Texas Department of Transportation

DESIGN-BUILD SPECIFICATIONS Items 10-29

Attachment 12-1

Environmental Permits, Issues and Commitments (EPIC)

SH 99

September 2025

I. STORMWATER POLLUTION PREVENTION

Texas Pollutant Discharge Elimination System (TPDES) TXR 150000: Stormwater Discharge Permit or Construction General Permit is required for projects with 1 or more acres disturbed soil. Projects with any disturbed soil must protect for erosion and sedimentation in accordance with Item 506. Refer to the TxDOT SWP3 Summary Sheets, SWP3 Binder Template, and Form 2118.

No Additional Comments

Construction contractors shall remove all temporary erosion and sedimentation BMPs once final stabilization is reached and at the completion of the project in accordance with the TCEQ CGP and project specific SWP3.

II. WORK IN OR NEAR STREAMS, WATERBODIES AND WETLANDS

United States Army Corps of Engineers (USACE) Permit is required for filling, dredging, excavating or other work in water bodies, rivers, creeks, streams, wetlands or wet areas. The Contractor must adhere to all of the terms and general conditions associated with the following permit(s). If additional work not represented in the plans is required, contact the Engineer immediately.

- ☐ No United States Army Corps (USACE) Permit Required
- ☐ Work is authorized by the United States Army Corps of Engineers (USACE) under a Nationwide Permit (NWP) without a Pre-Construction Notification (PCN). Project specific permit was not issued by USACE, therefore is not in the plan set. The USACE general conditions are in the “General Notes."
- ☐ Work is authorized by the United States Army Corps of Engineers (USACE) under a Nationwide Permit (NWP) with a Pre-Construction Notification (PCN). The project specific permit issued by the United States Army Corps of Engineers (USACE) is included in the plan set. The USACE general conditions are in the “General Notes."
- ☒ Work is authorized by the United States Army Corps of Engineers (USACE) under a Individual Permit (IP). The project specific permit issued by the United States Army Corps of Engineers (USACE) is included in the plan set.
- ☐ Work would be authorized by the United States Army Corps of Engineers (USACE) permit. The project specific permit issued by the USACE will be provided to the contractor.

United States Coast Guard (USCG) Permit is required for projects that involve the construction or modification (including changes to lighting) of a bridge or causeway across a water body determined to be navigable by the United States Coast Guard (USCG) under Section 9 of the Rivers and Harbors Act. If additional work not represented in the plans is required, contact the Engineer immediately.

- ☒ No United States Coast Guard (USCG) Coordination Required
- ☐ United States Coast Guard (USCG) Permit
- ☐ United States Coast Guard (USCG) Exemption

Additional Comments

The DB Contractor shall not obtain borrow, stockpile, stage, nor use as parking area for any vehicles, equipment, maintenance, or fueling areas adjacent to or near jurisdictional aquatic resources.

The DB Contractor will comply with all conditions and commitments listed in the Individual Permit.

III. CULTURAL RESOURCES

Refer to TxDOT Standard Specifications in the event historical issues or archeological artifacts are found during construction. Upon discovery of archeological artifacts (bones, burnt rock, flint, pottery, etc.) cease work in the area and contact the Engineer immediately.

No Additional Comments

IV. VEGETATION RESOURCES

Preserve native vegetation to the extent practical. Refer to TxDOT Standard Specifications in order to comply with requirements for invasive species, beneficial landscaping and tree/brush removal.

Additional Comments

The construction contractor shall re-seed Right-Of-Way in accordance with the Wildflower Seeding specifications.

• Minimize the amount of vegetation cleared. Removal of native vegetation, particularly mature native trees and shrubs should be avoided. Impacted vegetation should be replaced with in-kind onsite replacement/restoration of native vegetation.

V. FEDERAL LISTED, PROPOSED THREATENED, ENDANGERED SPECIES, CRITICAL HABITAT, STATE LISTED SPECIES, CANDIDATE SPECIES AND MIGRATORY BIRDS

If any of the listed species below are observed, cease work in the area, do not disturb species or habitat and contact the Engineer immediately.

The work may not remove active nests (from bridges, structures, or vegetation adjacent to the roadway, etc.) during nesting season (February 15 to October 1). If removal of structures or vegetation is necessary during the nesting season, the Contractor shall conduct a bird survey no more than 3 days in advance of the clearing/demolish start date. All bird surveys shall be conducted by a Field Biologist and adhere to the guidance document “Avoiding Migratory Birds and Handling Potential Violations” found in the TxDOT Environmental Compliance Toolkits at the time of the survey. (See below for Field Biologist and Ornithologist qualifications)

Additional Comments

Terrestrial & Aquatic Amphibian and Reptile BMP

• Minimize impacts to wetlands, temporary and permanent open water features, including depressions, and riverine habitats.

• Apply hydromulching and/or hydroseeding in areas for soil stabilization and/or revegetation of disturbed areas around wetlands and in riparian areas. If erosion control blankets or mats will be used, the product should not contain netting, but should only contain loosely woven natural fiber netting in which the mesh design allows the threads to move, therefore allowing expansion of the mesh openings. Plastic netting should be avoided.

Field Biologist, Ornithologist – a field biologist is defined as an individual qualified to perform field investigations, presence/absence surveys and habitat surveys for protected avian species or species of concern. A mandatory bachelor’s degree in biology or a related science is required. At a minimum, the Field Biologist, Ornithologist, shall have completed and reported a minimum of three presence/absence and habitat surveys for protected avian species in the past five years. A minimum of three projects must have been conducted in Texas. Surveys shall have been performed for documentation of species in accordance with a protocol approved by USFWS or TPWD, or following generally accepted methodologies.

VI. HAZARDOUS MATERIALS OR CONTAMINATION ISSUES

Refer to TxDOT Standard Specifications in the event potentially contaminated materials are observed, such as dead or distressed vegetation, trash disposal areas, drums, canisters, barrels, leaching or seepage of substances, unusual smells or odors, or stained soil, cease work in the area and contact the Engineer immediately.

Additional Comments

It shall be the DB Contractor’s responsibility to develop the management plan for subsurface investigation and remediation of potential hazmat contamination.

VII. OTHER ENVIRONMENTAL ISSUES

Comments:

Version 2.2

Texas Department of Transportation

TxDOT Houston District

ENVIRONMENTAL PERMITS, ISSUES AND COMMITMENTS

EPIC

FILE: EPIC Sheet.dgn	DN:	CK:	DW:	CK:
© TxDOT: March 2017	CONT	SECT	JOB	HIGHWAY
REVISIONS	3510	01	001	SH 99 Segment B1
UPDATED section V. text and added definition (10/17) ADDED USCG and USACE notes in Section VII (04/18)	DIST	COUNTY		SHEET NO.
	012	Brazoria/Galveston		

DATE: Apr 25, 2025
FILE:

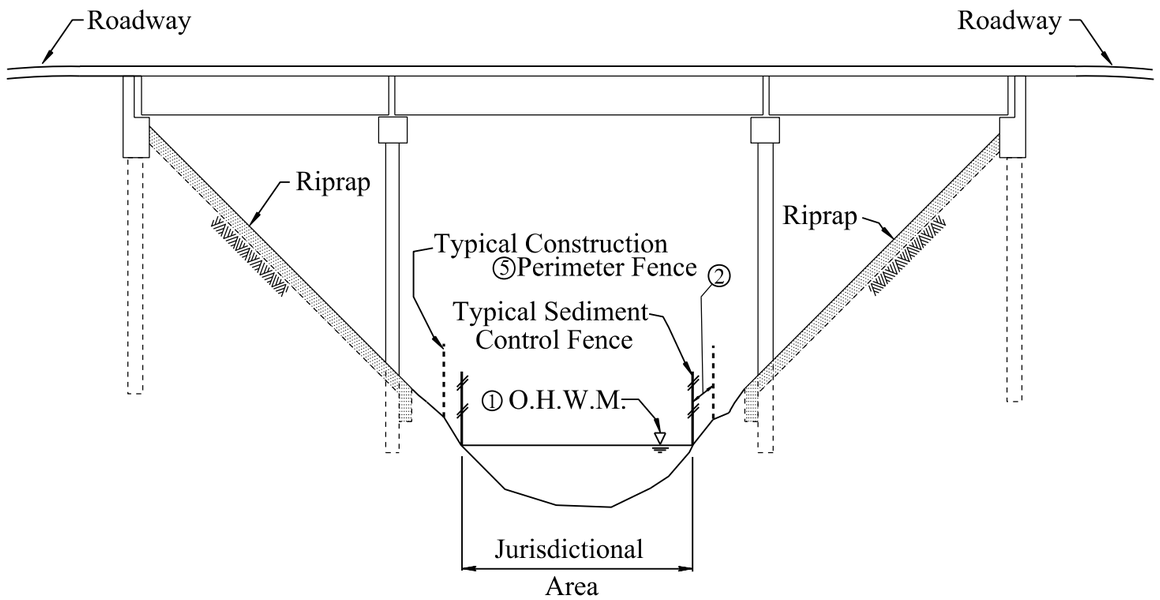

TYPICAL RELATIONSHIP OF
O.H.W.M., SEDIMENT CONTROL & CONSTRUCTION FENCING,
PILING/DRILL SHAFT & RIPRAP TOE WALLS
N.T.S.

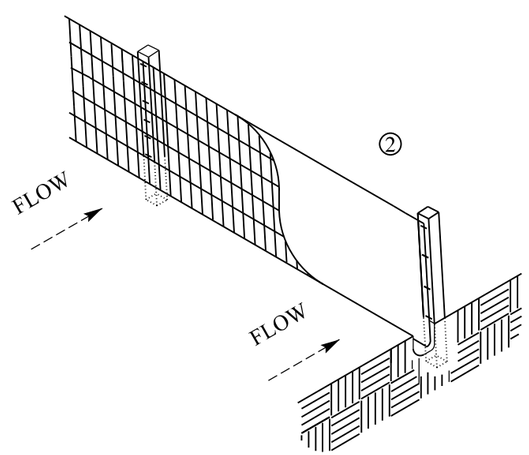

TEMPORARY SEDIMENT CONTROL FENCE

1.50" Radius, 0.50" Border, Black on White;
[WETLAND AREA] C; [DO NOT ENTER] C;
CIRCLE, DIAG LINE, RED

GENERAL DESIGN CONSIDERATIONS

1. Ordinary high water mark (elevation) (O.H.W.M.) is determined by the Environmental Project Manager and elevation is set by a Surveyor.

2. All non-permitted jurisdictional wetlands and waters within or adjacent to the project area shall be avoided and protected by signage and fencing, including both sediment control and construction fencing (see note 5). Construction equipment, materials/sediment are not allowed in the non-permitted wetlands/waters.

3. Any wetlands permitted for impacts/fill and non-permitted wetlands are shown elsewhere on plans or United States Army Corps of Engineers (USACE) permit.

4. The Contractor will be required to obtain the appropriate permits if she/he alters the construction method or deviates from the permit.

5. See item 506 for temporary sediment control fence and for construction perimeter fence. See item 502 for signs.

Texas Department of Transportation

TxDOT
Houston
District

ENVIRONMENTAL PERMITS,
ISSUES AND COMMITMENTS

EPIC

FILE: Wetland EPIC Sheet.dgn	DN:	CK:	DW:	CK:
© TxDOT: March 2017	CONT	SECT	JOB	HIGHWAY
REVISIONS ADDED construction fencing (06/17) UPDATED typical relationship diagram (09/17) UPDATED notes 2 and 5 (09/17) UPDATED note 5 (05/18)	DIST	COUNTY		SHEET NO.

DATE:
FILE:

VII. OTHER ENVIRONMENTAL ISSUES	VII. OTHER ENVIRONMENTAL ISSUES	VII. OTHER ENVIRONMENTAL ISSUES
All disturbed areas will be re-vegetated according to TxDOT's standard practices, the TCEQ CGP , and SWP3 in compliance with Executive Order 13112 on Invasive Species and the Executive Memorandum on Beneficial Landscaping. Re-vegetation efforts shall provide appropriate and sustainable cover to prevent erosion and siltation.	General Design and Construction BMP: • Employees and contractors will be provided information prior to start of construction to educate personnel of the potential for all state-listed threatened species or other SGCN to occur within the project area and should be advised of relevant rules and regulations to protect plants, fish, and wildlife. • Contractors will be informed to avoid harming all wildlife species if encountered and allow them to safely leave the project site. Due diligence should be used to avoid killing or harming any wildlife species in the implementation of transportation projects. • Apply hydromulching and/or hydroseeding in areas for soil stabilization and/or revegetation of disturbed areas around wetlands and in riparian areas. • If erosion control blankets or mats will be used, the product should not contain netting, but should only contain loosely woven natural fiber netting in which the mesh design allows the threads to move, therefore allowing expansion of the mesh openings. Plastic netting should be avoided. • The DB contractor shall obtain a copy of the 401 Water Quality Certification from TxDOT and follow all conditions of the Certification. Water quality & Stream Crossing BMP's • Minimize the use of equipment in streams and riparian areas during construction. When possible, equipment access should be from banks, bridge decks, or barges. • When temporary stream crossings are unavoidable, remove stream crossings once they are no longer needed and stabilize banks and soils around the crossing. • Rubbish found near bridges on TxDOT ROW should be removed and disposed of properly to minimize the risk of pollution. Rubbish does not include brush piles or snags • Upon removal of temporary crossings, Developer shall restore the waterway and the disturbed area within 100 ft to prior condition and submit detailed documentation showing before and after conditions for each temporary crossing.	Continuation of Section V. on EPIC sheet one: • Examine heavy equipment stored on site before use, particularly after rain events when reptile and amphibian movements occur more often, to ensure use will not harm individuals that might be seeking temporary refuge. • Mussel BMP • Fresh water mussel surveys and relocation would be performed prior to construction. Bat BMP • If bats are present or recent signs of occupation (i.e., piles of guano, distinct musky odor, or staining and rub marks at potential entry points) are observed, take appropriate measures to ensure that bats are not harmed, such as implementing non-lethal exclusion activities or timing or phasing of construction. • Contact TPWD for additional resources and information to assist in executing successful bat exclusions that will avoid unnecessary harm or death in bats. Continuation of Section II. on EPIC sheet one: If the DB Contractor impacts Waters Of The United States (WOTUS) not covered in the IP it shall be their responsibility of the DB contractor to coordinate with USACE and modify the permit to include additional impacts to WOTUS. Furthermore, the DB Contractor shall coordinate with USACE to identify and purchase compensatory mitigation credits for the additional WOTUS impacts.

Texas Department of Transportation

TxDOT Houston District

ENVIRONMENTAL PERMITS, ISSUES AND COMMITMENTS

EPIC

FILE: EPIC Additional Comment Sheet.dgn	DN:	CK:	DW:	CK:
© TxDOT: March 2017	CONT	SECT	JOB	HIGHWAY
REVISIONS	3510	01	001	SH 99 Segment B1
	DIST	COUNTY		SHEET NO.
	012	Brazoria/Galveston		

DATE:
FILE:

Texas Department of Transportation

DESIGN-BUILD SPECIFICATIONS Items 10-29

Attachment 12-1

Environmental Permits, Issues and Commitments (EPIC)

SH 35 Bypass

September 2025

I. STORMWATER POLLUTION PREVENTION

Texas Pollutant Discharge Elimination System (TPDES) TXR 150000: Stormwater Discharge Permit or Construction General Permit is required for projects with 1 or more acres disturbed soil. Projects with any disturbed soil must protect for erosion and sedimentation in accordance with Item 506. Refer to the TxDOT SWP3 Summary Sheets, SWP3 Binder Template, and Form 2118.

No Additional Comments

II. WORK IN OR NEAR STREAMS, WATERBODIES AND WETLANDS

United States Army Corps of Engineers (USACE) Permit is required for filling, dredging, excavating or other work in water bodies, rivers, creeks, streams, wetlands or wet areas. The Contractor must adhere to all of the terms and general conditions associated with the following permit(s). If additional work not represented in the plans is required, contact the Engineer immediately.

No United States Army Corps (USACE) Permit Required

Work is authorized by the United States Army Corps of Engineers (USACE) under a Nationwide Permit (NWP) without a Pre-Construction Notification (PCN). Project specific permit was not issued by USACE, therefore is not in the plan set. The USACE general conditions are in the “General Notes."

Work is authorized by the United States Army Corps of Engineers (USACE) under a Nationwide Permit (NWP) with a Pre-Construction Notification (PCN). The project specific permit issued by the United States Army Corps of Engineers (USACE) is included in the plan set. The USACE general conditions are in the “General Notes."

☒ Work is authorized by the United States Army Corps of Engineers (USACE) under a Individual Permit (IP). The project specific permit issued by the United States Army Corps of Engineers (USACE) is included in the plan set.

Work would be authorized by the United States Army Corps of Engineers (USACE) permit. The project specific permit issued by the USACE will be provided to the contractor.

United States Coast Guard (USCG) Permit is required for projects that involve the construction or modification (including changes to lighting) of a bridge or causeway across a water body determined to be navigable by the United States Coast Guard (USCG) under Section 9 of the Rivers and Harbors Act. If additional work not represented in the plans is required, contact the Engineer immediately.

☒ No United States Coast Guard (USCG) Coordination Required

United States Coast Guard (USCG) Permit

United States Coast Guard (USCG) Exemption

Additional Comments

Water feature impacts will be permitted under the SH 99 Segment B1 IP permit. The construction contractor for SH 35 must adhere to the terms and conditions associated with SH 99 Segment B1 permit. Please see the SH 99 Segment B1 permit for all terms and general conditions.

III. CULTURAL RESOURCES

Refer to TxDOT Standard Specifications in the event historical issues or archeological artifacts are found during construction. Upon discovery of archeological artifacts (bones, burnt rock, flint, pottery, etc.) cease work in the area and contact the Engineer immediately.

No Additional Comments

IV. VEGETATION RESOURCES

Preserve native vegetation to the extent practical. Refer to TxDOT Standard Specifications in order to comply with requirements for invasive species, beneficial landscaping and tree/brush removal.

No Additional Comments

V. FEDERAL LISTED, PROPOSED THREATENED, ENDANGERED SPECIES, CRITICAL HABITAT, STATE LISTED SPECIES, CANDIDATE SPECIES AND MIGRATORY BIRDS

If any of the listed species below are observed, cease work in the area, do not disturb species or habitat and contact the Engineer immediately.

The work may not remove active nests (from bridges, structures, or vegetation adjacent to the roadway, etc.) during nesting season (February 15 to October 1). If removal of structures or vegetation is necessary during the nesting season, the Contractor shall conduct a bird survey no more than 3 days in advance of the clearing/demolish start date. All bird surveys shall be conducted by a Field Biologist and adhere to the guidance document “Avoiding Migratory Birds and Handling Potential Violations” found in the TxDOT Environmental Compliance Toolkits at the time of the survey. (See below for Field Biologist and Ornithologist qualifications)

No Additional Comments

Field Biologist, Ornithologist – a field biologist is defined as an individual qualified to perform field investigations, presence/absence surveys and habitat surveys for protected avian species or species of concern. A mandatory bachelor’s degree in biology or a related science is required. At a minimum, the Field Biologist, Ornithologist, shall have completed and reported a minimum of three presence/absence and habitat surveys for protected avian species in the past five years. A minimum of three projects must have been conducted in Texas. Surveys shall have been performed for documentation of species in accordance with a protocol approved by USFWS or TPWD, or following generally accepted methodologies.

VI. HAZARDOUS MATERIALS OR CONTAMINATION ISSUES

Refer to TxDOT Standard Specifications in the event potentially contaminated materials are observed, such as dead or distressed vegetation, trash disposal areas, drums, canisters, barrels, leaching or seepage of substances, unusual smells or odors, or stained soil, cease work in the area and contact the Engineer immediately.

No Additional Comments

VII. OTHER ENVIRONMENTAL ISSUES

Comments:

Once the Individual Permit (IP) has been issued, the AO and TxDOT Engineer would be notify when activities permitted under the United States Army Corps of Engineers (USACE).

Version 2.2

Texas Department of Transportation

TxDOT Houston District

ENVIRONMENTAL PERMITS, ISSUES AND COMMITMENTS

EPIC

FILE: EPIC Sheet.dgn	DN:	CK:	DW:	CK:
© TxDOT: March 2017	CONT	SECT	JOB	HIGHWAY
REVISIONS	0178	02	092	SH 35
UPDATED section V. text and added definition (10/17) ADDED USCG and USACE notes in Section VII (04/18)	DIST	COUNTY		SHEET NO.
	012	Brazoria		

DATE: Dec 03, 2024
FILE:

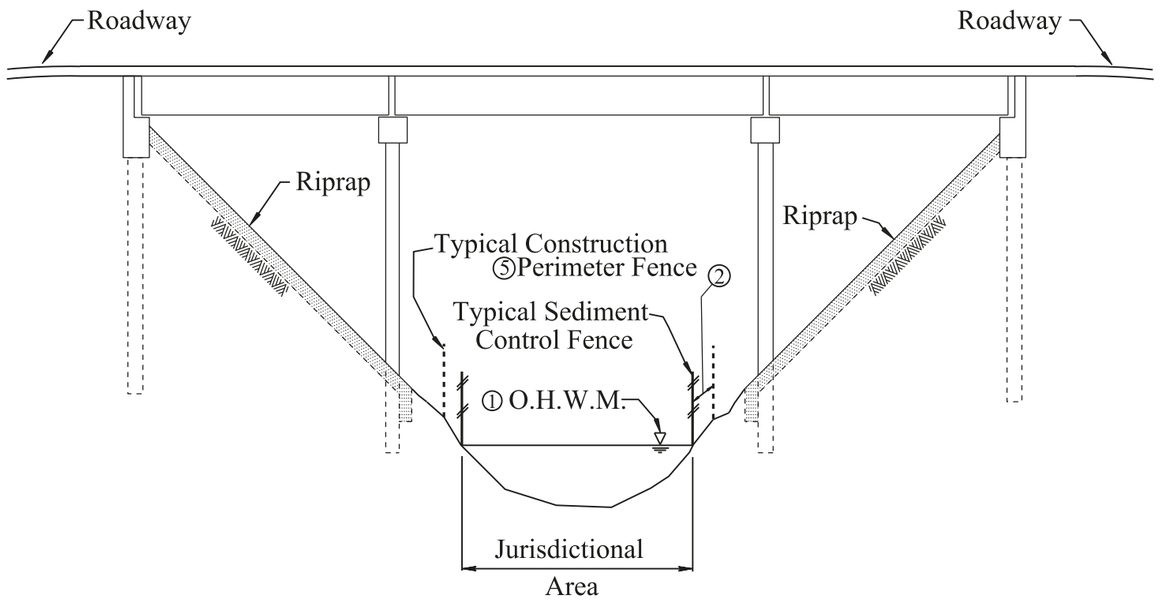

TYPICAL RELATIONSHIP OF
O.H.W.M., SEDIMENT CONTROL & CONSTRUCTION FENCING,
PILING/DRILL SHAFT & RIPRAP TOE WALLS
N.T.S.

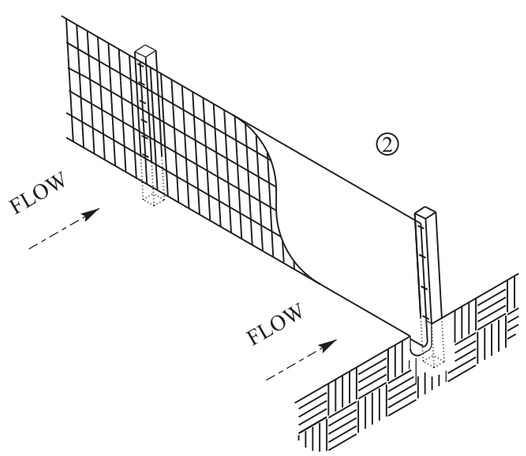

TEMPORARY SEDIMENT CONTROL FENCE

1.50" Radius, 0.50" Border, Black on White;
[WETLAND AREA] C; [DO NOT ENTER] C;
CIRCLE, DIAG LINE, RED

GENERAL DESIGN CONSIDERATIONS

1. Ordinary high water mark (elevation) (O.H.W.M.) is determined by the Environmental Project Manager and elevation is set by a Surveyor.

2. All non-permitted jurisdictional wetlands and waters within or adjacent to the project area shall be avoided and protected by signage and fencing, including both sediment control and construction fencing (see note 5). Construction equipment, materials/sediment are not allowed in the non-permitted wetlands/waters.

3. Any wetlands permitted for impacts/fill and non-permitted wetlands are shown elsewhere on plans or United States Army Corps of Engineers (USACE) permit.

4. The Contractor will be required to obtain the appropriate permits if she/he alters the construction method or deviates from the permit.

5. See item 506 for temporary sediment control fence and for construction perimeter fence. See item 502 for signs.

Texas Department of Transportation

TxDOT
Houston
District

ENVIRONMENTAL PERMITS,
ISSUES AND COMMITMENTS

EPIC

FILE: Wetland EPIC Sheet.dgn	DN:	CK:	DW:	CK:
© TxDOT: March 2017	CONT	SECT	JOB	HIGHWAY
REVISIONS	0271	07	326	I-10
ADDED construction fencing (06/17)	DIST	COUNTY		SHEET NO.
UPDATED typical relationship diagram (09/17)	HOU	Harris		2857B

UPDATED notes 2 and 5 (09/17)
UPDATED note 5 (05/18)

DATE:
FILE:

Texas Department of Transportation

DESIGN-BUILD SPECIFICATIONS Items 10-29

Attachment 14-1

Utility Adjustment Forms

September 2025

Texas Department of Transportation
Form DB-ROW-U-AdjCheck
REV 07/2018

UTILITY ADJUSTMENT CHECKLIST

(To be included with Utility Assembly Submittal)

U-No.: _____

District: _____

Utility Owner: _____

County(ies): _____

CSJ No(s).: R-_____ C-_____

Project Limits: _____ to _____

Federal ROW Project No.: _____

Reimbursement (*check one (1) box*): Actual Cost ☐ Lump Sum ☐ Non-Reimbursable ☐

Alternate Procedure Approval Date: _____

Description of Work (*Approximate from/to stationing and line type*):

Estimated Start Date: _____, 20_____

Estimated Completion or Duration: _____, 20_____

Estimated Total Adjustment Costs: $0.00

Estimated Betterment (*in dollars and calculated %*): $0.00 0%

Estimated Accrued Depreciation: $0.00

Estimated Salvage: $0.00

Credits and Vouchers: $0.00

Eligibility Ratio (*calculated and supported %*) $0.00 0%

Noteworthy Issues/Items: _____

ASSEMBLY PACKAGE

1. Have the required number of Utility Adjustment Assemblies of which the TxDOT Copy is color coded, been submitted?

   Yes ☐ No ☐ N/A ☐

2. Have the following forms been submitted?

PUAA/UAAA:	Yes ☐	No ☐	N/A ☐
UJUA:	Yes ☐	No ☐	N/A ☐
Statement - Contract Work:	Yes ☐	No ☐	N/A ☐
U-1 Affidavit:	Yes ☐	No ☐	N/A ☐
Quitclaim Deed:	Yes ☐	No ☐	N/A ☐
UM/UDC Sign Off:	Yes ☐	No ☐	N/A ☐

3. Are all forms submitted complete and correct for the situation/circumstance of the Utility Adjustment?

   Yes ☐ No ☐ N/A ☐

TRANSMITTAL MEMO

4. If the Adjustment has unique characteristics, does the transmittal include explanations and clarifications?

   Yes ☐ No ☐ N/A ☐

5. Has a recommendation for approval been stated?

   Yes ☐ No ☐ N/A ☐

6. If the Utility Adjustment is in more than one (1) RCSJ (Local Jurisdictional Boundary), have the percentages in each jurisdiction been detailed?

   Yes ☐ No ☐ N/A ☐

UTILITY ADJUSTMENT AGREEMENT

7. Have language modifications to the utility agreement been approved by TxDOT?

Yes ☐ No ☐ N/A ☐

8. Has the Utility consultant-engineering contract been reviewed and approved by the Developer's Utility Manager (UM)?

Yes ☐ No ☐ N/A ☐

UTILITY ADJUSTMENT PLANS AND SPECIFICATIONS

9. Plans folded so as to fit into 8.5" x 11" file?

Yes ☐ No ☐ N/A ☐

10. Have the Utility Adjustments been designed for the Proposed Configuration?

Yes ☐ No ☐ N/A ☐

11. Project or vicinity plan provided?

Yes ☐ No ☐ N/A ☐

12. Have the plans for the Utility Adjustment been sealed by a Registered Professional Engineer (PE)?

Yes ☐ No ☐ N/A ☐

13. Has the Utility Owner signed the cover sheet of the plans verifying review and approval, if Developer is responsible for Engineering on either Owner Managed or Developer Managed Agreement?

Yes ☐ No ☐ N/A ☐

14. Backfill requirements met (item 400 referenced)?

Yes ☐ No ☐ N/A ☐

15. If excavation is required, do the plans included a note on OSHA trench excavation protection?

Yes ☐ No ☐ N/A ☐

16. Is a note provided in the plans that the adjustment will conform with the TMUTCD?

Yes ☐ No ☐ N/A ☐

17. If the adjustment involves a plastic water, sanitary sewer, or gas line, has a metal detection wire been included in the estimate or with detailed in the plans?

Yes ☐ No ☐ N/A ☐

18. Has Barlow's Formula information been submitted for un-encased high pressure pipelines? (The Barlow's calculation must be provided by the utility owner. The following information is required to complete Barlow's formula. S=Yield Strength, Wall thickness = t, Outside Diameter = D, Design Factor = F. Maximum Operating Pressure must also be given and compared to the pressure calculated with Barlow's. The Barlow calculation must be shown with the submission.)

Yes ☐ No ☐ N/A ☐

19. If the pipeline is un-encased, is there adequate coating, wrapping and cathodic protection?

Yes ☐ No ☐ N/A ☐

20. Information on plans sufficient and adequate to:

Determine necessity and justification of proposed work?

Yes ☐ No ☐ N/A ☐

Demonstrate Utility Accommodation Rules compliance?

Yes ☐ No ☐ N/A ☐

Indicate highway stationing, existing and proposed ROW, offsets from proposed ROW, existing and proposed grades, and edge of pavement lines?

Yes ☐ No ☐ N/A ☐

Provide any other necessary or essential information such as pressure, flow, offset, type, condition, wall thickness, specifications etc.?

Yes ☐ No ☐ N/A ☐

21. Is this Utility Adjustment within ROW project limits or directly related to work required within project limits?

Yes ☐ No ☐ N/A ☐

22. Are any of the proposed utility facilities installed longitudinally within a control of access?

Yes ☐ No ☐ N/A ☐

COST ESTIMATE

23. Has the Developer's Utility Design Coordinator located on the plans the major items of material listed on the estimate by scaling or stationing?

Yes ☐ No ☐ N/A ☐

24. If the agreed sum method has been marked, has a detailed, itemized estimate and matching plans been provided?

Yes ☐ No ☐ N/A ☐

25. Is the estimate properly and adequately itemized and detailed?

Yes ☐ No ☐ N/A ☐

26. Are overheads and loadings checked for reasonableness?

Yes ☐ No ☐ N/A ☐

27. Replacement utility ROW charges justified and supported?

Yes ☐ No ☐ N/A ☐

28. Eligibility ratio calculated and recommended?

Yes ☐ No ☐ N/A ☐

29. Betterment credit applicable?

Yes ☐ No ☐ N/A ☐

If yes, is credit calculated and applied properly?

Yes ☐ No ☐ N/A ☐

30. Accrued Depreciation credit applicable?

Yes ☐ No ☐ N/A ☐

If yes, is credit calculated and applied properly?

Yes ☐ No ☐ N/A ☐

31. Salvage credit applicable?

Yes ☐ No ☐ N/A ☐

If yes, is credit applied properly?

Yes ☐ No ☐ N/A ☐

32. Estimate extensions checked?

Yes ☐ No ☐ N/A ☐

AFFIDAVIT OF PROPERTY INTEREST

33. Proof of compensable property interest established by utility where applicable?

Yes ☐ No ☐ N/A ☐

If yes, according to the "**Real Property Interest**" paragraph of the PUAA:

Does the estimate detail reimbursement for "New Property" interest?

Yes ☐ No ☐ N/A ☐

Does the estimate detail compensation for relinquishing "Existing Property" interest?

Yes ☐ No ☐ N/A ☐

Did the utility owner provide a letter stating that they will quitclaim their property interest at no costs or an agreed sum if new utility property interests are not being acquired?

Yes ☐ No ☐ N/A ☐

34. Have the parcel ID numbers to be Quitclaimed been identified?

Yes ☐ No ☐ N/A ☐

35. Has the owner provided a signed letter of intent to Quitclaim, and has a copy of the correct Quitclaim Deed(s) been submitted?

Yes ☐ No ☐ N/A ☐

R.O.W. MAPS

36. Approved and current ROW Maps on file with project office?

Yes ☐ No ☐ N/A ☐

37. Have the existing and proposed utility facilities been plotted on the ROW map and attached to this assembly?

Yes ☐ No ☐ N/A ☐

COMMENTS: _____

Prepared by: _____ _____
Utility Design Coordinator Date

Recommended for Approval by: _____ _____
Quality Control Date

Approved by: _____ _____
Utility Manager Date

County: _____
ROW CSJ No.: _____
Const. CSJ No.: _____
Highway: _____
Fed. Proj. No.: _____
Limits: _____ to _____

PROJECT UTILITY ADJUSTMENT AGREEMENT
(DB Contractor-Managed)

Agreement No.: _____-U-_____

THIS AGREEMENT, by and between [DB Contractor], hereinafter identified as the "**DB Contractor**" and [Utility Owner], hereinafter identified as the "**Owner**", is as follows:

WITNESSETH

WHEREAS, the STATE OF TEXAS, acting by and through the Texas Department of Transportation, hereinafter identified as "TxDOT", is authorized to design, construct, operate, maintain, and improve projects as part of the state highway system throughout the State of Texas, all in conformance with the applicable provisions of Chapters 201, 203, 222, 223, 224 and 228 of the Texas Transportation Code, as amended; and

WHEREAS, TxDOT proposes to construct a project identified as [Project Name] (the "Project") and classified as either Interstate, Toll or Traditional (meaning eligibility based on existing compensable interest in the land occupied by the facility to be relocated within the proposed highway right of way limits) as indicated below (*check one box*). Reimbursement will be authorized by the type of project selected below in conformance with §203.092 of the Transportation Code,

☐ Interstate

☐ Toll

☐ Traditional

; and

WHEREAS, pursuant to that certain Design-Build Contract ("DBC") by and between TxDOT and the DB Contractor with respect to the Project, the DB Contractor has undertaken the obligation to design, construct, finance, operate and maintain the Project and adhere to all requirements in the DBC; and

WHEREAS, the DB Contractor's duties pursuant to the DBC include causing the relocation, removal or other necessary adjustment of existing Utility(ies) impacted by the Project (collectively, "Adjustment"), subject to the provisions herein; and

WHEREAS, the Project may receive Federal funding, financing and/or credit assistance; and

WHEREAS, the DB Contractor has notified the Owner that certain of its facilities and appurtenances (the "Owner Utilities") are in locational conflict with the Project (and/or with the Ultimate Configuration of the Project), and the Owner has requested that the DB Contractor undertake the Adjustment of the Owner Utilities as necessary to accommodate the Project (and the Ultimate Configuration) and the Owner agrees that the "Project" will be constructed in accordance with §203.092 of the Texas Transportation Code, as amended, and 23 CFR 645 Subpart A (Utility Relocations, Adjustments and Reimbursement); and

WHEREAS, the Owner Utilities and the proposed Adjustment(s) of the Owner Utility(ies) are described as follows *[insert below a description of the affected facilities (by type, size and location) as well as a brief description of the nature of the Adjustment work to be performed (e.g., "adjust 12" waterline from approximately Highway Station 100+00 to approximately Highway Station 200+00)]*:

_____; and

WHEREAS, the Owner recognizes that time is of the essence in completing the work contemplated herein; and

WHEREAS, the DB Contractor and the Owner desire to implement the Adjustment of the Owner Utility(ies) by entering into this Agreement.

AGREEMENT

NOW, THEREFORE, in consideration of these premises and of the mutual covenants and agreements of the parties hereto and other good and valuable consideration, the receipt and sufficiency of which being hereby acknowledged, the DB Contractor and the Owner agree as follows:

1. **Preparation of Plans.** [*Check one box that applies:*]

☐ The DB Contractor has hired engineering firm(s) acceptable to the Owner to perform all engineering services needed for the preparation of plans, required specifications, and cost estimates, attached hereto as Exhibit A (collectively, the "Plans"), for the proposed Adjustment of the Owner Utilities. The DB Contractor represents and warrants that the Plans conform to the most recent Utility Accommodation Rules issued by the Texas Department of Transportation ("TxDOT"), as set forth in 43 Texas Administrative Code Part 1, Chapter 21, Subchapter C, *et seq.* (the "UAR"). By its execution of this Agreement or by the signing of the Plans, the Owner hereby approves and confirms that the Plans are in compliance with the "standards" described in Paragraph 3(a)(4).

☐ The Owner has provided plans, required specifications and cost estimates, attached hereto as Exhibit A (collectively, the "Plans"), for the proposed Adjustment of the Owner Utilities. The Owner represents and warrants that the Plans conform to the most recent Utility Accommodation Rules issued by the Texas Department of Transportation ("TxDOT"), as set forth in 43 Texas Administrative Code Part 1, Chapter 21, Subchapter C, *et seq.* (the "UAR"). By its execution of this Agreement, the DB Contractor and the Owner hereby approve the Plans. The Owner also has provided to the DB Contractor a Utility plan view map illustrating the location of existing and proposed Utility facilities on the DB Contractor's right of way map of the Project. With regard to its preparation of the Plans, the Owner represents as follows *[check one (1) box that applies]*:

☐ The Owner's employees were utilized to prepare the Plans, and the charges therefore do not exceed the Owner's typical costs for such work.

☐ The Owner utilized consulting engineers to prepare the Plans, and the fees for such work are not based upon a percentage of construction costs. Further, such fees encompass only the work necessary to prepare the Plans for Adjustment of the Owner Utilities described herein, and do not include fees for work done on any other project. The fees of the consulting engineers are reasonable and are comparable to the fees typically charged by consulting engineers in the locale of the Project for comparable work for the Owner.

2. **Review by TxDOT.** The parties hereto acknowledge and agree as follows:

(a) Upon execution of this Agreement by the DB Contractor and the Owner, the DB Contractor will submit this Agreement, together with the attached Plans, to TxDOT for its review and approval as part of a package referred to as a "Utility Assembly". The parties agree to cooperate in good faith to modify this Agreement and/or the Plans, as necessary and mutually acceptable to all parties, to respond to any comments made by TxDOT thereon. Without limiting the generality of the foregoing:

(1) The Owner agrees to respond (with comment and/or acceptance) to any modified Plans and/or Agreement prepared by the DB Contractor in response to TxDOT comments within **10 Business Days** after receipt of such modifications; and

(2) If the Owner originally prepared the Plans, the Owner agrees to modify the Plans in response to TxDOT comments and to submit such modified Plans to the DB Contractor for its comment and/or approval (and re-submittal to TxDOT for its comment and/or approval) within **10 Business Days** after receipt of TxDOT's comments.

The Owner's failure to timely respond to any modified Plans submitted by the DB Contractor pursuant to this paragraph shall be deemed the Owner's approval of same. If the Owner fails to timely prepare modified Plans which are its responsibility hereunder, then the DB Contractor shall have the right to modify the Plans for the Owner's approval as if the DB Contractor had originally prepared the Plans. The process set forth in this paragraph will be repeated until the Owner, the DB Contractor and TxDOT have all approved this Agreement and the Plans.

(b) The parties hereto acknowledge and agree that TxDOT's review, comments and approval of a Utility Assembly or any component thereof shall constitute TxDOT's approval of the location and manner in which a Utility Assembly will be installed, adjusted, or relocated within the State Highway right of way (the "ROW"), subject to the DB Contractor and the Owner's satisfactory performance of the Adjustment work in accordance with the approved Plans. TxDOT has no duty to review Owner Utilities or components for their quality or adequacy to provide the intended utility service.

3. **Design and Construction Standards.**

(a) All design and construction performed for the Adjustment work which is the subject of this Agreement shall comply with and conform to the following:

(1) All applicable local and State Laws, regulations, decrees, ordinances and policies, including the UAR, the *Utility Manual* issued by TxDOT (to the extent its requirements are mandatory for the Utility Adjustment necessitated by the Project, as communicated to the Owner by the DB Contractor or TxDOT), the requirements of the DBC, and the policies of TxDOT;

(2) All federal Laws, regulations, decrees, ordinances and policies applicable to projects receiving federal funding, financing and/or credit assistance, including without limitation, 23 CFR 645 Subpart A and B; and the Buy America provisions of 23 U.S.C. §, 2 CFR Part 184, and 23 CFR 635.410. Prior to the incorporation of iron or steel products, the Owner will submit to TxDOT and DB Contractor an executed TxDOT Form 1818 – Material Statement with proper attachments, issued and signed by the initial fabricator, supplier of materials, or Owner. Prior to supplying any manufactured products or construction materials listed on Exhibit A, the Owner shall sign and submit to TxDOT and DB Contractor the acknowledgment of compliance set forth in Exhibit A hereto. The Owner shall supply, upon request by the DB Contractor or TxDOT, proof of compliance with the aforementioned Laws, rules and regulations prior to the commencement of construction;

(3) The terms of all governmental permits or other approvals, as well as any private approvals of third parties necessary for such work;

(4) The (i) published, current design practices regularly followed by the Owner in its own work, and (ii) standards of practice, and construction methods (collectively, "standards") which the Owner customarily applies to Utility facilities comparable to the Owner Utilities that are constructed by the Owner or for the Owner by its contractors at the Owner's expense, which standards are current at the time this Agreement is signed by the Owner, and which the Owner has submitted to the DB Contractor in writing; and

(5) Owner agrees that all service meters must be placed outside of the State ROW.

(b) Such design and construction also shall be consistent and compatible with:

(1) The DB Contractor's current design and construction of the Project;

(2) The Ultimate Configuration for the Project; and

(3) Any other Utilities being installed in the same vicinity.

The Owner acknowledges receipt of Project plans and Ultimate Configuration documents from the DB Contractor as necessary to comply with the foregoing. In case of any inconsistency among any of the standards referenced in this Agreement, the most stringent standard shall apply.

(c) The plans, specifications, and cost estimates contained in Exhibit A shall identify and detail all Utility facilities that the Owner intends to abandon in place rather than remove, including material type, quantity, size, age and condition. No facilities containing hazardous or contaminated materials may be abandoned, but shall be specifically identified and removed in accordance with the requirements of subparagraph (a). It is understood and agreed that the DB Contractor shall not pay for the assessment and remediation or other corrective action relating to soil and ground water contamination caused by the Utility facility prior to the removal.

4. **Responsibility for Costs of Adjustment Work.** With the exception of any Betterment (hereinafter defined), the parties shall allocate the cost of any Adjustment between themselves as identified in Exhibit A and in accordance with §203.092 of the Texas Transportation Code. An allocation percentage may be determined by application of an eligibility ratio, if appropriate, as detailed in Exhibit A.

5. **Construction by the DB Contractor.**

(a) The Owner hereby requests that the DB Contractor perform the construction necessary to adjust the Owner Utilities and the DB Contractor hereby agrees to perform such construction. All construction work hereunder shall be performed in a good and workmanlike manner, and in accordance with the Plans (except as modified pursuant to Paragraph 16).

(b) The DB Contractor shall retain such contractor or contractors as are necessary to adjust the Owner Utilities.

(c) The DB Contractor shall obtain all permits necessary for the construction to be performed by the DB Contractor hereunder, and the Owner shall cooperate in that process as needed.

6. **Reimbursement of Owner's Indirect Costs.**

(a) DB Contractor agrees to reimburse the Owner its share, if applicable, of the Owner's indirect costs (e.g., engineering, inspection, testing, ROW) as identified in Exhibit A. When requested by the Owner, monthly progress payments will be made. The monthly payment will not exceed 90% of the estimated indirect work done to date. Once the indirect work is complete, final payment of the eligible indirect costs will be made. Intermediate payments shall not be construed as final payment for any items included in the intermediate payment.

(b) The Owner's indirect costs associated with Adjustment of the Owner Utilities shall be developed pursuant to the method checked and described below [*check only one box*]:

☐ (1) Actual related indirect costs accumulated in accordance with:

(i) A work order accounting procedure prescribed by the applicable Federal or State regulatory body, or

(ii) Established accounting procedure developed by the Owner and which the Owner uses in its regular operations

*(either (i) or (ii) referred to as "**Actual Cost**")*, OR

☐ (2) The agreed sum of $_____ ("**Agreed Sum**") as supported by the analysis of the Owner's estimated costs attached hereto as part of Exhibit A.

(c) All indirect costs charged to the DB Contractor by the Owner shall be reasonable and shall be computed using rates and schedules not exceeding those applicable to similar work performed by or for the Owner at the Owner's expense. The DB Contractor's performance of the Adjustment work hereunder and payment of the DB Contractor's share of the Owner's costs pursuant to this Agreement, if applicable, shall be full compensation to the Owner for all costs incurred by the Owner in adjusting the Owner Utilities (including without limitation, costs of relinquishing and/or acquiring right of way).

7. **Advancement of Funds by Owner for Construction Costs.**

(a) Advancement of Owner's share, if any, of estimated costs, Exhibit A shall identify all estimated engineering and construction-related costs, including labor, material, equipment and other miscellaneous construction items. Exhibit A shall also identify the Owner's and DB Contractor's respective shares of the estimated costs. The Owner shall advance to the DB Contractor its allocated share, if any, of the estimated costs for construction and engineering work to be performed by the DB Contractor, in accordance with the following terms:

☐ The Adjustment of the Owner's Utilities does not require advancement of funds.

☐ The Adjustment of the Owner's Utilities does require advancement of funds and the terms agreed to between the DB Contractor and the Owner are listed below.

[Insert terms of advance funding to be agreed between DB Contractor and Owner]

_____

(b) Adjustment Based on Actual Costs or Agreed Sum

[*Check the one appropriate provision, if advancement of funds is required*]:

☐ The Owner is responsible for its share of the DB Contractor's actual cost for the Adjustment, including the identified Betterment. Accordingly, upon completion of all Adjustment work to be performed by both parties pursuant to this Agreement, (i) the Owner shall pay to the DB Contractor the amount, if any, by which the actual cost of the Betterment (as determined in Paragraph 9(b)) *plus* the actual cost

of Owner's share of the Adjustment (based on the allocation set forth in Exhibit A) exceeds the estimated cost advanced by the Owner, or (ii) the DB Contractor shall refund to the Owner the amount, if any, by which such advance exceeds such actual cost, as applicable.

☐ The Agreed Sum is the agreed and final amount due for the Adjustment, including any Betterment, under this Agreement. Accordingly, no adjustment (either up or down) of such amount shall be made based on actual costs.

8. **Invoices.** On invoices prepared by either the Owner or the DB Contractor, all costs developed using the "**Actual Cost**" method described in Paragraph 6(b)(1) shall be itemized in a format allowing for comparisons to the approved estimates, including listing each of the services performed, the amount of time spent and the date on which the service was performed. The original and three (3) copies of each invoice, together with (i) such supporting information to substantiate all invoices as reasonably requested, and (ii) such waivers and releases of liens as the other party may reasonably require, shall be submitted to the other party at the address for notices stated in Paragraph 21, unless otherwise directed pursuant to Paragraph 22.

The Owner and the DB Contractor shall make commercially reasonable efforts to submit final invoices no later than 120 days after completion of work. The Owner and the DB Contractor hereby acknowledge and agree that any costs submitted to the other party within 12 months following completion of all Adjustment work to be performed by the parties pursuant to this Agreement shall be deemed to have been abandoned and waived.

9. **Betterment and Salvage.**

(a) For purposes of this Agreement, the term "Betterment" means any upgrading of an Owner Utility being adjusted that is not attributable to the construction of the Project and is made solely for the benefit of and at the election of the Owner, including but not limited to an increase in the capacity, capability, efficiency or function of the adjusted Utility over that provided by the existing Utility or an expansion of the existing Utility; *provided, however*, that the following are not considered Betterments:

(1) Any upgrading which is required for accommodation of the Project;

(2) Replacement devices or materials that are of equivalent standards although not identical;

(3) Replacement of devices or materials no longer regularly manufactured with the next highest grade or size;

(4) Any upgrading required by applicable Laws, regulations or ordinances;

(5) Replacement devices or materials which are used for reasons of economy (e.g., non-stocked items that may be uneconomical to purchase); or

(6) Any upgrading required by the Owner's written "standards" meeting the requirements of Paragraph 3(a)(4) and deemed to be of direct benefit to the Project.

[*Include the following for fiber optic Owner Utilities only:*] Extension of an adjustment to the nearest splice boxes shall not be considered a Betterment if required by the Owner in order to maintain its written telephony standards.

(b) It is understood and agreed that the DB Contractor shall not pay for any Betterments and that the Owner shall be solely responsible therefor. No Betterment may be performed hereunder which is incompatible with the Project or the Ultimate Configuration or which cannot be performed within the other constraints of applicable Law, any applicable governmental approvals, including without limitation the scheduling requirements thereunder.

Accordingly, the parties agree as follows [*check the one (1) box that applies, and complete if appropriate*]:

☐ The Adjustment of the Owner Utilities pursuant to the Plans does not include any Betterment.

☐ The Adjustment of the Owner Utilities pursuant to the Plans includes a Betterment to the Owner Utilities by reason of *[Insert explanation, e.g. "replacing 12" pipe with 24" pipe]*: _____.

The DB Contractor has provided to the Owner comparative estimates for (i) all work to be performed by the DB Contractor pursuant to this Agreement, including work attributable to the Betterment, and (ii) the cost to perform such work without the Betterment, which estimates are hereby approved by the Owner. The estimated cost of the DB Contractor's work hereunder which is attributable to Betterment is $_____, calculated by *subtracting* (ii) from (i). The percentage of the total cost of the DB Contractor's work hereunder which is attributable to Betterment is _____%, calculated by *subtracting* (ii) from (i), which remainder is *divided* by (i).

(c) If Paragraph 9(b) identifies Betterment, the Owner shall advance to the DB Contractor, at least **10 Business Days** prior to the date scheduled for commencement of construction for Adjustment of the Owner Utilities, the estimated cost attributable to Betterment as set forth in Paragraph 9(b). Should the Owner fail to advance payment to the DB Contractor **10 Business Days** prior to commencement of the Adjustment construction, the DB Contractor shall have the option of commencing and completing (without delay) the Adjustment work without installation of the applicable Betterment. *[If Paragraph 9(b) identifies Betterment, check the one (1) appropriate provision]*:

☐ The estimated cost stated in Paragraph 9(b) is the agreed and final amount due for Betterment hereunder, and accordingly no adjustment (either up or down) of such amount shall be made based on actual costs.

☐ The Owner is responsible for the DB Contractor's actual cost for the identified Betterment. Accordingly, upon completion of all Adjustment work to be

performed by both parties pursuant to this Agreement, (i) the Owner shall pay to the DB Contractor the amount, if any, by which the actual cost of the Betterment (determined as provided below in this paragraph) exceeds the estimated cost advanced by the Owner, or (ii) the DB Contractor shall refund to the Owner the amount, if any, by which such advance exceeds such actual cost, as applicable. Any additional payment by the Owner shall be due within **60 calendar days** after the Owner's receipt of the DB Contractor's invoice therefor, together with supporting documentation; any refund shall be due within **60 calendar days** after completion of the Adjustment work hereunder. The actual cost of Betterment incurred by the DB Contractor shall be calculated by *multiplying* (i) the Betterment percentage stated in Paragraph 9(b), by (ii) the actual cost of all work performed by the DB Contractor pursuant to this Agreement (including work attributable to the Betterment), as invoiced by the DB Contractor to the Owner.

(d) If Paragraph 9(b) identifies Betterment, the amount allocable to Betterment in the Owner's indirect costs shall be determined by applying the percentage of the Betterment calculated in Paragraph 9(b) to the Owner's indirect costs. The Owner's invoice to the DB Contractor for the DB Contractor's share of the Owner's indirect costs, shall credit the DB Contractor with any Betterment amount determined pursuant to this Paragraph 9(d).

(e) For any Adjustment from which the Owner recovers any materials and/or parts and retains or sells the same, after application of any applicable Betterment credit, the Owner's invoice to the DB Contractor for its costs shall credit the DB Contractor with the salvage value for such materials and/or parts.

(f) The determinations and calculations of Betterment described in this Paragraph 9 shall exclude right of way acquisition costs. Betterment in connection with right of way acquisition is addressed in Paragraph 15.

10. **Management of the Adjustment Work.** The DB Contractor will provide project management for the Adjustment of the Owner Utility(ies).

11. **Utility Investigations.** At the DB Contractor's request, the Owner shall assist the DB Contractor in locating any Utilities (including any appurtenances) which are owned and/or operated by the Owner and may be impacted by the Project. Without limiting the generality of the foregoing, in order to help assure that neither the adjusted Owner Utility(ies) nor existing, unadjusted Utility(ies) owned or operated by the Owner are damaged during construction of the Project, the Owner shall mark in the field the location of all such Utilities horizontally on the ground in advance of Project construction in the immediate area of such Utilities.

12. **Inspection and Acceptance by the Owner.**

(a) Throughout the Adjustment construction hereunder, the Owner shall provide adequate inspectors for such construction. The work shall be inspected by the Owner's inspector(s) at least once each working day, and more often if such inspections are deemed necessary by Owner. Further, upon request by the DB Contractor or its Subcontractors, the Owner shall furnish an inspector at any reasonable time in which construction is underway

pursuant to this Agreement, including occasions when construction is underway in excess of the usual 40 hour work week and at such other times as reasonably required. The Owner agrees to promptly notify the DB Contractor of any concerns resulting from any such inspection.

(b) The Owner shall perform a final inspection of the adjusted Owner Utilities, including conducting any tests as are necessary or appropriate, within **five (5) Business Days** after completion of construction hereunder. The Owner shall accept such construction if it is consistent with the performance standards described in Paragraph 3, by giving written notice of such acceptance to the DB Contractor within said **five (5) day** period. If the Owner does not accept the construction, then the Owner shall, not later than the expiration of said **five (5) day** period, notify the DB Contractor in writing of its grounds for non-acceptance and suggestions for correcting the problem, and if the suggested corrections are justified, the DB Contractor will comply. The Owner shall re-inspect any revised construction (and retest if appropriate) and give notice of acceptance, no later than **five (5) Business Days** after completion of corrective work. The Owner's failure to inspect and to give any required notice of acceptance or non-acceptance within the specified time period shall be deemed accepted.

(c) From and after the Owner's acceptance (or deemed acceptance) of an adjusted Owner Utility, the Owner agrees to accept ownership of, and full operation and maintenance responsibility for, such Owner Utility.

13. **Design Changes.** The DB Contractor will be responsible for additional Adjustment design and construction costs necessitated by design changes to the Project, upon the terms specified herein.

14. **Field Modifications.** The DB Contractor shall provide the Owner with documentation of any field modifications, including Utility Adjustment Field Modifications as well as minor changes described in Paragraph 16(b), occurring in the Adjustment of the Owner Utility(ies).

15. **Real Property Interests.**

(a) The Owner has provided, or upon execution of this Agreement shall promptly provide to the DB Contractor, documentation acceptable to TxDOT indicating any right, title or interest in real property claimed by the Owner with respect to the Owner Utilities in their existing location(s). Such claims are subject to TxDOT's approval as part of its review of the DB Contractor Utility Assembly as described in Paragraph 2. Claims approved by TxDOT as to rights or interests are referred to herein as "**Existing Utility Property Interests**".

(b) If acquisition of any new easement or other interest in real property ("**Replacement Utility Property Interest**") is necessary for the Adjustment of any Owner Utility(ies), then the Owner shall be responsible for undertaking such acquisition. The Owner shall implement each acquisition hereunder expeditiously so that related Adjustment construction can proceed in accordance with the DB Contractor's Project schedules. The DB Contractor shall be responsible for its share (as specified in Paragraph 4) of the actual and reasonable acquisition costs of any such Replacement Utility Property Interest (including without

limitation the Owner's reasonable overhead charges and reasonable legal costs as well as compensation paid to the landowner), excluding any costs attributable to a Betterment as described in Paragraph 15(c), and subject to the provisions of Paragraph 15(e); *provided, however*, that all acquisition costs shall be subject to the DB Contractor's prior written approval. Eligible acquisition costs shall be segregated from other costs on the Owner's estimates and invoices. Any such Replacement Utility Property Interest shall have a written valuation and shall be acquired in accordance with applicable Law.

(c) The DB Contractor shall pay its share only for a replacement in kind of an Existing Utility Property Interest (e.g., in width and type), unless a Replacement Utility Property Interest exceeding such standard:

(1) Is required in order to accommodate the Project or by compliance with applicable Law; or

(2) Is called for by the DB Contractor in the interest of overall Project economy.

Any Replacement Utility Property Interest which is not the DB Contractor's responsibility pursuant to the preceding sentence shall be considered a Betterment to the extent that it upgrades the Existing Utility Property Interest which it replaces, or in its entirety if the related Owner Utility was not installed pursuant to an Existing Utility Property Interest. Betterment costs shall be solely the Owner's responsibility.

(d) For each Existing Utility Property Interest located within the Project right of way, upon completion of the related Adjustment work and its acceptance by the Owner, the Owner agrees to execute a quitclaim deed or other appropriate documentation relinquishing such Existing Utility Property Interest to TxDOT, unless the affected Owner Utility is remaining in its original location or is being reinstalled in a new location within the area subject to such Existing Utility Property Interest. If the Owner Utility(ies) are remaining within the existing property interest, a Utility Joint Use Acknowledgement will be required. All quitclaim deeds or other relinquishment documents shall be subject to TxDOT's approval as part of its review of the Utility Assembly as described in Paragraph 2. For each such Existing Utility Property Interest relinquished by the Owner, the DB Contractor shall do one of the following to compensate the Owner for such Existing Utility Property Interest, as appropriate:

(1) If the Owner acquires a Replacement Utility Property Interest for the affected Owner Utility, the DB Contractor shall reimburse the Owner for the DB Contractor's share of the Owner's actual and reasonable acquisition costs in accordance with Paragraph 15(b), subject to Paragraph 15(c); or

(2) If the Owner does not acquire a Replacement Utility Property Interest for the affected Owner Utility, the DB Contractor shall compensate the Owner for the DB Contractor's share of the market value of such relinquished Existing Utility Property Interest, as mutually agreed between the Owner and the DB Contractor and supported by a written valuation.

The compensation, if any, provided to the Owner pursuant to either subparagraph (i) or (ii) above shall constitute complete compensation to the Owner for the relinquished Existing Utility Property Interest and any Replacement Utility Property Interest, and not further compensation shall be due to the Owner from the DB Contractor or TxDOT on account of such Existing Utility Property Interest or Replacement Utility Property Interest.

(e) All Utility Joint Use Acknowledgments (UJUA) or Utility Installation Requests, permit applications shall be subject to TxDOT approval as part of its review of the Utility Assembly as described in Paragraph 2. A Utility Joint Use Acknowledgment is required where an Existing Utility Property Interest exists and the existing or proposed Utility will remain or be adjusted within the boundaries of the Existing Utility Property Interest. All other accommodations not located on Existing Utility Property Interests will require a Utility permit through TxDOT's Right of Way Utility and Leasing Information System (RULIS).

16. **Amendments and Modifications.** This Agreement may be amended or modified only by a written instrument executed by the parties hereto, in accordance with Paragraph 16(a) or Paragraph 16(b) below:

(a) Except as otherwise provided in Paragraph 16(b), any amendment or modification to this Agreement or the Plans attached hereto shall be implemented by a Utility Adjustment Agreement Amendment ("**UAAA**") in the form of Exhibit B hereto (DB-ROW-U-UAAA-DM). The UAAA form can be used for a new scope of work with concurrence of the DB Contractor and TxDOT as long as the design and construction responsibilities have not changed. Each UAAA is subject to the review and approval of TxDOT, prior to its becoming effective for any purpose and prior to any work being initiated thereunder. The Owner agrees to keep and track costs for each UAAA separately from other work being performed.

(b) For purposes of this Paragraph 16(b), "**Utility Adjustment Field Modification**" shall mean any horizontal or vertical design change from the Plans included in a Utility Assembly previously approved by TxDOT, due either to design of the Project or to conditions not accurately reflected in the approved Utility Assembly (e.g., shifting the alignment of an 8 inch water line to miss a modified or new roadway drainage structure). A Utility Adjustment Field Modification agreed upon by the DB Contractor and the Owner does not require a UAAA, provided that the modified Plans have been submitted to TxDOT for its review and comment. A minor change (e.g., an additional water valve, an added Utility marker at a ROW line, a change in vertical bend, etc.) will not be considered a Utility Adjustment Field Modification and will not require a UAAA, but shall be shown in the documentation required pursuant to Paragraph 14.

(c) This Agreement does not alter and shall not be construed in any way to alter the obligations, responsibilities, benefits, rights, remedies, and claims between the DB Contractor and TxDOT to design and construct the Project, including the Adjustment.

17. **Entire Agreement.** This Agreement embodies the entire agreement between the parties and there are no oral or written agreements between the parties or any representations made which are not expressly set forth herein.

18. **Assignment; Binding Effect; TxDOT as Third-Party Beneficiary.** Neither the Owner nor the DB Contractor may assign any of its rights or delegate any of its duties under this Agreement without the prior written consent of the other party and of TxDOT, which consent may not be unreasonably withheld or delayed; *provided, however*, that the DB Contractor may assign any of its rights and/or delegate any of its duties to TxDOT or to any other entity engaged by TxDOT to fulfill the DB Contractor's obligations, at any time without the prior consent of the Owner.

    This Agreement shall bind the Owner, the DB Contractor and their successors and permitted assigns, and nothing in this Agreement nor in any approval subsequently provided by any party hereto shall be construed as giving any benefits, rights, remedies, or claims to any other person, firm, corporation or other entity, including, without limitation, any contractor or other party retained for the Adjustment work or the public in general; *provided, however*, that the Owner and the DB Contractor agree that although TxDOT is not a party to this Agreement, TxDOT is intended to be a third-party beneficiary to this Agreement.

19. **Breach by the Parties.**

    (a) If the Owner claims that the DB Contractor has breached any of its obligations under this Agreement, the Owner will notify the DB Contractor and TxDOT in writing of such breach, and the DB Contractor shall have **30 days** following receipt of such notice in which to cure such breach, before the Owner may invoke any remedies which may be available to it as a result of such breach; *provided, however*, that both during and after such period TxDOT shall have the right, but not the obligation, to cure any breach by the DB Contractor. Without limiting the generality of the foregoing:

        (1) TxDOT shall have no liability to the Owner for any act or omission committed by the DB Contractor in connection with this Agreement, including without limitation any claimed defect in any design or construction work supplied by the DB Contractor or by its Subcontractors; and

        (2) In no event shall TxDOT be responsible for any repairs or maintenance to the Owner Utilities adjusted pursuant to this Agreement.

    (b) If the DB Contractor claims that the Owner has breached any of its obligations under this Agreement, the DB Contractor will notify the Owner and TxDOT in writing of such breach, and the Owner shall have **30 days** following receipt of such notice in which to cure such breach, before the DB Contractor may invoke any remedies which may be available to it as a result of such breach.

20. **Traffic Control.** The DB Contractor shall provide traffic control or shall reimburse the Owner for the DB Contractor's share (if any, as specified in Paragraph 4) of the costs for traffic control made necessary by the Adjustment work performed by either the DB Contractor or the Owner pursuant to this Agreement, in compliance with the requirements of the Texas *Manual on Uniform Traffic Control Devices*. Betterment percentages calculated in Paragraph 9 shall also apply to traffic control costs.

21. **Notices.** Except as otherwise expressly provided in this Agreement, all notices or communications pursuant to this Agreement shall be sent or delivered to the following:

Owner:	Owener Contact Address Line #1 Address Line #2 City, State Zip Phone: ( ) - Fax: ( ) -
DB Contractor:	DB Contact Address Line #1 Address Line #2 City, State Zip Phone: ( ) - Fax: ( ) -

A party sending notice of default of this Agreement to another party shall also send a copy of such notice to TxDOT at the following address:

Texas Department of Transportation
Attention: Alternative Delivery Division
6230 E Stassney Lane
Austin, TX 78744

Any notice or demand required herein shall be given (a) personally, (b) by certified or registered mail, postage prepaid, return receipt requested, or (c) by reliable messenger or overnight courier to the appropriate address set forth above. Any notice served personally shall be deemed delivered upon receipt, and any notice served by certified or registered mail or by reliable messenger or overnight courier shall be deemed delivered on the date of receipt as shown on the addressee's registry or certification of receipt or on the date receipt is refused as shown on the records or manifest of the U.S. Postal Service or such courier. Any party may designate any other address for this purpose by written notice to all other parties; TxDOT may designate another address by written notice to all parties.

22. **Approvals.** Any acceptance, approval, or any other like action (collectively "**Approval**") required or permitted to be given by the DB Contractor, the Owner or TxDOT pursuant to this Agreement:

(a) Must be in writing to be effective (except if deemed granted pursuant hereto);

(b) Shall not be unreasonably withheld or delayed; and if Approval is withheld, such withholding shall be in writing and shall state with specificity the reason for withholding such Approval, and every effort shall be made to identify with as much detail as possible what changes are required for Approval; and

(c) Except for approvals by TxDOT, and except as may be specifically provided otherwise in this Agreement, shall be deemed granted if no response is provided to the party requesting an Approval within the time period prescribed by this Agreement (or if no time period is prescribed, then **14 calendar days**), commencing upon actual receipt by the party from which an Approval is requested or required, of a request for Approval from the requesting party. All requests for Approval shall be sent out by the requesting party to the other party in accordance with Paragraph 21.

23. **Time.**

(a) Time is of the essence in the performance of this Agreement.

(b) All references to "days" herein shall be construed to refer to calendar days, unless otherwise stated.

(c) No party shall be liable to another party for any delay in performance under this Agreement from any cause beyond its control and without its fault or negligence ("**Force Majeure**"), such as acts of God, acts of civil or military authority, fire, earthquake, strike, unusually severe weather, floods or power blackouts.

24. **Continuing Performance.** In the event of a dispute, the Owner and the DB Contractor agree to continue their respective performance hereunder to the extent feasible in light of the dispute, including paying billings, and such continuation of efforts and payment of billings shall not be construed as a waiver of any legal right.

25. **Equitable Relief.** The DB Contractor and the Owner acknowledge and agree that delays in Adjustment of the Owner Utilities will impact the public convenience, safety and welfare, and that (without limiting the parties' remedies hereunder) monetary damages would be inadequate to compensate for delays in the construction of the Project. Consequently, the parties hereto (and TxDOT as well, as a third-party beneficiary) shall be entitled to specific performance or other equitable relief in the event of any breach of this Agreement which threatens to delay construction of the Project; *provided, however*, that the fact that specific performance or other equitable relief may be granted shall not prejudice any claims for payment or otherwise related to performance of the Adjustment work hereunder.

26. **Authority.** The Owner and the DB Contractor each represent and warrant to the other party that the warranting party possesses the legal authority to enter into this Agreement and that it has taken all actions necessary to exercise that authority and to lawfully authorize its undersigned signatory to execute this Agreement and to bind such party to its terms. Each person executing this Agreement on behalf of a party warrants that he or she is duly authorized to enter into this Agreement on behalf of such party and to bind it to the terms hereof.

27. **Cooperation.** The parties acknowledge that the timely completion of the Project will be influenced by the ability of the Owner (and its contractors) and the DB Contractor to coordinate their activities, communicate with each other, and respond promptly to reasonable requests. Subject to the terms and conditions of this Agreement, the Owner and the DB Contractor agree to take all steps

reasonably required to coordinate their respective duties hereunder in a manner consistent with the DB Contractor's current and future construction schedules for the Project.

28. **Termination.** If the Project is canceled or modified so as to eliminate the necessity of the Adjustment work described herein, then the DB Contractor shall notify the Owner in writing and the DB Contractor reserves the right to thereupon terminate this Agreement. Upon such termination, the parties shall negotiate in good faith an amendment that shall provide mutually acceptable terms and conditions for handling the respective rights and liabilities of the parties relating to such termination.

29. **Nondiscrimination.** Each party hereto agrees, with respect to the work performed by such party pursuant to this Agreement that such party shall not discriminate on the grounds of race, color, sex, national origin or disability in the selection and/or retention of contractors and consultants, including procurement of materials and lease of equipment.

30. **Applicable Law, Jurisdiction and Venue.** This Agreement shall be governed by the Laws of the State of Texas, without regard to the Conflict of Laws principles thereof. Venue for any action brought to enforce this Agreement or relating to the relationship between any of the parties shall be the District Court of _____ County, Texas [or the United States District Court for the Western District of Texas (Austin)].

31. **Relationship of the Parties.** This Agreement does not in any way, and shall not be construed to, create a principal/agent or joint venture relationship between the parties hereto and under no circumstances shall the Owner or the DB Contractor be considered as or represent itself to be an agent of the other.

32. **Waiver of Consequential Damages.** No party hereto shall be liable to any other party to this Agreement, whether in contract, tort, equity, or otherwise (including negligence, warranty, indemnity, strict liability, or otherwise) for any punitive, exemplary, special, indirect, incidental, or consequential damages, including, without limitation, loss of profits or revenues, loss of use, claims of customers, or loss of business opportunity.

33. **Captions.** The captions and headings of the various paragraphs of this Agreement are for convenience and identification only, and shall not be deemed to limit or define the content of their respective paragraphs.

34. **Counterparts.** This Agreement may be executed in any number of counterparts. Each such counterpart hereof shall be deemed to be an original instrument but all such counterparts together shall constitute one and the same instrument.

35. **Effective Date.** This Agreement shall become effective upon the later of (a) the date of signing by the last party (either the Owner or DB Contractor) signing this Agreement, and (b) the date of TxDOT's approval as indicated by the signature of TxDOT's representative below.

APPROVED BY:

TEXAS DEPARTMENT OF TRANSPORTATION

By: _____
[Printed Name]

By: _____
Authorized Signature

District Engineer (or designee)

Date: _____

OWNER

By: _____
[Print Owner Name]

By: _____
Duly Authorized Representative

[Title]
[Company]

Date: _____

DB CONTRACTOR

By: _____
[Print Name]

By: _____
Duly Authorized Representative

[Title]
[Company]

Date: _____

County: _____
ROW CSJ No.: _____
Const. CSJ No.: _____
Highway: _____
Fed. Proj. No.: _____
Limits: _____ to _____

EXHIBIT A

PLANS, SPECIFICATIONS, COST ESTIMATES AND ALLOCATION

Manufactured Products and Construction Materials Acknowledgment of Compliance

The Owner hereby acknowledges that all manufactured products and construction materials (as such terms are defined under 2 CFR Part 184 and described below) that it supplies for permanent incorporation into the Adjustment will be in conformance with 23 USC § 313, 23 CFR § 635.410 and 2 CFR Part 184 and will be produced in the United States to the extent required by such laws.

Per 2 CFR § 184.3, manufactured products means:

(1) Articles, materials, or supplies that have been:

(i) Processed into a specific form and shape; or

(ii) Combined with other articles, materials, or supplies to create a product with different properties than the individual articles, materials, or supplies.

(2) If an item is classified as an iron or steel product, a construction material, or a section 70917(c) material under 2 CFR § 184.4(e) and the definitions set forth in 2 CFR § 184.3, then it is not a manufactured product. However, an article, material, or supply classified as a manufactured product under 2 CFR § 184.4(e) and paragraph (1) of this definition may include components that are construction materials, iron or steel products, or section 70917(c) materials.

Per 2 CFR § 184.3 and 2 CFR § 184.6, construction materials include:

- *Non-ferrous metals*
- *Glass (including optic glass)*
- *Optical fiber*
- *Lumber*
- *Engineered wood*
- *Drywall*
- *Fiber optic cable (including drop cable)*
- *Plastic and polymer-based products (including polyvinylchloride, composite building materials, and polymers used in fiber optic cables)*

County: _____
ROW CSJ No.: _____
Const. CSJ No.: _____
Highway: _____
Fed. Proj. No.: _____
Limits: _____ to _____

Authorized Owner Representative:

_____
Signature

_____
Title

County: _____
ROW CSJ No.: _____
Const. CSJ No.: _____
Highway: _____
Fed. Proj. No.: _____
Limits: _____ to _____

EXHIBIT B

UTILITY ADJUSTMENT AGREEMENT AMENDMENT
(DB-ROW-U-UAAA-DM)

County: _____
ROW CSJ No.: _____
Const. CSJ No.: _____
Highway: _____
Fed. Proj. No.: _____
Limits: _____ to _____

UTILITY ADJUSTMENT AGREEMENT AMENDMENT
(DB Contractor-Managed)

(**Amendment No. _____ to Agreement No.: _____** -U-_____)

THIS AMENDMENT TO PROJECT UTILITY ADJUSTMENT AGREEMENT (this "Amendment"), by and between, [DB Contractor] hereinafter identified as the "**DB Contractor**" and [Utility Owner], hereinafter identified as the "**Owner**", is as follows:

WITNESSETH

WHEREAS, the STATE of TEXAS, acting by and through the Texas Department of Transportation, hereinafter identified as "**TxDOT**", proposes to construct the project identified above (the "Project", as more particularly described in the "Original Agreement", defined below); and

WHEREAS, pursuant to that certain Design-Build Contract ("DBC") by and between TxDOT and the DB Contractor with respect to the Project, the DB Contractor has undertaken the obligation to design, construct, and potentially maintain the Project, including causing the removal, relocation, or other necessary adjustment of existing Utilities impacted by the Project (collectively, "Adjustment"); and

WHEREAS, the Owner and DB Contractor are parties to that certain executed Project Utility Adjustment Agreement (PUAA) designated by the "Agreement No." indicated above, as amended by previous amendments, if any (the "Original Agreement"), which provides for the Adjustment of certain Utilities owned and/or operated by the Owner (the "Owner Utilities"); and

WHEREAS, the parties are required to utilize this Amendment form in order to modify the Original Agreement to add the Adjustment of Owner Utilities facilities not covered by the Original Agreement; and

WHEREAS, the parties desire to amend the Original Agreement to add additional Owner Utility facility(ies), on the terms and conditions hereinafter set forth.

NOW, THEREFORE, in consideration of the agreements contained herein, the parties hereto agree as follows:

1. **Amendment**. The Original Agreement is hereby amended as follows:

1.1 **Plans**.

(a) The description of the Owner Utilities and the proposed Adjustment of the Owner Utilities in the Original Agreement is hereby amended to add the following Utility facility(ies) ("**Additional Owner Utilities**") and proposed Adjustment(s) to the Owner Utilities described in the Original Agreement *[insert below a description of the affected facilities (by type, size and location) as well as a brief description of the nature of the Adjustment work to be performed (e.g., "adjust 12" waterline from approximately Highway Station 100+00 to approximately Highway Station 200+00)]*: _____.

(b) The Plans, as defined in Paragraph 1 of the Original Agreement, are hereby amended to add thereto the plans, specifications and cost estimates attached hereto as Exhibit A; and

(c) The Plans attached hereto as Exhibit A, along with this Amendment, shall be submitted upon execution to TxDOT in accordance with Paragraph 2 of the Original Agreement, and Paragraph 2 shall apply to this Amendment and the Plans attached hereto in the same manner as if this Amendment were the Original Agreement. If the Owner claims an Existing Utility Property Interest for any of the Additional Owner Utilities, documentation with respect to such claim shall be submitted to TxDOT as part of this Amendment and the attached Plans, in accordance with Paragraph 15(a) of the Original Agreement.

1.2 **Reimbursement of Owner's Indirect Costs.** For purposes of Paragraph 6 of the Original Agreement, the following terms apply to the Additional Owner Utilities and proposed Adjustment:

(a) DB Contractor agrees to reimburse the Owner its share of the Owner's indirect costs (e.g., engineering, inspection, testing, ROW) as identified in Exhibit A. When requested by the Owner, monthly progress payments will be made. The monthly payment will not exceed 90% of the estimated indirect work done to date. Once the indirect work is complete, final payment of the eligible indirect costs will be made. Intermediate payments shall not be construed as final payment for any items included in the intermediate payment.

(b) The Owner's indirect costs associated with Adjustment of the Owner Utilities shall be developed pursuant to the method checked and described below *[check only one (1) box]*:

☐ (1) Actual related indirect costs accumulated in accordance with:

(i) A work order accounting procedure prescribed by the applicable Federal or State regulatory body; or

(ii) Established accounting procedure developed by the Owner and which the Owner uses in its regular operations;

(either (i) or (ii) referred to as "**Actual Cost**"*)*, or

☐ (2) The agreed sum of $_____ ("**Agreed Sum**") as supported by the analysis of the Owner's estimated costs attached hereto as part of Exhibit A.

1.3 **Advancement of Funds by Owner for Construction Costs.**

(a) Advancement of Owner's share, if any, of estimated costs. Exhibit A shall identify all estimated engineering and construction-related costs, including labor, material, equipment and other miscellaneous construction items. Exhibit A shall also identify the Owner's and DB Contractor's respective shares of the estimated costs.

The Owner shall advance to the DB Contractor its allocated share, if any, of the estimated costs for construction and engineering work to be performed by DB Contractor, in accordance with the following terms:

☐ The Adjustment of the Owner's Utilities does not require advancement of funds.

☐ The Adjustment of the Owner's Utilities does require advancement of funds and the terms agreed to between the DB Contractor and Owner are listed below.

[Insert terms of advance funding to be agreed between DB Contractor and Owner.]

_____

(b) Adjustment Based on Actual Costs or Agreed Sum.

[Check the one (1) appropriate provision, if advancement of funds is required]:

☐ The Owner is responsible for its share of the DB Contractor Actual Cost for the Adjustment, including the identified Betterment. Accordingly, upon completion of all Adjustment work to be performed by both parties pursuant to this Amendment:

(i) The Owner shall pay to the DB Contractor the amount, if any, by which the Actual Cost of the Betterment (as determined in

Paragraph 9(b)) *plus* the Actual Cost of Owner's share of the Adjustment (based on the allocation set forth in Exhibit A) exceeds the estimated cost advanced by the Owner; or

(ii) The DB Contractor shall refund to the Owner the amount, if any, by which such advance exceeds such Actual Cost, as applicable.

☐ The Agreed Sum is the agreed and final amount due for the Adjustment, including any Betterment, under this Amendment. Accordingly, no adjustment (either up or down) of such amount shall be made based on Actual Costs.

1.4 **Responsibility for Costs of Adjustment Work.** For purposes of Paragraph 4 of the Original Agreement, responsibility for the Agreed Sum or Actual Cost, as applicable, of all Adjustment work to be performed pursuant to this Amendment shall be allocated between the DB Contractor and the Owner as identified in Exhibit A hereto and in accordance with §203.092 of the Texas Transportation Code. An allocation percentage may be determined by application of an eligibility ratio, if appropriate, as detailed in Exhibit A; *provided however*, that any portion of an Agreed Sum or Actual Cost attributable to Betterment shall be allocated 100% to the Owner in accordance with Paragraph 9 of the Original Agreement.

1.5 **Betterment**.

(a) Paragraph 9(b) (Betterment and Salvage) of the Original Agreement is hereby amended to add the following *[Check the one (1) box that applies, and complete if appropriate]*:

☐ The Adjustment of the Additional Owner Utilities, pursuant to the Plans as amended herein, does not include any Betterment.

☐ The Adjustment of the Additional Owner Utilities, pursuant to the Plans as amended herein, includes Betterment to the Additional Owner Utilities by reason of *[insert explanation, e.g. "replacing 12" pipe with 24" pipe]*: _____.

The DB Contractor has provided to the Owner comparative estimates for (i) all work to be performed by the DB Contractor pursuant to this Amendment, including work attributable to the Betterment, and (ii) the cost to perform such work without the Betterment, which estimates are hereby approved by the Owner. The estimated cost of the DB Contractor work under this Amendment which is attributable to Betterment is $_____, calculated by *subtracting* (ii) from (i). The percentage of the total cost of the DB Contractor work under this Amendment which is attributable to Betterment is _____%, calculated by *subtracting* (ii) from (i), which remainder is *divided* by (i).

(b) If the above Paragraph 1.5(a) identifies Betterment, the Owner shall advance to the DB Contractor, at least **10 Business Days** prior to the date scheduled for commencement of construction for Adjustment of the Additional Owner Utilities, the estimated cost attributable to Betterment as set forth in Paragraph 1.5(a) of this Amendment. If the Owner fails to advance payment to the DB Contractor on or before the foregoing deadline, the DB Contractor shall have the option of commencing and completing (without delay) the Adjustment work without installation of the applicable Betterment. *[Check the one (1) appropriate provision]*:

☐ The estimated cost stated in Paragraph 1.5(a) of this Amendment is the agreed and final amount due for Betterment under this Amendment, and accordingly no adjustment (either up or down) of such amount shall be made based on actual costs.

☐ The Owner is responsible for the DB Contractor Actual Cost for the identified Betterment. Accordingly, upon completion of all Adjustment work to be performed by both parties pursuant to this Amendment, (i) the Owner shall pay to the DB Contractor the amount, if any, by which the Actual Cost of the Betterment (determined as provided below in this paragraph) exceeds the estimated cost advanced by the Owner, or (ii) the DB Contractor shall refund to the Owner the amount, if any, by which such advance exceeds such Actual Cost, as applicable. Any additional payment by the Owner shall be due within **60 days** after the Owner's receipt of the DB Contractors invoice therefor, together with supporting documentation; any refund shall be due within **60 days** after completion of the Adjustment work under this Amendment. The Actual Cost of Betterment incurred by the DB Contractor shall be calculated by *multiplying* (i) the Betterment percentage stated in Paragraph 1.5(a) of this Amendment, by (ii) the Actual Cost of all work performed by the DB Contractor pursuant to this Amendment (including work attributable to the Betterment), as invoiced by the DB Contractor to the Owner.

(c) The determinations and calculations of Betterment described in this Amendment shall exclude right of way acquisition costs. Betterment in connection with right of way acquisition is addressed in Paragraph 15 of the Original Agreement.

1.6 **Miscellaneous**.

(a) The Owner and the DB Contractor agree to refer to this Amendment, designated by the "Amendment No." and "Agreement Number" indicated on page 1 above, on all future correspondence regarding the Adjustment work that is the subject of this Amendment and to track separately all costs relating to this Amendment and the Adjustment work described herein.

(b) *[Include any other proposed amendments allowed by applicable Law.]*

_____

2. **General.**
   (a) All capitalized terms used in this Amendment shall have the meanings assigned to them in the Original Agreement, except as otherwise stated herein.
   (b) This Amendment may be executed in any number of counterparts. Each such counterpart hereof shall be deemed to be an original instrument but all such counterparts together shall constitute one (1) and the same instrument.
   (c) Except as amended hereby, the Original Agreement shall remain in full force and effect. In no event shall the responsibility, as between the Owner and the DB Contractor, for the preparation of the Plans and the Adjustment of the Owner Utilities be deemed to be amended hereby.
   (d) This Amendment shall become effective upon the later of (a) the date of signing by the last party (either the Owner or the DB Contractor) signing this Amendment, and (b) the completion of TxDOT's review and approval as indicated by the signature of TxDOT's representative below.

APPROVED BY:

TEXAS DEPARTMENT OF TRANSPORTATION

By: _____
[Printed Name]

By: _____
Authorized Signature

District Engineer (or designee)

Date: _____

OWNER

By: _____
[Print Name]

By: _____
Duly Authorized Representative Signature

[Title]
[Company]

Date: _____

DB CONTRACTOR

By: _____
[Print Name]

By: _____
Duly Authorized Representative

[Title]
[Company]

Date: _____

County: _____
ROW CSJ No.: _____
Const. CSJ No.: _____
Highway: _____
Fed. Proj. No.: _____
Limits: _____ to _____

PROJECT UTILITY ADJUSTMENT AGREEMENT
(Owner-Managed)

Agreement No.: _____-U-_____

THIS AGREEMENT, by and between [DB Contractor], hereinafter identified as the "**DB Contractor**" and [Utility Owner], hereinafter identified as the "**Owner**", is as follows:

WITNESSETH

WHEREAS, the STATE OF TEXAS, acting by and through the Texas Department of Transportation, hereinafter identified as "TxDOT", is authorized to design, construct, operate, maintain, and improve projects as part of the state highway system throughout the State of Texas, all in conformance with the applicable provisions of Chapters 201, 203, 222, 223, 224 and 228 of the Texas Transportation Code, as amended; and

WHEREAS, TxDOT proposes to construct a project identified as the [Project Name] (the "Project") and classified as either Interstate, Toll or Traditional (meaning eligibility based on existing compensable interest in the land occupied by the facility to be relocated within the proposed highway right of way limits) as indicated below (*check one box*). Reimbursement will be authorized by the type of project selected below in conformance with Transportation Code 203.092,

☐ Interstate

☐ Toll

☐ Traditional

;and

WHEREAS, pursuant to that certain Design-Build Contract (the "DBC") by and between TxDOT and the DB Contractor with respect to the Project, the DB Contractor has undertaken the obligation to design, construct, finance, operate and maintain the Project and adhere to all requirements in the DBC; and

WHEREAS, the DB Contractor's duties pursuant to the DBC include causing the relocation, removal, or other necessary adjustment of the existing Utility(ies) impacted by the Project (collectively, "Adjustment"), subject to the provisions herein; and

WHEREAS, the Project may receive federal funding, financing and/or credit assistance; and

WHEREAS, the DB Contractor has notified the Owner that certain of its facilities and appurtenances (the "Owner Utility(ies)") are in locational conflict with the Project (and/or the Ultimate Configuration of the Project), and the Owner has decided to undertake the Adjustment of the Owner Utility(ies) and agrees that the "Project" will be constructed in accordance with §203.092 of the Texas Transportation Code, as amended, and 23 CFR 645 Subpart A (Utility Relocations, Adjustments and Reimbursement); and

WHEREAS, the Owner Utilities and the proposed Adjustment(s) of the Owner Utility(ies) are described as follows *[insert below a description of the affected facilities (by type, size and location) as well as a brief description of the nature of the Adjustment work to be performed (e.g., "adjust 12" waterline from approximately Highway Station 100+00 to approximately Highway Station 200+00")]:*

_____; and

WHEREAS, the Owner recognizes that time is of the essence in completing the work contemplated herein; and

WHEREAS, the DB Contractor and the Owner desire to implement the Adjustment of the Owner Utility(ies) by entering into this Agreement.

AGREEMENT

NOW, THEREFORE, in consideration of these premises and of the mutual covenants and agreements of the parties hereto and other good and valuable consideration, the receipt and sufficiency of which being hereby acknowledged, the DB Contractor and the Owner agree as follows:

1. **Preparation of Plans.** [*Check one box that applies:*]

☐ The DB Contractor has hired engineering firm(s) acceptable to the Owner to perform all engineering services needed for the preparation of plans, required specifications, and cost estimates, attached hereto as Exhibit A (collectively, the "Plans"), for the proposed Adjustment of the Owner Utilities. The DB Contractor represents and warrants that the Plans conform to the most recent Utility Accommodation Rules issued by the Texas Department of Transportation ("TxDOT"), set forth in 43 Texas Administrative Code, Part 1, Chapter 21, Subchapter C, *et seq*. (the "UAR"). By its execution of this Agreement or by the signing of the Plans, the Owner hereby approves and confirms that the Plans are in compliance with the "standards" described in Paragraph 3(a)(4).

☐ The Owner has provided plans, required specifications and cost estimates, attached hereto as Exhibit A (collectively, the "Plans"), for the proposed Adjustment of the Owner Utilities. The Owner represents and warrants that the Plans conform to the Utility Accommodation Rules issued by the Texas Department of Transportation ("TxDOT"), as set forth in 43 Texas Administrative Code Part 1, Chapter 21, Subchapter C, *et seq*. (the "UAR"). By its execution of this Agreement, the DB Contractor and the Owner hereby approve the Plans. The Owner also has provided to the DB Contractor a Utility plan view map illustrating the location of existing and proposed Utility facilities on the DB Contractor's right of way map of the Project. With regard to its preparation of the Plans, the Owner represents as follows *[check one box that applies]*:

☐ The Owner's employees were utilized to prepare the Plans, and the charges therefore do not exceed the Owner's typical costs for such work.

☐ The Owner utilized consulting engineers to prepare the Plans, and the fees for such work are not based upon a percentage of construction costs. Further, such fees encompass only the work necessary to prepare the Plans for Adjustment of the Owner Utilities described herein, and do not include fees for work done on any other project. The fees of the consulting engineers are reasonable and are comparable to the fees typically charged by consulting engineers in the locale of the Project for comparable work for the Owner.

2. **Review by TxDOT**. The parties hereto acknowledge and agree as follows:

(a) Upon execution of this Agreement by the DB Contractor and the Owner, the DB Contractor will submit this Agreement, together with the attached Plans, to TxDOT for its review and approval as part of a package referred to as a "Utility Assembly". The parties agree to cooperate in good faith to modify this Agreement and/or the Plans, as necessary and mutually acceptable to all parties, to respond to any comments made by TxDOT thereon. Without limiting the generality of the foregoing:

(1) The Owner agrees to respond (with comment and/or acceptance) to any modified Plans and/or Agreement prepared by the DB Contractor in response to TxDOT comments within **10 Business Days** after receipt of such modifications; and

(2) If the Owner originally prepared the Plans, the Owner agrees to modify the Plans in response to TxDOT comments and to submit such modified Plans to the DB Contractor for its comment and/or approval (and resubmit to TxDOT for its comment and/or approval) within **10 Business Days** after receipt of TxDOT's comments.

The Owner's failure to timely respond to any modified Plans submitted by the DB Contractor pursuant to this paragraph shall be deemed the Owner's approval of same. If the Owner fails to timely prepare modified Plans which are its responsibility hereunder, then the DB Contractor shall have the right to modify the Plans for the Owner's approval as if the DB Contractor had originally prepared the Plans. The DB Contractor shall be responsible for providing Plans to and obtaining comments on and approval of the Plans from the Owner. The process set forth in this paragraph will be repeated until the Owner, the DB Contractor and TxDOT have all approved this Agreement and the Plans.

(b) The parties hereto acknowledge and agree that TxDOT's review, comments, and/or approval of a Utility Assembly or any component thereof shall constitute TxDOT's approval of the location and manner in which a Utility Assembly will be installed, adjusted, or relocated within the State Highway right of way (the "ROW"), subject to the DB Contractor and Owner's satisfactory performance of the Adjustment work in accordance with the approved Plans. TxDOT has no duty to review Owner facilities or components for their quality or adequacy to provide the intended Utility service.

3. **Design and Construction Standards**.

(a) All design and construction performed for the Adjustment work which is the subject of this Agreement shall comply with and conform to the following:

(1) All applicable local and State Laws, regulations, decrees, ordinances and policies, including the UAR, the Utility Manual issued by TxDOT (to the extent its requirements are mandatory for the Utility Adjustment necessitated by the Project, communicated to the Owner by the DB Contractor or TxDOT), the requirements of the DBC, and the policies of TxDOT;

(2) All federal Laws, regulations, decrees, ordinances and policies applicable to projects receiving Federal funding, financing and/or credit assistance, including without limitation 23 CFR 645 Subparts A and B and the Buy America provisions of 23 U.S.C § , 2 CFR Part 184 and 23 CFR 635.410. Prior to the incorporation of any iron or steel products into the Adjustment, the Owner will submit to TxDOT and DB Contractor an executed TxDOT Form 1818 – Material Statement with proper attachments, issued and signed by the initial fabricator, supplier of materials, or Owner. Prior to the incorporation of any manufactured products or construction materials listed on Exhibit A, the Owner shall sign and submit to TxDOT and DB Contractor the acknowledgment of compliance set forth in Exhibit A hereto. The Owner shall supply, upon request by the DB Contractor or TxDOT, proof of compliance with the aforementioned Laws, rules and regulations prior to the commencement of construction;

(3) The terms of all governmental permits or other approvals, as well as any private approvals of third parties necessary for such work;

(4) The (i) published, current design practices regularly followed by the Owner in its own work, and (ii) standards of practice, and construction methods (collectively, "standards") which the Owner customarily applies to facilities comparable to the Owner Utilities that are constructed by the Owner or for the Owner by its contractors at the Owner's expense, which standards are current at the time this Agreement is signed by the Owner, and which the Owner has submitted to the DB Contractor in writing; and

(5) Owner agrees that all service meters must be placed outside of the State ROW.

(6) By signing this agreement, the Owner and the DB Contractor hereby certify that all materials, products, and components incorporated into this Adjustment shall comply with the requirements in 2 CFR Part 184.

(b) Such design and construction also shall be consistent and compatible with:

(1) The DB Contractor's current design and construction of the Project;

(2) The Ultimate Configuration for the Project; and

(3) Any other utilities being installed in the same vicinity.

The Owner acknowledges receipt from the DB Contractor of Project plans and Ultimate Configuration documents as necessary to comply with the foregoing. In case of any inconsistency among any of the standards referenced in this Agreement, the most stringent standard shall apply.

(c) The plans, specifications, and cost estimates contained in Exhibit A shall identify and detail all Utility facilities that the Owner intends to abandon in place rather than remove, including material type, quantity, size, age, and condition. No facilities containing hazardous or contaminated materials may be abandoned, but shall be specifically identified and removed in accordance with the requirements of subparagraph (a). It is understood and agreed that the DB Contractor shall not pay for the assessment and remediation or other corrective action relating to soil and ground water contamination caused by the utility facility prior to the removal.

4. **Construction by the Owner; Scheduling**.

(a) The Owner hereby agrees to perform the construction necessary to adjust the Owner Utility(ies). All construction work hereunder shall be performed in a good and workmanlike manner, and in accordance with the Plans (except as modified pursuant to Paragraph 17). The Owner agrees that during the Adjustment of the Owner Utilities, the Owner and its contractors will coordinate their work with the DB Contractor so as not to interfere with the performance of work on the Project by the DB Contractor or by any other party. "Interfere" means any action or inaction that interrupts, interferes, delays or damages Project work.

(b) The Owner may utilize its own employees or may retain such contractor or contractors as are necessary to adjust the Owner Utility(ies), through the procedures set forth in Form "Statement Covering Contract Work" attached hereto as Exhibit C. If the Owner utilizes its own employees for the Construction work portion of the Adjustment of Owner Utility(ies), this form is not required.

(c) The Owner shall obtain all permits necessary for the construction to be performed by the Owner hereunder, and the DB Contractor shall cooperate in that process as needed. The Owner shall submit a traffic control plan to the DB Contractor as required for Adjustment work to be performed on existing road rights of way.

(d) The Owner shall commence its construction for Adjustment of each Owner Utility hereunder promptly after (i) receiving written notice to proceed therewith from the DB Contractor, and (ii) any Project right of way necessary for such Adjustment has been acquired either by the DB Contractor (for adjusted facilities to be located within the Project right of way) or by the Owner (for adjusted facilities to be located outside of the Project right of way), or a right-of-entry permitting the Owner's construction has been obtained from the landowner by the DB Contractor or by the Owner with the DB Contractor's prior approval. The Owner shall notify the DB Contractor at least 72 hours prior to commencing construction for the Adjustment of each Owner Utility hereunder.

(e) The Owner shall expeditiously stake the survey of the proposed locations of the Owner Utility(ies) being adjusted, on the basis of the final approved Plans. The DB Contractor shall verify that the Owner Utility(ies), whether moving to a new location or remaining in

place, clear the planned construction of the Project as staked in the field as well as the Ultimate Configuration.

(f) The Owner shall complete all of the Owner Utility reconstruction and relocation work, including final testing and acceptance thereof *[check one box that applies]*:

☐ On or before **[Month] [Day]**, **20[19]**.

☐ A duration not to exceed _____ calendar days upon notice to proceed by the DB Contractor.

(g) The amount of reimbursement due to the Owner pursuant to this Agreement for the affected Adjustment(s) shall be reduced by 10% for each 30-day period (and by a pro rata amount of said 10% for any portion of a 30-day period) by which the final completion and acceptance date for the affected Adjustment(s) exceeds the applicable deadline. The provisions of this Paragraph 4(g) shall not limit any other remedy available to the DB Contractor at Law or in equity as a result of the Owner's failure to meet any deadline hereunder.

The above reduction applies except to the extent due to:

(1) Force Majeure as described in Paragraph 24(c);

(2) Any act or omission of the DB Contractor, if the Owner fails to meet any deadline established pursuant to Paragraph 4(f); or

(3) If the DB Contractor and/or TxDOT determine, in their sole discretion, that a delay in the relocation work is the result of circumstances beyond the control of the

Owner or the Owner's contractor and the DB Contractor will not reduce the reimbursement.

5. **Costs of the Work**.

(a) The Owner's costs for Adjustment of each Owner Utility shall be derived from:

(1) The accumulated total of costs incurred by the Owner for design and construction of such Adjustment, *plus*

(2) The Owner's other related costs to the extent permitted pursuant to Paragraph 5(b) (including without limitation the eligible engineering costs incurred by the Owner for design prior to execution of this Agreement), *plus*

(3) The Owner's right of way acquisition costs, if any, which are reimbursable pursuant to Paragraph 16.

(b) The Owner's costs associated with Adjustment of the Owner Utilities shall be developed pursuant to the method checked and described below *[check only one box]*:

☐ (1) Actual costs accumulated in accordance with a work order accounting procedure prescribed by the applicable Federal or State regulatory body ("**Actual Cost**");

☐ (2) Actual costs accumulated in accordance with an established accounting procedure developed by the Owner and which the Owner uses in its regular operations ("**Actual Cost**"); or

☐ (3) The agreed sum of $_____ ("**Agreed Sum**"), as supported by the analysis of estimated costs attached hereto as part of Exhibit A.

6. **Responsibility for Costs of Adjustment Work**. The Agreed Sum or Actual Cost, as applicable, of all work to be performed pursuant to this Agreement shall be allocated between the DB Contractor and the Owner as identified in Exhibit A and in accordance with § 203.092 of the Texas Transportation Code. An allocation percentage may be determined by application of an eligibility ratio, if appropriate, as detailed in Exhibit A; *provided, however*, that any portion of an Agreed Sum or Actual Cost attributable to Betterment shall be allocated 100% to the Owner in accordance with Paragraph 10. All costs charged to the DB Contractor by the Owner shall be reasonable and shall be computed using rates and schedules not exceeding those applicable to similar work performed by or for the Owner at the Owner's expense. Payment of the costs allocated to the DB Contractor pursuant to this Agreement (if any) shall be full compensation to the Owner for all costs incurred by the Owner in Adjusting the Owner Utilities (including without limitation costs of relinquishing and/or acquiring right of way).

7. **Billing, Payment, Records and Audits: Actual Cost Method**. The following provisions apply if the Owner's costs are developed under procedure (1) or (2) described in Paragraph 5(b):

   (a) After (i) completion of all Adjustment work to be performed pursuant to this Agreement, (ii) the DB Contractor's final inspection of the Adjustment work by Owner hereunder (and resolution of any deficiencies found), and (iii) receipt of an invoice complying with the applicable requirements of Paragraph 9, the DB Contractor shall pay to the Owner an amount equal to 90% of the DB Contractor's share of the Owner's costs as shown in such final invoice (less amounts previously paid, and applicable credits). After completion of the DB Contractor's audit referenced in Paragraph 7(c) and the parties' mutual determination of any necessary adjustment to the final invoice resulting therefrom, the DB Contractor shall make any final payment due so that total payments will equal the total amount of the DB Contractor's share reflected on such final invoice (as adjusted, if applicable).

   (b) When requested by the Owner and properly invoiced in accordance with Paragraph 9, the DB Contractor shall make intermediate payments to the Owner based upon the progress of the work completed at not more than monthly intervals, and such payments shall not exceed 90% of the DB Contractor's share of the Owner's eligible costs as shown in each such invoice (less applicable credits). Intermediate payments shall not be construed as final payment for any items included in the intermediate payment.

   (c) The Owner shall maintain complete and accurate cost records for all work performed pursuant to this Agreement. The Owner shall maintain such records for four (4) years after receipt of final payment hereunder. The DB Contractor and their respective representatives shall be allowed to audit such records during the Owner's regular business hours. Unsupported charges will not be considered eligible for reimbursement. The parties shall mutually agree upon (and shall promptly implement by payment or refund, as applicable) any financial adjustment found necessary by the DB Contractor's audit. TxDOT, the Federal Highway Administration (FHWA), and their respective representatives also shall be allowed to audit such records upon reasonable notice to the Owner, during the Owner's regular business hours.

8. **Billing and Payment: Agreed Sum Method**. If the Owner's costs are developed under procedure (3) described in Paragraph 5(b), then the DB Contractor shall pay its share of the Agreed Sum to the Owner after completion of:

   (a) All Adjustment work to be performed pursuant to this Agreement;

   (b) The DB Contractor's final inspection of the Adjustment work by Owner hereunder (and resolution of any deficiencies found); and

   (c) The receipt of an invoice complying with the applicable requirements of Paragraph 9.

9. **Invoices**. If the Owner's costs are developed under procedure (1) or (2) described in Paragraph 5(b), then Owner shall list each of the services performed, the amount of time spent and the date on which the service was performed. The original and three (3) copies of each invoice shall be submitted to the DB Contractor at the address for notices stated in Paragraph 22, unless otherwise directed by the DB Contractor pursuant to Paragraph 23, together with:

   (a) Such supporting information to substantiate all invoices as reasonably requested by the DB Contractor; and

   (b) Such waivers or releases of liens as the DB Contractor may reasonably require.

   The Owner shall make commercially reasonable efforts to submit final invoices not later than 120 days after completion of work. Final invoices shall include any necessary quitclaim deeds pursuant to Paragraph 16, and all applicable record drawings accurately representing the Adjustment as installed. The Owner hereby acknowledges and agrees that any right it may have for reimbursement of any of its costs not submitted to the DB Contractor within 12 months following completion of all Adjustment work to be performed by both parties pursuant to this Agreement shall be deemed to have been abandoned and waived. Invoices shall clearly delineate total costs and those costs that are reimbursable pursuant to the terms of this Agreement.

10. **Betterment**.

   (a) For purposes of this Agreement, the term "Betterment" means any upgrading of an Owner Utility being adjusted that is not attributable to the construction of the Project and is made solely for the benefit of and at the election of the Owner, including but not limited to an increase in the capacity, capability, efficiency or function of the adjusted Utility over that provided by the existing Utility facility or an expansion of the existing Utility facility; provided, however, that the following are not considered Betterments:

      (1) Any upgrading which is required for accommodation of the Project;

      (2) Replacement devices or materials that are of equivalent standards although not identical;

      (3) Replacement of devices or materials no longer regularly manufactured with the next highest grade or size;

(4) Any upgrading required by applicable Laws, regulations or ordinances;

(5) Replacement devices or materials which are used for reasons of economy (e.g., non-stocked items may be uneconomical to purchase); or

(6) Any upgrading required by the Owner's written "standards" meeting the requirements of Paragraph 3(a)(4) and deemed to be of direct benefit to the Project.

[Include the following for fiber optic Owner Utilities only:] Extension of an Adjustment to the nearest splice boxes shall not be considered a Betterment if required by the Owner in order to maintain its written telephony standards.

(b) It is understood and agreed that the DB Contractor will not pay for any Betterments and that the Owner shall not be entitled to payment therefor. No Betterment may be performed in connection with the Adjustment of the Owner Utilities which is incompatible with the Project or the Ultimate Configuration or which cannot be performed within the other constraints of applicable Law and any applicable governmental approvals, including without limitation the scheduling requirements thereunder. Accordingly, the parties agree as follows *[check the one box that applies and complete if appropriate]*:

☐ The Adjustment of the Owner Utilities pursuant to the Plans does not include any Betterment.

☐ The Adjustment of the Owner Utilities pursuant to the Plans includes Betterment to the Owner Utilities by reason of *[insert explanation, e.g. "replacing 12" pipe with 24" pipe]*: _____. The Owner has provided to the DB Contractor comparative estimates for (i) all costs for work to be performed by the Owner pursuant to this Agreement, including work attributable to the Betterment, and (ii) the cost to perform such work without the Betterment, which estimates are hereby approved by the DB Contractor. The estimated amount of the Owner's costs for work hereunder which is attributable to Betterment is $_____, calculated by *subtracting* (ii) from (i). The percentage of the total cost of the Owner's work hereunder which is attributable to Betterment is _____%, calculated by *subtracting* (ii) from (i), which remainder shall be *divided* by (i).

(c) If Paragraph 10(b) identifies Betterment, then the following shall apply:

(1) If the Owner's costs are developed under procedure (3) described in Paragraph 5(b), then the Agreed Sum stated in that Paragraph includes any credits due to the DB Contractor on account of the identified Betterment, and no further adjustment shall be made on account of same.

(2) If the Owner's costs are developed under procedure (1) or (2) described in Paragraph 5(b), the parties agree as follows *[If Paragraph 10(b) identifies Betterment and the Owner's costs are developed under procedure (1) or (2), check the one appropriate provision]*:

☐ The estimated cost stated in Paragraph 10(b) is the agreed and final amount due for Betterment hereunder. Accordingly, each intermediate invoice

submitted pursuant to Paragraph 7(b) shall include a credit for an appropriate percentage of the agreed Betterment amount, proportionate to the percentage of completion reflected in such invoice. The final invoice submitted pursuant to Paragraph 7(a) shall reflect the full amount of the agreed Betterment credit. For each invoice described in this paragraph, the credit for Betterment shall be applied before calculating the DB Contractor's share (pursuant to Paragraph 6) of the cost of the Adjustment work. No other adjustment (either up or down) shall be made based on actual Betterment costs.

☐ The Owner is responsible for the actual cost of the identified Betterment, determined by *multiplying* (a) the Betterment percentage stated in Paragraph 10(b), by (b) the actual cost of all work performed by the Owner pursuant to this Agreement (including work attributable to the Betterment), as invoiced by the Owner to the DB Contractor. Accordingly, each invoice submitted pursuant to either Paragraph 7(a) or Paragraph 7(b) shall credit the DB Contractor with an amount calculated by *multiplying* (x) the Betterment percentage stated in Paragraph 10(b), by (y) the amount billed on such invoice.

(d) The determinations and calculations of Betterment described in this Paragraph 10 shall exclude right of way acquisition costs. Betterment in connection with right of way acquisition is addressed in Paragraph 16.

11. **Salvage**. For any Adjustment from which the Owner recovers any materials and/or parts and retains or sells the same, after application of any applicable Betterment credit, the DB Contractor is entitled to a credit for the salvage value of such materials and/or parts. If the Owner's costs are developed under procedure (1) or (2) described in Paragraph 5(b), then the final invoice submitted pursuant to Paragraph 7(a) shall credit the DB Contractor with the full salvage value. If the Owner's costs are developed under procedure (3) described in Paragraph 5(b), then the Agreed Sum includes any credit due to the DB Contractor on account of salvage.

12. **Utility Investigations**. At the DB Contractor's request, the Owner shall assist the DB Contractor in locating any Utilities (including appurtenances) which are owned and/or operated by Owner and may be impacted by the Project. Without limiting the generality of the foregoing, in order to help assure that neither the adjusted Owner Utility(ies) nor existing, unadjusted Utility(ies) owned or operated by the Owner are damaged during construction of the Project, the Owner shall mark in the field the location of all such Utilities horizontally on the ground in advance of Project construction in the immediate area of such Utilities.

13. **Inspection and Ownership of Owner Utilities**.

(a) The DB Contractor shall have the right, at its own expense, to inspect the Adjustment work performed by the Owner or its contractors, during and upon completion of construction. All inspections of work shall be completed and any comment provided within **five (5) business days** after request for inspection is received.

(b) The Owner shall accept full responsibility for all future repairs and maintenance of the adjusted Owner Utilities. In no event shall the DB Contractor or TxDOT become

responsible for making any repairs or maintenance, or for discharging the cost of same. The provisions of this Paragraph 13(b) shall not limit any rights which the Owner may have against the DB Contractor if either party respectively damages any Owner Utility as a result of its respective Project activities.

14. **Design Changes**. The DB Contractor will be responsible for additional Adjustment design and responsible for additional construction costs necessitated by design changes to the Project made after approval of the Plans, upon the terms specified herein.

15. **Field Modifications**. The Owner shall provide the DB Contractor with documentation of any field modifications, including Utility Adjustment Field Modifications as well as minor changes as described in Paragraph 17(b), occurring in the Adjustment of the Owner Utility(ies).

16. **Real Property Interests**.

(a) The Owner has provided, or upon execution of this Agreement shall promptly provide to the DB Contractor, documentation acceptable to TxDOT indicating any right, title or interest in real property claimed by the Owner with respect to the Owner Utility(ies) in their existing location(s). Such claims are subject to TxDOT's approval as part of its review of the DB Contractor's Utility Assembly as described in Paragraph 2. Claims approved by TxDOT as to rights or interests are referred to herein as "**Existing Utility Property Interests**".

(b) If acquisition of any new easement or other interest in real property ("**Replacement Utility Property Interest**") is necessary for the Adjustment of any Owner Utility(ies), then the Owner shall be responsible for undertaking such acquisition. The Owner shall implement each acquisition hereunder expeditiously so that related Adjustment construction can proceed in accordance with the DB Contractor's Project schedules. The DB Contractor shall be responsible for its share (if any, as specified in Paragraph 6) of the actual and reasonable acquisition costs of any such Replacement Utility Property Interest (including without limitation the Owner's reasonable overhead charges and reasonable legal costs as well as compensation paid to the landowner), excluding any costs attributable to Betterment as described in Paragraph 16(c), and subject to the provisions of Paragraph 16(e); *provided, however*, that all acquisition costs shall be subject to the DB Contractor's prior written approval. Eligible acquisition costs shall be segregated from other costs on the Owner's estimates and invoices. Any such Replacement Utility Property Interest shall have a written valuation and shall be acquired in accordance with applicable Law.

(c) The DB Contractor shall pay its share only for a replacement in kind of an Existing Utility Property Interest (e.g., in width and type), unless a Replacement Utility Property Interest exceeding such standard:

(1) Is required in order to accommodate the Project or by compliance with applicable Law; or

(2) Is called for by the DB Contractor in the interest of overall Project economy.

Any Replacement Utility Property Interest which is not the DB Contractor's cost responsibility pursuant to the preceding sentence shall be considered a Betterment to the

extent that it upgrades the Existing Utility Property Interest which it replaces, or in its entirety if the related Owner Utility was not installed pursuant to an Existing Utility Property Interest. Betterment costs shall be solely the Owner's responsibility.

(d) For each Existing Utility Property Interest located within the Project right of way, upon completion of the related Adjustment work and its acceptance by the Owner, the Owner agrees to execute a quitclaim deed or other appropriate documentation relinquishing such Existing Utility Property Interest to TxDOT, unless the affected Owner Utility is remaining in its original location or is being reinstalled in a new location within the area subject to such Existing Utility Property Interest. All quitclaim deeds or other relinquishment documents shall be subject to TxDOT's approval as part of its review of the Utility Assembly as described in Paragraph 2. For each Existing Utility Property Interest relinquished by the Owner, the DB Contractor shall do one (1) of the following to compensate the Owner for such Existing Utility Property Interest, as appropriate:

(1) If the Owner acquires a Replacement Utility Property Interest for the affected Owner Utility, the DB Contractor shall reimburse the Owner for the DB Contractor's share of the Owner's actual and reasonable acquisition costs in accordance with Paragraph 16(b) and subject to Paragraph 16(c); or

(2) If the Owner does not acquire a Replacement Utility Property Interest for the affected Owner Utility, the DB Contractor shall compensate the Owner for the DB Contractor's share of the market value of such relinquished Existing Utility Property Interest, as mutually agreed between the Owner and the DB Contractor and supported by a written valuation.

The compensation, if any, provided to the Owner pursuant to either subparagraph (i) or subparagraph (ii) above shall constitute complete compensation to the Owner for the relinquished Existing Utility Property Interest and any Replacement Utility Property Interest, and no further compensation shall be due to the Owner from the DB Contractor or TxDOT on account of such Existing Utility Property Interest or Replacement Utility Property Interest.

(e) All Utility Joint Use Acknowledgments (UJUA) or Right of Way Utility and Leasing Information System (RULIS), Form 1082 shall be subject to TxDOT approval as part of its review of the Utility Assembly as described in Paragraph 2. A Utility Joint Use Acknowledgment is required where an Existing Utility Property Interest exists and the existing or proposed Utility will remain or be adjusted within the boundaries of the Existing Utility Property Interest. All other accommodations not located on Existing Utility Property Interests will require a Utility Installation Request, Form 1082.

17. **Amendments and Modifications**. This Agreement may be amended or modified only by a written instrument executed by the parties hereto, in accordance with Paragraph 17(a) or Paragraph 17(b) below:

(a) Except as otherwise provided in Paragraph 17(b), any amendment or modification to this Agreement or the Plans attached hereto shall be implemented by a Utility Adjustment Agreement Amendment ("**UAAA**") in the form of Exhibit B hereto (DB-ROW-U-UAAA-OM). The UAAA form can be used for a new scope of work with concurrence of the DB

Contractor and TxDOT as long as the Design and Construction responsibilities have not changed. Each UAAA is subject to the review and approval of TxDOT, prior to its becoming effective for any purpose and prior to any work being initiated thereunder. The Owner agrees to keep and track costs for each UAAA separately from other work being performed.

(b) For purposes of this Paragraph 17(b), "**Utility Adjustment Field Modification**" shall mean any horizontal or vertical design change from the Plans included in a Utility Assembly previously approved by TxDOT, due either to design of the Project or to conditions not accurately reflected in the approved Utility Assembly (e.g., shifting the alignment of an 8 inch water line to miss a modified or new roadway drainage structure). A Utility Adjustment Field Modification agreed upon by the DB Contractor and the Owner does not require a UAAA, provided that the modified Plans have been submitted to TxDOT for its review and comment. A minor change (e.g., an additional water valve, an added Utility marker at a ROW line, a change in vertical bend, etc.) will not be considered a Utility Adjustment Field Modification and will not require a UAAA, but shall be shown in the documentation required pursuant to Paragraph 15.

18. **Entire Agreement**. This Agreement embodies the entire agreement between the parties and there are no oral or written agreements between the parties or any representations made which are not expressly set forth herein.

19. **Assignment; Binding Effect; TxDOT as Third Party Beneficiary**. The Owner and the DB Contractor may not assign any of its rights or delegate any of its duties under this Agreement without the prior written consent of the other parties and of TxDOT, which consent may not be unreasonably withheld or delayed; *provided, however*, that the DB Contractor may assign any of its rights and/or delegate any of its duties to TxDOT or to any other entity with which TxDOT contracts to fulfill the DB Contractor's obligations at any time without the prior consent of the Owner.

This Agreement shall bind the Owner, the DB Contractor and their successors and permitted assigns, and nothing in this Agreement nor in any approval subsequently provided by any party hereto shall be construed as giving any benefits, rights, remedies, or claims to any other person, firm, corporation or other entity, including, without limitation, any contractor or other party retained for the Adjustment work or the public in general; *provided, however*, that the Owner and the DB Contractor agree that although TxDOT is not a party to this Agreement, TxDOT is intended to be a third-party beneficiary to this Agreement.

20. **Breach by the Parties**.

(a) If the Owner claims that the DB Contractor has breached any of its obligations under this Agreement, the Owner will notify the DB Contractor and TxDOT in writing of such breach, and the DB Contractor shall have **30 days** following receipt of such notice in which to cure such breach, before the Owner may invoke any remedies which may be available to it as a result of such breach; *provided, however*, that both during and after such period TxDOT shall have the right, but not the obligation, to cure any breach by the DB Contractor. Without limiting the generality of the foregoing:

(1) TxDOT shall have no liability to the Owner for any act or omission committed by the DB Contractor in connection with this Agreement; and

(2) In no event shall TxDOT be responsible for any repairs or maintenance to the Owner Utilities adjusted pursuant to this Agreement.

(b) If the DB Contractor claims that the Owner has breached any of its obligations under this Agreement, the DB Contractor will notify the Owner and TxDOT in writing of such breach, and the Owner shall have **30 days** following receipt of such notice in which to cure such breach, before the DB Contractor or the DB Contractor may invoke any remedies which may be available to it as a result of such breach.

21. **Traffic Control**. The DB Contractor shall provide traffic control or shall reimburse the Owner for the DB Contractor's share (if any, as specified in Paragraph 6) of the costs for traffic control made necessary by the Adjustment work performed by either the DB Contractor or the Owner pursuant to this Agreement, in compliance with the requirements of the Texas *Manual on Uniform Traffic Control Devices*. Betterment percentages calculated in Paragraph 10 shall also apply to the traffic control costs.

22. **Notices**. Except as otherwise expressly provided in this Agreement, all notices or communications pursuant to this Agreement shall be sent or delivered to the following:

Owner:
Owner Contact
Address Line #1
Address Line #2
City, State Zip
Phone: ( ) -
Fax: ( ) -

DB Contractor:
DB Contact
Address Line #1
Address Line #2
City, State Zip
Phone: ( ) -
Fax: ( ) -

A party sending a notice of default of this Agreement to another party shall also send a copy of such notice to TxDOT at the following address:

Texas Department of Transportation
Attention: Alternative Finance Division
6230 E Stassney Lane
Austin, Texas 78744

Any notice or demand required herein shall be given (a) personally, (b) by certified or registered mail, postage prepaid, return receipt requested, or (c) by reliable messenger or overnight courier to the appropriate address set forth above. Any notice served personally shall be deemed delivered upon receipt and served by certified or registered mail or by reliable messenger or overnight courier shall be deemed delivered on the date of receipt as shown on the addressee's registry or certification

of receipt or on the date receipt is refused as shown on the records or manifest of the U.S. Postal Service or such courier. Any party may designate any other address for this purpose by written notice to all other parties; TxDOT may designate another address by written notice to all parties.

23. **Approvals**. Any acceptance, approval, or any other like action (collectively "**Approval**") required or permitted to be given by either the DB Contractor or the Owner pursuant to this Agreement:

    (a) Must be in writing to be effective (except if deemed granted pursuant hereto);

    (b) Shall not be unreasonably withheld or delayed; and if Approval is withheld, such withholding shall be in writing and shall state with specificity the reason for withholding such Approval, and every effort shall be made to identify with as much detail as possible what changes are required for Approval; and

    (c) Except for approvals by TxDOT, and except as may be specifically provided otherwise in this Agreement, shall be deemed granted if no response is provided to the party requesting an Approval within the time period prescribed by this Agreement (or if no time period is prescribed, then **14 calendar days**), commencing upon actual receipt by the party from which an Approval is requested or required, of a request for Approval from the requesting party. All requests for Approval shall be sent out by the requesting party to the other party in accordance with Paragraph 22.

24. **Time; Force Majeure**.

    (a) Time is of the essence in the performance of this Agreement.

    (b) All references to "days" herein shall be construed to refer to calendar days, unless otherwise stated.

    (c) No party shall be liable to another party for any delay in performance under this Agreement from any cause beyond its control and without its fault or negligence ("**Force Majeure**"), such as acts of God, acts of civil or military authority, fire, earthquake, strike, unusually severe weather, floods or power blackouts. If any such event of Force Majeure occurs, the Owner agrees, if requested by the DB Contractor, to accelerate its efforts hereunder if reasonably feasible in order to regain lost time, so long as the DB Contractor agrees to reimburse the Owner for the reasonable and actual costs of such efforts.

25. **Continuing Performance**. In the event of a dispute, the Owner and the DB Contractor agree to continue their respective performance hereunder to the extent feasible in light of the dispute, including paying billings, and such continuation of efforts and payment of billings shall not be construed as a waiver of any legal right.

26. **Equitable Relief**. The DB Contractor and the Owner acknowledge and agree that delays in Adjustment of the Owner Utilities will impact the public convenience, safety and welfare, and that (without limiting the parties' remedies hereunder) monetary damages would be inadequate to compensate for delays in the construction of the Project. Consequently, the parties hereto (and TxDOT as well, as a third party beneficiary) shall be entitled to specific performance or other equitable relief in the event of any breach of this Agreement which threatens to delay construction of the Project; *provided, however*, that the fact that specific performance or other equitable relief

may be granted shall not prejudice any claims for payment or otherwise related to performance of the Adjustment work hereunder.

27. **Authority**. The Owner and the DB Contractor each represent and warrant to the other party that the warranting party possesses the legal authority to enter into this Agreement and that it has taken all actions necessary to exercise that authority and to lawfully authorize its undersigned signatory to execute this Agreement and to bind such party to its terms. Each person executing this Agreement on behalf of a party warrants that he or she is duly authorized to enter into this Agreement on behalf of such party and to bind it to the terms hereof.

28. **Cooperation**. The parties acknowledge that the timely completion of the Project will be influenced by the ability of the Owner (and its contractors) and the DB Contractor to coordinate their activities, communicate with each other, and respond promptly to reasonable requests. Subject to the terms and conditions of this Agreement, the Owner and the DB Contractor agree to take all steps reasonably required to coordinate their respective duties hereunder in a manner consistent with the DB Contractor's current and future construction schedules for the Project. The Owner further agrees to require its contractors to coordinate their respective work hereunder with the DB Contractor.

29. **Termination**. If the Project is canceled or modified so as to eliminate the necessity of the Adjustment work described herein, then the DB Contractor shall notify the Owner in writing and the DB Contractor reserves the right to thereupon terminate this Agreement. Upon such termination, the parties shall negotiate in good faith an amendment that shall provide mutually acceptable terms and conditions for handling the respective rights and liabilities of the parties relating to such termination.

30. **Nondiscrimination**. Each party hereto agrees, with respect to the work performed by such party pursuant to this Agreement that such party shall not discriminate on the grounds of race, color, sex, national origin or disability in the selection and/or retention of contractors and consultants, including procurement of materials and lease of equipment.

31. **Applicable Law, Jurisdiction and Venue**. This Agreement shall be governed by the Laws of the State of Texas, without regard to the conflict of laws principles thereof. Venue for any action brought to enforce this Agreement or relating to the relationship between any of the parties shall be the District Court of _____ County, Texas [or the United States District Court for the Western District of Texas (Austin)].

32. **Relationship of the Parties.** This Agreement does not in any way, and shall not be construed to, create a principal/agent or joint venture relationship between the parties hereto and under no circumstances shall the Owner or the DB Contractor be considered as or represent itself to be an agent of the other.

33. **Waiver of Consequential Damages**. No party hereto shall be liable to any other party to this Agreement, whether in contract, tort, equity, or otherwise (including negligence, warranty, indemnity, strict liability, or otherwise), for any punitive, exemplary, special, indirect, incidental,

or consequential damages, including, without limitation, loss of profits or revenues, loss of use, claims of customers, or loss of business opportunity.

34. **Captions**. The captions and headings of the various paragraphs of this Agreement are for convenience and identification only, and shall not be deemed to limit or define the content of their respective paragraphs.

35. **Counterparts**. This Agreement may be executed in any number of counterparts. Each such counterpart hereof shall be deemed to be an original instrument but all such counterparts together shall constitute one (1) and the same instrument.

36. **Effective Date**. This Agreement shall become effective upon the later of (a) the date of signing by the last party (either the Owner or the DB Contractor) signing this Agreement, and (b) the date of TxDOT's approval as indicated by the signature of TxDOT's representative below.

APPROVED BY:

TEXAS DEPARTMENT OF TRANSPORTATION

By: _____
[Printed Name]

By: _____
Authorized Signature

District Engineer (or designee)

Date: _____

OWNER

By: _____
[Print Owner Name]

By: _____
Duly Authorized Representative

[Title]
[Company]

Date: _____

DB CONTRACTOR

By: _____
[Print Name]

By: _____
Duly Authorized Representative

[Title]
[Company]

Date: _____

County: _____
ROW CSJ No.: _____
Const. CSJ No.: _____
Highway: _____
Fed. Proj. No.: _____
Limits: _____ to _____

EXHIBIT A

PLANS, SPECIFICATIONS, COST ESTIMATES AND ALLOCATION

Manufactured Products and Construction Materials Acknowledgment of Compliance

The Owner hereby acknowledges that all manufactured products and construction materials (as such terms are defined under 2 CFR Part 184 and described below) permanently incorporated into the Adjustment will be in conformance with 23 USC § 313, 23 CFR § 635.410 and 2 CFR Part 184 and will be produced in the United States to the extent required by such laws.

Per 2 CFR § 184.3, manufactured products means:

(1) Articles, materials, or supplies that have been:

(i) Processed into a specific form and shape; or

(ii) Combined with other articles, materials, or supplies to create a product with different properties than the individual articles, materials, or supplies.

(2) If an item is classified as an iron or steel product, a construction material, or a section 70917(c) material under 2 CFR § 184.4(e) and the definitions set forth in 2 CFR § 184.3, then it is not a manufactured product. However, an article, material, or supply classified as a manufactured product under 2 CFR § 184.4(e) and paragraph (1) of this definition may include components that are construction materials, iron or steel products, or section 70917(c) materials.

Per 2 CFR § 184.3 and 2 CFR § 184.6, construction materials include:

- *Non-ferrous metals*
- *Glass (including optic glass)*
- *Optical fiber*
- *Lumber*
- *Engineered wood*
- *Drywall*
- *Fiber optic cable (including drop cable)*
- *Plastic and polymer-based products (including polyvinylchloride, composite building materials, and polymers used in fiber optic cables)*

County: _____
ROW CSJ No.: _____
Const. CSJ No.: _____
Highway: _____
Fed. Proj. No.: _____
Limits: _____ to _____

Authorized Owner Representative:

_____
Signature

_____
Title

County: _____
ROW CSJ No.: _____
Const. CSJ No.: _____
Highway: _____
Fed. Proj. No.: _____
Limits: _____ to _____

EXHIBIT B

UTILITY ADJUSTMENT AGREEMENT AMENDMENT
(DB-ROW-U-UAAA-OM)

County: _____
ROW CSJ No.: _____
Const. CSJ No.: _____
Highway: _____
Fed. Proj. No.: _____
Limits: _____ to _____

UTILITY ADJUSTMENT AGREEMENT AMENDMENT
(Owner-Managed)

(**Amendment No. _____ to Agreement No.**: _____- U -_____)

THIS AMENDMENT TO PROJECT UTILITY ADJUSTMENT AGREEMENT (this "Amendment"), by and between, [DB Contractor] hereinafter identified as the "**DB Contractor**" and [Utility Owner], hereinafter identified as the "**Owner**", is as follows:

WITNESSETH

WHEREAS, the STATE of TEXAS, acting by and through the Texas Department of Transportation, hereinafter identified as "**TxDOT**", proposes to construct the project identified above (the "Project", as more particularly described in the "Original Agreement", defined below); and

WHEREAS, pursuant to that certain Design-Build Contract ("DBC") by and between TxDOT and the DB Contractor with respect to the Project, the DB Contractor has undertaken the obligation to design, construct, and potentially maintain the Project, including causing the removal, relocation, or other necessary adjustment of existing Utilities impacted by the Project (collectively, "Adjustment"); and

WHEREAS, the Owner and DB Contractor are parties to that certain executed Project Utility Adjustment Agreement (PUAA) designated by the "Agreement No." indicated above, as amended by previous amendments, if any (the "Original Agreement"), which provides for the Adjustment of certain Utilities owned and/or operated by the Owner (the "Owner Utilities"); and

WHEREAS, the parties are required to utilize this Amendment form in order to modify the Original Agreement to add the Adjustment of Owner Utilities facilities not covered by the Original Agreement; and

WHEREAS, the parties desire to amend the Original Agreement to add additional Owner Utility facility(ies), on the terms and conditions hereinafter set forth.

NOW, THEREFORE, in consideration of the agreements contained herein, the parties hereto agree as follows:

1. **Amendment**. The Original Agreement is hereby amended as follows:

Plans.

(a) The description of the Owner Utilities and the proposed Adjustment of the Owner Utilities in the Original Agreement is hereby amended to add the following Utility

facility(ies) ("**Additional Owner Utilities**") and proposed Adjustment(s) *[insert below a description of the affected facilities (by type, size and location) as well as a brief description of the nature of the Adjustment work to be performed (e.g., "adjust 12" waterline from approximately Highway Station 100+00 to approximately Highway Station 200+00")]*: _____.

(b) The Plans, as defined in Paragraph 1 of the Original Agreement, are hereby amended to add thereto the plans, specifications and cost estimates attached hereto as Exhibit A.

(c) The Plans attached hereto as Exhibit A, along with this Amendment, shall be submitted upon execution to TxDOT in accordance with Paragraph 2 of the Original Agreement, and Paragraph 2 shall apply to this Amendment and the Plans attached hereto in the same manner as if this Amendment were the Original Agreement. If the Owner claims an Existing Utility Property Interest for any of the Additional Owner Utilities, documentation with respect to such claim shall be submitted to TxDOT as part of this Amendment and the attached Plans, in accordance with Paragraph 16(a) of the Original Agreement.

(d) Paragraph 4(f) of the Original Agreement is hereby amended to add the following deadline for the Adjustment of the Additional Owner Utilities *[check one (1) box that applies]*:

☐ Owner shall complete all of the Utility reconstruction and relocation work, including final testing and acceptance thereof, on or before **[Month] [Day], 2019**.

☐ Owner shall complete all of the Utility reconstruction and relocation work, including final testing and acceptance thereof, within _____ **calendar days** after delivery to Owner of a notice to proceed by DB Contractor;

(e) For purposes of Paragraph 5(b) of the Original Agreement, the Owner's costs associated with Adjustment of the Additional Owner Utilities shall be developed pursuant to the method checked and described below *[check only one (1) box]*:

☐ (1) Actual costs accumulated in accordance with a work order accounting procedure prescribed by the applicable Federal or State regulatory body ("**Actual Cost**");

☐ (2) Actual costs accumulated in accordance with an established accounting procedure developed by the Owner and which the Owner uses in its regular operations ("**Actual Cost**"); or

☐ (3) The agreed sum of $_____("**Agreed Sum**"), as supported by the analysis of estimated costs attached hereto as part of Exhibit A.

(f) For purposes of Paragraph 6 of the Original Agreement, responsibility for the Agreed Sum or Actual Cost, as applicable, of all Adjustment work to be performed pursuant to this Amendment shall be allocated between the DB Contractor and the Owner as identified in Exhibit A and in accordance with §203.092 of the Texas Transportation

Code. An allocation percentage may be determined by application of an eligibility ratio, if appropriate, as detailed in Exhibit A; *provided, however*, that any portion of an Agreed Sum or Actual Cost attributable to Betterment shall be allocated 100% to the Owner in accordance with Paragraph 10 of the Original Agreement.

(g) Paragraph 10(b) of the Original Agreement is hereby amended to add the following *[Check the one (1) box that applies]*:

☐ The Adjustment of the Additional Owner Utilities, pursuant to the Plans as amended herein, does not include any Betterment.

☐ The Adjustment of the Additional Owner Utilities, pursuant to the Plans as amended herein, includes Betterment to the Additional Owner Utilities by reason of *[insert explanation, e.g. "replacing 12" pipe with 24" pipe]*: _____.

The Owner has provided to the DB Contractor comparative estimates for (i) all costs for work to be performed by the Owner pursuant to this Amendment, including work attributable to the Betterment, and (ii) the cost to perform such work without Betterment, which estimates are hereby approved by the DB Contractor. The estimated amount of the Owner's costs for work under this Agreement which is attributable to Betterment is $_____, calculated by *subtracting* (ii) from (i). The percentage of the total cost of the Owner's work hereunder which is attributable to Betterment is _____%, calculated by *subtracting* (ii) from (i) which remainder shall be *divided* by (i).

(h) The following shall apply to any Betterment described in Paragraph 1(g) of this Amendment:

(i) If the Owner's costs are developed under procedure (3) described in Paragraph 1(e) of this Amendment, then the Agreed Sum stated in that Paragraph includes any credits due to the DB Contractor on account of the identified Betterment, and no further adjustment shall be made on account of same.

(ii) If the Owner's costs are developed under procedure (1) or (2) described in Paragraph 1(e) of this Amendment, the parties agree as follows *[check the one (1) appropriate provision]*:

☐ The estimated cost stated in Paragraph 1(g) of this Amendment is the agreed and final amount due for Betterment under this Amendment. Accordingly, each intermediate invoice submitted for Adjustment(s) of the Additional Owner Utilities pursuant to Paragraph 7(b) of the Original Agreement shall credit the DB Contractor with an appropriate amount of the agreed Betterment amount, proportionate to the percentage of completion reflected in such invoice. The final invoice submitted for Adjustment(s) of the Additional Owner Utilities pursuant to Paragraph 7(a) of the Original Agreement shall reflect the full amount of the agreed Betterment credit. For each invoice described in this paragraph, the credit for Betterment shall be applied before calculating the DB Contractor's share (pursuant to Paragraph 1(e) of this Amendment) of the cost of the

Adjustment work. No other adjustment (either up or down) shall be made based on actual Betterment costs.

☐ The Owner is responsible for the Actual Cost of the identified Betterment, determined by *multiplying* (a) the Betterment percentage stated in Paragraph 1(g) of this Amendment, by (b) the actual cost of all work performed by the Owner pursuant to this Amendment (including work attributable to the Betterment), as invoiced by the Owner to the DB Contractor. Accordingly, each invoice submitted for Adjustment of the Additional Owner Utilities pursuant to either Paragraph 7(a) or Paragraph 7(b) of the Original Agreement shall credit the DB Contractor with an amount calculated by *multiplying* (x) the Betterment percentage stated in Paragraph 1(g) of this Amendment, by (y) the amount billed on such invoice.

(i) The determinations and calculations of Betterment described in this Amendment shall exclude right of way acquisition costs. Betterment in connection with ROW acquisition is addressed in Paragraph 16 of the Original Agreement.

(j) Owner and the DB Contractor agree to refer to this Amendment, designated by the "Amendment No." and "Agreement number" indicated on page 1 above, on all future correspondence regarding the Adjustment work that is the subject of this Amendment and to track separately all costs relating to this Amendment and the Adjustment work described herein.

(k) *[Include any other proposed amendments in compliance with the applicable Law.]*

_____

2. **General**.

(a) All capitalized terms used in this Amendment shall have the meanings assigned to them in the Original Agreement, except as otherwise stated herein.

(b) This Amendment may be executed in any number of counterparts. Each such counterpart hereof shall be deemed to be an original instrument but all such counterparts together shall constitute one (1) and the same instrument.

(c) Except as amended hereby, the Original Agreement shall remain in full force and effect. In no event shall the responsibility, as between the Owner and the DB Contractor, for the preparation of the Plans and the Adjustment of the Owner Utilities be deemed to be amended hereby.

(d) This Amendment shall become effective upon the later of (a) the date of signing by the last party (either the Owner or the DB Contractor) signing this Amendment, and (b) the completion of TxDOT's review and approval as indicated by the signature of TxDOT's representative below.

APPROVED BY:

TEXAS DEPARTMENT OF TRANSPORTATION

By: _____
[Printed Name]

By: _____
Authorized Signature

District Engineer (or designee)

Date: _____

OWNER

By: _____
[Print Owner Name]

By: _____
Duly Authorized Representative

[Title]
[Company]

Date: _____

DB CONTRACTOR

By: _____
[Print Name]

By: _____
Duly Authorized Representative

[Title]
[Company]

Date: _____

County: _____
ROW CSJ No.: _____
Const. CSJ No.: _____
Highway: _____
Fed. Proj. No.: _____
Limits: _____ to _____

EXHIBIT C

STATEMENT COVERING CONTRACT WORK

STATEMENT COVERING UTILITY CONSTRUCTION CONTRACT WORK

(AS APPEARING IN ESTIMATE)

U-No. _____

District: _____

County: _____ ROW CSJ No.: _____

Federal Project No.: _____ Highway No.: _____

I, _____, a duly authorized and qualified representative of _____, hereinafter referred to as **Owner**, am fully cognizant of the facts and make the following statements in respect to work which will or may be done on a contract basis as appears in the estimate to which this statement is attached.

It is more economical and/or expedient for **Owner** to contract this adjustment, or **Owner** is not adequately staffed or equipped to perform the necessary work on this project with its own forces to the extent as indicated on the estimate.

Procedure to be Used in Contracting Work

☐ A. Solicitation for bids is to be accomplished through open advertising and contract is to be awarded to the lowest qualified bidder who submits a proposal in conformity with the requirements and specifications for the work to be performed.

☐ B. Solicitation for bids is to be accomplished by circulating to a list of pre-qualified contractors or known qualified contractors and such contract is to be awarded to the lowest qualified bidder who submits a proposal in conformity with the requirements and specifications for the work to be performed. Such presently known contractors are listed below:

1. _____
2. _____
3. _____
4. _____
5. _____

☐ C. The work is to be performed under an existing continuing contract under which certain work is regularly performed for **Owner** and under which the lowest available costs are developed. (If only part of the contract work is to be done under an existing contract, give detailed information by attachment hereto.)

☐ D. The utility proposes to contract outside the foregoing requirements and therefore evidence in support of its proposal is attached to the estimate in order to obtain the concurrence of the State, and the Federal Highway Administration Division Engineer where applicable, prior to taking action thereon (approval of the agreement shall be considered as approval of such proposal).

☐ E. The utility plans and specifications, with the consent of the State, will be included in the construction contract awarded by the State.

_____ _____
[Signature of Officer/Representative] Date

_____
[Title of Officer/Representative]

DB Contractor's Utility Design Coordinator

Utility No Conflict Sign-Off Form

Utility Design Coordinator: _____

Date plans received: _____

Utility Company: _____

Assembly "U" number: _____

Type of Utilities: _____

Date on Utility's plans: _____ No. of sheets in Utility's plans: _____

I, _____, the Utility Design Coordinator (UDC) on behalf of the DB Contractor (_____) certify that a review of the above referenced Utility Plans concerning the proposed highway improvements on the _____ has been completed and have not identified any conflicts between the Utility's proposed relocation and any design features.

Design features include but are not limited to pavement structures, drainage facilities, bridges, retaining walls, traffic signals, illumination, signs, foundations, duct/conduit, ground boxes, erosion control facilities, water quality facilities and other DB Contractor-Managed Utilities.

Any design changes to the _____ after the signing of this form will be coordinated through the DB Contractor's Utility Manager and the affected Utility Owner.

☐ Check box if any areas of concern and insert comments below:

Utility Design Coordinator: (UDC)

_____ (Signature)

_____ Date

_____ (Print Name)

Utility Coordination Firm:

_____ (Print Name)

This form must be completed/signed and included in each Utility Assembly submitted to the Texas Department of Transportation.

DB Contractor's Utility Manager

Utility No Conflict Sign-Off Form

Utility Manager: _____

Date plans received: _____

Utility Company: _____

Assembly "U" number: _____

Type of Utilities: _____

Date on Utility's plans: _____ No. of sheets in Utility's plans: _____

I, _____, the Utility Manager (UM) working on behalf of the DB Contractor (_____) certify that a review of the above referenced Utility Plans concerning the proposed highway improvements on the _____ has been completed and have not identified any conflicts between the Utility's proposed relocation and any existing and/or proposed Utilities.

The proposed Utility Plans conform to Title 43 of the Texas Administrative Code, Section 21.31 – 21.56 of the Utility Accommodation Rules.

☐ Check box if any areas of concern and insert comments below:

Utility Manager: (UM)

_____ (Signature) _____ Date

_____ (Print Name)

Utility Design Coordinator: (UDC)

_____ (Signature) _____ Date

_____ (Print Name)

Utility Coordination Firm:

_____ (Print Name)

This form must be completed/signed and included in each Utility Assembly submitted to the Texas Department of Transportation.

NOTICE OF REQUIRED ACCOMMODATION (NORA)

Date

Utility Company
Contact Person
Address
City, State, Zip

CMRR #: _____

County:
Highway:
Limits From:
Limits To:
CCSJ:
ROW CSJ:

Dear Contact Person:

This letter is being sent to you as a result of the identification of a conflict between TxDOT's subject project and your utility, which is/are located Conflict Location(s). This/these conflict(s) will necessitate that the structure(s) be relocated.

It is imperative to have all Utility companies complete their relocations by our construction date of [*insert date as shown in the Project schedule:* date]. The project plans are shown in Attachment "A."

You may rely upon this notice and the provided plans to begin preliminary utility activities, such as design, subsurface utility engineering, and material procurement. If TxDOT or its DB Contractor changes its plans subsequent to this notice, your company will be entitled to reimbursement of additional eligible expenses incurred **relative to the specific change**, regardless of the Utility's status under §203.092 of the Transportation Code.

A Utility Permit, Project Utility Adjustment Agreement (PUAA), Utility Adjustment Agreement Amendment (UAAA), and/or Abbreviated Utility Assembly (AUA) (Attachment "B"), defining the terms, the timeline of the relocation, and the extent to which the Utility company's costs of such relocation are reimbursable, if at all, is required within 90 days of date of this letter, unless otherwise agreed to. **Physical relocation shall not commence until the Utility Permit, PUAA, UAAA, and/or AUA is executed by both parties.**

If your company wishes to relocate its utilities within the highway right of way, we must work together to determine the appropriate location of the relocated utility. Upon determination of the new location, within the highway right of way, and Utility Permit application by the Utility company, TxDOT will issue a Utility Permit, as applicable, allowing the installation of the utility.

If a PUAA, UAAA, AUA, and/or Utility Permit is not executed by [*insert date as agreed upon with TxDOT:* date], then TxDOT may initiate actions to relocate/accommodate the utility under the authority of law. This may include relocating the utility at the sole cost and expense of the Utility company, injunctive action, or exercising the power of eminent domain.

If the Parties have not agreed to resolve the conflict, an escalation process will be utilized. If the Utility company fails to resolve the conflicts within the timeline specified in the PUAA, UAAA, or AUA, TxDOT will invoke its right under Transportation Code §203.0935 to relocate the utility itself.

All reimbursements are subject to audit and standard documentation requirements, in accordance with TxDOT policies.

Please contact point of contact at email address or phone number if additional information is needed.

Sincerely,

Sender
Utility Manager, Company

Enclosure

Texas Department of Transportation

DESIGN-BUILD SPECIFICATIONS Items 10-29

Attachment 19-1

Cross Street Design Criteria

September 2025

Attachment 19-1: Cross Street Design Criteria

Intersecting Street	Jurisdiction	Roadway Classification	Design Speed (mph)	Position (over/under)	Design Vehicle	Clear Zone for Cross Street	Curb and Gutter	Sidewalk and Min. Usable Width (LF)	Proposed Work						Proposed Work						Future Work				
									Eastbound Side				Westbound Side		Southbound Side				Northbound Side		Southbound Side			Northbound Side	
									U-Turn (each)	Through Lanes	Turn Lanes	Median	Through Lanes	U-Turn (each)	U-Turn (each)	Through Lanes	Turn Lanes	Median	Through Lanes	U-Turn (each)	U-Turn (each)	Through Lanes	Median	Through Lanes	U-Turn (each)
FM 2403 Connector	TxDOT	Urban Collector	45	Under SH 99	WB-62	6 ft from FOC	Y	10 ft	0	1 (12')	0	2' Flush	1 (12')	1											
FM 2403	TxDOT	Urban Collector	45	at Grade	WB-62	6 ft from FOC	Y	N/A	0	1 (12')	0	0	1 (12')	0											
Briscoe Drive	City of Alvin	Urban Collector	40	at Grade	WB-62	6 ft from FOC	N	N/A																	
Childress Drive	City of Alvin	Urban Collector	40	at Grade	WB-62	6 ft from FOC	Y	N/A																	
FM 1462	TxDOT	Urban Collector	40	Under SH 99	WB-62	6 ft from FOC	Y	N/A	1	1 (12')	2 (12')	2' Flush	2 (12')	1											
Mustang Road	City of Alvin	Urban Collector	40	Under SH 99	WB-62	6 ft from FOC	Y	N/A	0	1 (12')	2 (12')	2' Flush	1 (12')	0											
Jephson Lane	City of Alvin	Urban Collector	40	at Grade	WB-62	6 ft from FOC	N	N/A																	
Fairway Drive	City of Alvin	Urban Collector	40	Under SH 99	WB-62	6 ft from FOC	Y	N/A	0	1 (12')	2 (12')	2' Flush	1 (12')	0											
East South Street	City of Alvin	Urban Collector	40	Under SH 99	WB-62	6 ft from FOC	Y	N/A	0	1 (12')	2 (12')	2' Flush	1 (12')	1											
East House Street	City of Alvin	Urban Collector	40	Under SH 99	WB-62	6 ft from FOC	Y	N/A	0	1 (12')	2 (12')	2' Flush	1 (12')	0											
Delta Drive	City of Alvin	Urban Collector	40	at Grade	WB-62	6 ft from FOC	N	N/A																	
SH 6	TxDOT	Urban Collector	45	Under SH 99	WB-62	6 ft from FOC	Y	N/A	1	2 (12')	2 (12')	12' Raised	2 (12')	1											
Dickinson Road/FM 517[1]	TxDOT	Urban Collector	50	Under SH 99	WB-62	6 ft from FOC	Y	N/A	0	2 (12')	2 (12')	6' Raised	1 (12')	0											
Steele Road	City of Alvin	Urban Collector	40	at Grade	WB-62	6 ft from FOC	N	N/A																	
Wheeler Drive[2]	City of Alvin	Urban Collector	40	Under SH 99	WB-62	6 ft from FOC	Y	N/A	1	2 (12')	1 (12')	6' Flush	1 (12')	1											
FM 528[2]	TxDOT	Urban Collector	45	Under SH 99	WB-62	6 ft from FOC	Y	6 ft	1	2 (12')	2 (12')	10' Flush	2 (12')	1											
Clifford Street	Brazoria County	Urban Collector	40	Under SH 99	WB-62	6 ft from FOC	Y	N/A							0	1 (12')	2 (12')	2' Flush	1 (12')	0					
Future Thoroughfare	Brazoria County	Urban Collector	40	Under SH 99	WB-62	6 ft from FOC	Y	N/A														2 (12')	2' Flush	2 (12')	
Georgetown Parkway	City of Friendswood	Urban Collector	40	Under SH 99	WB-62	6 ft from FOC	Y	N/A							0	2 (12')	2 (12')	2' Flush	2 (12')	0					
West Boulevard	City of League City	Urban Collector	40	Under SH 99	WB-62	6 ft from FOC	Y	N/A							1	2 (12')	2 (12')	2' Flush	2 (12')	0					
Longfellow Drive	City of League City	Urban Collector	40	Under SH 99	WB-62	6 ft from FOC	Y	N/A							0	2 (12')	2 (12')	2' Flush	2 (12')	0					
McFarland Road	City of League City	Urban Collector	40	Under SH 99	WB-62	6 ft from FOC	Y	N/A							0	1 (12')	2 (12')	2' Flush	1 (12')	0					
Maple Leaf Drive	City of League City	Urban Collector	40	Under SH 99	WB-62	6 ft from FOC	Y	N/A							0	2 (12')	2 (12')	2' Flush	2 (12')	0					
Bay Area Blvd	City of League City	Urban Collector	40	Under SH 99	WB-62	6 ft from FOC	Y	N/A							1	2 (12')	2 (12')	2' Flush	2 (12')	1					
Landing Blvd	City of League City	Urban Collector	40	Under SH 99	WB-62	6 ft from FOC	Y	N/A							1	2 (12')	2 (12')	2' Flush	2 (12')	1					
Hobbs Road	City of League City	Urban Collector	40	Under SH 99	WB-62	6 ft from FOC	Y	N/A																	
Calder Road	City of League City	Urban Collector	40	Under SH 99	WB-62	6 ft from FOC	Y	N/A							0	2 (12')	1 (12')	4' Flush	2 (12')	0					

NOTES:
1) Includes 14' shoulder on EB side and WB side through lanes
2) Includes 10' shoulder on EB side and WB side through lanes

Texas Department of Transportation

DESIGN-BUILD SPECIFICATIONS Items 10-29

Attachment 19-2

Cross Street Typical Sections

September 2025

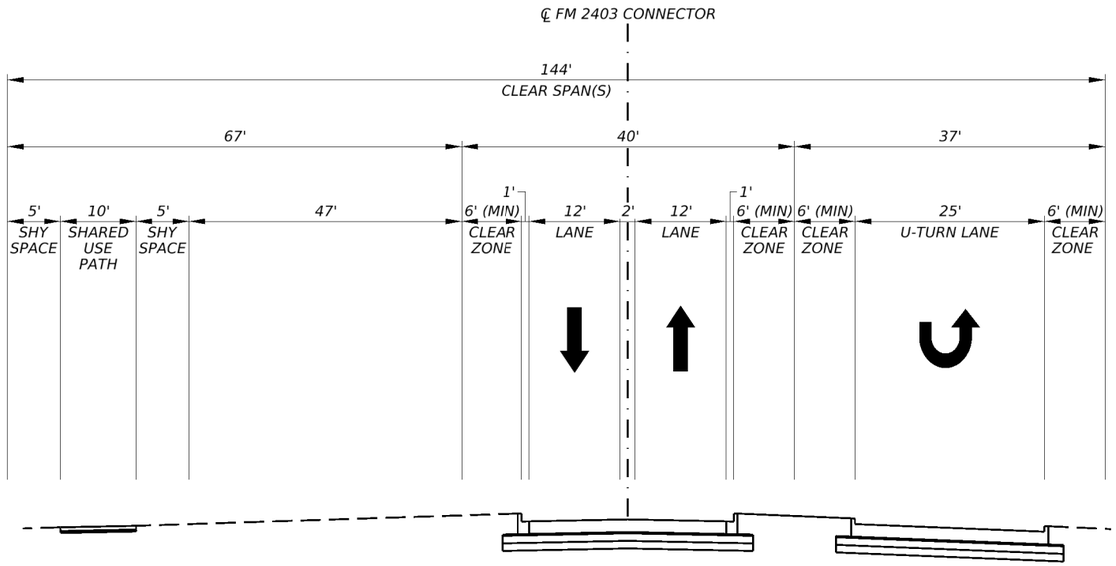

PROPOSED CROSS STREET SECTION
FM 2403 (CONNECTOR)
(NTS)

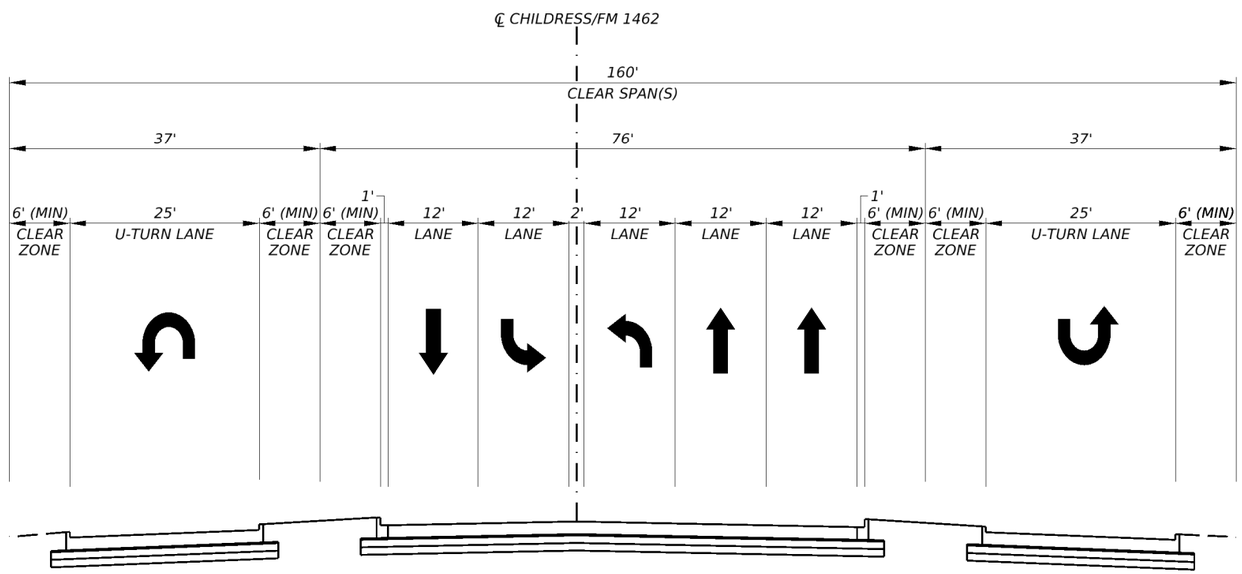

PROPOSED CROSS STREET SECTION
CHILDRESS/FM 1462
(NTS)

GENERAL NOTES:

1. THE PURPOSE OF THESE TYPICAL SECTIONS IS TO SHOW CROSS STREET INFORMATION ONLY.

2. TYPICALS ARE AT CENTER LINE OF MAIN LANES. DB CONTRACTOR TO DESIGN MEDIANS AT FRONTAGE ROADS TO END OF RIGHT OF WAY (ROW).

Texas Department of Transportation

GRAND PARKWAY SEGMENT B-1 DB PROJECT

ATTACHMENT 19-2 CROSS STREET TYPICAL SECTIONS

9-5-2025

©TxDOT

SHEET 1 OF 10

CONT	SECT	JOB	HIGHWAY
3510	001,ETC	01	SH 99

DIST	COUNTY	SHEET NO.
HOU	BRAZORIA/GALVESTON	01

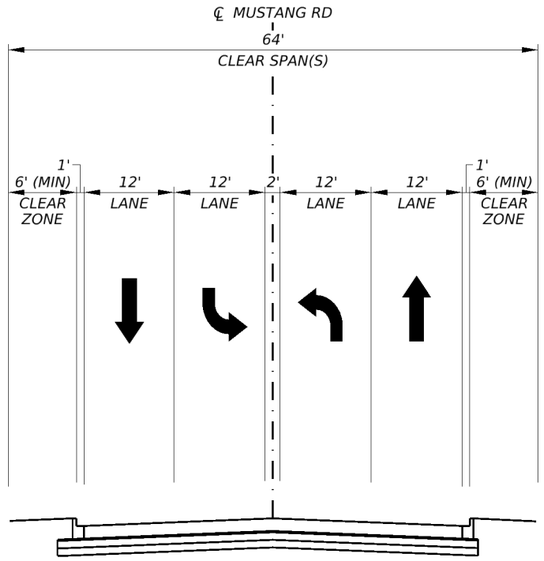

PROPOSED CROSS STREET SECTION
MUSTANG RD
(NTS)

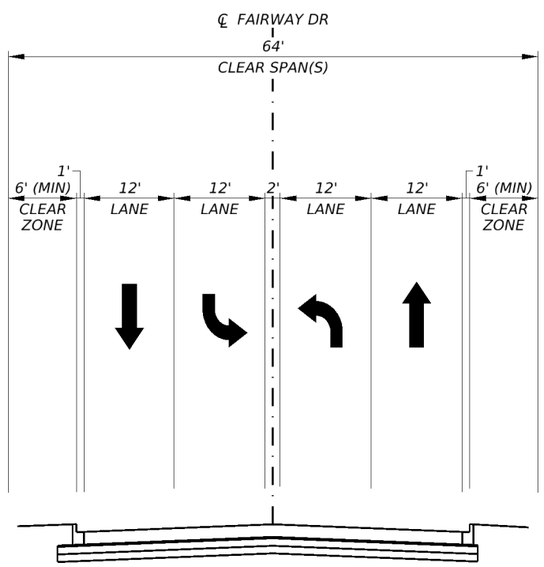

PROPOSED CROSS STREET SECTION
FAIRWAY DR
(NTS)

GENERAL NOTES:

1. THE PURPOSE OF THESE TYPICAL SECTIONS IS TO SHOW CROSS STREET INFORMATION ONLY.

2. TYPICALS ARE AT CENTER LINE OF MAIN LANES. DB CONTRACTOR TO DESIGN MEDIANS AT FRONTAGE ROADS TO END OF RIGHT OF WAY (ROW).

Texas Department of Transportation

GRAND PARKWAY
SEGMENT B-1 DB PROJECT

ATTACHMENT 19-2
CROSS STREET
TYPICAL SECTIONS

9-5-2025

©TxDOT

CONT	SECT	JOB	HIGHWAY
3510	001,ETC	01	SH 99

DIST	COUNTY	SHEET NO.
HOU	BRAZORIA/GALVESTON	02

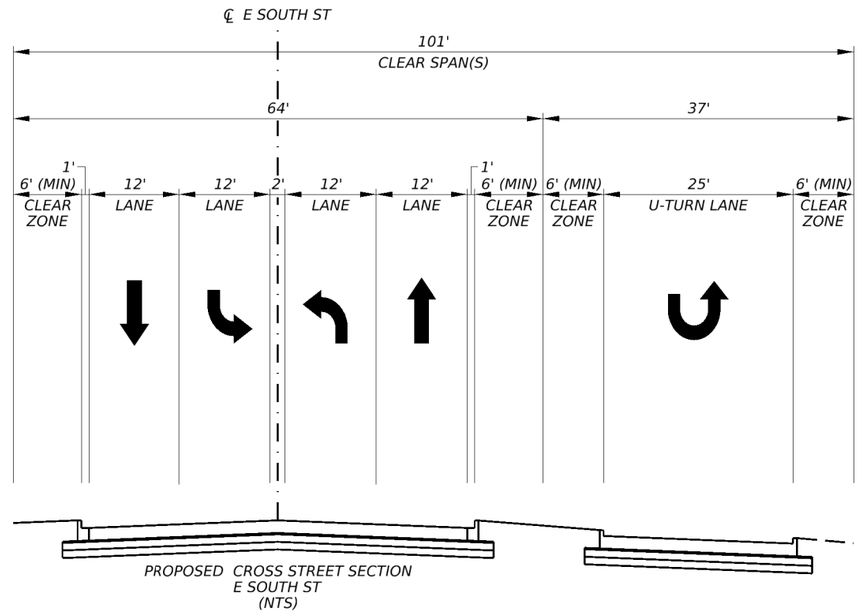

PROPOSED CROSS STREET SECTION
E SOUTH ST
(NTS)

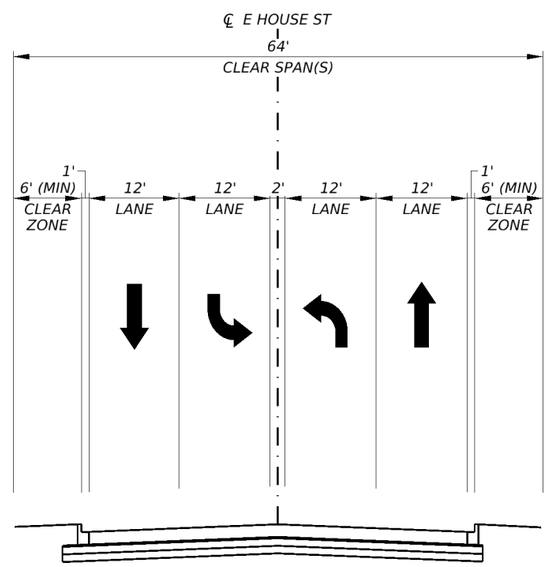

PROPOSED CROSS STREET SECTION
E HOUSE ST
(NTS)

GENERAL NOTES:

1. THE PURPOSE OF THESE TYPICAL SECTIONS IS TO SHOW CROSS STREET INFORMATION ONLY.

2. TYPICALS ARE AT CENTER LINE OF MAIN LANES. DB CONTRACTOR TO DESIGN MEDIANS AT FRONTAGE ROADS TO END OF RIGHT OF WAY (ROW).

Texas Department of Transportation

GRAND PARKWAY
SEGMENT B-1 DB PROJECT

ATTACHMENT 19-2
CROSS STREET
TYPICAL SECTIONS

9-5-2025

©TxDOT

SHEET 3 OF 10

CONT	SECT	JOB	HIGHWAY
3510	001,ETC	01	SH 99

DIST	COUNTY	SHEET NO.
HOU	BRAZORIA/GALVESTON	03

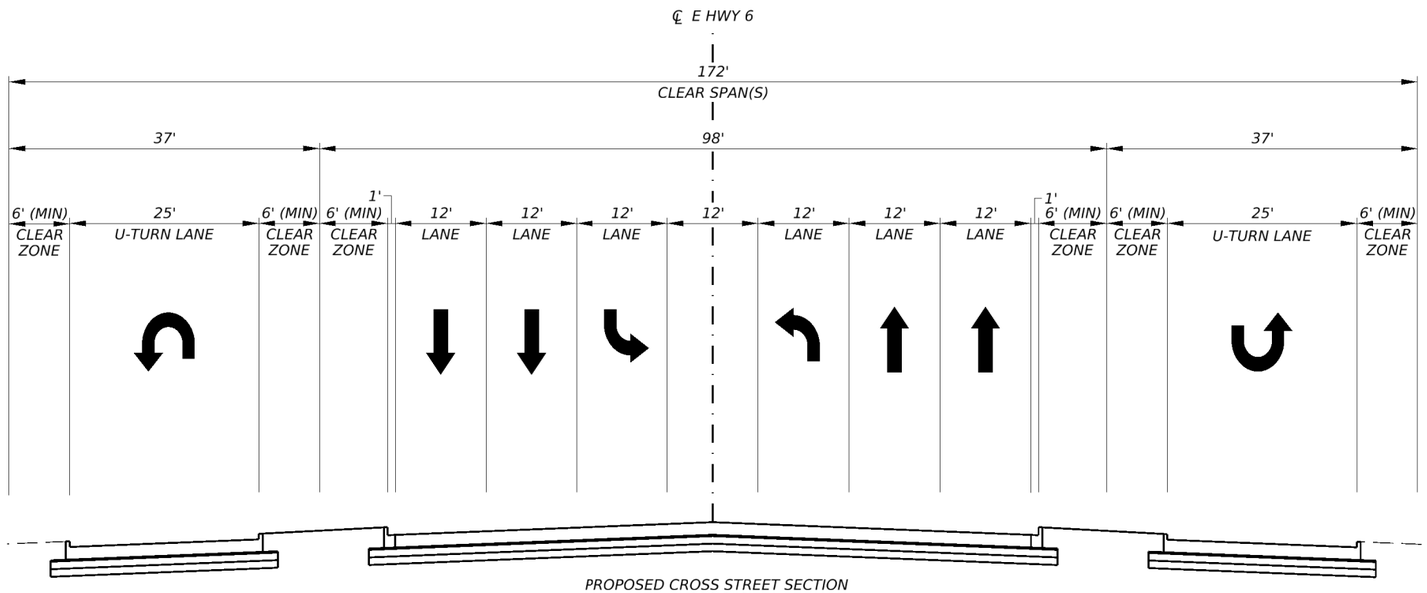

PROPOSED CROSS STREET SECTION
E HWY 6
(NTS)

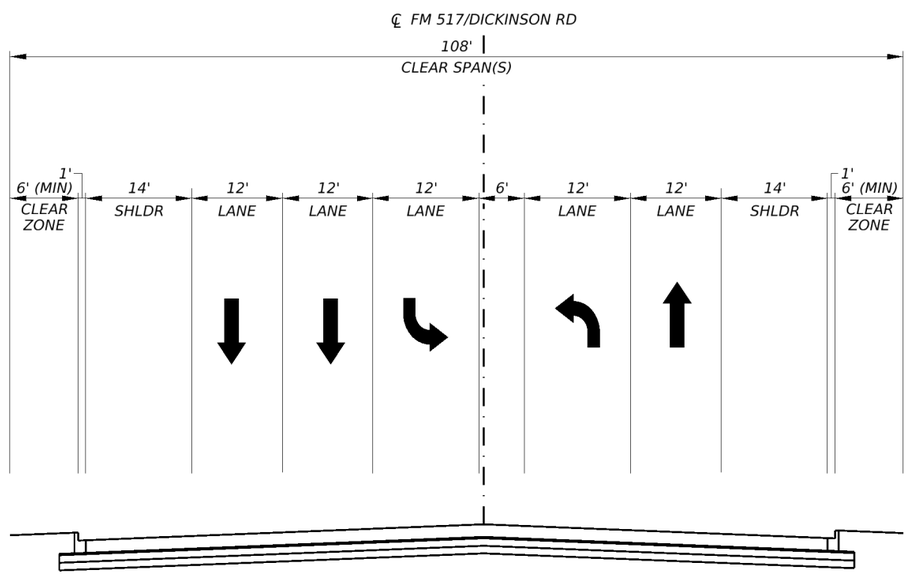

PROPOSED CROSS STREET SECTION
FM 517/DICKINSON RD
(NTS)

GENERAL NOTES:

1. THE PURPOSE OF THESE TYPICAL SECTIONS IS TO SHOW CROSS STREET INFORMATION ONLY.

2. TYPICALS ARE AT CENTER LINE OF MAIN LANES. DB CONTRACTOR TO DESIGN MEDIANS AT FRONTAGE ROADS TO END OF RIGHT OF WAY (ROW).

Texas Department of Transportation

GRAND PARKWAY SEGMENT B-1 DB PROJECT

ATTACHMENT 19-2 CROSS STREET TYPICAL SECTIONS

9-5-2025

©TxDOT

CONT	SECT	JOB	HIGHWAY
3510	001,ETC	01	SH 99

DIST	COUNTY	SHEET NO.
HOU	BRAZORIA/GALVESTON	04

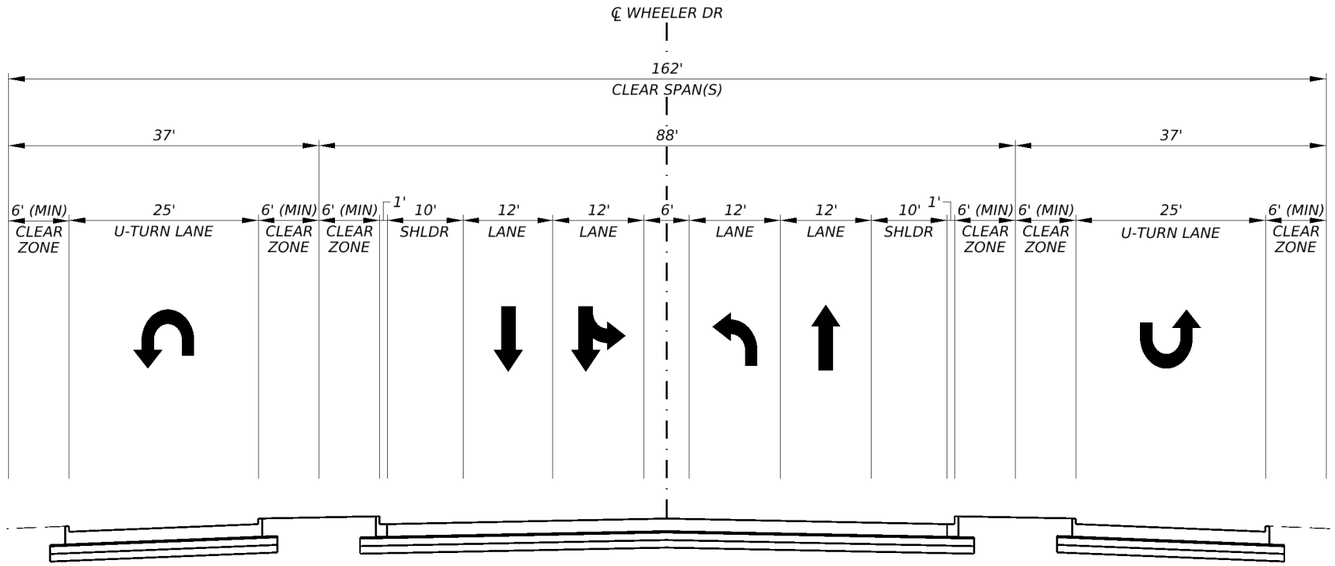

PROPOSED CROSS STREET SECTION
WHEELER DR
(NTS)

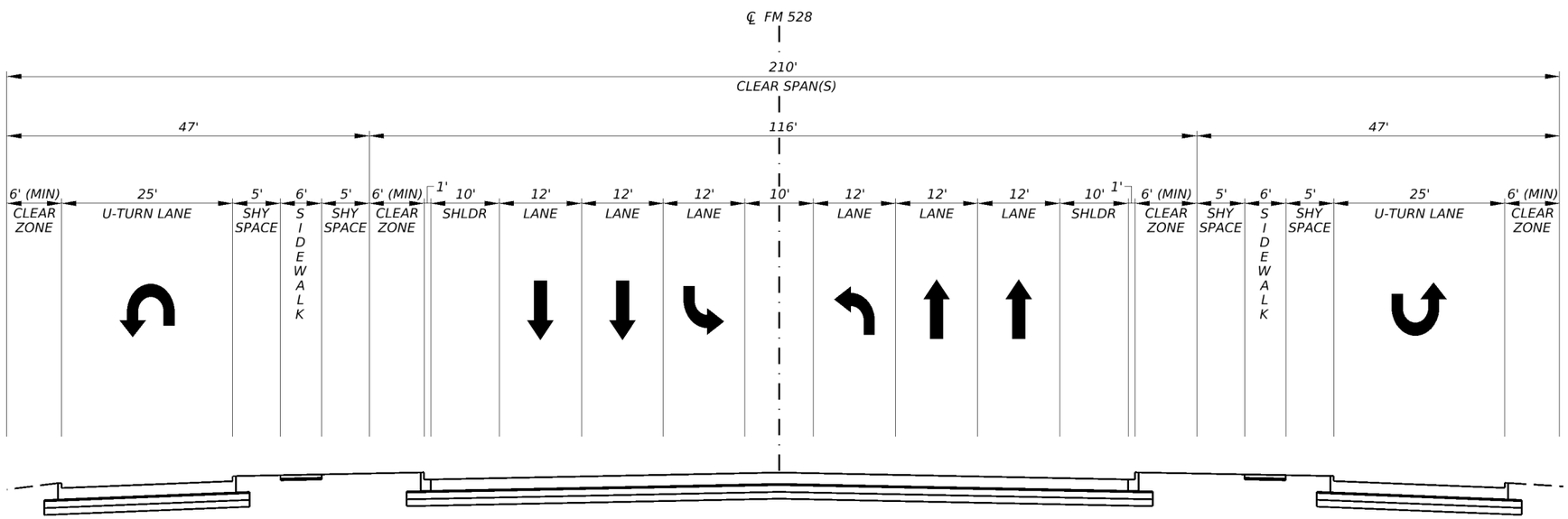

PROPOSED CROSS STREET SECTION
FM 528
(NTS)

GENERAL NOTES:

1. THE PURPOSE OF THESE TYPICAL SECTIONS IS TO SHOW CROSS STREET INFORMATION ONLY.

2. TYPICALS ARE AT CENTER LINE OF MAIN LANES. DB CONTRACTOR TO DESIGN MEDIANS AT FRONTAGE ROADS TO END OF RIGHT OF WAY (ROW).

Texas Department of Transportation

GRAND PARKWAY
SEGMENT B-1 DB PROJECT

ATTACHMENT 19-2
CROSS STREET
TYPICAL SECTIONS

9-5-2025

©TxDOT

SHEET 5 OF 10

CONT	SECT	JOB	HIGHWAY
3510	001,ETC	01	SH 99
DIST	COUNTY		SHEET NO.
HOU	BRAZORIA/GALVESTON		05

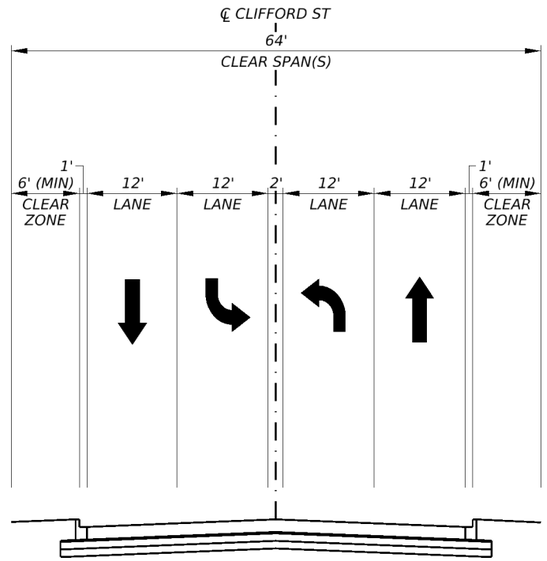

PROPOSED CROSS STREET SECTION
CLIFFORD ST
(NTS)

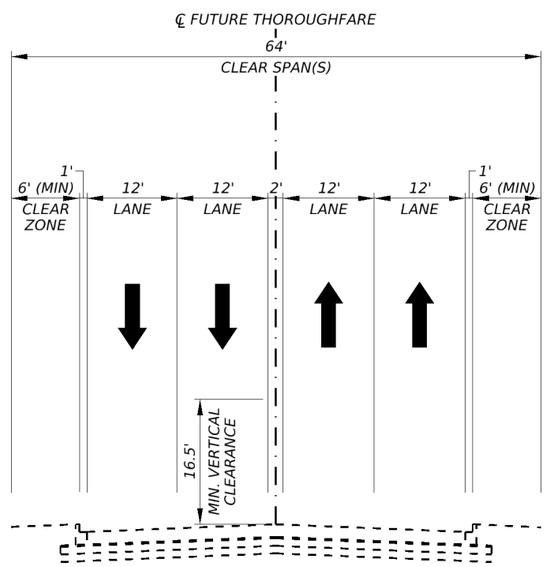

PROPOSED CROSS STREET SECTION
FUTURE THOROUGHFARE
(NTS)

GENERAL NOTES:

1. THE PURPOSE OF THESE TYPICAL SECTIONS IS TO SHOW CROSS STREET INFORMATION ONLY.

2. TYPICALS ARE AT CENTER LINE OF MAIN LANES. DB CONTRACTOR TO DESIGN MEDIANS AT FRONTAGE ROADS TO END OF RIGHT OF WAY (ROW).

Texas Department of Transportation

GRAND PARKWAY
SEGMENT B-1 DB PROJECT

ATTACHMENT 19-2
CROSS STREET
TYPICAL SECTIONS

9-5-2025

©TxDOT

CONT	SECT	JOB	HIGHWAY
3510	001,ETC	01	SH 99

DIST	COUNTY	SHEET NO.
HOU	BRAZORIA/GALVESTON	06

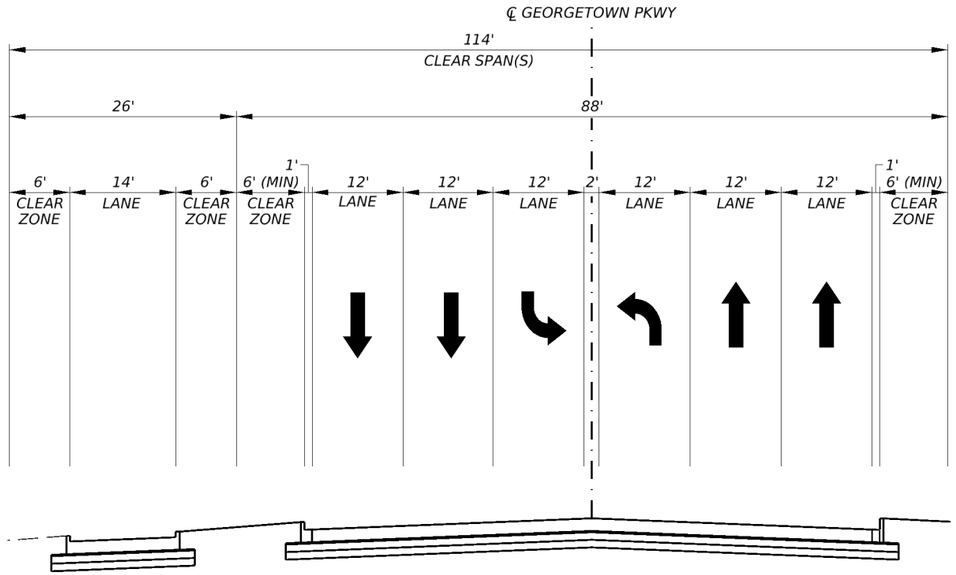

MAINTENANCE ACCESS ROAD (NTS)

PROPOSED CROSS STREET SECTION GEORGETOWN PKWY (NTS)

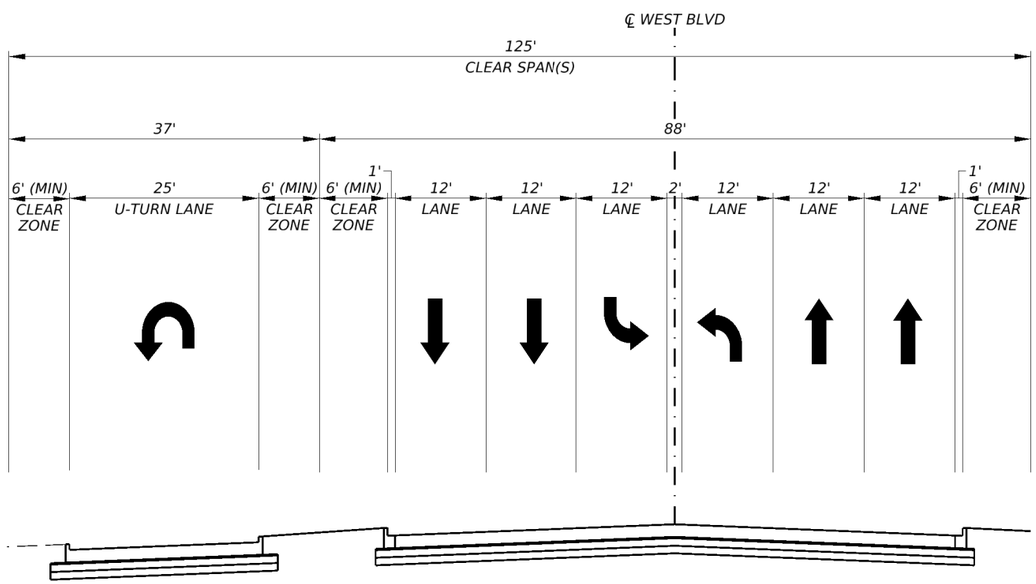

PROPOSED CROSS STREET SECTION WEST BLVD (NTS)

GENERAL NOTES:

1. THE PURPOSE OF THESE TYPICAL SECTIONS IS TO SHOW CROSS STREET INFORMATION ONLY.

2. TYPICALS ARE AT CENTER LINE OF MAIN LANES. DB CONTRACTOR TO DESIGN MEDIANS AT FRONTAGE ROADS TO END OF RIGHT OF WAY (ROW).

Texas Department of Transportation

GRAND PARKWAY SEGMENT B-1 DB PROJECT

ATTACHMENT 19-2 CROSS STREET TYPICAL SECTIONS

9-5-2025

©TxDOT

CONT	SECT	JOB	HIGHWAY
3510	001,ETC	01	SH 99

DIST	COUNTY	SHEET NO.
HOU	BRAZORIA/GALVESTON	07

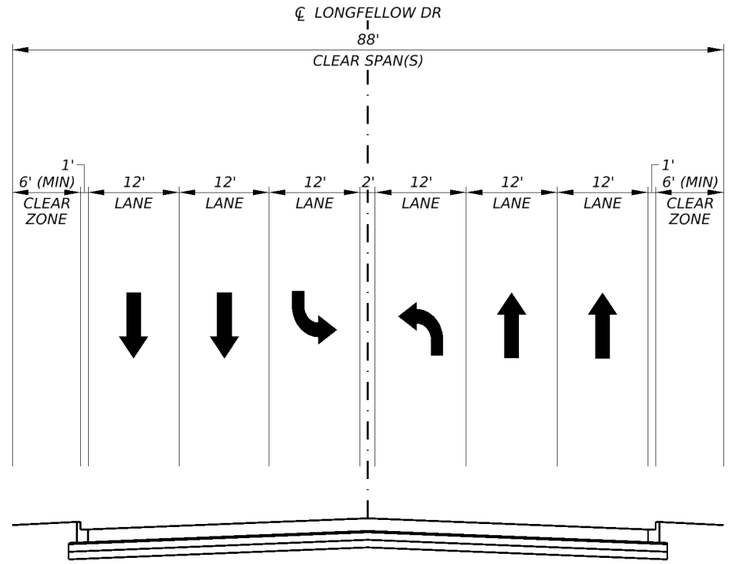

PROPOSED CROSS STREET SECTION
LONGFELLOW DR
(NTS)

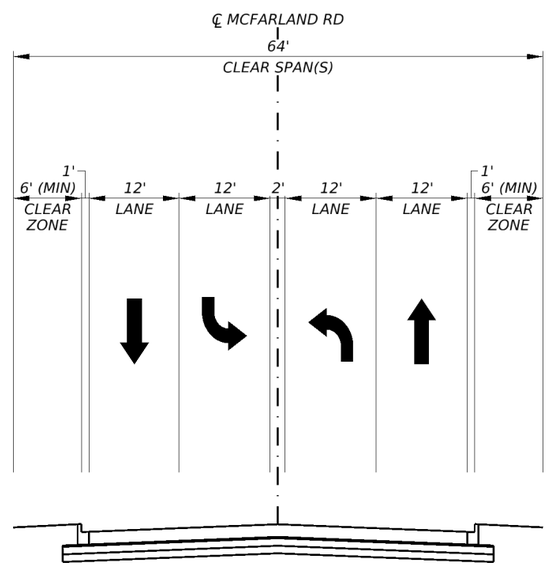

PROPOSED CROSS STREET SECTION
MCFARLAND RD
(NTS)

GENERAL NOTES:

1. THE PURPOSE OF THESE TYPICAL SECTIONS IS TO SHOW CROSS STREET INFORMATION ONLY.

2. TYPICALS ARE AT CENTER LINE OF MAIN LANES. DB CONTRACTOR TO DESIGN MEDIANS AT FRONTAGE ROADS TO END OF RIGHT OF WAY (ROW).

Texas Department of Transportation

GRAND PARKWAY
SEGMENT B-1 DB PROJECT

ATTACHMENT 19-2
CROSS STREET
TYPICAL SECTIONS

9-5-2025

©TxDOT

CONT	SECT	JOB	HIGHWAY
3510	001,ETC	01	SH 99

DIST	COUNTY	SHEET NO.
HOU	BRAZORIA/GALVESTON	08

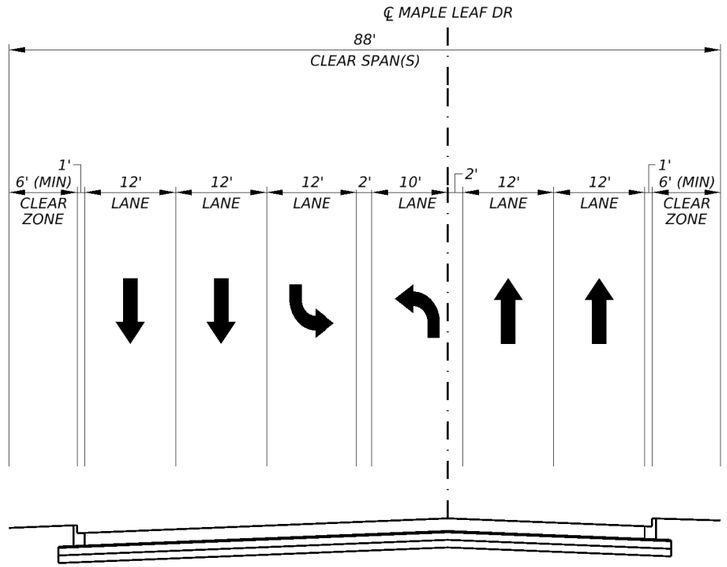

PROPOSED CROSS STREET SECTION
MAPLE LEAF DR
(NTS)

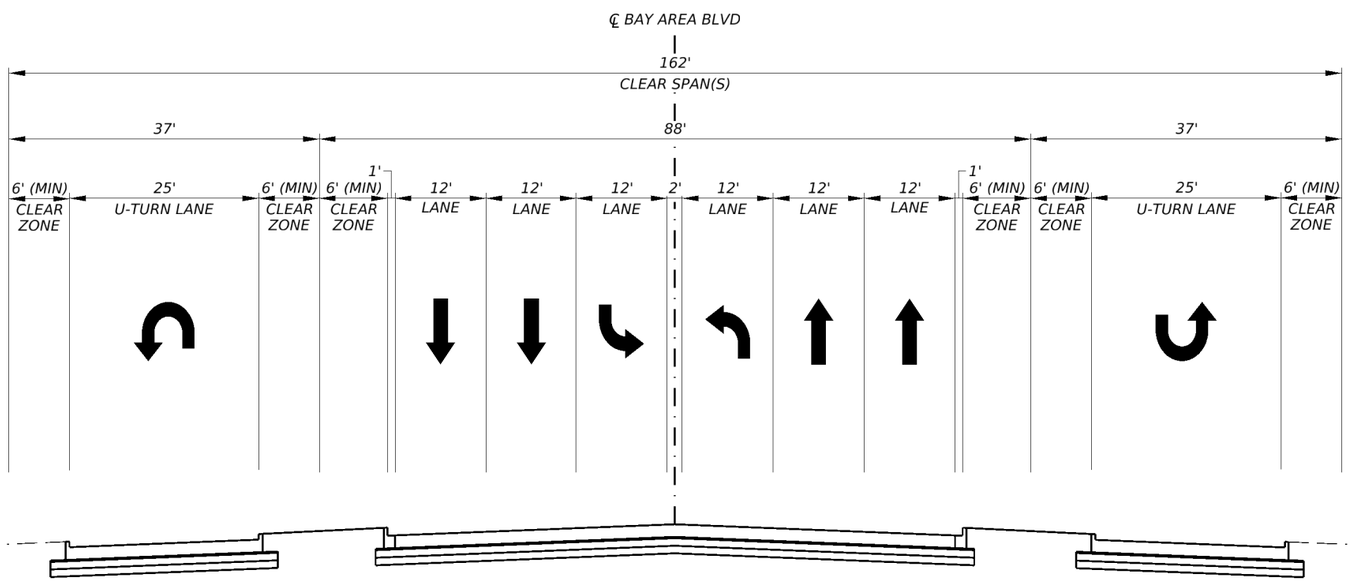

PROPOSED CROSS STREET SECTION
BAY AREA BLVD
(NTS)

GENERAL NOTES:

1. THE PURPOSE OF THESE TYPICAL SECTIONS IS TO SHOW CROSS STREET INFORMATION ONLY.

2. TYPICALS ARE AT CENTER LINE OF MAIN LANES. DB CONTRACTOR TO DESIGN MEDIANS AT FRONTAGE ROADS TO END OF RIGHT OF WAY (ROW).

Texas Department of Transportation

GRAND PARKWAY
SEGMENT B-1 DB PROJECT

ATTACHMENT 19-2
CROSS STREET
TYPICAL SECTIONS

9-5-2025

©TxDOT

SHEET 9 OF 10

CONT	SECT	JOB	HIGHWAY
3510	001,ETC	01	SH 99
DIST	COUNTY		SHEET NO.
HOU	BRAZORIA/GALVESTON		09

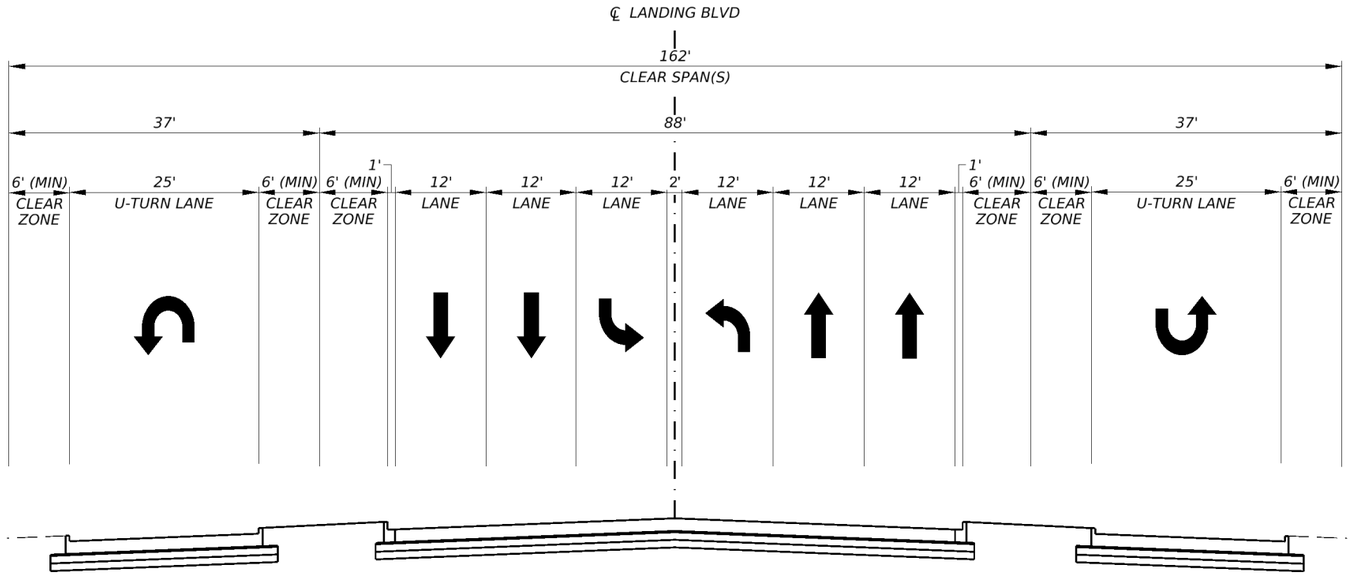

PROPOSED CROSS STREET SECTION
LANDING BLVD
(NTS)

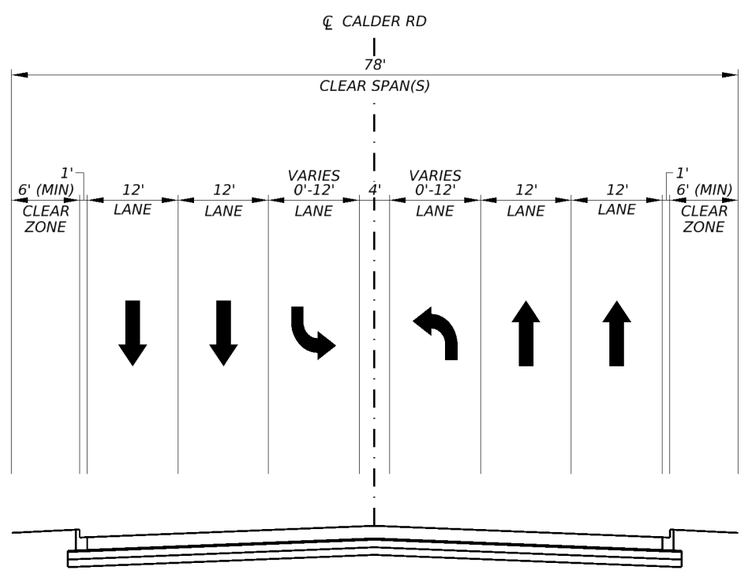

PROPOSED CROSS STREET SECTION
CALDER RD
(NTS)

GENERAL NOTES:

1. THE PURPOSE OF THESE TYPICAL SECTIONS IS TO SHOW CROSS STREET INFORMATION ONLY.

2. TYPICALS ARE AT CENTER LINE OF MAIN LANES. DB CONTRACTOR TO DESIGN MEDIANS AT FRONTAGE ROADS TO END OF RIGHT OF WAY (ROW).

Texas Department of Transportation

GRAND PARKWAY
SEGMENT B-1 DB PROJECT

ATTACHMENT 19-2
CROSS STREET
TYPICAL SECTIONS

9-5-2025

©TxDOT

SHEET 10 OF 10

CONT	SECT	JOB	HIGHWAY
3510	001,ETC	01	SH 99

DIST	COUNTY	SHEET NO.
HOU	BRAZORIA/GALVESTON	10

Texas Department of Transportation

DESIGN-BUILD SPECIFICATIONS
Items 10-29

Attachment 23-1
Planting, Establishment, and Maintenance Layout

September 2025

TYPE OF WORK	ITEMS AND REQUIREMENTS FOR EACH TYPE OF WORK

Reference Item 166,168 and 180, of the Texas Standard Specifications for Construction and Maintenance of Highways, Streets and Bridges 2014 for specifications, dimensions, volumes and measurements that are not shown. Use latest Houston District, Special Provisions for those items indicated.

WILDFLOWER SEEDING

180-7001 WILDFLOWER SEEDING AC

ITEM 180.2. MATERIALS

INDIAN BLANKET, *Gaillardia pulchella*.....3.00 LB PLS/AC
PINK EVENING PRIMROSE, *Oenothera speciosa*.....1.00 LB PLS/AC
PLAINS COREOPSIS, *Coreopsis tinctoria*.....3.00 LB PLS/AC
TEXAS BLUEBONNET, *Lupinus texensis*.....2.00 LB PLS/AC

180-7002 WILDFLOWER SEEDING (MIX 1) AC (Roadside)

ITEM 180.2. MATERIALS

BLACK-EYED SUSAN, *Rudbeckia hirta* ..... 2.00 LB PLS/AC
INDIAN BLANKET, *Gaillardia pulchella* ..... 3.00 LB PLS/AC
MEXICAN HAT, *Ratibida columnifera* ..... 1.00 LB PLS/AC
PLAINS COREOPSIS, *Coreopsis tinctoria* ..... 3.00 LB PLS/AC
PURPLE CONEFLOWER, *Echinacea purpurea* ..... 1.00 LB PLS/AC
TEXAS BLUEBONNET, *Lupinus texensis* ..... 1.00 LB PLS/AC

180-7003 WILDFLOWER SEEDING (MIX 2) AC (Monarch Butterfly Habitat)

ITEM 180.2. MATERIALS

Antelope-Horn Milkweed, *Asclepias asperula (Decne.) Woodson* .... 0.5 LB PLS/AC
Green Milkweed, *Asclepias viridis Walter* ..... 0.5 LB PLS/AC
Texas Bluebonnet, *Lupinus texensis*..... 2.00 LB PLS/AC
Lemonmint, *Monarda citriodora Cerv.ex Lag* ..... 1.00 LB PLS/AC
Black-eyed Susan, *Rudbeckia hirta* ..... 2.00 LB PLS/AC
Indian Blanket, *Gaillardia pulchella* ..... 3.00 LB PLS/AC
Partridge Peq, *Chamaecrista fasciculata (Michx.) Greene* ..... 3.00 LB PLS/AC
Engelmann Daisy, *Engelmannia perstenia* ..... 2.00 LB PLS./AC

ITEM 180.2. CONSTRUCTION

Planting date:
OCTOBER 1 - DECEMBER 1

Unless otherwise directed by District Vegetation Manager.

Loosen and scarify soil to a depth of 0.25 inches or mow the area to a standard height of 1 inch before seeding. Ground preparation should occur within a 48 hour window before seeding occurs.

Mow wildflowers at the standard mowing height (7") annually in the following months:

JUNE
OCTOBER

PLS (Pure Live Seed)
Provide documentation of PLS requirements per Item 108.2.
Provide seed labels in accordance with Item 180.2 to Vegetation Specialist for approval prior to any seeding.
Any seeding completed prior to approval will not be paid for. B

166-7001 FERTILIZER AC

APPLIES TO: 180-7001 WILDFLOWER SEEDING
180-7002 WILDFLOWER SEEDING (MIX 1)
180-7003 WILDFLOWER SEEDING (MIX 2)

ITEM 166.3. CONSTRUCTION

Apply fertilizer uniformly, prior or simultaneous to seeding.

RATE: 4000 lbs/acre

Use a NON-CHEMICAL fertilizer which meets all the following criteria:
(1) BRAND NAME must be registered with the Texas State Chemist as a commercial fertilizer.
(2) Meets USEPA guidelines for unrestricted use.
(3) Derived from biological sources such as, but not limited to: sewage sludge, manures, vegetation, etc.
(4) In granular form and essentially dust free.

Submit proof of registration and nutrient source to Engineer.

Use the following products or an approved equal(see note this sheet):
Sigma, SIGMA AgriScience, 281-851-6749
Sustanite-standard grade, Automation Nation, Inc., 713-675-4999
Milorganite, MMSD, 800-287-9645
Agricultural Organic P/L, Ag Org, INC., 713-523-4396

168-7001 VEGETATIVE WATERING TGL

ONLY APPLIES TO: 180-7001 WILDFLOWER SEEDING
180-7002 WILDFLOWER SEEDING (MIX 1)
180-7003 WILDFLOWER SEEDING (MIX 2)

ITEM 168.3 CONSTRUCTION

One time application after seeding.
Complete vegetative watering within 7 days of seeding.
RATE: 6000 gallons/acre.

SEQUENCE OF WORK

ROADSIDE	NEW BED PREP CONDITION	MONARCH BUTTERFLY HABITAT
1. Scalp mow 2. Fertilizer 3. Wildflower seeding 4. Vegetative watering	1. Wildflower seeding 2. Vegetative watering	1. Scalp Mowing or scarify soil 2. Fertilize 3. Wildflower seeding 4. Vegetative watering

NTS

ATTACHMENT 23-1:
PLANTING, ESTABLISHMENT, AND MAINTENANCE LAYOUT

WILDFLOWER SEEDING

SHEET 1 OF 1

Texas Department of Transportation

FED.RD. DIV.NO.	PROJECT NO.		SHEET NO.
STATE	DIST.	COUNTY	
CONT.	SECT.	JOB	HIGHWAY NO.

Texas Department of Transportation

DESIGN-BUILD SPECIFICATIONS Items 10-29

Attachment 24-1

City of League City, Signal Requirements and to be Furnished Signal Equipment

September 2025

City of League City, Signal Requirements and to be Furnished Signal Equipment

For all signals within the City of League City, DB Contractor shall incorporate into their design and construction the following TxDOT bid codes and attached General Notes:

ITEM	CODE	DESCRIPTION
6058	6001	BBU SYSTEM (SIDE MOUNT), APLHA FXM 2000 (OR APPROVED EQUAL)
6060	6001	GPS EMERGENCY SYSTEM - GTT/3M OPTICOM (OR APPROVED EQUAL)
SS6929		PTZ CAMERA - WTI SIDEWINDER IP CAMERA, SW720-H. 264-SD (OR APPROVED EQUAL)
6090	6001	DOUBLE SIDED ILSN (LED) (6 D) DURALIGHT JXMSTN SERIES (OR APPROVED EQUAL) W/ TOP MOUNTING HARDWARE
6062	6034	WIRELESS ETHERNET BROADBAND RADIO, INTUICOM (OR APPROVED EQUAL)
6306	6001	VIVDS PROSR
6306	6003	VIVDS CAM ASSY VAR LNS (ECONOLITE VISION OR APPROVED EQUAL)
6306	6007	VIVDS CABLING
	*	POWDER COAT SIGNAL EQUIPMENT
	*	ROUND SIGNAL POLES

(Spec Book year 2014)

The City of League City will furnish the DB Contractor with the following equipment:

6060	6001	GPS EMERGENCY SYSTEM - GTT/3M OPTICOM (OR EQUAL)

(Spec Book year 2014)

for the following signalized intersections:

- Georgetown Parkway
- West Boulevard
- Longfellow Drive
- McFarland Road
- Maple Leaf Drive
- Bay Area Boulevard
- Landing Street
- Calder Drive
- SH 99 EB FR @ FM 646

General Notes

THE CONTRACTOR SHALL BE RESPONSIBLE FOR CONTACTING THE LOCAL POWER COMPANY AND PROVIDING ELECTRICAL SERVICE TO THE SITE.

THE PROPOSED LOCATIONS FOR THE SIGNAL SUPPORT POLES, AS SHOWN ON THE PLANS ARE APPROXIMATE, SOME FIELD ADJUSTMENT MAY BE REQUIRED IN ORDER TO AVOID CONFLICT WITH EITHER OVERHEAD OR UNDERGROUND UTILITIES. THE CONTRACTOR SHALL BE RESPONSIBLE FOR DETERMINING AND STAKING THE OPTIMUM LOCATIONS FOR THESE POLES AND FOR RECEIVING APPROVAL FROM THE ENGINEER OR ENGINEERING REPRESENTATIVE AND THE APPROPRIATE UTILITIES BEFORE INSTALLATION BEGINS. PROPER ROADSIDE CLEAR ZONES SHALL BE OBSERVED.

ALL CONSTRUCTION ACTIVITIES SHALL SE COMPLETED IN FULL COMPLIANCE WITH THE AMERICANS WITH DISABILITIES ACT (ADA), ARCHITECTURAL AND TRANSPORTATION BARRIERS COMPLIANCE BOARD AND THE TEXAS DEPARTMENT OF LICENSING AND REGULATION (TDLR).

FIELD VERIFY THE DEPTHS OF THE DRILL SHAFTS TO MEET THE MINIMUM CLEARANCES SPECIFIED IN THE PLANS BEFORE ORDERING MATERIALS.

SHAFTS FOR FOOTINGS SHALL BE DRILLED THROUGH FIRM, UNDISTURBED SOIL AND BE VISUALLY INSPECTED BY THE ENGINEER OR ENGINEERING REPRESENTATIVE PRIOR TO PLACEMENT OF REINFORCEMENT. THE ENGINEER OR ENGINEERING REPRESENTATIVE SHALL BE ADVISED BY THE CONTRACTOR OF ANY GROUND WATER OR LOOSE SOIL ENCOUNTERED DURING DRILLING.

CONDUIT SHALL BE LAID AT A MINIMUM DEPTH OF 24 INCHES BELOW FINISHED GRADE. THE CONTRACTOR SHALL SEAL ALL OPEN CONDUIT ENTRANCES HOLES, WITH OR WITHOUT CABLES, WITH CONDUIT DUCT SEAL PUTTY OR CONDUIT PLUGS. WHERE CABLES ENTER THE CONDUIT, THE SEALANT SHALL BE APPLIED AFTER INSTALLING THE CABLE.

ALL EQUIPMENT NECESSARY FOR VIDEO DETECTION SHALL BE FURNISHED BY THE CONTRACTOR AND INSTALLED IN THE CABINET, VIDEO DETECTION CAMERAS SHALL BE INSTALLED ON MAST ARMS.

DELIVER CONTROLLER CABINET AND ASSEMBLY TO THE CITY OF LEGUE CITY PUBLIC WORKS OPERATION CENTER FOR PROGRAMMING AND TESTING TWO WEEKS IN ADVANCE PRIOR TO CONTRACTOR INSTALLING EQUIPMENT IN THE FIELD. COORDINATE DROP OFF AND PICK UP WITH PUBLIC WORKS MANAGER AT 281-554-1083.

THE SIGNAL SHOP REPRESENTATIVE WILL ASSIST IN DETERMINING HOW THE DETECTION CABLES ARE TO BE CONNECTED, AND WILL ALSO PROGRAM THE CONTROLLER FOR

OPERATION, HOOK UP THE MALFUNCTION MANAGEMENT UNIT (MMU) OR CONFLICT MONITOR, DETECTOR UNITS, AND OTHER EQUIPMENT, AND TURN ON THE CONTROLLER. HAVE A QUALIFIED TECHNICIAN ON THE PROJECT SITE TO PLACE THE TRAFFIC SIGNALS IN OPERATION.

USE QUALIFIED PERSONNEL TO RESPOND TO AND DIAGNOSE ALL TROUBLE CALLS DURING THE THIRTY-DAY TEST PERIOD. REPAIR ANY MALFUNCTION TO CONTRACTOR-SUPPLIED SIGNAL EQUIPMENT. PROVIDE TO THE ENGINEER A LOCAL TELEPHONE NUMBER, NOT SUBJECT TO FREQUENT CHANGES AND AVAILABLE ON A 24-HOUR BASIS, FOR REPORTING TROUBLE CALLS. RESPONSE TIME TO REPORTED CALLS MUST BE LESS THAN 2 HOURS. MAKE APPROPRIATE REPAIRS WITHIN 24 HOURS. PLACE A LOGBOOK IN THE CONTROLLER CABINET AND KEEP A RECORD OF EACH TROUBLE CALL REPORTED. NOTIFY THE ENGINEER OF EACH TROUBLE CALL. DO NOT CLEAR THE ERROR LOG IN THE CONFLICT MONITOR OR MMU DURING THE THIRTY-DAY TEST PERIOD WITHOUT APPROVAL.

TRAFFIC SIGNAL WILL NOT BE ACTIVATED UNTIL A PRE-TURN WALK THRU HAS TAKEN PLACE AND ALL SAFETY ITEMS HAVE BEEN INSTALLED COMPLETE AND IN PLACE AS PER THE PLANS AND APPROVED BY ENGINEER OR ENGINEERING REPRESENTATIVE.

THE CONTRACTOR SHALL PROVIDE AS-BUILT DRAWINGS TO THE ENGINEER OR ENGINEERING REPRESENTATIVE UPON COMPLETION OF THE PROJECT.

ITEM 680 – Notes

FOR BOTH GROUND AND POLE-MOUNT CABINETS, PROVIDE CABINET CONFIGURATION WITH A MINIMUM OUTPUT OF 16 POSITION LOAD BAYS.

INTEGRATE THE PROPOSED TRAFFIC SIGNAL(S) INTO THE EXISTING ADVANCED TRAFFIC MANAGEMENT SYSTEM (ATMS) AS SHOWN ON THE PLANS. CENTRACS ATMS SOFTWARE, WHICH UTILIZES ECONOLITE CONTROLLERS, IS CURRENTLY IN USE IN THE TRAFFIC MANAGEMENT CENTER OF CITY OF LEAGUE CITY. PROVIDE CONTROLLERS ON THIS PROJECT THAT FULLY COMMUNICATE WITH THE EXISTING ATMS SOFTWARE.

ALL NEW SIGNAL HEADS SHALL BE POLYCARBONATE.

ALL NEW SIGNAL LENSES SHALL BE LED TYPE NON TINTED.

ALL CONDUITS SHALL BE SCHEDULE 80 PVC UNLESS OTHERWISE NOTED.

PTZ CAMERA SHALL BE COMPATIBLE WITH THE SOFTWARE USED IN THE CITY OF LEAGUE CITY TRAFFIC MANAGEMENT CENTER.

ALL TRAFFIC SIGNAL POLES AND MAST ARMS SHALL BE ROUND TYPE, BLACK POWDER COATED.

Texas Department of Transportation

DESIGN-BUILD SPECIFICATIONS
Items 10-29

Attachment 26-1
Request for Approval of Traffic Control Plan

September 2025

REQUEST FOR APPROVAL OF TRAFFIC CONTROL PLAN

SH99 Segment B-1 (CCSJ: 3510-01-001, etc)

Requirements found in DB Specification Item 26 + DBA Exh 15

SECTION 1 ROADWAY INFORMATION

LCN Number:	Highway or Street Name:
County:	Direction:
Table 15-1:	Is this a FULL CLOSURE?

SECTION 2 ROADWAY

Num of Existing Mainlines:	Num of Mainlines Closed:
Num of Existing Frontage Lanes:	Num of Frontage Lanes Closed:
Num of Existing Cross Street Lanes:	Num of Cross Street Lanes Closed:
Ramps Closed:	Turnaround Closed:
Describe Traffic Management Procedure to be used and attach Proposed Traffic Control Plan:	
Describe coordination with locality: (if needed)	

SECTION 3 LIMITS OF WORK

FROM (Do not use Stations):	TO (Do not use Stations):
Start Date:	End Date:
Start Time:	End Time:
Detour description: (as needed)	
Describe PCMS usage: How many days in advance of this TCP should sign be placed?	
Describe Police assistance to be used:	
Nature Of Work:	

SECTION 4 CONTACT INFORMATION

Onsite Contractor Responsible Person In Charge:	Cell #
Submitted By: (Name and Company) Date:	Cell #

TRAFFIC CONTROL PLAN APPROVED:

Project Engineer: _____ Date: _____ ADORE Plus submittal # _____

Texas Department of Transportation

DESIGN-BUILD SPECIFICATIONS Items 10-29

Attachment 26-2

Motor Carrier Division Permit Restriction Application

September 2025

Texas Department of Motor Vehicles

Rev. 06/2019

Motor Carrier Division
Permit Restriction Application

District Number:	District Name:

New Restriction ☐	Amend Restriction ☐	Cancel Restriction ☐

Highway: _____ **County:** _____

From junction: _____ **Mile Post/Ref. Marker:** _____

To junction: _____ **Mile Post/Ref. Marker:** _____

Direction(s) affected: Northbound ☐ Southbound ☐ Eastbound ☐ Westbound ☐

Turns affected:

Maximum dimensions allowed. *If a dimension is not affected, put N/A in the space provided.*
Enter dimensions in feet and inches. For Length, do not write "legal."

Width:	Height:	Overall Length:
Weight:	No Permits: ☐ *Leave other dimensions blank*	
Required vehicle ground clearance to cross railroads and other similar grade conditions (in inches):		

NOTE: Do not over restrict your highways; loads with small dimensions might safely travel through the restricted area without any inconvenience to the construction crew and/or the traveling public.

☐ **Check here if a copy of permit needs to be sent to the District Office**

Start Date: _____ **Projected End Date:** _____

Type of work or reason:

Construction: ☐ Maintenance: ☐ Sealcoat: ☐ Safety: (physical limits) ☐ Other: ☐

Comments:

Approved by: _____ Date: _____

Date restriction lifted: _____ Approved by: _____

MCD Mapping Coordinator phone: 512-465-3888
e-mail: MCD_PERMIT-RESTRICTION@txdmv.gov

We cannot correctly restrict your roadway unless this form is filled out completely.

Texas Department of Transportation

DESIGN-BUILD SPECIFICATIONS Items 10-29

Attachment 27-1

Performance and Measurement Table During Construction

September 2025

Note 1. DB Contractor shall record a separate Defect upon failure to achieve any of the requirements set forth in a Measurement Record. DB Contractor shall repair each Defect within the specified Defect Repair Period.

Note 2. DB Contractor shall conduct hazard mitigation with respect to a Category 1 Defect to mitigate the hazard to Users or imminent risk of damage or deterioration to property or the environment such that the Category 1 Defect no longer exists. For all physical Elements, DB Contractor shall monitor hazard mitigation and shall take action to prevent recurrence of the hazard prior to permanent repair.

Note 3. DB Contractor shall conduct permanent repair of all Defects to restore the condition of an Element to a condition such that no Defect exists.

Note 4. Unless stated otherwise, measurements shall be conducted using procedures, techniques, and measuring equipment consistent with TxDOT's Pavement Management Information System Rater's Manual, TxDOT Designation TEX-1001-S "Test Procedure for Operating Inertial Profilers and Evaluating Pavement Profiles" and TxDOT Specification No. TxDOT 968-62-65 "Pavement Condition Data Collection Services."

Note 5. Unless stated otherwise, pavement performance measurement records relate to 0.1-mile Performance Sections.

Note 6. Pavement distress data includes distresses identified directly by automated methods and distresses revealed by post-processing of visual images obtained during data collection by TxDOT certified visual distress raters for flexible and rigid pavements.

ELEMENT CATEGORY	REF	ELEMENT	PERFORMANCE OBJECTIVE	DEFECT REPAIR PERIOD (NOTE 2, 3)	INSPECTION AND MEASUREMENT METHOD (NOTE 4, 6)	REF	MEASUREMENT RECORD (NOTE 1,5)
HAZARD MITIGATION AND PERMANENT REPAIR OF CATEGORY 1 DEFECTS							
A: CATEGORY 1 DEFECTS OF PHYSICAL ELEMENTS (GENERAL)							
1) PAVEMENT	A1	All physical Elements	Provide Hazard Mitigation and Permanent Repair to any Category 1 Defect in a pavement Element.	24 hours Hazard Mitigation 28 days Permanent Repair	The inspection and measurement method for the identification of Category 1 Defects may include any of the methods in this Table.	A1.1	No Category 1 Defects, including but not limited to: any failure as defined in TxDOT PMIS System Rater's Manual.
2) DRAINAGE	A2		Provide Hazard Mitigation and Permanent Repair to any Category 1 Defect in a drainage system Element.			A2.1	No Category 1 Defects, including but not limited to: any failure of a drainage system that permits water to accumulate on the travel way to the extent that such water would represent a hazard because of its position or depth.
3) STRUCTURES	A3		Provide Hazard Mitigation and Permanent Repair to any Category 1 Defect in a structures Element.			A3.1	No Category 1 Defects, including but not limited to: any structural condition, loading event, deflection, crack or settlement that exceeds the design expectation for the Element.
4) EARTHWORK	A4		Provide Hazard Mitigation and Permanent Repair to any Category 1 Defect in an earthwork Element.			A4.1	No Category 1 Defects, including but not limited to: any settlement, earthwork instability or erosion event threatening user safety.
5) GENERAL	A5		Provide Hazard Mitigation and Permanent Repair to any Category 1 Defect in any other Element.			A5.1	No other Defects that meet the definition of a Category 1 Defect as defined in Section 27.3.2.3. [*The following criteria for a Category 1 Defect are included in Section 27.3.2.3:* • *Represents an immediate or imminent health or safety hazard to Users or road workers;* • *There is a risk of immediate or imminent structural failure or deterioration;* • *There is an immediate or imminent risk of damage to a third party's property; or* • *There is an immediate or imminent risk of damage to the environment.*]

ELEMENT CATEGORY	REF	ELEMENT	PERFORMANCE OBJECTIVE	DEFECT REPAIR PERIOD (NOTE 2, 3)	INSPECTION AND MEASUREMENT METHOD (NOTE 4, 6)	REF	MEASUREMENT RECORD (NOTE 1,5)
B: CATEGORY 1 DEFECTS OF PHYSICAL ELEMENTS (REQUIRE MORE RAPID DEFECT REPAIR)							
1) TRAFFIC SIGNS	B1	Warning and regulatory signs ("Stop", "Yield", "Do Not Enter", "One Way", and "Wrong Way" signs)	Signs are correctly located, clearly visible, legible, reflective, at the correct height and free from structural and electrical defects.	2 hours Hazard Mitigation 28 days Permanent Repair	Visual inspection	B1.1	No traffic sign Defects that represent an immediate or imminent health or safety hazard to Users or road workers.
2) TRAFFIC SIGNALS	B2	Traffic Signals	(i) Traffic signals and their associated equipment shall be: • clean and visible • correctly aligned and operational • free from damage caused by accident or vandalism • bulbs are not burned out (ii) Signal timing and operation is correct. (iii) Contingency plans are in place to rectify Category 1 Defects not immediately repairable to assure alternative traffic control is provided during a period of failure.	2 hours Hazard Mitigation 28 days Permanent Repair	Visual inspection	B2.1	No traffic signal Defects that represent an immediate or imminent health or safety hazard to Users or road workers.
C. CATEGORY 1 DEFECTS OF OPERATIONAL ITEMS (HAZARD MITIGATION ONLY)							
1) AMENITY	C1	Graffiti	Graffiti is removed in a manner and using materials that restore the surface to a like appearance similar to adjoining surfaces (i) Category 1 Defect – Obscene, apparent gang-related, or highly visible graffiti	24 hours Hazard Mitigation	Visual inspection	C1.1	Graffiti that is obscene, apparent gang-related, or highly visible is not present.
		Animals	All dead or injured animals are cleared from travel lanes and shoulders.	1 hour Hazard Mitigation	Visual inspection	C1.2	Dead or injured animals do not represent an immediate or imminent health or safety hazard to Users or road workers.
		Stalled or abandoned vehicles and equipment	Stalled or abandoned vehicles and equipment are cleared from travel lanes and shoulders.	1 hour Hazard Mitigation	Visual inspection	C1.3	Stalled or abandoned vehicles or equipment do not represent an immediate or imminent health or safety hazard to Users or road workers.
2) WEATHER-RELATED EVENTS	C2	Travel lanes	Pretreat travel way prior to potential snow and ice event.	See SICP for reference	Visual inspection	C2.1	Pretreat travel way in accordance with the requirements of the SICP included in the MMP prior to potential snow and ice event.
			Maintain travel way free from snow and ice.		Records of all snow and ice controls		Response times are met for all snow and ice controls:
				1 hour Hazard Mitigation		C2.2	(i) Maximum 1 hr response time to complete staffing and loading of spreading vehicles.
				2 hours Hazard Mitigation		C2.3	(ii) Maximum 2 hrs from departure from loading point to complete treatment and return to loading point.
				1 hour Hazard Mitigation		C2.4	(iii) Maximum 1 hr response time for snow and ice clearance vehicles to depart from base.
			Monitor the Project and respond to any flooding event that causes safety concern to the road users.	1 hour Hazard Mitigation	Visual inspection	C2.5	Set up and maintain traffic control to shut down any Project travel lanes and shoulders that are flooded and pose safety concern to the road users.

ELEMENT CATEGORY	REF	ELEMENT	PERFORMANCE OBJECTIVE	DEFECT REPAIR PERIOD (NOTE 2, 3)	INSPECTION AND MEASUREMENT METHOD (NOTE 4, 6)	REF	MEASUREMENT RECORD (NOTE 1,5)
3) INCIDENT RESPONSE	C3	General	(i) Monitor the Project and respond to Incidents in accordance with the Maintenance Management Plan (MMP). (ii) Monitor the Project and respond to Incidents involving Hazardous Materials in accordance with the Maintenance Management Plan. (iii) Evaluate structural damage to structures and liaise with emergency services to ensure safe working environment while clearing the Incident.	1 hour Hazard Mitigation	Records of all incident and emergency responses	C3.1	Response times are met for 98% of Incidents measured on a 1 year rolling basis and no unresolved complaints from Emergency Services.
4) SWEEPING AND CLEANING	C4	Obstructions and debris	Travel lanes and shoulders free from obstructions and debris including at a minimum objects, luminaire poles, and tires.	1 hour Hazard Mitigation	Visual inspection	C4.1	No obstructions and/or debris on travel lanes and shoulders that represent an immediate or imminent health or safety hazard to Users or road workers.
PERMANENT REPAIR OF ALL OTHER DEFECTS NOT CLASSIFIED AS CATEGORY 1 DEFECTS							
1) PAVEMENT GENERAL							
	1.1	Ride quality	All roadways have a smooth surface course (including bridge decks, covers, gratings, frames and boxes).	28 days	10-ft straightedge used to measure discontinuities	1.1.1	No individual discontinuities greater than the reference condition (on a location-specific basis) in the BECR.
	1.2	Edge drop-offs	All roadways are free from edge drop-offs exceeding measurement record thresholds.	28 days	Physical measurement	1.2.1	No edge drop-off greater than the reference condition (on a location-specific basis) in the BECR.
1a) PAVEMENT (ASPHALT)							
	1a.1	Ruts	All roadways are free from surface depressions exceeding measurement record thresholds.	28 days	Physical measurement	1a.1.1	No depth of rut at any location greater than the reference condition (on a location-specific basis) in the BECR.
	1a.2	Cracking	All roadways are free from cracking exceeding measurement record thresholds.	28 days	Physical measurement	1a.2.1	No unsealed longitudinal cracking and/or transverse cracking in any Performance Section with a width greater than the reference condition (on a location-specific basis) in the BECR.
1b) PAVEMENT (CRCP)							
	1b.1	Spalled cracks	All roadways (including shoulders and ramps) are free from spalled cracks exceeding measurement thresholds.	28 days	Physical measurement	1b.1.1	No individual spalling of any crack greater than the reference condition (on a location-specific basis) in the BECR.
	1b.2	Popouts and punchouts	All roadways (including shoulders and ramps) are free from popouts and punchouts exceeding measurement thresholds.	28 days	Physical measurement	1b.2.1	No individual punchouts greater than the reference condition (on a location-specific basis) in the BECR.
	1b.3	Longitudinal cracking	All roadways (including shoulders and ramps) are free from longitudinal cracks exceeding measurement record thresholds.	28 days	Physical measurement	1b.3.1	No longitudinal cracks greater than the reference condition (on a location-specific basis) in the BECR.
1c) PAVEMENT (JCP)							
	1c.1	Damaged joints and cracks	All roadways (including shoulders and ramps) are free from damaged joints and cracks.	28 days	Physical measurement	1c.1.1	No individual spalling of joints or cracks greater than the reference condition (on a location-specific basis) in the BECR.

ELEMENT CATEGORY	REF	ELEMENT	PERFORMANCE OBJECTIVE	DEFECT REPAIR PERIOD (NOTE 2, 3)	INSPECTION AND MEASUREMENT METHOD (NOTE 4, 6)	REF	MEASUREMENT RECORD (NOTE 1,5)
	1c.2	Slabs with cracks in multiple directions	All roadways (including shoulders and ramps) are free from potential shattered slabs.	28 days	Visual inspection	1c.2.1	No slabs separated into three or more pieces greater than the reference condition (on a location-specific basis) in the BECR.
	1c.3	Slabs with longitudinal cracks	All roadways (including shoulders and ramps) are free from slabs with longitudinal cracks.	28 days	Physical measurement	1c.3.1	No longitudinal cracks in any slab greater than the reference condition (on a location-specific basis) in the BECR.
2) DRAINAGE							
	2.1	Non-bridge class culverts, pipes, ditches, channels, catch basins, inlets, manholes and outfalls	Each element of the drainage system functions properly from the point at which water drains from the travel way to the outfall or drainage way and is free of: • defects in sealant at movement joints • scour damage • corrosion of rebar	28 days	Visual inspection	2.1.1	Performance objective met.
	2.2	Drainage treatment devices	Drainage treatment and balancing systems, flow and spillage control devices function correctly, are free of silt and debris and their location and means of operation is recorded adequately to permit their correct operation in Emergency.	28 days	Visual inspection	2.2.1	Performance objective met.
	2.3	Discharge systems	Surface water discharge systems perform their proper function and discharge to groundwater and waterways complies with the relevant legislation and permits.	In accordance DB Specification Item 27, Section 27.7.9	Visual inspection	2.3.1	Performance objective met.
	2.4	Erosion	Address erosion greater than 12” deep along ditches, swales, ponds, and channels.	28 days	Visual inspection	2.4.1	The general condition is at least equal to the reference condition (on a location-specific basis) in the BECR.
	2.5	Channels and ditches – Permanent Erosion Control Measures	Where permanent erosion control measures such as rock or concrete riprap are utilized: free of undermined or damaged erosion control measures.	28 days	Visual inspection	2.5.1	The general condition is at least equal to the reference condition (on a location-specific basis) in the BECR.

ELEMENT CATEGORY	REF	ELEMENT	PERFORMANCE OBJECTIVE	DEFECT REPAIR PERIOD (NOTE 2, 3)	INSPECTION AND MEASUREMENT METHOD (NOTE 4, 6)	REF	MEASUREMENT RECORD (NOTE 1,5)
3) STRUCTURES							
	3.1	Structure components (Structures having an opening measured along the center of the roadway of more than 20 feet between faces of abutments or spring lines of arches or extreme ends of the openings for multiple box culverts or multiple pipes that are 60 inches or more in diameter and that have a clear distance between openings of less than half of the smallest pipe diameter)	(i) Substructures and superstructures are free of: • undesirable vegetation • debris and significant accumulation of bird droppings that impact the performance of the structure(s) and the ability to inspect the structure(s) • blocked drains, weep pipes, manholes and chambers • blocked drainage holes in structural components • defects in joint sealants • defects in pedestrian protection measure • scour damage • corrosion of rebar • paint system failures • impact damage (ii) Expansion joints free of: • dirt, debris and vegetation • defects in drainage system • loose nuts and bolts • defects in gaskets and/or seals (iii) The deck drainage system is free of all debris and operates as intended. (iv) Parapets free of: • loose nuts and bolts • blockages of hollow section drain holes • undesirable vegetation • impact damage • concrete spalling	6 months	(a) The National Bridge Inspection Standards (NBIS) of the Code of Federal Regulations, 23 Highways – Part 650 (b) The TxDOT Bridge Inspection Manual (c) The Federal Highway Administration's Bridge Inspector's Reference Manual (d) Visual Inspection	3.1.1	The general condition is at least equal to the reference condition (on a location-specific basis) in the BECR and records maintained as required in the TxDOT Bridge Inspection Manual.
			(v) Bearings and bearing seats are: • properly aligned horizontally and vertically • clean and in full contact with each other (vi) Sliding and roller surfaces are clean and greased to ensure satisfactory performance. Additional advice contained in bearing manufacturers' instructions in the structure maintenance manual is followed. (vii) Special finishes are clean and perform to the appropriate standards. (viii) All non-structural items such as hoists and electrical fixings, operate correctly, are clean and lubricated as appropriate, in accordance with the manufacturer's recommendations and certification of lifting devices is maintained.			3.1.2	The condition rating is at least equal to the reference condition rating (on a location-specific basis) in the BECR.
	3.2	Load ratings	All structures maintain the design load capacity and no load restrictions for Texas legal loads (including legally permitted vehicles).	Not used	Not used	3.3.1	Not used
	3.3	Gantries and high-masts	Sign signal gantries, high-masts are structurally sound and free of: • loose nuts and bolts • defects in surface protection systems	6 months	Visual inspection	3.4.1	The general condition is at least equal to the reference condition (on a location-specific basis) in the BECR.

ELEMENT CATEGORY	REF	ELEMENT	PERFORMANCE OBJECTIVE	DEFECT REPAIR PERIOD (NOTE 2, 3)	INSPECTION AND MEASUREMENT METHOD (NOTE 4, 6)	REF	MEASUREMENT RECORD (NOTE 1,5)
	3.4	Access points	All hatches and points of access have fully operational and lockable entryways.	6 months	Visual inspection	3.5.1	The general condition is at least equal to the reference condition (on a location-specific basis) in the BECR.
	3.5	Retaining walls	Retaining walls are free of: • undesirable vegetation • defects in sealed joints • defects in pedestrian protection • scour damage • corrosion of rebar • paint system failure • concrete spalling • impact damage • blocked weep holes Parapets are free of: • loose nuts and bolts • blockage of drain holes • undesirable vegetation • impact damage • concrete spalling	28 days	Visual inspection	3.6.1	The general condition is at least equal to the reference condition (on a location-specific basis) in the BECR.
4) PAVEMENT MARKINGS, OBJECT MARKERS, BARRIER MARKERS AND DELINEATORS							
	4.1	Pavement markings	Pavement markings are: • clean and visible during the day and at night • whole and complete and of the correct color, type, width and length • placed to meet the TMUTCD and TxDOT's Pavement Marking Standard Sheets	28 days	**a) Markings - General**		
					Visual inspection (to include a record of visibility of markings under low beam headlights)	4.1.1	Marking visibility condition meets or exceeds the reference condition (on a location-specific basis) in the BECR.
					Physical measurement	4.1.2	Length of pavement marking where the loss of pavement marking material is at least equal to the reference condition (on a location-specific basis) in the BECR.
					b) Profile Markings		
					Visual inspection	4.1.3	The general condition is at least equal to the reference condition (on a location-specific basis) in the BECR.
	4.2	Raised reflective markers	Raised reflective pavement markers are: • clean and clearly visible • of the correct color and type • reflective or retroreflective in accordance with TxDOT standards are: • correctly located, aligned and at the correct level • firmly fixed • in a condition that will ensure that they remain at the correct level	6 months	Visual inspection	4.2.1	Raised reflective markers is at least equal to the reference condition for ineffectiveness in any 10 consecutive markers (on a location-specific basis) in the BECR. (Ineffective includes missing, damaged, settled or sunk).

ELEMENT CATEGORY	REF	ELEMENT	PERFORMANCE OBJECTIVE	DEFECT REPAIR PERIOD (NOTE 2, 3)	INSPECTION AND MEASUREMENT METHOD (NOTE 4, 6)	REF	MEASUREMENT RECORD (NOTE 1,5)
	4.3	Delineators & markers	Object markers, mail box markers and delineators are: • clean and visible • of the correct color and type • legible and reflective • straight and vertical	28 days	Visual inspection	4.3.1	The general condition is at least equal to the reference condition (on a location-specific basis) in the BECR.
5) CURBS, GUARDRAILS, SAFETY BARRIERS AND IMPACT ATTENUATORS							
	5.1	Curbs	Curbs are free of cracks that impact functionality or performance of the curb, broken pieces and separation, and are in proper grade and alignment.	28 days	Visual inspection	5.1.1	The general condition is at least equal to the reference condition (on a location-specific basis) in the BECR.
	5.2	Guardrails and safety barriers	All guardrails, safety barriers, and concrete barriers are maintained free of defects. They are appropriately placed and correctly installed at the correct height and distance from roadway or obstacles.	28 days	Visual inspection	5.2.1	The general condition is at least equal to the reference condition (on a location-specific basis) in the BECR.
	5.3	Impact attenuators	All impact attenuators are appropriately placed, correctly installed, and free of damage.	28 days	Visual inspection	5.3.1	The general condition is at least equal to the reference condition (on a location-specific basis) in the BECR.
6) TRAFFIC SIGNS							
	6.1	General – All signs	(i) Signs are correctly located, clearly visible, legible, reflective, at the correct height and free from structural and electrical defects. (ii) Identification markers are provided, correctly located, visible, clean and legible. (iii) Sign mounting posts are vertical, structurally sound and rust free. (iv) All break-away sign mounts are clear of silt or other debris that could impede break-away features and shall have correct stub heights. (v) Obsolete and redundant signs are removed or replaced as appropriate. (vi) Visibility distances meet the stated requirements. (vii) Sign information is of the correct size, location, type and wording to meet its intended purpose and any statutory requirements. (viii) All structures and elements of the signing system are kept clean and free from debris and have clear access provided. (ix) All replacement and repair materials and equipment are in accordance with the requirements of the TMUTCD.	28 days	Visual inspection	6.1.1	The general condition is at least equal to the reference condition (on a location-specific basis) in the BECR.

ELEMENT CATEGORY	REF	ELEMENT	PERFORMANCE OBJECTIVE	DEFECT REPAIR PERIOD (NOTE 2, 3)	INSPECTION AND MEASUREMENT METHOD (NOTE 4, 6)	REF	MEASUREMENT RECORD (NOTE 1,5)
7) TRAFFIC SIGNALS							
	7.1	General	(i) Traffic signals and their associated equipment shall be: • clean and visible • correctly aligned and operational • free from damage caused by accident or vandalism • bulbs are not burned out (ii) Signal timing and operation is correct. (iii) Comply with National Electric Code regulations. (iv) Traffic signals are structurally sound. (v) Signals have identification markers and the telephone number for reporting faults are correctly located, clearly visible, clean and legible.	28 days	Visual inspection	7.1.1	The general condition is at least equal to the reference condition (on a location-specific basis) in the BECR.
	7.2	Pedestrian elements and vehicle detectors	All pedestrian elements and vehicle detectors are correctly positioned and fully functional.	28 days	Visual inspection	7.2.1	The general condition is at least equal to the reference condition (on a location-specific basis) in the BECR.
8) LIGHTING							
	8.1	Roadway lighting – General	(i) All lighting is free from defects and provides acceptable uniform lighting quality. (ii) Lanterns are clean, clearly visible and correctly positioned. (iii) Lighting units are free from accidental damage or vandalism. (iv) Columns are upright, correctly founded, visually acceptable and structurally sound.	28 days	Night time inspection or automated logs	8.1.1	The general condition is at least equal to the reference condition (on a location-specific basis) in the BECR.
	8.2	Sign lighting	Sign lighting is fully operational.	28 days	Night time inspection or automated logs	8.2.1	The general condition is at least equal to the reference condition (on a location-specific basis) in the BECR.
	8.3	Aesthetic lighting	Aesthetic lighting is fully operational.	28 days	Night time inspection or automated logs	8.3.1	The general condition is at least equal to the reference condition (on a location-specific basis) in the BECR.
	8.4	Electrical supply	Electricity supply, feeder pillars, cabinets, switches and fittings are electrically, mechanically and structurally sound and functioning.	28 days	Testing to meet National Electric Code regulations, visual inspection	8.4.1	The general condition is at least equal to the reference condition (on a location-specific basis) in the BECR.
	8.5	Access panels	All access panels in place and secure at all times.	28 days	Visual inspection	8.5.1	The general condition is at least equal to the reference condition (on a location-specific basis) in the BECR.
	8.6	High-mast lighting	(i) All high-mast luminaries functioning on each pole. (ii) All obstruction lights are present and working (if required). (iii) Compartment door is secure with all bolts in place. (iv) All winch and safety equipment are correctly functioning and maintained without rusting or corrosion. (for structural requirements refer to Element Category 3)	28 days	Night time inspections or automated logs	8.6.1	The general condition is at least equal to the reference condition (on a location-specific basis) in the BECR.

ELEMENT CATEGORY	REF	ELEMENT	PERFORMANCE OBJECTIVE	DEFECT REPAIR PERIOD (NOTE 2, 3)	INSPECTION AND MEASUREMENT METHOD (NOTE 4, 6)	REF	MEASUREMENT RECORD (NOTE 1,5)
9) FENCES, WALLS AND SOUND ABATEMENT							
	9.1	General	Integrity and structural condition of fences, walls and/or sound abatement elements are maintained and are free of: • blocked weep holes • undesirable vegetation • defects in joint sealants • defects in pedestrian protection • scour damage • corrosion of rebar • paint system failure • concrete spalling • impact damage	6 months	Visual inspection and structural assessment if visual inspection warrants	9.1.1	The general condition is at least equal to the reference condition (on a location-specific basis) in the BECR.
10) ROADSIDE MANAGEMENT (comply with specified minimum condition)							
	10.1	Vegetated areas – Except landscaped areas – General	Vegetation is maintained so that: (i) Height of grass and weeds is kept within the limits described for rural or urban areas. Mowing begins before vegetation reaches the maximum height. (ii) Spot mowing at intersections, ramps or other areas maintains visibility of appurtenances and sight distance. (iii) Grass or vegetation does not encroach into or on paved shoulders, mainlanes, sidewalks, islands, riprap, traffic barrier or curbs. (iv) A herbicide program is undertaken in accordance with the TxDOT Roadside Vegetation Manual and the TxDOT Herbicide Operations Manual to control noxious weeds and to eliminate grass in pavement or concrete. (v) A full width mowing cycle is completed after the first frost. (vi) Wildflowers are preserved utilizing the guidelines in the mowing specifications and TxDOT Roadside Vegetation Management Manual.	28 days	Physical measurement	10.1.1	Urban Areas - Individual measurement areas have 95% of height of grass and weeds between 5” and 18”. Rural areas - Individual measurement areas have 95% of height of grass and weeds between 5” and 30”.
					Visual inspection	10.1.2	Other performance objectives met.
	10.2	Landscaped areas	(i) All landscaped areas are maintained to their originally constructed condition. Landscaped areas are as designated in the Plans. (ii) Mowing, litter pickup, irrigation system maintenance and operation, plant maintenance, pruning, insect, disease and pest control, fertilization, mulching, bed maintenance, watering is undertaken as per Maintenance Management Plan. (iii) The height of grass and weeds is kept between 2“ and 8”. Mowing begins before vegetation reaches 8”. (iv) Damaged or dead vegetation is replaced.	28 days	Visual inspection	10.2.1	Performance objective met.
	10.3	Fire hazards	Fire hazards are controlled.	28 days	Visual inspection	10.3.1	Performance objective met.

ELEMENT CATEGORY	REF	ELEMENT	PERFORMANCE OBJECTIVE	DEFECT REPAIR PERIOD (NOTE 2, 3)	INSPECTION AND MEASUREMENT METHOD (NOTE 4, 6)	REF	MEASUREMENT RECORD (NOTE 1,5)
	10.4	Trees, brush and ornamentals	(i) Trees, brush and ornamentals on the right of way, except in established no mow areas, are trimmed in accordance with TxDOT standards. (ii) Trees, brush and ornamentals are trimmed to insure they do not interfere with vehicles or sight distance, or inhibit the visibility of signs. (iii) Dead trees, brush, ornamentals and branches are removed. Potentially dangerous trees or limbs are removed. (iv) All undesirable trees and vegetation are removed. Diseased trees or limbs are treated or removed by licensed contractors.	28 days	Visual inspection	10.4.1	Performance objective met.
	10.5	Wetlands	Wetlands are managed in accordance with the permit requirements.	28 days	Visual inspection and records of compliance	10.5.1	The general condition is at least equal to the reference condition (on a location-specific basis) in the BECR.
`	10.6	Sidewalks and pedestrian curb ramps	Compliance with TxDOT Design Standards and Americans with Disabilities Act (ADA) requirements and maintain at a standard to be free of defects as follows: (i) unsealed cracks or joints (ii) broken sections (iii) vertical displacement or misalignment	28 days	Visual inspection	10.6.1	The general condition is at least equal to the reference condition (on a location-specific basis) in the BECR.
11) REST AREAS AND PICNIC AREAS (NOT USED)							
12) EARTHWORKS, EMBANKMENTS AND CUTTINGS							
	12.1	Slope failure	No structural or natural failures of the embankment and cut slopes of the Project.	6 months	Visual inspection	12.1.1	The general condition is at least equal to the reference condition (on a location-specific basis) in the BECR.
	12.2	Slopes - General	Slopes are in conformance to the original, as-designed, graded cross-sections (or any modifications to such cross sections needed to address erosion or instability).	6 months	Visual inspection	12.2.1	The general condition is at least equal to the reference condition (on a location-specific basis) in the BECR.
	12.3	Slopes – Erosion	Slopes function properly with no erosion of a nature that may result in further deterioration. All necessary erosion prevention measures are in place, including landscaping materials, seeding, turf or other vegetation. The roadway, shoulders and ditches are free from all eroded materials.	3 months	Visual inspection	12.3.1	The general condition is at least equal to the reference condition (on a location-specific basis) in the BECR.
	12.4	Slopes - Permanent Erosion Control Measures	Where permanent erosion control measures such as rock or concrete riprap are utilized, erosion control measures are not damaged or undermined, function properly and concrete slope protection joints are sealed and free from vegetation affecting or having the potential to affect structural integrity.	3 months	Visual inspection	12.4.1	The general condition is at least equal to the reference condition (on a location-specific basis) in the BECR.

ELEMENT CATEGORY	REF	ELEMENT	PERFORMANCE OBJECTIVE	DEFECT REPAIR PERIOD (NOTE 2, 3)	INSPECTION AND MEASUREMENT METHOD (NOTE 4, 6)	REF	MEASUREMENT RECORD (NOTE 1,5)
13) ITS EQUIPMENT							
	13.1	ITS Equipment - Maintenance	All ITS equipment is fully functional and housing is functioning and free of defects. (i) All equipment and cabinet identification numbers are visible, sites are well drained and access is clear. (ii) Steps, handrails and accesses are kept in a good condition. (iii) Access to all communication hubs, ground boxes, cabinets and sites is clear. (iv) All drainage is operational and all external fixtures and fittings are in a satisfactory condition. (v) All communications cable markers, cable joint markers and duct markers are visible and missing markers are replaced. (vi) Backup power supply system is available at all times.	28 days	Visual inspection and records of existing malfunctions	13.1.1	ITS equipment is fully functional and the general condition is at least equal to the reference condition in the BECR.
	13.2	Dynamic Message Sign Equipment	Dynamic Message Signs are free from faults such as: (i) Any signal displaying a message which is deemed to be a safety hazard. (ii) Failure of system to clear sign settings when appropriate. (iii) 2 or more contiguous sign failures that prevent control office setting strategic diversions. (iv) Signs displaying an incorrect message.	14 days	Visual inspection and records of existing malfunctions	13.2.1	Dynamic message sign is fully functional and the general condition is at least equal to the reference condition in the BECR.
	13.3	CCTV Equipment	CCTV Systems are free from serious faults that significantly limit the availability of the operators to monitor the area network, such as: (i) Failure of CCTV Systems to provide control offices with access and control of CCTV images. (ii) Failure of a CCTV camera or its video transmission system. (iii) Failure of a Pan / Tilt unit or its control system. (iv) Moisture ingress onto CCTV camera lens. (v) Faults that result in significant degradation of CCTV images.	14 days	Visual inspection and records of existing malfunctions	13.3.1	CCTV system is fully functional and the general condition is at least equal to the reference condition in the BECR.
	13.4	Vehicle Detection Equipment	All equipment free of defects and operational problems such as: (i) Inoperable loops (ii) Malfunctioning camera controllers	28 days	Visual inspection and records of existing malfunctions	13.4.1	Vehicle detection equipment is fully functional and the general condition is at least equal to the reference condition in the BECR.

ELEMENT CATEGORY	REF	ELEMENT	PERFORMANCE OBJECTIVE	DEFECT REPAIR PERIOD (NOTE 2, 3)	INSPECTION AND MEASUREMENT METHOD (NOTE 4, 6)	REF	MEASUREMENT RECORD (NOTE 1,5)
14) TOLLING FACILITIES AND BUILDINGS (NOT USED)							
15) AMENITY							
	15.1	Graffiti	Graffiti is removed in a manner and using materials that restore the surface to a like appearance similar to adjoining surfaces (i) Category 2 Defect – Graffiti other than Category 1 Defect	28 days	Visual inspection	15.1.1	Graffiti is not present.
	15.2	Animals	All dead or injured animals are removed.	3 days	Visual inspection	15.2.1	Dead or injured animals are not present.
	15.3	Abandoned vehicles and equipment	All abandoned vehicles and equipment are removed.	3 days	Visual inspection	15.3.1	Abandoned vehicles or equipment are not present.
16) SNOW AND ICE CONTROL (NOT USED - SEE CATEGORY 1 DEFECTS)							
17) INCIDENT RESPONSE							
	17.1	Temporary and permanent repair	(i) Propose and implement temporary measures or permanent repairs to Defects arising from the Incident. (ii) Ensure the structural safety of any structures affected by the Incident.	28 days	Review and inspection of the Incident site	17.1.1	Performance objective met.
18) CUSTOMER RESPONSE							
	18.1	Response to inquiries	Timely and effective response to customer inquiries and complaints: (i) Contact the customer within 48 hours following initial customer inquiry. (ii) All work resulting from customer requests is scheduled within 48 hours of customer contact.	See Performance Objective	Records of all customer inquires and responses	18.1.1	Performance objective met.
			(iii) All customer concerns/requests are resolved to TxDOT's satisfaction within 2 weeks of the initial inquiry.	14 days			
	18.2	Customer contact line	Telephone line staffed during business hours and 24 hour availability of messaging system. Faults to telephone line or message system rectified.	48 hours	Availability of the customer contact line	18.2.1	No instances of line out of action or unstaffed.
19) SWEEPING AND CLEANING							
	19.1	Sweeping	(i) Keep all channels, hard shoulders, gore areas, ramps, intersections, islands and frontage roads swept clean. (ii) Clear and remove debris from traffic lanes, hard shoulders, medians, other paved areas, footways and cycle ways. (iii) Remove all sweepings without stockpiling in the right of way and dispose of at approved tip.	3 days	Visual inspection	19.1.1	No buildup of dirt, ice, rock, debris, etc. on roadways and bridges to accumulate greater than 18" wide or 1/2" deep.
	19.2	Litter	(i) Keep the right of way in a neat condition, remove litter regularly. (ii) Pick up large litter items before mowing operations. (iii) Dispose of all litter and debris collected at an approved solid waste site.	3 days	Visual inspection	19.2.1	No more than 30 pieces of litter (rural) and 50 pieces of litter (urban) per roadside mile shall be visible when traveling at highway speed.

Texas Department of Transportation

DESIGN-BUILD SPECIFICATIONS Items 10-29

Attachment 27-2

Baseline Inspection Requirements

September 2025

ATTACHMENT 27-2: BASELINE INSPECTION REQUIREMENTS

Provide photographic records and physical measurements referenced by location to establish an agreed reference condition for each Performance Section as follows:

ELEMENT CATEGORY	ELEMENT	INSPECTION/MEASUREMENT METHOD	MEASUREMENT REF*	MEASUREMENT RECORD
1) PAVEMENT				
1.1	**Ride quality**	Physical measurement	1.1.1	Location and depth of any individual discontinuity (e.g. bumps and depressions) that is greater than 3/4"
1.2	**Edge drop-offs**	Physical measurement	1.2.1	Location and depth of any individual edge drop-offs that is greater than 2" for more than 10 feet in length
1a) PAVEMENT (ASPHALT)				
1a.1	**Ruts**	Physical measurement	1a.1.1	Location and depth of any individual rut that is greater than 1/2"
1a.2	**Cracking**	Physical measurement	1a.2.1	Location and length of any unsealed cracking with a width greater than 1/4" and a length exceeding 5 feet.
1b) PAVEMENT (CRCP)				
1b.1	**Spalled Cracks**	Physical measurement	1b.1.1	Location and length of any individual spalling of any crack greater than 12" length
1b.2	**Popouts and Punchouts**	Physical measurement	1b.2.1	Location and number of any popouts greater than 4" wide or long exceeding a depth of 1"; Location and number of any punchout with a maximum dimension of 24" or more exceeding 1/4" vertical fault dimension compared to adjacent intact slab
1b.3	**Longitudinal Cracking**	Physical measurement	1b.3.1	Location and length of any longitudinal cracks with width exceeding 1/8"
1c) PAVEMENT (JCP)				
1c.1	**Damaged Joints and Cracks**	Physical measurement	1c.1.1	Location and length of any individual spalling of joints or cracks more than 3" in width and greater than 12" length

ATTACHMENT 27-2: BASELINE INSPECTION REQUIREMENTS

ELEMENT CATEGORY	ELEMENT	INSPECTION/MEASUREMENT METHOD	MEASUREMENT REF*	MEASUREMENT RECORD
1c.2	**Slabs with cracks in multiple directions**	Visual Inspection	1c.2.1	Location and number of any slabs separated into three or more pieces by a combination of transverse cracks and longitudinal cracks of any width extending from edge to edge of the slab
1c.3	**Slabs with Longitudinal Cracks**	Physical measurement	1c.3.1	Location and length of any longitudinal cracks in any slab with width exceeding 1/8"
2) DRAINAGE				
2.1	**Non-bridge class culverts, pipes, ditches, channels, catch basins, inlets, manholes and outfalls**	Visual Inspection	2.1.1	General condition
2.2	**Drainage treatment devices**	Visual Inspection	2.2.1	General condition
2.4	**Erosion**	Visual inspection	2.4.1	Location and general condition of any erosion greater than 12” deep along ditches, swales, ponds, and channels
2.5	**Channels and ditches - Permanent erosion control measures**	Visual inspection	2.5.1	Location and general condition of any undermined or damaged erosion control measures
3) STRUCTURES				
3.1	**Structures components**	Visual inspection	3.1.1	General condition
		Physical measurement and records of previous inspection	3.1.2	Location of any individual deck, superstructure or substructure with condition rating less than seven (7)
3.3	**Gantries and high-masts**	Visual inspection	3.3.1	General condition
3.4	**Access points**	Visual inspection	3.4.1	General condition
3.5	**Retaining walls**	Visual inspection	3.5.1	General condition

ATTACHMENT 27-2: BASELINE INSPECTION REQUIREMENTS

ELEMENT CATEGORY	ELEMENT	INSPECTION/MEASUREMENT METHOD	MEASUREMENT REF*	MEASUREMENT RECORD
4) PAVEMENT MARKINGS, OBJECT MARKERS, BARRIER MARKERS AND DELINEATORS				
4.1	**Pavement markings**	**a) Markings - General** Visual inspection (to include a record of visibility of markings under low beam headlights)	4.1.1	Marking visibility under low-beam headlight
		Physical measurement	4.1.2	Location and length of pavement marking where there is loss of material
		b) Profile markings - visual inspection	4.1.3	General condition
4.2	**Raised reflective markers**	Visual inspection	4.2.1	Location and number of raised reflective markers that are ineffective in any 10 consecutive markers (ineffective includes missing, damaged, settled or sunk)
4.3	**Delineators & Markers**	Visual inspection	4.3.1	General condition
5) CURBS, GUARDRAILS, SAFETY BARRIERS AND IMPACT ATTENUATORS				
5.1	**Curbs**	Visual inspection	5.1.1	General condition
5.2	**Guardrails and safety barriers**	Visual inspection	5.2.1	General condition
5.3	**Impact attenuators**	Visual inspection	5.3.1	General condition
6) TRAFFIC SIGNS				
6.1	**General – All signs**	Visual inspection	6.1.1	General condition
6.2	**Warning and regulatory signs**	Visual inspection	6.2.1	General condition
7) TRAFFIC SIGNALS				
7.1	**General**	Visual inspection	7.1.1	General condition
7.2	**Pedestrian elements and vehicle detectors**	Visual inspection	7.2.1	General condition
8) LIGHTING				
8.1	**Roadway lighting - general**	Visual inspection	8.1.1	General condition
8.2	**Sign lighting**	Visual inspection	8.2.1	General condition
8.3	**Aesthetic lighting**	Visual inspection	8.3.1	General condition
8.4	**Electrical supply**	Visual inspection	8.4.1	General condition
8.5	**Access panels**	Visual inspection	8.5.1	General condition
8.6	**High-mast lighting**	Visual inspection	8.6.1	General condition

ATTACHMENT 27-2: BASELINE INSPECTION REQUIREMENTS

ELEMENT CATEGORY	ELEMENT	INSPECTION/MEASUREMENT METHOD	MEASUREMENT REF*	MEASUREMENT RECORD
9) FENCES, WALLS AND SOUND ABATEMENT				
9.1	**General**	Visual inspection	9.1.1	General condition
10) ROADSIDE MANAGEMENT				
10.6	**Sidewalks and pedestrian curb ramps**	Visual inspection	10.6.1	General condition
11) REST AREAS AND PICNIC AREAS (NOT USED)				
12) EARTHWORKS, EMBANKMENTS AND CUTTINGS				
12.1	**Slope failure**	Visual inspection	12.1.1	Location and severity of any slope failure
12.2	**Slopes – General**	Visual inspection	12.2.1	General condition
12.3	**Slopes – Erosion**	Visual inspection	12.3.1	Location and depth of any erosion greater than 6" deep
12.4	**Slopes – Permanent Erosion Control Measures**	Visual inspection	12.4.1	Location and general condition of any undermined or damaged erosion control measures
13) ITS EQUIPMENT				
13.1	**ITS Equipment-Maintenance**	Visual inspection and records of malfunction	13.1.1	General condition
13.2	**Dynamic Message Sign Equipment**	Visual inspection and records of malfunction	13.2.1	General condition
13.3	**CCTV Equipment**	Visual inspection and records of malfunction	13.3.1	General condition
13.4	**Vehicle Detection Equipment**	Visual inspection and records of malfunction	13.4.1	General condition

Notes

* Measurement ref to be cross-referenced with Attachment 27-1.

Texas Department of Transportation

DESIGN-BUILD SPECIFICATIONS
Items 10-29

Attachment 27-3
Maintenance Limits

September 2025

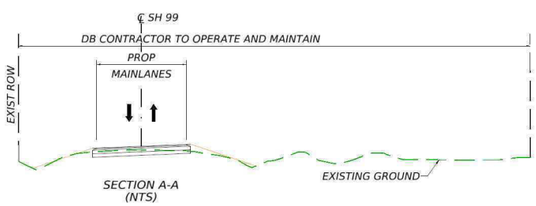

SECTION A-A
(NTS)

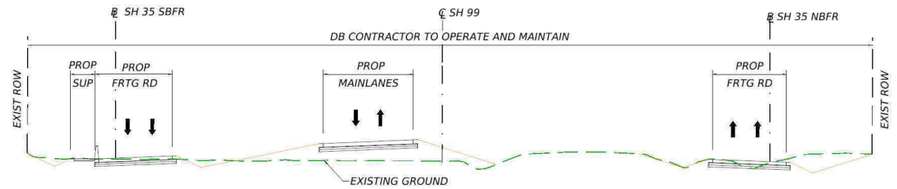

SECTION B-B
(NTS)

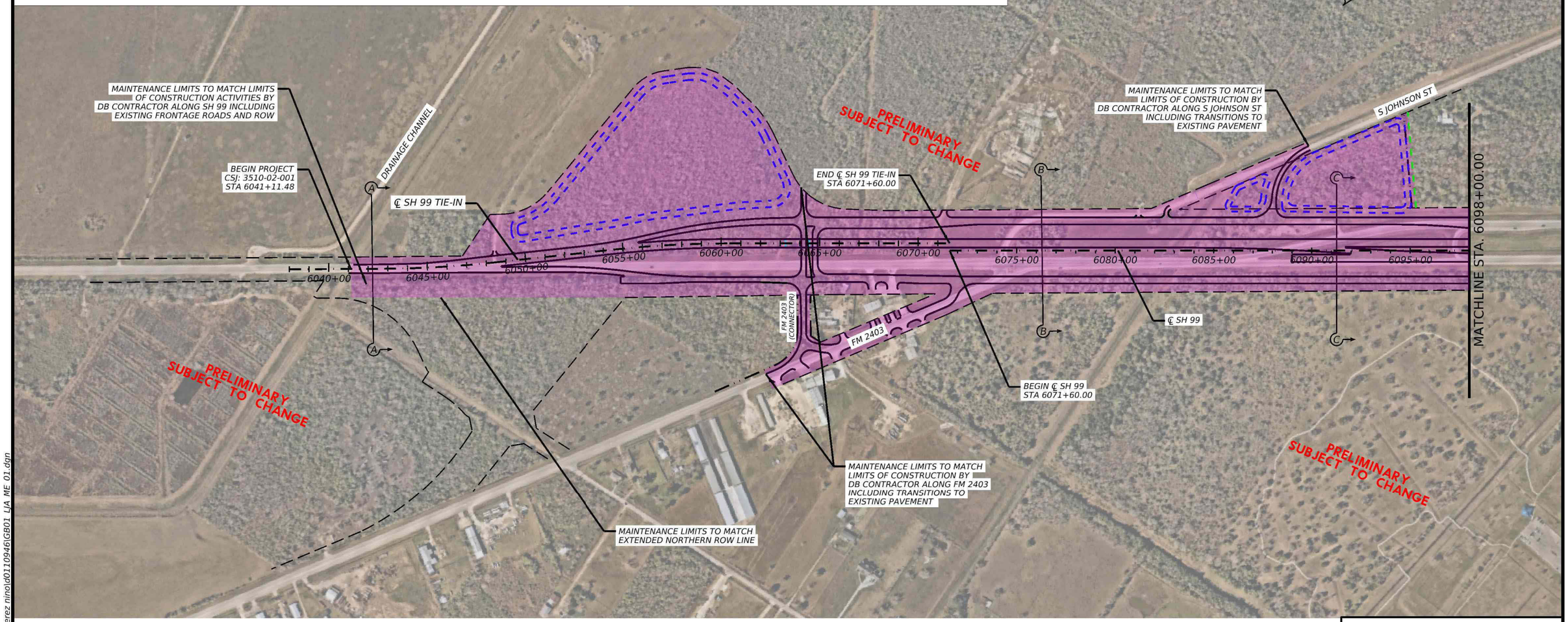

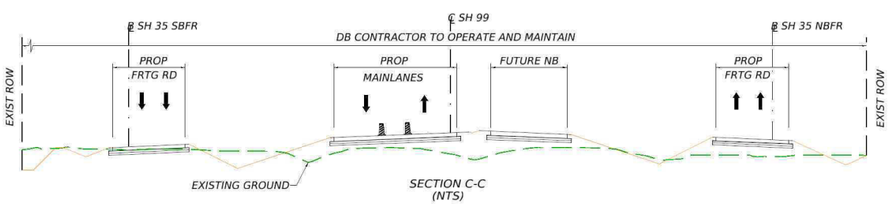

SECTION C-C
(NTS)

NOTE:

1. DB CONTRACTOR TO COORDINATE UTILITY RELOCATIONS OUTSIDE ROW LIMITS WITH UTILITY OWNER AND LANDOWNER.

2. DB CONTRACTOR TO MAINTAIN FIBER DUCTBANK FROM THE MAINTENANCE LIMITS TO THE EXISTING HUB BUILDING.

LEGEND

- LIMITS OF DB CONTRACTOR'S CONSTRUCTION, OPERATIONS, AND MAINTENANCE RESPONSIBILITIES
- DETENTION PONDS
- PROP ROW
- EXIST ROW
- TEMPORARY CONSTRUCTION OR DRAINAGE EASEMENT
- PROP SH 99
- PROP SH 35 PROJECT
- PROP BRIDGE

0' 250' 500'

SCALE: 1"= 500'

LJA PROGRAM MANAGEMENT

FRN - F-14256

Texas Department of Transportation

© 2024 BY TEXAS DEPARTMENT OF TRANSPORTATION, ALL RIGHTS RESERVED

ATTACHMENT 27-3:
MAINTENANCE LIMITS
SH 99
GRAND PARKWAY SEGMENT B-1
BEGIN TO STA 6098+00

SHEET 1 OF 12

CONT	SECT	JOB	HIGHWAY
2510	001	02	SH 99
DIST	COUNTY		SHEET NO.
HOU	BRAZORIA/GALVESTON		1

DATE: 1/26/2025 9:58:47 AM
FILE: c:\workingdir\lja-pw.bentley.com_lja-pw-01\gregorio.perez.nino\d0110946\GB01_LJA_ME_01.dgn

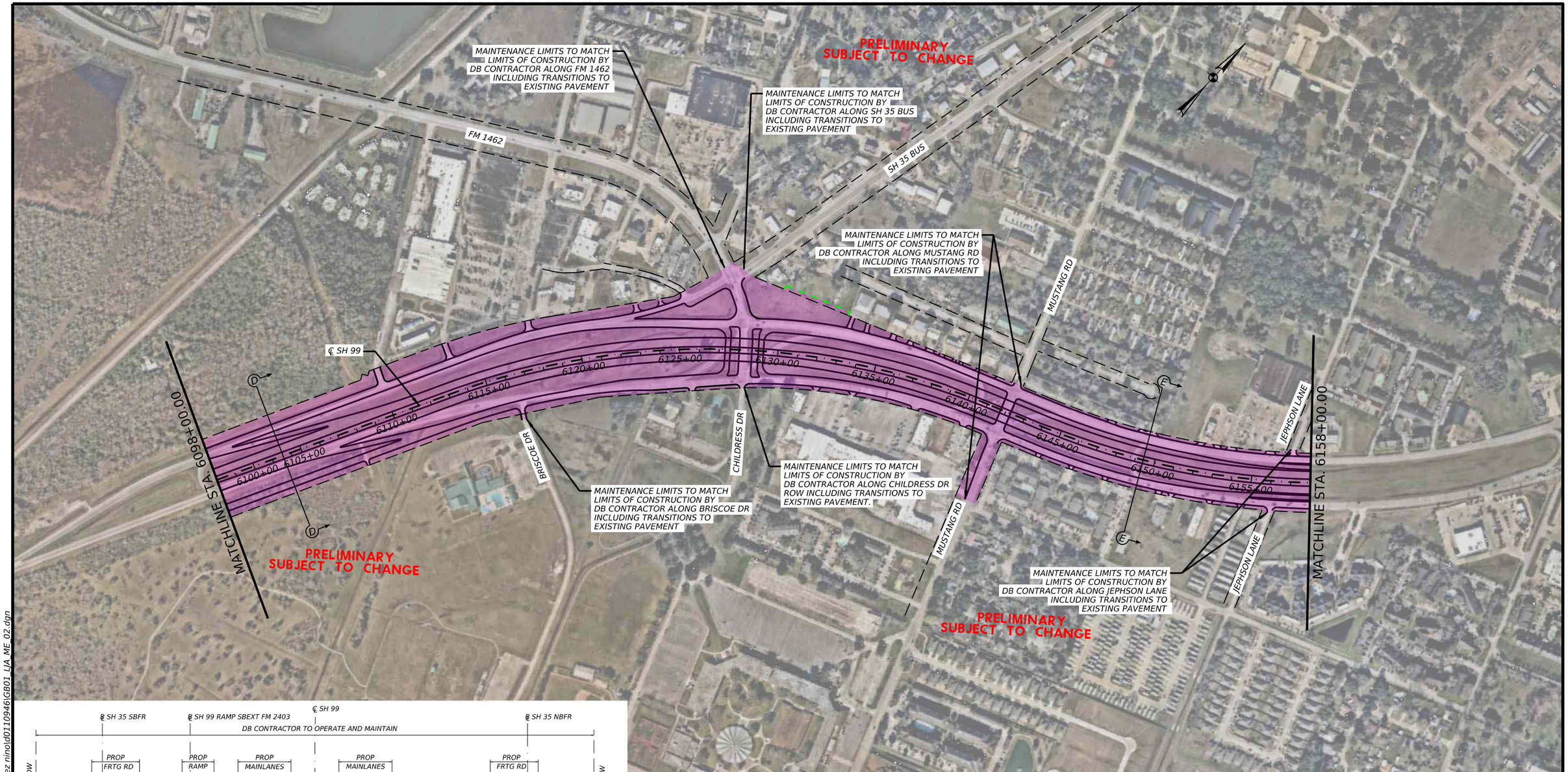

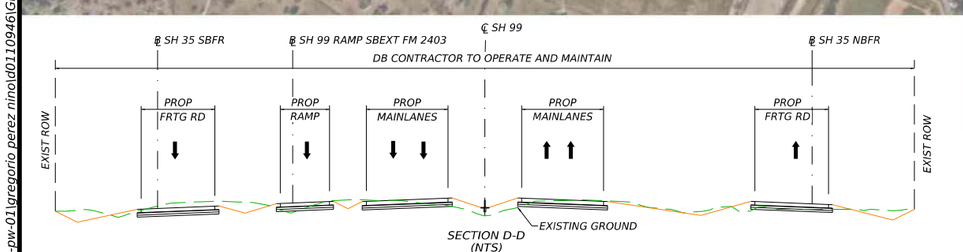

SECTION D-D
(NTS)

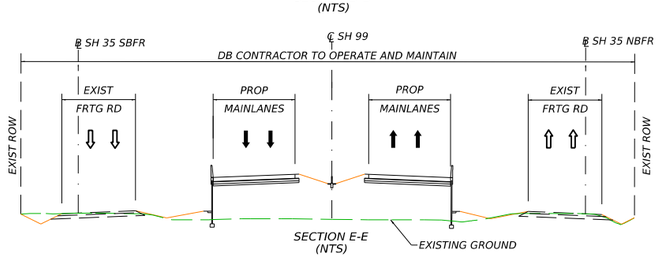

SECTION E-E
(NTS)

NOTE:

1. DB CONTRACTOR TO COORDINATE UTILITY RELOCATIONS OUTSIDE ROW LIMITS WITH UTILITY OWNER AND LANDOWNER.

2. DB CONTRACTOR TO MAINTAIN FIBER DUCTBANK FROM THE MAINTENANCE LIMITS TO THE EXISTING HUB BUILDING.

LEGEND

- LIMITS OF DB CONTRACTOR'S CONSTRUCTION, OPERATIONS, AND MAINTENANCE RESPONSIBILITIES
- DETENTION PONDS
- PROP ROW
- EXIST ROW
- TEMPORARY CONSTRUCTION OR DRAINAGE EASEMENT
- PROP SH 99
- PROP SH 35 PROJECT
- PROP BRIDGE

0' 250' 500'

SCALE: 1"= 500'

LJA PROGRAM MANAGEMENT
FRN - F-14256

Texas Department of Transportation

© 2024 BY TEXAS DEPARTMENT OF TRANSPORTATION, ALL RIGHTS RESERVED

ATTACHMENT 27-3: MAINTENANCE LIMITS SH 99 GRAND PARKWAY SEGMENT B-1

STA 6098+00 TO STA 6158+00

SHEET 2 OF 12

CONT	SECT	JOB	HIGHWAY
2510	001	02	SH 99
DIST	COUNTY		SHEET NO.
HOU	BRAZORIA/GALVESTON		2

DATE: 1/31/2025 9:26:29 AM
FILE: c:\workingdir\lja-pw.bentley.com_lja-pw-01\gregorio.perez.ninol\d0110946\GB01_LJA_ME_02.dgn

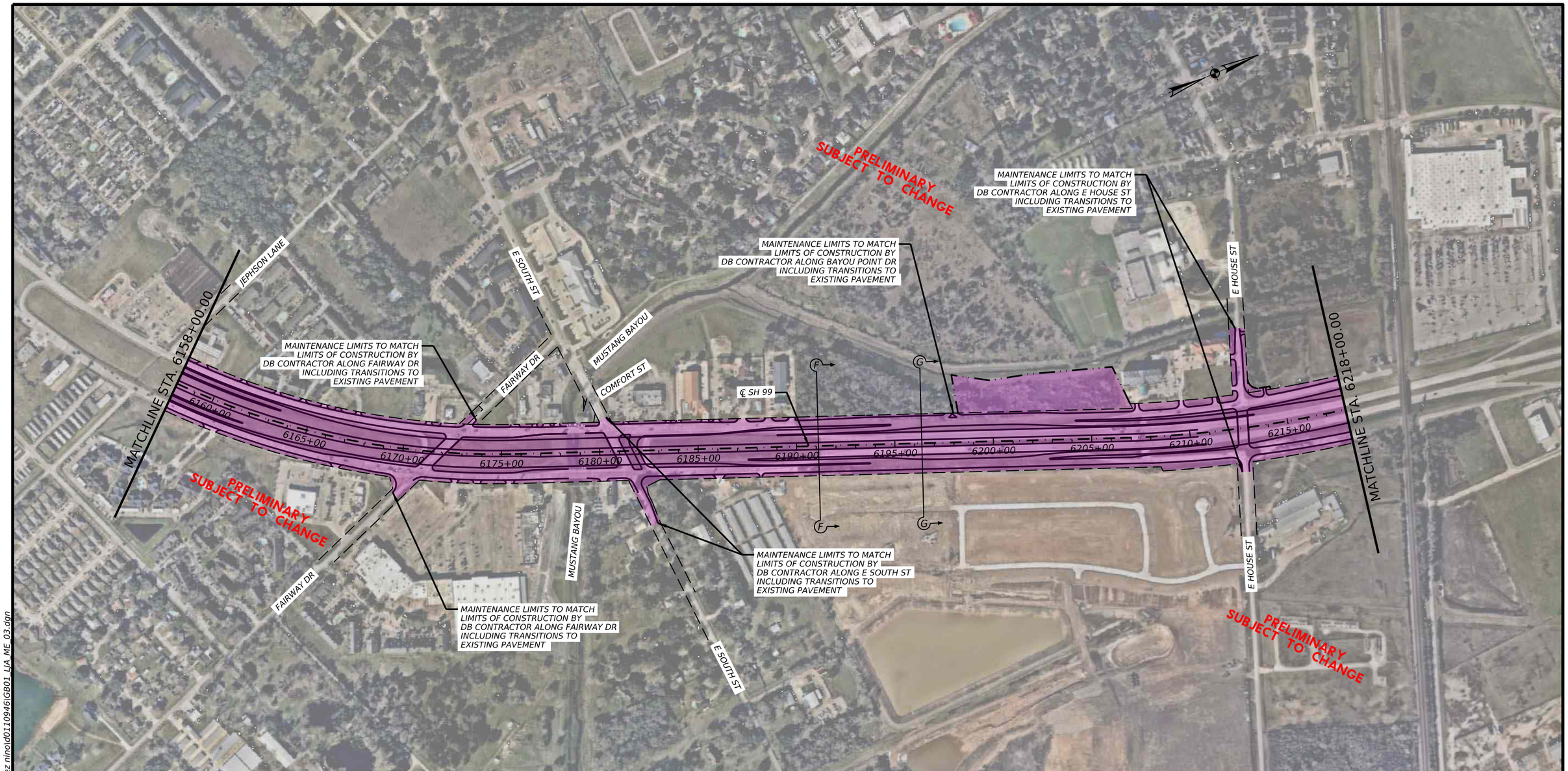

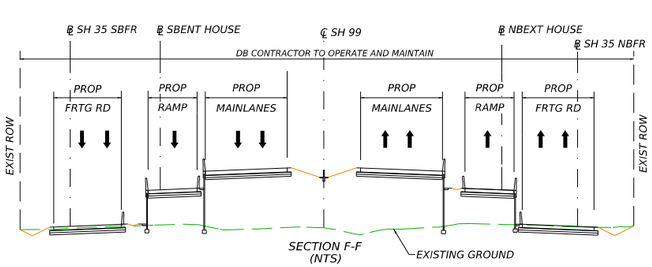

SECTION F-F
(NTS)

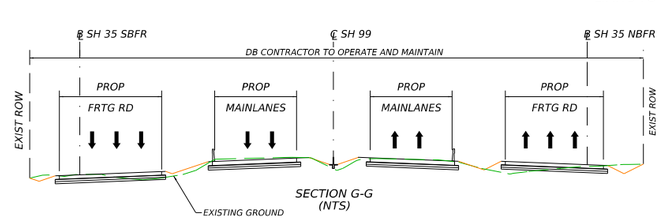

SECTION G-G
(NTS)

NOTE:

1. DB CONTRACTOR TO COORDINATE UTILITY RELOCATIONS OUTSIDE ROW LIMITS WITH UTILITY OWNER AND LANDOWNER.

2. DB CONTRACTOR TO MAINTAIN FIBER DUCTBANK FROM THE MAINTENANCE LIMITS TO THE EXISTING HUB BUILDING.

LEGEND

- LIMITS OF DB CONTRACTOR'S CONSTRUCTION, OPERATIONS, AND MAINTENANCE RESPONSIBILITIES
- DETENTION PONDS
- PROP ROW
- EXIST ROW
- TEMPORARY CONSTRUCTION OR DRAINAGE EASEMENT
- PROP SH 99
- PROP SH 35 PROJECT
- PROP BRIDGE

0' 250' 500'

SCALE: 1"= 500'

LJA PROGRAM MANAGEMENT
FRN - F-14256

Texas Department of Transportation

© 2024 BY TEXAS DEPARTMENT OF TRANSPORTATION, ALL RIGHTS RESERVED

ATTACHMENT 27-3: MAINTENANCE LIMITS SH 99 GRAND PARKWAY SEGMENT B-1

STA 6158+00 TO STA 6218+00

SHEET 3 OF 14

CONT	SECT	JOB	HIGHWAY
2510	001	02	SH 99
DIST	COUNTY		SHEET NO.
HOU	BRAZORIA/GALVESTON		3

DATE: 1/31/2025 7:41:51 AM
FILE: c:\workingdir\lja-pw.bentley.com_lja-pw-01\gregorio perez nino\d0110946\GB01_LJA_ME_03.dgn

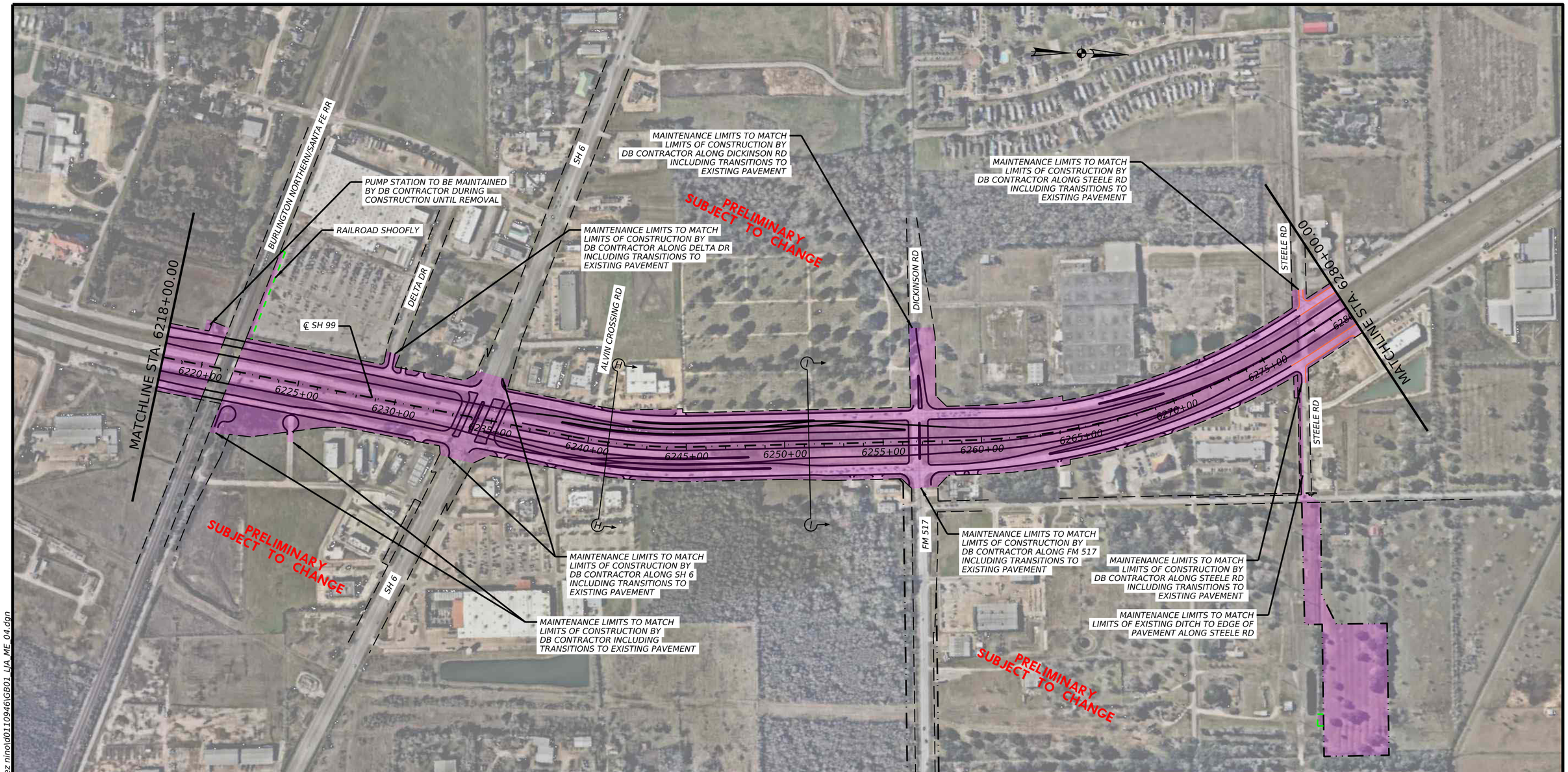

NOTE:

1. DB CONTRACTOR TO COORDINATE UTILITY RELOCATIONS OUTSIDE ROW LIMITS WITH UTILITY OWNER AND LANDOWNER.

2. DB CONTRACTOR TO MAINTAIN FIBER DUCTBANK FROM THE MAINTENANCE LIMITS TO THE EXISTING HUB BUILDING.

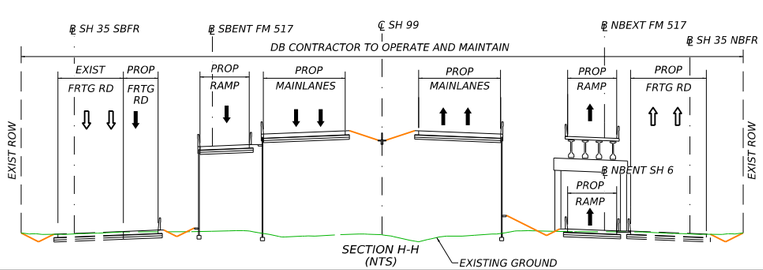

SECTION H-H (NTS)

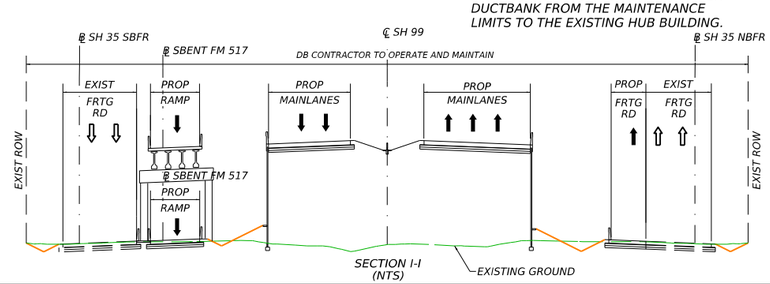

SECTION I-I (NTS)

LEGEND

- LIMITS OF DB CONTRACTOR'S CONSTRUCTION, OPERATIONS, AND MAINTENANCE RESPONSIBILITIES
- DETENTION PONDS
- PROP ROW
- EXIST ROW
- TEMPORARY CONSTRUCTION OR DRAINAGE EASEMENT
- PROP SH 99
- PROP SH 35 PROJECT
- PROP BRIDGE

0' 250' 500'

SCALE: 1"= 500'

LJA PROGRAM MANAGEMENT

FRN - F-14256

Texas Department of Transportation

© 2024 BY TEXAS DEPARTMENT OF TRANSPORTATION, ALL RIGHTS RESERVED

ATTACHMENT 27-3: MAINTENANCE LIMITS SH 99 GRAND PARKWAY SEGMENT B-1

STA 6218+00 TO STA 6280+00

SHEET 4 OF 12

CONT	SECT	JOB	HIGHWAY
2510	001	02	SH 99
DIST		COUNTY	SHEET NO.
HOU		BRAZORIA/GALVESTON	4

DATE: 1/31/2025 9:14:35 AM
FILE: c:\workingdir\lja-pw.bentley.com_lja-pw-01\gregorio.perez.nino\d0110946\GB01_LJA_ME_04.dgn

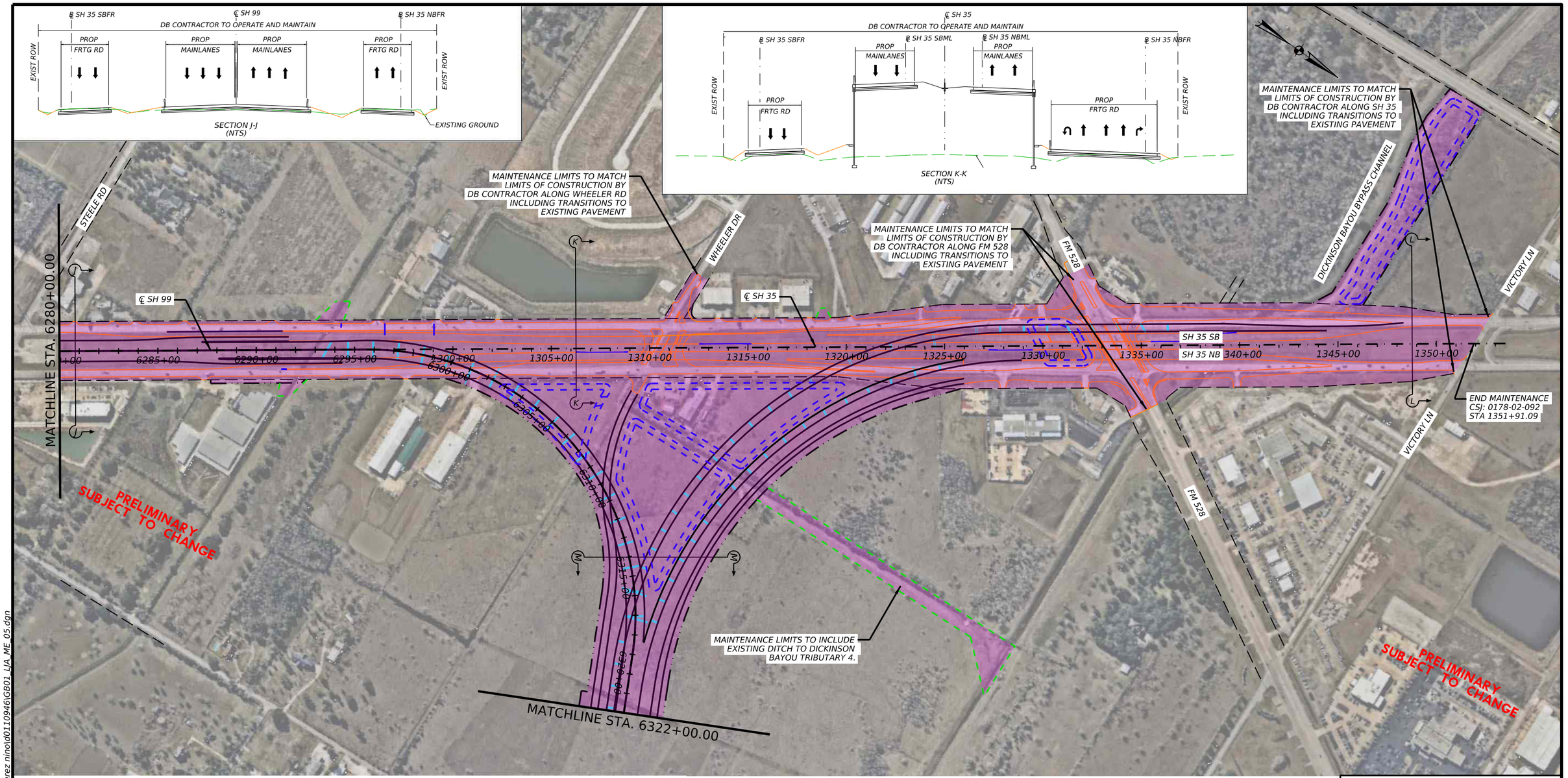

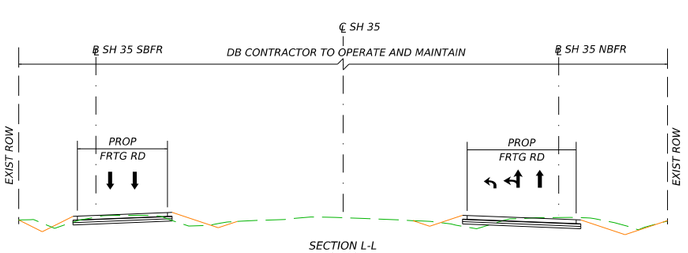

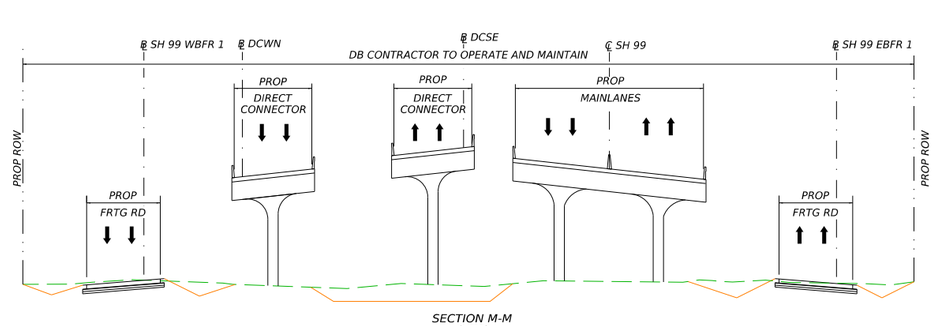

NOTE:

1. DB CONTRACTOR TO COORDINATE UTILITY RELOCATIONS OUTSIDE ROW LIMITS WITH UTILITY OWNER AND LANDOWNER.

2. CONTRACTOR TO MAINTAIN ITS DUCTBANK SHOWN OUTSIDE LIMITS.

LEGEND

- LIMITS OF DB CONTRACTOR'S CONSTRUCTION, OPERATIONS, AND MAINTENANCE RESPONSIBILITIES
- DETENTION PONDS
- PROP ROW
- EXIST ROW
- TEMPORARY CONSTRUCTION OR DRAINAGE EASEMENT
- PROP SH 99
- PROP SH 35 PROJECT
- PROP BRIDGE

0' 250' 500'

SCALE: 1"= 500'

LJA PROGRAM MANAGEMENT

FRN - F-14256

Texas Department of Transportation

© 2024 BY TEXAS DEPARTMENT OF TRANSPORTATION, ALL RIGHTS RESERVED

ATTACHMENT 27-3: MAINTENANCE LIMITS SH 99 GRAND PARKWAY SEGMENT B-1

STA 6280+00 TO STA 6322+00

SHEET 5 OF 12

CONT	SECT	JOB	HIGHWAY
2510	001	02	SH 99
DIST		COUNTY	SHEET NO.
HOU		BRAZORIA/GALVESTON	5

DATE: 1/28/2025 1:52:15 PM
FILE: c:\workingdir\ja-pw.bentley.com_lja-pw-01\gregorio perez.nino\d0110946\GB01_LJA_ME_05.dgn

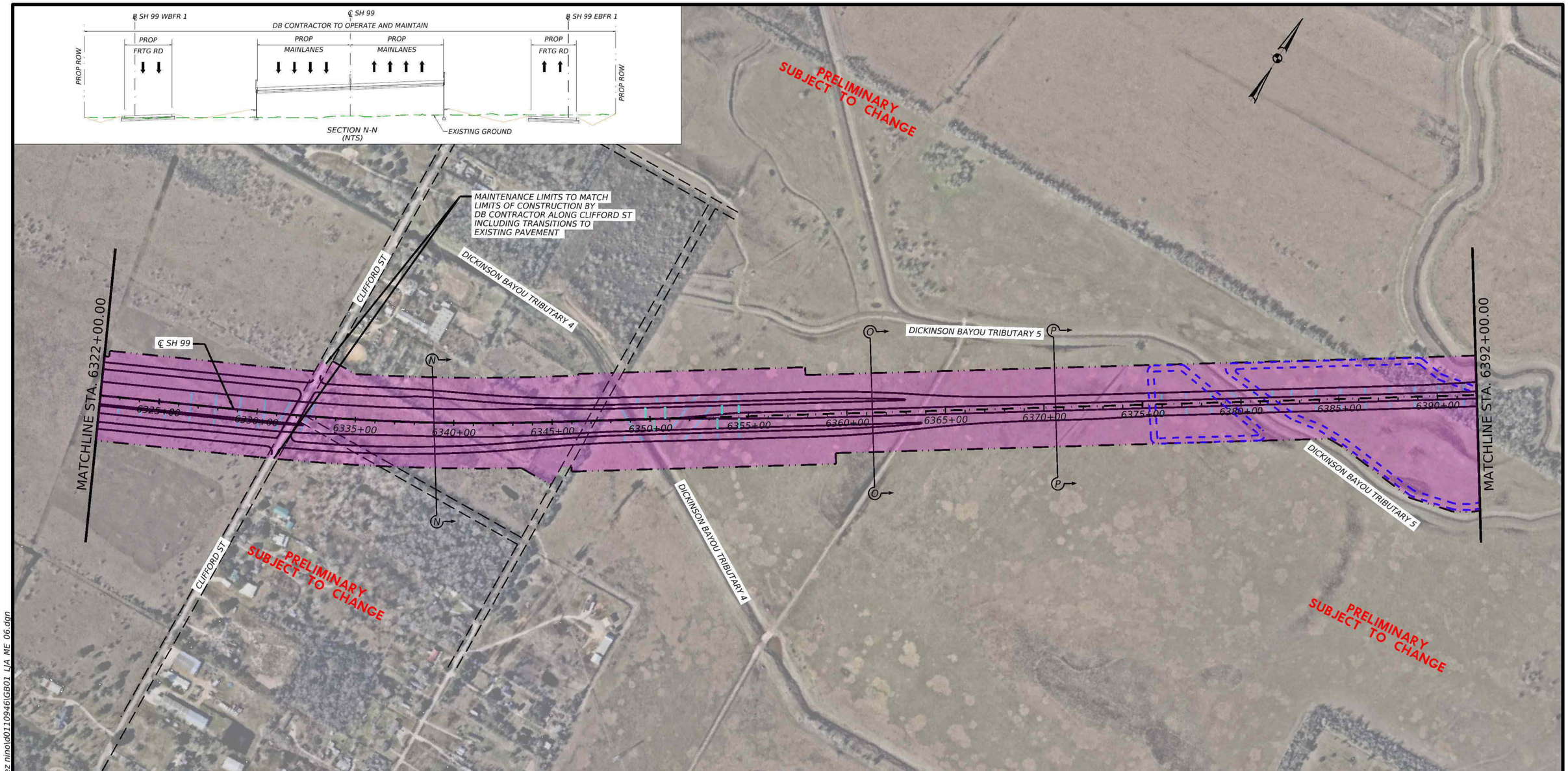

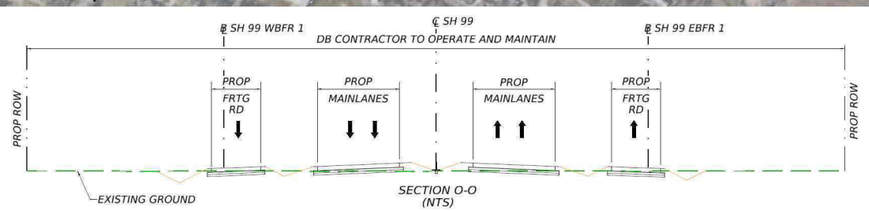

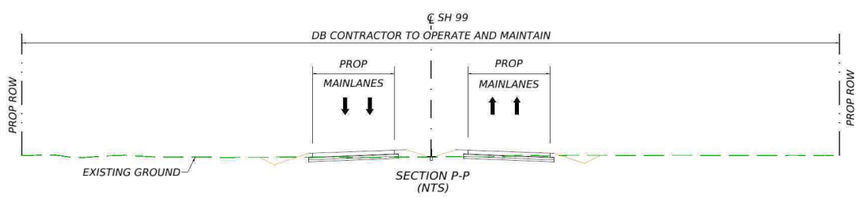

NOTE:

1. DB CONTRACTOR TO COORDINATE UTILITY RELOCATIONS OUTSIDE ROW LIMITS WITH UTILITY OWNER AND LANDOWNER.

2. DB CONTRACTOR TO MAINTAIN FIBER DUCTBANK FROM THE MAINTENANCE LIMITS TO THE EXISTING HUB BUILDING.

LEGEND

- LIMITS OF DB CONTRACTOR'S CONSTRUCTION, OPERATIONS, AND MAINTENANCE RESPONSIBILITIES
- DETENTION PONDS
- PROP ROW
- EXIST ROW
- TEMPORARY CONSTRUCTION OR DRAINAGE EASEMENT
- PROP SH 99
- PROP SH 35 PROJECT
- PROP BRIDGE

0' 250' 500'

SCALE: 1"= 500'

LJA PROGRAM MANAGEMENT

FRN - F-14256

Texas Department of Transportation

© 2024 BY TEXAS DEPARTMENT OF TRANSPORTATION. ALL RIGHTS RESERVED

ATTACHMENT 27-3:
MAINTENANCE LIMITS
SH 99
GRAND PARKWAY SEGMENT B-1
STA 6322+00 TO STA 6392+00

SHEET 6 OF 12

CONT	SECT	JOB	HIGHWAY
2510	001	02	SH 99
DIST	COUNTY		SHEET NO.
HOU	BRAZORIA/GALVESTON		6

DATE: 1/26/2025 10:09:38 AM
FILE: c:\workingdir\lja-pw.bentley.com lja-pw-01\gregorio perez nino\d0110946\GB01 LJA ME 06.dgn

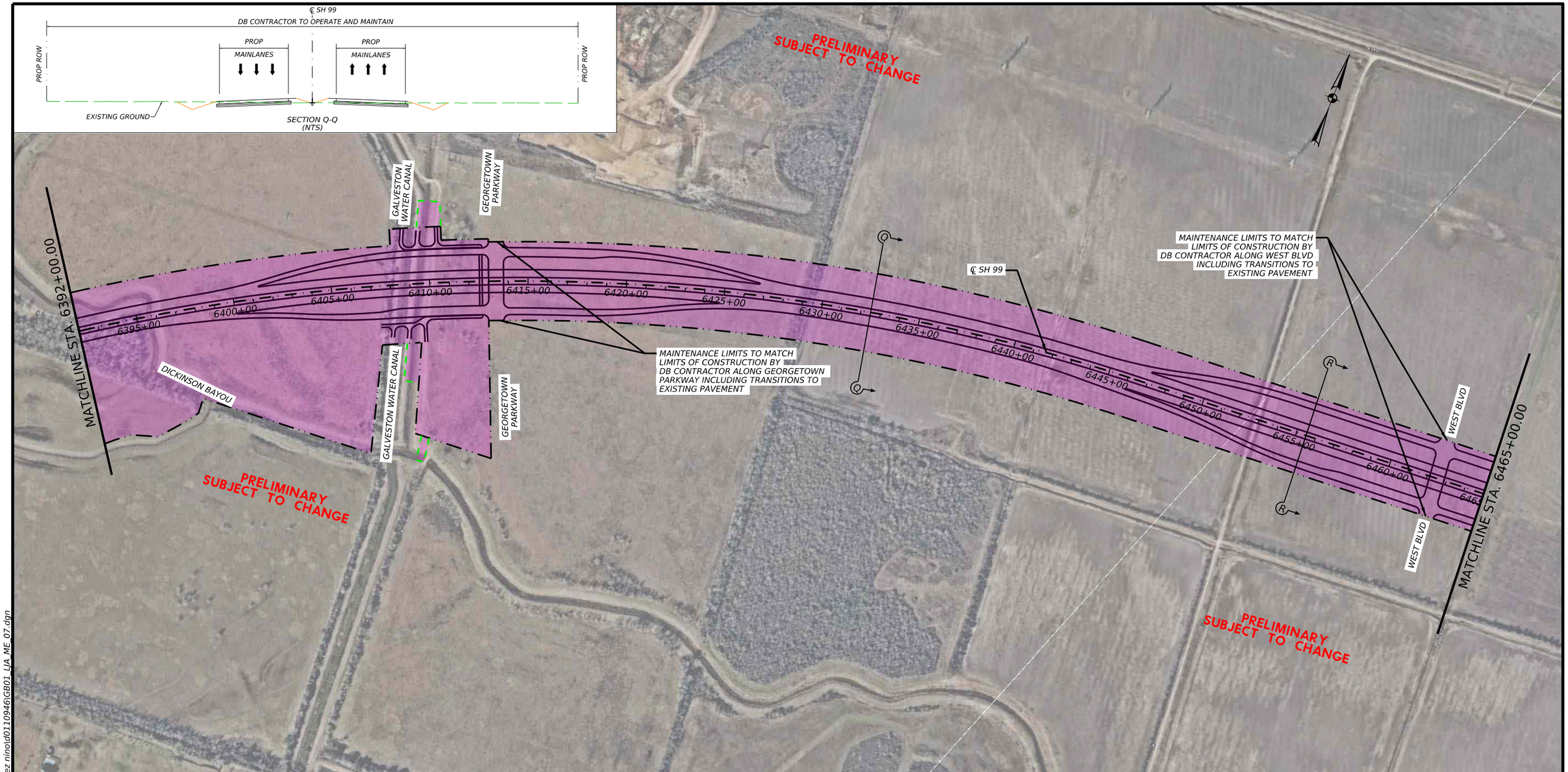

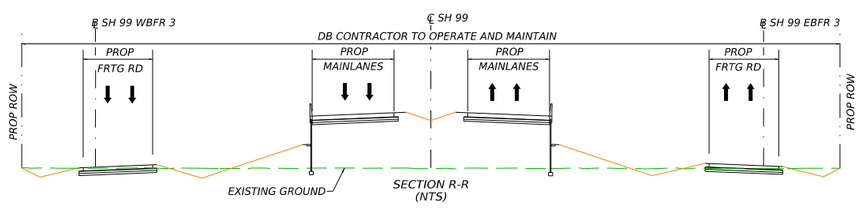

NOTE:

1. DB CONTRACTOR TO COORDINATE UTILITY RELOCATIONS OUTSIDE ROW LIMITS WITH UTILITY OWNER AND LANDOWNER.

2. DB CONTRACTOR TO MAINTAIN FIBER DUCTBANK FROM THE MAINTENANCE LIMITS TO THE EXISTING HUB BUILDING.

LEGEND

- LIMITS OF DB CONTRACTOR'S CONSTRUCTION, OPERATIONS, AND MAINTENANCE RESPONSIBILITIES
- DETENTION PONDS
- PROP ROW
- EXIST ROW
- TEMPORARY CONSTRUCTION OR DRAINAGE EASEMENT
- PROP SH 99
- PROP SH 35 PROJECT
- PROP BRIDGE

0' 250' 500'

SCALE: 1"= 500'

LJA PROGRAM MANAGEMENT

FRN - F-14256

Texas Department of Transportation

© 2024 BY TEXAS DEPARTMENT OF TRANSPORTATION, ALL RIGHTS RESERVED

ATTACHMENT 27-3:
MAINTENANCE LIMITS
SH 99
GRAND PARKWAY SEGMENT B-1
STA 6392+00 TO STA 6465+00

SHEET 7 OF 12

CONT	SECT	JOB	HIGHWAY
2510	001	02	SH 99
DIST	COUNTY		SHEET NO.
HOU	BRAZORIA/GALVESTON		7

DATE: 1/31/2025 7:49:25 AM
FILE: c:\working\dir\lja-pw.bentley.com_lja-pw-01\gregorio.perez.ninoldd0110946\GB01_LJA_ME_07.dgn

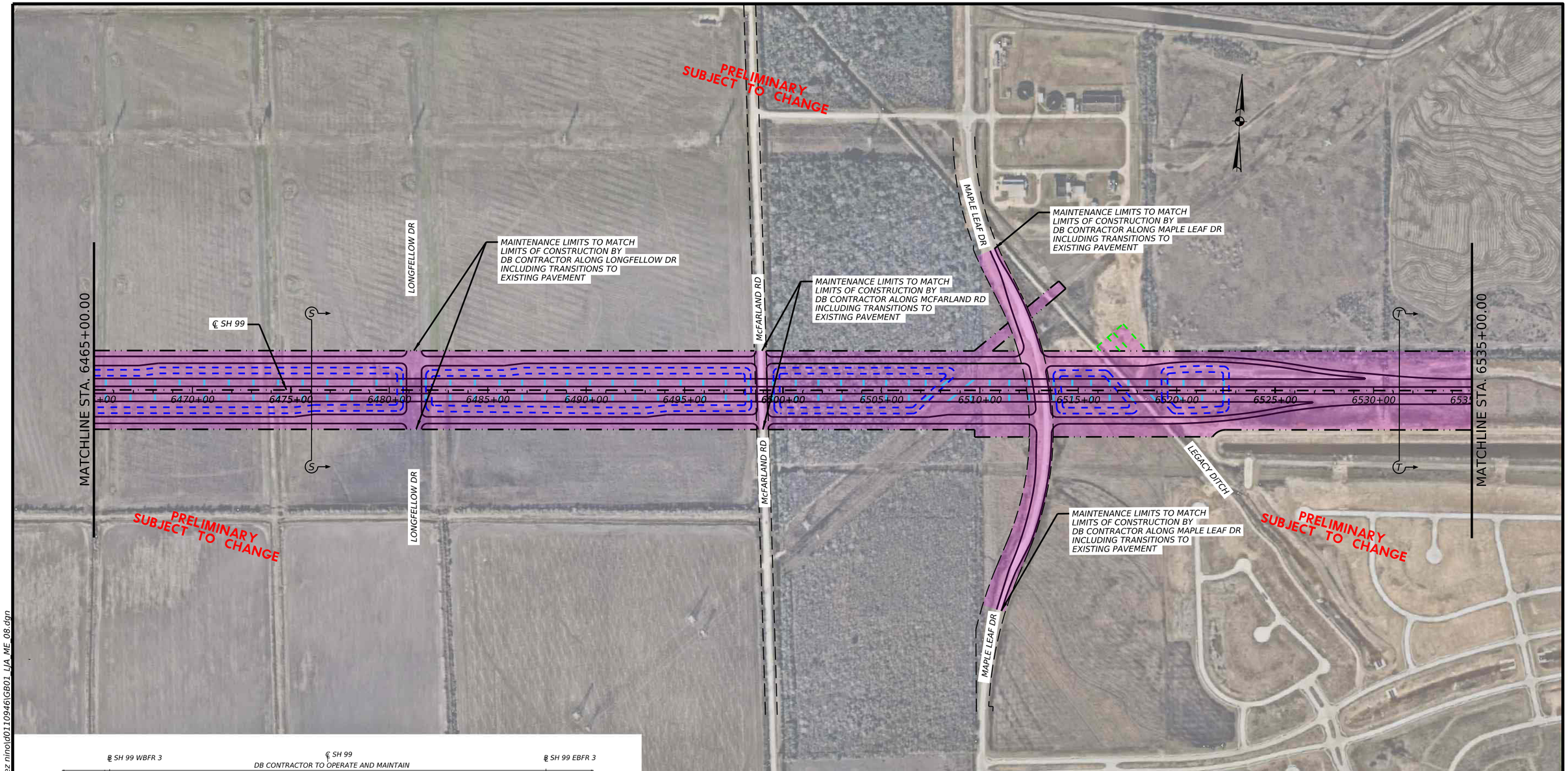

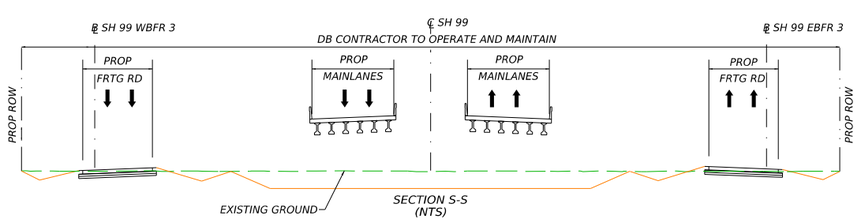

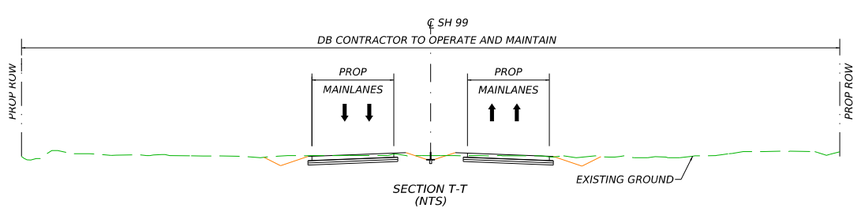

NOTE:

1. DB CONTRACTOR TO COORDINATE UTILITY RELOCATIONS OUTSIDE ROW LIMITS WITH UTILITY OWNER AND LANDOWNER.

2. DB CONTRACTOR TO MAINTAIN FIBER DUCTBANK FROM THE MAINTENANCE LIMITS TO THE EXISTING HUB BUILDING.

LEGEND

- LIMITS OF DB CONTRACTOR'S CONSTRUCTION, OPERATIONS, AND MAINTENANCE RESPONSIBILITIES
- DETENTION PONDS
- PROP ROW
- EXIST ROW
- TEMPORARY CONSTRUCTION OR DRAINAGE EASEMENT
- PROP SH 99
- PROP SH 35 PROJECT
- PROP BRIDGE

0' 250' 500'

SCALE: 1"= 500'

LJA PROGRAM MANAGEMENT

FRN - F-14256

Texas Department of Transportation

© 2024 BY TEXAS DEPARTMENT OF TRANSPORTATION, ALL RIGHTS RESERVED

ATTACHMENT 27-3: MAINTENANCE LIMITS SH 99 GRAND PARKWAY SEGMENT B-1

STA 6465+00 TO STA 6535+00

SHEET 8 OF 12

CONT	SECT	JOB	HIGHWAY
2510	001	02	SH 99
DIST	COUNTY		SHEET NO.
HOU	BRAZORIA/GALVESTON		8

DATE: 1/27/2025 9:32:03 AM
FILE: c:\workingdir\lja-pw.bentley.com_lja-pw-01\gregorio perez nino\d0110946\GB01_LJA_ME_08.dgn

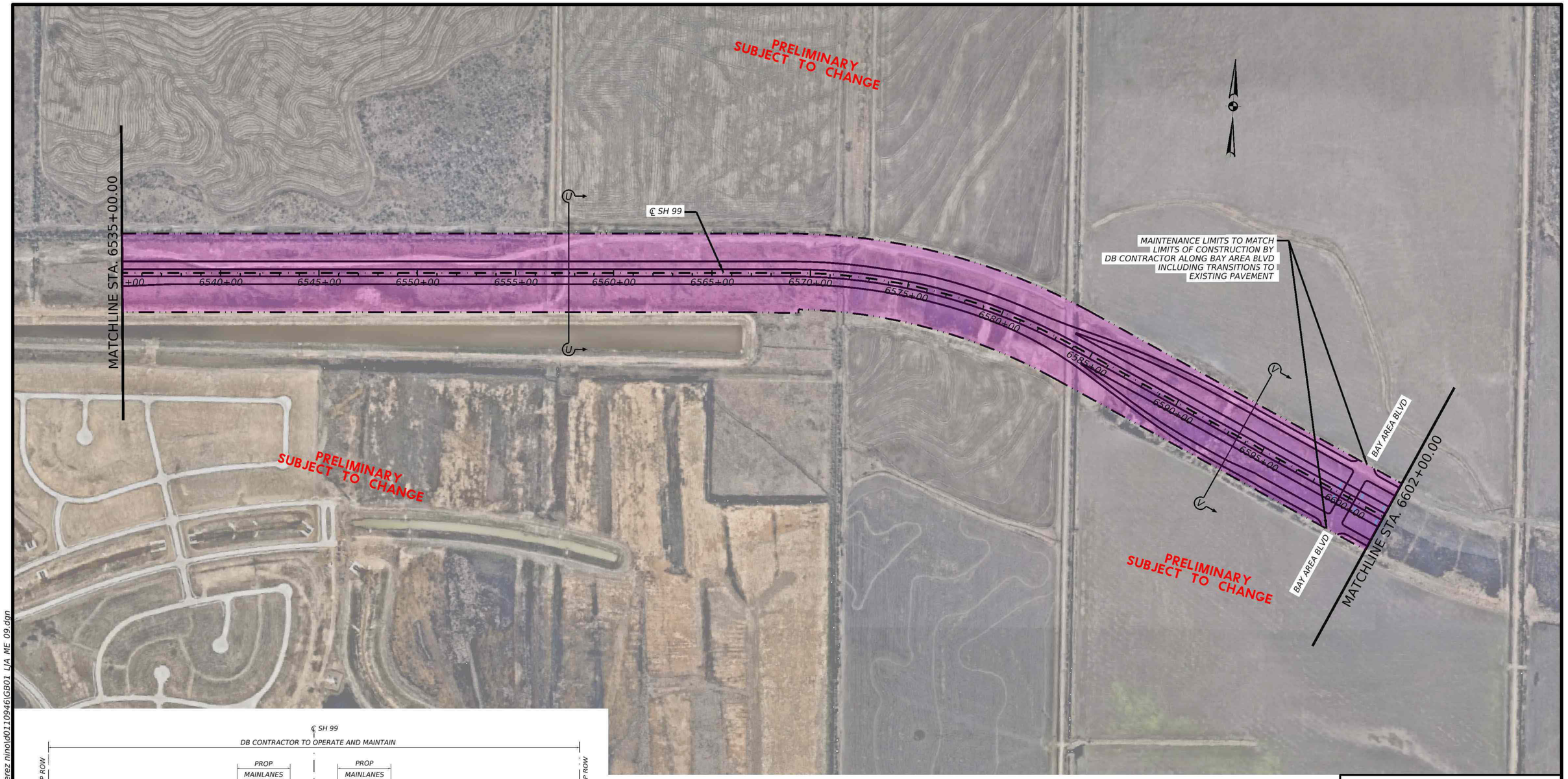

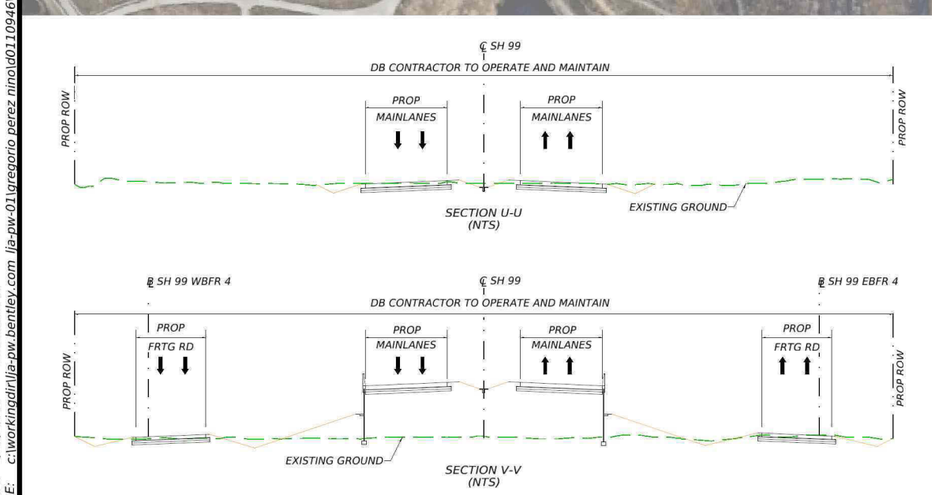

NOTE:

1. DB CONTRACTOR TO COORDINATE UTILITY RELOCATIONS OUTSIDE ROW LIMITS WITH UTILITY OWNER AND LANDOWNER.

2. DB CONTRACTOR TO MAINTAIN FIBER DUCTBANK FROM THE MAINTENANCE LIMITS TO THE EXISTING HUB BUILDING.

LEGEND

- LIMITS OF DB CONTRACTOR'S CONSTRUCTION, OPERATIONS, AND MAINTENANCE RESPONSIBILITIES
- DETENTION PONDS
- PROP ROW
- EXIST ROW
- TEMPORARY CONSTRUCTION OR DRAINAGE EASEMENT
- PROP SH 99
- PROP SH 35 PROJECT
- PROP BRIDGE

0' 250' 500'

SCALE: 1"= 500'

LJA PROGRAM MANAGEMENT

FRN - F-14256

Texas Department of Transportation

© 2024 BY TEXAS DEPARTMENT OF TRANSPORTATION. ALL RIGHTS RESERVED

ATTACHMENT 27-3:
MAINTENANCE LIMITS
SH 99
GRAND PARKWAY SEGMENT B-1
STA 6535+00 TO STA 6602+00

SHEET 9 OF 12

CONT	SECT	JOB	HIGHWAY
2510	001	02	SH 99
DIST	COUNTY		SHEET NO.
HOU	BRAZORIA/GALVESTON		9

DATE: 1/26/2025 10:15:36 AM
FILE: c:\working\dir\lja-pw.bentley.com_lja-pw-01\gregorio.perez.ninol\d0110946\GB01_LJA_ME_09.dgn

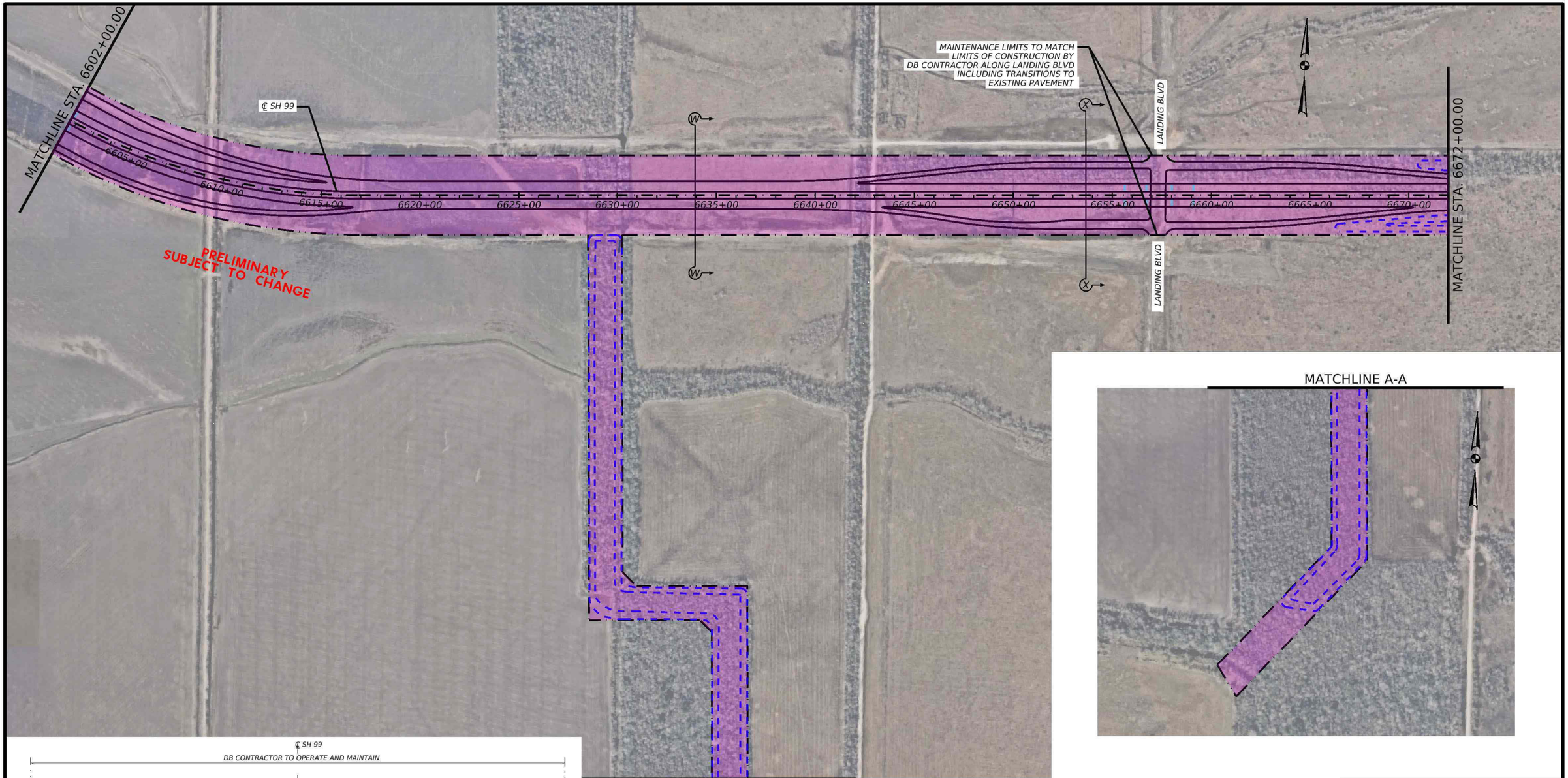

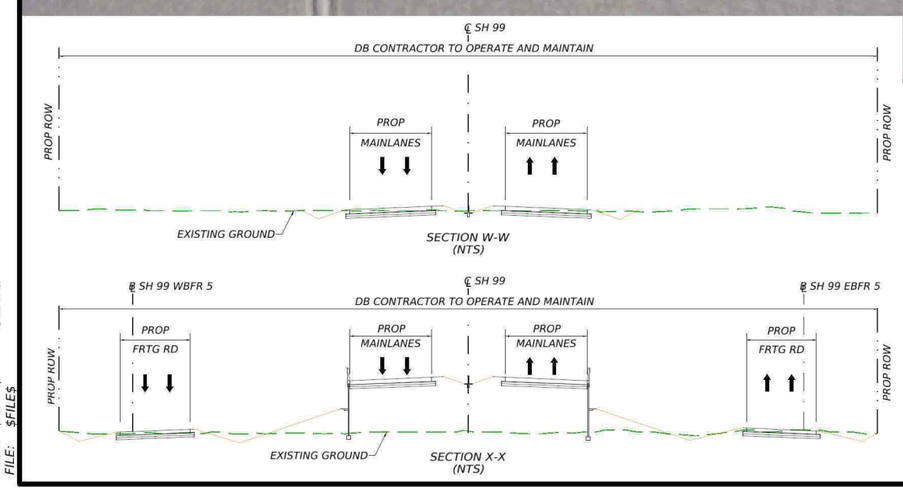

NOTE:

1. DB CONTRACTOR TO COORDINATE UTILITY RELOCATIONS OUTSIDE ROW LIMITS WITH UTILITY OWNER AND LANDOWNER.

2. DB CONTRACTOR TO MAINTAIN FIBER DUCTBANK FROM THE MAINTENANCE LIMITS TO THE EXISTING HUB BUILDING.

LEGEND

- LIMITS OF DB CONTRACTOR'S CONSTRUCTION, OPERATIONS, AND MAINTENANCE RESPONSIBILITIES
- DETENTION PONDS
- PROP ROW
- EXIST ROW
- TEMPORARY CONSTRUCTION OR DRAINAGE EASEMENT
- PROP SH 99
- PROP SH 35 PROJECT
- PROP BRIDGE

0' 250' 500'

SCALE: 1"= 500'

LJA PROGRAM MANAGEMENT

FRN - F-14256

Texas Department of Transportation

© 2024 BY TEXAS DEPARTMENT OF TRANSPORTATION, ALL RIGHTS RESERVED

ATTACHMENT 27-3:
MAINTENANCE LIMITS
SH 99
GRAND PARKWAY SEGMENT B-1
STA 6602+00 TO STA 6672+00

SHEET 10 OF 12

CONT	SECT	JOB	HIGHWAY
2510	001	02	SH 99
DIST	COUNTY		SHEET NO.
HOU	BRAZORIA/GALVESTON		10

DATE: $DATE$
FILE: $FILE$
$TIME$

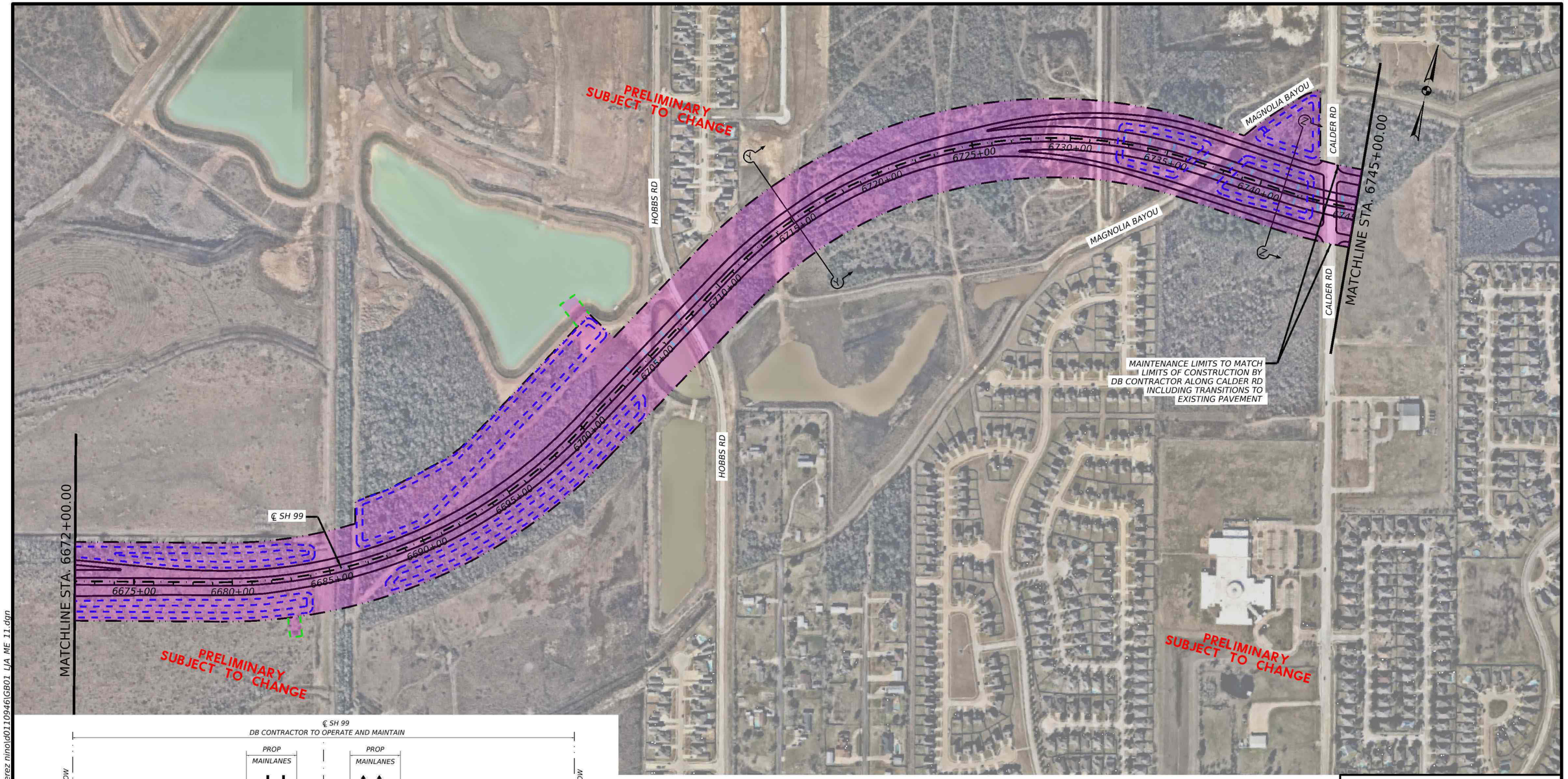

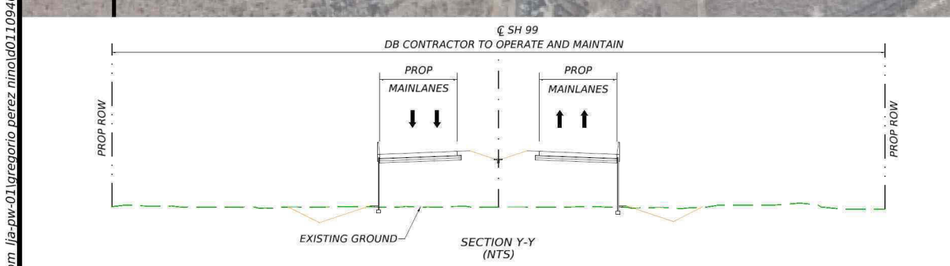

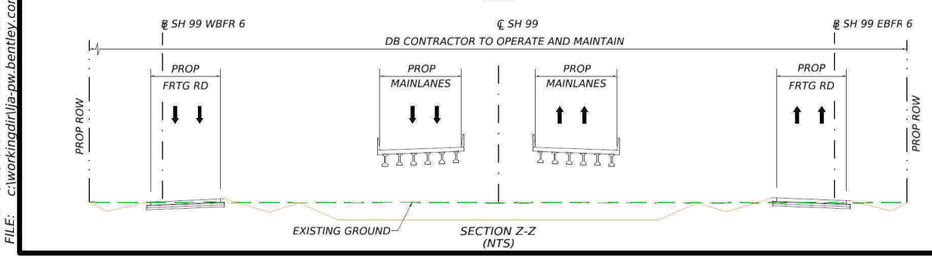

NOTE:

1. DB CONTRACTOR TO COORDINATE UTILITY RELOCATIONS OUTSIDE ROW LIMITS WITH UTILITY OWNER AND LANDOWNER.

2. DB CONTRACTOR TO MAINTAIN FIBER DUCTBANK FROM THE MAINTENANCE LIMITS TO THE EXISTING HUB BUILDING.

LEGEND

- LIMITS OF DB CONTRACTOR'S CONSTRUCTION, OPERATIONS, AND MAINTENANCE RESPONSIBILITIES
- DETENTION PONDS
- PROP ROW
- EXIST ROW
- TEMPORARY CONSTRUCTION OR DRAINAGE EASEMENT
- PROP SH 99
- PROP SH 35 PROJECT
- PROP BRIDGE

0' 250' 500'

SCALE: 1"= 500'

LJA PROGRAM MANAGEMENT

FRN - F-14256

Texas Department of Transportation

© 2024 BY TEXAS DEPARTMENT OF TRANSPORTATION, ALL RIGHTS RESERVED

ATTACHMENT 27-3:
MAINTENANCE LIMITS
SH 99
GRAND PARKWAY SEGMENT B-1
STA 6672+00 TO STA 6745+00

SHEET 11 OF 12

CONT	SECT	JOB	HIGHWAY
2510	001	02	SH 99
DIST	COUNTY		SHEET NO.
HOU	BRAZORIA/GALVESTON		11

DATE: 1/26/2025 10:19:19 AM
FILE: c:\workingdir\lja-pw.bentley.com_lja-pw-01\gregorio perez ninol\d0110946\GB01 LJA ME 11.dgn

MATCHLINE STA. 6745+00.00

UNNAMED CHANNEL

UNNAMED CHANNEL

PRELIMINARY SUBJECT TO CHANGE

PRELIMINARY SUBJECT TO CHANGE

PRELIMINARY SUBJECT TO CHANGE

MAINTENANCE LIMITS TO MATCH LIMITS OF CONSTRUCTION BY DB CONTRACTOR ALONG BROOKPORT DR INCLUDING TRANSITIONS TO EXISTING PAVEMENT

BROOKPORT DR

SEE NOTE 2

℄ SH 99

AA

AA

+00

6750+00

6754+00

6760+00

6765+00

6770+00

6775+00

6780+00

6785+00

6790+00

END PROJECT
CSJ: 3510-02-001
STA 6763+00.00

END MAINTENANCE LIMITS
STA 6784+10.18

FM 646

MAINTENANCE LIMITS TO MATCH LIMITS OF CONSTRUCTION BY DB CONTRACTOR ALONG FM 646 INCLUDING TRANSITIONS TO EXISTING PAVEMENT

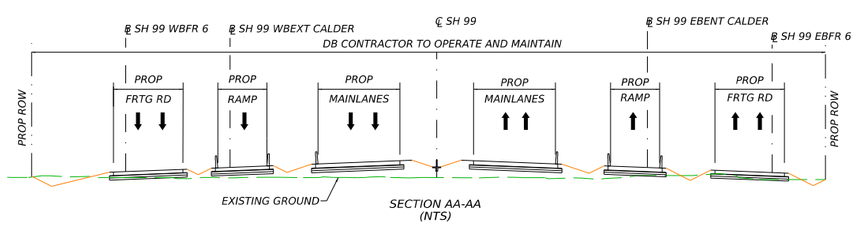

NOTE:

1. DB CONTRACTOR TO COORDINATE UTILITY RELOCATIONS OUTSIDE ROW LIMITS WITH UTILITY OWNER AND LANDOWNER.

2. DB CONTRACTOR TO MAINTAIN FIBER DUCTBANK FROM THE MAINTENANCE LIMITS TO THE EXISTING HUB BUILDING.

LEGEND

- LIMITS OF DB CONTRACTOR'S CONSTRUCTION, OPERATIONS, AND MAINTENANCE RESPONSIBILITIES
- DETENTION PONDS
- PROP ROW
- EXIST ROW
- TEMPORARY CONSTRUCTION OR DRAINAGE EASEMENT
- PROP SH 99
- PROP SH 35 PROJECT
- PROP BRIDGE

0' 250' 500'

SCALE: 1"= 500'

LJA PROGRAM MANAGEMENT

FRN - F-14256

Texas Department of Transportation

© 2024 BY TEXAS DEPARTMENT OF TRANSPORTATION, ALL RIGHTS RESERVED

ATTACHMENT 27-3:
MAINTENANCE LIMITS
SH 99
GRAND PARKWAY SEGMENT B-1
STA 6745+00 TO END

SHEET 12 OF 12

CONT	SECT	JOB	HIGHWAY
2510	001	02	SH 99
DIST	COUNTY		SHEET NO.
HOU	BRAZORIA/GALVESTON		12

DATE: 1/31/2025 7:35:23 AM
FILE: c:\workingdir\lja-pw.bentley.com_lja-pw-01\gregorio.perez.ninoldo\01109461GB01_LJA_ME_12.dgn

Texas Department of Transportation

DESIGN-BUILD SPECIFICATIONS
Items 10-29

Attachment 27-4
Maintenance Management Plan

September 2025

Maintenance Management Plan

NAME OF PROJECT
Contract #XXXXX

Day Month Year

Prepared By: DB Contractor's Name
Street Address
Suite XXX
City Name, Texas XXXX

Note: this MMP Template applies to Maintenance Work performed under the DBC prior to Final Acceptance.

MAINTENANCE MANAGEMENT PLAN

For The

NAME OF PROJECT

Approved By:

_____ _____

FirstName LastName
Maintenance Manager (MM) **Date**

_____ _____

FirstName LastName
Maintenance Quality Manager (MQCM) **Date**

_____ _____

FirstName LastName
TxDOT's Authorized Representative **Date**

Record of Revisions

Rev.	Date Issued	Pages Affected	Comments
0	XX/XX/XXXX	All	Initial Issue
1	XX/XX/XXXX	XX-XX	Add brief comment regarding revision

Instructions to DB Contractor:

(These instructions to be removed from completed Maintenance Management Plan)

1. This MMP template defines the structure and required contents of the MMP. Use this template for each version and revision of the MMP submitted to TxDOT for approval.
2. Include the Design-Build (DB) Contractor's processes to achieve compliance with the obligations in the Contract Documents including the Performance Requirements. Describe who is responsible for each activity.
3. Processes should be clear, auditable, measurable, and achievable. Include control points at which the DB Contractor causes its own personnel or independent parties to verify that the work is in compliance with the Design-Build Contract. Identify points in the processes at which TxDOT is given the opportunity to witness or approve the Work.
4. Identify the procedures (i.e. detailed steps) that will be utilized (see Appendix 6 for a listing of procedures that are needed at a minimum).
5. The MMP shall apply to Maintenance Work before Final Acceptance and an updated version of this plan shall apply to the Capital Maintenance Contract.
6. Describe the MMP updating process so that TxDOT knows who will be performing what actions when.
7. The MMP is part of the Project Management Plan (PMP). Section 4.2 of the General Conditions sets forth TxDOT's approval rights and the conditions attached to its approval of the PMP.
8. Do not duplicate Item 27 of the Design-Build Specifications or the Capital Maintenance Agreement (CMA) General Conditions within the MMP. Where necessary, cross reference relevant parts of Item 27 of the Design-Build Specifications or the CMA General Conditions.
9. Include within the MMP all Proposal Commitments related to the Maintenance Work and how TxDOT will be able to verify the Proposal Commitments have been fulfilled.
10. Instructions to the DB Contractor are shown in this template in parentheses and italics and shall be removed prior to submittal of the MMP to TxDOT.

TABLE OF CONTENTS

1. GENERAL MANAGEMENT AND ADMINISTRATION 1

1.1 Organization and Personnel 1

1.1.1 Design-Build (DB) Contractor Maintenance Organization Chart 1

1.1.2 Qualifications, Experience necessary and training requirements for DB Contractor staff positions 1

1.1.3 Personnel Training and Certification 1

1.2 Communication Protocols 2

1.2.1 Communications with TxDOT, Governmental Entities and Third Parties 2

1.2.2 Coordination during Intelligent Transportation Systems (ITS) integration and ITS operations 2

1.2.3 Oversize / Overweight Permits 3

1.2.4 Coordination with Utilities, Stakeholders and other Third Parties 3

1.3 Project Meetings 3

1.4 Document Control and Information Management 4

1.5 Procurement and Subcontractors 4

1.6 Offices and Equipment 5

2. EMERGENCY RESPONSE 5

2.1 Incident and Emergency Management Plan (IEMP) 5

2.2 Snow and Ice Control Plan (SICP) 7

2.3 Severe Weather Evacuation Plan (SWEP) 7

3. ENVIRONMENTAL COMPLIANCE 8

3.1 Hazardous Material Management Plan (HMMP) 8

3.2 Storm Water Pollution Prevention Plan (SW3P) Implementation 8

3.3 Truck Routes, Hazardous Material Routes and related Approvals 8

3.4 Environmental Compliance and Mitigation Plan (ECMP) 8

4. MAINTENANCE LIMITS AND PERFORMANCE REQUIREMENTS AND MAINTENANCE SERVICES PROCEDURES 9

4.1 Maintenance Limits, Layout and Limits of Performance Sections 9

4.2 Performance and Measurement Tables 9

4.3 Maintenance Management System (MMS) 9

4.4 Defects and Inspections 9

4.5 Tracking and Reporting Noncompliance Events 10

5. MAINTENANCE SAFETY PLAN 10
APPENDIX 1: STAFF NAMES CONTACT DETAILS AND QUALIFICATIONS 11
APPENDIX 2: CONTACT DETAILS FOR TXDOT AND THIRD PARTIES 11
APPENDIX 3: MAINTENANCE LIMITS AND LIMITS OF PERFORMANCE SECTIONS 11
APPENDIX 4: PERFORMANCE AND MEASUREMENT TABLES 11
APPENDIX 5: MAINTENANCE FACILITY LOCATION AND EQUIPMENT 11
APPENDIX 6: MMP PROCEDURES 12
APPENDIX 7: TEMPLATE FOR TYPICAL PROCEDURE 13
APPENDIX 8: QUALITY POLICIES 14

1. GENERAL MANAGEMENT AND ADMINISTRATION

[Provide an overview of the approach to delivering Maintenance Work for the Project prior to Final Acceptance, identify the Project's maintenance objectives and reference applicable quality policies in Appendix 8. Identify Proposal Commitments applicable to the Maintenance Work. Show timeline for MMP versions and updates and MMP submittal milestones.]

1.1 Organization and Personnel

1.1.1 Design-Build (DB) Contractor Maintenance Organization Chart

Figure 1.1 below shows the organization chart for Maintenance Work before Final Acceptance.

[Describe the organizational structure and how it will enable the DB Contractor's obligations for Maintenance Work to be met. Describe the reporting lines to TxDOT and internally. Describe the roles and responsibilities assigned to each position. Identify Major Subcontractors and describe the Maintenance Work to be performed by them.]

Figure 1.1: Organization Chart for Maintenance Work before Final Acceptance

[Insert organization chart showing reporting lines to include at a minimum:

- *TxDOT Project Manager*
- *DB Contractor corporate management team*
- *DB Contractor Project Manager**
- *Maintenance Manager**
- *Maintenance Quality Manager**
- *Maintenance Safety Manager**
- *Individual responsible for customer service**
- *Individual responsible for training program**
- *Individual responsible for ensuring maintenance and life cycle issues are captured in the design with link to design and construction teams**

For each individual (*) identify the employing organization. Show positions and activities to be undertaken by Major Subcontractors.]

1.1.2 Qualifications, Experience necessary and training requirements for DB Contractor staff positions

Appendix 1 shows the individual(s) assigned to staff positions with their positions, contact information (email and mobile phone number), education/qualifications, role, and summary of previous experience.

[Include at a minimum the individuals required to be identified on the organization chart and marked with (*) above, including individuals employed by subcontractors]

1.1.3 Personnel Training and Certification

Table 1.1 defines responsibility for development and implementation of training programs, who will be conducting the training and certification process for each staff position, including maintenance personnel, subcontractors and maintenance crew members on the topics below.

Table 1.1: Training Program Matrix

Training Program	Person responsible to develop and deliver	Staff positions requiring training	Frequency of training	Link to training program
Maintenance Management Plan training				
Inspections, Defect identification and categorization of Defects				
Maintenance Safety Plan, equipment use, all safety-related activities and enforcement of safety operations				
CPR and first aid				
Work zone traffic control and flaggers in work zones				
[Other training programs as appropriate (details to be added by DB Contractor)]				

[Include at a minimum training requirements for the individuals required to be identified on the organization chart, including individuals employed by subcontractors]

1.2 Communication Protocols

[Insert the required information below and refer to appropriate chapter and section from the PMP for all sub-sections of 1.2 (1.2.1 – 1.2.4).

1.2.1 Communications with TxDOT, Governmental Entities and Third Parties

Refer to the following procedures in Appendix 6:

- MMP-001 –Submittals and Coordination with TxDOT, Governmental Entities and Third Parties

For processes on meetings, reporting, written updates and immediate notifications on priority issues refer to *[Chapter X, Section X]* of the Project Management Plan (PMP).

Contact details for TxDOT, Governmental Entities, third parties, other stakeholders and their consultant offices with whom the DB Contractor will communicate are listed in Appendix 2.

[Within MMP-001 identify all adjacent highway agencies and address all interfaces with adjacent and connecting roadways.]

1.2.2 Coordination during Intelligent Transportation Systems (ITS) integration and ITS operations

For ITS integration before Final Acceptance refer to *[Chapter X, Section X]* of the PMP.

The following are maintenance interfaces with ITS:

[List the points of interfaces and include reference to diagrams or drawings showing interface lines and demarcations of responsibility for each item of ITS equipment. Include updates consistent with progress of design].

The contact details for other entities responsible for ITS are as follows:

[List the contact details here]

1.2.3 Oversize / Overweight Permits

The process for requests for permitting, issuance of permits and enforcement of permits through TxDOT is included in the following procedure in Appendix 6:

- MMP-002 –Agency Coordination for Oversize Loads

[State how TxDMV will be notified of closures associated with permits and how updates for roadway clearances during construction will be provided.]

1.2.4 Coordination with Utilities, Stakeholders and other Third Parties

Refer to the following procedures in Appendix 6:

- MMP-001 –Submittals and Coordination with TxDOT, Other Agencies and Third Parties

Table 1.2 below shows:

- Utilities, stakeholders and other third parties;
- In-house staff and specialized resources from the maintenance team responsible for coordination (including development and compliance with processes and the production of documentation) for each utility, stakeholder and other third party; and
- Reference to procedures contained in Appendix 6 specific to each named entity.

Table 1.2: Coordination with Governmental Entities, Stakeholders, Utilities, and Third Parties

Entity, Utility, stakeholder or third party	DB Contractor Personnel responsible for coordination	Reference to Procedure (specific to the named entity)

[Insert Governmental Entity, utility and stakeholder or third party coordination responsibilities and processes for Maintenance Work before Final Acceptance. Include reference to individual procedures applicable to each entity, covering the following:

- *Notification to entity of upcoming Maintenance Services that may affect the entity's operations, e.g. Maintenance Services affecting adjacent business of utility interest*
- *Application by entity for access to inspect, repair, renew or replace its equipment within the Maintenance Limits.]*

1.3 Project Meetings

[Refer to appropriate chapter and section from the PMP for meetings in connection with Maintenance Work.]

The meeting types, topics, required participants and frequencies of meetings in connection with Maintenance Work shall be in accordance with Table 1.3.

Table 1.3 Meetings in Connection with Maintenance Work

Meeting Type	Frequency	Attendees
Maintenance Work review meeting	Quarterly or more frequently depending upon the Maintenance Work being performed	TxDOT, Maintenance Manager, other senior personnel

[Insert details of all other meetings in connection with the Maintenance Work including mandatory meetings required by TxDOT.]

1.4 Document Control and Information Management

[Refer to appropriate chapter and section from the PMP for document control and information management in connection with Maintenance Work.
Document Control and information management for Maintenance Work shall be as identified in Table 1.4.

Table 1.4: Document Control and Information Management

Person responsible for compliance with TxDOT Maintenance and Inspection of Records requirements	*[Insert name of individual or staff position]*
Procedures applicable	*[Insert references to applicable procedures]*
Document management Electronic Content Management System software	*[Insert details of software and reference to manuals]*
Person responsible for the storage and retention of Maintenance Records	*[Insert name of individual or staff position]*
[Insert other requirements applicable to document control and information management]	

1.5 Procurement and Subcontractors

Maintenance Work activities that will be subcontracted are shown in Table 1.5 below.

Table 1.5: Details of Subcontractors Performing Maintenance Work

Name of Subcontractor and start date	Key contact details	Work responsibility

[Add details of each subcontractor in accordance with the requirements of the DBC.]

1.6 Offices and Equipment

Refer to the following procedure in Appendix 6:

- MMP-003 – Maintenance of Facilities, Vehicles and Equipment Plan

[Provide location and map in Appendix 5 (if different than the Roadway Maintenance office) of the maintenance facility for equipment maintenance and storage and for the de-icing material storage, if applicable.]

[Provide spare parts, special tools and equipment list including an auditable parts and spares inventory adequate to address the maintenance obligations and compatible with the Maintenance Management System and a list of vendors for equipment and maintenance services. This information shall be included in Appendix 5]

[Provide current versions and procedures, functionality, software maintenance requirements and access protocols for all specialist software employed by DB Contractor in connection with the Maintenance Services.]

The physical address is *[insert address]*

The 24-hour contact number is *[insert number].*

2. EMERGENCY RESPONSE

2.1 Incident and Emergency Management Plan (IEMP)

The IEMP contains the approach to Incident management consistent with *Section 27.7.1 of the Design-Build Specifications*, training requirements and staffing requirements for response to Incidents and Emergencies, and includes protocols, processes, and guidelines to mitigate the impacts, respond to and recover from all such events. The IEMP has been prepared in coordination with and including input from the following organizations:

[Insert Project-specific list of consultees, dates of consultation and evidence of actively seeking input and feedback, to include TxDOT, Emergency Services, owners of Related Transportation Facilities and applicable Governmental Entities.]

The command structure for Incident Management is shown in Figure 2.1.

Figure 2.1: Command Structure for Incident Management

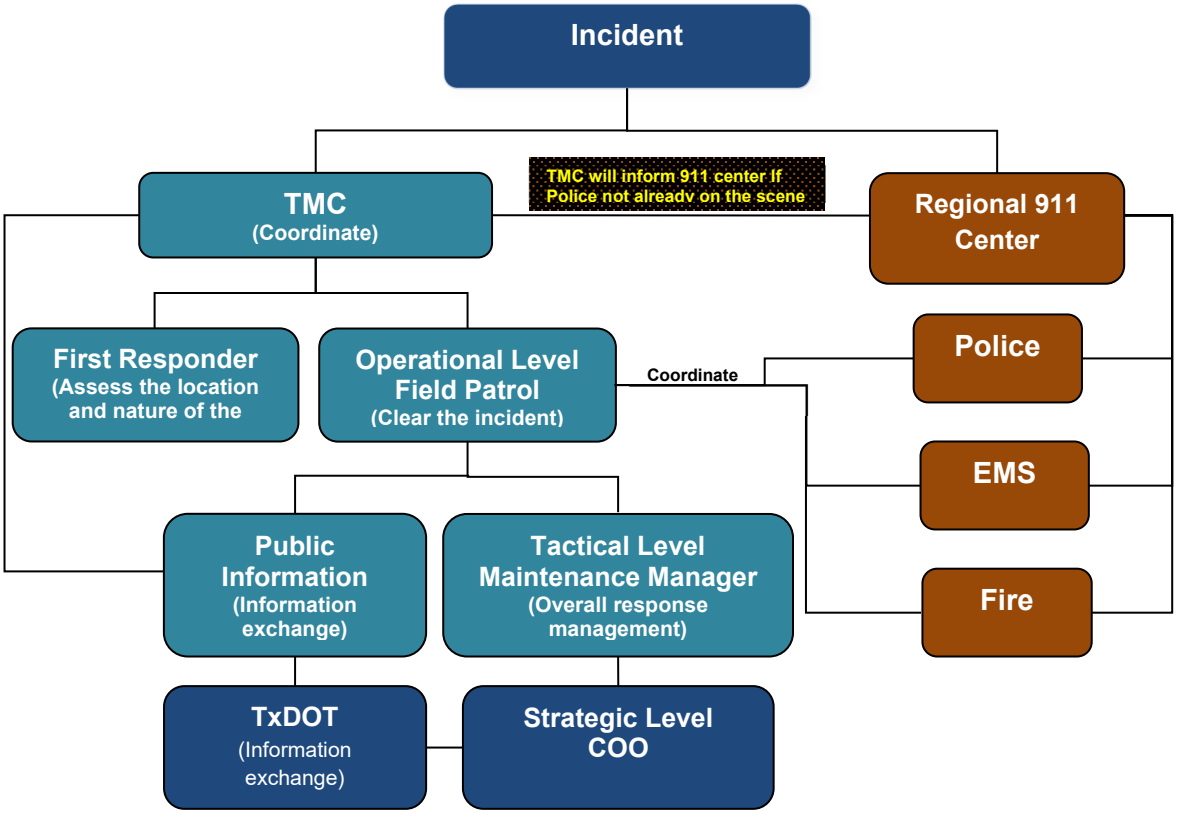

[Replace example Command Structure by Project-specific chart of equivalent detail that includes Project-specific details of Emergency Services and TxDOT contacts]

The following procedures in Appendix 6 are part of the IEMP:

- MMP-004 –Emergency and Incident Management.
- MMP-005 – Incident Damage Reports, Third Party Claims and Repairs
- MMP-006 – Complaint Review and Response
- MMP-007 – Customer Satisfaction Data Collection System

[Include within the IMP, processes and responsibilities for:

(i) Identification of Incidents of differing categories (minor, major, critical) and notification of Emergency Services providers

(ii) Rapid and reliable establishment of traffic control for Incident management

(iii) Removal by towing and recovery of stalled, broken down, wrecked or otherwise incapacitated vehicles from the travel lane, including coordination with Emergency Services/law enforcement

(iv) Clearance of Incident and return affected lanes to normal use within the specified period of arriving at the Incident site

(v) Cleanup of debris, oil, broken glass and other such objects foreign to the roadway surface

(v) Notification of the public of traffic issues related to Incidents

(vi) Seeking feedback from TxDOT, emergency services and law enforcement and improving processes to improve response times.

(vii) *contact methods, personnel available, and response times for any Emergency condition requiring attention during off-hours*

(viii) identification and containment of all Hazardous Material spills and appropriate disposal of such materials.]

2.2 Snow and Ice Control Plan (SICP)

The SICP contains operational processes for performing snow and ice control work. The SICP complies with all applicable Law, codes, and regulations governing the operation of equipment on public highways. The SICP will be updated at least annually to incorporate any changes in strategy and equipment levels designed to rectify any noncompliances in snow and ice removal operations during the preceding winter season.

The following procedure contained in Appendix 6 is part of the SICP.

- MMP-008 – Snow and Ice Control / Clean-up Plan.

[Include within the SICP processes and responsibilities for:

(i) Receiving weather forecasts and making decisions for snow and ice control and pretreatment based upon analysis of data received

(ii) Advance preparation and call-out

(iii) Training in connection with snow and ice control

(iv) Record keeping/ reporting including maintaining records of compliance with the Performance Requirements

(v) Environmental management and processes for using preventative measures, involving use of anti-icing and de-icing chemicals such as salt and alternative substances, including storage and application

(vi) A list of the equipment and materials available for snow and ice control including its current location and methods to guarantee its availability for use.]

2.3 Severe Weather Evacuation Plan (SWEP)

The SWEP contains operational processes for evacuation. The SWEP complies with all applicable Law, codes, and regulations governing the operation of equipment on public highways. The SWEP will be updated at least annually to incorporate any changes in strategy and evacuation routes during the previous year.

The following procedure in Appendix 6 is part of the SWEP:

- MMP-009 – Severe Weather Evacuation Plan.

[Include within the SWEP a process and the individual responsible for each of the following:

(i) Receiving weather forecasts and making decisions for evacuation based upon analysis of data received

(ii) Advance preparation and call-out

(iii) Training in connection with evacuation processes

(iv) Record keeping / reporting including maintaining records of compliance with the Performance Requirements

(v) Develop evacuations zones and evacuation guides with routes.]

3. ENVIRONMENTAL COMPLIANCE

3.1 Hazardous Material Management Plan (HMMP)

The HMMP governs the safe handling, storage, treatment and/or disposal of Hazardous Materials, whether encountered at or brought onto the Project by the DB Contractor, encountered or brought onto the Project by a third party, or otherwise, spill prevention and countermeasures and pollution prevention measures.

The HMPP is at *[Chapter X, Section X]* of the PMP.

3.2 Storm Water Pollution Prevention Plan (SW3P) Implementation

Maintenance Work will be undertaken in compliance with the Texas Commission on Environmental Quality Texas Pollutant Discharge Elimination System Construction General Permit in accordance with the TxDOT Storm Water Management and Guidelines for Construction Activities Manual.

The SW3P is at *[Chapter X, Section X]* of the PMP.

3.3 Truck Routes, Hazardous Material Routes and related Approvals

Truck Routes, Haz-Mat Routes and associated approvals are at *[Chapter X, Section X]* of the PMP.

3.4 Environmental Compliance and Mitigation Plan (ECMP)

The ECMP includes compliance strategies and processes to be employed in accordance with the requirements of applicable Environmental Laws and Environmental Approvals. Maintenance Work will be undertaken in compliance with the ECMP and the Environmental Commitments.

Refer to Section 1.1.3 for education and training requirements for all project personnel.
The ECMP is at *[Chapter X, Section X]* of the PMP.

4. MAINTENANCE LIMITS AND PERFORMANCE REQUIREMENTS AND MAINTENANCE SERVICES PROCEDURES

4.1 Maintenance Limits, Layout and Limits of Performance Sections

Schematic Drawings showing the Maintenance Limits and the extents of the Performance Sections are included in Appendix 3, consistent with the requirements of *Section 27.1.3 of the Design-Build Specifications*.

[Include processes and responsibilities for:

(i) Periodically validating that the Maintenance Limits are correctly and clearly identified in the field

(ii) Liaison with TxDOT and Governmental Entities at least annually to review the Maintenance Limits, identify any jurisdictional gaps or inefficiencies and recommend solutions]

4.2 Performance and Measurement Tables

Appendix 4 to the MMP contains the most recent approved versions of the Performance and Measurement Tables.

4.3 Maintenance Management System (MMS)

Refer to the following procedure in Appendix 6:

- MMP-010 – Establishing Maintenance Management System

4.4 Defects and Inspections

Refer to the following procedures in Appendix 6:

- MMP-011 – Defect Categorization and Repair
- MMP-012 – Maintenance Inspection Plan
- MMP-013 – Maintenance Repair Submittal Plan

[Include within the above processes and responsibilities for:

(i) Training of responsible personnel to identify and to categorize Defects discovered during inspection. This shall include training specific to the identification and recording of Category 1 Defects.

(ii) Tracking and reporting of Defects including fault detection logs, software output

(iii) Generation of corrective action work orders through the MMS including how backlog of corrective maintenance and repair activities will be populated and monitored in the MMS

(iv) Action by Defect category type, to include a description of how the actions are carried out stating the responsible individuals and the processes for specific Defect types with examples

(v) How Defects will be remedied, with examples provided for all common Defects, stating necessary notification and the individuals to be notified for such Defect repair.

(vi) Documentation including how Defects will be entered, updated and closed in the Maintenance Management System.

(vii) Verification of the satisfactory completion of Maintenance Services and restoration of asset condition

(viii) Discovery of maintenance trends to determine the need for adjustments in the weekly, monthly and annual maintenance plan to address changing project conditions

(ix) Inspection and testing of Project items and the identification and classification of Defects and inspection failures.

(x) Monitoring instrumentation according to applicable specification

(xi) Field inspections of completed Maintenance Services and for preparing daily reports to document all inspections performed

(xii) Identification of inspection agencies and organizations, including information on each agency's capability to provide the specific services required, certifications held, and equipment

(xiii) Preparation and submittal of the Baseline Element Condition Report (BECR)

(xiv) Hazard mitigation for any Category 1 Defect in a Maintained Element of which the DB Contractor is aware through its own inspections, from a third party or through notification by TxDOT

(xv) Proposal to TxDOT of a repair method for any Defect]

4.5 Tracking and Reporting Noncompliance Events

[Include the following where Noncompliance Events are included in the Contract]

Refer to the following procedure in Appendix 6 for Noncompliance Events:

- MMP-014 – Tracking and Reporting Noncompliance Events

[Include within the above processes and responsibilities for:

(i) Meeting self-reporting obligations

(ii) Identification of the start date of each Noncompliance Event

(iii) Accurate assessment and reporting of the date of cure

(iv) Proper use of the Noncompliance Events database and integration with the MMS

(v) Validation of the data, times, dates and other information entered into the Noncompliance Event database including frequency of checks / audits]

5. MAINTENANCE SAFETY PLAN

The Maintenance Safety Plan describes the DB Contractor's policies, plans, training programs, and work site controls to ensure the health and safety of personnel involved in the Project and the general public affected by the Project.

The *Maintenance* Safety Plan is part of the MMP at *[Chapter X, Section X]* of the PMP.

APPENDIX 1: STAFF NAMES CONTACT DETAILS AND QUALIFICATIONS

[Insert contact details, qualifications and training record for Maintenance Work]

Key Personnel or other personnel position	Staff name and start date	Contact details	Education, qualifications and experience	Link to training record in connection with Project
			[Insert details or link to resume]	

APPENDIX 2: CONTACT DETAILS FOR TXDOT AND THIRD PARTIES

[Insert contact details for Maintenance Work]

Organization	Contact name, e-mail and address	Business Phone
TxDOT *[List all TxDOT contacts in connection with Project]*		
Governmental Entities *[list all Governmental Entities]*		
Traffic Management Centers (TMC)		
Utilities *[list all utilities]*		
[Other third parties]		

APPENDIX 3: MAINTENANCE LIMITS AND LIMITS OF PERFORMANCE SECTIONS

[Include Schematic drawings that show the Maintenance Limits and the limits of the Performance Sections before Final Acceptance]

APPENDIX 4: PERFORMANCE AND MEASUREMENT TABLES

[Insert the latest version of the Performance and Measurement Tables]

APPENDIX 5: MAINTENANCE FACILITY LOCATION AND EQUIPMENT

[Insert a map showing the location of the Maintenance Facility and a list of equipment and tools]

APPENDIX 6: MMP PROCEDURES

MMP procedures are shown below. *[Add additional procedures as necessary and provide cross references to the applicable section of the MMP]*

MMP Procedure Number	MMP Procedure Name
MMP-001	Submittals and Coordination with TxDOT, Governmental Entities and Third Parties
MMP-002	Agency Coordination for Oversize Loads
MMP-003	Maintenance of Facilities, Vehicles, and Equipment Plan
MMP-004	Emergency and Incident Management
MMP-005	Incident Damage Reports, Third Party Claims and Repairs
MMP-006	Complaint Review and Response
MMP-007	Customer Satisfaction Data Collection System
MMP-008	Snow and Ice Control Plan
MMP-009	Severe Weather Evacuation Plan
MMP-010	Establishing Maintenance Management System
MMP-011	Defect Categorization and Repair
MMP-012	Maintenance Inspection Plan
MMP-013	Maintenance Repair Submittal Plan
MMP-014	Tracking and Reporting Noncompliance Events
MMP-015	Procedure for Updating MMP

APPENDIX 7: TEMPLATE FOR TYPICAL PROCEDURE

1. PURPOSE AND NEED

[List the reason for the procedure's implementation.]

1.1 Methodologies

[List the methodologies to be defined as part of the procedure.]

2. SCOPE

[Define the limits of the procedure. Define individuals or workgroups to whom the procedure applies.]

3. DEFINED TERMS

- *[List the terms defined as part of the procedure]*

4. STEPS IN PROCEDURE

[Describe the procedure, in detail. List all steps. Assign individual responsibility for implementing the procedure]

[Include tables, flowcharts and figures as applicable.]

5. DOCUMENT CONTROL

[List the methods by which the procedure will be documented and archived. Define the location at which the procedure's records will be filed.]

REFERENCES

[Reference applicable documents within the contract with specific section and page locations.]

Approved By:

_____ _____

FirstName LastName
Maintenance Manager (MM) **Date**

_____ _____

FirstName LastName
Procedure Owner **Date**

APPENDIX 8: QUALITY POLICIES

[Insert here links to or copies of the corporate quality policies and commitments of the DB Contractor and its Affiliates applicable to the Maintenance Work]

Texas Department of Transportation

DESIGN-BUILD SPECIFICATIONS
Item 10-29

Attachment 29-1

Toll Facility Responsibility Matrix

September 2025

Attachment 29-1

Toll Facility Responsibility Matrix

LEGEND		WORK DESCRIPTION	
Primary Responsibility[1]	A	1	2
Support/Coordination Responsibility[2]	B	Design/Procure	Install and/or Construct
No Responsibility	C		

Element/Task/Component/Sub-system	DB Contractor		Systems Integrator (SI)		Comments Other Responsibility/Information
	1	2	1	2	
FACILITIES					
1. Toll Zone layout design	A	N/A	B	N/A	See Section 29.2 of DB Specifications and Attachment 29-2 (Typical Toll Zone Layout). DB Contractor shall include TxDOT approved elements from the Toll Avoidance Evaluation Report.

Element/Task/Component/Sub-system	DB Contractor		Systems Integrator (SI)		Comments Other Responsibility/Information
	1	2	1	2	
2. Electrical conduit and conductor between the following limits: • from metered power service to electrical ground box (adjacent to metered power service) • from electrical ground box (adjacent to metered power service) to electrical ground box (adjacent to concrete pad foundation for roadside equipment) • from electrical ground box (adjacent to concrete pad foundation for roadside equipment) to roadside toll equipment cabinets	A	A	B	B	DB Contractor to furnish and install all required conduit, conductor and ground boxes. DB Contractor shall provide a minimum of 50 feet of electrical conductor coiled at the electrical ground box adjacent to the concrete pad foundation for roadside toll equipment at Toll Zones. This electrical conductor is for the Systems Integrator to pull and terminate into the roadside toll equipment cabinet.
3. Electrical conductor between the following limits: • from roadside toll equipment cabinet to the backup power systems • from the roadside toll equipment cabinet to the electrical ground box (adjacent to toll gantry) • from electrical ground box (adjacent to toll gantry) to ETCS Elements	C	B	A	A	DB Contractor to furnish and install all required electrical conduit and ground boxes, and shall coordinate access to roadway for installation of conductor by SI.

Element/Task/Component/Sub-system	DB Contractor		Systems Integrator (SI)		Comments Other Responsibility/Information
	1	2	1	2	
4. Electrical **conduit** between the following limits: • from the concrete pad foundation for roadside equipment to backup power systems • from the concrete pad foundation for roadside equipment to fuel tank for backup power systems • from the concrete pad foundation for roadside equipment to the electrical ground box (adjacent to toll gantry) • from electrical ground box (adjacent to toll gantry) to ETCS Elements	A	A	B	B	DB Contractor to furnish and install all required electrical conduit and ground boxes and shall coordinate access to roadway for installation of conductor by SI.
5. Concrete encased duct bank for tolling communication cable and conduit for the length of the corridor	A	A	B	B	DB Contractor responsible for the design and construction of the Concrete encased duct bank for tolling communication cable and conduit for the length of the corridor.
6. Tolling communication trunkline cable and conduit in concrete encased duct bank for the length of the corridor	A	A	B	B	DB Contractor to provide 144-strand single mode fiber optic cable in the tolling trunk line. No daisy chaining. DB Contractor to install pull strings, fiber optic markers, test stations and tracer wire with fiber optic cables and perform testing as required per TxDOT special specification, 6007, ITS Fiber Optic Cable.
7. Tolling communication drop cable and conduit from concrete encased duct bank to communication termination cabinet	A	A	B	B	DB Contractor to provide and test tolling communication cable to termination cabinets adjacent to each Toll Zone equipment cabinet pad per TxDOT special specification, 6007, ITS Fiber Optic Cable. See Item 29.3.2 for further details.

Element/Task/Component/Sub-system	DB Contractor		Systems Integrator (SI)		Comments Other Responsibility/Information
	1	2	1	2	
8. Tolling communication termination cabinet and concrete pad	A	A	B	B	DB Contractor to provide termination cabinet (including patch panels and all associated splice hardware e.g. fiber drop cable, splice enclosure, splice tray, splice kit) with required power and concrete pad. Dimensions of cabinet and pad to be determined by DB Contractor based on toll fiber requirements. Cabinets shall meet requirements as specified in TxDOT special specification, 6008, ITS Ground Mounted Cabinet.
9. Tolling communication cable between the following limits: • from tolling communication termination cabinet to roadside equipment cabinets • from roadside equipment cabinet to tolling communication ground box • from tolling communication ground boxes to ETCS Elements • from tolling communication ground box to loop sensor ground box • from loop sensor ground box to in-pavement loop sensors	C	B	A	A	DB Contractor to furnish and install all required conduit and ground boxes and shall coordinate access to roadway for installation of tolling communication cable by SI.

Element/Task/Component/Sub-system	DB Contractor		Systems Integrator (SI)		Comments Other Responsibility/Information
	1	2	1	2	
10. Tolling communication cable conduit between the following limits: • from tolling communication termination cabinet to roadside equipment cabinets • from roadside equipment cabinet to tolling communication ground box • from tolling communication ground boxes to ETCS Elements • from tolling communication ground boxes to loop sensor ground box • from loop sensor ground box to in-pavement loops sensors	A	A	B	B	DB Contractor to furnish and install all required conduit and ground boxes and shall coordinate access to roadway for installation of communication cable by SI.
11. In-pavement loop sensors	C	B	A	A	DB Contractor to provide access to SI to saw cut and install in-pavement loop sensors.
12. Conduit stub-ups in Toll Zone pavement for loop sensors	A	A	B	B	SI to provide conduit stub-up locations, within the 110' Toll Zone pavement, at each Toll Zone to DB Contractor. DB Contractor to provide conduit stub-ups to terminate in ground boxes, provided by DB Contractor, adjacent to Toll Zone pavement.
13. Roadside toll equipment cabinets and all equipment inside the cabinets including power, communication and HVAC systems	C	B	A	A	SI to install complete roadside toll equipment cabinet. DB Contractor will coordinate access to roadway for installations.
14. Concrete pad foundation for roadside toll equipment cabinets	A	A	B	B	DB Contractor to design and construct pads/foundations. See Attachment 29-5 (Toll Zone Equipment Pad Details).
15. Concrete riprap at concrete pad foundation for roadside toll equipment cabinets	A	A	B	B	See Attachment 29-5 (Toll Zone Equipment Pad Details).

Element/Task/Component/Sub-system	DB Contractor		Systems Integrator (SI)		Comments Other Responsibility/Information
	1	2	1	2	
16. Complete backup power systems: generators, automatic transfer switches, fuel tanks, and electrical conductor	C	B	A	A	DB Contractor shall coordinate access to roadway for installation.
17. Concrete pad foundation and bollards (including level grading and earthwork) for fuel tank for backup power systems	A	A	B	B	DB Contractor to design and construct pads/foundations. See Attachment 29-5 (Toll Zone Equipment Pad Details).
18. Battery backup system for the lane controllers/tolling equipment at Toll Zones	C	B	A	A	DB Contractor will coordinate access to roadway for installations.
19. Toll Zone maintenance driveways	A	A	B	B	DB Contractor to design and construct maintenance driveways.
20. Concrete traffic barrier and foundation, barrier end treatments, Toll Zone drainage, grading/earthwork, SW3P and retaining walls within Toll Zone	A	A	B	B	All non-pavement reinforcement (barrier, etc.) withinToll Zones shall be epoxy coated.
21. Toll gantry structures and foundations (includes columns and trusses)	A	A	B	B	SI to provide specific requirements for gantries and foundations to be incorporated in DB Contractor's design. DB Contractor to design and construct gantries and foundations.
22. Lightning protection and lightning protection grounding ring	A	A	B	B	DB Contractor to furnish and install required lightning protection and lightning protection grounding ring for the Toll Zones and roadside ETCS Elements. DB Contractor shall supply shop drawings for SI review. See Attachment 29-2 (Typical Toll Zone Layout).
23. Toll equipment mounted on gantries	B	B	A	A	SI to install any required equipment on gantries.
24. Toll equipment mounting hardware on gantries	A	A	B	B	SI to coordinate with DB Contractor during the design phase to incorporate any required gantry framing to support toll equipment weight and mounting hardware.

Element/Task/Component/Sub-system	DB Contractor		Systems Integrator (SI)		Comments Other Responsibility/Information
	1	2	1	2	
25. Toll Zone pavement structure, including special pavement section and conduit stub-ups for pavement loop sensors, conduit, and ground boxes, see Attachment 29-3 (Toll Zone Pavement Details)	A	A	B	B	SI to provide pavement loop details with stub-up locations. SI will coordinate with DB Contractor for joint layouts within the Toll Zone pavement. DB Contractor to construct stub-ups to terminate in ground boxes, provided by DB Contractor, adjacent to Toll Zone pavement.
26. Signing	A	A	B	C	DB Contractor shall be responsible for all signing on the project.
27. Network diagrams	A	A	B	B	DB Contractor shall provide toll network diagrams and fiber cable splice diagrams for tolling infrastructure for SI review.
28. Traffic control/safe work zone	A	A	B	B	SI to provide DB Contractor detailed lane closure requirements for installation and testing of ETCS locations. DB Contractor to provide TCP and implementation of lane closures for SI work, in accordance with Item 26, “Traffic Control.”
ELECTRONIC TOLL COLLECTION SYSTEM (ETCS) SUB-SYSTEMS					
29. Automatic Vehicle Classification System and Image Capturing System (ICS) Hardware	C	B	A	A	DB Contractor will coordinate access to roadway for installations.
30. Computer rack system, routers, hubs, switches, firewalls, VPN, modems, patch/distribution panels at the roadside toll equipment cabinet	C	B	A	A	DB Contractor will coordinate access to roadway for installations.
31. Toll plaza host computer	C	C	A	A	
32. Lane controller hardware	C	B	A	A	DB Contractor will coordinate access to roadway for installations on DB Contractor provided structures.
33. Communication equipment	C	B	A	A	DB Contractor will coordinate access to roadway for installations.

Element/Task/Component/Sub-system	DB Contractor		Systems Integrator (SI)		Comments Other Responsibility/Information
	1	2	1	2	
34. Support equipment at TxDOT designated customer service center	C	C	A	A	
35. Commissioning and site acceptance testing	C	B	A	A	DB Contractor will coordinate access to roadway for testing.
36. Lane controller software	C	C	A	A	
37. Plaza computer software	C	C	A	A	
38. Host computer software	C	C	A	A	
39. Toll collection system application software	C	C	A	A	
40. Maintenance Online Management System Software	C	C	A	A	
41. Operational testing	C	C	A	A	
42. Training: (user and maintenance)	C	C	A	A	
43. Documentation: (user and maintenance)	C	C	A	A	
44. Documentation: ETCS installation/electrical design and plans	C	C	A	A	
45. Documentation: civil as-built drawings	A	A	C	C	
46. Documentation: ETCS as-built drawings, and SI contract closeout documents	C	C	A	A	
47. FCC licenses/regulations as applies to toll systems	C	C	A	A	

1. *Primary Responsibility: Work which the identified party shall perform in accordance with the requirements of the Design-Build Contract*
2. *Support/Coordination Responsibility: Providing and or obtaining input on Work requirements by/from the identified party*

Texas Department of Transportation

DESIGN-BUILD SPECIFICATIONS
Item 10-29

Attachment 29-2

Typical Toll Zone Layout

September 2025

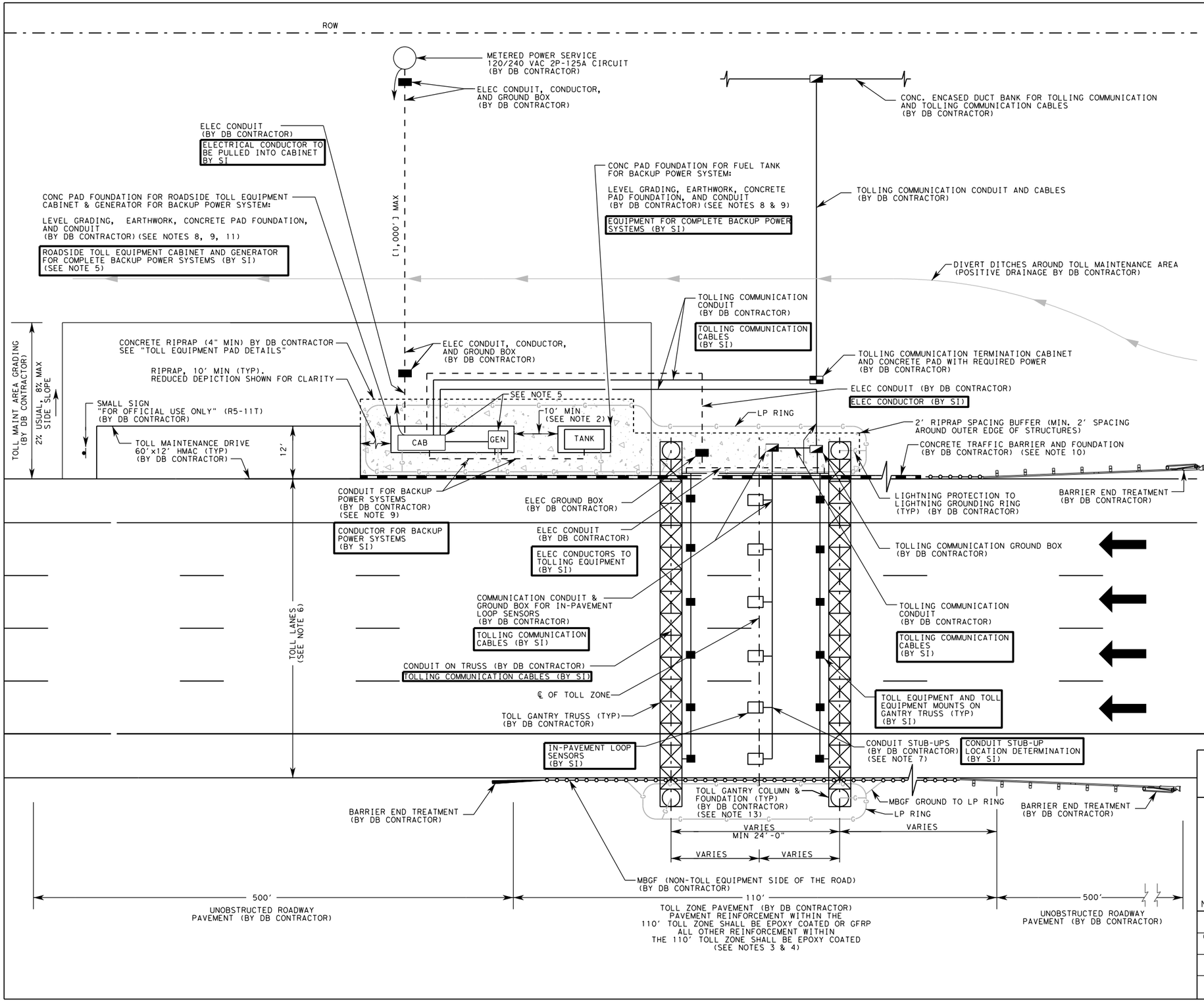

LEGEND

- ELEC GROUND BOX (BY DB CONTRACTOR)
- TOLLING COMMUNICATION GROUND BOX (BY DB CONTRACTOR)
- TOLLING COMMUNICATION TERMINATION CABINET (BY DB CONTRACTOR)
- ELEC CONDUIT & CONDUCTORS
- TOLLING COMMUNICATION CONDUIT & CABLES
- METERED POWER SERVICE (BY DB CONTRACTOR)
- XXX SYSTEMS INTEGRATOR (SI) RESPONSIBILITIES
- PAVEMENT LOOP SENSOR (BY SI)
- LIGHTNING PROTECTION (LP)

NOTES:

1. ALL CONDUIT BY DB CONTRACTOR.
2. MINIMUM 10' BUFFER REQUIRED BETWEEN ROADSIDE TOLL EQUIPMENT CONC PAD FOUNDATION AND FUEL TANK CONC PAD FOUNDATION.
3. TOLLING PAVEMENT WITHIN THE 110' DIMENSIONED LENGTH (AND TOLL ZONE PAVEMENT WIDTH) SHALL CONFORM TO REQUIREMENTS SHOWN IN THE "TOLL ZONE PAVEMENT DETAILS".
4. ALL NON-PAVEMENT REINFORCEMENT WITHIN THE 110' TOLL ZONE DIMENSIONED LENGTH AND TOLL LANES PAVEMENT WIDTH (INCLUDING TRAFFIC BARRIERS) SHALL BE EPOXY COATED. THIS INCLUDES ITEMS SUCH AS BARRIERS, RETAINING WALL TIES, CHAIRS, ETC.
5. SI WILL PROVIDE AND PLACE ROADSIDE TOLL EQUIPMENT CABINETS AND ALL EQUIPMENT INSIDE THE CABINETS INCLUDING POWER CONNECTION, COMMUNICATION, AND HVAC SYSTEMS.
6. REFER TO DB SPECIFICATIONS FOR ROADWAY GEOMETRY & LANE CONFIGURATION.
7. CONDUIT STUB-UPS BY DB CONTRACTOR, INSTALLED PER SI SPECIFICATIONS.
8. CONCRETE PADS FOR ROADSIDE TOLL EQUIPMENT CABINET AND FUEL TANK SHALL BE LEVEL, NO SLOPE.
9. CONDUIT TO EXTEND A MINIMUM OF 3" ABOVE CONCRETE PAD FOR BACKUP POWER SYSTEMS.
10. RIGID BARRIER PROTECTION SHALL BE DESIGNED AND PROVIDED BY THE DB CONTRACTOR FOR THE BACKUP POWER SYSTEMS CONCRETE PAD.
11. THE TOLLING COMMUNICATION TERMINATION CABINET SHALL BE PLACED TO PROVIDE FOR A MAXIMUM CABLE RUN LENGTH OF 150 FEET BETWEEN ROADSIDE TOLL EQUIPMENT CABINET AND TOLLING COMMUNICATION TERMINATION CABINET.
12. ALL STRUCTURAL FOUNDATIONS, GEOTECHNICAL ANALYSIS, LIGHTNING PROTECTION, AESTHETIC TREATMENT, COLUMN/ TOWERS AND OVERHEAD SPANS SHALL BE THE RESPONSIBILITY OF THE DB CONTRACTOR.
13. ALL GANTRY COLUMNS SHALL HAVE 3' MINIMUM CLEARANCE BETWEEN COLUMN FACE AND ANY FLEXIBLE BARRIER SYSTEM.
14. DB CONTRACTOR'S DESIGN SHALL BE COORDINATED WITH TxDOT IN ADVANCE TO ENSURE THAT THE DESIGN AND CONSTRUCTION MEETS THE SYSTEM INTEGRATOR'S SPECIFICATIONS.

Texas Department of Transportation
© 2023

TYPICAL TOLL ZONE LAYOUT

NOT TO SCALE

DESIGN	FED. RD. DIV. NO.	STATE PROJECT NO.		HIGHWAY NO.
GRAPHICS	STATE	DISTRICT	COUNTY	SHEET NO.
CHECK	CONTROL	SECTION	JOB	
CHECK				

Texas Department of Transportation

DESIGN-BUILD SPECIFICATIONS
Item 10-29

Attachment 29-3

Toll Zone Pavement Details

September 2025

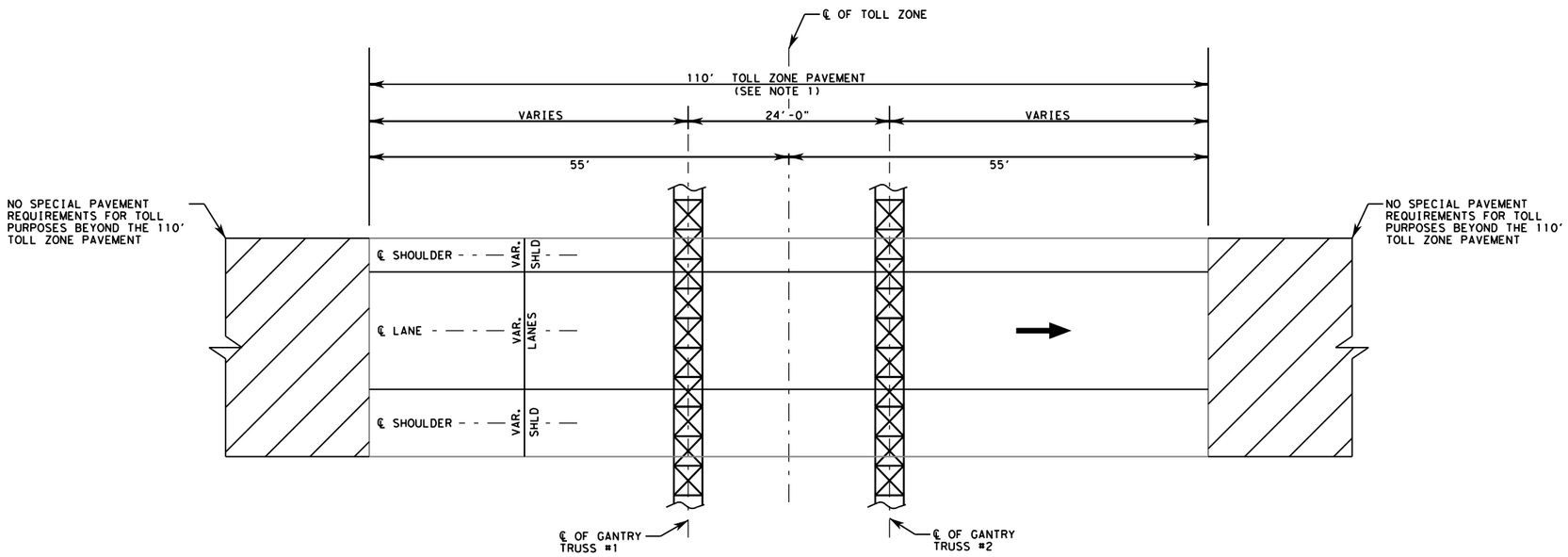

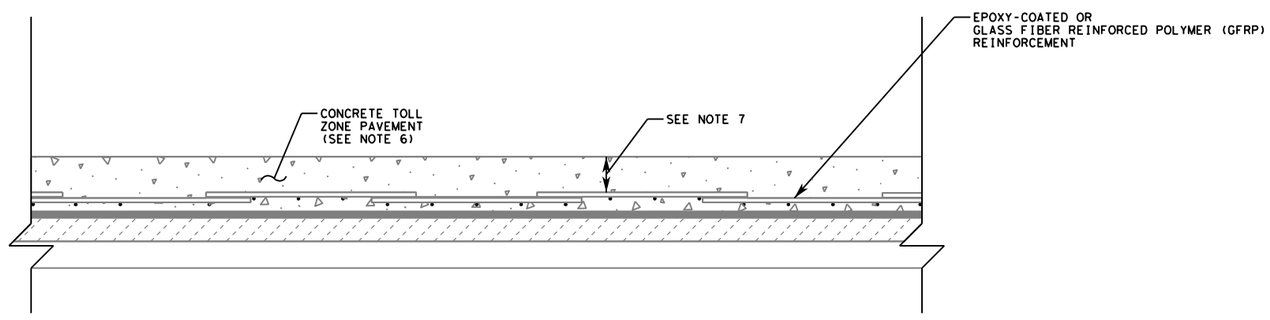

NOTES:

1. NO CONSTRUCTION JOINTS ARE ALLOWED WITHIN THE 110′ TOLL ZONE PAVEMENT AREA. LONGITUDINAL AND TRANSVERSE EXPANSION JOINTS ARE ONLY ALLOWED PER JOINT AND STUBUP DETAIL SHEETS.
2. ALL PAVEMENT REINFORCEMENT WITHIN THE 110′ TOLL ZONE SHOULD BE EPOXY-COATED OR GFRP.
3. ALL NON-PAVEMENT REINFORCEMENT WITHIN THE 110′ TOLL ZONE DIMENSIONED LENGTH AND TOLL LANES PAVEMENT WIDTH (INCLUDING TRAFFIC BARRIERS) SHALL BE EPOXY-COATED.
4. ALL ACCESSORIES SUCH AS TIES, BAR CHAIRS, SUPPORTS OR CLIPS SHALL BE NON-FERROUS, PLASTIC, PRECAST MORTAR OR CONCRETE BLOCK SUPPORTS OR AS APPROVED BY THE ENGINEER.
5. LONGITUDINAL AND TRANSVERSE EXPANSION JOINTS SHALL NOT CROSS PAVEMENT LOOPS WITHIN THE 110′ TOLL ZONE PAVEMENT.
6. TYPICAL PAVEMENT SHOWN FOR REFERENCE ONLY. PAVEMENT DESIGN SHALL BE PERFORMED BY DB CONTRACTOR.
7. A MINIMUM 8" SPACING SHALL BE REQUIRED FOR EPOXY-COATED REINFORCEMENT AND A MINIMUM 4" SPACING FOR GFRP.
8. DB CONTRACTOR TO PROVIDE CONDUIT STUB-UPS TO TERMINATE IN GROUNDBOXES, PROVIDED BY DB CONTRACTOR, ADJACENT TO TOLL ZONE PAVEMENT. SI TO PROVIDE CONDUIT STUB-UP LOCATIONS, WITHIN THE 110′ TOLL ZONE PAVEMENT, AT EACH TOLL ZONE TO DB CONTRACTOR.
9. DB CONTRACTOR TO PROVIDE ACCESS TO SI TO SAW CUT AND INSTALL IN-PAVEMENT LOOP SENSORS.

Texas Department of Transportation
© 2023

TOLL ZONE PAVEMENT DETAILS

NOT TO SCALE

DESIGN	FED. RD. DIV. NO.	STATE PROJECT NO.		HIGHWAY NO.
GRAPHICS				
	STATE	DISTRICT	COUNTY	SHEET NO.
CHECK				
CHECK	CONTROL	SECTION	JOB	

Texas Department of Transportation

DESIGN-BUILD SPECIFICATIONS
Item 10-29

Attachment 29-4

Toll Gantry Requirements

September 2025

NOTES:

1. CONDUIT CONFIGURATION IN CONCRETE COLUMNS WILL VARY DEPENDING ON COLUMN DIMENSIONS AND OTHER DESIGN CONSIDERATIONS.
2. 1" CONDUIT IS FOR LIGHTNING PROTECTION.

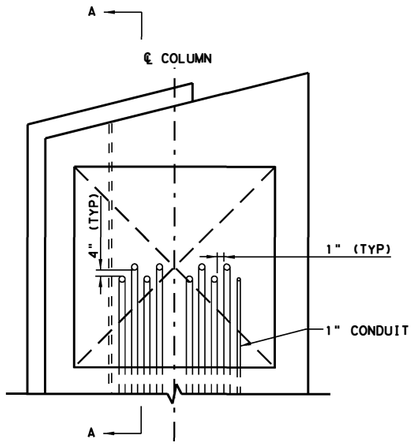

1 TYPICAL CONDUIT LAYOUT (FRONT ELEVATION VIEW)
SCALE: NTS

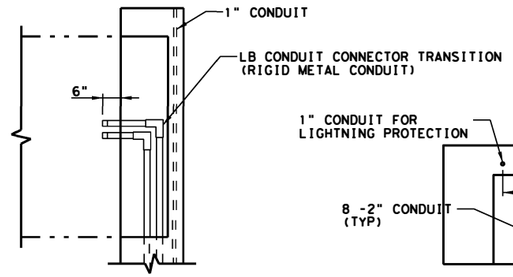

2 TYPICAL CONDUIT LAYOUT (SECTION A-A)
SCALE: NTS

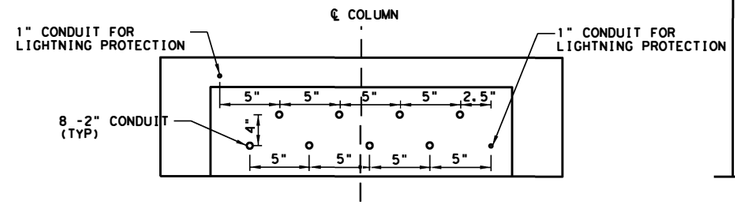

3 TYPICAL COLUMN CONDUIT LAYOUT (PLAN VIEW)
SCALE: NTS

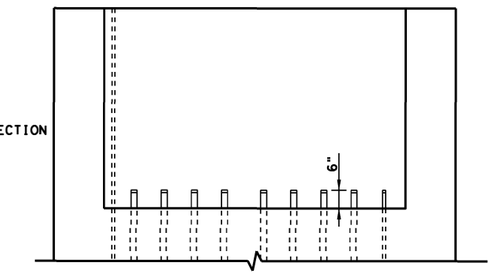

4 TYPICAL COLUMN ELEVATION VIEW
SCALE: NTS

TYPICAL CONDUIT DETAILS FOR CONCRETE COLUMNS

CONDUIT CHART				
LOCATION\PURPOSE	NUMBER	SIZE	SCHEDULE	TYPE
SHOULDER TOLLING	2	2"	40	PVC/RM*
LANE 1 TOLLING	2	2"	40	PVC/RM*
LANE 2 TOLLING	2	2"	40	PVC/RM*
LANE 3 TOLLING	2	2"	40	PVC/RM*
LANE 4 TOLLING	2	2"	40	PVC/RM*
LIGHTNING PROTECTION	2	1"	40	PVC/RM*

* ALL TRENCHED OR CONCRETE ENCASED CONDUIT SHALL BE PVC.
ALL EXPOSED CONDUIT SHALL BE RIGID METAL.

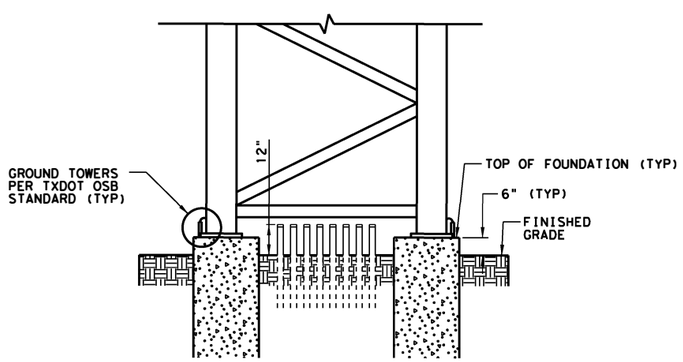

5 TYPICAL OSB TOWER DETAIL (ELEVATION VIEW)
SCALE: NTS

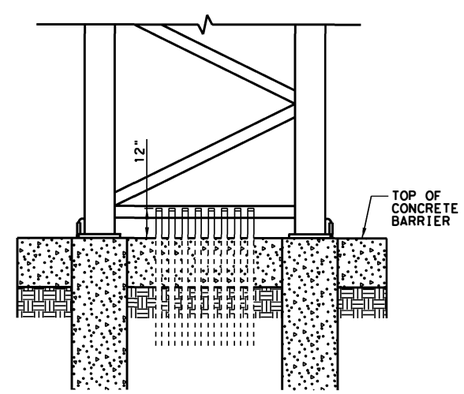

6 TYPICAL OSB TOWER DETAIL IN BARRIER (ELEVATION VIEW)
SCALE: NTS

TYPICAL CONDUIT DETAILS FOR TRUSS STRUCTURES

Texas Department of Transportation
© 2023

TOLL GANTRY REQUIREMENTS

NOT TO SCALE — SHEET 1 OF 2

DESIGN	FED. RD. DIV. NO.	STATE PROJECT NO.		HIGHWAY NO.
GRAPHICS	STATE	DISTRICT	COUNTY	SHEET NO.
CHECK	CONTROL	SECTION	JOB	
CHECK				

NOTES:

1. DB CONTRACTOR SHALL DESIGN AND COORDINATE TOLL GANTRY LOCATION WITH TxDOT AND THE SI INTERGRATOR THROUGHOUT THE DESIGN PROCESS. TOLL GANTRIES SHALL NOT BE PLACED ON ELEVATED ROADWAY SECTIONS UNLESS APPROVED BY TxDOT. FINAL TOLL GANTRY LOCATIONS ARE SUBJECT TO TxDOT APPROVAL. ANY CHANGES TO THE FINAL TOLL GANTRY LOCATIONS SHALL BE APPROVED BY TxDOT.

2. ALL STRUCTURAL FOUNDATIONS, GEOTECHNICAL ANALYSIS, LIGHTNING PROTECTION, COLUMNS/ TOWERS, OVERHEAD SPANS, AESTHETICS, AND AESTHETIC TREATMENTS SHALL BE THE RESPONSIBILITY OF THE DB CONTRACTOR.

3. MINIMUM VERTICAL CLEARANCE SHALL BE 19.5 FT FOR FACILITIES ON TEXAS HIGHWAY FREIGHT NETWORK. MINIMUM VERTICAL CLEARANCE REQUIRMENTS SHALL MEET TEXAS HIGHWAY FREIGHT MINIMUM VERTICAL CLEARANCE REQUIREMENTS. ENSURE CORRESPONDING CLEARANCE FOR GANTRY TRUSS IS MAINTAINED BASED ON FIELD SURVEY.

4. DB CONTRACTOR IS RESPONSIBLE FOR TOLL EQUIPMENT SUPPORT BRACKETS.

5. LIGHTNING PROTECTION SHALL BE INSTALLED IMMEDIATELY FOLLOWING THE CONSTRUCTION OF EACH GANTRY IN ACCORDANCE WITH THE TOLL ZONE WORK.

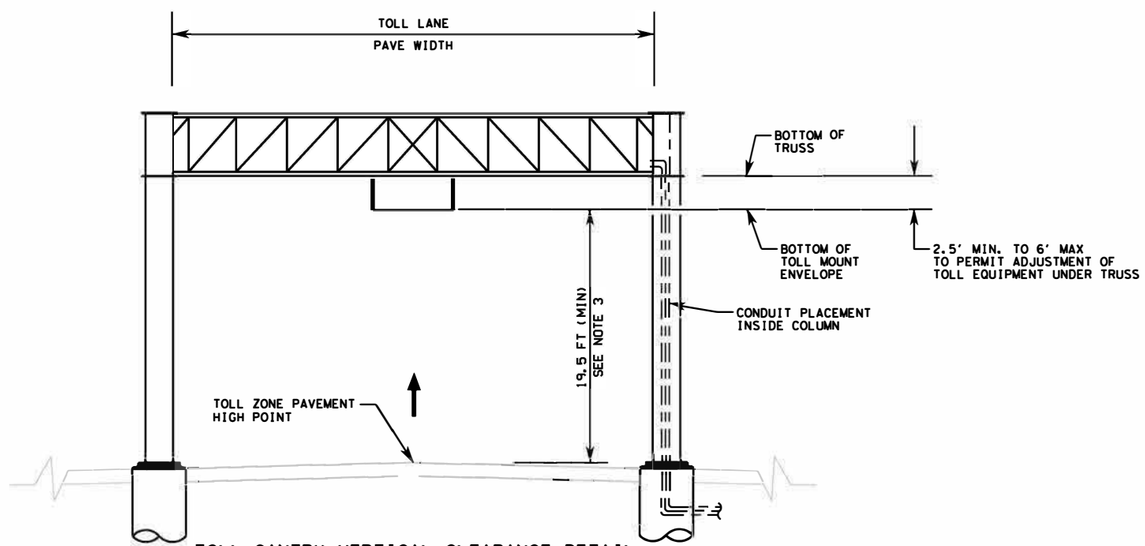

TOLL GANTRY VERTICAL CLEARANCE DETAIL

Texas Department of Transportation
© 2023

TOLL GANTRY REQUIREMENTS

NOT TO SCALE

SHEET 2 OF 2

DESIGN	FED. RD. DIV. NO.	STATE PROJECT NO.		HIGHWAY NO.
GRAPHICS				
	STATE	DISTRICT	COUNTY	SHEET NO.
CHECK				
CHECK	CONTROL	SECTION	JOB	

Texas Department of Transportation

DESIGN-BUILD SPECIFICATIONS
Item 10-29

Attachment 29-5

Toll Zone Equipment Pad Details

September 2025

LEGEND

XXX SI RESPONSIBILITIES

NOTES:

1. BUILD PADS TO BE LEVEL, NO SLOPE
2. EQUIPMENT FOUNDATION PAD CONCRETE SHALL BE CL "A"
3. CONDUIT TO EXTEND A MINIMUM OF 3" ABOVE CONCRETE PAD.
4. PLACE CONCRETE IN ACCORDANCE WITH ITEM 420, IN THE 2014 SPECIFICATION BOOK. FOR RIPRAP, PLACE 4", CL "B" IN ACCORDANCE WITH ITEM 432, IN THE 2014 SPECIFICATION BOOK.
5. UNLESS OTHERWISE SHOWN ON THE PLANS OR DIRECTED, PAD WILL BE 6" DEEP AND REINFORCED.
6. RIPRAP AROUND THE EQUIPMENT AND FUEL TANK PADS SHALL BE EXTENDED 10' ON ALL SIDES TO PROVIDE VEGETATION CONTROL AND SHALL BE SLOPED FOR POSITIVE DRAINAGE.
7. SEE ATTACHMENT 29-2 FOR THE TYPICAL TOLL ZONE LAYOUT.
8. DB CONTRACTOR'S DESIGN SHALL BE COORDINATED WITH TxDOT IN ADVANCE TO ENSURE THAT THE DESIGN AND CONSTRUCTION MEETS THE SYSTEM INTEGRATOR'S SPECIFICATIONS.
9. PLACE BOLLARDS TO AVOID PAD AND RIPRAP REINFORCING AND CONDUITS.

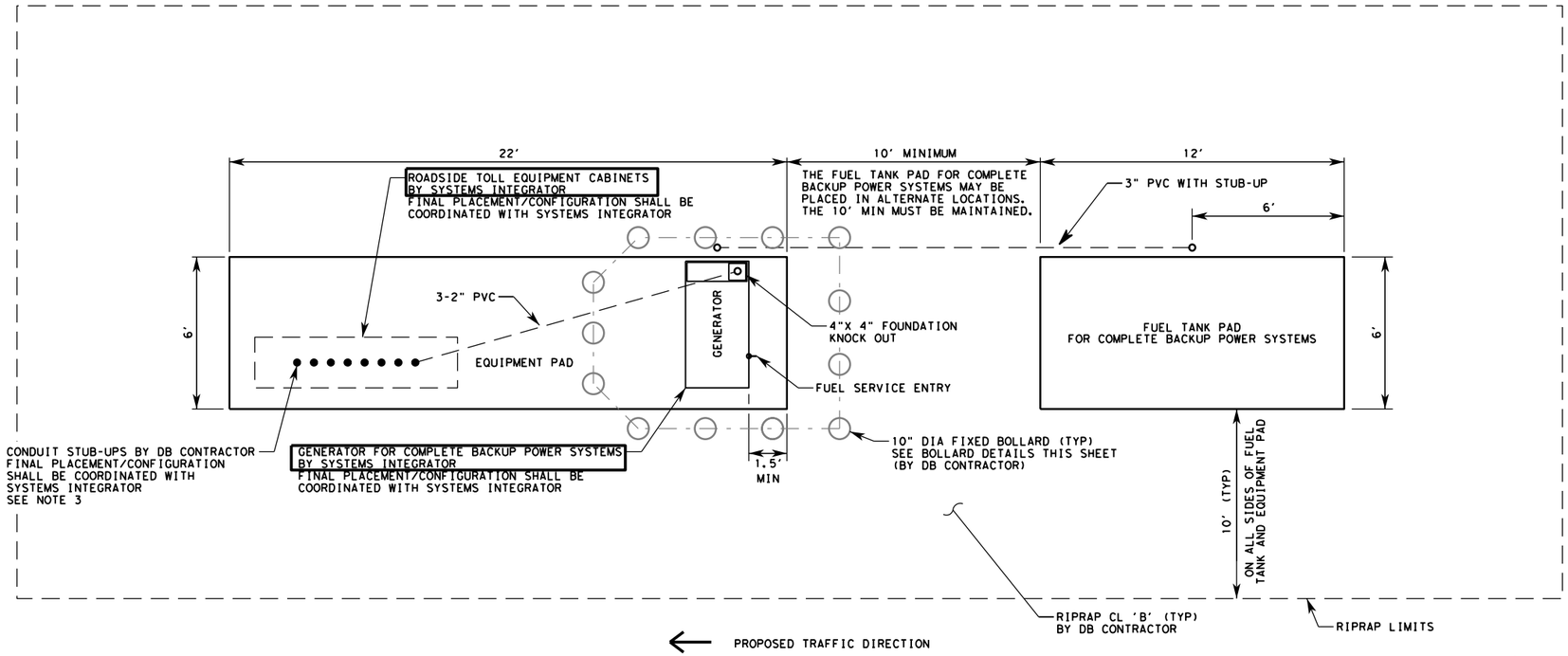

TOLL ZONE CONCRETE PAD AND RIPRAP CONFIGURATION

N. T. S.

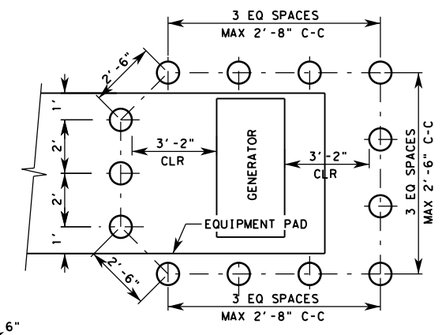

BOLLARD PLAN DETAIL

N. T. S.

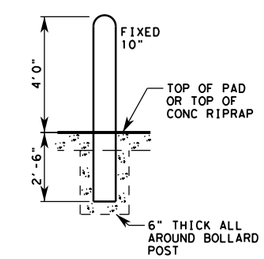

BOLLARD ELEVATION DETAIL

N. T. S.

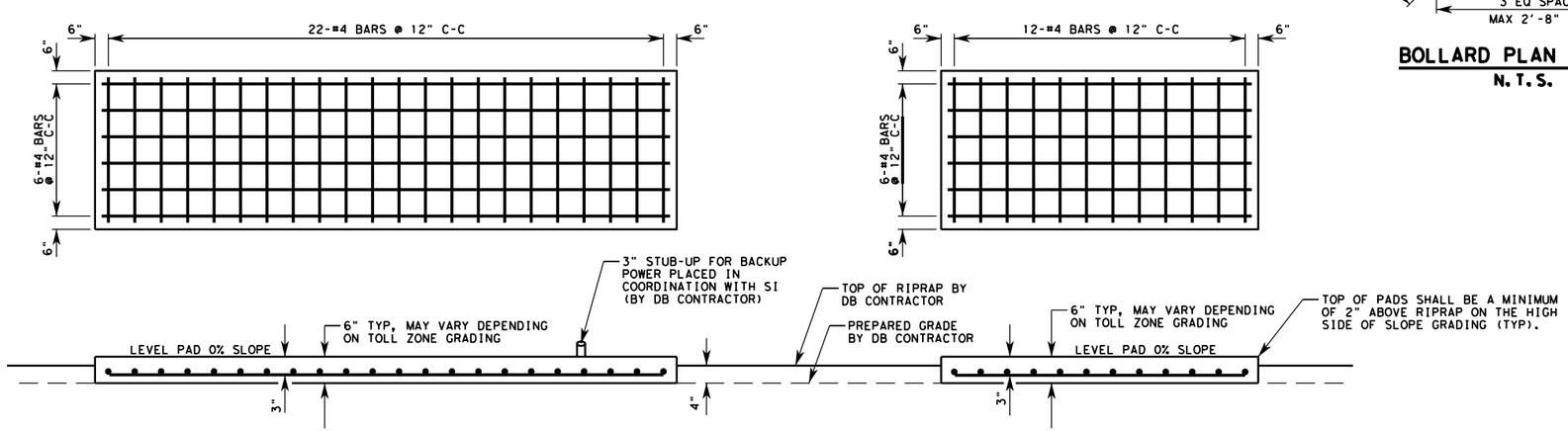

CONCRETE PAD REBAR DETAIL

N. T. S.

Texas Department of Transportation
© 2023

TOLL ZONE EQUIPMENT PAD DETAILS

NOT TO SCALE

DESIGN	FED. RD. DIV. NO.	STATE PROJECT NO.		HIGHWAY NO.
GRAPHICS				
	STATE	DISTRICT	COUNTY	SHEET NO.
CHECK				
CHECK	CONTROL	SECTION	JOB	

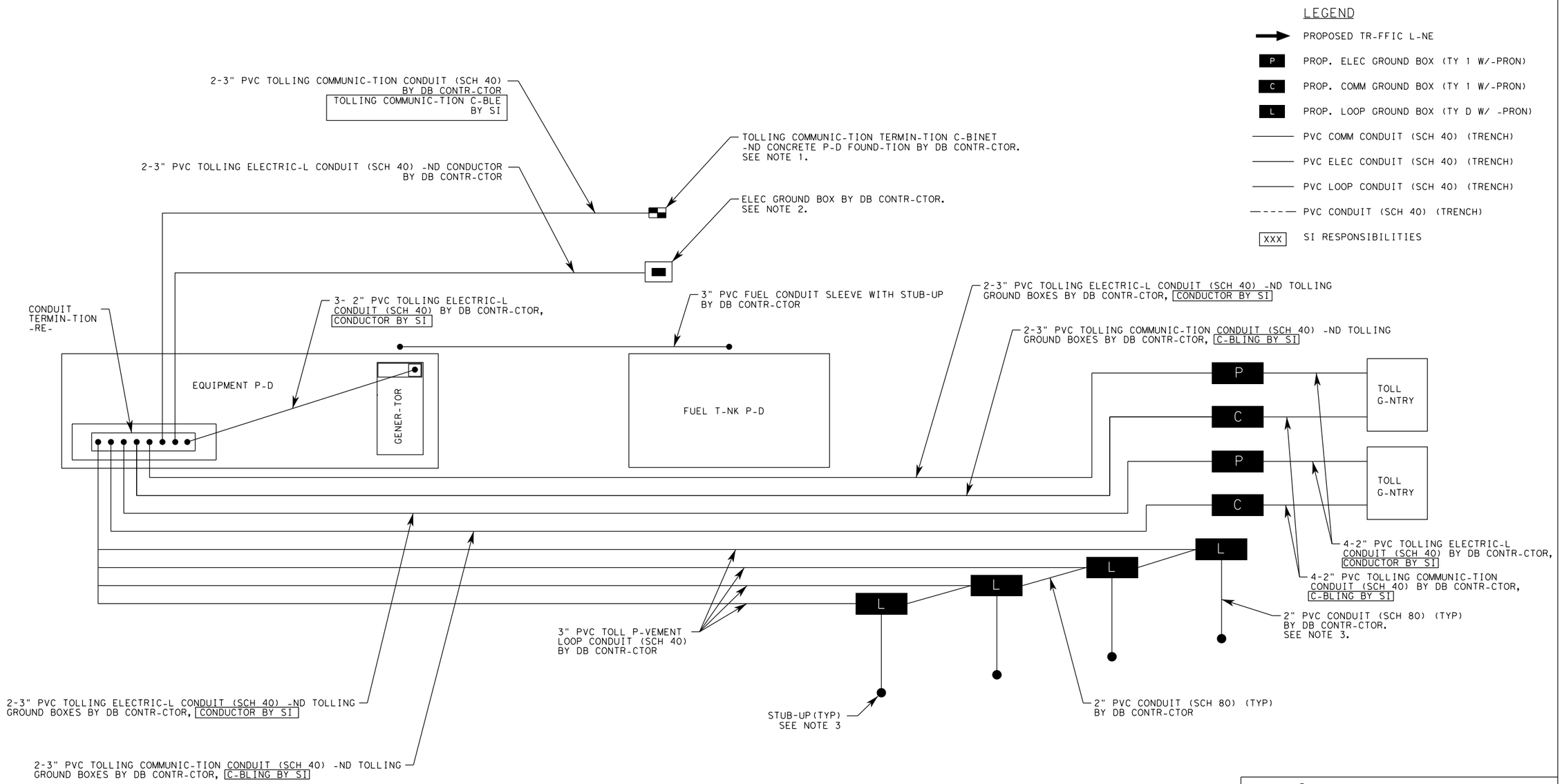

PROPOSED TR-VEL L-NES

TYPICAL TOLL PAD LAYOUT

N.T.S.

NOTES:

1. DB CONTR-CTOR SH-LL PROVIDE - MINIMUM OF 100 FEET OF TOLLING COMMUNIC-TION C-BLE COILED -T THE TERMIN-TION C-BINET.
2. DB CONTR-CTOR SH-LL PROVIDE - MINIMUM OF 50 FEET OF ELECTRIC-L CONDUCTOR COILED -T THE GROUND BOX -DJ-CENT TO THE CONCRETE P-D FOUND-TION FOR RO-DSIDE TOLL EQUIPMENT -T THE TOLL ZONE.
3. -LL LOOP SENSOR CONDUIT -ND STUP UPS SH-LL BE 2 INCH.
4. DB CONTR-CTOR'S DESIGN SH-LL BE COORDIN-TED WITH TxDOT IN -DV-NCE TO ENSURE TH-T THE DESIGN -ND CONSTRUCTION MEETS THE SYSTEM INTEGR-TOR'S SPECIFIC-TIONS.

Texas Department of Transportation
© 2023

TOLL ZONE EQUIPMENT PAD DETAILS

NOT TO SC-LE

DESIGN	FED.RD. DIV.NO.	ST-TE PROJECT NO.		HIGHW-Y NO.
GR-PHICS				
	ST-TE	DISTRICT	COUNTY	SHEET NO.
CHECK				
CHECK	CONTROL	SECTION	JOB	

Texas Department of Transportation

DESIGN-BUILD SPECIFICATIONS
Item 10-29

Attachment 29-6

Typical Lightning Protection System Details

September 2025

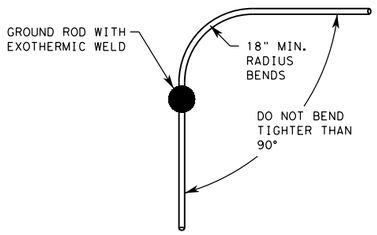

TOP VIEW OF RADIUS

(NOT TO SCALE)

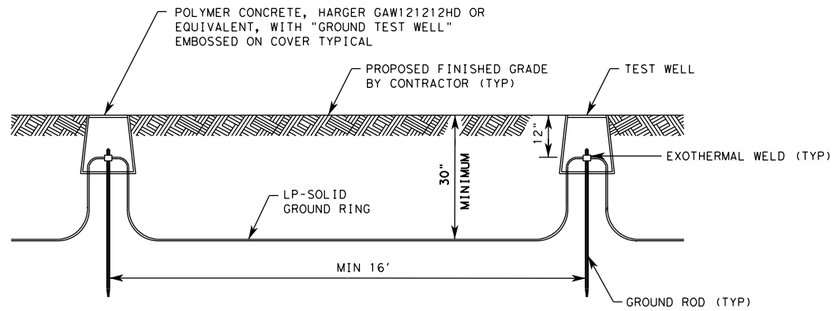

NOTES:

1. ALL GROUND GRID CONDUCTOR CONNECTIONS SHALL BE MADE BY EXOTHERMIC WELDING (CADWELD OR EQUIVALENT) EXCEPT AS SHOWN IN NOTE 2 AND 3 BELOW. EXOTHERMIC WELD MATERIAL SHALL BE PROPERLY SIZED AND UL LISTED FOR THE METALS BEING JOINED.
2. CONNECTIONS TO REBAR MAY BE MADE BY MECHANICAL CONNECTORS DESCRIBED IN KEY NOTE 2 BELOW, OR UL LISTED HIGH COMPRESSION FITTING WITH COMPRESSION TOOLS RATED AT 12 TONS OF FORCE. PRIOR TO MAKING CONNECTIONS WITH COMPRESSION CONNECTIONS, THE CONDUCTORS SHALL BE CLEANED WITH A WIRE BRUSH AND SHALL BE LIBERALLY COATED WITH AN ANTI-OXIDANT COMPOUND.
3. CONNECTIONS TO ANCHOR BOLTS MAY BE MADE WITH TINNED PLATED COPPER OR TINNED PLATED BRASS BOLT-ON MECHANICAL CONNECTORS UL LISTED FOR CONCRETE EMBEDMENT. CONNECTIONS TO ANCHOR BOLTS SHALL BE MADE ON THE NON-GALVANIZED PORTION OF THE BOLT.
4. DETAILS NOT SHOWN SHALL COMPLY WITH NFPA 780, L.P.I CODE 175, AND UL96A.
5. DB CONTRACTOR'S DESIGN SHALL BE COORDINATED WITH TxDOT IN ADVANCE TO ENSURE THAT THE DESIGN AND CONSTRUCTION MEETS THE SYSTEM INTEGRATOR'S SPECIFICATIONS.

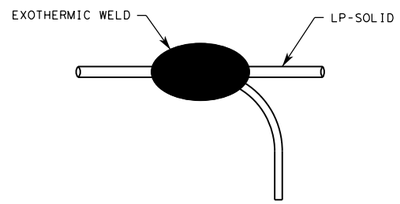

PREFERRED (PARALLEL) TAP METHOD

90° EXOTHERMIC WELD MOLD ACCEPTABLE
(NOT TO SCALE)

TYPICAL TEST WELL

(NOT TO SCALE)

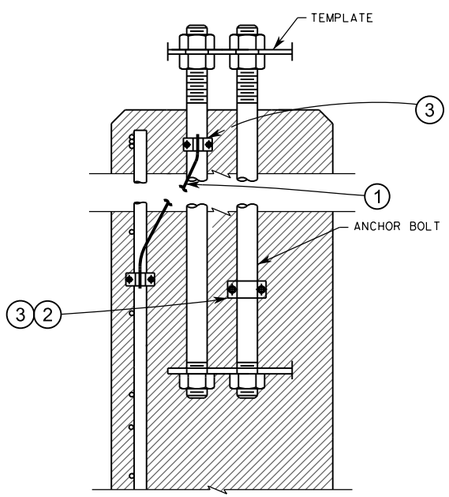

ANCHOR BOLT GROUNDING DETAILS

NOTE: DETAILS APPLY TO EACH ANCHOR BOLT
(NOT TO SCALE)

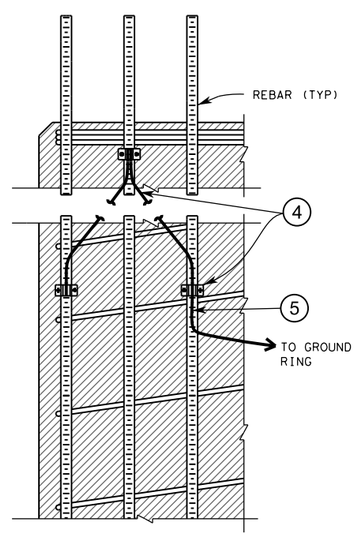

GROUNDING DETAILS

NOTE: DETAILS APPLY TO EACH DRILL SHAFT
(NOT TO SCALE)

KEY NOTES

1. BOND EACH CAGED SET OF ANCHOR BOLTS IN TWO PLACES TO REBAR WITH LP SOLID AND TWO MECHANICAL CONNECTORS.
2. BOND ANCHOR BOLT CAGE IN ONE PLACE TO GROUND ROD WITH LP SOLID AND MECHANICAL CONNECTORS.
3. ATTACH MECHANICAL CONNECTORS TO BOLTS ON THE NON-GALVANIZED PART OF THE BOLT.
4. BOND DRILL SHAFT REBAR IN THREE PLACES APPROXIMATELY 120° APART WITH LP SOLID AND THREE MECHANICAL CONNECTORS.
5. BOND REBAR IN ONE PLACE TO GROUND RING WITH LP SOLID AND MECHANICAL CONNECTOR.

Texas Department of Transportation
© 2023

TYPICAL LIGHTNING PROTECTION SYSTEM DETAILS

NOT TO SCALE

DESIGN	FED. RD. DIV. NO.	STATE PROJECT NO.		HIGHWAY NO.
GRAPHICS	STATE	DISTRICT	COUNTY	SHEET NO.
CHECK				
CHECK	CONTROL	SECTION	JOB	

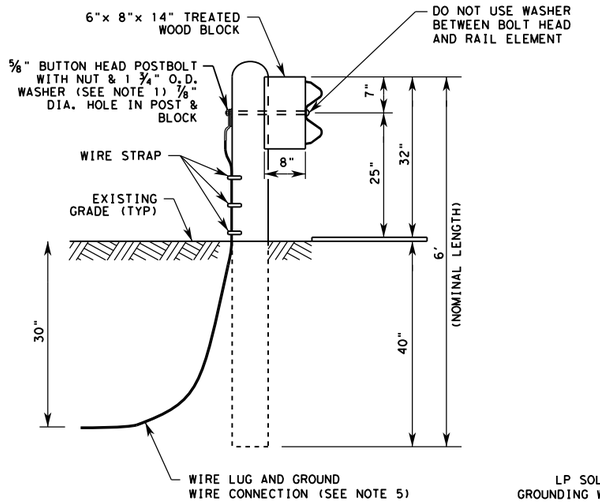

GROUND WIRE AND MBGF CONNECTION

(SIDE VIEW) (NOT TO SCALE)

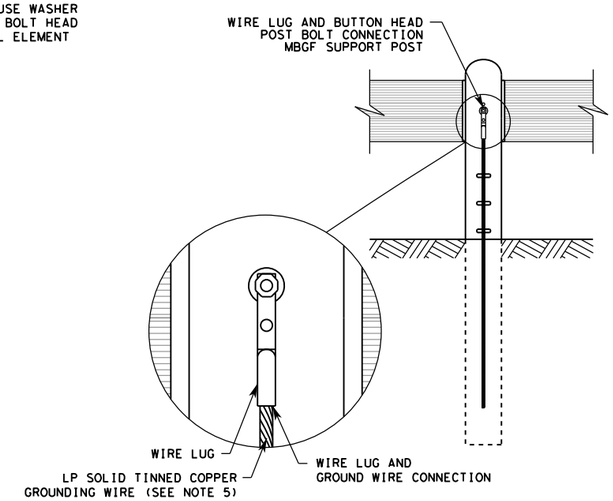

GROUND WIRE AND MBGF CONNECTION

(FRONT VIEW) (NOT TO SCALE)

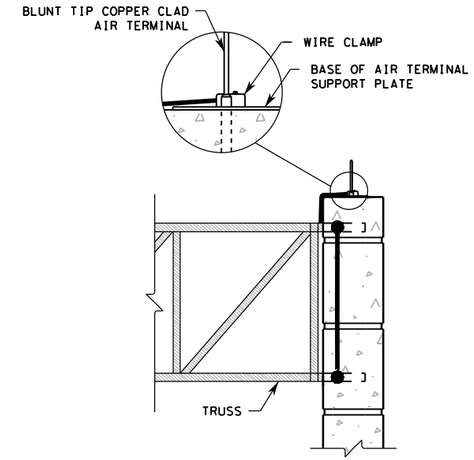

AIR TERMINAL COLUMN CONNECTION (COSS)

(NOT TO SCALE)

NOTES:

1. LP SOLID GROUNDING WIRE WILL BE ATTACHED TO THE MBGF WITH A WIRE LUG.
2. ALL AIR TERMINALS CONNECTED TO THE TRUSS WILL BE SECURED WITH STAINLESS STEEL HARDWARE. THE J-BOLT WILL SECURE THE AIR TERMINAL TO THE SIDE OF THE TRUSS.
3. AIR TERMINALS THAT ARE ATTACHED AT THE TOP OF THE TOLLING COLUMN ARE CONNECTED USING AIR TERMINAL SUPPORT PLATES.
4. ALTERNATE CONNECTION DETAILS MAY BE SUBMITTED FOR APPROVAL.
5. CONDUCTOR TYPE LP-SOLID SHALL BE NO.2 BARE SOLID TINNED COPPER CONDUCTOR.
6. DB CONTRACTOR'S DESIGN SHALL BE COORDINATED WITH TxDOT IN ADVANCE TO ENSURE THAT THE DESIGN AND CONSTRUCTION MEETS THE SYSTEM INTEGRATOR'S SPECIFICATIONS.

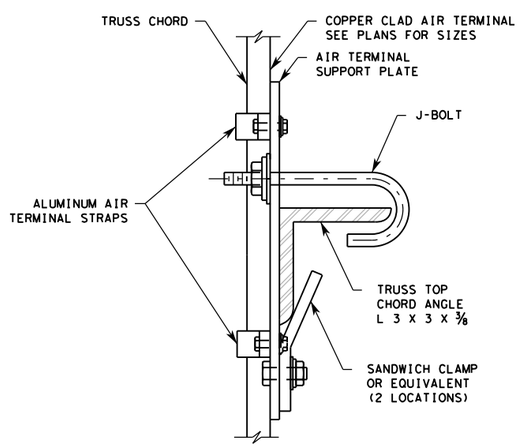

AIR TERMINAL CONNECTION TO TRUSS CHORD

(NOT TO SCALE)

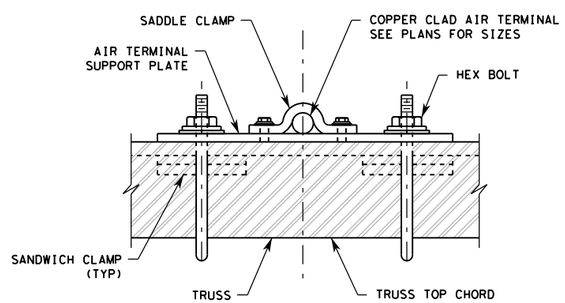

AIR TERMINAL AND TRUSS CHORD (TOP VIEW)

(SANDWICH CLIP BOLTS NOT SHOWN FOR CLARITY)

(NOT TO SCALE)

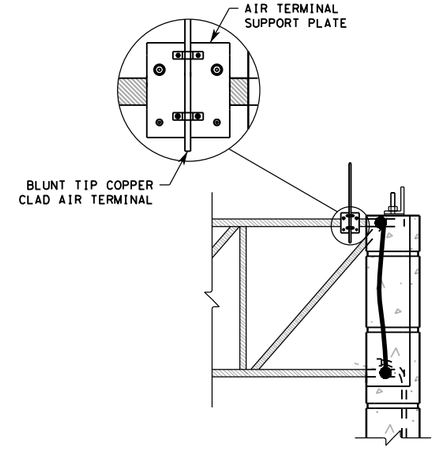

AIR TERMINAL COLUMN CONNECTION (OSB)

(NOT TO SCALE)

Texas Department of Transportation
© 2023

TYPICAL LIGHTNING PROTECTION SYSTEM DETAILS

NOT TO SCALE

DESIGN	FED. RD. DIV. NO.	STATE PROJECT NO.		HIGHWAY NO.
GRAPHICS				
	STATE	DISTRICT	COUNTY	SHEET NO.
CHECK				
CHECK	CONTROL	SECTION	JOB	

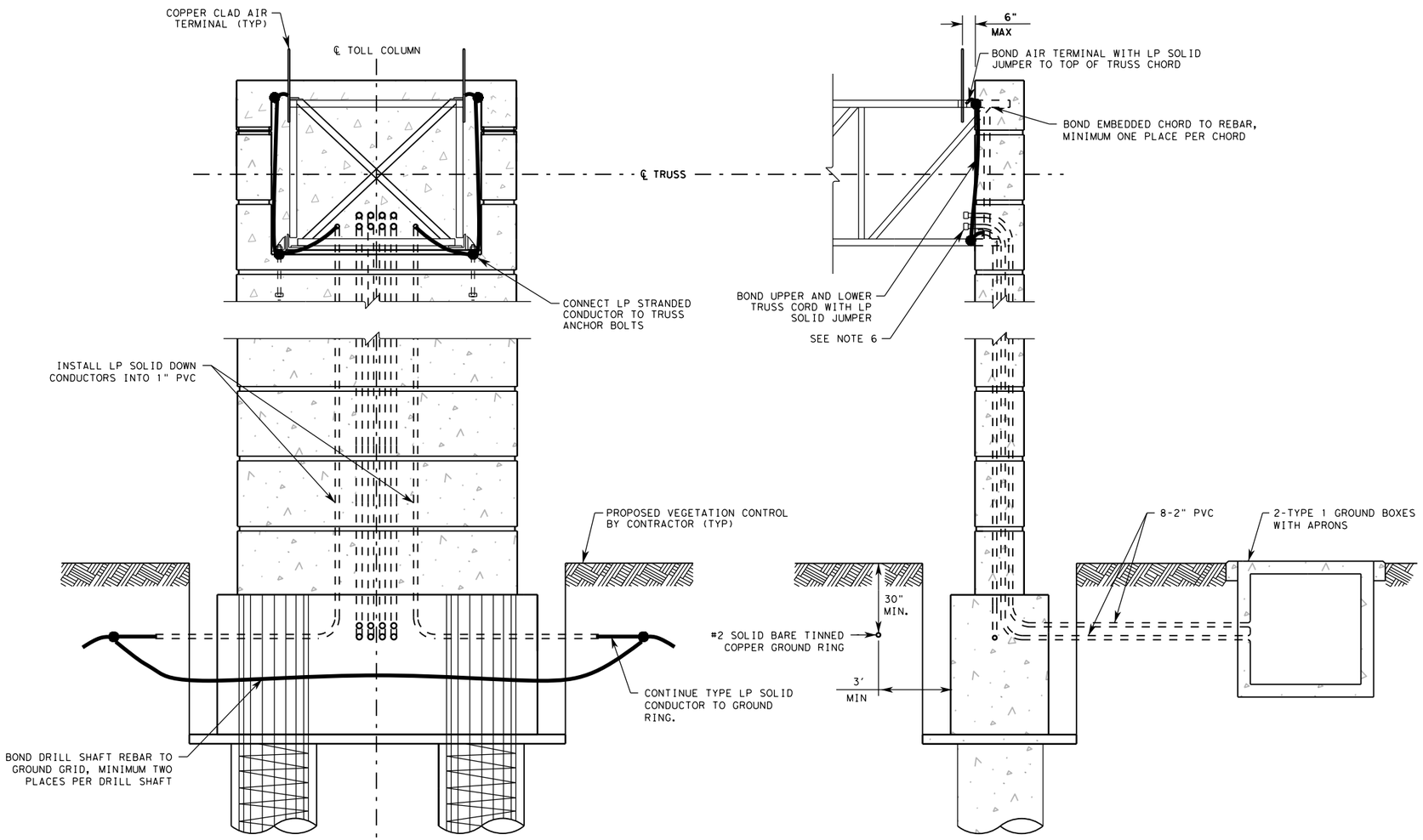

FRONT ELEVATION

(NOT TO SCALE)

SIDE ELEVATION

(NOT TO SCALE)

LEGEND

● – EXOTHERMIC WELD

NOTES:

1. CONDUCTOR TYPE LP SOLID SHALL BE NO.2 BARE SOLID TINNED COPPER CONDUCTOR.
2. CONDUCTOR TYPE LP STRANDED SHALL BE 32 STRANDS OF NO. 17 COPPER TOTALING A MINIMUM OF 57,400 CIR MILS.
3. INSTALL CONDUCTOR STRAPS AT A MAXIMUM OF 24" INCREMENTS.
4. STRAPS, TERMINALS, AND TERMINAL SUPPORTS SHALL BE UL LISTED AS LIGHTNING PROTECTION HARDWARE.
5. INSTALL LP SOLID CABLE INSIDE CONDUIT AND DOWN TO GROUND RING. INSTALL LP STRANDED CONDUCTOR FOR ALL EXPOSED CONDUCTOR AT TOP OF STRUCTURE.
6. PVC TO BE OFFSET 2" FROM CENTERLINE AND SPACED 4" APART. EXTEND CONDUITS 6" FROM FACE OF COLUMN.
7. TRANSITION TO 2" RM CONDUIT ALONG TRUSS.
8. DB CONTRACTOR'S DESIGN SHALL BE COORDINATED WITH TxDOT IN ADVANCE TO ENSURE THAT THE DESIGN AND CONSTRUCTION MEETS THE SYSTEM INTEGRATOR'S SPECIFICATIONS.

Texas Department of Transportation
© 2023

TYPICAL LIGHTNING PROTECTION SYSTEM DETAILS

NOT TO SCALE

DESIGN	FED. RD. DIV. NO.	STATE PROJECT NO.		HIGHWAY NO.
GRAPHICS				
	STATE	DISTRICT	COUNTY	SHEET NO.
CHECK				
CHECK	CONTROL	SECTION	JOB	