INSTRUCTIONS

for the

GUIDE FOR DETERMINING TIME REQUIREMENTS FOR TRAFFIC SIGNAL PREEMPTION AT HIGHWAY-RAIL GRADE CROSSINGS

USING THESE INSTRUCTIONS

The purpose of these instructions is to assist TxDOT personnel in completing the 2003 Guide For Determining Time Requirements For Traffic Signal Preemption At Highway-Rail Grade Crossings*, also known as the Preemption Worksheet. The main purpose of the Preemption Worksheet is to determine if additional time (advance preemption) is required for the traffic signal to move stationary vehicles out of the crossing before the arrival of the train.*

If you have any questions about completing the Preemption Worksheet, please contact the Mr. David Valdez in the Traffic Operations Division at telephone 512-416-2642 or email DVALDEZ@dot.state.tx.us. For any feedback on the Draft version of the Worksheet or Instructions, please contact Mr. Roelof Engelbrecht from the Texas Transportation Institute at 979-862-3559 or roelof@tamu.edu.

SITE DESCRIPTIVE INFORMATION:

Enter the location for the highway-rail grade crossing including the (nearest) **City**, the **County** in which the crossing is located, and the Texas Department of Transportation (TxDOT) **District** name. When entering the District name, do not use the dated district numbering schema; use the actual district name.

Next, enter the **Date** the analysis was performed, your (the analyst's) name next to "**Completed by**," and the status of the **District Approval** for this crossing.

To complete the reference schematic for this site, place a **North Arrow** in the provided circle to correctly orient the crossing and roadway. Record the name of the **Parallel Street** and the **Crossing Street** in the spaces provided, and remember to include any "street sign"/local name for the streets as well as any state/US/Interstate designation (i.e., "FM 1826," "SH 71," "US 290," "Interstate 35 [frontage]"). You may wish to note other details on the intersection/crossing diagram as well, including the number of lanes and/or turn bays on the intersection approach crossing the tracks and any adjacent land use.

Enter the **Railroad** name, **Railroad Contact** person's name, and **Phone** number for the responsible railroad company and its equipment maintenance and operations contractor (if any). Finally, record the unique 7-character **Crossing DOT#** (6 numeric plus one alphanumeric characters) for the crossing.

Note that this guide for determining (warning) time requirements for traffic signal preemption requires you to input many controller unit timing/phasing values. To preserve the accuracy of these values, record all values to the next highest tenth of a second (i.e., record 5.42 seconds as 5.5 seconds).

SECTION 1: RIGHT-OF-WAY TRANSFER TIME CALCULATION

Preempt Verification and Response Time

Line 1. The **preempt delay time** is the amount of time, in seconds, that the traffic signal controller is programmed to wait from the initial receipt of a preempt call until the call is "verified" and considered a viable request for transfer into preemption mode. Preempt delay time is a value entered into the controller unit for purposes of preempt call validation, and may not be available on all manufacturer's controllers.

Line 2. Unlike preempt delay time (Line 1), which is a value entered into the controller, **controller response time to preempt** is the time that elapses while the controller unit electronically registers the preempt call (i.e., it is the controller's equipment response time for the preempt call). The controller manufacturer should be consulted to find the correct value (in seconds) for use here. For future reference, you may wish to record the controller type in the **Remarks** section to the right of the controller response time to preempt value. However, note that the manufacturer's given response time may be unique for a controller unit's model and software generation; other models and/or software generations may have different response times.

Line 3. The sum of Line 1 and Line 2 is the **preempt verification and response time**, in seconds. It represents the number of seconds between the receipt at the controller unit of a preempt call issued by the railroad's grade crossing warning equipment and the time the controller software actually begins to respond to the preempt call (i.e., by transitioning into preemption mode).

Worst-Case Conflicting Vehicle Time

Line 4. Worst-case conflicting vehicle phase number is the number of the controller unit phase which conflicts with the phase(s) used to clear the tracks—the track clearance phase(s)—that has the longest sum of minimum green (if provided), other (additional) green time (if provided), yellow change interval, and red clearance interval durations that may need to be serviced during the transition into preemption. Note that all of these time elements are for vehicular phases only; pedestrian phase times will be assessed in the next part of the analysis. The worst-case vehicle phase can be any phase that conflicts with the track clearance phase(s); it is not restricted to only the phases serving traffic parallel to the tracks.

Line 5. Minimum green time during right-of-way transfer is the number of seconds that the worst-case vehicle phase (see Line 4 discussion) must display a green indication before the controller unit will terminate the phase through its yellow change and red clearance intervals and transition to the track clearance green interval. The minimum green time during right-of-way transfer may be set to zero to allow as rapid a transition as possible to the track clearance green interval. However, local policies will govern the amount of minimum green time provided during the transition into preemption.

Line 6. If any additional green time is preserved beyond the preempt minimum green time for the worst-case vehicle phase (line 4), it should be entered here as **Other green time during right-of-way transfer**. Given the time-critical nature of the transition to the track clearance green interval during preempted operation, this value is usually zero except in unusual circumstances. One situation where other green time may be present is when a trailing green overlap is used on the worst-case vehicle phase, and the controller unit is set up to time out the trailing green overlap on entry into preemption.

Line 7. Yellow change time is the required yellow change interval time for the worst-case vehicle phase (line 4) given prevailing operating conditions. Yellow change time for the phase under preemption is usually the same value, in seconds, programmed for the phase under normal operating circumstances. Section 4D.13 of the *Texas Manual on Uniform Traffic Control Devices* (*MUTCD*) states that the normal yellow change interval shall not be shortened or omitted during the transition into preemption control. Guidance on setting the yellow change interval can be found in the Institute of Transportation Engineer's *Determining Vehicle Signal Change and Clearance Intervals*.

Line 8. Red clearance time is the required red clearance interval for the worst-case vehicle phase (line 4) given prevailing operating conditions. Red clearance time for the phase under preemption is usually the same value, in seconds, programmed for the phase under normal operating circumstances. Section 4D.13 of the *Texas MUTCD* states that the normal red clearance interval shall not be shortened or omitted during the transition into preemption control. Guidance on setting the red clearance interval can be found in the Institute of Transportation Engineer's *Determining Vehicle Signal Change and Clearance Intervals*.

Line 9. Worst-case conflicting vehicle time is the sum of lines 5 through 8. It will be compared with the worst-case conflicting pedestrian time to determine whether vehicle or pedestrian phase times are the most critical in their impact on warning time requirements during the transition to the track clearance green interval.

Worst-case Conflicting Pedestrian Time

Line 10. Worst-case pedestrian phase number is the pedestrian phase number (referenced as the vehicle phase number that the pedestrian phase is associated with) that has the longest sum of walk time, pedestrian clearance (i.e., flashing don't walk) times, and associated vehicle clearance times that have to be provided during the transition into preemption. The worst-case pedestrian phase is not restricted to pedestrian phases running concurrently with vehicle phases that serve traffic parallel to the tracks. The vehicle phase associated with the worst-case pedestrian phase may even be one of the track clearance phases if the pedestrian phase is not serviced concurrently with the associated track clearance phase.

Line 11. Minimum walk time during right-of-way transfer (seconds) is the minimum pedestrian walk time for the worst-case pedestrian phase (line 10). The *Texas MUTCD* permits the shortening (i.e. truncation) or complete omission of the pedestrian walk interval. A zero value allows for the most rapid transition to the track clearance green interval. However, the minimum pedestrian walk time is typically set based on local policies, which may or may not allow truncation and/or omission.

Line 12. Pedestrian clearance time during right-of-way transfer (seconds) is the clearance (i.e., flashing don't walk) time for the worst-case pedestrian phase. The *Texas MUTCD* permits the shortening (i.e. truncation) or complete omission of the pedestrian clearance interval. A zero value allows for the most rapid transition to the track clearance green interval. However, the pedestrian clearance time is typically set based on local policies, which may or may not allow truncation and/or omission.

Line 13. Enter a **Yellow change time** if the pedestrian clearance interval does not time simultaneously with the yellow change interval of the vehicular phase associated with your worst-case pedestrian phase; enter zero if does. Local policies will determine if this is allowed. Simultaneous timing of the pedestrian clearance interval and the yellow change interval (i.e. a zero value on line 13) allows for the most rapid transition to the track clearance green interval. If a non-zero value is entered, make sure to enter the yellow change time of the vehicular phase associated with your worst-case pedestrian phase. This value may not be the same value you enter on Line 7, since the worst-case pedestrian phase may not be the same as the worst-case vehicular phase.

Line 14. Enter a **Red clearance time** if the pedestrian clearance interval does not time simultaneously with the red clearance interval of the vehicular phase associated with your worst-case pedestrian phase; enter zero if does. Local policies will determine if this is allowed. Also, note than not all traffic signal controllers allow simultaneous timing of the pedestrian clearance interval and the red clearance interval. Simultaneous timing of the pedestrian clearance interval and the red clearance interval (i.e. a zero value on line 14) allows for the most rapid transition to the track clearance green interval. If a non-zero value is entered, make sure to enter the red clearance time of the vehicular phase associated with your worst-case pedestrian phase. This value may not be the same value you enter on Line 8, since the worst-case pedestrian phase may not be the same as the worst-case vehicular phase.

Line 15. Add lines 11 through 14 to calculate your **Worst-case conflicting pedestrian time**. This value will be compared to the worst-case conflicting vehicle time to determine whether vehicle or pedestrian phase times are the most critical in their impact on warning time requirements during the transition to the track clearance green interval.

Worst-case Conflicting Vehicle or Pedestrian Time

Line 16. Record the **Worst-case conflicting vehicle or pedestrian time** (in seconds) by comparing lines 9 and 15 and writing the larger of the two as the entry for line 16.

Line 17. Calculate the **Right-of-way transfer time** by adding lines 3 and 16. The right-of-way transfer time is the maximum amount of time needed for the worst case condition, prior to display of the track clearance green interval.

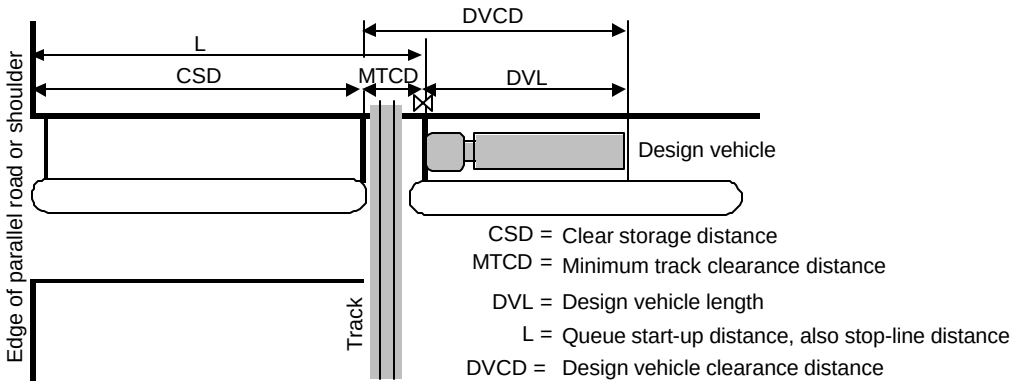

Figure 1 Queue clearance distances.

SECTION 2: QUEUE CLEARANCE TIME CALCULATION

Line 18. Record the **Clear storage distance** (CSD in Figure 1), in feet, as the shortest distance along the crossing street between the edge of the grade crossing nearest the signalized intersection—identified by a line parallel to the rail 6 feet (2 m) from the rail nearest to the intersection—and the edge of the street or shoulder of street that parallels the tracks. If the normal stopping point on the crossing street is significant different from the edge or shoulder of parallel street, measure the distance to the normal stopping point. For angled (i.e., non-perpendicular) railroad crossings, always measure the distance along the inside (centerline) edge of the leftmost lane or the distance along the outside (shoulder) edge of the rightmost lane, as appropriate, to determine the <u>shortest</u> clear storage distance and record that value.

Line 19. Minimum track clearance distance (MTCD in Figure 1), in feet, is the length along the highway at one or more railroad tracks, measured from the railroad crossing stop line, warning device, or 12 feet (4 m) perpendicular to the track centerline—whichever is further away from the tracks, to 6 feet (2 m) beyond the tracks measured perpendicular to the far rail. For angled (i.e., non-perpendicular) railroad crossings, always measure the distance along the inside (centerline) edge of the leftmost lane or the distance along the outside (shoulder) edge of the rightmost lane, as appropriate, to determine the <u>longest</u> minimum track clearance distance and record that value.

Line 20. Design vehicle length (DVL in Figure 1), in feet, is the length of the design vehicle, the longest vehicle permitted by road authority statute on the subject roadway. In the **Remarks** section to the right of the data entry box for Line 20, note the design vehicle type for ease of reference. Some design vehicles from the *AASHTO Green Book (A Policy on Geometric Design of Highways and Streets)* are given in Table 1. Note that Texas legal size and weight limits for non-permit vehicles allow a maximum semitrailer length of 59 feet, resulting in a design vehicle length of 79.5 feet when combined with a conventional long-haul tractor.

Table 1. AASHTO Design vehicle lengths and heights.

Design Vehicle Type	Symbol	Length (ft)
Passenger Car	P	19
Single Unit Truck	SU	30
Large School Bus	S-BUS 40	40
Intermediate Semi-Trailer	WB-50	55

Line 21. Queue start-up distance (L in Figure 1), in feet, is the maximum length over which a queue of vehicles stopped for a red signal indication at an intersection downstream of the crossing must get in motion so that the design vehicle can move out of the railroad crossing prior to the train's arrival. Queue start-up distance is the sum of the clear storage distance (Line 18) and minimum track clearance distance (Line 19).

Line 22. Time required for the design vehicle to start moving (seconds) is the time elapsed between the start of the track clearance green interval and the time the design vehicle, which is located at the edge of the railroad crossing on the opposite side from the signalized intersection, begins to move. This elapsed time is based on a "shock wave" speed of 20 feet per second and a 2 second start-up time (the additional time for the first driver to recognize the signal is green and move his/her foot from the brake to the accelerator). The time required for the design vehicle to start moving is calculated, in seconds, as 2 plus the queue start-up distance, L (Line 21) divided by the wave speed of 20 feet per second. The time required for the design vehicle to start moving is a conservative value taking into account the worst-case vehicle mix in the queue in front of the design vehicle as well as a limited level of drive inattentiveness. This value may be overridden by local observation, but care must be taken to identify the worst-case (longest) time required for the design vehicle to start moving.

Line 23. Design vehicle clearance distance (DVCD in Figure 1) is the length, in feet, which the design vehicle must travel in order to enter and completely pass through the railroad crossing's minimum track clearance distance (MTCD). It is the sum of the minimum track clearance distance (Line 19) and the design vehicle's length (Line 20).

Line 24. The **Time for design vehicle to accelerate through the design vehicle clearance distance (DVCD)** is the amount of time required for the design vehicle to accelerate from a stop and travel the complete design vehicle clearance distance. This time value, in seconds, can be found through local observation or by using by Figure 2. If local observation is used, take care to identify the worst-case (longest) time required for the design vehicle to accelerate through the DVCD. If Figure 2 is used to estimate the time for the design vehicle to accelerate through the DVCD, locate the DVCD from Line 23 on the horizontal axis of Figure 2 and then draw a line straight up until that line intersects the acceleration time performance curve for your design vehicle. Then, draw a horizontal line from this point to the left until it intersects the vertical axis, and record the appropriate acceleration time. Round up to the next higher tenth of a second. For example, with a DVCD of 80 feet and a WB-50 semi-trailer design vehicle on a level surface, the time required for the design vehicle to accelerate through the DVCD will be 12.2 seconds.

If your design vehicle is a WB-50 semi-trailer, large school bus (S-BUS 40), or single unit (SU) vehicle, you may need to apply a correction factor to estimate the effect of grade on the acceleration of the vehicle. Determine the average grade over a distance equal to the design vehicle clearance distance (DVCD), centered around the minimum track clearance distance (MTCD). If the grade is 1% uphill (+1%) or greater, multiply the acceleration time obtained from Figure 2 with the factor obtained from Table 2 and round up to the next higher tenth of a second to get an estimate of the acceleration time on the grade. For example, with a DVCD of 80 feet and a WB-50 semi-trailer design vehicle on a 4% uphill, the (interpolated) factor from Table 2 is 1.30. Therefore, the estimated time required for the design vehicle to accelerate through the DVCD will be 12.2 x 1.30 = 15.86 seconds, or 15.9 seconds rounded up to the next higher tenth of a second.

If you selected a design vehicle different from those listed in Figure 2 and Table 2, you may still be able to use Figure 2 and Table 2 if you can match your design vehicle to the weight, weight-to-power ratio, and power application characteristics of the design vehicles in Figure 2 and Table 2. The WB-50 curve and grade factors are based on an 80,000 lb vehicle with a weight-to-power ratio of 400 lb/hp accelerating at 85% of its maximum power on level grades and at 100% of its maximum power on uphill grades, and may therefore be representative of any heavy tractor-trailer combination with the same characteristics. The school bus curve and grade factors are based on a 27,000 lb vehicle with a weight-to-power ratio of 180 lb/hp accelerating at 70% of its maximum power on level grades and at 85% of its maximum power on uphill grades. The SU curve and grade factors are based on a 34,000 lb vehicle with a weight-to-power ratio of 200 lb/hp accelerating at 75% of its maximum power on level grades and at 90% of its maximum power on uphill grades.

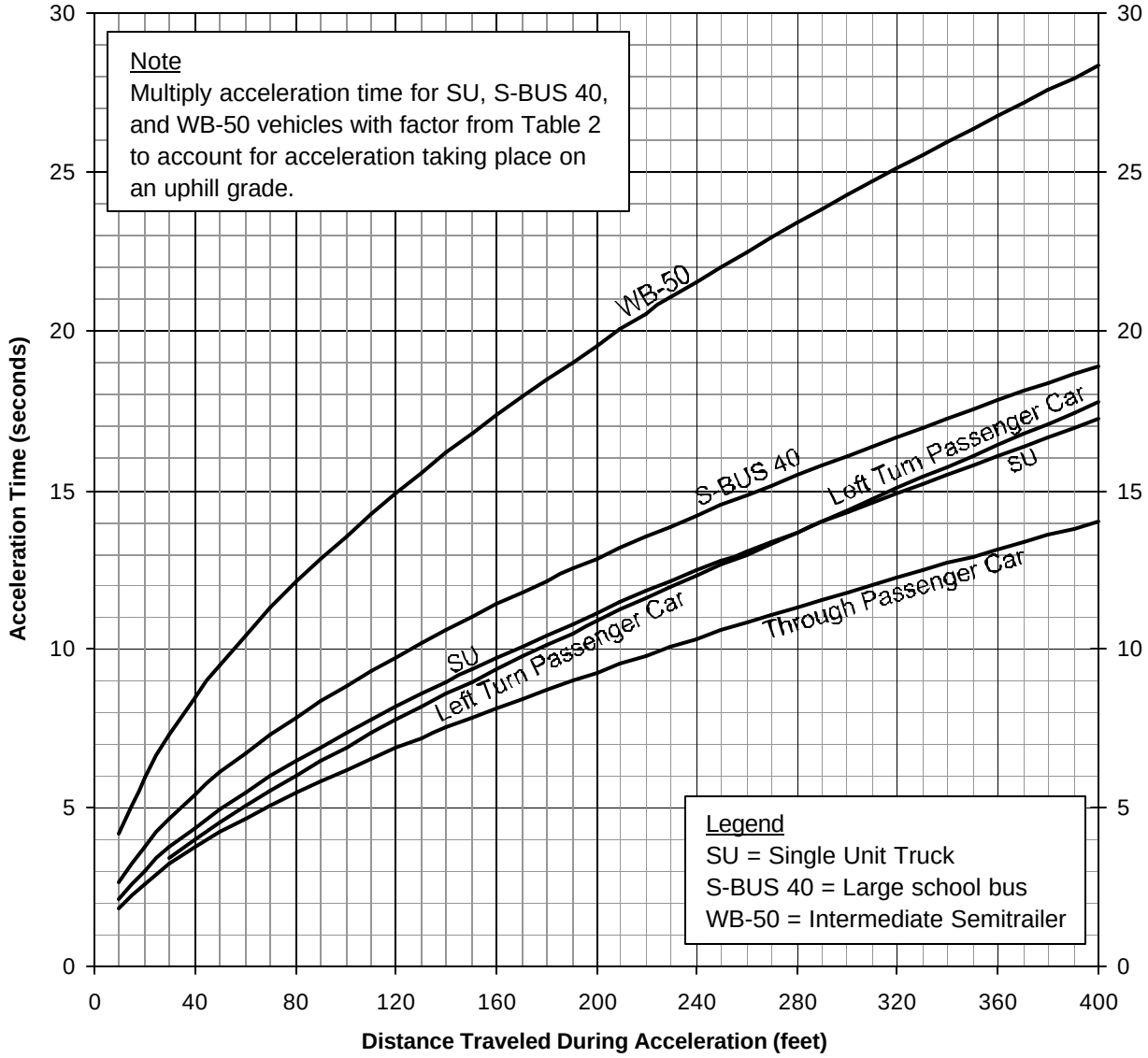

Figure 2 Acceleration time over a fixed distance on a level surface.

Table 2. Factors to account for slower acceleration on uphill grades. Multiply the appropriate factor (depending on the design vehicle, grade, and acceleration distance) with the acceleration time in Figure 2 to obtain the estimated acceleration time on the grade.

Acceleration Distance (ft)	Design Vehicle and Percentage Uphill Grade													
	Single Unit Truck (SU)				Large School Bus (S-BUS 40)					Intermediate Tractor-Trailer (WB-50)				
	0-2%	4%	6%	8%	0-1%	2%	4%	6%	8%	0%	2%	4%	6%	8%
25	1.00	1.06	1.13	1.19	1.00	1.01	1.10	1.19	1.28	1.00	1.09	1.27	1.42	1.55
50	1.00	1.09	1.17	1.25	1.00	1.01	1.12	1.21	1.30	1.00	1.10	1.28	1.44	1.58
75	1.00	1.10	1.19	1.29	1.00	1.02	1.13	1.23	1.33	1.00	1.11	1.30	1.47	1.61
100	1.00	1.11	1.21	1.32	1.00	1.02	1.14	1.25	1.35	1.00	1.11	1.31	1.48	1.64
125	1.00	1.12	1.23	1.34	1.00	1.03	1.15	1.26	1.37	1.00	1.12	1.32	1.50	1.66
150	1.00	1.12	1.24	1.37	1.00	1.03	1.16	1.28	1.40	1.00	1.12	1.33	1.52	1.68
175	1.00	1.13	1.25	1.38	1.00	1.03	1.17	1.29	1.42	1.00	1.12	1.34	1.53	1.70
200	1.00	1.13	1.26	1.40	1.00	1.04	1.17	1.30	1.43	1.00	1.13	1.35	1.54	1.72
225	1.00	1.14	1.27	1.42	1.00	1.04	1.18	1.32	1.45	1.00	1.13	1.35	1.56	1.74
250	1.00	1.14	1.28	1.43	1.00	1.04	1.19	1.33	1.47	1.00	1.13	1.36	1.57	1.76
275	1.00	1.14	1.29	1.44	1.00	1.05	1.20	1.34	1.49	1.00	1.14	1.37	1.58	1.77
300	1.00	1.14	1.30	1.46	1.00	1.05	1.20	1.35	1.50	1.00	1.14	1.37	1.59	1.79
325	1.00	1.15	1.30	1.47	1.00	1.05	1.21	1.36	1.52	1.00	1.14	1.38	1.60	1.81
350	1.00	1.15	1.31	1.48	1.00	1.05	1.22	1.37	1.54	1.00	1.15	1.39	1.61	1.82
375	1.00	1.15	1.31	1.49	1.00	1.06	1.22	1.38	1.55	1.00	1.15	1.39	1.62	1.84
400	1.00	1.15	1.32	1.50	1.00	1.06	1.23	1.40	1.57	1.00	1.15	1.40	1.63	1.85

For design vehicle clearance distances greater than 400 feet, use Equation 1 to estimate the time for the design vehicle to accelerate through the design vehicle clearance distance or any other distance:

$$T = e^{\left[a - b\sqrt{c + \frac{2}{b}\ln\left(\frac{d}{X}\right)}\right]} \tag{1}$$

where

T = time to accelerate through distance X, in seconds;
X = distance over which acceleration takes place, in feet;
ln = natural logarithm function;
e = 2.17828, the base of natural logarithms; and
a, b, c, and d = calibration parameters from Table 3.

Note: To interpolate between grades, <u>do not</u> interpolate the parameters in Table 3. The correct way to interpolate is to calculate the acceleration time *T* using Equation 1 for the two nearest grades and then interpolate between the two acceleration times.

Line 25. Queue clearance time is the total amount of time required (after the signal has turned green for the approach crossing the tracks) to begin moving a queue of vehicles through the queue start-up distance (L, Line 21) and then move the design vehicle from a stopped position at the far side of the crossing completely through the minimum track clearance distance (MTCD, Line 19). This value is the sum of the time required for design vehicle to start moving (Line 22) and the time for design vehicle to accelerate through the design vehicle clearance distance (Line 24).

Table 3. Parameters to estimate vehicle acceleration times over distances greater than 400 feet using Equation 1.

Design Vehicle	Grade	*a*	*b*	*c*	*d*
Through Passenger Car	Level	7.75	3.252	5.679	2.153
Left Turning Passenger Car	Level	10.29	5.832	3.114	5.090
Single Unit Truck (SU)	Level to 2%	8.16	3.624	5.070	2.018
	4%	10.39	4.865	4.560	1.739
	6%	9.52	4.542	4.393	1.700
	8%	9.38	4.597	4.165	1.668
Large School Bus (S-BUS 40)	Level to 1%	10.02	4.108	5.95	0.885
	2%	11.51	5.254	4.801	1.300
	4%	10.79	5.042	4.577	1.266
	6%	10.61	5.101	4.329	1.253
	8%	11.84	6.198	3.652	1.554
Intermediate Semi-Trailer (WB-50)	Level	17.75	7.984	4.940	0.481
	2%	10.26	4.026	6.500	0.249
	4%	9.39	3.635	6.670	0.193
	6%	9.38	3.732	6.310	0.188
	8%	10.31	4.515	5.219	0.265

SECTION 3: MAXIMUM PREEMPTION TIME CALCULATION

Line 26. Right-of-way transfer time, in seconds, recorded on Line 17. The right-of-way transfer time is the maximum amount of time needed for the worst case condition, prior to display of the track clearance green interval.

Line 27. Queue clearance time, in seconds, recorded on Line 25. Queue clearance time starts simultaneously with the track clearance green interval (i.e. after right-of-way transfer), and is the time required for the design vehicle stopped just inside the minimum track clearance distance to start up and move completely out of the minimum track clearance distance.

Line 28. Desired minimum separation time is a time "buffer" between the departure of the last vehicle (the design vehicle) from the railroad crossing (as defined by the minimum track clearance distance) and the arrival of the train. Separation time is added for safety reasons and to avoid driver discomfort. If no separation time is provided, a vehicle could potentially leave the crossing at exactly the same time the train arrives, which would certainly lead to severe driver discomfort and potential unsafe behavior. The recommended value of four (4) seconds is a based on the minimum recommended value found in the Institute of Transportation Engineer's *ITE Journal* (in an article by Marshall and Berg in February 1997).

Line 29. Maximum preemption time is the total amount of time required after the preempt is initiated by the railroad warning equipment to complete right-of-way transfer to the track clearance green interval, initiate the track clearance phase(s), move the design vehicle out of the crossing's minimum track clearance distance, and provide a separation time "buffer" before the train arrives at the crossing. It is the sum of the right-of-way transfer time (Line 26), the queue clearance time (Line 27), and the desired minimum separation time (Line 28).

SECTION 4: SUFFICIENT WARNING TIME CHECK

Line 30. Minimum time (seconds) is the least amount of time active warning devices shall operate prior to the arrival of a train at a highway-rail grade crossing. Section 8D.06 of the *Texas MUTCD* requires that flashing-light signals shall operate for at least 20 seconds before the arrival of any train, except on tracks where all trains operate at less than 32 km/h (20 mph) and where flagging is performed by an employee on the ground.

Line 31. Clearance time (seconds), typically known as CT, is the additional time that may be provided by the railroad to account for longer crossing time at wide (i.e., multi-track crossings) or skewed-angle crossings. You must obtain the clearance time from the railroad responsible for the railroad crossing. In cases where the minimum track clearance distance (Line 19) exceeds 35 feet, the railroads' *AREMA Manual* requires clearance time of one second be provided for each additional 10 feet, or portions thereof, over 35 feet. Additional clearance time may also be provided to account for site-specific needs. Examples of extra clearance time include cases where additional time is provided for simultaneous preemption (where the preemption notification is sent to the signal controller unit simultaneously with the activation of the railroad crossing's active warning devices), instead of providing advance preemption time.

Line 32. Minimum warning time (seconds) is the sum of the minimum time (Line 30) and the clearance time (Line 31). This value is the actual minimum time that active warning devices can be expected to operate at the crossing prior to the arrival of the train under normal, through-train conditions. The term "through-train" refers to the case where trains do not stop or start moving while near or at the crossing. Note that the minimum warning time, <u>does not</u> include buffer time (BT). Buffer time is added by the railroad to ensure that the minimum warning time is always provided despite inherent variations in warning times; however, it is not consistently provided and <u>cannot be relied upon</u> by the traffic engineer for signal preemption and/or warning time calculations.

Line 33. Advance preemption time (seconds), if provided, is the period of time that the notification of an approaching train is forwarded to the highway traffic signal controller unit or assembly <u>prior</u> to activating the railroad active warning devices. Only enter advance preemption time if you can verify from the railroad that advance preemption time is already being provided for your site. If you are determining whether or not you need advance preemption time, enter zero for the advance preemption time in Line 33.

Line 34. Warning time provided by the railroad is the sum of the minimum warning time (Line 32) and the advance preemption time (Line 33), in seconds. This value should be verified with the railroad, and <u>should not</u> include buffer time (BT).

Line 35. Additional warning time required from railroad is the additional time needed (if any), in seconds, that is required to provide safe preemption in the worst case (the maximum preemption time on Line 29), given the warning time provided by the railroad (Line 34). The additional warning time required is calculated by subtracting the warning time provided by the railroad (Line 34) from the maximum preemption time (Line 29). If the result of the subtraction is equal to or less than zero, it means that sufficient warning time is available, and you should enter zero (0) on Line 35. However, keep in mind that highly negative (-10 or less) subtraction results may indicate the potential for operational problems due to insufficient track clearance green time. Section 5 of the worksheet contains a methodology for calculating sufficient track clearance green time.

If the additional warning time is greater than zero (0), it means that the warning time provided by the railroad is insufficient, and additional warning time has to be requested from the railroad to ensure safe operation. The railroad can provide additional warning time either by providing additional clearance time (CT) (Line 30), or by providing or increasing advance preemption time (Line 33).

As an alternative, it may be possible to reduce the maximum preemption time (Line 29). To reduce the maximum preemption time, you can reduce either the preempt delay time (Line 1), if this is possible; reduce preempt minimum green time (Line 5) or other green time (Line 6), as long as you do not violate local policies for signal timing; or, reduce yellow change time (Line 7) or red clearance time (Line 8) as long as adequate and appropriate yellow change and red clearance intervals are provided as per the *Texas MUTCD* Section 4D.10 and applicable guidelines such as the Institute of Transportation Engineers' *Determining Vehicle Signal Change and Clearance Intervals*.

If pedestrian rather than vehicular phasing controls warning time requirements for preemption, it may be possible to reduce the minimum walk time (Line 11) and/or pedestrian clearance time (Line 12) as long as you do not violate local policies for signal timing. You can also let the pedestrian clearance time (flashing don't walk) time simultaneous with vehicular yellow change and red clearance and so reduce the values on Line 13 (yellow change time) and Line 14 (red clearance time) to zero (0). If local policies do

not currently allow simultaneous clearance for pedestrian and vehicular phasing, you may want to consider allowing this type of operation to reduce your worst-case conflicting pedestrian time.

Once you have made all of the possible adjustments to the warning time, recompute the totals in Lines 3, 9, 15, 16, 17, 26, 29, and 35. If Line 35 remains greater than zero, then you will have to request additional warning time from the railroad, as described above, to ensure safe preemption of the adjacent signalized intersection.

SECTION 5: TRACK CLEARANCE GREEN TIME CALCULATION (OPTIONAL)

Note: This section is optional and is used to calculate the duration of the track clearance green interval. If this worksheet is only used to determine if additional warning time has to be requested from the railroad, this section need not be completed.

The objective of the section is to calculate the duration of the track clearance green interval to ensure safe and efficient operations at the crossing and adjacent traffic signal.

The Preempt Trap Check section (lines 36 to 44) focuses on safety by calculating the minimum duration of the track clearance green interval to ensure that the track clearance green does not terminate before the gates block access to the crossing. If the gates do not block access to the crossing before the expiration of the track clearance green, it is possible that vehicles can continue to cross the tracks and possibly stop on the tracks. However, the track clearance green interval has already expired and there will be no further opportunity to clear. This potentially hazardous condition is called the "preempt trap" and is described in more detail in TxDOT Project Bulletin 1752-9: The Preempt Trap: How to Make Sure You Do Not Have One.

The Clearing of Clear Storage Distance section (lines 45 to 50) focuses on efficiency by calculating duration of the track clearance green interval that is needed to clear the clear storage distance (CSD in Figure 1), or a specific portion thereof.

Preempt Trap Check

Line 36. Advance preemption time provided is the duration (in seconds) the preempt sequence is active in the highway traffic signal controller before the activation of the railroad active warning devices. If Line 35 is zero (i.e. no additional warning time is required from the railroad), the value on Line 33 can be used. In other cases, use the actual value of the advance preemption time (APT) provided by the railroad. If no APT is provided, enter zero on Line 36.

Line 37. Multiplier for maximum APT due to train handling is a value that relates the maximum duration of the advance preemption time (APT) to the minimum value guaranteed by the railroad. Although the railroad guarantees a minimum duration for the APT, it is probable that in most cases the actual duration of the APT will be longer than the guaranteed duration. This variability in APT occurs due to "train handling", which a term that describes the acceleration and deceleration of trains on their approach to the crossing. If a train accelerates or decelerates while approaching to the crossing, the railroad warning system cannot estimate the arrival time of the train at the crossing accurately, resulting in variation in the actual duration of APT provided. This variation needs to be taken into account to ensure safe operation.

To make sure that the preempt trap does not occur we need to determine the maximum value of the APT so that a sufficiently long track clearance green interval can be provided to ensure that the gates block access to the crossing before the track clearance green ends. The maximum APT can be estimated by multiplying the advance preemption time provided (and guaranteed) by the railroad (Line 36) with the multiplier for maximum APT due to train handling. This value is only significant if the value for APT on Line 36 is non-zero. If APT is zero, continue to line 38.

In the case where APT is provided, the difference between the minimum and maximum values of APT is termed excess APT. Excess APT usually occurs when the train decelerates on the approach to the crossing, or where train handling affects the accuracy of the estimated time of train arrival at the crossing so that the preempt sequence is activated earlier than expected. The amount of excess APT is increased by the following conditions:

- Increased variation in train speeds, since more trains will be speeding up and slowing down;
- Lower train speeds, since a fixed deceleration rate has a greater effect on travel time at low speeds than at higher speeds; and
- Longer warning times, because more time is available for the train to decelerate on the approach to the crossing.

The multiplier for maximum APT can be determined from field measurements as the largest advance preemption time observed (or the 95th percentile, if enough observations are available) divided by the value on Line 36. If no field observations are available, the multiplier for maximum APT can be estimated as 1.60 if warning time variability is high or 1.25 if warning time variability is low. High warning time variability can typically be expected in the vicinity of switching yards, branch lines, or anywhere low-speed switching maneuvers takes place. According to Section 16.30.10 of the *AREMA Signal Manual* the railroad can provide a "timer for constant time between APT and CWT." The effect of such a "not to exceed" timer is to eliminate excess APT, and if provided, the multiplier on Line 37 can be set to 1.0.

Line 38. Maximum APT is largest value (in seconds) of the advance preemption time that can typically be expected, which corresponds to the earliest possible time the preemption sequence in the traffic signal controller will be activated before the activation of the railroad grade crossing warning system (flashing lights and gates). It is the calculated by multiplying the APT provided by the railroad (Line 36) with the multiplier for maximum APT due to train handling (Line 37).

Line 39. Minimum duration for the track clearance green is the minimum duration (in seconds) of the track clearance green interval to ensure that the gates block access to the crossing before the track clearance green expires in the case where <u>no</u> advance preemption time is provided. It is necessary to block access to the crossing before the track clearance green expires to ensure that vehicles do not enter the crossing after the expiration of the track clearance green and so be subject to the preempt trap (described in the introduction to Section 5).

The 15 seconds minimum duration for the track clearance green interval is calculated from Federal regulations and requirements of the *Texas MUTCD*. Section 8D.06 of the *Texas MUTCD* requires that flashing-light signals shall operate for at least 20 seconds before the arrival of any train (with certain exceptions), while Section 8D.04 requires that the gate arm shall reach its horizontal position at least 5 seconds before the arrival of the train. For simultaneous (non-advance) preemption, the preemption sequence starts at the same time as the flashing-light signals, so to ensure that the preempt trap does not occur, a track clearance green interval of at least 15 seconds is required.

Line 40. Gates down after start of preemption is the maximum duration (in seconds) from when the preempt is activated in the highway traffic signal controller until the gates reach a horizontal position. Calculate this value by adding the maximum advance preemption time on Line 38 to the minimum duration for the track clearance green interval on Line 39.

Line 41. Preempt verification and response time, recorded on Line 3, is the number of seconds between the receipt at the controller unit of a preempt call issued by the railroad's grade crossing warning equipment and the time the controller software actually begins to respond to the preempt call.

Line 42. Best-case conflicting vehicle or pedestrian time (in seconds) is the minimum time from when the preempt starts to time in the controller (i.e. after verification and response) until the track clearance green interval can start timing. In most cases, this value is zero, since the controller may already be in the track clearance phase(s) when the preempt starts timing, and therefore the track clearance green interval can start timing immediately. The best-case conflicting vehicle or pedestrian time may be greater than zero if the track clearance green interval contains phases that are not in normal operation (and conflicts with the normal phases), or where another phase or interval <u>always</u> has to terminate before the track clearance green interval can start timing.

Line 43. Minimum right-of-way transfer time is the minimum amount of time needed for the best case condition, prior to display of the track clearance green interval. Calculate the minimum right-of-way transfer time by adding lines 41 and 42.

Line 44. Calculate the M**inimum track clearance green time** by subtracting Line 43 from Line 40. This yields the minimum time that the track clearance green interval has to be active to avoid the preempt trap.

Clearing of Clear Storage Distance

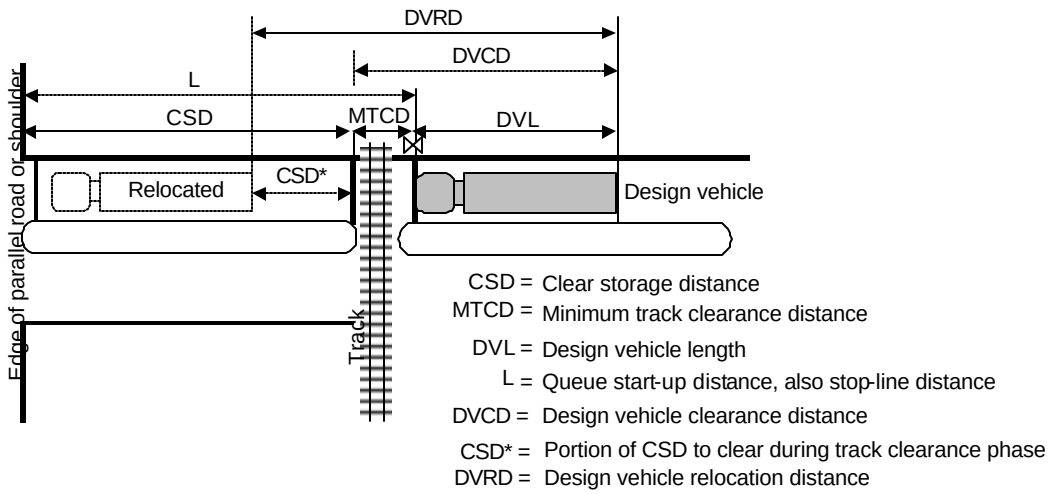

Figure 3 Relocation distances during the track clearance green interval.

Line 45. Time required for design vehicle to start moving, recorded on Line 22, is the number of seconds that elapses between the start of the track clearance green interval and the time the design vehicle, which is located at the edge of the railroad crossing on the opposite side from the signalized intersection, begins to move.

Line 46. Design vehicle clearance distance (DVCD in Figure 3) is the length, in feet, which the design vehicle must travel in order to enter and completely pass through the railroad crossing's minimum track clearance distance (MTCD). This is the same value as recorded on Line 23.

Line 47. Portion of CSD to clear during track clearance, (CSD* in Figure 3) is the portion of the clear storage distance (CSD), in feet, that must be cleared of vehicles before the track clearance green interval ends. For intersections with a CSD greater than approximately 150 feet it is desirable—but not necessary—to clear the full CSD during the track clearance green interval. In other words, it is desirable to set Line 47 to the full value of CSD (Line 18). If the full CSD is <u>not</u> cleared, however, vehicles will be stopped in the CSD during the preempt dwell period, and if not serviced during the preempt dwell period, will be subject to unnecessary delays which may result in unsafe behavior. For CSD values less than 150 feet the full CSD is typically cleared to avoid the driver task of crossing the tracks followed immediately by the decision to stop or go when presented by a yellow signal as the track clearance green interval terminates.

Line 48. Design vehicle relocation distance (DVRD in Figure 3) is the distance, in feet, that the design vehicle must accelerate through during the track clearance green interval. It is the sum of the design vehicle clearance distance (Line 46) and the portion of CSD to clear during the track clearance green interval (Line 47).

Line 49. The **Time required for design vehicle to accelerate through DVRD** is the amount of time required for the design vehicle to accelerate from a stop and travel the complete design vehicle relocation distance (DVRD). This time value, in seconds, can be found by locating your design vehicle relocation distance from Line 48 on the horizontal axis of Figure 2 and then drawing a line straight up until that line intersects the acceleration time performance curve for your design vehicle. For a WB-50 semi-trailer, large school bus (S-BUS 40), or single unit (SU) vehicle, multiply the acceleration time with a correction factor obtained from Table 2 to estimate the effect of grade on the acceleration of the vehicle. Use the average grade over the design vehicle relocation distance. For design vehicle relocation distances greater than 400 feet, use Equation 1 with the appropriate parameters listed in Table 3.

Line 50. Time to clear portion of clear storage distance, in seconds, is the total amount of time required (after the signal has turned green for the approach crossing the tracks) to begin moving a queue of vehicles through the queue start-up distance (L in Figure 3) and then move the design vehicle from a stopped position at the far side of the crossing completely through the portion of clear storage distance that must be cleared (CSD* in Figure 3). This value is the sum of the time required for design vehicle to start moving (Line 45) and the time for the design vehicle to accelerate through the design vehicle relocation distance, DVRD (Line 49).

Line 51. The **Track clearance green interval** is the time required, in seconds, for the track clearance green interval to avoid the occurrence of the preempt trap <u>and</u> to provide enough time for the design vehicle to clear the portion of the clear storage distance specified on Line 47. The track clearance green interval time is the maximum of the minimum track clearance green time (Line 44) and the time required to clear a portion of clear storage distance (Line 50).

SECTION 6: VEHICLE-GATE INTERACTION CHECK (OPTIONAL)

Note: This section is optional and is used to calculate the required advance preemption time to avoid the automatic gates descending on a stationary or slow moving design vehicle as it moves through the minimum track clearance distance (MTCD). If this worksheet is only used to determine if additional warning time has to be requested from the railroad to ensure that vehicles have enough time to clear the crossing before the arrival of the train, this section need <u>not</u> be completed.

Line 52. Right-of-way transfer time, in seconds, recorded on Line 17, is the maximum amount of time needed for the worst case condition, prior to display of the track clearance green interval.

Line 53. Time required for design vehicle to start moving, recorded on Line 22, is the time (in seconds) elapsed between the start of the track clearance green interval and the time the design vehicle, which is located at the edge of the railroad crossing on the opposite side from the signalized intersection, begins to move.

Line 54. Time required for design vehicle to accelerate through the design vehicle length, DVL, is the time required for the design vehicle to accelerate through its own length. The design vehicle length is recorded on Line 20. This time value, in seconds, can be read from Figure 2 and Table 2 or looked up in Table 4 for standard design vehicles. For a WB-50 semi-trailer, large school bus, or single unit (SU) truck use the average grade over the design vehicle length at the far side of the crossing.

Line 55. Time required for design vehicle to clear the descending gates, in seconds, is the sum of the right-of-way transfer time on Line 52, the time required for design vehicle to start moving on Line 53, and the time required for design vehicle to accelerate through the design vehicle length on Line 54.

Line 56. Duration of flashing lights before gate descent start, in seconds, is the time the railroad warning lights flash before the gates start to descend. This value typically ranges from 3 to 5 seconds and must be obtained from the railroad. The value obtained from the railroad may be verified using field observation.

Table 4. Time required for the design vehicle to accelerate through the design vehicle length.

Design Vehicle	Design Vehicle Length (feet)	Grade	Acceleration Time (seconds)
Through Passenger Car	19	Level	2.6
Left Turning Passenger Car	19	Level	2.7
Single Unit Truck (SU)	30	Level to 2%	3.8
		4%	4.0
		6%	4.3
		8%	4.6
Large School Bus (S-BUS 40)	40	Level to 1%	5.5
		2%	5.5
		4%	6.1
		6%	6.6
		8%	7.0
Intermediate Semi-Trailer (WB-50)	55	Level	10.0
		2%	11.0
		4%	12.8
		6%	14.4
		8%	15.8

Line 55. Time required for design vehicle to clear the descending gates, in seconds, is the sum of the right-of-way transfer time on Line 52, the time required for design vehicle to start moving on Line 53, and the time required for design vehicle to accelerate through the design vehicle length on Line 54.

Line 56. Duration of flashing lights before gate descent start, in seconds, is the time the railroad warning lights flash before the gates start to descend. This value typically ranges from 3 to 5 seconds and must be obtained from the railroad. The value obtained from the railroad may be verified using field observation.

Line 57. Full gate descent time, in seconds, is the time it takes for the gates to descend to a horizontal position after they start their descent. This value must be obtained from the railroad and may be verified using field observation. In the case where multiple gates descend at different speeds, use the descent time of the gate that reaches the horizontal position first.

Line 58. The **Proportion of non-interaction gate descent time** is the decimal proportion of the full gate descent time on Line 57 during which the gate will <u>not</u> interact with (i.e. not hit) the design vehicle if it is located under the gate. This value depends on the design vehicle height, h, and the distance from the center of the gate mechanism to the nearest side of the design vehicle, d, as shown in Figure 4. Figure 5 can be used to determine the proportion of non-interaction gate descent time. Select the distance from the center of the gate mechanism to the nearest side of the design vehicle, d, on the vertical axis of Figure 5, draw a horizontal line until you reach the curve that represents the design vehicle, and then draw a vertical line down to the horizontal axis and read off the value of the proportion of non-interaction gate descent time.

Line 59. Non-interaction gate descent time is time (in seconds) during gate descent that the gate will <u>not</u> interact with (i.e. not hit) the design vehicle if it is located under the gate. In other words, it is the time that expires after the gate starts to descend until it hits the design vehicle if it is located under the gate. This value is calculated by multiplying the full gate descent time on Line 57 with the proportion of non-interaction gate descent time on Line 58.

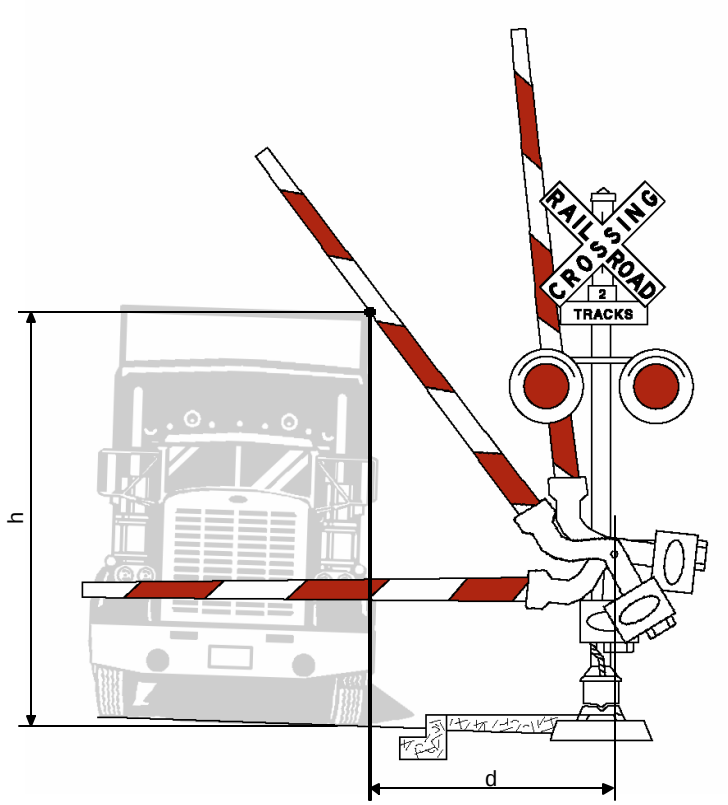

Figure 4 Gate interaction with the design vehicle.

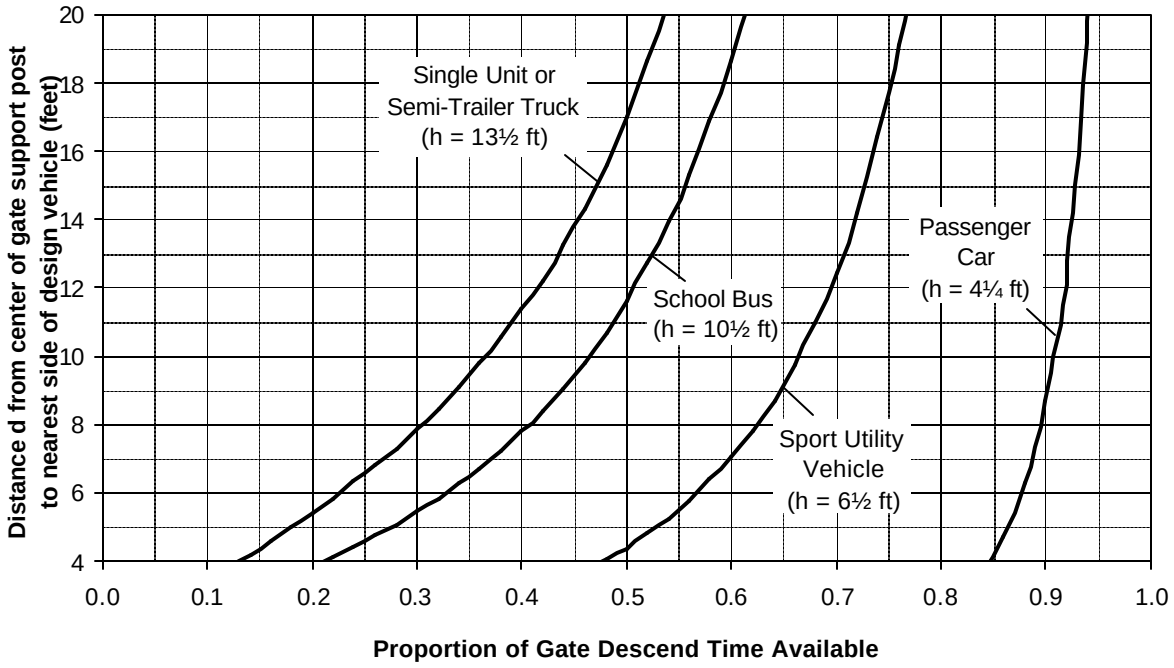

Figure 5 Proportion of gate descent time available as a function of the design vehicle height and the distance from the center of the gate mechanism to the nearest side of the design vehicle.

Line 60. Time available for design vehicle to clear descending gate, in seconds, is the time, after the railroad warning lights start to flash, that is available for the design vehicle to clear the descending gate before the gate hits the vehicle. It is the sum of the duration of the flashing lights before gate descent start (Line 56) and the non-interaction gate descent time (Line 59).

Line 61. Advance preemption time required to avoid design vehicle-gate interaction, in seconds, is calculated by subtracting the time available for the design vehicle to clear descending gate (Line 60) from the time required for the design vehicle to clear descending gate (Line 55). The result is the amount of advance preemption time that is required to avoid the gates descending on a stationary or slow-moving design vehicle. If the result of the subtraction is equal to or less than zero, it means that sufficient time is available, and you should enter zero (0) on Line 61. If the result is greater than the amount of advance preemption time provided by the railroad, as given on Line 36, there is a possibility that the gates could descend on a stationary or slow-moving design vehicle. To avoid this situation, additional advance preemption time should be requested from the railroad.

It should be kept in mind that on its own, gates descending on a vehicle is not a critical safety failure, because enough time still exists to clear the crossing before the arrival of the train, if the advance preemption time on Line 36 is provided. Therefore, local policies may vary on whether additional advance preemption time (over and above that on Line 36) should be requested solely for the purpose of prohibiting gates descending on vehicles.

If additional advance preemption time is provided to avoid design vehicle-gate interaction, Line 33 of this Worksheet has to updated, and Lines 34 and 35 recomputed. Section 5 also needs to be recomputed to calculate the track clearance green time.

REFERENCES

The following references were used in the development of the *2003 Guide For Determining Time Requirements For Traffic Signal Preemption At Highway-Rail Grade Crossings* and these accompanying Instructions.

Texas Department of Transportation. *Texas Manual on Uniform Traffic Control Devices (MUTCD)*. 2003. On the Internet at http://www.dot.state.tx.us/TRF/mutcd.htm. Link valid May 2003.

Institute of Transportation Engineers (ITE). *Determining Vehicle Signal Change and Clearance Intervals*. An Informational Report prepared by ITE Technical Council Task Force 4TF-1, August 1994.

American Association of State Highway & Transportation Officials (AASHTO). *A Policy on Geometric Design of Highways and Streets*. (Green Book). 2001.

Marshall, P.S. and W.D. Berg. *Design Guidelines for Railroad Preemption at Signalized Intersections*. In ITE Journal Volume 67, Number 2, February 1997, pp. 20-25.

American Railway Engineering and Maintenance-of-Way Association (AREMA). *Manual of Recommended Practices-Signals*. 2000.

Engelbrecht, R.J., S. Sunkari, T. Urbanik, and K. Balke. *The Preempt Trap: How to Make Sure You do Not Have One*. Texas Department of Transportation Project Bulletin 1752-9, October, 2000. On the Internet at http://tti.tamu.edu/product/catalog/ reports/1752-9.pdf. Link valid May 2003.