UPDATED: 11/10/2011

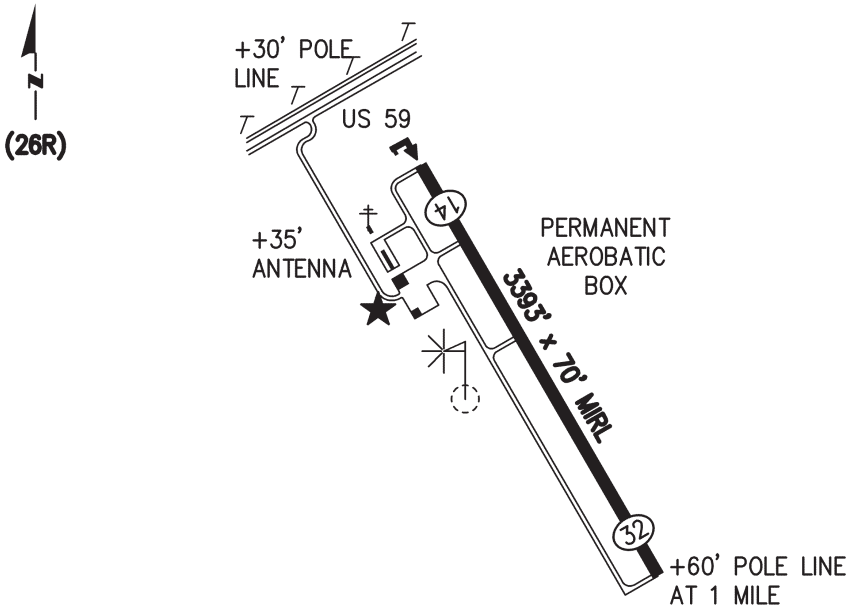

Lat: N 29° 00.06′ **Elev:** 61' MSL **Sectional:** HOUSTON
Lon: W 96° 34.92′ **TPA:** STD **Downtown to Apt:** 03 nm/NE

Owner: JACKSON COUNTY
115 W. MAIN, RM 207
EDNA TX 77957
Phone: 361-782-2352
Fax: 361-782-3730
Web: www.co.jackson.tx.us

Manager: DENNIS SIMONS
115 W. MAIN, RM 207
EDNA TX 77957
361-782-2352
Email: jcjudge@ykc.com

ATTENDANCE SCHEDULE: DWN-DSK

FUEL: 100LL 24HRS SELF SERVE

REPAIRS: Airframe: MAJOR Power Plant: MAJOR

LIGHTS: DSK-DWN RDO/CTL **UNICOM/CTAF:** 122.8

REMARKS: FOOD-LODGING (3 MI); COURTESY CAR;
MONITOR AEROBATIC BOX ON 123.3; (MC, VI)