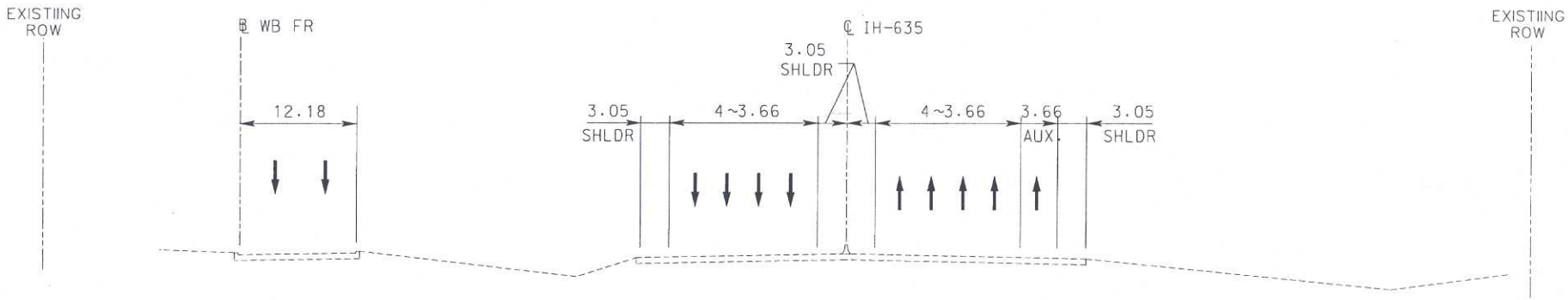

IH-635
EXISTING SECTION
STA. 43+060
N.T.S.

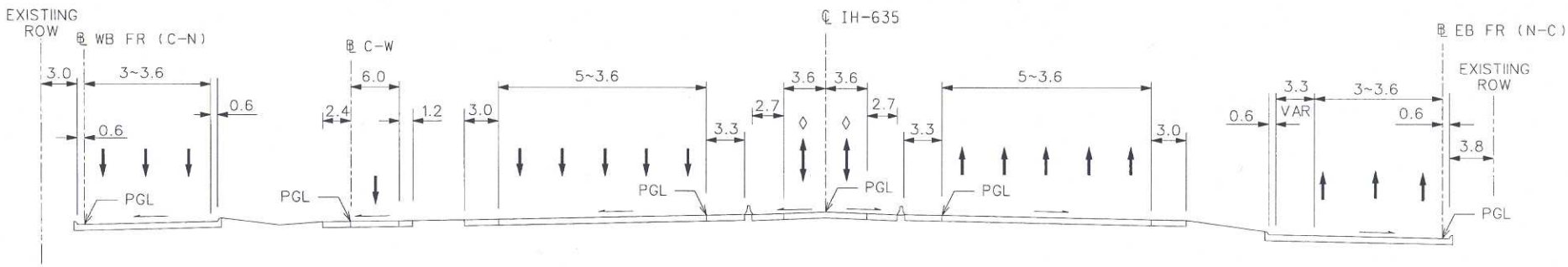

IH-635
PROPOSED SECTION
STA. 43+060
N.T.S.

Environmental Assessment
East Section
Appendix A
Page 31 of 89

Texas Department of Transportation
LBJ Corridor Transportation Study
DART

IH 635 PRELIMINARY TYPICAL SECTIONS

US 75 TO IH 30

Figure 31

NOVEMBER 2000

SHEET 1 OF 2