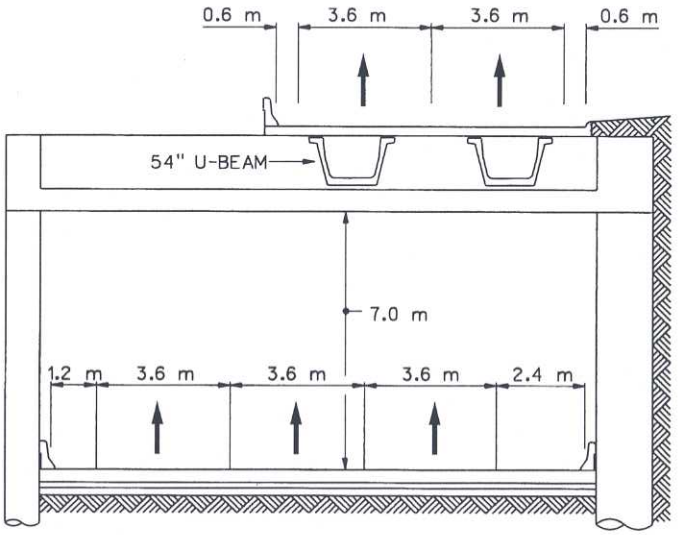

HOV/TOLL BOX UNDER FRONTAGE ROAD

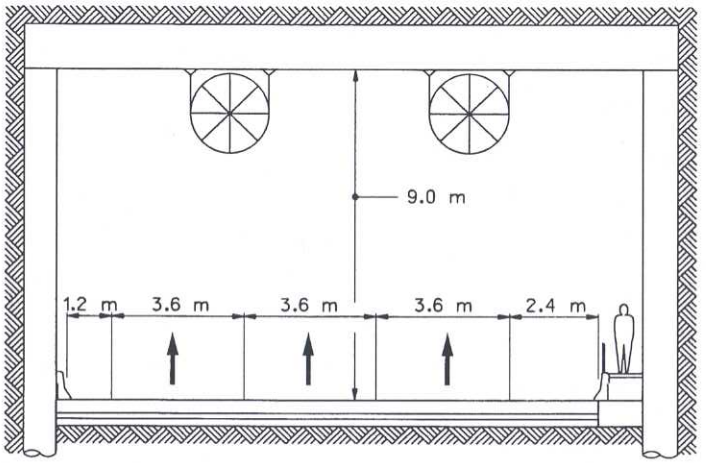

HOV/TOLL CUT-N-COVER TUNNEL

NOTE: ALL DIMENSIONS IN METERS

Texas Department of Transportation | 635 LBJ Corridor Transportation Study | DART

IH 635 PRELIMINARY
TYPICAL SECTIONS
LUNA ROAD TO US 75

DATE: APRIL 2002

SHEET 6 OF 7