FED. RD. DIV. NO.	FEDERAL AID PROJECT NO.		SHEET NO.
6	NH 92(50)M		1
STATE	STATE DIST. NO.	COUNTY	
TEXAS	21	HIDALGO	
CONT.	SECT.	JOB	HIGHWAY NO.
0039	17	097	US 83/281

STATE OF TEXAS
DEPARTMENT OF TRANSPORTATION

PLANS OF [redacted]
STATE HIGHWAY IMPROVEMENT

FEDERAL AID PROJECT, NO. NH 92(50)M
NET LENGTH OF PROJECT= 11,088.10 FT. = 2.100 MI.

HIDALGO COUNTY
US 83 - US 281

LIMITS: AT US 281 INTERCHANGE IN PHARR

CONSTRUCTION OF AN INTERCHANGE FACILITY CONSISTING OF GRADING, STRUCTURES, ASPHALTIC CONCRETE PAVEMENT, FLEXIBLE BASE, LIME TREATED SUBGRADE, SIGNING, ILLUMINATION, PAVEMENT MARKINGS AND LANDSCAPING.

SCALES:
PLAN: 1 IN. = 50 FT.
PROFILE: 1 IN. HOR. = 50 FT., 1 IN. VERT. = 5 FT.
OTHERS AS NOTED.

RDWY.	10,747.20 FT.	= 2.035 MI.*
BRIDGE	340.90 FT.	= 0.064 MI.*
WIDENING		
	11,088.10 FT.	2.099 MI.

BRIDGE = 10,392.36 FT. = 1.968 MI.
DIRECT CONN.

*LENGTHS BASED ON LANES.

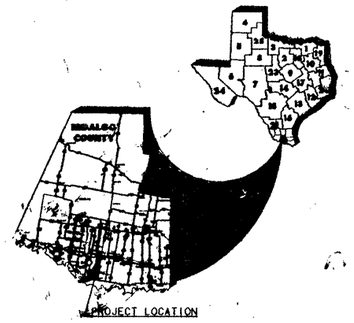

PROJECT LOCATION

DESIGN SPEED:

US 83 MAINLANES= 60 MPH
DIRECT CONNECTORS= 50 MPH RAMPS #2 & 3
45 MPH RAMPS #1 & 4

INDEX OF SHEETS

SHEET NO.	DESCRIPTION
1	- TITLE SHEET
2	- PROJECT LAYOUT
3-3A-9	- TYPICAL SECTIONS
10-32A	- SUGGESTED TRAFFIC CONTROL PLAN
33-33I	- GENERAL NOTES & SPECIFICATION DATA
34-40G	- ESTIMATE & QUANTITY
41-50A	- PLAN & PROFILE (US 83) & RDWY DETAILS
51-54	- PLAN & PROFILE (US 281)
55-57	- DRAINAGE AREA MAPS
58-60B-63	- DRAINAGE OUTFALL LAYOUTS & DETAILS
64-72	- UTILITIES & DRAINAGE
73-81	- STORM SEWER PROFILES
82-86	- LATERAL STORM SEWER DETAILS
87-91	- HYDRAULIC DATA & PIPE RUN SUMMARY
92-104	- RETAINING WALL PLAN & PROFILE
105	- REINFORCED EARTH RET. WALL (STANDARDS)
106	- RETAINED EARTH RET. WALL (STANDARDS)
107	- EMRW-88 (STANDARDS)
108	- TRAFFIC RAIL FOUNDATIONS (STANDARDS)
	CONC. TRAFFIC BARR. & RAILING DETAILS
109	- CTB (1) SPECIAL
110	- CTB (2) SPECIAL
111-116	- CTB MISC. DETAILS
117	- T501 RETROFIT DETAILS
118	- CTB1 (1)-85 (STANDARDS)
119	- CTB (2)-81 (STANDARDS)
120	- PCTB (1)-90 (STANDARDS)
121	- PCTB (2)-85 (STANDARDS)
	US83 OVERPASS WIDENING AT US281
122-123	- BRIDGE LAYOUT & TYPICAL SECTION
124	- EST. QUANTITIES & BRG. SEAT ELEVS.
125-128	- STRUCTURAL DETAILS
	US83 OVERPASS WIDENING AT SUGAR RD.
129-130	- BRIDGE LAYOUT & TYPICAL SECTION
131	- EST. QUANTITIES & BRG. SEAT ELEVS.
132-143	- STRUCTURAL DETAILS
	MISCELLANEOUS STRUCTURAL DETAILS
144-145	- ARMOR JOINT DETAILS
146	- Gp A-2(MOD)
147	- Gpc (MOD)
148	- GP-NS-LR
149-155	- OMITTED
	US83/281 DIRECT CONNECTORS
	RAMPS 1&2
156-158	- BRIDGE LAYOUTS
159	- EST. QUANTITIES & BRG. SEAT ELEVS.
160-190	- STRUCTURAL DETAILS
	RAMPS 3&4
191-193	- BRIDGE LAYOUTS
194	- EST. QUANTITIES & BRG. SEAT ELEVS.
195-226	- STRUCTURAL DETAILS
	RAMPS 1
227-231	- BRIDGE LAYOUTS
232	- EST. QUANTITIES & BRG. SEAT ELEVS.
233-269	- STRUCTURAL DETAILS
	RAMPS 2
270-275	- BRIDGE LAYOUTS
276	- EST. QUANTITIES & BRG. SEAT ELEVS.
277-316	- STRUCTURAL DETAILS
	RAMPS 3
317-320	- BRIDGE LAYOUTS
321	- EST. QUANTITIES & BRG. SEAT ELEVS.
322-350	- STRUCTURAL DETAILS
	RAMPS 4
351-354	- BRIDGE LAYOUTS
355	- EST. QUANTITIES & BRG. SEAT ELEVS.
356-367, 374-376, 376A-384, 384A,B	- STRUCTURAL DETAILS
	MISC. STRUCTURAL DETAILS
385	- GP A-2 (MOD.) (STANDARDS)
386	- GP B-3 (STANDARDS)
387	- GP C (SPL) (STANDARDS)
388	- GP-NS-LR (STANDARDS)
389	- PG-D (MOD.) (STANDARDS)

CONT'D

INDEX OF SHEETS (CONT.)

SHEET NO.	DESCRIPTION
390	- EB-1 (MOD.)
391	- SPECIAL BEARING DETAILS
392	- MODULAR JOINT DETAILS
393-396A	- BRIDGE DRAIN DETAILS
397	- SEJ - S(1) (STANDARDS)
398	- RAIL TYPE T501 (STANDARDS)
399-400, 400A	PCP (STANDARDS)
401	- PMDF (C) (STANDARDS)
402	- PMDF (S) (STANDARDS)
403	- PCB-MEBR (STANDARDS)
404	- SS-MEBR (STANDARDS)
405	- BPA (STANDARDS)
406	- BL (STANDARDS)
407	- RR8 & RR9 (STANDARDS)
407A	- ODSR (STANDARDS)
408	- IRRIGATION STRUCTURE DETAILS
409	- MISCELLANEOUS RIP-RAP DETAILS
410-411	- DRIVEWAYS, TURNOUTS & MILLING DETAILS
412-416	- ILLUMINATION LAYOUT SHEETS
417-431A	- LARGE SIGNS LAYOUTS & DETAILS
432-446A,B	- OVERHEAD SIGN STRUCTURE DETAILS
446 C,D,E,F	- SUMMARY OF LARGE SIGNS
447-450	- SMALL SIGNS LAYOUT & DETAILS
451-454	- SUMMARY OF SMALL SIGNS
455-465	- PAVEMENT MARKING LAYOUTS & DETAILS
466-502	- LANDSCAPING LAYOUT & DETAILS
	STANDARDS BELOW
	DRAINAGE
503-505A-505B	MANHOLE & INLET DETAILS & S.E.T. DETAILS
509	- MH-M
510-510A	- SD
511-512	- CONC. CURB, C&G AND CONC. GUTTER DTLS.
512A,B,C	- PC-2, PC-4, PC-7
	TRAFFIC & ILLUMINATION
513	- IPM (1)-90
514-515	- M(1) & (3)
516-518	- R (1) THRU (3)
519-520	- W (1) & (2)
521-523	- SMD (1-1) THRU (1-3)
523A	- SMD (CTB)
524	- IE (4)
525-526	- IM (1) & (2)
527-529	- SMD (8-1), (8-2)&(A-1)
530	- OMITTED
531	- OSB-ZI
532	- HOSB-ZI
533-534	- OSBT & OSBG
535	- OSB-FD
536	- COSS-ZI
537	- HCOSS-ZI
538	- OMITTED
539	- COSSD
540	- COSS-FD
541	- SL (1)
542	- SL (MV)
543	- SWW (1)
544	- SB(SWL-1)
545-551	- HMID (1) THRU (7)-86
552	- HMID (8)-86 (MOD.)
553-554	- HMID (9) & (10)-86
555	- HMIF (MOD)
556	- HMIP 100
557-563	- RID (1) THRU (7)-88
	MISCELLANEOUS
564	- GREAT - 89
565	- HBF (CTB) - 81
566	- CLF - 80
567	- MBGF-91
568	- TB (BMGF)-88
569	- BED - 91
570	- GET - 91A
571-573	- D & OM (1), (2) & (3)
574-575	- TCP (5-1) & (5-2) - 91
576-582	- DC (1) THRU (7) - 93
583-585	- TCP (3-1), (3-2) & (3-3) - 91

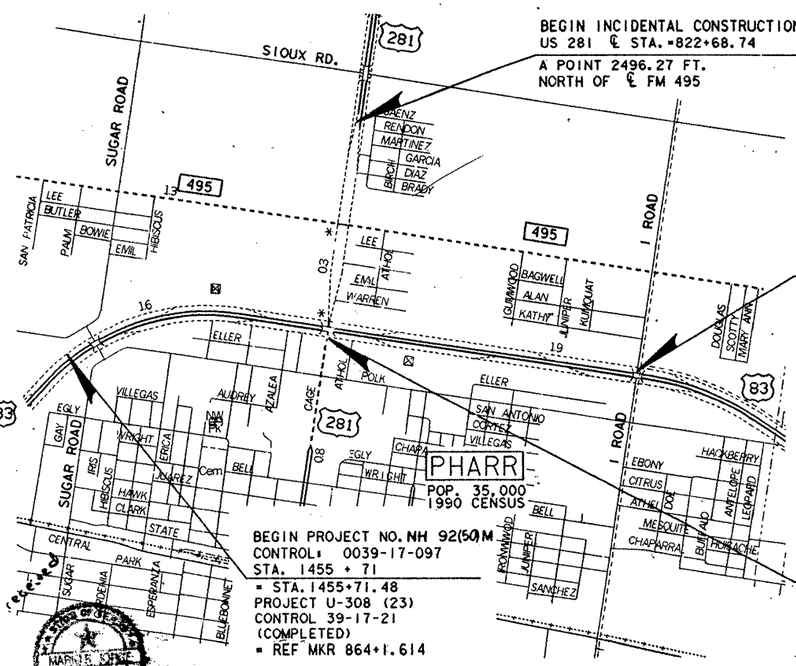

PLANS APPROVED:
CITY OF PHARR

*ATTACHMENT NO. 1 TO SPECIAL AGREEMENT FOR CONSTRUCTION, MAINTENANCE AND OPERATION OF SAFETY LIGHTING SYSTEMS WITHIN MUNICIPALITIES, DATED _____.

THE CITY-STATE CONSTRUCTION, MAINTENANCE AND OPERATION RESPONSIBILITIES [redacted] AS HERETOFORE AGREED TO, ACCEPTED, AND SPECIFIED IN THE AGREEMENT TO WHICH THESE PLANS ARE MADE A PART.*

Pete Sepulveda Jr. — NAME — City Manager — TITLE — 3-2-92 — DATE

PLANS APPROVED:
HIDALGO COUNTY DRAINAGE DISTRICT NO. 1

[signature] — NAME — County Judge — TITLE — 2-28-92 — DATE

PLANS APPROVED:
HIDALGO COUNTY IRRIGATION DISTRICT NO. 2

Larry L. Stevenson — NAME — Gen. Mgr. — TITLE — 3-2-92 — DATE

TRAFFIC, DETOURS, BARRICADES, ETC.

SEE SPECIFICATION ITEM 502, ITEM 7, SPECIAL PROVISION FOR "DETOURS, BARRICADES, WARNING SIGNS, SEQUENCE OF WORK, ETC." AND SUGGESTED TRAFFIC CONTROL PLAN SHEETS.

TYPE III(C) BARRICADES WITH SIGNS G20-1, G20-2, G20-6, R20-3, CW20-1A AND/OR CW20-1D [redacted] ERECTED AT EACH END OF THE PROJECT ON US 83 AND AT THE NORTH END OF CONSTRUCTION ON US 281.

ADDITIONAL BARRICADES AND SIGNS [redacted] USED TO DIRECT TRAFFIC AND PROTECT THE WORK IN THE IMMEDIATE VICINITY OF THE OPERATION AS DIRECTED BY THE ENGINEER.

SIGNS CW20-1D AND G20-2 [redacted] ERECTED AT ALL CONNECTING ROADS.

TYPE III(C) BARRICADES [redacted] CONSIST OF ONE PANEL ON EACH SIDE ON THE PAVEMENT WHERE THE RIGHT OF WAY IS TOO NARROW TO ALLOW THE PLACING OF TWO PANELS.

SIGNS G20-1BL OR G20-1BR [redacted] ERECTED AS DIRECTED BY THE ENGINEER.

U.S. DEPARTMENT OF TRANSPORTATION
FEDERAL HIGHWAY ADMINISTRATION

APPROVED: _____
DIVISION ADMINISTRATOR — DATE

THE STANDARD SHEETS SPECIFICALLY IDENTIFIED ABOVE ABOVE PLUS SHEET NO. 10 [redacted] SELECTED BY ME OR OR UNDER MY RESPONSIBLE SUPERVISION AS BEING APPLICABLE TO THIS PROJECT.

Mario R. Jorge, P.E. — 3-2-92
MARIO R. JORGE, P.E. — DATE

MARIO R. JORGE 65538 LICENSED PROFESSIONAL ENGINEER

PROJ. NO. _____
COUNTY _____ LETTING DATE _____
HWY. NO. _____
DATE ACCEPTED _____

NH 92(50)M
HIDALGO

Contractor: Gilbert Texas Construction Corp.
Letting Date: April 8, 1992
Contract Beginning Date: June 14, 1992
Work Completed Date: August 10, 1994
Date of Acceptance: ~~September 1, 1994~~
Final Cost: $ ~~29,583,650.10~~ 29,639,950.98
Change Orders on Sheet 331

SPECIFICATIONS ADOPTED BY THE STATE DEPARTMENT OF HWYS & PUBLIC TRANS. SEPTEMBER 1, 1982 AND SPECIFICATION ITEMS LISTED AND DATED AS FOLLOWS. [redacted] GOVERN ON THIS PROJECT. REQUIRED CONTRACT PROVISIONS FOR FEDERAL-AID CONSTRUCTION CONTRACTS (FORM FHWA-1273, AUG. 1989), AND ADDENDUM TO FHWA FORM FHWA-1273, REQUIRED CONTRACT PROVISIONS, FEDERAL AID CONSTRUCTION CONTRACTS (FEBRUARY 1991).

MARIO R. JORGE 65538 LICENSED PROFESSIONAL ENGINEER

WORK ON THIS PROJECT WAS COMPLETED IN ACCORDANCE WITH THE PLANS AND SPECIFICATIONS.

[signature] P.E. — 5/1/97
AREA ENGINEER — DATE

APPROVED FOR LETTING: March 5, 1992 — DIRECTOR OF BRIDGES & STRUCTURES

RECOMMENDED FOR LETTING: 3/2 1992 — DISTRICT DESIGN ENGINEER

STATE DEPARTMENT OF HIGHWAYS AND PUBLIC TRANSPORTATION

RECOMMENDED FOR LETTING: 3-2 1992 — SUPERVISING RESIDENT ENGINEER

RECOMMENDED FOR LETTING: 3/3 1992 — DISTRICT ENGINEER

APPROVED FOR LETTING: March 5 1992 — for CHIEF ENGINEER OF HIGHWAY DESIGN

LAYOUT SCALE: 0 1/4 1/2 MILES

Revised 3-30-92

LEGEND

(1) [redacted] RECONSTRUCTION OF US 83 MAIN LANES TO 6 LANE DIVIDED FROM STA. 1455+71 TO STA. 1566+59.10.

(2) CONSTRUCTION OF THE US 281 MAINLANE APPROACHES TO [redacted] INTERCHANGE. RECONSTRUCT US 281 NORTHBOUND FR. RD. AT SIOUX RD.

(3) CONVERSION OF EXISTING EXIT & ENTRANCE RAMPS TO [redacted] STANDARD RAMPS.

(4) CONSTRUCTION OF [redacted] 4 DIRECT CONNECTORS FROM US 83 EAST & WEST BOUND TO US 281 NORTH & SOUTH BOUND.

(5) [redacted] WIDENING OF US 281 OVERPASS TO THE INSIDE IN ORDER TO ACCOMODATE [redacted] 6 LANE DIVIDED SECTION.

(6) [redacted] WIDENING OF SUGAR RD. OVERPASS TO BOTH SIDES.

SIOUX RD.

BEGIN INCIDENTAL CONST. NH92 (50)M
US 281 ℄ STA. 822+68.74

N

[redacted] US 281
MAIN LANES CONNECTION

FM 495

EXIST. US 281 SOUTH
BOUND FRTG. RD.

EXIST. US 281 NORTH
BOUND FRTG. RD.

BEGIN PROJECT NH92 (50)M
CONTROL: 39-17-97
℄ STA. 1455+71

[redacted] 6 LANE DIVIDED
(1) SECTION ON US 83 MAINLANES

[redacted] RAMP 4 (E)

[redacted] RAMP 2 (C)

S.D.H. & P.T.
DISTRICT OFFICE

RAMP 1 (B)

[redacted] RAMP 3 (D)

US 83 WESTBOUND
FRTG. RD.

END PROJECT NH92 (50)M
CONTROL: 39-17-97
℄ STA. 1566+59.10

[redacted] 6 LANE DIVIDED
(1) SECTION ON US 83 MAINLANES

US 83 EAST BOUND MAIN LANES

US 83 WEST BOUND MAIN LANES

SUGAR RD.

US 83 EAST
BOUND FRTG. RD.

US 281

END INCIDENTAL CONSTRUCTION
US 281 ℄ STA. = 868+22.71

[redacted] SUGAR RD.
(6) BRIDGE WIDENING

[redacted] US 281
(5) BRIDGE WIDENING

STATE OF TEXAS
MARIO R. JORGE
65538
REGISTERED
PROFESSIONAL ENGINEER

Mario R. Jorge, P.E
10-31-91

US 83/281 INTERCHANGE
PROJECT LAYOUT

SCALE: 1" = 300'

FED. RD. DIV. NO.	FEDERAL AID PROJECT NO.		SHEET NO.
6	NH.92(50)M		2
STATE	STATE DIST. NO.	COUNTY	
TEXAS	21	HIDALGO	
CONT.	SECT.	JOB	HIGHWAY NO.
39	17	97	US 83/281

E:\PROJECT DGN - PRE=SAME

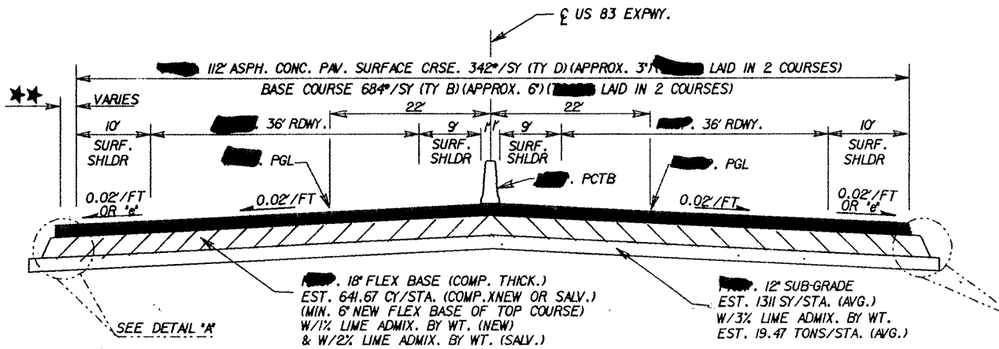

★★ SEE CTB AND P&P SHEETS.

Ⓐ

U.S. 83 EXPWY.
. TYPICAL SECITON
USED BETWEEN THE FOLLOWING STATIONS:

(LEFT)

STA. 1455+71.00 TO STA. 1456+41.78
★★STA. 1501+00.00 TO STA. 1505+56.00
STA. 1513+70.75 TO STA. 1514+00.00
★★STA. 1526+49.90 TO STA. 1539+86.38
STA. 1551+50.44 TO STA. 1553+73.20
STA. 1561+00.00 TO STA. 1566+59.10

(RIGHT)

STA. 1511+00.00 TO STA. 1511+85.25
STA. 1513+70.75 TO STA. 1514+00.00
STA. 1520+24.00 TO STA. 1531+88.26
STA. 1554+52.80 TO STA. 1566+59.10

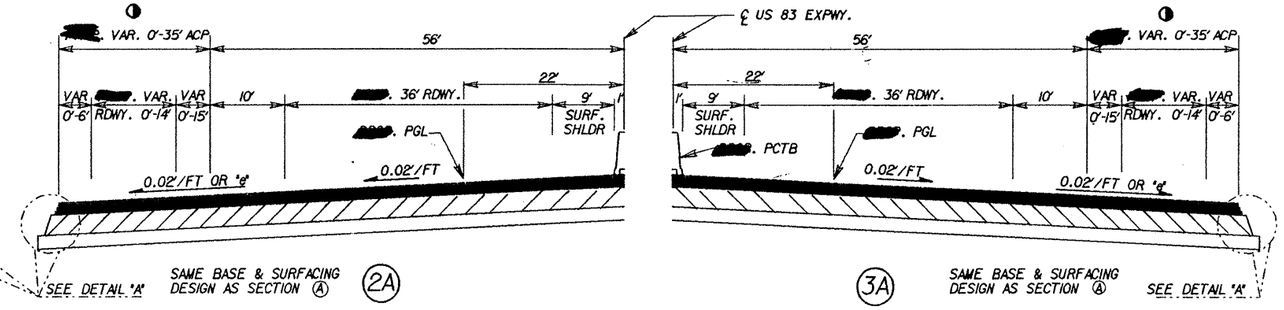

U.S. 83 EXPWY.
EXIT OR ENTRANCE RAMP TRANSITION SECTIONS
USED BETWEEN THE FOLLOWING STATIONS:

(LEFT)

EXIT RAMPS
★★STA. 1505+56.00 TO STA. 1511+85.25
STA. 1539+86.38 TO STA. 1551+50.44
STA. 1553+73.20 TO STA. 1561+00.00

ENTRANCE RAMPS
STA. 1514+00.00 TO STA. 1526+49.90

(RIGHT)

EXIT RAMPS
STA. 1514+00.00 TO STA. 1520+24.00
STA. 1551+93.80 TO STA. 1554+52.80

ENTRANCE RAMPS
STA. 1501+00.00 TO STA. 1511+00.00
STA. 1531+88.26 TO STA. 1540+57.60
STA. 1540+57.60 TO STA. 1545+00.00

◑ SEE P&P SHEETS

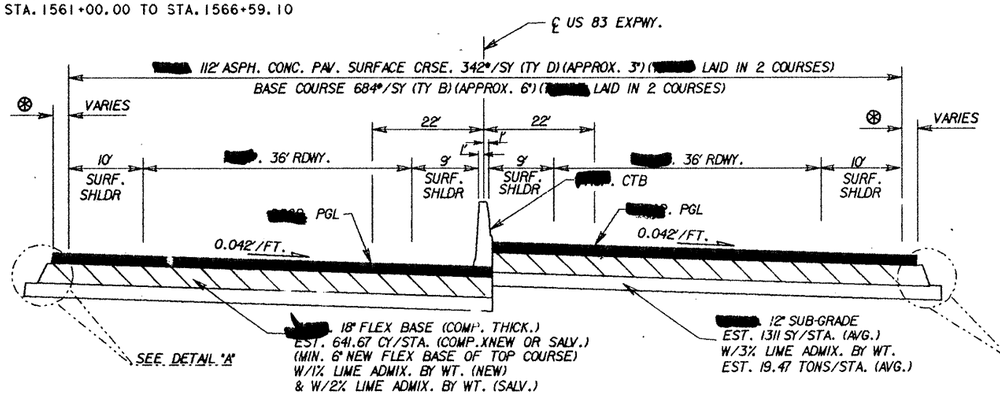

* TRANSITION TO FULL SUPERELEVATION
SEE PLAN & PROFILE SHEETS

⊛ SEE SHEET NO. 7 & PLAN & PROFILE SHEETS

Ⓑ

U.S. 83 EXPWY.
. SUPERELEVATED SECTION
USED BETWEEN THE FOLLOWING STATIONS:

(LEFT)

*STA. 1456+41.78 TO STA. 1459+43.04
⊛STA. 1493+17.00 TO STA. 1495+05.68
⊛*STA. 1495+05.68 TO STA. 1501+00.00

(RIGHT)

⊛STA. 1487+19.50 TO STA. 1495+05.68
*STA. 1495+05.68 TO STA. 1498+63.50

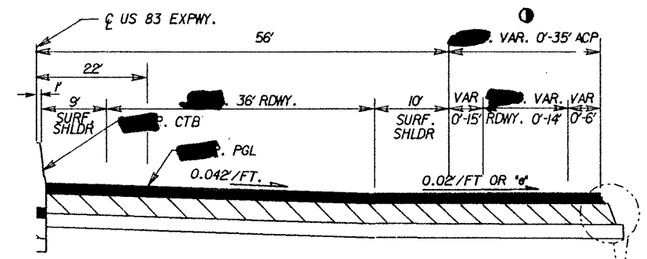

U.S. 83 EXPWY.
. EXIT OR ENTRANCE RAMP TRANSITION SECTIONS (SUPERELEVATED)
USED BETWEEN THE FOLLOWING STATIONS:

(RIGHT)

EXIT RAMPS
STA. 1480+00.00 TO STA. 1487+19.50

ENTRANCE RAMPS
*STA. 1498+63.50 TO STA. 1501+00.00

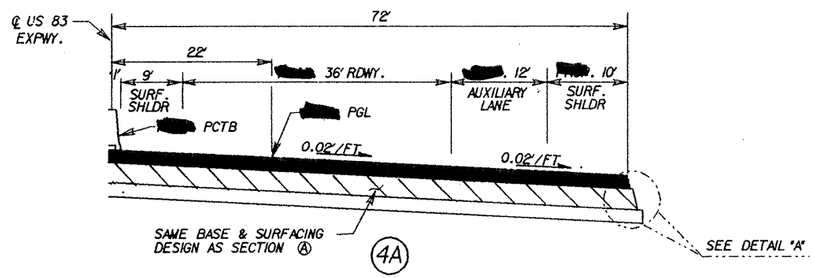

U.S. 83 EXPWY.
. 36' MAIN LANE W/12' AUXILARY LANE
STA. 1545+00 TO STA. 1551+93.80 (RIGHT)

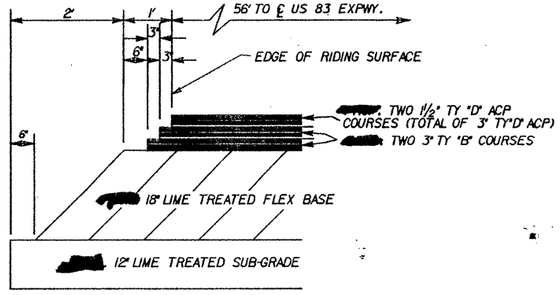

DETAIL "A"
SEE P&P SHEETS WHERE THIS DETAIL DOES NOT APPLY

NOTES:

THE 1% LIME SHOWN ON TYPICAL SECTIONS ITEM 249. FLEX. BASE IS SEPARATE FROM LIME WHICH REQUIRED TO MEET P.I. AND TRIAXIAL REQUIREMENTS ADDED AT CONTRACTOR'S EXPENSE.

WHERE POSSIBLE AND UNLESS OTHERWISE DIRECTED BY THE ENGINEER, PERMISSIBLE CONSTRUCTION JOINTS FALL ON STRIPING LINES AS SHOWN ON STRIPING DETAILS.

THE . TYPE "B" ACP MAY CONSIST OF UP TO 50% OF RECYCLED EXISTING ACP.

114#/SY OF ACP IS EQUIVALENT TO 1.0 (ONE) INCH IN DEPTH OF ACP.

PCJ DENOTES PERMISSIBLE CONSTRUCTION JOINT.

PCTB DENOTES PRECAST CONC TRAFFIC BARRIER.

ALL STATIONS SHOWN ARE CENTERLINE STATIONS.

◑ SEE PLAN AND PROFILE SHEETS FOR "e".

STATE OF TEXAS
MANUEL JORGE
65538
REGISTERED
PROFESSIONAL ENGINEER
Manuel Jorge, P.E.
3-3-92

U.S. 83
TYPICAL SECTIONS
SHEET 1 OF 6 SHEETS

SCALE: N.T.S.

FED. RD. DIV. NO.	FEDERAL AID PROJECT NO.			SHEET NO.
6	NH 92 (50)M			3
STATE	STATE DIST. NO.	COUNTY		
TEXAS	21	HIDALGO		
CONT.	SECT.	JOB	HIGHWAY NO.	
39	17	97	US 83	

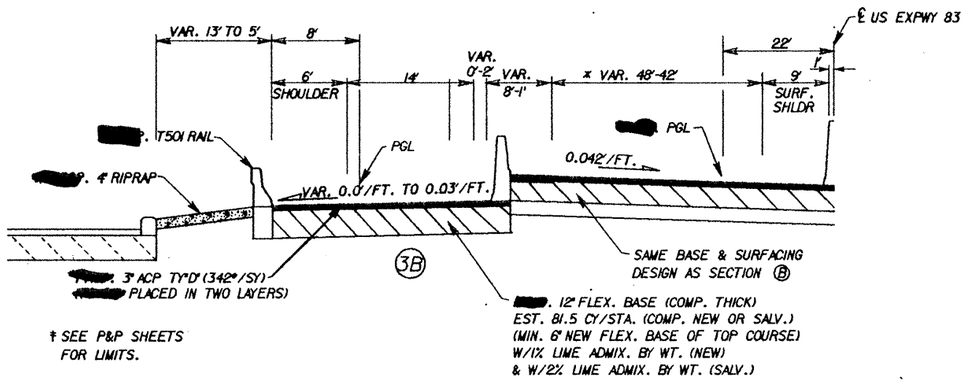

† SEE P&P SHEETS FOR LIMITS.

US 83 EXPRESSWAY
ENTRANCE RAMP TRANSITION

USED BETWEEN THE FOLLOWING STATIONS.
(LEFT)
STA. 1483+25.0 TO STA. 1485+50.0

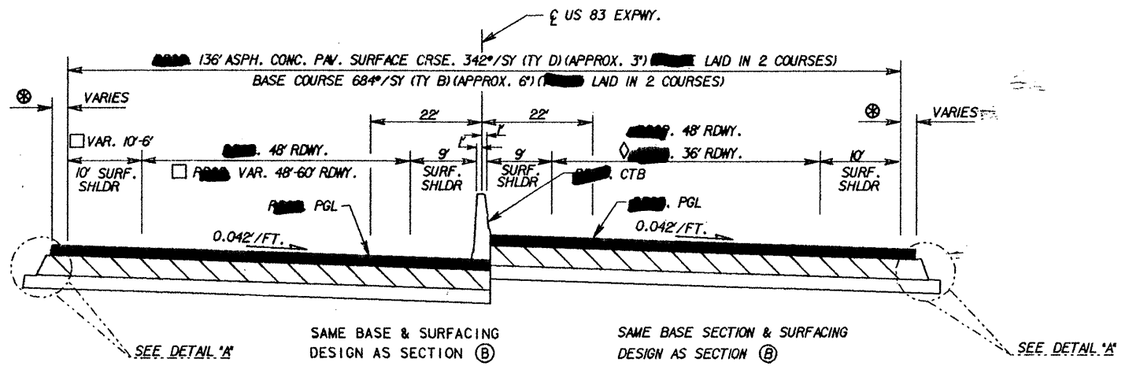

✱ TRANSITION TO FULL SUPERELEVATION SEE PLAN & PROFILE SHEETS

⊛ SEE SHEET NO. 7 & PLAN & PROFILE SHEETS

(C)

U.S. 83 EXPWY.
SUPERELEVATED SECTION

USED BETWEEN THE FOLLOWING STATIONS:

(LEFT)
STA. 1463+00.00 TO STA. 1470+52.53
STA. 1472+07.03 TO STA. 1472+24.00
□ STA. 1472+24.00 TO STA. 1479+00.00

(RIGHT)
STA. 1472+07.03 TO STA. 1472+15.00
◊ STA. 1477+15.80 TO STA. 1480+00.00

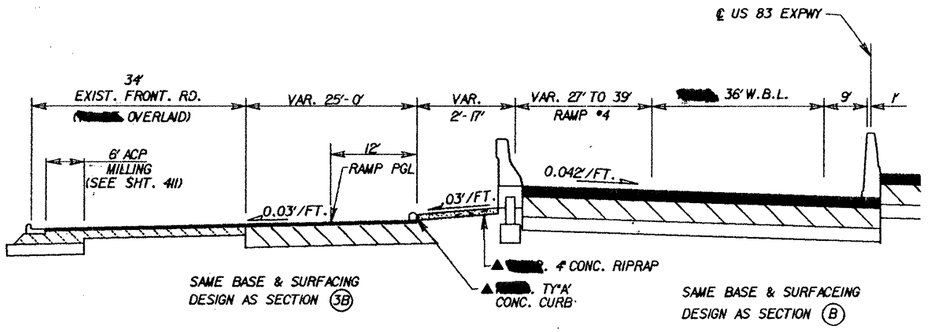

4C

STA. 1485+50 TO 1493+17

▲ SEE P&P SHEET FOR LIMITS

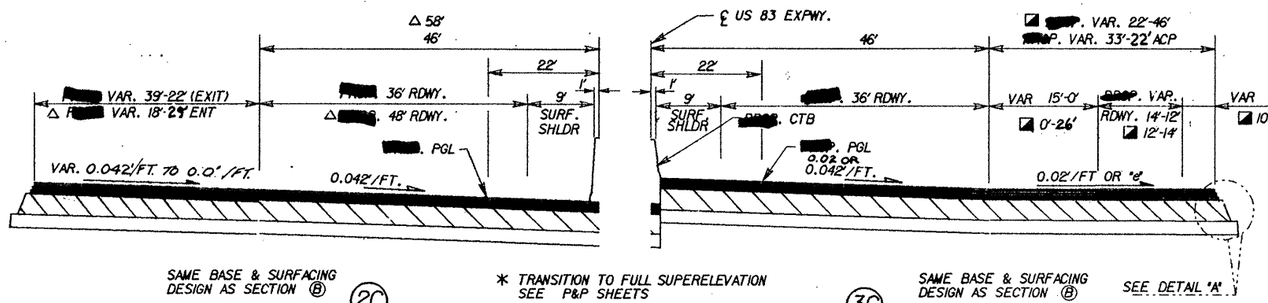

U.S. 83 EXPWY.
EXIT OR ENTRANCE RAMP
TRANSITION SECTIONS (SUPERELEVATED)

USED BETWEEN THE FOLLOWING STATIONS:

(LEFT)
EXIT RAMPS
✱ STA. 1459+43.04 TO STA. 1462+11.78
STA. 1462+11.78 TO STA. 1463+00.00
ENTRANCE RAMPS
△ STA. 1479+00.00 TO STA. 1483+25.00

(RIGHT)
EXIT RAMPS
◪ STA. 1472+15.00 TO STA. 1477+15.80
ENTRANCE RAMPS
STA. 1455+71.00 TO STA. 1456+41.78
✱ STA. 1456+41.78 TO STA. 1462+11.78
STA. 1462+11.78 TO STA. 1470+52.53

STATE OF TEXAS
MAJOR JONES
65530
REGISTERED ENGINEER

3-3-92

U.S. 83
TYPICAL SECTIONS

SHEET 2 OF 6 SHEETS

SCALE: N. T. S.

FED. RD. DIV. NO.	FEDERAL AID PROJECT NO.			SHEET NO.
6	NH 92 (50)M			3A
STATE	STATE DIST. NO.	COUNTY		
TEXAS	21	HIDALGO		
CONT.	SECT.	JOB	HIGHWAY NO.	
39	17	97	US 83	

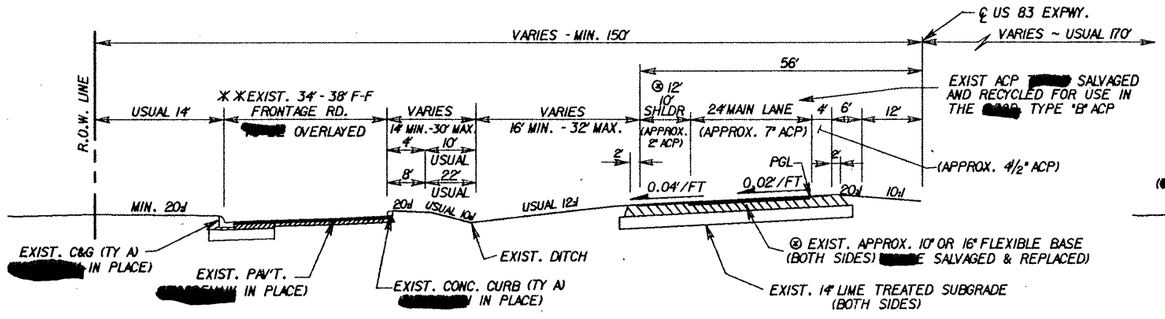

** SEE P&P SHEETS.
⊛ WITH ADDITIONAL 12' AUXILARY LANE

USUAL EXISTING TYPICAL GRADING & ROADBED HALF SECTION

LEFT MAIN LANE	RIGHT MAIN LANE
STA. 1485+50.00 TO STA. 1502+50.00	STA. 1482+00.00 TO STA. 1496+60.00
STA. 1528+50.00 TO STA. 1551+00.00	STA. 1523+25.00 TO STA. 1539+65.00
	⊛ STA. 1545+00.00 TO STA. 1551+90.00
	STA. 1558+40.00 TO STA. 1559+38.00

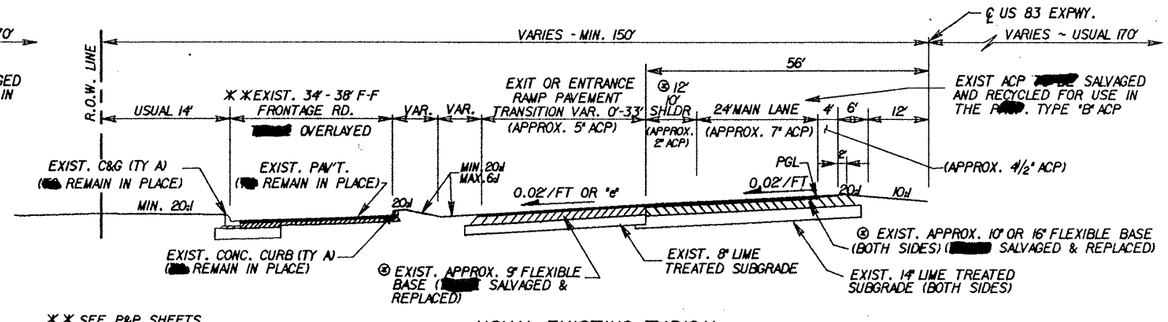

** SEE P&P SHEETS.

USUAL EXISTING TYPICAL EXIT OR ENTRANCE RAMP PAVEMENT TRANSITION AREA GRADING & ROADBED HALF SECTION

LEFT MAIN LANE	RIGHT MAIN LANE
STA. 1459+34.04 TO STA. 1462+70.30	STA. 1455+71.00 TO STA. 1462+70.30
STA. 1480+00.00 TO STA. 1484+53.90	STA. 1498+63.50 TO STA. 1505+00.00
STA. 1505+00.00 TO STA. 1511+85.25	STA. 1540+57.60 TO STA. 1545+00.00
STA. 1520+24.00 TO STA. 1526+49.90	STA. 1551+90.00 TO STA. 1554+52.80
STA. 1553+73.20 TO STA. 1559+38.00	

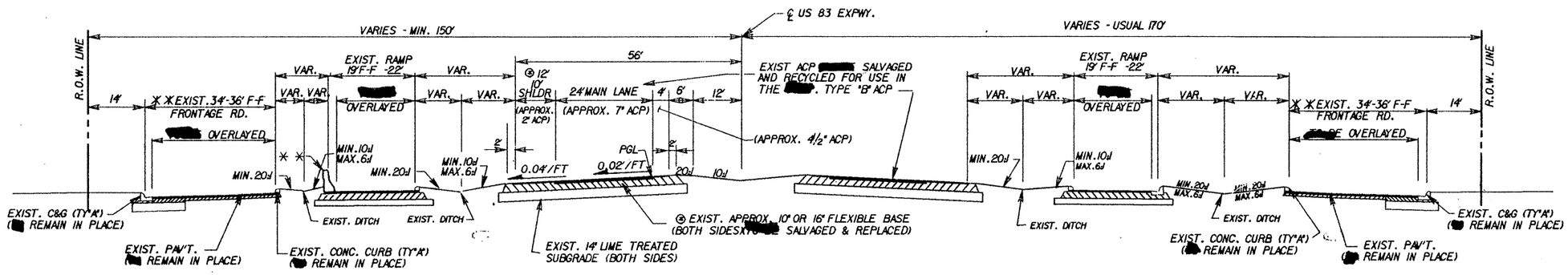

** SEE P&P SHEETS

USUAL EXISTING TYPICAL EXIT OR ENTRANCE RAMP AREA GRADING & ROADBED SECTION

LEFT MAIN LANE	RIGHT MAIN LANE
STA. 1455+71.00 TO STA. 1459+43.04	STA. 1477+15.80 TO STA. 1482+00.00
STA. 1484+53.90 TO STA. 1485+50.00	STA. 1496+60.00 TO STA. 1498+63.50
STA. 1502+50.00 TO STA. 1505+00.00	STA. 1520+24.00 TO STA. 1523+25.00
STA. 1526+49.90 TO STA. 1528+50.00	STA. 1539+65.00 TO STA. 1540+57.60
STA. 1551+00.00 TO STA. 1553+73.20	STA. 1554+52.80 TO STA. 1558+40.00

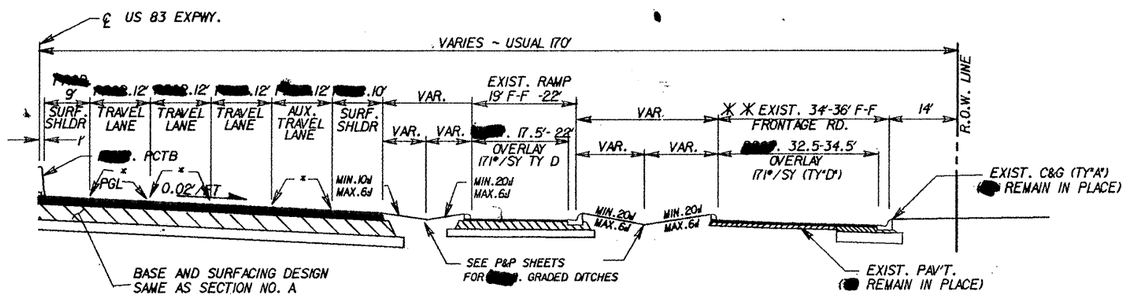

. TYPICAL GRADING HALF SECTION W/12' AUXILARY LANE

** SEE P&P SHEETS

RIGHT MAIN LANE
STA. 1545+00.00 TO STA. 1551+75.00

APPROXIMATE
⊛ STATION LIMITS OF EXIST 10" FLEXIBLE BASE

LEFT MAIN LANE
STA. 1455+71.00 TO STA. 1461+00.00
STA. 1481+00.00 TO STA. 1505+00.00
STA. 1521+50.00 TO STA. 1559+00.00

RIGHT MAIN LANE
STA. 1455+71.00 TO STA. 1463+00.00
STA. 1480+00.00 TO STA. 1505+00.00
STA. 1520+50.00 TO STA. 1560+00.00

⊛ STATION LIMITS OF EXIST 16" FLEXIBLE BASE

LEFT MAIN LANE
STA. 1461+00.00 TO STA. 1470+52.53
STA. 1472+07.03 TO STA. 1481+00.00
STA. 1505+00.00 TO STA. 1511+85.25
STA. 1513+70.75 TO STA. 1521+50.00
STA. 1559+00.00 TO STA. 1566+59.10

RIGHT MAIN LANE
STA. 1463+00.00 TO STA. 1470+52.53
STA. 1472+07.03 TO STA. 1480+00.00
STA. 1505+00.00 TO STA. 1511+85.25
STA. 1513+70.75 TO STA. 1520+50.00
STA. 1560+00.00 TO STA. 1566+59.10

NOTES:

ALL GRADING WITHIN R.O.W. LIMITS. WHERE REQUIRED BY FIXTURES OR UNUSUAL CONDITIONS, THE GOVERNING SLOPES VARIED WHEN SPECIFICALLY DIRECTED BY THE ENGINEER.

THE SUBGRADE SHAPED AND BLADED A MINIMUM DISTANCE OF TWO FEET BEYOND THE EDGE OF THE BASE COURSE. THE COMPLETE BASE ROLLED BEFORE THE EARTH SHOULDER IS SHAPED, AND FINAL COMPACTION DONE OVER BASE AND EDGE OF SHOULDER.

MATCH EXISTING DITCH GRADES AT THE BEGINNING AND THE END OF . DITCH PROFILES AS SHOWN THE P & P SHEETS.

THE . TYPE "B" ACP MAY CONSIST OF UP TO 50% OF RECYCLED EXISTING ACP.

171#/SY OF ACP IS EQUIVALENT TO 1½ INCHES IN DEPTH OF ACP.

** DENOTES PCJ (PERMISSIBLE CONSTRUCTION JOINT)

3-3-92

US 83 EXISTING TYPICAL GRADING & OVERLAY SECTIONS

SCALE: N. T. S.

FED. RD. DIV. NO.	FEDERAL AID PROJECT NO.		SHEET NO.
6	NH 92 (50)M		4
STATE	STATE DIST. NO.	COUNTY	
TEXAS	21	HIDALGO	
CONT.	SECT.	JOB	HIGHWAY NO.
39	17	97	US 83

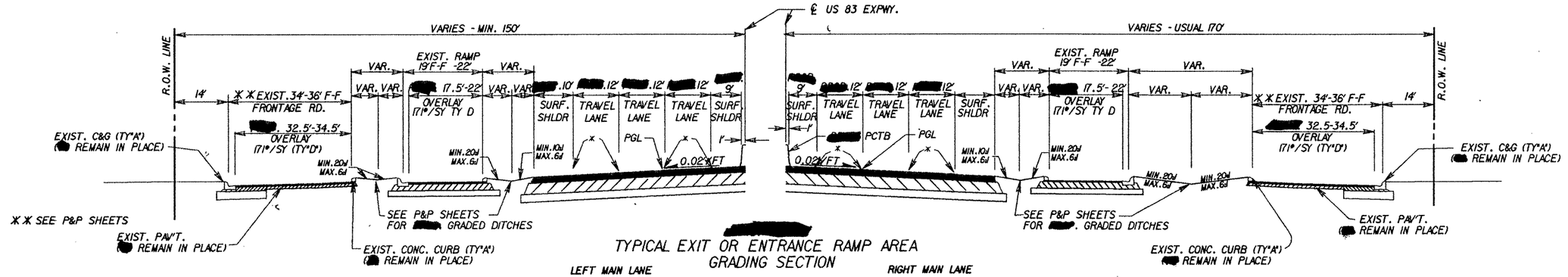

TYPICAL EXIT OR ENTRANCE RAMP AREA GRADING SECTION

NOTES:

SEE NOTES ON SHEET 2 OF 5 SHEETS FOR GRADING AND SUBGRADE INFORMATION.

171#/SY OF ACP IS EQUIVALENT TO 1½ INCHES IN DEPTH OF ACP.

× DENOTES PCJ (PERMISSIBLE CONSTRUCTION JOINT)

LEFT MAIN LANE

STA. 1455+71.00 TO STA. 1456+41.78
⊠ STA. 1456+41.78 TO STA. 1459+43.04
⊠ STA. 1484+53.90 TO STA. 1484+97.06
⊠ STA. 1499+66.63 TO STA. 1501+00.00
STA. 1501+00.00 TO STA. 1505+00.00
STA. 1526+44.00 TO STA. 1532+17.88
STA. 1551+50.44 TO STA. 1553+73.20

RIGHT MAIN LANE

⊠ STA. 1494+66.16 TO STA. 1498+63.50
STA. 1520+24.00 TO STA. 1524+20.77
STA. 1554+52.80 TO STA. 1559+38.00

⊠ = SUPERELEVATION TRANSITION SECTION

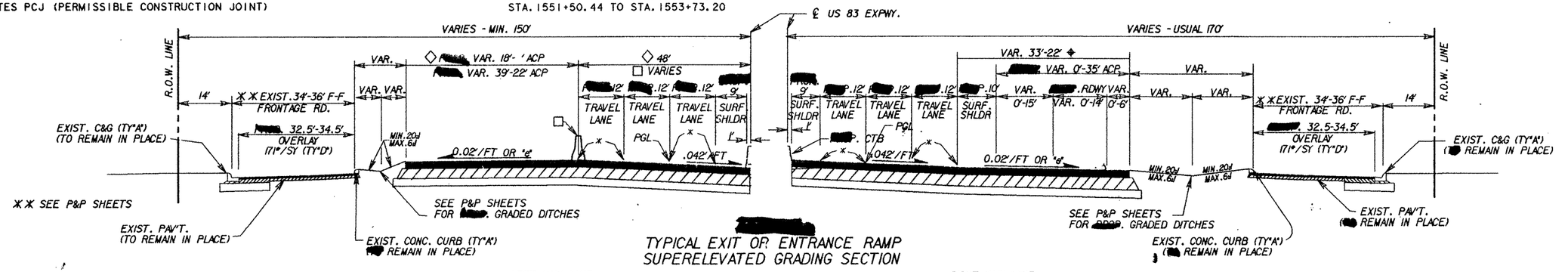

TYPICAL EXIT OR ENTRANCE RAMP SUPERELEVATED GRADING SECTION

☐ SEE SUPERELEVATED TYPICAL SECTIONS (SHEET 3A)

LEFT MAIN LANE

STA. 1459+43.04 TO STA. 1462+11.78
STA. 1462+11.78 TO STA. 1463+00
◇ STA. 1479+00 TO STA. 1483+25
☐ STA. 1483+25 TO STA. 1493+17

RIGHT MAIN LANE

◆ STA. 1456+41.78 TO STA. 1462+11.78
STA. 1480+00.00 TO STA. 1487+19.50
STA. 1498+63.50 TO STA. 1501+00.00

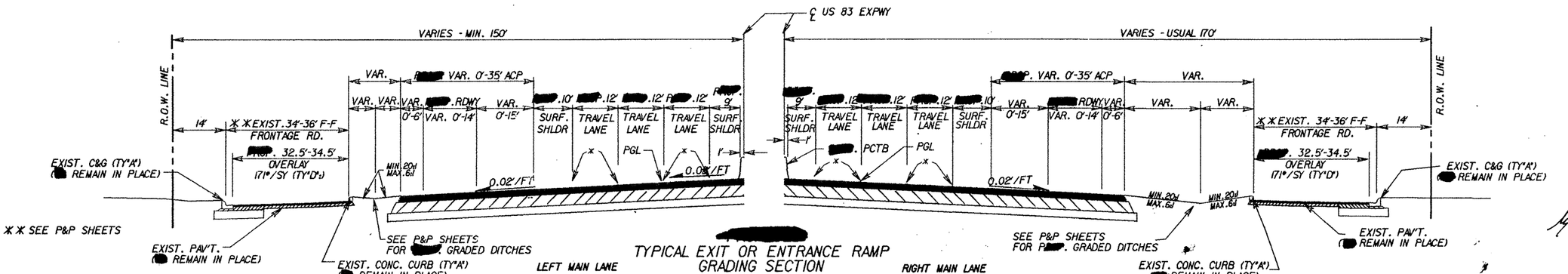

TYPICAL EXIT OR ENTRANCE RAMP GRADING SECTION

LEFT MAIN LANE

STA. 1520+24.00 TO STA. 1526+49.90
STA. 1539+86.37 TO STA. 1551+50.44
STA. 1553+73.20 TO STA. 1559+38.00

RIGHT MAIN LANE

STA. 1455+71.00 TO STA. 1456+41.78
STA. 1501+00.00 TO STA. 1504+95.00
STA. 1531+88.26 TO STA. 1540+57.60
STA. 1540+57.60 TO STA. 1545+00.00
STA. 1551+75.00 TO STA. 1554+52.60

MAJOR JORGE 65538 REGISTERED PROFESSIONAL ENGINEER
3-3-92

US 83
TYPICAL GRADING & OVERLAY SECTIONS

SHEET 4 OF 6 SHEETS

SCALE: N. T. S.

FED. RD. DIV. NO.	FEDERAL AID PROJECT NO.		SHEET NO.
6	NH 92 (5D) M		5
STATE	STATE DIST. NO.	COUNTY	
TEXAS	21	HIDALGO	
CONT.	SECT.	JOB	HIGHWAY NO.
39	17	97	US 83

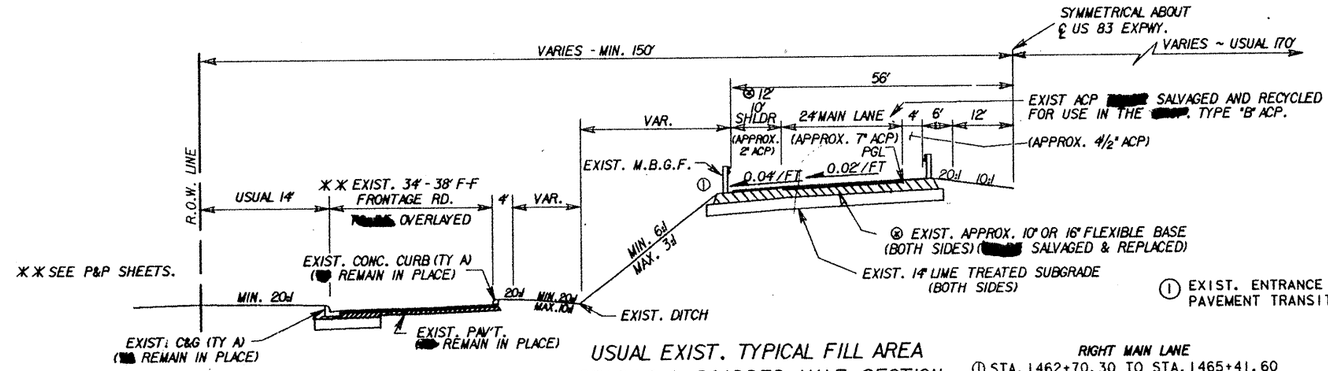

① EXIST. ENTRANCE OR EXIT RAMP PAVEMENT TRANSITION (0' TO 33')

USUAL EXIST. TYPICAL FILL AREA GRADING & ROADBED HALF SECTION

LEFT MAIN LANE

① STA. 1462+70.30 TO STA. 1464+00.00
STA. 1464+00.00 TO STA. 1470+52.53
STA. 1472+07.03 TO STA. 1472+10.00
② STA. 1472+10.00 TO STA. 1480+00.00
① STA. 1505+00.00 TO STA. 1511+85.25
STA. 1513+70.75 TO STA. 1514+00.00
① STA. 1514+00.00 TO STA. 1520+24.00
① STA. 1559+38.00 TO STA. 1561+00.00
STA. 1561+00.00 TO STA. 1566+59.10

RIGHT MAIN LANE

① STA. 1462+70.30 TO STA. 1465+41.60
STA. 1465+41.60 TO STA. 1470+52.53
STA. 1472+07.03 TO STA. 1472+10.00
② STA. 1472+10.00 TO STA. 1477+15.80
① STA. 1505+00.00 TO STA. 1511+00.00
STA. 1511+00.00 TO STA. 1511+85.25
STA. 1513+70.75 TO STA. 1514+00.00
① STA. 1514+00.00 TO STA. 1520+24.00
STA. 1559+38.00 TO STA. 1566+59.10

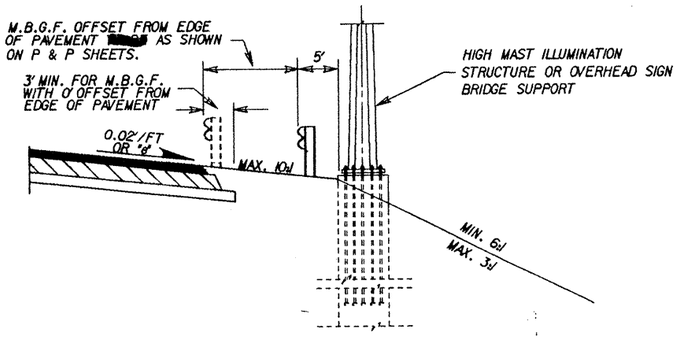

TYPICAL GRADING SECTION WITH [redacted]. M.B.G.F. LOCATED ADJACENT TO FILL AREA

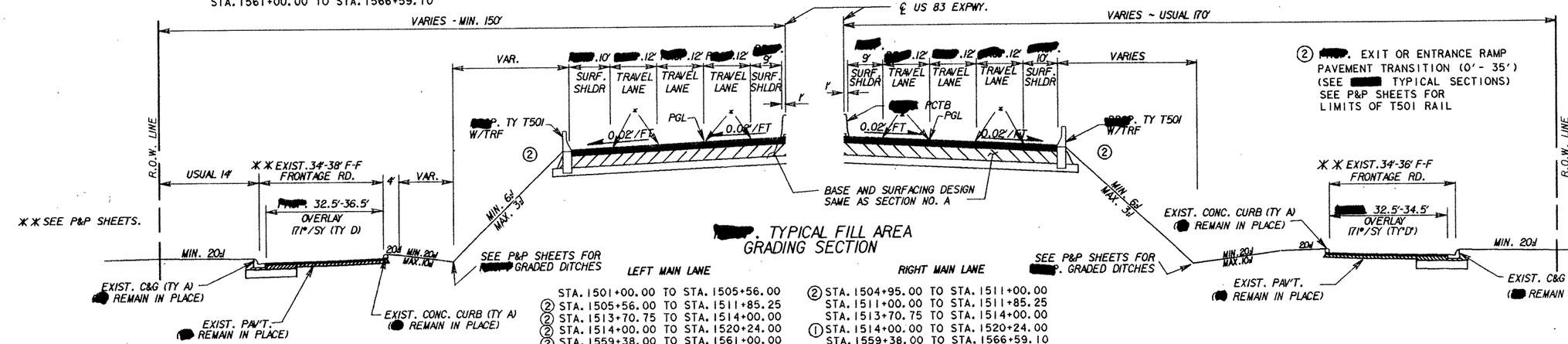

[redacted]. TYPICAL FILL AREA GRADING SECTION

LEFT MAIN LANE

STA. 1501+00.00 TO STA. 1505+56.00
② STA. 1505+56.00 TO STA. 1511+85.25
② STA. 1513+70.75 TO STA. 1514+00.00
② STA. 1514+00.00 TO STA. 1520+24.00
② STA. 1559+38.00 TO STA. 1561+00.00
STA. 1561+00.00 TO STA. 1566+59.10

RIGHT MAIN LANE

② STA. 1504+95.00 TO STA. 1511+00.00
STA. 1511+00.00 TO STA. 1511+85.25
STA. 1513+70.75 TO STA. 1514+00.00
① STA. 1514+00.00 TO STA. 1520+24.00
STA. 1559+38.00 TO STA. 1566+59.10

② [redacted]. EXIT OR ENTRANCE RAMP PAVEMENT TRANSITION (0'- 35') (SEE [redacted]. TYPICAL SECTIONS AND P&P SHEETS)

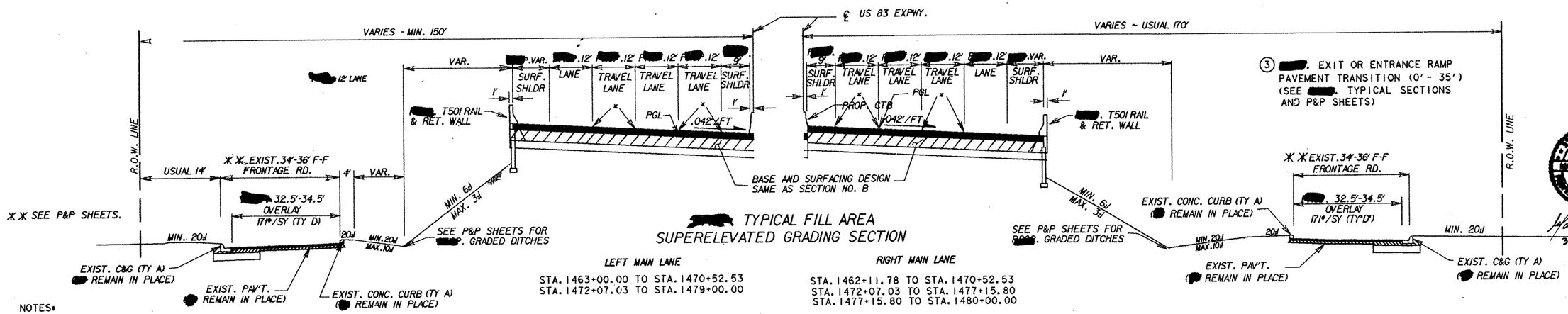

[redacted]. TYPICAL FILL AREA SUPERELEVATED GRADING SECTION

LEFT MAIN LANE

STA. 1463+00.00 TO STA. 1470+52.53
STA. 1472+07.03 TO STA. 1479+00.00

RIGHT MAIN LANE

STA. 1462+11.78 TO STA. 1470+52.53
STA. 1472+07.03 TO STA. 1477+15.80
STA. 1477+15.80 TO STA. 1480+00.00

NOTES:

SEE NOTES ON SHEET 2 OF 5 SHEETS FOR GRADING AND SUBGRADE INFORMATION.

171#/SY OF ACP IS EQUIVALENT TO 1½ INCHES IN DEPTH OF ACP.

* DENOTES PCJ (PERMISSIBLE CONSTRUCTION JOINT)

⊗ SEE SHEET 2 OF 5 FOR STATION LIMITS OF EX STING 10' OR 16' FLEXIBLE BASE [redacted] SALVAGED AND REPLACED.

US 83 EXISTING & [redacted] TYPICAL GRADING & OVERLAY SECTIONS

SHEET 5 OF 6 SHEETS

SCALE: N. T. S.

FED. RD. DIV. NO.	FEDERAL AID PROJECT NO.		SHEET NO.
6	NH92 (50)M		6
STATE	STATE DIST. NO.	COUNTY	
TEXAS	21	HIDALGO	
CONT.	SECT.	JOB	HIGHWAY NO.
39	17	97	US 83

[redacted] 85539 STATE OF TEXAS

Wade R. Long, P.E. 3-3-92

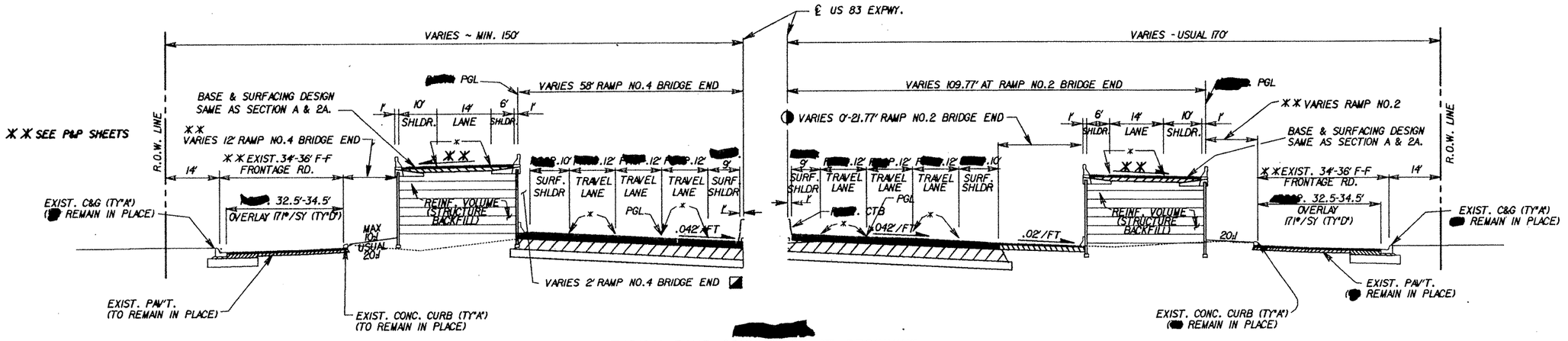

TYPICAL RAMP CONNECTION AT BEGINNING OF DIRECT CONNECTOR BRIDGE

RAMP NO. 4

℄ STA. 1493+17, 56.68' LT. (TO RAMP PGL)
TO STA. 1499+66.63, 58' LT. (TO RAMP PGL)
SEE P&P SHEETS FOR ADDITIONAL INFORMATION ON PGL OFFSETS.

RAMP NO. 2

℄ STA. 1487+19.50, 56' RT. (TO RAMP PGL)
TO STA. 1494+66.13, 109.77' RT. (TO RAMP PGL)
SEE P&P SHEETS FOR ADDITIONAL INFORMATION ON PGL OFFSETS.

NOTES:

SEE NOTES ON SHEET 2 OF 5 SHEETS FOR GRADING AND SUBGRADE INFORMATION.

171#/SY OF ACP IS EQUIVALENT TO 1½ INCHES IN DEPTH OF ACP.

** DENOTES PCJ (PERMISSIBLE CONSTRUCTION JOINT)

◐ SECTION SHALL CONSIST OF 171#/SY ACP & 6" FLEX BASE W/1% LIME

◪ SECTION [redacted] SAME AS [redacted] ROADWAY SECTION

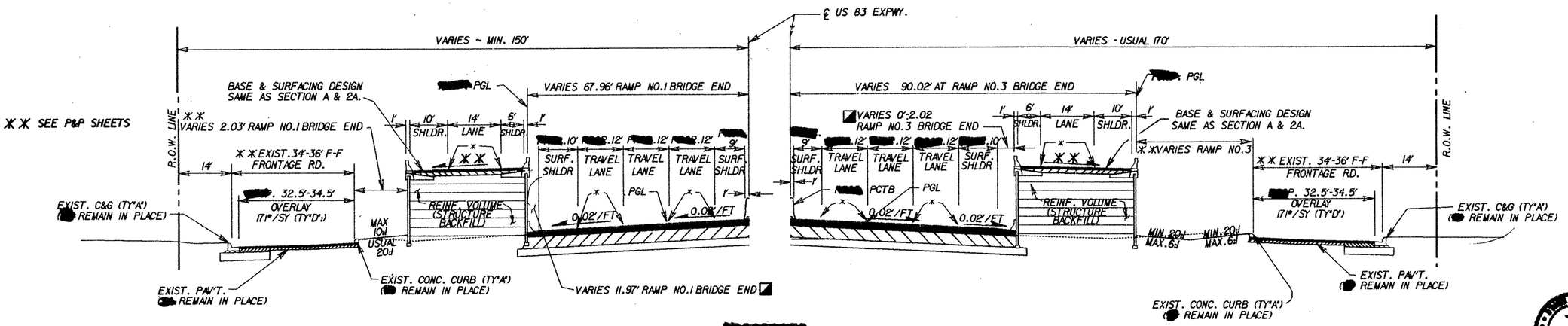

TYPICAL RAMP CONNECTION AT BEGINNING OF DIRECT CONNECTOR BRIDGE

RAMP NO. 1

℄ STA. 1532+17.88, 67.97' LT. (TO RAMP PGL)
TO STA. 1539+86.38, 56' LT. (TO RAMP PGL)
SEE P&P SHEETS FOR ADDITIONAL INFORMATION ON PGL OFFSETS.

RAMP NO. 3

℄ STA. 1524+20.77, 90.02' RT. (TO RAMP PGL)
TO STA. 1531+88.26, 88' RT. (TO RAMP PGL)
SEE P&P SHEETS FOR ADDITIONAL INFORMATION ON PGL OFFSETS.

[redacted]
MARIO R. LOPEZ
85630
[redacted]
3-3-92

US 83 [redacted]
TYPICAL GRADING & OVERLAY SECTIONS

SHEET 6 OF 6 SHEETS

SCALE: N. T. S.

FED. RD. DIV. NO.	FEDERAL AID PROJECT NO.		SHEET NO.
6	NH92 (SD)M		7
STATE	STATE DIST. NO.	COUNTY	
TEXAS	21	HIDALGO	
CONT.	SECT.	JOB	HIGHWAY NO.
39	17	97	US 83

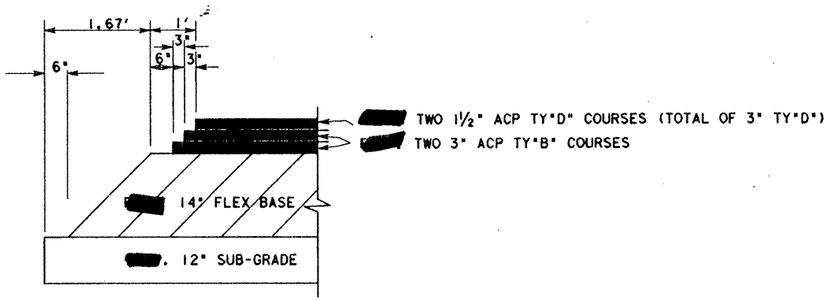

DETAIL A

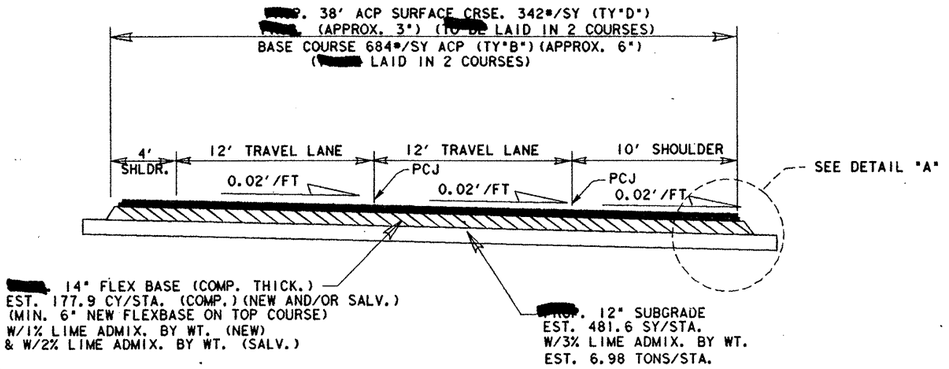

(LEFT)

STA. 835+09.9 TO STA. 846+22.51

(RIGHT)

STA. 833+21.9 TO STA. 846+22.51

TYPICAL ROADBED SECTION (1)

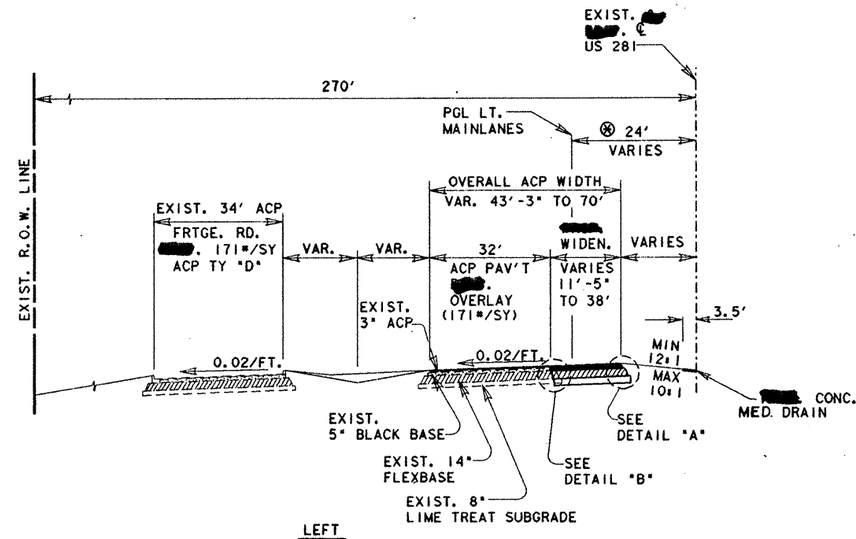

LEFT

STA. 828+00.26 TO STA. 835+09.9

⊛ SEE GRADING SECTION

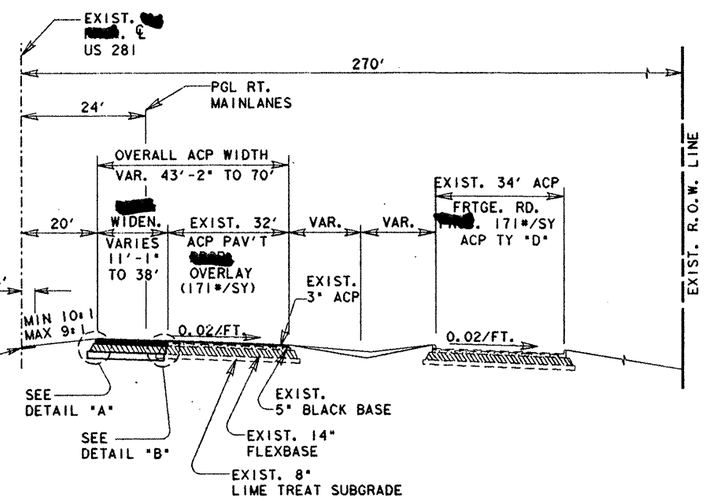

RIGHT

STA. 830+52.85 TO STA. 833+21.9

TYPICAL ROADBED TRANSITIONS

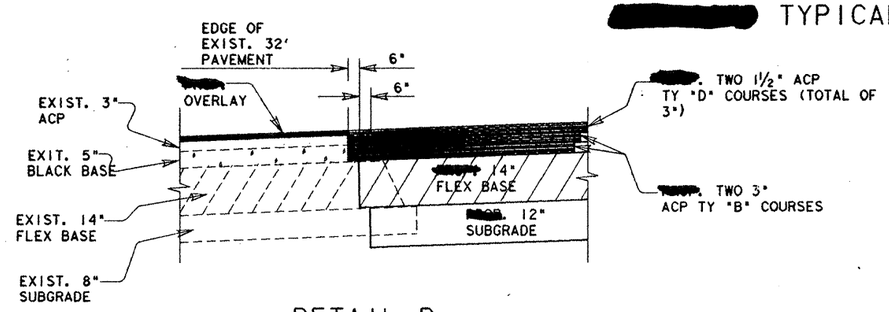

DETAIL B

US 281

TYPICAL SECTIONS

SHEET 1 OF 2 SHEETS

SCALE: 1"=20'

FED. RD. DIV. NO.	FEDERAL AID PROJECT NO.		SHEET NO.
6	NH 92(50)M		8
STATE	STATE DIST. NO.	COUNTY	
TEXAS	21	HIDALGO	
CONT.	SECT.	JOB	HIGHWAY NO.
39	17	97	US 281

ZFA1: [325107]US83TYP.DGN [PARM: S

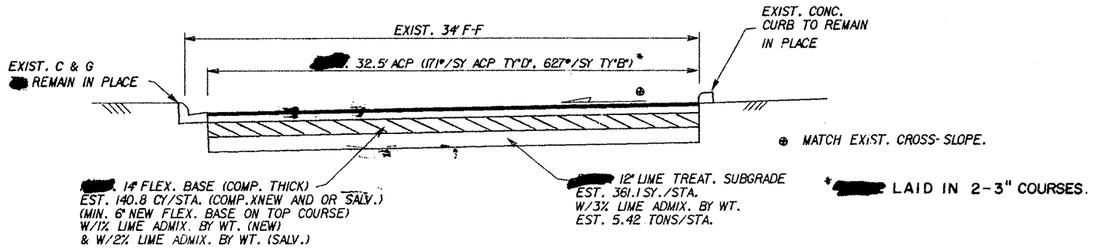

FRONTAGE RD. RECONSTRUCTION

(SEE P&P SHEETS FOR LIMITS)

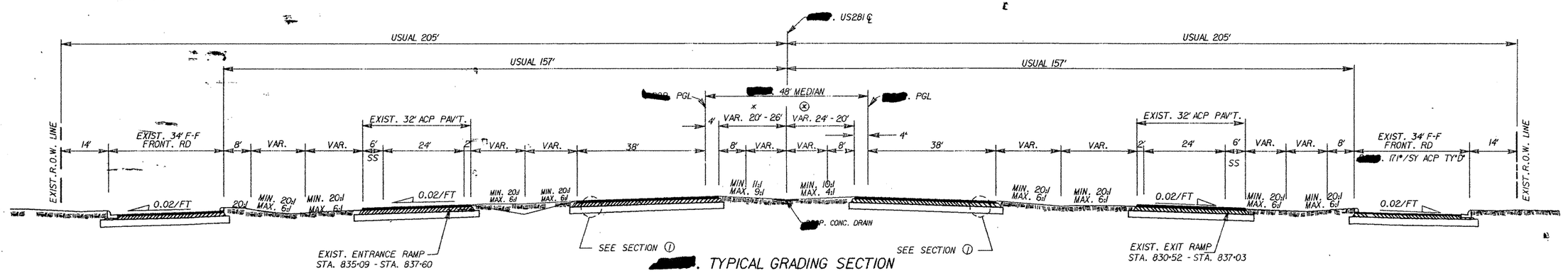

TYPICAL GRADING SECTION

LEFT

STA. 835+09.9 - STA. 838+65

RIGHT

STA. 838+21.9 - STA. 838+08

* FROM STA. 833+06.7 - STA. 840+31.0 (TRANSITION FROM 20'-26')
⊛ FROM STA. 833+40.16 - STA. 840+64.72 (TRANSITION FROM 20'-16')

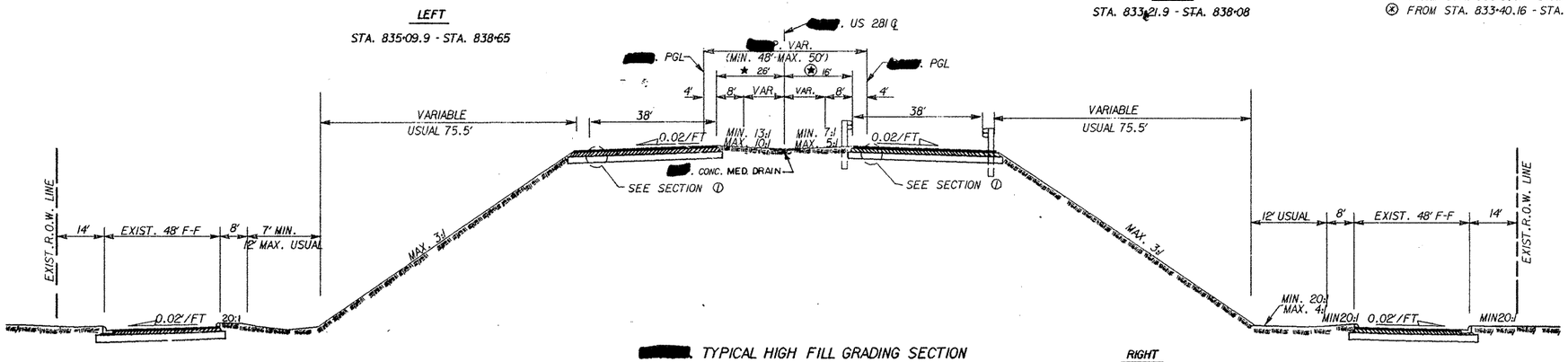

TYPICAL HIGH FILL GRADING SECTION

STA. 838+65 - STA. 846+22.51 (LT. MAIN LANES)

RIGHT

STA. 838+08 - STA. 846+22.51

★ FROM STA. 840+31.0 - STA. 846+22.51
⊛ FROM STA. 840+64.2 - STA. 846+22.51

LEFT

STA. 838+65 - STA. 846+22.51

STATE OF TEXAS
MARIO R. JORGE
65538
REGISTERED
PROFESSIONAL ENGINEER

Mario R. Jorge, P.E.
10-31-97

TYPICAL SECTIONS
US 281

SHEET 2 OF 2 SHEETS

SCALE: N.T.S.

FED. RD. DIV. NO.	FEDERAL AID PROJECT NO.		SHEET NO.
6	NH92(50)M		9
STATE	STATE DIST. NO.	COUNTY	
TEXAS	21	HIDALGO	
CONT.	SECT.	JOB	HIGHWAY NO.
39	17	97	US 83

FILE: INTORIA.DGN DATE REVISED: 2/ /97

GENERAL NOTES

1. The Traffic Control sheets are intended to provide minimum traffic control measures for typical work zone operations. Additional traffic control devices may be used if the basic principles governing the design and placement of the supplemental devices are maintained.

2. Minor Operation is defined as a work zone that will not require traffic control devices to warn or direct traffic during day time conditions. At the end of each work day all work zone traffic control devices shall be removed from the view of all motorists and no unusual conditions or potential hazards shall exist that require advance warning to the driving public.

3. Construction vehicles outside of a protected zone and within 30' of traveled way shall have strobes or rotating beacons in use.

SIGNS

1. The selection of sign size shall be based on Table I.

2. Flashing warning lights, channelizing devices, and/or flags shall be used to call attention to the advance warning signs.

3. The word, "AHEAD" may be substituted for the actual distance on the advance warning signs where applicable. When used, distances on warning signs shall be rounded to the nearest 500 feet.

4. The word "UTILITY", "SIGNAL", "BRIDGE", "LIGHT-[illegible]", "STREET", or "RAMP" may be substituted for "ROAD" in all signs where applicable.

5. Appropriate advisory speed signs may be used in conjunction with warning signs. Speeds shall be determined in the field by the Engineer.

6. Advance warning signs shall be mounted on portable sign supports with a 1' minimum mounting height. A 3' mounting height is desirable.

7. Regulatory signs shall be mounted on supports with a 5' minimum mounting height.

CHANNELIZING DEVICES

1. The maximum spacing between channelizing devices in a taper shall be approximately equal in feet to the speed limit and on tangents twice the speed limit.

2. When channelizing devices are used to direct traffic across existing lane line etc. with a taper the spacing between channelizing devices may be reduced by as much as 50%.

3. Channelizing device spacing may be reduced when placed on curves, hills, or next to potential hazards. At least three channelizing devices should be in view at any one time.

4. Lane closure taper length is equal to "L". Shoulder closure taper length is equal to "1/2 L". (see table II)

5. Tapers down stream from the work area are optional and when used shall be 50'-100' long.

6. Tapers shall be 50 feet long when placed downstream of a flagger, YIELD sign, or STOP sign.

7. The selection of channelizing devices shall be based on the degree of hazard associated with the work area. The selection priority of channelizing devices, in the order of increasing hazard recognition are:

portable mounted delineators
28" cones
36" or more tubular cones
portable mounted vertical panels
36" cones
Type I Barricade
Type II Barricade
Plastic Drums
MBGF, fixed or drum mounted
Concrete Barrier Rail

8. Flashing arrow boards used on two-way, two-lane roadways shall flash in the caution mode.

BARRICADES

1. Barricades may be used to support signs; however, no more than two information or guide type signs may be placed on a barricade and only one regulatory or warning sign may be placed on a barricade. Minimum mounting height of a sign on Type I Barricade is one foot.

2. Barricades shall NOT be placed (horizontal rails) parallel to traffic within 30' of the travelled way.

3. Type III Barricades shall not be used for channelizing devices.

4. Type III Barricades shall have reflective stripes on one side if it is facing traffic one direction only and on both sides if it serves traffic in two directions.

FLAGGER CONTROL

1. For one lane, two-way traffic control, one or more flaggers should be used where traffic, road conditions, or terrain warrant their use. If flaggers are used the taper may be reduced to 50' minimum. When flaggers are used to control traffic the symbol "Advance Flagger" sign may be used. When flaggers are used the "BE PREPARED TO STOP" sign may be used.
Proper spacing between signs should be maintained.

2. When flaggers are used to draw attention to traffic control devices the symbol "Advance Flagger" sign may be used.
Proper spacing between signs may be maintained.

3. Flaggers shall carry hand held air horns to alert work crew of an emergency condition.

4. When more than one flagger is used, a chief flagger shall be assigned the responsibility of making all decisons concerning traffic control.

5. Flaggers shall wear vests and shall use flags and/or paddles to signal traffic.

6. Flaggers shall wear hard hats to provide a professional image to the motorists and to protect the head from flying materials.

7. Flaggers shall work behind cones to draw attention to the flagger position.

8. Flaggers shall be neatly attired and well groomed.

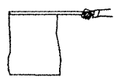

VESTS

Flagmen when on duty shall wear orange colored safety vests as an outer garment. The vest shall be so made as to be adjustable in the side to fit properly. All apparel shall be of a neat appearance. In emergencies and during inclement weather the attire may be altered as approved by the Engineer.

HELMET OR CAP

The use of a white, safety helmet or orange cap is desirable.

FLAG

SIZE : 24"x24" appox. 36" staff, free edge of flag should be weighted
MATERIAL : Vinyl bonded to nylon fabric material
COLOR : Red

STOP AND SLOW SIGNS

SIZE : 18"X18" MIN.
MATERIAL : Sign, aluminum 081 plate, or other compatable light weight material. Staff 9' min. length thinwall conduit tubing or other comparable light weight material.
COLOR STOP : sign, red field, white letters and border
COLOR SLOW : sign, orange field, black letters and border
LETTERS : 6" Series C for STOP sign
6" Series B for SLOW sign

Table I

TYPICAL CONSTRUCTION WARNING SIGN SIZE AND SPACING

Roadway Classification	Posted Speed	Sign Spacing▲	Major Construction Or Major Maintenance Approach Warning Signs CW 20n Series And CW 22-1 Sign		Minor Construction Or Minor Maintenance Approach Warning Signs CW 21 Series		Other Warning Signs
	MPH	Ft. (Apprx.)	Standard Inches	Minimum[4] Inches	Standard Inches[7]	Minimum[4] Inches[7]	Standard Inches[7]
Conven.	30	80	48X48	36X36	30X30 or 36X36	25X24 or 30X30	30X30 or 36X36
	35	120					
	40	160					
	45	240		Use Standard Size		Use Standard Size	
	50	320					
	55	500[2]					
Exp or Frwy	55	500[3]			48X48*	48X48*	48X48*

▲ Minimum distance from work to 1st Advance Warning sign and/or distance between each additional sign.

* Smaller sign sizes may be used where sign designs have not been included in the Standard Traffic Signs Design Booklet.

General Notes:

1. Special or larger size signs may be used as may be necessary.
2. Distance between signs should be increased as required to have 1500' advance warning.
3. Distance between signs may be increased as required to have ½ mile or more advance warning.
4. For use only on secondary roads or city streets where speeds are low.
5. Only diamond shaped warning sign sizes are indicated.
6. See sign listing in TXMUTCD, Appendix A for complete list of all available sign design sizes.
7. Where two sizes are listed, see sign size list in TXMUTCD, Appendix A for proper size.

WORKER SAFETY

1. When vehicles are used to shadow the work area, the vehicle may be parked 30' or more in advance of the work area, engine turned off, transmission in gear (or set in PARK), emergency brake set on.

2. Vehicle mounted attenuators may be installed on vehicles used to shadow the work area.

3. Vehicles and equipment parked at the work site that are not used to shadow the work area may be parked as close to the right of way line as possible.

4. Workers exposed to traffic may wear vests.

Table II

TYPICAL TRANSITION LENGTHS AND SUGGESTED MAXIMUM SPACING OF DEVCES

Posted* Speed	Formula	Minimum Desirable Taper Lengths** 10' Offset	11' Offset	12' Offset	Suggested Maximum Spacing of Device On a Taper	On a Tangent
30	$L=\frac{WS^2}{60}$	150'	165'	180'	30'	60'-75'
35		205'	225'	245'	35'	70'-90'
40		265'	295'	320'	40'	80'-100'
45	L=WS	450'	495'	540'	45'	90'-110'
50		500'	550'	600'	50'	100'-125'
55		550'	605'	660'	55'	110'-140'
60		600'	660'	720'	60'	120'-150'

* 85th Percentile Speed may be used on roads where traffic speeds normally exceed the posted speed limit.
** Taper lengths have been rounded off.

Table III

SUGGESTED MAXIMUM SPACING for HIGHWAY DELINEATORS on HORIZONTAL CURVES

(Distance in Feet Rounded to the Nearest 5 Feet)

Radius of Curve (in feet)	Spacing on Curve (in feet)
50	20
150	30
200	35
250	40
300	50
400	55
500	65
600	70
700	75
800	80
900	85
1,000	90

Spacing for specific radii not shown may be interpolated from table. The minimum spacing should be 20 feet. The spacing on curves of not exceed 300 feet. In advance of or beyond a curve, and proceeding away from the end of the curve, the spacing of the first delineator approaching a curve is 2 S, the second 3 S, and the third 6 S but not to exceed 300 feet. S refers to the delineator spacing for specific radii computed from the formula $S=\sqrt{R-50}$.

PADDLE

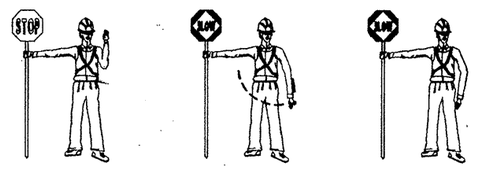

TO STOP TRAFFIC | TRAFFIC PROCEED | TO ALERT AND SLOW TRAFFIC

FLAG

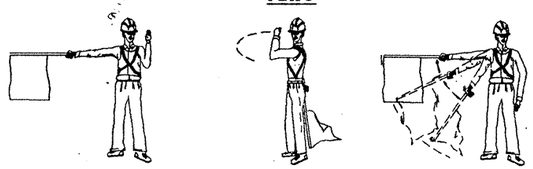

TO STOP TRAFFIC | TRAFFIC PROCEED | TO ALERT AND SLOW TRAFFIC

GENERAL INFORMATION TRAFFIC CONTROL PLAN

SHEET 1 OF 24 SHEETS

DISTRICT STANDARD

FED. ROAD DIV. NO.	STATE	FEDERAL AID PROJECT NO.			SHEET NO.
6	TEXAS	NH 92 (SD)M			10
STATE DIST. NO.	COUNTY	CONT. NO.	SEC. NO.	JOB NO.	HIGHWAY NO.
21	HIDALGO	39	17	97	US 83

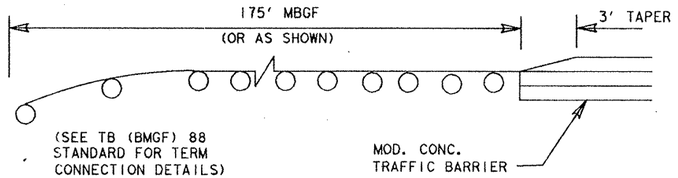

TEMPORARY BARREL MOUNTED MBGF

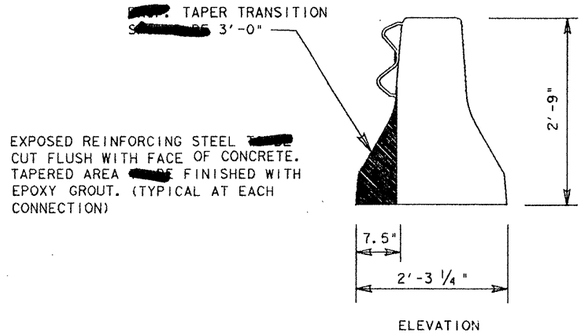

ELEVATION

MODIFIED CONC. TRAFFIC BARRIER DETAIL

FOR THIS PROJECT, 130 - 30' SECTIONS OF TEMPORARY CONC. TRAFFIC BARRIERS WITH CONNECTING HARDWARE [illegible] FURNISHED BY THE TX. DOT. AT THE DISTRICT OFFICE YARD. THE CONTRACTOR [illegible] RESPONSIBLE FOR HAULING THE BARRIERS TO AND FROM THE DISTRICT 21 OFFICE YARD LOCATED AT 600 W. EXPRESSWAY 83 IN PHARR, TEXAS.

[illegible] THE RESPONSIBILITY OF THE CONTRACTOR TO LOAD AND HAUL THE TEMPORARY CONC. BARRIERS FROM THE DISTRICT OFFICE YARD TO THE PROJECT AREA. THE CONTRACTOR [illegible] MAINTAIN THE TEMPORARY CONC. BARRIERS IN FIRST CLASS CONDITION UNTIL ALL WORK REQUIRING THE BARRIERS HAS BEEN COMPLETED. UPON COMPLETION OF THIS WORK, ALL BARRIERS AND CONNECTING HARDWARE FURNISHED [illegible] REMAIN THE PROPERTY OF THE TX. D.O.T. AND [illegible] DELIVERED TO THE DISTRICT OFFICE YARD IN PHARR, TEXAS BY THE CONTRACTOR. PORTIONS OF THE TEMPORARY CONC. BARRIER DAMAGED BEYOND REASONABLE REPAIR, [illegible] REPLACED AT THE CONTRACTOR'S EXPENSE.

THE CONTRACTOR [illegible] USE THE SLING TYPE LIFTING DEVICES WHEN MOVING THE TEMPORARY CONC. TRAFFIC BARRIERS FURNISHED BY THE S.D.H.& P.T.. IF HOLES ARE NEEDED FOR SLING LIFT, THE CONTRACTOR [illegible] DRILL OR CORE APPROXIMATELY 2" HOLES (NON-IMPACTED) 6'- 3" ± 2" FROM EACH END AND 14" FROM THE TOP FOR SLING LIFTING OF THE BARRIERS. THE EXISTING THREADED SLEEVES SHALL NOT BE USED.

THE CONTRACTOR [illegible] ALLOWED TO PROVIDE HIS OWN ADDITIONAL TEMPORARY CONC. TRAFFIC BARRIERS REQUIRED FOR THE VARIOUS PHASES OF CONSTRUCTION. THE CONTRACTOR [illegible] ALSO [illegible] ALLOWED TO RE-USE THESE TEMPORARY CONC. TRAFFIC BARRIERS FOR THE [illegible] PERMANENT CONC. TRAFFIC BARRIER IN MEDIAN (EXCEPT FOR THE [illegible] CAST-IN-PLACE TYPE CONC. TRAFFIC BARRIERS) PROVIDED THAT THEY HAVE NOT BEEN DAMAGED WHILE BEING USED FOR TRAFFIC CONTROL. EACH BARRIER SECTION [illegible] RE-USED [illegible] INDIVIDUALLY APPROVED BY THE ENGINEER. ALL WORK, LABOR AND TOOLS REQUIRED FOR USING THE PERMANENT TRAFFIC BARRIERS AS TEMPORARY CONC. BARRIERS [illegible] NOT [illegible] PAID FOR DIRECTLY, BUT [illegible] CONSIDERED SUBSIDIARY TO ITEM 502.

THE CONTRACTOR [illegible] PERFORM THE FULL DEPTH PHASE WORK ONLY IN THE AREA NOT TO EXCEED THE LENGTH OF THE ERECTED TEMPORARY CONCRETE BARRIER. THE CONTRACTOR [illegible] WORK IN THE REMAINING LENGTH OF THE [illegible] SECTION BEYOND THE CONC. BARRIER BY SCARIFYING & REMOVING THE EXIST. ACP WITH SALVAGE FLEX BASE AS NOT TO EXCEED A DROP-OFF OF MORE THAN 2". THE CONSTRUCTION AREA BEYOND THE CONC. BARRIER [illegible] REQUIRE DRUMS AS TEMPORARY BARRIER.

PHASES I THRU IV CONSTRUCTION WILL REQUIRED THE USE OF TEMPORARY CONC. TRAFFIC BARRIERS. PHASE III CONSTRUCTION REQUIRES THAT TEMPORARY CONC. TRAFFIC BARRIERS [illegible] INSTALLED AT BOTH OUTSIDE EDGES OF THE COMPLETED PHASE II CONSTRUCTION. TO PROVIDE TEMPORARY DRAINAGE OF THE COMPLETED PHASE II, THE CONTRACTOR [illegible] REQUIRED TO INSTALL TEMPORARY CONC. TRAFFIC BARRIERS THAT ARE SLOTTED FOR DRAINAGE AT 60 FT. INTERVALS ON EACH SIDE.

ALL WORK AND MATERIALS REQUIRED FOR THE INSTALLATION, AND ATTACHMENT OF THE TEMPORARY BARREL MOUNTED GUARD FENCE TO THE CONCRETE BARRIER, ALL WORK INVOLVED, INCLUDING LOADING, HAULING, UNLOADING, PLACING AND STORING OF CONCRETE BARRIER USED IN THIS PROJECT FOR PREPARATION, INCLUDING MODIFYING THE BARRIER END, FOR REASONABLE REPAIR OF DAMAGED SECTIONS, ERECTION, MAINTAINING, REMOVING, HAULING AND DELIVERING THE CONC. BARRIERS AS REQUIRED BY THE VARIOUS PHASES OF CONSTRUCTION, AND ALL LABOR AND TOOLS [illegible] NOT [illegible] PAID FOR DIRECTLY BUT [illegible] CONSIDERED SUBSIDIARY TO ITEM 502.

THE END OF THE CONCRETE BARRIER, AND ATTACHMENTS TO THE TEMPORARY BARREL-MOUNTED GUARD FENCE, [illegible] MODIFIED AS SHOWN ON PLANS.

THE CONTRACTOR [illegible] USE, EITHER TYPE C STEADY BURN LIGHTS, DELINEATORS OR VERTICAL PANELS FOR DELINEATION ON TEMPORARY CONC. TRAFFIC BARRIERS. SPACING FOR THESE DEVICES [illegible] AS SHOWN ON THE BARRICADE AND CONSTRUCTION STANDARDS.

TRAFFIC CONTROL FOR THE CONSTRUCTION OF THE [illegible] 7'X 6' BOX CULVERT CROSSING F.M. 495 SHALL INCLUDE 2 - 30 FT SECTIONS OF TEMPORARY CONC. TRAFFIC BARRIERS WITH 125 FT OF TEMPORARY BARREL MOUNTED METAL BEAM GUARD FENCE ATTACHED TO BOTH ENDS, PLASTIC DRUM LANE CLOSURE TRANSITIONS WITH APPROPRIATE CONSTRUCTION WARNING SIGNS AS REQUIRED BY THE T.M.U.T.C.D. AND THE BARRICADE STANDARDS. THE CONTRACTOR [illegible] ALLOWED TO CLOSE ONLY HALF OF THE ROADWAY AT ANY ONE TIME AND PROVIDE A 12 FT. LANE FOR EACH DIRECTION OF TRAFFIC. THE CONTRACTOR [illegible] REQUIRED TO REMOVE ANY EXISTING PAVEMENT MARKINGS WHICH CONFLICT WITH THE DIRECTION OF THE TRANSITIONED OR DETOURED TRAFFIC AND TO INSTALL APPROPRIATE REMOVABLE TYPE PAVEMENT MARKINGS AS REQUIRED BY THE T.M.U.T.C.D. AND THE BARRICADE STANDARDS THE CONTRACTOR [illegible] PRESENT A TRAFFIC CONTROL PLAN TO THE ENGINEER FOR APPROVAL PRIOR TO BEGINNING THIS WORK.

TRAFFIC CONTROL FOR THE TRENCHING AND LAYING OPERATION FOR STORM DRAIN TRUNKLINE CROSSING F.M. 495 [illegible] INCLUDE FLAGMEN AT BOTH ENDS OF THE WORK AREA, CONES AND PLASTIC DRUM LANE CLOSURE TRANSITIONS WITH APPROPRIATE CONSTRUCTION WARNING SIGNS AS REQUIRED BY THE T.M.U.T.C.D. AND BARRICADE STANDARDS. THE CONTRACTOR [illegible] REQUIRED TO BACKFILL TRENCH AS SOON AS THE PIPE JOINT IS IN PLACE. NO TRENCH [illegible] LEFT OPEN OVERNIGHT. THE CONTRACTOR [illegible] PRESENT A TRAFFIC CONTROL PLAN TO THE ENGINEER FOR APPROVAL PRIOR TO BEGINNING THIS WORK.

THE CONTRACTOR [illegible] COVER THE EXISTING ADVANCE AND SUPPLEMENTAL GUIDE SIGNS AND EXIT GORE SIGNS CORRESPONDING TO THE EXIT RAMP CLOSURES FOR THAT PARTICULAR SEQUENCE OF PHASE III CONSTRUCTION. COVERING OF THESE SIGNS [illegible] WITH A MATERIAL AS APPROVED BY THE ENGINEER AND ATTACHED TO THE SIGN IN A MANNER WHICH [illegible] PRESENT A NEAT APPEARANCE AND NOT DAMAGE THE SIGN. THE CONTRACTOR [illegible] MAINTAIN THESE SIGN COVERINGS FOR THE DURATION OF THE SEQUENCE OF CONSTRUCTION. WHEN THE EXIT OR ENTRANCE RAMP IS RE-OPENED TO TRAFFIC, ALL EXISTING PERMANENT SIGNS [illegible] UNCOVERED AND ALL APPLICABLE TEMPORARY GUIDE AND DETOUR SIGNS [illegible] REMOVED.

TEMPORARY GUIDE SIGNS [illegible] INSTALLED ON TIMBER BREAKAWAY ROADSIDE SIGN SUPPORTS AS SHOWN ON BARRICADE STANDARD BC(4)-89. ALL WORK AND MATERIALS REQUIRED FOR THE INSTALLATION AND REMOVAL OF THE TEMPORARY GUIDE SIGNS AND FOR THE COVERING OF EXISTING SIGNS REQUIRED FOR THE VARIOUS SEQUENCES OF PHASE III CONSTRUCTION [illegible] NOT [illegible] PAID FOR DIRECTLY, BUT [illegible] CONSIDERED SUBSIDIARY TO ITEM 502. ALL TEMPORARY GUIDE SIGNS INSTALLED [illegible] REMAIN THE PROPERTY OF THE CONTRACTOR.

GENERAL NOTES:

THIS IS A SUGGESTED TRAFFIC CONTROL PLAN, SUBMITTED FOR THE CONTRACTORS CONSIDERATION. THE CONTRACTOR [illegible] SUBMIT AN ALTERNATE CONSTRUCTION SEQUENCE AND TRAFFIC CONTROL PLAN TO THE ENGINEER FOR APPROVAL.

THE CONTRACTORS ATTENTION IS DIRECTED TO THE REQUIREMENTS OF ITEM 7, "LEGAL RELATIONS AND RESPONSIBILITIES TO THE PUBLIC" OF THE STANDARD SPECIFICATIONS.

THE TRAFFIC CONTROL PLAN [illegible] DIVIDED INTO SIX (6) PHASES OF CONSTRUCTION. THE VARIOUS PHASE SEQUENCES WILL REQUIRE DETOURS, LANE DETOUR TRANSITIONS, OR LANE OR SHOULDER CLOSURE TRANSITIONS. THE CONTRACTOR [illegible] RESPONSIBLE FOR REMOVING ALL CONFLICTING PAVEMENT MARKINGS AND FOR INSTALLING THE [illegible] TEMPORARY CONC. TRAFFIC BARRIERS, CHANNELIZING DEVICES WITH APPROPRIATE CONSTRUCTION PAVEMENT MARKINGS AND CONSTRUCTION WARNING SIGNS AS SHOWN ON THE TRAFFIC CONTROL PLAN, THE BARRICADES AND CONSTRUCTION STANDARD SHEETS, THE T.M.U.T.C.D. OR AS DIRECTED BY THE ENGINEER. SINCE THE TRAFFIC CONTROL PLAN IS COMPLEX DUE TO THE VARIOUS PHASES AND SEQUENCES OF WORK INVOLVED, THE CONTRACTOR [illegible] REQUIRED TO ASSIGN A KNOWLEDGEABLE TRAFFIC CONTROL RESPONSIBLE PERSON TO PRVIDE CO-ORDINATION IN THIS REGARD WITH HIS WORK FORCES, SUB-CONTRACTORS AND WITH THE DEPARTMENT. MOVING FROM ONE PHASE OR SEQUENCE TO ANOTHER [illegible] REQUIRE ADVANCE COMPREHENSIVE PLANNING SO AS TO MAXIMIZE SAFETY AND MINIMIZE INCONVENIENCE FOR THE TRAVELING PUBLIC.

THE PORTION OF THIS PROJECT WHICH COINCIDES WITH EXISTING ROADS AND/OR PRIVATE DRIVES [illegible] KEPT OPEN TO TRAFFIC AT ALL TIMES, UNLESS OTHERWISE PROVIDED FOR OR APPROVED BY THE ENGINEER. THE CONTRACTOR [illegible] REQUIRED TO MAINTAIN AT ALL TIMES, A ONE WAY SURFACED ROADWAY, MIN. 12' WIDE.

ALL STRIPING AND SIGNING, [illegible] THE RESPONSIBILITY OF THE CONTRACTOR AND [illegible] IN ACCORDANCE WITH TCP (5-1), TCP (5-2)-91. AND "THE TEXAS MANUAL OF UNIFORM TRAFFIC CONTROL DEVICES".

ALL WORK AND MATERIALS REQUIRED FOR TRAFFIC HANDLING AND REMOVAL OF EXISTING RAISED PAVEMENT MARKERS, ETC., [illegible] NOT [illegible] PAID FOR DIRECTLY BUT SHALL BE PART OF ITEM 502, "BARRICADES, SIGNS AND TRAFFIC HANDLING", REMOVAL OF EXISTING PAVEMENT MARKINGS [illegible] ACCOMPLISHED BY BURNING OR BLADING AND [illegible] PAID FOR UNDER ITEM 6913.

ALL GDMRK ON THIS PROJECT REQUIRED BY THE "TEXAS MANUAL UNIFORM TRAFFIC CONTROL DEVICES. [illegible] PAID FOR UNDER ITEM 6924 WORK ZONE PAVEMENT MARKINGS".

WHEN CONNECTING [illegible] ROADWAY AND/OR DETOURS TO SECTIONS OF EXISTING PAVEMENT BEING USED BY TRAFFIC AND SUCH OPERATIONS RESULT IN A DROPOFF OF MORE THAN 2", A 3:1 SLOPE [illegible] REQUIRED. THIS WORK [illegible] DONE EXPEDITIOUSLY DURING DAYLIGHT HOURS. NECESSARY FLAGMEN AND APPROPRIATE SIGNING TO SAFELY GUIDE TRAFFIC THROUGH THE WORK AREA [illegible] REQUIRED AS DIRECTED BY THE ENGINEER.

ADEQUATE SIGNS AND BARRICADES [illegible] INSTALLED BY THE CONTRACTOR AND APPROVED BY THE ENGINEER PRIOR TO OPENING ANY SECTION TO TRAFFIC. OTHER SIGNS [illegible] USED IN ADDITION TO THOSE REQUIRED BY THE PLANS AND BARRICADE STANDARDS.

TY III (C) BARRICADES WITH ACCOMPANYING SIGNS [illegible] REQUIRED AT EACH END OF THE PROJECT.

THE CONTRACTOR [illegible] HAVE AT ALL TIMES, ENOUGH BARRICADES AND SIGNS TO REPLACE THOSE DAMAGED.

DETOUR STRIPING AND SIGNING [illegible] AS SHOWN IN THE PLANS AND IN ACCORDANCE WITH THE "MANUAL OF UNIFORM TRAFFIC CONTROL DEVICES".

CHANNELIZING DEVICES [illegible] REQUIRED ALONG THE EDGE OF THE PORTIONS OF THE ROADWAY OPEN TO TRAFFIC.

ALL DETOUR GUIDE SIGNS REQUIRED UNDER PHASE III, & IV [illegible] IN PLACE BEFORE CLOSURE OF ANY DIRECTION OF TRAVEL OR ENTRANCE OR EXIT RAMP.

WORK ZONE PAVEVMENT MARKINGS ON BRIDGES OR THOSE WHICH [illegible] INSTALLED AFTER THE COMPLETION OF WORK ON A CERTAIN PHASE SEQUENCE BUT [illegible] REQUIRED [illegible] REMOVED ON A SUBSEQUENT SEQUENCE OF WORK, [illegible] OF THE REMOVABLE TYPE.

MARIO R. JORGE 65530

Mario R. Jorge, P.E.
3-2-92

TRAFFIC CONTROL PLAN

SHEET 2 OF 24 SHEETS

FED. ROAD DIV. NO.	STATE	FEDERAL AID PROJECT NO.				SHEET NO.
6	TEXAS	NH92 (50)M				11
STATE DIST. NO.	COUNTY		CONT. NO.	SEC. NO.	JOB NO.	HIGHWAY NO.
21	HIDALGO		39	17	51	US83

NOTE:
THE CONTRACTOR [redacted] REQUIRED TO CONSTRUCT A MINIMUM OF FIVE (5) HIGH MAST ILLUMINATION SYSTEMS DURING PHASE I CONSTRUCTION AT LOCATIONS DETERMINED BY THE ENGINEER. THE COMPLETED ILLUMINATION SYSTEMS [redacted] PAID FOR UNDER THE PERTINENT BID ITEMS.

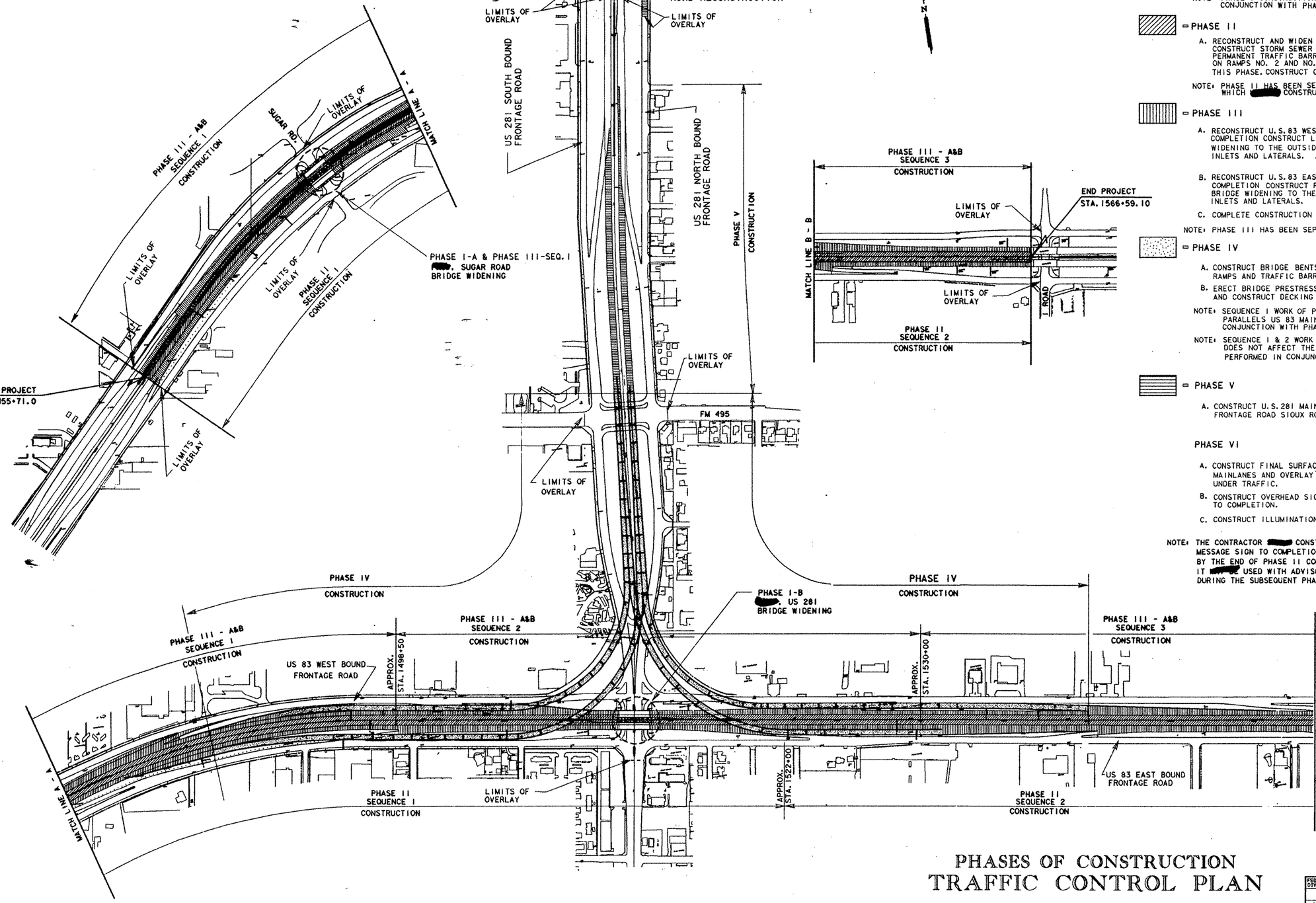

SEQUENCE OF CONSTRUCTION

▭ PHASE I

A. WIDEN SUGAR ROAD OVERPASS BRIDGE TO THE INSIDE TO COMPLETION.
B. WIDEN U.S. 281 OVERPASS BRIDGES TO COMPLETION.

NOTE: PHASE I CONSTRUCTION [redacted] PERFORMED IN CONJUNCTION WITH PHASE II CONSTRUCTION.

▭ PHASE II

A. RECONSTRUCT AND WIDEN U.S. 83 MAIN LANES TO INSIDE, CONSTRUCT STORM SEWER INLETS AND LATERALS AND INSTALL PERMANENT TRAFFIC BARRIER TO COMPLETION. BENTS NO. 18 ON RAMPS NO. 2 AND NO. 3 [redacted] CONSTRUCTED DURING THIS PHASE. CONSTRUCT CHANGEABLE MESSAGE SIGN.

NOTE: PHASE II HAS BEEN SEPERATED INTO TWO (2) SEQUENCES WHICH [redacted] CONSTRUCTED SIMULTANEOUSLY.

▭ PHASE III

A. RECONSTRUCT U.S. 83 WESTBOUND OUTSIDE MAINLANES TO COMPLETION CONSTRUCT LT. MAINLANES SUGAR RD. BRIDGE WIDENING TO THE OUTSIDE AND CONSTRUCT STORM SEWER INLETS AND LATERALS.

B. RECONSTRUCT U.S. 83 EASTBOUND OUTSIDE MAINLANES TO COMPLETION CONSTRUCT RT. MAIN LANES SUGAR RD. BRIDGE WIDENING TO THE OUTSIDE AND CONSTRUCT STORM SEWER INLETS AND LATERALS.

C. COMPLETE CONSTRUCTION OF STORM SEWER SYSTEM.

NOTE: PHASE III HAS BEEN SEPERATED INTO THREE (3) SEQUENCES.

▭ PHASE IV

A. CONSTRUCT BRIDGE BENTS, ABUTMENT, RETAINING WALLS, RAMPS AND TRAFFIC BARRIERS TO COMPLETION.
B. ERECT BRIDGE PRESTRESSED CONC. BEAMS AND STEEL GIRDERS, AND CONSTRUCT DECKING AND RAILING TO COMPLETION.

NOTE: SEQUENCE I WORK OF PHASE IV CONSTRUCTION WHICH PARALLELS US 83 MAIN LANES [redacted] PERFORMED IN CONJUNCTION WITH PHASE III CONSTRUCTION.

NOTE: SEQUENCE I & 2 WORK OF PHASE IV CONSTRUCTION WHICH DOES NOT AFFECT THE TRAVELLED ROADWAY [redacted] PERFORMED IN CONJUNCTION WITH PHASES I, II AND/OR III.

▭ PHASE V

A. CONSTRUCT U.S. 281 MAIN LANES AND RECONSTRUCT NORTH BOUND FRONTAGE ROAD SIOUX ROAD APPROACH TO COMPLETION.

PHASE VI

A. CONSTRUCT FINAL SURFACE COURSE OF TY "D" ACP ON US 83 MAINLANES AND OVERLAY US 83 AND US 281 FRONTAGE ROADS UNDER TRAFFIC.
B. CONSTRUCT OVERHEAD SIGN BRIDGES AND INSTALL SIGNING TO COMPLETION.
C. CONSTRUCT ILLUMINATION SYSTEMS TO COMPLETION.

NOTE: THE CONTRACTOR [redacted] CONSTRUCT THE CHANGEABLE MESSAGE SIGN TO COMPLETION & HAVE IT OPERATIONAL BY THE END OF PHASE II CONSTRUCTION SO THAT IT [redacted] USED WITH ADVISORY MESSAGES DURING THE SUBSEQUENT PHASES OF CONSTRUCTION.

[redacted]
MAJOR JORGE
65538
REGISTERED
ENGINEER
STATE OF TEXAS

3-3-92

PHASES OF CONSTRUCTION
TRAFFIC CONTROL PLAN

SHEET 3 OF 24 SHEETS

FED. ROAD DIV. NO.	STATE	FEDERAL AID PROJECT NO.			SHEET NO.
6	TEXAS	NH92 (60)M			12
STATE DIST. NO.	COUNTY	CONT. NO.	SEC. NO.	JOB NO.	HIGHWAY NO.
21	HIDALGO	39	17	97	US83

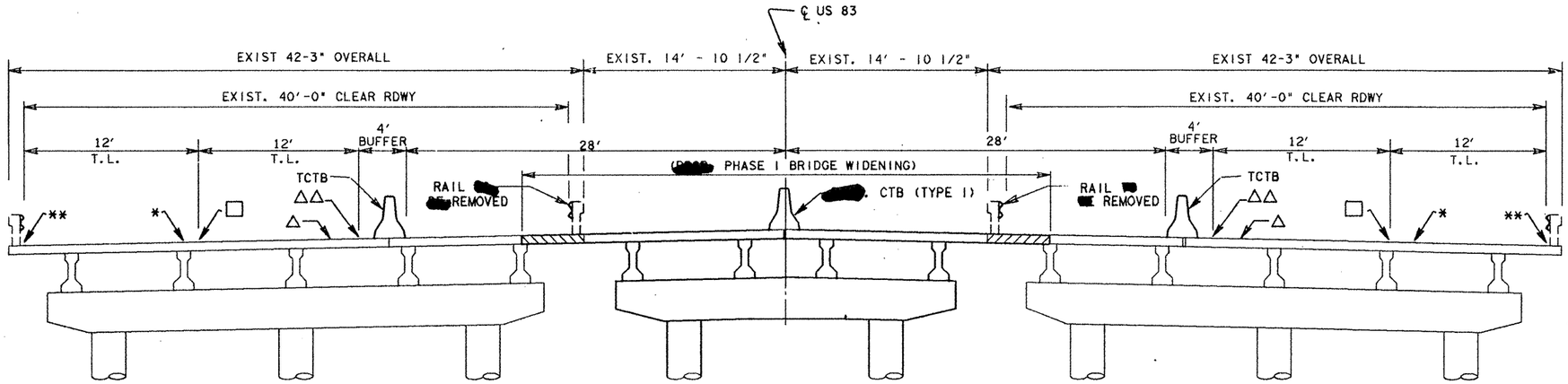

PHASE I-B US 281 OVERPASS

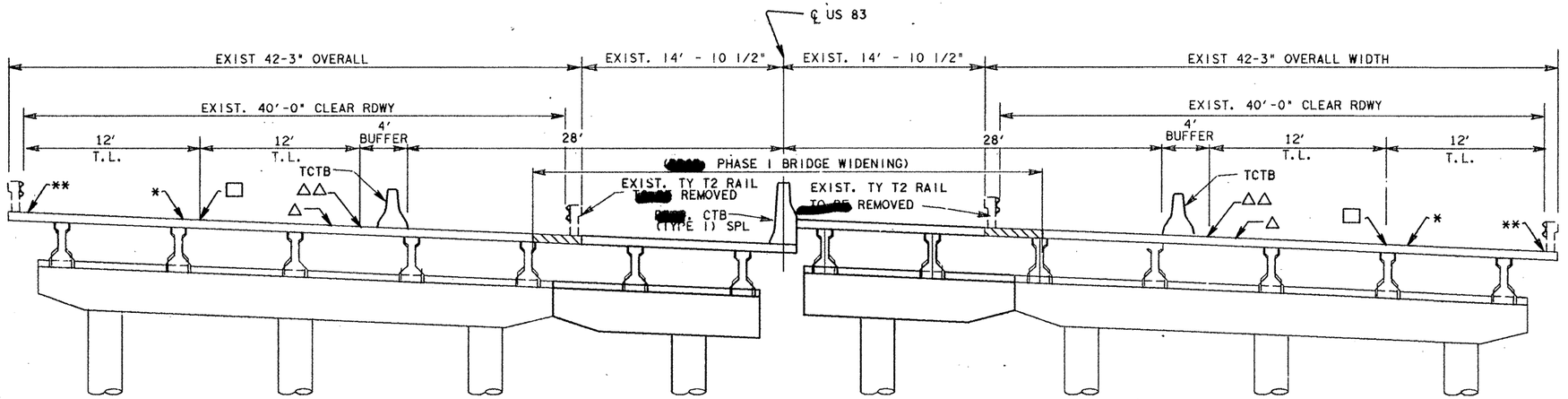

PHASE I-A SUGAR ROAD OVERPASS

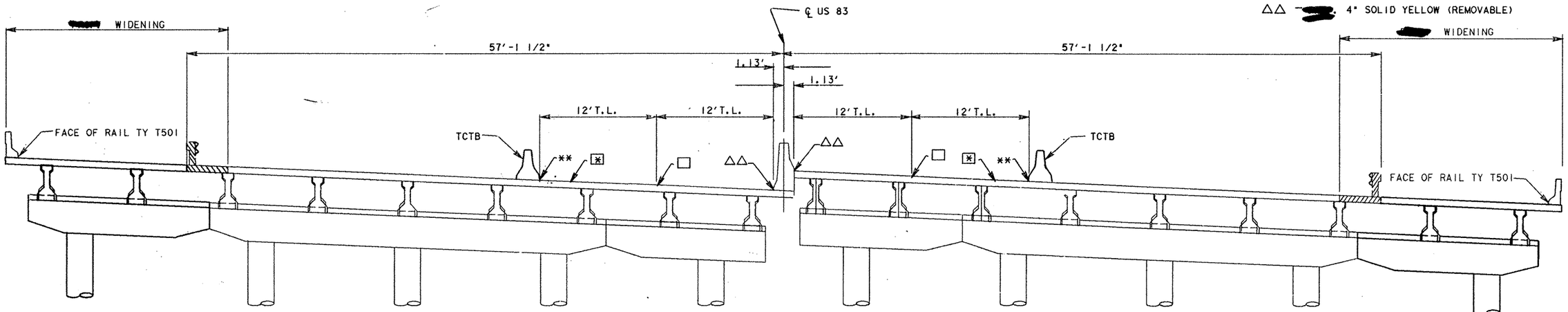

PHASE III - SEQ. I CONSTRUCTION

SUGAR RD. OVERPASS

LEGEND:

T.L. – TRAVEL LANE
TCTB – TEMPORARY CONC. TRAFFIC BARRIER
* – EXIST. 4" SOLID WHITE ([redacted] REMOVED)
⊠ – EXIST. 4" SOLID YELLOW ([redacted] REMOVED)
△ – EXIST. 4" DASHED WHITE ([redacted] REMOVED)
□ – [redacted] 4" DASHED WHITE (REMOVABLE)
** – [redacted] 4" SOLID WHITE (REMOVABLE)
△△ – [redacted] 4" SOLID YELLOW (REMOVABLE)

STATE OF TEXAS
MARIO R. JORGE
65536
REGISTERED
Mario R. Jorge, P.E
3-3-92

TYPICAL OVERPASS SECTIONS
TRAFFIC CONTROL PLAN

SHEET 4 OF 24 SHEETS

FED. ROAD DIV. NO.	STATE	FEDERAL AID PROJECT NO.			SHEET NO.
6	TEXAS	NH92-(50)M			13
STATE DIST. NO.	COUNTY	CONT. NO.	SEC. NO.	JOB NO.	HIGHWAY NO.
21	HIDALGO	39	17	97	US 83

⊛ EXISTING ACP [redacted] SALVAGED AND RECYCLED FOR USE IN THE TY "B" ACP. EXISTING FLEXIBLE BASE [redacted] SALVAGED AND REPLACED.

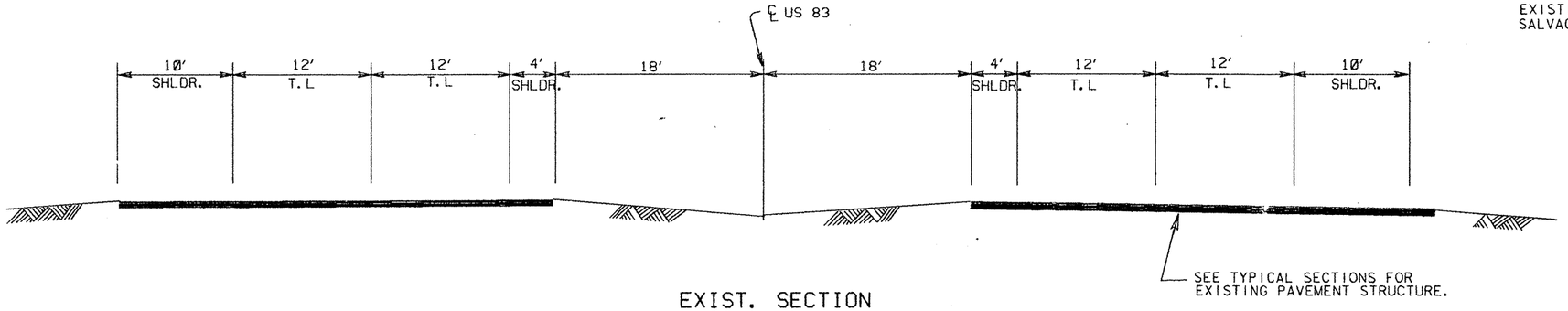

EXIST. SECTION

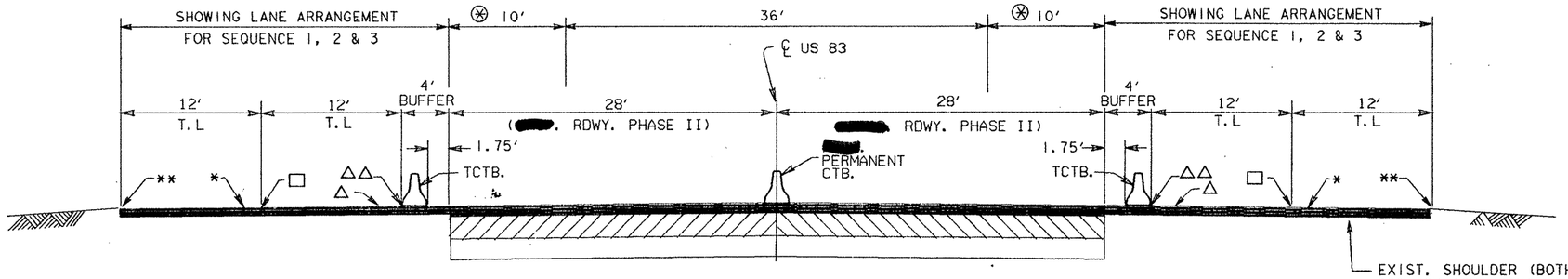

(2 LANES EACH DIRECTION)

PHASE II CONSTRUCTION

EXIST. SHOULDER (BOTH SIDES) [redacted] OVERLAYED WITH 228#/SY ACP (TY"D") LEVEL-UP PRIOR TO OPENING AS A TRAFFIC LANE (EST. 18.6 TONS/STA [redacted] SUBSIDIARY TO ITEM 502.)

NOTE:
THE PAVEMENT STRUCTURE AND CROSS - SLOPES [redacted] AS SHOWN ON TYPICAL SECTIONS.

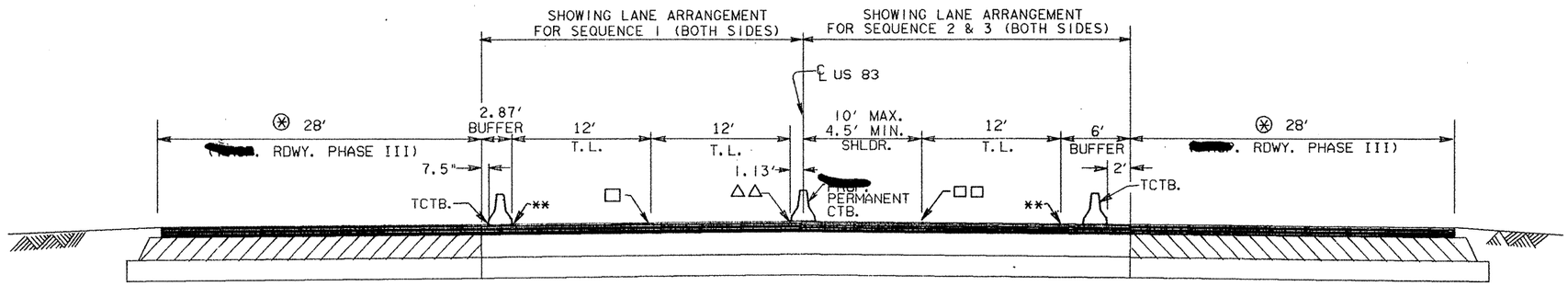

(2 OR 1 LANE EACH DIRECTION)

PHASE III CONSTRUCTION

LEGEND:

T.L. – TRAVEL LANE
TCTB – TEMPORARY CONC. TRAFFIC BARRIER
* – EXIST. 4" SOLID WHITE (TO BE REMOVED)
△ – EXIST. 4" DASHED WHITE (TO BE REMOVED)
□ – PROP. 4" DASHED WHITE (REMOVABLE)
* * – PROP. 4" SOLID WHITE (REMOVABLE)
△ △ – PROP. 4" SOLID YELLOW (REMOVABLE)
□ □ – PROP. 4" SOLID YELLOW (NON-REMOVABLE)

STATE OF TEXAS
MARIO R. JORGE
65538
REGISTERED
ENGINEER
Mario R. Jorge P.E.
10-31-97

PHASE II & III CONSTRUCTION

TRAFFIC CONTROL PLAN

SHEET 5 OF 24 SHEETS

FED. ROAD DIV. NO.	STATE	FEDERAL AID PROJECT NO.			SHEET NO.
6	TEXAS	NH 92 (50) M			14
STATE DIST. NO.	COUNTY	CONT. NO.	SEC. NO.	JOB NO.	HIGHWAY NO.
21	HIDALGO	39	17	97	US 83

NOTES:

1. WHILE ERECTING BEAMS AND CONSTRUCTING BRIDGE DECK WIDENING, THE CONTRACTOR [illegible] PROVIDE ADEQUATE PROTECTION TO TRAFFIC BELOW. THIS WORK [illegible] PERFORMED IN SUCH A MANNER AS TO MINIMIZE DELAY TO THE TRAVELING PUBLIC.

2. THE CONTRACTOR [illegible] MODIFY THE RECOMMENDED SEQUENCE OF CONSTRUCTION SUBJECT TO APPROVAL BY THE ENGINEER.

PHASE I-A
(SUGAR ROAD OVERPASS)

SEQUENCE 1

1. INSTALL PLASTIC DRUMS WITH APPROPRIATE CONSTRUCTION WARNING SIGNS AND BARRICADES TO CLOSE THE SUGAR ROAD OUTSIDE LANES AS SHOWN.

2. EXISTING SOUTH BOUND LANE ASSIGNMENT SIGNS (ONE (1) GROUND-MOUNTED AND ONE (1) SIGNAL MAST ARM MOUNTED) [illegible] COVERED FOR THE DURATION OF THE SOUTH BOUND OUTSIDE LANE CLOSURE.

3. REMOVE TWO (2) EXISTING LEFT TURN ARROW PAVEMENT MARKINGS ON SOUTH BOUND INSIDE LANE.

4. INSTALL FOUR (4) RIGHT TURN ARROWS AND WORDS "ONLY" PAVEMENT MARKINGS WITH LANE ASSIGNMENT SIGNS AS SHOW, AND REMOVE THESE MARKINGS AND SIGNS WHEN THEY NO LONGER APPLY.

5. CONSTRUCT LEFT & RIGHT BENTS AND ABUTMENT WIDENINGS AND RIP RAP TO COMPLETION.

SEQUENCE 2

1. INSTALL TEMPORARY CONC. TRAFFIC BARRIER, TEMPORARY BARREL MOUNTED METAL BEAM GUARD FENCE, AND A 660 FT. PLASTIC DRUM MAIN LANE DETOUR WITH APPROPRIATE CONSTRUCTION PAVEMENT MARKINGS AND CONSTRUCTION WARNING SIGNS FOR EACH APPROACH DIRECTION OF TRAVEL AS SHOWN ON SHEET 10 OF 24.

2. REMOVE EXIST TY T2 RAILS, REMOVE BRIDGE DECKS TO BREAK BACK LINE, ERECT BRIDGE PRESTRESSED CONC. BEAMS AND CONSTRUCT BRIDGE DECK AND INSIDE CONCRETE TRAFFIC BARRIER TO COMPLETION.

NOTE: THIS SEQUENCE [illegible] PERFORMED IN CONJUNCTION WITH PHASE II ROADWAY CONSTRUCTION.

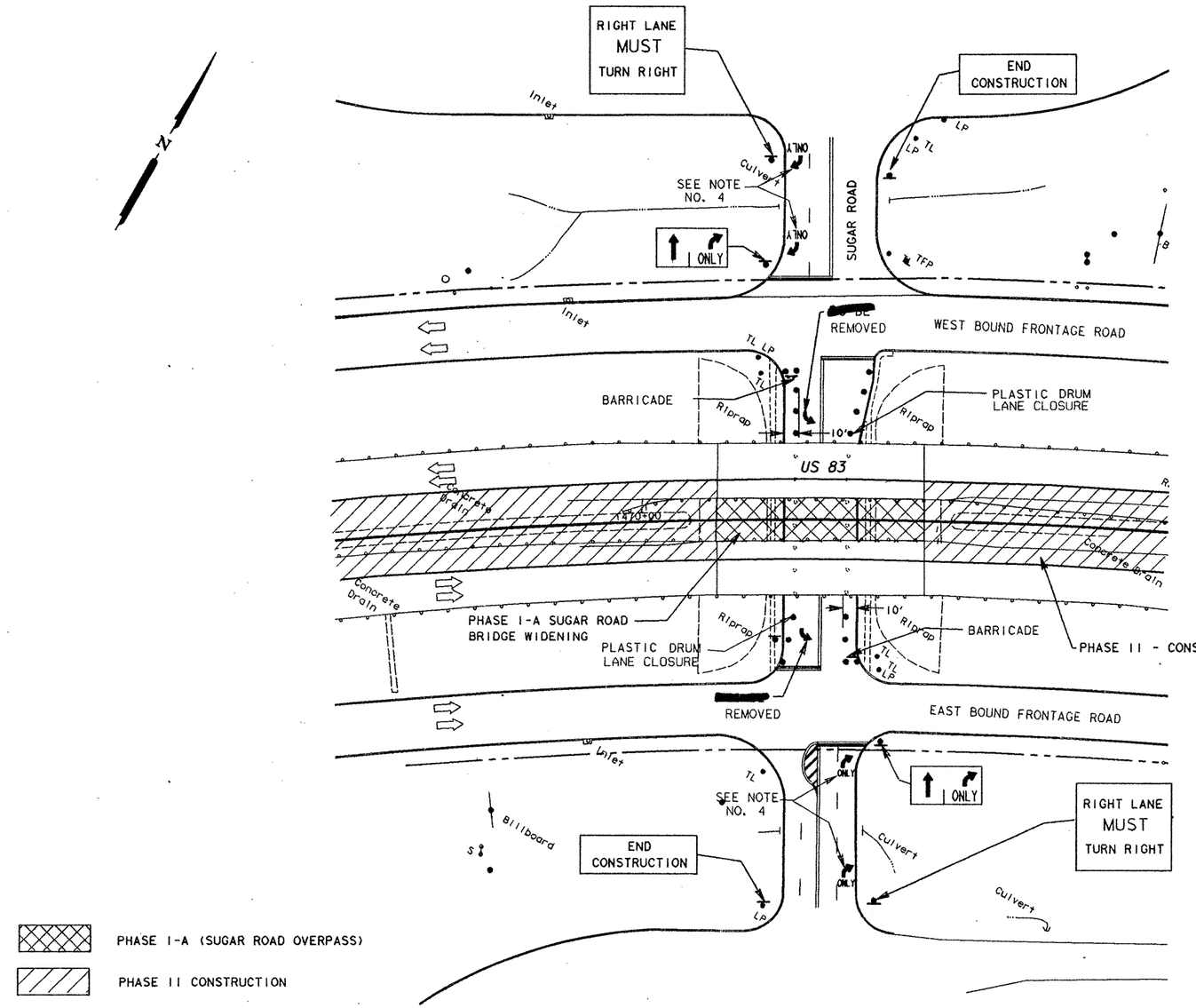

MARIO R. JORGE 85538 STATE OF TEXAS

Mario R. Jorge, P.E.
10-31-91

PHASE I-A SUGAR ROAD OVERPASS

TRAFFIC CONTROL PLAN

SHEET 6 OF 24 SHEETS

FED. ROAD DIV. No.	STATE	FEDERAL AID PROJECT NO.			SHEET NO.
6	TEXAS	NH 92 (50)M			15
STATE DIST. NO.	COUNTY	CONT. NO.	SEC. NO.	JOB NO.	HIGHWAY NO.
21	HIDALGO	39	17	9[illegible]	US 83

NOTES:

1. US 281 CENTER LEFT TURN LANES [redacted] NOT [redacted] CLOSED AT THE SAME TIME THE OUTSIDE LANES ARE CLOSED.
2. THE CONTRACTOR S[redacted] MAINTAIN AT LEAST TWO (2) LANES OPEN TO TRAFFIC IN EACH DIRECTION OF TRAVEL AT ALL TIMES.
3. THE CONTRACTOR S[redacted] COVER EXISTING PERMANENT SIGNS WHEN IN CONFLICT WITH TRAFFIC MOVEMENTS OR WHEN NOT APPLICABLE DURING A CERTAIN SEQUENCE OF CONSTRUCTION. THE CONTRACTOR [redacted] UNCOVER THE SIGNS WHEN CONDITIONS RETURN TO THOSE FOR WHICH THE SIGNS WERE INTENDED.
4. WHILE ERECTING BEAMS AND CONSTRUCTING BRIDGE DECK WIDENING, THE CONTRACTOR [redacted] PROVIDE ADEQUATE PROTECTION TO TRAFFIC BELOW. THIS WORK [redacted] PERFORMED IN SUCH A MANNER AS TO MINIMIZE DELAY TO THE TRAVELING PUBLIC.
5. THE CONTRACTOR [redacted] MODIFY THE RECOMMENDED SEQUENCE OF CONSTRUCTION SUBJECT TO APPROVAL BY THE ENGINEER.

PHASE I - B (US281 OVERPASS)

SEQUENCE 1

1. INSTALL PLASTIC DRUMS WITH APPROPRIATE CONSTRUCTION WARNING SIGNS AT US 281 CENTER LANE CLOSURE AS SHOWN.
2. MODIFY BRIDGE RAIL MOUNTED LANE ASSIGNMENT SIGNS FOR US 281 NORTH AND SOUTH BOUND TO COMPLEMENT TRAFFIC MOVEMENTS. (LEFT TURN ARROW SIGN [redacted] COVERED AND ADD LEFT TURN ARROW TO STRAIGHT THRU ARROW SIGN)
3. CONSTRUCT CENTER BENTS TO COMPLETION.

SEQUENCE 2

1. REMOVE PLASTIC DRUMS FROM SEQUENCE I AND INSTALL THEM WITH APPROPRIATE CONSTRUCTION WARNING SIGNS TO CLOSE OUTSIDE LANES AS SHOWN.
2. REMOVE EXISTING PAVEMENT MARKINGS AT NORTH & SOUTH SIDE INSIDE FOR NORTH & SOUTH BOUND TRAFFIC AS SHOWN AND REMOVE LEFT TURN ONLY ARROW AND WORD PAVEMENT MARKINGS ON BOTH INSIDE LANES TO PROVIDE AN ADDITIONAL STRAIGHT THRU LANE IN EACH DIRECTION.
3. INSTALL PLASTIC DRUMS, RIGHT TURN ARROW AND WORDS "ONLY" PAVEMENT MARKINGS WITH APPROPRIATE SIGNS [redacted] PROVIDE RIGHT TURN ONLY LANES (NORTH BOUND RIGHT AND SOUTH BOUND RIGHT) AS SHOWN.
4. MODIFY BRIDGE MOUNTED LANE ASSIGNMENT SIGNS [redacted] COMPLEMENT TRAFFIC MOVEMENTS (UNCOVER LEFT TURN ARROW SIGN AND ADD STRAIGHT THRU ARROW AND REMOVE LEFT TURN ARROW ADDED ON SEQUENCE I ABOVE.
5. INSTALL PLASTIC DRUMS, BARRICADES WITH APPROPRIATE SIGNS AND CLOSE TURN AROUND LANES AS SHOWN.
6. STATE FORCES TO MODIFY "LEFT TURN ONLY" SIGNAL HEADS [redacted] PROVIDE PROTECTED AND PERMISSIVE LEFT TURN MOVEMENTS FOR BOTH DIRECTIONS OF TRAVEL.
7. CONSTRUCT REMAINING BENTS, ABUTMENTS AND RIP-RAP TO COMPLETION.

SEQUENCE 3

1. INSTALL TEMPORARY CONC. TRAFFIC BARRIER, TEMPORARY BARREL MOUNTED METAL BEAM GUARD FENCE, AND A 660 FT. PLASTIC DRUM MAIN LANE DETOUR WITH APPROPRIATE CONSTRUCTION PAVEMENT MARKINGS AND CONSTRUCTION WARNING SIGNS FOR EACH APPROACH DIRECTION OF TRAVEL AS SHOWN ON SHEET 10 OF 24.
2. REMOVE EXISTING TY 2 RAILS, REMOVE BRIDGE DECKS TO BREAK BACK LINE, ERECT BRIDGE PRESTRESSED CONC. BEAMS AND CONSTRUCT BRIDGE DECK AND INSIDE CONC. TRAFFIC RAIL TO COMPLETION.

NOTE: THIS SEQUENCE [redacted] PERFORMED IN CONJUNCTION WITH PHASE II ROADWAY CONSTRUCTION.

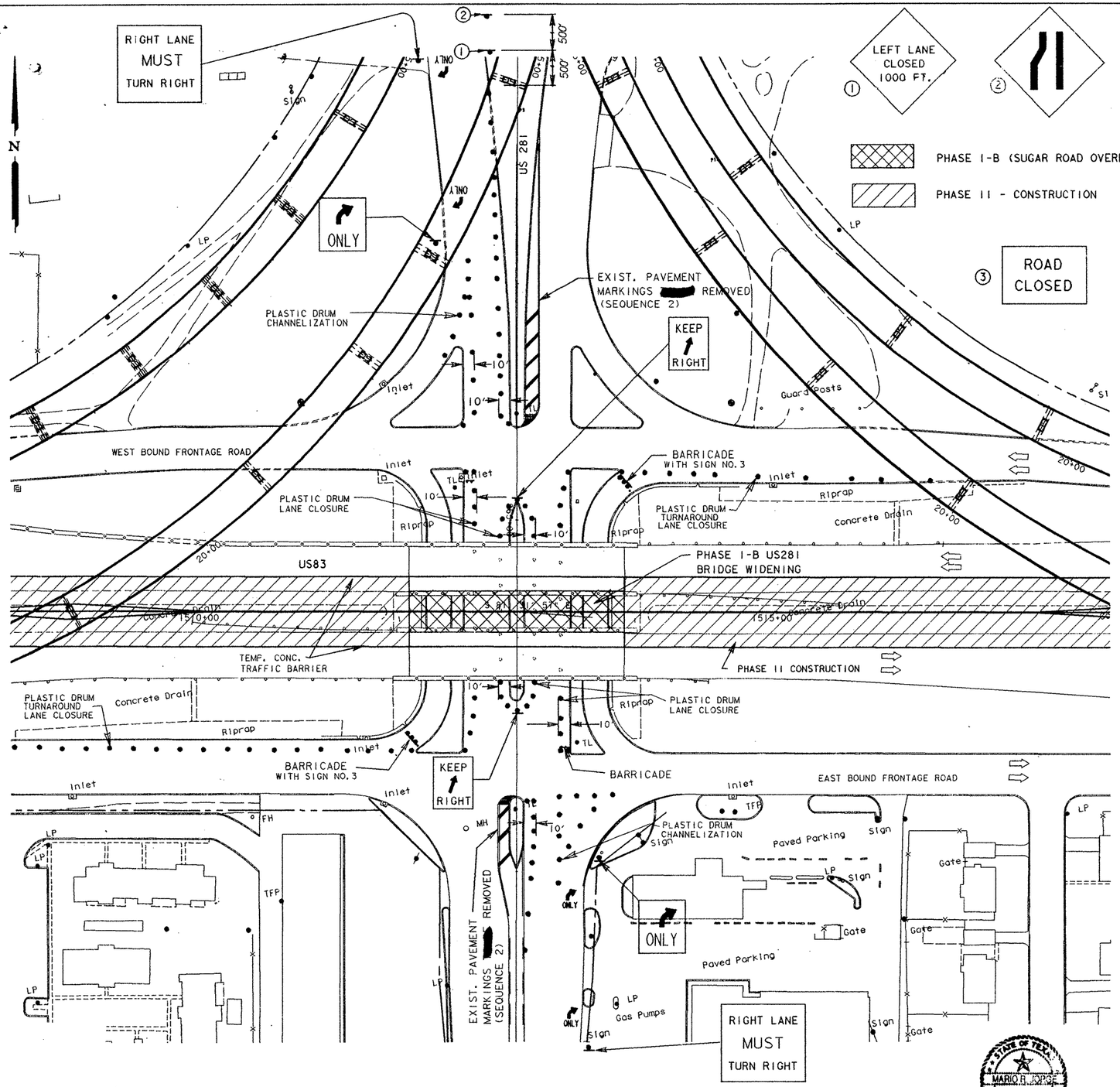

Mario R. Jorge, P.E.
10-31-91

PHASE I-B US 281 OVERPASS

TRAFFIC CONTROL PLAN

SHEET 7 OF 24 SHEETS

FED. ROAD DIV. NO.	STATE	FEDERAL AID PROJECT NO.				SHEET NO.
6	TEXAS	NH 92 (50)M				16
STATE DIST. NO.	COUNTY		CONT. NO.	SEC. NO.	JOB NO.	HIGHWAY NO.
21	HIDALGO		39	17	97	US 83

PHASE II CONSTRUCTION

SEQUENCE I

1. CONSTRUCT 228#/SY (TY"D") ACP LEVEL-UP COURSE ON BOTH EXISTING OUTSIDE SHOULDERS UNDER TRAFFIC PRIOR TO USING AS TRAFFIC LANES.
2. REMOVE 4" SOLID WHITE EDGE STRIPE AND 4" DASHED WHITE STRIPES AND RAISE REFLECTIVE PAVEMENT MARKERS AS SHOWN.
3. INSTALL 4" SOLID WHITE AND YELLOW EDGE LINES AND 4" DASHED WHITE STRIPES WITH REMOVABLE CONSTRUCTION PAVEMENT MARKINGS AS SHOWN ON PHASE II CONSTRUCTION SECTION. REMOVE STRIPE WHEN SECTION IS OPEN TO TRAFFIC .
4. INSTALL TEMPORARY CONC. TRAFFIC BARRIER, TEMPORARY BARREL MOUNTED METAL BEAM GUARD FENCE AND PLASTIC DRUM MAIN LANE DETOUR WITH APPROPRIATE CONSTRUCTION PAVEMENT MARKINGS AND CONSTRUCTION WARNING SIGNS AT EACH END OF SEQUENCE I FOR BOTH DIRECTIONS OF TRAVEL.

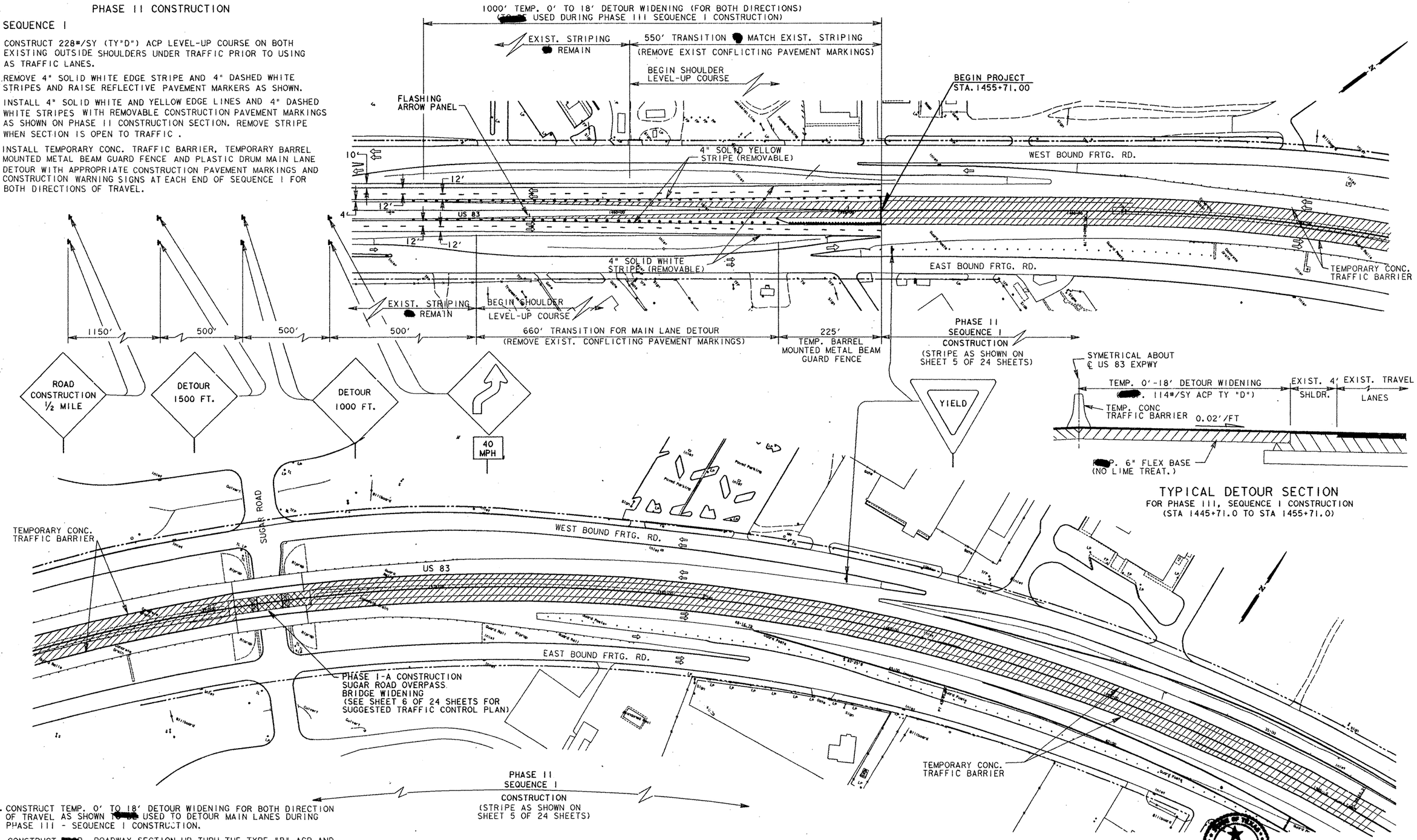

TYPICAL DETOUR SECTION
FOR PHASE III, SEQUENCE I CONSTRUCTION
(STA 1445+71.0 TO STA 1455+71.0)

5. CONSTRUCT TEMP. 0' TO 18' DETOUR WIDENING FOR BOTH DIRECTION OF TRAVEL AS SHOWN TO BE USED TO DETOUR MAIN LANES DURING PHASE III - SEQUENCE I CONSTRUCTION.
6. CONSTRUCT [redacted]P. ROADWAY SECTION UP THRU THE TYPE "B" ACP AND THE FIRST COURSE OF TY"D" SURF ACP. AND CONSTRUCT THE PROP. CONC. TRAFFIC BARRIER TO COMPLETION.
7. RE-INSTALL 4" WHITE DASHED STRIPES AND 4" SOLID WHITE AND YELLOW EDGE LINES WHEN SECTION IS OPEN TO TRAFFIC.

PHASE I - CONSTRUCTION

PHASE II - CONSTRUCTION

STATE OF TEXAS
MARIO R. JORGE
65536
REGISTERED
PROFESSIONAL ENGINEER
10-31-91

PHASE II - CONSTRUCTION
TRAFFIC CONTROL PLAN

SHEET 8 OF 24 SHEETS

FED. ROAD DIV. NO.	STATE	FEDERAL AID PROJECT NO.			SHEET NO.
6	TEXAS	NH 92 (50) M			17
STATE DIST. NO.	COUNTY	CONT. NO.	SEC. NO.	JOB NO.	HIGHWAY NO.
21	HIDALGO	39	17	97	US 83

GENERAL NOTES:

1. CONSTRUCT BENT NO. 18 OF RAMP NO. 2 AND BENT NO. 18 OF RAMP NO. 3 DURING PHASE II SEQUENCE I CONSTRUCTION IN ORDER TO MINMIZE ADDITIONAL TRAFFIC CONTROL IN THE MEDIAN AREA DURING SUBSEQUENT PHASES OF CONSTRUCTION.

2. FOR PHASE II, SEQUENCE I WEST BOUND APPROACH, INSTALL TEMPORARY BARREL MOUNTED METAL BEAM GUARD FENCE, PLASTIC DRUM MAIN LANE DETOUR WITH APPROPRIATE CONSTRUCTION PAVEMENT MARKINGS AND CONSTRUCTION WARNING SIGNS AS SHOWN ON SHEET 10 OF 24 AND REMOVE THE CONFLICTING PAVEMENT MARKINGS AS SHOWN.

3. FOR PHASE II, SEQUENCE 2 EAST BOUND APPROACH, INSTALL TEMPORARY BARREL MOUNTED METAL BEAM GUARD FENCE, PLASTIC DRUM MAIN LANE DETOUR WITH APPROPRIATE CONSTRUCTION PAVEMENT MARKINGS AND CONSTRUCTION WARNING SIGNS AS SHOWN ON SHEET 8 OF 24 AND REMOVE THE CONFLICTING PAVEMENT MARKINGS AS SHOWN.

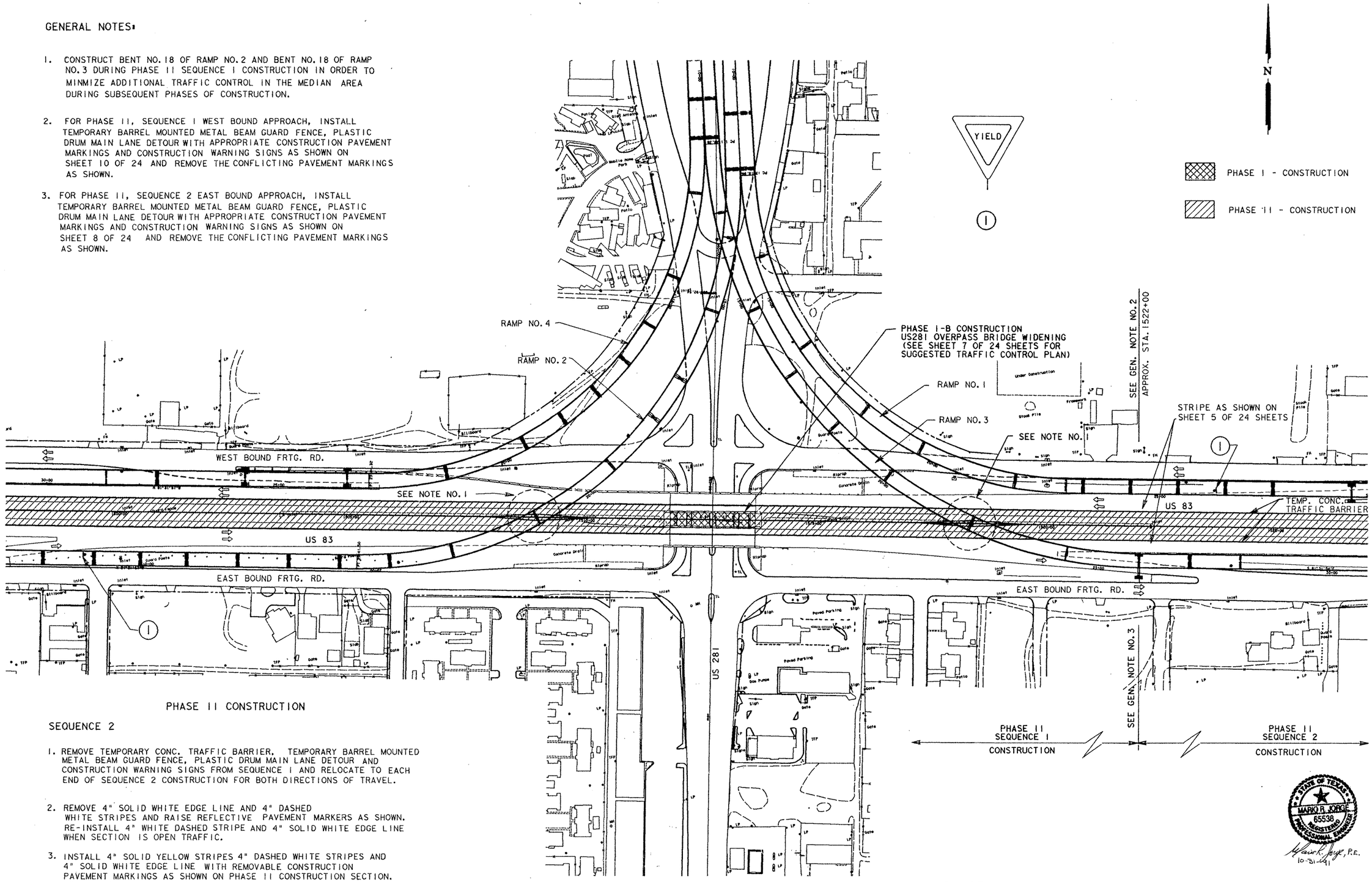

PHASE II CONSTRUCTION

SEQUENCE 2

1. REMOVE TEMPORARY CONC. TRAFFIC BARRIER, TEMPORARY BARREL MOUNTED METAL BEAM GUARD FENCE, PLASTIC DRUM MAIN LANE DETOUR AND CONSTRUCTION WARNING SIGNS FROM SEQUENCE I AND RELOCATE TO EACH END OF SEQUENCE 2 CONSTRUCTION FOR BOTH DIRECTIONS OF TRAVEL.

2. REMOVE 4" SOLID WHITE EDGE LINE AND 4" DASHED WHITE STRIPES AND RAISE REFLECTIVE PAVEMENT MARKERS AS SHOWN. RE-INSTALL 4" WHITE DASHED STRIPE AND 4" SOLID WHITE EDGE LINE WHEN SECTION IS OPEN TRAFFIC.

3. INSTALL 4" SOLID YELLOW STRIPES 4" DASHED WHITE STRIPES AND 4" SOLID WHITE EDGE LINE WITH REMOVABLE CONSTRUCTION PAVEMENT MARKINGS AS SHOWN ON PHASE II CONSTRUCTION SECTION. REMOVE STRIPE WHEN SECTION IS OPEN TO TRAFFIC .

4. CONSTRUCT [redacted]. ROADWAY SECTION UP THRU TYPE "B" ACP AND FIRST COURSE OF TY"D" SURF ACP. AND CONSTRUCT THE [redacted]. CONC TRAFFIC BARRIER TO COMPLETION.

STATE OF TEXAS
MARIO R. JORGE
65538
REGISTERED
PROFESSIONAL ENGINEER

Mario R. Jorge, P.E.
10-31-91

PHASE II - CONSTRUCTION

TRAFFIC CONTROL PLAN

SHEET 9 OF 24 SHEETS

FED. ROAD DIV. NO.	STATE	FEDERAL AID PROJECT NO.				SHEET NO.
6	TEXAS	NH 92 (50)M				18
STATE DIST. NO.	COUNTY		CONT. NO.	SEC. NO.	JOB NO.	HIGHWAY NO.
21	HIDALGO		39	17	97	US 8

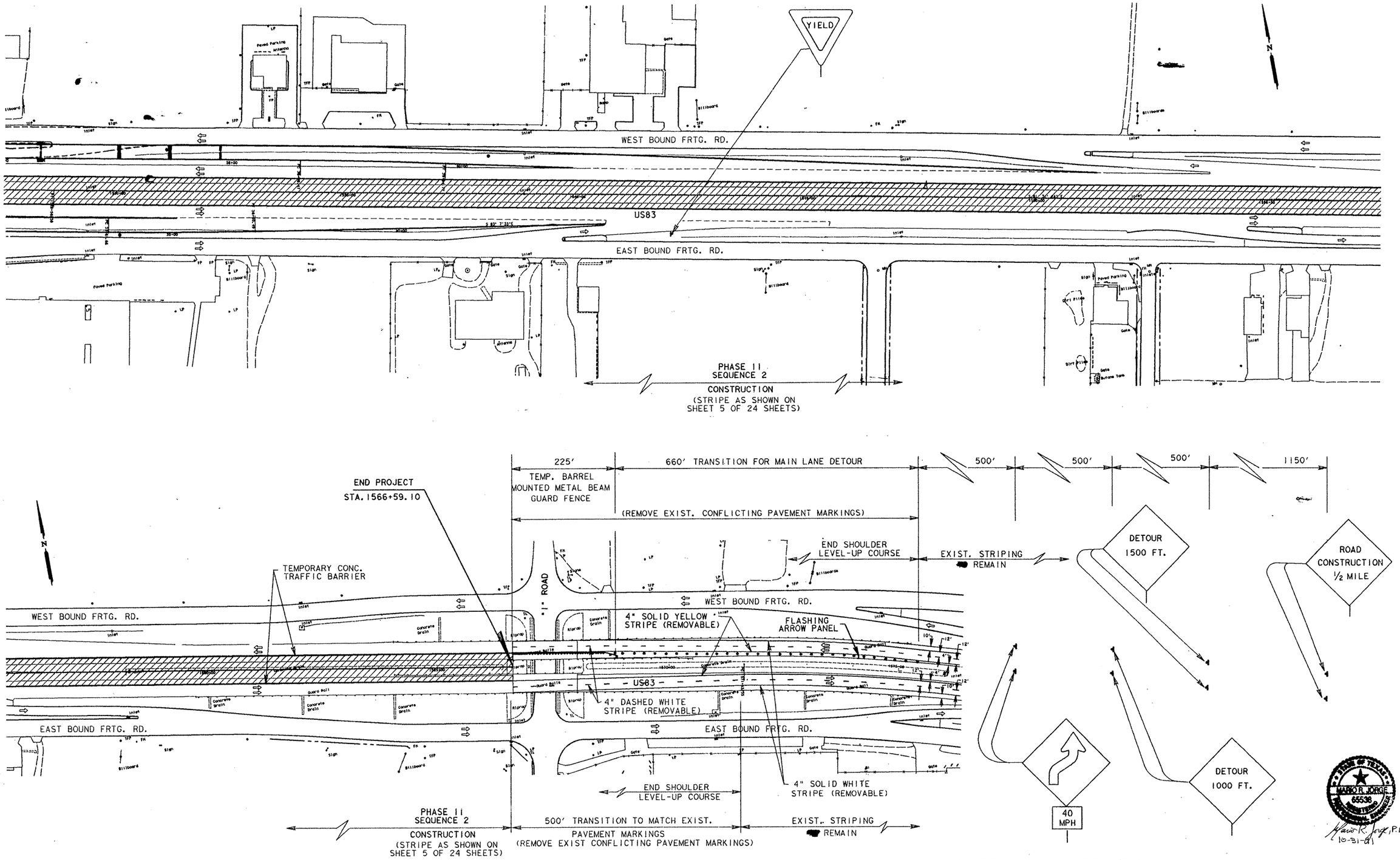

PHASE II - CONSTRUCTION

TRAFFIC CONTROL PLAN

SHEET 10 OF 24 SHEETS

STATE OF TEXAS
MAHOR JORGE
65536
LICENSED
PROFESSIONAL ENGINEER
Mahor R. Jorge, P.E.
10-31-91

FED. ROAD DIV. NO.	STATE	FEDERAL AID PROJECT NO.			SHEET NO.
6	TEXAS	NH 92 (50)M			19
STATE DIST. NO.	COUNTY	CONT. NO.	SEC. NO.	JOB NO.	HIGHWAY NO.
21	HIDALGO	39	17	97	US 83

PHASE III - A & B CONSTRUCTION

SEQUENCE I

1. INSTALL TEMPORARY CONC. TRAFFIC BARRIER, TEMPORARY BARREL MOUNTED METAL BEAM GUARD FENCE AND PLASTIC DRUM MAIN LANE DETOUR TRANSITION WITH APPROPRIATE CONSTRUCTION PAVEMENT MARKINGS AND CONSTRUCTION WARNING SIGNS AT EACH END OF SEQUENCE I FOR BOTH DIRECTIONS OF TRAVEL.

2. REMOVE 4" SOLID YELLOW STRIPES, 4" DASHED WHITE STRIPES AND RAISE REFLECTIVE PAVEMENT MARKERS [redacted]

3. INSTALL 4" SOLID YELLOW AND WHITE EDGE LINES AND INSTALL 4" DASHED WHITE STRIPES WITH REMOVABLE CONSTRUCTION PAVEMENT MARKINGS [redacted] ON PHASE III CONSTRUCTION SECTION.

4. CLOSE US281, PHARR AND EDINBURG EXIT RAMP DURING PHASE III-B, SEQUENCE I AND INSTALL TEMPORARY EXIT GUIDE SIGNS AT THE EAST BOUND SUGAR ROAD EXIT [redacted] ON SHEET 14 OF 24 SHEETS

5. CLOSE WEST BOUND ENTRANCE RAMP AT STA. 1485+00 DURING PHASE III-A SEQUENCE I AND ROUTE ALL WEST BOUND TRAFFIC TO ENTRANCE RAMP WEST OF SUGAR ROAD.

6. CLOSE US 83 BUS., JACKSON ROAD EXIT RAMP DURING PHASE III-A, SEQUENCE I AND INSTALL TEMPORARY EXIT GUIDE SIGNS AT THE WEST BOUND SUGAR ROAD EXIT [redacted] ON SHEET 14 OF 24 SHEETS.

7. CLOSE EAST BOUND ENTRANCE RAMP AT STA. 1455+7[redacted] DURING PHASE III-B SEQUENCE I AND ROUTE ALL EAST BOUND TRAFFIC TO ENTRANCE RAMP EAST OF SUGAR ROAD.

8. CONSTRUCT [redacted]. ROADWAY SECTION UP THRU THE TYPE "B" ACP AND FIRST COURSE OF TYPE "D" ACP & CONSTRUCT SUGAR RD. BRIDGE WIDENING TO THE OUTSIDE.

9. REMOVE ALL CONSTRUCTION DETOUR PAVEMENT MARKINGS AND RE-INSTALL 4" WHITE DASHED STRIPE AND 4" SOLID YELLOW STRIPES, SECTION IS OPEN TRAFFIC.

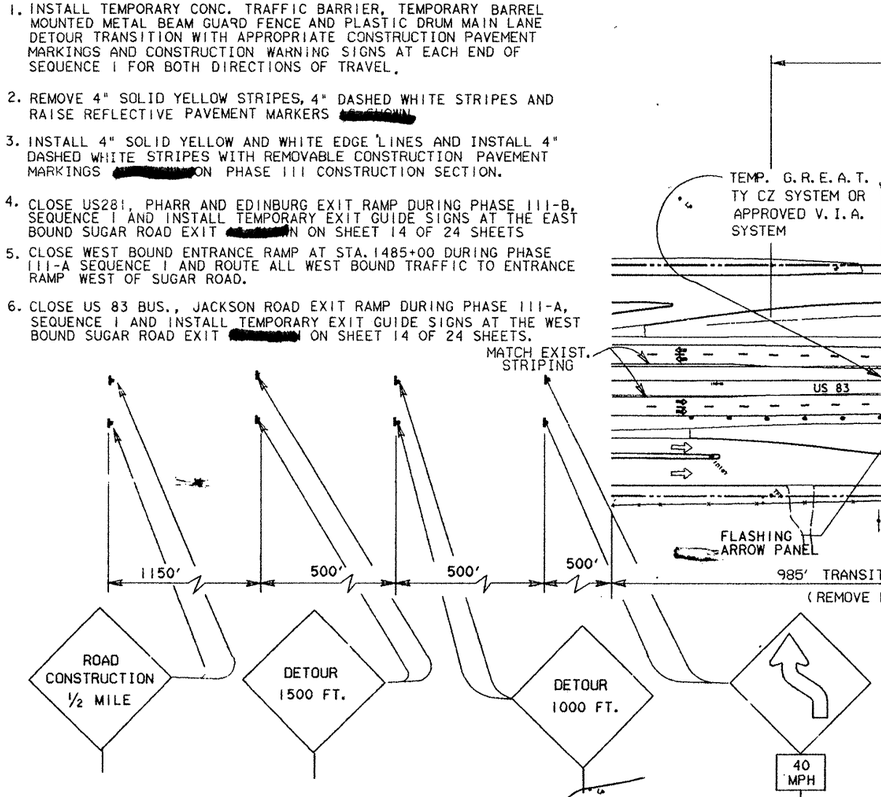

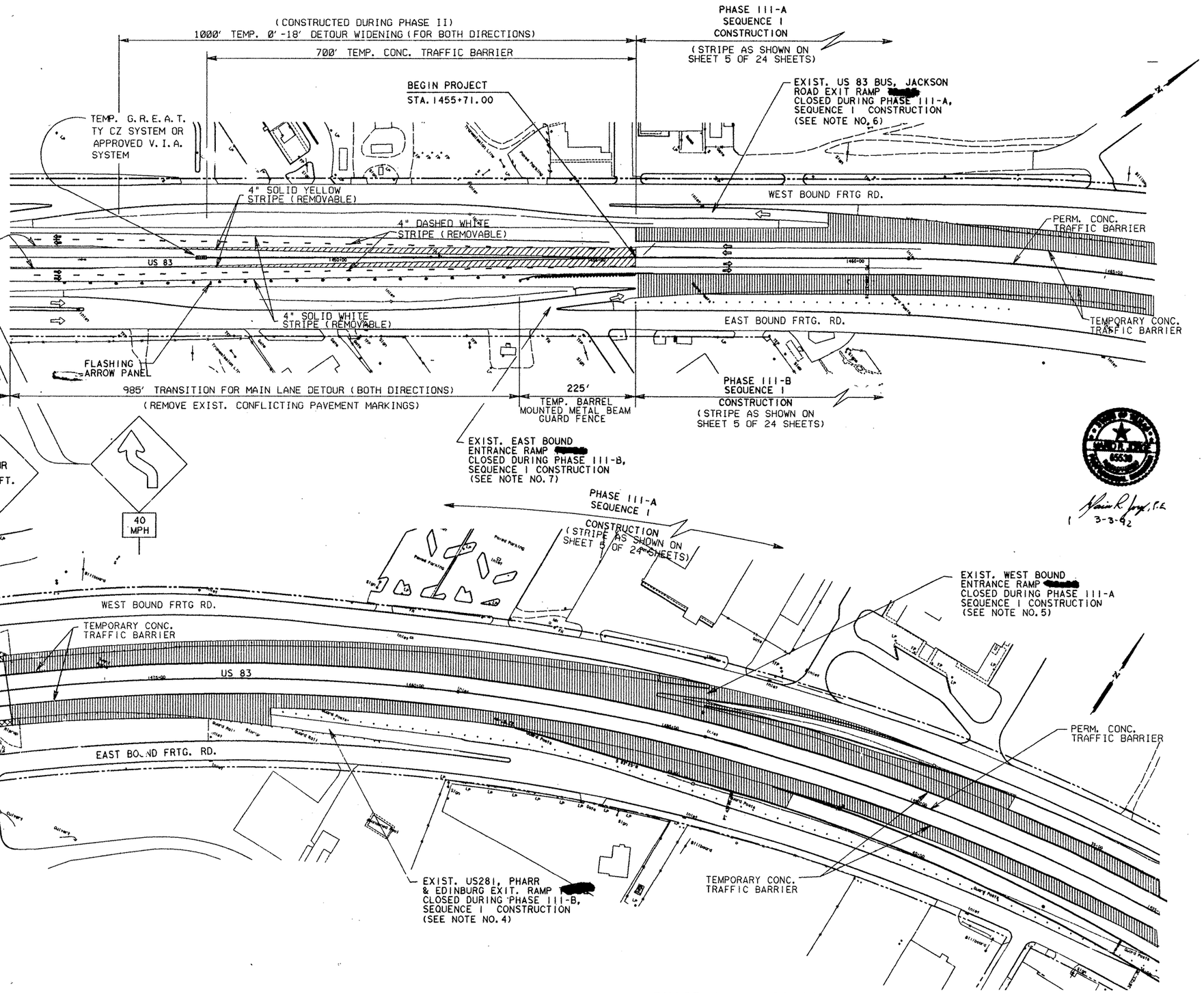

PHASE III - CONSTRUCTION

BRIDGE WIDENING CONSTRUCTION

PHASE III - CONSTRUCTION
TRAFFIC CONTROL PLAN

SHEET 11 OF 24 SHEETS

3-3-92

FED. ROAD DIV. NO.	STATE	FEDERAL AID PROJECT NO.				SHEET NO.
6	TEXAS	NH 82-(5D)M				20
STATE DIST. NO.	COUNTY	CONT. NO.	SEC. NO.	JOB NO.		HIGHWAY NO.
21	HIDALGO	39	17	97		US 83

SEQUENCE 2 PHASE III - A & B CONSTRUCTION

1. OPEN THE US 281, PHARR, EDINBURG EXIT RAMP AND THE WEST BOUND ENTRANCE RAMP AT STA. 1485+00 AND REMOVE TEMPORARY GUIDE SIGNS AND DETOUR SIGNS INSTALLED DURING SEQUENCE 1.
2. REMOVE TEMPORARY CONC. TRAFFIC BARRIER, TEMPORARY BARREL MOUNTED METAL BEAM GUARD FENCE, PLASTIC DRUM MAIN LANE DETOUR, CONSTRUCTION PAVEMENT MARKINGS AND CONSTRUCTION WARNING SIGNS FROM SEQUENCE 1.
3. INSTALL TEMPORARY CONC. TRAFFIC BARRIER, TEMPORARY BARREL MOUNTED METAL BEAM GUARD FENCE, PLASTIC DRUM LANE CLOSURE TRANSITION WITH APPROPRIATE CONSTRUCTION PAVEMENT MARKINGS AND CONSTRUCTION WARNING SIGNS AT EACH END OF SEQUENCE 2 FOR BOTH DIRECTIONS OF TRAVEL AS SHOWN ON SHEET 13 OF 24 SHEETS
4. REMOVE 4" DASHED WHITE STRIPES AND RAISE REFLECTIVE PAVEMENT MARKERS AS SHOWN. RE-INSTALL 4" WHITE DASHED STRIPE WHEN SECTION IS OPEN TRAFFIC
5. INSTALL 4" SOLID YELLOW STRIPES WITH NON-REMOVABLE CONSTRUCTION PAVEMENT MARKINGS AND INSTALL 4" SOLID WHITE STRIPES WITH REMOVABLE CONSTRUCTION PAVEMENT MARKINGS AS SHOWN ON PHASE III CONSTRUCTION SECTION. REMOVE 4" SOLID WHITE STRIPES AFTER SECTION IS OPEN TO TRAFFIC.
6. CLOSE SUGAR ROAD AND POLK AVE. EXIT RAMP DURING PHASE III-A, SEQUENCE 2 AND INSTALL TEMPORARY EXIT GUIDE SIGNS AT THE "I" ROAD EXIT RAMP AS SHOWN ON SHEET 14 OF 24 SHEETS.
7. CLOSE EAST BOUND ENTRANCE RAMP AT STA. 1498+50 DURING PHASE III-B, SEQUENCE 2 AND ROUTE ALL TRAFFIC TO NEXT ENTRANCE RAMP EAST OF US 281.
8. CLOSE WEST BOUND ENTRANCE RAMP AT STA. 1527+00 DURING PHASE III-A, SEQUENCE 2 AND ROUTE ALL TRAFFIC TO NEXT ENTRANCE RAMP WEST OF US 281.
9. CONSTRUCT [redacted] ROADWAY SECTION UP THRU THE TYPE "B" ACP AND FIRST COURSE OF TY"D" ACP.

PHASE III CONSTRUCTION

GENERAL NOTES

* 1. FOR PHASE III-A, SEQUENCE 1 WEST BOUND APPROACH, INSTALL TEMPORARY BARREL MOUNTED METAL BEAM GUARD FENCE, PLASTIC DRUM MAIN LANE DETOUR WITH APPROPRIATE CONSTRUCTION PAVEMENT MARKINGS AND CONSTRUCTION WARNING SIGNS AS SHOWN ON SHEET 11 OF 24 (SAME AS EAST BOUND APPROACH) AND REMOVE THE CONFLICTING PAVEMENT MARKINGS.

** 2. FOR PHASE III-A & III-B SEQUENCE 2 & 3 EAST BOUND AND WEST BOUND APPROACHES, INSTALL TEMPORARY BARREL MOUNTED METAL BEAM GUARD FENCE, PLASTIC DRUM LANE CLOSURE TRANSITION WITH APPROPRIATE CONTRUCTION PAVEMENT MARKINGS AND CONSTRUCTION WARNING SIGNS AS SHOWN ON SHEET 13 OF 24 AND REMOVE THE CONFLICTING PAVEMENT MARKINGS.

3. SEQUENCE 1 WORK OF PHASE IV CONSTRUCTION WHICH PARALLELS US 83 MAINLANES [redacted] PERFORMED IN CONJUNCTION WITH PHASE III CONSTRUCTION.

4. THE CONTRACTOR [redacted] RELOCATE THE TEMPORARY CONC. TRAFFIC BARRIERS UPON COMPLETION OF SEQUENCE 2 & 3 ROADWAY CONSTRUCTION TO PROVIDE FOR TWO (2) TRAFFIC LANES IN EACH DIRECTION OF TRAVEL.

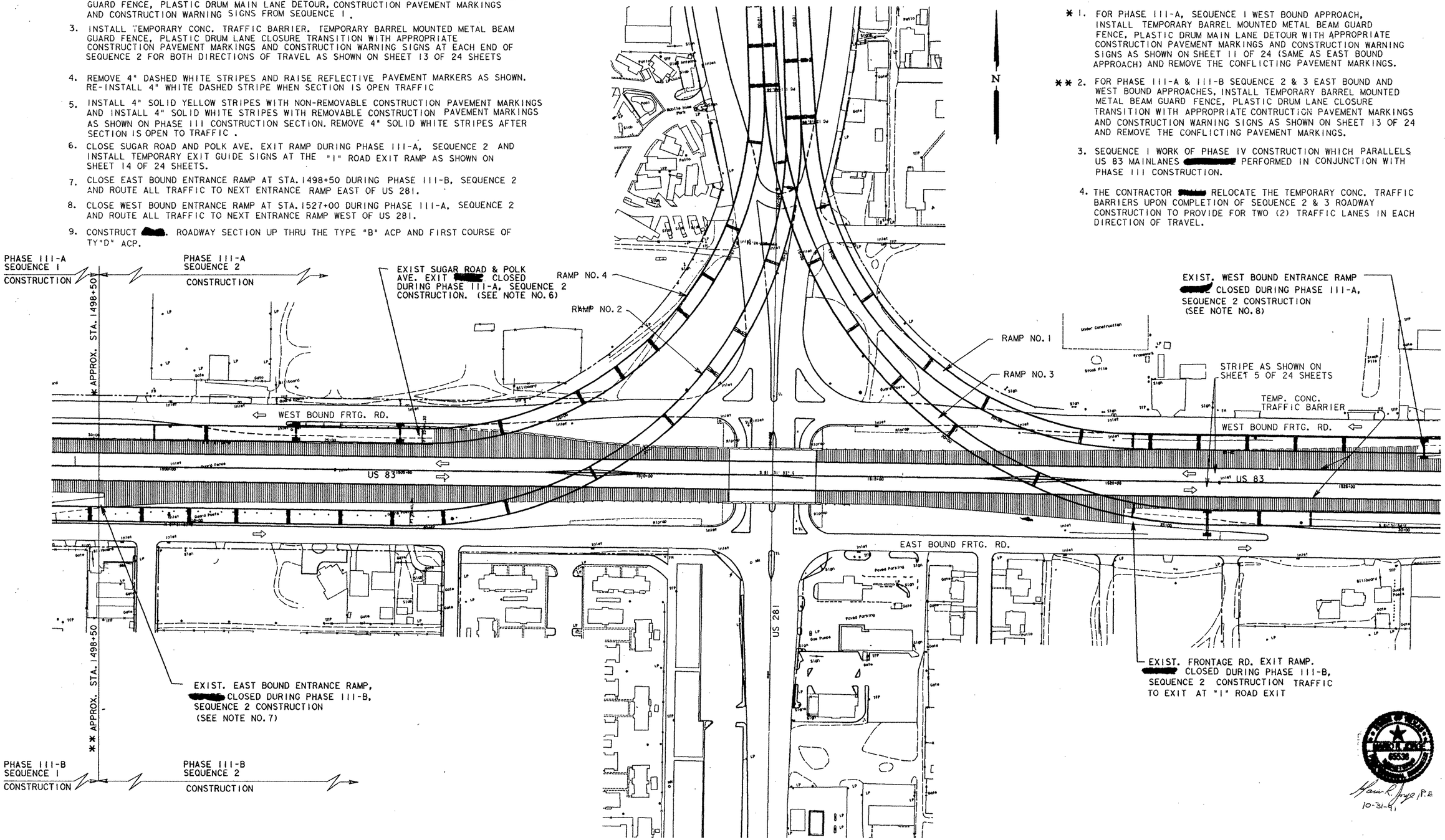

PHASE III - CONSTRUCTION

Hank R. Joyce P.E. 10-31-91

PHASE III - CONSTRUCTION

TRAFFIC CONTROL PLAN

SHEET 12 OF 24 SHEETS

FED. ROAD DIV. NO.	STATE	FEDERAL AID PROJECT NO.				SHEET NO.
6	TEXAS	NH 92 (50)M				21
STATE DIST. NO.	COUNTY		CONT. NO.	SEC. NO.	JOB NO.	HIGHWAY NO.
21	HIDALGO		39	17	97	US 83

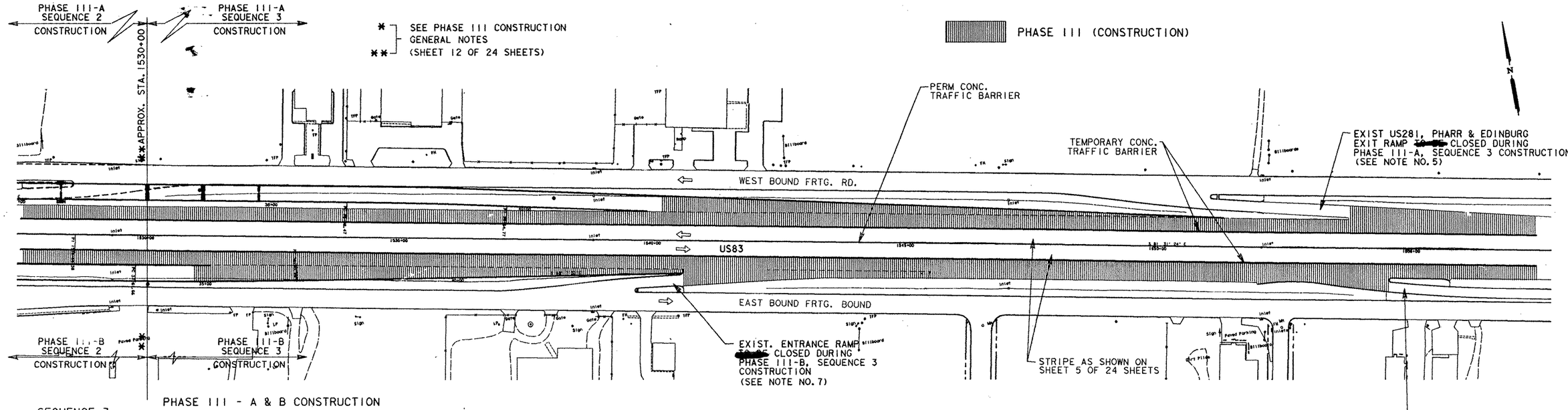

PHASE III - A & B CONSTRUCTION

SEQUENCE 3

1. OPEN THE SUGAR ROAD - POLK AVENUE EXIT RAMP, THE FRONTAGE ROAD EXIT RAMP, THE EAST BOUND ENTRANCE RAMP AT STA. 1498+50 AND THE WEST BOUND ENTRANCE RAMP AT STA. 15[illegible]+00 AND REMOVE THE TEMPORARY GUIDE SIGNS AND DETOUR SIGNS INSTALLED DURING SEQUENCE 2.
2. REMOVE TEMPORARY CONC. TRAFFIC BARRIER, TEMPORARY BARREL MOUNTED METAL BEAM GUARD FENCE, PLASTIC DRUM LANE CLOSURE TRANSITION, CONSTRUCTION PAVEMENT MARKINGS AND CONSTRUCTION WARNING SIGNS FROM SEQUENCE 2 AND RELOCATE TO EACH END END OF SEQUENCE 3 FOR BOTH DIRECTIONS OF TRAVEL.
3. REMOVE EXIST 4" DASHED WHITE STRIPES AND RAISE REFLECTIVE PAVEMENT MARKERS AS SHOWN AND RE-INSTALL 4" WHITE DASHED STRIPE WHEN SECTION IS OPEN TRAFFIC.
4. INSTALL 4" SOLID YELLOW STRIPES WITH NON-REMOVABLE CONSTRUCTION PAVEMENT MARKINGS AND INSTALL 4" SOLID WHITE STRIPES WITH REMOVABLE CONSTRUCTION PAVEMENT MARKINGS AS SHOWN ON PHASE III CONSTRUCTION SECTION. REMOVE 4" SOLID WHITE STRIPES AFTER SECTION IS OPEN TO TRAFFIC .
5. CLOSE WEST BOUND US281, PHARR & EDINBURG EXIT RAMP DURING PHASE III-A SEQUENCE 3 CONSTRUCTION AND INSTALL TEMPORARY EXIT GUIDE SIGNS AT THE WEST BOUND "I" ROAD EXIT AS SHOWN IN SHEET 14 OF 24 SHEETS.
6. CLOSE EAST BOUND "I" ROAD EXIT RAMP DURING PHASE III-B, SEQUENCE 3 CONSTRUCTION AND INSTALL TEMPORARY EXIT GUIDE SIGNS AT THE EAST BOUND FRONTAGE ROAD EXIT AS SHOWN ON SHEET 14 OF 24 SHEETS
7. CLOSE EAST BOUND ENTRANCE RAMP AT STA. 1540+50 DURING PHASE III-B, SEQUENCE 3 CONSTRUCTION AND ROUTE ALL TRAFFIC TO NEXT ENTRANCE RAMP EAST OF "I" ROAD.
8. CONSTRUCT [redacted] ROADWAY SECTION UP THRU THE TYPE "B" ACP AND THE FIRST COURSE OF TY"D" SURF ACP.
9. OPEN THE WEST BOUND US 281, PHARR EDINBURG EXIT RAMP, THE EAST BOUND "I" ROAD EXIT RAMP AND THE EXIT RAMP AT STA. 1540+50 AND REMOVE ALL TEMPORARY GUIDE SIGNS AND DETOUR SIGNS INSTALLED DURING THIS SEQUENCE.

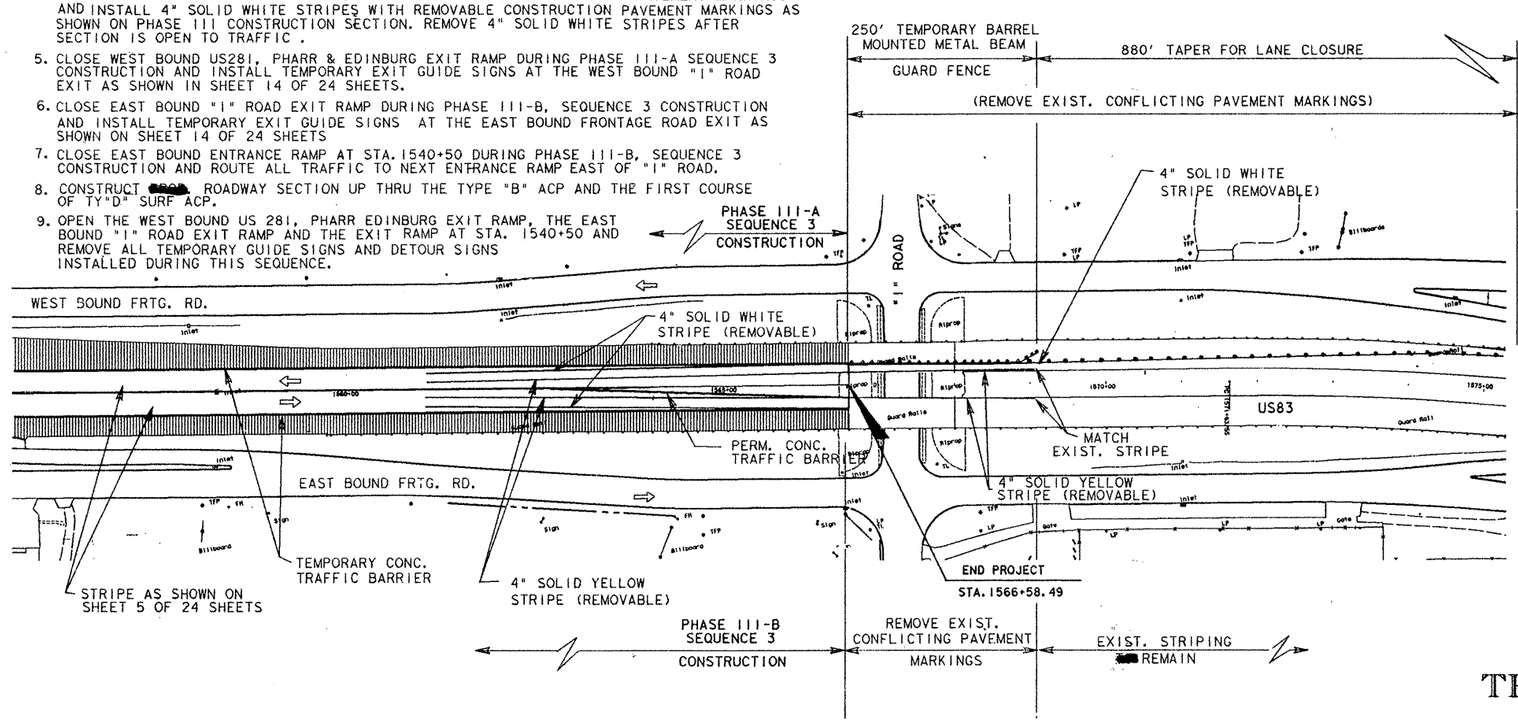

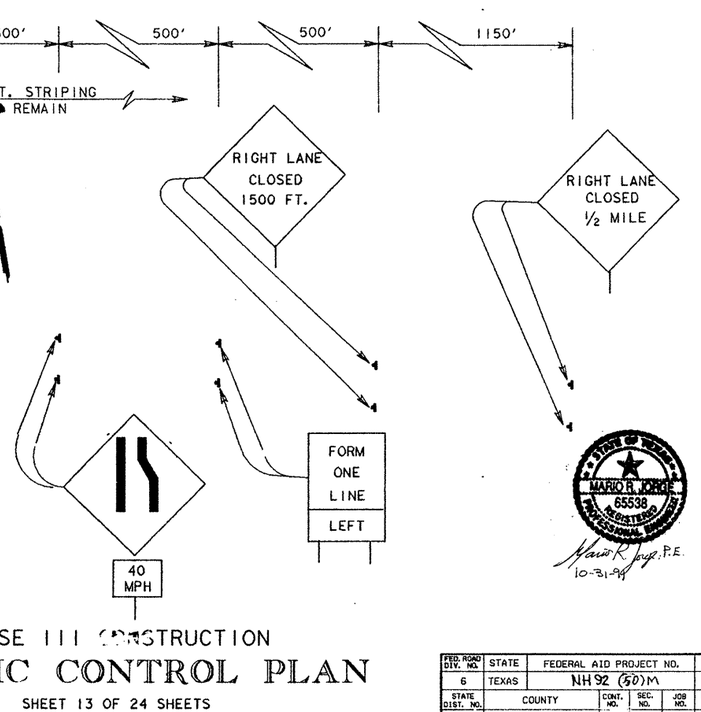

PHASE III CONSTRUCTION

TRAFFIC CONTROL PLAN

SHEET 13 OF 24 SHEETS

FED. ROAD DIV. NO.	STATE	FEDERAL AID PROJECT NO.				SHEET NO.
6	TEXAS	NH92 (50)M				22
STATE DIST. NO.	COUNTY	CONT. NO.	SEC. NO.	JOB NO.		HIGHWAY NO.
21	HIDALGO	39	17	87		US 83

⊛ BARRICADE WITH SIGNS (3) & (4)

* EXISTING GUIDE SIGN [redacted] COVERED DURING PHASE III, SEQUENCE 1, CONSTRUCTION ONLY

** EXISTING GUIDE SIGN [redacted] COVERED DURING PHASE III, SEQUENCE 2, CONSTRUCTION ONLY

*** EXISTING GUIDE SIGN [redacted] COVERED DURING PHASE III, SEQUENCE 3, CONSTRUCTION ONLY

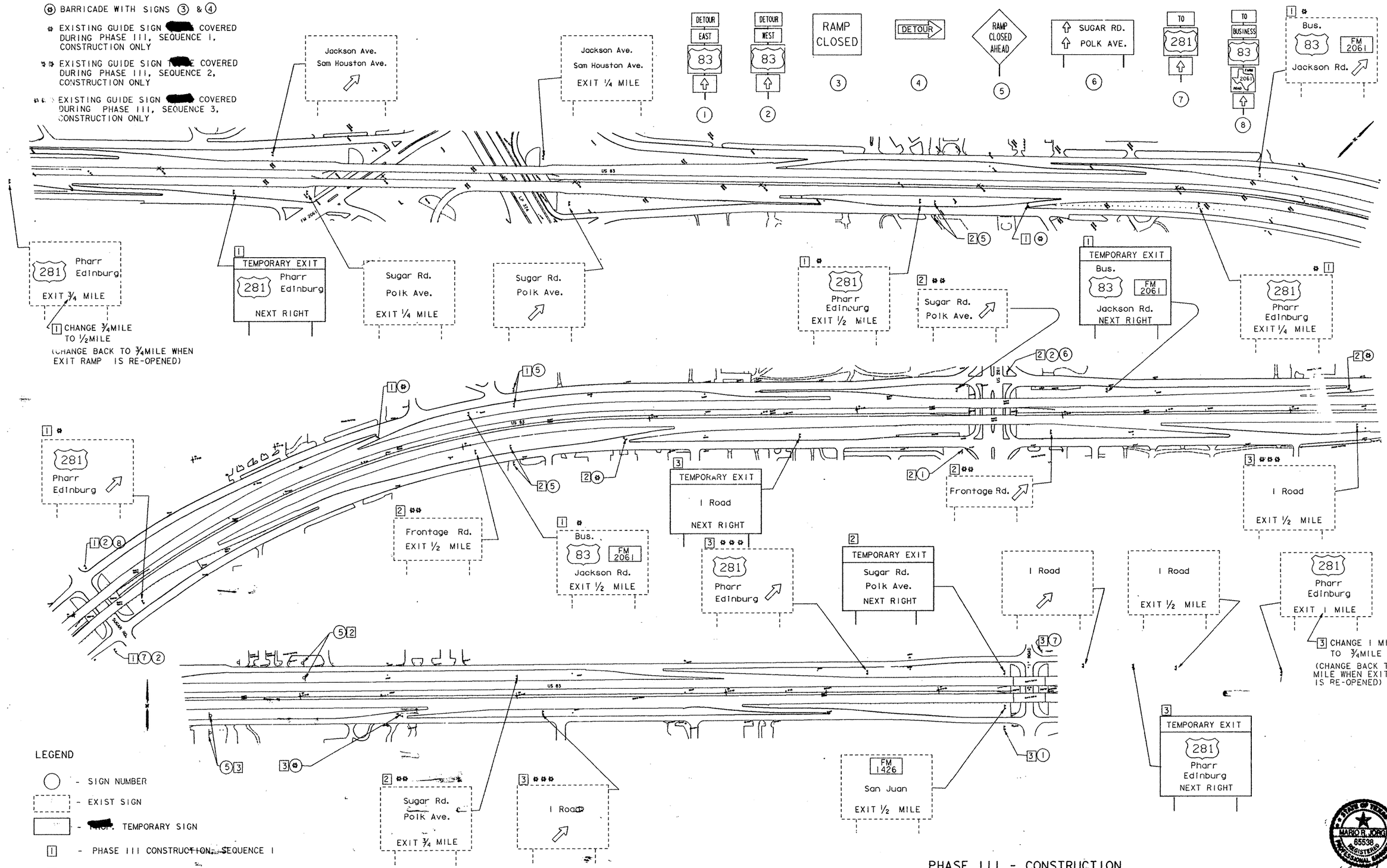

LEGEND

- ○ - SIGN NUMBER
- [ ] - EXIST SIGN
- [redacted] - TEMP. TEMPORARY SIGN
- [1] - PHASE III CONSTRUCTION, SEQUENCE 1
- [2] - PHASE III CONSTRUCTION, SEQUENCE 2
- [3] - PHASE III CONSTRUCTION, SEQUENCE 3

PHASE III - CONSTRUCTION

DETOUR - US 83 EXIT & ENTRANCE RAMP CLOSURES

TRAFFIC CONTROL PLAN

SHEET 14 OF 24 SHEETS

STATE OF TEXAS
MARIO R. JORGE
65538
REGISTERED
PROFESSIONAL ENGINEER
Mario R. Jorge, P.E.
10-31-97

FED. ROAD DIV. NO.	STATE	FEDERAL AID PROJECT NO.			SHEET NO.
6	TEXAS	NH 92 (5D)M			23
STATE DIST. NO.	COUNTY	CONT. NO.	SEC. NO.	JOB NO.	HIGHWAY NO.
21	HIDALGO	39	17	97	US 83

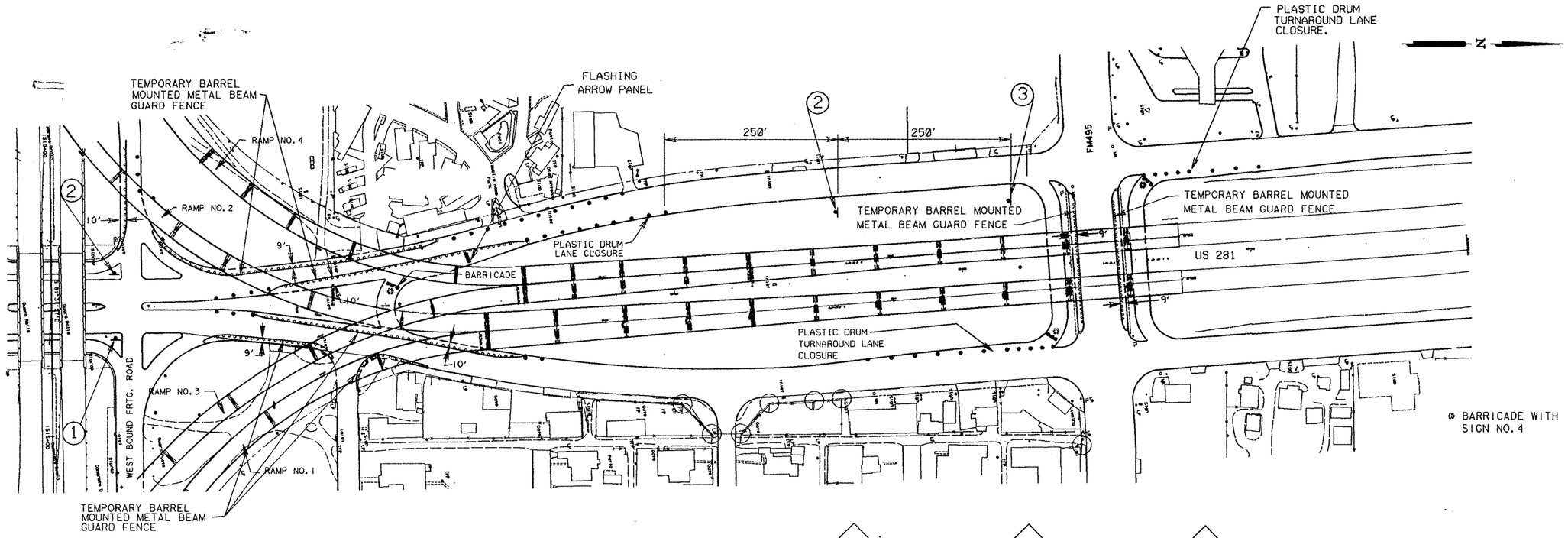

PHASE IV

SEQUENCE I

1. THIS SEQUENCE INCLUDES THE CONSTRUCTION OF BENTS, ABUTMENTS, RETAINING WALLS AND PERMANENT CONC. TRAFFIC BARRIERS TO COMPLETION.

2. INSTALL TEMPORARY CONC. TRAFFIC BARRIERS, TEMPORARY BARREL MOUNTED METAL BEAM GUARD FENCE AND PLASTIC DRUM LANE OR SHOULDER CLOSURES WITH APPROPRIATE WARNING SIGNS AS SHOWN.

NOTE: SEQUENCE I WORK OF PHASE IV CONSTRUCTION WHICH PARALLELS US 83 MAINLANES [redacted] PERFORMED IN CONJUNCTION WITH PHASE III CONSTRUCTION.

GENERAL NOTES:

1. THE CONTRACTOR [redacted] PERFORM WORK ON PHASE IV, CONSTRUCTION IN CONJUNCTION WITH ANY OTHER PHASE PROVIDED THAT THIS WORK [redacted] NOT CREATE A CONFLICT WITH DETOURS OR LANE CLOSURES [redacted] FOR OTHER PHASES OF CONSTRUCTION.

2. PHASE III & IV, SEQUENCE I CONSTRUCTION [redacted] REQUIRE THE USE OF G.R.E.A.T. TY"CZ" SYSTEMS OR DEPARTMENT APPROVED VEHICLE IMPACT ATTENUATORS (V.I.A.) AT FIVE (5) LOCATIONS SHOWN ON SHEETS 11 & 16 OF 24. [redacted] THE RESPONSIBILITY OF THE CONTRACTOR TO INSTALL THESE SYSTEMS AT THE DESIGNATED TEMPORARY LOCATIONS AND REMOVED WHEN THEIR USE IS NO LONGER REQUIRED. ALL WORK, LABOR, TOOLS, MATERIALS AND EQUIPMENT NECESSARY TO COMPLETE THIS WORK [redacted] NOT [redacted] PAID DIRECTLY, BUT [redacted] CONSIDERED SUBSIDIARY TO ITEM 502, "BARRICADES, SIGNS AND TRAFFIC HANDLING" THE CONTRACTOR [redacted] ALLOWED TO USE THE [redacted]. PERMANENT G.R.E.A.T. SYSTEMS AS TY"CZ" FOR TEMPORARY TRAFFIC CONTROL. ANY DAMAGED TEMPORARY G.R.E.A.T. SYSTEM [redacted] REPAIRED OR REPLACED IMMEDIATELY ACCORDING TO SPCIFICATION ITEM 5653. INSTALLING THE TEMPORARY G.R.E.A.T. SYSTEMS AT THEIR PERMANENT LOCATION [redacted] PAID FOR IN ACCORDANCE TO ITEM 5653: "GUARD RAIL ENERGY ABSORBING TERMINAL."

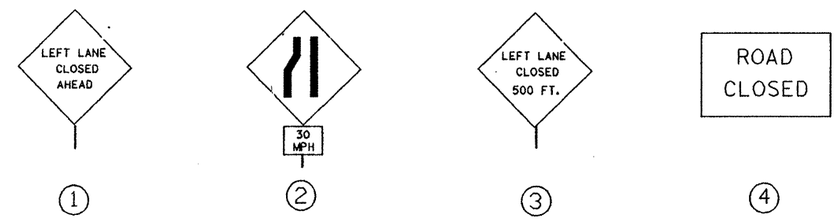

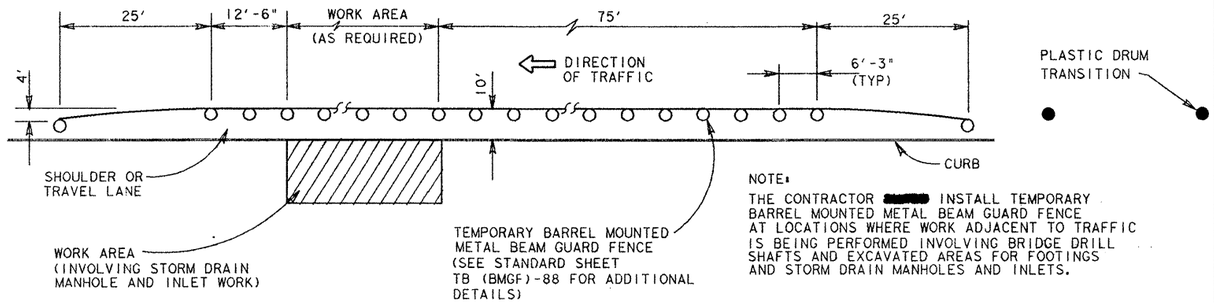

NOTE:
THE CONTRACTOR [redacted] INSTALL TEMPORARY BARREL MOUNTED METAL BEAM GUARD FENCE AT LOCATIONS WHERE WORK ADJACENT TO TRAFFIC IS BEING PERFORMED INVOLVING BRIDGE DRILL SHAFTS AND EXCAVATED AREAS FOR FOOTINGS AND STORM DRAIN MANHOLES AND INLETS.

DETAIL - TEMPORARY BARREL MOUNTED M.B.G.F.

MARIO R. JORGE 85538

Mario R. Jorge, P.E.
10-31-91

PHASE IV - CONSTRUCTION

TRAFFIC CONTROL PLAN

SHEET 15 OF 24 SHEETS

FED. ROAD DIV. NO.	STATE	FEDERAL AID PROJECT NO.				SHEET NO.
6	TEXAS	NH 92 (50) Mic				24
STATE DIST. NO.	COUNTY	CONT. NO.	SEC. NO.	JOB NO.	HIGHWAY NO.	
21	HIDALGO	39	17	97	US 83	

NOTE:

1. FRONTAGE ROAD LANE CLOSURE TRANSITIONS SHALL BE PRECEEDED WITH "LEFT LANE CLOSED AHEAD" AND LEFT LANE DROP SYMBOL SIGNS AS SHOWN ON SHEET 15 OF 24.
2. THE CONTRACTOR SHALL INSTALL TEMPORARY G.R.E.A.T. TY"CZ" SYSTEMS OR DEPARTMENT APPROVED VEHICLE IMPACT ATTENUATORS (V.I.A.) AT THE FOUR (4) LOCATIONS SHOWN.

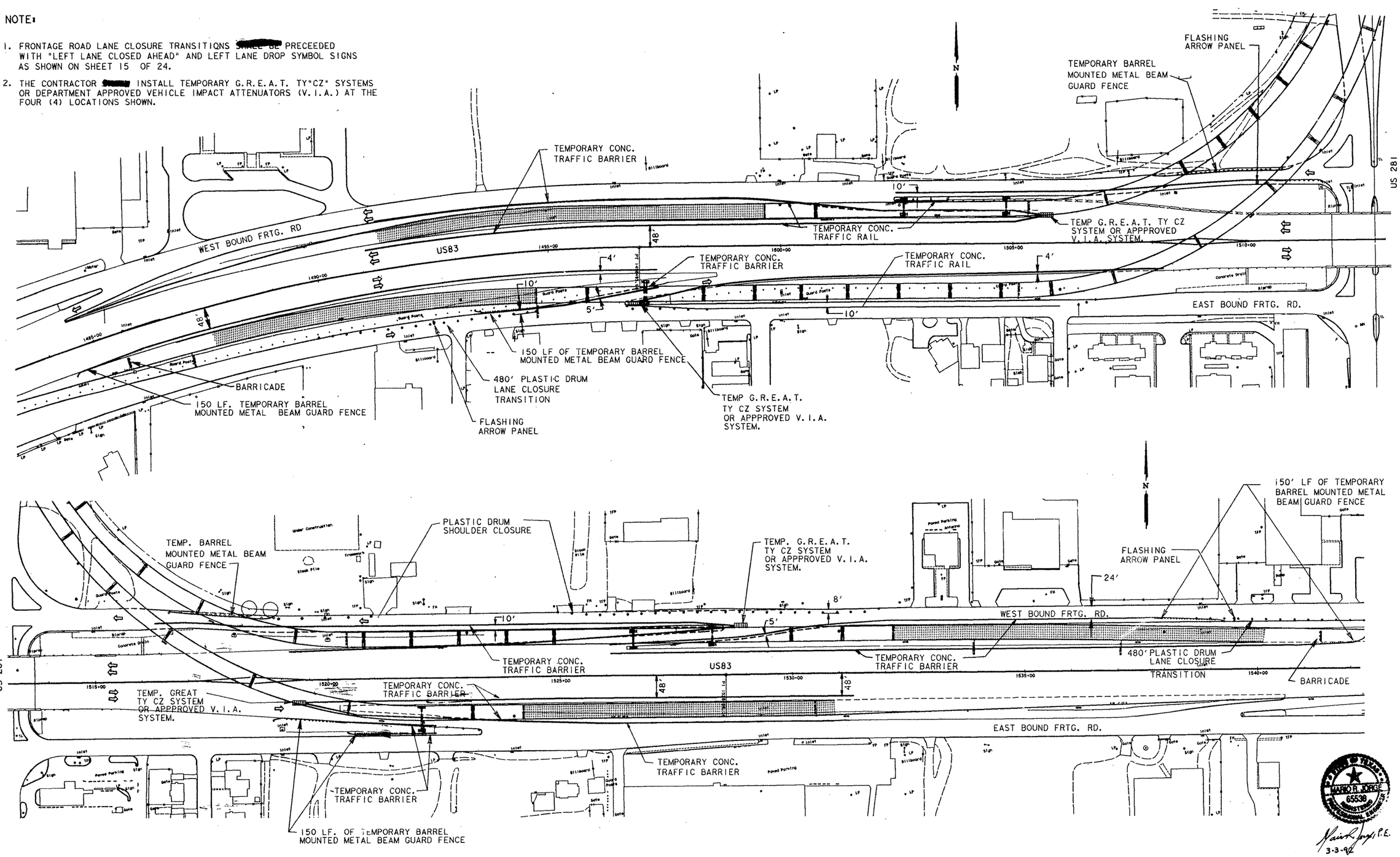

CONNECTION RAMPS

PHASE IV CONSTRUCTION

TRAFFIC CONTROL PLAN

SHEET 16 OF 24 SHEETS

MARIO R. JORGE 65538 REGISTERED PROFESSIONAL ENGINEER

Mario Jorge, P.E.

3-3-92

FED. ROAD DIV. NO.	STATE	FEDERAL AID PROJECT NO.			SHEET NO.
6	TEXAS	NH 92 (50)M			25
STATE DIST. NO.	COUNTY	CONT. NO.	SEC. NO.	JOB NO.	HIGHWAY NO.
21	HIDALGO	39	17	97	US83

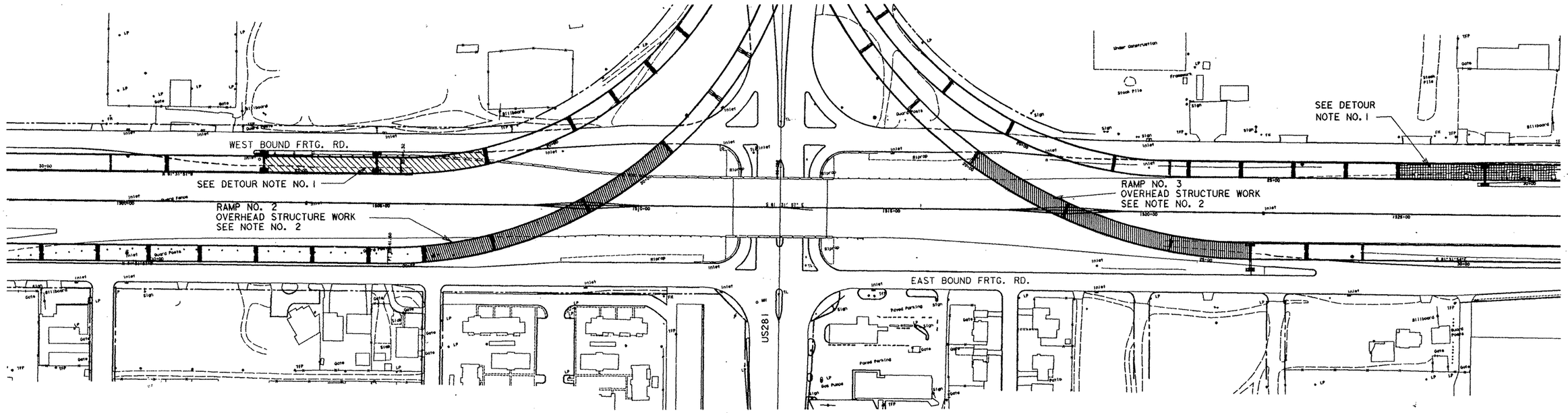

(US 83 EAST & WEST BOUND MAIN LANE CLOSURE)
SEQUENCE 2-A

PHASE IV
SEQUENCE 2

1. THIS SEQUENCE INCLUDES THE ERECTION OF BRIDGE PRESTRESSED CONC. BEAMS AND STEEL GIRDERS AND CONSTRUCTION OF BRIDGE DECKING AND RAILING TO COMPLETION.

2. THE CONTRACTOR [redacted] COMPLETELY CLOSE THE AFFECTED TRAVEL LANES (MAINLANES OR FRONTAGE ROADS) WHILE INSTALLING THE BRIDGE STEEL GIRDERS OR OVERHEAD CONSTRUCTION OPERATIONS ONLY WHEN AN ADEQUETLY PROTECTED 12' MINIMUM TRAVEL LANE CANNOT [redacted] PROVIDED FOR THE AFFECTED DIRECTION OF TRAFFIC. THE COMPLETE CLOSURE OF A DIRECTION OF TRAFFIC [redacted] PERFORMED ONLY DURING THE HOURS BETWEEN 7:00 P.M. FRIDAY AND 6:00 A.M. MONDAY. TRAFFIC [redacted] DETOURED AS SHOWN ON THE PLANS OR AS DIRECTED BY THE ENGINEER FOR THE DURATION OF THE COMPLETE CLOSURE.

3. ALL LANE CLOSURE SIGNING AND BARRICADING [redacted] IN ACCORDANCE WITH THE MUTCD AND [redacted] REQUIRE A FLASHING ARROW PANEL.

DETOUR NOTE:

1. THE DETOUR PLAN FOR THE SUGAR ROAD-POLK AVE. EXIT RAMP AND US 83 ENTRANCE RAMP CLOSURES [redacted] AS SHOWN FOR PHASE III - SEQUENCE 2 CONSTRUCTION. (SEE SHEET 14 OF 24 .)

2. UNLESS AN ALTERNATE CONSTRUCTION SEQUENCE AND TRAFFIC CONTROL PLAN IS APPROVED BY THE ENGINEER, ALL OVERHEAD CONSTRUCTION OPERATIONS ON THE STEEL GIRDER UNITS ON RAMPS NO. 2 & 3 WHICH REQUIRE THE COMPLETE CLOSURE OF THE US 83 MAIN LANES, [redacted] PERFORMED BETWEEN THE HOURS OF 7:00 P.M. FRIDAY AND 6:00 A.M. MONDAY. THE DETOUR [redacted] AS SHOWN ON SHEET 18 OF 24 SHEETS.

US83 MAIN LANES OVERHEAD STRUCTURE WORK

SUGAR ROAD-POLK AVE. EXIT RAMP OVER HEAD STRUCTURE WORK

US 83 ENTRANCE RAMP OVER HEAD STRUCTURE WORK.

N

PHASE IV - CONSTRUCTION

TRAFFIC CONTROL PLAN

SHEET 17 OF 24 SHEETS

FED. ROAD DIV. NO.	STATE	FEDERAL AID PROJECT NO.			SHEET NO.
6	TEXAS	NH 92 (50) M			26
STATE DIST. NO.	COUNTY	CONT. NO.	SEC. NO.	JOB NO.	HIGHWAY NO.
21	HIDALGO	39	17	97	US83

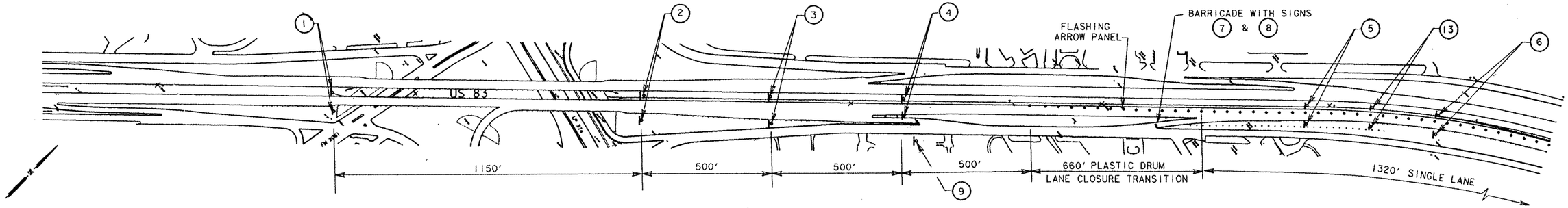

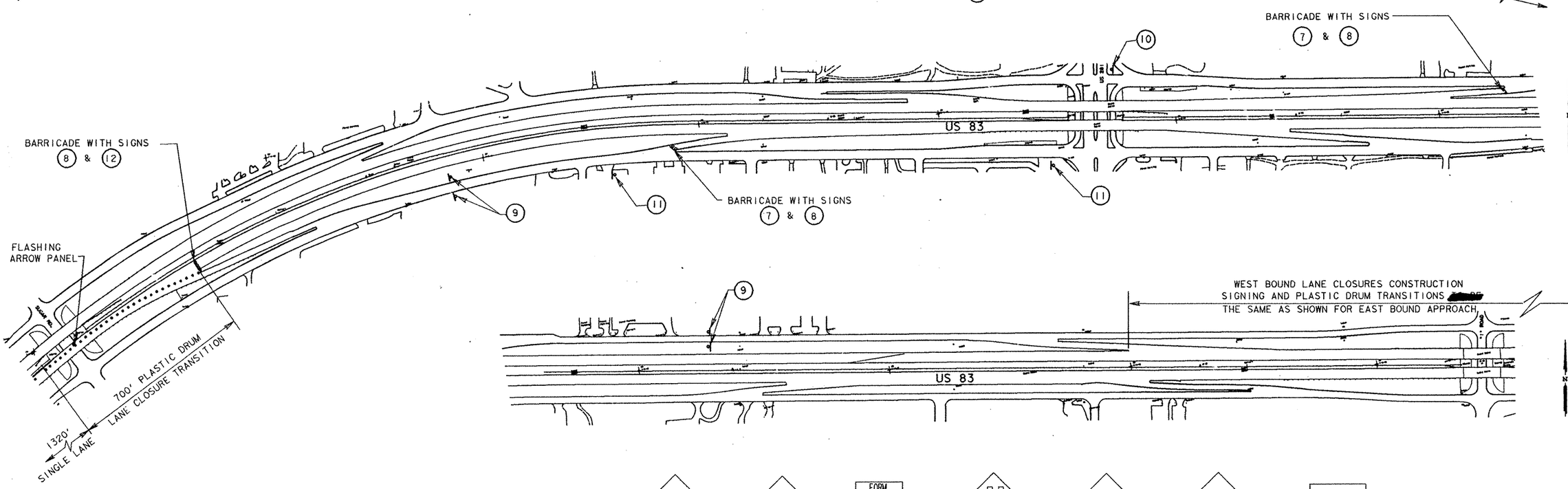

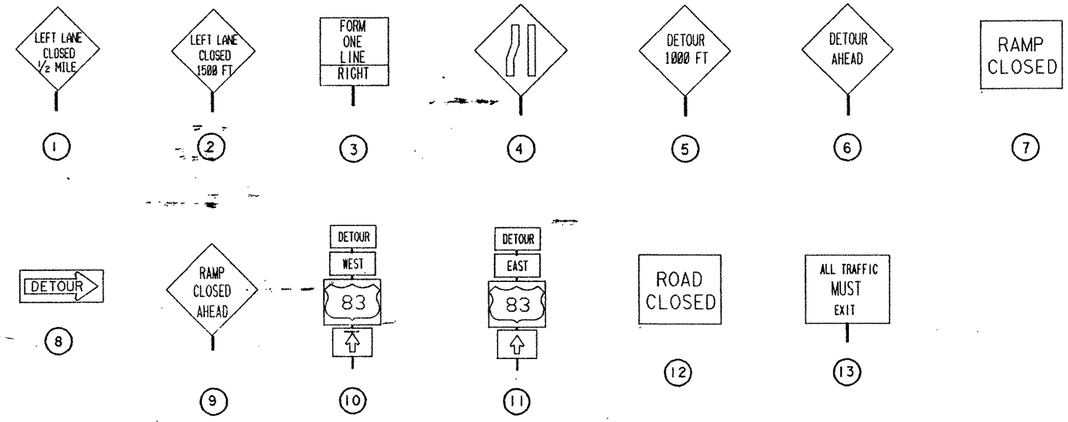

DETOUR NOTES:

1. ALL PERMANENT SIGNS IN CONFLICT WITH THE DETOUR AND DIRECTION OF TRAFFIC [redacted] TEMPORARILLY COVERED FOR THE DURATION OF THE DETOUR.

PHASE IV - CONSTRUCTION

DETOUR - US 83 MAIN LANE CLOSURE

TRAFFIC CONTROL PLAN

SHEET 18 OF 24 SHEETS

10-31-01

FED. ROAD DIV. NO.	STATE	FEDERAL AID PROJECT NO.				SHEET NO.
6	TEXAS	NH 92 (50) M				27
STATE DIST. NO.	COUNTY	CONT. NO.	SEC. NO.	JOB NO.		HIGHWAY NO.
21	HIDALGO	39	17	97		US 83

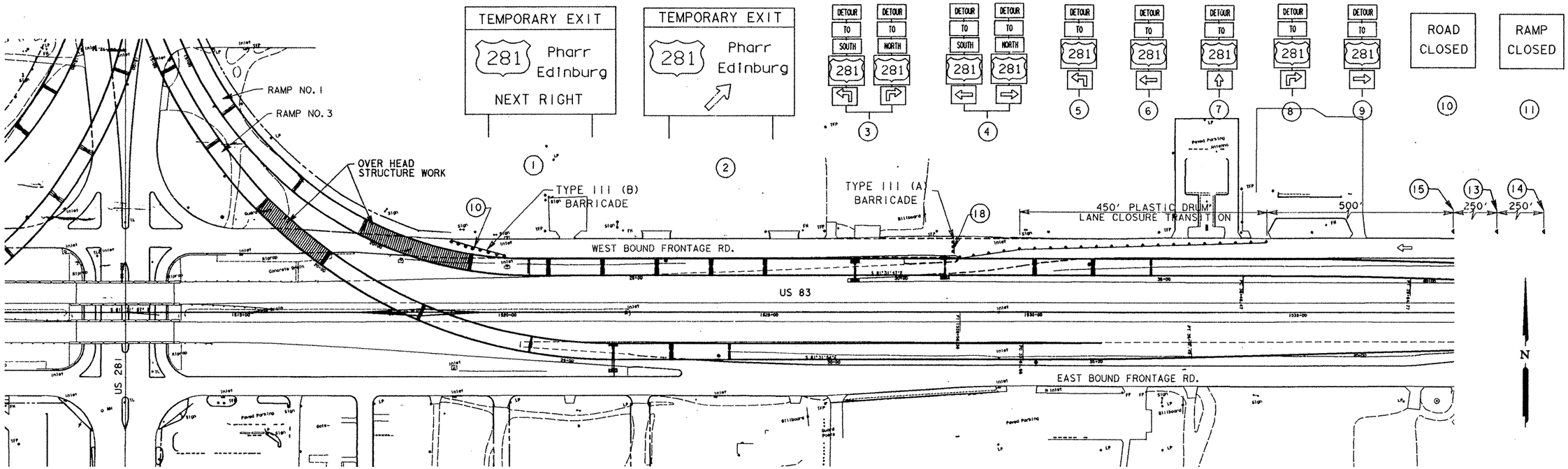

(WEST BOUND FRONTAGE ROAD CLOSURE EAST OF US 281)
SEQUENCE 2-B

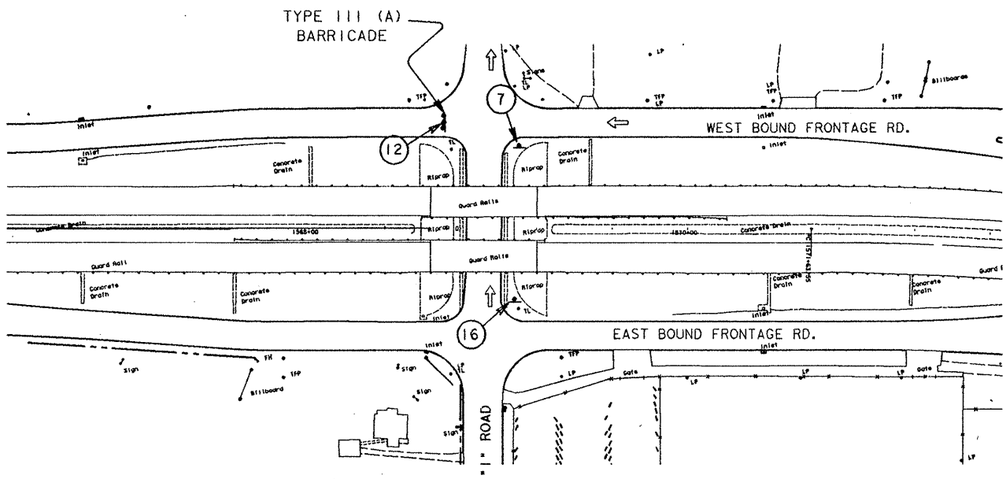

LEGEND:

- OVERHEAD STRUCTURE WORK
- SIGN NUMBER
- DETOUR ROUTE

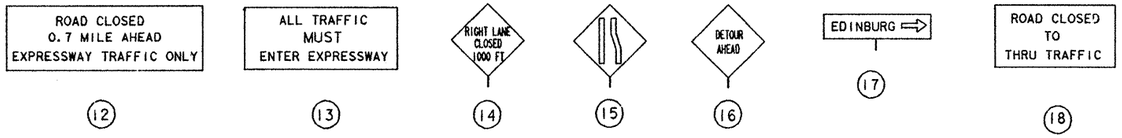

DETOUR NOTES:

1. UNLESS AN ALTERNATE CONSTRUCTION SEQUENCE AND TRAFFIC CONTROL PLAN IS APPROVED BY THE ENGINEER, ALL OVERHEAD CONSTRUCTION OPERATIONS ON THE 520' AND 750' STEEL GIRDER UNITS ON RAMPS 1 & 3 RESPECTIVELY WHICH REQUIRE THE COMPLETE CLOSURE OF THE US 83 WESTBOUND FRONTAGE ROAD, [redacted] PERFORMED BETWEEN 7:00 P.M. FRIDAY AND 6:00 A.M. MONDAY. THE WESTBOUND FRONTAGE ROAD [redacted]L REMAIN OPEN TO TRAFFIC AT ALL OTHER TIMES. WHEN COMPLETE CLOSURE OF THE FRONTAGE ROAD IS REQUIRED, TRAFFIC IS [redacted] DETOURED AS SHOWN AND/OR AS DIRECTED BY THE ENGINEER.
2. THE EXISTING WEST BOUND U.S. 281, EDINBURG, PHARR EXIT RAMP [redacted] TEMPORARILY CLOSED AND TRAFFIC DETOURED VIA THE ROUTE SHOWN ON THIS SHEET. ALL DETOUR SIGNING [redacted] IN PLACE PRIOR TO CLOSING THE FRONTAGE ROAD FOR THE WEEKEND.
3. ALL PERMANENT SIGNS IN CONFLICT WITH THE DETOUR AND DIRECTION OF TRAFFIC SHALL BE TEMPORARILY COVERED FOR THE DURATION OF THE DETOUR.
4. ALL DETOUR SIGNING [redacted] REMOVED WHEN THE FRONTAGE ROAD IS RE-OPENED FOR TRAFFIC.

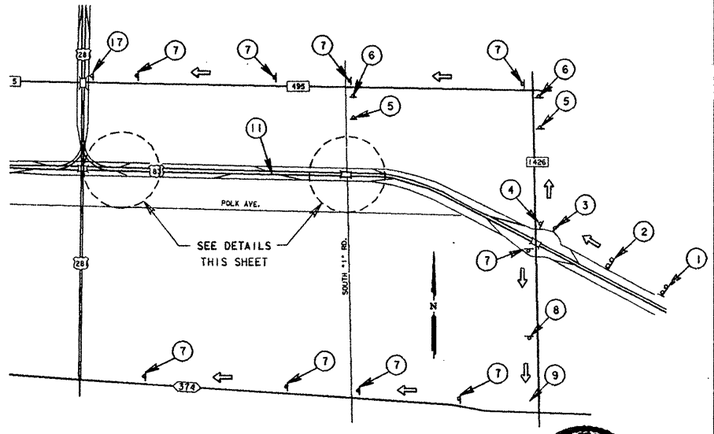

DETOUR ROUTE

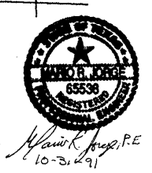

10-3-91

PHASE - IV CONSTRUCTION

DETOUR - US 83 WEST BOUND FRONTAGE RD.
SUGGESTED TRAFFIC CONTROL PLAN

SHEET 19 OF 24 SHEETS

FED. ROAD DIV. NO.	STATE	FEDERAL AID PROJECT NO.				SHEET NO.
6	TEXAS	NH92 (50)M				28
STATE DIST. NO.	COUNTY		CONT. NO.	SEC. NO.	JOB NO.	HIGHWAY NO.
21	HIDALGO		39	17	97	US83

DETOUR NOTES:

1. UNLESS AN ALTERNATE CONSTRUCTION SEQUENCE AND TRAFFIC CONTROL PLAN IS APPROVED BY THE ENGINEER, ALL OVERHEAD CONSTRUCTION OPERATIONS ON THE 680' AND 645' STEEL GIRDER UNITS ON RAMPS 2 & 4 RESPECTIVELY WHICH REQUIRE THE COMPLETE CLOSURE OF THE US 83 WESTBOUND FRONTAGE ROAD, [redacted], PERFORMED BETWEEN 7:00 P.M. FRIDAY AND 6:00 A.M. MONDAY. THE WESTBOUND FRONTAGE ROAD [redacted] REMAIN OPEN TO TRAFFIC AT ALL OTHER TIMES. WHEN COMPLETE CLOSURE OF THE FRONTAGE ROAD IS REQUIRED, TRAFFIC IS [redacted] DETOURED AS SHOWN AND/OR AS DIRECTED BY THE ENGINEER.
2. THE DETOUR ROUTE S[redacted] AS SHOWN ON THIS SHEET. ALL DETOUR SIGNING [redacted] IN PLACE PRIOR TO CLOSING THE FRONTAGE ROAD FOR THE WEEKEND.
3. ALL PERMANENT SIGNS IN CONFLICT WITH THE DETOUR AND DIRECTION OF TRAFFIC S[redacted] TEMPORARILY COVERED FOR THE DURATION OF THE DETOUR.
4. ALL DETOUR SIGNS [redacted] REMOVED WHEN THE FRONTAGE ROAD IS RE-OPENED FOR TRAFFIC.

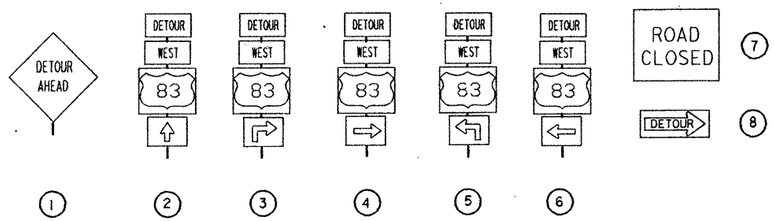

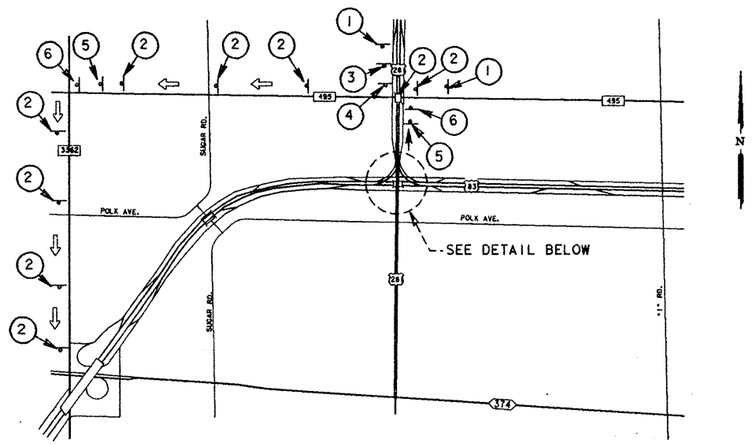

DETOUR ROUTE

* TYPE III (B) BARRICADE WITH SIGN (7)

** TYPE III (B) BARRICADE WITH SIGNS (7) & (8)

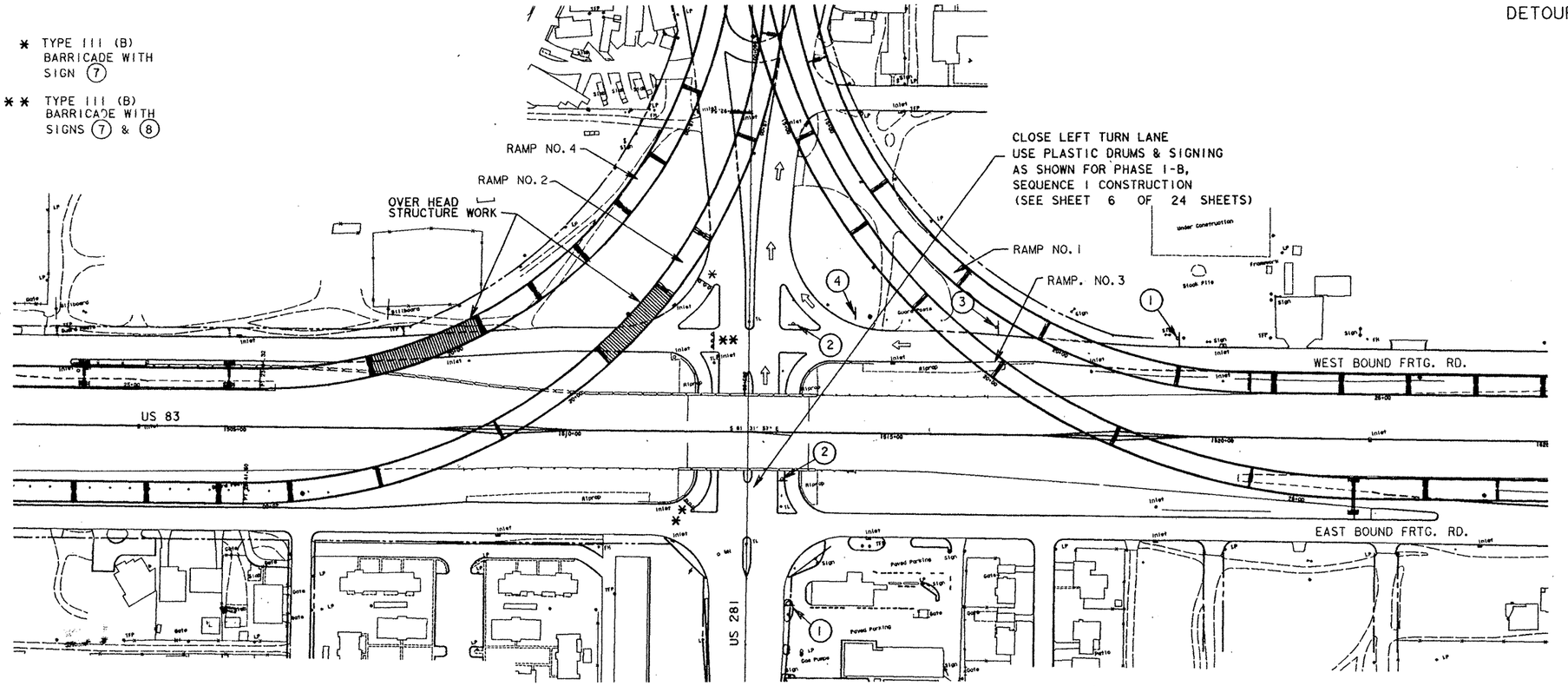

LEGEND:

- OVERHEAD STRUCTURE WORK
- SIGN NUMBER
- DETOUR ROUTE

(WEST BOUND FRONTAGE ROAD CLOSURE WEST OF US 281)
SEQUENCE 2-C

PHASE IV - CONSTRUCTION

DETOUR - US 83 WEST BOUND FRONTAGE RD.
SUGGESTED TRAFFIC CONTROL PLAN

SHEET 20 OF 24 SHEETS

Marie R. Boyd, P.E.
10-31-91

FED. ROAD DIV. NO.	STATE	FEDERAL AID PROJECT NO.			SHEET NO.
6	TEXAS	NH 92 (5D) M			29
STATE DIST. NO.	COUNTY	CONT. NO.	SEC. NO.	JOB NO.	HIGHWAY NO.
21	HIDALGO	39	17	97	US83

NOTES:

1. UNLESS AN ALTERNATE CONSTRUCTION SEQUENCE AND TRAFFIC CONTROL PLAN IS APPROVED BY THE ENGINEER, ALL OVERHEAD CONSTRUCTION OPERATIONS ON THE 584' AND 430' STEEL GIRDER UNITS ON RAMPS 2 & 4 RESPECTIVELY WHICH REQUIRE THE COMPLETE CLOSURE OF THE US 281 SOUTHBOUND FRONTAGE ROAD, [illegible] PERFORMED BETWEEN 7:00 P.M. FRIDAY AND 6:00 A.M. MONDAY. THE US 281 FRONTAGE ROAD [illegible] REMAIN OPEN TO TRAFFIC AT ALL OTHER TIMES. WHEN COMPLETE CLOSURE OF THE FRONTAGE ROAD IS REQUIRED, TRAFFIC IS [illegible] DETOURED AS SHOWN AND/OR AS DIRECTED BY THE ENGINEER.

2. FOR THE US 281 SOUTH BOUND FRONTAGE ROAD INTERSECTION WITH FM 495, THE CONTRACTOR [illegible] INSTALL PLASTIC DRUMS TO CLOSE EXISTING RIGHT TURN CHANNILIZATION BAY AND INSTALL RIGHT TURN ONLY ARROWS ON ADJACENT LANE AND LANE ASSIGNMENT SIGNS AS SHOWN.

3. ALL PERMANENT SIGNS IN CONFLICT WITH THE DETOUR AND DIRECTION OF TRAFFIC [illegible] TEMPORARILY COVERED FOR THE DURATION OF THE DETOUR.

4. THE CONTRACTOR [illegible] REQUIRED TO REMOVE PART OF THE EXIST CONC. CURB TO CONSTRUCT SOUTH BOUND DETOUR AS SHOWN. THE REMOVED CONC. CURB [illegible] REPLACED WHEN THE DETOUR IS NO LONGER BEING USED. THE DETOUR CONSTRUCTION AND CURB REPLACEMENT [illegible] MEASURED AND PAID FOR UNDER THEIR PERTINENT BID ITEMS.

5. ALL DETOUR SIGNING [illegible] REMOVED OR TURNED AWAY FROM VIEW OF TRAFFIC WHEN NOT IN USE.

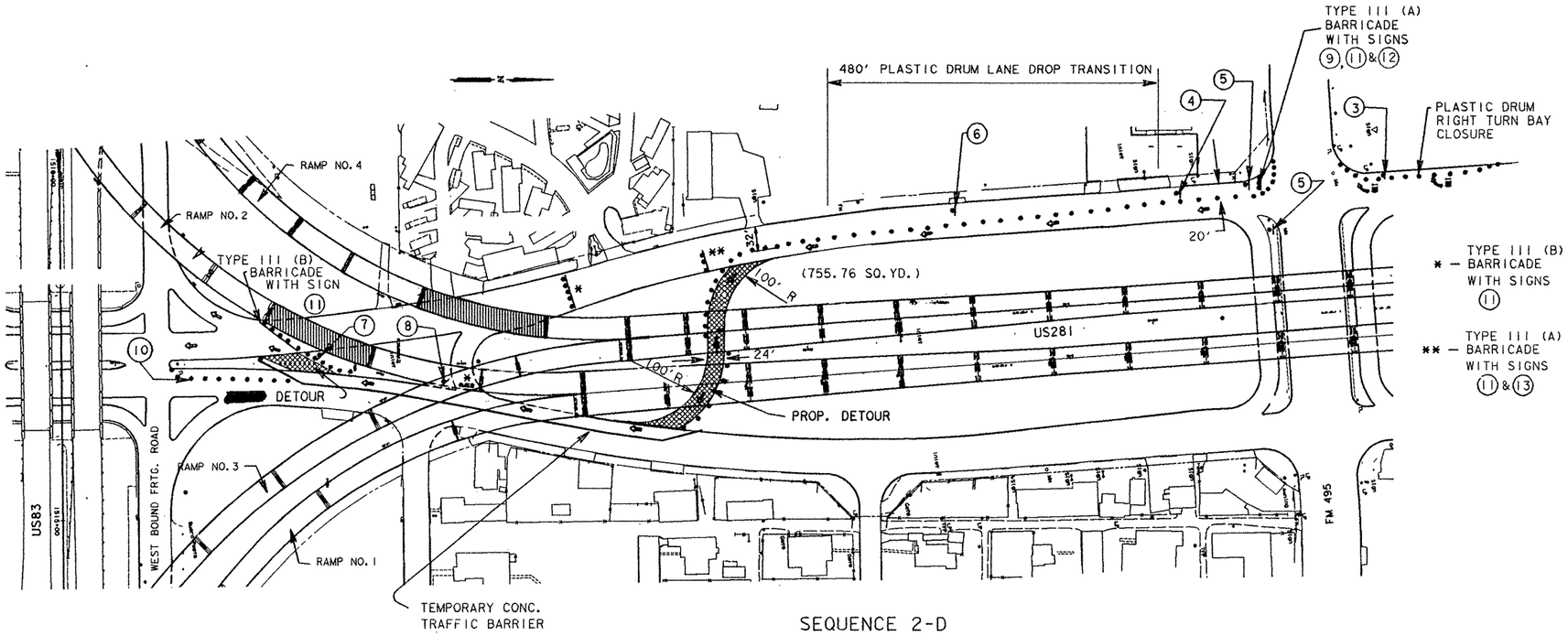

SEQUENCE 2-D

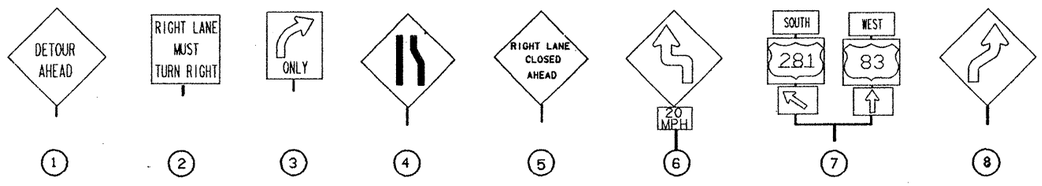

LEGEND:

- OVERHEAD STRUCTURE WORK
- TEMPORARY DETOUR
- SIGN NUMBER
- DETOUR ROUTE

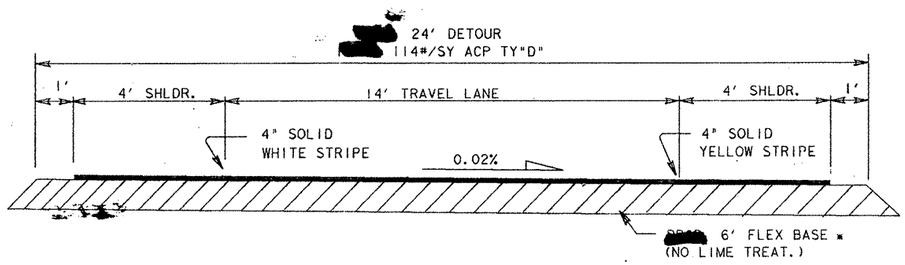

TYPICAL DETOUR SECTION

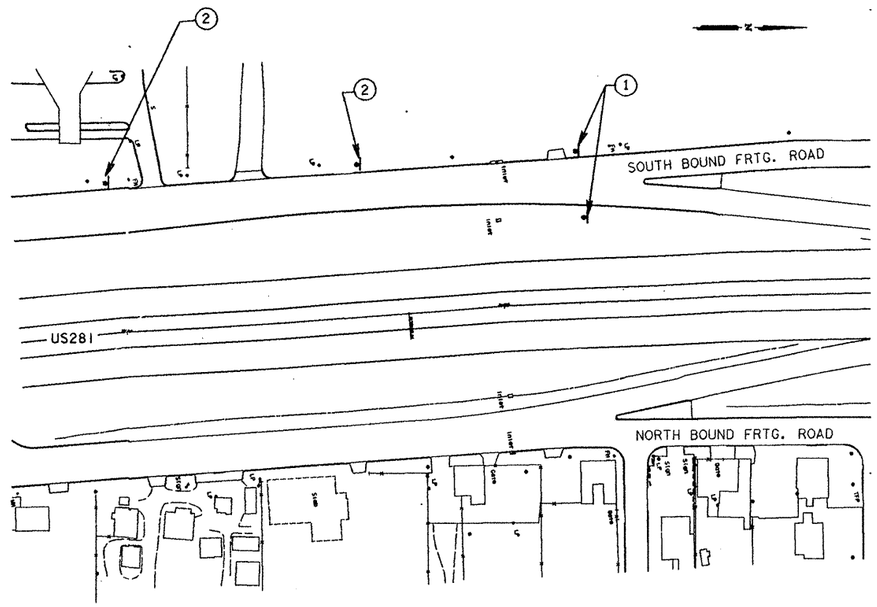

STATE OF TEXAS
MARIO R. JORGE
65536
REGISTERED PROFESSIONAL ENGINEER
Mario R. Jorge, P.E.
10-31-91

PHASE IV - CONSTRUCTION

DETOUR - US 281 SOUTH BOUND LANES
TRAFFIC CONTROL PLAN

SHEET 21 OF 24 SHEETS

FED. ROAD DIV. NO.	STATE	FEDERAL AID PROJECT NO.				SHEET NO.
6	TEXAS	[illegible]				30
STATE DIST. NO.	COUNTY		CONT. NO.	SEC. NO.	JOB NO.	HIGHWAY NO.
21	HIDALGO		39	17	97	US83

NOTES:

1. UNLESS AN ALTERNATE CONSTRUCTION SEQUENCE AND TRAFFIC CONTROL PLAN IS APPROVED BY THE ENGINEER, ALL OVERHEAD CONSTRUCTION OPERATIONS ON THE 610' & 702.41' STEEL GIRDER UNITS ON RAMPS 1 & 3 RESPECTIVELY, WHICH REQUIRE THE COMPLETE CLOSURE OF THE US 281 NORTHBOUND FRONTAGE ROAD, [redacted] PERFORMED BETWEEN 7:00 P.M. FRIDAY AND 6:00 A.M. MONDAY. THE US 281 FRONTAGE ROADS [redacted] REMAIN OPEN TO TRAFFIC AT ALL OTHER TIMES. WHEN COMPLETE CLOSURE OF THE FRONTAGE ROAD IS REQUIRED, TRAFFIC [redacted] DETOURED AS SHOWN AND/OR AS DIRECTED BY THE ENGINEER.

2. ALL PERMANENT SIGNS IN CONFLICT WITH THE DETOUR AND DIRECTION OF TRAFFIC [redacted] TEMPORARILY COVERED FOR THE DURATION OF THE DETOUR.

3. THE CONTRACTOR [redacted] REQUIRED TO REMOVE PART OF THE CONC. CURB TO CONSTRUCT NORTH BOUND DETOUR AS SHOWN. THE REMOVED CURB [redacted] REPLACED WHEN THE DETOUR IS ON LONGER BEING USED. THE DETOUR CONSTRUCTION AND CURB REPLACEMENT [redacted] MEASURED AND PAID FOR UNDER THEIR PERTINENT BID ITEMS.

4. ALL DETOUR SIGNING [redacted] REMOVED OR TURNED AWAY FROM VIEW OF TRAFFIC WHEN NOT IN USE.

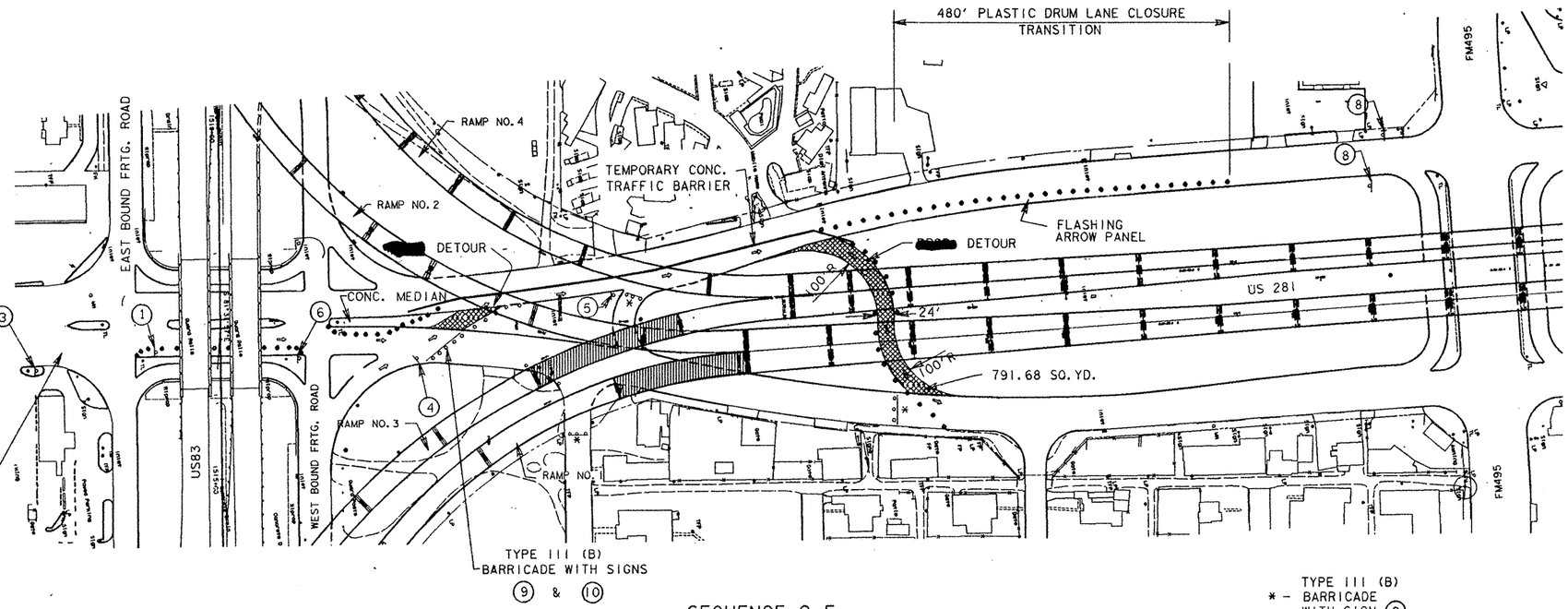

SEQUENCE 2-E

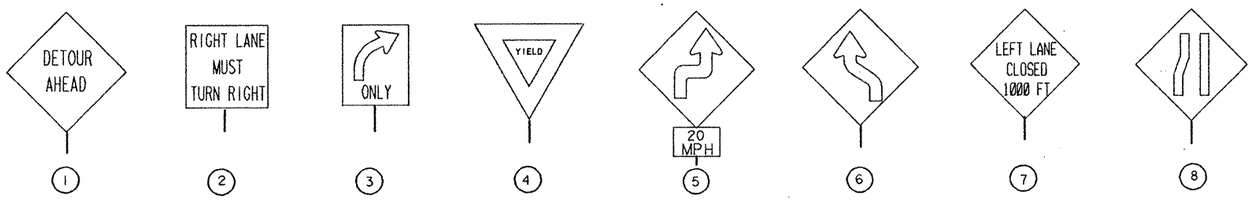

LEGEND:

- OVERHEAD STRUCTURE WORK
- [redacted] DETOUR
- SIGN NUMBER
- DETOUR ROUTE

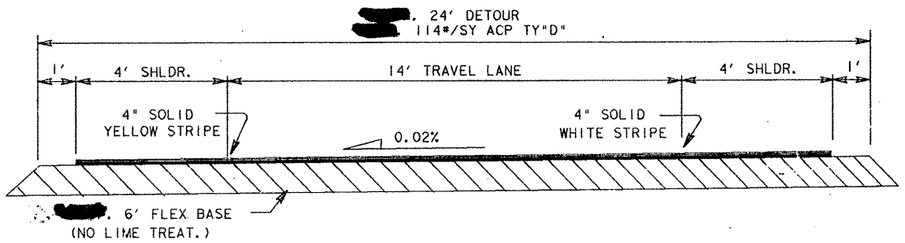

TYPICAL DETOUR SECTION

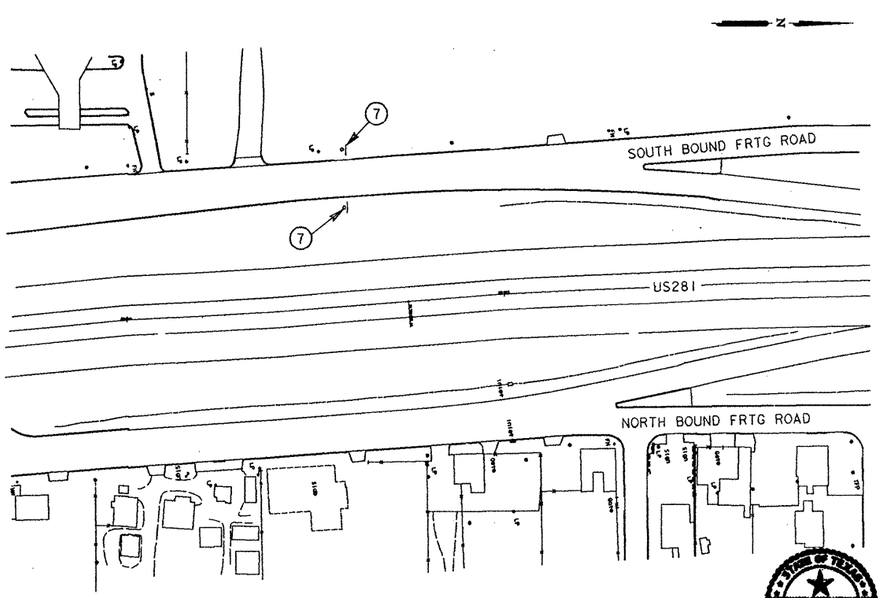

PHASE IV - CONSTRUCTION

DETOUR - US 281 NORTH BOUND LANES
TRAFFIC CONTROL PLAN

SHEET 22 OF 24 SHEETS

STATE OF TEXAS
MARIO R. JORGE
65538
REGISTERED
PROFESSIONAL ENGINEER

Mario R. Jorge, P.E.
10-31-91

FED. ROAD DIV. NO.	STATE	FEDERAL AID PROJECT NO.			SHEET NO.
6	TEXAS	NH 92 (BD)M			31
STATE DIST. NO.	COUNTY	CONT. NO.	SEC. NO.	JOB NO.	HIGHWAY NO.
21	HIDALGO	39	17	97	US83

DETOUR NOTES:

1. UNLESS AN ALTERNATE CONSTRUCTION SEQUENCE AND TRAFFIC CONTROL PLAN IS APPROVED BY THE ENGINEER. ALL OVERHEAD CONSTRUCTION OPERATIONS ON THE FM 495 OVERPASS PRESTRESSED CONC. BEAMS WHICH REQUIRE THE COMPLETE CLOSURE OF FM 495 [redacted] PERFORMED BETWEEN 7:00 P.M. FRIDAY AND 6:00 A.M. MONDAY. FM 495 [redacted] REMAIN OPEN TO TRAFFIC AT ALL OTHER TIMES. WHEN COMPLETE CLOSURE OF FM 495 IS REQUIRED, TRAFFIC [redacted] DETOURED AS SHOWN AND/OR AS DIRECTED BY THE ENGINEER.

2. PERMANENT FM 495 ROUTE MARKERS IN CONFLICT WITH THE DETOUR OR DIRECTION OF TRAFFIC [redacted] TEMPORARILY COVERED FOR THE DURATION OF THE DETOUR.

3. ALL DETOUR SIGNING [redacted] EITHER REMOVED OR TURNED AWAY FROM VIEW OF TRAFFIC WHEN NOT IN USE.

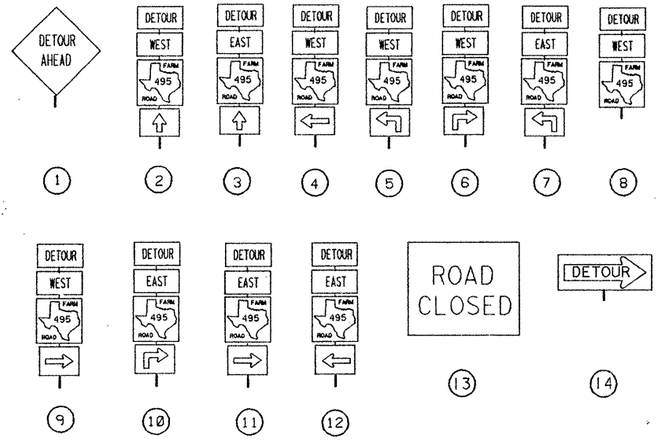

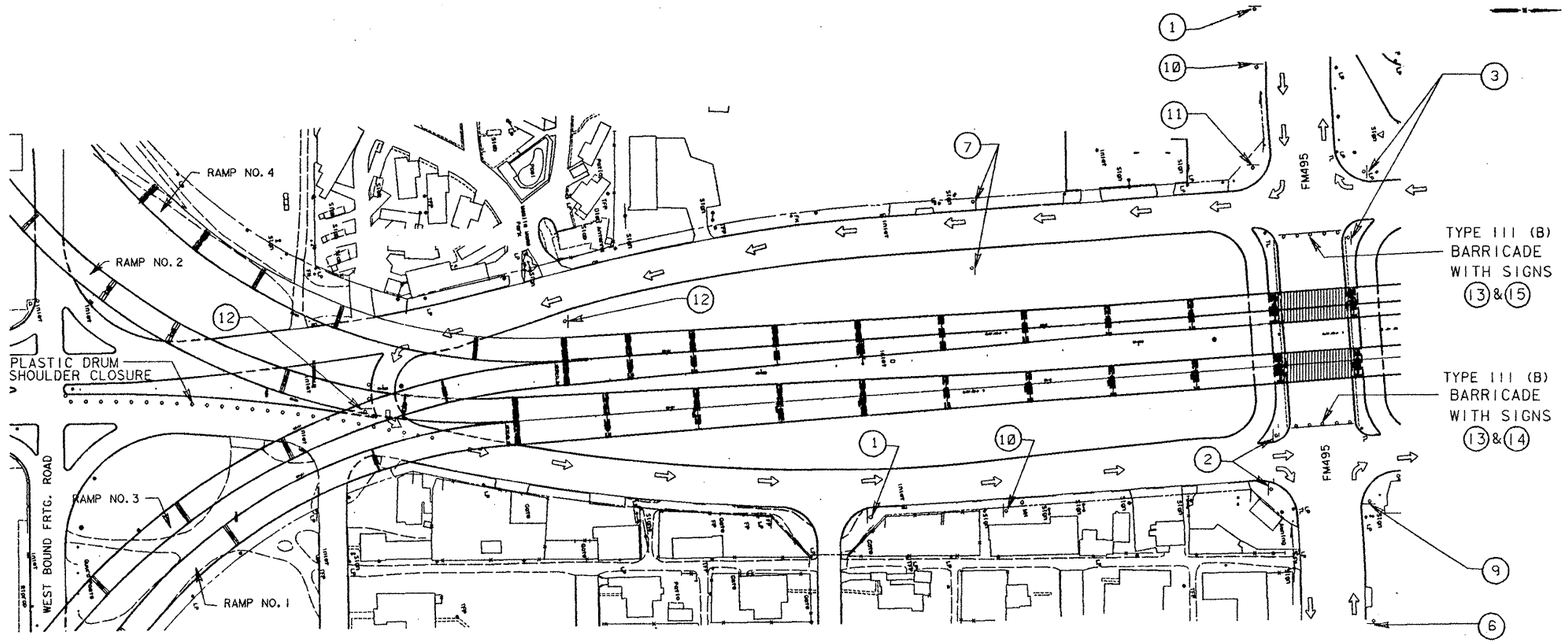

SEQUENCE 2-F

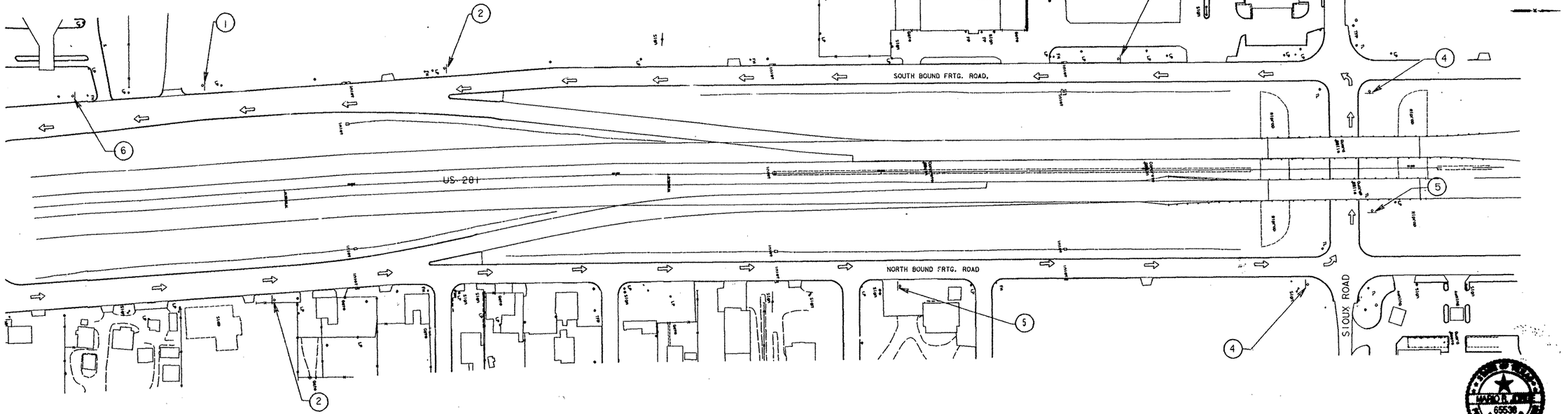

LEGEND:

- OVERHEAD STRUCTURE WORK
- SIGN NUMBER
- DETOUR ROUTE

PHASE IV - CONSTRUCTION

DETOUR - FM 495

TRAFFIC CONTROL PLAN

SHEET 23 OF 24 SHEETS

FED. ROAD DIV. NO.	STATE	FEDERAL AID PROJECT NO.			SHEET NO.
6	TEXAS	NH 92 (50)M			32
STATE DIST. NO.	COUNTY	CONT. NO.	SEC. NO.	JOB NO.	HIGHWAY NO.
21	HIDALGO	39	17	97	US83

FILE: INTCP022.DGN VER: SAME VRQ:\INTCP022.DGN

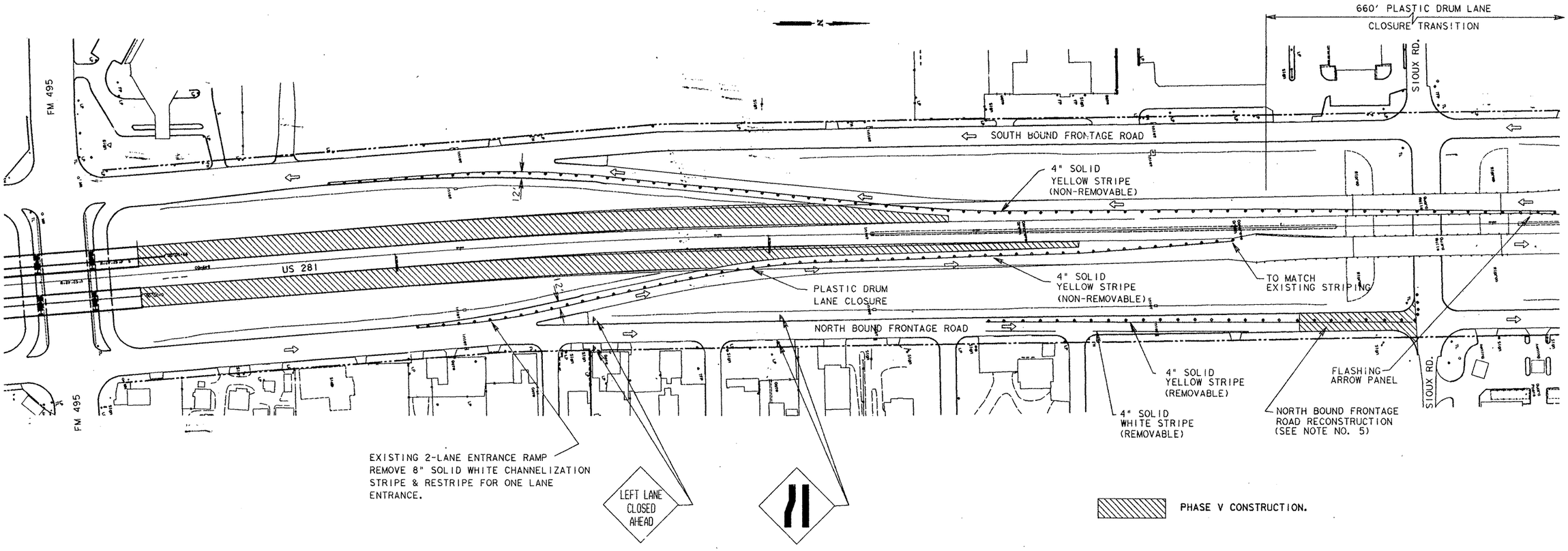

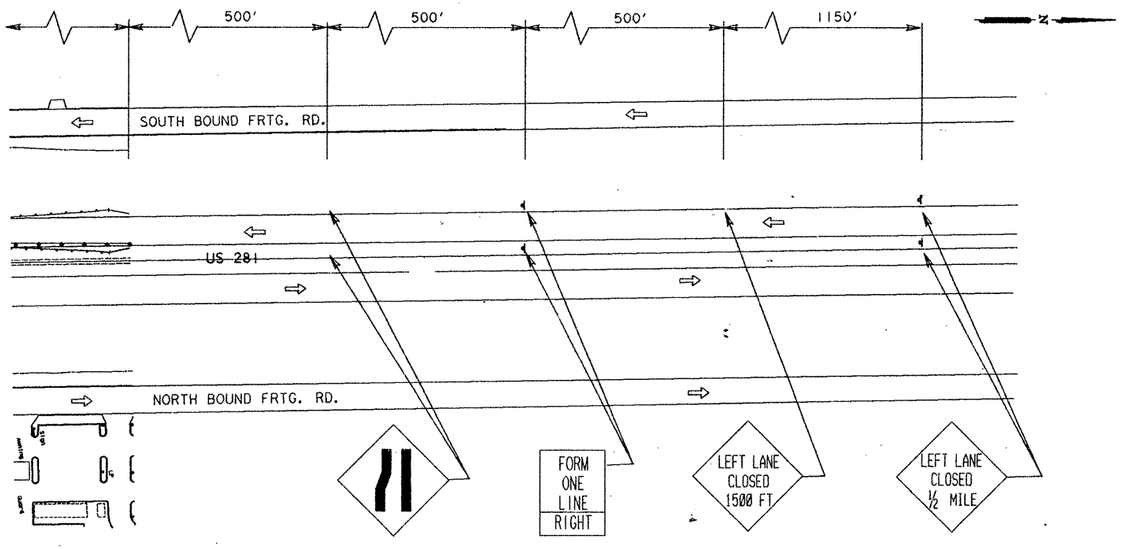

PHASE V - CONSTRUCTION

1. THIS PHASE OF CONSTRUCTION PROVIDES FOR THE CONSTRUCTION OF THE US 281 MAIN LANES FROM THE FM 495 OVERPASS TO CONNECT TO THE EXISTING MAIN LANES AND THE PARTIAL RECONSTRUCTION OF THE NORTH BOUND FRONTAGE ROAD TO COMPLETION.
2. INSTALL PLASTIC DRUM LANE CLOSURE FOR SOUTH BOUND AND NORTH-BOUND MAIN LANE TRAFFIC WITH APPROPRIATE CONSTRUCTION PAVEMENT MARKINGS AND CONSTRUCTION SIGNS AS SHOWN.
3. REMOVE EXISTING 8" SOLID WHITE CHANNELIZATION STRIPE, REMOVE RAISED PAVEMENT MARKERS AND TRAFFIC BUTTONS AND RESTRIPE FOR A ONE (1) LANE ENTRANCE RAMP.
4. MODIFY EXISTING LANE ASSIGNMENT SIGNS ON NORTH BOUND FRONTAGE ROAD TO COMPLEMENT THE ONE LANE ENTRANCE RAMP.
5. THE TRAFFIC CONTROL FOR THE PARTIAL RECONSTRUCTION OF THE US 281 NORTH BOUND FRONTAGE ROAD [redacted] PERFORMED IN TWO (2) SECTIONS AND MAINTAINING A MINIMUM 12 FT. TRAVEL LANE OPEN TO TRAFFIC WITH A 5 FT. BUFFER ZONE BETWEEN THE TRAFFIC LANE AND THE RECONSTRUCTION AREA. THE FRONTAGE ROAD LANE CLOSURE TRANSITIONS [redacted] INCLUDE PLASTIC DRUM LANE CLOSURE TRANSITION WITH APPROPRIATE CONSTRUCTION WARNING SIGNS AND CONSTRUCTION PAVEMENT MARKINGS AS REQUIRED BY THE T.M.U.T.C.D. AND BARRICADE STANDARDS.

STATE OF TEXAS
MARIO R. JORGE
65538
REGISTERED
PROFESSIONAL ENGINEER

Mario R. Jorge, P.E.
10-31-91

PHASE V - CONSTRUCTION

TRAFFIC CONTROL PLAN

SHEET 24 OF 24 SHEETS

FED. ROAD DIV. NO.	STATE	FEDERAL AID PROJECT NO.				SHEET NO.
6	TEXAS	NH 92 (50)M				324
STATE DIST. NO.	COUNTY	CONT. NO.	SEC. NO.	JOB NO.		HIGHWAY NO.
21	HIDALGO	39	17	97		US

GENERAL NOTES AND SPECIFICATION DATA--

---GENERAL---

THE FOLLOWING STANDARD DETAIL SHEETS [redacted] MODIFIED: GP A-2, GP C (SPL), PG-D, [redacted]-1, MH TY M, AND HMIF

ERECTION AND/OR REMOVAL OF POLES AND LUMINAIRES LOCATED NEAR ANY OVERHEAD ELECTRICAL LINES [redacted] ACCOMPLISHED USING ESTABLISHED INDUSTRY AND UTILITY SAFETY PRACTICES. CONTRACTOR [redacted] CONSULT WITH THE APPROPRIATE UTILITY COMPANY PRIOR TO BEGINNING SUCH WORK.

WORK INVOLVED IN REMOVING AND DISPOSING OF EXISTING PAVEMENT MARKERS AND/OR TRAFFIC BUTTONS [redacted] NOT [redacted] PAID FOR DIRECTLY, BUT [redacted] CONSIDERED SUBSIDIARY TO THE CONTRACT ITEMS INVOLVED.

THE CONTRACTOR [redacted] ARRANGE FOR AND COOPERATE WITH THE UTILITY COMPANY TO PROVIDE POWER SERVICE FOR ALL ILLUMINATION. ALL NECESSARY EXPENSES FOR POWER SERVICE CONNECTION [redacted] BORNE BY THE CONTRACTOR AND INCLUDED IN THE BID PRICE FOR THE INSTALLATIONS.

---ITEM 5 CONTROL OF THE WORK---

TO ENSURE ACCURATE MEASUREMENT FOR FINAL PAY QUANTITIES AND TO FACILITATE THE ENGINEER'S CHECK ON THE CONTRACTOR'S SURVEY WORK, THE CONTRACTOR [redacted] REQUIRED TO SET CONSTRUCTION STAKES BASED ON PLAN STATIONS AND AT 100 FT. MAXIMUM INTERVALS OR AS DIRECTED BY THE ENGINEER.

---ITEM 6 CONTROL OF MATERIALS---

THE CONTRACTOR [redacted] REQUIRED TO FURNISH THE RESIDENT ENGINEER THE MAXIMUM GROSS WEIGHTS, INCLUDING LOADS, FOR ALL VEHICLES, INCLUDING TRUCKS, TRUCK-TRACTORS, TRAILERS, SEMI-TRAILERS OR ANY COMBINATION OF SUCH VEHICLES USED TO DELIVER MATERIALS TO THE PROJECT. MAXIMUM GROSS WEIGHTS ARE [redacted] DETERMINED IN ACCORDANCE WITH THE SPECIAL PROVISION TO ITEM 6, "CONTROL OF MATERIALS", (006---040).

---ITEM 7 LEGAL RELATIONS AND RESPONSIBILITIES TO THE PUBLIC---

PARTIAL ACCEPTANCE OF ROADWAY LIGHTING [redacted] BY EACH SERVICE POLE AND ITS ASSOCIATED CIRCUITS.

ERECTION OF POLES AND LUMINAIRES LOCATED NEAR ANY OVERHEAD ELECTRICAL LINES [redacted] ACCOMPLISHED USING ESTABLISHED INDUSRTY AND UTILITY SAFETY PRACTICES. THE CONTRACTOR [redacted] CONSULT WITH THE APPROPRIATE UTILITY COMPANY PRIOR TO BEGINNING SUCH WORK.

Revised 3-30-92

GENERAL NOTES AND SPECIFICATION DATA--

---ITEM 164 SEEDING FOR EROSION CONTROL---, CONT'D

SEED MIXTURE	RATE	RECOMMENDED DATE
GREEN SPRANGLETOP -LEPTOCHLOA DUBIA	1.2 LBS/AC	JAN 15 TO MAY 1
BERMUDAGRASS -CYNODON DACTYLON	6.9 LBS/AC	JAN 15 TO MAY 1
K-R BLUESTEM -BOTHRIOCHLOA ISCHAEMUM DEG. VAR. SONGARICA	3.0 LBS/AC	JAN 15 TO MAY 1
BUFFALOGRASS -BUCHLOE DACTYLOIDES	5.0 LBS/AC	JAN 15 TO MAY 1
WINTER RYE *OPTION AS APPROVED BY THE ENGINEER) OPTION NO.1 -SETARIA ITALICA	90.0 LBS/AC	MAR 1 TO SEPT 1
OPTION NO. 2 -LOLIUM MULTIFLORUM	90.0 LBS/AC	OCT 1 TO FEB 1

GREEN SPRANGLETOP SCIENTIFIC NAME: LEPTOCHLOA DUBIA
MINIMUM ACCEPTABLE PURITY STANDARDS: 95%.
* MINIMUM ACCEPTABLE GERMINATION STANDARDS: 95%.
POUNDS OF PURE LIVE SEED (PLS) PER ACRE: 1.2

BERMUDAGRASS SCIENTIFIC NAME: CYNODON DACTYLON
MINIMUM ACCEPTABLE PURITY STANDARDS: 95%.
* MINIMUM ACCEPTABLE GERMINATION STANDARDS: 85%.
POUNDS OF PURE LIVE SEED (PLS) PER ACRE: 6.9.

K R BLUESTEM SCIENTIFIC NAME: BOTHRIOCHLOA ISCHAEMUM DEG VAR. SONGARICA
MINIMUM ACCEPTABLE PURITY STANDARDS: 58%.
* MINIMUM ACCEPTABLE GERMINATION STANDARDS: 77%.
POUNDS OF PURE LIVE SEED (PLS) PER ACRE: 3.0.

BUFFALO GRASS SCIENTIFIC NAME: BUCHLOE DACTYLOIDES
MINIMUM ACCEPTABLE PURITY STANDARDS: 92%.
* MINIMUM ACCEPTABLE GERMINATION STANDARDS: 90%.

WINTER RYE SCIENTIFIC NAME: SETARIA ITALICA OR LOLIUM MULTIFLORUM, SEE NOTE ABOVE.
MINIMUM ACCEPTABLE PURITY STANDARDS: 95%.
* MINIMUM ACCEPTABLE GERMINATION STANDARDS 90%.
POUNDS OF PURE LIVE SEED (PLS) ACRE: 90.0 TYP.

* NOTE: GERMINATION [redacted] INCLUDE HARDSEED AND/OR

GENERAL NOTES AND SPECIFICATION DATA--

---ITEM 8 PROSECUTION AND PROGRESS---

THE CONTRACTOR [redacted] COMPLETE ALL STORM SEWER OPERATIONS, EXCEPT AT THOSE LOCATIONS WHICH [redacted] CONFLICT WITH PHASE III CONSTRUCTION, INCLUDING ITS OUTFALL PRIOR TO THE START OF PHASE III.

WHEN REPLACING THE 72" RCP WITH THE 7X6 PRECAST BOX AT THE OUTFALL FOR NETWORK I, THE CONTRACTOR [redacted] REMOVE ONLY THOSE PIPE JOINTS WHICH HE REPLACES WITH THE PRECAST BOX SECTIONS BEFORE THE END OF THE DAY. THE 470 LF OF 72" RCP REMOVAL FROM NETWORK I [redacted] BECOME THE PROPERTY OF THE STATE. THE CONTRACTOR [redacted] STOCKPILE THE MATERIAL ALONG THE R.O.W. LINE [redacted] PICKED UP.

THE CONTRACTOR [redacted] BEGIN HIS STORM SEWER CONSTRUCTION AT THE TWO OUTFALLS AND WORK HIS WAY BACK TO THE US 83 FRONTAGE ROAD, COORDINATING HIS WORK IN SUCH A WAY AS TO MINIMIZE THE AMOUNT OF TIME IN WHICH THE DRAINAGE OF THE PROJECT IS SEVERELY AFFECTED.

---ITEMS 100, 102 AND 104 PREP ROW, CLEAR & GRUB, AND REMOV OLD CONC---

THE CONTRACTOR [redacted] NOT REMOVE ANY PALM NOT AUTHORIZED BY THE ENGINEER. PALMS [redacted] REMOVED [redacted] DISPOSED OF THE SAME DAY AS REMOVAL.

ALL BRUSH AND TREE LIMBS THAT OVERHANG INTO THE HIGHWAY R.O.W. ALONG THE R.O.W. LINE [redacted] REMOVED UNDER THIS ITEM AND DISPOSED OF AS DIRECTED BY THE ENGINEER.

UNLESS OTHERWISE AUTHORIZED BY THE ENGINEER, ALL OBSTRUCTIONS, OBJECTIONABLE MATERIAL AND OLD CONCRETE [redacted] DISPOSED OF BY HAULING IT OFF THE PROJECT AND OUT OF SIGHT FROM STATE HIGHWAYS TO DISPOSAL SITES ARRANGED FOR BY THE CONTRACTOR AND SATISFACTORY TO THE ENGINEER.

---ITEM 160 FURNISHING AND PLACING TOPSOIL---

TOPSOIL REQUIRED FOR THIS ITEM [redacted] FROM CONTRACTOR OBTAINED SOURCES OUTSIDE THE RIGHT-OF-WAY. THE TOPSOIL [redacted] TOPSOIL LOAM (PH 6.8-7.5), TYPICAL OF THE AREA, WITH NO NOXIOUS WEEDS, GRASSES, STICKS, OR STONES PRESENT AND [redacted] CONSISTENT IN TEXTURE (MAXIMUM LUMP SIZE OF 1").

GENERAL NOTES AND SPECIFICATION DATA--

---ITEM 164 SEEDING FOR EROSION CONTROL---, CONT'D
FIRMSEED AND/OR DORMANT SEED AS DETERMINED BY AN APPROVED SEED TESTING LABORATORY.

WATER [redacted] APPLIED UNIFORMLY OVER AREAS AFTER SEEDING OR SODDING AS DIRECTED BY THE ENGINEER IN ACCORDANCE WITH APPLICABLE PROVISIONS OF ITEM 168, "SPRINKLE IRRIGATION". IN ADDITION THE CONTRACTOR [redacted] BE RESPONSIBLE FOR A 90-DAY GRASS ESTABLISHMENT PERIOD. DURING THIS PERIOD WATER EQUIPMENT [redacted] METERED AND OPERATED UNDER PUMPING PRESSURE CAPABLE OF DELIVERING THE REQUIRED QUANTITIES OF WATER PER CYCLE. EACH CYCLE [redacted] EXECUTED EVERY TWO (2) DAYS, OR AS DIRECTED BY THE ENGINEER, AND WATER APPLIED IN SUCH A MANNER TO ENSURE ADEQUATE MOISTURE [redacted] MAINTAINED ON THE SURFACE OF THE GRASS SEED AND NOT ERODE THE SOIL IN PLACE. DURING PERIODS OF ADEQUATE MOISTURE, AS DEFINED BY THE ENGINEER, NO MECHANICAL WATERING [redacted] REQUIRED. IN ADDITION TO METERING THE WATER EQUIPMENT, THE CONTRACTOR SHALL, UPON REQUEST OF THE ENGINEER, PROVIDE A LOG BOOK AND RECEIPTS OF WATER APPLIED. GRASS ESTABLISHMENT, FERTILIZER AND WATER USED FOR GRASS ESTABLISHMENT [redacted] NOT [redacted] PAID FOR DIRECTLY, BUT [redacted] SUBSIDIARY TO ITEM 164.

THE BASIS OF THE ESTIMATE BELOW ESTABLISHES THE APPROXIMATE QUANTITY OF WATER REQUIRED TO COMPLETE ONE (1) FULL WATERING CYCLE:

* GRASS AREAS	GALLON/ACRE	ACRE	TOTAL GALLON (MINIMUM)
	3,394.0	7.71	26,170

---ITEM 190 ROADSIDE PLANTING---

THE CONTRACTOR [redacted] MAKE AN EXAMINATION OF THE PROJECT SITE AND COMPLETELY FAMILIARIZE HIMSELF WITH THE NATURE AND EXTENT OF THE WORK [redacted] ACCOMPLISHED. NO EXTRA COMPENSATION [redacted] ALLOWED FOR ANY WORK MADE NECESSARY BY UNUSUAL CONDITIONS OR OBSTACLES ENCOUNTERED DURING THE PROGRESS OF THE WORK WHICH ARE READILY APPARENT UPON A VISIT TO THE SITE. IF THERE ARE ANY QUESTIONS IN THIS REGARD, OR DISCREPANCIES BETWEEN THE PLANS AND ACTUAL SITE CONDITIONS, THE CONTRACTOR [redacted] NOTIFY THE ENGINEER PRIOR TO THE SUBMISSION OF BIDS.

THE SITE LIMITS, FOR THE PURPOSE OF SITE PREPARATION, PLANTING, WATERING AND OTHER LANDSAPE OPERATIONS REQUIRED UNDER THE CONTRACT, [redacted] INCLUDE ALL AREA(S) SHOWN ON THE PLANS. ALL PLANTING OPERATIONS AND ASSOCIATED WORK [redacted] CONFINED TO THESE AREAS AND OTHER SUCH AREAS OF THE RIGHT-OF-WAY THAT [redacted] REQUIRED TO GAIN ACCESS TO THE SITE(S) SPECIFIED HEREIN. IN SO FAR AS POSSIBLE, THE CONTRACTOR [redacted]

GENERAL NOTES AND SPECIFICATION DATA--

---ITEM 162 BLOCK SOD "BUFFALOGRASS"---

BLOCK SOD BUFFALOGRASS [redacted] APPLIED IN AREAS DESIGNATED ON THE PLANS OR AS DIRECTED BY THE ENGINEER. THIS WORK [redacted] NOT [redacted] PERFORMED UNTIL ALL CONSTRUCTION AND PLANTING ACTIVITIES HAVE BEEN COMPLETED. PRIOR TO SODING, THE AREAS DESIGNATED [redacted] FINISHED TO A SMOOTH SURFACE FOR UNIFORM APPLICATION. BLOCK SOD [redacted] ASEXUALLY PROPAGATED BUFFALOGRASS. THE VARIETY [redacted] "PRAIRIE BUFFALOGRASS" OR EQUAL.

EXAMPLE: CRENSHAW & DOUGUET TURFGRASS.
609 CASTLE RIDGE SUITE 220
AUSTIN, TEXAS 78746

GRASS [redacted] TAGED FOR PURITY STANDARDS AND DELIVERED TO TO THE SITE FRESHLY CUT AND STACKED ON PALLETS.

THE CONTRACTOR [redacted] PREPARE THE SOIL BY APPLYING FIRTILIZER AT TWO POUNDS OF NITROGEN PER SQUARE FOOT (1-1-1 RATIO FOR N-P-K) AND THOROUGHLY WATERED BEFORE SOD PLANTING, THIS WORK [redacted] NOT [redacted] PAID FOR DIRECTLY, BUT [redacted] SUBSIDIARY TO ITEM 162.

ANY VOIDS LEFT IN THE BLOCK SODING [redacted] FILLED WITH ADDITIONAL SOD AND TAMPED. BLOCK SOD PLACED ON SLOPES GREATER THAN 3:1 [redacted] PINNED TO HOLD THE SOD FIRMLY IN PLACE. ALL DITCH RUNS [redacted] FULLY SODDED (NO CHECKERBOARD) TO PREVENT SILT ACCUMULATION. ALL FLAT RUNS (AS DEFINED BY THE ENGINEER) [redacted] CHECKERBOARD SODDED.

---ITEM 164 SEEDING FOR EROSION CONTROL---

CELLULOSE FIBER MULCH SEEDING [redacted] APPLIED IN AREAS DESIGNATED ON THE PLANS OR AS DIRECTED BY THE ENGINEER. THIS WORK [redacted] NOT [redacted] PERFORMED UNTIL ALL CONSTRUCTION AND PLANTING ACTIVITIES HAVE BEEN COMPLETED. PRIOR TO SEEDING, THE AREAS DESIGNATED [redacted] FINISHED TO A SMOOTH SURFACE FOR UNIFORM APPLICATION OF SEED.

SEEDING [redacted] ACCOMPLISHED BY THE HYDROMULCH METHOD IN TWO APPLICATIONS AS SHOWN BELOW:

1ST APPLICATION - GRASS SEED

2ND APPLICATION - CELLULOSE FIBER MULCH. "FLAT" AREAS AT THE RATE OF 2000 POUND (DRY WEIGHT) MULCH PER ACRE. FERTILIZER 500 POUND PER ACRE. FERTILIZER [redacted] 5-5-10 N-P-K HOMOGENIZED.

GENERAL NOTES AND SPECIFICATION DATA--

---ITEM 190 ROADSIDE PLANTING---, CONT'D

VARY ACCESS ROUTES ACROSS THE RIGHT-OF-WAY TO PREVENT ANY DAMAGE TO SLOPES AND EXISTING VEGETATION. THE CONTRACTOR [redacted] BE RESPONSIBLE FOR THE REPAIR AND REPLACEMENT OF DAMAGED RIGHT-OF-WAY AND VEGETATION WHICH, IN THE OPINION OF THE ENGINEER, COULD HAVE BEEN AVOIDED. ALL MATERIAL AND WORK REQUIRED FOR REPAIR AND REPLACEMENT SHALL MEET WITH THE APPROVAL OF THE ENGINEER, AND [redacted] NOT [redacted] PAID FOR DIRECTLY, BUT [redacted] SUBSIDIARY TO THE VARIOUS BID ITEMS.

DURING THE EXECUTION OF THE WORK, UTMOST CARE [redacted] BE EXERCISED TO PREVENT DAMAGE TO ANY UTILITIES, STRUCTURES OR RIGHT-OF-WAY. THE CONTRACTOR [redacted] RESPONSIBLE FOR CONTACTING, LOCATING, AND PROTECTING ALL UNDERGROUND UTILITIES AND STRUCTURES. THE ENGINEER [redacted] ASSIST THE CONTRACTOR IN LOCATING UNDERGROUND UTILITIES AND STRUCTURES. HOWEVER, ANY DAMAGE TO EXISTING UTILITIES OR STRUCTURES [redacted] REPAIRED AT THE CONTRACTOR'S EXPENSE. IF IN THE COURSE OF THE WORK, UNDERGROUND UTILITIES OR STRUCTURES ARE ENCOUNTERED AND ARE IN CONFLICT WITH THE WORK, THE CONTRACTOR [redacted] CONTACT THE ENGINEER WHO [redacted] RECOMMEND NECESSARY ADJUSTMENTS. CHANGES OF THIS NATURE ARE CONSIDERED INCIDENTAL TO THE WORK AND [redacted] NOT ENTITLE THE CONTRACTOR TO ADDITIONAL COMPENSATION.

THE CONTRACTOR [redacted] NOT REPAIR OR SERVICE ANY EQUIPMENT OR PERFORM ANY OPERATION ON THE RIGHT-OF-WAY WHICH [redacted] IN ANYWAY MAR THE LANDSCAPE, BY RENDER THE SOIL STERILE, CAUSE DAMAGE TO EXISTING VEGETATION, OR PERFORM ANY OPERATION WHICH [redacted] HAVE AN ADVERSE AFFECT ON THE [redacted] USE OF THE LAND. IF THE CONTRACTOR NEEDS ADDITIONAL AREA FOR EMPLOYEE PARKING, SERVICING, STORAGE, AND SECURING OF EQUIPMENT AND MATERIALS USED IN THE PERFORMANCE OF THE SPECIFIED WORK, THE ENGINEER [redacted] UPON REQUEST FROM THE CONTRACTOR, DESIGNATE AN AREA FOR THIS PURPOSE. THE CONTRACTOR [redacted] RESPONSIBLE FOR THE MAINTENANCE AND SECURING OF THIS SITE WHICH [redacted] KEPT IN A NEAT, WORKMAN-LIKE APPEARANCE AT ALL TIMES. UPON COMPLETION OF THE WORK, THE CONTRACTOR [redacted] PROMPTLY REMOVE ALL EQUIPMENT, STRUCTURES, AND EXCESS MATERIALS FROM THE SITE AND RESTORE THE AREA TO ITS ORIGINAL CONDITION, INCLUDING THE REESTABLISHMENT OF SURFACE VEGETATION. THIS WORK [redacted] ACCOMPLISHED TO THE SATISFACTION OF THE ENGINEER AND [redacted] SUBSIDIARY TO THE VARIOUS BID ITEMS.

THE CONTRACTOR [redacted] RESPONSIBLE FOR PROTECTION OF HIS MATERIALS AND EQUIPMENT FROM THEFT, VANDALISM, ANIMALS, FIRE, ETC., WHILE SAID MATERIALS AND EQUIPMENT ARE ON THE PROJECT SITE, WHETHER STORED OR INSTALLED IN PLACE, UNTIL THE PROJECT HAS BEEN ACCEPTED BY THE ENGINEER. IN LIKE MANNER, THE CONTRACTOR [redacted] PROTECT ALL EARTHWORK.

GENERAL NOTES AND SPECIFICATION DATA--

---ITEM 190 ROADSIDE PLANTING---, CONT'D
UPON COMPLETION OF THE PROJECT, THE SITE(S) AS DEFINED HEREIN, [redacted] CLEANED OF ALL DEBRIS AND LEFT IN A NEAT AND PRESENTABLE CONDITION. THIS [redacted] INCLUDE BUT NOT [redacted] LIMITED TO, THE REMOVAL OF ALL NOXIOUS WEEDS AND DEBRIS FROM PLANTED AREAS AND THE PROPER MOWING OF THE SITE LIMITS AS SPECIFIED HEREIN OR AS SPECIFIED BY THE ENGINEER. THIS WORK [redacted] NOT [redacted] PAID FOR DIRECTLY, BUT [redacted] SUBSIDIARY TO THE VARIOUS BID ITEMS.

THE CONTRACTOR [redacted] RESPONSIBLE FOR PROVIDING MATERIAL SAMPLES AS WELL AS ANY MANUFACTURER'S LITERATURE OF MATERIALS USED ON THIS PROJECT AS REQUIRED BY THE ENGINEER. ANY COSTS ASSOCIATED WITH ANY SAMPLING AND TESTING [redacted] THE RESPONSIBILITY OF THE CONTRACTOR. THESE COSTS [redacted] CONSIDERED AS INCIDENTAL AND THE CONTRACTOR WILL NOT BE ENTITLED TO ANY ADDITIONAL COMPENSATION.

THE CONTRACTOR [redacted] REQUIRED TO VERIFY AND ADHERE TO THE REQUIREMENTS AND CODES OF THE CONTROLLING UTILITY AUTHORITIES IN THE EVENT ANY MATERIALS OR INSTALLATION OF ANY UTILITIES SHOWN ON THE PLANS ARE NOT ADEQUATE TO MEET THE REQUIREMENTS OR CODES OF THE CONTROLLING UTILITY AUTHORITIES. ANY CHANGES [redacted] NECESSARY [redacted] CONSIDERED INCIDENTAL AND THE CONTRACTOR [redacted] NOT [redacted] ENTITLED TO ANY ADDITIONAL COMPENSATION.

ANY WATER HAULED TO THE SITE DURING THE INSTALLATION OR NINETY (90)-DAY MAINTENANCE PERIOD SHALL BE PAID BY THE CONTRACTOR.

---PRECONSTRUCTION CONFERENCE---
PRIOR TO BEGINNING WORK ON THE PROJECT AND SOON AFTER THE AWARD OF THE CONTRACT, A CONFERENCE [redacted] HELD BETWEEN THE REPRESENTATIVES OF THE ENGINEER, THE CONTRACTOR, AND ANY SUBCONTRACTORS THAT WILL BE INVOLVED IN THE WORK. AT THIS TIME THE CONTRACTOR [redacted] SUBMIT CHARTS OR BRIEFS OUTLINING THE MANNER OF EXECUTION OF THE WORK THAT IS INTENDED IN ORDER TO COMPLETE THE SPECIFIED WORK WITHIN THE ALLOTTED TIME. THIS CONFERENCE WILL MORE COMPLETELY ESTABLISH THE SEQUENCE OF WORK [redacted] FOLLOWED AND ESTABLISH THE ESTIMATED PROGRESS SCHEDULE FOR COMPLETION OF THE VARIOUS TASKS.

IN ADDITION, AT THIS CONFERENCE, THE CONTRACTOR [redacted] RESPONSIBLE FOR FURNISHING THE ENGINEER WITH ALL OF THE FOLLOWING, AS SPECIFIED HEREIN OR AS DIRECTED BY THE ENGINEER:

1. SAMPLES OF ALL MATERIALS, EXCEPT PLANTS, [redacted] USED ON THE PROJECT WITH IDENTIFICATION AS TO PRODUCT NAME; NAME, LOCATION, PHONE NUMBER

GENERAL NOTES AND SPECIFICATION DATA--

---PRECONSTRUCTION CONFERENCE---, CONT'D
(INCLUDING AREA CODE), AND MAILING ADDRESS OF PRODUCT SOURCE AND MANUFACTURER, IF DIFFERENT FROM SOURCE; CONTENT OF PRODUCT; AMOUNT OF EACH INGREDIENT IN THE PRODUCT; AND THE MANUFACTURER'S DIRECTIONS AS TO USE AND APPLICATION OF THE PRODUCT, IF APPLICABLE.

2. MANUFACTURER'S LITERATURE OF ALL MATERIALS AND EQUIPMENT INSTALLED ON THE PROJECT.

3. ANY AND ALL STATE AND FEDERAL CERTIFICATIONS STATING THAT THE PLANT MATERIALS ARE FREE FROM DISEASE AND INSECT INFESTATION.

4. ALL NURSERY LOCATIONS, NAMES, PHONE NUMBERS (INCLUDING AREA CODES), AND MAILING ADDRESSES WHERE THE CONTRACTOR INTENDS TO PROCURE PLANT MATERIAL FOR THE PROJECT SO THAT CRITICAL PLANTS [redacted] INSPECTED AT THE SOURCE, IF NECESSARY. ALSO, INDICATE WHICH MATERIALS [redacted] OBTAINED FROM EACH NURSERY.

5. A PLAN FOR TRANSPORTING PLANT MATERIALS AS SPECIFIED UNDER ITEM 190 OF THESE GENERAL NOTES.

6. THE SOURCE OF WATER AND THE MEANS OF DISTRIBUTION ON THE PROJECT (THIS [redacted] IRRIGATION SYSTEM OR BY OTHER MEANS AS REQUIRED BY THE PROJECT).

ALL OF THE REQUIREMENTS LISTED UNDER THE "PRECONSTRUCTION CONFERENCE" [redacted] SUBJECT TO REVIEW, TESTING, AND APPROVAL BY THE ENGINEER. IF ITEMS FAIL TO MEET APPROVAL THE CONTRACTOR [redacted] CORRECT THE DEFICIENCIES AND RESUBMIT FOR APPROVAL AS DIRECTED BY THE ENGINEER, PRIOR TO BEGINNING WORK ON THE PROJECT. IF THESE ITEMS FAIL A SECOND APPROVAL, THE ENGINEER [redacted] DETERMINE THE COURSE OF ACTION FOR THE CONTRACTOR TO FOLLOW. ANY APPROVAL GIVEN, AS STATED ABOVE, [redacted] NOT RELIEVE THE CONTRACTOR FROM PROVIDING QUALITY MATERIALS, PRODUCTS, AND EQUIPMENT DURING CONSTRUCTION. THE ENGINEER HAS THE OPTION TO REVIEW, TEST, APPROVE, OR DISAPPROVE ANY PHASE OF THE CONSTRUCTION OR MAINTENANCE AS THE WORK PROGRESSES. IT IS UNDERSTOOD THAT SOME MATERIALS FOR THE PROJECT WILL REQUIRE MIXING. THEREFORE, THESE MATERIALS AFTER MIXING [redacted] REVIEWED, TESTED, AND APPROVED AS STATED WITHIN THESE GENERAL NOTES.

GENERAL NOTES AND SPECIFICATION DATA--

---MULCH MATERIALS---

1. MULCH MATERIAL FOR SOIL AMENDMENT REQUIRED IN THE BACKFILL MIX [redacted] 100% ORGANIC COMPOSTED MATERIAL, FACTORY BLENDED TO CONTAIN NONDEFOLIATED (ARSENIC ACID FREE) SOIL AMENDMENT, WEED FREE, AND CONTAINING AN APPROXIMATE NONLEACHABLE N-P-K ANALYSIS BY WEIGHT OF 1.2-0.5-1.1 WITH TRACE ELEMENTS.

   EXAMPLE: SWEET SOIL, SOIL AMENDMENT
   MANUFACTURED BY :

   ORGANIC COMPOST INC.
   BOX 1637
   EDINBURG, TEXAS 78540
   PH. NO. (512) 383 - 1121
   FAX NO. (512) 381 - 8824
   (OR APPROVED EQUAL)

2. ALL MULCH FOR SURFACE APPLICATION [redacted] SHREDDED PINE BARK. THE TEXTURE SHALL CORRESPOND TO THE TYPE I, CLASS B CLASSIFICATION OF THE FEDERAL SPECIFICATION Q-P-166E, WITH PARTICLES RANGING IN SIZE FROM 3/8 INCH TO ABOUT 1 INCH, WITH A MINIMUM (NOT OVER 25% BY VOLUME) OF FINER PARTICLES AND DUST. MULCH OF THIS TYPE AND CLASS [redacted] FREE OF STICKS, STONES, CLAY, OR OTHER FOREIGN MATTER.

3. ONE CUBIC FOOT (1 CF) SAMPLES OF EACH TYPE OF INGREDIENT ALONG WITH A LABEL FROM THE MANUFACTURER'S PACKAGES [redacted] SUBMITTED TO THE ENGINEER FOR APPROVAL. IF BULK MATERIALS ARE USED, TYPICAL SAMPLES OF EACH TYPE OF MATERIAL [redacted] PROVIDED TO THE ENGINEER FOR APPROVAL PRIOR TO THE PREPARATION OF THE PLANTING MIX. THESE SAMPLES, IF APPROVED BY THE ENGINEER, [redacted] USED AS THE STANDARD BY WHICH OTHER MATERIALS [redacted] JUDGED. ANY MATERIAL THAT, IN THE JUDGMENT OF THE ENGINEER, IS BELOW THE QUALITY OF THESE SAMPLES [redacted] TESTED IN ACCORDANCE WITH THE SPECIFICATIONS SET FORTH HEREIN. ANY REJECTED MATERIAL [redacted] IMMEDIATELY REMOVED FROM THE SITE AT THE CONTRACTORS EXPENSE. PAYMENT FOR ANY TESTING REQUIRED UNDER THIS SECTION [redacted] THE RESPONSIBILITY OF THE CONTRACTOR.

GENERAL NOTES AND SPECIFICATION DATA--

---PLANTING SOIL MIX---
BACKFILLING OF ALL TREE PITS [redacted] DONE WITH A PLANTING SOIL MIX AS SPECIFIED HEREIN. NATIVE SOIL REMOVED FROM THE PLANTING PITS AND BEDS SHALL NOT [redacted] USED TO FORM THE WATERING BASINS. EXCESS SOIL [redacted] REMOVED FROM THE SITE OR DISTRIBUTED AND LEVELED ON THE SITE BY THE CONTRACTOR AS DIRECTED BY THE ENGINEER. WATERING BASINS [redacted] FORMED USING THE SOIL MIX AND RAKED SMOOTH.

PLANTING SOIL MIX USED FOR BACKFILLING TREE PLANTING PITS [redacted] PREPARED IN THE FOLLOWING PROPORTIONS BY VOLUME:

60% SANDY LOAM TOPSOIL (PH 6.8-7.5). SOIL [redacted] TYPICAL OF THE AREA WITH NO NOXIOUS WEEDS, GRASSES STICKS, ROOTS, OR STONES PRESENT AND [redacted] CONSISTENT IN TEXTURE. (MAXIMUM LUMP SIZE IS 1").
40% SOIL AMENDMENT AS LISTED ABOVE.

THE ENGINEER [redacted] REQUIRE THE CONTRACTOR TO MIX ALL INGREDIENTS OF THE PLANTING SOIL MIX IN THE PRESENCE OF THE ENGINEER.

ALL INGREDIENTS [redacted] THOROUGHLY BLENDED TO PROVIDE A HOMOGENEOUS MIXTURE. MIXING [redacted] IN ONE CUBIC YARD OR GREATER BATCHES USING MECHANICAL MIXING EQUIPMENT APPROVED BY THE ENGINEER. MIXING [redacted] DONE IN A DESIGNATED ON-SITE AREA OR IT [redacted] ACCOMPLISHED OFF-SITE, IF APPROVED BY THE ENGINEER, AND THE FINISHED MATERIAL TRANSPORTED TO THE SITE.

SAMPLES OF AT LEAST ONE CUBIC FOOT (1 CF) FOR EACH TEN CUBIC YARDS (10 CY) OF PLANTING SOIL MIX USED ON THE SITE [redacted] SUBMITTED TO THE ENGINEER FOR APPROVAL. IN THE EVENT DEFICIENCIES ARE FOUND IN THE PLANTING MIX, THEY [redacted] CORRECTED IMMEDIATELY. IF THE MATERIAL IS REJECTED ON THE PROJECT SITE BY THE ENGINEER FOR ANY REASON, ALL OF THE REJECTED MATERIAL [redacted] IMMEDIATELY REMOVED FROM THE SITE AND DISPOSED OF BY THE CONTRACTOR AT HIS EXPENSE. [redacted] ANY OF THE REJECTED MATERIAL [redacted] LAYER USED IN THE PLANTING OPERATIONS, THE ENGINEER, AT HIS DISCRETION, [redacted] REQUIRE THE CONTRACTOR TO REMOVE AND REPLACE THE SOIL MIX WITH AN APPROVED MIXTURE. ANY TESTING REQUIRED BY THE ENGINEER [redacted] THE RESPONSIBILITY OF THE CONTRACTOR AND [redacted] CONSIDERED SUBSIDIARY TO THE WORK AND NO ADDITIONAL COMPENSATION [redacted] AWARDED.

GENERAL NOTES AND SPECIFICATION DATA--

---FERTILIZER APPLICATION AT PLANTING---
ALL PLANTS [redacted] FERTILIZED WITH AN APPROVED SLOW RELEASE TABLET APPLIED AT THE RATE SHOWN ON THE PLANS, OR AT A COMPARABLE RATE FOR AN APPROVED SUBSTITUTE. THE CONTRACTOR [redacted] SUBMIT COMPLETE MANUFACTURER'S LITERATURE AND ANALYSIS DATA FOR APPROVAL OF THE ENGINEER PRIOR TO BEGINNING WORK ON THE PROJECT.

APPLICATION [redacted] AS FOLLOWS:

(1) GALLON MATERIAL - ONE (1) TABLETS
(5) GALLON MATERIAL - TWO (2) TABLETS
(10) GALLON MATERIAL - TWO (2) TABLETS
(15) GALLON MATERIAL - THREE (3) TABLETS
PALMS - EIGHT (8) TABLETS EACH
TREES - ONE (1) TABLET PER 1/2 INCH CALIPER
PLACEMENT OF TABLETS ARE AS DESIGNATED ON THE PLANS.

---STAKING OF PLANT MATERIAL LOCATIONS---
ALL TREES AND PALMS [redacted] STAKED IN THE FIELD BY THE CONTRACTOR AND APPROVED BY THE ENGINEER PRIOR TO ANY EXCAVATION OF PLANT PITS. STAKES [redacted] COLOR CODED TO DENOTE TREE LOCATIONS AT THE TIME WHEN TREE LOCATIONS HAVE BEEN STAKED AND STAKES COLOR CODED, THE ENGINEER [redacted] HAVE THE RIGHT TO MAKE ADJUSTMENTS TO THE PLANT LOCATIONS [redacted] MEET FIELD CONDITIONS. THESE CHANGES [redacted] CONSIDERED INCIDENTAL AND THE CONTRACTOR [redacted] NOT [redacted] ENTITLED TO ANY ADDITIONAL COMPENSATION.

---SIGNAGE STAKING---
THE CONTRACTOR [redacted] ALSO LOCATE AND STAKE ALL SIGNAGE LOCATIONS ON THE PROJECT AT THE TIME OF PLANT STAKING. SIGNAGE STAKING [redacted] CONSIDERED INCIDENTAL AND THE CONTRACTOR [redacted] NOT [redacted] ENTITLED TO TO ANY ADDITIONAL COMPENSATION.

---STAKING AND GUYING---
THE CONTRACTOR [redacted] INSTALL AND MAINTAIN THE GUYING MATERIAL AS DETAILED ON THE PLANS OR AS DIRECTED BY THE ENGINEER.

---WATER AND WATERING---
WATER FOR ALL PLANTING AND 90 DAY MAINTENANCE OPERATIONS [redacted] THE RESPONSIBILITY OF THE CONTRACTOR. WATER [redacted] CLEAN, CLEAR, AND FREE

GENERAL NOTES AND SPECIFICATION DATA--

---WATER AND WATERING---, CONT'D
OF INDUSTRIAL WASTES OR OTHER SUBSTANCES HARMFUL TO PLANTS. THE CONTRACTOR [redacted] PROVIDE ALL REQUIRED FACILITIES, TO MAKE CONNECTIONS AND CONVEY THE WATER TO THE PLACES WHERE IT [redacted] USED AND TO INCREASE THE WATER PRESSURE IF REQUIRED. AT THE PRECONSTRUCTION CONFERENCE, THE CONTRACTOR [redacted] PREPARED TO IDENTIFY THE SOURCE OF WATER AND THE MEANS FOR DELIVERY AND DISTRIBUTION OF WATER ON THE SITE.

DURING THE PLANTING OPERATIONS, THE CONTRACTOR [redacted] PROVIDE A QUANTITY AND FREQUENCY OF WATER APPLICATION TO KEEP THE GROUND AND BACKFILL MATERIAL MOIST TO A DEPTH OF AT LEAST TWELVE INCHES (12") BELOW THE ROOT BALL AND FOR THE DURATION OF THE 90-DAY MAITENANCE PERIOD AS A PART OF THIS CONTRACT. THE CONTRACTOR [redacted] REQUIRED TO MEET THE MINIMUM WATERING REQUIREMENT STATED ABOVE BY A METHOD APPROVED BY THE ENGINEER OR, IF APPLICABLE, IN THE EVENT THE IRRIGATION SYSTEM FAILS.

---PRUNING---
ANY NECESSARY PRUNING [redacted] DONE AT THE TIME OF PLANTING AS DIRECTED BY THE ENGINEER AND IN ACCORDANCE WITH APPROVED HORTICULTURAL METHODS. BALLED-IN-BURLAPPED TREES [redacted] PRUNED TO REDUCE FOLIAGE BY NO MORE THAN ONE-THIRD (1/3) OF THAT EXISTING PRIOR TO DIGGING AND [redacted] PERFORMED IN SUCH A MANNER AS TO RETAIN THE NATURAL SHAPE OF THE PLANT. CONTAINER-GROWN PLANTS [redacted] NOT [redacted] PRUNED FOR SHAPE OR FOLIAGE REDUCTION. ALL PLANTS [redacted] PRUNED AS NECESSARY TO REMOVE DAMAGED TWIGS, BRANCHES, ROOTS, AND AS MUCH ADDITIONAL PRUNING AS REQUIRED BY THE ENGINEER. ALL PRUNING [redacted] ACCOMPLISHED WITH CLEAN SHARP TOOLS SPECIFICALLY DESIGNED FOR THESE PURPOSES. PRUNING AND SELECTIVE THINNING EQUAL TO CLASS I "FINE PRUNING" [redacted] ACCOMPLISHED AS NEEDED DURING THE CONTRACT PERIOD. THE REMOVAL OF SUCKER GROWTH [redacted] AS REQUIRED TO KEEP THE PLANT MATERIAL FREE OF SUCKER GROWTH.

---PLANT BASIN MAINTENANCE---
DURING THE INSTALLATION AND NINETY (90) DAY MAINTENANCE PERIOD ALL PLANT BASINS AND PLANTING BEDS [redacted] MAINTAINED WEED FREE. NYLON STRING TRIMMERS [redacted] NOT [redacted] USEDWITHIN THE PLANT BASINS OR PLANTING BEDS. A TWO INCH (2") LAYER OF PINE BARK MULCH OR SHREDDED CYPRESS MULTCH, FINE GRADE AND FREE OF DEBRIS, [redacted] ESTABLISHED AND MAINTAINED AT ALL TIMES WITHIN THE BASINS AND BEDS. EXISTING MULCH [redacted] WORKED AS TO ELIMINATE MULCH COMPACTION.

WATERING BASINS [redacted] MAINTAINED AS PER DETAILS (SEE PLAN SHEET 481) BACK FILL MATERIAL LISTED ABOVE, FREE OF WEED SEED OR OTHER UNDESIRABLE DEBRIS, [redacted] USED TO BUILD BASINS AND [redacted] COMPACTED TO

GENERAL NOTES AND SPECIFICATION DATA--

---PLANT BASIN MAINTENANCE---, CONT'D
ADEQUATELY REDUCE EROSION DURING WATERING OR EXCESSIVE RAINFALL.

---TREE BRACING AND WRAPPING---

TREE BRACING [redacted] REQUIRED UNDER THIS CONTRACT, AS DETAILED ON THE PLANS.

TREE WRAPPING [redacted] NOT [redacted] REQUIRED FOR THIS CONTRACT.

---PLANT MATERIAL---

AS DIRECTED BY THE ENGINEER, THE CONTRACTOR [redacted] REQUIRED TO FURNISH AND INSTALL THE FOLLOWING PLANTS WITHIN THE PROJECT LIMITS AS NEEDED. THE QUANTITY OF EACH PLANT TYPE LISTED WITHIN THE ESTIMATE SUMMARY SHEET AND WITHIN THE PROJECT PROPOSAL [redacted] INCREASED OR DECREASED AS NECESSARY. THE CONTRACTOR [redacted] PAID FOR THE ACTUAL NUMBER OF PLANTS INSTALLED BASED ON THE UNIT PRICE BID FOR EACH TYPE. REPLACEMENT PLANT MATERIAL [redacted] MEET OR EXCEED THE FOLLOWING SPECIFICATIONS:

---PLANTING---

ALL PALMS [redacted] SET WITH THE TERMINAL BUD PLUMB IN THE LOCATIONS INDICATED ON THE PLANS. ALL PALMS [redacted] SET AT LEAST SIX (6) TO TWELVE (12) INCHES DEEPER THAN THE TOP MOST SURFACE OF THE BALL AFTER PLANTING. A SOIL WATERING RING [redacted] FORMED AT THE OUTSIDE EDGE OF THE PLANT PIT WITH A MINIMUM DEPTH OF EIGHT (8) INCHES IN THE EVENT THAT SOME PALMS HAVE CURVED TRUNKS THAT WILL REQUIRE ADDITIONAL SUPPORT. THE CONTRACTOR [redacted] USE FOUR (4) INCH OR LARGER PEELED POSTS AS THE MAIN SUPPORTS AND PRESSURE TREATED 2 X 4 BLOCKS TO SECURE PEELED POSTS TO THE PALM. NAIL BLOCKS [redacted] SECURED TO THE TRUNK WITH NYLON STRAPS OR METAL BANDS. NO NAILS [redacted] DRIVEN DIRECTLY INTO THE TRUNKS OF THE PALMS.

CALIFORNIA FAN PALM, WASHINGTONIA FILIFERA, EIGHT (8) TRUNK FEET, [redacted] A FULLY DEVELOPED PALM WITH EIGHT (8) OR MORE FEET OF DEVELOPED WOOD TO THE TRUNK. PALM TRUNKS [redacted] STRAIGHT WITH OUT CURVES UNLESS AS NOTED ON THE PLAN SHEETS. HEADS [redacted] HAVE THREE (3) TO FOUR (4) LOWER FRONDS STRIPPED AND USED TO SUPPORT THE TERMINAL BUD BY WRAPPING WITH JUTE TWINE. THE REMAINING FRONDS SHALL THEN BE SECURED TO THE BOUND BUD. ROOT BALLS [redacted] TIGHT, GENERALLY CIRCULAR, WITH A MINIMUM DIAMETER OF THIRTY-SIX (36) INCHES AND A MINIMUM DEPTH OF FOURTEEN (14) INCHES, MEASURED AT THE BASE OF THE TREE.

GENERAL NOTES AND SPECIFICATION DATA--

---PLANTING---, CONT'D
TEXAS PALM, SABAL TEXANA, [redacted] A FULLY DEVELOPED PALM WITH SIX (6) OR MORE FEET OF DEVELOPED WOOD TO THE TRUNK. HEADS [redacted] HAVE THREE (3) TO FOUR (4) LOWER FRONDS STRIPPED AND USED TO SUPPORT THE TERMINAL BUD BY WRAPPING WITH JUTE TWINE. THE REMAINING FRONDS [redacted] THEN BE SECURED TO THE BOUND BUD. ROOT BALLS [redacted] TIGHT, GENERALLY CIRCULAR, WITH A MINIMUM DIAMETER OF THIRTY-SIX (36) INCHES AND A MINIMUM DEPTH OF FOURTEEN (14) INCHES, MEASURED AT THE BASE OF THE PALM.

KING SAGO PALM, SAGO REVOLUTA, [redacted] A FULLY DEVELOPED PALM WITH TWO (2) OR MORE FEET OF DEVELOPED WOOD TO THE TRUNK. HEADS SHALL HAVE THREE (3) TO FOUR (4) LOWER FRONDS STRIPPED AND USED TO SUPPORT THE TERMINAL BUD BY WRAPPING WITH JUTE TWINE. THE REMAINING FRONDS [redacted] THEN BE SECURED TO THE BOUND BUD. ROOT BALLS [redacted] TIGHT, GENERALLY CIRCULAR, WITH A MINIMUM DIAMETER OF EIGHTEEN (18) INCHES AND A MINIMUM DEPTH OF TEN (10) INCHES, MEASURED AT THE BASE OF THE PALM.

QUERCUS VIRGINIANA, LIVE OAK, [redacted] CONTAINER-GROWN WITH A MINIMUM CONTAINER SIZE OF FORTY (40) GALLON. TREES [redacted] TEN TO THELVE FEET (10'-12') IN HEIGHT WITH A MINIMUM SPREAD OF SIX FEET (6'). TREES [redacted] HAVE A SINGLE, STRAIGHT TRUNK WITH BRANCHING NO LOWER THAN FOUR FEET (4') AND A CALIPER OF THREE AND ONE HALF (3" 1/2) TO FOUR (4) INCHES.

CEDAR ELM, ULMUS CRASSIFOLIA, [redacted] 4 INCHES IN CALIPER WITH AN AVERAGE HEIGHT RANGE OF 18 TO 20' TREES [redacted] HAVE A SINGLE, STRAIGHT TRUNK WITH BRANCHING NO LOWER THAN FOUR FEET (4'), B&B. SPREAD [redacted] 4 TO 6 FEET.

ASH, FRAXINUS BERLANDIERIANA OR FRAXINUS VELUTINA. [redacted] 2.5 TO 3 INCHES CALIPER WITH AN AVERAGE HEIGHT RANGE OF 15 TO 18 FEET. SPREAD [redacted] 4 TO 5 FEET. B&B.

ANAQUA, ENRETIA ANACUA, [redacted] 2.5 TO 3 INCHES CALIPER WITH AN AVERAGE HEIGHT RANGE OF 8 TO 10 FEET. SPREAD [redacted] 4 TO 5 FEET. B&B.

ROBUSTA COTTON WOOD, POPULUS DELTOIDES, 'ROBUSTA' [redacted] B&B WITH A MINIMUM HEIGHT OF SEVEN (7) FEET AND A SPREAD OF 3 TO 4 FEET. [redacted] HAVE AN FOUR (4) INCH CALIPER AND SINGLE, STRAIGHT TRUNK WITH BRANCHING NO LOWER THAN FOUR FEET, WELL ROOTED AND FULL.

GREAT LEAD TREE, LEUCAA RETUSA, 'RETUSA' [redacted] B&B. AND HAVE AN AVERAGE HEIGHT RANGE OF 10-12 FEET THE PLANTS SHALL HAVE A MINIMUM CALIPER OF ONE TO ONE AND ONE-HALF (1-1 1/2) INCHES.

GENERAL NOTES AND SPECIFICATION DATA--

---PLANTING---, CONT'D
WILD OLIVE, CORDIA BOISSERI, [redacted] BE B&B, AND HAVE AN AVERAGE HEIGHT RANGE OF 5-6 FEET. THE PLANTS [redacted] HAVE A MINIMUM CALIPER OF TWO AND ONE-HALF (2-1/2) TO THREE (3) INCHES.

BIRD OF PARADISE, CAESALPINIIA GILLIESII, [redacted] B&B STOCK WITH A MINIMUM OF THREE TRUNKS AND A HEIGHT RANGE OF 4 TO 5 FEET, WELL ROOTED AND FULL.

MOUNTAIN LAUREL, SOPHORA SECUNDIFLORA, [redacted] CONTAINER-GROWN STOCK WITH A MINIMUM CONTAINER SIZE OF FIFTEEN (15) GALLON. [redacted] MULTI-TRUNK WITH A MINIMUM OF 5 - 6 FEET AND A MINIMUM SPREAD OF 28-32 INCHES.

YAUPON HOLLY, ILEX VOMITORIA, FIFTEEN (15) GALLON, [redacted] FIVE TO SIX FEET (5'-6') IN HEIGHT, WITH A MINIMUM SPREAD OF THREE FEET (3'). PLANTS [redacted] HAVE A MINIMUM OF TWO (2) TRUNKS WITH A MINIMUM CALIPER OF THREE-QUARTERS OF AN INCH (3/4"). PLANTS [redacted] GENERALLY SYMMETRICAL WITH TWIGGY WELL DEVELOPED TOPS.

NERIUM OLEANDER, VAR. "HARDY RED", RED OLEANDER, FIVE (5) GALLON [redacted] THIRTY TO THIRTY-SIX INCHES (30"-36") IN HEIGHT AND A SPREAD OF TWENTY-FOUR TO THIRTY INCHES (24-30"). EACH PLANT [redacted] FULL WITH WELL DEVELOPED TOPS AND A MINIMUM OF 3 FULL STALKS.

SPANISH DAGGER, YUCCA TRECULENA, [redacted] B&B, AND HAVE AN MINIMUM HEIGHT OF FOUR 4 TO 5 FEET, WELL ROOTED AND FULL. 50% OF ALL SPANISH DAGGERS [redacted] HAVE MULTI HEADS.

SPANISH DAGGER, YUCCA TRECULENA, [redacted] B&B, AND HAVE AN MINIMUM HEIGHT OF 7 TO 8 FEET, WELL ROOTED AND FULL. 50% OF ALL SPANISH DAGGERS [redacted] HAVE MULTI HEADS.

BOUGAINVILLEA, BOUGAINVILLEA GLABRA 'MEXICO RED', [redacted] FIVE (5) GALLON CONTAINER-GROWN STOCK. PLANT [redacted] HAVE A MINIMUM OF THREE (3) TO FOUR (4) WELL DEVELOPED STALKS EACH. HEIGHT [redacted] 2 1/2 TO 3 FEET, WELL ROOTED AND FULL.

PHILLODENDRON, PHILLODENDRON SELLOUM, [redacted] ONE (1) GALLON CONTAINER-GROWN STOCK. PLANT [redacted] HAVE A MINIMUM OF THREE (3) TO FOUR (4) WELL DEVELOPED STALKS EACH. HEIGHT [redacted] 2 1/2 TO 3 FEET, WELL ROOTED AND FULL.

CENIZO, LEUCOPHYLLUM FRUTESCENS 'GREEN CLOUD' [redacted] CONTAINER-GROWN ONE (1) GALLON WITH A MINIMUM SPREAD OF 18-24 INCHES, WELL ROOTED AND FULL.

GENERAL NOTES AND SPECIFICATION DATA--

---PLANTING---, CONT'D

CENIZO, LEUCOPHYLLUM FRUTESCENS 'WHITE CLOUD' [redacted] CONTAINER-GROWN ONE (1) GALLON WITH A MINIMUM SPREAD OF 18-24 INCHES, WELL ROOTED AND FULL.

ENGELMAN'S PRICKLY PEAR, OPTUNIA LINDHEIMERI, [redacted] B&B STOCK 7-8 HEADS WITH A MINIMUM SPREAD OF EIGHTEEN (18) INCHES AND AN MINIMUM HEIGHT OF THELVE (12) INCHES EACH.

TURKS CAP, CLERODENDRUM SIPHONANTHUS, [redacted] CONTAINER-GROWN ONE (1) GALLON WITH A MINIMUM SPREAD OF 18-24 INCHES, WELL ROOTED AND FULL.

NATAL PLUM, CARISSA GRANDIFLORA, [redacted] CONTAINER-GROWN ONE (1) GALLON WITH A MINIMUM SPREAD OF 18-24 INCHES, WELL ROOTED AND FULL.

ALL PLANTS [redacted] TRUE TO SPECIES AND VARIETY AND [redacted] CONFORM TO MEASUREMENTS AND CONDITIONS AS SPECIFIED, UNLESS OTHERWISE AGREED UPON BY THE ENGINEER. PLANTS [redacted] SUBJECT TO INSPECTION AND APPROVAL BY THE ENGINEER AT THE PLACE OF GROWTH AND UPON DELIVERY TO THE PROJECT SITE FOR CONFORMITY TO THE SPECIFICATIONS. SUCH APPROVAL [redacted] NOT IMPAIR THE RIGHT OF INSPECTION AND REJECTION DURING PROGRESS OF THE WORK. THE ENGINEER RESERVES THE RIGHT TO REFUSE INSPECTION AT ANY TIME IF IN HIS JUDGMENT A SUFFICIENT QUANTITY OF PLANTS IS NOT AVAILABLE FOR INSPECTION.

ALL PLANTS INSPECTED AT THE PLACE OF GROWTH BY THE ENGINEER [redacted] BE TAGGED WITH SERIALIZED SELF-LOCKING TAGS. PLANTS DELIVERED TO THE SITE WITHOUT THESE TAGS OR WITH BROKEN TAGS [redacted] SUFFICIENT REASON FOR REJECTION. TAGS [redacted] FURNISHED BY THE CONTRACTOR AND APPROVED BY THE ENGINEER.

THE CONTRACTOR [redacted] SUBMIT FOR APPROVAL A PLAN TO THE ENGINEER FOR TRANSPLANTING PLANT MATERIAL FROM THE PLACE OF GROWTH TO THE SITE. SUCH A PLAN [redacted] INCLUDE: DATE OF PICK-UP, PLACE OF GROWTH, NURSERY OR PLACE OF STORAGE, TYPE OF VEHICLE USED FOR SHIPPING, METHOD OF PROTECTING PLANTS DURING TRANSIT, DATE OF DELIVERY TO SITE, PROJECTED DATE OF INSTALLATION, A MEANS OF STORAGE AND CARE. [redacted] WATERING AND SHADING USED BETWEEN DELIVERY AND PLANTING WHICH [redacted] SUBJECT TO REVIEW BY THE ENGINEER. DO NOT STORE PLANT MATERIALS ON HARD SURFACES AND IMMEDIATELY UNTIE MATERIAL UPON DELIVERY.

THE FOLLOWING CONSIDERATIONS FOR PRODUCT HANDLING BY THE CONTRACTOR [redacted] EVALUATED DURING HOT WEATHER AND WHEN PRACTICAL:

1) THE CONTRACTOR [redacted] REQUIRED TO TRANSPORT

GENERAL NOTES AND SPECIFICATION DATA--

---PLANTING---, CONT'D
PLANT MATERIALS BETWEEN SUNSET AND SUNRISE IF TRANSPORTED IN AN OPEN TRAILER OR UNREFRIGERATED VAN.

2) DUG MATERIAL [redacted] MAINTAINED AND WATERED AS REQUIRED AT THE NURSERY TO GUARANTEE THEIR VITALITY AND HEALTH UNTIL INSTALLATION.

3) PROTECT TRUNKS, STEMS, BRANCHES, AND ROOT BALLS FROM ALL DAMAGE DURING DIGGING, HANDLING, TYPING, WRAPPING, LOADING, UNLOADING, AND UNTYING OPERATIONS.

4) LOAD CONTAINERS ONTO TRANSPORT VEHICLE AND SECURE IN A MANNER THAT PROTECTS THE STRUCTURAL INTEGRITY OF THE ROOT BALLS AND BRANCHES.

5) THE CONTRACTOR [redacted] SOLELY RESPONSIBLE FOR THE SAFE TRANSPORTATION OF PLANTS TO THE SITE AND THEIR CONDITION UPON ARRIVAL.

6) PLANTS DAMAGED, DEHYDRATED OR ABUSED DURING TRANSIT AND STORAGE [redacted] REJECTED.

7) PLANT MATERIALS [redacted] NOT [redacted] STORED ON CONCRETE OR LEFT EXPOSED TO THE SUN.

8) PROTECT THE ROOT BALLS AND WATER REGULARLY UNTIL PLANTING.

9) IF PLANTS ARE LEFT IN STORAGE OVER THE WEEKEND OR HOLIDAY, A MEANS OF PERIODICALLY WATERING AND INSPECTING ROOT BALL MOISTURE [redacted] PROVIDED.

THE ENGINEER [redacted] INSPECT ANY PHASE OF PRODUCT HANDLING AND [redacted] REJECT ANY PLANT MATERIAL IMPROPERLY HANDLED DURING ANY POINT OF THIS OPERATION.

WHERE SPECIFIED [redacted] NURSERY-GROWN, EITHER IN CONTAINERS OR IN THE FIELD, SUCH PLANTS [redacted] NURSERY-GROWN IN ACCORDANCE WITH HORTICULTURAL PRACTICES UNDER CLIMATIC CONDITIONS SIMILAR TO THOSE OF THE PROJECT FOR AT LEAST TWELVE (12) MONTHS, UNLESS SPECIFICALLY OTHERWISE AUTHORIZED BY THE ENGINEER IN WRITING. UNLESS SPECIFICALLY NOTED OTHERWISE, ALL PLANTS [redacted] HEAVY, SYMMETRICAL, TIGHTLY KNIT, SO TRAINED OR FAVORED IN DEVELOPMENT AND APPEARANCE AS [redacted] SUPERIOR

GENERAL NOTES AND SPECIFICATION DATA--

---PLANTING---, CONT'D
IN FORM, NUMBER OF BRANCHES, COMPACTNESS AND SYMMETRY.

PLANTS [redacted] SOUND, HEALTHY AND VIGOROUS, WELL BRANCHED AND DENSELY FOLIATED, WHEN IN LEAF. THEY [redacted] FREE OF DISEASE, INSECT INFESTATION, EGGS, OR LARVAE, AND [redacted] HAVE HEALTHY, WELL DEVELOPED ROOT SYSTEMS. THEY [redacted] FREE FROM PHYSICAL DAMAGE OR ADVERSE CONDITIONS THAT [redacted] PREVENT THRIVING GROWTH.

PLANTS [redacted] MEASURED WHEN BRANCHES ARE IN THEIR NORMAL POSITION. HEIGHT AND SPREAD DIMENSIONS SPECIFIED REFER TO THE MAIN BODY OF THE PLANT AND NOT BRANCH TIP TO TIP. CALIPER MEASUREMENT [redacted] TAKEN AT A POINT ON THE TRUNK SIX INCHES (6") ABOVE NATURAL GROUND LINE FOR TREES UP TO FOUR INCHES (4") IN CALIPER AND AT A POINT TWELVE INCHES (12") ABOVE NATURAL GROUND LINE FOR TREES OVER FOUR INCHES (4") IN CALIPER. IF A RANGE OF SIZE IS GIVEN, NO PLANT [redacted] LESS THAN THE MINIMUM SIZE AND AT LEAST 40% OF THE PLANTS [redacted] AS LARGE AS THE MAXIMUM SIZE SPECIFIED. THE MEASUREMENTS SPECIFIED ARE THE MINIMUM SIZE ACCEPTABLE AND ARE THE MEASUREMENTS AFTER PRUNING, WHERE PRUNING IS REQUIRED. PLANTS THAT MEET THE MEASUREMENTS SPECIFIED, BUT DO NOT POSSESS A NORMAL BALANCE BETWEEN HEIGHT AND SPREAD [redacted] REJECTED.

ALL PLANTS SPECIFIED IN CONTAINERS [redacted] PROVIDED IN STRUCTURALLY SOUND, NURSERY PLANT CONTAINERS WITH THE MINIMUM SIZE AS SPECIFIED. CONTAINER DIMENSIONS [redacted] AS RECOMMENDED BY THE "AMERICAN STANDARD FOR NURSERY STOCK", CURRENT EDITION. IF A CONTAINER IS NOT LISTED IN THE "AMERICAN STANDARD FOR NURSERY STOCK", THEN THE ENGINEER WILL HAVE FINAL APPROVAL OF CONTAINER DIMENSIONS.

CONTAINER STOCK [redacted] GROWN IN THE DELIVERED CONTAINERS FOR AT LEAST SIX (6) MONTHS, BUT NOT OVER THO (2) YEARS. SAMPLES MUST PROVE NO ROOTBOUND CONDITIONS EXIST. NO CONTAINER PLANTS THAT HAVE CRACKED OR BROKEN BALLS OF EARTH WHEN TAKEN FROM CONTAINER [redacted] PLANTED. CONTAINER STOCK [redacted] NOT [redacted] PRUNED BEFORE DELIVERY. FIELD GROWN PLANTS RECENTLY TRANSPLANTED INTO CONTAINERS [redacted] NOT [redacted] ACCEPTED.

TREES WHICH HAVE DAMAGED, CROOKED, OR MULTIPLE LEADERS; UNLESS SPECIFIED, [redacted] REJECTED. TREES WITH ABRASIONS OF THE BARK, SUNSCALDS, DISFIGURING KNOTS, OR FRESH CUTS OF LIMBS OVER THREE-QUARTERS INCH (3/4") THAT HAVE NOT COMPLETELY CALLOUSED [redacted] REJECTED.

THE CONTRACTOR [redacted] NEITHER WORK SUBSOIL FOR PLANTING OPERATIONS WHEN MOISTURE CONTENT IS SO GREAT THAT EXCESSIVE COMPACTION [redacted] OCCUR NOR WHEN IT IS SO DRY THAT THE CLODS [redacted] NOT BREAK READILY. WATER [redacted] APPLIED, IF NECESSARY.

GENERAL NOTES AND SPECIFICATION DATA--

---PLANTING---, CONT'D

THE CONTRACTOR [redacted] NOT EXCAVATE TREE PITS MORE THAN 24 HOURS IN ADVANCE OF PLANTING OPERATION. ANY PLANT PITS LEFT UNATTENDED FOR ANY LENGTH OF TIME [redacted] COVERED OR CLEARLY FLAGGED TO THE SATISFACTION OF THE ENGINEER TO PREVENT ACCIDENTAL INJURY.

CANNED STOCK [redacted] REMOVED CAREFULLY AFTER CANS [redacted] CUT ON TWO OR THREE SIDES WITH AN APPROVED TOOL. DO NOT USE SPADE TO CUT CANS. DO NOT LIFT OR HANDLE CONTAINER PLANT BY TOPS, STEMS, OR TRUNKS AT ANY TIME.

DO NOT BIND OR HANDLE ANY PLANT WITH WIRE OR ROPE AT ANY TIME SO AS TO DAMAGE BARK OR BREAK BRANCHES. LIFT AND HANDLE PLANTS ONLY FORM BOTTOM OF BALL.

THE CONTRACTOR [redacted] FOLLOW THESE STEPS FOR THE INSTALLATION OF PIT PLANTED MATERIALS: SCARIFY THE WALLS AND BOTTOM OF THE PLANT PITS IMMEDIATELY PRIOR TO THE PLACEMENTS OF PLANT AND BACKFILL MIX TO INSURE THE REMOVAL OF ALL GLAZING CAUSED BY AN AUGER OR MECHANICAL HOLE DIGGER. FILL PLANT PITS WITH BACKFILL MIX TO COMPACT DEPTH SO THE TOP OF THE ROOT BALL IS ONE (1) INCH ABOVE FINISH GRADE. CAREFULLY FILL PIT WITH BACKFILL MIX AND COMPACT BY WATERING IN TO SUPPORT ROOT BALL: SMOOTH PLANTED AREAS TO CONFORM TO SPECIFIED GRADES AFTER FULL SETTLEMENT HAS OCCURRED. CREATE WATERING BASINS AS SHOWN ON THE PLANS. WATER ALL PLANTS IMMEDIATELY AFTER PLANTING. APPLY PREEMERGENT WEED CONTROL MATERIALS IN AREAS TO RECEIVE MULCH. SPREAD MULCH IN REQUIRED AREAS TO THE COMPACTED DEPTH OF THREE (3) INCHES.

THE CONTRACTOR [redacted] FOLLOW THESE STEPS FOR THE INSTALLATION OF PIT PLANTED MATERIALS:

1) SCARIFY THE WALLS AND BOTTOM OF ALL PLANT PITS IMMEDIATELY PRIOR TO THE PLACEMENT OF PLANT AND BACKFILL MIX TO INSURE THE REMOVAL OF ALL GLAZING CAUSED BY AN AUGER OR MECHANICAL HOLE DIGGER.

2) FILL PLANT PITS WITH BACKFILL MIX TO COMPACT DEPTH TO RECEIVE ROOT BALL, SO THAT THE TOP OF THE ROOT BALL IS TWO INCHES (2") ABOVE FINISHED GRADE.

3) FOR BOXED MATERIAL, BREAK VERTICAL BANDS AND REMOVE TOP AND BOTTOM OF CONTAINER. CAREFULLY LOWER PLANT INTO PIT WITH BACKHOE OR APPROVED

GENERAL NOTES AND SPECIFICATION DATA--

---PLANTING---, CONT'D
METHOD AND ADJUST ELEVATION, CUT HORIZONTAL BANDS AND REMOVE SIDES.

4) PRUNE AWAY GIRDLED ROOTS AND TEASE ROOT HAIR MASSES. MASSES. CAREFULLY FILL PIT WITH BACKFILL MIX AND COMPACT BY WATERING IN TO SUPPORT ROOT BALL.

5) SMOOTH PLANTED AREAS TO CONFORM TO SPECIFIED GRADES AFTER FULL SETTLEMENT HAS OCCURRED. CREATE WATERING BASINS AS SHOWN ON THE PLANS. WATER ALL PLANTS IMMEDIATELY AFTER PLANTING.

6) SPREAD MULCH IN REQUIRED AREAS TO THE COMPACTED DEPTH OF THREE INCHES (3") OR AS SPECIFIED IN THE DETAILS OR BY THE ENGINEER.

7) TREES [redacted] STAKED FOR SUPPORT DURING THE SAME DAY AS PLANTING. PLANTS SHALL STAND PLUMB AFTER STAKING. THE CONTRACTOR [redacted] RESPONSIBLE FOR MATERIAL REMAINING PLUMB AND STRAIGHT FOR ALL GIVEN CONDITIONS THROUGHOUT THE CONTRACT PERIOD. FREE SUPPORT [redacted] DONE AS OUTLINED IN THE DETAILS.

---REPLACEMENT OF MATERIAL---

IF AT ANY TIME DURING THE CONTRACT PERIOD, A PLANT IS FOUND [redacted] DEAD, IT [redacted] REPLACED TO THE SATISFACTION OF THE ENGINEER, AND WITHIN THE PERIOD SPECIFIED IN THE FORMAL WRITTEN NOTIFICATION FROM THE ENGINEER. FAILURE TO ACCOMPLISH REPLACEMENT OF PLANT MATERIALS DURING THE SPECIFIED TIME PERIOD [redacted] CONSIDERED NON-PERFORMANCE OF THE GUARANTEE AND MAINTENANCE REQUIREMENTS INCLUDED IN THIS CONTRACT AND THE ENGINEER [redacted] WITHHOLD PAYMENT UNTIL THE REQUIRED REPLACEMENT HAS BEEN ACCOMPLISHED. ALL REPLACEMENT PLANTS [redacted] OF THE SAME KIND, SIZE, AND QUALITY AS ORIGINALLY SPECIFIED, AND [redacted] FURNISHED AND PLANTED AS ORIGINALLY SPECIFIED. THE CONTRACTOR [redacted] MAKE EVERY EFFORT TO ENSURE THAT REPLACEMENT MATERIAL RECEIVES ANY ADDITIONAL CARE AND MAINTENANCE REQUIRED FOR THE REPLACEMENT PLANTS TO BECOME WELL ESTABLISHED. THE ENGINEER [redacted] REQUIRE REPLACEMENT OF PLANT MATERIAL UNTIL SATISFIED THAT ALL THE PLANTS ON THE PROJECT ARE IN A HEALTHY, VIGOROUS CONDITION.

---PLANTING REQUIREMENT FOR PLANT REPLACEMENT---

GENERAL NOTES AND SPECIFICATION DATA--

---PLANTING REQUIREMENT FOR PLANT REPLACEMENT---, CONT'D
THE CONTRACTOR [redacted] EXCAVATE EXISTING SOIL AS SHOWN IN THE PLANTING DETAILS. THIS EXCAVATED MATERIAL [redacted] NOT [redacted] REUSED IN PLANTING BACKFILL, BUT [redacted] REMOVED FROM THE SITE AND DISPOSED OF IN A MANNER ACCEPTABLE TO THE ENGINEER.

THE BACKFILL MIX FOR ALL REPLACEMENT PLANT MATERIAL [redacted] PREPARED IN THE FOLLOWING PROPORTIONS BY VOLUME:

60% SANDY LOAM TOPSOIL (PH 6.8-7.5). SOIL SHALL BE TYPICAL OF THE AREA WITH NO NOXIOUS WEEDS, GRASSES, STICKS, ROOTS, OR STONES PRESENT AND SHALL BE CONSISTENT IN TEXTURE. (MAXIMUM LUMP SIZE IS 1").
40% SOIL AMENDMENT AS LISTED UNDER 'SOIL MIX' ABOVE.

THE ENGINEER [redacted] REQUIRE THE CONTRACTOR TO MIX ALL INGREDIENTS OF THE PLANTING SOIL MIX IN THE PRESENCE OF THE ENGINEER.

ALL INGREDIENTS [redacted] THOROUGHLY BLENDED TO PROVIDE A HOMOGENEOUS MIXTURE. MIXING [redacted] IN ONE CUBIC YARD OR GREATER BATCHES USING MECHANICAL MIXING EQUIPMENT APPROVED BY THE ENGINEER. MIXING [redacted] DONE IN A DESIGNATED ON-SITE AREA OR [redacted] ACCOMPLISHED OFF-SITE IF APPROVED BY THE ENGINEER AND THE FINISHED MATERIAL TRANSPORTED TO THE SITE.

SAMPLES OF AT LEAST ONE CUBIC FOOT (1 CF) FOR EACH TEN CUBIC YARDS (10 CY) OF PLANTING SOIL MIX USED ON THE SITE [redacted] SUBMITTED TO THE ENGINEER FOR APPROVAL. IN THE EVENT DEFICIENCIES ARE FOUND IN THE PLANTING MIX THEY [redacted] CORRECTED IMMEDIATELY. IF THE MATERIAL IS REJECTED ON THE PROJECT SITE BY THE ENGINEER FOR ANY REASON, ALL OF THE REJECTED MATERIAL [redacted] IMMEDIATELY REMOVED FROM THE SITE AND DISPOSED OF BY THE CONTRACTOR AT HIS EXPENSE. IF ANY OF THE REJECTED MATERIAL [redacted] USED IN THE PLANTING OPERATIONS, THE ENGINEER, AT HIS DISCRETION, [redacted] REQUIRE THE CONTRACTOR [redacted] REMOVE AND REPLACE THE SOIL MIX WITH AN APPROVED MIXTURE. ANY TESTING REQUIRED BY THE ENGINEER [redacted] THE RESPONSIBILITY OF THE CONTRACTOR AND [redacted] CONSIDERED SUBSIDIARY TO THE WORK AND NO ADDITIONAL COMPENSATION [redacted] AWARDED.

PLANTING [redacted] ACCOMPLISHED AS DETAILED ON PLAN SHEET 481 FOR REPLACEMENT OF PLANTS. THE CONTRACTOR [redacted] USE AND DEMONSTRATE ALL PLANTING TECHNIQUES ASSOCIATED WITH QUALITY HORTICULTURAL METHODS IN HIS PLANT HANDLING AND PLANTING OPERATIONS TO THE SATISFACTION OF THE ENGINEER.

GENERAL NOTES AND SPECIFICATION DATA--

---PLANTING REQUIREMENT FOR PLANT REPLACEMENT---, CONT'D

THE ENGINEER [redacted] INSPECT ANY PHASE OF PRODUCT HANDLING AND [redacted] REJECT ANY PLANT MATERIAL IMPROPERLY HANDLED DURING THIS OPERATION.

THE CONTRACTOR [redacted] NOT LEAVE PLANT PITS OPEN MORE THAN TWENTY-FOUR (24) HOURS PRIOR TO PLANTING. ANY PIT LEFT UNATTENDED FOR ANY LENGTH OF TIME [redacted] COVERED OR CLEARLY FLAGGED TO THE SATISFACTION OF THE ENGINEER.

ALL PLANTS [redacted] TRUE TO SPECIES AND VARIETY AND [redacted] CONFORM TO MEASUREMENTS AND CONDITIONS AS SPECIFIED, UNLESS OTHERWISE AGREED UPON BY THE ENGINEER.

WHERE SPECIFIED [redacted] NURSERY-GROWN, EITHER IN CONTAINERS OR IN THE FIELD, SUCH PLANTS [redacted] NURSERY-GROWN IN ACCORDANCE WITH GOOD HORTICULTURAL PRACTICES UNDER CLIMATIC CONDITIONS SIMILAR TO THOSE OF THE PROJECT FOR AT LEAST TWELVE (12) MONTHS, UNLESS SPECIFICALLY OTHERWISE AUTHORIZED BY THE ENGINEER IN WRITING. UNLESS SPECIFICALLY NOTED OTHERWISE, ALL PLANTS [redacted] HEAVY, SYMMETRICAL, TIGHTLY KNIT, SO TRAINED OR FAVORED IN DEVELOPMENT AND APPEARANCE AS TO BE SUPERIOR IN FORM, NUMBER OF BRANCHES, COMPACTNESS AND SYMMETRY.

PLANTS [redacted] SOUND, HEALTHY AND VIGOROUS, WELL BRANCHED AND DENSELY FOLIATED, WHEN IN LEAF. THEY [redacted] FREE OF DISEASE, INSECT PESTS, EGGS, OR LARVAE, AND [redacted] HAVE HEALTHY, WELL DEVELOPED ROOT SYSTEMS. THEY [redacted] FREE FROM PHYSICAL DAMAGE OR ADVERSE CONDITIONS THAT [redacted] PREVENT THRIVING GROWTH.

PLANTS [redacted] MEASURED WHEN BRANCHES ARE IN THEIR NORMAL POSITION. HEIGHT AND SPREAD DIMENSIONS SPECIFIED REFER TO THE MAIN BODY OF THE PLANT AND NOT BRANCH TIP TO TIP. CALIPER MEASUREMENT [redacted] TAKEN AT A POINT ON THE TRUNK SIX INCHES (6") ABOVE NATURAL GROUND LINE FOR TREES UP TO FOUR INCHES (4") IN CALIPER AND AT A POINT TWELVE INCHES (12") ABOVE NATURAL GROUND LINE FOR TREES OVER FOUR INCHES (4") IN CALIPER. IF A RANGE OF SIZE IS GIVEN, NO PLANT [redacted] LESS THAN THE MINIMUM SIZE AND AT LEAST 40% OF THE PLANTS [redacted] AS LARGE AS THE MAXIMUM SIZE SPECIFIED. THE MEASUREMENTS SPECIFIED ARE THE MINIMUM SIZE ACCEPTABLE AND ARE THE MEASUREMENTS AFTER PRUNING, WHERE PRUNING IS REQUIRED. PLANTS THAT MEET THE MEASUREMENTS SPECIFIED, BUT DO NOT POSSESS A NORMAL BALANCE BETWEEN HEIGHT AND SPREAD [redacted] REJECTED.

ALL PLANTS SPECIFIED IN CONTAINERS [redacted] PROVIDED IN STRUCTURALLY SOUND, NURSERY PLANT CONTAINERS WITH THE MINIMUM SIZE AS SPECIFIED. CONTAINER DIMENSIONS [redacted] AS RECOMMENDED BY THE "AMERICAN STANDARD FOR NURSERY STOCK", (CURRENT EDITION). IF A CONTAINER IS NOT LISTED IN

GENERAL NOTES AND SPECIFICATION DATA--

---PLANTING REQUIREMENT FOR PLANT REPLACEMENT---, CONT'D
THE "AMERICAN STANDARD FOR NURSERY STOCK", THEN THE ENGINEER [redacted] HAVE FINAL APPROVAL OF CONTAINER DIMENSIONS.

CONTAINER STOCK [redacted] HAVE GROWN IN THE DELIVERED CONTAINERS FOR AT LEAST SIX (6) MONTHS, BUT NOT OVER TWO (2) YEARS. SAMPLES [redacted] PROVE NO ROOTBOUND CONDITIONS EXIST. NO CONTAINER PLANTS THAT HAVE CRACKED OR BROKEN BALLS OF EARTH WHEN TAKEN FROM CONTAINER [redacted] PLANTED. CONTAINER STOCK [redacted] NOT [redacted] PRUNED BEFORE DELIVERY. FIELD GROWN PLANTS RECENTLY TRANSPLANTED INTO CONTAINERS [redacted] NOT [redacted] ACCEPTED.

DO NOT BIND OR HANDLE ANY PLANT WITH WIRE OR ROPE AT ANY TIME SO AS TO DAMAGE BARK OR BREAK BRANCHES. LIFT AND HANDLE PLANTS ONLY FROM BOTTOM OF BALL.

---ITEM 249 FLEXIBLE BASE (DELIVERED)---

FLEXIBLE BASE (TY F GR 4A) [redacted] CONFORM TO THE FOLLOWING REQUIREMENTS:

	BEFORE LIME IS ADDED
RETAINED ON SQ. SIEVE	PERCENT RETAINED
2"	0
1/2"	20-60
NO. 4	40-75
NO. 40	75-85
MAX. P.I.	15
MAX. WET BALL P.I.	15
WET BALL MILL MAX AMOUNT	50
MIN. COMP STRENGTH PSI:	150 AT 15 PSI LATERAL PRESSURE

THE WET BALL TEST (TEX-116-E) [redacted] RUN AND THE PLASTICITY INDEX OF THE MATERIAL PASSING THE NO. 40 SIEVE [redacted] DETERMINED.

AFTER 1/2% OR 1% LIME (LABORATORY) IS ADDED TO UNLIMED MATERIAL

MAX. P.I.	12
MIN. COMP. STRENGTH PSI:	180 AT 15 PSI LATERAL PRESSURE
TRIAXIAL TEST (LIME TREATED)	TEX-121-E

IF 1/2% LIME (LABORATORY) IS REQUIRED TO MEET P.I. AND TRIAXIAL REQUIREMENTS, 1% LIME [redacted] INCORPORATED INTO THE FLEXIBLE BASE AT STATE'S EXPENSE.

IF 1% LIME (LABORATORY) IS REQUIRED TO MEET P.I. AND TRIAXIAL REQUIREMENTS, 2% LIME [redacted] INCORPORATED INTO THE FLEXIBLE BASE AT

GENERAL NOTES AND SPECIFICATION DATA--

---ITEM 249 FLEXIBLE BASE (DELIVERED)---, CONT'D
STATE'S EXPENSE AND THE CONTRACTOR [redacted] AT HIS EXPENSE, INCORPORATE AN ADDITIONAL 1% LIME INTO THE FLEXIBLE BASE IN ACCORDANCE WITH PROVISIONS OF ITEMS 262 AND 264, EXCEPT FOR MEASUREMENT AND PAYMENT.

THE PERCENT OF DENSITY AS DETERMINED BY COMPACTION RATIO (TEX-114-E) FOR THE NEW FLEXIBLE BASE [redacted] A MINIMUM OF 98%. DENSITY, GRADATION AND P.I. TOLERANCES [redacted] PERMITTED.

THE MATERIAL [redacted] BE TEMPORARILY STOCKPILED AT THE SOURCE IN AT LEAST 3 SUCCESSIVE HORIZONTAL LAYERS, EACH NOT EXCEEDING TWO FEET IN DEPTH. THE STOCKPILE [redacted] NEVER EXCEED THE WORKING HEIGHT OF THE EQUIPMENT USED TO RELOAD THE MATERIAL. A SUFFICIENT STOCKPILE [redacted] BE DETERMINED BY THE ENGINEER PRIOR TO DELIVERY TO THE ROAD. IT IS A PRIMARY REQUIREMENT THAT THE MATERIAL [redacted] OF SUCH COHESIVE QUALITY AS TO SET UP TO FORM A TIGHTLY BONDED COURSE. MATERIAL HAVING A P.I. OF 4 OR LESS IS USUALLY DOUBTFUL AS TO COHESIVE QUALITY, BUT [redacted] USED IF THE MATERIAL [redacted] PROPERLY BOND. ANY MATERIAL WHICH FAILS TO BOND [redacted] REMOVED AND REPLACED WITH SATISFACTORY MATERIAL AT THE CONTRACTOR'S EXPENSE.

SAMPLES FOR TESTING THE MATERIAL FOR SOIL CONSTANTS, GRADATION AND WET BALL MILL [redacted] TAKEN FROM PRODUCTION OR STOCKPILE AS DIRECTED BY THE ENGINEER.

THE CONTRACTOR'S ATTENTION IS CALLED TO THE FACT THAT CERTAIN EXISTING [redacted] STRUCTURES [redacted] WITHIN THE LIMITS OF THE FLEXIBLE BASE. IT [redacted] THE CONTRACTOR'S RESPONSIBILITY TO PERFORM CONSTRUCTION OPERATIONS WITHOUT DAMAGE TO THESE STRUCTURES.

---ITEM 252 SALVAGING AND REPLACING BASE---

QUANTITIES OF FLEXIBLE BASE [redacted] SALVAGED, SHOWN ON THE TYPICAL SECTIONS, ARE FOR ESTIMATING PURPOSES ONLY. ALL ACCEPTABLE BASE MATERIAL ENCOUNTERED IN EXISTING BASE IS [redacted] SALVAGED AS DIRECTED BY THE ENGINEER REGARDLESS OF THE QUANTITIES INVOLVED.

SALVAGED BASE [redacted] USED IN THE BOTTOM COURSE ON ANY OF THE [redacted] SECTIONS, DRIVEWAYS AND TURNOUTS. THE SALVAGED FLEXIBLE BASE [redacted] LAID TO A COMPACTED THICKNESS THAT [redacted] ALLOW A MINIMUM COVER OF 6 INCHES OF NEW FLEXIBLE BASE ON [redacted] ROADWAY SECTIONS.

THE PERCENT OF DENSITY AS DETERMINED BY COMPACTION RATIO (TEX-114-E) FOR THE SALVAGED FLEXIBLE BASE [redacted] A MINIMUM OF 98%. DENSITY TOLERANCES [redacted] PERMITTED.

GENERAL NOTES AND SPECIFICATION DATA--

---ITEM 260 LIME TREATMENT FOR MATERIALS IN PLACE---

THE CONTRACTOR'S ATTENTION IS CALLED TO THE FACT THAT CERTAIN EXISTING [redacted] STRUCTURES ARE WITHIN THE LIMITS OF THE LIME-TREATED SUBGRADE. UNLESS OTHERWISE DIRECTED BY THE ENGINEER, THESE STRUCTURES [redacted] INSTALLED BEFORE THE FINAL ROLLING OF THIS SUBGRADE. IT [redacted] THE CONTRACTOR'S RESPONSIBILITY TO PERFORM THE PROPER LIME TREATING OPERATION WITHOUT DAMAGE TO THESE STRUCTURES.

SOFT SPOTS IN THE SUBGRADE ARE TO RECEIVE LIME STABILIZATION AS DIRECTED BY THE ENGINEER. PAYMENT FOR LIME STABILIZATION OF SOFT SPOTS [redacted] MADE ONLY UNDER BID ITEM 260, "LIME (TY A OR B)". ADDING, MIXING, ETC., OF THE LIME FOR SOFT SPOTS [redacted] NOT [redacted] PAID FOR DIRECTLY BUT [redacted] CONSIDERED SUBSIDIARY TO THE BID ITEM, LIME TREATED SUBGRADE.

---ITEMS 260 & 262 LIME TREAT FOR MATLS IN PLACE AND BASE COURSES---

THE SLURRY METHOD OF APPLYING LIME [redacted] REQUIRED EXCEPT WHERE THE LIME IS [redacted] ADDED TO NATURALLY WET MATERIALS.

FOR THIS PROJECT, THE ENGINEER [redacted] DIRECT A RANDOM NUMBER OF LIME TRUCKS [redacted] CHECK WEIGHED.

THE MINIMUM SEVEN-DAY CURING PERIOD AND THE MINIMUM TWO-DAY REQUIREMENT BEFORE OPENING TO TRAFFIC [redacted] NOT APPLY TO THIS PROJECT. THE LIME TREATED MATERIAL [redacted] KEPT MOIST UNTIL THE TREATED MATERIAL IS SEALED OR COVERED BY OTHER MATERIAL.

---ITEM 310 PRIME COAT (ASPHALTIC MATERIAL ONLY)---

THE CONTRACTOR [redacted] EXERCISE DILIGENCE IN THE APPLICATION OF ASPHALT BY THE USE OF FLAGGING AND ROLLING PROCEDURES TO KEEP FROM SPRAYING OR SPLATTERING THE TRAVELING PUBLIC WITH ASPHALTIC MATERIAL.

ALL EXISTING FLEXIBLE BASE WHICH [redacted] BECOME EXPOSED BY THE PLANING OPERATION, [redacted] PRIMED AT THE RATE OF 0.2 GAL/SY.

---ITEM 340 HOT MIX ASPHALTIC CONCRETE PAVEMENT---

TO ENSURE MIX CONSISTENCY AND UNIFORMITY OF THE MATERIAL, THE HOT MIX PLANT [redacted] HAVE AND MAINTAIN ON HAND THE SPECIFIED AMOUNT OF ALL THE ACCEPTABLE AND REQUIRED AGGREGATE COMPONENTS BEFORE PRODUCTION CAN BEGIN AND [redacted] MAINTAIN THAT SPECIFIED AMOUNT ON HAND THROUGHOUT THE COURSE OF THE PROJECT UNLESS OTHERWISE DIRECTED BY THE ENGINEER.

SPECIFICATION DATA

GENERAL NOTES AND SPECIFICATION DATA--

---ITEM 340 HOT MIX ASPHALTIC CONCRETE PAVEMENT---, CONT'D

SALVAGED ASPHALTIC CONCRETE MATERIAL USED IN RECYCLING HOT MIX BITUMINOUS PAVEMENT [redacted] HAVE A MAXIMUM PARTICLE SIZE OF ONE INCH. SALVAGE MATERIAL [redacted] IN NO WAY [redacted] IDENTIFIABLE IN THE MIXTURE AS IT LEAVES THE PLANT MIXING EQUIPEMENT.

RECLAIMED BITUMINOUS PAVEMENT MATERIAL USED IN HOT-MIX RECYCLING [redacted] [redacted] MATERIAL REMOVED FROM THE EXISTING ROADWAY AS SHOWN ON PLANS. MATERIAL SAMPLES OF RECLAIMED BITUMINOUS PAVEMENT MATERIAL FOR MIX DESIGN [redacted] TAKEN FROM STOCKPILES. STOCKPILES [redacted] CONTAIN A MINIMUM OF 500 CUBIC YARDS (LOOSE) BEFORE SAMPLES ARE OBTAINED FOR MIX DESIGN. STOCKPILES [redacted] LOCATED AT THE MIXING-PLANT SITE. UNUSED RECLAIMED BITUMINOUS PAVEMENT MATERIAL [redacted] REMAIN THE PROPERTY OF THE STATE. THE CONTRACTOR [redacted] WAIT UNTIL A MIX DESIGN [redacted] COMPLETED AND APPROVED BEFORE RECYCLING OPERATIONS BEGIN.

[redacted] THE CONTRACTOR NOT ELECT TO RECYCLE HOT-MIX BITUMINOUS PAVEMENT, THE EXISTING ASPHALTIC CONCRETE MATERIAL SHOWN ON THE PLANS [redacted] RECYCLED [redacted] STOCKPILED AT A LOCATION AS DIRECTED BY THE ENGINEER. THE MAXIMUM SIZE OF THE ASPHALTIC CONCRETE MATERIAL [redacted] 2.5 IN.

INFORMATION REGARDING THE GRADATION AND ASPHALT CONTENT OF THE EXISTING HOT-MIX [redacted] RECYCLED IS AVAILABLE AT THE RESIDENT ENGINEER'S OFFICE.

THE LONGITUDINAL JOINTS OF EACH LIFT [redacted] LOCATED A MINIMUM OF 6 INCHES HORIZONTALLY FROM THE JOINT BEING COVERED.

THE LONGITUDINAL JOINTS FOR THE SURFACE COURSE [redacted] AT THE EDGE OF THE TRAVEL LANE LINES OR AS DIRECTED BY THE ENGINEER.

---ITEMS 400 & 401 STRUCTURAL EXCAVATION AND SEWER EXCAVATION---

BACKFILL IN THAT PORTION OF CONCRETE BOX CULVERTS AND SIPHONS BELOW THE TOP OF THE STRUCTURE AND ALL BACKFILL IN TRENCHES FOR IRRIGATION LINES, STORM SEWERS AND PIPE CULVERTS [redacted] BE COMPACTED TO A FINAL CONDITION COMPARABLE IN DENSITY AND CONSOLIDATION TO THE ADJACENT UNDISTURBED MATERIAL BY ANY METHOD SATISFACTORY TO THE ENGINEER. WHEN APPROVED LOW PLASTICITY PONDED BACKFILL IS USED BELOW THE SPRING LINE OF PIPE STRUCTURES, CLASS C BEDDING [redacted] NOT [redacted] REQUIRED.

---ITEM 416 DRILLED SHAFT FOUNDATIONS---

CLASS "C" CONCRETE [redacted] REQUIRED FOR THIS ITEM.

SPECIFICATION DATA

GENERAL NOTES AND SPECIFICATION DATA--

---ITEM 340 HOT MIX ASPHALTIC CONCRETE PAVEMENT---, CONT'D

THE ENGINEER, IF REQUESTED BY THE CONTRACTOR, [redacted] FURNISH THE INITIAL MIX DESIGN FOR EACH TYPE OF MIXTURE SPECIFIED IN THE CONTRACT. ANY ADDITIONAL MIX DESIGNS REQUESTED BY THE CONTRACTOR [redacted] AT THE CONTRACTOR'S EXPENSE. THE DEPARTMENT'S LABORATORY [redacted] PERFORM THE SAMPLING AND TESTING AT THE CURRENT PRICE AT THE TIME THE WORK IS DONE. THE EXPENSE FOR SUCH SAMPLING AND TESTING [redacted] DEDUCTED FROM ANY MONIES DUE OR TO BECOME DUE TO THE CONTRACTOR.

PRIOR TO SHIPPING ASPHALT TO THE PROJECT, THE CONTRACTOR [redacted] FURNISH THE ENGINEER WITH THE NAME OF THE SUPPLIER AS WELL AS SAMPLES OF THE ASPHALT HE PROPOSES TO USE SO THAT THE PERCENT OF ASPHALT IN THE MIX [redacted] DETERMINED.

THE CONTRACTOR'S ATTENTION IS DIRECTED TO SPECIFICATION ITEM 528, "AUTOMATIC SCREED CONTROLS FOR ASPHALTIC-CONCRETE SPREADING AND FINISHING MACHINE", WHICH IS INCLUDED IN THE SPECIFICATIONS FOR THIS PROJECT.

A TAMPING OR VIBRATING SCREED [redacted] REQUIRED FOR THE FULL WIDTH OF THE NORMAL TRAVEL LANE.

IN ADDITION TO THE TACK COAT MATERIALS SPECIFIED IN THESE STANDARD SPECIFICATIONS, THE CONTRACTOR, IF HE SO DESIRES, [redacted] USE MS-2 OR MS-1. THE CONTRACTOR [redacted] EXERCISE DILIGENCE IN THE APPLICATION OF "TACK COAT" BY THE USE OF FLAGGING AND ROLLING PROCEDURES TO KEEP FROM SPRAYING OR SPLATTERING THE TRAVELING PUBLIC WITH ASPHALTIC MATERIAL.

THE TACK COAT [redacted] ROLLED WITH A PNEUMATIC TIRE ROLLER.

THE CONTRACTOR [redacted] KEEP A 10-FOOT STRAIGHT EDGE ON THE JOB FOR SURFACE TESTING DURING ALL PAVING OPERATIONS.

A MINIMUM POLISH VALUE OF 32 WHEN TESTED IN ACCORDANCE WITH TEST METHOD TEX-438-A [redacted] REQUIRED FOR THE AGGREGATE USED IN THE SURFACE COURSE OF THE US 83 AND US 281 EXPRESSWAY MAIN TRAVEL LANES AND DIRECT CONNECTORS.

A MINIMUM POLISH VALUE OF 32 WHEN TESTED IN ACCORDANCE WITH TEST METHOD TEX-438-A [redacted] REQUIRED FOR THE AGGREGATE USED IN THE SURFACE COURSE OF THE FRONTAGE ROADS TRAVEL LANES, UNLESS SILICEOUS AGGREGATE WITH SATISFACTORY SKID HISTORY BASED ON TX DOT SKID TRAILER MEASUREMENTS IS USED. THE EXISTING AND [redacted] SOURCES FOR SATISFACTORY AGGREGATES [redacted] REVIEWED WITH THE RESIDENT ENGINEER ASSIGNED TO THIS PROJECT AND LISTED IN "NOTICE TO CONTRACTORS".

SPECIFICATION DATA

GENERAL NOTES AND SPECIFICATION DATA--

---ITEMS 416 & 417 DRILL SHAFT FOUND AND SLURRY DISPL DRILL SHAFTS---

THE CONTRACTOR [redacted] PROBE BEFORE DRILLING FOUNDATIONS TO DETERMINE THE LOCATIONS OF ALL UNDERGROUND UTILITIES AND STRUCTURES.

---ITEMS 420 & 421 CONC STRUCTURES AND CONC FOR STRUCTURES---

A MECHANICAL LONGITUDINAL SCREED [redacted] REQUIRED FOR CONCRETE SLABS, UNLESS OTHERWISE DIRECTED BY THE ENGINEER.

THE ENGINEER [redacted] SAMPLE ALL CONCRETE USED ON THE PROJECT. TEST BEAMS AND CYLINDERS [redacted] TESTED BY THE ENGINEER IN ACCORDANCE WITH TEST METHODS TEX-418-A AND TEX-420-A. ALL TEST MOLDS [redacted] FURNISHED BY THE ENGINEER AND THE CONTRACTOR [redacted] MAINTAIN THEM IN THE PROPER CONDITION. IN ADDITION, THE CONTRACTOR [redacted] RESPONSIBLE FOR FURNISHING PERSONNEL [redacted] REMOVE THE TEST SPECIMENS FROM THE MOLDS AND TO TRANSPORT THEM TO THE PROPER CURING LOCATION AT THE SCHEDULE DESIGNATED BY THE ENGINEER AND IN ACCORDANCE WITH THE GOVERNING SPECIFICATION. FOR ALL CONCRETE ITEMS THE CONTRACTOR [redacted] HAVE A WHEELBARROW, OR OTHER CONTAINER ACCEPTABLE TO THE ENGINEER, AVAILABLE TO USE IN THE SAMPLING OF THE CONCRETE. ALL LABOR AND EQUIPMENT FURNISHED BY THE CONTRACTOR [redacted] CONSIDERED SUBSIDIARY TO THE VARIOUS BID ITEMS AND [redacted] NOT [redacted] PAID FOR DIRECTLY.

---ITEM 421 CONCRETE FOR STRUCTURES---

BENT CONCRETE [redacted] PAID AS PLAN QUANTITY.

---ITEM 423 RETAINING WALLS---

THE [redacted] RETAINING WALLS FOR THIS PROJECT [redacted] EITHER THE REINFORCED EARTH OR RETAINED EARTH.

THE CONTRACTOR [redacted] TAKE MEASURES TO PROTECT THE SELECT BACKFILL UNDER THE FOOTING IN THE AREA OF THE WINGWALL FROM BEING WASHED AWAY BY WATER DURING CONSTRUCTION.

THE MINIMUM REINFORCING LENGTH BEHIND THE RETAINING WALL PANELS [redacted] AS DETAILED IN THE PLANS.

---ITEM 425 PRESTRESSED CONCRETE STRUCTURES---

ROAD CLOSURES OR DETOURS AROUND STRUCTURES NECESSARY TO ACCOMPLISH [redacted] WORK, [redacted] NOT [redacted] PERMITTED UNTIL ALL PRECAST AND/OR PRESTRESSED MEMBERS FOR THE [redacted] STRUCTURE HAVE BEEN CAST, TESTED AND APPROVED FOR USE.

SPECIFICATION DATA

GENERAL NOTES AND SPECIFICATION DATA--

---ITEM 340 HOT MIX ASPHALTIC CONCRETE PAVEMENT---, CONT'D

THE POINT OF SAMPLING FOR TESTS, TEST METHOD TEX-217-F (PART I AND PART II), [redacted] THE COARSE AGGREGATE STOCKPILE WHEN THE DRYER-DRUM MIXING PLANT IS USED. THE POINT OF SAMPLING WHEN THE BATCH PLANT IS USED [redacted] AT THE HOT BINS.

VIBRATORY ROLLERS [redacted] NOT [redacted] PERMITTED ON UNCOMPACTED COURSES OF 2 INCHES AND LESS.

IN ADDITION TO THE SURFACE STRAIGHT EDGE REQUIREMENTS, THE RESULTS OF RIDE METER SURFACE TESTING, BY STATE FORCES, [redacted] USED AS A GUIDE FOR ADJUSTING LAYING OPERATIONS. A RIDE METER SI VALUE OF 4.0 AND ABOVE IS EXPECTED FOR OVERLAY AND NEW SURFACE CONSTRUCTION. SI VALUES BELOW 4.0 ARE [redacted] CONSIDERED INCREASINGLY LESS DESIRABLE TO A POINT OF UNACCEPTABILITY WITH A METER SI VALUE OF 3.2 AND BELOW. SI VALUES ARE [redacted] OBTAINED AT APPROXIMATELY 500 FT. INTERVALS WITH STRUCTURE LOCATIONS EXCEPTED.

THE CONTRACTOR [redacted] BE REQUIRED TO OBTAIN THE ROADWAY SPECIMENS AT HIS EXPENSE TO DETERMINE THE PERCENT OF AIR VOIDS. A MINIMUM OF ONE LOCATION [redacted] TESTED PER COURSE PER TYPE FOR EACH DAY'S PRODUCTION. THE SPECIMENS [redacted] CONSIST OF EITHER 3 CORES OR AN 18 INCH, PLUS OR MINUS, SQUARE OF ACP FROM EACH LOCATION IN ACCORDANCE WITH TEST METHOD TEX-207-F.

ON COURSES OF 1.5 INCHES OR LESS, THE AIR VOID REQUIREMENTS [redacted] BE VOIDED. THE REQUIRED COMPACTION [redacted] ATTAINED USING THE METHOD DESCRIBED IN ARTICLE 340.6(6)(C)2 OF THE GOVERNING SPECIAL PROVISION.

NO POLISH VALUE IS REQUIRED FOR THE AGGREGATE USED IN THE BASE COURSE.

ALL AGGREGATES, EXCEPT RECLAIMED BITUMINOUS PAVEMENT USED IN BASE AND SURFACE COURSES OF ACP, [redacted] SUBJECTED TO FOUR CYCLES OF THE MAGNESIUM SULPHATE SOUNDNESS TEST IN ACCORDANCE WITH TEST METHOD TEX-411-A. THE LOSS [redacted] NOT [redacted] GREATER THAN 30 PERCENT WHEN MAGNESIUM SULFATE IS USED.

[redacted] THE CONTRACTOR ELECT TO USE THE OPTION OF RECYCLING HOT MIX BITUMINOUS PAVEMENT, THEN APPROXIMATELY A MINIMUM OF 50 PERCENT OF THE COURSE AGGREGATE AND APPROXIMATELY A MINIMUM OF 50 PERCENT OF THE SCREENINGS [redacted] BE LIMESTONE. LIMESTONE SCREENINGS [redacted] FROM A CRUSHING OPERATION MEETING THE FOLLOWING GRADING REQUIREMENTS.

	PERCENT BY WEIGHT
PASSING THE 3/8" SIEVE	100
PASSING THE NO. 10 SIEVE	70-100
PASSING THE NO. 200 SIEVE	0- 30

SPECIFICATION DATA

GENERAL NOTES AND SPECIFICATION DATA--

---ITEM 427 SURFACE FINISHES FOR CONCRETE---

A GRADE I, CLASS B, ~~TYPE II~~ ~~ACRYLIC RESIN WATER-BASED PAINT~~ - See PC*11,SA*11 SURFACE FINISH [redacted] REQUIRED ON ALL GRADE SEPARATION STRUCTURES.EXCEPT THAT A CLASS "D" FINISH [redacted] USED ON FORM LINER SURFACES.

TYPE II - See PC*11,SA*11

A GRADE III, CLASS B, ~~TYPE I~~ SURFACE FINISH [redacted] REQUIRED ON ALL OTHER CONCRETE STRUCTURES, INCLUDING ALL EXPOSED SURFACES OF CTB. THE CONTRACTOR [redacted] EXERCISE CARE WHEN APPLYING THE SURFACE FINISH SO AS NOT TO SPLATTER PAINT ON FORM LINER SURFACES.

THE SURFACE FINISH FOR ALL [redacted] RETAINING WALLS [redacted] THE ASHLAR STONE FINISH AND [redacted] COLORED BY THE USE OF A NATURALLY PIGMENTED CEMENT OR BY THE USE OF A COLOR-CONDITIONING ADMIXTURE.

COLOR [redacted] OF THE BUFF COLOR PRODUCED BY THE TYPE IP BUFF CEMENT, L.M. SCOFIELD COMPANY, CODE "MESA BEIGE" (CODE C-12) OR IP BUFF PRODUCED BY TEXAS INDUSTRIES, INC., OR EQUIVALENT AS APPROVED BY THE ENGINEER. THE COLOR-CONDITIONING ADMIXTURE [redacted] A SINGLE COMPONENT, PIGMENTED, WATER REDUCING CONCRETE ADMIXTURE, FACTORY FORMULATED AND PACKAGED IN CUBIC YARD DOSAGE INCREMENTS. MULTIPLE COLOR ADDITIVES AND PIGMENTS [redacted] DOSED SEPARATELY INTO THE MIX [redacted] NOT [redacted] PERMITTED. MATERIALS FOR COLORING THE CONCRETE [redacted] USED IN ACCORDANCE WITH THE MANUFACTURER'S RECOMMENDATIONS. COPING FOR RETAINING WALLS [redacted] NOT [redacted] COLORED, BUT WILL BE PAINTED AS SHOWN ELSEWHERE IN THE PLANS. THE SAME AGGREGATE SOURCE AND GRADATION, AND THE SAME CEMENT TYPE AND SOURCE [redacted] USED FOR ALL CONCRETE RECEIVING THE STONE FINISH.

THE CONTRACTOR [redacted] POUR AND FINISH A 3'X 3' SAMPLE PANEL OF THE COLORED ASHLAR STONE FINISH. THE PANEL SHALL MEET WITH THE REQUIREMENTS OF THE PLANS AND SPECIFICATIONS AND [redacted] APPROVED BY THE ENGINEER BEFORE FURTHER RETAINING WALL PANELS [redacted] POURED. THE SAMPLE PANEL [redacted] CONSIDERED TYPICAL FOR THE FINISH. ANY DEVIATION OF COLOR, GRADE, OR DEPTH FROM THE SAMPLE PANEL [redacted] GROUNDS FOR REJECTION AND IT [redacted] REMOVED AND REPLACED AS SPECIFIED BY THE ENGINEER. THE SAMPLE PANEL [redacted] NOT [redacted] PAID FOR DIRECTLY BUT [redacted] CONSIDERED SUBSIDIARY TO ITEM 423

---ITEM 430 EXTENDING CONCRETE STRUCTURES---

OLD CONCRETE [redacted] DISPOSED OF BY HAULING IT OFF THE PROJECT AND OUT OF SIGHT FROM STATE HIGHWAYS TO DISPOSAL SITES ARRANGED FOR BY THE CONTRACTOR AND SATISFACTORY TO THE ENGINEER.

SPECIFICATION DATA

GENERAL NOTES AND SPECIFICATION DATA--

---ITEM 432 RIPRAP---

ALL CONCRETE RIPRAP EXCEPT CONCRETE RIPRAP USED ON SAFETY END TREATMENTS [redacted] 4" THICK. CONCRETE USED ON THIS RIPRAP [redacted] CLASS "B" AND REINFORCING SH[redacted] 6"X 6" - W3 X W3 (NO.6 GAUGE) WELDED WIRE FABRIC OR #3 BARS AT 18" C.C. UNLESS OTHERWISE SHOWN ON THE PLANS.

P[redacted] RIPRAP FOR EMBANKMENT SLOPES UNDER BRIDGE ENDS S[redacted] CONSTRUCTED IN ACCORDANCE WITH RR-8 STANDARD.

---ITEM 437 CONCRETE ADMIXTURES---

HIGH RANGE WATER REDUCERS [redacted] USED ONLY TO MEET SPECIAL REQUIREMENTS AND [redacted] REQUIRE THE WRITTEN APPROVAL OF THE ENGINEER ON EACH SPECIFIC PROJECT. A SATISFACTORY WORK PLAN FOR CONTROL [redacted] SUBMITTED BY THE CONTRACTOR FOR APPROVAL AND AN EVALUATION OF THE CONCRETE CONTAINING THE ADMIXTURE [redacted] PERFORMED BY THE ENGINEER.

---ITEM 442 METAL FOR STRUCTURES---

ALL STRUCTURAL STEEL (ARMOR JOINTS AND SEALED EXPANSION JOINTS) [redacted] RECEIVE PROTECTION SYSTEM II, PRIME COAT.

ALL [redacted] STRUCTURAL STEEL (HS) AND (HYC) ON THE BRIDGE STRUCTURES [redacted] RECEIVE PROTECTION SYSTEM II, GRAY, INCLUDING THE INSIDE OF THE STEEL BOX CAPS.

---ITEM 446 CLEANING, PAINT AND PAINTING---

ALL PAINT S[redacted] PURCHASED FROM THE DEPARTMENT. PAINT [redacted] CHARGED TO THE CONTRACTOR AT THE FOLLOWING PRICES:

PROTECTION SYSTEM II PRIME COAT --- $ 99.90 PER 3 GALLON BUCKET
APPEARANCE COAT (GRAY) ---------- $ 81.30 PER 5 GALLON BUCKET

ALL PRIMING [redacted] DONE IN SUCH A MANNER AND SEQUENCE THAT NO PRIME COAT [redacted] DEPOSITED ON THE FINISH COAT.

THE ATTENTION OF PROSPECTIVE BIDDERS IS DIRECTED TO ORDINANCE AND REGULATIONS OF LOCAL MUNICIPAL AND COUNTY GOVERNMENT AND THE TEXAS AIR CONTROL BOARD WHICH ARE APPLICABLE TO THIS PROJECT.

THE CONTRACTOR'S ATTENTION IS CALLED TO REQUIREMENTS OF ARTICLE 446.5. THE CONTRACTOR [redacted] NOTIFY THE DIRECTOR, EQUIPMENT AND PROCUREMENT DIVISION, IN AUSTIN WITHIN 30 DAYS AFTER THE DATE OF THE AUTHORIZATION

GENERAL NOTES AND SPECIFICATION DATA--

---ITEM 446 CLEANING, PAINT AND PAINTING---, CONT'D
TO BEGIN WORK. THIS WRITTEN NOTIFICATION [redacted] INCLUDE THE APPROXIMATE QUANTITIES OF EACH TYPE OF PAINT [redacted] USED AND THE ANTICIPATED DELIVERY DATES REQUIRED FOR ANY PAINTS BEING PURCHASED FROM THE DEPARTMENT.

---ITEM 450 RAILING---

METAL BEAM G[redacted] FLARE TERMINAL CONNECTORS ARE REQUIRED.

---ITEMS 464 & 465 REINFORCED CONC PIPE CULVERTS AND PIPE SEWERS---

TONGUE AND GROOVE PIPE [redacted] REQUIRED FOR INSTALLATIONS WHERE PART OF THE STRUCTURE [redacted] PROTRUDE INTO THE LIME TREATED SUBGRADE. THE 4 FOOT DEPTH RESTRICTION FOR HEAVY EQUIPMENT PASSAGE OVER PIPE STRUCTURES IS VOIDED. THE CONTRACTOR [redacted] RESPONSIBLE FOR ANY CONSTRUCTION DAMAGE TO THESE FACILITIES.

COLD APPLIED, PLASTIC ASPHALT SEWER JOINT COMPOUND [redacted] USED ON THIS PROJECT.

THE WORK INVOLVED IN CONNECTING EXISTING [redacted] STORM SEWER PIPE TO EXISTING [redacted] MANHOLES [redacted] CONSIDERED SUBSIDIARY TO THE PERTINENT BID ITEMS.

---ITEM 471 FRAMES, GRATES, RINGS AND COVERS---

ALL GRATES [redacted] WELDED TO THE FRAMES IN A MANNER SATISFACTORY TO THE ENGINEER.

ALL MANHOLES LOCATED ON PAVED SURFACES [redacted] CONSTRUCTED WITH A COVER OF THE TYPE THAT [redacted] ENABLE IT T[redacted] BOLTED TO THE RING.

FRAMES ARE REQUIRED FOR GRATES.

---ITEM 475 HEADWALL, WINGWALLS, INLETS AND MANHOLES---

ALL [redacted] MANHOLES AND INLETS USED IN THIS PROJECT, EXCEPT THOSE WHICH HAVE UTILITY LINES THRU THEM AS INDICATED IN THE PLANS, [redacted] CAST AT THE CONTRACTOR'S YARD IN ORDER TO MINIMIZE THE AMOUNT OF TIME THAT THE STRUCTURAL EXCAVATION IS OPEN. PROVISIONS [redacted] MADE DURING FORMING AND CASTING SO THAT THE BOTTOM OF THE INLET MATCHES THE [redacted] FLOWLINE OF THE PIPE.

GENERAL NOTES AND SPECIFICATION DATA--

---ITEM 502 BARRICADES, SIGNS AND TRAFFIC HANDLING---

THE TRAFFIC CONTROL PLAN FOR THIS PROJECT S[redacted] AS SHOWN IN THE PLANS, AS DETAILED ON BC (1) THRU (7)-89, AND/OR AS PROVIDED FOR IN THE 1980 TEXAS "MANUAL ON UNIFORM TRAFFIC CONTROL DEVICES".

PLASTIC DRUMS [redacted] USED IN ACCORDANCE WITH THE PLANS AND MANUFACTURERS RECOMMENDATIONS AS APPROVED BY THE ENGINEER.

THE CONTRACTOR [redacted] USE SLING TYPE LIFTING DEVICES WHEN MOVING THE CONCRETE BARRIERS. IF HOLES ARE NEEDED FOR SLING LIFTING, THE CONTRACTOR [redacted] DRILL OR CORE APPROXIMATELY 2 INCH HOLES (NON-IMPACTED) 6 FOOT 3 INCHES (PLUS OR MINUS 2 INCHES) FROM EACH END AND 14 INCHES FROM THE TOP OF THE MEDIAN BARRIERS. THREADED SLEEVES [redacted] NOT [redacted] USED FOR LIFTING.

DURING THE VARIOUS CONSTRUCTION PHASES, THE CONTRACTOR [redacted] PROVIDE DRAINAGE SLOTS IN EVERY OTHER (MIN) TEMPORARY CONCRETE TRAFFIC BARRIER USED FOR TRAFFIC CONTROL IN ORDER TO HANDLE TEMPORARY DRAINAGE. ANY ADDITIONAL MEASURES NEEDED [redacted] AS DIRECTED BY THE ENGINEER.

THE CONTRACTOR [redacted] REQUIRED TO PROVIDE, AT HIS OWN EXPENSE, A MINIMUM OF TWO (2) OFF-DUTY PHARR POLICE OFFICERS AT EACH US 83 FRONTAGE ROAD INTERSECTION WITH US 281 TO MAINTAIN THE ORDERLY MOVEMENT OF TRAFFIC AS SHOWN ON PHASE IV OF THE TRAFFIC CONTROL PLAN. THIS TYPE TRAFFIC CONTROL IS [redacted] USED DURING DAYLIGHT HOURS AND AT OTHER TIMES AS DETERMINED BY THE ENGINEER.

---ITEM 504 STRUCTURE FOR FIELD OFFICE AND LABORATORY---

THE CONTRACTOR [redacted] FURNISH ONE AIR-CONDITIONED FIELD OFFICE AND LAB (TY D) ON THIS PROJECT. THIS BUILDING [redacted] NOT [redacted] LESS THAN 8 FEET BY 16 FEET AND 8 FEET HIGH OR AN APPROVED EQUIVALENT AND [redacted] NOT HAVE LESS THAN FOUR GLASS WINDOWS AND ONE DOOR. A WORKBENCH AND A TABLE, EACH 3 FEET WIDE AND 6 FEET LONG, [redacted] PROVIDED.

THE CONTRACTOR [redacted] FURNISH 120-240 VOLT SINGLE PHASE ELECTRICITY TO FIELD OFFICE.

THE CONTRACTOR [redacted] FURNISH ONE AIR-CONDITIONED FIELD OFFICE AND LAB (TY D) AT THE PLANT SITE FOR TESTING THE ASPHALTIC CONCRETE. THIS STRUCTURE [redacted] NOT [redacted] LESS THAN 8 FEET BY 20 FEET AND 8 FEET HIGH. IT [redacted] NOT HAVE LESS THAN 2 GLASS WINDOWS AND 1 DOOR. [redacted] EQUIPPED WITH AT LEAST ONE 30 AMP - 220 VOLT OUTLET, THREE 20 AMP - 110 VOLT OUTLETS AND A SUITABLE HOODED EXHAUST SYSTEM WITH FAN.

GENERAL NOTES AND SPECIFICATION DATA--

---ITEM 508 CONSTRUCTING DETOURS---

FLEXIBLE BASE AND PRIME COAT USED FOR DETOURS S[redacted] MEET THE REQUIREMENTS OF ITEM 249 AND 310 RESPECTIVELY, EXCEPT FOR MEASUREMENT AND PAYMENT.

---ITEM 530 CONC CURB, GUTTER, C & G, SIDEWALKS AND DRIVEWAYS---

MEMBRANE CURING, TYPE 2, [redacted] REQUIRED.

APPLICATION OF MORTAR PASTE TO ACCURATELY SHAPE THE FACE OF THE CONCRETE CURB OR CURB AND GUTTER SHALL NORMALLY BE PLACED WITHIN 15 MINUTES AND NOT LATER THAN 25 MINUTES AFTER THE CONCRETE IS PLACED IN THE FORMS, IN THE EVENT THAT AN EXTRUSION MACHINE IS NOT USED.

THE [redacted] CONCRETE DRIVES AND SIDEWALKS ON THIS PROJECT [redacted] RECONSTRUCTED WITH A MINIMUM 4" THICK CONCRETE SLAB OR EQUAL TO THE EXISTING SLAB THICKNESS AND REINFORCEMENT [redacted] 6" X 6" - W3 X W3 (NO.6 GAUGE) WELDED WIRE FABRIC OR #3 BARS AT 18" C.C. UNLESS OTHERWISE SHOWN ON THE PLANS.

THE ENTRAINED AIR REQUIREMENT [redacted] NOT APPLY TO THIS ITEM.

BEFORE FINAL ACCEPTANCE OF THE PROJECT, DISCOLORATION CAUSED BY TIRE MARKS, MUD, ASPHALT, PAINT OR OTHER SIMILAR MATERIAL [redacted] REMOVED BY ANY METHOD SATISFACTORY TO THE ENGINEER TO ACHIEVE A UNIFORM COLOR AND TEXTURE OF THE FINISHED SURFACE EXPOSED TO VIEW.

---ITEM 540 METAL BEAM GUARD FENCE---

GUARD FENCE LOCATIONS AND QUANTITIES SHOWN ON PLANS ARE FOR ESTIMATING PURPOSES ONLY. FINAL LOCATIONS AND QUANTITIES [redacted] AS DIRECTED BY THE ENGINEER AFTER COMPLETION OF GRADING OPERATIONS.

THE OPTIONAL TERMINAL ANCHOR POST [redacted] REQUIRED FOR ALL TERMINAL ANCHOR SECTIONS AS SHOWN ON THE METAL BEAM GUARD FENCE STANDARD.

TERMINAL ANCHOR POSTS [redacted] CONSTRUCTED TO DIMENSIONS SHOWN ON MBGF-91. ALL CONCRETE FOR TERMINAL ANCHOR POSTS [redacted] CLASS B.

STEEL LINE POSTS FOR METAL BEAM GUARD FENCE [redacted] EMBEDDED IN CONCRETE 12 INCHES IN DIAMETER. ALL CONCRETE FOR LINE POSTS [redacted] CLASS B AND [redacted] SUBSIDIARY TO ITEM 540. SPACERS AND ALL STEEL FITTINGS S[redacted] GALVANIZED.

GENERAL NOTES AND SPECIFICATION DATA--

---ITEM 542 REMOVING METAL BEAM GUARD FENCE---

CONTRACTOR [redacted] DELIVER ALL SALVABLE METAL BEAM GUARD FENCE MATERIALS TO THE TX DOT MAINTENANCE YARD LOCATED IN PHARR, TEXAS.

---ITEM 614 HIGH MAST ILLUMINATION ASSEMBLIES---

THE 400 WATT HIGH MAST ASYMETRIC FIXTURE WHEN MOUNTED IN THE LEVEL POSITION 50 FEET ABOVE THE MIDPOINT AND 20 FEET OUTSIDE OF EITHER LONG SIDE OF A RECTANGULAR AREA MEASURING 340 FEET BY 50 FEET, [redacted] PROVIDE THE FOLLOWING:

1. A MEASURED MINIMUM INTENSITY OF 0.2 HORIZONTAL FOOTCANDLES AT ANY POINT ON THE SURFACE OF THIS AREA.

2. A MEASURED MAXIMUM TO MINIMUM LIGHT INTENSITY RATIO, IN HORIZONTAL FOOTCANDLES, OF LESS THAN 20.

3. AN AVERAGE MEASURED INTENSITY OF 0.6 HORIZONTAL FOOTCANDLES ON THE SURFACE AREA.

LIGHT INTENSITIES MEASURED IN HORIZONTAL FOOTCANDLES ALONG A LINE PARALLEL TO AND 30 FEET IN FROM THE LONG SIDE OF THE PREVIOUSLY DEFINED RECTANGULAR AREA ABOVE WHICH THE FIXTURE IS MOUNTED [redacted] NOT [redacted] LESS THAN 0.35 FOOTCANDLES AT ANY POINT FROM ZERO TO 155 FEET ON BOTH SIDES OF THE FIXTURE.

THE FIXTURE AND LIGHTING SYSTEM [redacted] ALSO MEET OTHER REQUIREMENTS SHOWN ON THE PLANS. THE CONTRACTOR [redacted] SUBMIT A COMPUTER GENERATED LAYOUT OF THE AREA [redacted] LIGHTED BY HIGH MAST POLES SHOWING FOOTCANDLE LEVELS AND ROADWAY AND POLE LOCATIONS.

---ITEM 628 SERVICE POLES---

LUGS ON CIRCUIT BREAKERS AND CONTACTORS [redacted] LARGE ENOUGH TO ACCEPT BRANCH CIRCUIT CONDUCTORS SIZED AS SHOWN ON THE PLANS. WHERE BRANCH CIRCUIT CONDUCTORS ARE ENLARGED TO REDUCE VOLTAGE DROP BEYOND THE CAPACITY OF THE LUGS, DISTRIBUTION BLOCKS [redacted] INSTALLED IN THE SERVICE ENCLOSURE TO SPLICE BRANCH CIRCUIT CONDUCTORS TO THE MAXIMUM WIRE SIZE FOR WHICH THE CIRCUIT BREAKER OR LIGHTING CONTACTOR IS RATED TO ACCEPT.

THE PHOTOELECTRIC CONTROL [redacted] PLACED ON THE NORTH SIDE OF THE SERVICE POLE. IF, IN THE NORTH POSITION, STRAY AMBIENT LIGHT CAUSES ERRATIC OR FALSE OPERATION OF THE CONTROL, THE CONTRACTOR [redacted] ADJUST THE CONTROL POSITION, KEEPING THE CONTROL IN THE NW QUADRANT OF THE

GENERAL NOTES AND SPECIFICATION DATA--

---ITEM 628 SERVICE POLES---, CONT'D
POLE. THE PHOTOCELL SHALL HAVE THE FOLLOWING RATINGS:

105-285 VOLTS, 50-60 HZ AC
1800 VA HIGH PRESSURE SODIUM LIGHTING LOAD

THE PHOTOCELL [redacted] HAVE A HERMETICALLY SEALED GLASS FACE CADMIUM SULFIDE CELL. THE CHASSIS [redacted] MOLDED PHENOLIC WITH 3 POLE TWIST-LOCK PLUG AND PROVIDED WITH A CROSS LINKED POLYETYLENE GASKET. THE PHOTOCELL ENCLOSURE [redacted] WEATHERPROOF. THE ENCLOSURE [redacted] MADE OF POLY-ACRYLIC WITH AN ACRYLIC WINDOW AND HAVE ULTRAVIOLET INHIBITING AGENTS INCORPORATED INTO THE ENCLOSURE MATERIAL. THE PHOTOCELL [redacted] HAVE A SEALED EXPULSION ARRESTOR. THE PHOTOCELL [redacted] AN ELECTRO-MECHANICAL RELAY WITH NORMALLY CLOSED CONTACTS. THE TURN-ON RANGE [redacted] 1 +/- .5 FOOTCANDLE, TURN-OFF RANGE [redacted] TWO FOOTCANDLES HIGHER THAN TURN-ON. UL LISTING OF THE PHOTOCELL IS NOT REQUIRED.

---ITEMS 634 & 636 PLYWOOD AND ALUMINUM SIGNS---

COMPLETE SIGN BLANKS AND PANELS [redacted] HANDLED AND STORED AT THE JOB SITE IN SUCH A MANNER THAT CORNERS, EDGES AND FACES ARE NOT DAMAGED. FINISHED SIGN BLANKS S[redacted] STORED IN EITHER A WEATHER PROOF WAREHOUSE OR OUTSIDE AND OFF THE GROUND IN A VERTICAL POSITION. ALL PAPER, CARDBOARD AND CHEMICALLY TREATED SEPARATORS AND PACKAGING [redacted] REMOVED PRIOR TO OUTSIDE STORAGE.

---ITEM 648 ROADSIDE TRAFFIC SIGN SUPPORTS---

THE CONTRACTOR'S ATTENTION IS DIRECTED TO THE FACT THAT THE LENGTHS OF THE POSTS FOR LARGE GROUND MOUNT SIGNS AND/OR THE TOWER LEGS FOR THE OVERHEAD SIGN STRUCTURES ARE APPROXIMATE. THE CONTRACTOR [redacted] VERIFY EXISTING FIELD CONDITIONS TO DETERMINE THE REQUIRED LENGTHS OF THESE POSTS AND/OR TOWER LEGS PRIOR TO ORDERING THESE MATERIALS TO CONFORM WITH SPECIFIED SIGN MOUNTING HEIGHTS SHOWN IN THE PLANS.

---ITEM 652 HIGHWAY SIGN LIGHTING FIXTURES---

ALL SIGN LIGHTING [redacted] 240 VOLT.

---ITEM 658 DELINEATORS AND OBJECT MARKERS---

DELINEATOR ASSEMBLIES [redacted] INSTALLED 8 FEET FROM THE EDGE OF SHOULDER UNLESS RESTRICTED BY SOME OBSTRUCTION IN WHICH CASE THE DELINEATOR ASSEMBLY [redacted] PLACED BETWEEN 2 AND 8 FEET FROM THE EDGE OF THE SHOULDER.

GENERAL NOTES AND SPECIFICATION DATA--

---ITEM 658 DELINEATORS AND OBJECT MARKERS---, CONT'D

DELINEATORS TYPE D-DW AND D-DY AND OBJECT MARKERS TYPE OM-2SR AND OM-3R WHICH ARE [redacted] ATTACHED TO CONCRETE TRAFFIC BARRIERS ARE [redacted] MOUNTED ON A GALVENIZED STEEL BRACKET. THE BRACKET TO WHICH THE DELINEATORS OR OBJECT MARKERS ARE MOUNTED [redacted] EITHER A "T" OR "L" SHAPED BRACKET. THE BRACKET IS [redacted] ATTACHED TO THE CONCRETE SURFACE WITH A MINIMUM OF TWO (2) MASONRY STUDS. THE CONTRACTOR [redacted] SUBMIT DETAILED BRACKET SHOP DRAWINGS FOR APPROVAL PRIOR TO FABRICATION. THE MOUNTING BRACKETS [redacted] NOT [redacted] PAID FOR DIRECTLY, BUT [redacted] CONSIDERED SUBSIDIARY TO THIS ITEM.

---ITEM 1128 ROADWAY EXCAVATION---

INFORMATION REGARDING HAUL IS AVAILABLE AT THE OFFICE OF THE RESIDENT ENGINEER. ALL HAULING OF MATERIALS [redacted] NOT [redacted] PAID FOR DIRECTLY, BUT [redacted] CONSIDERED AS SUBSIDIARY TO THE BID ITEMS INVOLVED.

SURPLUS EXCAVATION [redacted] CONSIDERED WASTE AND [redacted] DISPOSED OF AT SITES PROVIDED BY THE CONTRACTOR AND SATISFACTORY TO THE ENGINEER.

PRIOR TO CONTRACT LETTING, REPRODUCIBLE EARTHWORK CROSS SECTIONS [redacted] AVAILABE AT THE RESIDENT ENGINEER'S OFFICE FOR BORROWING BY COPY SERVICE COMPANIES FOR THE PURPOSE OF MAKING COPIES FOR THE PROSPECTIVE BIDDERS, AT THE PROSPECTIVE BIDDER'S EXPENSE.

---ITEM 1129 EMBANKMENT---

THE PERCENT OF DENSITY, AS DETERMINED BY COMPACTION RATIO TEST METHOD TEX-114-E, [redacted] A MINIMUM OF 95 PERCENT. DENSITY TOLERANCES [redacted] PERMITTED.

THE CONTRACTOR'S ATTENTION IS CALLED TO THE FACT THAT THE FOLLOWING NOTES FOR THIS ITEM APPLY TO ANY MATERIAL USED FOR EMBANKMENT OTHER THAN THAT WHICH WAS EXCAVATED FROM THE ROADWAY.

EXCAVATION OF MATERIAL WHICH [redacted] USED FOR EMBANKMENT AND [redacted] RESULT IN CREATING A PIT BELOW NATURAL GROUND WITHIN 500 FEET OF ANY ROAD DESIGNATED OR MAINTAINED AS A PART OF THE SYSTEM OF ROADS UNDER THE JURISDICTION OF THE TX DOT [redacted] NOT [redacted] PERMITTED WITHOUT THE WRITTEN APPROVAL OF THE ENGINEER AND SUCH EXCAVATION OF MATERIAL WITHIN 200 FEET OF ANY OTHER PUBLIC ROAD [redacted] NOT [redacted] PERMITTED WITHOUT THE CONSENT OF THE GOVERNMENTAL AGENCY WHICH HAS JURISDICTION OF THE ROAD. THE SECURING OF EMBANKMENT MATERIAL BY THE EXCAVATION OF DITCHES FOR BENEFICIAL DRAINAGE PURPOSES, THE REMOVAL OF SPOIL BANKS, AND THE REMOVAL OF HILLS FOR LAND LEVELLING WITHIN 500 FEET OR 200 FEET OF ANY

GENERAL NOTES AND SPECIFICATION DATA--

---ITEM 1129 EMBANKMENT---, CONT'D

PUBLIC ROAD [redacted] PERMITTED, PROVIDED THAT SELECTION CRITERIA IS MET. EXISTING BORROW PITS [redacted] EXTENDED TO NO CLOSER THAN PRESENT CLEARANCES OR THE 200 FT. AND 500 FT. CLEARANCES CITED ABOVE, WHICHEVER IS THE LEAST DISTANCE, PROVIDED THERE IS ADEQUATE NATURAL OR PLANTED VEGETATIVE SCREENING AS DETERMINED BY THE ENGINEER.

EMBANKMENT (DENS CONT) [redacted] TYPE C WITH A MAX. P.I. OF 40. BORROW USED AS EMBANKMENT MATERIAL IN THE TOP TWO FEET BELOW THE BOTTOM OF FLEXIBLE BASE [redacted] MEET THE FOLLOWING REQUIREMENTS BASED ON PRELIMINARY TESTS AND SUCH OTHER TESTS FOUND NECESSARY BY THE ENGINEER.

1. THE MATERIAL [redacted] SUCH AS TO PRODUCE A WELL-BONDED EMBANKMENT AND [redacted] HAVE A MINIMUM P.I. OF 8 AND A MAXIMUM P.I. OF 30.

THE CONTRACTOR'S ATTENTION IS CALLED TO THE FACT THAT THE PRELIMINARY TEST [redacted] REQUIRE APPROXIMATELY 15 DAYS AND THAT HE [redacted] ADVISE THE ENGINEER OF THE LOCATION OF THE SOURCE SUFFICIENTLY IN ADVANCE TO AVOID DELAY.

THE SUBGRADE [redacted] SHAPED AND BLADED A MINIMUM DISTANCE OF TWO FEET BEYOND THE EDGE OF THE [redacted] BASE COURSE. THE COMPLETE BASE [redacted] ROLLED BEFORE THE EARTH SHOULDER IS SHAPED AND FINAL COMPACTION [redacted] DONE OVER BASE AND EDGE OF EARTH SHOULDER.

---ITEMS 3073 & 3074 ANTI-STRIPPING AGENTS---

A CONTROL SECTION STRIP OF ASPHALTIC CONCRETE PAVEMENT CONTAINING NO ANTISTRIPPING AGENT [redacted] OF THE LENGTH AND LOCATION AS DIRECTED BY THE ENGINEER.

---ITEM 3741 PLANING ASPHALTIC SURFACE---

THE LOOSE MATERIAL RESULTING FROM THE PLANING OPERATIONS ON THE FRONTAGE ROADS [redacted] DELIVERED TO THE STATE'S MAINTENANCE YARD LOCATED IN PHARR, TX. AND STOCKPILED IN ACCORDANCE WITH THE SPECIFICATIONS.

THE CONTRACTOR'S ATTENTION IS CALLED TO THE FACT THAT THERE ARE EXISTING TRAFFIC SIGNAL LOOP DETECTOR WIRES IN THE PAVED AREA [redacted] PLANED AT TWO (2) LOCATIONS ON THE US 281 FRONTAGE ROADS. THE CONTRACTOR [redacted] LOCATE AND MARK THE LOOP DETECTORS AND SHALL EXERCISE CAUTION NOT TO DAMAGE THESE WIRES WHILE PERFORMING THE PLANING OPERATION.

GENERAL NOTES AND SPECIFICATION DATA--

---ITEM 5084 CONSTRUCTING DRIVEWAYS AND TURNOUTS---

DAILY TESTING REQUIREMENTS FOR HOT MIX ASPHALTIC CONCRETE PAVEMENTS FOR DRIVES, COMMERCIAL ENTRANCES AND TURNOUTS [redacted] WAIVED BY THE ENGINEER.

---ITEM 5306 IRRIGATION SYSTEM---

THIS PROJECT INCLUDES AN IRRIGATION SYSTEM WITH ELECTRIC CONTROLLERS AND VALVES. IT [redacted] THE CONTRACTOR'S RESPONSIBILITY TO PROGRAM AND MAINTAIN THE SYSTEM SO THAT THE MINIMUM WATERING REQUIREMENTS STATED IN ITEM 190 ARE MET. IN THE EVENT THE IRRIGATION SYSTEM FAILS, THE CONTRACTOR [redacted] MEET THE WATERING REQUIREMENTS BY A METHOD APPROVED BY THE ENGINEER. THE COST OF WATER USED BY THE AUTOMATED IRRIGATION SYSTEM FOR THIS ITEM [redacted] PAID FOR BY THE STATE.

THE DRAWINGS ARE GENERALLY DIAGRAMMATIC AND INDICATIVE OF THE WORK [redacted] INSTALLED. DUE TO THE SCALE OF THE DRAWINGS, IT IS NOT POSSIBLE TO INDICATE ALL OFFSETS, FITTINGS, AND SLEEVES WHICH [redacted] REQUIRED. THE CONTRACTOR [redacted] CAREFULLY INVESTIGATE THE SITE CONDITIONS AFFECTING ALL WORK AND [redacted] PLAN HIS WORK ACCORDINGLY, FURNISHING SUCH OFFSETS, FITTINGS, AND SLEEVES AS [redacted] REQUIRED TO MEET SITE CONDITIONS.

THE CONTRACTOR [redacted] NOT WILLFULLY INSTALL THE IRRIGATION SYSTEM AS SHOWN ON THE DRAWINGS WHEN IT IS OBVIOUS IN THE FIELD THAT OBSTRUCTIONS, GRADE DIFFERENCES OR DISCREPANCIES IN AREA DIMENSIONS EXIST THAT [redacted] NOT [redacted] KNOWN IN ENGINEERING. SUCH OBSTRUCTIONS OR DIFFERENCES [redacted] BROUGHT TO THE ATTENTION THE ENGINEER WHO [redacted] RECOMMEND NECESSARY CHANGES. THIS WORK [redacted] CONSIDERED INCIDENTAL TO THE PROJECT. IN THE EVENT THIS NOTIFICATION IS NOT PERFORMED, THE CONTRACTOR [redacted] ASSUME FULL RESPONSIBILITY FOR ANY REVISIONS NECESSARY.

THE CONTRACTOR [redacted] FIELD VERIFY DIMINSIONS AND MINIMUM 50 PSI STATIC WATER PRESSURE AT EACH METER BEFORE TRENCHING, IF DESCREPANCIES EXIST, NOTIFY THE ENGINEER BEFORE PROCEEDING. IF THE CONTRACTOR FAILS TO VERIFY PRESSURES, HE ASSUMES FULL RESPONSIBILITY AND COSTS FOR ANY SYSTEM ALTERATIONS. A COPY OF THE COMPLETE PROJECT AND ALL ADDITINOL PROJECT INFORMATION [redacted] WITH THE IRRIGATION CONTRACTOR AT ALL TIMES . THE CONTRACTOR [redacted] COORDINATE HIS INSTALLATION ACTIVITYS AND THE SITE NEEDS WITH THE GENERAL CONTRACTOR.

ALL NECESSARY BORING FOR ELECTRICAL WORK AND WATER SLEEVES [redacted] SUBSIDIARY TO THE ITEM "IRRIGATION SYSTEM"

GENERAL NOTES AND SPECIFICATION DATA--

---ITEM 5306 IRRIGATION SYSTEM---, CONT'D

SLEEVING MATERIAL [redacted] INSTALLED BY THE GENERAL CONTRACTOR.

USE OF SLEEVES FOR ALL ROADWAY CROSSINGS [redacted] REQUIRED.

ELECTRICAL WORK: SERVICE ENTRANCE [redacted] CONSIST OF METER LOOP, CIRCUIT BREAKER ENCLOSURE, CIRCUIT BREAKER AND CONTROLLER INSTALLED ON A WOOD POLE AS SHOWN ON THE PLANS. EQUIPMENT [redacted] INSTALLED BY THE CONTRACTOR [redacted] AS FOLLOWS:

(A) WOOD POLE [redacted] UTILITY GRADE, MINIMUM SIZE 30 FOOT CLASS 5 EMBEDDED 5 FEET. UTILITY COMPANY [redacted] REQUIRE A LONGER POLE.

(B) METER BASE [redacted] OBTAINED FROM THE UTILITY COMPANY AND INSTALLED BY THE CONTRACTOR.

(C) CIRCUIT BREAKER ENCLOSURE [redacted] A RAINPROOF NEMA 3R WITH 100 AMP LUGS WITH LOCKING HASP EQUAL TO THE FOLLOWING EXAMPLE: SQUARE D NO. QO2100BNRB.

(D) CIRCUIT BREAKER [redacted] A 15 AMP ONE POLE RATED 120/240 VOLTS AND 22,000 AIC EQUAL TO THE FOLLOWING EXAMPLE: SQUARE D NO. QO115H.

(E) APPROVALS, PERMITS. THE CONTRACTOR [redacted] RESPONSIBLE FOR OBTAINING ALL PERMITS AND LICENSES AND PAYING ALL FEES NECESSARY FOR THE INSTALLATION AND OPERATION OF THE IRRIGATION SYSTEM.

INSTALLATION OF THE SERVICE ENTRANCE [redacted] NOT [redacted] PAID FOR DIRECTLY BUT [redacted] CONSIDERED SUBSIDIARY TO THE ITEM "IRRIGATION SYSTEM".

---ELECTRICAL WORK---

(A) 120 VOLT SERVICE. ALL 120 VOLT AND HEAVIER ELECTRICAL SERVICE [redacted] PROVIDED BY THE STATE TO WITHIN FIVE (5) FEET OF THE FINAL CONTROLLER LOCATION. THE CONTRACTOR [redacted] RESPONSIBLE FOR FURNISHING AND INSTALLING ALL OTHER APPURTENANCES NECESSARY TO THE SAFETY AND PROPER OPERATION OF THE SYSTEM.

GENERAL NOTES AND SPECIFICATION DATA--

---ELECTRICAL WORK---, CONT'D

(B) LOW VOLTAGE SERVICE. ALL LOW VOLTAGE ELECTRICAL WORK [redacted] ACCOMPLISHED BY THE IRRIGATION CONTRACTOR IN ACCORDANCE WITH THE REQUIREMENTS SET FORTH HEREIN.

(C) APPROVALS, PERMITS. THE CONTRACTOR [redacted] RESPONSIBLE FOR OBTAINING ALL PERMITS AND LICENSES NECESSARY FOR THE INSTALLATION AND OPERATION OF THE IRRIGATION SYSTEM.

---MATERIALS---

ALL IRRIGATION SYSTEM UTILITY METERS, FOR BILLING PURPOSES ONLY, [redacted] BE APPLIED FOR BY THE CONTRACTOR IN THE NAME OF THE TEXAS DEPARTMENT OF TRANSPORTATION AS REQUIRED BY THE ENGINEER. THE CONTRACTOR [redacted] RESPONSIBLE FOR PAYING THE COST OF ALL METERS, TAPS, INSTALLATION, AND ANY FEES OR OTHER COSTS ASSOCIATED WITH THE UTILITY METERS. THE STATE [redacted] RESPONSIBLE ONLY FOR THE COST OF THE WATER AND ELECTRICITY USED ON THIS PROJECT TO OPERATE THE IRRIGATION SYSTEM.

ANY WATER HAULED TO THE SITE DURING THE INSTALLATION OR NINETY (90)-DAY MAINTENANCE PERIOD [redacted] PAID BY THE CONTRACTOR. THE STATE [redacted] ASSUME PAYMENT ONLY FOR WATER AND ELECTRICITY USED TO OPERATE THE IRRIGATION SYSTEM.

ABOVE GROUND PIPE. ALL ABOVEGROUND PIPE AND BURIED RISERS AND SWING-JOINT COMPONENTS [redacted] SCHEDULE 40 PVC PIPE RATED FOR DIRECT SUNLIGHT EXPOSURE.

1. UNDERGROUND PIPE. ALL UNDERGROUND PIPE [redacted] DOMESTIC EXTRUDED PIPE MANUFACTURED FROM PVC 1120, TYPE I, GRADE 1, PVC COMPOUND. THE PIPE [redacted] SDR 13.5, 315, FOR ALL 1/2", PIPE AND SDR 21, CLASS 200 FOR ALL OTHER SIZES, PRESSURE RATED WITH TWIN GASKET COUPLINGS AND FITTINGS OR SLIP TYPE SOLVENT WELDED JOINTS. ALL FITTINGS INCORPORATED INTO THE SYSTEM [redacted] OF THE SAME TYPE AND CLASS MATERIAL AS THE PIPE. ALL FITTINGS [redacted] REGULARLY MANUFACTURED PARTS (REDUCERS, BUSHINGS, AND OTHER APPURTENANCES), INTENDED FOR USE WITH THE AFOREMENTIONED MATERIALS. ALL PIPE AND FITTINGS [redacted] CONFORM TO ASTM D-1784 AND [redacted] MARKED IN ACCORDANCE WITH ASTM D-2241.

GENERAL NOTES AND SPECIFICATION DATA--

---MATERIALS---, CONT'D

2. REMOTE CONTROL VALVES. ALL REMOTE CONTROL VALVES [redacted] WEATHER-MATIC SERIES 11024 FCR-20 WITH XPR OPTION OR APPROVED EQUAL IN THE SIZES INDICATED ON THE PLANS. THE CONTRACTOR [redacted] FURNISH VALVE DATA TO THE ENGINEER FOR APPROVAL PRIOR TO BEGINNING THE WORK.

3. WATER METER. [redacted] AS INDICATED AS ON THE PLANS THE CONTRACTOR [redacted] FURNISH METER DATA TO THE ENGINEER FOR APPROVAL PRIOR TO BEGINNING THE WORK.

4. VALVE BOXES. ALL GATE VALVES, REMOTE CONTROL VALVES, AND QUICK COUPLING VALVES [redacted] MOUNTED BELOW GRADE IN AMETEK OR APPROVED EQUAL VALVE BOXES. MINIMUM SIZE OF ANY BOX [redacted] TEN (10) INCHES AND [redacted] INSTALLED WITH THE TOP FLUSH WITH FINISHED GRADE. NO MORE THAN ONE (1) VALVE IS TO OCCUPY THE SAME BOX TO ALLOW EASY ACCESS FOR MAINTENANCE OPERATIONS AS DETERMINED BY THE ENGINEER.

5. ALL HEADS [redacted] FITTED WITH A HEAD LOCK TYPE HL-750 KBI BY WEATHER- MATIC OR EQUAL.

6. ALL AUTOMATIC DRAIN VALVES [redacted] TYPE 910AS MANUFACTURED BY WEATHER-MATIC OR EQUAL.

7. ROTARY POP UP HEADS: ROTARY IRRIGATION HEADS ON THIS SYSTEM [redacted] HUNTER - I 20 WITH 9 NO.(7 - 9) NOZZLE, OR APPROVED EQUAL. THE CONTRACTOR [redacted] FURNISH HEAD DATA TO THE ENGINEER FOR APPROVAL PRIOR TO BEGINNING THE WORK.

8. POP-UP IRRIGATION HEADS. POP-UP IRRIGATION HEADS ON THIS SYSTEM [redacted] WEATHER-MATIC 37P WITH 200 SERIES NOZZLES, OR APPROVED EQUAL. THE CONTRACTOR [redacted] FURNISH HEAD DATA TO THE ENGINEER FOR APPROVAL PRIOR TO BEGINNING THE WORK.

9. SPRAY HEADS ON RISERS. SPRAY HEADS ON RISERS [redacted] WEATHERMATIC 200 SERIES NOZZLES, OR APPROVED EQUAL. THE CONTRACTOR [redacted] FURNISH

GENERAL NOTES AND SPECIFICATION DATA--

---MATERIALS---
NOZZLE DATA TO THE ENGINEER FOR APPROVAL PRIOR TO BEGINNING THE WORK.

10. MISCELLANEOUS FITTINGS. THE CONTRACTOR [redacted] FURNISH ALL OTHER FITTINGS AND APPURTENANCES NECESSARY TO COMPLETE THE SYSTEM.

11. IRRIGATION CONTROLLER. THE CONTROLLER [redacted] WEATHER-MATIC, MARK A SERIES 1B TO 24 STATION(SEE PLAN SHEETS) OR AN APPROVED EQUAL AND INSTALLED IN STRICT ACCORDANCE WITH THE MANUFACTURER'S SPECIFICATIONS. THE CONTRACTOR [redacted] FURNISH CONTROLLER DATA TO THE ENGINEER FOR APPROVAL PRIOR TO BEGINNING THE WORK. THE CONTROLLER [redacted] INSTALLED ON A WEATHER-MATIC MRMP PEDESTAL, OR AN APPROVED EQUAL, AS PER THE MANUFACTURER'S SPECIFICATIONS.

12. CONTROL WIRE. ALL LOW VOLTAGE CONTROL WIRE [redacted] 14 GA. COLOR CODED AND SPECIFICALLY MANUFACTURED FOR DIRECT BURIAL. ALL WIRE CONNECTIONS AND SPLICES [redacted] MADE WITH WATERPROOF COMPRESSION CLAMPS COVERED WITH SCOTCH FILL AND COATED WITH SCOTCH KOTE, OR AN APPROVED EQUAL.

13. BACKFLOW PREVENTION DEVICES. ALL CONNECTIONS TO A POTABLE WATER SUPPLY [redacted] PROTECTED BY A DOUBLE CHECK VALVE ASSEMBLY (DCA) IN THE SIZES SHOWN ON THE PLANS. THE TYPE OF BACKFLOW PREVENTION IN ALL CASES [redacted] MEET THE REQUIREMENTS AND SPECIFICATIONS OF THE INDIVIDUAL WATER SUPPLY BEING ACCESSED FOR THE IRRIGATION SYSTEM. THE CONTRACTOR [redacted] RESPONSIBLE FOR OBTAINING ALL PERMITS AND APPROVALS FOR THE BACKFLOW PREVENTION DEVICES. THE CONTRACTOR [redacted] FURNISH CHECK VALVE DATA TO THE ENGINEER FOR APPROVAL PRIOR TO BEGINNING THE WORK.

EXAMPLE: FEBCO 805Y (2") OR AN APPROVED EQUAL

11. SOLVENT CEMENT. SOLVENT CEMENT [redacted] THE TYPE RECOMMENDED BY THE PIPE MANUFACTURER.

GENERAL NOTES AND SPECIFICATION DATA--

---INSTALLATION METHOD---
1. EXCAVATION AND BACKFILLING. THE CONTRACTOR [redacted] DO ALL NECESSARY EXCAVATING AND BACKFILLING REQUIRED FOR THE PROPER INSTALLATION OF THE PIPE AND OTHER IRRIGATION EQUIPMENT. EXCAVATION DEPTH AND PIPE LOCATION [redacted] IN STRICT ACCORDANCE WITH THE DIMENSIONS AND NOTES ON THE PLANS. DEVIATIONS IN THE PIPING AS SHOWN ON THE PLANS [redacted] NOT [redacted] PERMITTED WITHOUT APPROVAL, IN WRITING, FROM ENGINEER. MINOR ADJUSTMENTS TO THE LAYOUT THAT [redacted] NECESSARY TO AVOID UNFORESEEN UNDERGROUND OBSTRUCTIONS [redacted] MADE BY THE CONTRACTOR SO LONG AS THEY ARE RECORDED ON THE FIELD DRAWINGS AND INCORPORATED INTO THE "AS-BUILT DRAWINGS" DESCRIBED HEREINAFTER.

(A) TRENCH EXCAVATION. TRENCH EXCAVATION [redacted] FOLLOW, AS MUCH AS POSSIBLE, THE LAYOUT INDICATED ON THE DRAWINGS. DIG TRENCHES STRAIGHT AND SUPPORT PIPE CONTINUOUSLY ON BOTTOM OF TRENCH. LAY PIPE TO AN EVEN GRADE. TRENCH [redacted] CLEAN AND SMOOTH WITH ALL ORGANIC DEBRIS AND SHARP OBJECTS REMOVED. TRENCH DEPTHS [redacted] AS SHOWN ON THE PLANS.

PIPE [redacted] SNAKED IN THE TRENCH, WITH SCHEDULING FACING UP FOR CLEAR INSPECTION BY THE ENGINEER AND INORDER TO ALLOW FOR EXPANSION AND CONTRACTION. SOLVENT WELD PIPE [redacted] NOT [redacted] INSTALLED WHEN AIR TEMPERATURE IS BELOW FORTY (40) DEGREES FAHRENHIT. PLASTIC PIPE [redacted] CUT WITH A HAND SAW, HACK SAW, OR OTHER CUTTER, IN A MANNER THAT WILL INSURE A SQUARE CUT. BURRS AT CUT ENDS [redacted] REMOVED PRIOR TO INSTALLATION SO THAT A SMOOTH UNOBSTRUCTED [redacted] OBTAINED. PLASTIC TO PLASTIC [redacted] MADE FOLLOWING MANUFACTURER'S RECOMMENDATIONS.

ALL MAIN AND LATERAL LINES AR [redacted] PRESSURE TESTED AND INSPECTED BY THE ENGINEER PRIOR TO ANY BACKFILLING.

(B) DEPTH COVER. IRRIGATION MAINS [redacted] HAVE A MINIMUM OF EIGHTEEN (18) INCHES OF COVER, AND LATERAL LINES [redacted] HAVE A MINIMUM COVER OF TWELVE (12) INCHES OF SOIL.

GENERAL NOTES AND SPECIFICATION DATA--

---INSTALLATION METHOD---, CONT'D

(C) BACKFILL. ALL BACKFILL MATERIAL [redacted] FREE OF SHARP ROCK, LARGE STONES, OR OTHER MATERIALS THAT COULD DAMAGE THE PIPE DURING THE BACKFILLING OPERATION.

BACKFILLING [redacted] NOT [redacted] DONE IN FREEZING WEATHER EXCEPT WITH WRITTEN APPROVAL OF THE ENGINEER. THE SITE OF THE WORK [redacted] CONTINUOUSLY CLEARED OF EXCESS AND/OR WASTE MATERIALS AS THE BACKFILLING PROGRESSES, AND [redacted] LEFT IN A WORKMANLIKE CONDITION TO THE SATISFACTION OF THE ENGINEER. IN ORDER TO PREVENT ACCIDENTAL INJURY, ANY OPEN TRENCHES [redacted] COVERED OR CLEARLY FLAGGED TO THE ENGINEER'S SATISFACTION.

(D) COMPACTION OF BACKFILL. ALL TRENCHES [redacted] BACKFILLED IN LIFTS OF NO MORE THAN TWELVE (12) INCHES AND THEN COMPACTED BY AN APPROVED METHOD. COMPACTION OF THE PIPE TRENCHES [redacted] SUFFICIENT TO LIMIT SHORT TERM SETTLING OF THE BACKFILL TO NO MORE THAN ONE-TENTH (0.10) OF A VERTICAL FOOT. THE CONTRACTOR [redacted] RESPONSIBLE FOR CORRECTING ANY SETTLING GREATER THAN THIS WITHOUT ADDITIONAL COMPENSATION.

2. INSTALLATION OF SPRAY HEADS. ALL SPRAY HEADS [redacted] INSTALLED IN ACCORDANCE WITH THE DETAILS IN THE DRAWINGS. ALL HEADS [redacted] ONLY [redacted] INSTALLED ON TH[illegible] RISERS AFTER THE SYSTEM HAS BEEN THOROUGHLY FLUSHED TO REMOVE ALL SOIL AND TRASH THAT [redacted] HAVE ACCUMULATED IN THE LINES DURING THE INSTALLATION.

3. INSTALLATION OF VALVES. ALL VALVES, REMOTE, ELECTRIC, OR MANUAL, [redacted] INSTALLED IN ACCORDANCE WITH THE DETAILS IN THE DRAWINGS AND IN AN APPROVED VALVE BOX WHICH [redacted] REACH TO AT LEAST TWO (2) INCHES BELOW THE BOTTOM OF THE VALVE. A MINIMUM OF EIGHTEEN (18) INCHES OF EXTRA CONTROL WIRE [redacted] COILED BELOW THE VALVE IN THE VALVE BOX.

GENERAL NOTES AND SPECIFICATION DATA--

---INSTALLATION METHOD---, CONT'D
4. INSTALLATION OF CONTROL WIRE. ALL LOW VOLTAGE CONTROL WIRE [redacted] LAID IN THE PIPE TRENCHES BELOW THE PIPE. ANY WIRE THAT CANNOT BE INSTALLED DIRECTLY IN A PIPE TRENCH [redacted] PLACED IN A MINIMUM TWO (2) INCH CONDUIT OVER ITS ENTIRE RUN. ALL WIRE RUNS [redacted] CONTINUOUS LENGTHS. NO SPLICES [redacted] MADE IN THE TRENCH. ANY WIRE SPLICES THAT ARE REQUIRED [redacted] MADE AT THE VALVES USING WATERPROOF MATERIALS SPECIFIED HEREIN.

5. INSTALLATION OF CONTROLLERS. CONTROLLERS [redacted] INSTALLED IN ACCORDANCE WITH THE DRAWINGS AND DETAILS. THE LOCATION OF THE CONTROLLERS [redacted] AS SHOWN ON THE PLANS. ADJUSTMENT OF THE LOCATION [redacted] NECESSARY TO MEET UNFORESEEN SITE CONDITIONS. SHOULD RELOCATION BE NECESSARY THE CONTRACTOR [redacted] CONTACT THE ENGINEER IMMEDIATELY AND THE ENGINEER [redacted] WORK WITH THE CONTRACTOR TO ESTABLISH THE FINAL LOCATION. SUCH A RELOCATION [redacted] CONSIDERED AN INCIDENTAL CHANGE, AND THERE [redacted] NO ADDITIONAL COMPENSATION.

6. INSTALLATION OF WATER METERS AND BACKFLOW PREVENTERS. WATER METERS AND BACKFLOW PREVENTERS [redacted] INSTALLED IN ACCORDANCE WITH THE DRAWINGS AND DETAILS. THE LOCATION OF WATER METERS AND BACKFLOW PREVENTERS [redacted] AS SHOWN ON THE PLANS. ADJUSTMENT OF THE LOCATION [redacted] NECESSARY TO MEET UNFORESEEN SITE CONDITIONS. [redacted] RELOCATION [redacted] NECESSARY THE CONTRACTOR [redacted] CONTACT THE ENGINEER IMMEDIATELY AND THE ENGINEER [redacted] WORK WITH THE CONTRACTOR TO ESTABLISH THE FINAL LOCATION. SUCH A RELOCATION [redacted] CONSIDERED AN INCIDENTAL CHANGE AND THERE [redacted] NO ADDITIONAL COMPENSATION.

10. PROJECT SUPERVISION. THE CONTRACTOR [redacted] CONTINUOUSLY MAINTAIN A COMPETENT SUPERINTENDENT, LICENSED BY THE STATE OF TEXAS AS AN IRRIGATOR AND SATISFACTORY TO THE ENGINEER, ON THE SITE DURING ALL CONSTRUCTION OPERATIONS. THE SUPERINTENDENT [redacted] ABLE TO MAKE DECISIONS AND DIRECT THE WORK AS THE REPRESENTATIVE OF THE CONTRACTOR. IT [redacted] THE RESPONSIBILITY OF

GENERAL NOTES AND SPECIFICATION DATA--

---INSTALLATION METHOD---, CONT'D
THE SUPERINTENDENT TO NOTIFY THE ENGINEER OF WORK ACCOMPLISHED AT LEAST FORTY-EIGHT (48) HOURS IN ADVANCE OF REQUIRED ONSITE INSPECTIONS AND TO MAINTAIN A SET OF PLANS ON THE SITE AT ALL TIMES ON WHICH ALL FIELD ADJUSTMENTS OR DEVIATIONS FROM THE DRAWINGS ARE [redacted] RECORDED FOR THE PREPARATION OF THE AS-BUILT DRAWINGS. THE FIELD PLANS [redacted] AT ALL TIMES BE AVAILABLE FOR THE INSPECTION OF THE ENGINEER.

---GUARANTEE AND ACCEPTANCE---
1. MAINTENANCE PERIOD. THE IRRIGATION SYSTEM [redacted] INSPECTED CONCURRENTLY WITH, AND SUBJECT TO THE SAME 90-DAY MAINTENANCE PERIOD REQUIRED BY ITEM 190. DURING THE 90-DAY MAINTENANCE PERIOD, THE CONTRACTOR [redacted] PERFORM THE FOLLOWING MAINTENANCE ACTIVITIES AS A MINIMUM AND TO THE SATISFACTION OF THE ENGINEER:

(A) INSTALL AND MAINTAIN THE CONTROLLER PROGRAM TO INSURE THE PROPER DISTRIBUTION OF WATER.

(B) INSPECT, REPAIR, AND/OR REPLACE ANY EQUIPMENT THAT IS FOUND [redacted] DEFECTIVE OR THAT [redacted] DAMAGED BY OTHER MAINTENANCE ACTIVITIES.

(C) MAKE ANY ADJUSTMENTS THAT [redacted] BECOME NECESSARY TO INSURE THE PROPER DELIVERY OF WATER TO THE PLANT MATERIAL.

2. AS-BUILT DRAWINGS. UPON COMPLETION OF THE 90-DAY MAINTENANCE PERIOD, THE ENGINEER [redacted] MAKE AN INSPECTION OF THE PROJECT AT THIS TIME. THE CONTRACTOR [redacted] FURNISH THE ENGINEER A SET OF ASBUILT DRAWINGS ON REPRODUCIBLE FILM BASE SHEETS PREPARED BY A QUALIFIED DRAFTSMAN. THE ENGINEER [redacted] CHECK THESE BASE SHEETS [redacted] SURE THEY ARE A TRUE REFLECTION OF THE PROJECT CONDITIONS AND [redacted] DIRECT THE CONTRACTOR TO CORRECT ANY ERRORS THAT ARE FOUND. THE DRAWINGS [redacted] SHOW ALL VALVE LOCATIONS BY TRIANGULATION FROM A FIXED OBJECT AND ANY CHANGE TO SPRINKLER HEAD LOCATION AND REROUTING OF MAIN AND LATERAL LINES. ANY CHANGES OF THIS NATURE [redacted] APPROVED BY THE ENGINEER

GENERAL NOTES AND SPECIFICATION DATA--

---GUARANTEE AND ACCEPTANCE---, CONT'D
PRIOR TO INSTALLATION.

3. OPERATING AND MAINTENANCE DATA. THE CONTRACTOR [redacted] PROVIDE INSTRUCTIONS COVERING FULL OPERATION, CARE AND MAINTENANCE OF THE EQUIPMENT, INCLUDING A SCHEDULE SHOWING LENGTH OF TIME EACH VALVE IS [redacted] OPEN TO PROVIDE DETERMINED AMOUNT OF WATER AND INSTRUCT THE STATE'S DESIGNATED PERSONNEL IN PROPER OPERATION OF THE SYSTEM.

4. TEST. TESTING OF THE SYSTEM FOR LEAKAGE [redacted] IN ACCORDANCE WITH ITEM 5306. THE CONTRACTOR [redacted] ALSO TEST AND ASSURE THE PROPER ELECTRICAL WORKING ORDER OF THE SYSTEM TO THE SATISFACTION OF THE ENGINEER. THE CONTRACTOR [redacted] SET THE VALVE SEQUENCE AS DIRECTED BY THE ENGINEER.

---ITEM 5653 GUARD RAIL ENERGY ABSORBING TERMINALS---

IN ACCORDANCE WITH THE SPECIFICATIONS IF UNITS ARE DAMAGED, AT ANYTIME DURING THE PROJECT, THE SYSTEM [redacted] REPAIRED IMMEDIATELY.

A TYPE OB-3D OBJECT MARKER IS [redacted] ATTACHED TO THE FRONT FACE OF THE NOSE CARTRIDGE ON EACH G.R.E.A.T. UNIT AS SHOWN ON D & OM (3).

---ITEM 5694 GUARDRAIL EXTRUDER TERMINALS---

THREE GUARDRAIL EXTRUDER TERMINALS [redacted] SET UP ON THIS PROJECT TO BECOME THE PROPERTY OF THE STATE AND BE DELIVERED BY THE CONTRACTOR TO THE DISTRICT MAINTENANCE YARD IN PHARR, TX. THE REMAINING G.E.T.'S ARE [redacted] INSTALLED AT THE LOCATIONS SHOWN IN THE PLANS.

---ITEM 5739 INTERLOCKING CONCRETE PAVING STONES---

PART I - GENERAL

THE WORK [redacted] INCLUDE ALL LABOR, MATERIALS, EQUIPMENT, AND TRANSPORTATION REQUIRED TO INSTALL INTERLOCKING MODULAR CONCRETE PAVING UNITS.

THE PAVING UNITS [redacted] DELIVERED TO THE JOB SITE ON PALLETS AND BOUND IN SUCH A MANNER THAT NO DAMAGE OCCURS TO THE PRODUCT DURING HANDLING, HAULING, AND UNLOADING.

GENERAL NOTES AND SPECIFICATION DATA--

---ITEM 5739 INTERLOCKING CONCRETE PAVING STONES---, CONT'D
PART II - MATERIALS

PAVING UNITS [redacted] TYPE AS SPECIFIED IN THE PLAN SHEEETS. COLOR [redacted] APPROVED BY THE ENGINEER PRIOR TO ANY INSTALLATION OF PAVING UNITS. THE PAVING UNITS [redacted] SUPPLIED FROM ONE OF THE FOLLING COMPANIES, OR A COMPARABLE EQUAL, AS DETERMINED THE ENGINEER.

(A) PAVESTONE CO., P.O. BOX 1868 GRAPEVINE, TEXAS 76051. GRAPEVINE PO. NO. 817-481-5802

(B) ALAMO CONCRETE TILE INC. 1008 HOEFGEN, SAN ANTONIO TEXAS 78210. PO. NO. 512-534-8821

(C) PAVEX AUSTIN INC. P.O. BOX 19015, AUSTIN TEXAS 78760. PO. NO. 512-385-8444

(D) VALLEY BLOCK AND BRICK, P.O. DRAWER 2, PHARR, TEXAS 78577 PO. NO. 512-787-3223

THE PAVING UNIT THICKNESS [redacted] 2-3/8INCHES (6 CM.). PAVING UNIT [redacted] CONFORM TO A.S.T.M. DESIGNATION C-936-82.

IF THE CONTRACTOR CHOOSES TO USE AN INTERLOCKING CONCRETE PAVING UNITS OTHER THAN THOSE SPECIFIED OR ONE LISTED ABOVE IT [redacted] HIS RESPONSIBILITY TO FURNISH THE STATE WITH A PROFESSIONAL LABORATORY TEST CERTIFYING THAT THE SAME MATERIALS USED AND THEIR FABRICATION METHODS MEET OR EXCEED THE PROPERTIES OF THE MATERIAL HEREIN SPECIFIED.

ALL PAVING UNITS [redacted] FREE OF ANY DEFECTS THAT WOULD INTERFERE WITH THE PROPER PLACEMENT OR IMPAIR THE STRENGTH OR PERFORMANCE OF THE UNITS. MINOR CRACKS INCIDENTAIL TO THE USUAL METHOD OF MANUFACTURING OR SHIPPING RESULTING FROM CUSTOMARY METHODS OF HANDLING IN SHIPMENT AND DELIVERY, [redacted] LEFT TO THE DECISION OF THE ENGINEER FOR ACCEPTANCE.

DURING THE EXECUTION OF THE WORK, UTMOST CARE [redacted] EXERCISED TO PREVENT DAMAGE TO ANY UTILITIES, STRUCTURES OR RIGHT-OF-WAY. THE CONTRACTOR [redacted] RESPONSIBLE FOR CONTACTING, LOCATING, AND PROTECTING ALL UNDERGROUND UTILITIES AND STRUCTURES. THE ENGINEER [redacted] ASSIST THE CONTRACTOR IN LOCATING UNDERGROUND UTILITIES AND STRUCTURES. HOWEVER, ANY DAMAGE TO EXISTING UTILITIES OR STRUCTURES [redacted] REPAIRED AT THE CONTRACTORS EXPENSE. IF IN THE COURSE OF THE WORK, UNDERGROUND UTILITIES OR STRUCTURES ARE ENCOUNTERED AND ARE IN CONFLICT WITH THE WORK, THE CONTRACTOR [redacted] CONTACT THE ENGINEER WHO [redacted] DIRECT THE NECESSARY ADJUSTMENTS. CHANGES OF THIS NATURE ARE

GENERAL NOTES AND SPECIFICATION DATA--

---ITEM 5739 INTERLOCKING CONCRETE PAVING STONES---, CONT'D
CONSIDERED INCIDENTAL TO THE CONTRACT WORK AND [redacted] NOT ENTITLE THE CONTRACTOR TO ADDITIONAL COMPENSATION.

SAND-LAYING COURSE:

THE SAND LAYING COURSE [redacted] WELL GRADED CLEAN WASHED SHARP SAND WITH 100% PASSING A 3/8 INCH SIEVE AND A MAXIMUM OF 3% PASSING A NO. 200 SIEVE SIZE. COMMONLY KNOWN AS MANUFACTURED CONCRETE SAND OR LIMESTONE SCREENING. DO NOT USE MASON SAND.

THE SAND LAYING COURSE [redacted] THE RESPONSIBILITY OF THE PAVING UNIT INSTALLER.

EDGE RESTRAINT:

ALL EDGES OF THE INSTALLED PAVING UNITS [redacted] RESTRAINED. EDGE RESTRAINTS [redacted] CAST-IN-PLACE CONCRETE GRADE BEAMS (4" X 8" AS SHOWN ON THE PLANS), OR EXISTING CONCRETE CURB AND GUTTER AS SHOWN ON THE PLANS. CONCRETE [redacted] CLASS "A" CONCRETE, FIVE (5) SACK CEMENT PER CUBIC YARD MIX.

PART III - EXECUTION

INSTALLATION CONTRACTOR IS TO HAVE A MINIMUM 3 YEARS EXPERIENCE IN INSTALLATION OF INTERLOCKING CONCRETE PAVERS.

CONSTRUCTION OF THE SAND LAYING COURSE:

THE COMPACTED SAND LAYING COURSE [redacted] SPREAD EVENLY OVER THE AREA [redacted] PAVED AND THEN SCREEDED TO LEVEL THAT [redacted] PRODUCE A MINIMUM ONE (1) INCH (25MM) THICKNESS WHEN THE PAVING UNITS HAVE BEEN PLACED AND VIBRATED. THE FINAL ELEVATION OF PAVING UNITS [redacted] 1/4 INCH HIGHER THAN THE ADJACENT CURB, GUTTER, PAVING, ETC.. TO ALLOW FOR MINOR SETTLING THAT [redacted] OCCUR WITHIN THE BASE.

ONCE SCREEDED AND LEVELED TO THE DESIRED ELEVATION, THE SAND LAYING COURSE [redacted] NOT [redacted] DISTURBED IN A WAY.

LAYING OF THE CONCRETE PAVING UNITS:

THE PAVING UNITS [redacted] LAID IN THE PATTERN AS NOTED IN THE PLAN SHEETS AND MANUFACTURER'S DETAILS AND SPECIFICATIONS. THE CONTRACTOR [redacted] LAY A SAMPLE AREA 20'X 20' FOR PATTERN APPROVAL BY THE ENGINEER BEFORE CONTINUING. THE PAVING UNITS [redacted] LAID IN SUCH A MANNER THAT THE DESIRED PATTERN IS MAINTAINED AND THE JOINTS BETWEEN THE UNITS ARE

GENERAL NOTES AND SPECIFICATION DATA--

---ITEM 5739 INTERLOCKING CONCRETE PAVING STONES---, CONT'D
TIGHT AS POSSIBLE. THE JOINTS BETWEEN THE UNITS [redacted] NOT EXCEED 1/8 INCH (3MM).

STRING LINES [redacted] USED TO HOLD ALL PATTERN LINES TRUE RELATIVE TO THE BACK OF CURB AND GUTTER OR AS DIRECTED BY THE ENGINEER.

THE GAPS AT THE EDGE OF THE PAVER SURFACE [redacted] FILLED WITH STANDARD EDGE UNITS OR UNITS CUT TO FIT. CUTTING [redacted] ACCOMPLISHED TO LEAVE A CLEAN EDGE TO THE TRAFFIC SURFACE USING A MASONRY SAW. NO CUTS [redacted] RESULT WITH A PAVERUNIT LESS THAN 1/3 OF THE ORIGINAL UNIT'S DIMENSION.

PAVING UNITS [redacted] VIBRATED INTO THE SAND LAYING COURSE USING A VIBRATOR CAPABLE OF 3,000 TO 5,000 POUNDS COMPACTION FORCE WITH THE SURFACE CLEAN AND JOINTS OPEN. AFTER VIBRATION, CLEAN MASONRY TYPE SAND AT LEAST 30% OF 1/8 INCH (3MM) PARTICLES [redacted] SPREAD OVER THE PAVING UNIT SURFACE, ALLOWED TO DRY, AND VIBRATED INTO JOINTS WITH ADDITIONAL VIBRATOR PASSES AND BRUSHING SO AS TO COMPLETELY FILL THE JOINTS.

THE CONTRACTOR [redacted] BRING ALL MANHOLE COVERS, SIGNAGE POLES, JUNCTION PULL BOXES, AND DRAINAGE INLETS TO THE FINISH GRADE OF THE PAVING STONE AS DIRECTED BY THE ENGINEER. THE STATE DEPARTMENT OF TRANSPORTATION [redacted] ASSIST THE CONTRACTOR. HOWEVER,THE CONTRACTOR [redacted] RESPONSIBLE FOR THE FINAL FINISH GRADE OF THESE ITEMS.

SURPLUS MATERIAL [redacted] LEFT ON THE SURFACE DURING CONSTRUCTION TIME TO INSURE COMPLETE FILLING OF JOINTS DURING INITIAL USE. UPON COMPLETION OF ALL CONSTRUCTION WORK THE PAVER SURFACE [redacted] SWEPT AND CLEANED OF ALL EXCESS SOIL. FOREIGN MATERIAL, AND/OR STAINS.

STEEL EDGING:

STEEL EDGING [redacted] 14 GA. DARK GREEN IN COLOR. AND INSTALLED IN ACCORDANCE WITH THE MANUFACTURER'S SPECIFICATIONS. EDGING [redacted] APPROVED PRIOR TO INSTALLATION BY THE ENGINEER. EDGING [redacted] NOT [redacted] PAID FOR DIRECTLY AND [redacted] CONSIDERED SUBSIDIARY TO ITEM 1122.

WASHED ROCK:

ROCK [redacted] IGNEOUS IN COMPOSITION, WASHED AND CLEAN OF FOREIGN MATERIAL, ROCK [redacted] SMOOTH AND A CONSISTENT MIX OF COLORS AND SIZES RANGING FROM 1-3 INCHES. ROCK [redacted] PLACED AS NOTED IN PLANT BEDS AS INDICATED IN THE PLANTING DETAILS SEE SHEET 491. PRIOR TO INSTALLATION

GENERAL NOTES AND SPECIFICATION DATA--

---ITEM 5739 INTERLOCKING CONCRETE PAVING STONES---, CONT'D
CONTRACTOR [redacted] SUBMIT A CONSISTENT SAMPLE OF THE ROCK [redacted] USED TO THE ENGINEER FOR APPROVAL. ROCK AND SAMPLE [redacted] NOT [redacted] PAID FOR DIRECTLY AND [redacted] CONSIDERED SUBSIDIARY TO ITEM 190 MULCH MATERIALS.

EXAMPLE
THE FORDYCE COMPANY
SULLIVAN CITY, TEXAS
512-485-2711

---ITEM 5740 INTERIOR PLANTER SUPPORT SYSTEM---

ALL CLASS B CONCRETE SLOPED TO PLANTER CENTER LINE AND DRAIN LINE SYSTEM, WHICH [redacted] INCLUDE ALL MATERAL, FITTINGS, LABOR AND INCIDENTALS COMPLETE IN PLACE [redacted] NOT [redacted] PAID FOR DIRECTLY, BUT [redacted] CONSIDERED SUBSIDIARY TO THE ITEM INTERIOR PLANTER SUPPORT SYSTEM.

THIS ITEM [redacted] CONSIST OF PROVIDING ALL EQUIPMENT LABOR, MATERIALS AND INCIDENTALS NECESSARY TO INSTALL THE ITEM "INTERIOR PLANTER SUPPORT SYSTEM". SEE SHEET 491.

GRATE DRAINS [redacted] JOSAM 3900 SERIES OR NEENAH R-4920 SERIES WITH A FIXED 16 WIRE PER INCH COPPER SCREEN. OR EQUAL. AREA DRAINS [redacted] OUTLETTED WITH A MINIMUM 6" I.D. DRAIN LINE TIED TO THE STORM SEWER SYSTEM.

GLUE [redacted] A WATER BASED MASTIC WHICH [redacted] NOT DETERIORATE WHEN EXPOSED TO WATER OR MOISTURE. GLUE SHALL BE CHIMICALLY COMPATIBLE WITH MATERIALS TO WHICH IT IS APPLIED SO AS TO AVOID DECOMPOSITION OR DAMAGE TO ADJACENT MATERIALS. GLUE [redacted] MEET FILTER FABRIC AND WATERPROOFING MANUFACTURER'S PROVIDE WATERPROOFING AND PROTECTION/INSULATION BOARD ON ALL INTERIOR PLANTER SURFACES UNLESS NOTED OTHERWISE.

PROTECTION/INSULATION BOARD [redacted] 1" THICK EXTRUDED POLYSTYRENE.

PROTECTION/INSULATION BOARD [redacted] PLACED BUTT JOINTED FOR COMPLETE SURFACE COVERAGE. SCORE BOARD AS REQUIRED TO CONFORM TO IRREGULAR SURFACES.

BACKER MATERIAL [redacted] CLOSED CELL FOAM OR ROD INSTALLED TO COMPLETELY FILL JOINT.

COMPRESSIBLE JOINT FILLER [redacted] EMSEAL IMPREGNATED PREFORMED EXPANDING FOAM SEALANT AS MANUFACTURED BY EMSEAL U.S.A. INC. OR EQUAL.

GENERAL NOTES AND SPECIFICATION DATA--

---ITEM 5740 INTERIOR PLANTER SUPPORT SYSTEM---, CONT'D

COMPRESSIBLE JOINT FILLER AND BACKER MATERIAL [redacted] INCLUDED IN THE UNIT PRICE BID FOR ITEM "INTERIOR PLANTER SUPPORT SYSTEM".

GLUE [redacted] A WATER BASED MASTIC WHICH [redacted] NOT DETERIORATE WHEN EXPOSED TO WATER OR MOISTURE. GLUE [redacted] CHIMICALLY COMPATIBLE WITH MATERIALS TO WHICH IT IS APPLIED SO AS TO AVOID DECOMPOSITION OR DAMAGE TO ADJACENT MATERIALS. GLUE [redacted] MEET FILTER FABRIC AND WATERPROOFING MANUFACTURER'S RECOMMENDATIONS. SUBMIT PRODUCT INFORMATION FOR ENGINEER'S APPROVAL PRIOR TO INSTALLATION.

TAPE [redacted] 2" WIDTH "DUCT" TAPE OR A FILAMENT TYPE MATERIAL AS MANUFACTURED BY THE 3M COMPANY. ST. PAUL, MINNESOTA. OR EQUAL. TAPE [redacted] CHIMICALLY COMPATIBLE WITH MATERIALS TO WHICH IT IS APPLIED SO AS TO AVOID DECOMPOSITION OR DAMAGE TO ADJACENT MATERIALS. TAPE [redacted] MEET FILTER FABRIC AND WATERPROOFING MANUFACTURER'S RECOMMENDATIONS. SUBMIT PRODUCT INFORMATION FOR ENGINEER'S APPROVAL PRIOR TO INSTALLATION.

THE PORTION OF BACKFILL, [redacted] PLANTING MIX AND SUBSIDIARY TO ITEM 190 "ROAD SIDE PLANTING". MIX [redacted] PLACED TO THE DEPTHS AND SPECIFICATIONS AS INDICATED ON THE PLANTING DETAILS. SEE SHEET 491.

ALL CLASS B CONCRETE SLOPED TO PLANTER CENTER LINE AND DRAIN LINE SYSTEM, WHICH [redacted] INCLUDE ALL MATERAL, FITTINGS, LABOR AND INCIDENTALS COMPLETE IN PLACE [redacted] NOT [redacted] PAID FOR DIRECTLY, BUT [redacted] CONSIDERED SUBSIDIARY TO ITEM 5593 INTERIOR PLANTER SUPPORT SYSTEM.

---ITEM 5741 COLORED-TEXTURIZED CONCRETE---

THE CONTRACTOR [redacted] POUR AND FINISH A 3'X 3' SAMPLE PANEL OF "COLORED-TEXTURIZED CONCRETE". THE PANEL [redacted] MEET WITH THE REQUIREMENTS OF THE PLANS AND SPECIFICATIONS AND [redacted] APPROVED BY THE ENGINEER BEFORE FURTHER "COLORED-TEXTURIZED CONCRETE" [redacted] POURED. THE SAMPLE PANEL [redacted] CONSIDERED TYPICAL FOR THE FINISH. ANY DEVIATION OF COLOR, GRADE, OR DEPTH FROM THE SAMPLE PANEL [redacted] GROUNDS FOR REJECTION OF "COLOR TEXTURIZED CONCRETE" AND [redacted] REMOVED AND REPLACED AS SPECIFIED BY THE ENGINEER. THE SAMPLE PANEL OR ANY REQUIRED REPLACEMENT OF "COLOR TEXTURIZED CONCRETE" [redacted] NOT [redacted] PAID FOR DIRECTLY BUT [redacted] CONSIDERED SUBSIDIARY TO THE ITEM "COLORED-TEXTURIZED CONCRETE".

FINISH COLOR FOR COLORED-TEXTURIZED CONCRETE [redacted] BUFF GRAY. SEE PLAN SHEETS FOR PATTERN TYPE.

GENERAL NOTES AND SPECIFICATION DATA--

---ITEM 6000 SMALL ROADSIDE TRAFFIC SIGNS---

ALL SIGNS [redacted] INSTALLED IN ACCORDANCE WITH THE 1980 TEXAS "MANUAL ON UNIFORM TRAFFIC CONTROL DEVICES".

ANY DETAIL THAT CONFLICTS WITH THE STANDARD PLAN SHEETS [redacted] BROUGHT TO THE ATTENTION OF THE ENGINEER PRIOR TO CONSTRUCTION UNLESS A NOTE IS PLACED ADJACENT TO THE DETAIL TO INDICATE AN INTENTIONAL DEVIATION FROM THE STANDARD PLAN SHEETS.

ALL RED REGULATORY SERIES AND ALL WARNING SERIES SIGNS [redacted] HAVE (TYPE C) HIGH INTENSITY REFLECTIVE SHEETING AS CALLED FOR IN THE STANDARDS.

THE CONTRACTOR [redacted] DETERMINE THE POST LENGTHS AND VERIFY THEM PRIOR TO ORDERING THE MATERIALS IN ORDER TO MEET THE FIELD CONDITIONS AND TO CONFORM TO THE MINIMUM SIGN MOUNTING HEIGHTS IN ACCORDANCE WITH THE 1980 TEXAS "MANUAL ON UNIFORM TRAFFIC CONTROL DEVICES".

THE CONTRACTOR [redacted] PROBE BEFORE DRILLING FOR FOUNDATIONS TO DETERMINE THE LOCATION OF ALL UTILITIES AND STRUCTURES. THIS WORK [redacted] NOT [redacted] PAID FOR DIRECTLY BUT [redacted] SUBSIDIARY TO THE BID ITEMS INVOLVED.

ALL EXCESS EXCAVATION [redacted] SPREAD UNIFORMLY INSIDE THE RIGHT OF WAY AS DIRECTED BY THE ENGINEER AND [redacted] INCLUDED IN THE PRICE OF THIS ITEM.

ALL SIGNS [redacted] ERECTED ACCORDING TO THE LOCATIONS SHOWN ON THE SIGNING LAYOUT SHEETS EXCEPT THAT THE ENGINEER [redacted] SHIFT A SIGN IN ORDER TO SECURE A MORE DESIRABLE LOCATION. THE CONTRACTOR [redacted] STAKE ALL SIGN LOCATIONS AS SHOWN IN THE PLANS AND APPROVED BY THE ENGINEER. IT IS THE INTENT OF THE PLANS TO ERECT ALL ROADSIDE TRAFFIC SIGNS WITH SIGN EDGE A MINIMUM OF 6 FEET FROM THE EDGE OF THE SHOULDER, OR IF NONE, 12 FEET FROM THE EDGE OF TRAVEL LANE. IN CURB AND GUTTER SECTIONS THE SIGN EDGE [redacted] A MINIMUM OF 2 FEET FROM THE FACE OF THE CURB.

THE CONTRACTOR'S ATTENTION IS CALLED TO THE FACT THAT THE SIGNING STANDARD PLAN SHEETS FOR REGULATORY AND WARNING SIGNS SPECIFY THAT 5/8 INCH PLYWOOD [redacted] USED FOR SIGN BLANK MATERIAL, AS INDICATED BY ITEM 634 AND ITEM 6000. FOR THIS PROJECT, ALUMINUM TYPE A [redacted] FURNISHED FOR THE SIGNS SHOWN ON THESE PLAN SHEETS. MOUNTING DETAILS FOR THE ALUMINUM TYPE A SIGNS [redacted] THE SAME AS SHOWN FOR PLYWOOD SIGNS ON SMD(1-1), (1-2) AND (1-3). UNLESS OTHERWISE SPECIFIED, ALUMINUM TYPE A SIGNS [redacted] 0.125 INCH THICK.

DETAILS FOR STANDARD SIGNS NOT SHOWN ON THE SIGNING STANDARDS OR SIGNING DETAIL PLAN SHEETS [redacted] IN CONFORMANCE WITH THE

GENERAL NOTES AND SPECIFICATION DATA--

---ITEM 6000 SMALL ROADSIDE TRAFFIC SIGNS---, CONT'D
DEPARTMENT'S "STANDARD HIGHWAY SIGN DESIGNS FOR TEXAS" MANUAL, LATEST EDITION.

---ITEM 6057 REMOVING EXISTING ROADSIDE TRAFFIC SIGNS---

THE CONTRACTOR [redacted] REMOVE THE COMPLETE SIGN INSTALLATION AND SEPARATE THE SIGN POST AT THE CONCRETE FOUNDATION. THE CONTRACTOR [redacted] DISPOSE OF THE CONCRETE FOUNDATION IN ACCORDANCE WITH THIS BID ITEM. EXCEPT FOR CONCRETE FOUNDATIONS, ALL REMOVED SIGN PANELS, SIGN POSTS, AND HARDWARE [redacted] BECOME THE PROPERTY OF THE DEPARTMENT. ALL REMOVED SIGN INSTALLATIONS [redacted] COMPLETELY DISASSEMBLED. ALL MATERIAL REMOVED UNDER THIS ITEM [redacted] STOCKPILED BY THE CONTRACTOR WITHIN THE PROJECT LIMITS AS DIRECTED BY THE ENGINEER. NO SIGNS [redacted] REMOVED WITHOUT PRIOR APPROVAL OF THE ENGINEER.

---ITEM 6060 REMOVING OVERHEAD GUIDE SIGNS---

MATERIAL REMOVED UNDER THIS ITEM [redacted] BECOME THE PROPERTY OF THE CONTRACTOR AND [redacted] STOCKPILED TEMPORARILY WITHIN THE PROJECT LIMITS AS DIRECTED BY THE ENGINEER.

---ITEMS 6910 & 6924 REFLECT PAV MARK AND WORK ZONE PAV MARK---

CONTRACTOR'S ATTENTION IS CALLED TO THE FACT THAT FOR THIS PROJECT THE CONTRACTOR [redacted] REQUIRED TO PURCHASE TRAFFIC PAINT FROM THE DEPARTMENT. PAINT [redacted] PICKED UP AT THE DISTRICT WAREHOUSE AND THERE [redacted] NO SHIPPING AND HANDLING CHARGES. THE PAINT PRICES ARE AS FOLLOWS:

DHT NO.	PAINT DESCRIPTION	
137959	TRAFFIC, WHITE ACRYLIC WATER BASE	$ 30.90 / 5 GAL BKT
137960	TRAFFIC, YELLOW ACRYLIC WATER BASE ...	$ 30.60 / 5 GAL BKT
117702	TRAFFIC, WHITE ACRYLIC WATER BASE	$345.90 / 52 GAL DRUM
117703	TRAFFIC, YELLOW ACRYLIC WATER BASE ...	$338.10 / 52 GAL DRUM

---ITEM 8182 SURFACE FINISHES FOR EXISTING CONCRETE---

THE CONTRACTOR [redacted] NOT PERFORM THE OPERATIONS PRESCRIBED BY THIS ITEM UNTIL THE COMPLETION OF PHASE IV, IN ORDER THAT THE FRESHLY CLEANED AND PAINTED STRUCTURES [redacted] NOT [redacted] STAINED DURING CONSTRUCTION.

GENERAL NOTES AND SPECIFICATION DATA--

---SPECIAL PROVISIONS---

JOB TRAI[redacted]G ARE REQUIRED FOR THIS PROJECT. REFER TO THE FORMULA IN SPECIAL P[redacted]OVISION "JOB TRAINING", FOR DETERMINATION OF THE NUMBER OF JOB TRAINEES FOR THIS CONTRACT.

THE FOLLOWING GOAL [redacted] ESTABLISHED FOR THIS CONTRACT: DBE = 13.0%.

finish required by the plans.
2. The contractor submitted an acceptable alternate design change to eliminate the retaining wall panels with coping & moment slab, and replaced the system with a traffic rail foundation constructed in accordance with the details shown on the plans. This change was structurally equivalent and will facilitate retaining wall construction.

8. **FIELD CHANGE EIGHT (8) AND SUPPLEMENTAL AGREEMENT EIGHT (8)**
A temporary barrier barrel-mounted guard fence through the construction site was placed at several locations to protect and ensure the safety of the traveling public from potential safety hazards, which were not anticipated for protection in the traffic control drawings.

9. **FIELD CHANGE NINE (9) AND SUPPLEMENTAL AGREEMENT NINE (9)**
1. Due to a calculation error in the construction plans for "furnishing and placing topsoil"(item 160), the actual quantity needed was reduced to 40% of the original contract quantity. In accordance with article 4.3 of special provision 004-039, an adjustment in price was made due to "significant change" of major item (table I in item 4 of 1982 standard specifications used as reference for price adjustment).
2. The surface coverage was improved by changing from a "checkerboard" to a "solid" design pattern, thereby reducing maintenance during the establishment period.

10. **FIELD CHANGE TEN (10) AND SUPPLEMENTAL AGREEMENT TEN (10)**
The use of concrete block retaining walls with landscaped terraces enhanced the overall project aesthetics and provided slope protection which prevented any slope erosion. In order to accommodate this construction, the existing embankment was excavated and shaped. The project site was of three main entry points into the Rio Grande Valley from the north and the addition of this work has greatly improved the appearance of the area.

11. **FIELD CHANGE ELEVEN (11) AND SUPPLEMENTAL AGREEMENT ELEVEN (11)**
The use of Type II state approved acrylic resin water-based paint in lieu of the Type I acrylate resin solvent based paint specified in the proposal. This paint was used on all concrete structures. This change provided an equal or better quality product and result in a savings to the state.

12. **FIELD CHANGE TWELVE (12)**
The lineal footage was increased on Item 417, "Slurry displ drill shaft (60 in)". The 116 LF of 60" drilled shaft for ramp #3 bent #20 was inadvertently omitted from the plans.

12. **SUPPLEMENTAL AGREEMENT TWELVE (12)**
The project required Protection System II, Prime Coat in quantities not stocked at our Sequin Warehouse, and; it was necessary to execute Supplemental Agreement Twelve (12) in order to amend the requirements to Special Provision 446-002, Article 446.5 and of paragraph one on sheet F1 of the General Notes and Specification Data, and; this change has allowed the Contractor uninterrupted progress in meeting the current work schedule, and; the revised requirements of the said Special Provision and General Notes allowed Protection System II, Prime Coat to be purchased on the open market.

13. **FIELD CHANGE THIRTEEN (13)**
The quantity for Item 249" Flex base (DEL) (DC) (TY F GR 4A CL 3)" was increased due to a lower recovery of salvage flex base than estimated on the plans.

14. **FIELD CHANGE FOURTEEN (14) AND SUPPLEMENTAL AGREEMENT THIRTEEN (13)**
1. The contractor requested the substitution of Mexican Fan Palms for California fan Palms due to its' local unavailability. The Mexican Fan Palm was considered equivalent to the California Fan Palm.
2. The contractor requested the substitution of Lavender Tree for Paradise Poinciana due to its' unavailability.
This has resulted in a savings to the state.

15. **FIELD CHANGE FIFTEEN (15) AND SUPPLEMENTAL AGREEMENT FOURTEEN (14)**
6" of flexible base was installed as a foundation for the interlocking concrete pavestones. The detail on plans incorrectly showed compacted subgrade as a foundation for the interlocking concrete pave stones instead of the 6" of flexible base needed in order to minimize the future cost by preventing settlement and vegetative growth through the stones.

16. **FIELD CHANGE SIXTEEN (16) AND SUPPLEMENTAL AGREEMENT FIFTEEN (15)**
The clearance sings and brackets were installed at the overhead structure crossings in accordance with the standard specifications Item 444 "Bridge Protective Assembly" and Item 644 "Conformable Sheeting Reflectorized Signs". The vertical clearance signs and brackets at overhead crossings were omitted from the contract plans. These two items provided for signing normal (Item 444) and skewed (Item 644) crossings.

17. **FIELD CHANGE SEVENTEEN (17) AND SUPPLEMENTAL AGREEMENT SIXTEEN (16)**
1. The use of concrete block retaining walls with landscaped terraces required a modification and expansion of the proposed irrigation system at US 281 Overpass and a new irrigation system at Sugar road overpass.
2. Some existing rip-rap was in conflict with proposed concrete block walls and required removal.

18. **FIELD CHANGE EIGHTEEN (18) AND SUPPLEMENTAL AGREEMENT SEVENTEEN (17)**
The landscaped terraces on the concrete block walls altered the landscaping areas on US 281 overpass and created additional areas landscaped on Sugar Rd. overpass. Therefore, this required additional plant materials in order to maintain an aesthetically pleasing appearance, remain relatively maintenance free and compatible with the block walls.

19. **FIELD CHANGE NINETEEN (19) AND SUPPLEMENTAL AGREEMENT EIGHTEEN (18)**
A follow-up workshop for the department's partnering program was held on November 18, 1993. This service was facilitated by Dr. Eduardo Cabrera. This follow-up workshop was incorporated into the contract and the contractor was compensated for the expenses of providing this service.

20. **FIELD CHANGE TWENTY (20) AND SUPPLEMENTAL AGREEMENT NINETEEN (19)**
To comply with the Americans with Disabilities Act (ADA). This act will become effective January 26, 1995. Each location was made compliant with the concrete curb and gutter, CCCG-75 from the Division of highway design operations and procedures manual which conforms to the ADA ramp requirements.

21. **FIELD CHANGE TWENTY-ONE (21) AND SUPPLEMENTAL AGREEMENT TWENTY(20)**
Construction "Zip" joints were used in lieu of the construction joints on the concrete slab of the Interchange bridges and "Expansion Joints" were used in between the top of the precast retaining wall panels and coping.
By using "zip" joints, the contractor set-up continuous time saving deck pour operations which provided a superior riding surface on the bridge decks. The construction "zip" joints provided a controlled joint for cracking and reduced construction time in joint forming. This change resulted in a savings to the State. FHWA and the Txdot Bridge section concurred with the use of the construction joint. This type of expansion joint material was placed between the top of the precast retaining wall panel and the cast-in-place coping was used to provide a complete debonded connection. This method reduced the possibility of stress cracking on the precast wall panels connected to the coping.

22. **FIELD CHANGE TWENTY-TWO (22) AND SUPPLEMENTAL AGREEMENT TWENTY-ONE (21)**
The Prefabricated Pavement Marking 24" solid white stripe was reapplied with hot applied alkid thermo and plastic. The use of the thermoplastic material has a longer life in high volume traffic areas. The 24" painted stripes faded very quickly in some areas in some cases within a couple of weeks. The thermoplastic material was used at the following intersections: FM 495 and US 281, US 83 and US 281, US 83 and Sugar Road, US 83 and I Road, and US 281 and Souix Road. These intersections are high volume traffic areas.

23. **FIELD CHANGE TWENTY-THREE (23) AND SUPPLEMENTAL AGREEMENT TWENTY-TWO (22)**
The sealed expansion joints have failed and are no longer properly attached to the concrete bridge slab which was replaced on the ramp connectors.
A problem apparently existed with the welds holding the 1/2" diameter studs to the armor plate. The studs failed at the armor plate, and the armor joint was not properly anchored to the concrete bridge slab. Subsequently, the armor plate was loose and hanging in the joint location. The joints that needed repair were at the following location:
Ramp #1 - Bent #27, Bent #25, Bent #22, Bent #20, Bent #18
Ramp #2 - Bent #20, Bent #22, Bent #24
Ramp #1 & #2 - Bent #12
Ramp #3 - Bent #20, Bent #22
Ramp #3 & #4 - Bent #10
Ramp #4 - Bent #15, Bent #19, Bent #22, Bent #25
The Bridge Design Section recommended that a one foot section of the slab adjacent to the joint be cut out, replaced with a new redesigned sealed expansion joint, and replaced the concrete bridge slab with Class K concrete. In order to perform this added work, additional traffic control and barricades were required and added to the

SUMMARY OF FIELD CHANGES AND SUPPLEMENTAL AGREEMENTS

PROJECT NO.: NH 92 (50)M
CONTROL NO.: 0039-17-097

1. **FIELD CHANGE ONE (1) AND SUPPLEMENTAL AGREEMENT ONE (1)**
After the contract was awarded, Gilbert Texas Construction Co. chose to participate in the Department's Partnering Program. No provision was made for the partnering process which needed to be incorporated into the original plans and specifications.

2. **FIELD CHANGE TWO (2) AND SUPPLEMENTAL AGREEMENT TWO (2)**
To expedite completion of the project; the use of additional concrete median barriers resulted in less traffic detour shifts, and improved traffic flow conditions throughout the length of the project. Amounts used were to be deducted from Contractor payments. Barriers were kept in Pharr District 21 Office at different locations.

3. **FIELD CHANGE THREE (3) AND SUPPLEMENTAL AGREEMENT THREE (3)**
To provide for storm water management at construction sites in accordance with Federal Regulations (40 cfr Part 122) published in the Federal Register on September 9, 1992.

4. **FIELD CHANGE FOUR (4) AND SUPPLEMENTAL AGREEMENT FOUR (4)**
Heavy traffic traveling at unsafe speeds on the expressway created potentially dangerous conditions during the various detours needed for numerous phases of construction; therefore, it was necessary to provide static message board signs to give the traveling public additional advance warning of the detour conditions ahead.

5. **FIELD CHANGE FIVE (5) AND SUPPLEMENTAL AGREEMENT FIVE (5)**
The construction plans required the removal of existing metal beam guard fence (timber post), but field conditions indicated that a portion of the existing guard fence removed consisted of steel posts embedded in concrete. The work involved in completely removing steel posts and concrete foundations was more extensive; therefore, it was necessary to add item 542 "remove metal beam guard fence (steel post)" to properly compensate the contractor for this work.

6. **FIELD CHANGE SIX (6) AND SUPPLEMENTAL AGREEMENT SIX (6)**
To expedite the completion of the project; the use of additional concrete median barriers resulted in less traffic detour shifts, and improved traffic flow conditions throughout the length of the project. Amounts used were deducted monthly from contractor payments.

7. **FIELD CHANGE SEVEN (7) AND SUPPLEMENTAL AGREEMENT SEVEN (7)**
1. The retaining wall panels which were placed hidden away from view behind concrete barrier (type 5) and the concrete coping had a plain gray finish in lieu of the ashlar stone

SUMMARY OF WORK ORDERS

WORK ORDER ONE (1)-This was your authority to proceed with the following force account work. The Engineer had an inspector in charge of work at all times, and daily reports were rendered, signed by both parties, unless payment for the work will be by invoice. Work consisted of repairing damaged G.R.E.A.T. on WestBound Frontage Road at invoice price for labor equipment. The G.R.E.A.T. unit was damaged by a motor vehicle collision not involving contractor compensation for repair should be as per specification Item 5694.

WORK ORDER TWO (2)-The work consisted of installing PVC Drain connections from columns to the inlet inside planting bed "B". This was due to an error in the drainage plans. The top inlet elevation as per plans was too low for the planting bed. Upon raising the inlet, a conflict with column drains was created. This work was paid at invoice price.

WORK ORDER THREE (3)-Work consisted of a Change in the Alignment of Concrete Block Walls at the US 281 Overpass. This change was needed due to a conflict of the proposed block wall with the existing cast-in-place walls. A section of block wall already in place required to be removed and re-aligned. This work which includes the additional excavation (labor and equipment) and surveying for realignment was paid at invoice price.

WORK ORDER FOUR (4)-Work consisted of lowering the existing guardrail to meet standard height and replace damaged sections. The profile of the US 83 Expressway approach to the "I" Road overpass was lowered to meet our current design standards for vertical curves. The plans, however, did not address adjustment of the guardrail which was to remain in place.

WORK ORDER FIVE (5)-Work consisted of removing an existing wall footing next to the abutment at Sta. 1551 + 50 LT at US 281 and Expressway 83. Removal of this footing was needed in order to cap the abutment next to Modular Wall E-3.

WORK ORDER SIX (6)-Work consisted of repairing a damaged G.E.T. located at Ramp 1 on the U.S. 83 westbound lanes. The unit was damaged by a vehicle collision not involving the contractor's equipment on his operations therefore, entitling him for compensation as per the specification Item "5694" and Article 4.4.

WORK ORDER SEVEN (7)-Work consisted of repairing a damaged Armor joint on U.S. 281/83 Bridge Overpass - Westbound Lane. This repair was made to an existing armor joint on the US 83 Overpass. This condition existed before the new construction began.

WORK ORDER EIGHT (8)-Work consisted of relocating the sprinkler system irrigation lines at Bent 10, Ramp 3 and 4 which are shown to be placed under the sidewalk as per plans. Relocation of these lines away from the sidewalk ensured proper irrigation of the adjacent landscaped area.

WORK ORDER NINE (9)-Work consisted of repairing a damaged G.E.T. located at Ramp 2 on the U.S. 83 eastbound lanes. The unit was damaged by a vehicle collision not involving the contractor's equipment on his operations therefore, entitling him for compensation as per the specification Item "5694" and Article 4.4.

WORK ORDER TEN (10)-Work consisted of modifying the electrical systems for the High Mast Illumination Assemblies and the Cantilever Signs located within the Modular Block Walls at U.S. 281 and Sugar Road. The high illumination assemblies and the cantilever signs were installed and completed on the existing slopes of U.S. 281 and Sugar Road. The existing natural ground was sloped at this area. The modular block walls were approved after the installation of the high illuminaires and cantilever signs. When the modular block walls were constructed, the previously installed conduit and electrical work needed to be modified. This includes pull boxes, conduits and wiring to be relocated and repulled. The modifications are required at five locations.

W/O (11) - To add PVC Pipe to drain @ Bent #12

W/O (12) - To place 1 ½" gravel in the end theers of the interior planters @ Ramp 1 & 2.

W/O (13) - To remove a sample section of a Failed SEJ to be Studied by the University of Texas Center For Transportation Research.

BASIS OF ESTIMATE

ITEM	DESCRIPTION	RATE	UNIT	QUANTITY EST	QUANTITY FIN
204	SPRINKLING	4 MG/STA	MG	517	
	(EROSION CONTROL)				
★168	SPRINK. IRRIG. FOR CELL FIB. MULCH SEED	3.4 MG/ACRE	MG	1178	
260	LIME (TY A OR B) (SOFT SPOTS)	⊙ 50 TON/MI	TON	122	
	LIME TREATED SUBGRADE (12 IN)	3% BY WT.	TON	2778	
	TOTAL		TON	2900	
262	LIME (TY A OR B)				
	NEW FLEX BASE (58,350 CY)	✱✱ 1% BY WT.	TON	984.2	
	SALV. FLEX BASE (32,705 CY)	✱✱ 2% BY WT.	TON	1104	
	TOTAL		TON	2088	

⊙ PERCENTAGE OF LIME [redacted] VARIED WHERE REQUIRED AS DIRECTED BY THE ENGINEER.
ESTIMATED WEIGHT OF FLEXIBLE BASE (NEW & SALV.) = 125#/CF (3375#/CY) (COMPACTED DRY WEIGHT)
ESTIMATED WEIGHT OF SUBGRADE = 3000#/CY (COMPACTED)

✱✱ THIS LIME IS SEPARATE FROM LIME WHICH [redacted] REQUIRED TO MEET P.I. AND TRIAXIAL REQUIREMENTS ADDED AT CONTRACTORS EXPENSE

★ "SPRINKLE IRRIGATION" [redacted] NOT [redacted] PAID FOR DIRECTLY BUT [redacted] CONSIDERED SUBSIDIARY TO ITEM 164 "CELL FIBER MULCH SEED".

SUMMARY OF AREAS

ITEM	DESCRIPTION	RATE	QUANTITY (SQ. YD.) EST	QUANTITY (SQ. YD.) FIN
$ 260	LIME TREAT. SUBGRADE (12 IN)		184,408	
$ ⊗310	ASPH. MATERIAL (MC-30)	0.2 GAL/SY	181,243.	
# ⊗340	ASPH. CONC. PAV. (TYPE D) (OVERLAY)	171 #/SY	178,358.	
▲ ⊗340	ASPH. CONC. PAV. (TYPE D) (M.L. ADD'L)	171 #/SY	1,772.	
$ ⊗340	ASPH. CONC. PAV. (TYPE D) (MAIN LANES)	171 #/SY	180,359.	
$ ⊗340	ASPH. CONC. PAV. (TYPE B) (NEW OR RECYCLED)	684 #/SY	179,852	
$ ⊗340	ASPH. CONC. PAV. (TYPE D) (SHLDRS)	171 #/SY	65,604	
⊗340	ASPH. CONC. PAV. (TYPE D) (PV 32)	171 #/SY	114,755	

⊗ FOR CONTRACTORS INFORMATION ONLY (NON-PAY)

INCLUDES FRONTAGE ROADS, INTERSECTIONS AND TURNAROUNDS

$ INCLUDES US 281 FRONTAGE RD. RECONSTRUCTION.

▲ THIS AREA IS FOR THE ADDITIONAL PAVING BETWEEN EDGE OF 10' SHOULDER AND FACE OF T5 CTB. (SEE P&P AND TYP. SECTIONS)

DATA FOR ASPHALTIC CONCRETE PAVEMENT AND PRIME COAT

ITEM	DESCRIPTION	RATE	UNIT	QUANTITY EST	QUANTITY FIN
310	ASPH. MAT'L (MC-30)	0.2 GAL/SY	GAL	36,249	
340	A.C.P. (TY D)	AS SHOWN	TON	36,431	
340	A.C.P. (TY B) (NEW) OR (RECYCLED)	AS SHOWN	TON	61,510	
340	A.C.P. (TY D) (PV 32)	AS SHOWN	TON	9812	

SUMMARY OF DRWYS., TURNOUTS & PLANE ASPH.

SHEET NO.	ITEM 5084 DRWYS. TY P-1 (SY) EST	FIN	ITEM 5084 TURNOUTS TY P (SY.) EST	FIN	ITEM 3741 PLANE ASPH. SURF (0 - 1½") (SY) EST	FIN	ITEM 3741 PLANE ASPH. SURF (1½") (SY) EST	FIN	ITEM 530 4" CONC. DRIVEWAY (SY) EST	FIN
410	5352		2966		20,335		3,101			
62									61.	
SEE BELOW ✱	370									
TOTAL:	5722		2966		20,335		3,101		61.	

✱ INCLUDES QUANTITIES FOR DRIVEWAYS THAT [redacted] ARISE DURING CONSTRUCTION (EST. 5 DRWYS/MILE)

TY P-1 DRIVEWAYS = 370 SY.

SUMMARY OF FLEXIBLE BASE (ITEM 249)

DESCRIPTION	QUANTITY (CY) EST	FIN
FLEX BASE (DEL) TY "F" GR. 4A CLASS 3	58,350.	

SUMMARY OF SALVAGE AND REPLACE BASE (ITEM 252)

LOCATION (US 83 EXPWY)	QUANTITY (STA.) 14' WIDTH 10" DEPTH EST	FIN	14' WIDTH 16" DEPTH EST	FIN	⊞VAR. WID. 10" DEPTH EST	FIN	⊞VAR. WID. 16" DEPTH EST	FIN	32.5' WID. 14" DEPTH EST	FIN	✱ APPROX. QUANTITY (CY)
PHASE II	146.4		68.6								9,747
PHASE III - SEQ. 1					48.9		29.9				8,908
PHASE III - SEQ. 2					35.8		24.5				6,951
PHASE III - SEQ. 3.					59.0		14.2				6,905
US 281 FRONT. RD.									2.3		194
TOTAL	146.4		68.6		143.7		68.6		2.3		32,705

✱ FOR CONTRACTORS INFORMATION ONLY. THE TOTAL SALVAGED MATERIAL AVAILABLE BASED ON 85% RECOVERY [redacted] USED THROUGHOUT THE PROJECT.

⊞ THE EXISTING PAVEMENT TRANSITION FOR THE ENTRANCE & EXIT RAMPS HAVE A 9" FLEX. BASE LAYER.

NOTE: SALVAGE QUANTITIES SHOWN DO NOT INCLUDE ACP. THE CONTRACTOR HAS THE OPTION OF RECYCLING THE EXISTING ACP.

ESTIMATE AND QUANTITY

SHEET 1 OF 7 SHEETS

REVISED 3-30-92

FED. RD. DIV. NO.	FEDERAL AID PROJECT NO.	SHEET NO.
6	NH 92 (50) M	34
STATE	STATE DIST. NO.	COUNTY
TEXAS	21	HIDALGO
CONT.	SECT.	JOB	HIGHWAY NO.
39	17	97	281/83

PLOT SIZE=100 VRQ=V(INTEG) VER=(INTEG) FILE=(INTEG)

SUMMARY OF BARRIERS & RAILINGS

LOCATION	ITEM 514 ~ CONCRETE TRAF. BARRIER								ITEM 450 RAILING				ITEM 452 REMOVE RAILING		ITEM 421 CLASS "C" CONC. (MISC.)		ITEM 5736 HEADLIGHT BARR. FENCE (LF)	
	TYPE 2		TYPE 2 SPL		TYPE 3		TYPE 5		T501		T501R							
	LF		LF		LF		LF		LF		LF		LF		CY			
	EST.	FIN.	EST.	FIN.	EST.	FIN.	EST.	FIN.	EST.	FIN.	EST.	FIN.	EST.	FIN.	EST.	FIN.	EST.	FIN.
US 83 ℄ STA. 1455+71 TO STA. 1470+52.5			1481.5														1481.5	
SUGAR ROAD OVERPASS (SEE BRIDGE QUANT.)																		
US 83 ℄ 1472+07.0 TO STA. 1501+00			2893														2893	
US 83 ℄ STA. 1501+00 TO STA. 1507+51.60	651.60																651.6	
US 83 ℄ STA. 1507+51.60 TO STA. 1511+85.2					433.6												229.4	
US 281 OVERPASS (SEE BRIDGE QUANT.)																		
US 83 ℄ STA. 1513+70.8 TO STA. 1517+55.2	384.4																384.4	
US 83 ℄ STA. 1517+55.2 TO STA. 1519+83.6					228.4												228.4	
US 83 ℄ STA. 1519+83.6 TO STA. 1566+59.10	4675.5																4675.5	
ENT. RAMP @ APPROX. 1526+50, LT. (SHEET 111)	1144.2								1550.8						212.0			
ENT. RAMP @ APPROX. 1497+00, RT. (SHEET 112)	491								1556.8						213.3			
EXIT RAMP @ APPROX. 1520+00, RT. (SHEET 113)	931.8								848.0						115.8			
EXIT RAMP @ APPROX. 1505+00, LT. (SHEET 114)	1139.50								111.0		32.0		32.0		15.6			
RAMP #1 RET. WALL (SHEETS 92 & 93)	10.0						702.1		1408.9						6.6			
RAMP #2 RET. WALL (SHEETS 94 & 95)	10.0						682.3		1369.3						20.0			
RAMP #3 RET. WALL (SHEETS 96 & 97)	10.0						701.5		1272.0									
RAMP #4 RET. WALL (SHEETS 98 THRU 101)	10.0						657.3		1764.0						4.1			
RET. WALLS "A" & "B" (SHEET 103)									1281.0									
RET. WALLS "C" & "D" (SHEET 104)									1479.8									
SHEET 50A			225				228.5		228.5						30.8			
TOTAL	9458.0		4599.5		662.0		2743.2		12870.1		32.0		32.0		618.20		10543.8	

SUMMARY OF RETAINING WALLS
(REINFORCED EARTH OR RETAINED EARTH)

LOCATION	ITEM 423 RETAINING WALL (SF)	
	EST.	FIN.
RAMP # 1 (B) LEFT WALL	6218	
RAMP # 1 (B) RIGHT WALL	6700	
RAMP # 1 (B) FRONT WALL (ABUT. FACE)	445	
RAMP # 2 (C) LEFT WALL	5455	
RAMP # 2 (C) RIGHT WALL	6353	
RAMP # 2 (C) FRONT WALL (ABUT. FACE)	459	
RAMP # 3 (D) LEFT WALL	6001	
RAMP # 3 (D) RIGHT WALL	5700	
RAMP # 3 (D) FRONT WALL (ABUT. FACE)	432	
RAMP # 4 (E) LEFT WALL	6191	
RAMP # 4 (E) RIGHT WALL	10609	
RAMP # 4 (E) FRONT WALL (ABUT. FACE)	444	
US 83 W. BOUND WALL "A"	4682	
US 83 E. BOUND WALL "B"	2872	
US 83 W. BOUND WALL "C"	5640	
US 83 E. BOUND WALL "D"	2115	
TOTAL	70,316.	

SUMMARY OF GUARD RAIL ENERGY ABSORBING TERMINAL

SHEET NO.	ITEM 5653 GREAT (TY A) (10 BAY) (3.0 FT) EA.		ITEM 5653 GREAT (TY A) (10 BAY) (2.5 FT) EA.		ITEM 5653 GREAT (TY A) (6 BAY) (3.0 FT) EA.	
	EST.	FIN.	EST.	FIN.	EST.	FIN.
RAMPS 3 & 4 DIRECT CONNECTORS (BENT #12)	1					
US 83 ℄ STA. 1455+71, 0.0' OFFSET (SHT. 41)			1			
ENT. RAMP @ APPROX. 1526+50, LT. (SHT. 111)					1	
ENT. RAMP @ APPROX. 1497+00, RT. (SHT. 112)					1	
EXIT RAMP @ APPROX. 1520+00, RT. (SHT. 113)	1					
EXIT RAMP @ APPROX. 1505+00, LT. (SHT. 114)	1					
END RAMP #1 RET. WALL (SHEET 93)			1			
END RAMP #2 RET. WALL (SHEET 95)			1			
SHEET 50A					1	
TOTAL	3		3		3	

SUMMARY OF METAL BEAM GUARD FENCE, T.A.S. & G.E.T.

SHEET NO.	ITEM 540 MBGF (12GA)(TIM.-POST) LF		ITEM 540 TERM. ANCH. SECTION EA.		ITEM 542 REMOV. MBGF LF		ITEM 542 REMOVE T.A.S. EA.		ITEM 5694 G.E.T. EA.	
	EST.	FIN.	EST.	FIN.	EST.	FIN.	EST.	FIN.	EST.	FIN.
⊕									3	
41	250		1				2			
42	425				2291		2		1	
43	825		1		838		2		2	
45					450		2			
46					530		3			
48	812.5		2						3	
49	162.5		1		25		1		2	
50					225		1			
51	650				650		4		4	
52	575		4						4	
53	275								2	
TOTAL	3975		9		5009		17		21	

⊕ 3 ADDITIONAL GUARDRAIL EXTRUDER TERMINALS HAVE BEEN SET UP [redacted] DELIVERED BY THE CONTRACTOR TO THE DISTRICT. MAINT. YARD IN PHARR, TX.

ESTIMATE & QUANTITY

SHEET 2 OF 7 SHEETS

FED. RD. DIV. NO.	FEDERAL AID PROJECT NO.		SHEET NO.
6	NH 92(50) JM		35
STATE	STATE DIST. NO.	COUNTY	
TEXAS	21	HIDALGO	
CONT.	SECT.	JOB	HIGHWAY NO.
39	17	97	83/[illegible]

7EA2-F325L16J508326 DGN: [illegible]

SUMMARY OF [redacted] CONCRETE RIPRAP (CLASS B) (ITEM 432)

SHEET NO.	DESCRIPTION	QUANTITY (C.Y.) 4" EST	QUANTITY (C.Y.) 4" FIN	QUANTITY (C.Y.) 6" EST	QUANTITY (C.Y.) 6" FIN
42		3.6			
44		5.1			
45		21.0			
47		72.9			
48		16.3			
52		94.7			
53		63.8			
59				2.7	
63		7.5			
66		1.0			
114		1.8			
409		3.4			
VARIOUS	RIPRAP @ COLUMN DRAIN OUTLET	2.6			
50A		72.9			
64				28	
68				1.8	
72				1.0	
TOTAL:		366.6		33.5	

SUMMARY OF PLANT MATERIAL

ITEM	DESCRIPTION	SHEETS 466-480 UNIT (EA.) EST	SHEETS 466-480 UNIT (EA.) FIN
	OLEANDER (5 GAL.)	3123	
	YAUPON HOLLY 4-5 FT.	72	
	CENIZO (1 GAL.)	9815	
	LIVE OAK 3.5-4 IN CAL (CONTAINER)	93	
	CALIFORNIA FAN PALM (8 TRUNK FT)	244	
	SPANISH DAGGER 4-5 FT HT	55	
	CEDAR ELM 4 IN CAL	29	
	RIO GRANDE ASH 2.5-3 IN CAL	30	
190	BOUGAINVILLEA 5 GAL.	191	
	COTTONWOOD (4 IN CAL)	3	
	GREAT LEAD TREE 10-12 FT BB	32	
	BIRD OF PARADISE 4-5 FT. BB	116	
	WILD OLIVE 10-12" IN CONTAINER	76	
	PHILODENDRON (1 GAL)	9815	
	ANAQUA 8-10 FT BB	52	
	SABAL PALM 6 FT	220	
	TEXAS MOUNTAIN LAUREL 5-6 FT. BB	68	
	TURKS CAP (1 GAL)	79	
	NATAL PLUM (1 GAL)	1882	
	SAGO PALM 2-6FT. BB	97	
	SPANISH DAGGER 7-8 FT. BB	30	
	ENGELMAN'S PRICKLY PEAR	269	

SUMMARY OF ADDITIONAL LANDSCAPING MATERIAL

SHEET NO.	ITEM 5XXX COLORED TEXT. CONC. (SY) EST	ITEM 5XXX COLORED TEXT. CONC. (SY) FIN	ITEM 5XXX INTER. CONC. PAVING STONES (SY) EST	ITEM 5XXX INTER. CONC. PAVING STONES (SY) FIN	ITEM 5XXX INT. PLANT SYSTEM (LF) EST	ITEM 5XXX INT. PLANT SYSTEM (LF) FIN
470	1470		1046			
471			313.6			
475					600	
476			169.6		590	
477			119.5		565	
478			344.6		335	
492			2472			
493			1119.4			
494			1182.1			
495			1395.7			
496			1842.5			
497			1050			
498			1158			
TOTAL	1470		12,213		2090	

SUMMARY OF FURNISHING & PLACING TOPSOIL AND SEEDING & SODDING FOR EROSION CONTROL

SHEET NO.	ITEM 160 TOPSOIL (CY) EST.	ITEM 160 TOPSOIL (CY) FIN.	ITEM 162 BLOCK SOD (SY) EST.	ITEM 162 BLOCK SOD (SY) FIN.	ITEM 164 CELLULITE FIBER MULCH SEED (SY) EST.	ITEM 164 CELLULITE FIBER MULCH SEED (SY) FIN.
469	1796				5390	
470	4480		3007		12854	
471	10292.5		10538			
476	2472					
477	1463					
479	2309				6927	
480	2926				8778	
TOTAL:	25738.5		13545		33949	

SUMMARY OF [redacted] R.O.W. "ITEM 100"

STATION LIMITS	TOTAL STA. EST.	TOTAL STA. FIN.
(US 83) STA. 1455+71-STA. 1566+59.10	110.39	
(US 281) STA. 822+68.74-STA. 864+27	41.58	
TOTAL:	151.97	

** SUMMARY OF [redacted] R.O.W.

SHEET NO.	LOCATION	REMOVE OLD ⊗ CONC. RIP-RAP (SY)	REMOVE CHAIN LINK FENCE (LF)	REMOVE OLD ⊗ CONC. CURB (LF)	REMOVE OLD ⊗ CONC. (C&G) (LF)	REMOVE WIRE FENCE & TIM POST (LF)	REMOVE CONC. DRIVE (SY)
41		297	774		157		
42		1099	740	672	50.2		
43		1160	1272		50.3	743	
44			1300			1135	
45		1136	1300	615		840	
46		1243.6	1100				
47			1300				
48			1300				
49		649	1300		259		
50		455	350				
111		102		609			
112		77		344			
113				231			
114		16		358			
122		80					
132		80					
409		27.8		100			
63		44					
50A		126		608			
60A		33					
62					185		61
64		167		8	20		
68		2.4			8		
70					16		
71				22			
72				16	16		

** FOR CONTRACTORS INFORMATION ONLY. (NON-PAY)

⊗ WHERE PORTIONS OF THE EXISTING CONCRETE CURB, RIP-RAP OR CURB & GUTTER ARE [redacted] REMAIN IN PLACE, A SAW CUT [redacted] USED AT THE BREAKLINE IN ORDER TO PROVIDE A SMOOTH FACE.

SUMMARY OF [redacted] CONC. CURB, CURB & GUTTER, AND GUTTER (ITEM 530)

SHEET NO.	CONC. CURB TY "A" (LF) EST	CONC. CURB TY "A" (LF) FIN	CONC. CURB TY "A" MOD. (LF) EST	CONC. CURB TY "A" MOD. (LF) FIN	CONC. CURB TY "B" (LF) EST	CONC. CURB TY "B" (LF) FIN	CONC. CURB TY "I" (LF) EST	CONC. CURB TY "I" (LF) FIN	CONC. CURB TY "II" (LF) EST	CONC. CURB TY "II" (LF) FIN	C&G TY "A" (LF) EST	C&G TY "A" (LF) FIN	GUTTER TY "B" (LF) EST	GUTTER TY "B" (LF) FIN	GUTTER TY "A" (LF) EST	GUTTER TY "A" (LF) FIN
41 & 42							198				157					
52									328							
53							110.5		688		110.5					
59											38					
60											24					
64	8										20		130			
65													1695.8		40	
66	6										20		1485		80	
67													3632.2		60	
68											8		1948		40	
69	12										20		1117		120	
70											16		3315		200	
71											78		1184		60	
72	16										16					
113	20															
114	52															
396C					8											
409											20					
496			440													
50A	509															
62											185					
TOTAL:	623		440		8		308.5		1014		712.5		14507.		600	

SUMMARY OF CLASS B FINISH FOR EXIST. CONC. (ITEM 8182)

LOCATION	⊕ AREA (SY) EST	⊕ AREA (SY) FIN
US 281 OVERPASS	2836	
SUGAR ROAD OVERPASS	1603	
EXIST. RIPRAP TO BE CLEANED ONLY:		
US 281 OVERPASS	887	
SUGAR ROAD OVERPASS	870	
TOTAL	6196	

⊕ BRIDGE STRUCTURE AREAS WHICH ARE TO RECEIVE A CLASS "B", TYPE I SURFACE FINISH AND WHICH [redacted] PAID FOR UNDER ITEM 8182 ARE AS FOLLOWS: ALL SURFACES OF RAILING, WINGWALLS, ABUTMENTS, COLUMNS, ALL EXPOSED VERTICAL AND BOTTOM SURFACES OF BENTS. ALL VERTICAL AND OVERHANG SURFACES OF SLABS, AND THE EXPOSED VERTICAL AND BOTTOM SURFACES OF ALL BEAMS.

SUMMARY OF CLEAR & GRUB. (ITEM 102)

SHEET NO.	STA. EST	STA. FIN
63	5.1	
60	5.0	
TOTAL:	10.1	

ESTIMATE AND QUANTITY

SHEET 3 OF 7 SHEETS

FED. RD. DIV. NO.	FEDERAL AID PROJECT NO.	SHEET NO.
6	NH 92(50)M	36
STATE	STATE DIST. NO.	COUNTY
TEXAS		HIDALGO
CONT.	SECT.	JOB	HIGHWAY NO.
39	17	97	2/83

PLOT SIZE: 100 [illegible] FILE: INTE02 IPARM:SAME

SUMMARY OF DELINEATORS & OBJECT MARKERS (ITEMS 658, 6317 & 660)

SHEET NO.	ITEM 658 (D-SW) (B) EA.	ITEM 658 (D-SY) (B) EA.	ITEM 6317 TRAFF. BARR. DELIN. (SW) (B) EA.	ITEM 6317 TRAFF. BARR. DELIN. (SY) (B) EA.	ITEM 658 (D-DW) (B) EA.	ITEM 658 (D-DY) (B) EA.	ITEM 658 TRAFF. BARR. DELIN. (DW) (B) EA.	ITEM 658 TRAFF. BARR. DELIN. (DY) (B) EA.	ITEM 658 (OM-2SR) (B) EA.	ITEM 658 TRAFF. BARR. (OM-2SR) (B) EA.	ITEM 658 (OB-3D) (B) EA.	ITEM 658 (OM-3R) EA.	ITEM 658 TRAFF. BARR. (OM-3R) EA.	ITEM 658 (OM-3L) EA.	ITEM 658 TRAFF. BARR. (OM-3L) EA.	ITEM 658 (OM-2HR) EA.	ITEM 660 WING CHAN. POST (6.5FT.) (1.12 LB) EA.
41	5				10				2		1					2	20
42	2		12							1			1				2
43	3	3	3		5		12		5	1			1			1	17
44 & 45		1	12	5	2		13	3	1		3	1					8
46			4	3	1		12	6	4	2	1		2				3
47		3	2		6		3		1	2	1						11
48	3	3			14				4		1	1				1	27
49	10	7			13				2							3	35
50	6		3						2	1		1					9
52	7	6							8							1	22
53	5	4							4			1		1			15
54																	
228				3													
229				7													
230				5													
231				2													
232				1													
271			2														
272			6														
273			6														
274			3														
275			2														
318			4														
319			5														
320			6														
321			3														
352				4													
353				7													
354			1	6													
355			1	1													
TOTAL:	41	27	75	44	51		40	9	33	7	7	4	4	1		8	169

SUMMARY OF ELIMINATING EXISTING PAVEMENT MARKINGS (ITEM 6913)

	4" PAV. MARKINGS (LF)		8" PAV. MARKINGS (LF)		WORDS & ARROWS (EA)					
	EST	FIN	EST	FIN	EST	FIN	EST	FIN	EST	FIN
PHASE I-A	4070				2					
PHASE I-B	4950				4					
PHASE II	31509									
PHASE III-A	470									
PHASE III-B										
PHASE IV										
PHASE V	170		350							
TOTAL:	41169		350		6					

SUMMARY OF WORK ZONE PAVEMENT MARKINGS (ITEM 6924)

LOCATION	4" WHITE GUIDE MARK (EA)		4" YELLOW GUIDE MARK (EA)	
	EST	FIN	EST	FIN
PHASE VI				
US 83				
MAIN LANES	1,028			
FRONTAGE ROADS	514			
US 281				
MAIN LANES	130			
FRONTAGE ROADS	370			
AT FM 495	15		15	
TOTALS:	2,057		15	

SUMMARY OF WORK ZONE PAVEMENT MARKINGS (ITEM 6924)

DESCRIPTION	REMOVABLE								NON-REMOVABLE					
	4" SOLID WHITE (LF)		4" DASHED WHITE (LF)		4" SOLID YELLOW (LF)		WHITE ARROW (EA)		WORD ONLY WHITE (EA)		4" SOLID WHITE (LF)		4" DASHED WHITE (LF)		4" SOLID YELLOW (LF)	
	EST	FIN	EST	FIN	EST	FIN	EST	FIN	EST	FIN	EST	FIN	EST	FIN	EST	FIN
PHASE I-A	3250		820		3250		4		4		3250		820			
PHASE I-B	3370		840		3370		4		4		3370		840			
PHASE II																
SEQUENCE 1	14384		4200		21298						12999		2650		4700	
SEQUENCE 2	11690		2940		11690						11690		2940		9920	
PHASE III-A																
SEQUENCE 1	5877		1470		5877						3667		2070		5877	
SEQUENCE 2	4470												1120		4470	
SEQUENCE 3	4790												1140		3660	
PHASE III-B																
SEQUENCE 1	5877		1470		5877						3667		2070		5877	
SEQUENCE 2	4470												1120		4470	
SEQUENCE 3	3660												920		3660	
PHASE IV																
SEQUENCE 1					6500											
SEQUENCE 2	3190				8310		4		4		1980				1980	
PHASE V					500										3600	
TOTAL:	65028		11740		66672		12		12		40623		15690		48214	

NOTE: QUANTITIES LISTED ABOVE REPRESENT THOSE FOR EACH PHASE SEQUENCE PERFORMED INDEPENDENTLY. IF CERTAIN PHASE SEQUENCES ARE COMBINED OR PERFORMED IN CONJUNCTION WITH OTHER PHASES, THE LISTED QUANTITIES ARE [redacted] ADJUSTED ACCORDINGLY.

CONSTRUCTION PAVEMENT MARKINGS INSTALLED AFTER THE COMPLETION OF WORK OF A CERTAIN PHASE SEQUENCE BUT [redacted] REQUIRED [redacted] REMOVED ON A SUBSEQUENT SEQUENCE OF WORK [redacted] OF THE REMOVABLE TYPE.

SUMMARY OF CONSTRUCTING DETOURS (ITEM 508)

LOCATION	DETOUR 24' WID. CL. "I" (STA.)		DETOUR 0'-18' WID. CL. "I" (STA.)	
	EST	FIN	EST	FIN
PHASE II, SEQ. 1			20.0	
PHASE IV, SEQ. 2-D	2.83			
PHASE IV, SEQ. 2-E	2.97			
TOTAL:	5.80		20.0	

ESTIMATE AND QUANTITY

SHEET 4 OF 7 SHEETS

FED. RD. D.V. NO.	FEDERAL AID PROJECT NO.		SHEET NO.
6	NH 92(50)M		37
STATE	STATE DIST. NO.	COUNTY	
TEXAS		HIDALGO	
CONT.	SECT.	JOB	HIGHWAY NO.
39	17	97	

DATE: 7/1/83

FHWA INTERCO

SUMMARY OF HIGH MAST ILLUMINATION ASSEMBLIES

SHEET NO.	ITEM 614 HIGH MAST. ILLUM. ASSEMBLIES (EA)		ITEM 613 HIGH MAST. ILLUM. POLES (EA)		ITEM 618 CONDUIT 1½" PVC (LF)		ITEM 618 CONDUIT 1½" PVC (BORED) (LF)		ITEM 620 ELECTRICAL CONDUCTOR #8 BARE (LF)		ITEM 620 ELECTRICAL CONDUCTOR #8XHHW (LF)		ITEM 624 GROUND BOX (EA)		ITEM 628 SERV. POLE TY"A" (EA)	
	EST	FIN	EST	FIN	EST	FIN	EST	FIN	EST	FIN	EST	FIN	EST	FIN	EST	FIN
412	2		2		505		115		620		1240		2		2	
413	4		4		385		90		475		**1240**		1		4	
414	2		2		210				210		420				2	
415	2		2		245		80		325		**660**		2		2	
416	1		1		50		50		100		**400**				1	
TOTALS:	11		11		1395		335		1730		**3960**		5		11	

SUMMARY OF CEMENT STABILIZED BACKFILL ITEM 401 (CY)

SHEET NO.	FIN.	EST.
60B	57	
61	240	
89	99	
91	291	
87	27	
TOTAL	714	

REMOVE AND REPLACE CHAIN LINK FENCE ITEM 5085

SHEET	REMOVE (LF)		REPLACE (LF)	
	EST.	FIN.	EST.	FIN.
60A	40		40	
61	40		40	

SUMMARY OF DRAINAGE & IRRIGATION STRUCTURES

SHEET NO.	ITEM 472 RELAY PIPE SEWER (72") (LF)		#SEWER EXCAV. ITEM 401 (CY)		ITEM 465 RCP SEW (CL III) 18" (LF)		24" (LF)		30" (LF)		36" (LF)		42" (LF)		48" (LF)		54" (LF)	
	EST.	FIN.	EST.	FIN.	EST.	FIN.	EST.	FIN.	EST.	FIN.	EST.	FIN.	EST.	FIN.	EST.	FIN.	EST.	FIN.
62	140																	
64																		
65																		
66																		
67																		
68																		
69																		
70																		
71																		
72																		
87			2055		175		387		37		799							
88																		
89			17926		1568		1153		48		1530		1279		1407		500	
90	-																	
91			16670		1644		14		176		804		1739		973		2220	
408																		
60B																		
TOTAL:	140		36,651		3387		1554		261		3133		3018		2380		2720	

SHEET NO.	ITEM 475 INLETS (COMPLETE) TY"A" MOD. (EA)		TY"A" (EA)		TY"C" (EA)		TY CC (EA)		TY CC MOD. (EA)				TY LI (EA)		TY V (EA)		TY J (EA)		ITEM 477 SAFTY END TREATMENT TY"P" 18" (611)		ITEM 472 RELAY PIPE SEWER (LF) 18"& UNDER		ITEM 462 CONC. BOX CULV. (4 FT X 2 FT)		ITEM 474 SLOTTED DRAIN (18") (LF.)	
	EST.	FIN.	EST.	FIN.	EST.	FIN.	EST.	FIN.	EST.	FIN.	EST.	FIN.	EST.	FIN.	EST.	FIN.	EST.	FIN.	EST.	FIN.	EST.	FIN.	EST.	FIN.	EST.	FIN.
62																			1							
64																									40	
65																									80	
66																									60	
67																									40	
68																									120	
69																									200	
70																									60	
71																										
72																										
87	1						1				3															
88			1		2				15				1													
89																										
90	1				2		1		17						1		1									
91																					126					
408																										
60B																										
TOTAL:	2		1		4		2		35				1		1		1		1		126				600	

#FOR CONTRACTORS INFORMATION ONLY (NON-PAY).

SUMMARY OF DRAINAGE & IRRIGATION STRUCTURES (CONT.)

SHEET NO.	ITEM 471 GRATES & FRAMES TY"C" (EA)		TY"CC" (EA)		TY"CC" MOD. ! (EA)		TY"CC" MOD. (EA)		$ TY"LI" (EA)		TY"V" (EA)		ITEM 475 MANHOLES (COMPL.) TY"A" (EA)		TY B (EA)		TY"M" (EA)		ITEM 471 RING AND COVER TY 2 (EA)		TY I (EA)		ITEM 475 INLET EXT. (EA)		ITEM 479 ADJ. INLET (CAP) EA.		ITEM 8012 TRENCH EXCAV. PROTECTION (LF)		ITEM 401 CUT & REST. PAVEMENT (SY)		ITEM 496 REMOVE OLD STR. (PIPE) (LF)		ITEM 496 REMOVE OLD STR. (SMALL) (EA)		ITEM 472 RELAY PIPE (OVER 18") SEWER (LF)		ITEM 8353 RELAY 18" RCLHPP (CL III)		ITEM 496 REMOVE OLD STR. (LARGE) (EA)		ITEM 462 7'X 6' CONC. BOX (LF)		ITEM 475 MANHOLE (COMPL) TY "M" (1400)	
	EST.	FIN.	EST.	FIN.	EST.	FIN.	EST.	FIN.	EST.	FIN.	EST.	FIN.	EST.	FIN.	EST.	FIN.	EST.	FIN.	EST.	FIN.	EST.	FIN.	EST.	FIN.	EST.	FIN.	EST.	FIN.	EST.	FIN.	EST.	FIN.	EST.	FIN.	EST.	FIN.	EST.	FIN.	EST.	FIN.
62																													3											
64																													54		1									
65																													430		4									
66																													518		7									
67																													790		3									
68																													173		4									
69																							1						118		1									
70																							1						520		3									
71																							1				269		1006		2									
72																							1						50		2									
87			2		6												4		4		1		1				1409		23						492					
88	2				30				1				5		7		7		20		1		2																1	
89																											7048		697								474			
90	2		2		10		24				1		4		3		13		20		1		7						488											
91																											7457								303					
408																													22								46			
60																																								
60A																													314		1									
60B																													93											
61																													207											
TOTAL	4		4		46		24		1		1		9		10		24		44		3		10		4		15,914		2113		3662		28		795		46		1		474		1	

#FOR CONTRACTORS INFORMATION ONLY (NON-PAY).
$ GRATE TYPE "L1" [redacted] PAID FOR UNDER BID ITEM 471-106 GRATE TY "L".

ESTIMATE AND QUANTITY

SHEET 5 OF 7 SHEETS

FED. RD. DIV. NO.	FEDERAL AID PROJECT NO.	SHEET NO.
6	NH 92 (50) M	38
STATE	STATE DIST. NO.	COUNTY
TEXAS		HIDALGO
CONT.	SECT.	JOB	HIGHWAY NO.
39	17	97	281/83

PLOT SIZE: 1 VGD: VINTF04 VGD: UTF041 FILE: INTL

EARTHWORK QUANTITIES

US 83 EXPRESSWAY

STATION	STATION EXCAV (CU-YD)	STATION EMBANK (CU-YD)	ACCUM EXCAV (CU-YD)	ACCUM EMBANK (CU-YD)	MASS ORDINATE (CU-YD)
1455+71	0	0	0	0	0
1456+00	265	0	265	0	265
1457+00	827	0	1092	0	1092
1458+00	757	7	1849	7	1842
1459+00	717	7	2566	14	2552
1459+41	266	1	2832	15	2817
1459+45	37	0	2869	15	2854
1460+00	520	2	3389	17	3372
1461+00	588	35	3977	52	3925
1462+00	530	70	4507	122	4385
1463+00	529	71	5036	193	4843
1464+00	562	91	5598	284	5314
1464+48	286	57	5884	341	5543
1465+00	286	70	6170	411	5759
1466+00	531	86	6701	497	6204
1467+00	537	15	7238	512	6726
1468+00	562	9	7800	521	7279
1469+00	547	8	8347	529	7818
1470+00	545	6	8892	535	8357
1470+43	265	6	9157	541	8616
1472+16	120	4	9277	545	8732
1473+00	550	10	9827	555	9272
1474+00	580	26	10407	581	9826
1475+00	538	33	10945	614	10331
1476+00	554	13	11499	627	10872
1477+00	619	7	12118	634	11484
1477+15	93	2	12211	636	11575
1478+00	436	8	12647	644	12003
1479+00	509	10	13156	654	12502
1480+00	489	7	13645	661	12984
1480+76	400	11	14045	672	13373
1480+89	74	1	14119	673	13446
1481+00	72	1	14191	674	13517
1482+00	714	5	14905	679	14226
1483+00	790	0	15695	679	15016
1483+23	196	0	15891	679	15212
1483+27	33	0	15924	679	15245
1484+00	641	6	16565	685	15880
1485+00	1018	4	17583	689	16894
1485+47	498	3	18081	692	17389
1485+53	62	0	18143	692	17451
1486+00	463	5	18606	697	17909

US 83 EXPRESSWAY

STATION	STATION EXCAV (CU-YD)	STATION EMBANK (CU-YD)	ACCUM EXCAV (CU-YD)	ACCUM EMBANK (CU-YD)	MASS ORDINATE (CU-YD)
1487+00	918	30	19524	727	18797
1487+16	145	7	19669	734	18935
1487+21	44	3	19713	737	18976
1487+35	123	17	19836	754	19082
1488+00	552	78	20388	832	19556
1489+00	748	168	21136	1000	20136
1490+00	651	394	21787	1394	20393
1490+78	475	484	22262	1878	20384
1491+00	134	153	22396	2031	20365
1492+00	676	918	23072	2949	20123
1492+30	205	321	23277	3270	20007
1492+86	408	736	23685	4006	19679
1493+00	100	197	23785	4203	19582
1493+18	135	287	23920	4490	19430
1494+00	587	1485	24507	5975	18532
1494+68	491	1381	24998	7356	17642
1495+00	219	121	25217	7477	17740
1496+00	691	536	25908	8013	17895
1497+00	678	864	26586	8877	17709
1497+61	404	721	26990	9598	17392
1498+00	257	541	27247	10139	17108
1498+63	484	1017	27731	11156	16575
1499+00	303	661	28034	11817	16217
1499+55	516	1111	28550	12928	15622
1499+68	149	251	28699	13179	15520
1500+00	328	13	29027	13192	15835
SUB-TOTAL			29027	13192	
1500+00	0	0	0	0	0
1500+35	231	14	231	14	217
1501+00	446	13	677	27	650
1502+00	691	16	1368	43	1325
1503+00	718	19	2086	62	2024
1503+38	294	7	2380	69	2311
1503+52	110	2	2490	71	2419
1504+00	335	10	2825	81	2744
1505+00	705	23	3530	104	3426
1505+56	430	5	3960	109	3851
1506+00	342	0	4302	109	4193
1507+00	742	3	5044	112	4932
1508+00	668	7	5712	119	5593

US 83 EXPRESSWAY

STATION	STATION EXCAV (CU-YD)	STATION EMBANK (CU-YD)	ACCUM EXCAV (CU-YD)	ACCUM EMBANK (CU-YD)	MASS ORDINATE (CU-YD)
1508+41	229	6	5941	125	5816
1509+00	282	15	6223	140	6083
1510+00	401	22	6624	162	6462
1511+00	432	10	7056	172	6884
1511+61	286	6	7342	178	7164
1511+77	80	2	7422	180	7242
1513+80	95	2	7517	182	7335
1513+95	84	1	7601	183	7418
1514+00	23	0	7624	183	7441
1515+00	549	6	8173	189	7984
1516+00	586	4	8759	193	8566
1516+81	467	14	9226	207	9019
1517+00	107	6	9333	213	9120
1517+29	167	6	9500	219	9281
1517+60	159	4	9659	223	9436
1518+00	213	3	9872	226	9646
1519+00	568	2	10440	228	10212
1519+88	558	0	10998	228	10770
1520+00	83	1	11081	229	10852
1521+00	645	4	11726	233	11493
1522+00	638	7	12364	240	12124
1522+21	146	3	12510	243	12267
1523+00	529	5	13039	248	12791
1524+00	667	3	13706	251	13455
1524+18	122	0	13828	251	13577
1525+00	559	1392	14387	1643	12744
1525+22	161	380	14548	2023	12525
1525+43	160	346	14708	2369	12339
1525+65	168	342	14876	2711	12165
1526+00	252	497	15128	3208	11920
1526+22	157	295	15285	3503	11782
1527+00	471	879	15756	4382	11374
1528+00	493	773	16249	5155	11094
1529+00	499	419	16748	5574	11174
1529+28	138	77	16886	5651	11235
1529+30	7	4	16893	5655	11238
1530+00	358	127	17251	5782	11469
1531+00	636	63	17887	5845	12042
1532+00	779	57	18666	5902	12764
1532+15	124	10	18790	5912	12878
1533+00	663	1545	19453	7457	11996
1534+00	726	1656	20179	9113	11066

ESTIMATE & QUANTITY

SHEET 6 OF 7 SHEETS

FED. RD. DIV. NO.	FEDERAL AID PROJECT NO.		SHEET NO.
6	NH 92(60)M		39
STATE	STATE DIST. NO.	COUNTY	
TEXAS	21	HIDALGO	
CONT.	SECT.	JOB	HIGHWAY NO.
39	17	97	US 83

PLOT SIZE: VSD: XINTERHW.DGN VSD: INTERHW.IDAN FILE: INTERHW.DGN

EARTHWORK QUANTITIES

US 83 EXPRESSWAY

STATION	STATION EXCAV (CU-YD)	STATION EMBANK (CU-YD)	ACCUM EXCAV (CU-YD)	ACCUM EMBANK (CU-YD)	MASS ORDINATE (CU-YD)
1535+00	665	1236	20844	10349	10495
1536+00	667	825	21511	11174	10337
1537+00	689	477	22200	11651	10549
1538+00	731	198	22931	11849	11082
1538+78	583	57	23514	11906	11608
1538+80	8	1	23522	11907	11615
1539+00	148	10	23670	11917	11753
1540+00	812	44	24482	11961	12521
1540+79	704	32	25186	11993	13193
1541+00	201	9	25387	12002	13385
1542+00	919	47	26306	12049	14257
1543+00	807	53	27113	12102	15011
1544+00	722	65	27835	12167	15668
1545+00	651	76	28486	12243	16243
1546+00	575	80	29061	12323	16738
1546+47	269	37	29330	12360	16970
1547+00	316	46	29646	12406	17240
1548+00	630	68	30276	12474	17802
1549+00	624	30	30900	12504	18396
1550+00	568	27	31468	12531	18937
1551+00	494	19	31962	12550	19412
1552+00	383	46	32345	12596	19749
1552+37	123	20	32468	12616	19852
1553+00	233	24	32701	12640	20061
1554+00	542	23	33243	12663	20580
1555+00	590	5	33833	12668	21165
1556+00	502	9	34335	12677	21658
1557+00	532	7	34867	12684	22183
1558+00	598	9	35465	12693	22772
1558+16	99	3	35564	12696	22868
1558+29	74	2	35638	12698	22940
1559+00	394	25	36032	12723	23309
1560+00	530	31	36562	12754	23808
1561+00	469	8	37031	12762	24269
1562+00	445	11	476	12773	24703
1563+00	437	12	913	12785	25128
1564+00	457	9	38370	12794	25576
1565+00	448	8	38818	12802	26016
1566+00	398	8	39216	12810	26406
1566+52	201	8	39417	12814	26603
SUB-TOTAL			39417	12814	

US 281

STATION	STATION EXCAV (CU-YD)	STATION EMBANK (CU-YD)	ACCUM EXCAV (CU-YD)	ACCUM EMBANK (CU-YD)	MASS ORDINATE (CU-YD)
828+00.00	0	0	0	0	0
829+00.00	95	22	95	22	73
830+00.00	126	23	221	45	176
830+50.70	78	10	299	55	244
831+00.00	90	18	389	73	316
832+00.00	213	80	602	153	449
833+00.00	276	114	878	267	611
834+00.00	403	84	1281	351	930
835+00.00	499	52	1780	403	1377
835+16.30	85	9	1865	412	1453
836+00.00	366	83	2231	495	1736
837+00.00	244	258	2475	753	1722
838+00.00	85	633	2560	1386	1174
838+36.30	17	330	2577	1716	861
839+00.00	23	752	2600	2468	132
840+00.00	26	1342	2626	3810	-1184
841+00.00	24	1282	2650	5092	-2442
842+00.00	14	1600	2664	6692	-4028
843+00.00	3	1800	2667	8492	-5825
844+00.00	0	1769	2667	10261	-7594
844+53.40	0	994	2667	11255	-8588
845+00.00	0	853	2667	12108	-9441
846+00.00	15	1521	2682	13629	-10947
846+ 5.40	2	62	2684	13691	-11007
SUB-TOTAL			2684	13691	
GRAND TOTAL			71128	39697	

ESTIMATE & QUANTITY

SHEET 7 OF 7 SHEETS

FED. RD. DIV. NO.	FEDERAL AID PROJECT NO.		SHEET NO.
6	NH 92(50)M		40
STATE	STATE DIST. NO.	COUNTY	
TEXAS	21	HIDALGO	
CONT.	SECT.	JOB	HIGHWAY NO.
39	17	97	US E

ESTIMATE SUMMARY

CONTROL 39-17-97 / US 83																	
						ROADWAY		BRIDGES		ALT	ITEM-CODE			DESCRIPTION	UNIT	TOTAL	
EST.	FINAL	EST.	FINAL	EST.	FINAL	EST.	FINAL	EST.	FINAL		ITEM NO	DESC CODE	SP NO			EST.	FINAL
						151.970					100	002	009	PREP R O W	STA	151.970	151.97
						10.100					102	002	003	CLEAR AND GRUB	STA	10.100	10.1
						25738.500					160	003	001	FURN AND PLAC TPSL	CY	0.000	0.0
						13545.000					162	016	006	BLOCK SOD (PRAIRIE BUFFALO)	SY	27090.000	35[illegible]47
						33949.000					164	005	010	CELL FIB MULCH SEED (FLAT)	SY	33949.000	44092.21
						68.000					190	039		MOUNTAIN LAUREL (15 GAL)	EA	88.000	88.0
						79.000					190	049		TURKS CAP 1 GAL	EA	79.000	79.0
						9815.000					190	142		CENIZO 1GAL	EA	4912.000	5296.0
						93.000					190	211		LIVE OAK 3 1/2-4IN CAL	EA	93.000	93.0
						72.000					190	216		YAUPON HOLLY (15 GAL)	EA	72.000	72.0
						244.000					190	231		CALIFORNIA FAN PALM (8 TRUNK FT)	EA	0.000	0.0
						3123.000					190	306		HARDY RED OLEANDER (5 GAL)	EA	3515.000	3561.0
						1882.000					190	311		NATAL PLUM 1 GAL	EA	2405.000	2405.0
						55.000					190	352		SPANISH DAGGER 4-5FT HT	EA	55.000	55.0
						29.000					190	353		CEDAR ELM 4IN CAL	EA	29.000	29.0
						30.000					190	355		RIO GRAND ASH 2.5-3IN CAL	EA	30.000	30.0
						191.000					190	356		BOUGAINVILLEA 5 GAL	EA	191.000	191.0
						3.000					190	448		COTTONWOOD (4IN CAL)	EA	3.000	3.0
						116.000					190	718		PARADISE POINCIANA (B & B)	EA	0.000	0
						220.000					190	743		SABAL PALM (6 TRUNK FT)	EA	220.000	220.0
						9815.000					190	751		PHILODENDRON (1 GAL)	EA	9815.000	9815.0
						269.000					190	752		ENGELMAN'S PRICKLY PEAR B & B	EA	269.000	269.0
						97.000					190	753		SAGO PALM (2 TRUNK FT) B & B	EA	97.000	97.0
						30.000					190	754		SPANISH DAGGER 7-8 FT	EA	30.000	30.0
						76.000					190	755		WILD OLIVE 2.5-3IN CAL	EA	76.000	76.0
						52.000					190	756		ANAQUA 2.5-3IN CAL B & B	EA	52.000	52.0
						32.000					190	757		GREAT LEAD TREE 10-12FT B & B	EA	32.000	39.0
						517.000					204	002		SPRINK (EROSN CONT)	MG	517.000	1424.46
						58350.000					249	051		FLEX BASE (DEL)(DC)(TY F GR4A CL 3)	CY	64317.620	65302.349
						143.700					252	016		SALV AND REPL BASE (DENS CONT)(10 IN)	STA	143.700	143.70
						146.400					252	208		SALV AND REPL BS (DC)(14 FT)(10 IN)	STA	146.400	138.58
						68.600					252	209		SALV AND REPL BS (DC)(16 IN)	STA	68.600	68.6
						68.600					252	210		SALV AND REPL BS (DC)(14 FT)(16 IN)	STA	68.600	76.36
						2.300					252	211		SALV AND REPL BS (DC)(34 FT)(14 IN)	STA	2.300	2.3
						2900.000					260	003	064	LIME (TY A OR B)	TON	2900.000	2735.11
						184408.000					260	027	064	LIME TREAT SUBGR (DENS CONT)(12 IN)	SY	184408.000	181089.90
						2088.000					262	003	015	LIME (TY A OR B)	TON	2088.000	2151.99
						36249.000					310	001	006	ASPH MATL (MC-30)	GAL	36249.000	38443.0
						9812.000					340	051	143	ASPH CONC (TY D)(PV 32 MIN)	TON	9812.000	9851.79
						36431.000					340	068	143	ASPH CONC (TY D)(SURF)	TON	36431.000	35353.88
						61510.000					340	125	143	ASPH CONC (TY B)(BASE)	TON	61510.000	59489.43
						714.000					401	002	004	CEM STAB BKFL	CY	714.000	1215.74
						2113.000					401	003	004	CUT AND RESTORE PAV	SY	2113.000	3400.59
						14.000					416	010	002	DRILL SHAFT (NON-REINF)(12IN)(SIGN MTS)	LF	14.000	14.0
						57.000					416	011	002	DRILL SHAFT (24 IN)(SIGN MTS)	LF	57.000	57.0
								1120.000			417	003	005	SLURRY DISPL DRILL SHAFT (30 IN)	LF	1120.000	0.0
								834.000			417	004	005	SLURRY DISPL DRILL SHAFT (36 IN)	LF	834.000	0.0
								8764.000			417	008	005	SLURRY DISPL DRILL SHAFT (60 IN)	LF	8880.000	0.0
						342.000					417	010	005	SLURRY DISPL DRILL SHAFT(60IN)(HI-MAST)	LF	342.000	342.0
						240.000					417	033	005	SLURRY DISPL DRILL SHAFT (36IN SGN MTS)	LF	240.000	240.0

ESTIMATE & QUANTITY SHEET

REV. 3-30-92
REV. 4-6-92

STATE DIST. NO.	COUNTY	PROJECT NO.	SHEET NO.
21	HIDALGO	NH 92(50)M	40 A

ESTIMATE SUMMARY

CONTROL 39-17-97
US 83

ROADWAY EST.	ROADWAY FINAL	BRIDGES EST.	BRIDGES FINAL	ALT	ITEM NO	DESC CODE	SP NO	DESCRIPTION	UNIT	TOTAL EST.	TOTAL FINAL
231.000					417	035	005	SLURRY DISPL DRILL SHAFT (48IN SGN MTS)	LF	231.000	231.0
18.000					417	036	005	SLURRY DISPL DRILL SHAFT (54IN SGN MTS)	LF	18.000	18.0
		8038.600			421	010	047	CL C CONC (BENT)	CY	8038.600	8038.6
		110.000			421	012	047	CL C CONC (ABUT)	CY	110.000	110.0
618.200					421	015	047	CL C CONC (MISC)	CY	618.200	632.55
		364830.000			422	001	001	REINF CONC SLAB	SF	364830.000	364830.0
		17534.000			422	002	001	REINF CONC SLAB (EXT STR)	SF	17534.000	17534.0
70316.000					423	001	054	RETAINING WALL	SF	65525.000	65525.0
		1570.610			425	002	006	PRESTR CONC BEAM (TY B)	LF	1570.610	1570.61
		375.990			425	003	006	PRESTR CONC BEAM (TY C)	LF	375.990	375.99
		24498.480			425	009	006	PRESTR CONC BEAM (TY IV)	LF	24498.480	24498.48
		39119.000			428	001	001	CONC SURF TREAT	SY	39119.000	39119.0
		53.400			430	007	002	CL C CONC FOR EXT STR (ABUT)		53.400	53.4
		150.000			432	008		RIPRAP (CONC)(CL B)	CY	150.000	167.06
366.600					432	023		RIPRAP (CONC)(CL B)(4 IN)	CY	366.600	486.5
33.500					432	038		RIPRAP (CONC)(CL B)(6 IN)	CY	33.500	19.32
		40.000			434	002		SLIDING ELASTOMERIC BEAR (SE 3)	EA	40.000	40.0
		16.000			434	016		SLIDING ELASTOMERIC BEAR (SE 6)	EA	16.000	16.0
		16.000			434	019		SLIDING ELASTOMERIC BEAR (SE 7)	EA	16.000	16.0
		8.000			434	027		SLIDING ELASTOMERIC BEAR (IS 1)	EA	8.000	8.0
		4.000			435	003	008	ELASTOMERIC BEAR (IF 8)	EA	4.000	4.0
		4.000			435	009	008	ELASTOMERIC BEAR (IE-7)	EA	4.000	4.0
		12.000			435	011	008	ELASTOMERIC BEAR (IF-7)	EA	12.000	12.0
		20,000			435	019	008	ELASTOMERIC BEAR (IE-12)	EA	20.000	20.0
		8.000			435	023	008	ELASTOMERIC BEAR (IF-5)	EA	8.000	8.0
		4.000			435	051	008	ELASTOMERIC BEAR (IF-9)	EA	4.000	4.0
		4.000			435	058	008	ELASTOMERIC BEAR (IF-10)	EA	4.000	4.0
		4.000			435	068	008	ELASTORMERIC BEAR (IE-12)(MOD)	EA	4.000	4.0
		208.600			436	001	001	PREFM JNT SEAL (2 IN)	LF	208.600	208.6
		680749.000			442	001	007	STR STL (HYC)	LB	680749.000	680749.0
		7571217.000			442	002	007	STR STL (HS)	LB	7571217.000	7571217.0
		5944.000			442	003	007	STR STL (ARMOR JT)	LB	5944.000	5944.0
		1.000			444	001		BR PROT ASSEM	EA	1.000	1.0
		2.000			444	002		PROT ANGLE	EA	2.000	2.0
		1.000			444	005		SIGN AND BRACK	EA	1.000	1.0
12870.100		20935.600			450	036	002	RAIL (TY T 501)	LF	33805.700	33805.7
32.000					450	053	002	RAIL (TY T 501R)	LF	32.000	32.0
32.000					452	001		REMOV RAIL	LF	32.000	32.0
474.000					462	020	006	CONC BOX CULV (7 FT X 6 FT)	LF	474.000	474.0
3387.000					465	061	004	RCP SEW (18 IN)(CL III)	LF	3387.000	3467.0
1554.000					465	062	004	RCP SEW (24 IN)(CL III)	LF	1554.000	1554.0
261.000					465	063	004	RCP SEW (30 IN)(CL III)	LF	261.000	385.0
3133.000					465	064	004	RCP SEW (36 IN)(CL III)	LF	3133.000	3133.0
3018.000					465	065	004	RCP SEW (42 IN)(CL III)	LF	3018.000	3018.0
2380.000					465	066	004	RCP SEW (48 IN)(CL III)	LF	2380.000	2380.0
2720.000					465	067	004	RCP SEW (54 IN)(CL III)	LF	2720.000	2720.0
3.000					471	019		RING AND COVER (TY I)	EA	3.000	3.0
4.000					471	020		GRATE (TY C)	EA	4.000	4.0
4.000					471	040		GRATE (TY CC)	EA	4.000	6.0
44.000					471	045		RING AND COVER (TY 2)	EA	44.000	43.0

ESTIMATE & QUANTITY SHEET

Revised 3-30-92

STATE DIST. NO.	COUNTY	PROJECT NO.	SHEET NO.
21	HIDALGO	NH 92(50)M	40 B

ESTIMATE SUMMARY

CONTROL 39-17-97
US 83

ROADWAY EST.	ROADWAY FINAL			BRIDGES EST.	BRIDGES FINAL			ALT	ITEM-CODE ITEM NO	ITEM-CODE DESC CODE	ITEM-CODE SP NO	DESCRIPTION	UNIT	TOTAL EST.	TOTAL FINAL
						82.000			471	046		FRAME AND GRATE (BR DRAIN)	EA	82.000	82.0
24.000									471	101		GRATE (TY CC)(MOD)	EA	24.000	24.0
1.000									471	106		FRAMES AND GRATE (TY L)	EA	1.000	1.0
1.000									471	111		FRAME AND GRATE (TY V)	EA	1.000	1.0
46.000									471	112		GRATE (TY CC)(MOD I)	EA	46.000	46.0
126.000									472	001		RELAY CULV PIPE (18 IN DIA AND UNDER)	LF	126.000	146.0
795.000									472	002		RELAY CULV PIPE (OVER 18 IN DIA)	LF	795.000	687.0
140.000									472	010		RELAY PIPE SEWER (72 IN)	LF	140.000	96.0
600.000									474	006	001	SLOTTED DRAIN OUTFALL (18 IN)	LF	600.000	600.0
10.000									475	003		INLET EXT	EA	10.000	12.0
1.000									475	004		INLET (COMPL)(TY A)	EA	1.000	1.0
4.000									475	006		INLET (COMPL)(TY C)	EA	4.000	4.0
9.000									475	009		MANH (COMPL)(TY A)	EA	9.000	9.0
10.000									475	010		MANH (COMPL)(TY B)	EA	10.000	11.0
2.000									475	054		INLET (COMPL)(TY CC)	EA	2.000	3.0
1.000									475	175		INLET (COMPL)(TY V)	EA	1.000	1.0
35.000									475	184		INLET (COMPL)(TY CC)(MOD)	EA	35.000	35.0
24.000									475	212		MANH (COMPL)(TY M)	EA	24.000	23.0
2.000									475	217		INLET (COMPL)(TY A)(MOD)	EA	2.000	2.0
1.000									475	823		MANH (COMPL)(TY M)(MOD)	EA	1.000	1.0
1.000									475	987		INLET (COMPL)(TY L1)	EA	1.000	5.0
1.000									475	991		INLET STRUCTURE (TY J)	EA	1.000	1.0
1.000									477	251	002	SAFE END TRT (TY P)(1-18IN RCP)(6:1)	EA	1.000	0.0
4.000									479	005		ADJ INLET (CAP)	EA	4.000	12.0
1.000									496	001		REMOV OLD STR (LARGE)	EA	1.000	1.0
28.000									496	002		REMOV OLD STR (SMALL)	EA	28.000	27.0
3662.000									496	003		REMOV OLD STR (PIPE)	LF	3662.000	3215.0
33.000									502	001	021	BARCD,SIGN AND TRAF HANDLING	MO	33.000	33.0
5.800									508	044		CONST DETOURS (CL 1)(24 FT)	STA	5.800	5.8
20.000									508	055		CONST DETOURS (CL 1)(0 TO 18FT)	STA	20.000	20.0
						185.500			514	001	007	CONC TRAF BAR (TY 1)	LF	185.500	184.5
9458.000									514	002	007	CONC TRAF BAR (TY 2)	LF	9458.000	9681.63
662.000									514	003	007	CONC TRAF BAR (TY 3)	LF	662.000	664.57
2743.200									514	005	007	CONC TRAF BAR (TY 5)	LF	2743.200	2770.30
						154.500			514	060	007	CONC TRAF BAR (TY 1)(SPEC)	LF	154.500	154.5
4599.500									514	062	007	CONC TRAF BAR (TY 2)(SPL)	LF	4599.500	4542.5
308.500									530	001	011	CONC CURB (TY I)	LF	308.500	1131.0
1014.000									530	002	011	CONC CURB (TY II)	LF	1014.000	1063.0
623.000									530	015	011	CONC CURB (TY A)	LF	623.000	3154.5
61.000									530	022	011	CONC DRVWY (4 IN)	SY	61.000	64.0
712.500									530	026	011	CONC CURB & GUTTER (TY A)	LF	712.500	1611.40
600.000									530	027	011	CONC GTR (TY A)	LF	600.000	734.5
8.000									530	031	011	CONC CURB (TY B)	LF	8.000	20.0
14507.300									530	053	011	CONC GUTTER (TY B)	LF	14507.300	14631.0
440.000									530	120	011	CONC CURB (TY A)(MOD)	LF	440.000	418.0
9.000									540	011		TERM-ANCH SECT (12 GA)	EA	9.000	9.0
3975.000									540	015		MET BM GD FE (BLK OUT)(12 GA)(TIM POST)	LF	3975.000	4025.0
17.000									542	003	001	REMOV TERM-ANCH SECT	EA	17.000	17.0
5009.000									542	004	001	REMOV METAL BEAM GD FENCE (TIM POST)	LF	2551.000	2840.0
11.000									613	003		HIGH MAST ILL POLES (150 FT)	EA	11.000	11.0

ESTIMATE & QUANTITY SHEET

Revised 3-30-92

STATE DIST. NO.	COUNTY	PROJECT NO.	SHEET NO.
21	HIDALGO	NH 92(50)M	40c

ESTIMATE SUMMARY

CONTROL 39-17-97 / US 83											ITEM-CODE				UNIT	TOTAL	
						ROADWAY		BRIDGES		ALT				DESCRIPTION			
EST.	FINAL	EST.	FINAL	EST.	FINAL	EST.	FINAL	EST.	FINAL		ITEM NO	DESC CODE	SP NO			EST.	FINAL
						11.000					614	010		HIGH MAST ILL ASSEM (12 400W)(ASYM)	EA	11.000	11.0
						65.000					618	002		CONDT (RM)(1 IN)	LF	65.000	72.0
						40.000					618	041		CONDT (PVC)(SCH 40)(2 IN)	LF	40.000	0.0
						1395.000					618	046		CONDT (PVC)(SCH 40)(1 1/2 IN)	LF	1395.000	1712.0
						645.000					618	099		CONDT (PVC)(SCH 40)(2 IN)(BORED)	LF	645.000	593.0
						335.000					618	108		CONDT (PVC)(SCH 40)(1 1/2IN)(BORED)	LF	335.000	310.0
						1835.000					620	001		ELEC CONDR (NO. 8 BAR)	LF	1835.000	2197.0
						4130.000					620	031		ELEC CONDR (NO. 8)(TY XHHW)	LF	4130.000	4590.0
						4675.000					622	009	004	DUCT CABLE (1 IN)(8-3)(1 BAR-2 INSU)	LF	4675.000	4849.0
						21.000					624	022		GROUND BOX (RPM)(TY A)(122311) APRON	EA	21.000	21.0
						1.000					626	006		CIRCT PROT ASSEM TYPE SL	EA	1.000	1.0
						11.000					628	001		SERV POLE TYPE A	EA	11.000	11.0
						10.000					628	007		SERV POLE TYPE SL	EA	10.000	10.0
						916.000					634	002	001	PLYWOOD SIGNS (TYPE A) REMOVABLE COPY	SF	916.000	916.0
						609.590					636	001		ALUMINUM SIGNS (TYPE A)	SF	609.590	609.59
						3128.500					642	001		ALUMINUM SIGNS (TYPE O)	SF	3128.500	3128.5
						4397.000					648	001		RDSD TRAF SGN SUPPT (STRUCTURAL STEEL)	LB	4397.000	3973.0
						3.000					650	003	011	OVHD SGN SUPPT(CANT)(25FT SPAN)(17-6HT)	EA	3.000	3.0
						8.000					650	004	011	OVHD SGN SUPPT(CANT)(30FT SPAN)(17-6HT)	EA	8.000	8.0
						1.000					650	006	011	OVHD SGN SUPPT(CANT)(40FT SPAN)(17-6HT)	EA	1.000	1.0
						2.000					650	010	011	OVHD SGN SUPPT(BR)(60 FT SPAN)(17-6HT)	EA	2.000	2.0
						1.000					650	012	011	OVHD SGN SUPPT(BR)(70 FT SPAN)(17-6HT)	EA	1.000	1.0
						1.000					650	458	011	OVDH SGN SUPT (BR)(56.5FT SPN)(17-6 HT)	EA	1.000	1.0
						56.000					652	001	001	HWY SGN LIGHTING FIXTURE (MV)(100 WATT)	EA	56.000	56.0
						388.000					654	001		SIGN WALKWAYS	LF	388.000	388.0
						27.000					658	004		DELIN & OBJECT MARKERS (D-SY)(B)	EA	27.000	27.0
						41.000					658	005		DELIN & OBJECT MARKERS (D-SW)(B)	EA	41.000	41.0
						51.000					658	010		DELIN & OBJECT MARKERS (D-DW)(B)	EA	51.000	52.0
						33.000					658	013		DELIN & OBJECT MARKERS (OM-2SR)(B)	EA	33.000	34.0
						8.000					658	014		DELIN & OBJECT MARKERS (OM-2HR)	EA	8.000	8.0
						1.000					658	016		DELIN & OBJECT MARKERS (OM-3L)	EA	1.000	1.0
						4.000					658	017		DELIN & OBJECT MARKERS (OM-3R)	EA	4.000	4.0
						7.000					658	030		DELIN & OBJECT MARKERS (OB-3D)	EA	7.000	9.0
						9.000					658	035		DELIN & OBJ MARK (D-DY)(B) TRAF BARR	EA	9.000	12.0
						40.000					658	036		DELIN & OBJ MARK (D-DW)(B) TRAF BARR	EA	40.000	40.0
						7.000					658	037		DELIN & OBJ MARK (OM-2SR)(B) TRAF BARR	EA	7.000	8.0
						4.000					658	038		DELIN & OBJ MARK (OM-3R)(B) TRAF BARR	EA	4.000	4.0
						169.000					660	002		WINGED CHAN POSTS (1.12 LB)(6.5 FT)	EA	169.000	167.0
						71128.000					1146	001		EXCAV	CY	84689.000	91637.10
						39697.000					1147	002		EMBANK (DC)(TY C)	CY	39697.000	39697.0
						3101.000					3741	012		PLANE ASPH SURF (1 1/2IN)	SY	3101.000	4220.01
						20335.000					3741	018		PLANE ASPH SURF (0 TO 1 1/2IN)	SY	20335.000	21701.48
								985.000			4006	001		SEALED EXPANSION JOINTS (4 IN)	LF	985.000	985.0
						5722.000					5084	001		CONSTRUCT DRIVEWAYS (TY P-1)	SY	5722.000	4724.6
						2966.000					5084	008		CONSTRUCT TURNOUT (TY P)	SY	2966.000	3414.19
						80.000					5085	001		REMOVING CHAIN-LINK FENCE	LF	80.000	1121.0
						80.000					5085	002		REPLACING CHAIN-LINK FENCE	LF	80.000	1171.0
						1.000					5306	001		IRRIGATION SYSTEM	LS	0.000	0.0
						1.000					5641	001		MOBILIZATION	LS	1.000	1.0
						3.000					5653	006		GD RAIL EN ABS TERM (3FT)(10BAYS)(TY A)	EA	3.000	3.0

ESTIMATE & QUANTITY SHEET

Revised 3-30-92

STATE DIST. NO.	COUNTY	PROJECT NO.	SHEET NO.
21	HIDALGO	NH 92(50)M	40D

ESTIMATE SUMMARY

CONTROL 39-17-97 / US 83											ITEM-CODE					TOTAL	
						ROADWAY		BRIDGES		ALT					UNIT		
EST.	FINAL	EST.	FINAL	EST.	FINAL	EST.	FINAL	EST.	FINAL		ITEM NO	DESC CODE	SP NO	DESCRIPTION		EST.	FINAL
						3.000					5653	021		GD RAIL EN ABS TERM (2.5FT)(10 BAY)TY A	EA	3.000	3.0
						3.000					5653	028		GD RAIL EN ABS TERM (3 FT)(6 BAYS)TY A	EA	3.000	3.0
						21.000					5694	001		GUARDRAIL EXTRUDER TERMINALS	EA	21.000	21.0
						10543.800					5735	001		CONT OF ACCESS HDLT BAR FENCE (3 FT)	LF	10543.800	10455.0
						12213.000					5739	001		INTRLOCK CONC PAV STONE (2 3/8IN)	SY	12213.000	12732.359
						2090.000					5740	001		INTERIOR PLANTER SUPT SYSTEM	LF	2090.000	2644.0
						1470.000					5741	001		COLORED-TEXTURIZED CONC (4 IN)	SY	1470.000	1312.5
						29.000					6000	001		SMALL ROADSIDE TRAFFIC SIGNS(TYPE A)	EA	29.000	29.0
						5.000					6000	004		SMALL ROADSIDE TRAFFIC SIGNS(TYPE C)	EA	5.000	5.0
						1.000					6000	008		SMALL ROADSIDE TRAFFIC SIGNS(TYPE D-4)	EA	1.000	1.0
						23.000					6000	011		SMALL ROADSIDE TRAFFIC SIGNS(TYPE F)	EA	23.000	23.0
						4.000					6000	023		SMALL ROADSIDE TRAFFIC SIGNS(TY A)(SPL)	EA	4.000	4.0
						60.000					6057	001		REMOVING EXISTING ROADSIDE TRAF SIGNS	EA	60.000	60.0
						1.000					6060	001		REMOV OVHD GUIDE SIGNS	EA	1.000	1.0
						75.000					6317	002		TRAF BARRIER DELIN (SW)	EA	75.000	74.0
						44.000					6317	003		TRAF BARRIER DELIN (SY)	EA	44.000	47.0
						58038.000					6910	028		REFL PAV MRK TY II (W)(4")(SLD)	LF	58038.000	62832.0
						19730.000					6910	029		REFL PAV MRK TY II (W)(4")(BRK)	LF	19730.000	22865.0
						110.000					6910	030		REFL PAV MRK TY II (W)(4")(DOT)	LF	110.000	0.0
						35980.000					6910	032		REFL PAV MRK TY II (W)(8")(SLD)	LF	35980.000	41746.0
						8025.000					6910	036		REFL PAV MRK TY II (W)(24")(SLD)	LF	8025.000	9222.0
						46788.000					6910	047		REFL PAV MRK TY II (Y)(4")(SLD)	LF	46788.000	50865.0
						2670.000					6910	050		REFL PAV MRK TY II (Y)(8")(SLD)	LF	2670.000	2270.0
						1447.000					6910	053		REFL PAV MRK TY II (Y)(24")(SLD)	LF	1447.000	1977.0
						47.000					6911	037		PREFAB PAV MRK TY B (W)(ARROW)	EA	47.000	50.0
						6.000					6911	038		PREFAB PAV MRK TY B (W)(DBL ARROW)	EA	6.000	6.0
						8.000					6911	040		PREFAB PAV MRK TY B (W)(TND ARROW)	EA	8.000	8.0
						33.000					6911	041		PREFAB PAV MRK TY B (W)(WORD)	EA	33.000	35.0
						1948.000					6912	002		RAIS PAV MRK CL A (JIGGLE) TY I-C	EA	1948.000	1948.0
						1702.000					6912	006		RAIS PAV MRK CL B (REFL) TY I-A	EA	1702.000	1804.0
						3988.000					6912	007		RAIS PAV MRK CL B (REFL) TY I-C	EA	3988.000	4487.0
						252.000					6912	008		RAIS PAV MRK CL B (REFL) TY I-R	EA	252.000	238.0
						143.000					6912	009		RAIS PAV MRK CL B (REFL) TY II-A-A	EA	143.000	143.0
						1947.000					6912	010		RAIS PAV MRK CL B (REFL) TY II-C-R	EA	1947.000	2078.0
						41169.000					6913	001		ELIM EXT PAV MRK & MRKERS (4")	LF	41169.000	66158.0
						350.000					6913	003		ELIM EXT PAV MRK & MRKERS (8")	LF	350.000	0.0
						6.000					6913	007		ELIM EXT PAV MRK & MRKERS (ARROW)	EA	6.000	12.0
						65028.000					6924	001		WRK ZN PAV MRK REMOV (W)(4")(SLD)	LF	65028.000	50513.0
						11740.000					6924	002		WRK ZN PAV MRK REMOV (W)(4")(BRK)	LF	11740.000	3094.0
						12.000					6924	010		WRK ZN PAV MRK REMOV (W)(ARROW)	EA	12.000	17.0
						12.000					6924	014		WRK ZN PAV MRK REMOV (W)(WORD)	EA	12.000	15.0
						66672.000					6924	020		WRK ZN PAV MRK REMOV (Y)(4")(SLD)	LF	66672.000	23880.0
						40623.000					6924	029		WRK ZN PAV MRK NON-REMOV (W)(4")(SLD)	LF	40623.000	79447.0
						15690.000					6924	030		WRK ZN PAV MRK NON-REMOV (W)(4")(BRK)	LF	15690.000	19660.0
						48214.000					6924	048		WRK ZN PAV MRK NON-REMOV (Y)(4")(SLD)	LF	48214.000	62171.0
						2057.000					6924	057		WRK ZN PAV MRK GDMRK (W)	EA	2057.000	7390.0
						15.000					6924	058		WRK ZN PAV MRK GDMRK (Y)	EA	15.000	468.0
						1.000					6928	001		CHANGE MESS SIGN SYSTEM	LS	1.000	1.0
						15914.000					8012	001		TRENCH EXCAVATION PROTECTION	LF	15914.000	16909.0
								6196.000			8182	003		CL B FINISH FOR EXIST CONC	SY	6196.000	6196.0

ESTIMATE & QUANTITY SHEET

Revised 3-30-92

STATE DIST. NO.	COUNTY	PROJECT NO.	SHEET NO.
21	HIDALGO	NH 92(50)M	40E

ESTIMATE SUMMARY

CONTROL 39-17-97 / US 83																		
						ROADWAY		BRIDGES		ALT	ITEM-CODE			DESCRIPTION		UNIT	TOTAL	
EST.	FINAL	EST.	FINAL	EST.	FINAL	EST.	FINAL	EST.	FINAL		ITEM NO	DESC CODE	SP NO				EST.	FINAL
								64.000			8352	001		MODULAR EXPAN JOINT (8 IN)		LF	64.000	64.0
								32.000			8352	002		MODULAR EXPAN JOINT (8.5 IN)		LF	32.000	32.0
						46.000					8353	001		RELAY CONC PRESSR PIPE (18 IN)		LF	46.000	46.0
														CONTRACTOR FORCE ACT OR AGR UNIT PRICE (PART)				
														TEMP EROSN, SEDMT & WTR-POL CONT.		LS	1.000	
														SUMMARY OF NEW CONTRACT ITEMS				
											104	006		REMOV OLD CONC (RIPRAP)	FC17	SY	1628.000	1748.39
											190	105		CRAPE MYRTLE	FC18	EA	30.000	30.0
											190	396		MEXICAN FAN PALM	FC14	EA	244.000	244.0
											190	493		TRUMPET CREEPER	FC18	EA	125.000	129.0
											444	004		SIGN BRACKET	FC16	EA	12.000	12.0
											542	006		REMOVE MET BM GUARD FENCE (TIM POST)	FC5	LF	2551.000	2475.5
											644	001		CONFORMABLE SHEETING REFLECTORIZED SIGNS	FC16	SF	98.000	98.0
											5084	015		CONSTRUCT DRIVEWAYS (TY PB-2)	FC3	SY	1361.000	1325.0
											5790	001		TEMPORARY SEDIMENT CONTROL FENCE	FC3	LF	1484.000	1961.2
											6910	009		REFL PAV MRK TY I (W) (24") (SLD)	FC22	LF	1499.000	1499.0
											9000	001		PARTNERING PROGRAM	FC1	LS	1.000	1.0
											9000	002		PARTNERING PROGRAM	FC19	LS	1.000	1.0
											9001	001		CONC MEDIAN BAR	FC2	LF	9180.000	9030.0
											9001	002		REPLACE DAMAGED MEDIAN BARRIER	FC2	LF	0.000	0.0
											9001	003		CONCRETE TRAFFIC BARRIERS	FC6	MO	6.000	3.28
											9002	001		STATIC MESSAGE BOARD	FC4	EA	2.000	2.0
											9003	001		RETAINING WALL(PLAIN FINISH)	FC7	SF	3123.000	3123.0
											9004	001		CLASS C CONC (RAIL FOUNDATION)	FC7	LF	747.270	747.27
											9005	001		TEMP BARRIER BARREL-MOUNTED GUARD FENCE	FC8	LF	825.000	825.0
											9005	002		FURNISH AND PLACE TOPSOIL (MOD)	FC9	CY	10300.000	12073.89
											9006	001		CONCRETE BLOCK WALLS	FC10	SF	41495.000	56916.31
											9007	001		LAVANDER TREE	FC18	EA	156.000	156.0
											9008	001		SURFACE FINISHES FOR CONCRETE	FC11	SF	615521.000	615521.0
											9008	002		FL BS (DEL) (ORD COMP) (TY FCL 4)(MOD)	FC15	SY	6787.000	11822.0
											9009	001		IRRIGATION SYSTEM US281	FC17	LS	1.000	1.0
											9009	002		IRRIGATION SYSTEM (SUGAR ROAD)	FC17	LS	1.000	1.0
											9010	001		WILD PETUNA	FC18	EA	523.000	523.0
											9010	002		BOUGANVILLA-WANETA HATTEN	FC18	EA	838.000	994.0
											9010	003		BOUGANVILLA-VICKIE	FC18	EA	838.000	840.0
											9010	004		BOUGANVILLA-BARBARA CARST	FC18	EA	302.000	302.0
											9010	005		OLEANDER DWARF-SHARI D	FC18	EA	671.000	696.0
											9010	006		BUTTERFLY PLANT	FC18	EA	1193.000	1193.0
											9010	007		FIRE BUSH	FC18	EA	523.000	523.0
											9010	008		CROSS VINE	FC18	EA	125.000	129.0
											9010	009		CAPE HONEYSUCKEL	FC18	EA	125.000	130.0
											9010	010		CRAPE MYRTLE-NATUS	FC18	EA	30.000	30.0
											9010	011		ROYAL PONCIANA	FC18	EA	20.000	20.0
											9011	001		CONSTRUCTION "ZIP" JOINTS	FC21	LS	1.000	1.0
											9011	002		1/2" EXPANSION JOINT	FC21	LS	1.000	1.0
											9012	001		CONC WHEELCHAIR RAMPS	FC20	EA	20.000	27.0

111

ESTIMATE & QUANTITY SHEET

Revised 3-30-92

STATE DIST. NO.	COUNTY	PROJECT NO.	SHEET NO.
21	HIDALGO	NH 92(50)M	40 F

ESTIMATE SUMMARY

EST.	FIN.	EST.	FIN.	EST.	FIN.	EST.	FIN.	EST.	FIN.	ALT	ITEM CODE: ITEM NO.	ITEM CODE: DESC. CODE	ITEM CODE: SP. NO.	DESCRIPTION	UNIT	TOTAL:	
											9013	001		REMOVE & REPLACE ARMOR JT. & SLAB SEC. (2'/JT) FC23	LF	570.420	534.0
											9013	002		TRAFFIC CONTROL (RAMP CLOSURES) FC23	LS	1.000	1.0
														9100 WO#1-Repair damaged GREAT 1.00	1.00		
														9100 WO#2-Install PVC Drain Connections 1.00	1.00		
														9100 WO#3-Change alignment of concrete walls 1.00	1.00		
														9100 WO#4-Lower guardrail meet standard Hgt. 1.00	1.00		
														9100 WO#5-Remove retaining wall footing 1.00	1.00		
														9100 WO#6-Repair damaged GET at Ramp#1 1.00	1.00		
														9100 Repair damaged armor joint on bridge 1.00	1.00		
														9300 WO#8-Relocation of irrigation lines 1.00	1.00		
														9400 WO#9-Repair damaged GET 1.00	1.00		
														9400 WO#10-Repair high illum. & cant. Signs 1.00	1.00		
														9400 WO#11-Install 40 LF of Sch. 40 PVC 1.00	1.00		
														9400 WO#12-Placement of 1 ¼ gravel 1.00	1.00		
														9400 WO#13-saw cut intact sec(8"X24"),SEJ 1.00	1.00		

FED. RD. DIV. NO.	FEDERAL AID PROJECT NO.		SHEET NO.
6	NH 92( )M		406
STATE	STATE DIST. NO.	COUNTY	
TEXAS	21	HIDALGO	
CONT.	SECT.	JOB	HIGHWAY NO.
39	17	97	US 83

FILE: ZEA3:[325117]EST.DGN

BEGIN PROJECT F (308) 47
BEGIN [redacted] R.O.W.
CONTROL 39-17-97
STA. 1455+71.00
=STA. 1455+71.48
PROJECT U-308 (23)
CONTROL 39-17-21
(COMPLETED)
= RFR MKR 864-1-614

(1) CURVE DATA
OUTSIDE EDGE OF PAV'T.
(RT. MAIN LANE)

P.I. = STA. 2+25.53 (Q)
= ℄ STA. 1457+96.25, 68' RT.
X = 2,099,455.88
Y = 195,194.63
Δ = 2°52'18.90" RT.
D = 0°38'12.67"
T = 225.52'
L = 450.95'
R = 8996.71'

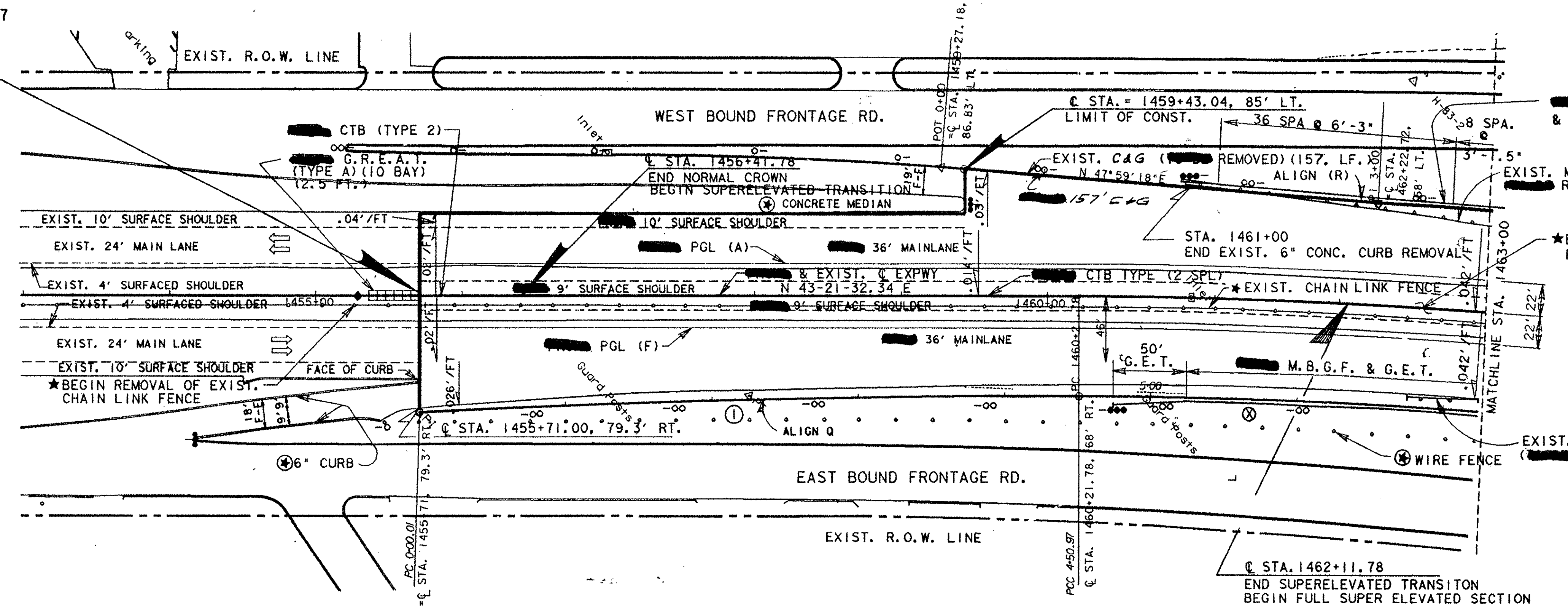

CURVE DATA
℄ EXPRESSWAY

P.I. STA. 1480+14.80
X= 2,100,929.62
Y= 196,854.35
Δ= 55°-06'-30".4 RT.
D= 1°-30'-0.0"
R= 3819.7186'
T= 1993.02'
L= 3673.90'
e= 0.042'/FT.

★ [redacted] REMOVED UNDER ITEM 100 "[redacted] ROW"

(★) [redacted] REMAIN IN PLACE

SHEET TOTALS FOR DELINEATORS & OBJECT MARKERS

- DELIN. TY (D-SW) (B) 5
- DELIN. TY (D-DW) (3) 10
- OBJ. MARKER (OM-2SR) (B) 2
- OBJ. MARKER (OM-2HR) 2
- OBJ. MARKER (OB-3D) 1
- WINGED CHANNEL POST 20

SHEET TOTALS

ITEM	EST.	FINAL	UNIT	DESCRIPTION
100	297		SY	REMOVE OLD CONC. (RIPRAP)
542	2		EA	REMOVE T.A.S.
100	774		LF	REMOVE CHAIN LINK FENCE
540	1		EA	T.A.S.
540	250		LF	M.B.G.F.
100	157		LF	REMOVE OLD CONC. (C&G)
530	157		LF	CONC C&G TY "A"

ENTRANCE RAMP (RT): STA. 1455+71, 46' RT. TO STA. 1463+00, 46' RT.
FROM: -.026'/FT TO -.042'/FT

EXIT RAMP (LT): STA. 1459+43.04, 46' LT. TO STA. 1463+00, 46' LT.
FROM: -.03'/FT TO +.042'/FT.

NOTE: MATCH EXISTING DITCH GRADES AT BEGINNING & END OF [redacted] DITCH PROFILES

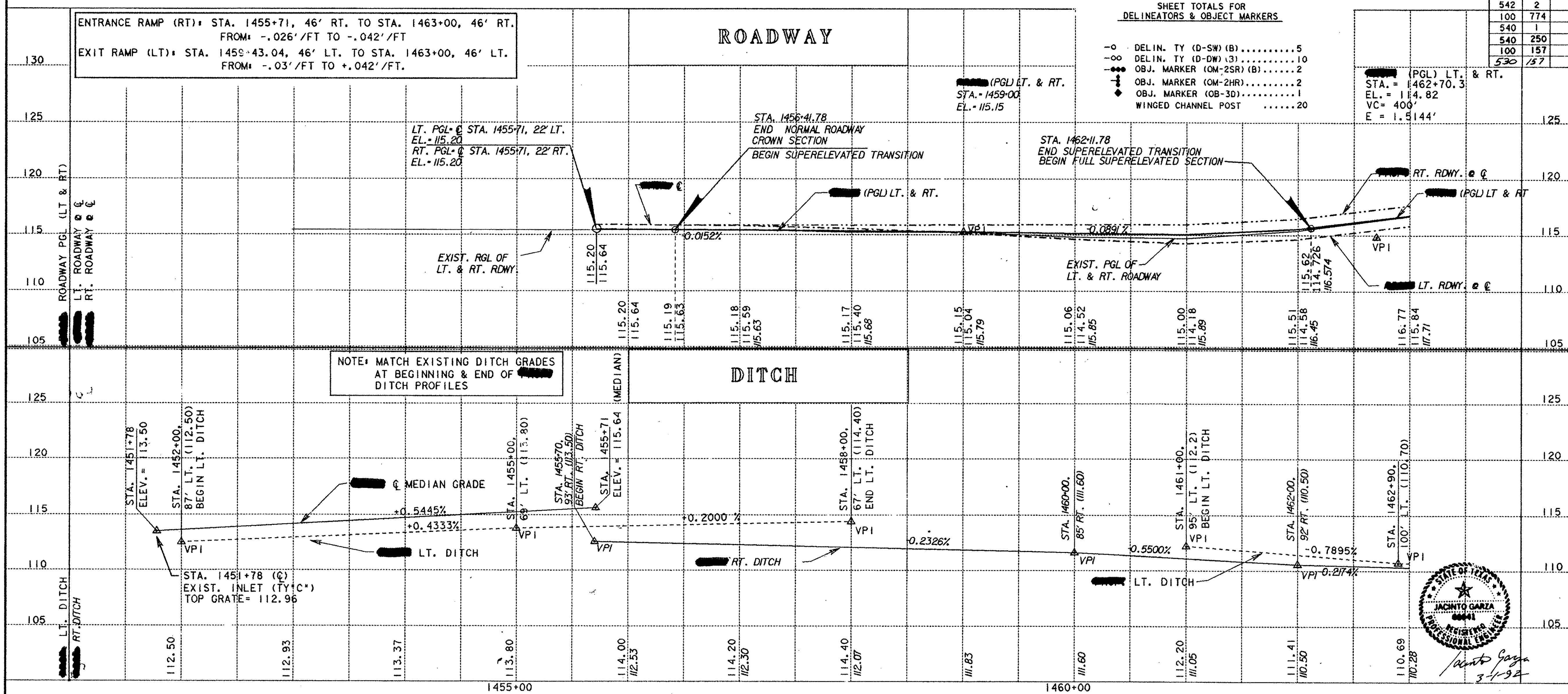

△ B.M. & HORIZONTAL DATA

H 83 - 2
*5 I.R.
STA. 1462+41.5 , 153 ' LT.
X = 2,099,611.61
Y = 195,671.88
ELEV. = 110.75

℄ CONTROL: IRON ROD W/ALUM. CAP
STA. 1455+00, 145' LT.
P.C. STA. 1460+21.78, 145' LT.
STA. 1463+00, 165' LT.

LEGEND
[redacted] PGL
RDWY. (A)&(F)

(X) [redacted] CANTILEVER SIGN
SEE SIGNING LAYOUTS FOR LOCATION.

US 83 PLAN PROFILE

STA. 1455+71 TO
STA. 1463+00

SCALE:
PLAN 1"= 50' HORIZ.
PROFILE 1"= 5' VERT.

STATE OF TEXAS — JACINTO GARZA — 60041 — REGISTERED PROFESSIONAL ENGINEER
Jacinto Garza
3-1-92

SHEET 1 OF 10 SHEETS

FED. RD. DIV. NO.	FEDERAL AID PROJECT NO.		SHEET NO.
6	NH 92( )M		41
STATE	DIST.	COUNTY	
TEXAS	21	HIDALGO	
CONT.	SECT.	JOB	HIGHWAY NO.
39	17	97	83

④
CURVE DATA
OUTSIDE EDGE OF PAV'T.
(LT. MAIN LANE)

PI STA 8+03.71 (R)
= ℄ STA. 1467+14.87, 100.49' LT.
X = 2100020.70
Y = 195944.45
Δ = 14°45'52.82" RT.
D = 1°28'25.55"
T = 503.71'
L = 1001.83'
R = 3887.72'

②
CURVE DATA
OUTSIDE EDGE OF PAV'T.
(RT. MAIN LANE)

P.I. STA. 10+37.76 (Q)
= ℄ STA. 1466+14.41, 22.39' RT.
X= 2100013.59
Y= 195785.24
Δ= 17°46'43.31" RT.
D= 1°31'37.88"
T= 586.79'
L= 1164.15'
R= 3751.72'

CURVE DATA
℄ EXPRESSWAY

P.I. STA. 1480+14.80
X = 2,100,929.62
Y = 196,854.35
Δ = 55°-06'-30.4" RT.
D = 1°-30'-0.0"
R = 3819.7186'
T = 1993.02'
L = 3673.90'
e = 0.042'/FT

[redacted] CONC. CURB
TY I
(198 LF)

★ [redacted] REMOVED UNDER
ITEM 100 [redacted] ROW"

⊛ [redacted] REMAIN IN PLACE

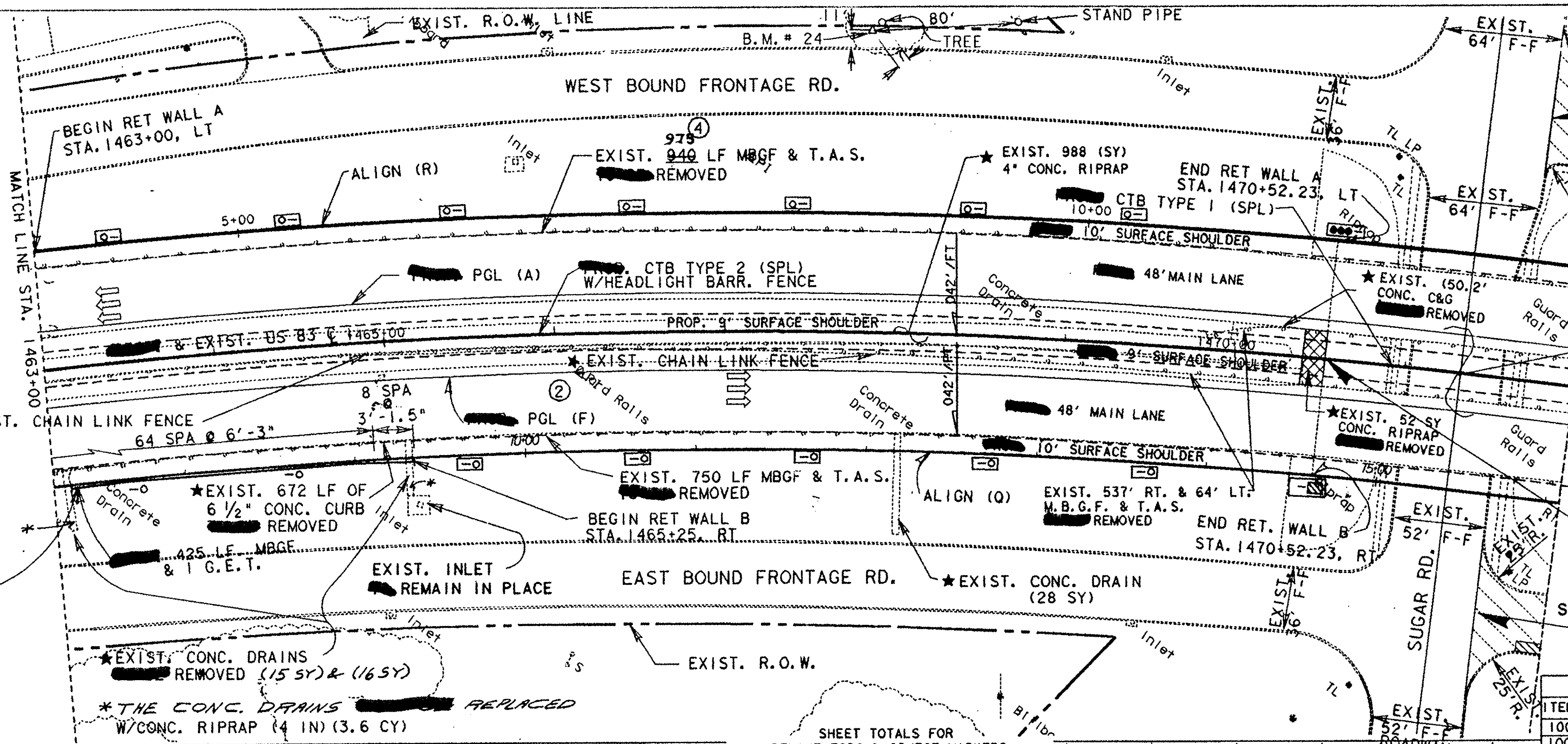

℄ STA. 1471+62 (LT)
LIMITS OF OVERLAY

EXIST. BRIDGE [redacted] WIDENED
SEE BRIDGE WIDENING SHEETS

℄ STA. 1470+52.53
BEGIN EXIST. & [redacted] BRIDGE

SEE FIELD CHANGE TEN (10)

℄ STA. 1471+56 (RT)
LIMITS OF OVERLAY

SHEET TOTALS FOR
DELINEATORS & OBJECT MARKERS

—o	DELIN. TY (D-SW) (B)	2
—●●●	TRAF BARR OBJ. MKR (OM-2SR) (B)	[illegible]
—▨	TRAF BARR OBJ. MKR (OM-3R) (B)	[illegible]
—o	TRAF BARR DELIN (D-SW) (B)	12
—●●	TRAF BARR DELIN (D-DY) (B)	0
—oo	TRAF BARR DELIN (D-DW) (B)	0
—●	TRAF BARR DELIN (D-DY) (B)	0
	DELIN. POSTS	2

SHEET TOTALS

ITEM	EST.	FIN	UNIT	DESCRIPTION
100	740		LF	REMOVE CHAIN LINK FENCE
100	1099		SY	REMOVE OLD CONC. (RIP-RAP)
542	2291		LF	REMOVE M.B.G.F.
542	2		EA	REMOVE T.A.S.
100	672		LF	REMOVE OLD CONC. (CURB)
100	50.2		LF	REMOVE OLD CONC. (C & G)
540	425		LF	M.B.G.F.
5694	1		EA	G.E.T.
432	3.6		CY	CONC. RIPRAP TY"B"
530	198		LF	CONC. CURB TY I

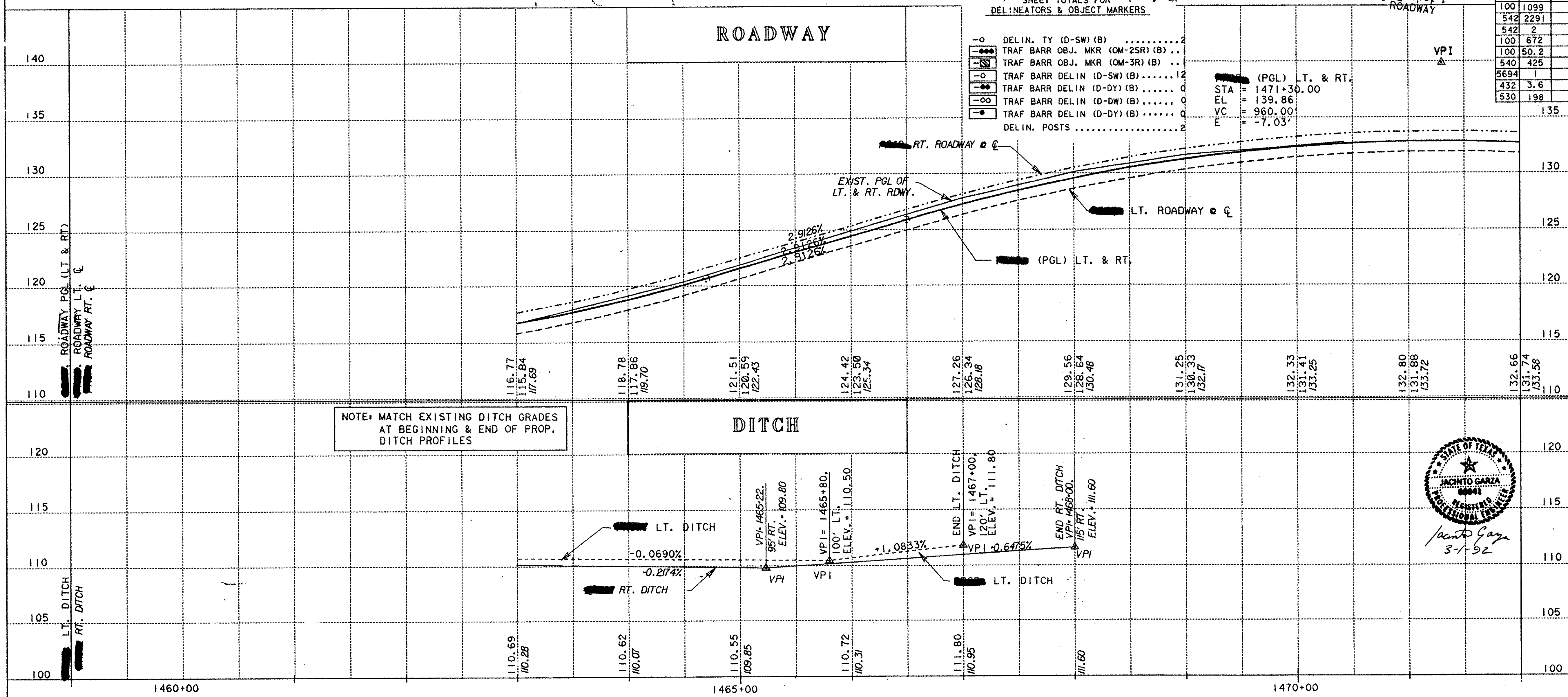

△ **B.M. & HORIZONTAL DATA**

H 83 - 2
#5 I.R.
STA. 1462+41.5 , 153 ' LT.
X = 2,099,611.61
Y = 195,671.88
ELEV. = 110.75

B.M. #24
#5 I.R.
≈STA. 1467+88 (LT.) (SEE PLAN)
ELEV. = 110.34

℄ CONTROL: IRON ROD W/ALUM. CAP
STA. 1465+00, 165' LT.
STA. 1470+00, 165' LT.

LEGEND

——— [redacted] PGL RDWY. (A) & (F)
▧ [redacted] OVERLAY
▨ EXIST. ACP [redacted] MILLED

STATE OF TEXAS
JACINTO GARZA
[illegible]
REGISTERED PROFESSIONAL ENGINEER
Jacinto Garza
3-1-92

US 83 PLAN PROFILE

STA. 1463+00 TO
STA. 1472+00

SCALE:
PLAN 1"= 50' HORIZ.
PROFILE 1"= 5' VERT.

SHEET 2 OF 10 SHEETS

FED. RD. DIV. NO.	FEDERAL AID PROJECT NO.		SHEET NO.
6	NH 92 ( )M		42
STATE	DIST.	COUNTY	
TEXAS	21	HIDALGO	
CONT.	SECT.	JOB	HIGHWAY NO.
39	17	97	US83

ZFA3:[325.110]FILE:EXPP001 LEVELS: 1 PLOT @ 1"=50' PRF: EXPP1

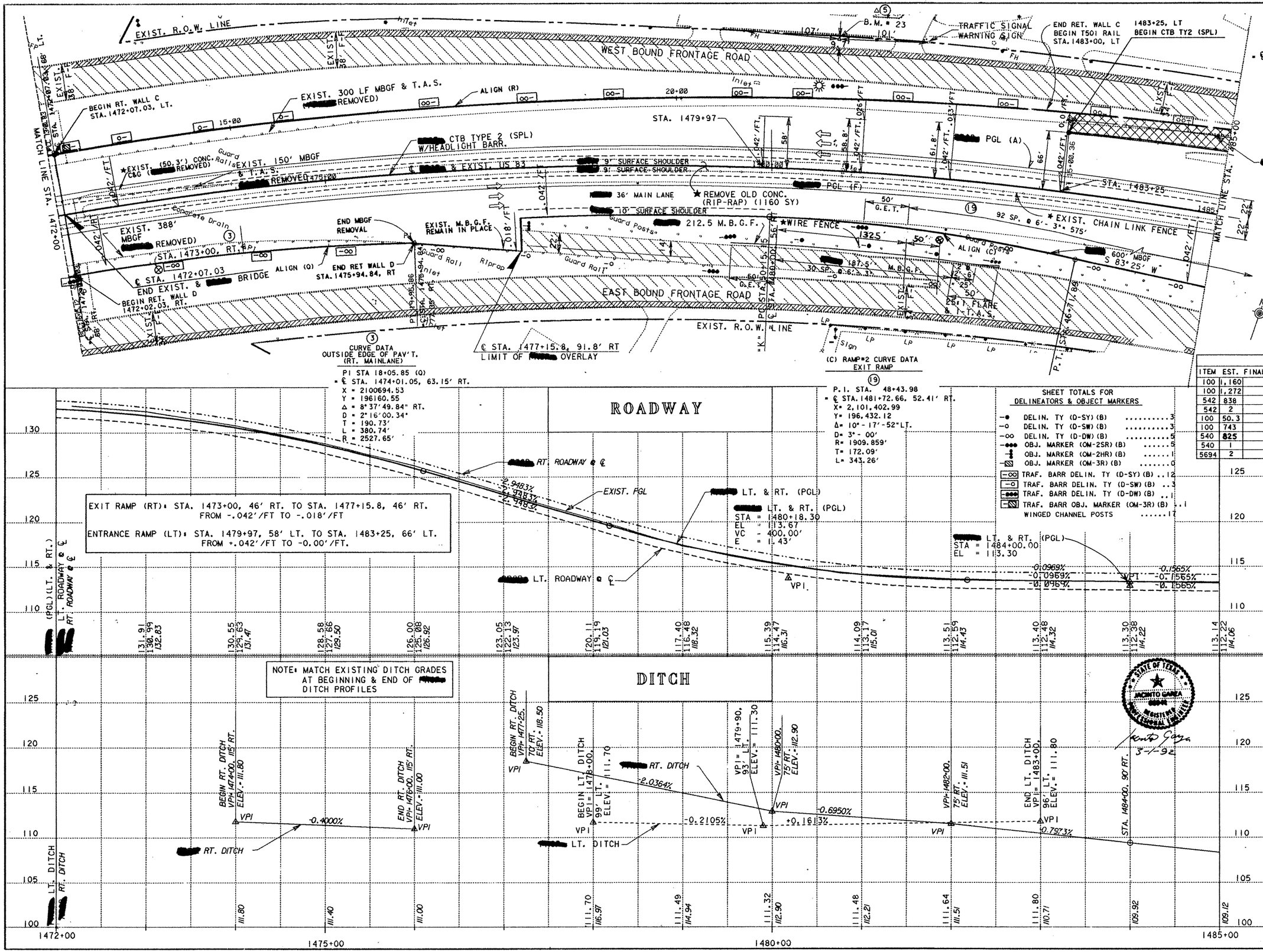

(5) CURVE DATA
OUTSIDE EDGE OF PAV'T.
(LT. MAIN LANE)
P.I.= 22+59.15 (R)
= ℄ STA. 1481+29.25, 184.13' LT.
X= 2101300.24
Y= 196649.7000
Δ= 24°25'59".06 RT.
D= 1°17'44".96
T= 957.31'
L= 1885.53'
R= 4421.58'

RADIAL BEARINGS	
K	S16°52'52."01E

CURVE DATA
(℄ EXPRESSWAY)
P.I. STA.1480+14.80
X= 2,100,929.62
Y= 196,854.35
Δ= 55°-06'-30".4 RT.
D= 1°-30'-0.0"
R= 3819.7186'
T= 1993.02'
L= 3673.90'
e= 0.042'/FT.

★ REMOVED UNDER ITEM 100 "ROW"
⊛ REMAIN IN PLACE

(3) CURVE DATA
OUTSIDE EDGE OF PAV'T.
(RT. MAINLANE)
PI STA 18+05.85 (Q)
= ℄ STA. 1474+01.05, 63.15' RT.
X = 2100694.53
Y = 196160.55
Δ = 8°37'49.84" RT.
D = 2°16'00.34"
T = 190.73'
L = 380.74'
R = 2527.65'

(C) RAMP #2 CURVE DATA
EXIT RAMP
(19)
P.I. STA. 48+43.98
= ℄ STA.1481+72.66, 52.41' RT.
X= 2,101,402.99
Y= 196,432.12
Δ= 10°-17'-52"LT.
D= 3°-00'
R= 1909.859'
T= 172.09'
L= 343.26'

SHEET TOTALS FOR DELINEATORS & OBJECT MARKERS

-●-	DELIN. TY (D-SY) (B)	3
-o-	DELIN. TY (D-SW) (B)	3
-oo-	DELIN. TY (D-DW) (B)	5
-●●●-	OBJ. MARKER (OM-2SR) (B)	5
-‡-	OBJ. MARKER (OM-2HR) (B)	1
-▨-	OBJ. MARKER (OM-3R) (B)	0
-[oo]-	TRAF. BARR DELIN. TY (D-SY) (B)	12
-[o]-	TRAF. BARR DELIN. TY (D-SW) (B)	3
-[●●●]-	TRAF. BARR DELIN. TY (D-DW) (B)	1
-[▨]-	TRAF. BARR OBJ. MARKER (OM-3R) (B)	1
	WINGED CHANNEL POSTS	17

SHEET TOTALS

ITEM	EST.	FINAL	UNIT	DESCRIPTION
100	1,160		SY	REMOVE OLD CONC. (RIP-RAP)
100	1,272		LF	REMOVE CHAIN LINK FENCE
542	838		LF	REMOVE M.B.G.F.
542	2		EA	REMOVE T.A.S.
100	50.3		LF	REMOVE OLD CONC. (C & G)
100	743		LF	WIRE FENCE (30 POSTS)
540	825		LF	[redacted] M.B.G.F.
540	1		EA	[redacted] T.A.S.
5694	2		EA	[redacted] G.E.T.

△ B.M. & HORIZONTAL DATA

H 83 - 3
#5 I.R.
STA. 1477+63.9, 270' LT.
X = 2,100,905.53
Y = 196,613.42
ELEV. = 110.59

B.M. #23
#5 I.R.
≈STA. 1480+69 (LT.)
ELEV. = 110.98
(SEE PLAN)

℄ CONTROL: IRON ROD W/ALUM. CAP
STA. 1475+00, 140' LT.
(SET NAIL IN PAV'T)
STA. 1480+00, 140' LT.
STA. 1485+00, 140' LT.

LEGEND
PCL RDWY. (A)&(F)
HIGH MAST. ILLUM.
OVERLAY
CANTILEVER SIGN. SEE SIGNING LAYOUTS FOR DETAILS.
EXIST. ACP MILLED

ROADWAY

EXIT RAMP (RT): STA. 1473+00, 46' RT. TO STA. 1477+15.8, 46' RT.
FROM -.042'/FT TO -.018'/FT

ENTRANCE RAMP (LT): STA. 1479+97, 58' LT. TO STA. 1483+25, 66' LT.
FROM +.042'/FT TO -0.00'/FT.

RT. ROADWAY ℄
EXIST. PGL
LT. & RT. (PGL)
STA = 1480+18.30
EL = 113.67
VC = 400.00'
E = 1.43'
LT. & RT. (PGL)
STA = 1484+00.00
EL = 113.30
LT. ROADWAY ℄
VPI
-2.9483%
+2.9483%
-0.0969%
-0.1565%

DITCH

NOTE: MATCH EXISTING DITCH GRADES AT BEGINNING & END OF [redacted] DITCH PROFILES

BEGIN RT. DITCH VPI= 1477+25. 70' RT. ELEV.= 118.50
BEGIN RT. DITCH VPI= 1474+00. 115' RT. ELEV.= 111.80
END RT. DITCH VPI= 1476+00. 115' RT. ELEV.= 111.00
BEGIN LT. DITCH VPI= 1478+00. 99' LT. ELEV.= 111.70
RT. DITCH
LT. DITCH
VPI= 1479+90. 93' LT. ELEV.= 111.30
VPI= 1480+00. 75' RT. ELEV.= 112.90
VPI= 1482+00. 75' RT. ELEV.= 111.51
END LT. DITCH VPI= 1483+00. 96' LT. ELEV.= 111.80
STA. 1484+00. 90' RT.
-0.4000%
-2.0364%
-0.2105%
+0.1613%
-0.6950%
-0.7973%

STATE OF TEXAS
ARCHITECT
ARTURO GARZA
REGISTERED
3-1-92

US 83
PLAN PROFILE
STA. 1472+00 TO
STA. 1485+00

SCALE:
PLAN 1"= 50' HORIZ.
PROFILE 1"= 5' VERT.

SHEET 3 OF 10 SHEETS

FED. RD. DIV. NO.	FEDERAL AID PROJECT NO.	SHEET NO.
6	NH 92( )M	43

STATE	DIST.	COUNTY
TEXAS	21	HIDALGO

CONT.	SECT.	JOB	HIGHWAY NO.
39	17	97	US83

ROADWAY

STA. 1485+28.5, LT. END T501 RAIL
G.R.E.A.T.
TFP
EXIST. R.O.W. LINE
WEST BOUND FRONTAGE ROAD
RAMP PGL (B) SEE SHEET 50A
ALIGN "H"
EXIT RAMP #4 SEE RET. WALL PROFILE
PROP. T501 RAIL
Sign
B.M. # 21
Billboard
MATCH LINE STA. 1485+00
STA. 1485+50, LT BEGIN RET. WALL RAMP 4 END CTB TY 3 (SPL)
CTB TYPE 2 (SPL) W/HEADLIGHT BARR. FENCE
CHAIN LINK FENCE
℄ STA. 1492+48.16, 56.1' LT. ALTGN. (E) = (E) BRIDGE STA. 36+15.38 (ELEV. 113.43)
PGL (A)
CTB (TYPE 5)
9' SURFACE SHOULDER
℄ & EXIST. US 83
SUPERELEVATED TRANSITION
100'
200'
N 81° 31' 57.26" W
36' MAINLANE
(C) BRIDGE STA. 43+08.17, 32' RT. (ELEV. 111.37) = ℄ STA. 1487+18.30, 56' RT.
PGL (F)
10' SURFACE SHOULDER
EXIST. CHAIN LINK FENCE
CTB (TYPE 2)
G.R.E.A.T. (TY A) (10 BAY)
ENTRANCE RAMP #2 SEE RET. WALL PROFILE
4" CONC. RIPRAP (5.1 CY)
T501 RAIL
BRIDGE ALIGN. (C)
BRIDGE ALIGN. (E) & PGL
Guard Posts
M.B.G.F.
(C) STA. 42+68.15 END T501 RAIL
TYPE T501 RAIL
EAST BOUND FRONTAGE ROAD
WIRE FENCE
EXIST. R.O.W. LINE
END BRIDGE RAMP 2
(C) BRIDGE STA. 35+78.51 (ELEV. = 128.93) = ℄ STA. 1494+66.13, 109.77' RT.
SEE BRIDGE SHEETS
*SEE SHEET NO. 111 FOR CTB MISC. DETAILS
MATCH LINE STA. 1498+00

⑥ (H) OUTSIDE EDGE RAMP 4 & W.B. MAIN LANE CURVE DATA
P.I. STA. 8+09.32
℄ STA. 1490+10.14, 153.82
X = 2,102,212.57
Y = 196,754.35
Δ = 22° - 30' - 18".57 LT.
D = 1° - 36' - 25".54
R = 3565.18'
T = 709.32'
L = 1400.36'

⑧ (E) RAMP 4 BRIDGE CURVE DATA
P.I. STA. 37+28.39
X = 2,102,329.84
Y = 196,704.54
Δ = 18°-21'-37".36 LT.
D = 1°-34'-48".5
R = 3626.0'
T = 586.0'
L = 1161.95'

(*) REMAIN IN PLACE
* REMOVED UNDER ITEM 100 "ROW"
SECTION [redacted] CONSIST OF 171#/SY ACP AND 6" FLEX BASE W/1 % LIME
SECTION [redacted] THE SAME AS PROP. ROADWAY SECTION

SHEET TOTALS				
ITEM	EST.	FINAL	UNIT	DESCRIPTION
100	1.300		LF	REMOVE CHAIN LINK FENCE
100	1.135		LF	WIRE FENCE (46 POSTS)
432	5.1		CY	PROP. CONC. RIPRAP (4")

⑦ (C) RAMP 2 BRIDGE CURVE DATA
P.I. = STA. 39+55.81
= ℄ STA. 1490+82.10, 67.70' RT.
X = 2,102,290.25
Y = 196,534.52
Δ = 15° - 03' - 02".74 LT.
D = 1° - 45'
R = 3274.044'
T = 432.512'
L = 860.043'
e = 0.042'/FI

CURVE DATA ℄ EXPRESSWAY
P.I. STA. 1480+14.80
X = 2,100,929.62
Y = 196,854.35
Δ = 55° - 06' - 30".4 RT.
D = 1° - 30' - 0".0
R = 3819.7186'
T = 1993.002'
L = 3673.9
e = 0.042'/FT.

(C) BRIDGE STA. 35+78.51 RAMP #2 ELEV. = 128.93

DELINEATORS & OBJECT MARKERS FOR SHEET 44 AND 45 SHEET TOTALS
- DELIN. TY (D-SY) (B) 1
- DELIN. TY (D-DW) (B) 2
- OBJ. MARKER (OM-2SR) (B) 1
- OBJ. MARKER (OM-2HR) 0
- OBJ. MARKER (OB-3D) 3
- OBJ. MARKER (OM-3R) 1
- TRAFF. BARR. DELIN. (D-SW) (B) 12
- TRAFF. BARR. DELIN. (D-DY) (B) 3
- TRAFF. BARR. DELIN. (D-DW) (B) 13
- TRAFF. BARR. DELIN. (D-SY) (B) 5
- WINGED CHAN. POST 8

△ B.M. & HORIZONTAL DATA
H 83 - 4
#5 I.R.
STA. 1494+81.88, 94.3' LT.
X = 2,102,613.21
Y = 196,672.46
ELEV. = 109.60

B.M. #21
#5 I.R.
STA. 1496+55 (LT.) (SEE PLAN)
ELEV. = 108.99

℄ CONTROL: IRON ROD W/ALUM. CAP
STA. 1490+00, 140' LT.
STA. 1495+00, 140' LT.
PT = STA. 1496+95.68, 140' LT.

LEGEND
- PGL RDWY. (A) + (F)
- 4" CONC. RIP RAP
- OVERLAY 171#/SY ACP (TY D)
- DIRECT CONNECTOR BRIDGE (SEE BRIDGE SHTS.)
- EXIST. ACP MILLED
- SEE SHT. 50A FOR RAMP DETAILS.
- CANTILEVER SIGN SEE SIGNING LAYOUTS FOR LOCATION
- HIGH MAST LUMINAIRE

(PGL) RAMP #2 SEE SHT. 94 & 95 FOR PROFILE ELEV. (TOP OF COPING)
+3.97947%
(PGL) RAMP #4 SEE SHT. 98-101
+3.5803%
RAMP #4 PGL STA = 33+53.80 (E) EL = 113.02 VC = 400.00' E = 1.868'
STA. = 36+15.38 (E) EL. = 113.43 ℄ 1492+48.16
VPI -0.157%
VPI 495+05.68 END SUPERELEVATED SECTION BEGIN SUPERELEVATED TRANSITION
-0.1565%
-0.1565%
0.1600%
-0.1558%
LT. & RT. (PGL) STA = 1495+05.68 EL = 111.57
LT. & RT. RDWY. ℄ ℄
LT. RDWY. ℄ ℄
RT. RDWY. ℄ ℄
VPI STA = 43+08.17 (C) ELEV. = 110.14
VPI STA = 42+58.16 (C) ELEV. = 110.06
VPI RAMP #2 PGL STA = 40+43.15 (C) EL = 110.44 VC = 430.00' E = 2.04'
EXIST. PGL
112.99 112.07 113.91
112.83 111.91 113.75
112.67 111.75 113.59
112.52 111.60 113.44
112.36 111.44 113.28
112.20 111.28 113.12
112.05 111.13 112.97
111.89 110.97 112.81
111.74 110.82 112.66
111.58 110.66 112.50
110.60 112.42
111.42 110.57 112.32
110.59 112.21
111.27 110.64 112.09
110.73 111.95
111.11 110.86 111.80
NOTE: MATCH EXISTING DITCH GRADES AT BEGINNING & END OF [redacted] DITCH PROFILES
DITCH
VPI = 1485+65.92' RT. ELEV. = 108.60
+0.0508%
[redacted] RT. DITCH
END RT. DITCH VPI = 1494+50, 113' RT. ELEV. = 109.05
BEGIN RT. DITCH VPI 1497+61, 111' RT. ELEV. 109.40
LT. DITCH
RT. DITCH
112.84 108.62
111.78 108.67
110.72 108.72
109.66 108.77
108.60 108.82
109.84 108.87
111.08 108.92
108.97
108.02
109.07
1485+00
1490+00
1495+00
1498+00

STATE OF TEXAS JACINTO GARZA 68961 REGISTERED PROFESSIONAL ENGINEER
Jacinto Garza 3-1-92

US 83
PLAN PROFILE
STA. 1485+00 TO STA. 1498+00

SCALE:
PLAN 1" = 50' HORIZ.
PROFILE 1" = 5' VERT.

SHEET 4 OF 10 SHEETS

FED. RD. DIV. NO.	FEDERAL AID PROJECT NO.		SHEET NO.
6	NH 92( )M		44
STATE	DIST.	COUNTY	
TEXAS	21	HIDALGO	
CONT.	SECT.	JOB	HIGHWAY NO.
39	17	97	US83

BEGIN CONC. RIPRAP (21 CY) STA. 1498+50, LT.

END BRIDGE RAMP (4) (E) BRIDGE STA. 28+71.44 (ELEV. = 130.29) = ℄ STA. 1499+66.63, 58' LT. SEE BRIDGE SHEETS

℄ STA. 1505+56.0, 91' LT. LIMIT OF [redacted] OVERLAY

EXIST. ROW LINE

T501 RETROFIT WEST BOUND FRONTAGE RD.

PC = STA. 6+16.02 = ℄ STA. 1505+01.04 (87' LT.)

BM #20

[redacted] BRIDGE & PGL ALIGN. (E)

[redacted] 10' SURFACE SHOULDER

[redacted] CTB TYPE 5

[redacted] 36' MAIN LANE

N 81°31'57"W

PGL (A)

STA. 1503+63.4 BEGIN [redacted] MILLING

℄ [redacted] & EXIST. US 83

[redacted] 9' SURFACE SHOULDER

[redacted] CTB TYPE 2 (SPL)

PGL (F)

[redacted] CTB TY 2 W/HEADLIGHT BARRIER FENCE

★EXIST. 1118 SY OLD CONC. RIPRAP

[redacted] T501 RAIL W/TRF.

[redacted] 6' SURFACE SHLDR.

★WIRE FENCE

[redacted] CTB TYPE 2

★EXIST. CHAIN LINK FENCE

36' MAIN LANE

9' SURFACE SHOULDER

STA. 1504+69.6

5°01'-31'-51".26" E

PRC = STA. 9+58.94 = ℄ STA. 1508+43.15 (66.5' LT.)

6' SHLDR.

[redacted] CTB TYPE 3

[redacted] RETAINING WALL

[redacted] EXIST. GUTTER & MBGF

[redacted] OVERHEAD SIGN BRIDGE ℄ STA. 1511+00

[redacted] CTB TY 3

EXIST. 150' MBGF & 1-T.A.S. [redacted] REMOVED)

10' SURFACE SHOULDER

200' TRANS. OF ROADWAY CROWN FROM 0.02'/FT TO 0.01'/FT

EXIST. 300' MBGF & 1-T.A.S. & 615 OF 6" CONC. CURB [redacted] REMOVED)

EXIST. 6" F.F.

EAST BOUND FRONTAGE RD.

RT. STA. 7+40.77 = ℄ STA. 1501+00, 66' RT.

SEE C.T.B. SHT. 112 FOR QUANTITY OF MILLING

CANAL ST.

℄ STA. 1498+63.5, 86.39' RT. LIMIT OF [redacted] OVERLAY

EXIST. ROW LINE

★ EXIST. CONC. DRAIN [redacted] REMOVED (18 SY)

MATCH LINE STA. 1498+00

MATCH LINE STA. 1511+00

Billboard, Guard Posts, Inlet, Sign, Gate, FH, TFP, Concrete Drain, Riprap

.027'/FT, .012'/FT, .02'/FT, .01'/FT

CURVE DATA EXIT RAMP (11)
P.I. STA. 1510+13.58 (46' LT.)
Δ= 6°-51'-31" LT.
D= 2°
R= 2864.79'
T= 171.67'
L= 342.92'

CURVE DATA ENTRANCE RAMP (10)
P.I. STA. 1506+72.71 (87' LT.)
Δ= 6°-51'-31" RT.
D= 2°
R= 2864.79'
T= 171.67'
L= 342.92'

CURVE DATA RDWY. ENTRANCE RAMP (9)
P.I. STA. 1498+64.21 (70.71' RT)
Δ= 9°-24'-44" RT.
D= 2°
R= 2864.79'
T= 235.84'
L= 470.61'

P.I. = STA. 17+40.17 = ℄ STA. 1511+00, 46' RT.

22'

★ [redacted] REMOVED UNDER ITEM 100 "PREP ROW"

⊛ [redacted] REMAIN IN PLACE

⊛ SEE CTB & MISC. DETAIL SHT. 4 OF 6 SHEET NO. 114

☑ QUANTITY FOR MILLING IS ONLY FOR MILLING ON MAIN LANES & EXIT RAMP.

ENTRANCE RAMP (RT): STA. 1498+63.5 TO STA. 1509+00 FROM -.012'/FT TO (SEE PLAN)

EXIT RAMP (LT): STA. 1505+56 TO STA. 1510+30 FROM .01'/FT TO .02'/FT

SHEET TOTALS				
ITEM	EST.	FINAL	UNIT	DESCRIPTION
100	1,136		SY	REMOVE OLD CONC. (RIPRAP)
100	1,300		LF	REMOVE CHAIN-LINK FENCE
542	450		LF	REMOVE MBGF
542	2		EA	REMOVE TERM. ANCHOR SECTION
100	615		LF	REMOVE OLD CONC. (CURB)
☑ 3741	412		SY	PLANE ASPH. CONC. (1½")
100	840		LF	WIRE FENCE (2 POSTS)
432	21		CY	PROP. CONC. RIPRAP 4"

ROADWAY

(E) BRIDGE STA. 28+71.44
RAMP #4
(ELEV. = 130.29)

3.5803 %

(PGL) RAMP #4

VPI 1501+00
END SUPERELEVATED TRANSITION
BEGIN NORMAL RDWY. CROWN SECTION

RT. RDWY. ℄

LT. RDWY. ℄

(PGL) (LT. & RT.)

VPI

0.2263%

EXIST. PGL

LT. & RT. (PGL)
STA. = 1500+00.00
EL = 110.80
VC = 200.00'
E = 0.10'

VPI
LT. & RT. (PGL)
STA. = 1504+95.00
EL = 111.92
VC = 400.00'
E = 1.61'

3.464%
3.464%

LT. & RT. (PGL)

℄

STATE OF TEXAS
JACINTO GARZA
REGISTERED PROFESSIONAL ENGINEER
Jacinto Garza
3-1-92

SECTION A-A

STA. 1503+63.4 THRU STA. 1511+85.25
SECTION THRU PARAPET WALL

1'-0" 6'
1'-5" 1½" TO BE MILLED (4.5') (412 SY)
1'-7" 1'-9" 2'-3"
0'-6"
EXIST. 5.5" ACP
LIMIT OF RECONST.
9" ACP
EXIST. CONC. GUTTER
EXIST. 9" FLEX. BASE
EXIST. 8" SUBGRADE
18" FLEX. BASE
RETAINING WALL
EXIST. AGGR. PANEL
12" SUBGRADE

DITCH

NOTE: MATCH EXISTING DITCH GRADES AT BEGINNING & END OF [redacted]. DITCH PROFILES

STA. 1499+00, 97' RT.
-0.8368%
VPI = 1500+00, 95' RT.
ELEV. = 107.40
+0.5667%
VPI = 1503+00, 94' RT.
ELEV. = 109.10
-0.1150%
STA. 1505+00, 90' RT.
DITCH RT.
END RT. DITCH VPI = 1507+00, 110' RT. BEGIN LT. DITCH VPI = 1507+00, 99' LT. ELEV. = 109.80
VPI = 1508+50, 105' LT. ELEV. = 109.50
END LT. DITCH VPI = 1510+00, 110' LT. ELEV. = 109.90
DITCH RT.
DITCH LT.

	1498+00	1500+00	1505+00	1510+00	1511+00
(PGL) (LT. & RT.)	111.00 111.64	110.96 111.09 111.50	111.17 111.40	110.90 111.26 111.36	111.38 111.38
LT. RDWY. ℄					
RT. RDWY. ℄					
DITCH	109.07	108.24	107.40	107.97	108.53
	111.03 111.41	111.25 111.69	111.48 111.92	112.15 112.59	113.63 114.07
	115.91 116.35	119.00 119.44	122.25 122.69	124.90 125.34	126.93 127.35
	128.35 128.66				
DITCH	109.27	108.45	108.63	109.80 108.80	109.60
	109.63	109.90			

△ B.M. & HORIZONTAL DATA

B.M. #20
≈ #5 I.R.
STA. 1506+48 (LT.) (SEE PLAN)
ELEV. = 109.09

℄ CONTROL: IRON ROD W/ALUM. CAP
STA. 1500+00, 140' LT.
STA. 1510+00, 140' LT.
(SET NAIL ON PAV'T)

LEGEND
[redacted] PGL RDWY. (A)+(F)
[redacted] 4" CONC. RIPRAP
[redacted] OVERLAY 171#/SY ACP (TY D)
DIRECT CONNECTOR (SEE BRIDGE SHTS.)
EXIST. ACP [redacted] MILLED
⊗ [redacted] CANTILEVER SIGN SEE SIGNING LAYOUTS FOR LOCATION.
☼ [redacted] HIGH MAST LUMINAIRE

US 83
PLAN PROFILE

STA. 1498+00 TO STA. 1511+00

SCALE:
PLAN 1"= 50' HORIZ.
PROFILE 1"= 5' VERT.

SHEET 5 OF 10 SHEETS

FED. RD. DIV. NO.	FEDERAL AID PROJECT NO.		SHEET NO.
6	NH 92( )M		45
STATE	DIST.	COUNTY	
TEXAS	21	HIDALGO	
CONT.	SECT.	JOB	HIGHWAY NO.
39	17	97	US83

Z:\83\1925_110\FILES\EXPP004 LEVELS\1 PLOT: 1"=50' PREF: EXPP4

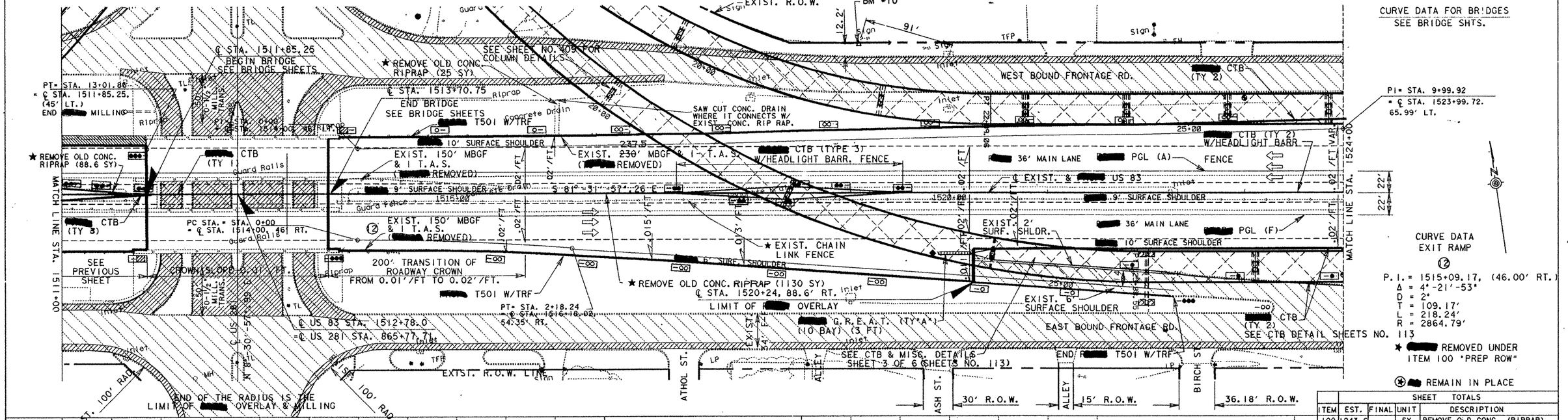

ROADWAY

EXIT RAMP (RT): STA. 1515+50 TO STA. 1520+24
FROM: -0.02'/FT TO -0.011'/FT

VPI

℄

LT. & RT. (PGL)
STA = 1512+78.00
EL = 138.97
VC = 1120.00'
E = -9.61'

EXIST. PGL

LT. & RT. (PGL)

-3.4100%

LT. & RT. (PGL)
STA = 1521+01.16
EL = 110.90
VC = 350.00'
E = 1.42'

VPI

-0.1690%

(PGL) ℄	129.16 / 129.38	129.35 / 129.57	128.93 / 129.18	127.90 / 128.26	126.25 / 126.69	124.00 / 124.44	121.13 / 121.57	117.76 / 118.20	114.60 / 115.04	112.34 / 112.78	111.00 / 111.44	110.56 / 111.00	110.39 / 110.83

NOTE: EXISTING DITCH GRADES AT BEGINNING & END OF DITCH PROFILES

DITCH

BEGIN RT. DITCH
VPI= 1517+00.
113' RT.
ELEV.= 109.60

BEGIN LT. DITCH
VPI= 1517+50.
100' LT.
ELEV.= 108.50

-0.500%

-0.2800%

VPI= 1519+00. 110' RT.
ELEV.= 108.60

VPI= 1520+00. 90' LT.
ELEV.= 107.80

RT. DITCH

+0.1017%

END RT. DITCH
VPI= 1521+95. 110' RT.
ELEV.= 108.90

LT. DITCH

+0.0545%

LT. DITCH	109.60	108.50	109.10	108.08 / 108.60	107.80 / 108.70	107.75 / 108.80	107.69	107.64	107.58
RT. DITCH									

1511+00 | 1515+00 | 1520+00 | 1524+00

135 / 130 / 125 / 120 / 115 / 110 / 105 / 100

SHEET TOTALS FOR DELINEATORS & OBJECT MARKERS

-oo	DELIN. TY (D-DW) (B) 1
-●●●	OBJ. MARKER (OM-2SR) (B) 1
◆	OBJ. MARKER (OB-3D) 1
-▭▭	TRAFF. BARR. DELIN. (D-DY) (B) 6
-▭▭▭	TRAF. BAR. DELIN. (OM-2SR) (B) 4
-▨▨	TRAF. BARR. DELIN. (OM-3R) (B) 2
	WINGED CHANNEL POST 3
-▭	DELIN. TY (D-SW) (B) 4
-●	DELIN. TY (D-SY) (B) 3
-oo	TRAFF. BARR. DELIN. (D-DW) (B) 12

SHEET TOTALS

ITEM	EST.	FINAL	UNIT	DESCRIPTION
100	1243.6		SY	REMOVE OLD CONC. (RIPRAP)
100	1100		LF	REMOVE CHAIN LINK FENCE
542	530		LF	REMOVE M.B.G.F.
542	3		EA.	REMOVE TERM. ANCH. SECT.

△ B.M. & HORIZONTAL DATA

H 83 - 5
#5 I.R.
STA. 1512+77 , 239 ' LT.
X = 2,104,500.24
Y = 196,564.48
ELEV. = 110.295

B.M. #10
#5 I.R.
STA. 1519+10 (LT.)
ELEV. = 108.48 (SEE PLAN)

℄ CONROL: (I.R. W/ALUM. CAP)
STA. 1515+00, 140' LT.
(SET 60 D NAIL)

STA. 1520+00, 140' LT

℄ US 281 STA. 865+00, O.C.
(SET R.R. SPIKE W/PUNCH MARK)

LEGEND

- PGL RDWY. (A) & (F)
- OVERLAY 171#/SY ACP (TY D)
- DIRECT CONNECTOR BRIDGE (SEE BRIDGE SHTS.)
- EXIST. ACP MILLED
- HIGH MAST LUMINAIRE

STATE OF TEXAS
JACINTO GARZA
68641
REGISTERED PROFESSIONAL ENGINEER
Jacinto Garza
10-31-91

US 83 PLAN PROFILE

STA. 1511+00 TO
STA. 1524+00

SCALE:
PLAN 1"= 50' HORIZ.
PROFILE 1"= 5' VERT.

SHEET 6 OF 10 SHEETS

FED. RD. DIV. NO.	FEDERAL AID PROJECT NO.	SHEET NO.
6	NH 92( )M	46

STATE	DIST.	COUNTY
TEXAS	21	HIDALGO

CONT.	SECT.	JOB	HIGHWAY NO.
39	17	97	US83

7EA91326 T3O3ELLE+EXPROOF LEVELS: 7 PLOT = 24.50 / PRE+ EXPRE

℄ STA. 1526+49.9, 84' LT.
LIMIT OF [redacted] OVERLAY

END BRIDGE RAMP (1)
(B) BRIDGE STA. 34+74.51 (ELEV. = 127.24)
= ℄ STA. 1532+17.88, 67.96' LT.
SEE BRIDGE SHTS.

LIMIT OF [redacted] CONC. RIPRAP

EXIST. R.O.W. LINE

Billboard

BM. #11

SEE CTB & MISC. SHT. 1 OF 6 SHEETS (SHEET NO. 111)

LIMITS OF REMOVAL OF EXIST. CONC. CURB TY "A"

WEST BOUND FRONTAGE ROAD

T501 RAIL

RAMP PGL ③

T501 W/TRF

STA. 1530+50

10' SURFACE SHOULDER

CTB (TYPE 2) SEE SHEET 111

36' MAIN LANE

CTB (TYPE 5)

BRIDGE ALIGN. (B)

PGL (A)

MATCH LINE STA. 1524+00

S 81°-31'-57".26 E

9' SURFACE SHOULDER

℄ EXIST. [redacted] US 83

S 81°-31'-24".06 E

MATCH LINE STA. 1537+00

★ EXIST. CHAIN LINK FENCE

CTB (TYPE 5)

END RET WALL
℄ STA. 1531+19.69

10' SURFACE SHOULDER

36' MAIN LANE

PGL (F)

200' CROWN SLOPE TRANSITION
FROM -0.02'/FT. TO +0.02'/FT.
S 81°31'54"E

T501 RAIL

RAMP PGL ③

END RET. WALL
℄ STA. 1529+93.92

BRIDGE ALIGN. (D)

END BRIDGE RAMP (3)
(D) BRIDGE STA. 28+06.87, (ELEV. = 128.77)
= ℄ STA. 1524+20.77, 90.02' RT.
SEE BRIDGE SHTS.

END [redacted] CONC. RIPRAP (64 CY) (♦)

EAST BOUND FRONTAGE ROAD

EXIST. R.O.W. LINE

(D) BRIDGE STA. 35+74.96
= ℄ STA. 1531+88.26, 88' RT.

♦ NOTE: THE AREA BETWEEN THE BACK OF THE CONC. CURB AND THE RETAINING WALL [redacted] 4" CONC. RIPRAP (8.9 CY)

⑬ (B) RAMP 1 CURVE DATA

P.I. = STA. 38+06.63
X = 2,106,723.2263
Y = 196,060.4950
Δ = 1°-34'-53".50 RT.
D = 0°-30'-00"
R = 11,459.156'
L = 316.31'

♦ SEE NOTE

⑭ (D) RAMP 3 CURVE DATA

P.I. = STA. 35+21.08
X= 2,106,289.4713
Y= 195,965.4066
Δ= 1°-35'-38.94" LT.
D= 0°-30'-00"
R= 11,459.156'
L= 318.830'

◐ SECTION SHALL CONSIST OF 171#/SY ACP AND 6" FLEX BASE W/1 % LIME

◪ SECTION [redacted] THE SAME AS [redacted] ROADWAY SECTION

★ [redacted] REMOVED UNDER ITEM 100 "[redacted] ROW"

⊛ [redacted] REMAIN IN PLACE

SHEET TOTALS FOR DELINEATORS & OBJECT MARKERS

—●	DELIN. TY (D-SY) (B) 3
—○○	DELIN. TY (D-DW) (B) 6
—●●●	OBJ. MARKER (OM-2SR) (B) 1
◆	OBJ. MARKER (OB-3D) 1
—○—	TRAFF. BARR. DEL. TY (D-SY) (B) 2
	DELIN. POST 11
—○○—	TRAFF. BARR. DEL. TY (D-SW) (B) 3
—●●●—	TRAFF. BARR. DEL. (OM-2SR) (B) 2

SHEET TOTALS

ITEM	EST.	FINAL	UNIT	DESCRIPTION
100	1,300		LF	REMOVING CHAIN LINK FENCE
432	72.9		CY	PROP. CONC. RIPRAP 4"

(D) BRIDGE STA. 28+06.87
RAMP #3 ELEV. = 128.77

ENTRANCE RAMP (LT): STA. 1516+00 TO STA. 1526+49.9
FROM +.02'/FT TO +.023'/FT

ROADWAY

(B) BRIDGE STA. 34+74.51
RAMP #1 ELEV. = 127.24

4.0163%

3.7422%

SEE SHTS 96 & 97 FOR PROFILE ELEV. (TOP OF COPING)

[redacted] (PGL) RAMP #3

VPI

PGL RAMP #1
SEE SHTS 92 & 93 FOR PROFILE ELEV. (TOP OF COPING)

℄ EL = 108.07

-0.1690%

-0.1690%

-0.0585%

-0.0550%

-0.0550%

LT. & RT. (PGL)

LT. & RT. (PGL)
STA = 1529+00.00
EL = 109.55

VPI
STA = 35+74.96 (D)
EL = 108.07

EXIST. PGL

[redacted] (PGL) RAMP #3
STA = 33+18.53 (D)
EL = 108.22
VC = 375.00'
E = .86'

(PGL) ℄

110.23 110.67 | 110.06 110.50 | 109.89 110.33 | 109.72 110.16 | 109.55 109.99 | 109.50 109.93 | 109.44 109.88 | 109.39 109.82 | 109.33 109.77 | 109.28 109.71 | 109.22 109.66 | 109.17 109.61 | 109.11 109.55

NOTE: MATCH EXISTING DITCH GRADES AT BEGINNING & END OF PROP. DITCH PROFILES

DITCH

BEGIN RT. DITCH
VPI= 1530+00, 95' RT.
ELEV. = 107.80

STA. 1535+00, 88' RT.

VPI= 1536+90, 86' RT.
ELEV. = 105.70

END LT. DITCH
VPI= 1525+50, 90' LT.
ELEV. = 108.10

LT. DITCH

RT. DITCH

+0.0545%

[redacted] LT. DITCH

[redacted] RT. DITCH

-0.3000%

VPI

107.80 | 107.50 | 107.20 | 106.90 | 106.60 | 106.30 | 106.00 | 105.77

1524+00 | 1525+00 | 1530+00 | 1535+00 | 1537+00

△ B.M. & HORIZONTAL DATA

H 83 - 6
#5 I.R.
STA. 1530+80.97, 80.3' LT.
X = 2,106,261.14
Y = 196,141.83
ELEV. = 106.68

≈B.M. #11
#5 I.R.
STA. 1529+05 (LT.) (SEE PLAN)
ELEV. = 106.76

℄ CONTROL (I.R. W/ALUM. CAP)
STA. 1525+00, 140' LT.
P.I. STA. 1528+56.38, 140' LT.
STA. 1530+00, 140' LT.
STA. 1535+00, 140' LT.

LEGEND

[redacted] PGL RDWY. (A) & (F)

[redacted] OVERLAY 171#/SY ACP (TY D)

DIRECT CONNECTOR (SEE BRIDGE SHTS.)

[redacted] 4" CONC. RIPRAP

EXIST. ACP [redacted] MILLED

⊗ [redacted] CANTILEVER SIGN (SEE SIGNING SHEETS FOR DETAILS)

✲ [redacted] HIGH MAST LUMINAIRE

STATE OF TEXAS
JACINTO GARZA
[redacted]
REGISTERED PROFESSIONAL ENGINEER
10-31-91

US 83 PLAN PROFILE

STA. 1524+00 TO STA. 1537+00

SCALE:
PLAN 1" = 50' HORIZ.
PROFILE 1" = 5' VERT.

SHEET 7 OF 10 SHEETS

FED. RD. DIV. NO.	FEDERAL AID PROJECT NO.	SHEET NO.
6	NH 92( )M	47

STATE	DIST.	COUNTY
TEXAS	21	HIDALGO

CONT.	SECT.	JOB	HIGHWAY NO.
39	17	97	US83

7E431325.130 FILE: EXPROO6 LEVELS: 1 PLOT @ 1"=50' PRFL EXPRR

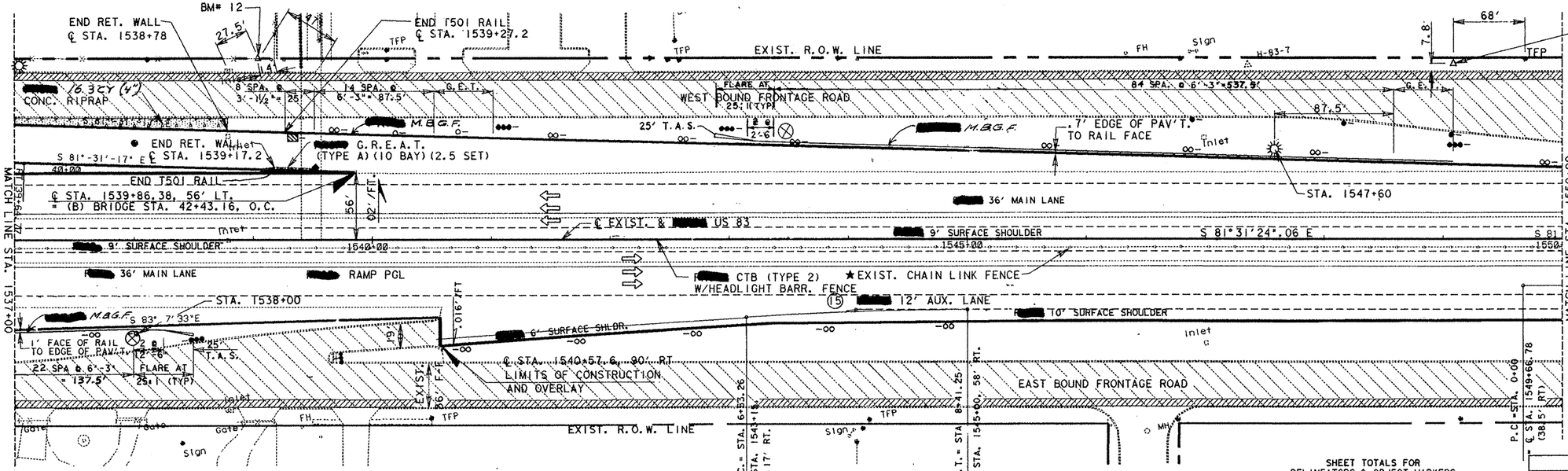

★ REMOVED UNDER ITEM 100 "PREP ROW"

(15) REMAIN IN PLACE

SHEET TOTALS FOR DELINEATORS & OBJECT MARKERS

DELIN. TY (D-SY) (B)	3
DELIN. TY (D-SW) (B)	3
DELIN. TY (D-DY) (B)	0
DELIN. TY (D-DW) (B)	14
OBJ. MARKER (OM-2SR) (B)	4
OBJ. MARKER (OM-2HR) (B)	1
OBJ. MARKER (OB-3D)	1
OBJ. MARKER (OM-3R) (B)	1
DELIN. POST	27

SHEET TOTALS

ITEM	EST.	FINAL	UNIT	DESCRIPTION
100	1,300		LF	REMOVE CHAIN LINK FENCE
540	812.5		LF	PROP. M.B.G.F.
540	2		EA	PROP. T.A.S.
432	16.3		CY	PROP. 4" CONC. RIPRAP
5694	3		EA	PROP. G.E.T.

△B.M. & HORIZONTAL DATA

H 83 - 7
#5 I.R.
STA. 1547+36, 144.4' LT.
X = 2,107,907.57
Y = 195,961.20
ELEV. = 105.06

B.M. #13
#5 I.R.
≈STA. 1549+00 (LT.) (SEE PLAN)
ELEV. = 104.88

B.M. #12
#5 I.R.
≈STA. 1539+05, LT.
(SEE PLAN)
ELEV. = 106.12'

℄ CONTROL (I.R. W/ALUM. CAP)

STA. 1540+00, 140' LT.
STA. 1545+00, 140' LT.
STA. 1550+00, 140' LT.

LEGEND

- PGL RDWY. (A)&(F)
- OVERLAY 171#/SY ACP (TY D)
- 4" CONC. RIPRAP
- ST. ACP MILLED
- CANTILEVER SIGN (SEE SIGNING SHEETS FOR DETAILS)
- HIGH MAST LUMINAIRE

ROADWAY

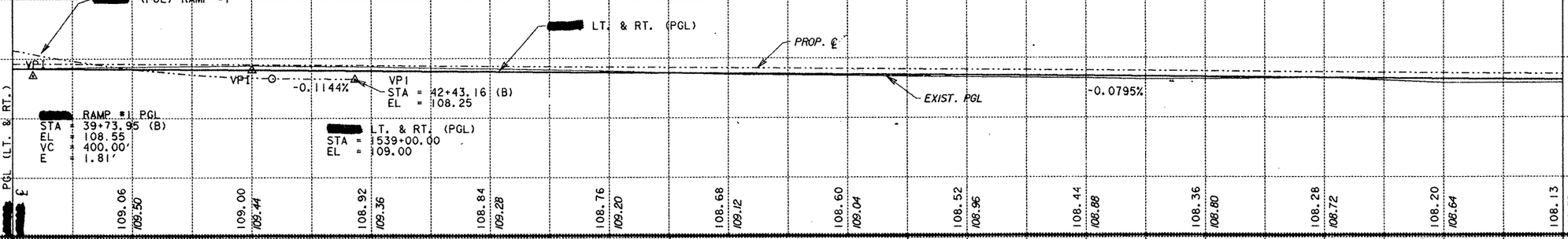

DITCH

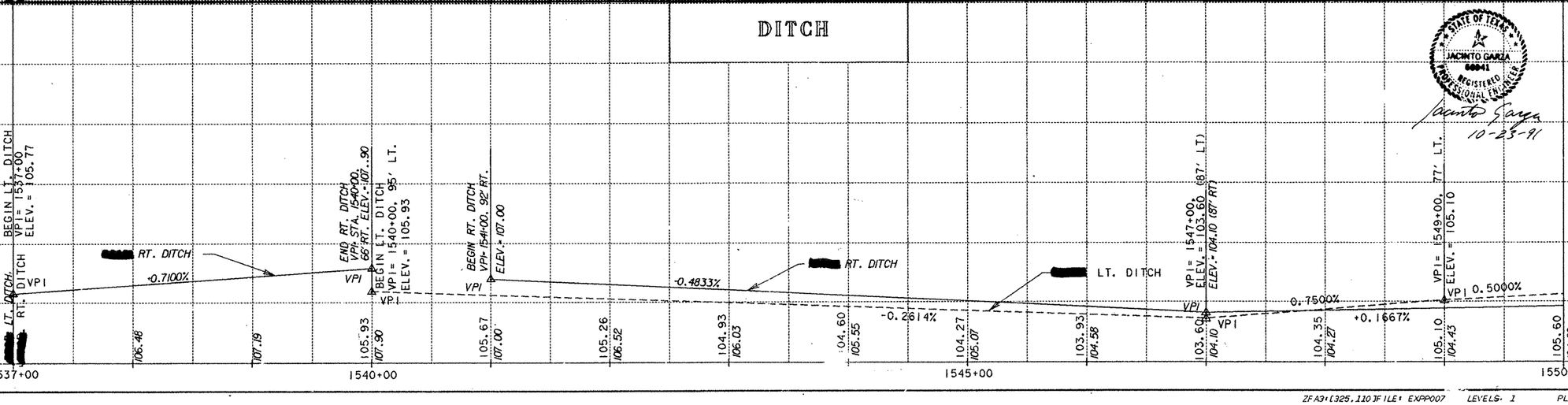

STATE OF TEXAS
JACINTO GARZA
68941
REGISTERED PROFESSIONAL ENGINEER
10-23-91

US 83 PLAN PROFILE

STA. 1537+00 TO STA. 1550+00

SCALE:
PLAN 1" = 50' HORIZ.
PROFILE 1" = 5' VERT.

SHEET 8 OF 10 SHEETS

FED. RD. DIV. NO.	FEDERAL AID PROJECT NO.	SHEET NO.
6	NH 92( )M	48

STATE	DIST.	COUNTY
TEXAS	21	HIDALGO

CONT.	SECT.	JOB	HIGHWAY NO.
39	17	97	US83

ZFA3:(325,110)FILE: EXPP007 LEVELS: 1 PLOT @ 1"=50' PRF: EXPP7

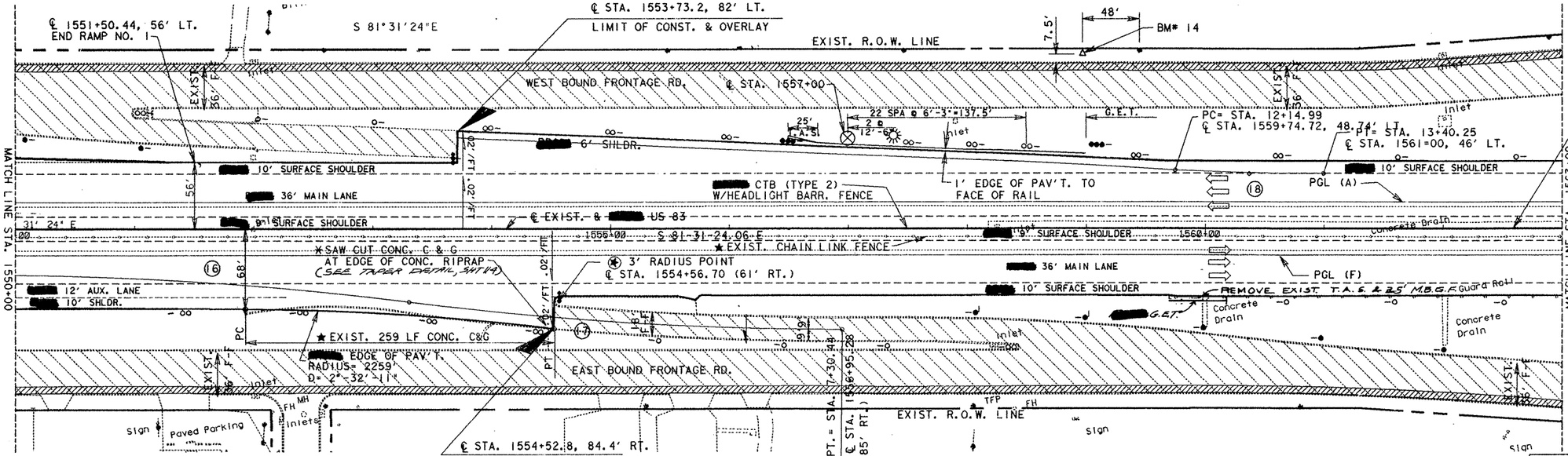

ROADWAY

SHEET TOTALS FOR DELINEATORS & OBJECT MARKERS

- DELIN. TY (D-SY)(B) 7
- DELIN. TY (D-SW)(B) 10
- DELIN. TY (D-DW)(B) 13
- OBJ. MARKER (OM-2SR)(B) 3
- OBJ. MARKER (OM-2HR) 2
- OBJ. MARKER (OB-3D) ..... WINGED CHANNEL POST 35

SHEET TOTALS

ITEM	EST.	FINAL	UNIT	DESCRIPTION
100	1,300		LF	REMOVE CHAIN LINK FENCE
100	259		LF	REMOVE CONC. C & G
100	649		SY	REMOVE OLD CONC. (RIPRAP)
540	162.5		LF	[redacted] M.B.G.F.
540	1		EA	[redacted] T.A.S.
5694	2		EA	[redacted] G.E.T.
542	1		EA	REMOVE T.A.S.
542	25		LF	REMOVE M.B.G.F.

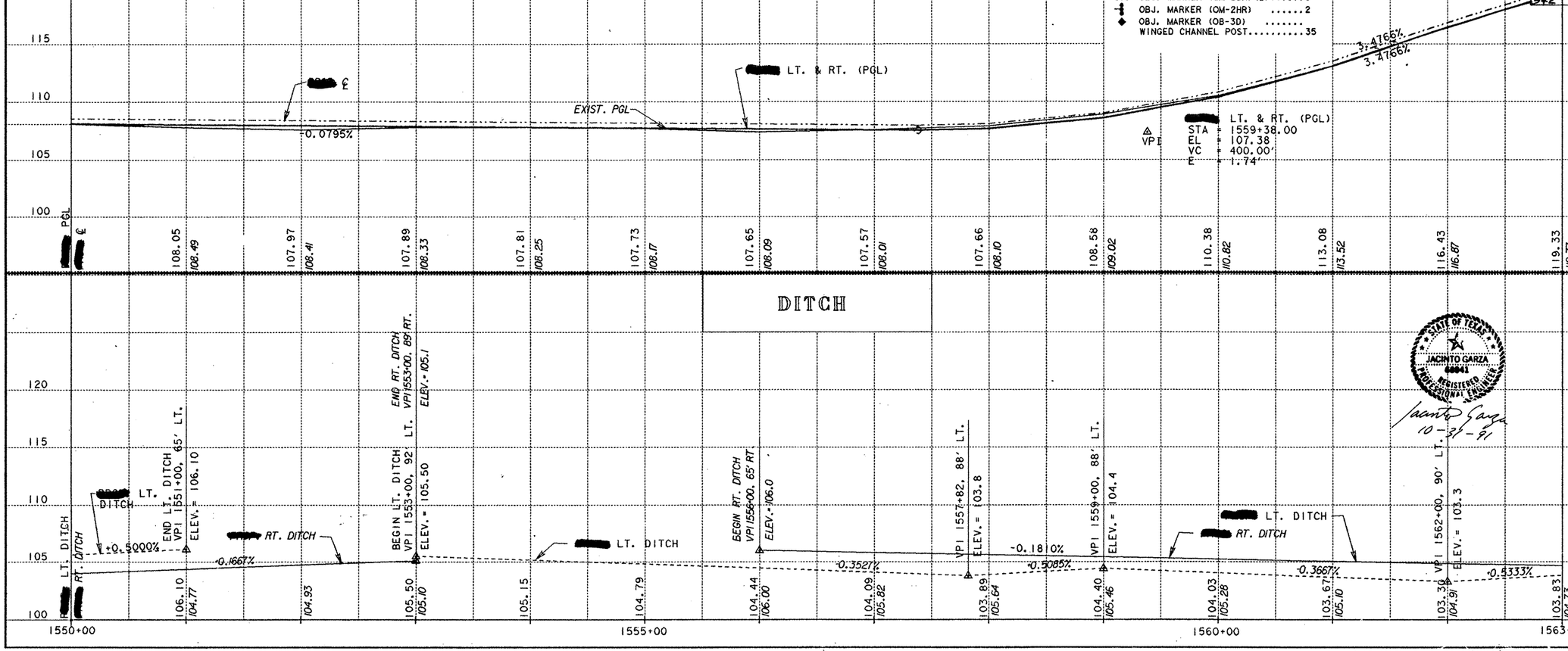

△ B.M. & HORIZONTAL DATA

B.M. #14
#5 I.R.
≈STA. 1558+96 (LT.) (SEE PLAN)
ELEV. = 104.50

℄ CONTROL: (IRON ROD W/ALUM. CAP)
STA. 1555+00, 140' LT.
STA. 1560+00, 140' LT.

LEGEND
- [redacted] PGL RDWY. (A)&(F)
- [redacted] OVERLAY 171#/SY ACP (TY D)
- EXIST. ACP [redacted] MILLED
- [redacted] CANTILEVER SIGN (SEE SIGN SHEETS FOR DETAILS)
- [redacted] HIGH MAST LUMINAIRE

STATE OF TEXAS — JACINTO GARZA — 68941 — REGISTERED PROFESSIONAL ENGINEER
10-31-91

US 83
PLAN PROFILE
STA. 1550+00 TO STA. 1563+00

SCALE:
PLAN 1"= 50' HORIZ.
PROFILE 1"= 5' VERT.

SHEET 9 OF 10 SHEETS

FED. RD. DIV. NO.	FEDERAL AID PROJECT NO.	SHEET NO.
6	NH 92( )M	49

STATE	DIST.	COUNTY
TEXAS	21	HIDALGO

CONT.	SECT.	JOB	HIGHWAY NO.
39	17	97	US83

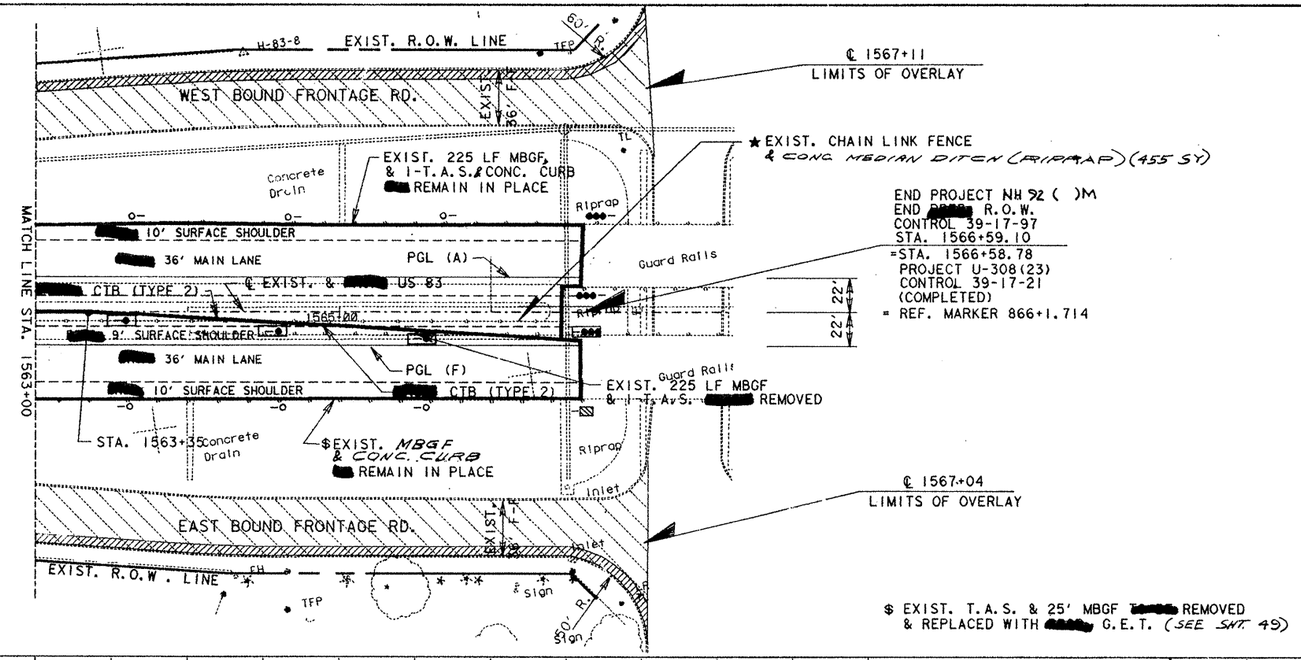

$ EXIST. T.A.S. & 25' MBGF REMOVED & REPLACED WITH G.E.T. (SEE SHT. 49)

★ REMOVED UNDER ITEM 100 "PREP ROW"

⊛ TO REMAIN IN PLACE

SHEET TOTALS FOR DELINEATORS & OBJECT MARKERS

DELIN. TY (D-SW) (B)	6
OBJ. MARKER (OM-3R) (B)	1
TRAF. BAR. DEL. TY (D-SY) (B)	3
TRAF. BAR. DEL. (OM-2SR)	1
OBJ. MARKER (OM-2SR) (B)	2
WINGED CHANNEL POST	9

SHEET TOTALS

ITEM	EST.	FINAL	UNIT	DESCRIPTION
100	455		SY	REMOVE OLD CONC. (RIPRAP)
100	350		LF	REMOVE CHAIN LINK FENCE
542	225		LF	REMOVE MBGF
542	1		EA	REMOVE TERM. ANCH. SECT.
5694	0		EA	PROP. G.E.T.

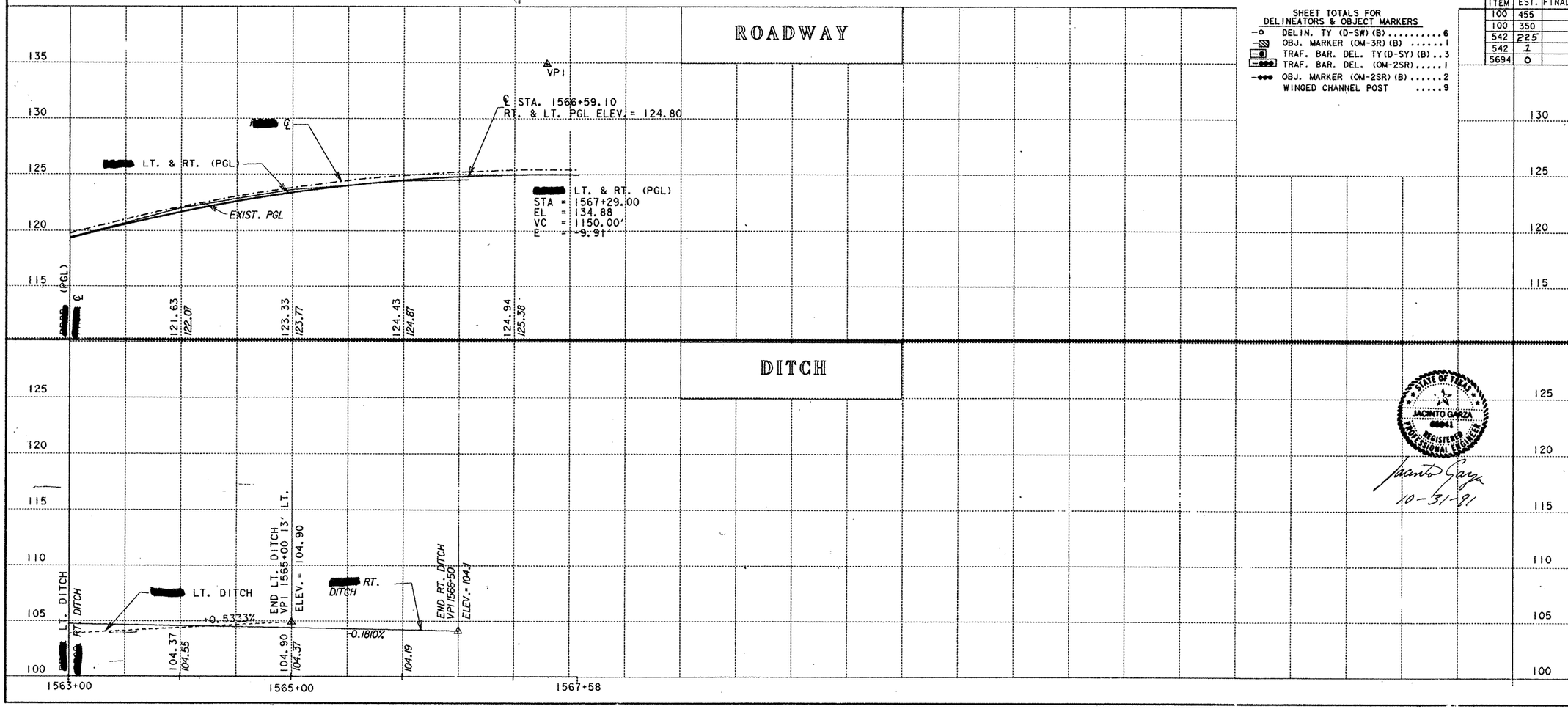

△ B.M. & HORIZONTAL DATA

H 83 - 8
#5 I.R.
STA. 1564+36.6, 169.5' LT.
X = 2,109,593.28
Y = 195,735.37
ELEV. = 104.11

℄ CONTROL: IRON ROD W/ALUM. CAP
STA. 1565+00, 140' LT.
STA. 1570+00, 140' LT.

LEGEND

- PGL RDWY. (A) & (F)
- OVERLAY 171#/SY ACP (TY D)
- EXIST. ACP MILLED

STATE OF TEXAS
JACINTO GARZA
6041
REGISTERED PROFESSIONAL ENGINEER

Jacinto Garza
10-31-91

US 83
PLAN PROFILE

STA. 1563+00 TO STA. 1567+58

SCALE:
PLAN 1" = 50' HORIZ.
PROFILE 1" = 5' VERT.

SHEET 10 OF 10 SHEETS

FED. RD. DIV. NO.	FEDERAL AID PROJECT NO.		SHEET NO.
6	NH 92 ( )M		50
STATE	DIST.	COUNTY	
TEXAS	21	HIDALGO	
CONT.	SECT.	JOB	HIGHWAY NO.
39	17	97	US83

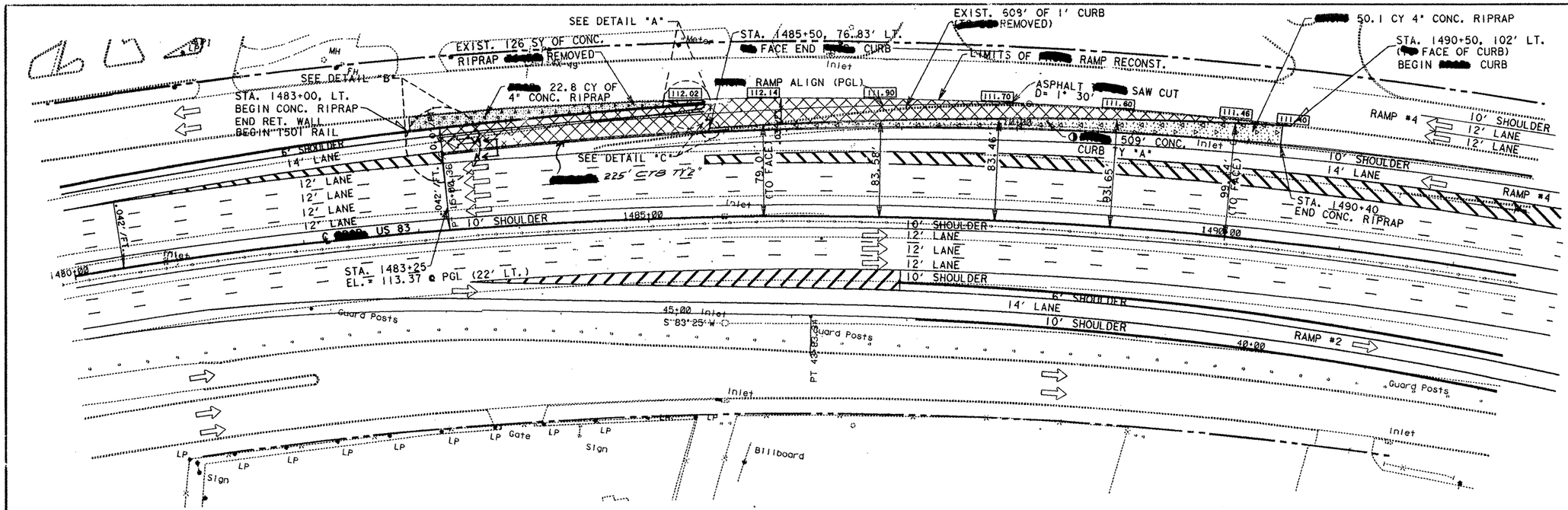

CURVE DATA
RAMP ALIGNMENT (PGL) (B)

P.I.= STA. 22+55.58
= ℄ STA. 1481+29.47, 175.95' LT.
X=2101302.58
Y=196641.85
Δ=24° 25' 59".06 RT.
R= 4413.58'
D= 1°-17'-53".42
T= 955.58'
L= 1882.12'

◑ THE FACE OF THE CONC. CURB TY "A" IS 12' RIGHT FROM ℄ ALIGNMENT (B)

RAMP PAVEMENT TRANSITION

STA. 1483+25, 66' LT. 0.0'/FT.
STA. 1485+50, 76.83' LT. - 0.03'/FT.

LEGEND:

XXX.XX FINISHED GRADE ELEVATIONS.

ALIGNMENT RELATIONSHIP

℄ STA. US 83	℄ STA. (B) RAMP (PGL)	℄ STA. OFFSET (LT)
1483+25	24+37.72	80.01
1483+75	24+88.81	81.84
1484+00	25+14.37	82.78
1484+25	25+39.93	83.74
1484+75	25+91.08	85.71
1485+00	26+16.66	86.73
1485+25	26+42.25	87.77
1485+75	26+93.46	89.90
1486+00	27+19.08	91.00
1486+25	27+44.70	92.11
1486+75	27+95.97	94.40
1487+00	28+21.62	95.57
1487+25	28+47.28	96.77
1487+75	28+98.62	99.21
1488+00	29+24.30	100.46
1488+25	29+50.00	101.72
1488+75	30+01.41	104.32
1489+00	30+27.13	105.64
1489+25	30+52.86	106.99
1489+75	31+04.35	109.73
1490+00	31+30.11	111.13
1490+25	31+55.88	112.55
1490+50	31+81.67	113.99

SHEET TOTALS

ITEM	EST.	UNIT	DESCRIPTION
249	308	CY	FLEX. BASE
252	5.5	STA.	SALV. & REPLACE BASE APPROX. 8" & 169.5 CY
262	5.2	TON	LIME 1% (NEW) FLEX. BASE
262	5.1	TON	LIME 2% (SALV.) SALVAGE
310	278	GAL.	ASPH. MAT'L. (MC-30)
340	238	TON	TY"D" ACP (139 SY)
450	228.5	LF	T501 RAIL
5653	1	EA.	GREAT (TY"A") (6-BAY) (2')
514	225	LF	CTB TY 2 (SPL.)
421	30.8	CY	*CLASS"C" CONC. (MISC.)
432	72.9	CY	CONC. RIPRAP (4") CLASS "B"
100	126	SY	REMOVE OLD CONC. RTPRAP
100	608	LF	REMOVE OLD CONC. CURB
530	509	LF	CONC. CURB TY "A"

* FOR T501 FOUNDATION & END BLOCK .135 CY/LF OF T501 RAIL

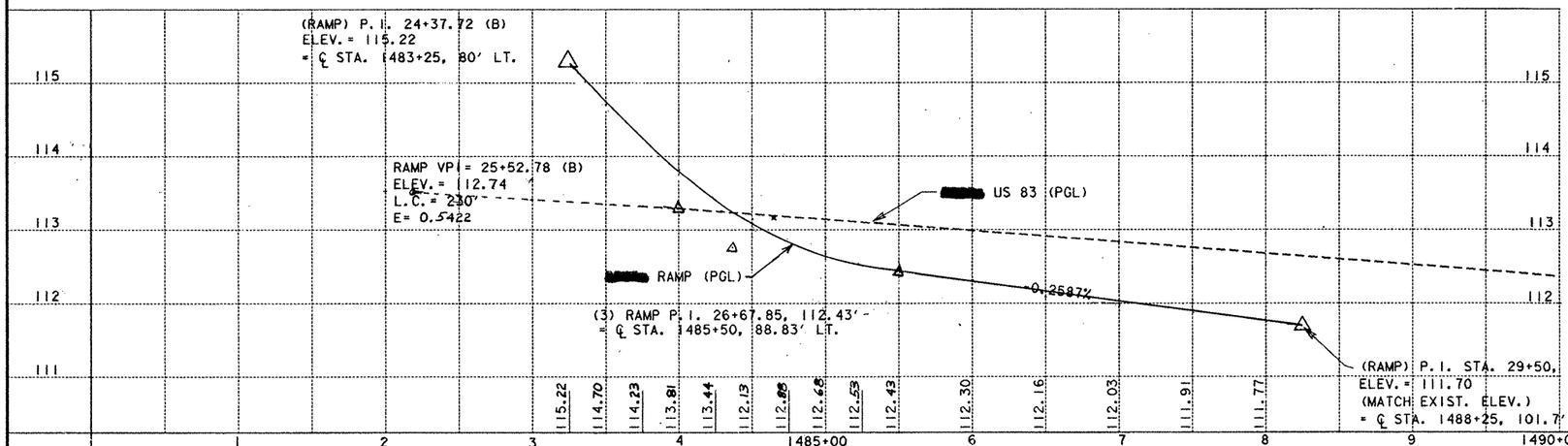

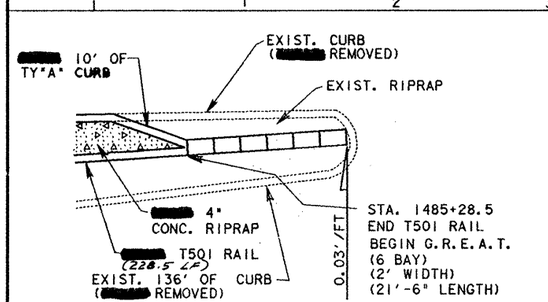

DETAIL "A"

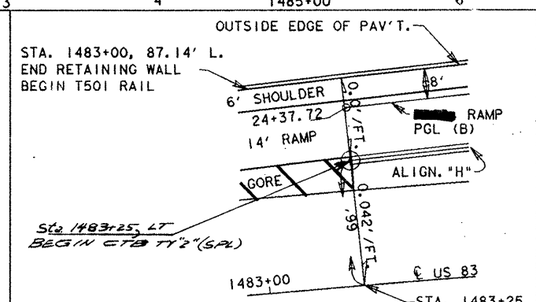

DETAIL "B"

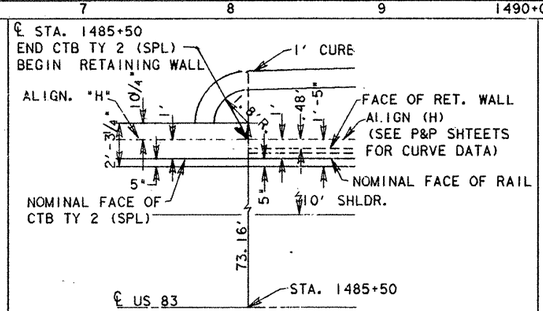

DETAIL "C"

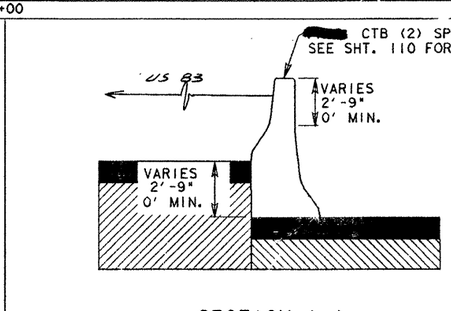

SECTION A-A

Jacinto Garza
3-1-92

ROADWAY DETAILS

STA. 1480+00 TO
STA. 1492+55

SCALE:
PLAN 1"= 50' HORIZ.
PROFILE 1"= 1' VERT.

SHEET 1 OF 1 SHEETS

FED. RD. DIV. NO.	FEDERAL AID PROJECT NO.	SHEET NO.
6	NH 92 ( ) M	50A

STATE	DIST.	COUNTY
TEXAS	21	HIDALGO

CONT.	SECT.	JOB	HIGHWAY NO.
39	17	97	US83/281

FILE: ZEA7:F325L102.1PR002.DG

SUMMARY OF TEMPORARY EROSION, SEDIMENTATION AND WATER POLLUTION PREVENTION & CONTROL

SHEET NO.	ITEM 160 FURNISHING & PLACING TOPSOIL (CY)		ITEM 164 SEEDING FOR EROSION CONTROL (SY)		ITEM 5782 TEMPORARY ROCK FILTER DAMS (LF)		ITEM 5797 TEMPORARY SEDIMENT CONTROL FENCE (LF)		ITEM 5788 TEMPORARY EROSION AND SEDIMENT CONTROL				ITEM 5084 CONST. DRIVEWAYS (TY PB-2) (SY)		ITEM 5790 REVET MATTRESSES AND GABIONS								ITEM 5791 PIPE SLOPE DRAINS (LF)		ITEM 5792 PAVED FLUMES (SY)		ITEM 5793 BALED HAY FOR EROSION (EA)	
									SEDIMENT TRAP (EA)		FILTER DAM (LF)				REVET MATTRESSES (SY)		STONE FILLED MATTRESS (CY)		GABION (LF)		STONE FILLED GABION (CY)							
	EST.	FIN.	EST.	FIN.	EST.	FIN.	EST.	FIN.	EST.	FIN.	EST.	FIN.	EST.	FIN.	EST.	FIN.	EST.	FIN.	EST.	FIN.	EST.	FIN.	EST.	FIN.	EST.	FIN.	EST.	FIN.
51							24																					
52							72						347															
53							24						234															
54													187															
64							72						203															
65							52																					
66							76																					
67							48																					
68							24																					
69							896						312															
70							48																					
71							52																					
72							76																					
1569+50- 1570+00													78															
TOTAL:							1464						1361															

NOTE:
ASPHALTIC MATERIAL USED FOR RAMPS FOR ENTRANCE/EXITS NOT TO BE PAID FOR DIRECTLY BUT TO BE SUBSIDIARY TO ITEM 5789 "STABILIZED CONSTRUCTION ENTRANCES".

ESTIMATE & QUANTITY

SHEET 2 OF 4 SHEET

FED. RD. DIV. NO.	STATE AID PROJECT NO.		SHEET NO.
6	NH 92 (50) M		5DB
STATE	STATE DIST. NO.	COUNTY	
TEXAS	21	HIDALGO	
CONT.	SECT.	JOB	HIGHWAY NO.
39	17	97	US 281/83

SITE DESCRIPTION

PROJECT LIMITS: Along US 83 0.3 miles west of Sugar Rd. overpass to "I" Rd. In Pharr; Along US 281 - 0.5 miles north of FM 495 to US 83/281 Intersection.

PROJECT DESCRIPTION: Construction of an interchange facility consisting of grading, structures, asphaltic concrete pavement, flexible base, lime treated subgrade, signing, illumination, pavement markings and landscaping.

MAJOR SOIL DISTURBING ACTIVITIES: Soil disturbing activities will include preparing the Right Of Way: Clearing and Grubbing; Excavation and embankment for roadways and Storm Sewers; Erosion and Sediment Controls; Topsoil work for final planting and seeding; Ingress/Egress to construction site.

TOTAL PROJECT AREA: 112 Acres

TOTAL AREA TO BE DISTURBED: 60 Acres (54%)

WEIGHTED RUNOFF COEFFICIENT (AFTER CONSTRUCTION): 0.65

EXISTING CONDITION OF SOIL & VEGETATIVE COVER AND % OF EXISTING VEGETATIVE COVER: The existing soil is sandy clay loam and is covered with approximately 10% of various grasses which are in good condition.

NAME OF RECEIVING WATERS: Pharr/McAllen lateral is part of Hidalgo county's Master Drainage System. This lateral will receive all 112 acres of drainage at 2 locations:

1) One location is located North of FM 495 and West of US 281. This outfall will receive approximately 50% of total drainage area from this project.

2) The other location is located North of FM 495 and East of US 281. This outfall will receive approximately 50% of total drainage area from this project.

The Pharr/McAllen lateral will ultimately flow into the Laguna Madre. This portion of the Laguna Madre is located within stream segment number 2491.

STORM WATER POLLUTION PREVENTION PLAN CERTIFICATION

"I certify under penalty of law that I understand the terms and conditions of the general National Pollutant Discharge Elimination System (NPDES) permit that authorizes the storm water discharges associated with industrial activity from the construction site identified as part of this certification."

Name and title of Signee: Paul S. Thorp Project Manager

Name, address, and phone number of the contracting firm:

GILBERT TEXAS CONSTRUCTION CORP.
101 EXPRESSWAY 83, SUITE H
PHARR, TEXAS 78577

Date of Certification: 9-28-92

EROSION AND SEDIMENT CONTROLS

SOIL STABILIZATION PRACTICES:

- ____ TEMPORARY SEEDING
- _X_ PERMANENT PLANTING, SODDING, OR SEEDING
- _X_ MULCHING
- ____ SOIL RETENTION BLANKET
- ____ BUFFER ZONES
- ____ PRESERVATION OF NATURAL RESOURCES

OTHER: Disturbed areas on which construction activity has ceased (temporarily or permanently) shall be stabilized within 14 days unless activities are scheduled to resume within 21 days.

STRUCTURAL PRACTICES:

- _X_ SILT FENCES
- ____ HAY BALES
- ____ ROCK BERMS
- ____ DIVERSION, INTERCEPTOR, OR PERIMETER DIKES
- ____ DIVERSION, INTERCEPTOR, OR PERIMETER SWALES
- ____ DIVERSION DIKE AND SWALE COMBINATIONS
- ____ PIPE SLOPE DRAINS
- ____ PAVED FLUMES
- _X_ ROCK BEDDING AT CONSTRUCTION EXIT
- ____ TIMBER MATTING AT CONSTRUCTION EXIT
- ____ CHANNEL LINERS
- ____ SEDIMENT TRAPS
- ____ SEDIMENT BASINS
- ____ STORM INLET SEDIMENT TRAP
- ____ STONE OUTLET STRUCTURES
- ____ CURBS AND GUTTERS
- ____ STORM SEWERS
- ____ VELOCITY CONTROL DEVICES

OTHER: ____

NARRATIVE - SEQUENCE OF CONSTRUCTION (STORM WATER MANAGEMENT) ACTIVITIES:

The order of activities will be as follows:

1. Install silt fences around all inlets that will drain all unstable areas.
2. Place rock bedding as entrances to and from construction activity, including at stockyard; also, used asphaltic concrete pavement as entrance ramps to construction zones.
3. Remove any sediment from pavement due to tracking, temporary entrance/exit ramps, or rains which have already occured. This sediment shall be disposed of properly as directed by the engineer
4. Install silt fences along embankments under Phase III construction where sediment will drain onto frontage road and into curbed inlets.
5. When all construction activity is complete and the site is stabilized and approved by the Project Engineer, remove all temporary structural controls.

STORM WATER MANAGEMENT: Storm water drainage will be provided by conc. curb & gutter, grated drop inlets, curb opening inlets and a storm drain pipe system. This system will carry drainage from areas within the R.O.W. as well as from side streets to lows in the highway where cross drainage occurs.

OTHER EROSION AND SEDIMENT CONTROLS:

MAINTENANCE: All erosion and sediment controls will be maintained in good working order. If a repair is necessary, it will be done at the earliest date possible, but no later than 7 calendar days after the surrounding exposed ground has dried sufficiently to prevent further damage from heavy equipment. The areas adjacent to creeks and drainageways shall have priority followed by devices protecting storm sewer inlets.

INSPECTION: An inspection will be performed by a TxDOT inspector every week as well as after every half inch or more of rain (as recorded on a non-freezing rain gauge to be located at the Project Site). An Inspection and Maintenance Report will be made per each inspection. Based on the inspection results, the controls shall be revised per the inspection report.

WASTE MATERIALS: All materials will be collected and stored in a securely lidded metal dumpster. The dumpster will meet all state and local city solid waste management regulations All trash and construction debris from the site will be deposited in the dumpster. The dumpster will be emptied as necessary or as required by local regulation, and the trash will be hauled to a local dump. No construction waste material will be buried on site.

HAZARDOUS WASTE (INCLUDING SPILL REPORTING): At a minimum, any products in the following catagories to be hazardous: Paints, Acids for cleaning masonry sufaces, Cleaning Solvents, Aphalt products Chemical additive for soil stabilization, or Concrete curing compounds and additives. In the eventof a spill which may be hazardous, the spill Coordinator should be contacted immediately. Emptying of excess concrete shall not be allowed onsite. Likewise, washout of concrete trucks shall not be performed onsite. These discharges are considered non-allowable non-storm water discharges. Concrete trucks shall never be allowed to dump into storm drains or sanitary sewers.

SANITARY WASTE: All sanitary waste will be collected from the portable units as necessary or as required by local regulation by a licensed sanitary waste management contractor.

OFFSITE VEHICLE TRACKING:

- _X_ HAUL ROADS DAMPENED FOR DUST CONTROL
- ____ LOADED HAUL TRUCKS TO BE COVERED WITH TARPAULIN
- _X_ EXCESS DIRT ON ROAD REMOVED DAILY
- _X_ STABILIZED CONSTRUCTION ENTRANCE

OTHER: ____

REMARKS: Disposal areas, stockpiles, and haul roads shall be constructed in a manner that will minimize and control the amount of sediment that may enter receiving waters. Disposal areas shall not be located in any wetland, waterbody or streambed.

Construction staging areas and vehicle maintenance areas shall be constructed by the Contractor in a manner to minimize the runoff of pollutants.

All waterways shall be cleared as soon as practicable of temporary embankment, temporary bridges, matting, falsework, piling, debris or other obstructions placed during construction operations that are not a part of the finished work.

TxDOT STORM WATER POLLUTION PREVENTION PLAN (SW3P)

FED. RD. DIV. NO.	FEDERAL AID PROJECT NO.		SHEET NO.
6	NH 92 (50) M		50C
STATE	STATE DIST. NO.	COUNTY	
TEXAS	21	HIDALGO	
CONT.	SECT.	JOB	HIGHWAY NO.
39	17	97	US 83/281

NOTE: BOTTOM OF THE FILTER FABRIC IS BURIED IN TRENCH, THE SAME AS WHEN IT IS INSTALLED AS A SILT FENCE. SEE THE FACT SHEET ON "SILT FENCES".

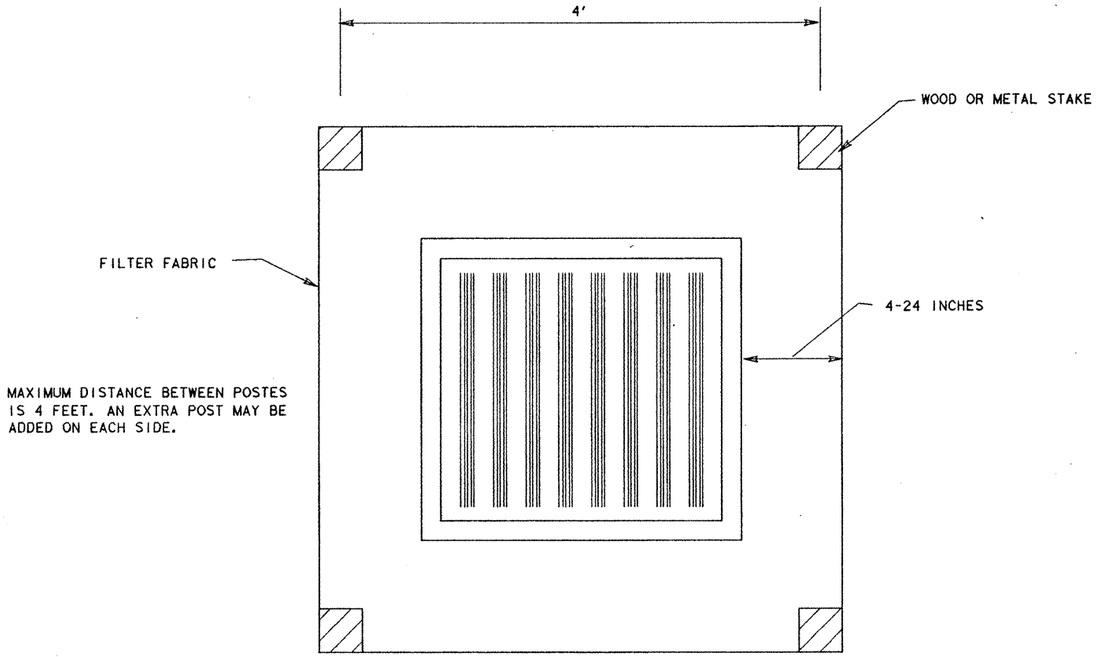

THIS METHOD OF INLET PROTECTION IS APPLICABLE WHERE THE INLETS DRAINS A RELATIVELY FLAT AREA (SLOPES LESS THAN 3%) WHERE SHEET OR OVERLAND FLOW IS TYPICAL. THE METHOD IS NOT RECOMMENDED FOR INLETS RECEIVING CONCENTRATED FLOWS, SUCH AS IN STREETS OR HIGHWAY DITCHES.

SILT FENCE INLET SEDIMENT FILTER

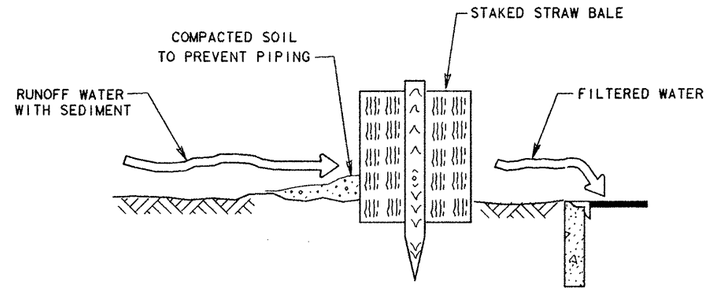

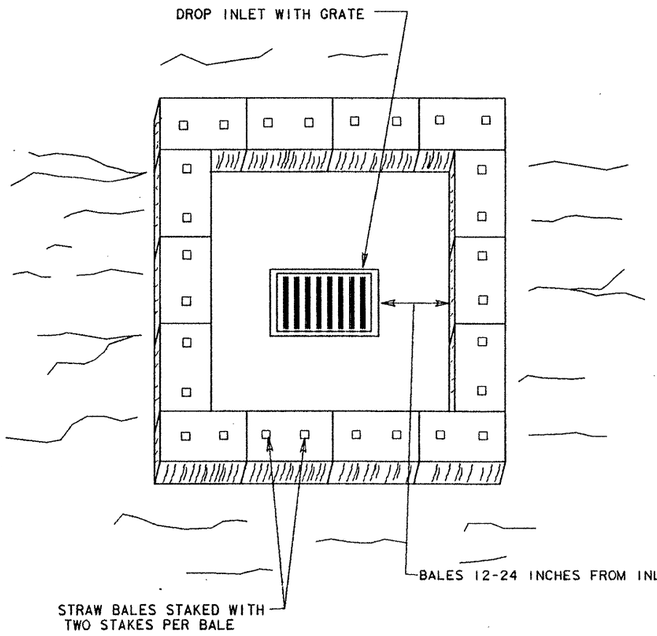

THIS METHOD OF INLET PROTECTION IS APPLICABLE WHERE THE INLETS DRAINS A RELATIVELY FLAT AREA (SLOPES LESS THAN 3%) WHERE SHEET OR OVERLAND FLOW IS TYPICAL. THE METHOD SHOULD NOT BE USED FOR INLETS RECEIVING CONCENTRATED FLOWS,

STRAW BALE INLET SEDIMENT FILTER

TEMPORARY EROSION CONTROL

FED. RD. DIV. NO.	FEDERAL AID PROJECT NO.		SHEET NO.
6	NH 92(50)M		500
STATE	STATE DIST. NO.	COUNTY	
TEXAS	21	HIDALGO	
CONT.	SECT.	JOB	HIGHWAY NO.
39	17	97	US 83/281

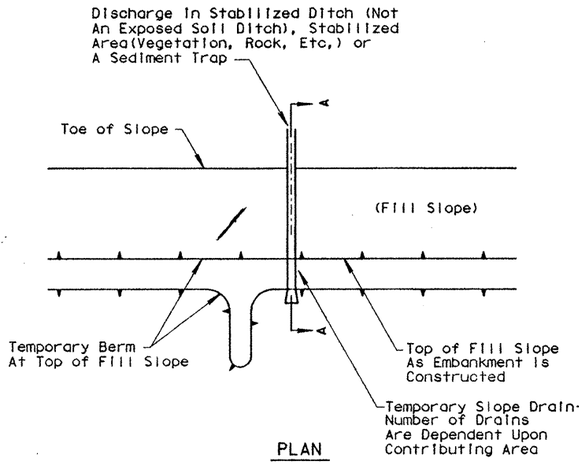

PLAN

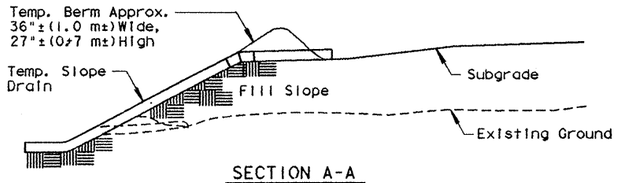

SECTION A-A
(For Fill Slopes)

TEMPORARY SLOPE DRAIN SHALL BE USED AT THE TOP OF FILL SLOPE AS EMBANKMENT IS CONSTRUCTED TO PREVENT EXCESSIVE EROSION UNTIL SHOULDERS ARE CONSTRUCTED AND THE SLOPES ARE SEEDED AND MULCHED. THE INTENT IS TO GET PERMANENT VEGITATIVE COVER AS SOON AS POSSIBLE.

TEMPORARY SLOPE DRAIN

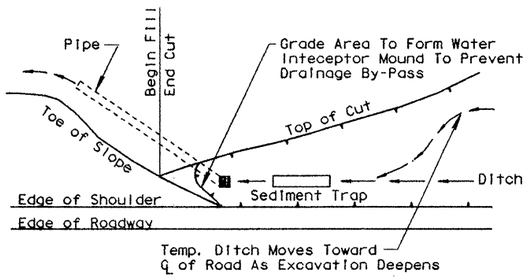

PLAN

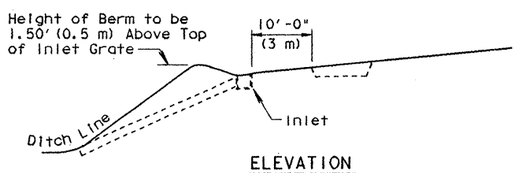

ELEVATION

INSTALL PIPE AND INLET OF REQUIRED SIZE TO CARRY COMPUTED WATER FLOW. CONSTRUCT BERM TYPE DAM TO PREVENT WATER OVERFLOW. IT IS CONTEMPLATED THAT THE SLOPE PIPE WILL BE INSTALLED AT THE SAME TIME THE INLET IS INSTALLED. WHEN THE SLOPE PIPE CANNOT BE INSTALLED AT THE SAME TIME, A TEMPORARY SLOPE DRAIN SHALL BE USED IN CONJUNCTION WITH THE INLET TO ALLOW FOR SAFE DISCHARGE OF WATER UNTIL THE PERMANENT SLOPE PIPE IS INSTALLED.

PERMANENT SLOPE DRAIN

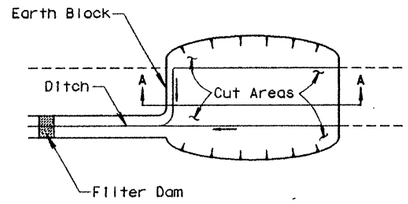

PLAN

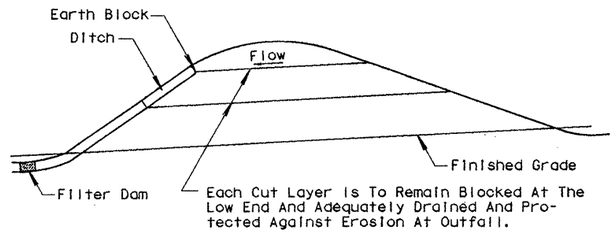

TYPICAL CUT TREATMENT

SECTION A-A

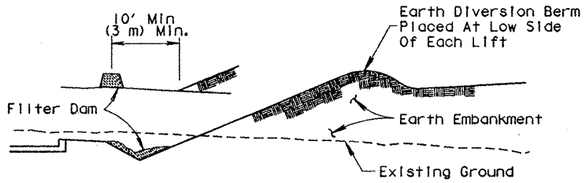

TYPICAL FILL TREATMENT

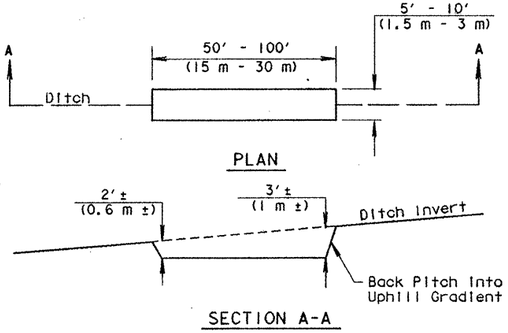

PLAN

SECTION A-A

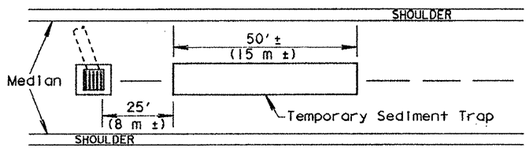

TEMPORARY MEDIAN SEDIMENT TRAP

THE TEMPORARY SEDIMENT TRAP SHALL BE CLEANED WHEN IT IS APPROXIMATELY 50% FILLED WITH SEDIMENT. TEMPORARY SEDIMENT TRAPS SHALL BE PLACED IN THE FOLLOWING LOCATIONS:

1. WITHIN SURFACE DRAINAGE DITCHES SPACED @ 500'±(152 m ±) ON CENTER.
2. IMMEDIATELY PRECEEDING DITCH INLETS,
3. JUST BEFORE THE DRAINAGE ENTERS A WATER COURSE, AND
4. JUST BEFORE THE DRAINAGE LEAVES THE RIGHT OF WAY.

THE LOCATION AND SIZE OF ADDITIONAL TEMPORARY SEDIMENT TRAPS SHALL BE AS DIRECTED BY THE ENGINEER.

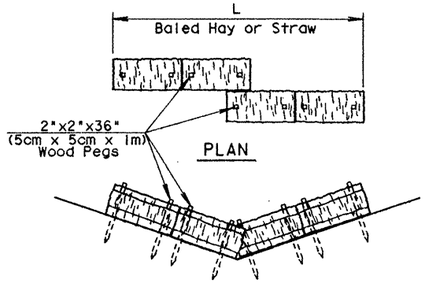

PLAN

ELEVATION

PLACEMENT FOR BALED HAY FILTER DAMS

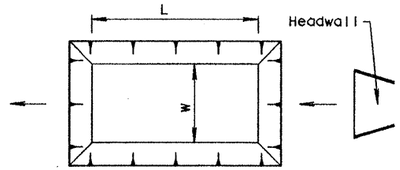

DIMENSION L AND W SHALL BE AS SHOWN IN THE PLANS OR AS DIRECTED BY THE ENGINEER.

PLAN

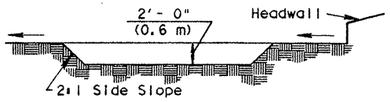

SECTION

SEDIMENT TRAP

EMBANKMENT FILL IN WATER

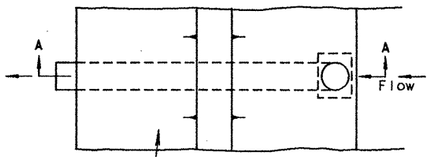

PLAN

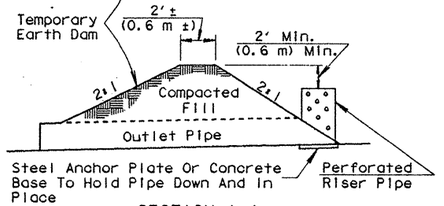

SECTION A-A

TEMPORARY DITCH BASIN

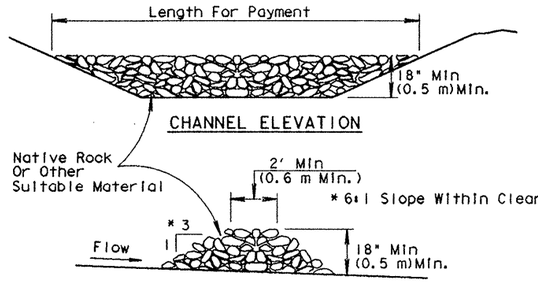

SECTION

FILTER DAMS

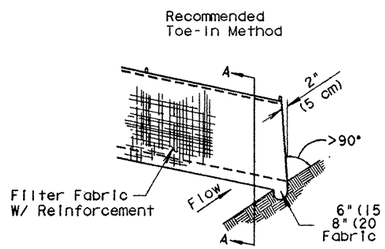

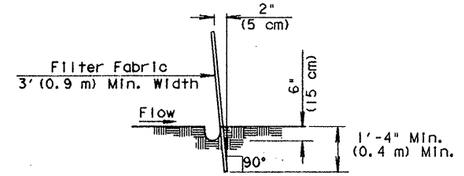

REINFORCEMENT AND FILTER FABRIC TO BE ATTACHED AS DIRECTED BY THE ENGINEER.

SECTION A-A

SEDIMENT CONTROL FENCE

Note: Poultry netting shall not be allowed as a reinforcement material.

TEMPORARY EROSION, SEDIMENT AND WATER POLLUTION CONTROL MEASURES

ALL DIMENSIONS AND LOCATIONS NOT INDICATED, FOR ITEMS APPEARING ON THIS SHEET OR ON THE PLANS, SHALL BE DIRECTED BY THE ENGINEER

STATE

FED. RD. DIV. NO.	FEDERAL AID PROJECT NO.		SHEET NO.
6	NH 92 (50) M		50E
STATE	STATE DIST. NO.	COUNTY	
TEXAS	21	HIDALGO	
CONT.	SECT.	JOB	HIGHWAY NO.
39	17	97	US 83/281

7EA3:5325(102 FILE: EROSION.DGN

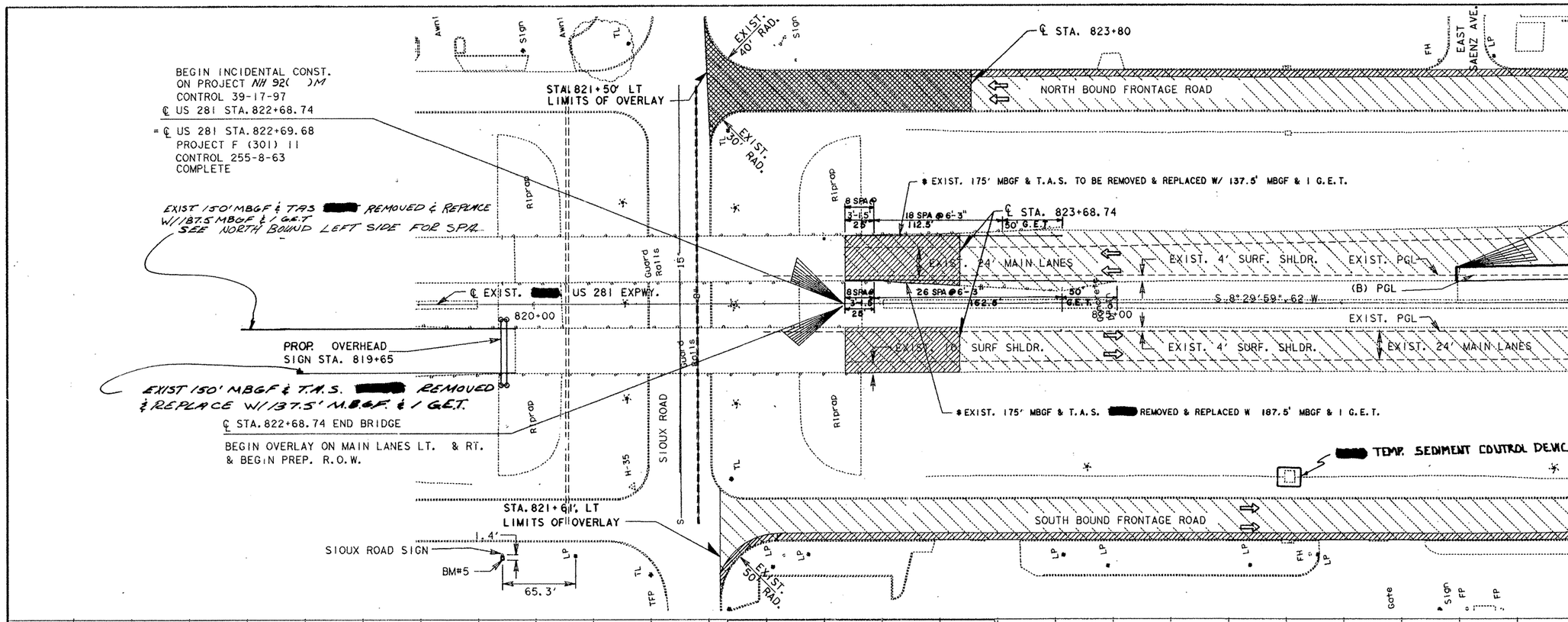

* [redacted]. POST SPACING IN ACCORDANCE W/MBGF-91, BED-91 & GET-91A STDS.

SHEET TOTALS

ITEM	EST.	UNIT	DESCRIPTION
540	650		[redacted] MBGF
542	650		REMOVE MBGF
542	4		REMOVE T.A.S.
5649	4		[redacted] G.E.T.

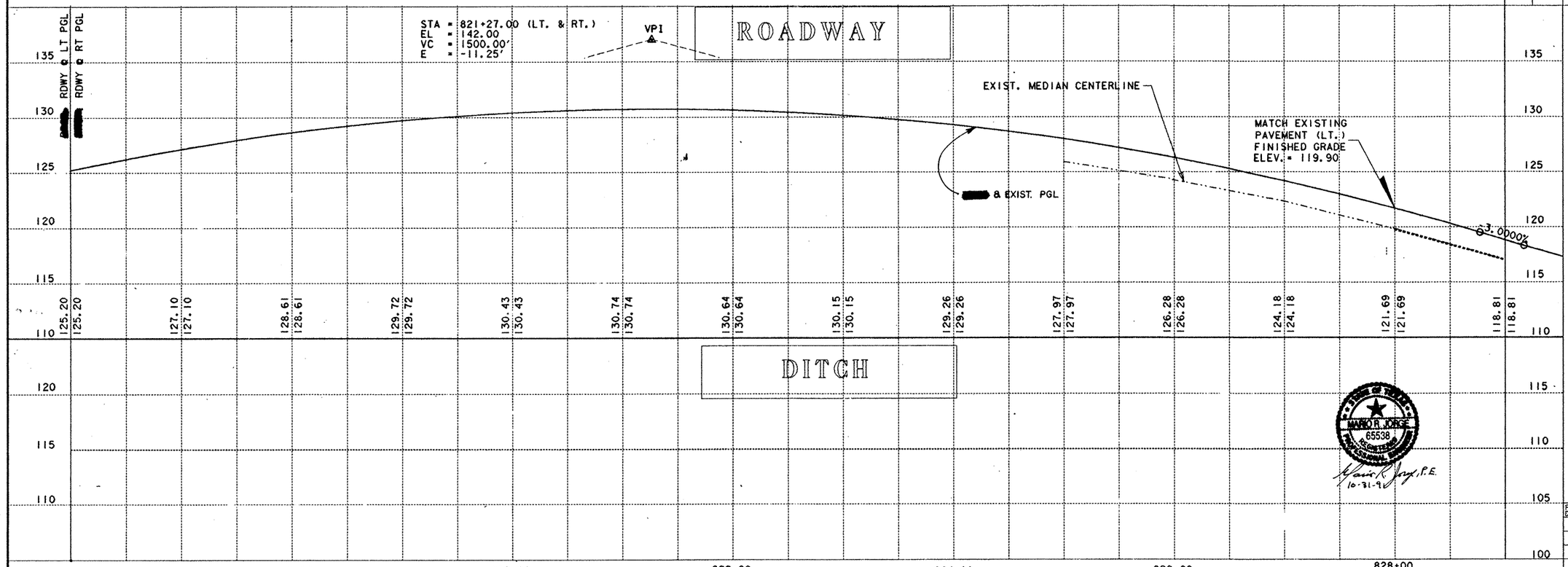

△ B.M. & HORIZONTAL DATA

H-281 - 35
#5 I.R.
STA. 820+85.54, 155.2' RT.
X = 2,104,953.47
Y = 200,808.57
ELEV. = 107.95

B.M. #5
#5 I.R.
STA. 819+73 (RT.) (SEE PLAN)
ELEV. = 106.6

LEGEND

- [redacted] OVERLAY 171#/SY ACP (TY D)
- [redacted] (910 SY) OF RDWY. RECONST.
- EXIST. ACP [redacted] MILLED
- EXIST MEDIAN CENTER LINE
- [redacted] MEDIAN CENTER LINE
- RIGHT (PGL)
- LEFT (PGL)

US 281 PLAN PROFILE

STA. 819+00 TO STA. 829+00

SCALE:
PLAN 1" = 50' HORIZ.
PROFILE 1" = 5' VERT.

SHEET 1 OF 4 SHEETS

FED. RD. DIV. NO.	FEDERAL AID PROJECT NO.	SHEET NO.
6	NH 92 (50)M	51

STATE	DIST.	COUNTY
TEXAS	21	HIDALGO

CONT.	SECT.	JOB	HIGHWAY NO.
39	17	97	US281

STATE OF TEXAS MARIO R. JORGE 65538 REGISTERED PROFESSIONAL ENGINEER
Mario R. Jorge, P.E. 10-31-9

DATE REVISED: 06/24/91 ZEA3:[325.7]0 TFILE:1287PP001 LEVELS: 1-30 PLOT @ 1" = 50' IPARM= SAME

RENDON AVE. | GRACIA ST. | EAST DIAZ AVE. | EXIST R.O.W. LINE

NORTH BOUND FRONTAGE ROAD

TEMP. SEDIMENT CONTROL DEVICE

℄ STA. 832+00
EXIST. TY "CC" INLET
(REMAIN IN PLACE)

℄ STA. 830+52.85
BEGIN RIGHT MAIN LANE CONSTRUCTION

EXIST. CONC. MED. DITCH
REMAIN IN PLACE

(B) PC 833+06.68
(C) PC 833+40.16

STA. 835+09.9 LT.

TEMP. SEDIMENT CONTROL DEVICE

DRAIN
STA. 842+00

DRAIN
STA. 840+00

CURB TY "II"

10' SURF. SHLDR.

4' SHLDR.

(B) PT STA. 840+31.24
(C) PT 840+64.72

(B) PROP. PGL

24' MAIN LANE

S 8°-29'-59" W

BEG. CONC. MED. DITCH
*REMOVE RADIUS UNDER PREP. R.O.W.

℄ EXIST. & PROP. US281 EXPWY.

24'
24'

MATCH LINE STA. 829+00

830+00

835+00

840+00

MATCH LINE STA. 842+00

PGL (B)

24' MAIN LANE

PGL (C)

CONC. DRAIN
(SEE DETAIL BELOW)

4' SURF. SHLDR.

STA. 840+00
OVERHEAD
SIGN BRIDGE

G.E.T.

FOR BOTH SIDES

10' SURF. SHLDR.

CURB TY "II"

TEMP. SEDIMENT CONTROL DEVICE

PROP. DRAIN STA. 841+00

G.E.T. | 37.5' MBGF @ 6'-3" SPA. | B | A

MBGF (162'-6")

STA. 833+21.9

EXIST. DITCH GRADE SHALL REMAIN IN PLACE

STABILIZED ENT/EXIT WITH
ASPHALTIC RAMP

STA. 831+50
CANTILEVER SIGN BRIDGE

23.2

9.55'

BM #7

SOUTH BOUND FRONTAGE ROAD

BM #6

EXIST R.O.W. LINE

EXIST R.O.W. LINE

STABILIZED ENT./EXIT

36'

33.31'

℄ CURVE DATA US 281 ℄

P.I. STA. 837+64.71
X = 2,104,758.77
Y = 199,124.90
Δ = 3°-37'-17.71" LT.
D = 0°-30'
R = 11,459.16
T = 362.28
L = 724.32

A1 = 25' T.A.S.
B1 = 2 SPA @ 12'-6" = 25' M.B.G.F.
C1 = 18 SPA @ 6'-3" = 112'-6" M.B.G.F.

CONC. DRAIN
TO BE PAID FOR AS
ITEM 432 "CONC. RIP-RAP
(CL B) 4".
SEE SHEET NO. 512 FOR DETAILS

SHEET TOTALS				
ITEM	EST.	FINAL	UNIT	DESCRIPTION
530	326		LF	CONC. CURB TY "II"
432	94.7		CY	CONC. RIPRAP (CL. "B") 4"
540	575		LF	METAL BEAM GUARD FENCE
540	4		EA.	TERMINAL ANCHOR SECTION
5694	4		EA.	G.E.T.

DELINEATORS & OBJECT MARKERS

—●—	DELIN. TY (D-SY) (B) 6
—○—	DELIN. TY (D-SW) (B) 7
—●●●—	OBJ. MARKER (OM-2SR) (B) 8
—‡—	OBJ. MARKER (OM-2HR) (B) 1
	WINGED CHANNEL POSTS 22

ROADWAY

LT MAIN LANES (B)
⑤ PI=STA. 836+68.96 26.62 LT.
Δ=3°-37'-17.71" LT.
D=0°30'00"
T=362.2794
R=11459.1559'
L=724.3175'

RT. MAIN LANES (C)
⑥ PI=STA. 837+02.442-22.18 RT.
Δ=337 17.71" LT.
D=0°30'00"
T=362.2794
R=11459.1559'
L=724.3175'

℄ STA. 830+52.85
MATCH EXIST. PAVEMENT (RT.)

MATCH EXIST. MEDIAN
FL. OF INLET
ELEV. = 109.50

VPI

0.0000%

VPI

3.1184% (C)
3.1228% (B)

STA. 831+67 (B) & (C)
EL=110.8
VC=500
E=1.8791 (C) & 1.875 (B)

STA. 836+19 (B) & (C)
EL=1:0.83
VC=400
E=1.5559 (C) & 1.5614 (B)

ROWY ℄ LT PGL
ROWY ℄ RT PGL
℄ MEDIAN ELEV.

118.81	118.81	117.00
116.02	116.02	114.24
113.81	113.82	112.08
112.21	112.22	109.58
111.21	111.22	109.65
110.81	110.82	109.90
111.05	111.08	110.15
112.07	112.10	110.36
113.87	113.91	111.97
116.44	116.49	114.28
119.54	119.59	117.07
122.65	122.71	119.87
125.62	125.68	122.65
128.05	128.09	125.11

842+00 (C)

DITCH

℄ MEDIAN DITCH

7'-0"
3'-6" | 3'-6"
6:1 | 6:1

4" CL. "B" CONC. RIPRAP

6"X6" W 2.9 WIRE MESH

CONC. MEDIAN
SECTION A-A

LT. DITCH ELEV.
RT. DITCH ELEV.

110.30	
107.20	109.90
109.30	109.50
108.95	109.10
108.60	108.70
108.25	108.30
107.90	107.90
108.00	108.00
108.10	108.10

℄ STA. 834+00
62' RT
BEGIN RT DITCH

℄ STA. 836+00
BEGIN LT DITCH
67.0' LT

MATCH EXIST. INLET
ELEV. = 107.90 LT. & RT.

VPI STA. 840+00, LT
VPI STA. 840+00, RT

-0.40% RT.
-0.35% LT.

.10%

830+00	
832+00	
834+00	
836+00	
838+00	
840+00	
842+00	

B.M. & HORIZONTAL DATA

H-281-36
#5 I.R.
STA. 834+30.68, 155.7 RT.
X = 2,104,654.09
Y = 199,477.89
ELEV. = 107.39

BM #6
#5 I.R.
STA. 829+70, RT.
(SEE PLAN)
ELEV. = 107.58

BM# 7
#5 I.R.
STA. 839+72, RT.
(SEE PLAN)
ELEV. = 107.86

LEGEND
EXIST. ACP MILLED
OVERLAY 1717 SY ACP (TY D)
EXIST. MEDIAN CENTER LINE
MEDIAN CENTER LINE
RIGHT PGL
LEFT PGL

US 281 PLAN PROFILE

STA. 829+00 TO
STA. 842+00

SCALE:
PLAN 1" = 50' HORIZ.
PROFILE 1" = 5' VERT.

SHEET 2 OF 4 SHEETS

MANUEL JORGE 65538 REGISTERED PROFESSIONAL ENGINEER
Manuel Jorge P.E.
10-31-91

FED. RD. DIV. NO.	FEDERAL AID PROJECT NO.	SHEET NO.
6	NH 92(50) M	52

STATE	D ST.	COUNTY
TEXAS	21	HIDALGO

CONT.	SECT.	JOB	HIGHWAY NO.
39	17	97	US281

DATE REVISED: 06/24/91

LIMIT OF [redacted] OVERLAY

LIMIT OF [redacted] OVERLAY

NORTH BOUND FRONTAGE RD.

SOUTH BOUND FRONTAGE RD.

EAST BUTLER STREET

℄ FM495

S 85°-11'-23" E

℄ US281
STA. 847+65.01
= ℄ FM 495
STA. 267+14.69

[redacted] STABILIZED ENTRANCE WITH ASPHALTIC RAMP

STA. 844+00
[redacted]. DRAIN

[redacted]. CONC. DRAIN
SEE SHEET 52
FOR DETAIL

BEGIN DIRECT CONN. 1&2
STA. 0+00
= ℄ STA. 846+22.51, 42' LT.
ELEV. = 131.87

55' R. (TYP)

[redacted]. 24' MAIN LANE

STA. 846+11.51
END TY"II" CURB

0+00.00

℄ EXIST. & [redacted]. US281 EXPWY.

G.E.T.

845+00

Temporary Guard Rails

30'

20'

DIRECT CONNECTORS 1 & 2

5+00

S 4°52'42"W

S 4°-52'-41.92" W

850+00

[redacted] TEMP. STABILIZED CONTROL DEVICE

Inlet

PC 853+98

DIRECT CONNECTORS 3 & 4

[redacted]. 24' MAIN LANE

STA. 844+97.5
END TY"II" CURB
BEG. TY"I" CURB

STA. 843+00
[redacted]. DRAIN

STA. 845+00
[redacted]. DRAIN

STA. 848+11.51
END TY"II" CURB

[redacted] STABILIZED EXIT/ENTRANCE WITH ASPHALTIC RAMP

END MAINLANE CONST.
℄ STA. 846+22.51 (LT. & RT.)
END CONC. MEDIAN RIPRAP

SEE BRIDGE SHEETS
FOR FURTHER INFORMATION

[redacted] STABILIZED EXIT WITH ASPHALTIC RAMP

BEGIN DIRECT CONN. 3&4
STA. 0+00
= ℄ STA. 846+22.51, 32' RT.
ELEV. = 132.00

MATCH LINE STA. 842+00

MATCH LINE STA. 855+00

RAMPS 3 & 4
STA. 7+45
[redacted] OVER
HEAD SIGN
BRIDGE
ATTACHED TO
CAPS.

[redacted] CONC. DRAIN
[redacted] PAID FOR AS
ITEM 432 "CONC. RIP-RAP
(CI B) 4".
SEE SHEET NO. 512 FOR DETAILS

EXIST. 50' R.

265+00

47.3'

BM #8

[redacted] COLORED TEXTURIZED CONCRETE
(SEE LANDSCAPING DETAILS)
[redacted] CONSTRUCTED IN ACCORDANCE W/STDS. RR8-RR9.
(TOE WALL & DRAIN ARE INCLUDED
IN QUANTITY FOR RIP-RAP)

★ [redacted] REMOVED UNDER
ITEM 100 "PREP. OF R.O.W."

A1 = 25' T.A.S.
B1 = 2 SPA @ 12'-6" = 25' M.B.G.F.
C1 = 14 SPA @ 6'-3" = 87.5'-0" M.B.G.F.
C2 = 22 SPA @ 6'-3" = 137.5'-0" M.B.G.F.
D1 = 8 SPA @ 3'-1½" = 25' M.B.G.F.

SHEET TOTALS

ITEM	EST.	FINAL	UNIT	DESCRIPTION
432	63.8		CY	CONC. RIPRAP (CL."B")4"
540	275		LF	METAL BEAM GUARD FENCE
5694	2		EA	G.E.T.
530	688		LF	CONC. CURB TY"II"
530	110.5		LF	CONC. CURB TY"I"

DELINEATORS & OBJECT MARKERS

DELIN. TY (D-SY)(B)	4
DELIN. TY (D-SW)(B)	5
OBJ. MARKER (OM-2SR)(B)	4
OBJ. MARKER (OM-3R)	1
OBJ. MARKER (OM-3L)	1
WINGED CHAN. POST (6.5LB.)	15

BM & HORIZONTAL DATA

H-281-37
#5 I.R.
STA. 847+12.77, 126.7' RT.
X = 2,104,551.89
Y = 198,190.81
ELEV. = 109.38

BM#8
#5 I.R.
≈STA. 849+62, RT.
(SEE PLAN)
ELEV. = 108.23

LEGEND

- [redacted] OVERLAY 171#/SY ACP (TY"D")
- EXIST. ACP [redacted] MILLED
- EXIST MEDIAN CENTER LINE
- [redacted] MEDIAN CENTER LINE
- RIGHT PGL
- LEFT PGL

US 281
PLAN
PROFILE

STA. 842+00 TO
STA. 855+00

SCALE:
PLAN 1"= 50' HORIZ.
PROFILE 1"= 5' VERT.

SHEET 3 OF 4 SHEETS

FED. RD. DIV. NO.	FEDERAL AID PROJECT NO.	SHEET NO.
6	NH 92 (50)M	53

STATE	DIST.	COUNTY
TEXAS	21	HIDALGO

CONT.	SECT.	JOB	HIGHWAY NO.
39	17	97	US281

END LT. MAIN LANE CONST.
℄ STA. 846+22.51, 30' LT. (PGL)
RAMP 1 & 2 STA. 0+00, 12' RT.
ELEV. = 132.11

LIMITS OF OVERLAY

STA = 843+01.41 (B)&(C)
EL = 132.11
VC = 550.00'
E = -2.14'
VPI (LT) & (RT)

0.0000%

END RT. MAIN LANE CONST.
℄ STA. 846+22.51, 20' RT. (PGL)
RAMP 3 & 4 STA. 0+00, 12' LT.
ELEV. = 132.24

ROADWAY

DITCH

	842+00	844+00	846+00	848+00	850+00	852+00	854+00
RDWY ℄ LT RDWY	128.05	129.91	131.21	131.94	132.11		
RDWY ℄ RT RDWY	128.09	129.94	131.23	131.94	132.11		
125.0 LT. OFFSET	108.10	108.20	108.30	108.40	108.90		
124.2 RT. OFFSET	108.10	108.20	108.30	108.40	108.90		

0.10%

DITCH PI (LT & RT)

0.5%

END DITCH RT. 12' LT. & RT.

DATE REVISED: 06/04/91

CURVE DATA FOR BRIDGES
SEE BRIDGE LAYOUT SHEETS

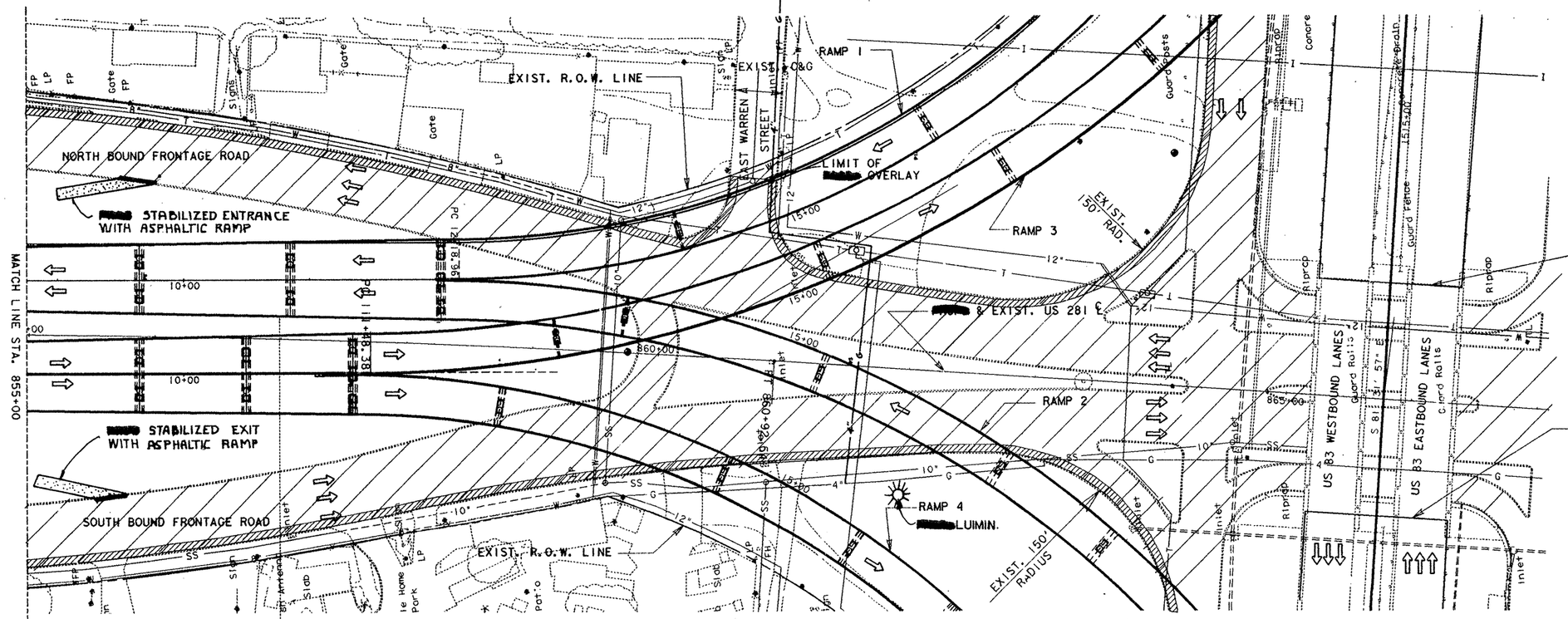

LEGEND
- OVERLAY 171#/SY ACP (TY D)
- EXIST MEDIAN CENTER LINE
- RIGHT
- LEFT

SHEET TOTALS

FINAL	UNIT	DESCRIPTION

SEE FIELD CHANGE SEVEN (7) SEE FIELD CHANGE TEN (10)

ROADWAY

DITCH

RDWY ℄ LT RDWY
RDWY ℄ RT RDWY

135
130
125
120
115

856+00 858+00 860+00 862+00 864+00 866+00

BM & HORIZONTAL DATA

LEGEND
- OVERLAY 171#/SY ACP (TY D)
- EXIST. ACP MILLED

US 281
PLAN
PROFILE

STA. 855+00 TO
STA. 868+00

SCALE:
PLAN 1"= 50' HORIZ.
PROFILE 1"= 5' VERT.

MARIO R. JORGE 65538 REGISTERED PROFESSIONAL ENGINEER
Mario R. Jorge, P.E.
10-31-91

SHEET 4 OF 4 SHEETS

FED. RD. DIV. NO.	FEDERAL AID PROJECT NO.	SHEET NO.
6	NH 92 (50)M	54

STATE	DIST.	COUNTY
TEXAS	21	HIDALGO

CONT.	SECT.	JOB	HIGHWAY NO.
39	17	97	US281

DATE REVISED

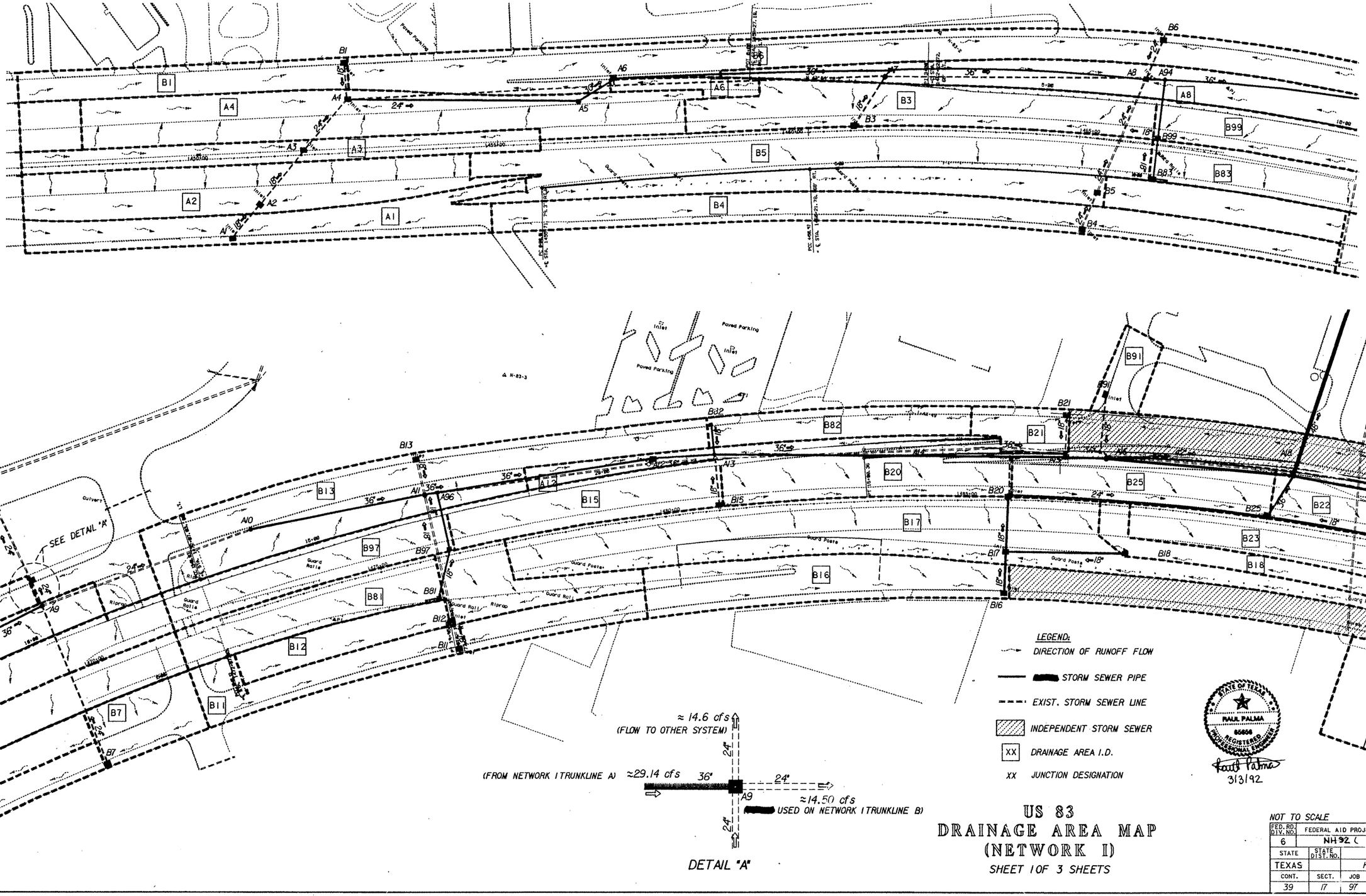

DETAIL "A"

LEGEND:

- DIRECTION OF RUNOFF FLOW
- STORM SEWER PIPE
- EXIST. STORM SEWER LINE
- INDEPENDENT STORM SEWER
- XX DRAINAGE AREA I.D.
- XX JUNCTION DESIGNATION

STATE OF TEXAS
RAUL PALMA
85656
REGISTERED PROFESSIONAL ENGINEER
3/3/92

US 83
DRAINAGE AREA MAP
(NETWORK I)

SHEET 1 OF 3 SHEETS

NOT TO SCALE

FED. RD. DIV. NO.	FEDERAL AID PROJECT NO.		SHEET NO.
6	NH 92 ( )M		55
STATE	STATE DIST. NO.	COUNTY	
TEXAS		HIDALGO	
CONT.	SECT.	JOB	HIGHWAY NO.
39	17	97	US 83

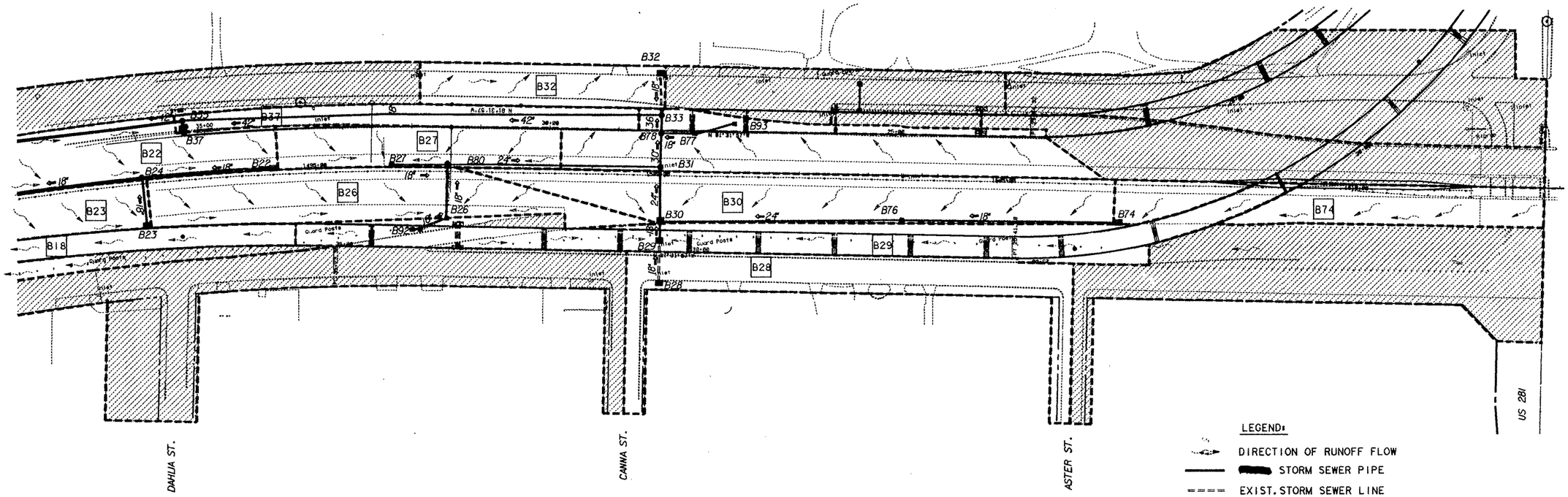

LEGEND:

- DIRECTION OF RUNOFF FLOW
- STORM SEWER PIPE
- EXIST. STORM SEWER LINE
- INDEPENDENT STORM SEWER
- XX DRAINAGE AREA I.D.
- XX JUNCTION DESIGNATION

STATE OF TEXAS
RAUL PALMA
65658
REGISTERED PROFESSIONAL ENGINEER

Raul Palma
3/3/92

US 83
DRAINAGE AREA MAP
(NETWORK I)

SHEET 2 OF 3 SHEETS

NOT TO SCALE

FED. RD. DIV. NO.	FEDERAL AID PROJECT NO.		SHEET NO.
6	NH 92 ( )M		56
STATE	STATE DIST. NO.	COUNTY	
TEXAS		HIDALGO	
CONT.	SECT	JOB	HIGHWAY NO.
39	17	97	US 83

LOT SIZE: 1" = 100' X80 INTDAM3.PRF VER: INTDAM3.PRF FILE: INTDAM3.DGN

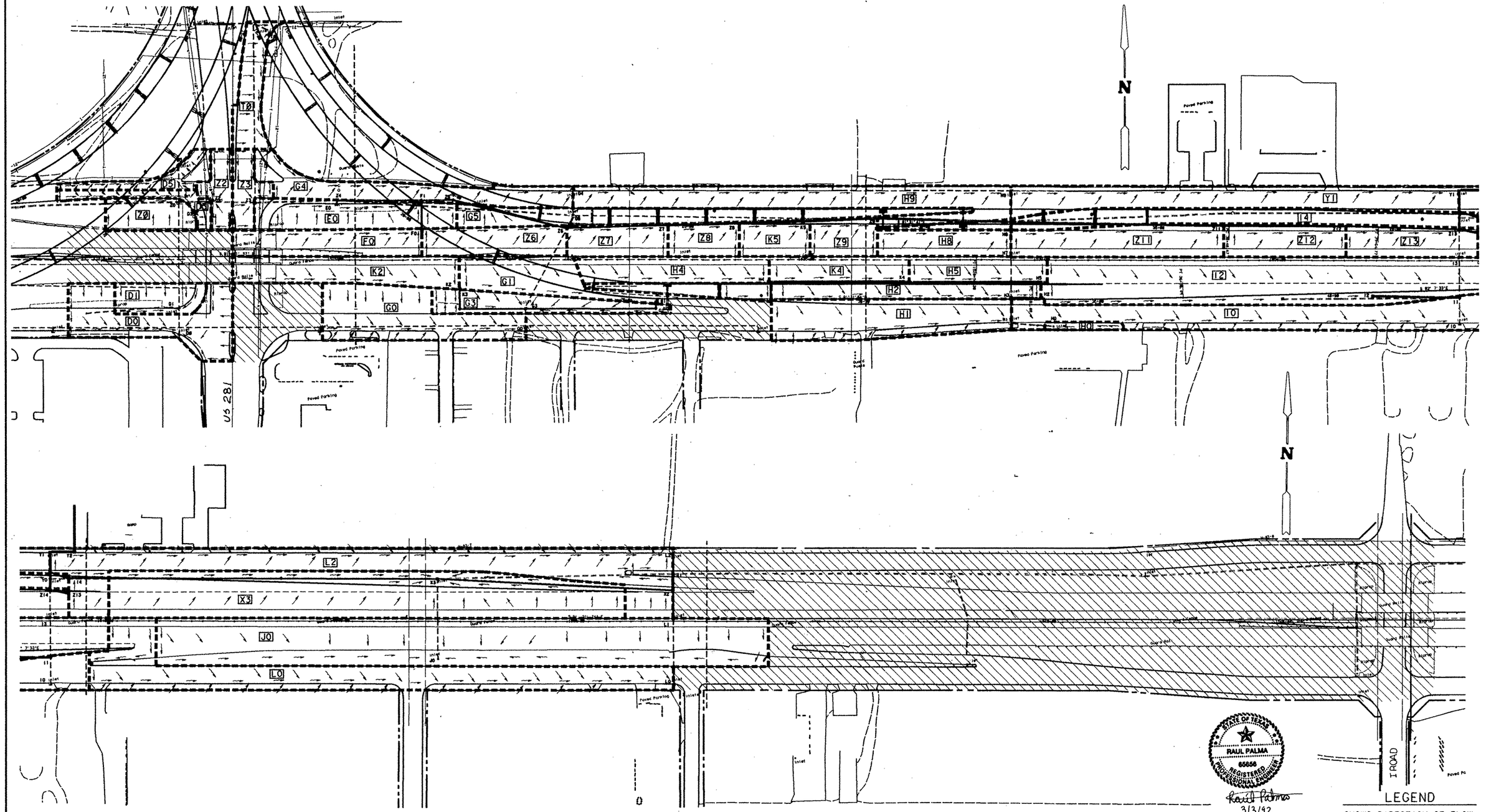

LEGEND

- SHOWS DIRECTION OF FLOW
- STORM SEWER PIPE
- EXIST. STORM SEWER PIPE
- AREAS NOT AFFECTED BY STORM SEWER NETWORK NO. II

US 83
DRAINAGE AREA MAP

(NETWORK II)

SHEET 1 OF 1 SHEETS

SCALE: 1"=100'

FED. RD. DIV. NO.	FEDERAL AID PROJECT NO.		SHEET NO.
6	NH92 ( )M		57
STATE	STATE DIST. NO.	COUNTY	
TEXAS	21	HIDALGO	
CONT.	SECT.	JOB	HIGHWAY NO.
39	17	97	[illegible]83/281

7FA1:[3251071]DRAR.DGN [PARM: SAME

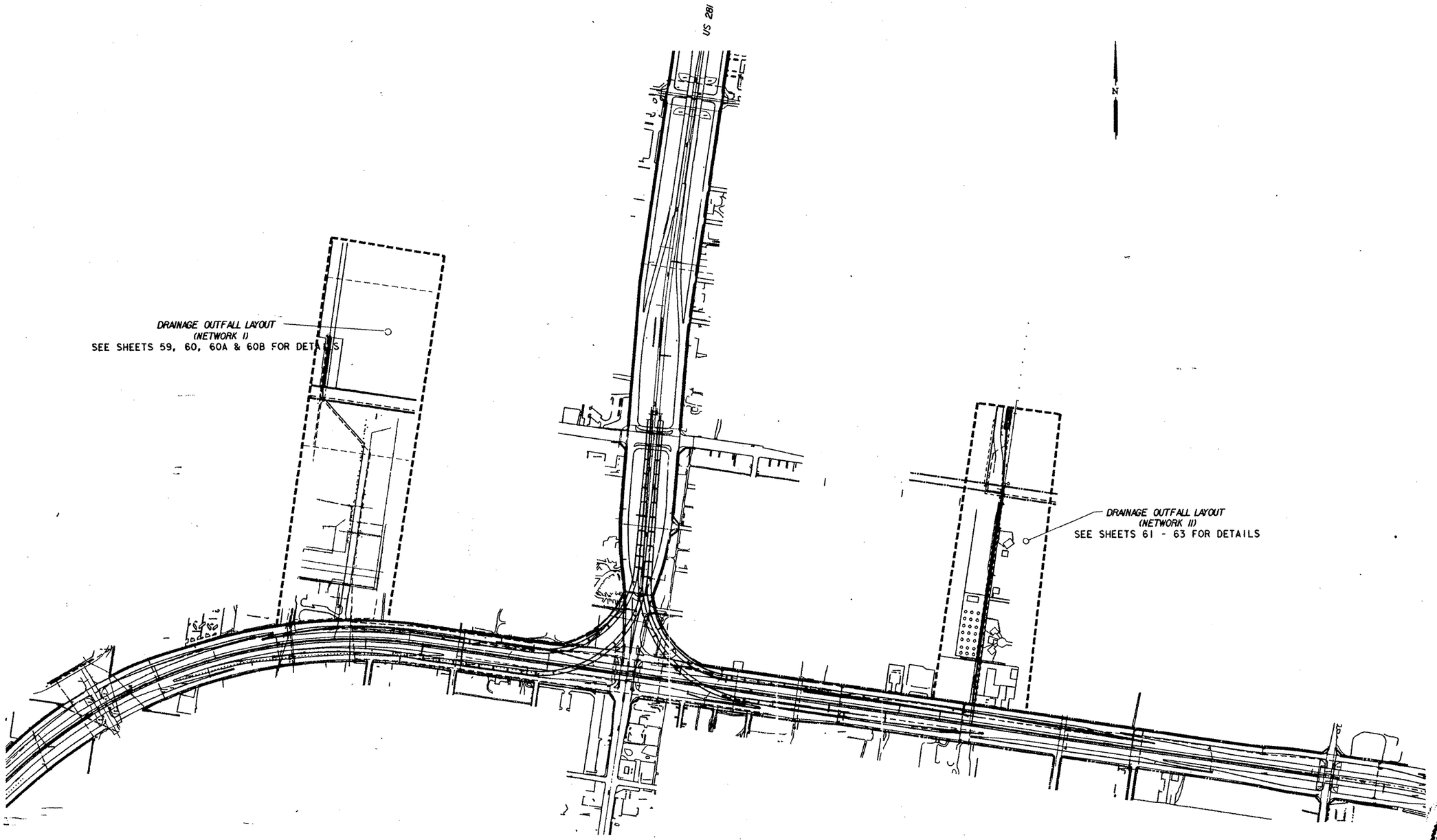

DRAINAGE OUTFALL LAYOUT
(NETWORK I & II)

SHEET 1OF 8 SHEETS

STATE OF TEXAS
PAUL PALMA
85656
REGISTERED
PROFESSIONAL ENGINEER
10/31/91

FED. RD. DIV. NO.	FEDERAL AID PROJECT NO.		SHEET NO.
6	NH 92 ( )M		58
STATE	STATE DIST. NO.	COUNTY	
TEXAS	21	HIDALGO	
CONT.	SECT.	JOB	HIGHWAY NO.
39	17	97	US83/281

PLOT SIZE: V80- VER- ZFA3• [325110]OUTFALL.DGN

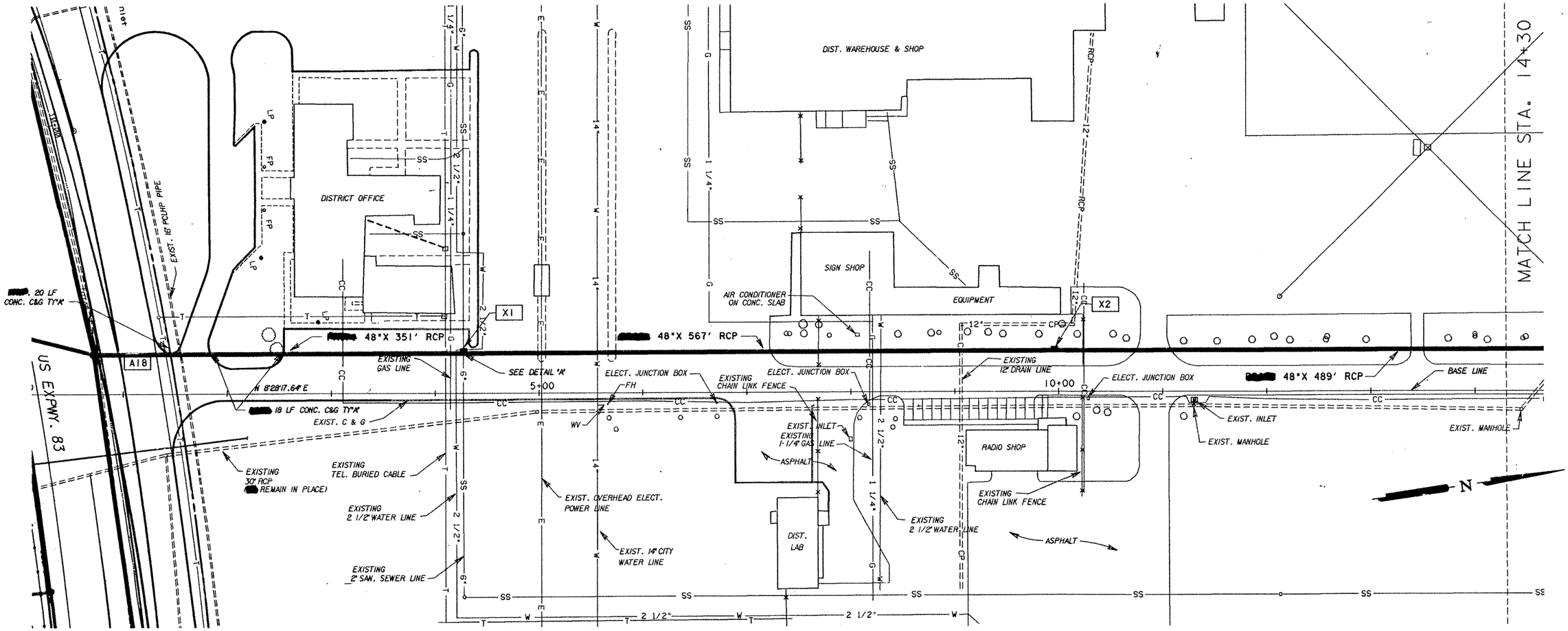

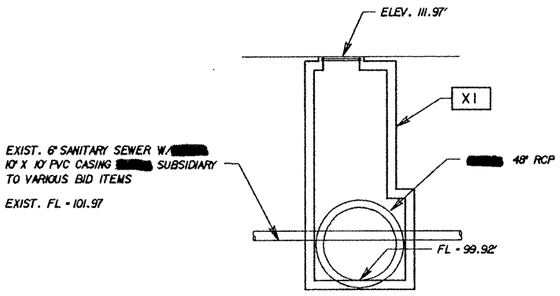

DETAIL "A"

A18

MANH. TY"M"
STA. 1490+31, 78.3' LT. (US 83 ℄)
STA. 0+73, 40' LT. (NETWORK I BASELINE)
JUNCT. BOX (6'-0"X4'-0")
FL. PIPE (WEST) = 101.05
FL. PIPE (EAST) = 100.51
FL. PIPE (NORTH) = 100.23
FL. PIPE (S-W) = 101.14
TOP MH = 114.65'

X1

MANH. TY"M"
STA. 4+27, 40' LT.
JUNCT. BOX (6'-0"X4'-0")
FL. PIPE (SOUTH) =99.92'
FL. PIPE (NORTH) =99.92'
TOP MH. = 111.99'

X2

MANH. TY"M"
STA. 9+97, 40' LT.
JUNCT. BOX (6'-0"X4'-0")
FL. PIPE (SOUTH) =99.43'
FL. PIPE (NORTH) =99.43'
TOP MH. = 108.50'

SHEET TOTALS

ITEM	DESCRIPTION	QUANTITY EST.	QUANTITY FIN.	UNIT
432	CONC. RIP-RAP (6 IN)	2.7		CY
530	CONC. C&G TY"A"	38		LF

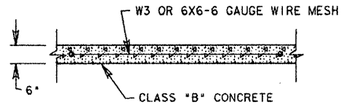

TYIPCAL CONC. RIPRAP DETAIL

HORIZONTAL DATA:

SET CONC. NAIL WITH TIN DISK ON PAVMT AT EVEN STATIONS ALONG BASE LINE.

BM DATA:

SEE PLAN & PROFILE SHEETS.

STATE OF TEXAS
PAUL PALMA
65858
REGISTERED PROFESSIONAL ENGINEER
3/3/92

DRAINAGE OUTFALL LAYOUT
(NETWORK I)

SHEET 2 OF 8 SHEETS

SCALE: 1" = 50'

FED. RD. DIV. NO.	FEDERAL AID PROJECT NO.		SHEET NO.
6	NH92 ( )M		59
STATE	STATE DIST. NO.	COUNTY	
TEXAS		HIDALGO	
CONT.	SECT.	JOB	HIGHWAY NO.
39	17	97	US 83/281

X6
OUTFALL
STA. 22+87.55, 450.8' LT.
FL. PIPE = 93.95'

SEE SHEET 60A FOR DETAILS

EXIST. 100' R.O.W.

8'

84' F-F

12 LF CONC. C&G TY"A"

12 LF CONC. C&G TY"A"

20' DRAINAGE EASEMENT

25' DRAINAGE EASEMENT

80' DRAIN DITCH ROW

EXIST. 72"X24' RCP (REMOVED UNDER ITEM 496, LARGE STR.)

EXIST. 72"X446' RCP (REMOVED) UNDER ITEM 496, LARGE STRUCT.)

EXIST. MH.

BASE LINE

20+00

PP

X6

EXIST. DRAIN DITCH

X5

7'X6'X 32' CONC. BOX

EXIST. 35' IRRIGATION EASEMENT

12" VENT

30" WELL

30" WELL

7'X6'X442' CONC. BOX

X4

EXIST. IRRIG. VENT FL = 103.97

SEE DETAIL "B"

EXIST. 12" DRAIN LINE (ABANDONED)

EXIST. 12" C.P. DRAIN LINE

384'

EXIST. 30"X72" RCP REMOVED AND RELAID AT A DIFFERENT LOCATION)

436' TO BASE LINE

FM 495

16" C.P. IRRIG. LINE

54"X 500' RCP

X3

MATCH LINE STA. 14+30

15+00

20+00

25+00

CC

EXIST. MANHOLE

CC

SS

SS

N

EXIST. 18" X 48' C.I.P.

12" VENT (REMAIN IN PLACE)

30" WELL (REMAIN IN PLACE)

DETAIL "B"

STATE OF TEXAS
PAUL PALMA
86066
REGISTERED
PROFESSIONAL ENGINEER

Paul Palma
3/3/92

X3

MANH. TY"M" (MOD)
STA. 14+91, 40' LT.
JUNCT. BOX (9'-0"X6'-6")
FL. PIPE (SOUTH) =99.02
FL. PIPE (NW) =95.75'
FL. PIPE (SE) = 95.75
FL. MH= 95.75
TOP MH. = 108.30'

X4

EXIST. MANH.
STA. 18+13 (429' LT.)
FL. PIPE (SE) =95.32'
FL. BOX (NORTH) =94.70'
FL. PIPE (WEST) = 95.57
FL. PIPE (EAST) = 95.47
FL. MH= 94.70

X5 Omitted

MANH. TY"M" (MOD)
STA. 22+61 (431' LT.)
JUNCT. BOX (9'-0"X6'-6")
FL. BOX (SOUTH) =94.00'
FL. BOX (NW) =94.00'
TOP MH. = (MATCH EXIST. PAV'T. APPROX. 108.00)

SHEET TOTALS

ITEM	DESCRIPTION	QUANTITY EST.	QUANTITY FIN.	UNIT
530	CONC. C&G TY"A"	24		LF
Ⓜ 496	REMOVE OLD STR (LARGE)	1		EA
102	CLEAR AND GRUB	5.0		STA.

Ⓜ INCLUDES ALL 72" RCP REMOVED.
NOTE: DITCH REGRADING PAID FOR UNDER ITEM 102 "CLEARING AND GRUBBING."

DRAINAGE OUTFALL LAYOUT
(NETWORK I)

SHEET 3 OF 8 SHEETS

SCALE: 1" = 50'

FED. RD. DIV. NO.	FEDERAL AID PROJECT NO.		SHEET NO.
6	NH 92 ( )M		60
STATE	STATE DIST. NO.	COUNTY	
TEXAS		HIDALGO	
CONT.	SECT.	JOB	HIGHWAY NO.
39	17	97	83/281

PLOT SIZE: V80-\EXUDA1.PRF VER- EXUDAB.PRF FILE: EXUDA.DGN

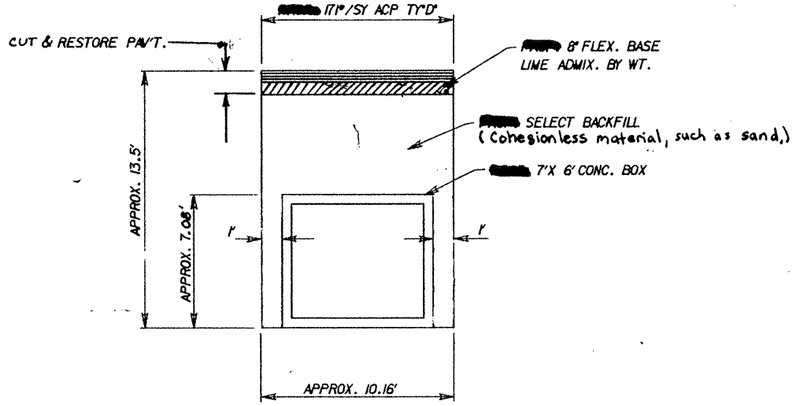

SECTION E-E

ON PRIVATE DRIVE

SHEET TOTALS				
ITEM	DESCRIPTION	EST.	FIN.	UNIT
x 100	REMOVE OLD CONC. RIPRAP	33		SY
401	CUT & RESTORE PAV.	314		SY
5085	REMOVE CHAIN LINK FENCE	40		LF
5085	REPLACE CHAIN LINK FENCE	40		LF
496	REMOVE OLD STR. (SMALL)	1		EA

x[redacted] REMOVED & PAID FOR UNDER ITEM 100.

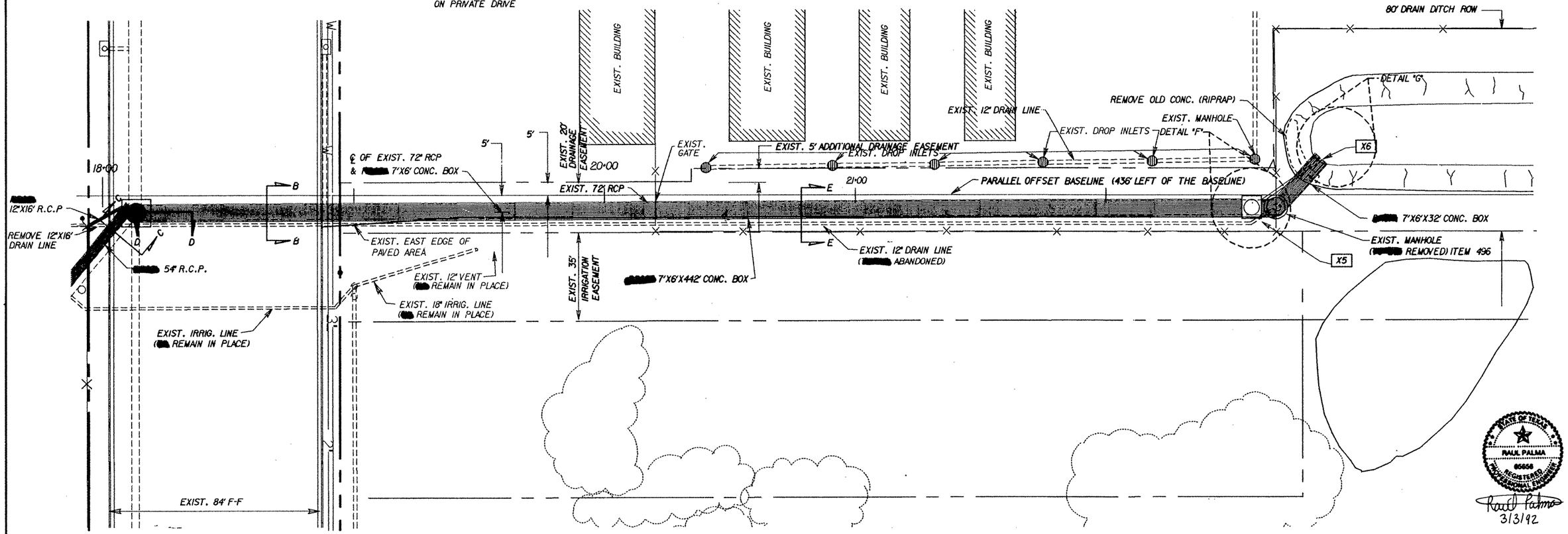

STATE OF TEXAS
RAUL PALMA
65656
REGISTERED PROFESSIONAL ENGINEER

Raul Palma
3/3/92

NOTE: SEE SHEET NO. 60-B FOR SECTIONS B-B, C-C, & D-D AND DETAILS "F" & "G"

DRAINAGE OUTFALL LAYOUT (NETWORK I)

SHEET 4 OF 8 SHEETS

SCALE : 1"=20' (PLAN)

FED. RD. DIV. NO.	FEDERAL AID PROJECT NO.		SHEET NO.
6	NH 92 ( ) M		60A
STATE	STATE DIST. NO.	COUNTY	
TEXAS		HIDALGO	
CONT.	SECT.	JOB	HIGHWAY
39	17	97	US 83

PLOT SIZE: V80= VER= EXUDAL FILE: EXUDAL

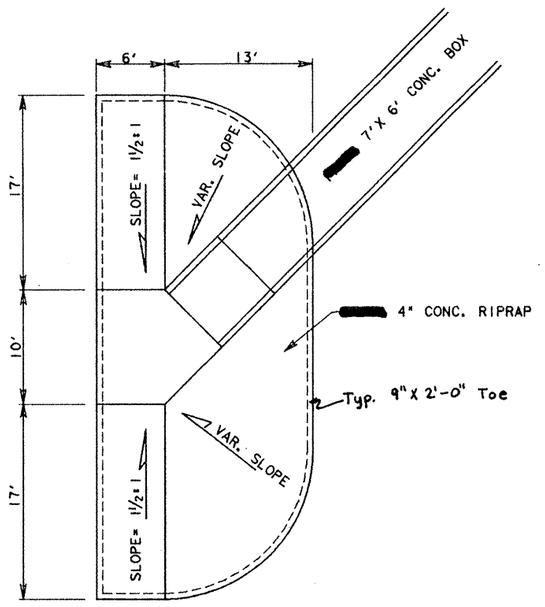

DETAIL "G"

CONC. RIPRAP (4") EST. 7.5 CY

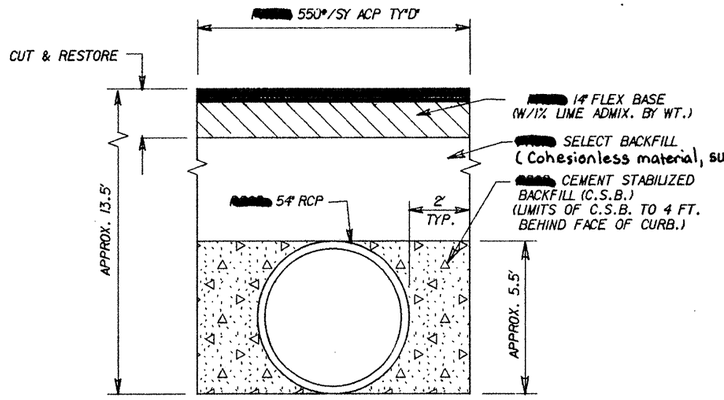

NOTE: ASPHALT, FLEXBASE & SUBG. QUANTITIES INCLUDED UNDER ROADWAY QUANTITIES.

SECTION C-C

ON FM 495

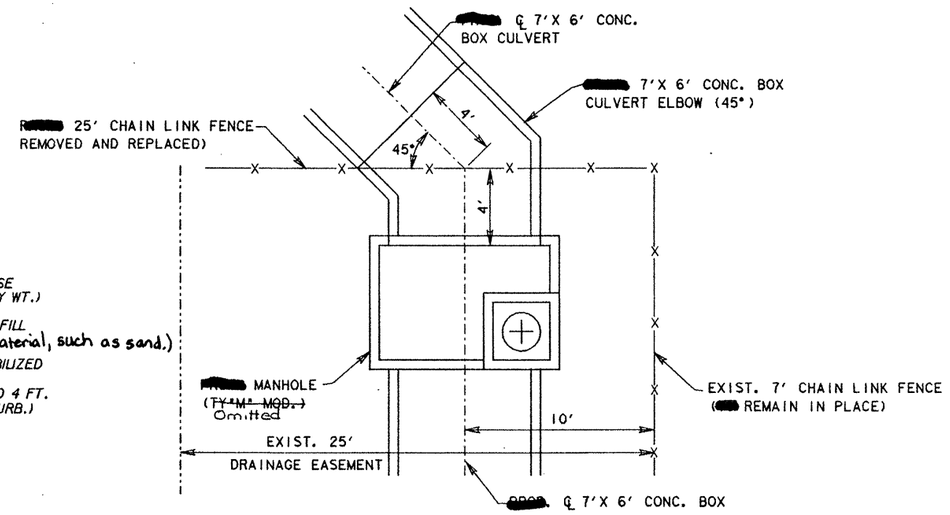

DETAIL "F"

SHEET TOTALS

ITEM	DESCRIPTION	EST.	FIN.	UNIT
401	CEM. STAB. BKFL	57		CY
401	CUT RESTORE PAV.	93		SY

* NON PAY FOR CONTRACTORS INFORMATION ONLY

NOTE: SHORING USED FOR 7'X6' CONC. BOX CULVERT.

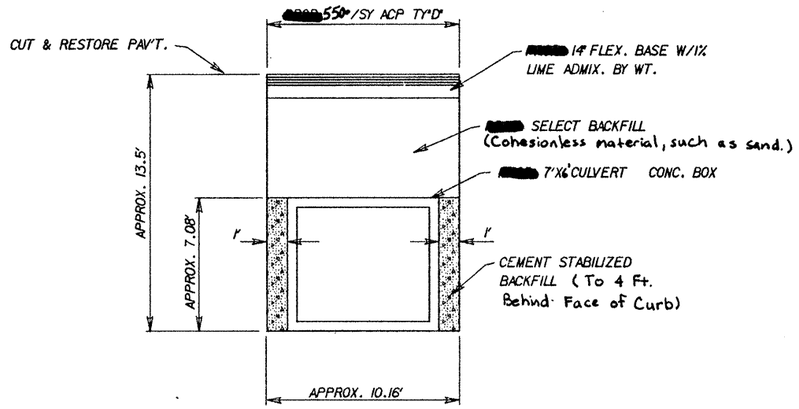

SECTION B-B

ON FM 495

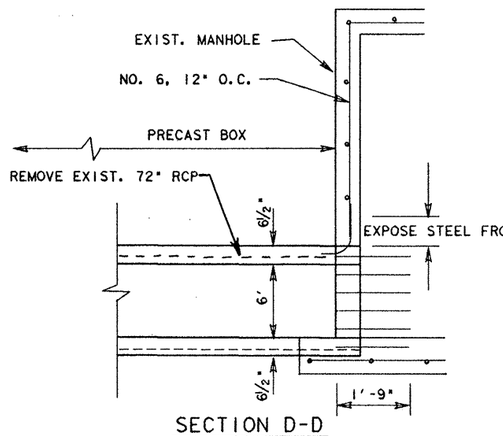

SECTION D-D

STATE OF TEXAS
RAUL PALMA
85658
REGISTERED
PROFESSIONAL ENGINEER
Raul Palma
3/3/92

PRECAST BOX CAST WITH REINFORCING STEEL EXTENDING 1'-9" MINIMUM PAST THE END OF THE BOX. SPLICE EXPOSED STEEL FROM EXIST. INLET TO EXPOSED STEEL EXTENDING FROM PRECAST BOX. MINIMUM LAP REQUIREMENTS CONFORM TO ITEM 440.6.

NOTE: BREAKING OF EXIST. MANHOLE, EXPOSING STEEL, FORMING AND OTHER INCIDENTALS NECESSARY TO COMPLETE THE WORK NOT PAID FOR DIRECTLY, BUT SUBSIDIARY TO ITEM 462.

7'X6' BOX PRECAST TO EXPEDITE CONSTRUCTION. CAST IN PLACE OF THE CONC. BOX NOT ALLOWED.

DRAINAGE OUTFALL LAYOUT (NETWORK 1)

SHEET 5 OF 8 SHEETS

SCALE: HOR. - 1" = 2.5'
VER. - 1" = 2.5'

FED. RD. DIV. NO.	FEDERAL AID PROJECT NO.		SHEET NO.
6	NH 92 ( )M		60B
STATE	STATE DIST. NO.	COUNTY	
TEXAS	21	HIDALGO	
CONT.	SECT.	JOB	HIGHWAY NO.
39	17	97	US 83/281

PLOT SIZE: VGC V.PRF VER: PAVIGRAPH FILE: HTSH_DON

NOTES: ▲ THE MATERIALS AND LABOR FOR INSTALLING THE STEEL CASING OF THE SANITARY SEWER LINE [redacted] SUBSIDIARY TO PERTINENT BID ITEMS.

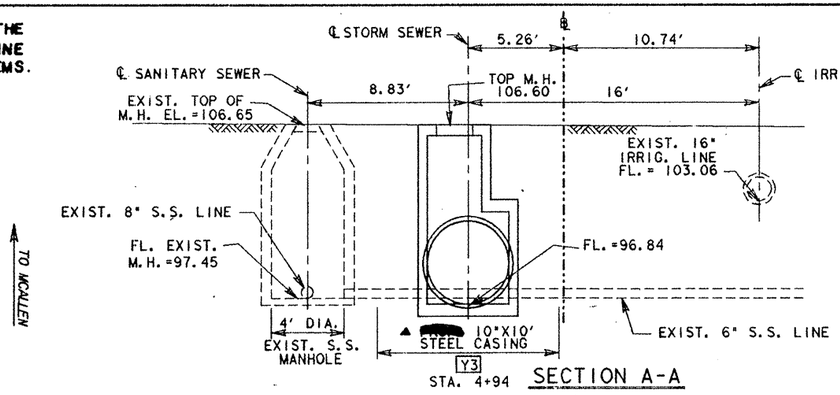

SECTION A-A

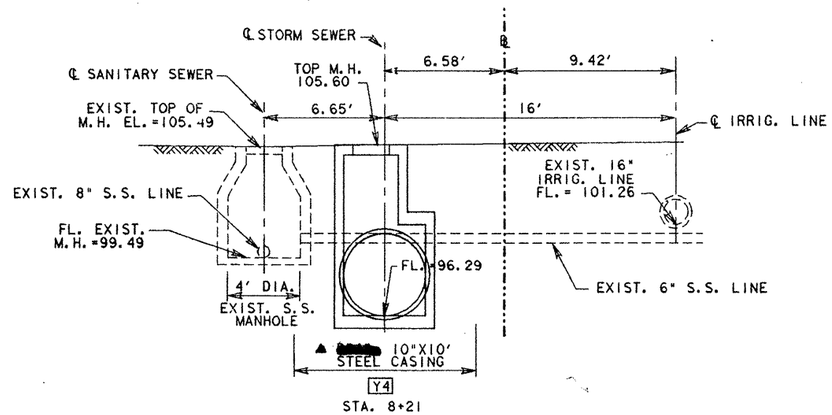

SECTION B-B

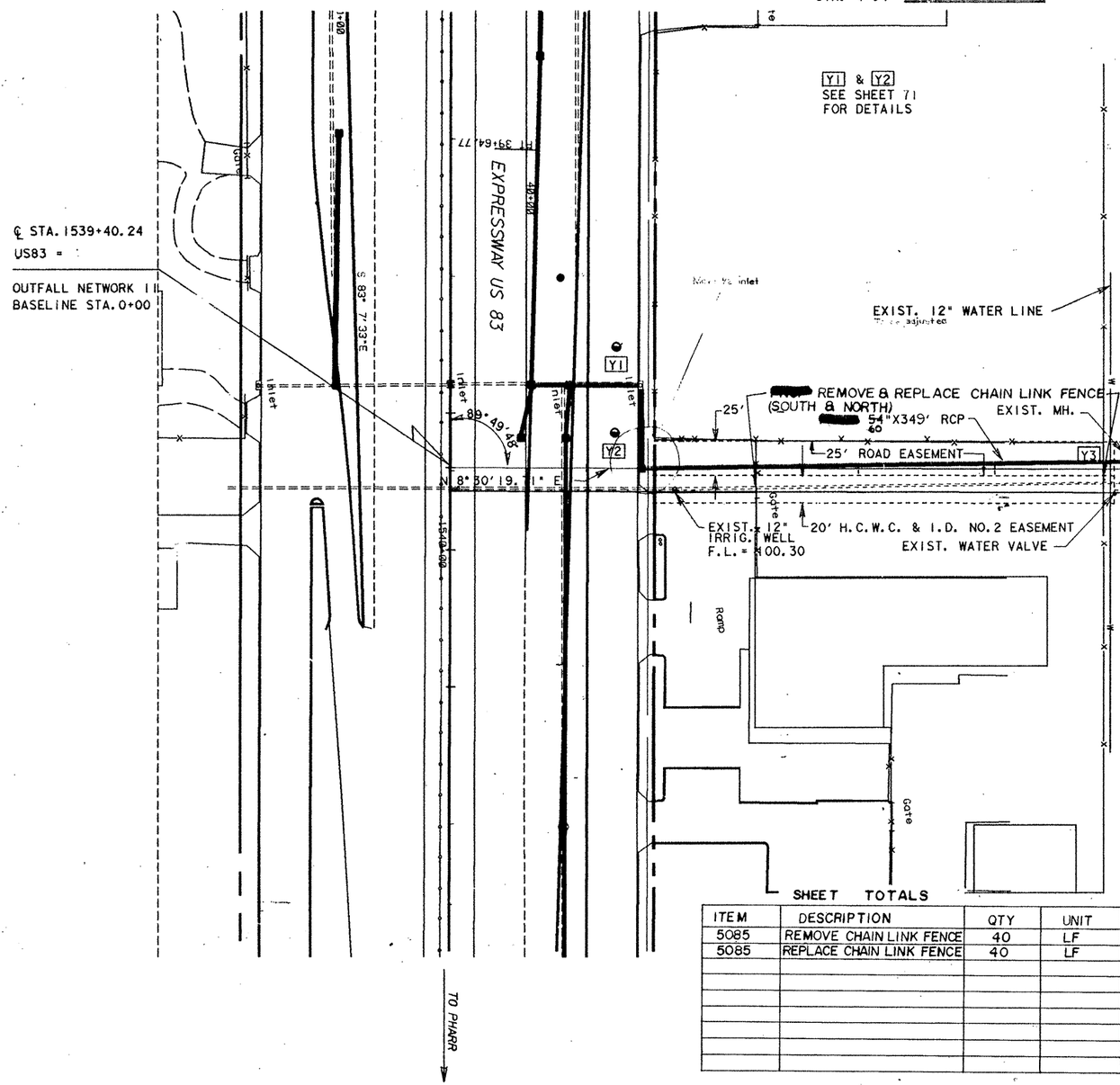

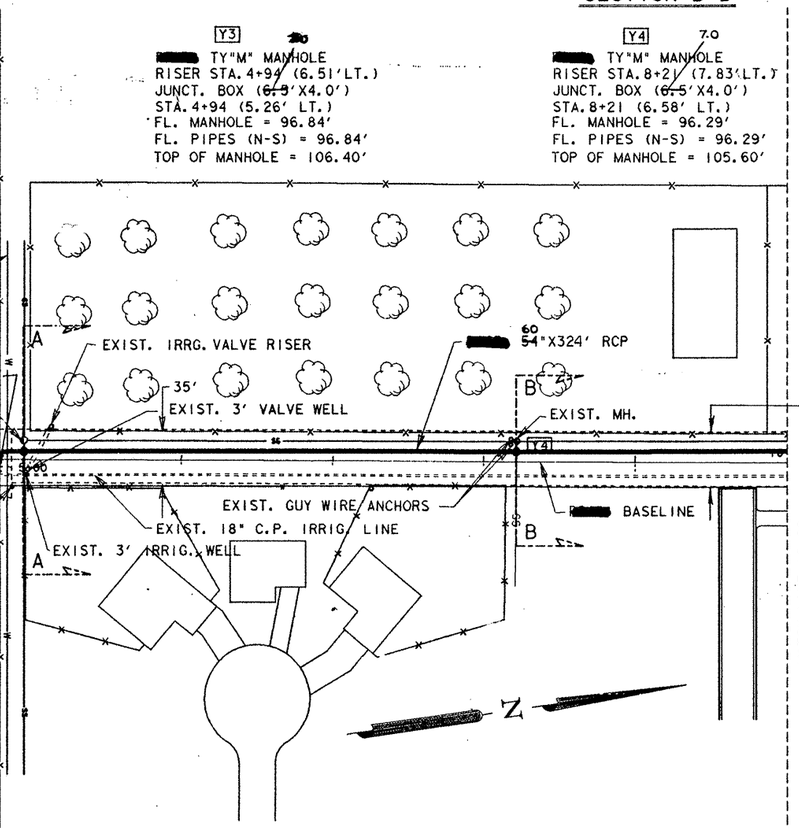

SHEET TOTALS

ITEM	DESCRIPTION	QTY	UNIT
5085	REMOVE CHAIN LINK FENCE	40	LF
5085	REPLACE CHAIN LINK FENCE	40	LF

HORIZONTAL CONTROL POINTS

1.) BASELINE STATION 5+00, 0' OFFSET (SET IRON PIN)

2.) BASELINE STATION 10+00, 0' OFFSET (SET IRON PIN)

STATE OF TEXAS
PAUL PALMA
65866
REGISTERED PROFESSIONAL ENGINEER
10/31/14

DRAINAGE OUTFALL LAYOUT

(NETWORK II)

SHEET 5 OF 6 SHEETS

SCALE: 1"=50'

FED. RD. DIV. NO.	FEDERAL AID PROJECT NO.		SHEET NO.
6	NH 92 ( ) M		61
STATE	STATE DIST. NO.	COUNTY	
TEXAS	21	HIDALGO	
CONT.	SECT.	JOB	HIGHWAY NO.
39	17	97	US 83

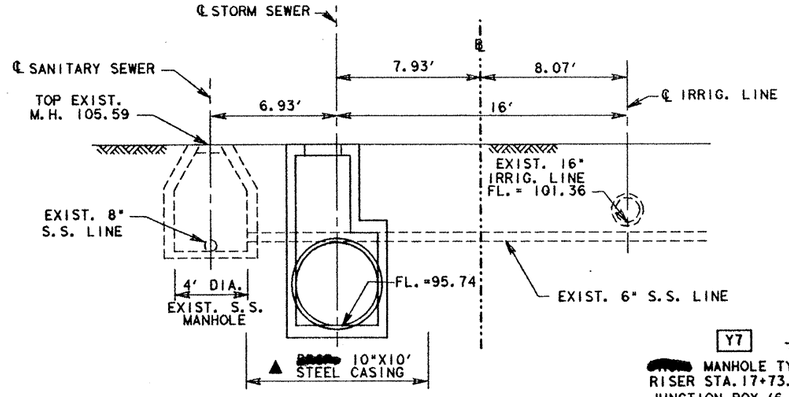

SECTION C-C

Y5 7.0
TY"M" MANHOLE
RISER STA. 11+50 (9.18' LT.)
JUNCT. BOX (6.5'X4') STA. 11+50 (7.93' LT.)
FL. MANHOLE = 95.74'
FL. PIPES = 95.74'
TOP OF MANHOLE = 105.30'

Y6 7.0
TY"M" MANHOLE
RISER STA. 14+31 (10.25' LT.)
JUNCT. BOX (6.5'X4') STA. 14+31 (9.00' LT.)
FL. MANHOLE = 95.28'
FL. PIPE = 95.28'
TOP OF MANHOLE = 103.15'

Y7 7.0 7.0
MANHOLE TY"M"
RISER STA. 17+73.25 (10.50' LT.)
JUNCTION BOX (6.5' X 6.5')
STA. 17+74 (9.75' LT.)
FL. MANHOLE = 94.16'
FL. PIPES (N-S) = 94.70'
FL. EXIST. PIPE (E-W) = 94.16'
TOP OF MANHOLE = 104.44'

LEGEND:
- CUT & RESTORE PAV'T
- OVERLAY W/171#/SY ACP TY D (EST. 1110 SY)

ITEM	DESCRIPTION	QUANTITY EST	QUANTITY FIN	UNIT
*	REMOVE C & G	185.		LF
*	REMOVE CONC. DRIVE	61.		SY
400	CEM STAB BKFL	240.		CY
400	CUT & RESTORE PAV'T	207.		SY
530	CONC. C&G (TY A)	185.		LF
340	ACP (TY D)	94.9		TON
496	REMOVE OLD STR. (PIPE)	3.		LF
530	CONC. DRIVEWAY (4")	61.		SY
472	RELAY PIPE SEWER (72")	140		LF

* PAID FOR UNDER ITEM 100.

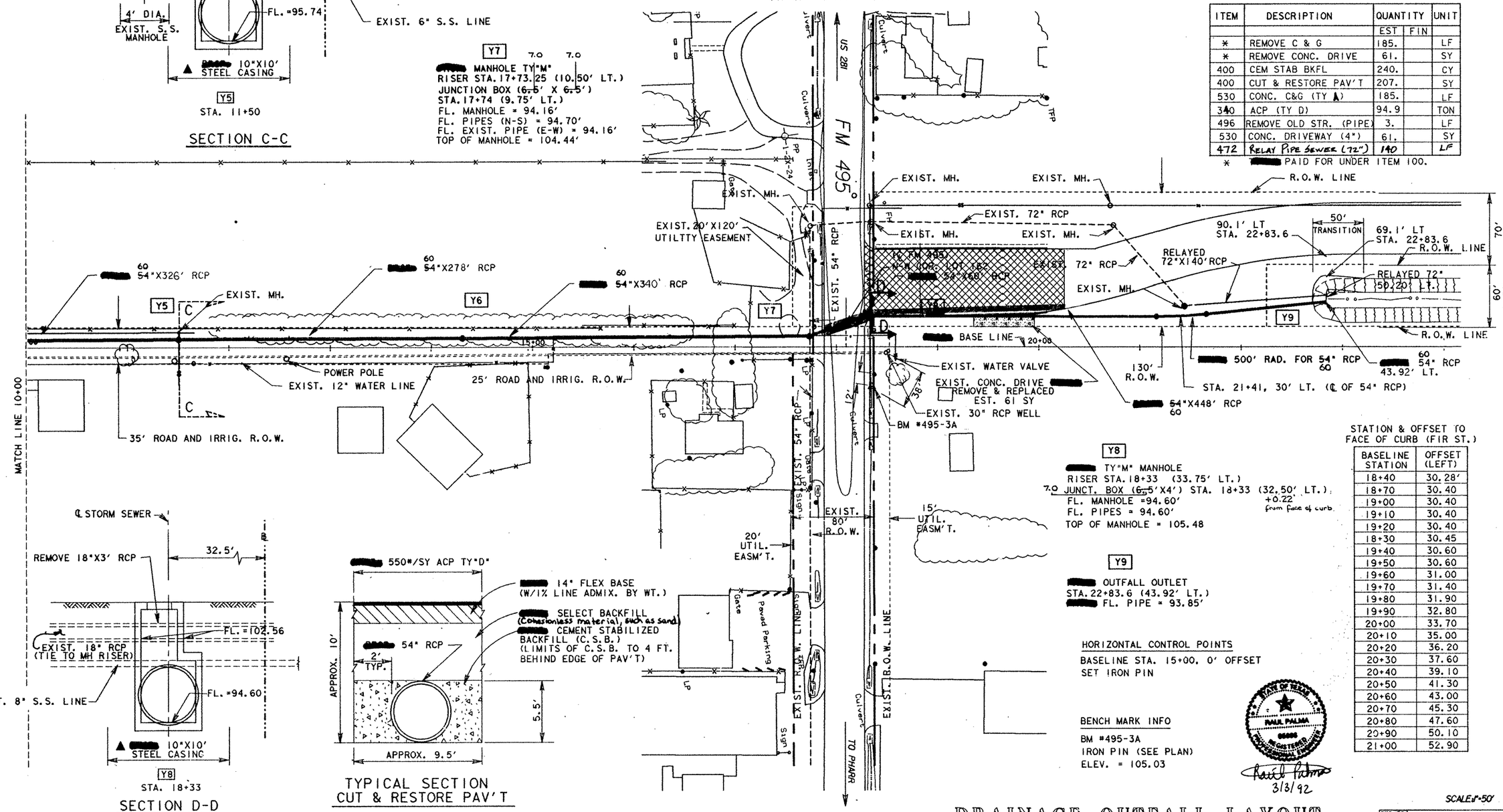

STATION & OFFSET TO FACE OF CURB (FIR ST.)

BASELINE STATION	OFFSET (LEFT)
18+40	30.28'
18+70	30.40
19+00	30.40
19+10	30.40
19+20	30.40
18+30	30.45
19+40	30.60
19+50	30.60
19+60	31.00
19+70	31.40
19+80	31.90
19+90	32.80
20+00	33.70
20+10	35.00
20+20	36.20
20+30	37.60
20+40	39.10
20+50	41.30
20+60	43.00
20+70	45.30
20+80	47.60
20+90	50.10
21+00	52.90

Y8
TY"M" MANHOLE
RISER STA. 18+33 (33.75' LT.)
7.0 JUNCT. BOX (6.5'X4') STA. 18+33 (32.50' LT.) +0.22' from face of curb
FL. MANHOLE =94.60'
FL. PIPES = 94.60'
TOP OF MANHOLE = 105.48

Y9
OUTFALL OUTLET
STA. 22+83.6 (43.92' LT.)
FL. PIPE = 93.85'

HORIZONTAL CONTROL POINTS
BASELINE STA. 15+00, 0' OFFSET
SET IRON PIN

BENCH MARK INFO
BM #495-3A
IRON PIN (SEE PLAN)
ELEV. = 105.03

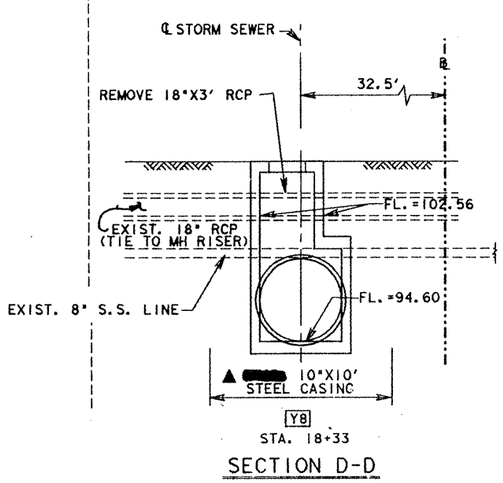

SECTION D-D

TYPICAL SECTION
CUT & RESTORE PAV'T

NOTES:
BASELINE BEARING = N8 30' 19.71"E
▲ THE MATERIAL AND LABOR FOR INSTALLING THE STEEL CASING OF THE SANITARY SEWER LINE [redacted] SUBSIDIARY TO PERTINENT BID ITEMS.

DRAINAGE OUTFALL LAYOUT

(NETWORK II)

SHEET 6 OF 6 SHEETS

SCALE: 1"=50'

FED. RD. DIV. NO.	FEDERAL AID PROJECT NO.		SHEET NO.
6	NH 92 ( ) M		62
STATE	STATE DIST. NO.	COUNTY	
TEXAS	21	HIDALGO	
CONT.	SECT.	JOB	HIGHWAY NO.
39	17	97	LS 83

[illegible] YONTZ DON IBARRUCHE

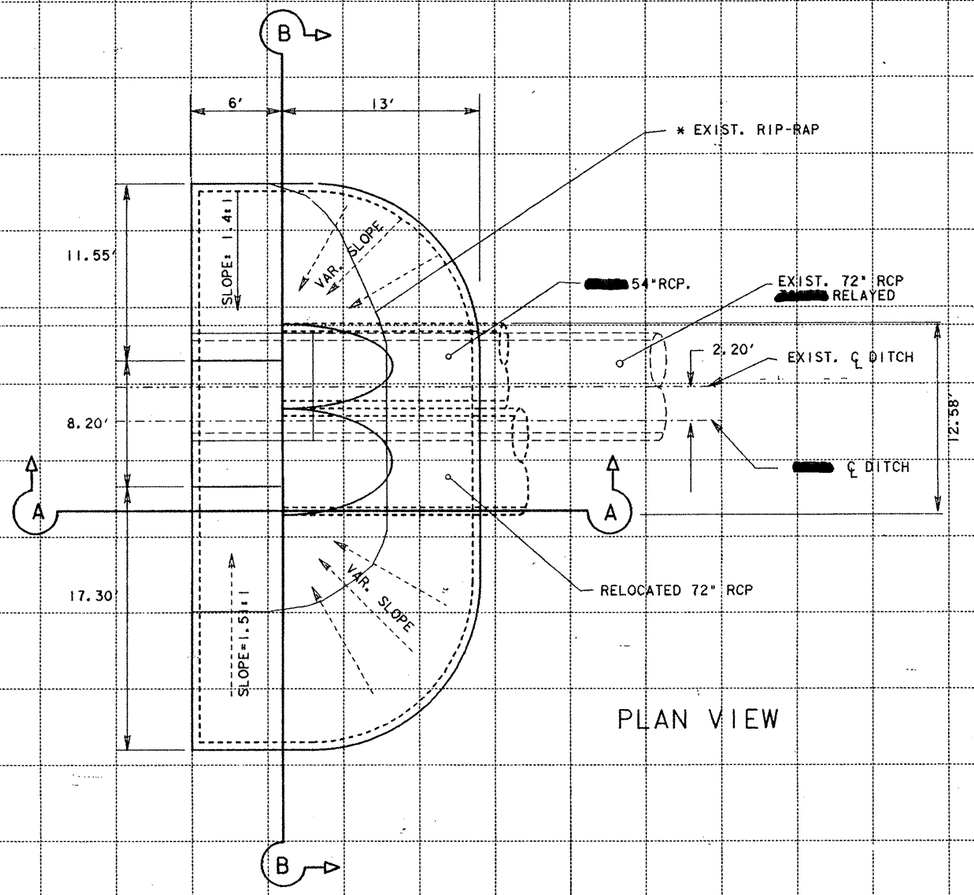

PLAN VIEW

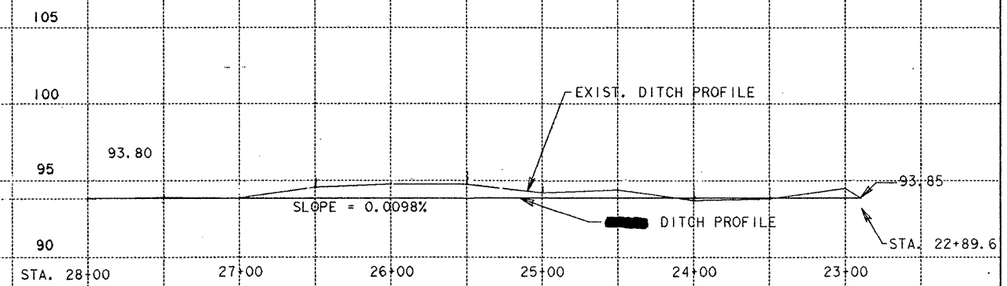

DITCH PROFILE

(SCALE: 1:50 HORIZ., 1:5 VERT.)

SHEET TOTALS

	ITEM	DESCRIPTION	QUANTITY EST	QUANTITY FIN	UNIT
*	100	REMOVE OLD CONC. RRIPRAP	44		SY
	432	[redacted] CONC. RIP-RAP (4")	7.54		CY
⊛	102	CLEAR & GRUB	5.1		STA.

⊛ EST. 200 CY (FOR INFORMATION ONLY) {INCLUDE EXCAV. FOR RE-CENTERING OF DITCH}

NOTE: DITCH REGRADING [redacted] PAID FOR UNDER ITEM 102 "CLEARING AND GRUBBING"

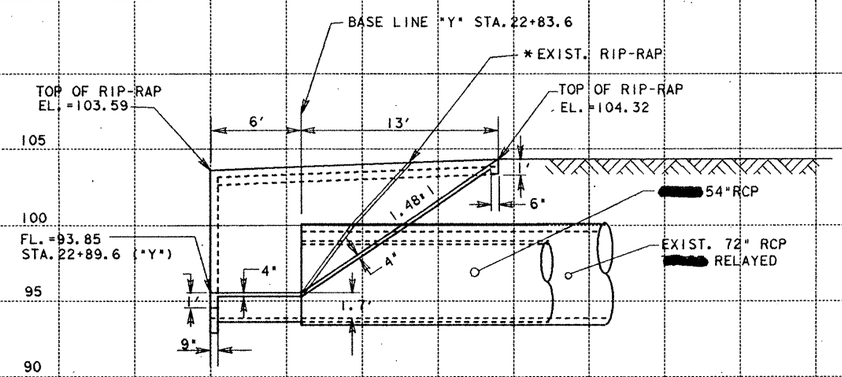

SECTION A-A

* EXIST. RIP-RAP [redacted] REMOVED UNDER ITEM 100.

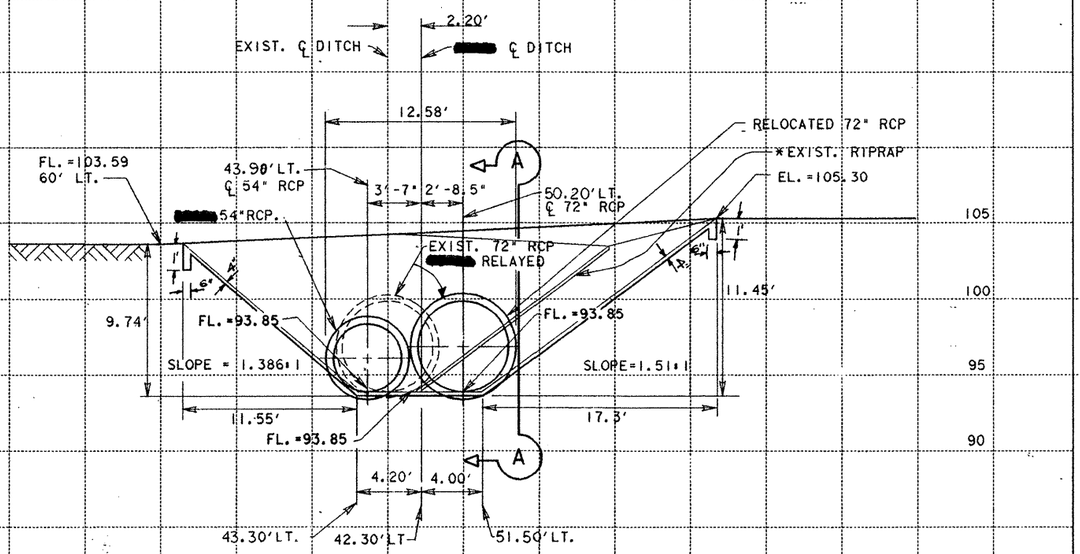

SECTION B-B

STATE OF TEXAS
RAUL PALMA
85856
REGISTERED PROFESSIONAL ENGINEER
10/31/91

DRAINAGE OUTFALL LAYOUT (NETWORK II)

FED. RD. DIV. NO.	FEDERAL AID PROJECT NO.	SHEET NO.
6	NH92 ( )M	63

STATE	STATE DIST. NO.	COUNTY	
TEXAS	21	HIDALGO	
CONT.	SECT.	JOB	HIGHWAY NO.
39	17	97	281/83

A4

STA. 1452+50 (82' LT)
EXIST. TY "C" INLET
([redacted] REMAIN IN PLACE)
FL. OF GRATE= 111.49'
FL. PIPE (NORTH)= 108.47'
FL. PIPE (S-W)=108.10'
FL. PIPE (EAST)= 108.10'

B1

STA. 1452+50 (140' LT)
EXIST. TY "A" INLET
([redacted] REMAIN IN PLACE)
TOP OF INLET= 112.85'
FL. PIPE (SOUTH)= 109.25'
Ψ [redacted] INLET EXT.

A5

STA. 1456+40
[redacted] MANH. TY"M"
RING & COVER = 62' LT.
CENTER MH = 62.75' LT
FL. PIPE (WEST) = 107.44'
FL. PIPE (N-E) = 107.44'
TOP MH = 113.80'

A6

STA. 1457+00 (100' LT)
†EXIST. TY"A" INLET
[redacted] TY "A" (MOD.) INLET
TOP INLET = 113.72'
F.L. PIPE (S-W) = 107.40'
FL. PIPE (EAST)= 107.40'

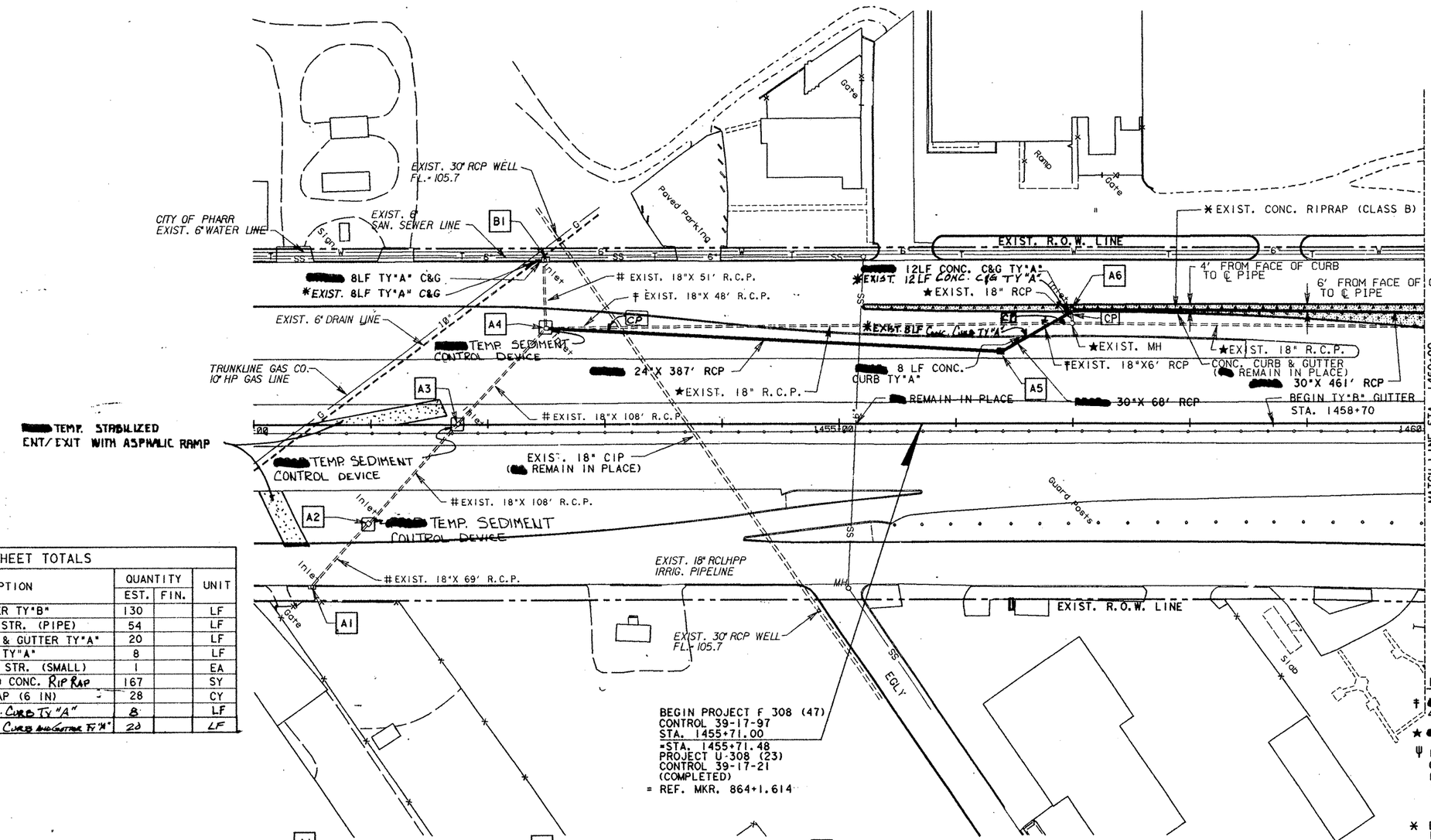

SHEET TOTALS				
ITEM	DESCRIPTION	QUANTITY EST.	QUANTITY FIN.	UNIT
530	CONC. GUTTER TY"B"	130		LF
496	REMOV. OLD STR. (PIPE)	54		LF
530	CONC. CURB & GUTTER TY"A"	20		LF
530	CONC. CURB TY"A"	8		LF
496	REMOV. OLD STR. (SMALL)	1		EA
	*REMOV. OLD CONC. RIP RAP	167		SY
432	CONC. RIPRAP (6 IN)	28		CY
*	REMOV. CONC. CURB TY "A"	8		LF
*	REMOV. CONC. CURB AND GUTTER TY "A"	20		LF

A1

STA. 1450+50 (140' RT)
EXIST. TY "A" INLET
([redacted] REMAIN IN PLACE)
TOP OF INLET= 112.45'
FL. PIPE (NORTH)= 108.96'

A2

STA. 1451+00 (86' RT)
EXIST. TY "C" INLET
([redacted] REMAIN IN PLACE)
TOP OF GRATE= 112. 3
FL. PIPE (N-E)= 108.43'
FL. PIPE (S-W)=108.43'

A3

STA. 1451+78 (℄)
EXIST. TY "C" INLET
([redacted] REMAIN IN PLACE)
FL. OF GRATE= 112.96'
FL. PIPE (N-E)= 108.27'
FL. PIPE (S-W)=108.27'

STATE OF TEXAS
PAUL PALMA
60000
REGISTERED
ENGINEER
Paul Palma
10/31/91

LEGEND:

† [redacted] REMOVED AND PAID FOR UNDER ITEM 496 "REMOVE OLD STRUCTURES".

★ [redacted] ABANDONED

Ψ INCLUDES ALL REMOVAL OF ASPH. CONC. PAV., CONC. C&G, BREAKING OF EXIST. INLET, EXCAVATIONS AND OTHER INCIDENTALS NECESSARY TO COMPLETE THE WORK. SUBSIDIARY TO THE ITEM "INLET EXTENSION".

* DENOTES [redacted] REMOVED AND PAID FOR UNDER ITEM 100 "PREP R.O.W."

[redacted] REMAIN IN PLACE

CP INDICATES CONCRETE PLUG; NOT [redacted] PAID FOR DIRECTLY, BUT [redacted] SUBSIDIARY TO PERTINENT BID ITEMS.

NOTE: ELEVATIONS AND OFFSET SHOWN FOR TOP OF STRUCTURES MEASURED AT CENTER OF RING + COVER OR GRATE OR AS NOTED.
SCALE 1"= 50'

UTILITIES & DRAINAGE

SHEET 1 OF 9 SHEETS
(NETWORK I)

FED. RD. DIV. NO.	FEDERAL AID PROJECT NO.		SHEET NO.
6	NH 92 (50)M		64
STATE	STATE DIST. NO.	COUNTY	
TEXAS	21	HIDALGO	
CONT.	SECT.	JOB	HIGHWAY NO.
39	17	97	US 83

PLOT SIZE: 8" FOV [illegible]

A7

STA. 1461+63
[redacted] MANH. TY"M"
RING & COVER = 92' LT
CENTER MH = 92.5' LT.
TOP MH. = 111.50
FL. PIPE (S-W) = 106.85
FL. PIPE (WEST) = 106.60
FL. PIPE (EAST) = 106.60

B6

STA. 1465+93 (164'LT.)
EXIST. TY "A" INLET
([redacted] REMAIN IN PLACE)
TOP INLET= 110.49
FL. PIPE (SOUTH) = 106.48

A8

STA. 1465+80 (100' LT)
‡EXIST. TY"C" INLET
[redacted] TY"CC" INLET
FL. PIPE (NORTH)= 106.32
FL. PIPE (SOUTH)= 106.32
FL. PIPE (WEST)= 106.32
FL. PIPE (EAST)= 106.32
TOP GRATE= 110.25

B99

STA. 1466+10, (3' LT)
[redacted] TY"CC" MOD. I INLET
FL. PIPE (NORTH)= 117.50'
TOP INLET= 123.90'
FL. PIPE (SOUTH)= 117.50

A9

STA. 1469+50 (122' LT)
‡EXIST. TY"A" MANH.
[redacted] MANH. TY"M"
RING & COVER = 122' LT
CENTER MH = 121.5' LT.
FL. PIPE (NORTH)= 106.37
FL. PIPE (SOUTH)= 105.94
FL. PIPE (EAST)= 105.94
FL. PIPE (WEST)= 105.94
TOP MANHOLE= 110.47'

SHEET TOTALS				
ITEM	DESCRIPTION	QUANTITY EST.	QUANTITY FIN.	UNIT
530	CONC. GUTTER TY"B"	1695.8		LF
496	REMOVE OLD STR. (PIPE)	430		LF
496	REMOVE OLD STR. (SMALL)	4		EA
530	CONC. GUTTER TY"A"	40		LF
474	SLOTTED DRAIN (18")	40		LF

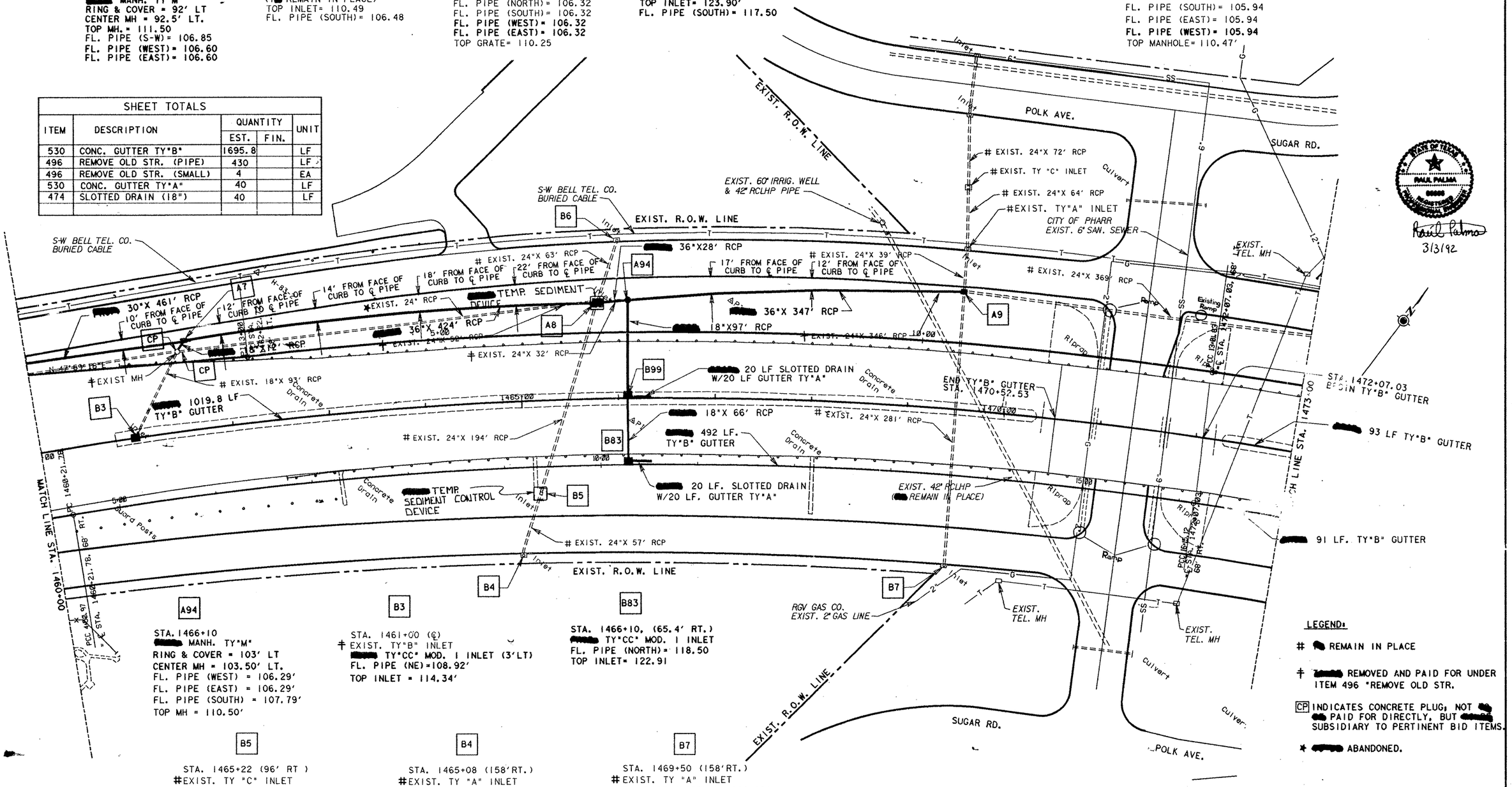

A94

STA. 1466+10
[redacted] MANH. TY"M"
RING & COVER = 103' LT
CENTER MH = 103.50' LT.
FL. PIPE (WEST) = 106.29'
FL. PIPE (EAST) = 106.29'
FL. PIPE (SOUTH) = 107.79'
TOP MH = 110.50'

B3

STA. 1461+00 (℄)
‡EXIST. TY"B" INLET
[redacted] TY"CC" MOD. I INLET (3'LT)
FL. PIPE (NE)=108.92'
TOP INLET = 114.34'

B83

STA. 1466+10, (65.4' RT.)
[redacted] TY"CC" MOD. I INLET
FL. PIPE (NORTH)= 118.50
TOP INLET= 122.91

B5

STA. 1465+22 (96' RT)
#EXIST. TY "C" INLET
FL. GRATE= 109.37'
FL. PIPE (NORTH)= 106.43'
FL. PIPE (SOUTH)= 106.43'

B4

STA. 1465+08 (158'RT.)
#EXIST. TY "A" INLET
TOP INLET= 110.47'
FL. PIPE (NORTH)= 106.47'

B7

STA. 1469+50 (158'RT.)
#EXIST. TY "A" INLET
FL. PIPE (NORTH)= 106.88'
TOP INLET= 110.86'

LEGEND:

[redacted] REMAIN IN PLACE

‡ [redacted] REMOVED AND PAID FOR UNDER ITEM 496 "REMOVE OLD STR.

CP INDICATES CONCRETE PLUG; NOT [redacted] PAID FOR DIRECTLY, BUT [redacted] SUBSIDIARY TO PERTINENT BID ITEMS.

* [redacted] ABANDONED.

NOTE: ELEVATIONS AND OFFSETS SHOWN FOR TOP OF STRUCTURES MEASURED AT CENTER OF RING & COVER OR GRATE OR AS NOTED.

STATE OF TEXAS
PAUL PALMA
[redacted]
REGISTERED PROFESSIONAL ENGINEER
Paul Palma
3/3/92

UTILITIES & DRAINAGE
(NETWORK 1)
SHEET 2 OF 9 SHEETS

SCALE 1"= 50'

FED. RD. DIV. NO.	FEDERAL AID PROJECT NO.		SHEET NO.
6	NH 92 (50)M		65
STATE	DIST.	COUNTY	
TEXAS	21	HIDALGO	
CONT.	SECT.	JOB	HIGHWAY NO.
39	17	97	US83

A10

STA. 1473+10, (122' LT)
EXIST. TY"A" MANHOLE
[redacted] MANH. TY"B"
TOP OF MH. = 112.00'
FL. PIPE (WEST) = 105.36'
FL. PIPE (EAST) = 105.36'

B13

STA. 1476+00 (158' LT.)
EXIST. TY"A" INLET
([redacted] REMAIN IN PLACE)
TOP OF INLET= 110.74
FL. PIPE (SOUTH) = 107.31

A11

STA. 1476+00 (102' LT.)
EXIST. TY"A" MANHOLE
[redacted] TY "B" MANHOLE
FL. PIPE (NORTH) = 105.97'
FL. PIPE (SOUTH) = 105.97'
FL. PIPE (EAST) = 104.77'
FL. PIPE (WEST) = 104.77'
TOP OF MH. = 114.75'

A12

STA. 1479+80 (93' LT.)
EXIST. TY"CC" INLET
[redacted]. TY "CC" MOD. I INLET
FL. PIPE (EAST) = 103.55'
FL. PIPE (WEST) = 103.55'
TOP INLET= 110.81

B15

STA. 1480+80 (3' LT.)
EXIST. TY"B" INLET.
[redacted] TY "CC" MOD. I INLET (3' LT)
FL. PIPE (NORTH) = 108.76
TOP INLET= 113.48'

A13

STA. 1480+80 (92'LT)
EXIST. TY"B" MANHOLE
[redacted] TY"B" MANHOLE
FL. PIPE (WEST) = 103.36
FL. PIPE (EAST) = 103.36
FL. PIPE (SOUTH) = 104.02'
TOP OF MH= 111.50
FL. PIPE (NORTH) = 104.86

B97

STA. 1476+20 (3' LT.)
[redacted] TY"CC" MOD. I INLET (3' LT.)
FL. PIPE (NORTH) = 118.20'
TOP INLET= 124.61'
FL. PIPE (SOUTH) = 118.20

B82

STA. 1480+80 (138' LT.)
[redacted] TY "A" INLET
FL. PIPE (SOUTH) = 105.36
TOP INLET= 111.34

SHEET TOTALS				
ITEM	DESCRIPTION	QUANTITY EST.	QUANTITY FIN.	UNIT
530	CONC. GUTTER TY"B"	1485		LF
496	REMOVE OLD STR. (PIPE)	518		LF
530	CONC. C&G TY"A"	20		LF
530	CONC. CURB TY"A"	6		LF
496	REMOVE OLD STR. (SMALL)	7		EA
	* REMOVE CONC. C & G.	20		LF
	* REMOVE CONC. CURB	6		LF
474	SLOTTED DRAIN (18")	80		LF
530	CONC. GUTTER TY"A"	80		LF

EXIST. R.O.W. LINE
RGV GAS CO. EXIST. 12" HP GAS LINE W/16" STEEL CASING
RGV GAS CO. EXIST. 2" GAS LINE
S-W BELL TEL. CO. BURIED CABLE
Paved Parking
Inlet
CITY OF PHARR EXIST. WATER LINE
CITY OF PHARR EXIST. SAN. SEWER LINE
SEE SHEET 50A FOR DETAILS
[redacted] 12 LF. C&G TY"A"
* EXIST. 12 LF. C&G
* EXIST. 6 LF. CONC. CURB
[redacted] 36"X 294' RCP
[redacted] 36"X16' RCP
EXIST. 18"X 54' RCP
[redacted] TEMP. SEDIMENT CONTROL DEVICE
[redacted] 36"X 366' RCP
[redacted] 18"X46' RCP
[redacted] 36"X 99' RCP
[redacted] 36"X 587' RCP
† EXIST. 24"X 298' RCP
† EXIST. 24"X 160' RCP
* EXIST. 24" RCP
* EXIST. MH
† EXIST. 24"X 96' RCP
[redacted] 18"X94' RCP
* EXIST. 18"X 8' RCP
[redacted] 6 LF CONC. CURB TY "A"
[redacted] 18"X8' RCP
† EXIST. MH
† EXIST. 24"X 24' RCP
# EXIST. 18"X 212' RCP
[redacted] 20 LF SLOTTED DRAIN W/20 LF GUTTER TY"A"
EXIST. 18"X 78' RCP
[redacted] 221 LF TY "B" GUTTER
[redacted] 20 LF SLOTTED DRAIN W/20 LF GUTTER TY"A"
* EXIST. 18" RCP
[redacted] 18"X 76' RCP
[redacted]. 20 LF. SLOTTED DRAIN W/20 LF. GUTTER TY"A"
[redacted] 264 LF. TY "B" GUTTER
Guard Posts
Guard Rail
Riprap
TEMP. SEDIMENT CONTROL DEVICE
EXIST. 18"X 88' RCP
EXIST. 18"X 62' RCP
EXIST. 18"X 41' RCP
PROP. 8 LF. CONC. C&G TY"A"
* EXIST. 8 LF. C & G
EXIST. R.O.W. LINE
MATCH LINE STA. 1473+00
MATCH LINE STA. 1486+00
A10 A11 A96 B97 B13 A12 A13 B15 B20 B17 B16 B12 B11 B81 B82

A96

STA. 1476+20, (100' LT)
[redacted]. TY"B" MANHOLE
TOP OF MH= 115.20
FL. PIPE (WEST) = 104.24
FL. PIPE (EAST) = 104.24
FL. PIPE (SOUTH) = 109.17

B17

STA. 1485+65, (92' RT)
EXIST. TY"C" INLET
([redacted] REMAIN IN PLACE)
TOP GRATE= 108.44
FL. PIPE (NORTH) = 105.40
FL. PIPE (SOUTH) = 105.62
FL. PIPE (EAST) = 105.62

B20

STA. 1485+65 (℄)
† EXIST. TY"B" INLET
[redacted] TY "CC" MOD. I INLET (3' LT)
FL. PIPE (EAST) = 104.44
FL. PIPE (SOUTH) = 104.94
TOP INLET= 112.25'

B12

STA. 1476+00 (115' RT)
EXIST. TY"C" INLET
([redacted] REMAIN IN PLACE)
FL. PIPE (NORTH) = 107.21'
FL. PIPE (SOUTH) = 107.21'
TOP OF GRATE= 110.59

B11

STA. 1476+00 (158' RT)
EXIST. TY"A" INLET
([redacted] REMAIN IN PLACE)
FL. PIPE (NORTH) = 107.26
TOP INLET= 110.72

B16

STA. 1485+65 (158' RT)
EXIST. TY"A" INLET
([redacted] REMAIN IN PLACE)
FL. PIPE (NORTH) = 107.15
TOP INLET= 110.50
Ψ [redacted] INLET EXT.

B81

STA. 1475+90 (74.5' RT.)
[redacted] TY"CC" MOD. INLET
FL. PIPE (NORTH) = 119.20
TOP INLET= 124.65

LEGEND:
* [redacted] ABANDONED
* [redacted] REMOVED AND PAID FOR UNDER ITEM 100 "PREP R.O.W."
# [redacted] REMAIN IN PLACE
† [redacted] REMOVED AND PAID FOR UNDER ITEM 496 "REMOVE OLD STR."

CP INDICATES CONCRETE PLUG; NOT [redacted] PAID FOR DIRECTLY, BUT [redacted] SUBSIDIARY TO PERTINENT BID ITEMS.

Ψ INCLUDES ALL REMOVAL OF ASPH. CONC. PAV., CONC. C+G, BREAKING OF EXIST. INLET, EXCAVATIONS AND OTHER INCIDENTALS NECESSARY TO COMPLETE THE WORK. SUBSIDIARY TO THE ITEM "INLET EXTENSION".

NOTE: ELEVATIONS AND OFFSETS SHOWN FOR TOP OF STRUCTURES MEASURED AT CENTER OF RING & COVER OR GRATE.

STATE OF TEXAS
RAUL PALMA
68666
REGISTERED PROFESSIONAL ENGINEER
Raul Palma
3/3/92

UTILITIES & DRAINAGE
(NETWORK I)
SHEET 3 OF 9 SHEETS

SCALE: 1"= 50'

FED. RD. DIV. NO.	FEDERAL AID PROJECT NO.	SHEET NO.
6	NH 92 (50)M	66

STATE	DIST.	COUNTY
TEXAS	21	HIDALGO

CONT.	SECT.	JOB	HIGHWAY NO.
39	17	97	US83

A15

STA. 1486+60, (70.22' LT)
†EXIST. TY"B" MANHOLE
[redacted]. TY "B" MANHOLE
W/18"X 8' RCP (NORTH)
FL. PIPE (NORTH)= 106.25'
FL. PIPE (EAST)= 102.23'
FL. PIPE (WEST)= 102.23'
TOP MH= 114.92'

B21

STA. 1486+60, (138' LT)
#EXIST. TY"A" INLET
FL. PIPE (SOUTH)= 107.78
TOP INLET= 111.20

B37

STA. 1493+14, (60.25' LT)
=(E) STA. 35+29.82, 3.75' RT.
[redacted] TY"LI" INLET
FL. PIPE (NORTH)= 103.15
TOP INLET= 113.41'

B25

STA. 1490+00, (3' LT.)
[redacted] TY"CC" MOD. I INLET
FL. PIPE (NORTH)= 101.39
FL. PIPE (EAST)= 102.89
FL. PIPE (WEST)= 102.39
TOP INLET= 111.57'

B35

STA. 1493+14, (78' LT.)
=(E) STA. 35+29.82 (21.34' RT.)
[redacted] TY"B" MANHOLE
FL. PIPE (WEST)= 101.07
FL. PIPE (EAST)= 101.07
FL. PIPE (SOUTH)= 103.05
TOP MH= 114.16

A18

STA. 1490+31 (78.3' LT.)
STA. 0+73, 40' LT. (NETWORK I BASELINE)
[redacted] MANH. TY"M"
JUNCT. BOX (6'-0"X5'-6")
OUTSIDE DIMENSION
CENTER R & C STA. 1490+30, (77.6' LT.)
FL. PIPE (WEST)= 101.05
FL. PIPE (EAST)= 100.51
FL. PIPE (NORTH)= 100.21
FL. PIPE (S-W) = 101.14'
TOP MH = 114.65'

B91

STA. 1487+20, (176' LT)
#EXIST. TY"A" INLET
FL. PIPE (SOUTH)= 108.08
TOP INLET= 110.87'

SEE SHEET NO. 59
FOR STORM SEWER LAYOUT

SHEET TOTALS

ITEM	DESCRIPTION	QUANTITY EST.	QUANTITY FIN.	UNIT
530	CONC. GUTTER TY"B"	3632.2		LF
496	REMOVE OLD STR. (PIPE)	790		LF
496	REMOVE OLD STR. (SMALL)	3		EA
474	SLOTTED DRAIN (18")	60		LF
530	CONC. GUTTER TY"A"	60		LF

#EXIST. 12" DRAIN LINE
SEE IRRIGATION DETAILS SHEET 1 OF 1
EXIST. 16" PCLHP PIPE
S-W BELL TEL. BURIED CABLE
#EXIST. 30" RCP
#EXIST MH
EXIST. R.O.W. LINE
#EXIST. 18" RCP
[redacted] 336 LF TY"B" GUTTER
#EXIST. INLET
#EXIST. MH
*EXIST. 24" RCP
#EXIST. 18"X 57' RCP
#EXIST. 18"X 96' RCP
#EXIST. 42"X 306' RCP
[redacted] TEMP. SEDIMENT CONTROL DEVICE
[redacted] 42"X 284' RCP
†EXIST. 24" X 64' RCP
[redacted] TEMP. SEDIMENT CONTROL DEVICE
[redacted] 42"X 689' RCP
†EXISTING 24"X 58' RCP
†EXIST. TY"C" INLET
†EXIST. 24"X 280' RCP
[redacted] 36"X 78' RCP
[redacted] 18"X 14' RCP
†EXIST. 24"X320' RCP
[redacted] 20 LF SLOTTED DRAIN W/20 LF GUTTER TY"A"
[redacted] 18"X 246' RCP
*EXIST. TY"C" INLET
[redacted] 1201LF TY"B" GUTTER
[redacted] 24"X 305' RCP
[redacted] 237 LF. TY"B" GUTTER
[redacted] 36"X 61' RCP
†EXIST. 24"X 68' RCP
REMAIN IN PLACE
[redacted] 905 LF TY"B" GUTTER
EXIST. 24" RCP
[redacted] 18"X 176' RCP
[redacted] 20 LF SLOTTED DRAIN W/20 LF GUTTER TY"A"
[redacted] 18"X 67' RCP
[redacted] 18"X77' RCP
[redacted] 45 LF TY"B" GUTTER
END TY"B" GUTTER STA. 1498+60
[redacted] 24"X 430' RCP
ADJUSTED BY OTHERS
[redacted] 679.5 LF TY"B" GUTTER
[redacted] 18"X 194' RCP
[redacted] 20 LF SLOTTED DRAIN W/20 LF GUTTER TY"A"
[redacted] 18"X49' RCP
[redacted] 18"X 75' RCP
[redacted] 229 LF TY"B" GUTTER
MATCH LINE STA. 1486+00
MATCH LINE STA. 1499+00
Guard Posts
#EXIST. MH
#EXIST. INLET
EXIST. 18" IRRIG. RCLHPP
CITY OF PHARR EXIST. WATER LINE
EXIST. 6" DRAIN LINE (ABANDONED)
EXIST. 36" RCP WELL
DAHLIA ST.
EXIST. R.O.W. LINE

B91 B21 A18 A15 A16 B37 B22 B27 B80 B24 B23 B25 B92 B26 B18

B92

STA. 1496+40, (89'RT)
[redacted] TY. "C" INLET
PROP. PIPE (EAST)= 108.00
TOP INLET = 111.00'

B27

STA. 1496+10, (3'LT)
[redacted] TY. "CC" MOD. I INLET
FL. PIPE (EAST)=105.50
TOP INLET= 110.69

B26

STA. 1496+91, (74'RT)
[redacted] TY. "CC" MOD. I INLET
FL. PIPE (NORTH)=105.19'
FL. PIPE (WEST)=105.19
TOP INLET= 109.64

B80

STA. 1496+91, (4'LT)
[redacted] TY. "A" MANHOLE
FL. PIPE (SOUTH)=104.74'
FL. PIPE (EAST)= 104.24'
FL. PIPE (WEST)=104.74
TOP MH= 110.71

LEGEND:
* [redacted] ABANDONED
# [redacted] REMAIN IN PLACE
† [redacted] REMOVED AND PAID FOR UNDER ITEM 496 "REMOVE OLD STR."

B18

STA. 1487+67, (86.82' RT.)
=STA. 42+60.07 "C" 12' RT.
[redacted] TY"CC" MOD. I INLET
FL. PIPE (WEST)= 106.01
TOP INLET= 110.06'

A16

STA. 1487+25, (71.88' LT)
†EXIST. PIPE JOINT
[redacted] TY"B" MANHOLE
W/18"X 8' RCP (NORTH)
FL. PIPE (NORTH)= 106.25'
FL. PIPE (WEST)= 102.10'
FL. PIPE (EAST)= 101.60'
TOP MANHOLE= 114.89'

B22

STA. 1494+30, (3'LT)
[redacted] TY. "CC" MOD. I INLET
FL. PIPE (WEST)= 105.50'
TOP INLET= 110.90'

B23

STA. 1492+50, (66'RT)
[redacted] TY. "CC" MOD. I INLET
FL. PIPE (NORTH)= 105.27'
TOP INLET= 110.34'

B24

STA. 1492+50, (4'LT)
[redacted] TY. "A" MANHOLE
FL. PIPE (WEST)=105.13'
FL. PIPE (EAST)= 105.13'
FL. PIPE (SOUTH)=105.13'
TOP MH= 111.22'

UTILITIES & DRAINAGE

(NETWORK I)

SHEET 4 OF 9 SHEETS

NOTE: ELEVATIONS AND OFFSETS SHOWN FOR TOP OF STRUCTURES MEASURED AT CENTER OF RING & COVER OR GRATE.

STATE OF TEXAS
PAUL PALMA
68686
REGISTERED
PROFESSIONAL ENGINEER
3/3/92

SCALE: 1"= 50'

FED. RD. DIV. NO.	FEDERAL AID PROJECT NO.	SHEET NO.
6	NH92 (50)M	67

STATE	DIST.	COUNTY	
TEXAS	21	HIDALGO	
CONT.	SECT.	JOB	HIGHWAY NO.
39	17	97	US83

B32

STA. 1500+00, (137' LT)
EXIST. TY"A" INLET
TOP INLET= 108.77
FL. PIPE (SOUTH)= 105.04

B31

STA. 1500+00, (3' LT)
† EXIST. TY"B" INLET
[redacted] TY"A" MANHOLE (4' LT)
FL. PIPE (NORTH)= 102.84
FL. PIPE (SOUTH)= 103.34
FL. PIPE (WEST)= 103.34
TOP MH= 111.19

B33

STA. 1500+00, (86' LT)
† EXIST. TY"A" MANHOLE
[redacted]. MANH. TY"M"
STA. 1500+00
RING & COVER = 80' LT
CENTER MH = 80.75'LT
W/18"X8' RCP EXT. (NORTH)
TOP MANHOLE= 111.60'
FL. PIPE (NORTH)= 103.46
FL. PIPE (SOUTH)= 102.12
FL. PIPE (WEST)= 101.62

97

STA. 1502+85, (90' LT)
[redacted] TY"CC" MOD. I INLET
FL. PIPE (NORTH)= 103.50'
TOP INLET= 109.75'

96

STA. 1502+85, (128' LT)
[redacted] TY"A" MANHOLE
FL. PIPE (EAST)= 100.50'
FL. PIPE (WEST)= 100.50'
FL. PIPE (SOUTH)= 100.50'
TOP MH= 108.75'

B78

STA. 1500+00, (54' LT)
[redacted]. MANH. TY"M"
5'X5' INSIDE WIDTH
FL. PIPE (NORTH)= 102.18
FL. PIPE (SOUTH)= 102.68
FL. PIPE (EAST)= 103.68
TOP MH. = 110.34

B77

STA. 1500+48 (54' LT)
[redacted]. TY"CC" MOD. I INLET
FL. PIPE (WEST)= 103.92'
FL. PIPE (EAST)= 103.92'
TOP INLET= 110.34

B93

STA. 1501+05 (70' LT)
[redacted] TY"C" INLET
FL. PIPE (WEST) = 109.00
TOP INLET = 112.00

SHEET TOTALS				
ITEM	DESCRIPTION	QUANTITY EST.	QUANTITY FIN.	UNIT
496	REMOVE OLD STR. (PIPE)	173		LF
★★ 432	CONC. RIP-RAP (6 IN)	1.8		CY
530	CONC. GUTTER TY"B"	1948		LF
	* REMOVE CONC. RIPRAP	2.4		SY
496	REMOVE OLD STR. (SMALL)	4		EA
530	CONC. C&G TY"A"	8		LF
474	SLOTTED DRAIN (18")	40		LF
530	CONC. GUTTER TY"A"	40		LF
*	REMOV. C & G TY"A"	8		LF

★★ NOTE: SEE SHT #59 FOR RIPRAP DETAILS

CP POWER LINE ([redacted] ADJUSTED BY OTHERS)
EXIST. 18"X 134' RCP
EXIST. 12" DRAIN LINE
EXIST. 24"X 602' RCP
VENT
EXIST. 12" IRRIG. LINE
EXIST. INLET
EXIST. R.O.W. LINE
[redacted]. 18"X 35' RCP
EXIST. INLET
S-W BELL TEL. CO.
EXIST. BURIED CABLES
HIGH MAST LUMINAIRE
[redacted] 66.5 LF TY"B" GUTTER
EXIST. 18"X 52" RCP
EXIST. MH.
[redacted]. 18"X55' RCP
† EXIST. INLET
# EXIST. 18"X 212' RCP
# EXIST. 18"X 8' RCP
# EXIST. MH.
[redacted] 36"X 29' RCP
* EXIST. MH.
N 81°31'57"W
[redacted] 30"X 48' RCP
[redacted] 18"X44' RCP
* EXIST. 24" RCP
† EXIST. 18"X 83' RCP
*EXIST. CONC. RIPRAP (CLASS B)
[redacted] 1.8CY RIP-RAP
* EXIST. JUNCT. BOX
EXIST. 18" RCP (ABANDONED)
* EXIST. 24" RCP
* EXIST. 18"X 93' RCP
MATCH LINE STA. 1499+00
1500+00
1505+00
1510+00
[redacted] REMAIN IN PLACE [redacted] 649.5' LF TY"B" GUTTER
† EXIST. 18"X 90' RCP
† EXIST. INLET
# EXIST. 10" DRAIN LINE
[redacted] 40 LF SLOTTED DRAIN W/40 LF GUTTER TY"A"
[redacted] 1232 LF TY"B" GUTTER
[redacted] 24"X 72' RCP
[redacted] 24"X 346' RCP
[redacted] 18"X 20' RCP
[redacted] 18"X 306' RCP
TEMP. SEDIMENT CONTROL DEVICE.
Guard Posts
Concrete Drain
Riprap
N 81°31'57"W
30+00
00+62
PT 29+41.38
EXIST. MH.
EXIST. 18"X54' RCP
EXIST. 18" RCP
[redacted] 8' CONC. C&G (TY"A")
* EXIST. 8' LF C&G TY"A"
EXIST. R.O.W. LINE
EXIST. INLET
CANNA ST.
ASTER ST.
EXIST. 18' RCP
EXIST. 18" RCP
EXIST. MH.
EXIST. INLET

B30

STA. 1500+00, (73' RT.)
[redacted] TY "CC" MOD. I INLET
TOP INLET= 109.83
FL. PIPE (NORTH)= 103.64
FL. PIPE (SOUTH)= 104.14
FL. PIPE (EAST)= 104.57

B29

STA. 1500+00, (96' RT.)
#EXIST. TY "C" INLET
FL. PIPE (SOUTH)= 104.17
FL. PIPE (NORTH)= 104.17
TOP INLET= 106.92

B28

STA. 1500+00, (158' RT)
EXIST. TY"A" INLET
FL. PIPE (NORTH)= 105.39
TOP INLET= 108.92
Ψ PROP. INLET EXT.

B76

STA. 1503+50, (65' RT)
[redacted] TY"A" MANHOLE
FL. PIPE (WEST)= 105.95'
FL. PIPE (EAST)= 106.45'
TOP MH = 110.85

B74

STA. 1506+60, (60' RT)
[redacted]. TY"CC" MOD. I INLET
FL. PIPE (WEST) = 113.19'
TOP INLET= 116.91

LEGEND:

★ [redacted] ABANDONED

* [redacted] REMOVED AND PAID FOR UNDER ITEM 100 "PREP R.O.W."

[redacted] REMAIN IN PLACE

Ψ INCLUDES ALL REMOVAL OF ASPH. CONC. PAV., CONC. C+G, EXCAVATIONS AND OTHER INCIDENTALS NECESSARY TO COMPLETE THE WORK.

† [redacted] REMOVED AND PAID FOR UNDER ITEM 496 "REMOVE OLD STR."

CP CONC. PLUG SUBSIDIARY TO PERTINENT BID ITEMS.

NOTE: ELEVATIONS AND OFFSETS SHOWN FOR TOP OF STRUCTURES MEASURED AT CENTER OF RING & COVER OR GRATE.

STATE OF TEXAS
PAUL PALMA
86466
REGISTERED PROFESSIONAL ENGINEER
10/31/91

NETWORK I
UTLITIES & DRAINAGE

SHEET 5 OF 9 SHEETS

SCALE 1"= 50'

FED. RD. DIV. NO.	FEDERAL AID PROJECT NO.		SHEET NO.
6	NH92 (50)M		68
STATE	DIST.	COUNTY	
TEXAS	21	HIDALGO	
CONT.	SECT.	JOB	HIGHWAY NO.
39	17	97	US83

TØ

STA.1513+59 (472' LT.)
EXIST. TY "A" INLET
(REMAIN IN PLACE)
TOP OF INLET=109.00
F.L. PIPE (N.W.)=104.25
F.L. INLET=104.25

T1

STA.1513+24 (487' LT.)
EXIST. TY "A" MANHOLE
(REMAIN IN PLACE)
TOP OF MANHOLE=109.23
F.L. MANHOLE=104.25
F.L. PIPES=104.25

SØ

STA.1510+55 (100' LT.)
TY "A" MANHOLE
(EXIST. 24" RCP TO BE RELAYED)
TOP OF MH =112.03
F.L. MH =101.80
F.L. PIPE (E - W) =101.80

D0

STA. 1511+65 (165' RT.)
EXIST. TY "A" INLET
(REMAIN IN PLACE)
TOP INLET=108.51
F.L. PIPE (N)=105.21
F.L. INLET=105.21

D1

STA. 1511+50 (110 RT.)
EXIST. TY "A" INLET
(REMAIN IN PLACE)
TOP INLET=109.46
F.L. PIPE=105.00
F.L. INLET=105.00

D2

STA. 1511+65 (113' RT.)
EXIST. JUNT. BOX
(REMAIN IN PLACE)
F.L. JUNCT. BOX=104.71
F.L. PIPES=104.71

D5

STA. 1511+65 (193'LT.)
EXIST. TY "A" INLET
(REMAIN IN PLACE)
TOP INLET=108.27
F.L. PIPE (S)=105.56
F.L. INLET=105.56

D3

STA. 1512+00 (83' LT.) (F.V.)
EXIST. TY "A" INLET
(REMAIN IN PLACE)
TOP INLET=109.22
F.L. PIPE (NE)=102.26
F.L. INLET=102.26

T2

STA. 1512+20 (114' LT.)
EXIST. JUNCT. BOX
(REMAIN IN PLACE)
F.L. JUNCT. BOX=101.91
F.L. PIPE(S.W.)=101.91
F.L. PIPES (E&W)=101.41

Z2

STA. 1512+30 (114' LT.)
EXIST. TY "A" INLET
(REMAIN IN PLACE)
TOP INLET=109.61
F.L. PIPE (E&W)=101.39
F.L. INLET 101.39

Z0

STA. 1508+50 (115' LT.)
EXIST. TY "C" INLET
(REMAIN IN PLACE)
F.L. GRATE=109.38
F.L. PIPE (E)=102.13
WEST PIPE TO BE PLUGGED
F.L. INLET=102.13'

Z1

STA. 1511+65 (114' LT.)
EXIST. TY "C" INLET
(REMAIN IN PLACE)
F.L. GRATE=108.38
F.L. PIPES (E&W)=101.63
F.L. PIPE (N)=105.03
F.L. PIPE (S)=104.11
F.L. INLET =101.57

Z3

STA. 1513+20 (114' LT.)
EXIST. TY "A" INLET
(REMAIN IN PLACE)
TOP OF INLET=109.75
F.L. PIPE (E&W)=101.37
F.L. PIPE (N.)=102.82
F.L. INLET=101.37

Z4

STA. 1515+00 (117' LT.)
EXIST. TY "B" MANHOLE
(REMAIN IN PLACE)
TOP OF MH = 109.33
F.L. M.H. =101.16
F.L. PIPE (W)=101.16
F.L. PIPE (E)=101.16
F.L. PIPE (S)=101.16

E0

STA. 1514+98 (110' LT.)
EXIST. TY "A" INLET
(REMAIN IN PLACE)
TOP OF INLET=109.11
F.L. INLET=104.10
F.L. PIPE(N)=104.10

G0

STA. 1519+00 (164' RT.)
EXIST. TY "A" INLET
(REMAIN IN PLACE)
(*) 1 INLET EXTENSION
TOP INLET=108.08
F.L. INLET=103.64
F.L. PIPE (N.)=103.64

G3

STA. 1519+00 (110' RT.)
EXIST. TY "C" INLET
(REMAIN IN PLACE)
F.L. GRATE=108.46
F.L. PIPE (N&S)=103.50
F.L. INLET=103.50

Z5

STA. 1517+45 (117'LT.)
MANHOLE TY "B"
F.L. MANHOLE=100.96
F.L. PIPE (E&W) RCP=100.96
TOP OF MANHOLE=108.82

K2

STA. 1517+60 (67.64' RT.)
TY "CC" (MOD.) INLET
F.L. GRATE=121.59'
F.L. INLET=118.25
F.L. PIPE (S)=118.25

F0

STA. 1516+81 (54.62' LT.)
TY "CC" (MOD.) INLET
F.L. GRATE=123.81
F.L. INLET=120.00
F.L. PIPE (N)=120.00

K3

STA. 1517+60 (114' RT.)
MANHOLE TY "A"
F.L. MANHOLE=105.88
F.L. PIPE (E) =105.88
F.L. PIPE (N) =105.88
TOP MANHOLE=108.70'

F1

STA. 1516+81 (117' LT.)
MANHOLE TY "B"
F.L. MANHOLE=101.02
F.L. PIPE (E&W)=101.02
F.L. PIPE (S)=101.77
TOP MANHOLE=109.00

G4

STA. 1520+00 (140' LT.)
EXIST. TY "A" INLET
(REMAIN IN PLACE)
(*) 1 INLET EXTENSION
TOP OF INLET=107.83
F.L. INLET=102.91
F.L. PIPE (S)=102.91

G5

STA. 1520+00 (85' LT.)
EXIST. TY "C" INLET
(ADJUSTED)
F.L. GRATE=107.63
F.L. INLET=102.89
F.L. PIPE (N)=102.89
F.L. PIPE(S)=102.89

Z6

STA. 1519+87.5 (62.41' LT.)
TY "CC" (MOD.) INLET
F.L. GRATE=114.12
F.L. INLET=100.59
F.L. PIPE (N.E.)=102.59
F.L. PIPE (S.W.)=102.72
F.L. PIPE (E)=100.59
F.L. PIPE (W)=100.59

INSET A

(*) G4
18" X22' RCP
6"
36" RCP
EXIST. 18"X31' RCP REMOVED
42" RCP
℄ TY "CC" INLET
EXIST. 18"X 188' RCP REMAIN IN PLACE

(*) INLET EXTENSION INCLUDES ALL REMOVAL OF CONC. PAV., CONC. CURB & GUTTER, EXCAVATION AND OTHER INCIDENTALS NECESSARY TO COMPLETE THE WORK

△ INDICATED INLET FLOW LINE ADJUSTED BY FILLING WITH CONCRETE TO THE SPECIFIED ELEV. AND PAID FOR UNDER ITEM 479 ADJ. MANHOLES AND INLETS.

CP INDICATES CONCRETE PLUG NOT PAID FOR DIRECTLY BUT SUBSIDIARY TO THE VARIOUS BID ITEMS.

† REMOVED AND PAID FOR UNDER ITEM 496 "REMOVE OLD STRUCTURE".

* REMOVED UNDER ITEM 100 "PREP. R.O.W."

REMAIN IN PLACE

✱ ABANDONED

◪ EXIST INLET TO CAPPED AND CONVERTED JUNCTION BOX TO BE PAID FOR UNDER ITEM 479 "ADJ. MANHOLES AND INLETS"

SCALE: 1"= 50'

SHEET TOTALS

	ITEM	DESCRIPTION	QUANTITY EST.	QUANTITY FIN.	UNIT
	496	REMOVE OLD STRUCT. (PIPE)	118		LF
☒	530	CURB AND GUTTER TY"A"	20		LF
	530	CONC. GUTTER TY"B"	1117		LF
	479	ADJ. MANHOLE AND INLETS	1		EA
	496	REMOVE OLD STRUCT. (SMALL)	1		EA
☒	530	CONC. CURB TY"A"	12		LF
	530	CONC. GUTTER TY"A"	120		LF
	474	SLOTTED DRAIN (18")	120		LF

NOTE: ☒ REMOVAL OF EXIST. CURB OR C&G SUBSIDIARY TO ITEM 100

UTILITIES & DRAINAGE
(NETWORK 11)

SHEET 6 OF 9 SHEETS

FED. RD. DIV. NO.	FEDERAL AID PROJECT NO.	SHEET NO.
6	NH 92 (50) M	69

STATE	DIST.	COUNTY
TEXAS	21	HIDALGO

CONT.	SECT.	JOB	HIGHWAY NO.
39	17	97	US83

PAUL PALMA 86868 REGISTERED PROFESSIONAL ENGINEER
10/31/41

7EAN325107FILE: EX11006.DGN JPARMSAVE

G1
STA. 1521+75 (99.01' RT.)
[redacted] TY "CC" (MOD. I) INLET
F.L. GRATE=109.77
F.L. INLET=107.00
F.L. PIPE (N)=107.00
F.L. PIPE (S)=107.00

G2
STA. 1521+75 (111.5' RT.)
[redacted] MANHOLE TY "A"
F.L. MANHOLE=106.00
F.L. PIPE (N)=106.00
F.L. PIPE (W)=106.00
TOP MANHOLE=108.88

Z7
STA. 1522+03 (64.42 LT.)
[redacted] TY "CC" (MOD.) INLET
F.L. GRATE=110.07
F.L. INLET=100.38
F.L. PIPES (E&W)=100.38

Z8
STA. 1523+50 (68.42' LT.)
[redacted] TY "CC" (MOD.) INLET
F.L. GRATE=109.50
F.L. INLET=100.23
F.L. PIPES (E&W)=100.23

Z9
STA. 1526+44 (80.42' LT.)
[redacted] TY "CC" (MOD.) INLET
F.L. GRATE=108.71
F.L. INLET=99.93
F.L. PIPES (E&W)=99.93

Z10
[redacted] TY"M" MANHOLE
RISER STA.1529+30 (73' LT.)
JUNCT. BOX (6'X4') STA.1529+30 (72' LT.)
F.L. MANHOLE = 99.64
F.L. PIPE (N) = 101.64
F.L. PIPE (W) = 99.64
F.L. PIPE (E) = 99.64
F.L. PIPE (S) = 99.64
TOP OF MANHOLE = 109.96

P0
[redacted] INLET
TY"V" MI-11 (RISER)
STA.1530+99.17 (71.13' LT.)
A=5'-3", C=4.4', D=9.65'
TOP OF GRATE FL. ELEV. = 109.00
TY"J" MI-4(1), (4'-11"X4'-4")
STA.1531+00 (70' LT.)
FL. PIPES (E&W) = 99.35
FL. INLET = 99.35

H0
STA. 1530+20 (148' RT.)
EXIST. TY "C" INLET
([redacted] REMAIN IN PLACE)
F.L. GRATE=105.98
F.L. INLET=103.85
F.L. PIPE (W)=103.85

H1
STA. 1529+30 (140' RT.)
EXIST. TY "A" INLET
(TO REMAIN IN PLACE)
⊛ [redacted] I INLET EXTENSION
TOP INLET=107.12
F.L. INLET=102.00
F.L. PIPE (N)=102.00
F.L. PIPE (E)=102.75

H3
STA. 1529+30(87' RT.)
† EXIST. TY "C" INLET
([redacted] REMOVED)
[redacted] TY "M" MANHOLE (86.60 RT.)
F.L. MANHOLE=101.62
F.L. PIPE (N&S)=101.62
F.L. PIPE (E)=101.62
TOP OF M.H.=110.16
=D STA. 33+16.08, 342' LT

H2
STA. 1529+95 (85.40' RT.)
[redacted] TY "CC" (MOD.) INLET
F.L. GRATE=109.10
F.L. INLET=101.75
F.L. PIPE (W)=101.75

H6
STA. 1529+30 (55.21' RT.)
[redacted] MANHOLE TY "M"
F.L. M.H. =101.51
F.L. PIPES (N&S)=101.51
F.L. PIPES (E&W)=101.51
TOP OF M.H.=108.87

H4
STA. 1524+14 (54.04 RT.)
[redacted] TY "CC" (MOD.) INLET
F.L. GRATE=109.73
F.L. INLET=102.32
F.L. PIPE (E)=102.32

CITY OF PHARR
EXIST. 8" SANITARY SEWER
S.W. BELL TEL. CO.
BURIED CABLE
6' LINE
CP
TFP
FH
EXIST. R.O.W. LINE
EXIST. 24"X440'
42"X284' RCP
20 LF. SLOTTED DRAIN
W/20 LF. GUTTER TY"A"
EXIST. MANHOLE
FL=101.60
EXIST. 18" IRRIG.
RCLHP PIPE LINE
Billboard
[redacted] 8 LF CONC.
C & G TY "A"
H9
EXIST. 18"X 48' RCP
[redacted] 18"X 65' RCP
[redacted] RCP.
48"X166' RCP
EXIST. 24"X 4
[redacted] GUTTER TY"B" 82'LF.
EXIST. 24"X 147' RCP
42"X148' RCP
42"X213 RCP
42"X 144' RCP
20 LF. SLOTTED DRAIN
W/20 LF. GUTTER TY"A"
GUTTER TY"B" 798 LF.
42"X 140' RCP
PROP. 20 LF. SLOTTED DRAIN
W/20 LF. GUTTER TY"A"
S 81°31'47"E
30+00
35+00
24"X14' RCP
48"X277' RCP
EXIST. 18"X 32'
GUTTER TY"B" 636 LF.
EXIST. 18"X 80' RCP
20 LF. SLOTTED DRAIN
W/20 LF. GUTTER TY"A"
Inlet
EXIST. INLET
Guard Fence
1525+00
1530+00
18"X 28' RCP
[redacted] 18"X 121' RCP
GUTTER T/"B" 1035 LF.
18"X292' RCP
18"X216' RCP
EXIST. 18"X 82' RCP
18"X73' RCP
20 LF. SLOTTED DRAIN
W/20 LF. GUTTER TY"A"
STA. 1531+19.64
END [redacted] RET. WALL
TEMP. SEDIMENT CONTROL DEVICE
GUTTER TY"B" 195 LF.
20 LF. SLOTTED DRAIN
W/20 LF. GUTTER TY"A"
GUTTER TY"B" 380 LF.
18"X62' RCP
18"X4' RCP
18"X4' RCP
TEMP. SEDIMENT CONTROL DEVICE
STA. 1529+93.92 END [redacted] RET. WALL
#EXIST. 18"X 52' RCP
GUTTER TY"B" 189 LF.
18"X 272' RCP
#EXIST. 18" RCP
40 LF. SLOTTED DRAIN
W/40 LF. GUTTER TY"A"
18"X9.0' RCP
20 LF. SLOTTED DRAIN
W/20 LF. GUTTER TY"A"
HIGH MAST LUMINAIRE
FL=102.50
EXIST. R.O.W. LINE
EXIST. 18"X 6' RCP
[redacted] 8 LF CONC.
C & G TY "A"
EXIST. 18"X 86' RCP
Paved Parking
Guard Posts
MATCH LINE STA. 1520+00
MATCH LINE STA. 1533+00

R0
STA.1523+00 (68' RT.)
[redacted] TY"C" INLET
F.L. GRATE = 111.00
F.L. INLET = 107.75
~~F.L. PIPE (W) = 107.75~~

R1
STA.1521+75 (68' LT.)
[redacted] MANHOLE TY"A"
F.L. MH. = 107.25
~~F.L. PIPE (E) = 107.25~~
F.L. PIPE (S) = 107.25
TOP OF MANHOLE = 112.61

K5
STA. 1525+01 (74.42' LT.)
[redacted] TY "CC" (MOD.) INLET
F.L. GRATE=109.10
F.L. INLET=100.08
F.L. PIPE (E&W) =100.08

H5
STA. 1530+07 (54.98' RT.)
[redacted] TY "CC" (MOD. I) INLET
F.L. GRATE=108.83
F.L. INLET=101.64
F.L. PIPE (W)=101.64

K4
STA. 1527+10 (55.04' RT.)
[redacted] TY "CC" (MOD I) INLET
F.L. GRATE=109.21
F.L. INLET=101.84
F.L. PIPES (E&W)=101.84

H7
STA. 1529+30 (℄)
EXIST. TY "C" INLET
[redacted] CONVERTED TO JUNCT. BOX)
F.L. INLET=101.34
F.L. PIPE (N&S)=101.34
CAP AT ELEV. = 106.15

H8
STA. 1529+30 (53.41' LT.)
[redacted] TY "CC" (MOD. I) INLET
F.L. GRATE=108.90
F.L. INLET=100.24
F.L. PIPE (S)=100.24
F.L. PIPE (N)=100.24

H9
STA. 1529+30 (140' LT.)
EXIST. TY "A" INLET
([redacted] REMAIN IN PLACE)
⊛ [redacted] INLET EXTENSION
TOP INLET=106.30
F.L. INLET=101.80
F.L. PIPE (S)=101.80

SHEET TOTALS

ITEM	DESCRIPTION	QUANTITY EST.	QUANTITY FIN.	UNIT
496	REMOVE OLD STRUCT. (PIPE)	520		LF
530	CURB AND GUTTER TY"A"	16		LF
530	CONC. GUTTER TY"B"	3315		LF
479	ADJ. MANHOLE AND INLETS	1		EA
496	REMOVE OLD STRUCT. (SMALL)	3		EA
530	CONC. GUTTER TY"A"	200		LF
474	SLOTTED DRAIN (18")	200		LF
[redacted]	REMOVE CONC. C&G	16.		LF

NOTE: [redacted] REMOVAL OF EXIST. CURB & C&G SUBSIDIARY TO ITEM 100.

⊛ [redacted] INLET EXTENSION INCLUDES ALL REMOVAL OF CONC. PAV., CONC. CURB & GUTTER, EXCAVATION AND OTHER INCIDENTALS NECESSARY TO COMPLETE THE WORK.

CP INDICATES CONCRETE PLUG NOT [redacted] PAID FOR DIRECTLY BUT [redacted] SUBSIDIARY TO THE VARIOUS BID ITEMS.

† [redacted] REMOVED AND PAID FOR UNDER ITEM 496 "REMOVE OLD STRUCT." (PIPE)

✱ [redacted] REMOVED UNDER ITEM 100 "PREP. R.O.W."

[redacted] REMAIN IN PLACE

✱ [redacted] ABANDONED

◪ EXIST INLET [redacted] CAPPED AND CONVERTED TO JUNCTION BOX [redacted] PAID FOR UNDER ITEM 479 "ADJ. MANHOLES AND INLETS"

UTILITIES & DRAINAGE
(NETWORK 11)
SHEET 7 OF 9 SHEETS

SCALE: 1"= 50'

FED. RD. DIV. NO.	FEDERAL AID PROJECT NO.	SHEET NO.
6	NH 92(50)M	70

STATE	DIST.	COUNTY
TEXAS	21	HIDALGO

CONT.	SECT.	JOB	HIGHWAY NO.
39	17	97	US83

STATE OF TEXAS
PAUL PALMA
68266
REGISTERED
PROFESSIONAL ENGINEER
Paul Palma
3/3/92

ZFA1: [325107]EXUD007.DGN IPARM: SAME

Z11
STA. 1533+80, (64.00' LT.)
[redacted]. TY"CC" (MOD.) INLET
FL. GRATE= 108.44
FL. INLET= 98.88
FL. PIPE (E & W)= 98.88

Z12
STA. 1536+40 (61.34' LT.)
[redacted]. TY"CC" (MOD.) INLET
FL. GRATE= 108.34
FL. INLET= 98.51
FL. PIPES (E & W)= 98.51

Z14
[redacted]. TY "M" MANHOLE
RISER STA. 1538+81 (56.01' LT.)
JUNCTION BOX (6'X6')
STA. 1538+80 (55.01' LT.)
TOP OF MANHOLE=108.34
FL. PIPE (W)= 98.17
FL. PIPE (E)= 100.67
FL. PIPE (N)= 98.17
FL. PIPE (S)= 100.75

I0
STA. 1538+80 (140' RT.)
EXIST. TY "A" INLET
([redacted] REMAIN IN PLACE)
⊛ [redacted]. I INLET EXTENSION
TOP OF INLET=106.22
F.L. INLET=101.45
F.L. PIPE (N)=101.45

I1
STA. 1538+80 (85' RT.)
EXIST. TY "A" MANHOLE
([redacted] REMAIN IN PLACE)
F.L. MANHOLE=101.24
FL. PIPES= 101.24
TOP OF MANHOLE=107.19

I3
STA. 1538+80 (℄)
EXIST. INLET TY "C"
([redacted] CONVERTED
TO JUNCT. BOX)
F.L. PIPE (N & S)=100.92
F.L. INLET=100.92
CAP AT ELEV.= 105.02

Y0
[redacted]. TY "M" MANHOLE RISER
STA. 1538+81.25 (95.32' LT.)
JUNCT. BOX (6'-6"X5'-6")
STA. 1538+80 (96.07 LT.)
TOP OF M.H.=106.39
FL PIPE(N)= 97.60
FL PIPE (S)= 98.10
FL. PIPE (E)= 98.48

I4
STA. 1539+18 (85.30' LT.)
[redacted]. TY "CC" (MOD.) INLET
F.L. GRATE=107.81
F.L. INLET=98.50
FL. PIPES (E & W)= 98.50

Y1
STA. 1538+80 (140' LT.)
EXIST. TY "A" INLET
([redacted] REMOVED & REPLACED)
[redacted]. TY "A" (MOD.1) INLET
(141.50' LT.)
⊛ [redacted]. I INLET EXTENSION
TOP OF INLET=105.90
F.L. INLET=97.48
FL. PIPE (S)= 97.48
FL. PIPE (E)= 97.48

Y2
[redacted]. TY "M" MANHOLE
RISER STA. 1539+41.49 (142.75 LT.)
JUNCT. BOX. (6'-6"X6'-6")
STA. 1539+40.24 (141.5 LT.) = 1+41.5('Y')
FL. PIPE (W)= 97.42
FL. PIPE (N)= 97.42
FL. MANHOLE= 97.42
TFP TOP OF MANHOLE=105.84

Z13
STA. 1539+18 (53.90'LT.)
[redacted]. TY"CC" (MOD.) INLET
FL. GRATE= 108.32
FL. INLET= 101.10
FL. PIPE (W)= 101.10

I2
STA. 1536+90 (86' RT.)
[redacted]. TY "C" INLET
F.L. GRATE=105.70
F.L. INLET=102.04
F.L. PIPE(E)=104.04

OUTFALL LOCATION
APPROX. 2015' NORTH

IRRIGATION
EXIST. 18" RCLHPP
FL=100.30

[redacted]. 54"X349' RCP
(SEE SHEET 64 FOR DETAILS)

[redacted] CUT & RESTORE
PAVEMENT (269 SY)

[redacted]. 70'CONC. C&G TY"A"

[redacted]. 54"X55'RCP

EXIST. R.O.W. LINE

[redacted]. GUTTER TY"B" 627'LF.
[redacted]. 20 LF. SLOTTED DRAIN
W/20 LF. GUTTER TY"A"

HIGH MAST LUMINAIRE

★EXIST. 24"X 475' RCP

[redacted]. 54"X40'RCP
[redacted] CONC. CURB TY

† EXIST. M.H. TY "B"

[redacted]. 42"X446' RCP

†EXIST. 24"X 496' RCP

† EXIST. 18"X 48' RCP

STA. 1539+27.20 END [redacted]. RET. WALL

[redacted]. 20 LF. SLOTTED DRAIN
W/20 LF. GUTTER TY"A"

[redacted]. 48"X36'RCP

† EXIST. 18"X32'

[redacted]. 42"X36'RCP

†EXIST. 24"X 320' RCP

[redacted]. 42"X328' RCP

[redacted]. GUTTER TY"B" 557'LF.

[redacted]. 48"X 258' RCP

[redacted]. 48"X236'RCP

#EXIST. 18"X 83' RCP

[redacted]. TEMP. SEDIMENT CONTROL DEVICE

STA. 1539+17.20 END [redacted]. RET. WALL

[redacted]. 18"X35' RCP

[redacted]. 20 LF. SLOTTED DRAIN
W/20 LF. GUTTER TY"A"

#EXIST. 18"X 80' RCP

★EXIST. 18" RCP

[redacted]. 18"X186' RCP

S 83° 7' 33"E

†EXIST. INLET

[redacted]. TEMP. SEDIMENT CONTROL DEVICE

† EXIST. 18"X110'

[redacted]. 8' C&G TY "A"

Conc. Curb TY "A"

#EXIST. 18"X 48' RCP

EXIST. R.O.W. LINE

EXIST. R.O.W. LINE

FL=99.8

Sign

Gate

Inlet

Guard Fence

MATCH LINE STA. 1533+00

MATCH LINE STA. 1546+00

I5
STA. 1543+68 (90' LT.)
[redacted]. MANHOLE TY "B"
[redacted]. F.L. MANHOLE=98.71
[redacted]. PIPES (E & W)=98.71
TOP MANHOLE=105.50

NOTE ⊠ [redacted] REMOVAL OF EXISTING CURB OR C & G [redacted] SUBSIDIARY TO ITEM 100.

SHEET TOTALS

ITEM	DESCRIPTION	QUANTITY EST.	QUANTITY FIN.	UNIT
496	REMOVE OLD STRUCT. (PIPE)	1006		LF
530	CURB AND GUTTER TY"A"	78		LF
530	CONC. GUTTER TY"B"	1184		LF
479	ADJ. MANHOLE AND INLETS	1		EA
496	REMOVE OLD STRUCT. (SMALL)	2		EA
530	CONC. GUTTER TY"A"	60		LF
474	SLOTTED DRAIN (18")	60		LF
400	CUT & RESTORE PAV'T.	269		SY
⊠	REM. CONC. CURB. TY "A"	22		LF

⊛ [redacted]. INLET EXTENSION INCLUDES ALL REMOVAL OF CONC. PAV., CONC. CURB & GUTTER, EXCAVATION AND OTHER INCIDENTALS NECESSARY TO COMPLETE THE WORK.

CP INDICATES CONCRETE PLUG NOT [redacted] PAID FOR DIRECTLY BUT [redacted] SUBSIDIARY TO THE VARIOUS BID ITEMS".

† [redacted] REMOVED AND PAID FOR UNDER ITEM 496 "REMOVE OLD STRUCT".

✕ [redacted] REMOVED UNDER ITEM 100 "PREP. R.O.W."

[redacted] REMAIN IN PLACE

★ [redacted] ABANDONED

◪ EXIST INLET [redacted] CAPPED AND CONVERTED TO JUNCTION BOX [redacted] PAID FOR UNDER ITEM 479 "ADJ. MANHOLES AND INLETS"

SCALE: 1"= 50'

UTILITIES & DRAINAGE

(NETWORK 11)

SHEET 8 OF 9 SHEETS

FED. RD. DIV. NO.	FEDERAL AID PROJECT NO.		SHEET NO.
6	NH 92(50)M		71
STATE	DIST.	COUNTY	
TEXAS	21	HIDALGO	
CONT.	SECT.	JOB	HIGHWAY NO.
39	17	97	US83

STATE OF TEXAS · PAUL PALMA · 80056 · REGISTERED PROFESSIONAL ENGINEER
Paul Palma
10/31/91

ZEAL: [325107]EXUD008.DGN [PARM: SAME

JO

STA. 1547+00 (86' RT.)
EXIST. TY "C" INLET
([redacted] REMAIN IN PLACE)
F.L. GRATE=103.41
F.L. INLET=100.40
F.L. PIPE (N) = 100.40

X3

STA. 1547+00 (85' LT.)
† EXIST. TY "C" INLET
([redacted] REMOVED)
[redacted]. TY "CC" INLET
F.L. GRATE=103.35
F.L. INLET=98.86
F.L. PIPE (E) =98.86
F.L. PIPE (W) =98.86
F.L. PIPE (S) =99.75

LO

STA. 1552+00 (140' RT.)
EXIST. TY "A" INLET
([redacted] REMAIN IN PLACE)
⊛ [redacted]. 1 INLET EXTENSION
TOP OF INLET=105.31
F.L. INLET=100.54
F.L. PIPE (N)=100.54

LI

STA. 1552+00 (℄)
EXIST. TY "C" INLET
([redacted] CONVERTED
TO JUNCT. BOX)
F.L. INLET=99.63
F.L. PIPE (N-S)=99.63
CAP AT ELEV. = 105.05

L2

STA. 1552+00 (140' LT.)
EXIST. TY "A" INLET
([redacted] REMAIN IN PLACE)
⊛ [redacted]. 1 INLET EXTENSION
TOP OF INLET=105.14
F.L. PIPE (S)=100.24
F.L. INLET=100.24

X2

[redacted]. TY "M" MANHOLE
RISER STA. 1552+00 (63.00' LT.)
JUNCTION BOX (5'X4') STA. 1552+00 (63.5' LT.)
TOP OF MANHOLE = 106.29
F.L. JUNCT. BOX=99.32
F.L. PIPE (W) RCP=99.32
F.L. PIPE (N&S) RCP=99.32

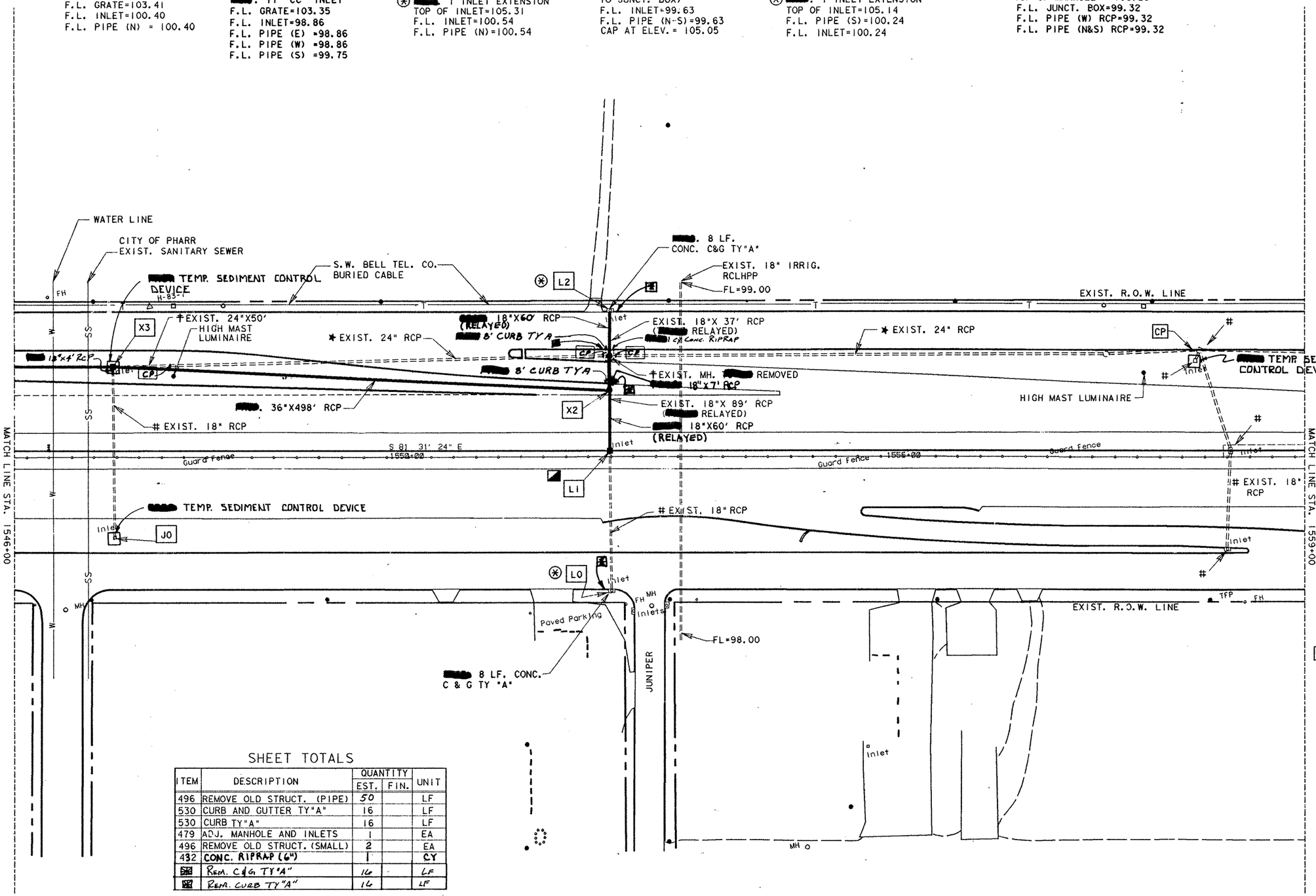

SHEET TOTALS

ITEM	DESCRIPTION	QUANTITY EST.	QUANTITY FIN.	UNIT
496	REMOVE OLD STRUCT. (PIPE)	50		LF
530	CURB AND GUTTER TY"A"	16		LF
530	CURB TY"A"	16		LF
479	ADJ. MANHOLE AND INLETS	1		EA
496	REMOVE OLD STRUCT. (SMALL)	2		EA
432	CONC. RIPRAP (6")	1		CY
▣	REM. C&G TY"A"	16		LF
▣	REM. CURB TY"A"	16		LF

NOTE: ▣ REMOVAL OF EXIST. CURB or C&G. SUBSIDIARY TO ITEM 100.

⊛ [redacted] INLET EXT. INCLUDES ALL REMOVAL OF CONC. PAV., CONC. CURB & GUTTER, EXCAVATION AND OTHER INCIDENTALS NECESSARY TO COMPLETE THE WORK.

CP INDICATES CONCRETE PLUG NOT [redacted] PAID FOR DIRECTLY BUT [redacted] SUBSIDIARY TO THE VARIOUS BID ITEMS.

† [redacted] REMOVED AND PAID FOR UNDER ITEM 496 "REMOVE OLD STRUCT".

✱ [redacted] REMOVED UNDER ITEM 100 "PREP. R.O.W."

[redacted] REMAIN IN PLACE

✱ [redacted] ABANDONED

◪ EXIST INLET [redacted] [redacted] CAPPED AND CONVERTED TO JUNCTION BOX [redacted] PAID FOR UNDER ITEM 479 "ADJ. MANHOLES AND INLETS"

STATE OF TEXAS
PAUL PALMA
[redacted]
REGISTERED
PROFESSIONAL ENGINEER
Paul Palma
10-31-91

SCALE: 50'

FED. RD. DIV. NO.	FEDERAL AID PROJECT NO.	SHEET NO.
6	NH 82 (50)M	72

STATE	DIST.	COUNTY
TEXAS	21	HIDALGO

CONT.	SECT.	JOB	HIGHWAY NO.
39	17	97	US83

UTILITIES & DRAINAGE
(NETWORK II)
SHEET 9 OF 9 SHEETS

75A1+5325107375XUD009 DGN 1BARM+SAME

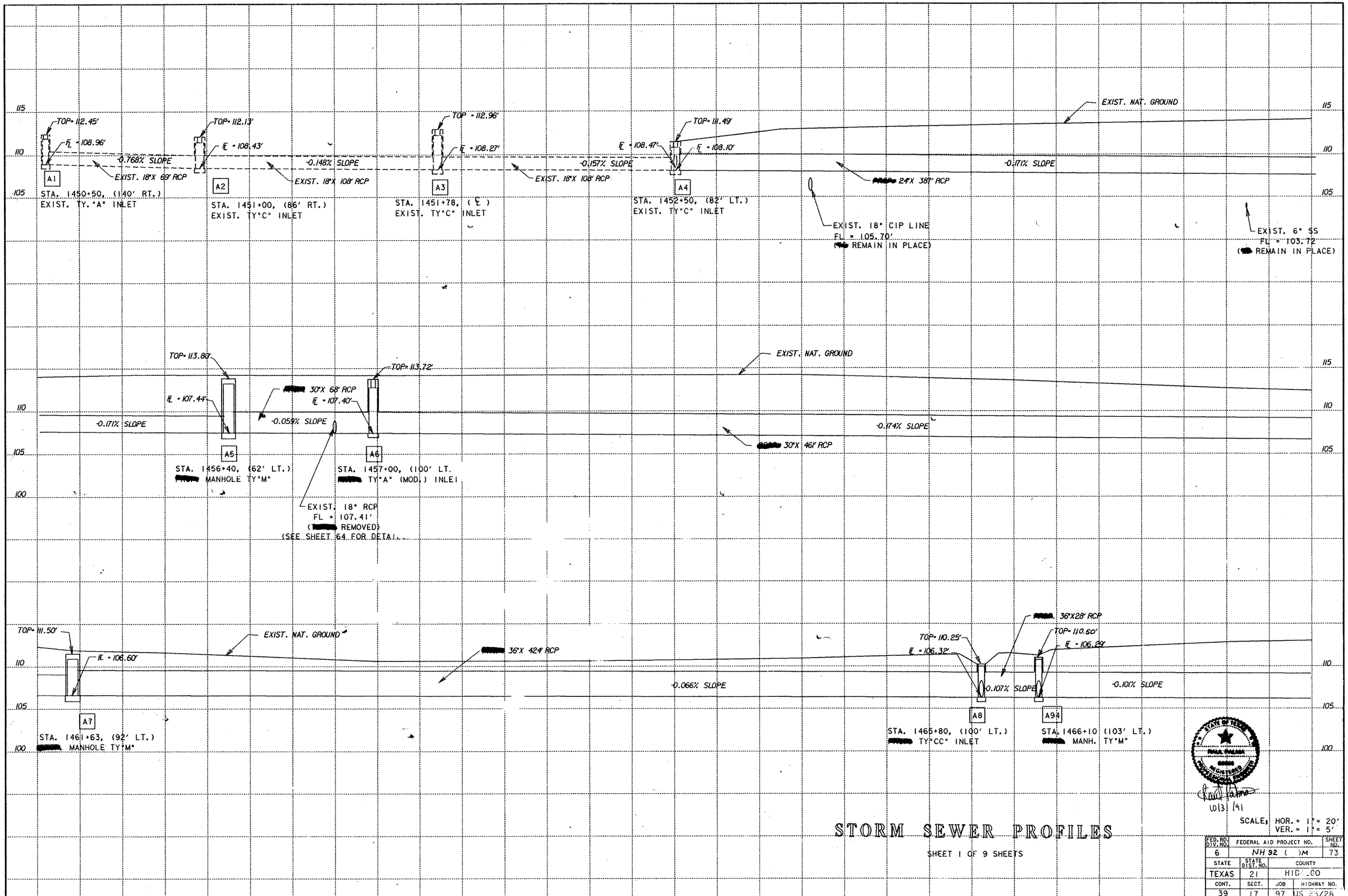

STORM SEWER PROFILES

SHEET 1 OF 9 SHEETS

10/3/91

SCALE: HOR. = 1" = 20'
VER. = 1" = 5'

FED. RD. DIV. NO.	FEDERAL AID PROJECT NO.		SHEET NO.
6	NH 92 ( )M		73
STATE	STATE DIST. NO.	COUNTY	
TEXAS	21	HIDALGO	
CONT.	SECT.	JOB	HIGHWAY NO.
39	17	97	US 83/28

PLOT SIZE: VBO: XPROL PRF VER: INTPROL PRF FILE: INTPRO.DGN

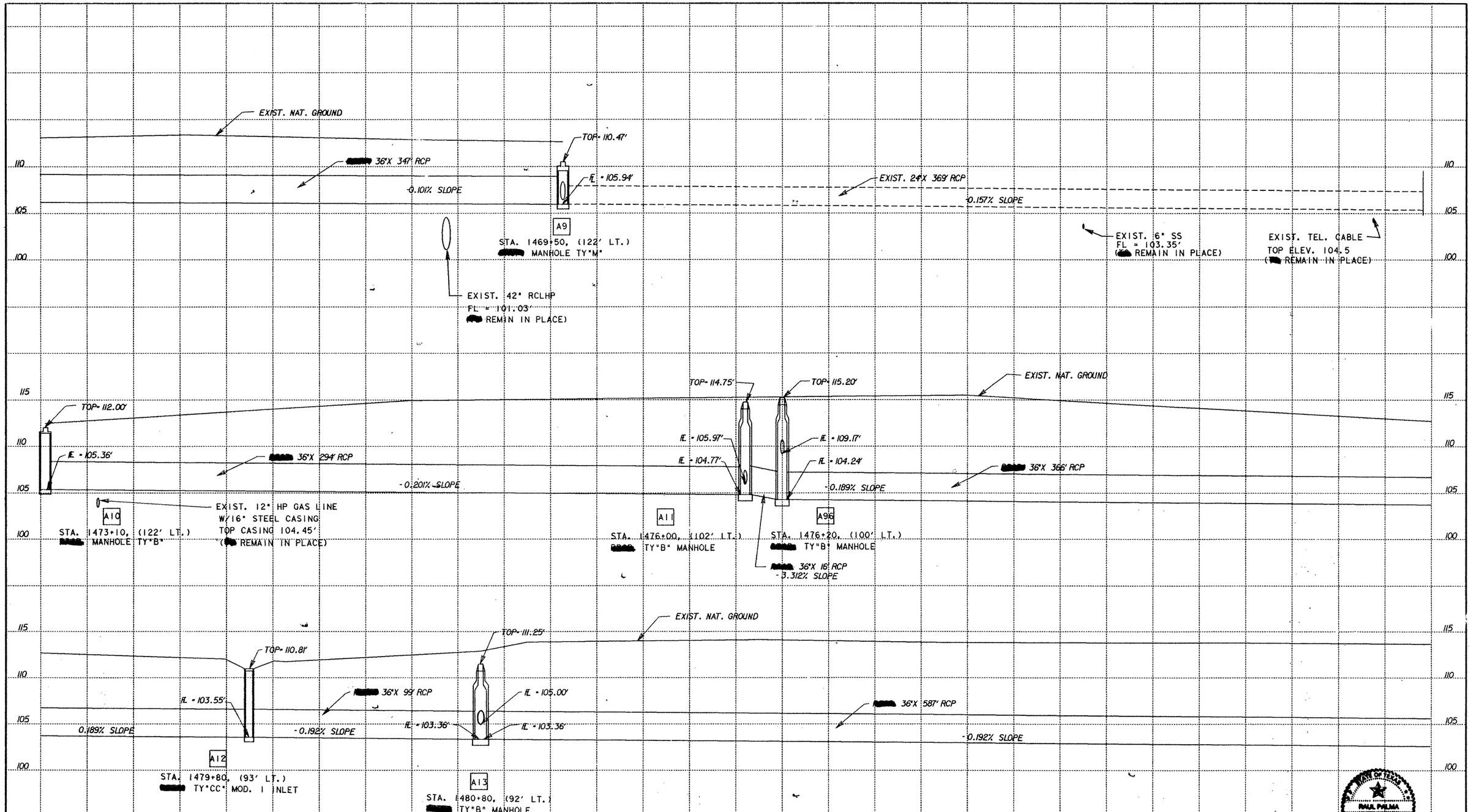

STATE OF TEXAS
RAUL PALMA
REGISTERED PROFESSIONAL ENGINEER

Raul Palma
3/3/92

STORM SEWER PROFILES
(NETWORK I)

SHEET 2 OF 9 SHEETS

SCALE: HOR. 1"= 20'
VER. = 1"- 5'

FED. RD. DIV. NO.	FEDERAL AID PROJECT NO.		SHEET NO.
6	NH 92 ( )M		74
STATE	STATE DIST. NO.	COUNTY	
TEXAS	21	HIDALGO	
CONT.	SECT.	JOB	HIGHWAY NO.
39	17	97	US 83/2

PLOT SIZE: V80-XPRO2.PRF VER-INTPRO2.PRF FILE: INTPRO.DGN

115
110
105
100
95

TOP= 114.92'
EXIST. 12" RCP LHPP
([redacted] ADJUSTED BY OTHERS)
TOP= 114.89'
EXIST. NAT. GROUND
TOP= 114.65'
IE = 106.25'
[redacted] 36"X61' RCP
FL = 106.25'
[redacted] 36"X 587' RCP
FL = 102.23'
IE = 102.10'
FL = 101.50'
[redacted] 42"X 306' RCP
-0.192% SLOPE
-0.213% SLOPE
-0.180% SLOPE
IE = 101.05'
IE = 100.51'
IE = 100.23'
A15
A16
A18
STA. 1486+60, (70.22' LT.)
[redacted] TY"B" MANHOLE
STA. 1487+25, (71.88' LT.)
[redacted] TY"B" MANHOLE
STA. 1490+31, (78.3' LT.)
[redacted] MANH. TY"M"
EXIST. 6" SS
FL = 99.85
([redacted] REMAIN IN PLACE)
EXIST. 18" RCP LHPP
FL = 101.15
SEE SHEET NO. 408 FOR DETAILS.

TOP = 114.16
EXIST. NAT. GROUND
FL = 103.05'
[redacted] 42"X 284' RCP
[redacted] 42"X 689' RCP
FL = 101.07'
-0.197% SLOPE
-0.080% SLOPE
B35
STA. 1493+14, (78' LT.)
[redacted] TY"B" MANHOLE
EXIST. 24" RCP
FL = 95.50
([redacted] REMAIN IN PLACE)

EXIST. NAT. GROUND
TOP = 108.00'
TOP = 109.83'
[redacted] 42"X 689' RCP
FL = 103.46'
IE = 104.57'
IE = 103.64
FL = 101.62'
-0.080% SLOPE
B33
B30
STA. 1500+00, (80.75' LT.)
[redacted] MANHOLE TY"M"
STA. 1500+00, (73' RT.)
[redacted] TY "CC" MOD. I INLET

STATE OF TEXAS
PAUL PALMA
85456
REGISTERED PROFESSIONAL ENGINEER
3/13/92

STORM SEWER PROFILES (NETWORK I)

SHEET 3 OF 9 SHEETS

SCALE: HOR. = 1" = 20'
VER. = 1" = 5'

FED. RD. DIV. NO.	FEDERAL AID PROJECT NO.		SHEET NO.
6	NH 92 ( )M		75
STATE	STATE DIST. NO.	COUNTY	
TEXAS	21	HIDALGO	
CONT.	SECT.	JOB	HIGHWAY NO.
39	17	97	US 83/281

PLOT SIZE: V80-XPR03.PRF VER- INTPR03.PRF FILE- INTPR0.DGN

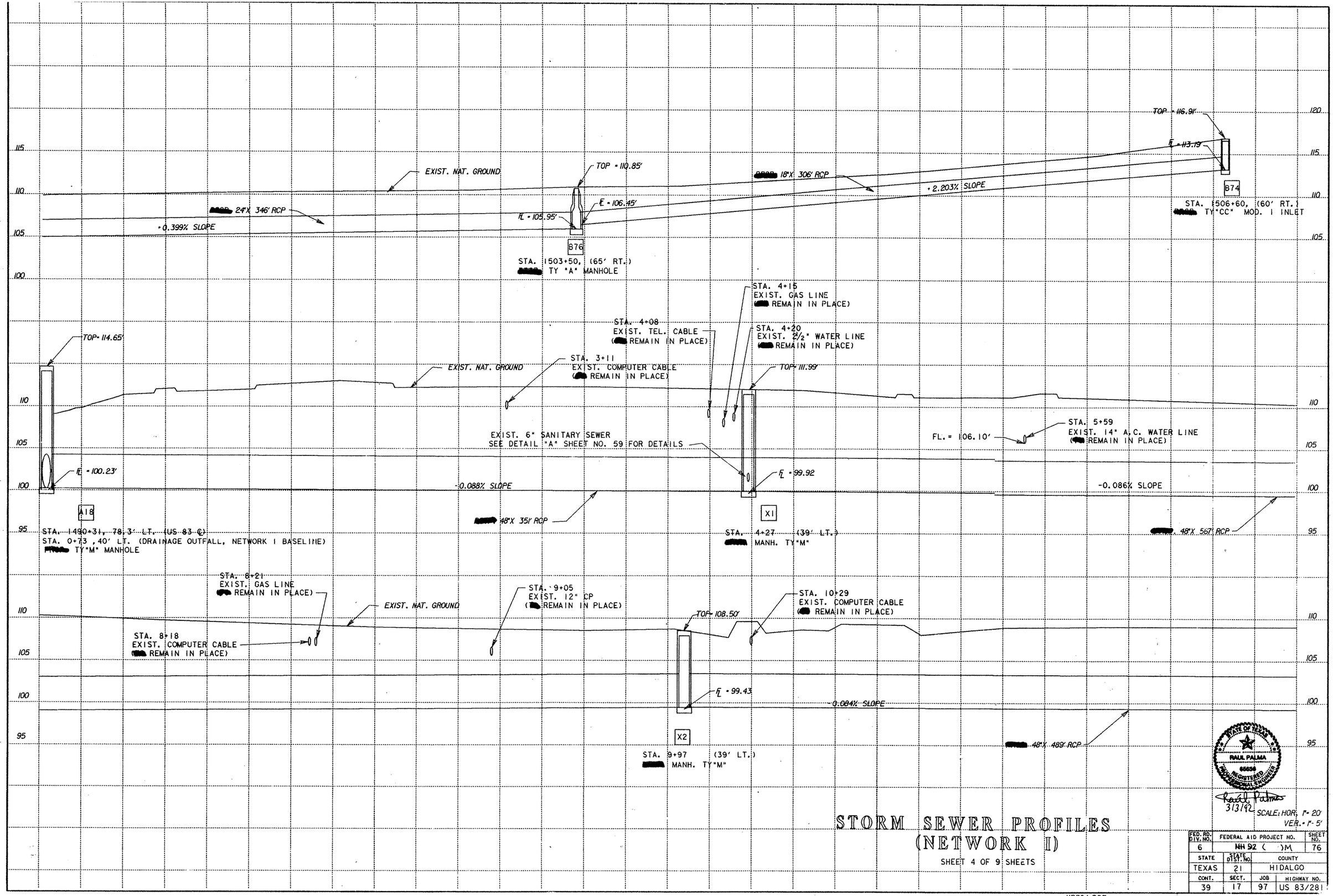

STORM SEWER PROFILES (NETWORK I)

SHEET 4 OF 9 SHEETS

FED. RD. DIV. NO.	FEDERAL AID PROJECT NO.		SHEET NO.
6	NH 92 ( )M		76
STATE	STATE DIST. NO.	COUNTY	
TEXAS	21	HIDALGO	
CONT.	SECT.	JOB	HIGHWAY NO.
39	17	97	US 83/281

PLOT SIZE: V80-XPR04.PRF VER: INTPR04.PRF FILE: INTPR04.DGN

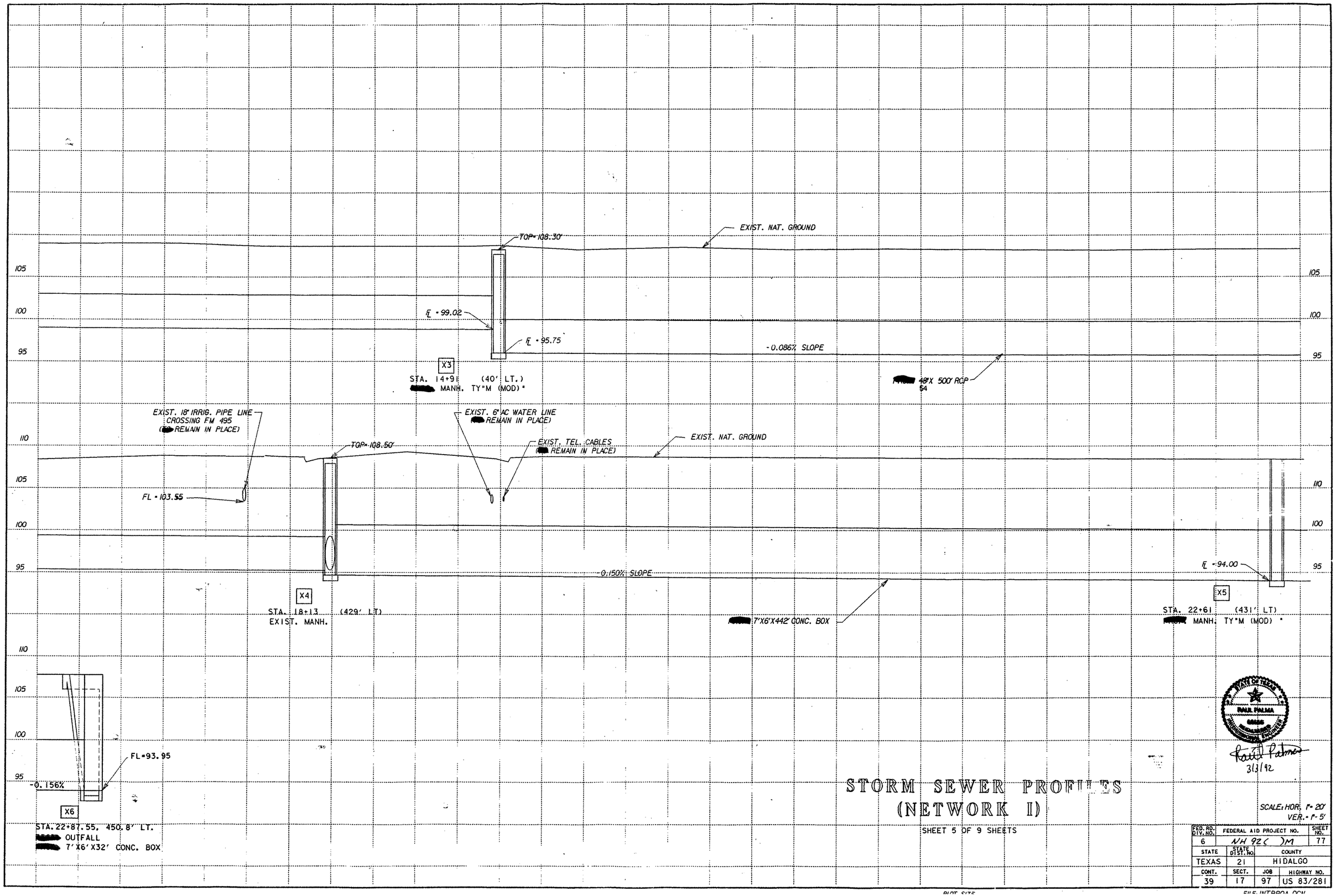

PAUL PALMA
68656
LICENSED PROFESSIONAL ENGINEER
STATE OF TEXAS
Paul Palma
3/3/92

STORM SEWER PROFILES (NETWORK I)

SHEET 5 OF 9 SHEETS

SCALE: HOR. 1"= 20'
VER. = 1"= 5'

FED. RD. DIV. NO.	FEDERAL AID PROJECT NO.		SHEET NO.
6	NH 92C)M		77
STATE	STATE DIST. NO.	COUNTY	
TEXAS	21	HIDALGO	
CONT.	SECT.	JOB	HIGHWAY NO.
39	17	97	US 83/281

PLOT SIZE

FILE: INTPROA.DGN

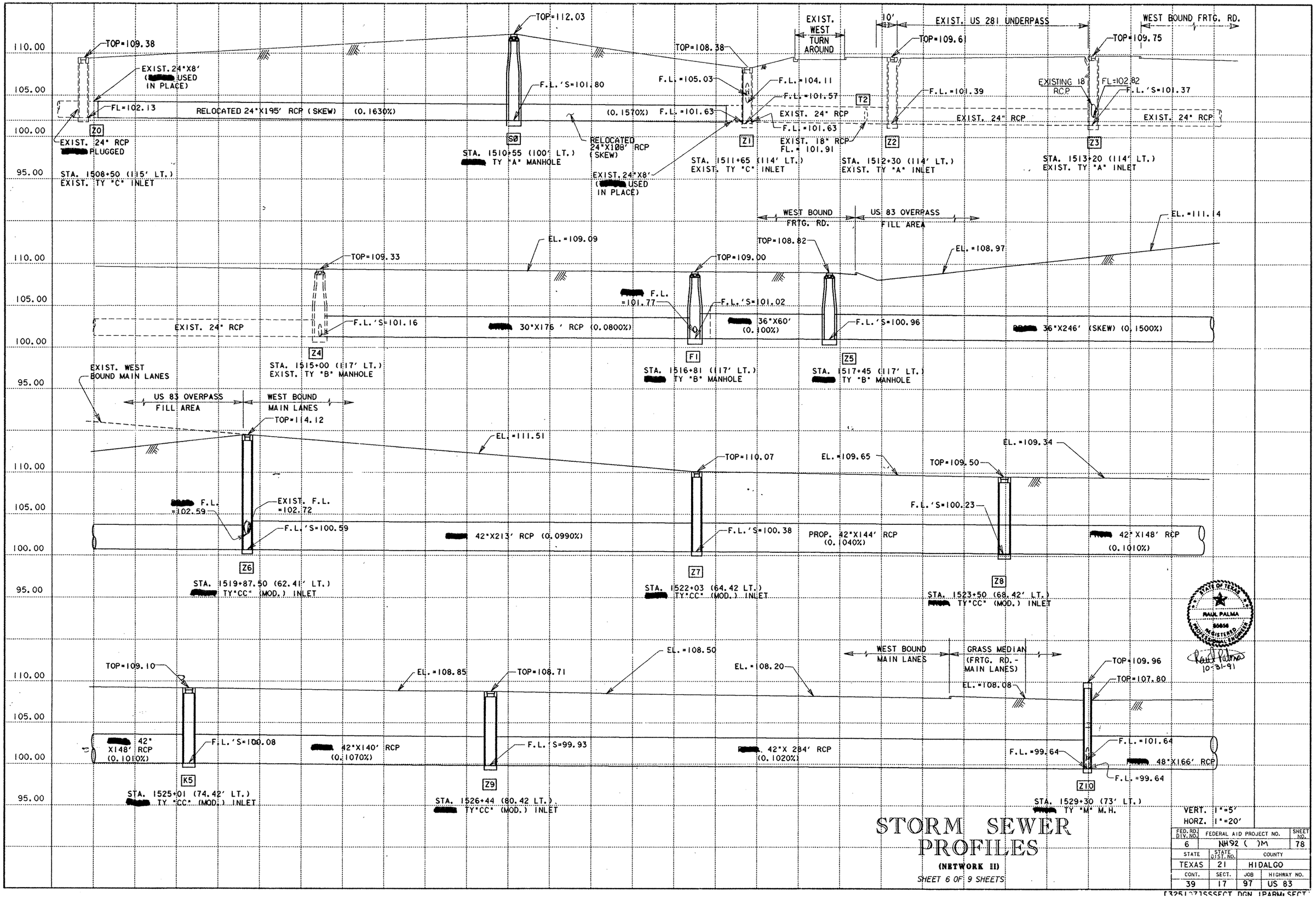

STORM SEWER PROFILES

(NETWORK II)

SHEET 6 OF 9 SHEETS

VERT. 1"=5'
HORZ. 1"=20'

FED. RD. DIV. NO.	FEDERAL AID PROJECT NO.		SHEET NO.
6	NH92 ( )M		78
STATE	STATE DIST. NO.	COUNTY	
TEXAS	21	HIDALGO	
CONT.	SECT.	JOB	HIGHWAY NO.
39	17	97	US 83

[3251\07]SSSECT DGN [PARM: SECT

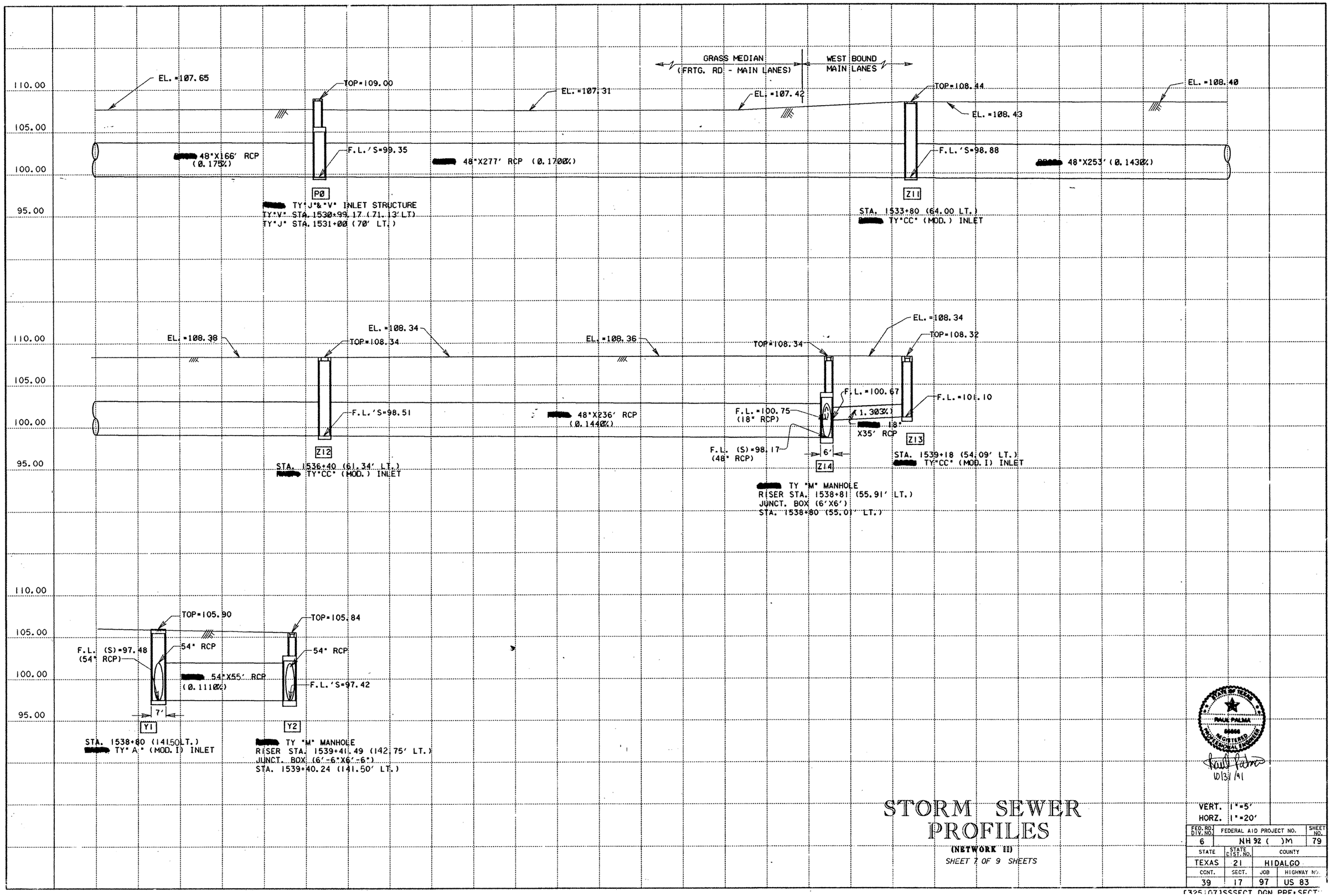

STORM SEWER PROFILES

(NETWORK II)

SHEET 7 OF 9 SHEETS

STATE OF TEXAS
RAUL PALMA
REGISTERED
PROFESSIONAL ENGINEER

10/31/91

VERT. 1"=5'
HORZ. 1"=20'

FED. RD. DIV. NO.	FEDERAL AID PROJECT NO.		SHEET NO.
6	NH 92 ( )M		79
STATE	STATE DIST. NO.	COUNTY	
TEXAS	21	HIDALGO	
CONT.	SECT.	JOB	HIGHWAY NO.
39	17	97	US 83

[325:07]SSSECT DGN PRE:SECT

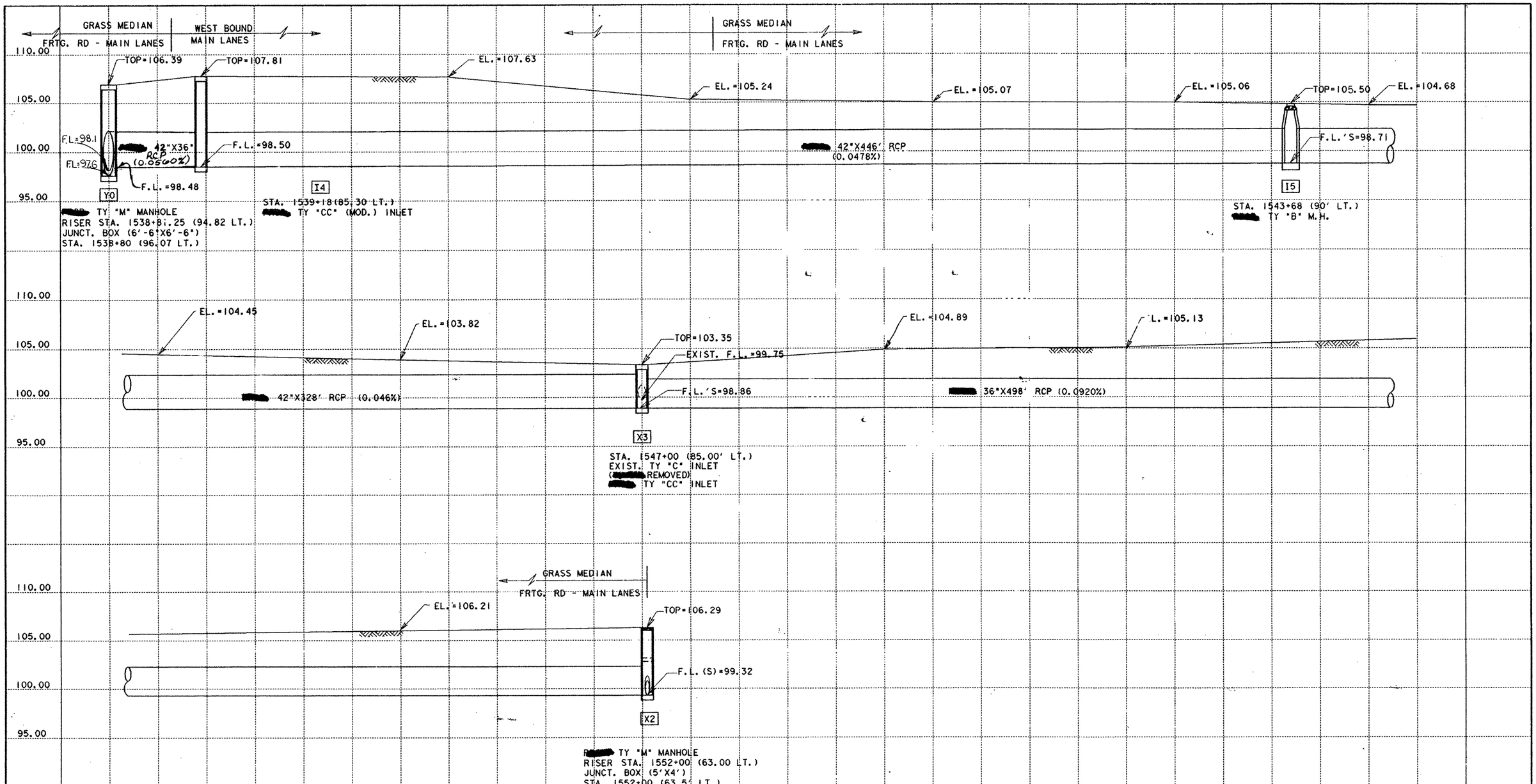

STORM SEWER PROFILES

(NETWORK II)

SHEET 8 OF 9 SHEETS

STATE OF TEXAS
RAUL PALMA
REGISTERED PROFESSIONAL ENGINEER

Raul Palma
10/31/91

VERT. 1"=5'
HORZ. 1"=20'

FED. RD. DIV. NO.	FEDERAL AID PROJECT NO.	SHEET NO.
6	NH 92( )M	80

STATE	STATE DIST. NO.	COUNTY	
TEXAS	21	HIDALGO	
CONT.		JOB	HIGHWAY NO.
39		97	US 83

ZFAI:[325107]SSSECT1.DGN [PARM:SAME

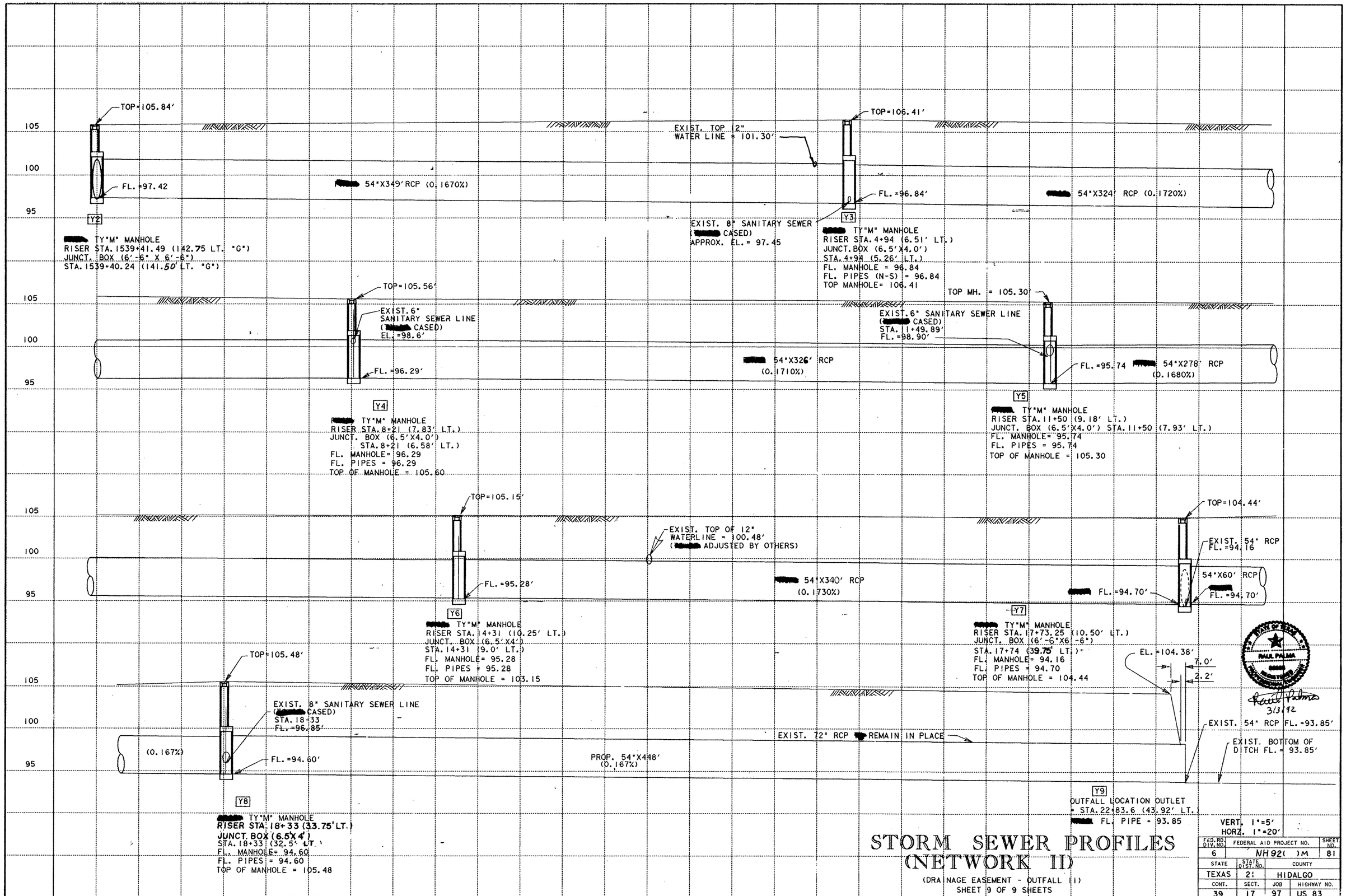

STORM SEWER PROFILES (NETWORK II)

(DRAINAGE EASEMENT - OUTFALL II)
SHEET 9 OF 9 SHEETS

VERT. 1"=5'
HORZ. 1"=20'

FED. RD. DIV. NO.	FEDERAL AID PROJECT NO.		SHEET NO.
6	NH92( )M		81
STATE	STATE DIST. NO.	COUNTY	
TEXAS	21	HIDALGO	
CONT.	SECT.	JOB	HIGHWAY NO.
39	17	97	US 83

[325107]SSSEC72.DGN PRF:SECT

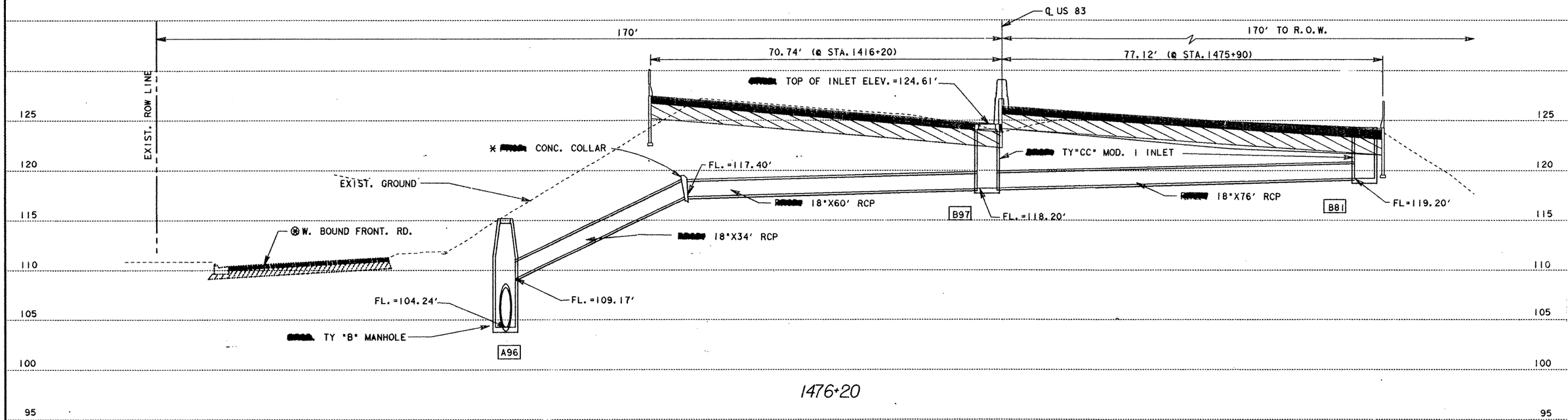

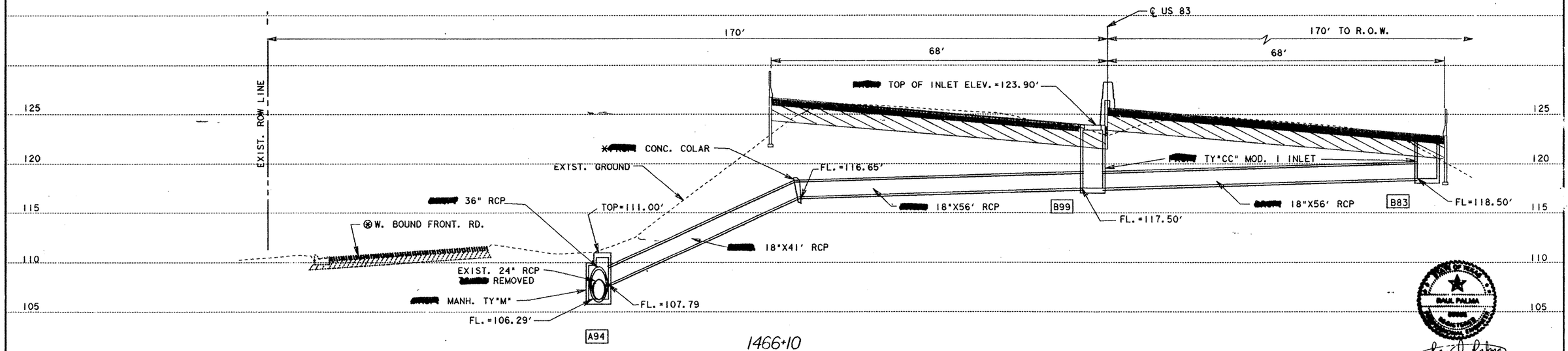

3/3/92

* NOT [redacted] PAID FOR DIRECTLY, BUT [redacted] SUBSIDARY TO PERTINENT BID ITEMS.

⊗ SEE TYPICAL SECTIONS FOR DETAILS ON RAMPS & FRONTAGE ROADS.

LATERAL STORM SEWER DETAILS (NETWORK I)

SHEET 1 OF 5 SHEETS

SCALE: HOR.- 1"= 10'
VER.- 1"= 5'

FED. RD. DIV. NO.	FEDERAL AID PROJECT NO.		SHEET NO.
6	NH92 ( ) M		82
STATE	STATE DIST. NO.	COUNTY	
TEXAS	21	HIDALGO	
CONT.	SECT.	JOB	HIGHWAY NO.
39	17	97	US 83/2

PLOT SIZE: V80-XINTCUL3.PRF VER-INTCUL3.PRF FILE: INTCUL.DGN

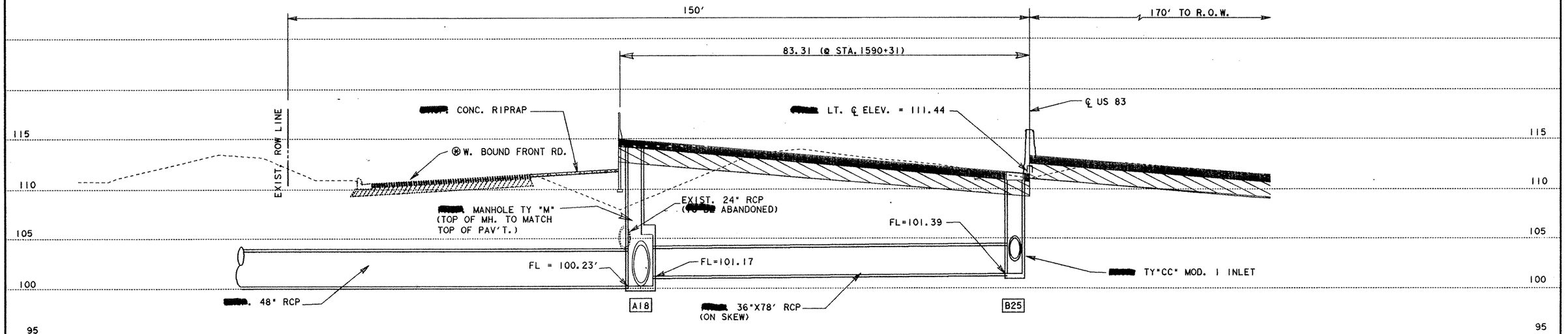

1490+00

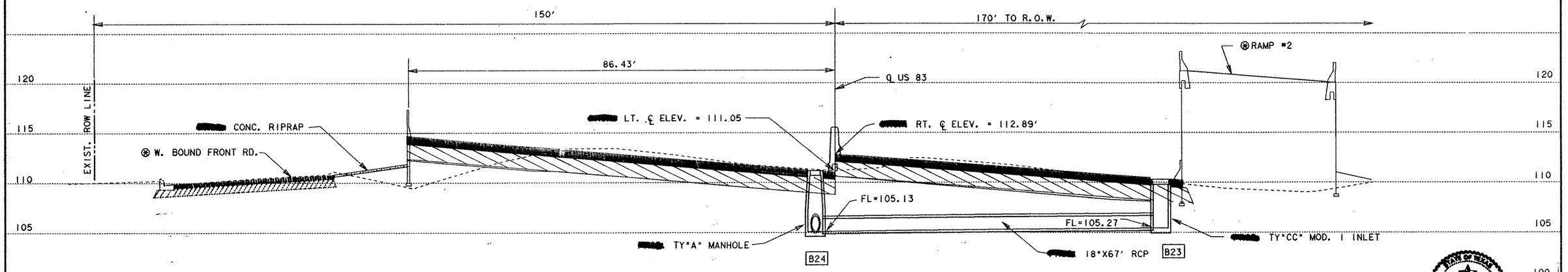

1492+50

℔ SEE TYPICAL SECTIONS FOR DETAILS ON RAMPS & FRONTAGE ROADS.

STATE OF TEXAS
PAUL PALMA
68036
REGISTERED PROFESSIONAL ENGINEER

Paul Palma
3/3/92

LATERAL STORM SEWER DETAILS
(NETWORK 1)

SHEET 2 OF 5 SHEETS

SCALE: HOR.- 1"= 10'
VER.- 1"= 5'

FED. RD. DIV. NO.	FEDERAL AID PROJECT NO.		SHEET NO.
6	RH 92 ( )M		83
STATE	STATE DIST. NO.	COUNTY	
TEXAS	21	HIDALGO	
CONT.	SECT.	JOB	HIGHWAY NO.
39	17	97	US 83

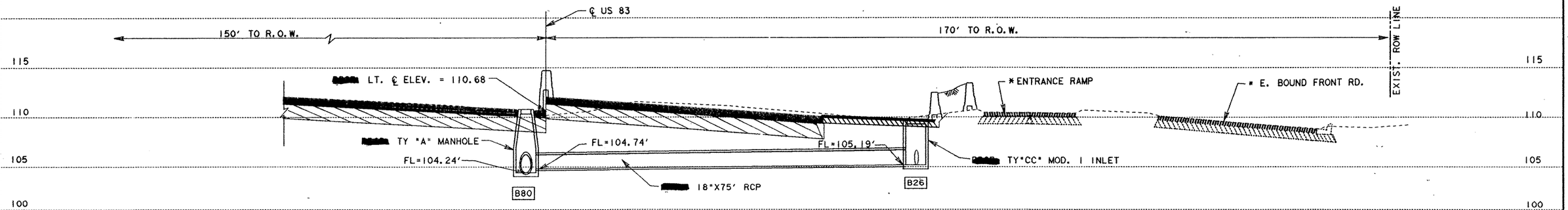

1496+91

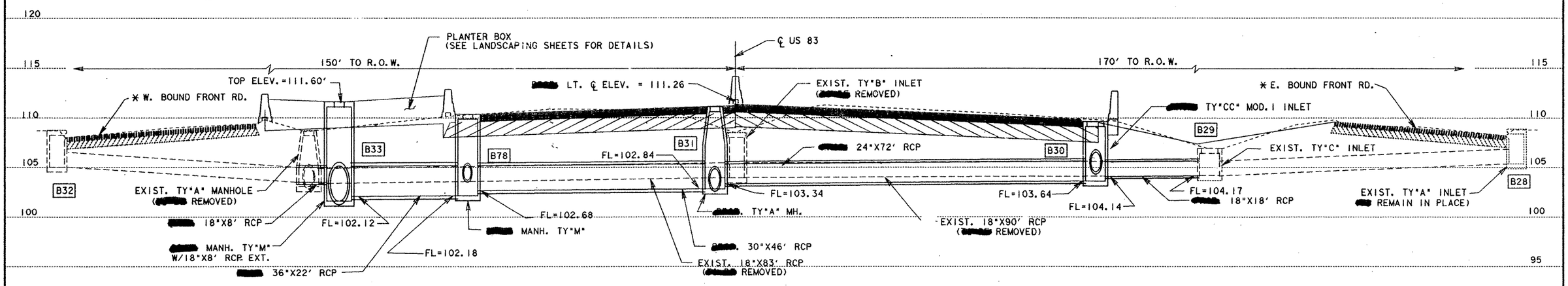

1500+00

* SEE TYPICAL SECTIONS FOR DETAILS ON RAMPS & FRONTAGE ROADS.

SCALE: HOR.- 1"= 10'
VER.- 1"= 5'

LATERAL STORM SEWER DETAILS (NETWORK I)

SHEET 3 OF 5 SHEETS

FED. RD. DIV. NO.	FEDERAL AID PROJECT NO.		SHEET NO.
6	NH 92( )M		84
STATE	STATE DIST. NO.	COUNTY	
TEXAS	21	HIDALGO	
CONT.	SECT.	JOB	HIGHWAY NO.
39	17	97	US 83/281

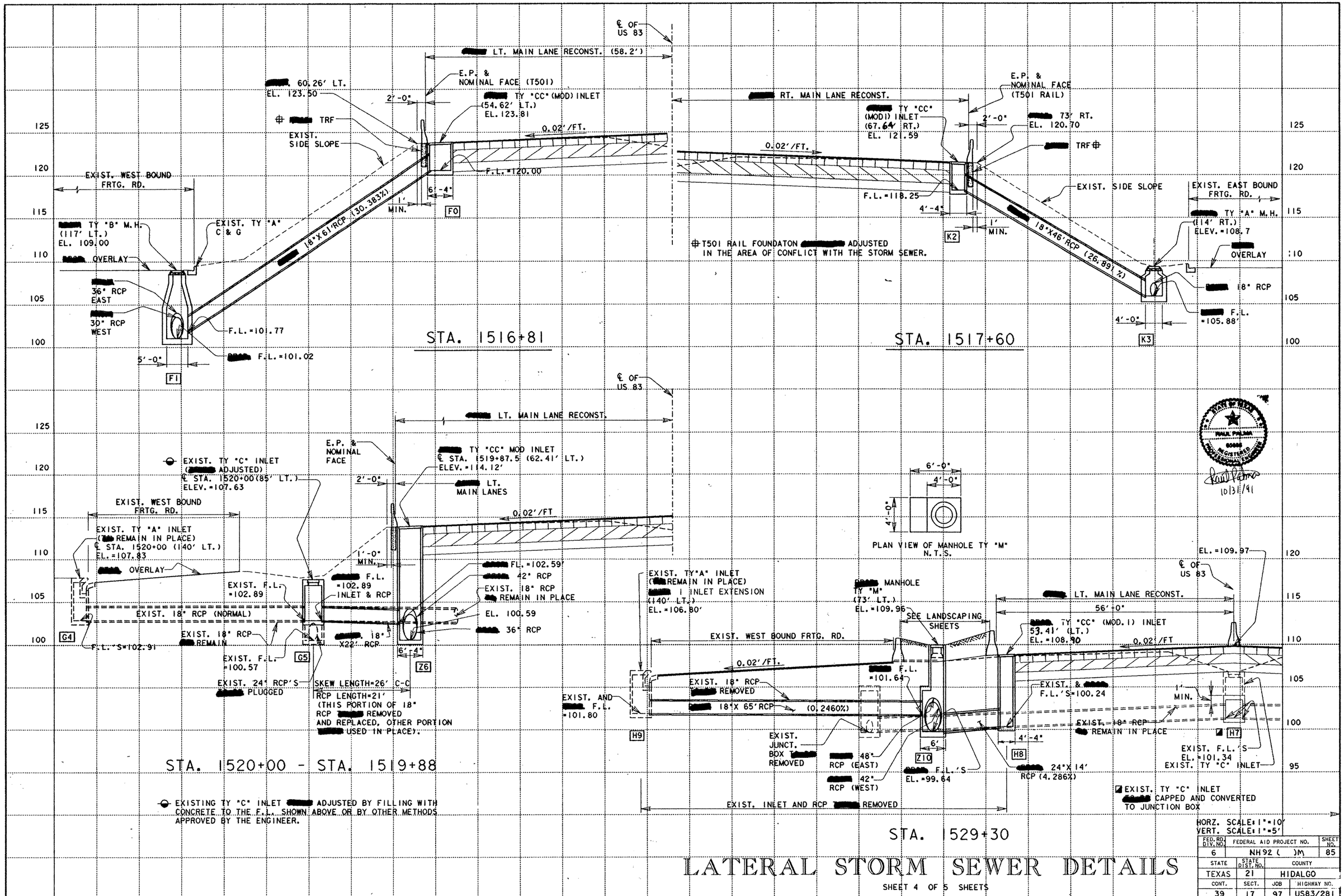

LATERAL STORM SEWER DETAILS

SHEET 4 OF 5 SHEETS

FED. RD. DIV. NO.	FEDERAL AID PROJECT NO.		SHEET NO.
6	NH92 ( )M		85
STATE	STATE DIST. NO.	COUNTY	
TEXAS	21	HIDALGO	
CONT.	SECT.	JOB	HIGHWAY NO.
39	17	97	US83/281

ZFAI:1325107]TYSECT1.DGN [PARM:SAME

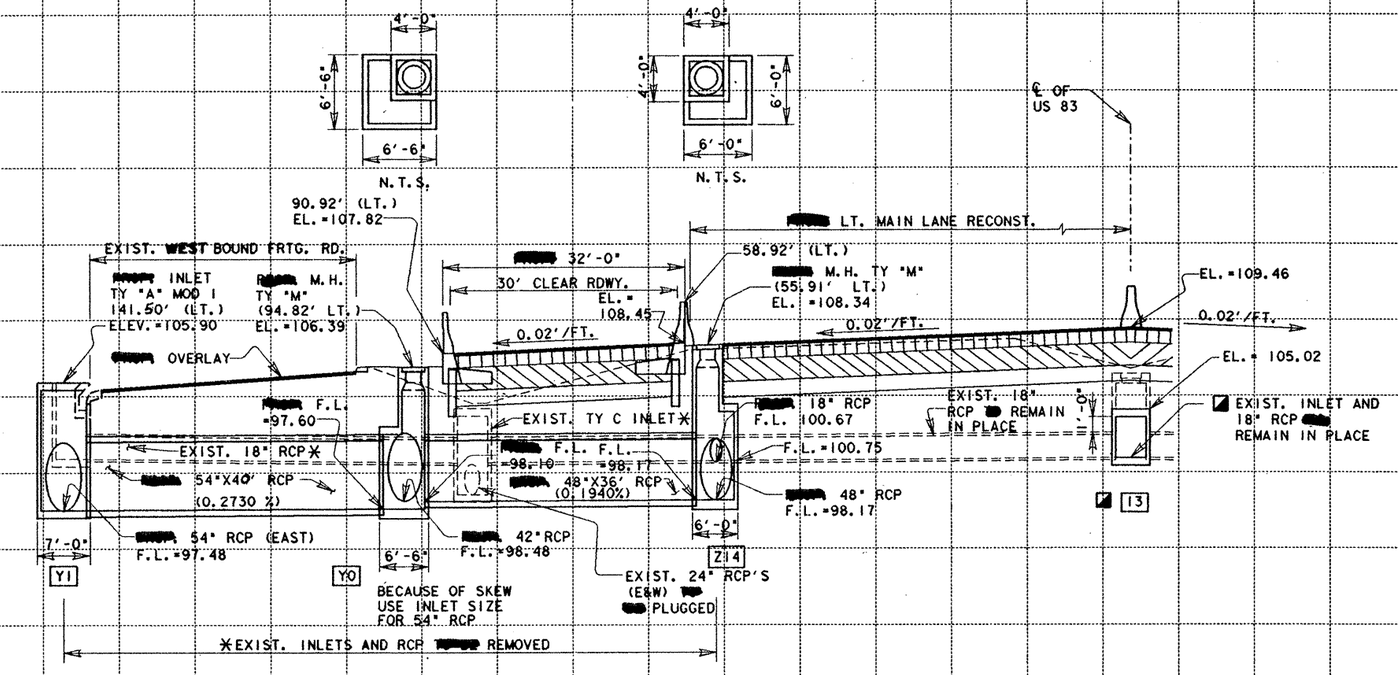

LATERAL STORM SEWER DETAILS

SHEET 5 OF 5 SHEETS

FED. RD. DIV. NO.	FEDERAL AID PROJECT NO.		SHEET NO.
6	NH92 ( )M		86
STATE	STATE DIST. NO.	COUNTY	
TEXAS	21	HIDALGO	
CONT.	SECT.	JOB	HIGHWAY NO.
39	1T	97	US83/281

NETWORK I

TRUNKLINE A

DRAINAGE AREA SUMMARY

I.D.	STATION TO STATION	D. A. (ACRES)	CA	TC (MIN)	SUPPLY Q (CFS)	INTENSITY (IN/HR)	TOTAL FLOW (CFS)
A 1	1447+00 TO 1455+00	1.51	0.85	8.00	0.00	8.73	7.42
A 2	1447+00 TO 1456+00	1.41	0.65	31.00	0.00	4.91	3.17
A 3	1442+00 TO 1456+00	1.10	0.17	65.00	0.00	3.05	0.50
A 4	1448+00 TO 1458+25	1.74	0.85	37.00	0.00	4.41	3.74
B 1	1446+00 TO 1452+50	0.95	0.52	14.00	0.00	7.54	3.92
A 6	1457+00 TO 1459+50	0.13	0.11	7.00	0.00	8.73	0.96
B 3	1458+25 TO 1466+00	1.21	1.03	3.00	0.00	8.73	8.98
B 4	1455+00 TO 1469+50	1.86	1.16	16.00	0.00	7.07	8.20
B 5	1454+25 TO 1471+40	3.14	1.72	20.00	0.00	6.30	10.86
B 6	1452+50 TO 1469+50	2.32	1.54	26.00	0.00	5.45	8.38
A 8	1458+50 TO 1470+25	1.18	0.18	13.00	0.00	7.80	1.38
B 7	1469+50 TO 1471+40	0.48	0.29	7.00	0.00	8.73	2.54
B83	1466+00 TO 1471+40	0.81	0.69	3.00	0.00	8.73	6.01
B99	1466+00 TO 1471+40	0.81	0.69	3.00	0.00	8.73	6.01

NOTE:
MINIMUM TIME OF CONCENTRATION = 10.0 MINUTES
INTENSITY BASED ON 10 (TEN) YEAR FREQUENCY IN CONFORMANCE WITH SDH & PT HYDRAULIC MANUAL.

SUMMARY OF INLETS AND MANHOLES

I.D.	STATION	DEPTH OF STR. (FT)	INLETS (COMPLETE) TY A (EA)	TY A MOD. 1 (EA)	TY C (EA)	TY CC MOD. 1 (EA)	TY CC (EA)	PONDING WIDTH (FT)	RING & COVER TY 1 (EA)	FLOW (CFS)	CAPACITY (CFS)	ACTUAL LENGTH (FT)	REQ LENGTH (FT)	GRATES TY "CC" MOD. 1	GRATES TY "CC"	GUTTER DEP. (IN)	ACTUAL AREA (SQ FT)	REQUIRED AREA (SQ FT)	INLET EXT. (EA)	MANHOLES TY M (EA)	MANHOLES	RING & COVER TY "2" (EA)
A 1	1450+50 (140' RT)	3.49						14.77		7.42	8.72	5.0	4.3				0.00	0.00				
A 2	1451+00 (86' RT)	3.70						0.00		3.17	14.05	0.0	0.0				5.00	1.13				
A 3	1451+78 (CL)	4.69						0.00		0.50	14.05	0.0	0.0				5.00	0.18				
A 4	1452+50 (82' LT)	3.39						0.00		3.74	14.05	0.0	0.0				5.00	1.33				
B 1	1452+50 (140' LT)	3.60						17.08		3.92	4.68	10.0	8.4				0.00	0.00	1			
A 6	1457+00 (100' LT)	6.32		1.				10.58	1.	0.96	1.79	5.0	2.7			3.0	0.00	0.00				
B 3	1461+00 (CL)	5.42				1.		12.27		8.98	32.86	0.0	0.0	2.			15.00	4.10				
B 4	1465+08 (158' RT)	4.00						23.77		8.20	10.36	5.0	4.0				0.00	0.00				
B 5	1465+22 (96' RT)	2.94						0.00		10.86	51.60	0.0	0.0				15.00	3.16				
B 6	1465+93 (164' LT)	4.01						21.27		8.38	10.36	5.0	4.0				0.00	0.00				
A 8	1465+80 (100' LT)	3.93					1.	0.00		1.38	42.13	0.0	0.0		2.		15.00	0.49				
B 7	1469+50 (158' RT)	3.98						15.27		2.54	2.53	5.0	5.0				0.00	0.00				
B83	1466+10 (65.4' RT.)	4.41				1.		7.97		6.01	5.11	4.5	0.0	2.			0.00	0.00				
B99	1466+10 (3' LT)	6.40				1.		7.97		6.01	5.11	4.5	0.0	2.			0.00	0.00				
A 5	1456+40 (62'LT.)	6.36																		1.		1.
A 7	1461+63 (92'LT.)	4.90																		1.		1.
A94	1466+10 (103' LT.)	4.21																		1.		1.
A 9	1469+50 (122'LT.)	4.53																		1.		1.
	SUBTOTAL			1.		3.	1.		1.					6.	2.				1.	4.		4.

◉ ACTUAL INLET LENGTHS CONFORM TO A 5YR. FREQUENCY FOR FRONTAGE ROADS AS REQUIRED BY HYRAULIC DESIGN MANUAL.

SUMMARY OF INLETS AND MANHOLES

RUN	STATION TO STATION	DESCRIPTION	U.S. ID	D.S. ID	U.S. F.L. ELEV	D.S. F.L. ELEV	SLOPE	FLOW (CFS)	U.S. HEAD (FT)	D.S. HEAD (FT)	HYDR. GRAD	DEPTH (FT)	VELOC. (FPS)	PIPE CAPAC. (CFS)	RCP FOR STORM DRAIN (LF) 18"	24"	30"	36"	CEMENT STAB BACKFILL ITEM 401 (CY)	$ CUT & RESTORE PAV. (SY)	* STORM EXCAV. (CY)	TRENCH EXCAV PROTECTION (FT)	ITEM 472 RELAY CULV. PIPE OVER 18" DIA. (LF)
1	1450+50 TO 1451+00	EXIST. 18" X 69' RCP	A 1	A 2	108.96	108.43	0.00768	7.42	111.86	111.57	0.00425	0.64	4.2	10.0									
2	1451+00 TO 1451+78	EXIST. 18" X 108' RCP	A 2	A 3	108.43	108.27	0.00148	7.35	111.57	111.12	0.00417	1.00	4.2	4.4									
3	1451+78 TO 1452+50	EXIST. 18" X 108' RCP	A 3	A 4	108.27	108.10	0.00157	5.06	111.12	110.91	0.00198	1.00	2.9	4.5									
4	1452+50	EXIST. 18" X 51' RCP	B 1	A 4	109.25	108.47	0.01529	3.92	110.97	110.91	0.00119	0.36	2.2	14.1									
5	1452+50 TO 1456+40	PROP. 24" X 387' RCP	A 4	A 5	108.10	107.44	0.00171	9.18	110.91	110.36	0.00140	0.75	2.9	10.1		387					363	340	
6	1456+40 TO 1457+00	PROP. 30" X 68' RCP	A 5	A 6	107.44	107.40	0.00059	9.01	110.36	110.34	0.00041	0.70	1.8	10.8					27	23	82	⊗ 64	68
7	1457+00 TO 1461+54	PROP. 30" X 461' RCP	A 6	A 7	107.40	106.60	0.00174	9.30	110.34	110.13	0.00044	0.50	1.9	18.5			37				567	454	424
8	1461+00 TO 1461+54	EXIST. 18" X 93' RCP	B 3	A 7	108.92	106.85	0.01971	8.98	110.98	110.13	0.00623	0.54	5.1	16.0									
		PROP. 18 " X 12' RCP													12						10	12	
9	1461+54 TO 1465+80	PROP. 36" X 424' RCP	A 7	A 8	106.60	106.32	0.00066	12.10	110.13	110.01	0.00028	0.59	1.7	18.6				424			405	105	
10	1465+08 TO 1465+22	EXIST. 24" X 57' RCP	**B 4	B 5	106.47	106.43	0.00070	8.20	111.15	111.08	0.00112	1.00	2.6	6.5									
11	1465+22 TO 1465+80	EXIST. 24" X 194' RCP	B 5	A 8	106.43	106.32	0.00057	18.18	111.08	110.01	0.00550	1.00	5.8	5.8									
12	1465+93 TO 1465+80	EXIST. 24" X 63' RCP	B 6	A 8	106.48	106.32	0.00254	8.38	110.09	110.01	0.00117	0.60	2.7	12.4									
13	1465+80 TO 1466+10	PROP. 36" X 28' RCP	A 8	A94	106.32	106.29	0.00107	24.83	110.01	109.98	0.00118	1.00	3.5	23.7				28			25	24	
14	1466+10	PROP. 18" X 66' RCP	B83	B99	118.50	117.50	0.01515	6.01	119.98	118.19	0.00279	0.46	7.6	14.0	66						36		
15	1466+10	PROP. 18" X 97' RCP	B99	A94	117.50	107.79	0.10010	12.02	118.10	109.98	0.01117	0.40	6.8	36.0	97						80	63	
16	1466+10 TO 1469+50	PROP. 36" X 347' RCP	A94	A 9	106.29	105.94	0.00101	28.69	109.98	109.43	0.00158	1.00	4.1	22.9				347			487	347	
17	1469+50	EXIST. 24" X 281' RCP	B 7	A 9	106.88	105.94	0.00335	2.54	109.46	109.43	0.00011	0.29	0.8	14.2									
	NETWORK I TRUNKLINE A ENDS AT JUNCTION A9. NETWORK I-TRUNKLINE B BEGINS AT JUNCTION A9													SUBTOTAL	175.	387.	37	799.	27	23	2055	1409	492
	SEE SHEET NO. 55 DETAIL "A"																						

* FOR CONTRACTOR'S INFORMATION ONLY.
** U.S. HEAD FOR INLET B4 CONFORMS TO A 2 Yr. FREQUENCY
$ SEE SHEET NO. 511 FOR DETAILS
⊗ SHORING [redacted] USED WHEN CROSSING OVER EXISTING PAVEMENT.

STATE OF TEXAS
PAUL PALMA
85656
REGISTERED PROFESSIONAL ENGINEER
Paul Palma
3/3/92

HYDRAULIC DATA SHEET

FED. RD. DIV. NO.	FEDERAL AID PROJECT NO.		SHEET NO.
6	NH 92C)M		87
STATE	STATE DIST. NO.	COUNTY	
TEXAS	21	HIDALGO	
CONT.	SECT.	JOB	HIGHWAY NO.
39	17	97	US 83/281

PLOT SIZE
VER: EXDASIO
FILE: EXDASIO.DGN ZEA3: [3251101

NETWORK I TRUNKLINE B

SUMMARY OF INLETS AND MANHOLES

I.D.	STATION	DEPTH OF STR. (FT)	INLETS (COMPLETE) TY CC MOD 1 (EA)	TY A (EA)	TY LI (EA)	TY C (EA)	FLOW (CFS)	CAPACITY (CFS)	ACTUAL LENGTH (FT)	REQ LENGTH (FT)	GRATES TY LI (EA)	TY CC MOD. 1 (EA)	TY CC MOD. (EA)	TY C (EA)	GUTTER DEP. (IN)	ACTUAL AREA (SQ FT)	REQUIRED AREA (SQ FT)	INLET EXT. (EA)	MANHOLES TY M (EA)	TY A (EA)	TY B (EA)	TY D (EA)	RING & COVER TY "1" (EA)	RING & COVER TY "2" (EA)	PONDING WIDTH (FT)
B91	1487+20 (176' LT)	2.79					2.23	2.43	5.0	4.6						0.00	0.00								14.27
B21	1486+60 (138' LT)	3.42					1.91	2.12	5.0	4.5						0.00	0.00								10.77
B16	1485+65 (158' RT)	3.35					6.06	5.99	⊛ 10.0	10.3						0.00	0.00	1							19.77
B13	1476+00 (158' LT)	3.43					6.86	8.72	5.0	3.9						0.00	0.00								20.27
B11	1476+00 (158' RT)	3.46					5.48	8.72	5.0	3.1						0.00	0.00								16.77
B32	1500+00 (137' LT)	3.73					2.74	2.73	5.0	5.1						0.00	0.00								17.27
B28	1500+00 (158' RT)	3.53					5.97	4.03	10.0	10.0						0.00	0.00	1							20.27
B12	1476+00 (115' RT)	3.38					4.53	70.22	0.0	0.0						5.00	1.61								0.00
B97	1476+20 (3' LT)	5.46	1				5.64	4.84	4.5	0.0		2				0.00	0.00								7.82
A12	1479+80 (93'LT)	7.26	1				0.27	40.54	0.0	0.0		2				15.00	0.17								0.00
B15	1480+80 (3' LT)	4.72	1				6.01	5.16	4.5	0.0		2				0.00	0.00								7.35
B17	1485+65 (92' RT)	3.04					6.92	70.22	0.0	0.0						5.00	2.46								0.00
B18	1487+67 (84.5' RT)	4.05	1				4.90	40.54	0.0	0.0		2				15.00	3.02								14.77
B20	1485+65 (CL)	7.81	1				6.17	5.34	4.5	0.0		2				0.00	0.00								11.25
B37	1493+14 (60.25' LT)	10.26			1		4.45	3.57	5.0	7.7	1					0.00	0.00								8.41
B22	1494+30 (3' LT)	5.40	1				4.90	4.23	4.5	0.0		2				0.00	0.00								13.94
B23	1492+50 (66' RT)	5.07	1				5.20	4.40	4.5	0.0		2				0.00	0.00								18.33
B25	1490+00 (3' LT)	10.18	1				4.82	4.20	4.5	0.0		2				0.00	0.00								13.49
B26	1496+91 (74' RT)	4.45	1				7.87	40.54	0.0	0.0		2				15.00	4.85								0.00
B27	1496+10 (3' LT)	5.19	1				4.16	40.54	0.0	0.0		2				15.00	2.56								0.00
B29	1500+00 (96'RT)	2.75					3.00	40.54	0.0	0.0						15.00	1.85								0.00
B30	1500+00 (73' RT)	6.19	1				9.07	56.62	0.0	0.0		2				15.00	4.01								0.00
B77	1500+48 (54' LT)	6.42	1				6.99	40.54	0.0	0.0		2				15.00	4.31								0.00
B74	1506+60 (60' RT)	3.72	1				6.31	4.24	4.5	0.0		2				0.00	0.00								12.41
B92	1496+50 (89' RT)	3.00				1	0.98	40.54	0.0	0.0				1		15.00	0.60								0.00
B93	1501+05 (70' LT)	3.00				1	1.40	40.54	0.0	0.0				1		15.00	0.86								0.00
B82	1480+80 (138' LT.)	5.98		1			2.41	2.52	5.0	4.8						0.00	0.00						1		15.27
B81	1475+90 (74.5' RT.)	5.45	1				4.53	4.00	4.5	0.0		2				0.00	0.00								7.20
A10	1473+10 (122 LT)	6.64																			1			1	
A11	1476+00 (102 LT)	9.98																			1			1	
A96	1476+20 (100 LT)	10.96																			1			1	
B24	1492+50 (4' LT)	6.09																		1				1	
A13	1480+80 (92' LT)	8.14																			1			1	
A15	1486+60 (70.22' LT)	12.29																			1			1	
A16	1487+25 (71.88' LT)	13.29																			1			1	
A18	1490+31 (78.3' LT)	14.42																		1				1	
B35	1493+14 (78' LT)	13.09																			1			1	
B80	1496+91 (4' LT)	6.47																			1			1	
B31	1500+00 (3' LT)	8.35																			1			1	
B78	1500+00 (54' LT)	8.16																			1			1	
B33	1500+00 (80' LT)	9.98																			1			1	
B76	1500+50 (65' LT)																				1			1	
△ X1	4+27 (40' LT)	12.27																			1			1	
△ X2	9+97 (40' LT)	9.27																			1			1	
△ X3	14+91 (40' LT)	9.50																			1			1	
△ X4	18+13 (406' LT)	10.10																			1			1	
△ X5	22+61 (423' LT)	9.99																			1			1	
90 & 97	**1502+85 (LT)		1									2									1				
	SUBTOTAL		15	1	1	2					1	30		2				2	8	5	7		1	20	

DRAINAGE AREA SUMMARY

I.D.	STATION TO STATION	D. A. (ACRES)	CA MIN	TC (MIN)	SUPPLY Q (CFS)	INTENSITY (IN/HR)	TOTAL FLOW (CFS)
A 9	1442+00 TO 1471+40	9.55	5.16	72.00	0.00	2.84	14.67
B91	1487+00 TO 1488+50	0.30	0.25	5.00	0.00	8.73	2.23
B21	1485+00 TO 1486+60	0.29	0.22	3.00	0.00	8.73	1.91
B16	1479+40 TO 1485+70	1.07	0.78	13.00	0.00	7.80	6.06
B13	1471+40 TO 1480+80	1.98	0.94	15.00	0.00	7.29	6.86
B11	1471+40 TO 1479+40	1.05	0.73	14.00	0.00	7.54	5.48
B32	1496+60 TO 1500+00	0.49	0.34	12.00	0.00	8.08	2.74
B28	1499+50 TO 1506+00	1.36	1.02	23.00	0.00	5.84	5.97
B12	1471+40 TO 1479+30	1.11	0.52	4.00	0.00	8.73	4.53
B97	1471+40 TO 1476+20	0.76	0.65	3.00	0.00	8.73	5.64
A12	1477+50 TO 1485+50	0.38	0.06	32.00	0.00	4.82	0.27
B15	1476+20 TO 1480+80	0.81	0.69	2.00	0.00	8.73	6.01
B17	1477+20 TO 1495+00	2.58	1.41	31.00	0.00	4.91	6.92
B18	1487+20 TO 1496+20	0.66	0.56	5.00	0.00	8.73	4.90

DRAINAGE AREA SUMMARY (CONT)

I.D.	STATION TO STATION	D. A. (ACRES)	CA MIN	TC (MIN)	SUPPLY Q (CFS)	INTENSITY (IN/HR)	TOTAL FLOW (CFS)
B20	1480+80 TO 1485+65	0.93	0.79	13.00	0.00	7.80	6.17
B37	1490+00 TO 1499+70	0.60	0.51	3.00	0.00	8.73	4.45
B22	1490+00 TO 1494+30	0.66	0.56	9.00	0.00	8.73	4.90
B23	1487+70 TO 1492+50	0.70	0.5[illegible]	10.00	0.00	8.73	5.20
B25	1485+65 TO 1490+00	0.65	0.55	9.00	0.00	8.73	4.82
B26	1492+50 TO 1500+00	1.06	0.90	9.00	0.00	8.73	7.87
B27	1494+30 TO 1498+50	0.56	0.48	5.00	0.00	8.73	4.16
B29	1496+20 TO 1507+00	1.00	0.61	31.00	0.00	4.91	3.00
B30	1497+20 TO 1506+60	1.32	1.12	12.00	0.00	8.08	9.07
B77	1498+50 TO 1506+50	0.98	0.83	11.00	0.00	8.39	6.99
B74	1506+60 TO 1512+77	0.85	0.72	3.00	0.00	8.73	6.31
B92	1494+70 TO 1497+20	0.14	0.11	2.00	0.00	8.73	0.98
B93	1499+70 TO 1505+60	0.20	0.16	4.00	0.00	8.73	1.40
B82	1480+80 TO 1485+00	0.47	0.31	13.00	0.00	7.80	2.41
B81	1471+40 TO 1475+90	0.61	0.52	3.00	0.00	8.73	4.53

** INDEPENDENT RUN NOT [redacted] INCORPORATED INTO NEW STORM SEWER.

△ DENOTES STATIONING FOR BASELINE TO OUTFALL (SEE SHEETS 59 & 60)

⊛ ACTUAL INLET LENGTHS CONFORM TO A 5 YR. FREQUENCY FOR FRONTAGE ROADS.

NOTE: A9 DATA IS SHOWN ON NETWORK I TRUNKLINE A. MINIMUM TIME OF CONCENTRATATION = 10.0 MINUTES INTENSITY BASED ON 10 (TEN) YEAR FREQUENCY IN CONFORMANCE WITH TXDOT HYDRALIC MANUAL.

STATE OF TEXAS
RAUL PALMA
85658
REGISTERED
PROFESSIONAL ENGINEER

3/31/92

HYDRAULIC DATA SHEET

FED. RD. DIV. NO.	FEDERAL AID PROJECT NO.		SHEET NO.
6	NH 92C 3M		88
STATE	STATE DIST. NO.	COUNTY	
TEXAS	21	HIDALGO	
CONT.	SECT.	JOB	HIGHWAY NO.
39	17	97	US 83/281

7EA7-F325LL01EXDAS.DGN

PIPE RUN SUMMARY

RUN	STATION TO STATION	DESCRIPTION	U.S. ID	D.S. ID	U.S. F.L. ELEV	D.S. F.L. ELEV	SLOPE	FLOW (CFS)	U.S. HEAD (FT)	D.S. HEAD (FT)	HYDR. GRAD	DEPTH (FT)	VELOC. (FPS)	PIPE CAPAC. (CFS)	RCP FOR STORM DRAIN (LF) 18"	24"	30"	36"	42"	48"	54"	$ CUT & RESTORE PAV. (SY)	*STORM EXCAV. (CY)	TRENCH EXCAV PROTECTION (FT)	CEMENT STAB. BACK FILL (CY)	CONC. BOX 7'X6' (LF)
1	1469+50 TO 1473+10	EXIST. 24" X 369' RCP	A 9	A10	105.94	105.36	0.00157	14.67	109.42	108.09	0.00358	1.00	4.7	9.7												
2	1473+10 TO 1476+00	PROP. 36" X 294' RCP	A10	A11	105.36	104.77	0.00201	14.48	108.09	107.98	0.00040	0.47	2.0	32.4				294					579	294		
3	1476+00	EXIST. 18" X 41' RCP	B11	B12	107.26	107.21	0.00122	5.48	109.49	109.40	0.00232	1.00	3.1	4.0												
4	1476+00	EXIST. 18" X 212' RCP	B12	A11	107.21	105.97	0.00585	9.31	109.40	107.98	0.00670	1.00	5.3	8.7												
5	1476+00	EXIST. 18" X 54' RCP	B13	A11	107.31	105.97	0.02481	6.86	108.94	107.98	0.00364	0.43	3.9	17.9												
6	1476+00 TO 1476+20	PROP. 36" X 16' RCP	A11	A96	104.77	104.24	0.03312	20.41	107.98	107.96	0.00080	0.27	2.9	131.5				16					28	12		
7	1475+90 TO 1476+20	PROP. 18" X 76' RCP	B81	B97	119.20	118.20	0.01316	4.53	120.42	118.81	0.00158	0.41	6.6	13.1	76								45			
8	1476+20	PROP. 18" X 94' RCP	B97	A96	118.20	109.17	0.09606	10.17	118.75	109.72	0.00799	0.37	17.1	35.3	94								94	94		
9	1480+80	PROP. 18" X 46' RCP	B82	A13	105.36	104.86	0.01087	2.41	107.49	107.47	0.00045	0.31	1.4	11.9	46							16	28		11	
10	1476+20 TO 1479+80	PROP. 36" X 366' RCP	A96	A12	104.24	103.55	0.00189	23.64	107.96	107.57	0.00107	0.65	3.3	31.4				366					784	366		
11	1479+80 TO 1480+80	PROP. 36" X 99' RCP	A12	A13	103.55	103.36	0.00192	23.53	107.57	107.47	0.00106	0.64	3.3	31.7				99					182	96		
12	1480+80	EXIST. 18" X 86' RCP	B15	A13	108.76	104.02	0.05512	6.01	110.24	107.47	0.00279	0.32	3.4	26.7	8											
13	1480+80 TO 1486+60	PROP. 36" X 587' RCP	A13	A15	103.36	102.23	0.00193	26.18	107.47	106.70	0.00131	0.69	3.7	31.7				587					1279	572		
14	1486+60	EXIST. 18" X 65' RCP	B21	A15	107.78	106.25	0.02354	1.91	108.52	106.70	0.00028	0.22	4.3	17.5												
15	1486+60 TO 1487+25	PROP. 36" X 61' RCP	A15	A16	102.23	102.10	0.00213	26.32	106.70	106.62	0.00133	0.67	3.7	33.4				61					135	61		
16	1487+20	EXIST. 18" X 104' RCP	B91	A16	108.08	106.25	0.01760	2.23	108.88	106.64	0.00038	0.26	6.1	15.1												
17	1487+25 TO 1490+31	PROP. 42" X 306' RCP	A16	A18	101.60	101.05	0.00180	26.96	106.62	106.43	0.00061	0.55	2.8	46.2					306				695	306		
18	1485+65	EXIST. 18" X 62' RCP	B16	B17	107.15	105.62	0.02468	6.06	110.08	109.91	0.00283	0.40	3.4	17.9												
19	1485+65 TO 1487+67	PROP. 18" X 194' RCP	B18	B17	106.01	105.62	0.00201	4.90	110.27	109.91	0.00185	0.79	2.8	5.1	194								96			
20	1485+65	EXIST. 18" X 88' RCP	B17	B20	105.40	104.94	0.00523	13.50	109.91	108.67	0.01407	1.00	7.6	8.2												
21	1485+65 TO 1490+00	PROP. 24" X 430' RCP	B20	B25	104.44	102.39	0.00477	17.32	108.67	106.52	0.00499	1.00	5.5	16.9		430							561	430		
22	1492+50 TO 1494+30	PROP. 18" X 176' RCP	B22	B24	105.50	105.13	0.00209	4.90	108.73	108.41	0.00185	0.77	2.8	5.2	176								160	176		
23	1492+50	PROP. 18" X 67' RCP	B23	B24	105.27	105.13	0.00209	5.20	108.55	108.41	0.00208	0.82	2.9	5.2	67								59	60		
24	1490+00 TO 1492+50	PROP. 18" X 246' RCP	B24	B25	105.13	102.89	0.00911	9.96	108.41	106.52	0.00766	0.75	5.6	10.9	246								253	246		
25	1490+00 TO 1490+31	PROP. 36" X 78' RCP	B25	A18	101.39	101.14	0.00321	25.06	106.52	106.43	0.00120	0.57	3.5	40.9				78					129	78		
26	1503+50 TO 1506+60	PROP. 18" X 306' RCP	B74	B76	113.19	106.45	0.02203	6.31	114.72	107.98	0.00307	0.42	3.6	16.9	306								143			
27	1500+00 TO 1503+50	PROP. 24" X 346' RCP	B76	B30	105.95	104.57	0.00399	6.31	107.98	107.75	0.00066	0.44	2.0	15.5		346							286	250		
28	1500+00	EXIST. 18" X 54' RCP	B28	B29	105.39	104.17	0.02259	5.97	107.99	107.85	0.00276	0.41	3.4	17.1												
29	1500+00	PROP. 18" X 20' RCP	B29	B30	104.17	104.14	0.00150	8.03	107.85	107.75	0.00498	1.00	4.5	4.4	20								12	6		
30	1500+00	PROP. 24" X 72' RCP	B30	B31	103.64	103.34	0.00417	17.07	107.75	107.40	0.00485	1.00	5.4	15.8		72							73	72		
31	1496+40 TO 1496+91	PROP. 18" X 49' RCP	B92	B26	108.00	105.19	0.05735	0.98	108.71	108.71	0.00007	0.13	0.6	27.3	49								27			
32	1496+91	PROP. 18" X 75' RCP	B26	B80	105.19	104.74	0.00600	8.85	108.71	108.26	0.00604	1.00	5.0	8.8	75								62	62		
33	1496+10 TO 1496+91	PROP. 18" X 77' RCP	B27	B80	105.50	104.74	0.00987	4.16	108.36	108.26	0.00133	0.42	2.4	11.3	77								73	28		
34	1496+91 TO 1500+00	PROP. 24" X 305' RCP	B80	B31	104.24	103.34	0.00295	13.00	108.26	107.40	0.00281	0.80	4.1	13.3		305							262	267		
35	1500+00	PROP. 30" X 48' RCP	B31	B78	102.84	102.68	0.00333	24.27	107.40	107.25	0.00298	0.78	4.9	25.7			48						67	46		
36	1500+48 TO 1501+05	PROP. 18" X 55' RCP	B93	B77	109.00	103.92	0.09236	1.40	109.62	107.49	0.00015	0.14	0.8	34.6	55								27	40		
37	1500+00 TO 1500+48	PROP. 18" X 44' RCP	B77	B78	103.92	103.68	0.00545	8.34	107.49	107.25	0.00537	0.81	4.7	8.4	44								42	44		
38	1500+00	PROP. 36" X 22' RCP	B78	B33	102.18	102.12	0.00207	29.05	107.25	107.21	0.00162	0.73	4.1	32.9				29					23	22		
39	1500+00	EXIST. 18" X 52' RCP	B32	B33	105.04	103.46	0.03038	2.74	107.24	107.21	0.00058	0.25	1.6	19.8	8											
40	1493+14 TO 1500+00	PROP. 42" X 689' RCP	B33	B35	101.62	101.07	0.00080	30.65	107.21	106.66	0.00079	0.82	3.2	30.8					689				1348	689		
41	1493+14	PROP. 18" X 148' RCP	B37	B35	103.15	103.05	0.01250	4.45	106.67	106.66	0.00153	0.41	2.5	12.7	14 8								21	8		
42	1490+31 TO 1493+14	PROP. 42" X 284' RCP	B35	A18	101.07	100.51	0.00197	31.26	106.66	106.43	0.00082	0.58	3.2	48.4					284				626	284		
43	△0+73 TO 4+27	PROP. 48" X 351' RCP	A18	X 1	100.23	99.92	0.00088	58.80	106.43	105.93	0.00143	1.00	4.7	46.2						351		254	1439	⊗ 351	78		
44	△4+27 TO 9+97	PROP. 48" X 567' RCP	X 1	X 2	99.92	99.43	0.00086	58.17	105.93	105.13	0.00140	1.00	4.6	45.7						567		269	2013	⊗ 567			
45	△9+97 TO 14+91	PROP. 48" X 489' RCP	X 2	X 3	99.43	99.02	0.00084	57.16	105.13	104.47	0.00135	1.00	4.5	45.1						489		46	1757	⊗ 489			
46	△14+91 TO 18+13	PROP. 54" X 500' RCP	X 3	X 4	95.75	95.32	0.00086	66.30	104.47	103.99	0.00097	1.00	4.2	62.5							500	20	2199	⊗ 500			
47	△18+13 TO 22+61	PROP. 7'X6'X442' BOX	X 4	X 5	94.70	94.00	0.00158	230.38	103.99	103.53	0.00104	4.31	5.5	285.0								72	2128	⊗ 442		442	
48	△22+61 TO 22+87.55	RROP. 7'X6'X 32' BOX	X 5	X 6	94.00	93.95	0.00156	229.95	103.53	103.50	0.00103	4.32	5.5	283.0									150	30		32	
	** 1502+85 (LT)	PROP. 18" X 35' RCP	97	96											35							20	41	⊗ 40	10		
														SUBTOTAL	~~1568~~ 1590	1153	48	1530	1279	1407	500	697	17926	7048	99	474

* FOR CONTRACTOR'S INFORMATION ONLY.

$ SEE SHEET NO. 511 FOR DETAILS

△ DENOTES STATIONING FOR BASELINE TO OUTFALL (SEE SHEETS 59 & 60)

**INDEPENDENT RUN. NOT [redacted] INCORPORATED IN NEW STORM SEWER.

⊗ SHORING [redacted] USED WHEN CROSSING OVER EXIST. PAVEMENT.

NETWORK I
TRUNKLINE B

HYDRAULIC DATA SHEET

STATE OF TEXAS
RAUL PALMA
68855
REGISTERED PROFESSIONAL ENGINEER

Raul Palma
3/31/92

FED. RD. DIV. NO.	FEDERAL AID PROJECT NO.	SHEET NO.
6	NH 92( )M	89
STATE	STATE DIST. NO.	COUNTY
TEXAS	21	HIDALGO
CONT.	SECT.	JOB	HIGHWAY NO.
39	17	97	US 83/281

VER: EXPAS2 EXPAS DGN: ZEA3:[325LL01]

NETWORK II

DRAINAGE AREA SUMMARY

I.D.	STATION TO STATION	D. A.	CA	* TC MIN	SUPPLY Q CFS	$ INTENSITY IN HR	TOTAL FLOW CFS
D 0	1509+30 - 1512+77.50	0.73	0.51	9.00	0.0	8.73	4.5
D 1	1510+29 - 1512+22	0.22	0.09	2.60	0.0	8.73	0.8
D 3	1509+06 - 1512+33	0.20	0.17	14.00	0.0	7.54	1.3
D 5	1509+06 - 1512+33	0.25	0.21	12.00	0.0	8.08	1.7
Z 0	1505+90 - 1510+08	0.31	0.05	7.60	0.0	8.73	0.4
Z 1	1510+08 - 1512+00	0.28	0.04	7.40	0.0	8.73	0.4
T 0	1512+80 - 1513+57	0.34	0.29	7.60	0.0	8.73	2.5
Z 2	1512+00 - 1512+37	0.20	0.17	0.88	0.0	8.73	1.5
Z 3	1512+80 - 1513+65	0.20	0.17	0.88	0.0	8.73	1.5
E 0	151280 - 1517+52	0.65	0.24	2.00	0.0	8.73	2.1
※ F 0	1512+80 - 1516+81	0.52	0.44	2.10	0.0	8.73	3.9
※ K 2	1512+80 - 1517+60	0.66	0.56	2.50	0.0	8.73	4.9
G 0	1514+70 - 1519+00	0.51	0.36	11.00	0.0	8.39	3.0
※ G 1	1517+60 - 1521+75	0.56	0.48	2.80	0.0	8.73	4.2
G 3	1517+00 - 1522+00	0.43	0.06	22.00	0.0	5.99	0.4
G 5	1517+52 - 1528+50	0.46	0.34	40.00	0.0	4.20	1.4
G 4	1513+25 - 1520+00	0.77	0.59	15.00	0.0	7.29	4.3
※ Z 6	1516+81 - 1519+87.50	0.42	0.36	1.70	0.0	8.73	3.1
R 0	1520+25 - 1524+20	0.55	0.44	10.00	0.0	8.73	3.8
※ Z 7	1519+87.50 - 1522+03	0.32	0.27	1.30	0.0	8.73	2.4
※ Z 8	1522+03 - 1523+50	0.24	0.20	3.40	0.0	8.73	1.8
※ K 5	1523+50 - 1525+01	0.26	0.22	3.40	0.0	8.73	1.9
※ Z 9	1525+01 - 1526+44	0.27	0.23	3.30	0.0	8.73	2.0
H 0	1530+00 - 1531+64	0.06	0.01	4.70	0.0	8.73	0.1
H 1	1524+20 - 1529+30	0.90	0.57	14.00	0.0	7.54	4.3
※ H 2	1524+20 - 1529+95	0.44	0.37	3.50	0.0	8.73	3.3
※ H 4	1520+15 - 1524+14	0.53	0.45	3.80	0.0	8.73	3.9
※ K 4	1524+14 - 1527+10	0.39	0.33	6.30	0.0	8.73	2.9
※ H 5	1527+10 - 1530+07	0.37	0.31	6.10	0.0	8.73	2.7
※ H 8	1526+44 - 1529+30	0.37	0.31	6.00	0.0	8.73	2.7
H 9	1520+00 - 1529+30	1.18	0.80	25.00	0.0	5.57	4.5
P 0	1526+44 - 1532+18	0.54	0.37	19.00	0.0	6.47	2.4
※ Z11	1529+30 - 1533+80	0.66	0.56	15.00	0.0	7.29	4.1
※ Z12	1533+80 - 1536+40	0.40	0.34	9.10	0.0	8.73	3.0
※ Z13	1536+40 - 1539+18	0.30	0.25	7.20	0.0	8.73	2.2
I 0	1529+30 - 1539+62	1.18	0.88	28.00	0.0	5.22	4.6
I 2	1530+00 - 1540+02	2.27	1.64	39.00	0.0	4.27	7.0
L 0	1539+62 - 1552+00	1.51	1.08	38.00	0.0	4.34	4.7
L 2	1538+80 - 1552+00	1.92	1.37	45.00	0.0	3.89	5.3
J 0	1541+04 - 1554+00	3.06	1.94	43.00	0.0	4.01	7.8
X 3	1540+00 - 1550+97	2.63	1.82	29.00	0.0	5.11	9.3
Y 1	1529+30 - 1538+80	1.10	0.74	28.00	0.0	5.22	3.9
※ I 4	1532+18 - 1539+18	0.43	0.37	3.20	0.0	8.73	3.2

NOTE:

* MINIMUM TIME OF CONCENTRATION = 10.0 MINUTES

$ INTENSITY BASED ON 10 (TEN) YEAR FREQUENCY IN CONFORMANCE WITH SDH & PT HYDRAULIC MANUAL.

※ GRATED INLETS ON GRADE ANALYZED USING HYDRAULIC ENGINEERING CIRCULAR #12, (COMPUTATIONS SHOWN INCLUDE CARRYOVER, WHEN APPLICABLE)

SUMMARY OF INLETS AND MANHOLES

I.D.	STATION	INLETS (COMPLETE) DEPTH OF STR. (FT)	TY A (MOD I) (EA)	TY C (EA)	TY CC (EA)	TY CC MOD (EA)	TY CC MOD I (EA)	INLET JUNCT BOX TY V (EA)	INLET JUNCT BOX TY J (EA)	RING & COVER TY I (EA)	GRATE W/FRAMES TY CC MOD (EA)	GRATE W/FRAMES TY CC MOD I (EA)	GRATE W/FRAMES TY V (EA)	GRATE TY C (EA)	GRATE TY CC (EA)	FLOW (CFS)	PONDING WIDTH (FT)	ACTUAL LENGTH (FT)	REQUIRED LENGTH (FT)	ACTUAL AREA (SQ FT)	REQUIRED AREA (SQ FT)	INLET EXT. (EA)	MANHOLES TY A (EA)	MANHOLES TY B (EA)	MANHOLES TY M (EA)	RING & COVER TY2 (EA)
D 0	1511+65(165' RT)															4.5		5.00	4.80							
D 1	1511+50(110' RT)															0.8		5.00	0.83							
D 3	1511+00(83' LT)															1.3		5.00	1.36							
D 5	1511+65(193' LT)															1.7		5.00	1.82							
Z 0	1508+50(115' LT)															0.4				16.00	0.14					
S 0	1510+55(100' LT)	10.23																					1			1
Z 1	1511+65(114' LT)															0.4				16.00	0.13					
T 0	1513+59(472' LT)															2.5		5.00	2.70							
Z 2	1512+30(114' LT)															1.5		5.00	1.59							
Z 3	1513+20(114' LT)															1.5		5.00	1.59							
E 0	1514+98(110' LT)															2.1		5.00	2.29							
※F 0	1516+81(54.62' LT)	3.81				1					2					3.86	9.28									
F 1	1516+81(117' LT)	7.98																						1		1
Z 5	1517+45(117' LT)	7.86																						1		1
※K 2	1517+60(67.42' RT)	3.18					1					2				4.90	10.15									
K 3	1517+60(114' RT)	2.82																					1			1
G 0	1519+00(164' LT)															3.0	14.77	10.00	6.04			1				
※G 1	1521+75(99.01' LT)	2.77				1					2					5.69	11.46									
G 2	1521+75(111.5' RT)	2.88																					1			1
G 3	1519+00(110' RT)															0.4				5.74	0.14					
G 5	1520+00(85' LT)															1.4				5.74	0.51					
G 4	1520+00(140' LT)															4.3	17.27	10.00	7.93			1				
※Z 6	1519+87.50(62.41' LT)					1					2					3.71	9.15									
R 0	1523+00(68' RT)	3.25		1										1		3.8				5.74	2.74					
R 1	1521+75(68' RT)	5.36																					1			1
※Z 7	1522+03(64.42' LT)	9.74				1					2					2.93	8.37									
※Z 8	1523+50(68.42' LT)	8.31				1					2					2.11	12.99									
※K 5	1525+01(74.42' LT)	9.10				1					2					2.30	13.42									
※Z 9	1526+44(80.42' LT)	8.88				1					2					2.37	13.57									
H 0	1530+20(148' RT)															0.1				5.74	0.03					
H 1	1529+30(140' RT)															4.3	17.27	10.00	7.92			1				
※H 2	1529+95(85.40' RT)	7.32				1					2					3.27	9.05									
H 3	1529+30(87' RT)	8.47																							1	1
※H 4	1524+14(54.04' RT)	7.40				1					2					3.93	11.64									
※K 4	1527+10(55.04 RT)	7.37					1					2				3.75	16.12									
H 6	1529+30(55.21' RT)	7.36																							1	1
※H 5	1530+07(54.98' RT)	7.19					1					2				3.43	15.59									
※H 8	1529+30(54.42' LT)	8.64					1					2				2.75	14.35									
H 9	1529+30(140' RT)															4.5	18.27	10.00	7.96			1				
Z10	1529+30(73' LT)	10.32																							1	1
P 0	1529+99.83(71.13' LT)	9.65						1	1				1			2.4				4.00	1.72					
※Z11	1533+80(64.00' LT)	9.56				1					2					4.51	21.32									
※Z12	1536+40(61.34' LT)	9.85				1					2					3.86	20.11									
※Z13	1539+18(54.90' LT)	7.22					1					2				2.93	18.14									
Z14	1538+81(55.91' LT)	10.17																							1	1
I 0	1538+80(140' RT)															4.6	18.77	10.00	8.10			1				
I 1	1538+80(85' RT)																									
I 2	1536+90(86' RT)	4.16		1										1		7.0				5.74	2.48					
L 0	1552+00(140' RT)															4.7	19.27	10.00	8.08			1				
L 2	1552+00(140' LT															5.3	22.27	10.00	8.37			1				
X 2	1552+00(63.50' LT)	6.97																							1	1
J 0	1547+00(86' RT)															7.8				5.74	1.58					
X 3	1547+00(85' LT)	4.49			1										2	9.3				5.74	1.96					
I 5	1543+68(90' LT)	6.79																						1		1
※I 4	1539+18(85.30' LT)	9.21				1					2					3.19	8.84									
Y 0	1538+81.25(94.82' LT)	8.79																							1	1
Y 1	1538+80(140' LT)	8.42	1							1						3.9	17.77	11.00	7.00							
✚Y 2	1539+40.24(G)=1+41(Y)	8.42																							1	1
✚Y 3	4+94 (5.26' LT)	9.57																							1	1
✚Y 4	8+21 (6.58' LT)	9.31																							1	1
✚Y 5	11+50 (7.93' LT)	9.56																							1	1
✚Y 6	14+31 (9.00' LT)	7.87																							1	1
✚Y 7	17+74 (9.75' LT)	10.28																							1	1
✚Y 8	18+33(32.50'LT)	10.88																							1	1
	TOTAL:		1	2	1	12	5	1	1	1	24	10	1	2	2							7	4	3	13	20

* FOR CONTRACTORS INFORMATION ONLY.

✚ STATIONS ARE ALONG OUTFALL BASELINE

⊗ ACTUAL INLET LENGTHS CONFORM TO A 5 YR. FREQUENCY FOR FRONTAGE ROADS.

RAUL PALMA 69068 REGISTERED 10/31/91

HYDRAULIC DATA SHEET

FED. RD. DIV. NO.	FEDERAL AID PROJECT NO.		SHEET NO.
6	NH 92 ( )M		90
STATE	STATE DIST. NO.	COUNTY	
TEXAS	21	HIDALGO	
CONT.	SECT.	JOB	HIGHWAY NO.
39	17	97	US 83/281

PLOT SIZE: VER: FILE: DASL DGN: ZEAL:[3251071]

NETWORK II

PIPE RUN SUMMARY

RUN	EXIST. STATION TO STATION	DESCRIPTION	U.S. ID	D.S. ID	U.S. F.L. ELEV	D.S. F.L. ELEV	SLOPE	FLOW (CFS)	U.S. HEAD (FT)	D.S. HEAD (FT)	HYDR. GRAD	DEPTH (FT)	VELOC. (FPS)	PIPE CAPAC. (CFS)	RCP FOR STORM DRAIN (LF) 18"	24"	30"	36"	42"	48"	54"	* STORM SEWER EXCAV (CY)	TRENCH EXCAV PROTECTION (FT)	$ CUT & RESTORE PAVE. (SY)	RELAY PIPE SEWER LF 24 IN	18 IN	CEMENT STAB. BKFL. (CY)
1	1511+65	EXIST. 18" X 55' RCP	D 0	D 2	105.21	104.71	0.00909	4.47	105.91	105.83	0.00154	0.45	5.8	10.9													
2	1511+50 - 1511+65	EXIST. 18" X 10' RCP	D 1	D 2	105.00	104.71	0.02900	0.78	105.83	105.83	0.00005	0.14	5.2	19.4													
3	1511+65	EXIST. 18" X 224' RCP	D 2	Z 1	104.72	104.11	0.00272	5.25	105.83	105.22	0.00213	0.74	3.7	5.9													
4	1511+00 - 1512+20	EXIST. 18" X 48' RCP	D 3	T 2	102.26	101.91	0.00729	1.27	104.93	104.92	0.00012	0.25	3.7	9.7													
5	1511+65	EXIST. 18" X 79' RCP	D 5	Z 1	105.56	105.03	0.00671	1.70	105.99	105.46	0.00022	0.29	4.0	9.3													
6	150+50 - 1510+55	PROP. 24" X 203' RCP	Z 0	S 0	102.13	101.80	0.00163	0.41	104.98	104.98	0.00000	0.14	1.5	9.9											195		
7	1510+55 - 1511+65	PROP. 24" X 108' RCP	S 0	Z 1	101.80	101.63	0.00157	0.41	104.98	104.98	0.00000	0.14	1.5	9.7											108		
8	1511+65 - 1512+20	EXIST. 24" X 62' RCP	Z 1	T 2	101.63	101.41	0.00355	7.18	104.98	104.92	0.00086	0.50	4.6	14.6													
9	1512+20 - 1512+30	EXIST. 24" X 8' RCP	T 2	Z 2	101.41	101.39	0.00250	7.99	104.92	104.91	0.00106	0.59	4.1	12.3													
10	1512+20 - 1513+20	EXIST. 24" X 97' RCP	Z 2	Z 3	101.39	101.37	0.00021	9.25	104.91	104.78	0.00142	1.00	2.9	3.5													
11	1513+59 - 1513+24	EXIST. 18" X 38' RCP	T 0	T 1	104.25	104.25	0.00000	2.51	105.77	105.75	0.00049	1.00	1.4	******													
12	1513+24	EXIST. 18" X 368' RCP	T 1	Z 3	104.25	102.82	0.00389	2.51	104.95	104.78	0.00049	0.41	3.7	7.1													
13	1513+20 - 1515+00	EXIST. 24" X 180' RCP	Z 3	Z 4	101.37	101.16	0.00117	12.44	104.78	104.31	0.00258	1.00	4.0	8.4													
14	1514+98 - 1515+00	EXIST. 18" X 10' RCP	E 0	Z 4	104.10	101.16	0.29400	2.13	104.31	104.31	0.00035	0.13	15.8	61.7													
15	1515+00 - 1516+81	PROP. 30" X 176' RCP	Z 4	F 1	101.16	101.02	0.00080	13.90	104.31	104.14	0.00098	1.00	2.8	12.5			176					270	176	101			58
16	1516+81	PROP. 18" X 61' RCP	F 0	F 1	120.00	101.77	0.30383	3.86	120.25	104.14	0.00115	0.17	19.4	62.7	61							46	60	3			1
17	1516+81 - 1517+45	PROP. 36" X 60' RCP	F 1	Z 5	101.02	100.96	0.00100	16.53	104.14	104.11	0.00052	0.64	3.5	22.8				60				101	60	40			24
18	1517+45 - 1519+87.50	PROP. 36" X 246' RCP	Z 5	Z 6	100.96	100.59	0.00150	16.39	104.11	103.98	0.00051	0.55	4.1	28.0				246				521	246	32			19
19	1519+00	EXIST. 18" X 48' RCP	★ G 0	G 3	103.64	103.50	0.00292	2.99	106.20	106.16	0.00069	0.50	3.4	6.1													
20	1517+60	PROP. 18" X 46' RCP	K 2	K 3	118.25	105.88	0.26891	4.90	118.55	106.48	0.00185	0.20	19.5	59.0	46							22	46				
21	1517+60 - 1519+00	PROP. 18" X 136' RCP	K 3	G 3	105.88	103.50	0.01750	4.90	106.48	106.16	0.00185	0.40	7.4	15.1	136							79	136				
22	1523+00 - 1521+75	PROP. 18" X 122' RCP	R 0	R 1	107.75	107.25	0.00410	3.84	108.53	108.03	0.00114	0.52	4.1	7.3	122							40	122				
23	1521+75	PROP. 18" X 28' RCP	R 1	G 1	107.25	107.00	0.00893	3.77	107.86	107.61	0.00110	0.41	5.5	10.8	28							13	28	13			5
24	1521+75	PROP. 18" X 9' RCP	G 1	G 2	107.00	106.00	0.12500	7.82	107.48	107.45	0.00472	0.30	17.5	40.2	9							5					
25	1521+75 - 1519+00	PROP. 18" X 272' RCP	G 2	G 3	106.00	103.50	0.00919	7.81	107.45	106.16	0.00472	0.63	6.7	10.9	272							157	272				
26	1519+00 - 1519+87.50	EXIST. 18" X 188' RCP	G 3	Z 6	103.50	102.72	0.00400	11.36	106.16	104.22	0.00997	1.00	6.4	7.2													
27	1520+00	EXIST. 18" X 51' RCP	G 4	G 5	102.91	102.89	0.00042	4.30	104.46	104.39	0.00143	1.00	2.4	2.3													
28	1520+00 - 1519+87.50	PROP. 18" X 22' RCP	G 5	Z 6	102.89	102.59	0.01364	3.91	104.01	103.98	0.00118	0.37	6.6	13.3	22							28	22				
29	1519+87.50 - 1522+03	PROP. 42" X 213' RCP	Z 6	Z 7	100.59	100.38	0.00099	23.36	103.98	103.88	0.00046	0.61	3.8	34.2					213			570	213				
30	1522+03 - 1523+50	PROP. 42" X 144' RCP	Z 7	Z 8	100.38	100.23	0.00104	24.14	103.88	103.81	0.00049	0.61	3.9	35.2					144			323	144				
31	1523+50 - 1525+01	PROP. 42" X 148' RCP	Z 8	K 5	100.23	100.08	0.00101	24.75	103.81	103.74	0.00052	0.63	3.9	34.7					148			323	148				
32	1525+01 - 1526+44	PROP. 42" X 140' RCP	K 5	Z 9	100.08	99.93	0.00107	25.41	103.74	103.66	0.00054	0.63	4.0	35.7					140			296	140				
33	1526+44 - 1529+30	PROP. 42" X 284' RCP	Z 9	Z10	99.93	99.64	0.00102	26.11	103.66	103.50	0.00057	0.65	3.9	34.8					284			562	284	167			110
34	1530+20 - 1529+30	EXIST. 18" X 90' RCP	★ H 0	H 1	103.85	102.75	0.01222	0.08	105.66	105.66	0.00000	0.06	1.8	12.6													
35	1529+30	EXIST. 18" X 55' RCP	H 1	H 3	102.00	101.62	0.00691	4.36	105.66	105.57	0.00147	0.48	5.2	9.5	4												
36	1529+95 - 1529+30	PROP. 18" X 62' RCP	H 2	H 3	101.75	101.62	0.00210	3.27	105.63	105.57	0.00082	0.58	3.1	5.2	62							33	62				
37	1529+30	EXIST. 18" X 30' RCP	H 3	H 6	101.62	101.51	0.00367	7.13	105.57	105.46	0.00393	1.00	4.0	6.9	4												
38	1524+14 - 1527+10	PROP. 18" X 292' RCP	H 4	K 4	102.32	101.84	0.00164	3.93	106.58	106.23	0.00120	0.72	2.9	4.6	292							316	292				
39	1527+10 - 1529+30	PROP. 18" X 216' RCP	K 4	H 6	101.84	101.51	0.00153	6.83	106.23	105.46	0.00360	1.00	3.9	4.4	216							234	216				
40	1530+07 - 1529+30	PROP. 18" X 73' RCP	H 5	H 6	101.64	101.51	0.00178	2.75	105.50	105.46	0.00058	0.55	2.8	4.8	73							81	73				
41	1529+30	EXIST. 18" X 55' RCP	H 6	H 7	101.51	101.34	0.00309	15.28	105.46	104.46	0.01804	1.00	8.6	6.3													
42	1529+30	EXIST. 18" X 50' RCP	H 7	H 8	101.34	100.24	0.02200	15.23	104.46	103.57	0.01792	0.75	10.7	16.9													
43	1529+30	PROP. 24" X 14' RCP	H 8	Z10	100.24	99.64	0.04286	17.52	103.57	103.50	0.00511	0.41	14.5	50.7		14						26					
44	1529+30	PROP. 18" X 65' RCP	H 9	Z10	101.80	101.64	0.00246	4.46	103.60	103.50	0.00153	0.68	3.5	5.6	65							52	65	26			10
45	1529+30 - 1531+00	PROP. 48" X 166' RCP	Z10	P 0	99.64	99.35	0.00175	38.15	103.50	103.40	0.00060	0.55	5.4	65.0						166		455	166				
46	1531+00 - 1533+80	PROP. 48" X 277' RCP	P 0	Z11	99.35	98.88	0.00170	39.33	103.40	103.22	0.00064	0.57	5.3	64.1						277		786	277				
47	1533+80 - 1536+40	PROP. 48" X 258' RCP	Z11	Z12	98.88	98.51	0.00143	41.01	103.22	103.04	0.00069	0.62	5.0	58.9						258		825	258				
48	1536+40 - 1538+80	PROP. 48" X 236' RCP	Z12	Z14	98.51	98.17	0.00144	41.82	103.04	102.87	0.00072	0.63	5.0	59.1						236		785	236				
49	1538+80	EXIST. 18" X 55' RCP	★ I 0	I 1	101.45	101.24	0.00382	4.61	104.18	104.09	0.00164	0.60	4.2	7.0													
50	1536+90 - 1538+80	PROP. 18" X 186' RCP	★ I 2	I 1	102.04	101.24	0.00430	6.98	104.79	104.09	0.00376	0.78	4.7	7.5	186									13			5
51	1538+80	EXIST. 18" X 85' RCP	I 1	I 3	101.24	100.92	0.00376	10.64	104.09	103.35	0.00874	1.00	6.0	7.0													
52	1538+80	EXIST. 18" X 55' RCP	I 3	Z14	100.92	100.75	0.00309	10.60	103.35	102.87	0.00867	1.00	6.0	6.3													
53	1539+18 - 1538+80	PROP. 18" X 35' RCP	Z13	Z14	101.10	100.67	0.01303	2.23	102.88	102.87	0.00038	0.28	5.5	13.0	38							41	33				
54	1538+80	PROP. 48" X 36' RCP	Z14	Y 0	98.17	98.10	0.00194	51.86	102.87	102.83	0.00111	0.66	5.9	68.6						36		129	36				
55	1552+00	EXIST. 18" X 137' RCP	★ L 0	L 1	100.54	99.63	0.00664	4.68	103.61	103.37	0.00169	0.51	5.2	9.3													
56	1552+00	PROP. 18" X 60' RCP	L 1	X 2	99.63	99.32	0.00517	4.65	103.37	103.27	0.00167	0.54	4.8	8.2								72	60	24		60	10
57	1552+00	PROP. 18" X 73' RCP	★ L 2	X 2	100.24	99.32	0.01260	5.34	103.43	103.27	0.00220	0.45	6.9	12.8	7							82	73	29		66	10
58	1552+00 - 1547+00	PROP. 36" X 498' RCP	X 2	X 3	99.32	98.86	0.00092	9.52	103.27	103.19	0.00017	0.46	3.0	22.0				498				525	498				
59	1547+00	EXIST. 18" X 168' RCP	J 0	X 3	100.40	99.75	0.00387	7.79	103.98	103.19	0.00469	1.00	4.4	7.1	4												
60	1547+00 - 1543+68	PROP. 42" X 328' RCP	X 3	I 5	98.86	98.71	0.00046	23.21	103.19	103.04	0.00045	0.83	2.7	23.3					328			422	328				
61	1543+68 - 1539+18	PROP. 42" X 446' RCP	I 5	I 4	98.71	98.50	0.00047	22.59	103.04	102.85	0.00043	0.79	2.8	23.7					446			719	446				
62	1539+18 - 1538+80	PROP. 42" X 36' RCP	I 4	Y 0	98.50	98.48	0.00056	23.11	102.85	102.83	0.00045	0.75	3.0	25.7					36			75	36				
63	1538+80	PROP. 54" X 40' RCP	Y 0	Y 1	97.60	97.48	0.00273	71.11	102.83	102.78	0.00111	0.59	7.3	111.3							40	163	44	40			39
64	1538+80 - 1539+40.24	PROP. 54" X 55' RCP	Y 1	Y 2	97.48	97.42	0.00111	73.61	102.78	102.72	0.00119	1.00	4.6	71.0							55	177	54				
⊕ 65	1+41 - 4+94	PROP. 54" X 349' RCP	Y 2	Y 3	97.42	96.84	0.00167	73.43	102.72	102.31	0.00119	0.71	6.1	87.1							349	1108	347				
⊕ 66	4+94 - 8+21	PROP. 54" X 324' RCP	Y 3	Y 4	96.84	96.29	0.00172	72.57	102.31	101.93	0.00116	0.70	6.1	88.3							324	1077	320				
⊕ 67	8+21 - 11+50	PROP. 54" X 326' RCP	Y 4	Y 5	96.29	95.74	0.00171	71.80	101.93	101.57	0.00114	0.69	6.1	88.0							326	1083	322				
⊕ 68	11+50 - 14+31	PROP. 54" X 278' RCP	Y 5	Y 6	95.74	95.28	0.00168	71.05	101.57	101.26	0.00111	0.69	6.1	87.3							278	952	274				
⊕ 69	14+31 - 17+74	PROP. 54" X 340' RCP	Y 6	Y 7	95.28	94.70	0.00173	70.41	101.26	100.90	0.00109	0.68	6.1	88.5							340	1176	336				
⊕ 70	17+74 - 18+33	PROP. 54" X 60' RCP	Y 7	Y 8	94.70	94.60	0.00167	69.66	100.90	100.84	0.00107	0.68	6.1	87.0							60	240	60	⊗			
⊕ 71	18+33 - 22+83.60	PROP. 54" X 448' RCP	Y 8	Y 9	94.60	93.85	0.00167	69.54	100.84	100.36	0.00107	0.68	6.0	87.0							448	1680	448	⊗			
			TOTAL:												1644	14	176	804	1739	973	2220	16670	7457	488	303	126	291

⊗ SEE SHEET 62 FOR QUANTITIES.

⊕ STATIONS SHOWN ARE ALONG OUTFALL BASELINE

* FOR CONTRACTOR'S INFORMATION ONLY.

$ SEE SHEET NO. 511 FOR DETAILS.

★ EXIST. FRTG. RD. INLETS FUNCTION PROPERLY UNDER A 5 YR. DESIGN FREQUENCY AS REQUIRED BY THE HYDRAULIC DESIGN MANUAL.

STATE OF TEXAS
RAUL PALMA
65656
REGISTERED PROFESSIONAL ENGINEER
10/3/91

HYDRAULIC DATA SHEET

FED. RD. DIV. NO.	FEDERAL AID PROJECT NO.	SHEET NO.
6	NH92 ( )M	91

STATE	STATE DIST. NO.	COUNTY
TEXAS	21	HIDALGO

CONT.	SECT.	JOB	HIGHWAY NO.
39	17	97	US 83/281

PLOT SIZE USR-DAS2 FILE: DASL DGN ZEA:[3251071]

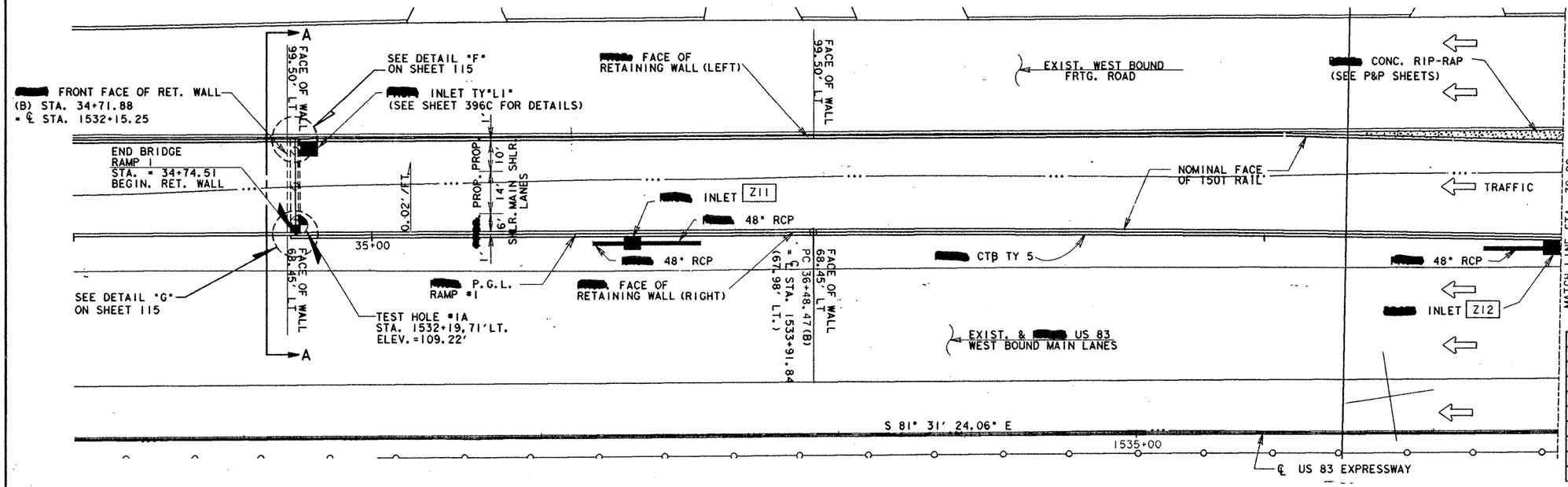

NOTE: WEEP HOLES FOR CTB TYPE 5 ARE [illegible] FORMED ON PANELS TO THE DIMENSIONS & DETAILS ON SHEET 116.

(B) CURVE DATA

RIGHT RETAINING WALL .48' LT. OF PGL (B)
PI=STA. 38+06.63("R")
= ℄ STA. 1535+50.00 (67.97' RT)
Δ =1°34'53.50 RT.
D =0°30'0.00"
T =158.16'
L =316.31'
R =11459.16'
LEFT RETAINING WALL
PARALLEL TO RIGHT WALL 31.52' LT. OF PGL (B)

170	LEFT				126.66	126.45	125.70	124.95	124.21	123.46	122.71	121.96	121.21	120.46	119.72	118.97	118.22	117.47	116.72	115.97	115.23	114.51	113.82	113.18	112.57	111.99	111.45		170
150	RIGHT				127.24	127.03	126.29	125.54	124.79	124.04	123.29	122.54	121.80	121.05	120.30	119.55	118.80	118.05	117.31	116.56	115.81	115.09	114.41	113.76	113.15	112.57	112.04		160

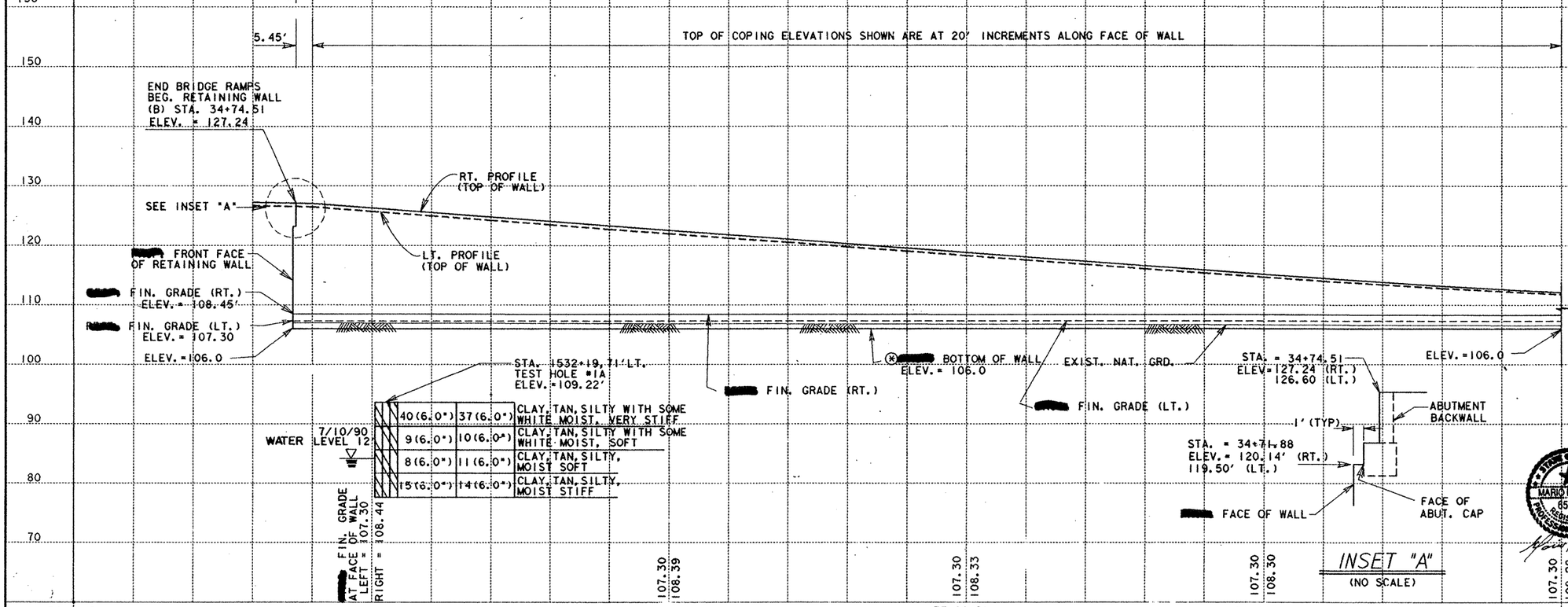

GENERAL NOTES:

SQUARE FOOT SURFACE AREA OF RETAINING WALL IS MEASURED BETWEEN FINISH GRADE AT TOP OF WALL AND FOOTING ELEVATION. FOOTING ADJUSTMENTS MADE TO ACCOMODATE THE AVAILABLE OPTIONAL DESIGNS [illegible] NOT [illegible] MEASURED.

SEE SHEET 7 OF 13 SHEETS FOR TYPICAL RETAINING WALL SECTION.

GROUNDWATER ELEVATIONS SHOWN ON BORINGS ARE VALID ONLY FOR THE DATE SHOWN. GROUNDWATER ELEVATIONS [illegible] VARY ACCORDING TO A VARIETY OF FACTORS. INCLUDING SEASON, RAINFALL AND LOCAL DRAINAGE CONDITIONS.

CONC. LEVELING PAD [illegible] ADJUSTED [illegible] THERE [illegible] ANY CONFLICT WITH THE STORM SEWER.

(*) [illegible] BOTTOM OF WALL ESTIMATED TO BE 1' (MIN.) BELOW FIN. GRADE

RAMP # 1 RET. WALL PROFILE

STA. 34+00 TO STA. 39+00

SCALE:
PLAN 1"= 20' HORIZ.
PROFILE 1"= 10' VERT.

SHEET 1 OF 13 SHEETS

MARIO R. JORGE 65538 REGISTERED PROFESSIONAL ENGINEER
10-31-91

FED. RD. DIV. NO.	FEDERAL AID PROJECT NO.		SHEET NO.
6	NH 92 ( )M		92
STATE	DIST.	COUNTY	
TEXAS	21	HIDALGO	
CONT.	SECT.	JOB	HIGHWAY NO.
39	17	97	03/281

ZFA2:[325116]RWB001.DGN PRF:SAME

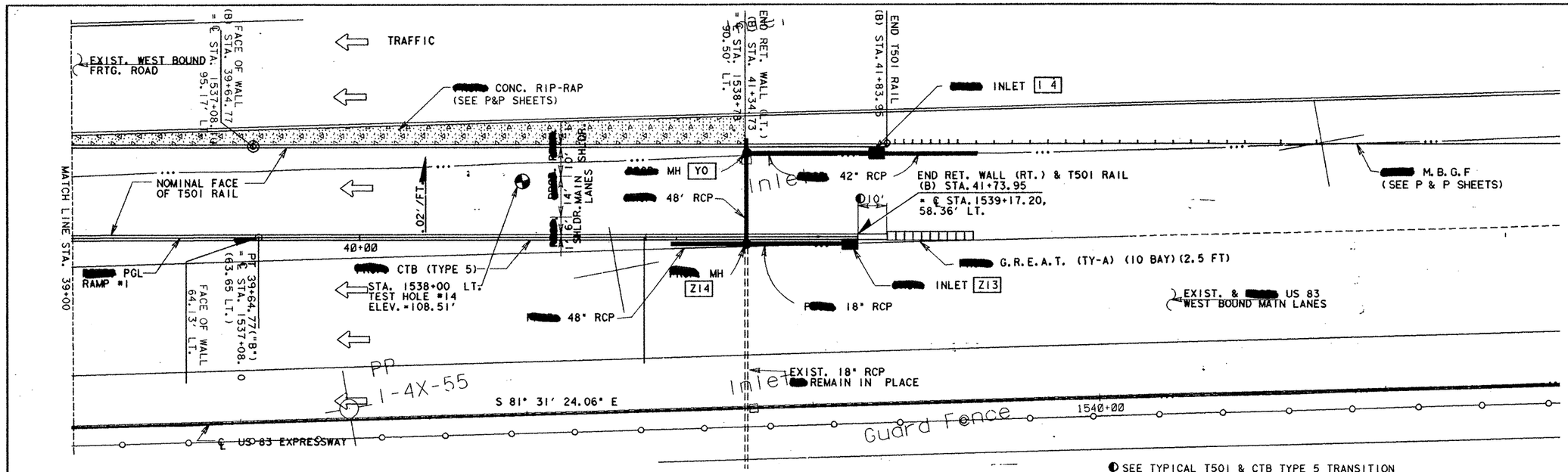

SEE TYPICAL T501 & CTB TYPE 5 TRANSITION DETAILS ON SHEET 115. [redacted] 10' TRANSITION [redacted] INCLUDED FOR PAYMENT UNDER CTB TYPE 2.

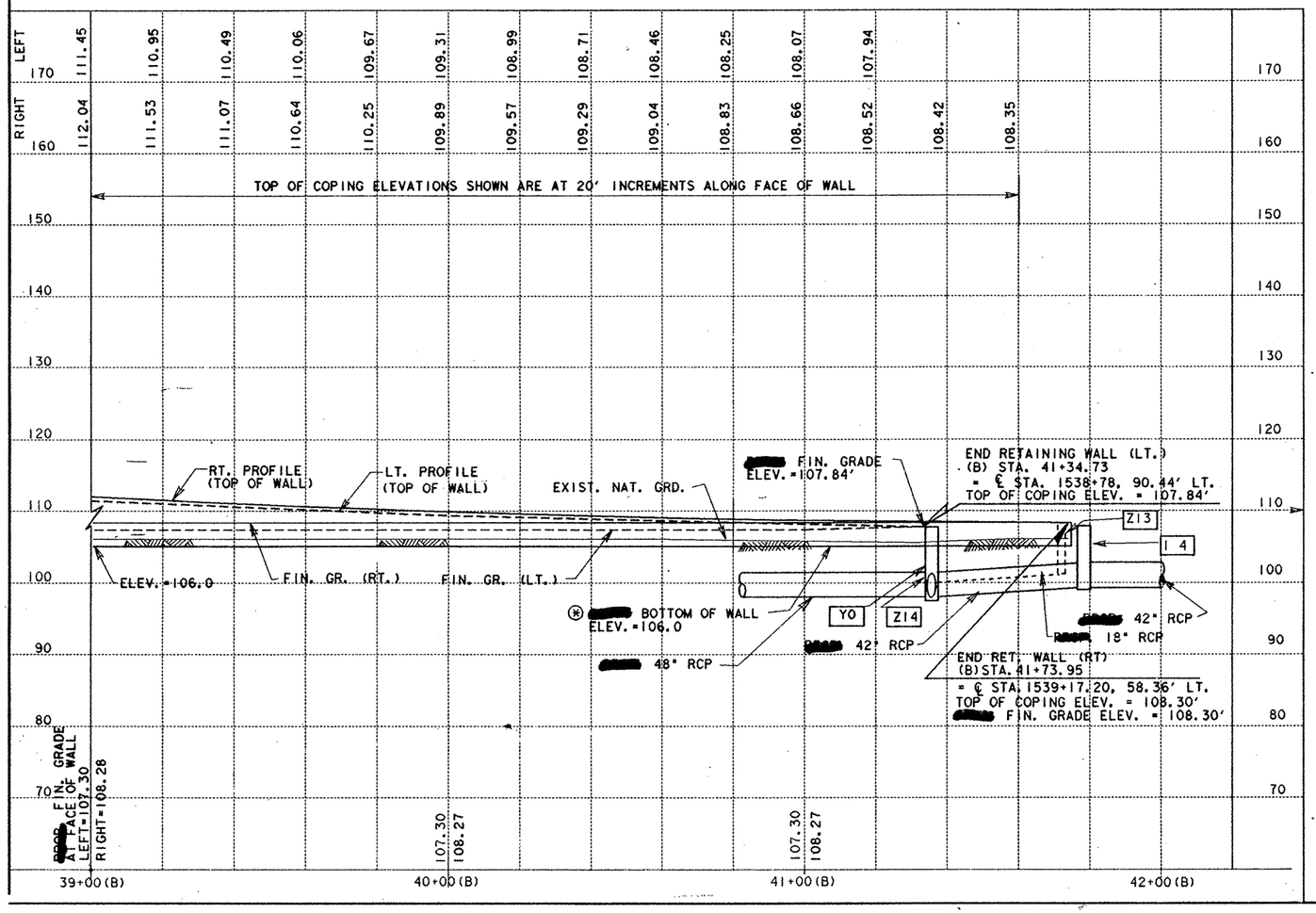

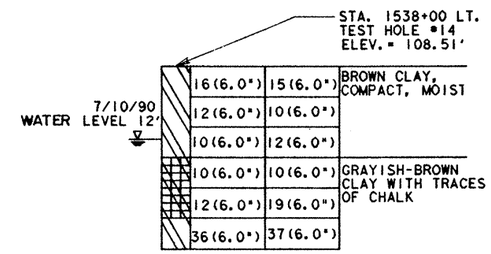

(B) CURVE DATA (PGL RAMP #1)

RIGHT RETAINING WALL (.48' LT. OF PGL)
PI = STA. 38+06.63 ("B")
= ℄ 1535+50.00 (67.91 LT.) ("G")
Δ = 1°34'53.49 RT.
D = 0°30'0.00"
T = 158.16'
L = 316.31'
R = 11459.16'
LEFT RETAINING WALL (PARALLEL TO RT. WALL) (31.52' LT. OF PGL.)

[redacted] BOTTOM OF WALL ESTIMATED [redacted] 1' (MIN.) BELOW FIN. GRADE

RAMP #1 RET. WALL PROFILE

STA. 39+00 TO STA. 42+00

SCALE:
PLAN 1" = 20' HORIZ.
PROFILE 1" = 10' VERT.

STATE OF TEXAS MARIO R. JORGE 65538 REGISTERED PROFESSIONAL ENGINEER
Mario R. Jorge, P.E. 10-31-91

SHEET 2 OF 13 SHEETS

FED. RD. DIV. NO.	FEDERAL AID PROJECT NO.		SHEET NO.
6	NH 92 ( )M		93
STATE	DIST.	COUNTY	
TEXAS	21	HIDALGO	
CONT.	SECT.	JOB	HIGHWAY NO.
39	17	97	83/281

ZFA2: [325116]RWB002.DGN PRF: SAME

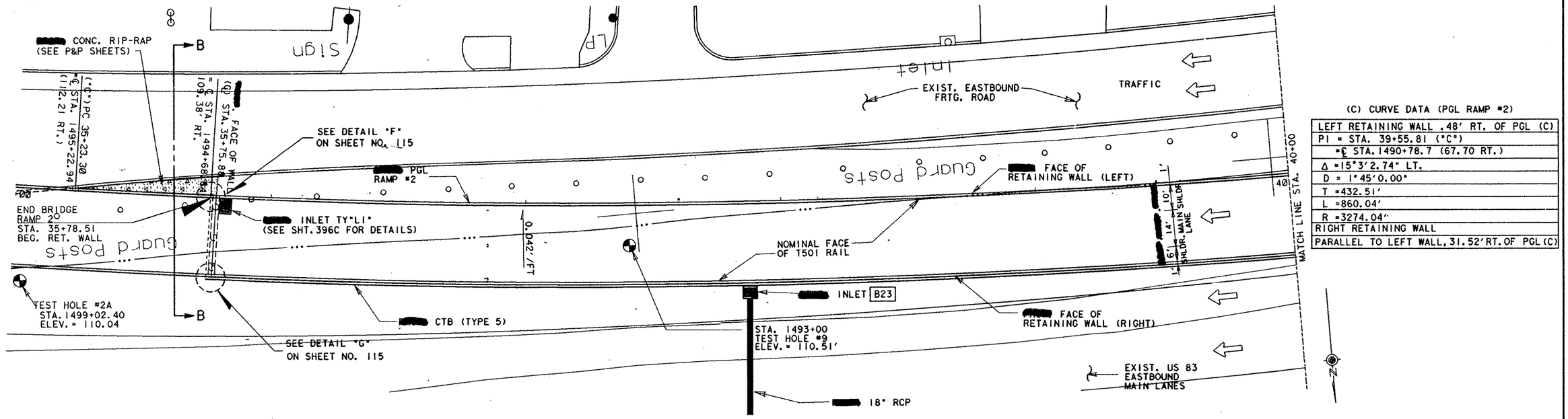

(C) CURVE DATA (PGL RAMP #2)

LEFT RETAINING WALL .48' RT. OF PGL (C)
PI = STA. 39+55.81 ("C")
= ℄ STA. 1490+78.7 (67.70 RT.)
Δ = 15°3'2.74" LT.
D = 1°45'0.00"
T = 432.51'
L = 860.04'
R = 3274.04'
RIGHT RETAINING WALL
PARALLEL TO LEFT WALL, 31.52' RT. OF PGL (C)

170	LEFT				128.93	128.87	128.08	127.28	126.48	125.69	124.89	124.10	123.30	122.50	121.71	120.91	120.12	119.32	118.53	117.77	117.05	116.37	115.71	115.10	114.52	113.97	113.46				170
160	RIGHT				130.07	130.02	129.28	128.50	127.71	126.91	126.12	125.32	124.52	123.73	122.93	122.14	121.34	120.55	119.76	119.00	118.28	117.59	116.94	116.32	115.74	115.20	114.69				160
					1.49'	TOP OF COPING ELEVATIONS SHOWN ARE AT 20' INCREMENTS ALONG FACE OF WALL																								
150																														150
140																														140
130																														130
120																														120
110																														110
100																														100
90																														90
80																														
70																														

RAMP #2 RET. WALL PROFILE

STA. 35+00 TO
STA. 40+00

SCALE:
PLAN 1" = 20' HORIZ.
PROFILE 1" = 10' VERT.

STATE OF TEXAS
MARIO R. JORGE
65538
REGISTERED
PROFESSIONAL ENGINEER
Mario Jorge, P.E.
10-31-91

SHEET 3 OF 13 SHEETS

FED. RD. DIV. NO.	FEDERAL AID PROJECT NO.		SHEET NO.
6	NH 92( )M		94
STATE	DIST.	COUNTY	
TEXAS	21	HIDALGO	
CONT.	SECT.	JOB	HIGHWAY NO.
39	17	97	83/281

7EA2: [325116]RWC001.DGN PRF: SA

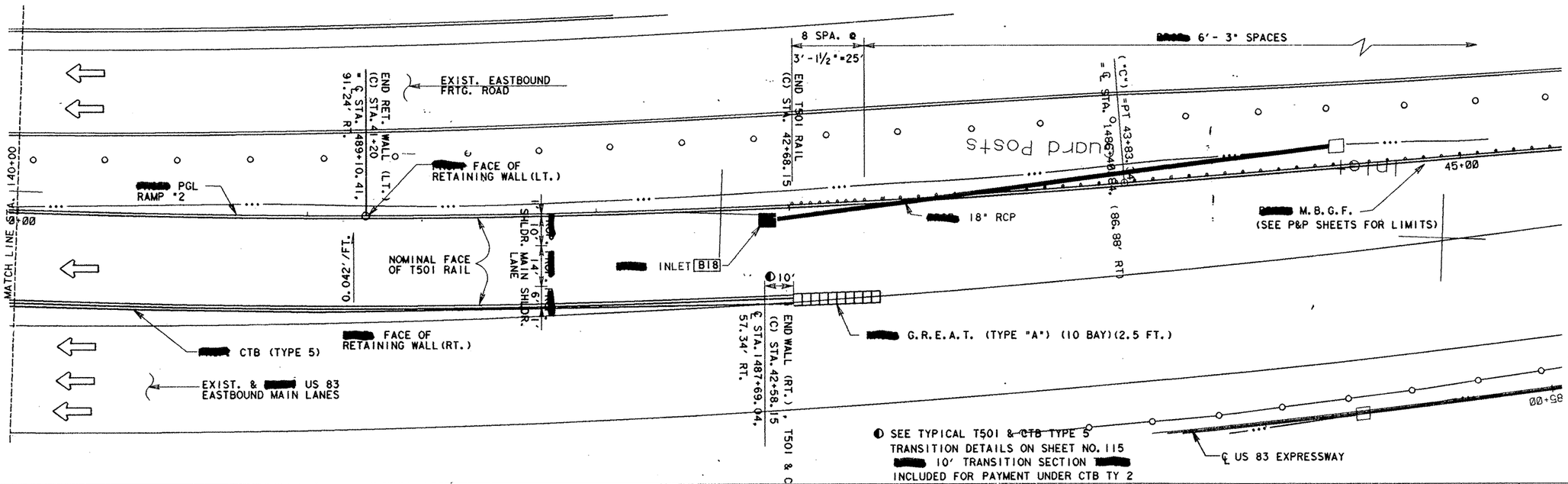

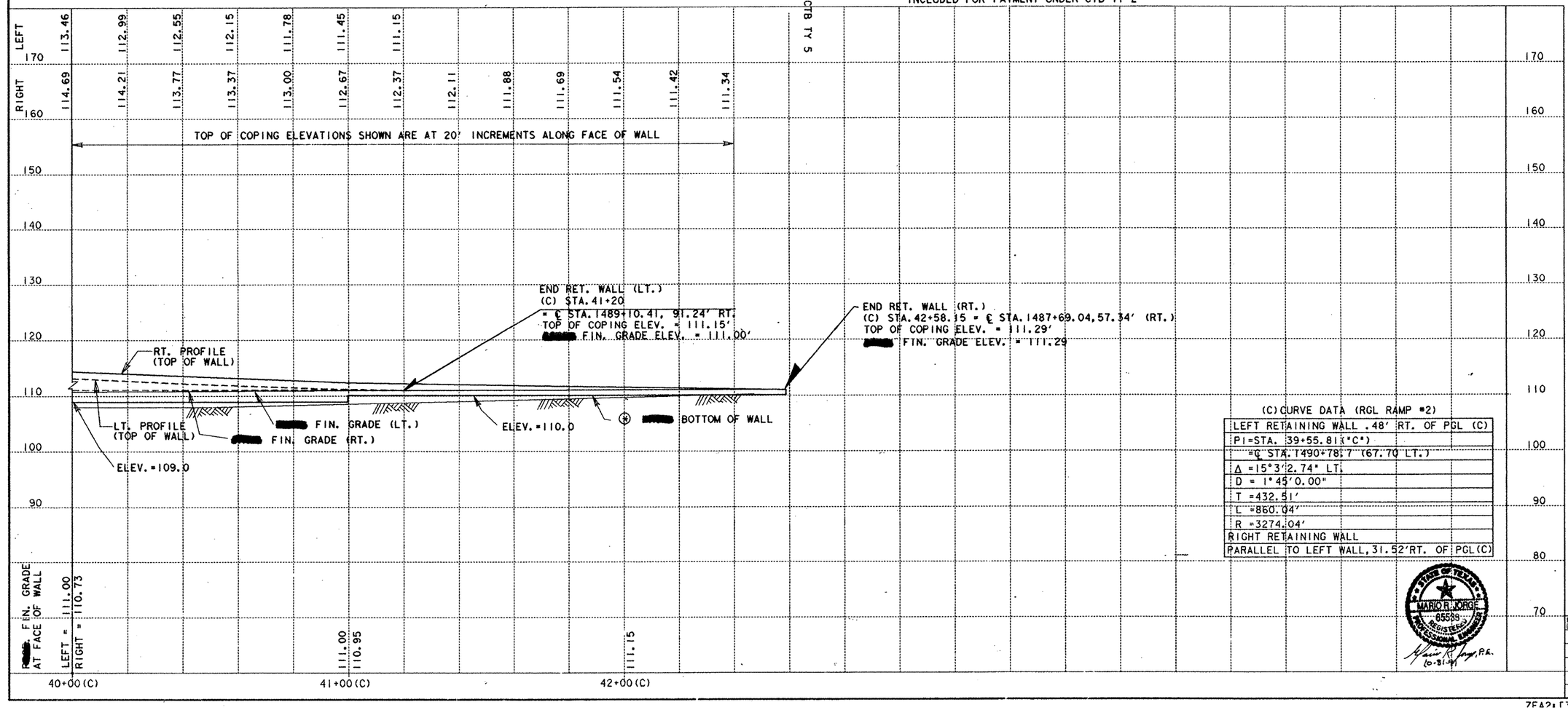

(C) CURVE DATA (RGL RAMP #2)

LEFT RETAINING WALL .48' RT. OF PGL (C)
PI=STA. 39+55.81 ("C")
℄ STA. 1490+78.7 (67.70 LT.)
Δ =15°3'2.74" LT.
D = 1°45'0.00"
T =432.51'
L =860.04'
R =3274.04'
RIGHT RETAINING WALL
PARALLEL TO LEFT WALL, 31.52' RT. OF PGL (C)

BOTTOM OF WALL ESTIMATED T 1' (MIN.) BELOW FIN. GRADE

RAMP #2 RET. WALL PROFILE

STA. 40+00 TO STA. 42+00

SCALE:
PLAN 1" = 20' HORIZ.
PROFILE 1" = 10' VERT.

STATE OF TEXAS
MARIO R. JORGE
65538
REGISTERED PROFESSIONAL ENGINEER
10-31-97

SHEET 4 OF 13 SHEETS

FED. RD. DIV. NO.	FEDERAL AID PROJECT NO.		SHEET NO.
6	NH 92 ( )M		95
STATE	DIST.	COUNTY	
TEXAS	21	HIDALGO	
CONT.	SECT.	JOB	HIGHWAY NO.
39	17	97	83/281

ZEA2: [325116]RWC002.DGN PRF: SAME

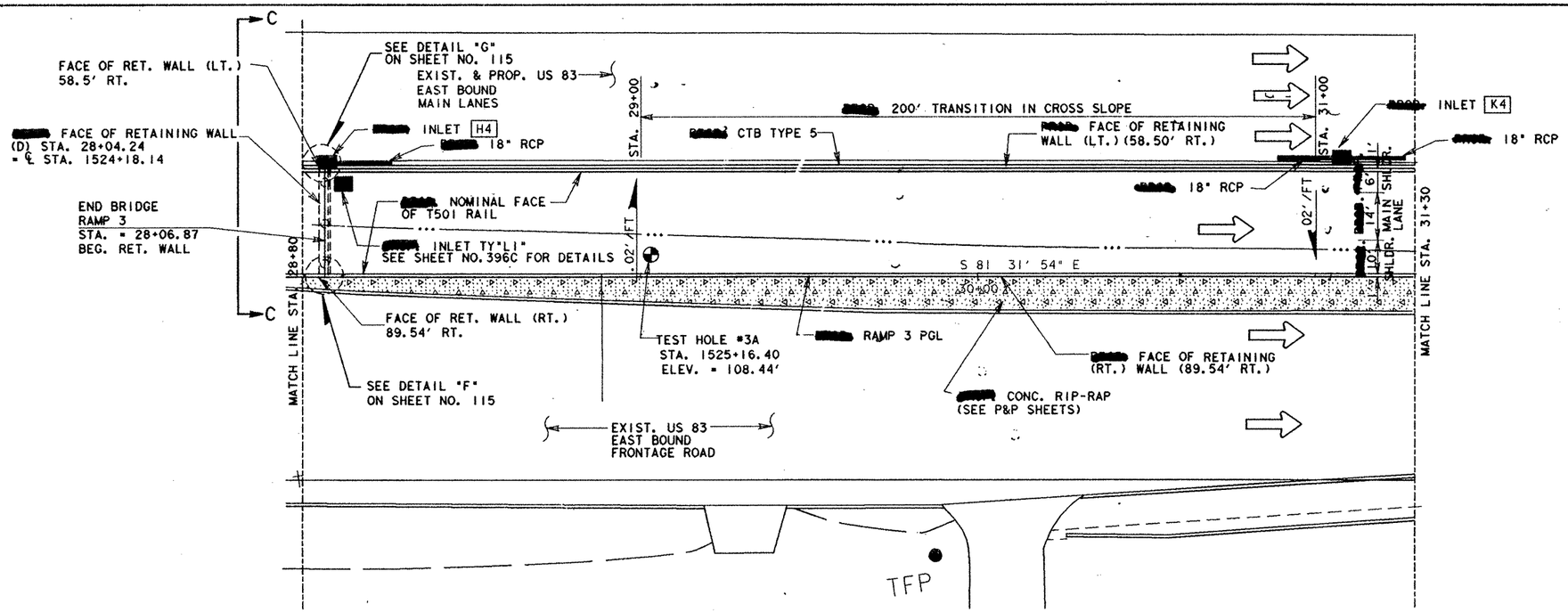
C
FACE OF RET. WALL (LT.)
58.5' RT.
SEE DETAIL "G"
ON SHEET NO. 115
EXIST. & PROP. US 83
EAST BOUND
MAIN LANES
INLET H4
18" RCP
FACE OF RETAINING WALL
(D) STA. 28+04.24
= ℄ STA. 1524+18.14
END BRIDGE
RAMP 3
STA. = 28+06.87
BEG. RET. WALL
NOMINAL FACE
OF T501 RAIL
INLET TY"LI"
SEE SHEET NO. 396C FOR DETAILS
MATCH LINE STA. 28+80
FACE OF RET. WALL (RT.)
89.54' RT.
SEE DETAIL "F"
ON SHEET NO. 115
TEST HOLE #3A
STA. 1525+16.40
ELEV. = 108.44'
RAMP 3 PGL
EXIST. US 83
EAST BOUND
FRONTAGE ROAD
STA. 29+00
200' TRANSITION IN CROSS SLOPE
CTB TYPE 5
FACE OF RETAINING
WALL (LT.) (58.50' RT.)
STA. 31+00
INLET K4
18" RCP
18" RCP
.02'/FT
S 81° 31' 54" E
20+00
CONC. RIP-RAP
(SEE P&P SHEETS)
FACE OF RETAINING
(RT.) WALL (89.54' RT.)
MATCH LINE STA. 31+30
10'
14'
6'
1'
SHLDR.
MAIN LANE
TFP

| | | |

(D) CURVE DATA (PGL RAMP #3)
RIGHT RETAINING WALL (.48' LT. OF PGL)
PI STA. = 35+21.08 ("D")
= ℄ STA. 1531+35.00 (89.99' RT.)
Δ= 1°35'38.93" LT.
D= 0°30'0.00"
T= 159.43'
L= 318.83'
R= 11459.16'
LEFT RET. WALL PARALLEL
TO RIGHT WALL (31.52' LT. OF PGL)

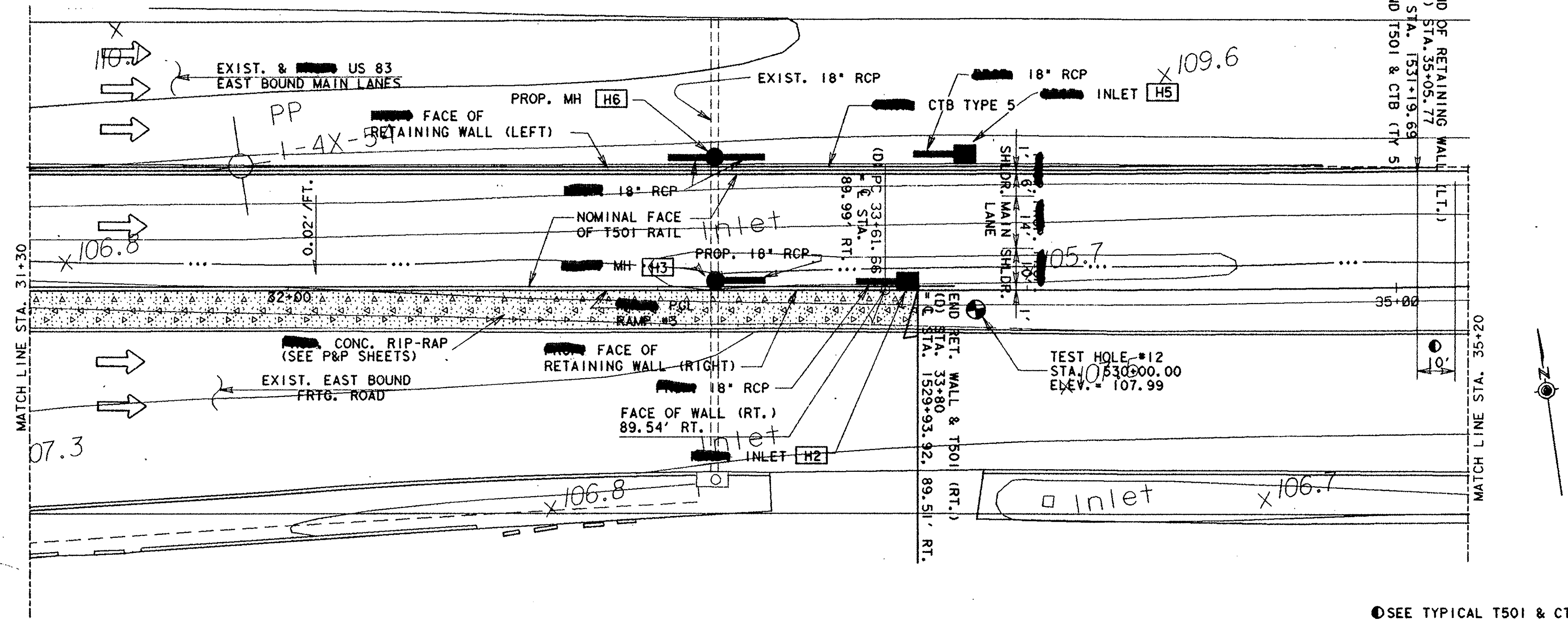

◐ SEE TYPICAL T501 & CTB TYPE 5 TRANSITION DETAILS ON SHEET 115. [redacted] 10' TRANSITIC [redacted] INCLUDED FOR PAYMENT UNDER CTB TYPE 2.

TOP OF COPING ELEVATIONS SHOWN ARE AT 20' INCREMENTS ALONG FACE OF WALL

LEFT	116.38	115.98	115.22	114.50	113.82	113.18	112.59	112.04	111.53	111.06	110.64	110.25	109.91	109.62	109.36	109.15	108.98	108.85	108.76	108.72
RIGHT	115.79	115.40	114.63	113.91	113.23	112.60	112.00	111.45	110.94	110.48	110.05	109.67	109.33	109.03						

(*) [redacted] BOTTOM OF WALL ESTIMATED [redacted] 1' (MIN.) BELOW FIN. GRADE

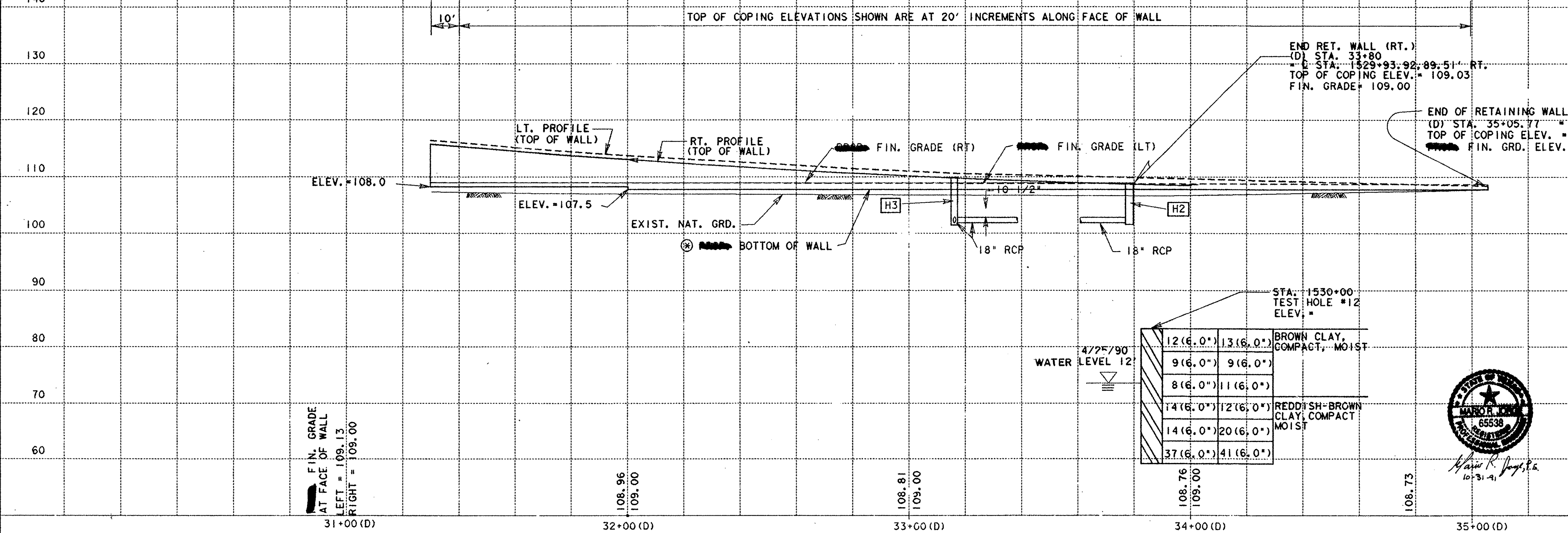

RAMP #3
RET. WALL PROFILE

STA. 31+30 TO 35+20

SCALE:
PLAN 1" = 20' HORIZ.
PROFILE 1" = 10' VERT.

SHEET 6 OF 13 SHEETS

STATE OF TEXAS — MARIO R. JORGE — 65538 — REGISTERED PROFESSIONAL ENGINEER
Mario R. Jorge, P.E. 10-31-91

FED. RD. DIV. NO.	FEDERAL AID PROJECT NO.		SHEET NO.
6	NH 92( )M		97
STATE	DIST.	COUNTY	
TEXAS	21	HIDALGO	
CONT.	SECT.	JOB	HIGHWAY NO.
39	17	97	83/281

FILE NAME	REFERENCE FILE	NAMED VIEW	LEVELS	PRF FILE
[325116] RWD002.DGN	NEWINT.DGN	REF1		RWD002.DGN
	NEWINT2.DGN	REF2		

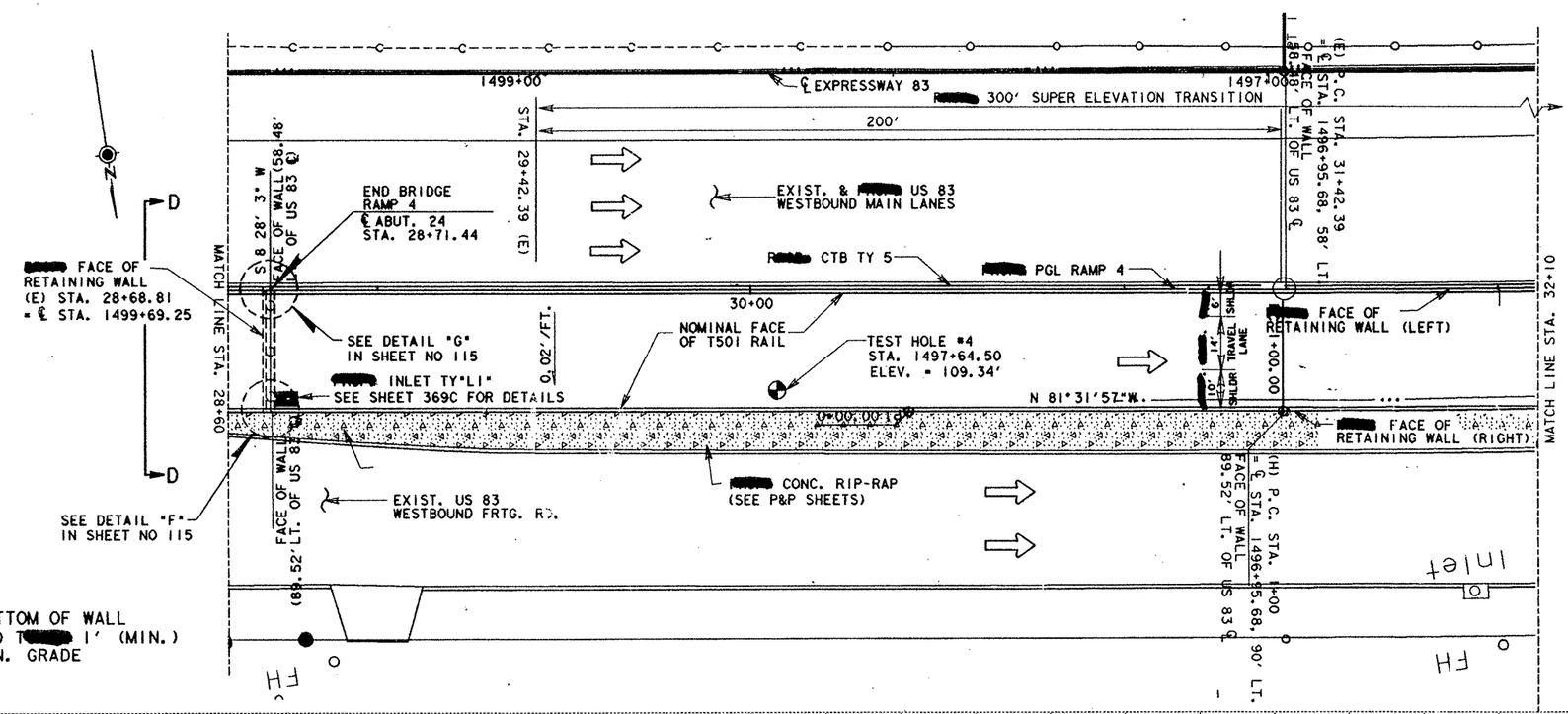

⊛ PROP. BOTTOM OF WALL ESTIMATED TO BE 1' (MIN.) BELOW FIN. GRADE

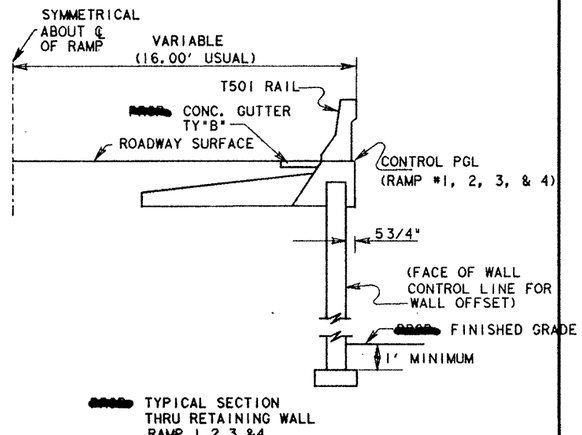

TYPICAL SECTION THRU RETAINING WALL RAMP 1,2,3,&4

NOTE: ALL OFFSETS ON RETAINING WALLS ARE FROM C US 83 TO FACE OF WALL AS SHOWN ABOVE.

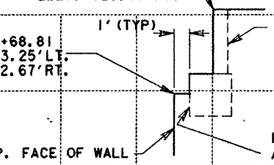

INSET "D"
(NO SCALE)

LEFT					130.29	129.98	129.27	128.56	127.84	127.12	126.41	125.69	124.97	124.26	123.54	122.82	122.11	121.39	120.67	119.96	119.27	118.62
RIGHT	END BRIDGE RAMP #4 BEG. RETAINING WALL (E) STA. 28+71.44				129.71	129.40	128.68	127.97	127.25	126.64	126.05	125.45	124.86	124.26	123.67	123.07	122.47	121.88	121.28	120.69	120.12	119.60

TOP OF COPING ELEVATIONS SHOWN ARE AT 20' INCREMENTS ALONG FACE OF WALL

8.56' 10'

SEE INSET "D"

RT. PROFILE (TOP OF WALL)

LT. PROFILE (TOP OF WALL)

PROP. FRONT FACE OF RETAINING WALL

PROP. FIN. GRADE RT. ELEV=110.46'

PROP. FIN. GRADE (RT.)

PROP. FIN. GRADE (LT.)

EXIST. NAT. GRD. (LT)

ELEV. = 111.0 (LT)

PROP. FIN. GRADE LT. ELEV. = 110.02'

ELEV. = 109.0

EXIST. NAT. GRD.

ELEV. = 110.0 (LT)

⊛ PROP. BOTTOM OF WALL (LT.)

⊛ PROP. BOTTOM OF WALL (RT.)

ELEV. = 110.0 (RT)

ELEV. = 109.0 (RT)

STA. 1497+64.50
TEST HOLE #4A
ELEV. = 109.34'

7/10/90
WATER LEVEL 12'

39 (6.0')	38 (6.0')	CLAY, TAN, SILTY, VERY MOIST, VERY STIFF
19 (6.0')	16 (6.0')	CLAY, TAN, MOIST, SOME WHITE, STIFF
13 (6.0')	12 (6.0')	CLAY, RUST, SOME WHITE SOME MOISTURE, STIFF
16 (6.0')	18 (6.0')	CLAY, RUST, LITTLE MOISTURE, STIFF

PROP. FIN. GRADE AT FACE OF WALL
LEFT= 110.53 110.52 111.19 110.66 112.00 110.79 112.62 110.92
RIGHT=

28+00 (E) 29+00 (E) 30+00 (E) 31+00 (E) 32+00 (E) 33+00 (E)

3-3-92

RAMP #4 RET. WALL PROFILE

STA. 28+60 TO 32+10

SCALE:
PLAN 1"= 20' HORIZ.
PROFILE 1"= 10' VERT.

SHEET 7 OF 13 SHEETS

FED. RD. DIV. NO.	FEDERAL AID PROJECT NO.		SHEET NO.
	NH 92 ( )M		98
STATE	DIST.	COUNTY	
TEXAS	21	HIDALGO	
CONT.	SECT.	JOB	HIGHWAY NO.
39	17	97	83/281

FILE NAME	REFERENCE FILE	NAMED VIEW	LEVELS	PRF FILE
[325116] RWE001.DGN	NEWINT2.DGN NEWINT.DGN	REF2 REF1		RWE001.PRF

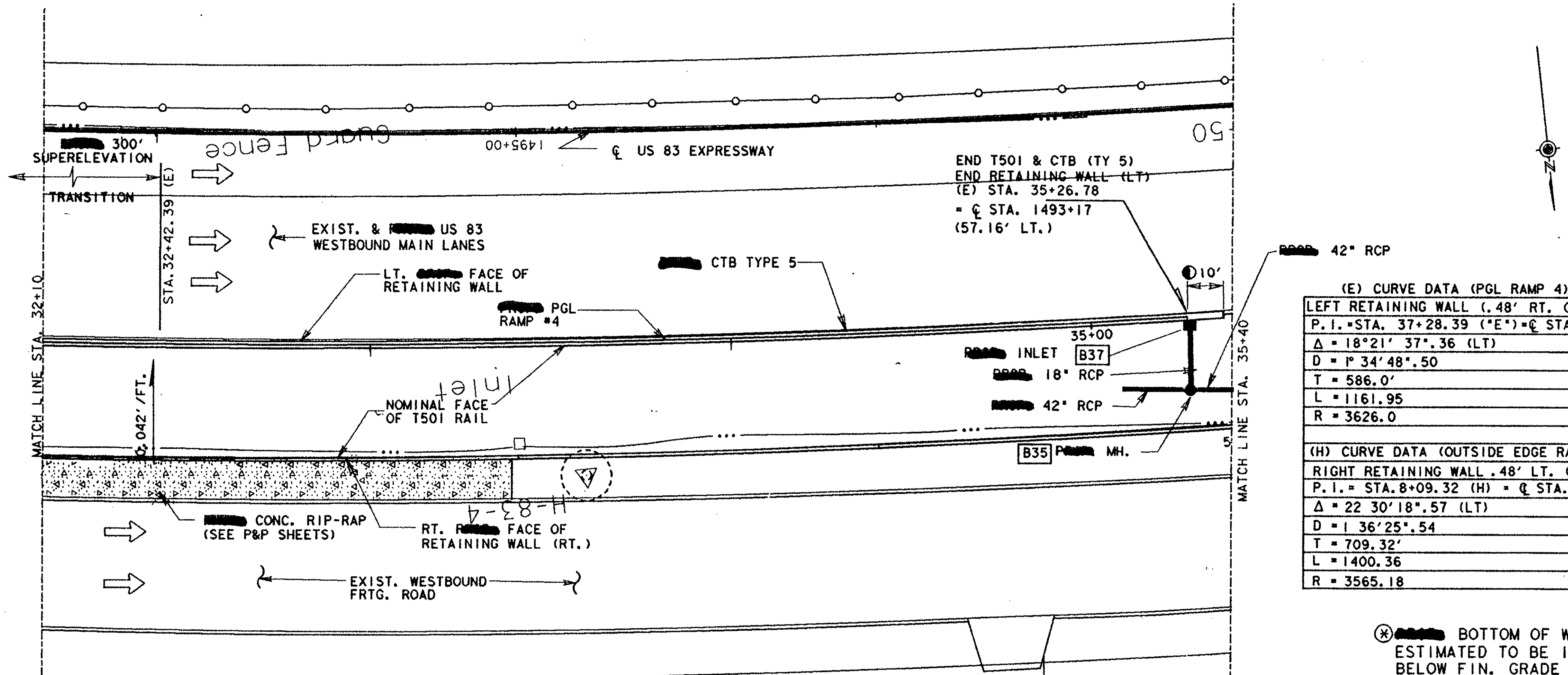

(E) CURVE DATA (PGL RAMP 4)
LEFT RETAINING WALL (.48' RT. OF PGL (E)
P.I.=STA. 37+28.39 ("E")=℄ STA.1491+22.78, 102.03' LT
Δ = 18°21' 37".36 (LT)
D = 1° 34'48".50
T = 586.0'
L = 1161.95
R = 3626.0
(H) CURVE DATA (OUTSIDE EDGE RAMP 4)
RIGHT RETAINING WALL .48' LT. OF ALIGNMENT (H)
P.I.= STA.8+09.32 (H) = ℄ STA.1490+10.14, 153.82 LT.
Δ = 22 30'18".57 (LT)
D = 1 36'25".54
T = 709.32'
L = 1400.36
R = 3565.18

(*) [redacted] BOTTOM OF WALL ESTIMATED TO BE 1' (MIN.) BELOW FIN. GRADE

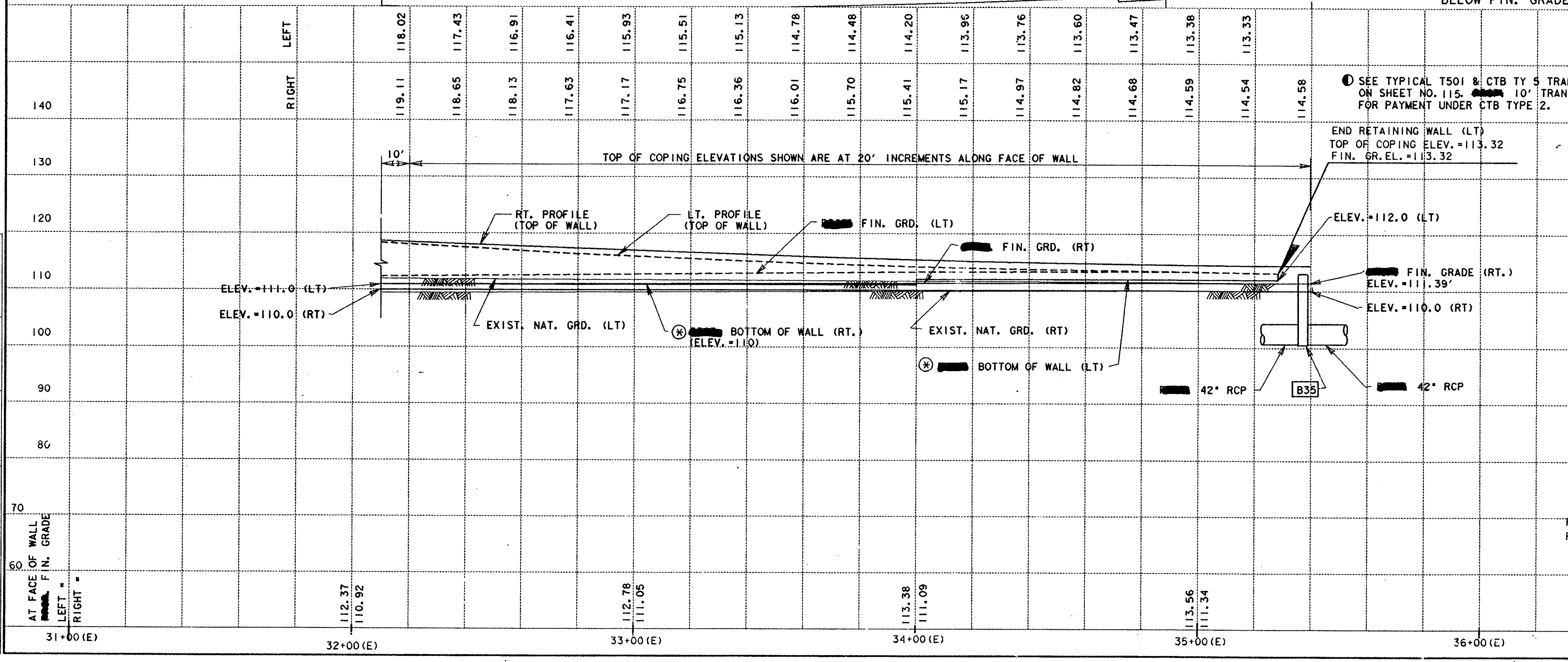

(◐) SEE TYPICAL T501 & CTB TY 5 TRANSITION DETAILS ON SHEET NO. 115. [redacted] 10' TRANSITION [redacted] INCLUDED FOR PAYMENT UNDER CTB TYPE 2.

FILE NAME	REFERENCE FILE	NAMED VIEW	LEVELS	PRF FILE
[325116] RWE002.DGN	NEWINT.DGN	REF1		RWE002.PRF
	NEWINT2.DGN	REF2		

[Seal] 3-3-92

RAMP #4
RET. WALL
PROFILE

STA. 32+10 TO 35+40

SCALE:
PLAN 1"= 20' HORIZ.
PROFILE 1"= 10' VERT.

SHEET 8 OF 13 SHEETS

FED. RD. DIV. NO.	FEDERAL AID PROJECT NO.			SHEET NO.
6	NH 92( )M			99
STATE	DIST.	COUNTY		
TEXAS	21	HIDALGO		
CONT.	SECT.	JOB	HIGHWAY NO.	
39	17	97	83/281	

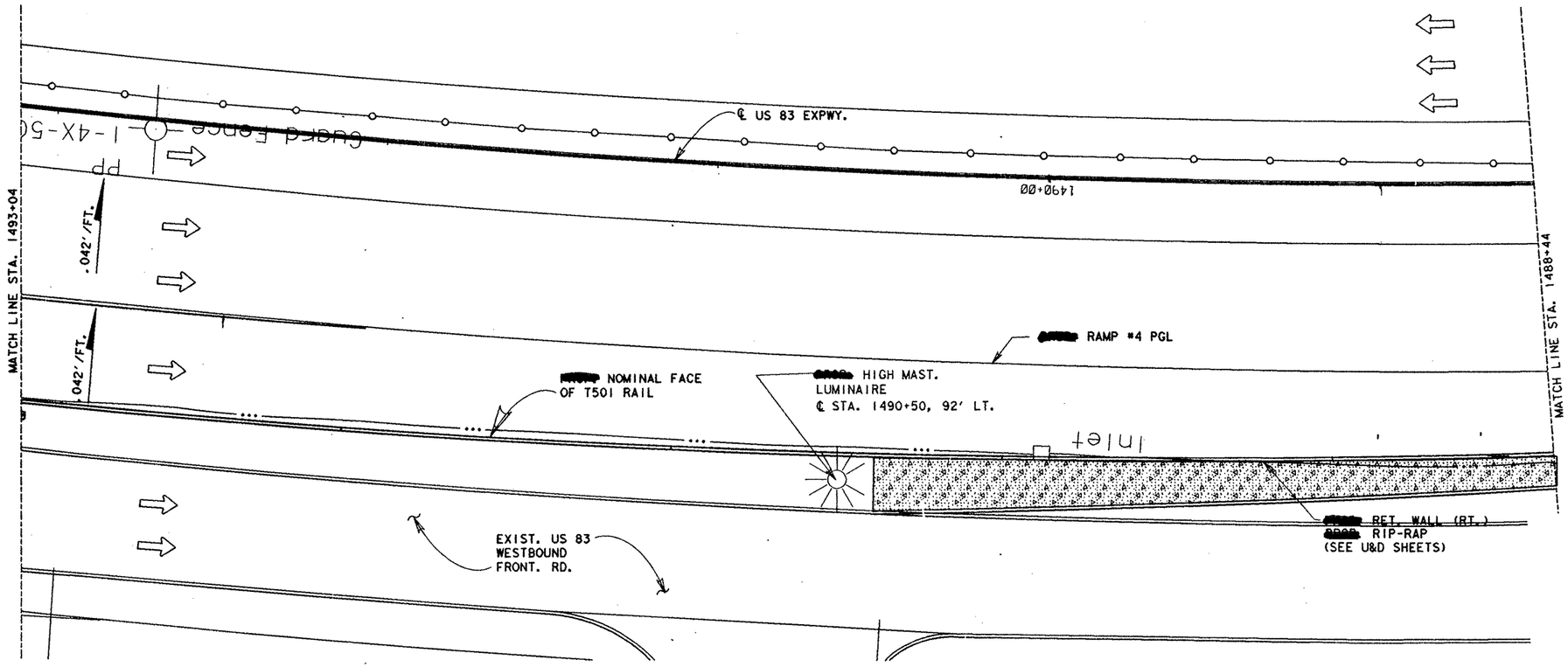

CURVE DATA
RET. WALL (RT)
PI STA 8+09.32 (H)
= ℄ STA. 1490+10.14, 153.82' LT.
X = 2102212.5716
Y = 196754.3508
Δ = 22°30'18.57" LT.
D = 1°36'25.54"
T = 709.32'
L = 1400.36'
R = 3565.18'
PC STA 1+00.00 (H)
PT STA 15+00.36 (H)

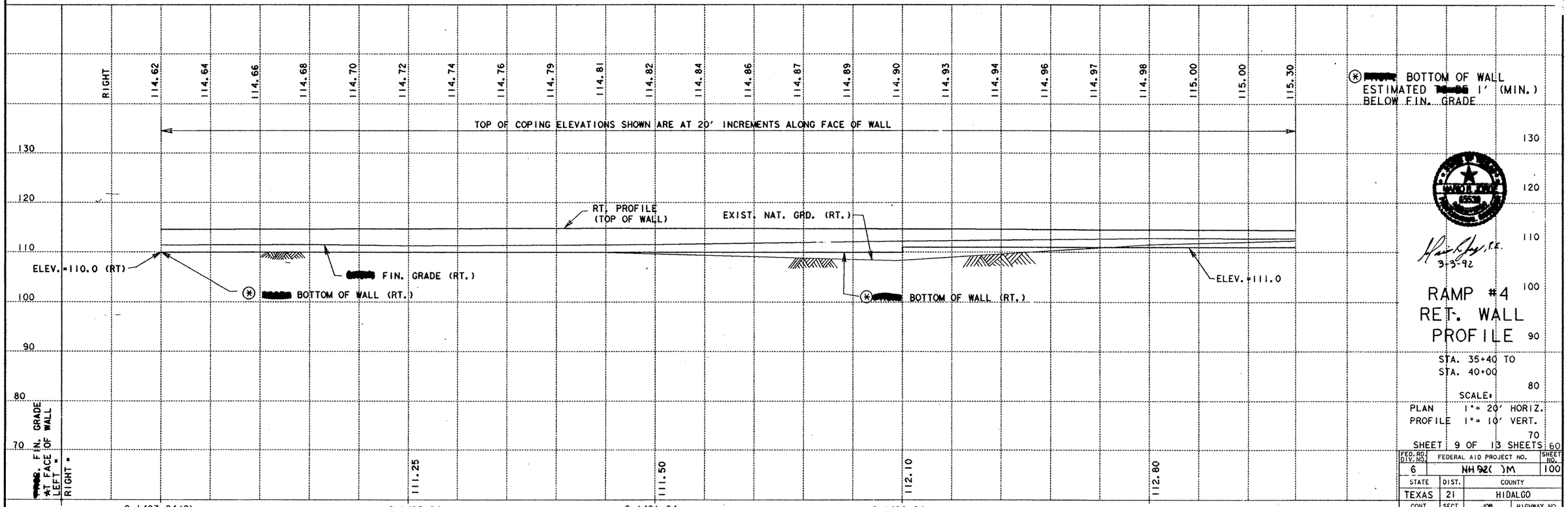

RAMP #4
RET. WALL
PROFILE

STA. 35+40 TO
STA. 40+00

SCALE:
PLAN 1"= 20' HORIZ.
PROFILE 1"= 10' VERT.

SHEET 9 OF 13 SHEETS

FED. RD. DIV. NO.	FEDERAL AID PROJECT NO.		SHEET NO.
6	NH 92( )M		100
STATE	DIST.	COUNTY	
TEXAS	21	HIDALGO	
CONT.	SECT.	JOB	HIGHWAY NO.
39	17	97	83/281

[325116] FILE: RWE003.DGN PRF: SAME

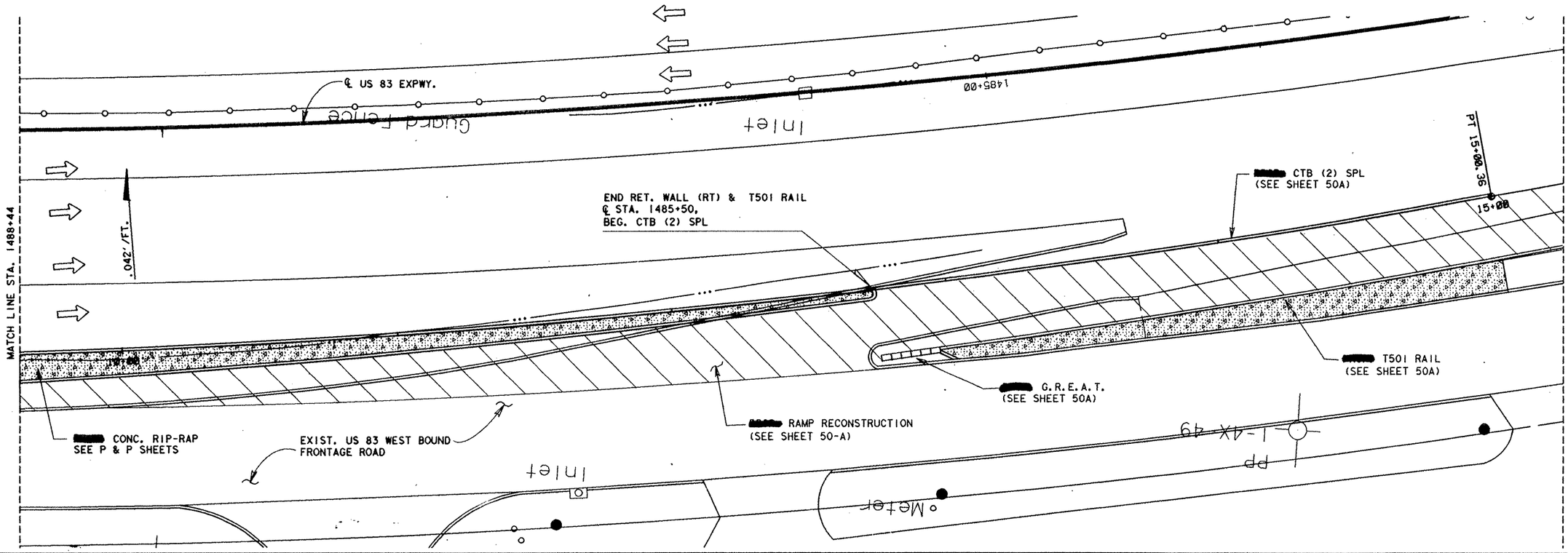

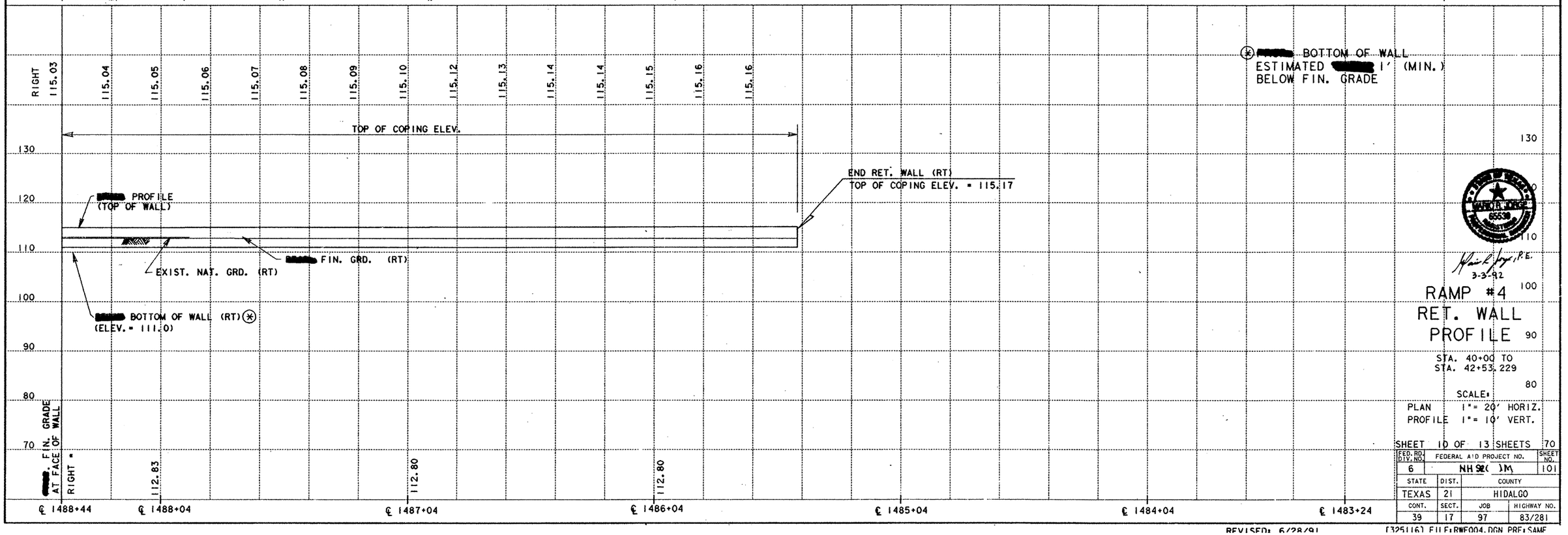

Manuel R. Lopez, P.E.
3-3-92

RAMP #4
RET. WALL PROFILE

STA. 40+00 TO
STA. 42+53.229

SCALE:
PLAN 1"= 20' HORIZ.
PROFILE 1"= 10' VERT.

SHEET 10 OF 13 SHEETS

FED. RD. DIV. NO.	FEDERAL AID PROJECT NO.	SHEET NO.
6	NH 92( )M	101

STATE	DIST.	COUNTY	
TEXAS	21	HIDALGO	
CONT.	SECT.	JOB	HIGHWAY NO.
39	17	97	83/281

REVISED: 6/28/91

[325116] FILE: RWF004.DGN PRF: SAME

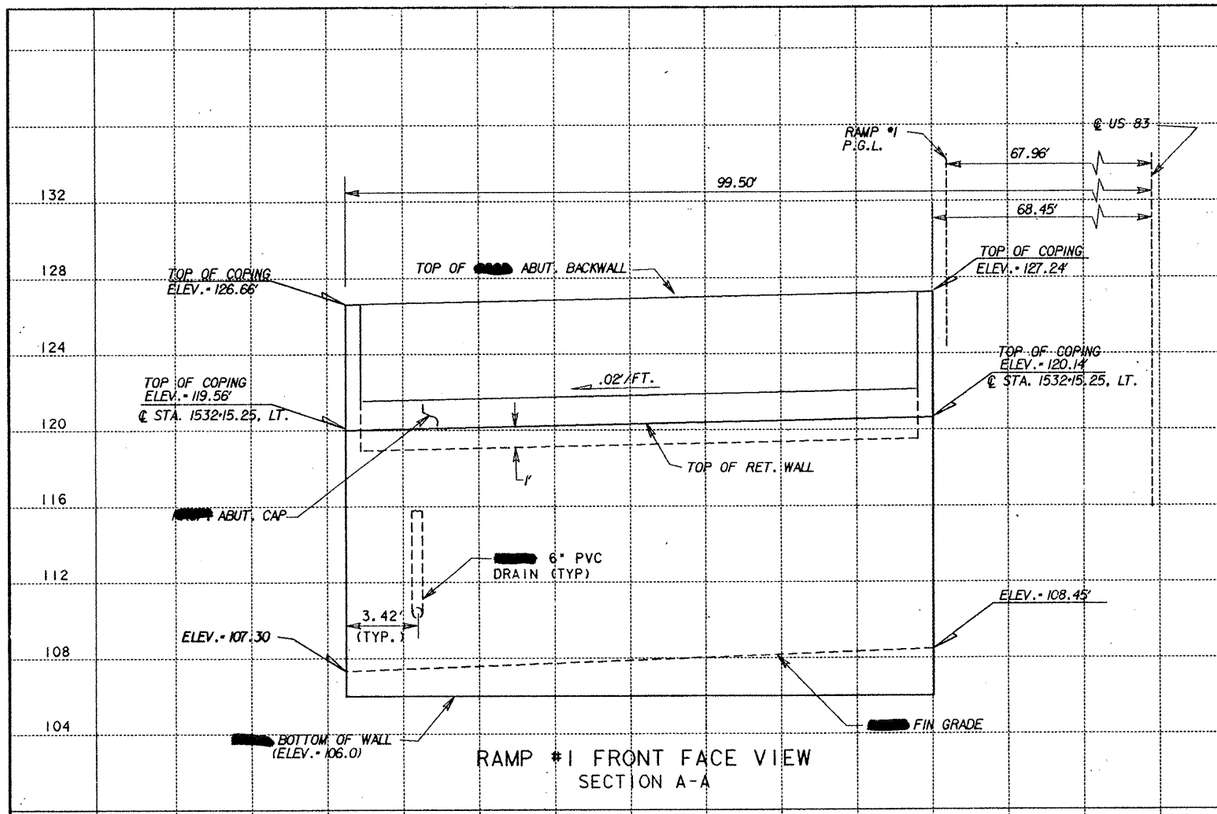

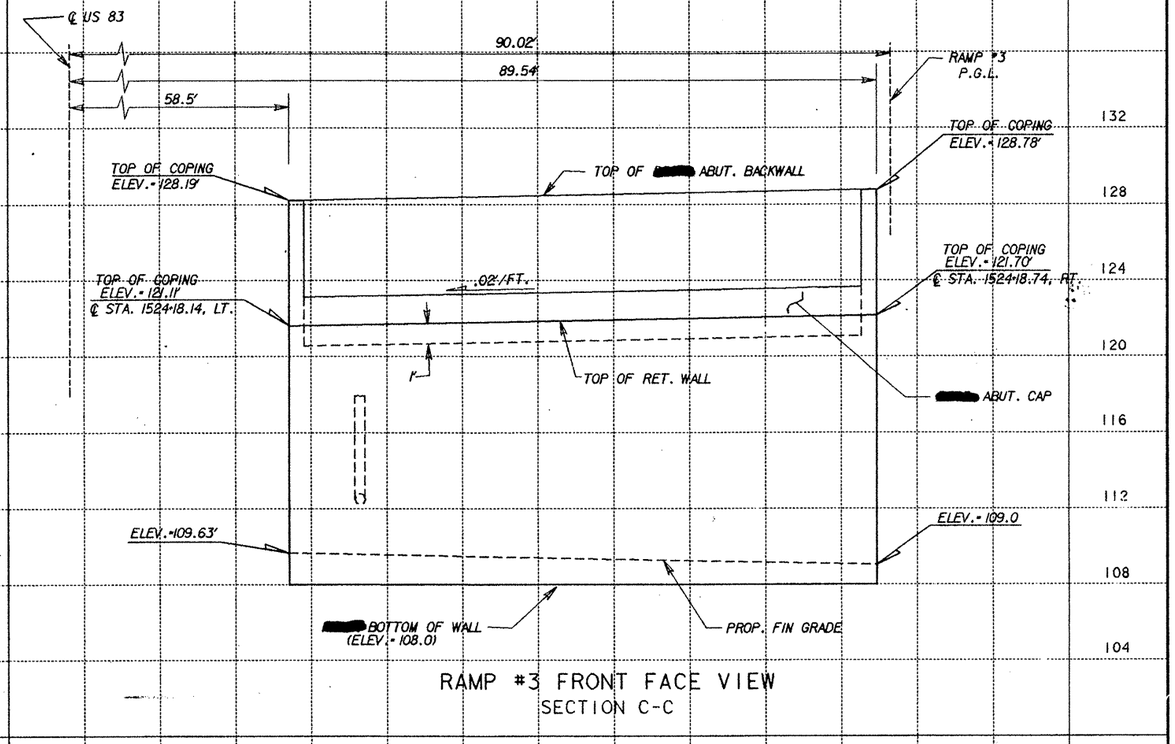

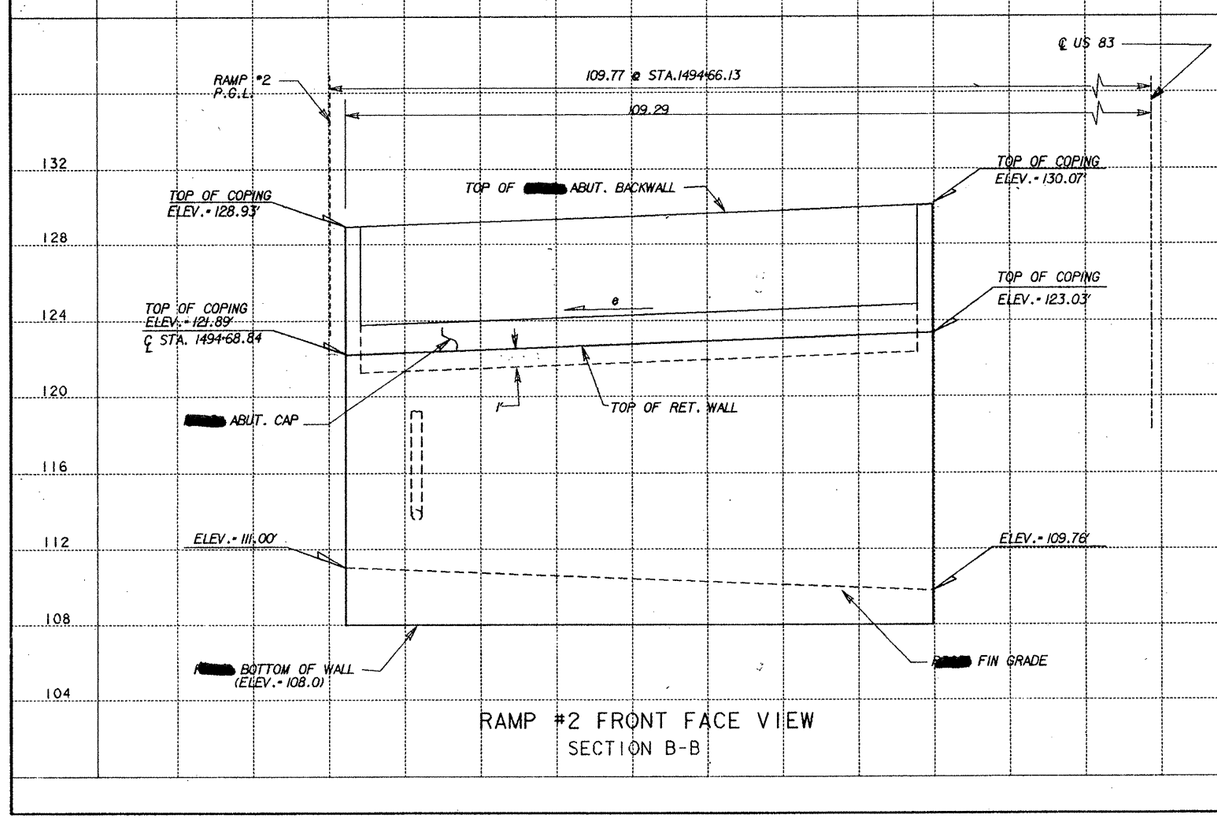

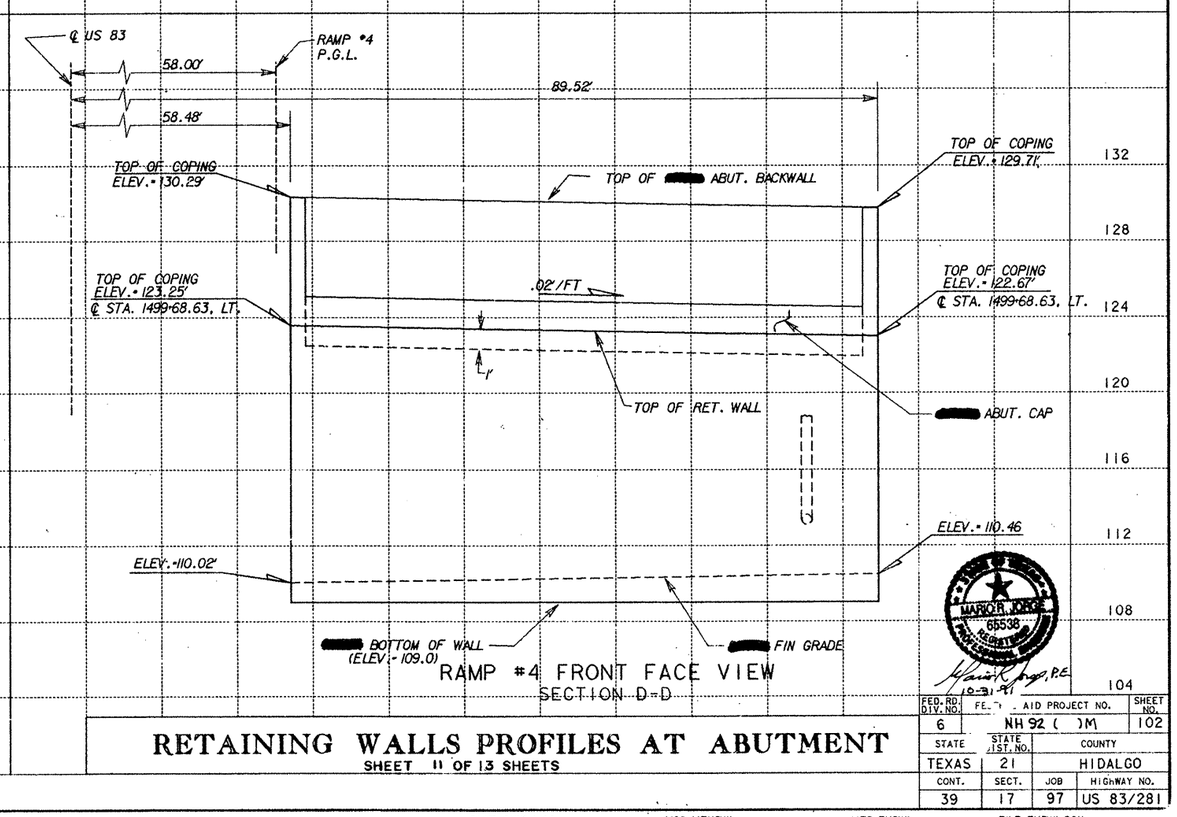

RETAINING WALLS PROFILES AT ABUTMENT

SHEET 11 OF 13 SHEETS

MARIO R. JORGE 65538 REGISTERED PROFESSIONAL ENGINEER
10-31-01

FED. RD. DIV. NO.	FED. AID PROJECT NO.		SHEET NO.
6	NH 92 ( )M		102
STATE	STATE DIST. NO.	COUNTY	
TEXAS	21	HIDALGO	
CONT.	SECT.	JOB	HIGHWAY NO.
39	17	97	US 83/281

REVISED: 6/28/01 PLOT SIZE=W00 V80-VEXRWI VER-FXRWI FILE-FXRWI.DGN

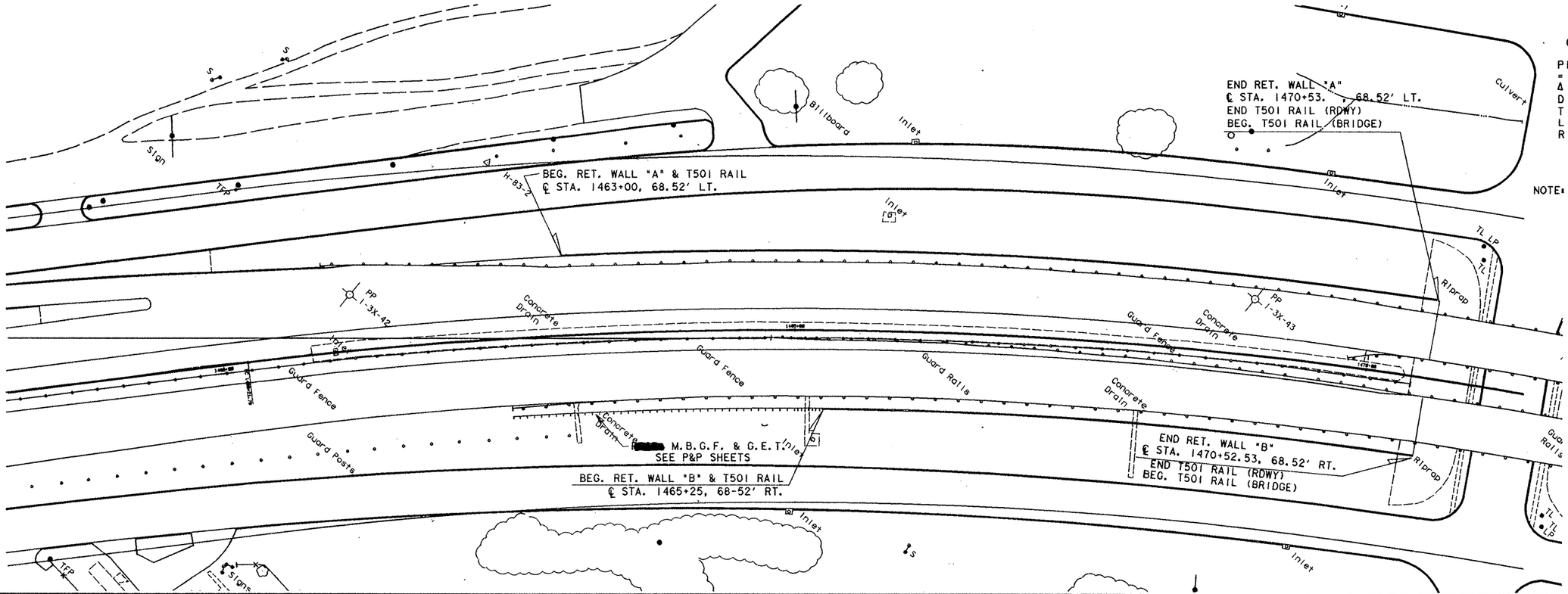

Manuel R. Ivey, P.E.
3-3-92

US 83 MAIN LANES (LT) & (RT)

RET. WALL PROFILE

"A" & "B"

SHEET 12 OF 13 SHEETS

SCALE:
PLAN 1"= 50' HOR.
PROFILE 1"= 10' VERT.

FED. RD. DIV. NO.	FEDERAL AID PROJECT NO.		SHEET NO.
6	NH 92 ( )M		103
STATE	STATE DIST. NO.	COUNTY	
TEXAS	21	HIDALGO	
CONT.	SECT.	JOB	HIGHWAY NO.
39	17	97	US 83

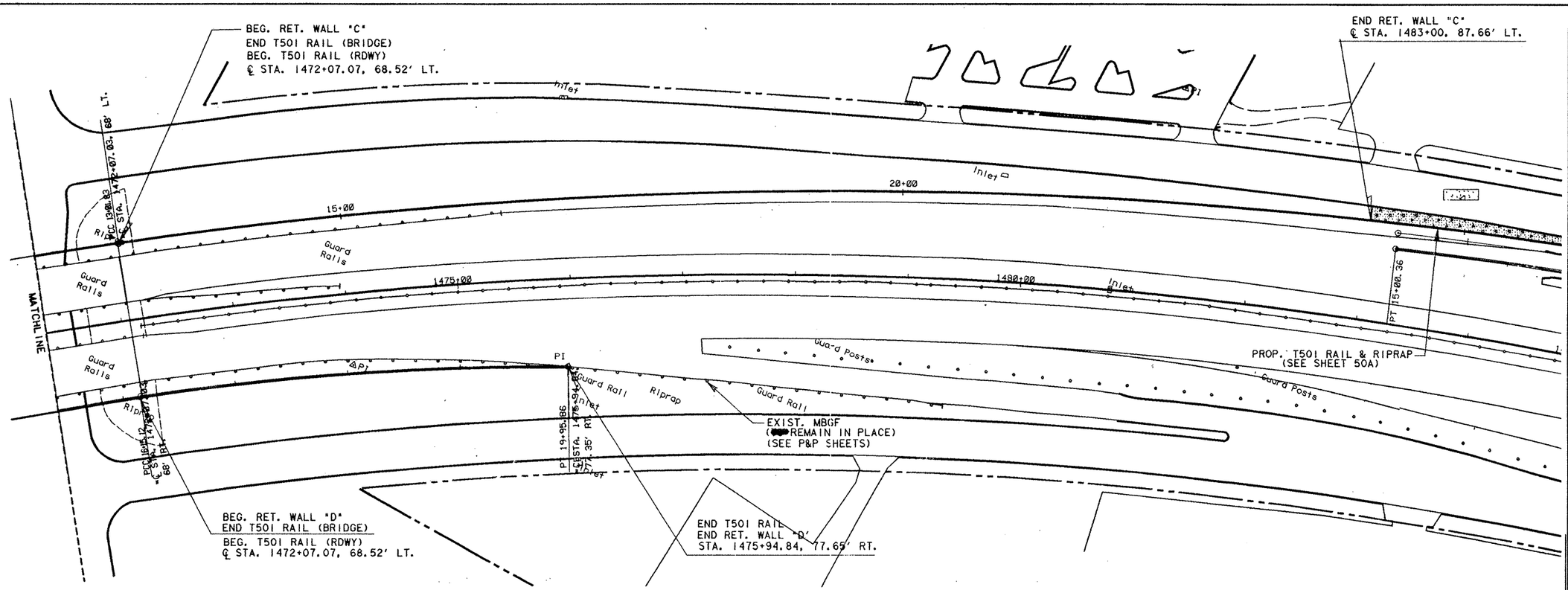

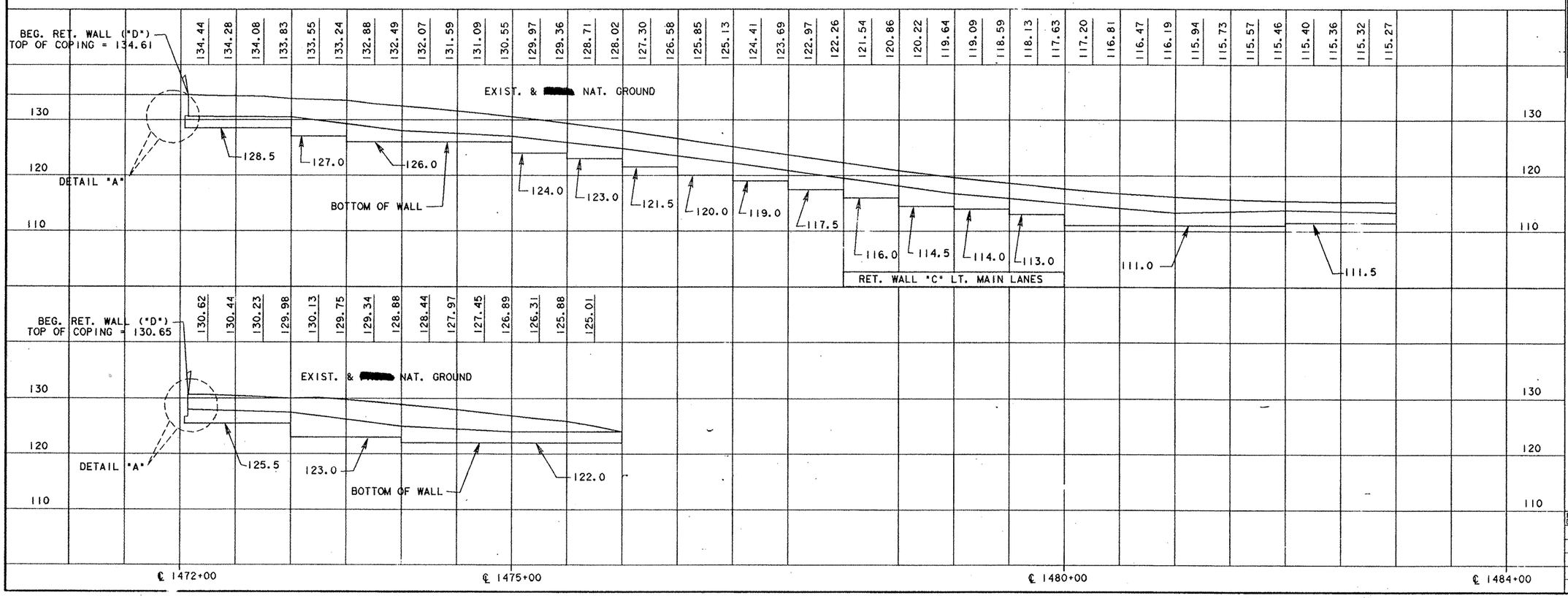

℄ STATION	FACE OF WALL OFFSET FROM ℄	
	"C"	"D"
1472+25	62.52' LT	62.54' RT
1472+50	68.55'	68.63'
1472+75	68.59'	68.81'
1473+00	68.66'	69.06'
1473+25	68.74'	69.39'
1473+50	68.85'	69.79'
1473+75	68.97'	70.28'
1474+00	69.12'	70.84'
1474+25	69.28'	71.48'
1474+50	69.47'	72.19'
1474+75	69.67'	72.99'
1475+00	69.90'	73.86'
1475+25	70.15'	74.81'
1475+50	70.41'	75.84'
1475+75	70.70'	76.94'
1476+00	71.00'	77.83'
1476+25	71.33'	
1476+50	71.67'	
1476+75	72.04'	
1477+00	72.43'	
1477+25	72.83'	
1477+50	73.26'	
1477+75	73.70'	
1478+00	74.17'	
1478+25	74.66'	
1478+50	75.16'	
1478+75	75.69'	
1479+00	76.23'	
1479+25	76.80'	
1479+50	77.38'	
1479+75	77.99'	
1480+00	78.61'	
1480+25	79.26'	
1480+50	79.92'	
1480+75	80.61'	
1481+00	81.31'	
1481+25	82.04'	
1481+50	82.78'	
1481+75	83.54'	
1482+00	84.33'	
1482+25	85.13'	
1482+50	85.95'	
1482+75	86.80'	
1483+00	87.66'	

Wayne R. Hoy, P.E.
3-3-92

US83 MAIN LANES (LT) & (RT) RET. WALL PROFILE "C" & "D"

SHEET 13 OF 13 SHEETS

SCALE:
PLAN 1"= 50' HOR.
PROFILE 1"= 5' VERT.

FED. RD. DIV. NO.	FEDERAL AID PROJECT NO.		SHEET NO.
6	NH 92 ( )M		104
STATE	STATE DIST. NO.	COUNTY	
TEXAS	21	HIDALGO	
CONT.	SECT.	JOB	HIGHWAY NO.
39	17	97	US U3/281

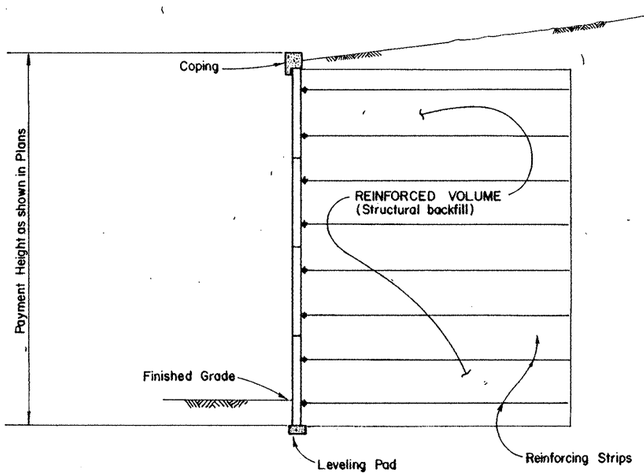

TYPICAL SECTION

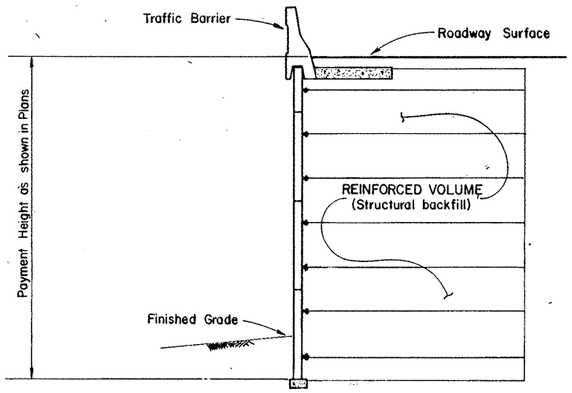

TYPICAL SECTION (Showing roadway on wall)

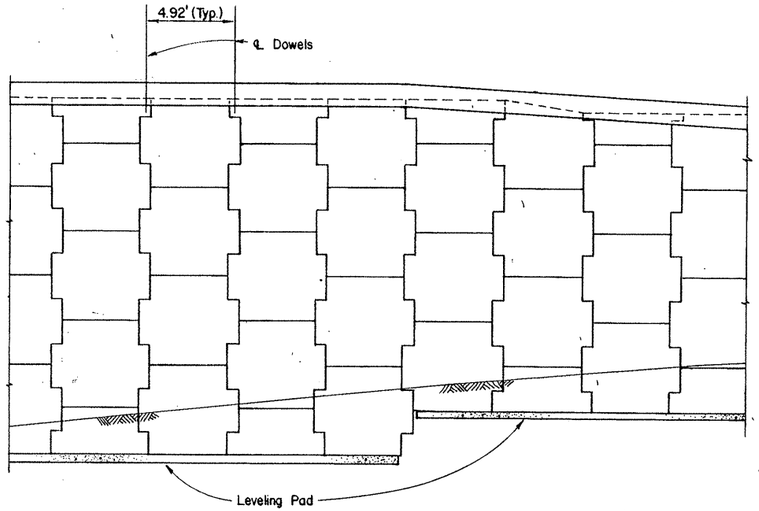

ELEVATION

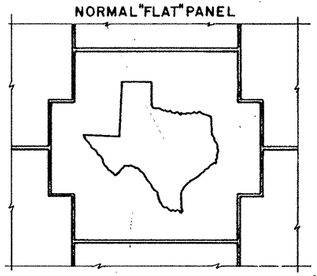

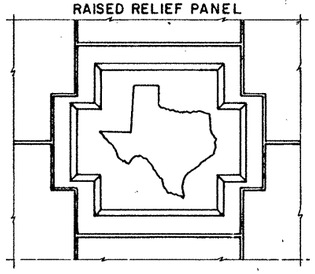

MAP OF TEXAS EMBLEM

Map of Texas emblem [redacted] formed into a wall panel next to each bridge abutment. The exact location of each emblem [redacted] approved by the Engineer. The cost of forming the emblems [redacted] not [redacted] paid for directly, but [redacted] considered incidental to the Item "Retaining Wall."

The map of Texas [redacted] inset a minimum of ¾" into the face of the panel, and [redacted] receive a smooth finish. The inset area [redacted] finished with a contrasting color as approved by the Engineer.

DESIGN PARAMETERS

Structure [redacted] based on the following design parameters:

Random Backfill: unit weight = 125 PCF
$\phi = 30°$ C = 0 PSF
Ka = .333

Select Backfill: unit weight = 125 PCF
$\phi = 34°$ C = 0 PSF
Ka = .28 Ko = .44

Stress in steel and concrete [redacted] in accordance with A.A.S.H.T.O. 1983 and current Interim Specifications.

The minimum length of Reinforcing Strips [redacted] 8.0'.

EXTERNAL STABILITY CRITERIA

Factor of safety in sliding along the base of the structure [redacted] greater than or equal to 1.5.

Factor of safety in overturning [redacted] greater than or equal to 2.0.

Allowable bearing pressure [redacted] not exceed 1/2 the ultimate bearing capacity of the foundation.

INTERNAL STABILITY CRITERIA

The coefficient of earth pressure, K, [redacted] vary linearly from .44 at the top of the structure to .28 at a depth of 20 feet. Below 20 feet, K [redacted] equal .28.

The factor of safety against pullout of the strips [redacted] greater than or equal 1.5 at all levels of reinforcement. The embedded length used in calculations [redacted] the length beyond the appropriate failure surface. The Rankine failure surface [redacted] used as the failure plane unless another failure plane can be properly justified. Pullout resistance [redacted] determined from actual test data evaluated at 3/4 inch strain.

STATE DEPARTMENT OF HIGHWAYS AND PUBLIC TRANSPORTATION

REINFORCED EARTH RETAINING WALL

ORIGINAL DRAWING DATE: JUNE 1985		STATE DISTRICT	FEDERAL REGION	FEDERAL AID PROJECT #			SHEET
DN:- / CK:- / DW:-MPM / CK:-RLR	REVISIONS 11-87 (Add Texas Emblem)	21	6	NH 92 ( ) YM			105
		COUNTY		CONTROL	SECTION	JOB	HIGHWAY
		HIDALGO		39	17	97	US83

BRUNING 44-142-57049

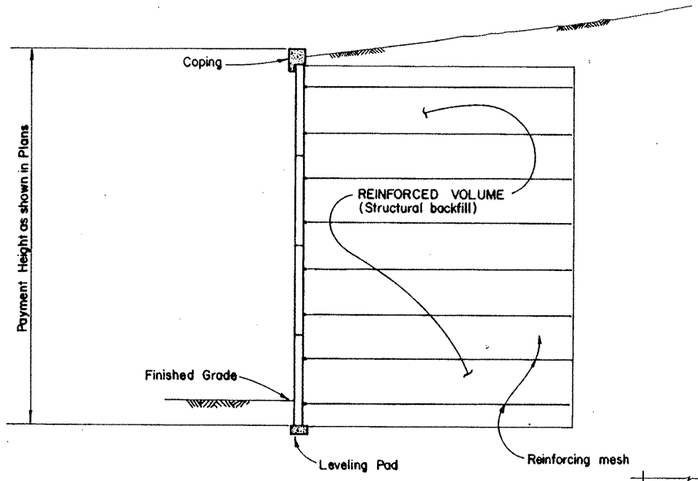

TYPICAL SECTION

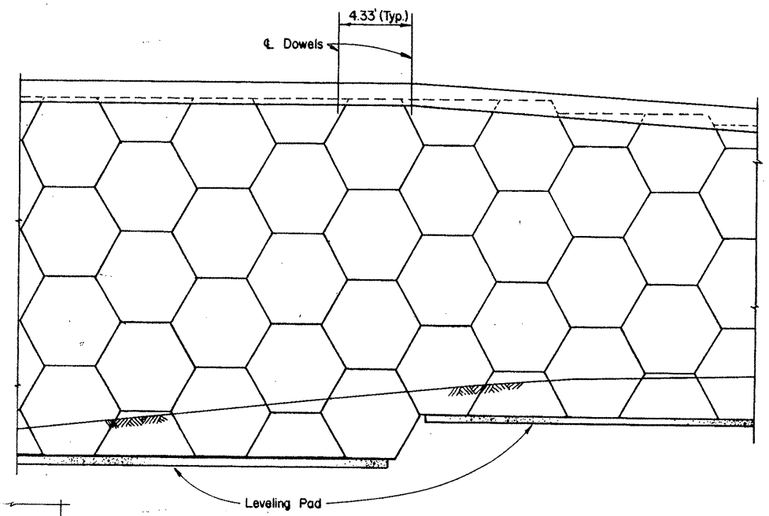

ELEVATION

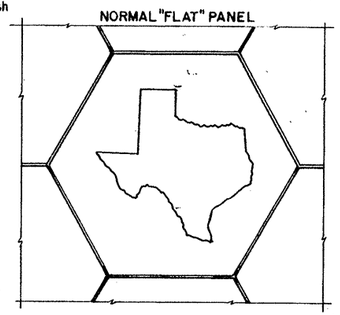

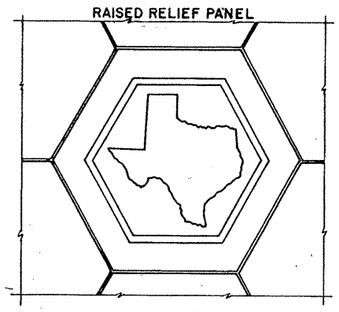

MAP OF TEXAS EMBLEM

Map of Texas emblem [redacted] formed into a wall panel next to each bridge abutment. The exact location of each emblem [redacted] approved by the Engineer. The cost of forming emblems [redacted] not [redacted] paid for directly, but [redacted] considered incidental to the Item "Retaining Wall."

The map of Texas [redacted] inset a minimum of 3/4" into the face of panel, and [redacted] recieve a smooth finish. The inset area [redacted] finished with a contrasting color as approved by the Engineer.

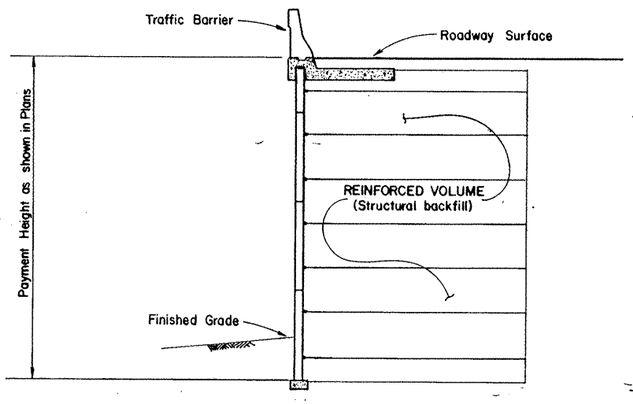

TYPICAL SECTION (Showing roadway on wall)

DESIGN PARAMETERS

Structure [redacted] based on the following design parameters:

Random Backfill: unit weight = 125 PCF
ϕ = 30° C=0 PSF
Ka = .333

Select Backfill: unit weight = 125 PCF
ϕ = 34° C=0 PSF
Ka = .28 K_o = .44

Stress in steel and concrete [redacted] in accordance with A.A.S.H.T.O. 1983 and current Interim Specifications.

The minimum length of Reinforcing mesh [redacted] 8.0'.

EXTERNAL STABILITY CRITERIA

Factor of safety in sliding along the base of the structure [redacted] greater than or equal to 1.5.

Factor of safety in overturning [redacted] greater than or equal to 2.0.

Allowable bearing pressure [redacted] not exceed 1/2 the ultimate bearing capacity of the foundation.

INTERNAL STABILITY CRITERIA

The coefficient of earth pressure, K, [redacted] vary linearly from .44 at the top of the structure to .28 at a depth of 20 feet. Below 20 feet, K [redacted] equal .28.

The factor of safety against pullout of the mesh [redacted] greater than or equal 1.5 at all levels of reinforcement. The embedded length used in calculations [redacted] the length beyond the appropriate failure surface. The Rankine failure surface [redacted] used as the failure plane unless another failure plane [redacted] properly justified. Pullout resistance [redacted] determined from actual test data evaluated at 3/4 inch strain.

STATE DEPARTMENT OF HIGHWAYS AND PUBLIC TRANSPORTATION

RETAINED EARTH RETAINING WALL

ORIGINAL DRAWING DATE JUNE 1985		STATE DISTRICT	FEDERAL REGION	FEDERAL AID PROJECT #	SHEET
DN: -	REVISIONS	21	6	NH92( )M	106
CK: -	11-87 (Add Texas Emblem)	COUNTY		CONTROL	SECTION	JOB	HIGHWAY
DW: - MPM		HIDALGO		34	17	97	563
CK: - RLR							

BRUNING 44-1425T049

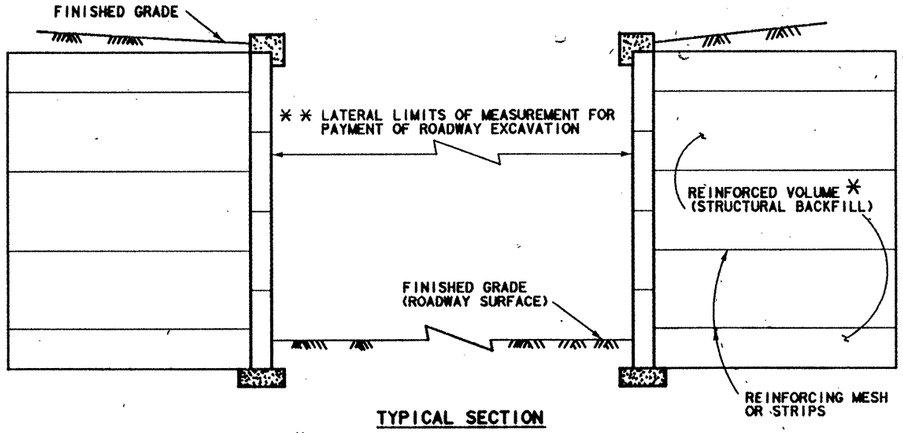

TYPICAL SECTION

ROADWAY EXCAVATION BETWEEN RETAINED EARTH OR REINFORCED EARTH RETAINING WALLS

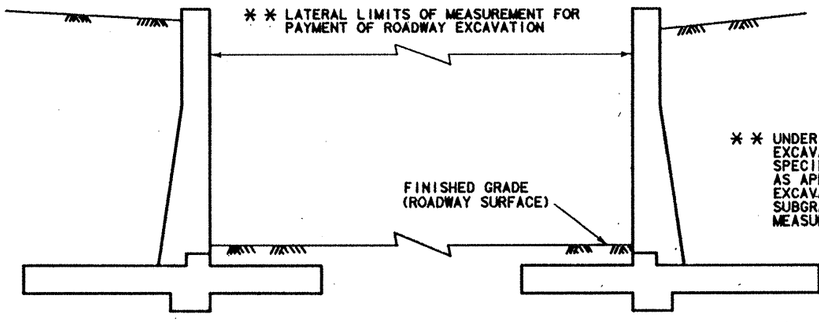

* * UNDER ITEM 110, "ROADWAY EXCAVATION" OR SPECIAL SPECIFICATION ITEM "EXCAVATION", AS APPLICABLE. ONLY THE EXCAVATION ABOVE THE [redacted] SUBGRADE ELEVATION [redacted] MEASURED FOR PAYMENT.

TYPICAL SECTION

ROADWAY EXCAVATION BETWEEN CONVENTIONAL RETAINING WALLS

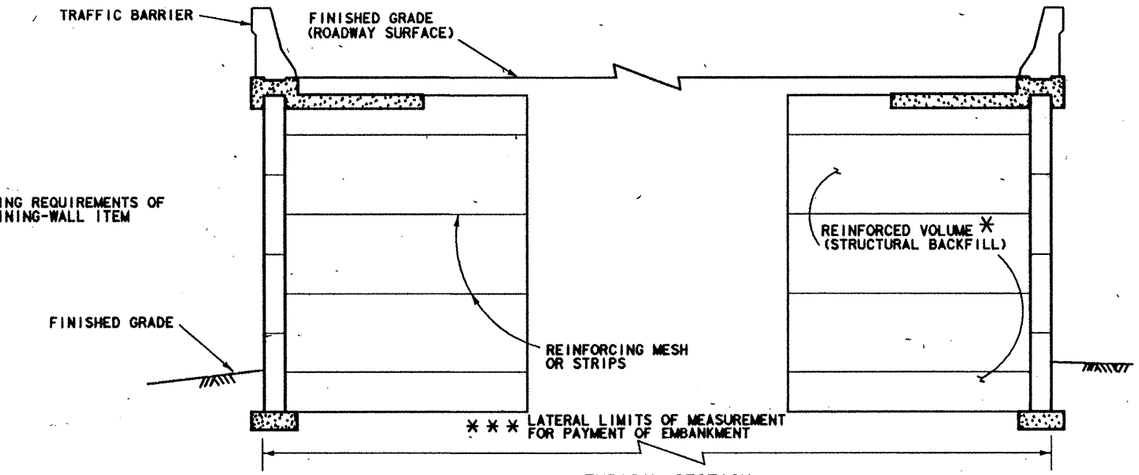

TYPICAL SECTION

EMBANKMENT BETWEEN RETAINED EARTH OR REINFORCED EARTH RETAINING WALLS

* * * UNDER SPECIAL SPECIFICATION ITEM "EMBANKMENT", OR ITEM 131, "BORROW (DELIVERED)", WHEN CLASS 3 MEASUREMENT IS SPECIFIED FOR ITEM 131, AS APPLICABLE. ONLY THE EMBANKMENT ABOVE THE EXISTING GROUND LINE [redacted] MEASURED FOR PAYMENT.

EARTHWORK MEASUREMENT WITH OTHER DESIGNS OF RETAINING WALLS [redacted] MADE TO THE OUTSIDE FINISHED FACE IN THE SAME MANNER.

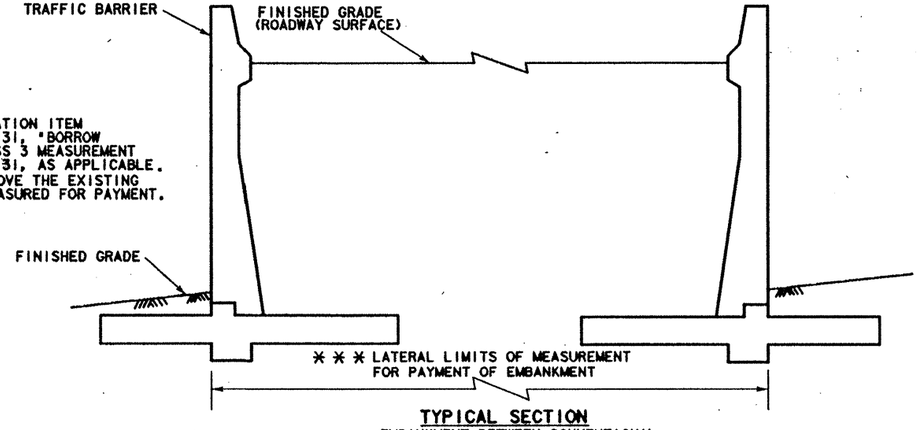

TYPICAL SECTION

EMBANKMENT BETWEEN CONVENTIONAL RETAINING WALLS

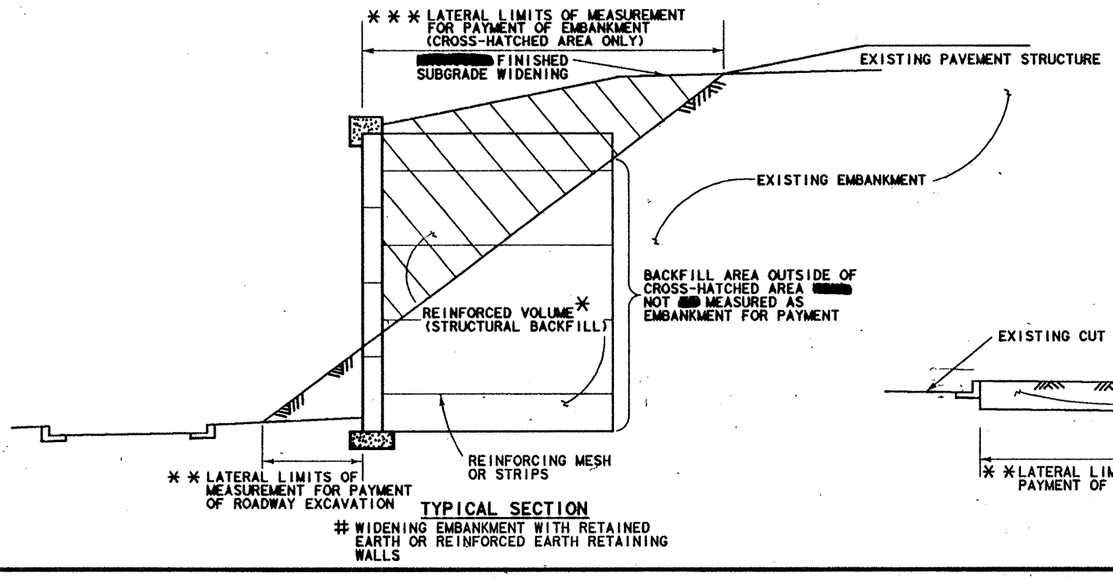

TYPICAL SECTION

WIDENING EMBANKMENT WITH RETAINED EARTH OR REINFORCED EARTH RETAINING WALLS

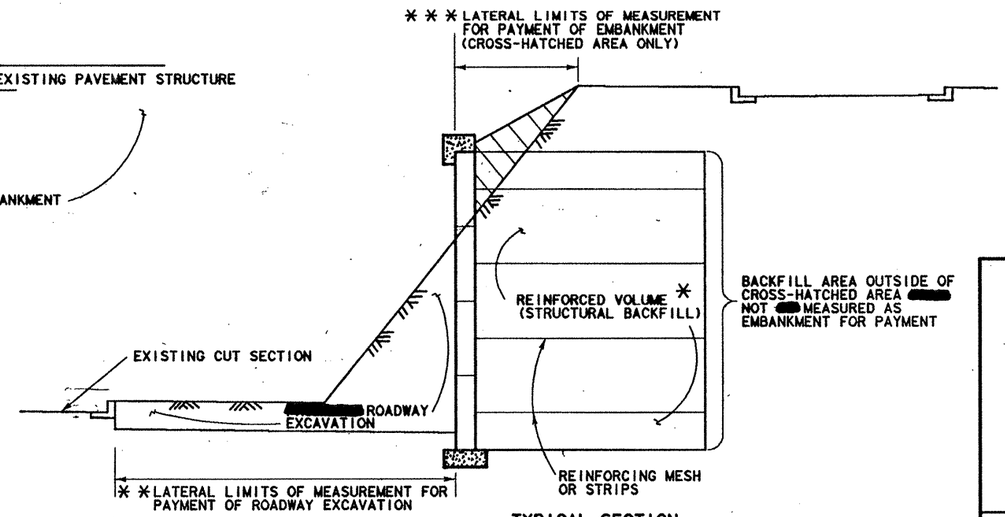

TYPICAL SECTION

WIDENING CUT SECTION WITH RETAINED EARTH OR REINFORCED EARTH RETAINING WALLS

STATE DEPARTMENT OF HIGHWAYS AND PUBLIC TRANSPORTATION

EARTHWORK MEASUREMENT AT RETAINING WALLS

EMRW - 88

REVISIONS	FED. RD. DIV. NO.	STATE	FEDERAL AID PROJECT NO.				SHEET NO.
	6	TEXAS	NH 82(503)M				107
	STATE DIST. NO.	COUNTY		CONT.	SECT.	JOB	HIGHWAY NO.
	21	Hidalgo		39	17	87	4583

† Precast versions of this detail [redacted] covered by patents held by The Reinforced Earth Company. The Contractor [redacted] indemnify and save harmless the State from all claims for infringement by reason of the use of the process by others without the consent of The Reinforced Earth Company.

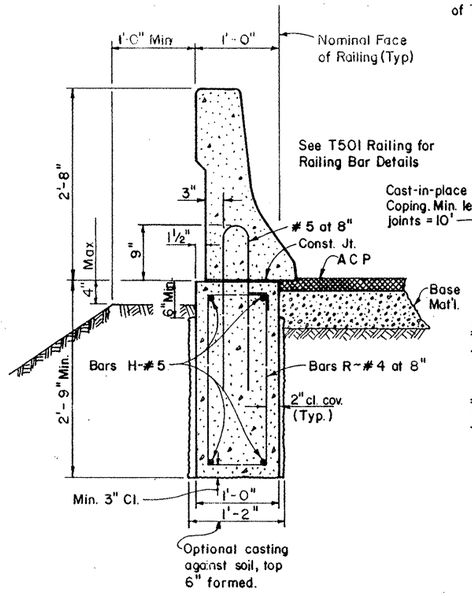

T501 RAIL

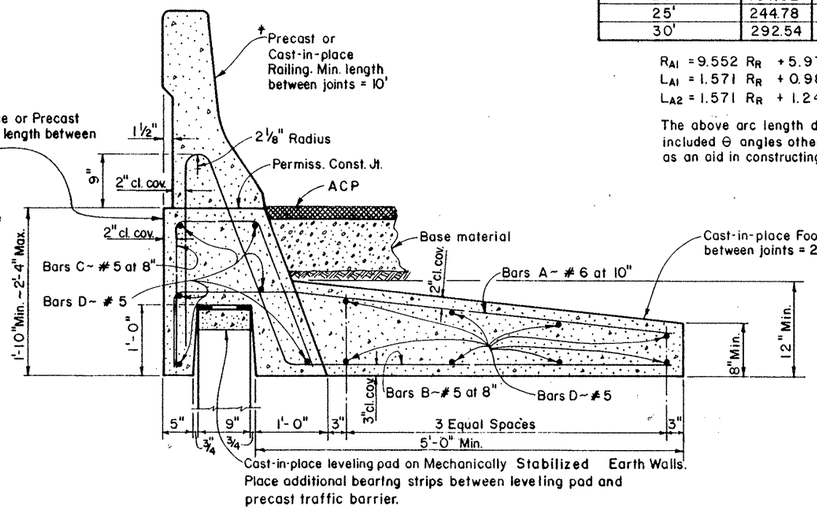

T501 ON MECHANICALLY STABILIZED EARTH WALLS ADJACENT TO ACP

TABLE OF DEVELOPED SURFACES DIMENSIONS FOR Θ = 90°						
Reference Radius R_R to Back of Rail	Radius R_{A1} ft.	Arc Length L_{A1} ft.	Arc Length L_{A2} ft.	Radius R_{B1} ft.	Arc Length L_{B1} ft.	Arc Length L_{B2} ft.
10'	101.50	16.69	16.95	18.82	16.95	17.87
15'	149.26	24.54	24.81	27.54	24.81	25.72
20'	197.02	32.40	32.66	36.26	32.66	33.58
25'	244.78	40.25	40.51	44.98	40.51	41.43
30'	292.54	48.11	48.37	53.69	48.37	49.28

$R_{A1} = 9.552\ R_R + 5.97$ $\quad R_{B1} = 1.744\ R_R + 1.38$

$L_{A1} = 1.571\ R_R + 0.98$ $\quad L_{B1} = 1.571\ R_R + 1.24$

$L_{A2} = 1.571\ R_R + 1.24$ $\quad L_{B2} = 1.571\ R_R + 2.16$

The above arc length dimensions [redacted] linearly ratioed for included Θ angles other than 90° The dimensions are intended as an aid in constructing forms for curved T501 Railing.

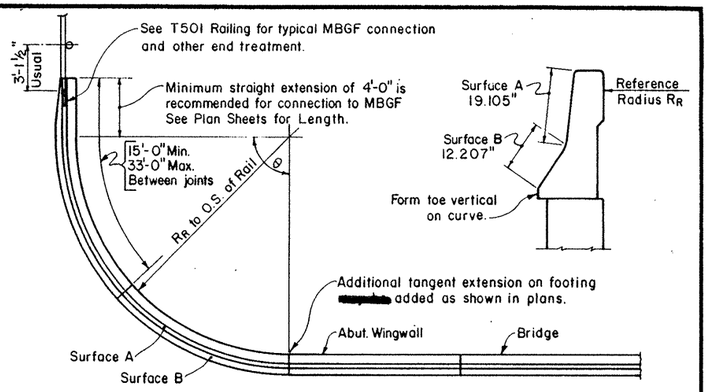

CURVED T501 RAILING AT BRIDGE ENDS

DESIGN NOTE: The curved end treatment at bridge ends [redacted] only [redacted] used in areas where traffic speed is 40 mph or less.

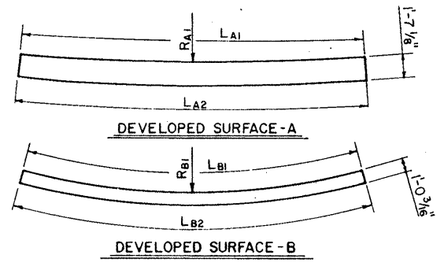

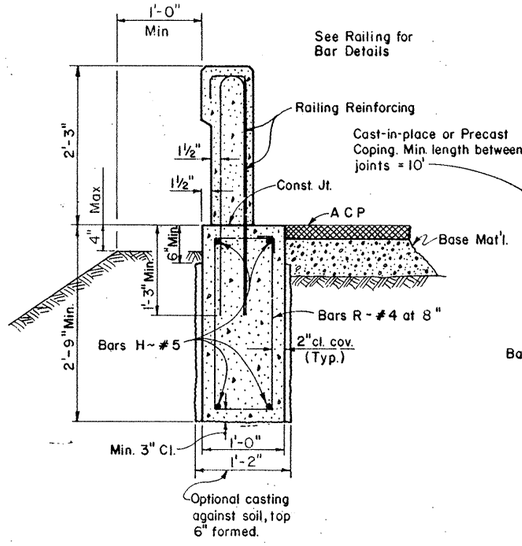

T201, T202 OR C201 RAIL

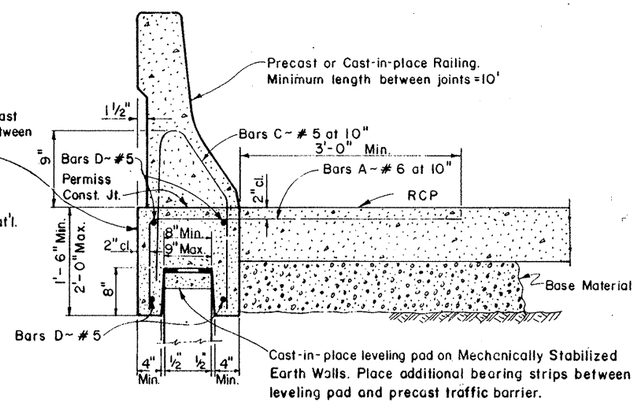

T501 ON MECHANICALLY STABILIZED EARTH WALLS ADJACENT TO RCP

NOTE: The configurations shown for railing anchorage on Mechanically Stabilized Earth Walls [redacted] used, or other similar configurations of equivalent strength [redacted] submitted for approval by the Engineer.

NOTE: The above footings for T501, T201, or T202 Railing have approx. C10 C Y per L F of Concrete and 10.77lbs. per L F of reinforcement.

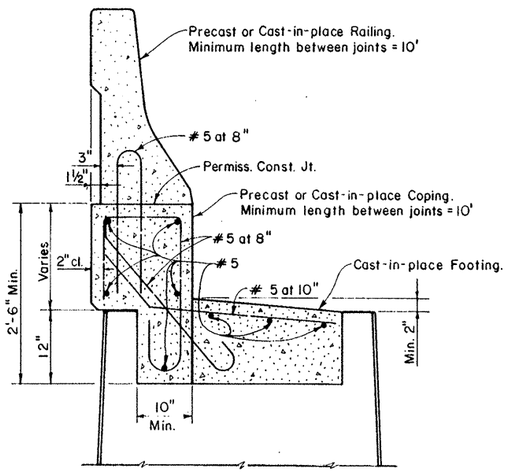

T501 ON DOUBLEWAL WALLS

NOTE: The configurations shown for railing on Doublewal walls [redacted] used, or other similar configurations of equivalent strength [redacted] submitted for approval by the Engineer.

GENERAL NOTES:

The foundations indicated are suitable for mounting typical concrete bridge barrier type railings. The design resistance is based on the current A A S H T O bridge railing requirements with the assumption of fair to good soil support conditions. Poor soil conditions [redacted] require suitably deeper foundations.

The primary use of the curved railing detail is to avoid the necessity of curved M B G F at the ends of bridges adjacent to at grade intersections.

All concrete [redacted] Class C or better and all reinforcement [redacted] Grade 60.

This detail is intended for use as a guide to unusual railing anchorage situations but [redacted] included in the plans, modified as necessary to apply to specific installations required on the project.

For railing installed on retaining walls, the railing foundation [redacted] considered subsidiary to the Item "Retaining Walls".

Payment for railing foundations will be by CY of Class C Concrete except those copings and/or footings necessary for mechanically stabilized earth walls [redacted] considered subsidiary to the Item "Retaining Walls". The associated bridge railing [redacted] paid for by the linear foot which includes the concrete and reinforcement.

Excavation [redacted] considered subsidiary to other items.

STATE DEPARTMENT OF HIGHWAYS AND PUBLIC TRANSPORTATION

BRIDGE TRAFFIC RAILING FOUNDATIONS

TRF

ORIGINAL DRAWING DATE: JUNE 1985		STATE DISTRICT	FEDERAL REGION	FEDERAL AID PROJECT #		SHEET
DR.:-JJP	REVISIONS	21	6	NH 92( )M		108
CK.:-MPM	Rev. 8-85 12 87 Added note. Rev. 1-88 (Gen Notes)	COUNTY		CONTROL	SECTION	JOB	HIGHWAY
DR.:-EDS	Jan 89 (Payment, file)	HIDALGO		39	17	97	US 83
CK.:-JJP	Jan 91 (Add MSE walls)						

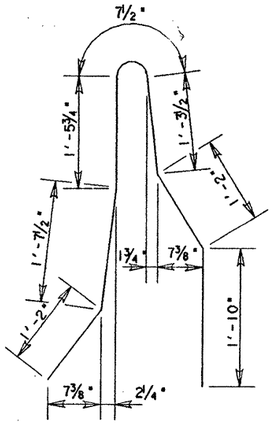

BARS S (#4)

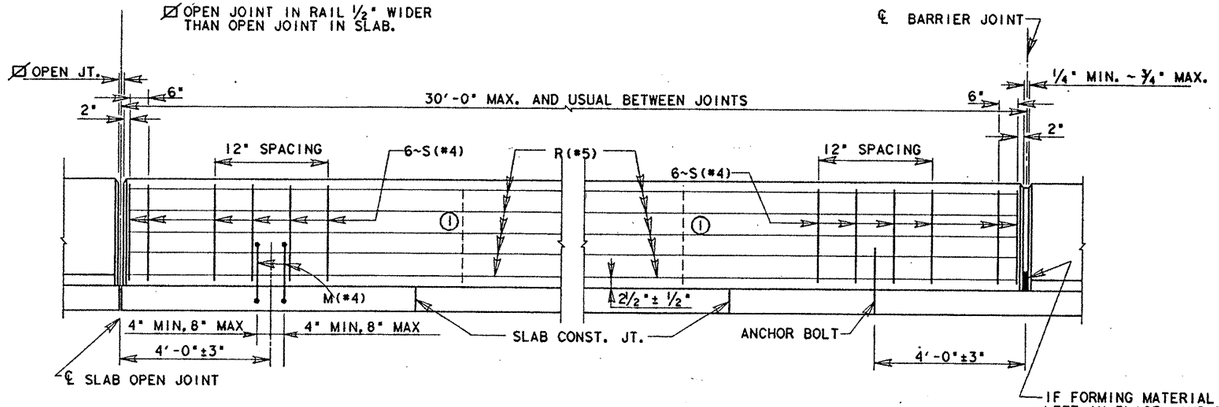

SHOWING TWO BARS M IN PLACE OF ONE ANCHOR BOLT ASSEMBLY

SHOWING ANCHOR BOLT ASSEMBLY

ELEVATION OF TRAFFIC BARRIER

(N.T.S.)

NOTE: TWO BARS [redacted] USED IN LIEU OF EACH ANCHOR BOLT.

① ADDITIONAL VERTICAL WIRES OR AUXILIARY CONVENTIONAL REINFORCING [redacted] PLACED AS NECESSARY TO PROVIDE CAGE STABILITY. AT LEAST ONE VERTICAL WIRE OR BAR IS NECESSARY AT THE MID POINT (+IFT.) OF THE SEGMENT.

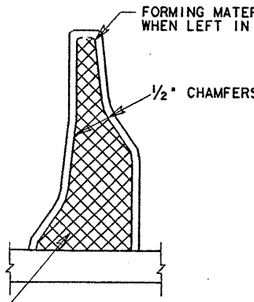

END VIEW

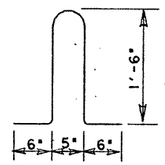

BARS M (#4)

ESTIMATED QUANTITIES (FOR INFORMATION ONLY)			
	CONC.	REINF. STEEL	STR. STEEL (ANCHOR BOLTS)
	C.Y.	LB.	LB.
30'-0" BARRIER CAST-IN-PLACE	6.5	389	17

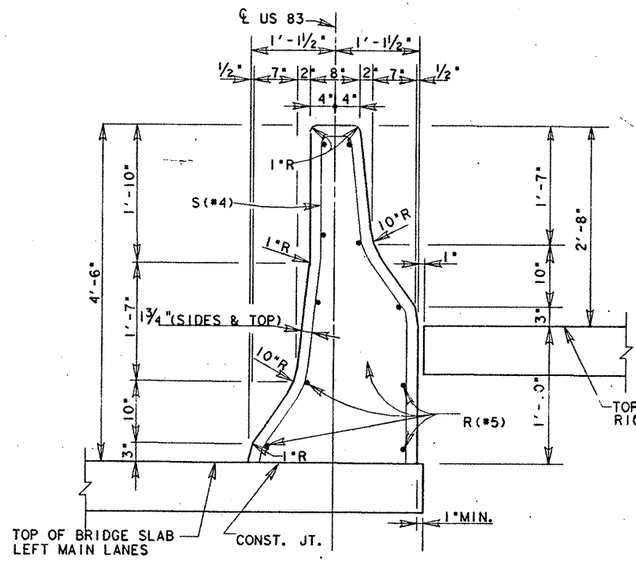

TYPICAL SECTION

NOTE: CAST-IN-PLACE BARRIER [redacted] SLIP FORMED. ADDITIONAL REINFORCEMENT [redacted] TACK WELDED TO THE UPPER TWO THIRDS OF THE REINFORCING CAGE TO PROVIDE BRACING. DO NOT WELD TO M BARS OR ANCHOR BOLTS.

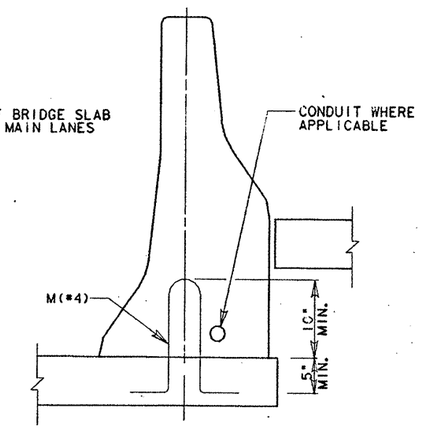

TO NEW SLAB

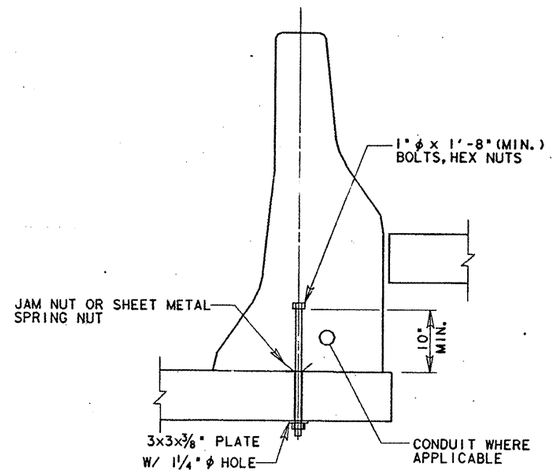

TO NEW OR EXIST. SLAB

CONNECTION DETAILS

GENERAL NOTES:

ALL CONCRETE, REINFORCEMENT, ANCHOR BOLTS, BLOCKING, GROUT, ETC., AS SHOWN ARE CONSIDERED AS PART OF THE BARRIER FOR PAYMENT.

CONCRETE FOR BARRIER [redacted] CLASS A, C, OR H.

JOINTS [redacted] LOCATED NEAR ENDS OF SPANS AND AT INTERVALS IN BETWEEN AS NECESSARY TO MAINTAIN 30 FT. MAXIMUM AND 15 FT. MINIMUM SECTION LENGTHS. A JOINT [redacted] PLACED AT INTERIOR SUPPORTS OF CONTINUOUS UNITS. JOINT OPENINGS [redacted] ½ INCH MINIMUM AND 1 INCH MAXIMUM OR ½ INCH WIDER THAN ADJACENT OPEN SLAB JOINTS. MATERIAL USED IN FORMING JOINTS [redacted] LEFT IN PLACE IF IT IS COMPRESSIBLE AND LIGHT IN COLOR. WHERE PORTIONS OF BARRIERS PROJECT OVER ADJACENT SPANS, SIMILIAR MATERIALS [redacted] ALSO [redacted] USED TO PROVIDE ¾ INCH NOMINAL CLEARANCE.

ANCHOR BOLTS AND ASSOCIATED NUTS, WASHERS, AND PLATES FOR THE BARRIER TO SLAB ATTACHMENT [redacted] GALVANIZED. BOLTS [redacted] CONFORM TO ASTM A307 (OR A36 THREADED ROD WITH TACK WELDED NUT). THREADED RODS [redacted] 0.906 INCH MINIMUM DIAMETER WITH ROLLED THREADS. NUTS [redacted] CONFORM TO A307 REQUIREMENTS AND [redacted] TAPPED OR CHASED AFTER GALVANIZING. BOLTS AND NUTS [redacted] HAVE CLASS 2A AND 2B FIT TOLERANCES.

THE CENTERLINE AXIS OF THE BARRIER [redacted] VERTICAL EXCEPT WHERE THE SLAB IS SUPERELEVATED IN WHICH CASE IT [redacted] NORMAL TO THE CROSS SLOPE UNLESS OTHERWISE SHOWN IN THE PLANS OR DIRECTED BY THE ENGINEER.

SHOP DRAWINGS ARE NOT REQUIRED FOR THIS BARRIER.

ANCHORAGE SYSTEMS EQUAL TO OR STRONGER THAN THOSE SHOWN [redacted] USED PROVIDED THE DETAILS OF SUCH SYSTEMS ARE SUBMITTED TO AND APPROVED BY THE ENGINEER PRIOR TO PLACEMENT.

WELDED WIRE FABRIC [redacted] USED AS AN OPTION TO THE CONVENTIONAL REINFORCEMENT SHOWN. WELDED WIRE FABRIC [redacted] MADE IN ACCORDANCE WITH ASTM A497.

STATE OF TEXAS
JODY R. ELLINGTON
68708
REGISTERED PROFESSIONAL ENGINEER

Jody R. Ellington, P.E.
12-14-90

SPECIAL
CONCRETE TRAFFIC BARRIER
(BRIDGE)
CTB (1)~SPL

FED. RD. DIV. NO.	FEDERAL AID PROJECT NO.		SHEET NO.
6	NH 92 ( )M		109
STATE	DIST. NO.	COUNTY	
TEXAS	21	HIDALGO	
CONT.	SECT.	JOB	
39	17	97	US 83/281

D21200A:7EA2:[325L16]SCTB281.DGN PRF:SAME

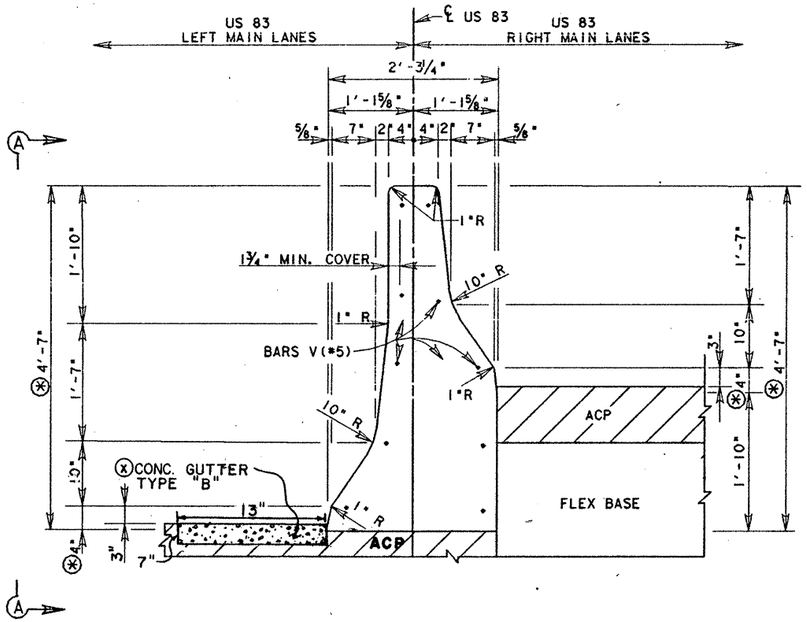

TYPICAL SECTION - CTB(2) ~ SPECIAL

(RDWY CAST-IN-PLACE)

Ⓐ WHEN 1" ACP IS NOT USED FOR LATERAL SUPPORT, THESE DIMENSIONS [redacted] ADJUSTED ACCORDINGLY. PERMISSIBLE METHODS OF ATTAINING EQUIVALENT LATERAL SUPPORT INCLUDE: (1) PROVISION OF #8 DOWEL BARS, 12" IN LENGTH, 4'C-C SPACING, PLACED VERTICALLY - WITH APPROXIMATELY ONE-HALF THE BAR LENGTH EMBEDDED BELOW THE CONCRETE TRAFFIC BARRIER, OR (2) 1" (MIN) DEEP KEYWAY IN CONCRETE PAVEMENT, EXCESS WIDTH IN KEYWAY BACKFILLED WITH GROUT.

Ⓧ SEE SHEET NO. 511 FOR DETAILS.

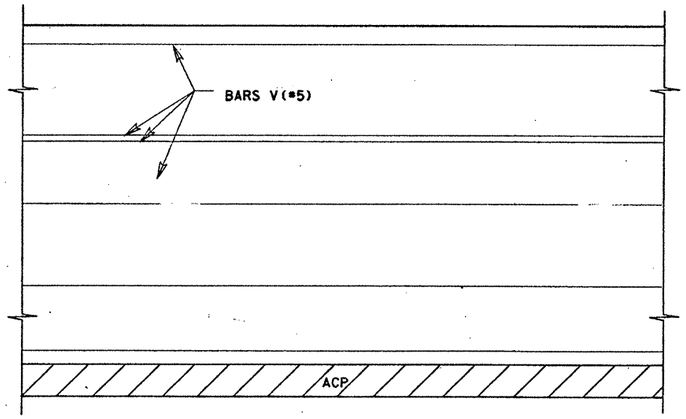

SECTION A-A - TYPICAL ELEVATION

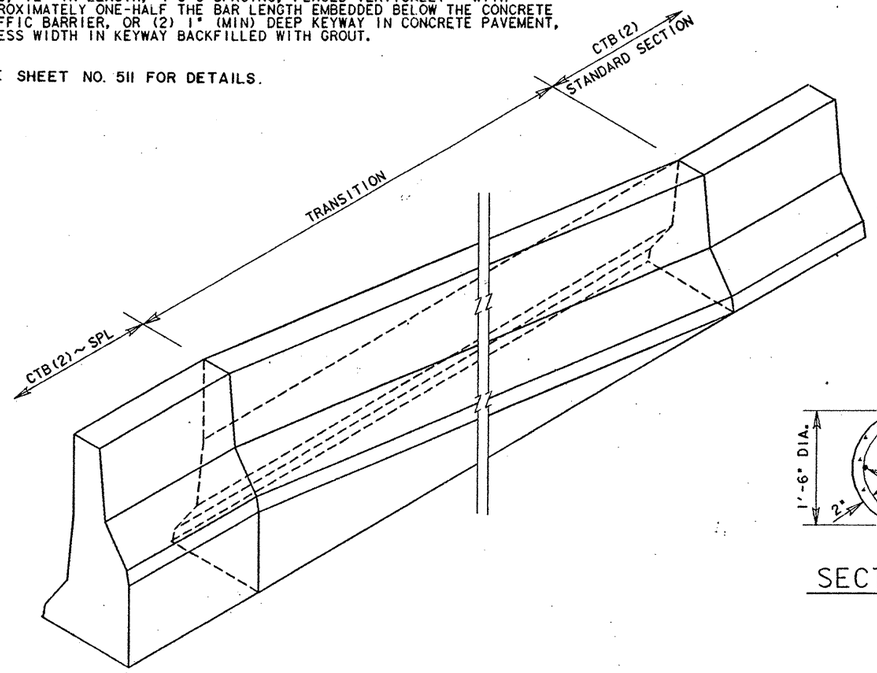

PERSPECTIVE SHOWING TRANSITION TO CTB(2) STANDARD SECTION

N.T.S.

NOTE: TRANSITION SECTION [redacted] PAID FOR AS CTB(2) ~ SPL.

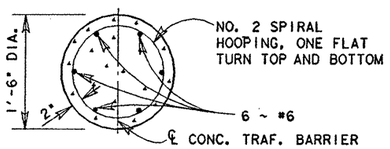

SECTION C-C

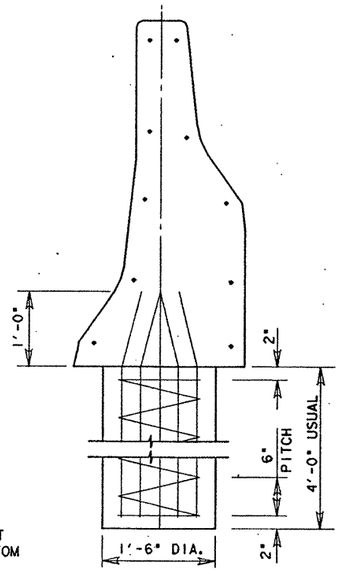

SECTION B-B

GENERAL NOTES

AXIS OF TRAFFIC BARRIER [redacted] VERTICAL, EXCEPT WHERE ROADWAY IS SUPERELEVATED, THEN AXIS [redacted] NORMAL TO ROADWAY SURFACE.

BID PRICE PER LINEAR FOOT OF CTB(2)~SPL, INCLUDING TERMINAL AND ANCHOR SECTIONS AS WELL AS ALL TRANSITION SECTIONS, [redacted] INCLUDE ALL OF THE CONCRETE, REINFORCEMENT AND DRILLED SHAFT FOUNDATIONS REQUIRED.

ALL CONCRETE, INCLUDING DRILLED SHAFT FOUNDATIONS, [redacted] CLASS A, C OR H.

LONGITUDINAL AND VERTICAL BARS FOR ROADWAY BARRIER [redacted] CONFORM TO ASTM A-615 (GRADE40).

AT CONSTRUCTION JOINTS FOR THE ROADWAY BARRIER, THE LONGITUDINAL BARS [redacted] EXTEND BEYOND THE JOINT SO THAT BAR SPLICES [redacted] A MINIMUM OF TWO FEET FROM THE CONSTRUCTION JOINT.

BAR SPLICES FOR ROADWAY BARRIER [redacted] A MINIMUM OF 24 TIMES THE NOMINAL DIAMETER OF THE BAR.

ANY METHOD DEVISED BY THE CONTRACTOR AND APPROVED BY THE ENGINEER THAT [redacted] ASSURE THE LONGITUDINAL ROADWAY STEEL [redacted] POSITIONED ± 1/2 INCH AS DIMENSIONED [redacted] SATISFACTORY.

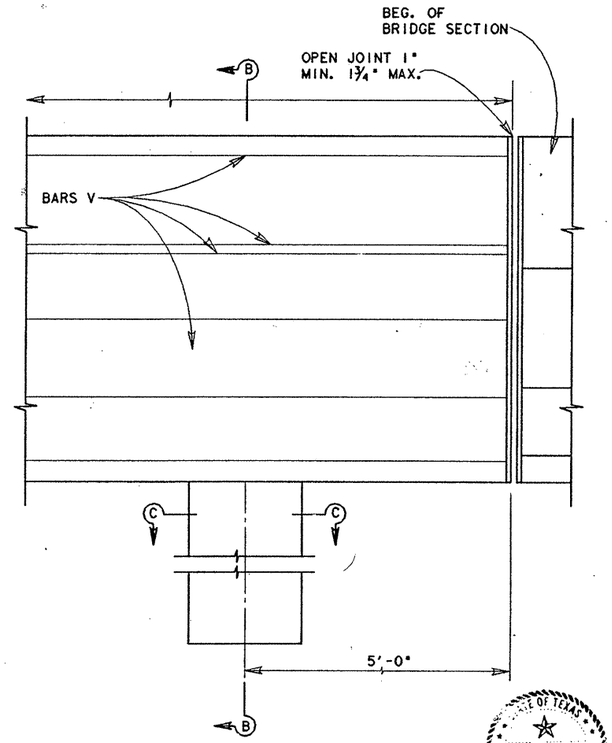

ANCHOR OR TERMINAL - ELEVATION

NOTE: 1'-6"Ø DRILLED SHAFT FOUNDATION X 4'-0" UNLESS SHOWN OTHERWISE IN THE PLANS

STATE OF TEXAS
JODY R. ELLINGTON
68708
REGISTERED PROFESSIONAL ENGINEER
Jody R. Ellington, P.E.
12-14-90

SCALE: 1"=1'

SPECIAL CONCRETE TRAFFIC BARRIER (ROADWAY) CTB(2) ~SPL

FED. RD. DIV. NO.	FEDERAL AID PROJECT NO.		SHEET NO.
6	NH 92 ( )M		110
STATE	STATE DIST. NO.	COUNTY	
TEXAS	21	HIDALGO	
CONT.	SECT.	JOB	HIGHWAY NO.
39	17	97	US 83/281

SHEET SUMMARY				
ITEM	EST.	FINAL	UNIT	DESCRIPTION
100	38		SY	REMOVE OLD CONC. RIP RAP
100	609		LF	REMOVE OLD CONC. (CURB)
450	1550.8		LF	RAILING (T501)
514	1144.2		LF	CONCRETE TRAFFIC BARRIER (TYPE 2)
421	212		CY	* CLASS "C" CONC. (MISC.)
5653	1		EA	G.R.E.A.T. (TYPE "A")(6 BAY)(3.0 FT.)

* FOR T501 FOUNDATION & END BLOCK.

RAMP #1

N

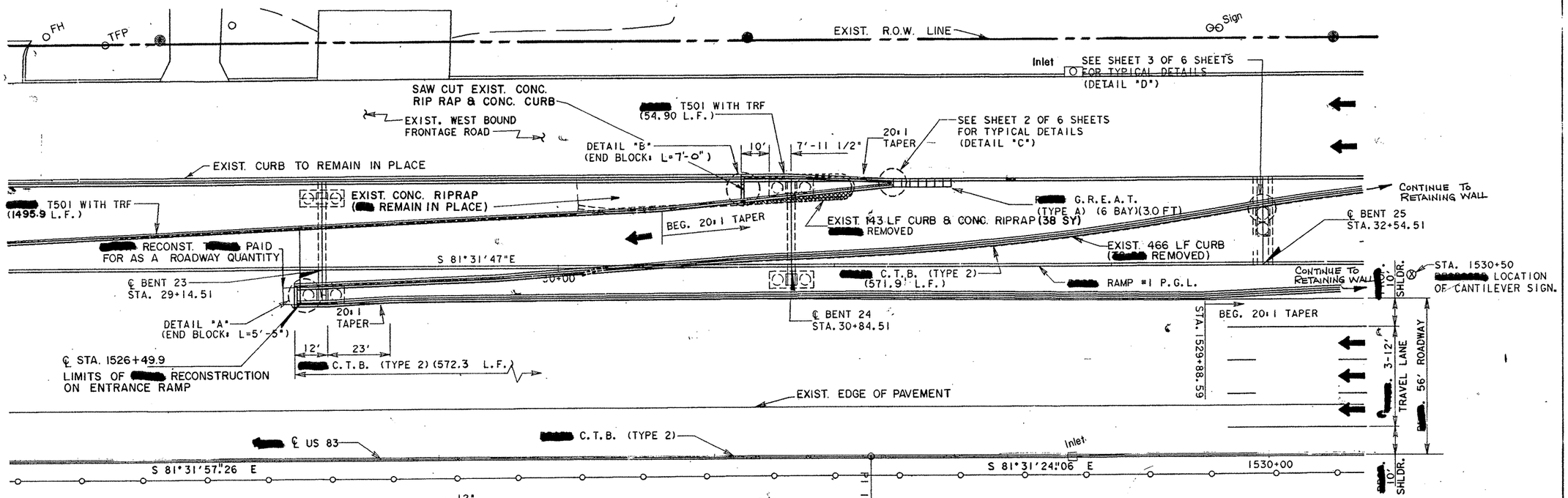

8 SY OF RECONSTRUCTION (1-1/2" ACP TY"D" & 12" OF 1% LIME **FLEXBASE**) SUBSIDIARY TO THE PERTINENT BID ITEMS.

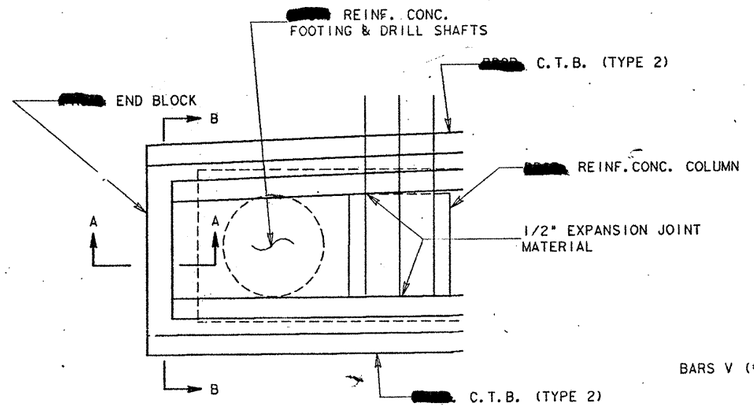

DETAIL A

SCALE: 1" = 3'

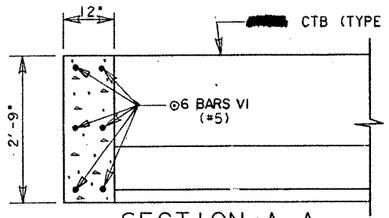

SECTION A-A

SCALE: 1"=2'

⊙BARS VI BENT 90° AND LAPPED A MINIMUM OF 6 BAR DIAMETERS WITH C.T.B. BARS V OR T501 BARS R. REFER TO C.T.B. (2)-81 OR T501 STANDARD FOR DIMENSIONS AND REINFORCING NOT SHOWN HEREIN.

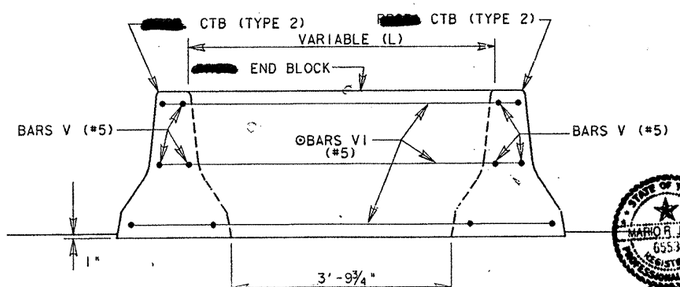

SECTION B-B

SCALE: 1"=2'

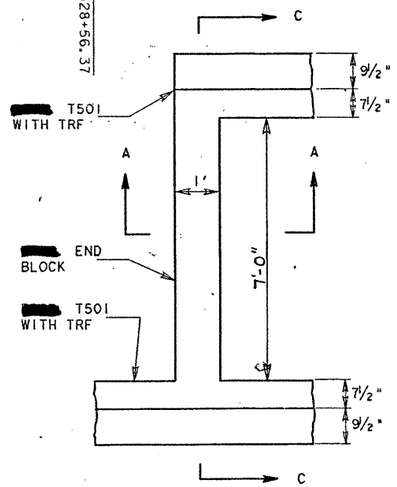

DETAIL B

N.T.S.

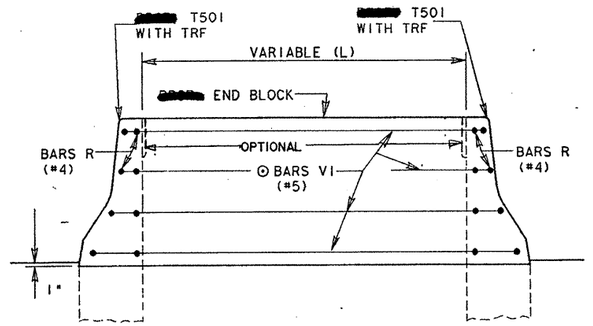

SECTION C-C

SCALE: 1"=2'

CONCRETE TRAFFIC BARRIER MISCELLANEOUS DETAILS

SHEET 1 OF 6 SHEETS
PLAN VIEW SCALE: 1"=20'

FED. RDJ DIV. NO.	FEDERAL AID PROJECT NO.		SHEET NO.
6	NH 92 ( )M		III
STATE	DIST. COUNTY NO.		COUNTY
TEXAS	21		HIDALGO
CONT.	SECT.	JOB	HIGHWAY NO.
39	17	97	US83/281

[3251116] CONCTB2.DGN PRF=CL - 2A

RAMP #2

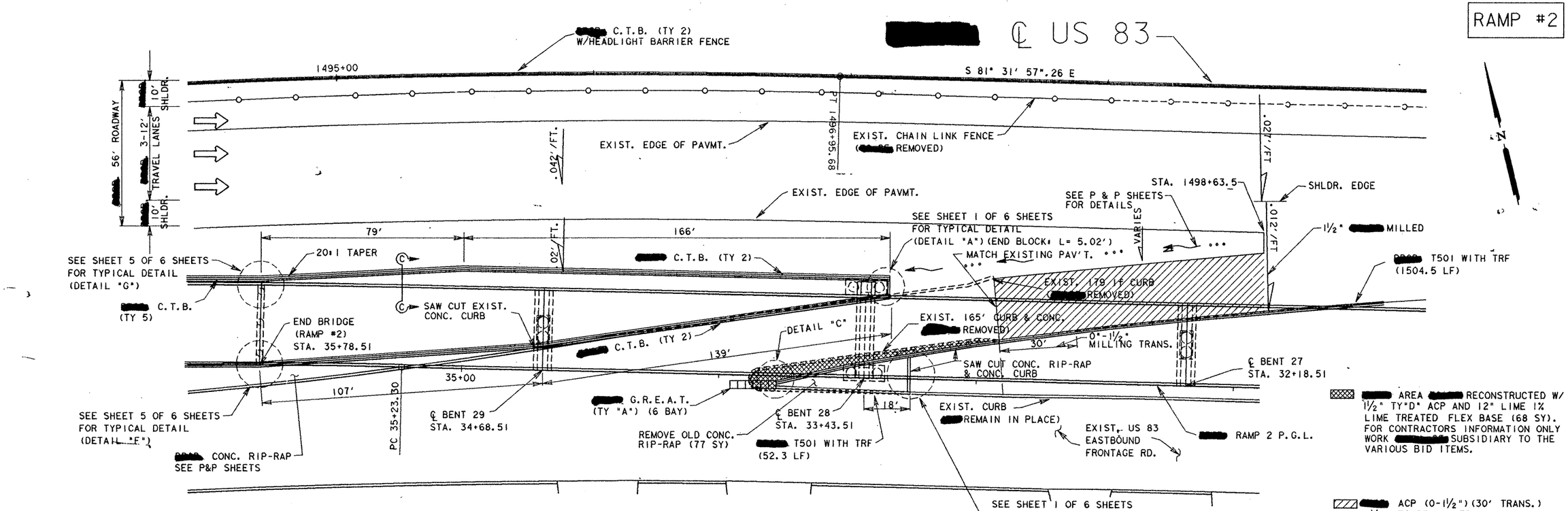

SHEET TOTALS				
ITEM	EST.	FINAL	UNIT	DESCRIPTION
100	344		LF	REMOVE OLD CONC. (CURB)
100	77		SY	REMOVE OLD CONC. (RIP-RAP)
514	491		LF	CONC. TRAF. BARRIER (TYPE 2)
450	1556.8		LF	RAILING TYPE T501
421	213.3		CY	⊛ CLASS "C" CONC. (MISC.)
3525	73		SY	PLANE ASPH. SURFACE (0-1½")
3525	207		SY	PLANE ASPH. SURF. (1½")
5653	1		EA	G.R.E.A.T. (TY"A") (6 BAY) (3.0')

⊛ FOR FOUNDATION OF T501 RAIL & END BLOCK

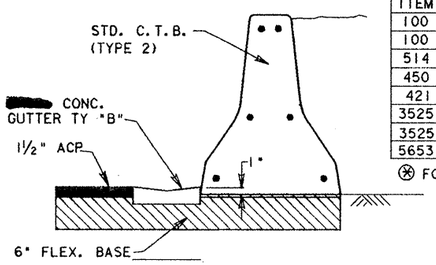

SECTION C-C

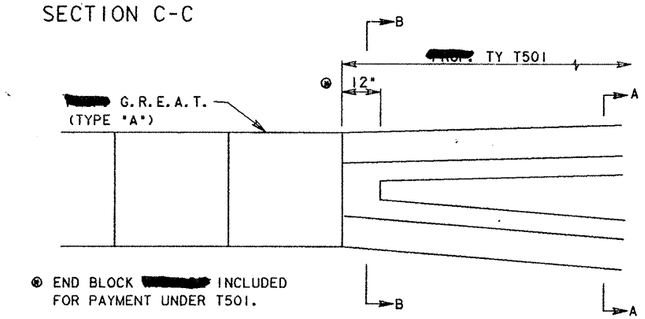

⊛ END BLOCK [redacted] INCLUDED FOR PAYMENT UNDER T501.

DETAIL "C"

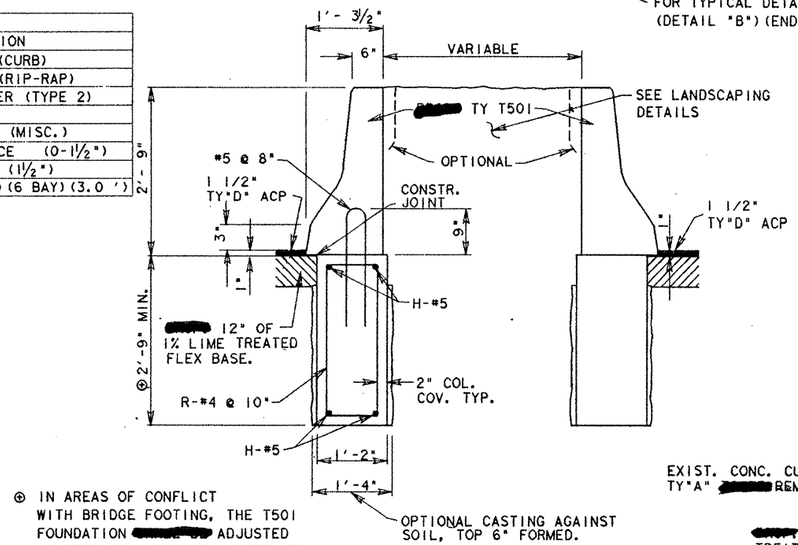

⊛ IN AREAS OF CONFLICT WITH BRIDGE FOOTING, THE T501 FOUNDATION [redacted] ADJUSTED TO MISS THE FOOTING. BARS "R" [redacted] ADJUSTED ACCORDINGLY.

SECTION A-A

NOTE: RAIL DIMENSIONS AND REINFORCING STEEL NOT SHOWN [redacted] IN ACCORDANCE WITH T501 RAIL STANDARD.

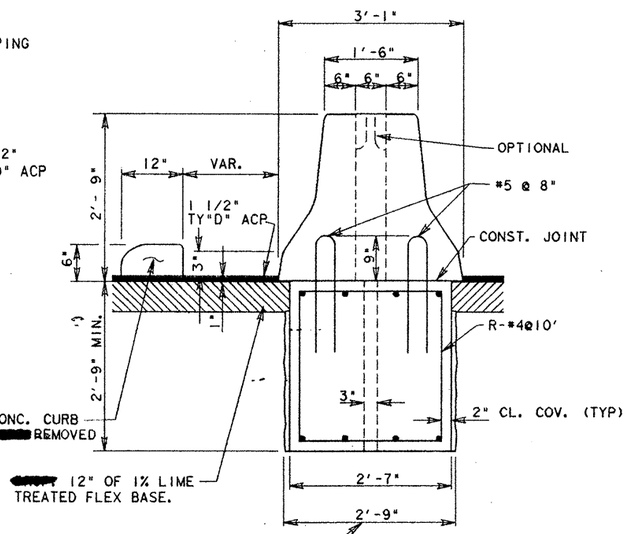

SECTION B-B

Mario R. Jorge, P.E.
10-31-81

CONCRETE TRAFFIC BARRIER & MISCELLANEOUS DETAILS

SHEET 2 OF 6 SHEETS
PLAN VIEW SCALE: 1"= 20'

FED. RD. DIV. NO.	FEDERAL AID PROJECT NO.		SHEET NO.
6	NH 92 ( ) M		112
STATE	STATE DIST. NO.	COUNTY	
TEXAS	21	HIDALGO	
CONT.	SECT.	JOB	HIGHWAY NO.
39	17	97	US 83/281

PLOT SIZE: V80-XCONCTR2.PRF V80-CONCTR2.PRF FILE:CONCTR2.DGN

RAMP #3

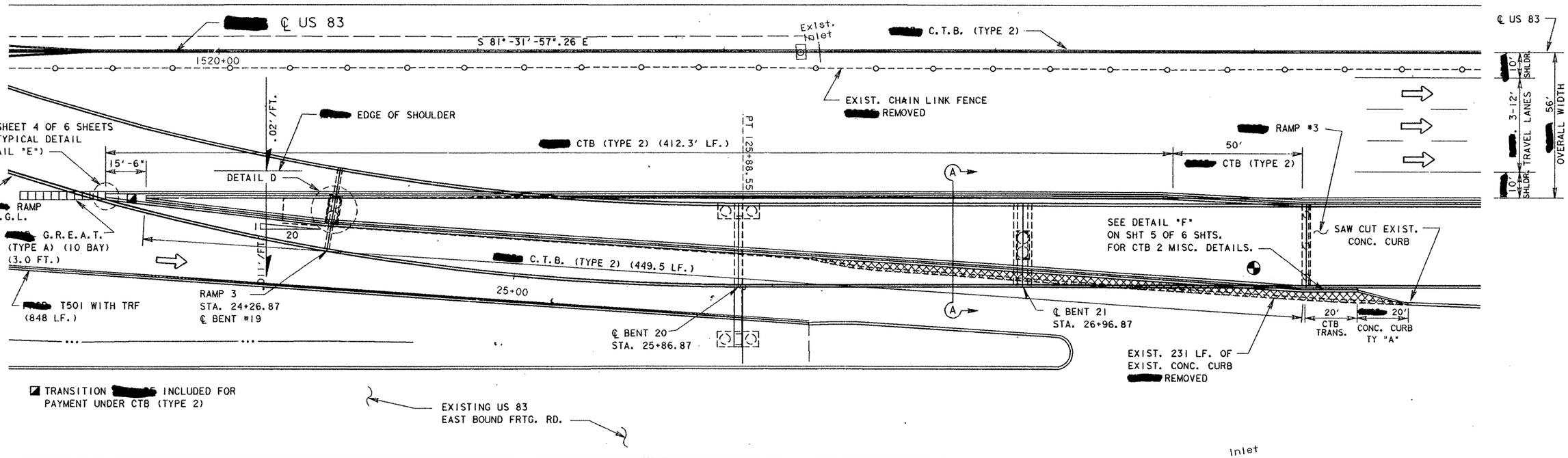

AREA RECONSTRUCTED W/ 1½" TY"D" ACP & 12" OF LIME TREATED SUBGRADE. (SY) FOR CONTRACTORS INFORMATION ONLY SUBSIDIARY TO THE VARIOUS BID ITEMS.

SHEET SUMMARY				
ITEM	EST.	FINAL	UNIT	DESCRIPTION
100	231		LF	REMOVE OLD CONC (CURB)
530	20		LF	PROP. CONC. CURB TY"A"
514	931.8		LF	CONC. TRAFFIC BARRIER (TYPE 2)
450	848		LF	RAILING (TYPE T501)
421	115.8		CY	⊗ CLASS "C" CONC. (MISC.)
5653	1		EA	G.R.E.A.T. (TY"A") (10 BAY) (3.0')

⊗ FOR T501 RAIL FOUNDATION.

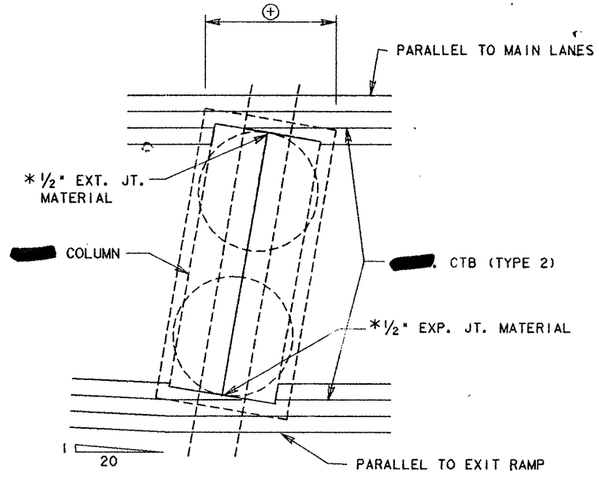

*FULL DEPTH OF RAIL WHERE IN CONTACT WITH COLUMN

DETAIL D

⊕ CONCRETE TRAFFIC BARRIER BLOCKED OUT AROUND THE COLUMN AS SHOWN ON DETAIL. THIS SECTION OF C.T.B. (30' MIN.) CAST IN PLACE.

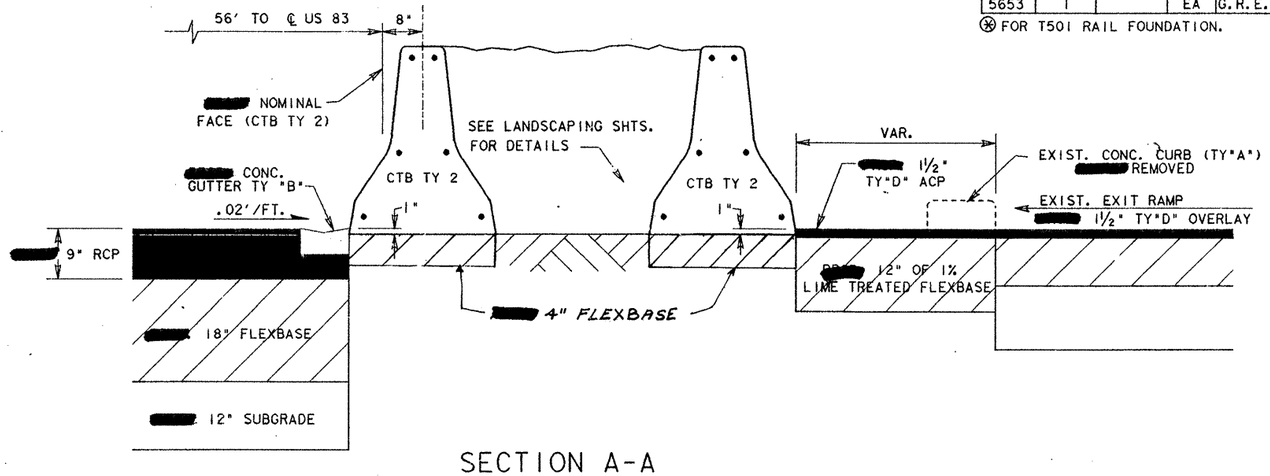

SECTION A-A

STATE OF TEXAS
MARIO R. JORGE
65538
LICENSED PROFESSIONAL ENGINEER
Mario R. Jorge, P.E.
10-31-91

CONCRETE TRAFFIC BARRIER & MISCELLANEOUS DETAILS

SHEET 3 OF 6 SHEETS
PLAN VIEW SCALE: 1"= 20'

FED. RD. DIV. NO.	FEDERAL AID PROJECT NO.		SHEET NO.
6	NH92 ( )M		113
STATE	STATE DIST. NO.	COUNTY	
TEXAS	21	HIDALGO	
CONT.	SECT.	JOB	HIGHWAY NO.
39	17	3349	US 83/281

PLOT SIZE: V80= XCONCTR3.PRF VER=CONCTR3.PRF FILE=CONCTR3.DGN

RAMP #4

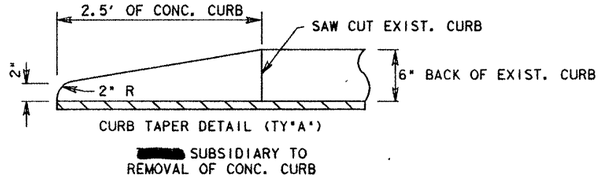

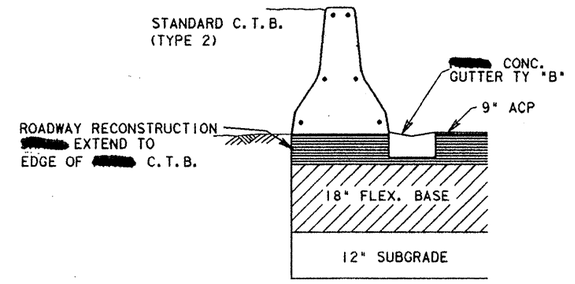

* EXIST. 32' PARAPET RAIL TRANSITION [redacted] REMOVED AND PAID FOR UNDER ITEM 452 "REMOVING RAIL" SEE T501 RAIL RETROFIT DETAILS ON SHEET NO. 117

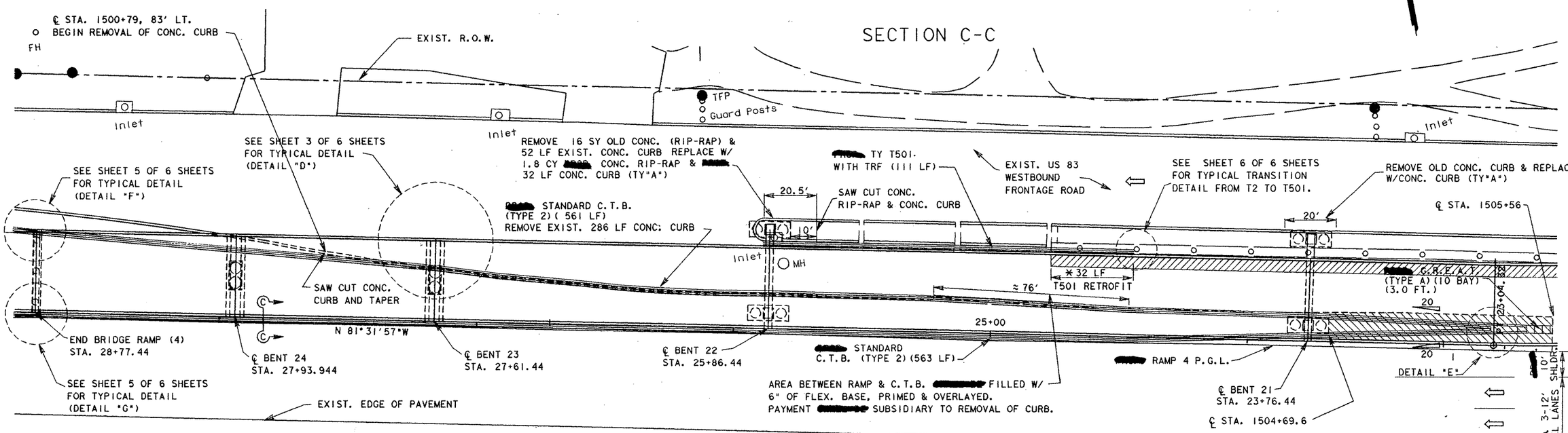

SHEET TOTALS				
ITEM	EST.	FINAL	UNIT	DESCRIPTION
100	358		LF	REMOVE OLD CONC (CURB)
100	16		SY	REMOVE OLD CONC. (RIP-RAP)
530	52		LF	CONC. CURB (TY"A")
432	1.8		CY	RIP-RAP (4")
514	1139.5		LF	CONC. TRAFFIC BARRIER (TYPE 2)
450	111		LF	RAILING (TYPE T501)
450	32		LF	RAILING (TYPE T501 RETROFIT)
452	32		LF	REMOVE RAILING
421	15.6		CY	⊗ CLASS "C" CONC. (MISC.)
5653	1		EA	G.R.E.A.T. (TY A) (10 BAY) (3.0')

⊗FOR T501 RAIL FOUNDATION.

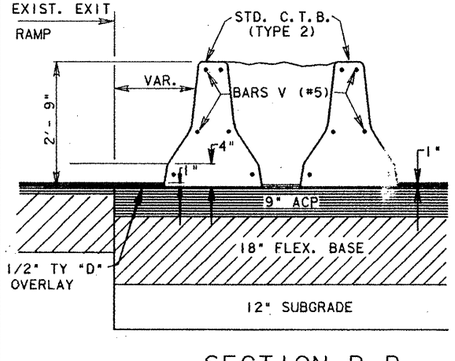

SECTION B-B

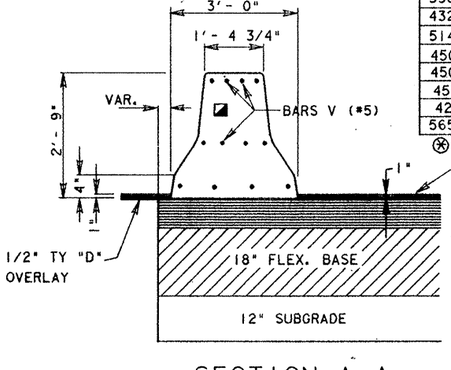

SECTION A-A

NOTE: RAIL DIMENSIONS AND REINFORCING STEEL NOT SHOWN [redacted] IN ACCORDANCE WITH CTB TYPE 2 STD.

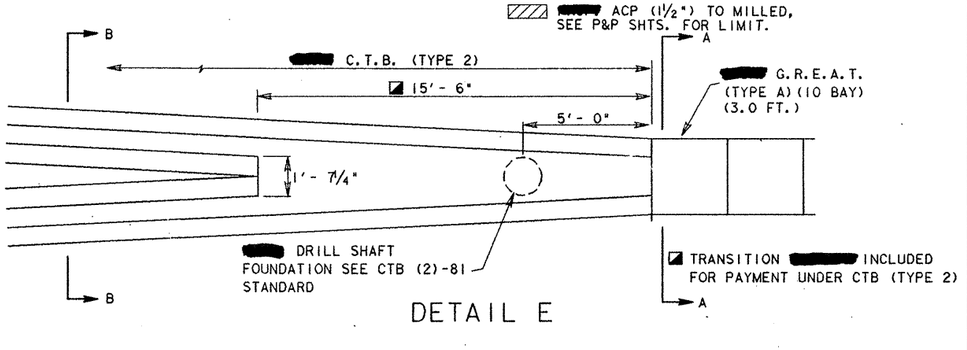

DETAIL E

Marion Jones, P.E.
10-31-91

CONCRETE TRAFFIC BARRIER & MISCELLANEOUS DETAILS

SHEET 4 OF 6 SHEETS
PLAN VIEW SCALE: 1"= 20'

FED. RD. DIV. NO.	FEDERAL AID PROJECT NO.		SHEET NO.
6	NH 92 ( )M		114
STATE	STATE DIST. NO.	COUNTY	
TEXAS	21	HIDALGO	
CONT.	SECT.	JOB	HIGHWAY NO.
39	17	[redacted]	US 83/281

PLOT SIZE: [illegible] XREF CONSTRL PRF [illegible] XREF CONSTRL PRF [illegible] FILE CONSTRL PRF

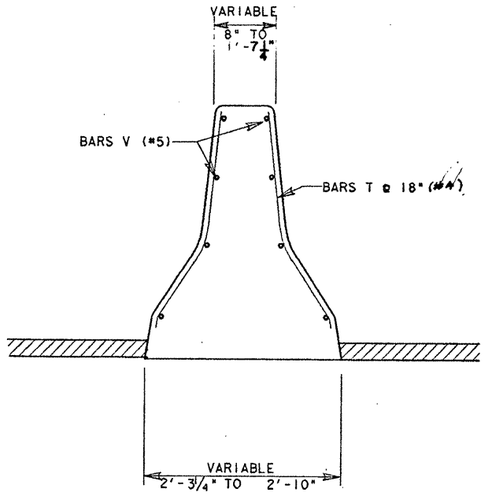

TRANSITION SECTION CTB TY. 2

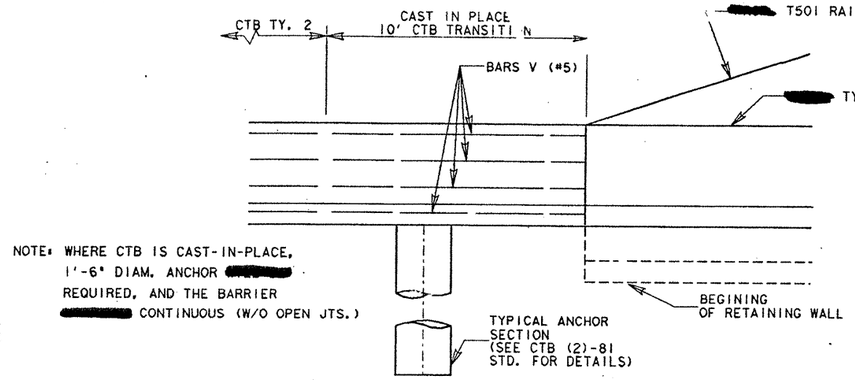

NOTE: WHERE CTB IS CAST-IN-PLACE, 1'-6" DIAM. ANCHOR [redacted] REQUIRED, AND THE BARRIER [redacted] CONTINUOUS (W/O OPEN JTS.)

ELEVATION

SHOWING RAIL TREATMENT @ END OF RET. WALL

NOTES:

⊙ THE FACE OF RETAINING WALL [redacted] SEALED WITH A GROUT ALONG THE TOP OF THE CTB AS DIRECTED BY THE ENGINEER. THIS WORK IS CONSIDERED SUBSIDIARY TO THE PARTICULAR RAIL ITEM.

CTB TRANSITION SECTION [redacted] HAVE THE SAME ANCHORAGE TO RETAINING WALL AS SHOWN FOR TY 5 CTB.

CTB LONGITUDINAL REINFORCING STEEL [redacted] BENT TO CONFORM WITH SLOPE ON TRANSITION SECTION.

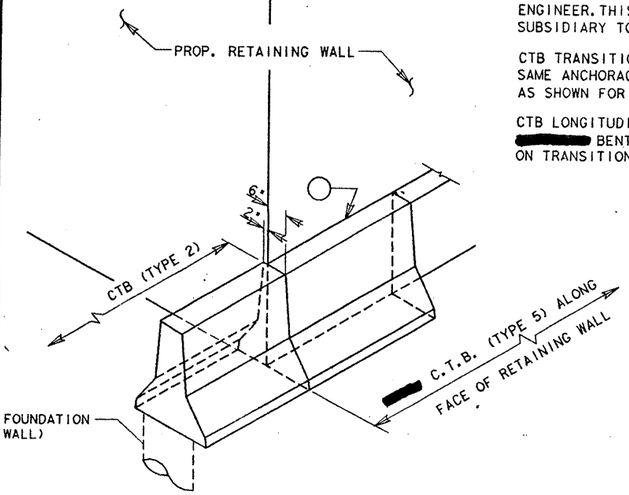

DETAIL "G" (TYPICAL)

PERSPECTIVE SHOWING TYPICAL CTB (TYPE 5) CONTINUATION ALONG FACE OF RETAINING WALL

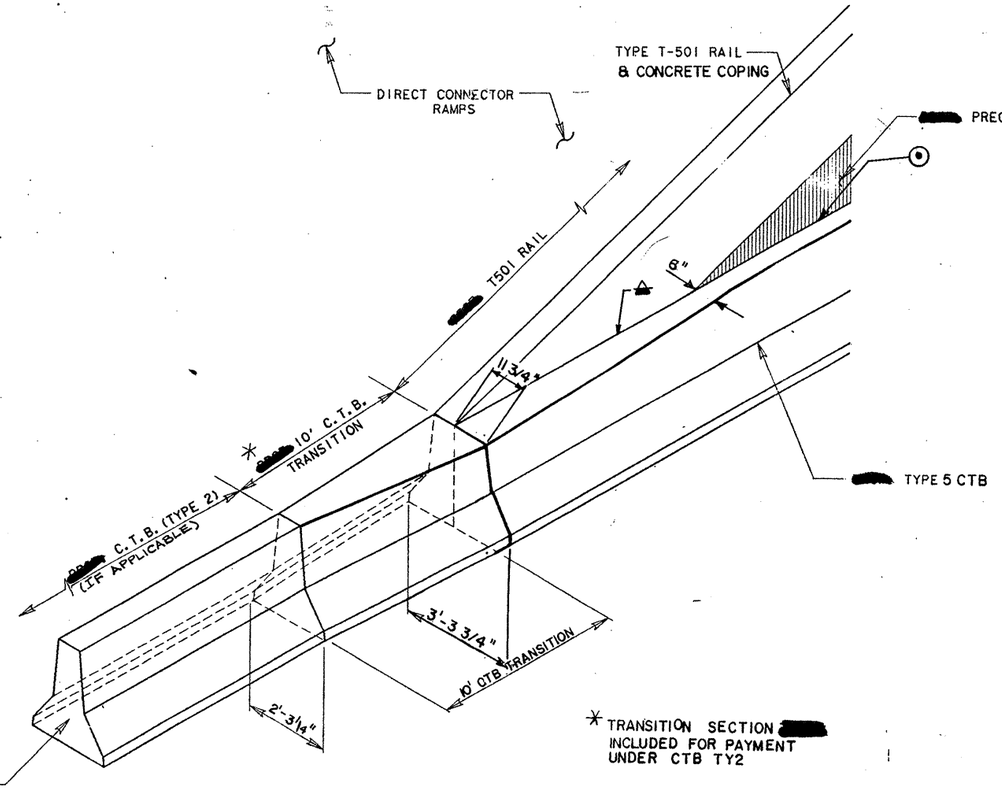

✳ TRANSITION SECTION [redacted] INCLUDED FOR PAYMENT UNDER CTB TY2

▲ CTB TYPE 5 [redacted] TRANSITIONED AS SHOWN ABOVE WHEN IT INTERCEPTS THE CONCRETE COPING AT THE END OF THE RETAING WALLS. THE COPING [redacted] EXTEND INTO THE TYPE 5 CTB, AND BARS "U" [redacted] CAST IN COPING WHEN IN CONFLICT THERE WITH.

TYPICAL T501 & CTB TYPE 5 AT END OF RET. WALLS.

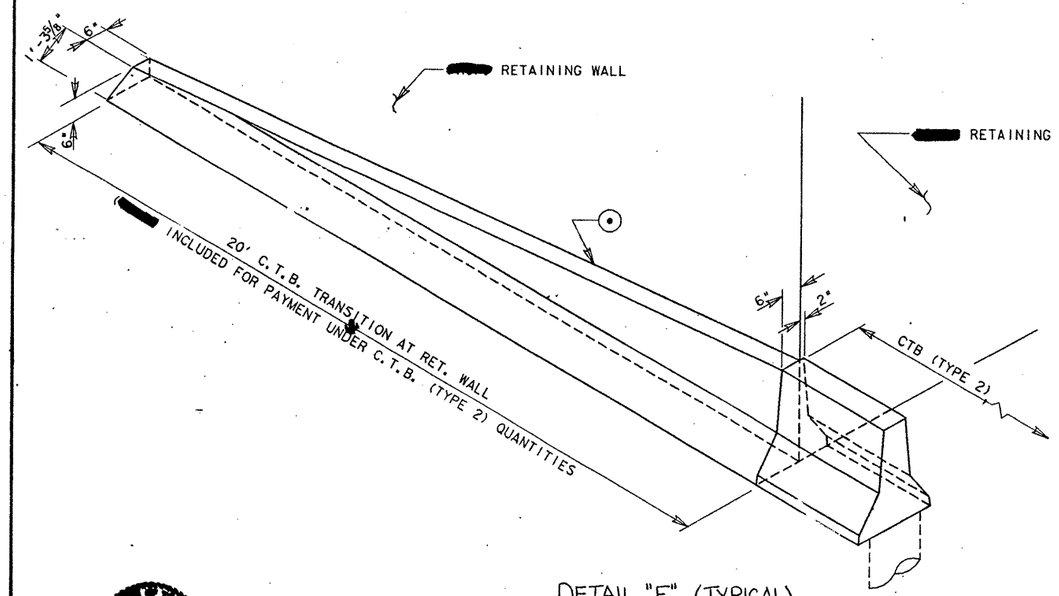

DETAIL "F" (TYPICAL)

PERSPECTIVE SHOWING TYPICAL CTB (TYPE 2) TERMINATION AT RETAINING WALL

MARIO R. JORGE 65536 — Mario R. Jorge, P.E. 10-2-98

CONCRETE TRAFFIC BARRIER MISCELLANEOUS DETAILS

SHEET 5 OF 6 SHEETS

FED. RD. DIV. NO.	FEDERAL AID PROJECT NO.		SHEET NO.
6	NH92 ( )M		115
STATE	STATE DIST. NO.	COUNTY	
TEXAS	21	HIDALGO	
CONT.	SECT.	JOB	HIGHWAY NO.
39	17	97	US83/281

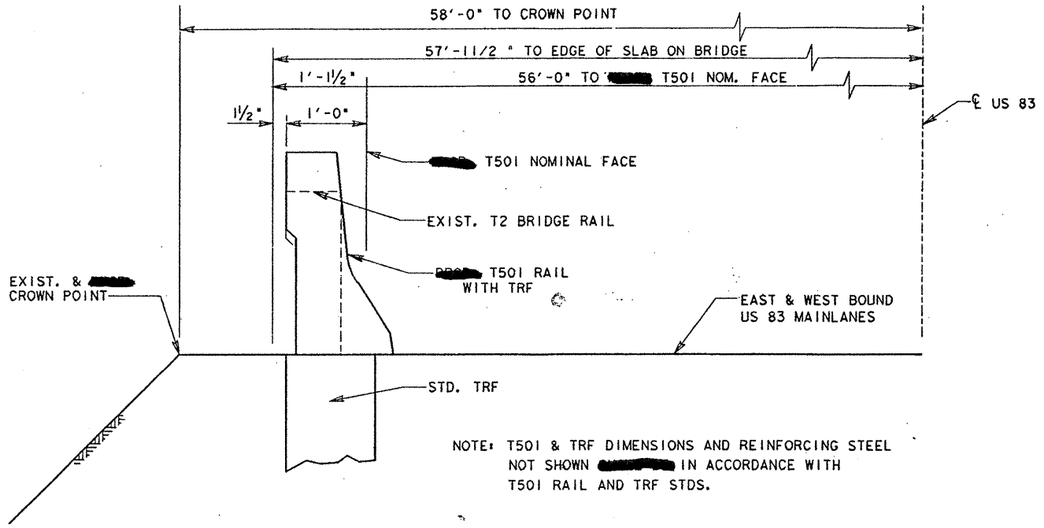

TYPICAL SECTION-ROADWAY T501 WITH TRF

SCALE: 1"= 1'

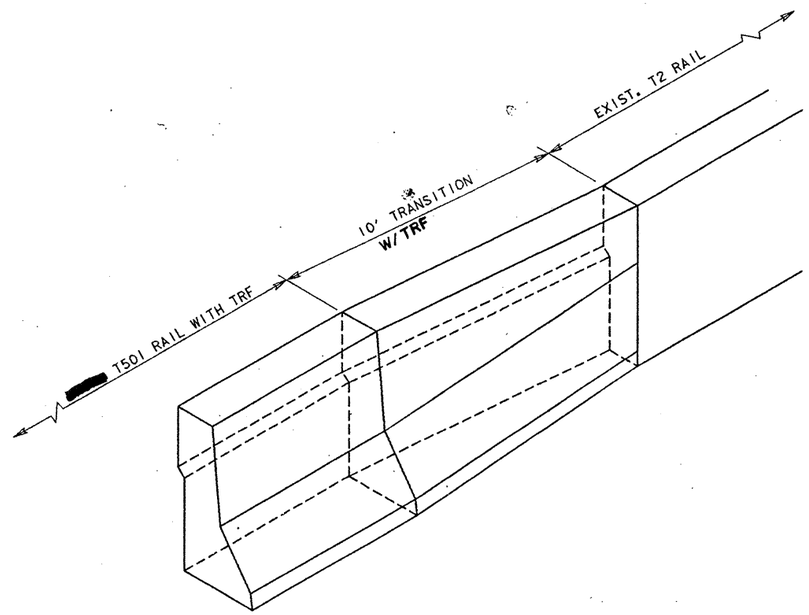

PERSPECTIVE SHOWING TRANSITION FROM T2 RAIL TO T501 STD. RAIL

NOTE: TRANSITION SECTION [redacted] PAID FOR AS T501 RAIL.

N.T.S.

TYPICAL TRANSITION DETAILS FROM EXIST. T2 RAIL TO [redacted] T501

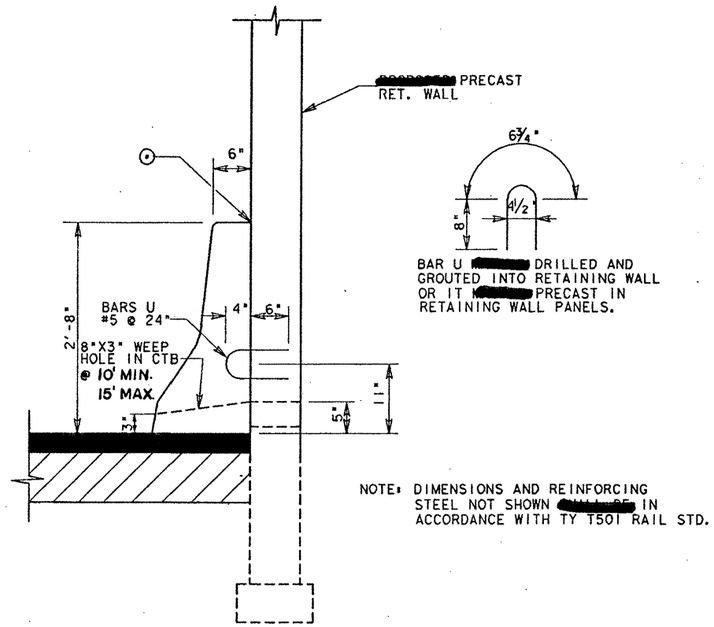

⊙ THE FACE OF RETAINING WALL [redacted] SEALED WITH A GROUT ALONG THE TOP OF THE CTB AS DIRECTED BY THE ENGINEER. THIS WORK IS CONSIDERED SUBSIDIARY TO THE PARTICULAR RAIL ITEM.

TYPE 5 CTB
(TYPICAL)

GENERAL NOTES:

ALL CONCRETE USED FOR TRAFFIC RAILS, CONCRETE TRAFFIC BARRIERS AND FOUNDATIONS [redacted] CLASS "C".

ALL TRAFFIC RAIL FOUNDATIONS [redacted] IN ACCORDANCE WITH DETAILS SHOWN ON TRF STANDARD.
ENDBLOCKS AND TRAFFIC RAIL FOUNDATIONS [redacted] PAID FOR UNDER ITEM 421 "CLASS C CONC. (MISC.)"

ALL CTB DRILLED SHAFT FOUNDATIONS LOCATED AS SHOWN IN THESE DETAILS AND/OR LOCATED 5'-0" AWAY FROM ADDITIONAL OPEN JOINT OR END OF CAST-IN-PLACE SECTIONS [redacted] IN ACCORDANCE WITH CTB(2)-81 STD.
THESE DRILLED SHAFT FOUNDATIONS [redacted] SUBSIDIARY TO THE CONCRETE TRAFFIC BARRIER.

STATE OF TEXAS
MARIO R. JORGE
65536
LICENSED PROFESSIONAL ENGINEER
Mario R. Jorge, P.E.
10-31-91

CONCRETE TRAFFIC BARRIER MISCELLANEOUS DETAILS

SHEET 6 OF 6 SHEETS

FED. RD. DIV. NO.	FEDERAL AID PROJECT NO.		SHEET NO.
6	NH 92 ( )M		116
STATE	STATE DIST. NO.	COUNTY	
TEXAS	21	HIDALGO	
CONT.	SECT.	JOB	HIGHWAY NO.
39	17	97	US83/281

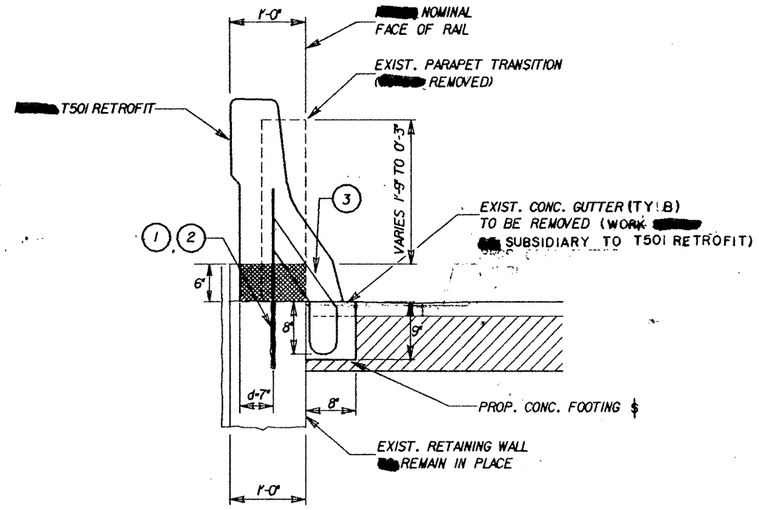

T501 RAIL RETROFIT AT PARAPET TRANSITION

LENGTH = 32'-0"

SCALE: 1"=1'

REMOVE TOP 6" OF EXISTING RETAINING WALL ALONG WITH PARAPET TRANSITION. ALL EXPOSED REINFORCEMENT CLEANED AND LEFT IN PLACE UNDAMAGED.

℄ - CONCRETE FOOTING (8" X 9") CLASS "C" (0.6 cy) INCLUDED FOR PAYMENT UNDER ITEM 421 CLASS "C" CONC. (MISC) SHOWN ON SHEET 114.

TABLE S

d INCHES	MAXIMUM ANCHOR SPACING (INCHES) DOWELS D NO. 6 GRADE 60
5	8.2
7	11.8
10	17.4
12	21.1
Other Spacing Interpolated	

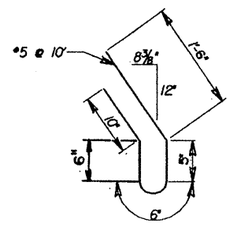

BARS "U" (3)

(SPACING SAME AS DOWEL D)

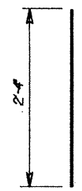

NO.6 DOWEL D

(GRADE 60)

(1), (2)

GENERAL NOTES

DESIGNED IN ACCORDANCE WITH AASHTO 1989 STANDARD AND INTERIM SPECIFICTIONS. SEE TRAFFIC RAIL TYPE T501 STANDARD FOR DETAILS NOT SHOWN HEREIN.

ADDITIONAL REINFORCING TACK WELDED TO THE UPPER TWO THIRDS OF THE REINFORCING CAGE TO PROVIDE BRACING WHEN SLIP FORMING IS USED. ADDITIONAL DOWELS OR ANCHORAGES ADDED WHEN WELDING IS NECESSARY IN THE LOWER ONE THIRD OF THE CAGE. WELDING TO BARS U OR DOWELS D NOT PERMITTED.

(1) NO. 6 DOWELS EPOXY GROUTED INTO THE EXISTING RETAINING WALL AS SHOWN.

THE HOLES FOR THE DOWELS 10 INCHES DEEP AND 0.875 TO 1.0 INCH IN DIAMETER. THE HOLES CLEAN AND DRY. COMPRESSED AIR, IF USED TO CLEAN THE HOLES, HAVE NO OIL IN SUSPENSION. THE HOLES DRILLED WITH IMPACT, ROTARY, OR PERCUSSION TYPE DRILLING EQUIPMENT.

THE DOWELS SET INTO THE HOLES WITH EPOXY BINDER WHICH CONFORMS TO THE REQUIREMENTS OF TX DOT EPOXY TYPE VIII (FORMERLY B-102). THEY NOT DISTURBED FOR A MINIMUM OF 72 HOURS IN WHICH THE AIR TEMPERATURE IS MORE THAN 40 DEGREES FARENHEIT. TEMPERATURES BELOW 40 DEGREES NOT CONSIDERED AS PART OF THE EPOXY CURING TIME

(2) AN APPROVED RESIN TYPE BINDER IN CAPSULES USED FOR THE NO. 6 DOWELS IN LIEU OF THE EPOXY BINDER. DEPTH OF HOLES AND INSTALLATION IN ACCORDANCE WITH MANUFACTURER'S RECOMMENDATIONS SUCH THAT THE FULL PULLOUT STRENGTH OF THE DOWELS OBTAINED.

T501 RAIL RETROFIT DETAILS AT EXISTING PARAPETTRANSITION

FED. RD. DIV. NO.	FEDERAL AID PROJECT NO.		SHEET NO.
6	NH 92 ( )M		117
STATE	STATE DIST. NO.	COUNTY	
TEXAS	21	HIDALGO	
CONT.	SECT.	JOB	HIGHWAY NO.
39	17	97	US83/281

ZEAR132FIG\T501RET.DGN PRF:SAME

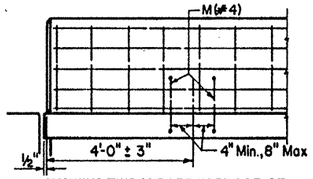

SHOWING TWO M BARS IN PLACE OF ONE ANCHOR BOLT ASSEMBLY

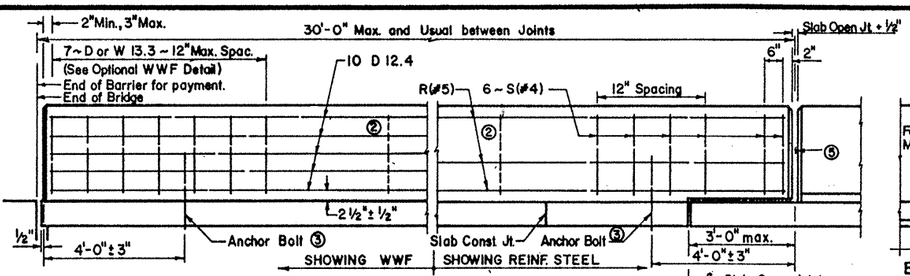

ELEVATION OF TRAFFIC BARRIER

② Note: Additional vertical wires or auxiliary conventional reinforcing shall be placed as necessary to provide cage stability. At least one vertical wire or bar is necessary at the mid point (± 1 ft.) of the segment.

⑤ No forming material to be left in place adjacent to slab expansion joints.

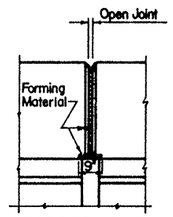

BARRIER JOINT FOR PRESTR. CONC. BOX BEAMS

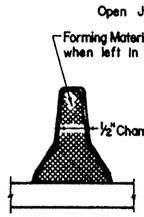

END VIEW

④ If forming material is not left in place, and barrier is on low side of roadway, the bottom 6" shall be plugged with concrete or joint sealing compound.

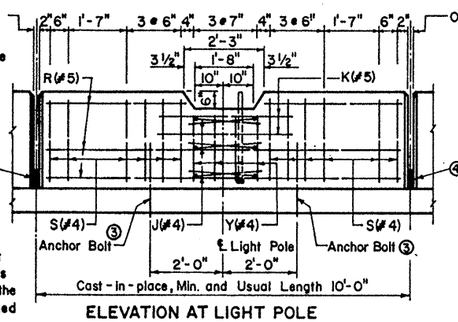

ELEVATION AT LIGHT POLE

③ Two Bars M may be used in lieu of each Anchor Bolt

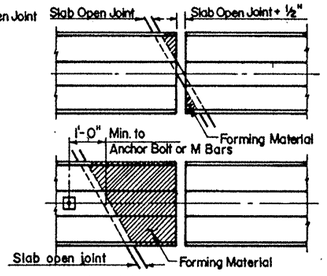

PLAN AT SLAB OPEN JOINTS

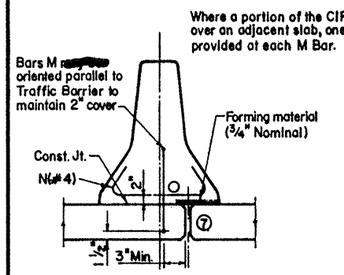

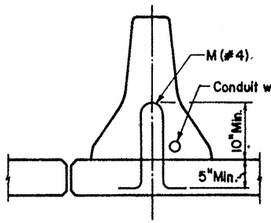

CAST-IN-PLACE ON NEW SLABS

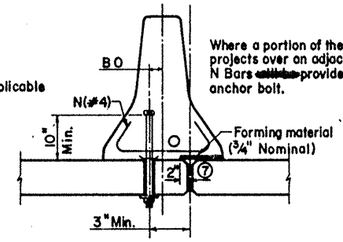

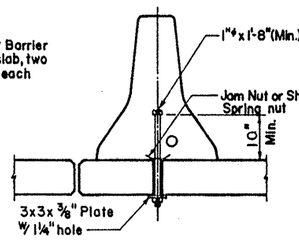

CAST-IN-PLACE ON NEW OR EXISTING SLABS

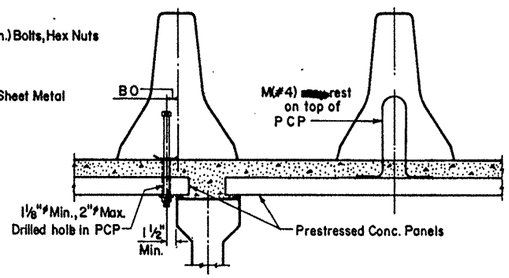

CAST-IN-PLACE WITH PCP SLABS

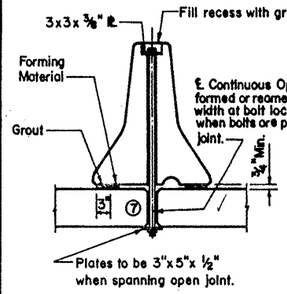

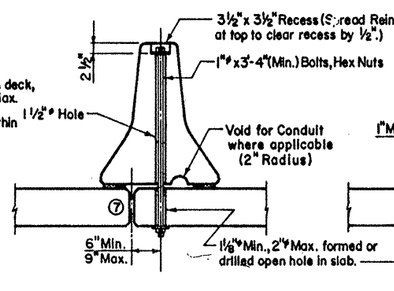

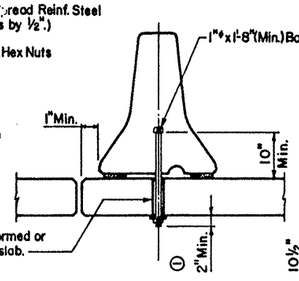

PRECAST ON NEW OR EXISTING SLABS

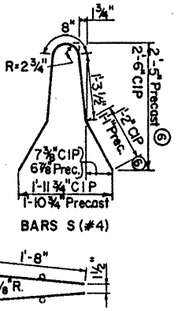

BARS S(#4)

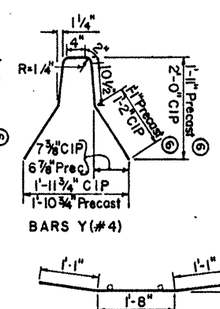

BARS Y(#4)

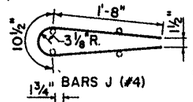

BARS J (#4)

Position of Pole Anchor Bolts

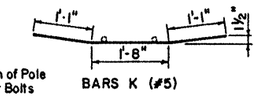

BARS K (#5)

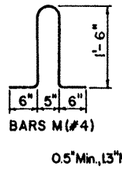

BARS M(#4)

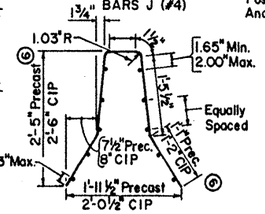

Detail shown is for D 12.4 longitudinal wires and D or W 13.3 vertical wires. Combinations of Reinforcing Steel and Welded Wire Fabric or configurations of Welded Wire Fabric other than shown will be permitted when conditions below are satisfied and the dimension from end of section to first welded vertical wire does not exceed 3".

DESCRIPTION	LONGITUDINAL WIRES	VERTICAL WIRES
1. Min. (Cumulative Total) Wire Area	1.24 Sq. in.	0.133 Sq. in. Per. Ft. (End 6'-0" of all sections)
2. No. of Wires Minimum Maximum	6 14	7 @ 12" 19 @ 4"
3. Maximum Wire Size Differential	The smaller wire shall have an area of 40% or more of the larger wire.	

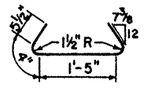

BAR N (#4)

⑥ Dimensions shown are permissible for structures with overlays up to 2 inches. Adjust by height of overlays over 2 inches.

⑦ Some longer span structures with open median joints require separate T501 (MOD) bridge railing on both sides due to the potential differential deflections.

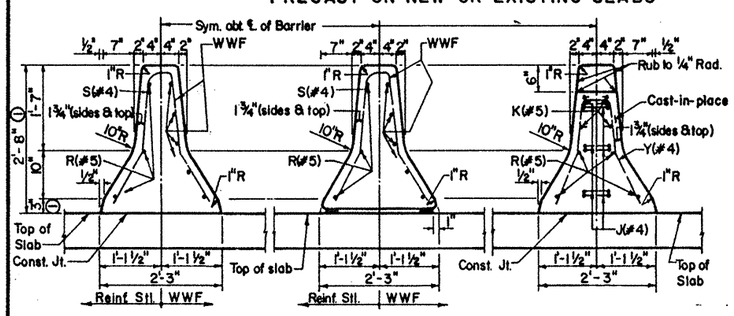

CAST-IN-PLACE PRECAST AT LIGHT POLE

TYPICAL SECTIONS

① Note: If bridge deck has Asphaltic Concrete Overlay, the height of cast-in-place and precast barriers and full height anchor bolts must be adjusted accordingly. See bridge layout sheet for overlay thickness.

Optional Slip Forming: Cast-in-place barrier may be slip formed. Additional reinforcement may be tack welded to the upper two-thirds of the reinforcing cage to provide bracing. Do not weld to M Bars or anchor bolts.

Bolt or Bar M Offset (B O)	No. of Bolts per Section	No. of M Bars per Section
0 to 2"	2	4
2" to 5" (Max)	3	6

ESTIMATED QUANTITIES (FOR INFORMATION ONLY)

	Conc.	Reinf. Steel	Str. Steel (Anchor Bolts)
	C.Y.	Lb.	Lb.
30'-0" Barrier Cast-in-place	3.5	228	17(b)
30'-0" Barrier (Precast)	3.4	160(a)	25(c)
10'-0" Light Pole Section	1.2	144	17(b)

(a) With W W F
(b) With 1'-8" Anchor Bolts
(c) With 3'-4" Anchor Bolts

GENERAL NOTES:

All concrete, reinforcement, anchor bolts, blocking, grout, etc., as shown are considered as part of the barrier for payment.

A cast-in-place section of barrier shall be provided, as shown if illumination poles are to be installed. See sheet CTBI(4) for the light pole, anchor bolt, and conduit details.

Concrete for barrier shall be Class A, C or H.

Welded wire fabric may be used as an option to the conventional reinforcement for precast or cast-in-place barrier. Only conventional reinforcement is to be used for the 10 ft. sections at any light poles. Welded wire fabric shall be made in accordance with ASTM A497.

Grout for precast barriers shall consist of two parts sand and one part cement. Latex adhesive may be added to the grout if directed by the Engineer. Wood or other material approved by the Engineer shall be used for blocking. Enough firm blocking shall be used to properly align and grade the barrier sections. At other locations, any suitable material may be used to retain the grout.

Joints shall be located near ends of spans, at ends of light pole sections, and at intervals in between as necessary to maintain 30 ft. maximum and 15 ft. minimum section lengths. When barrier is cast-in-place, a joint shall be placed at interior supports of continuous units. Joint openings shall be ½ inch minimum and 1 inch maximum or ½ inch wider than adjacent open slab joints. Material used in forming joints may be left in place if it is compressible and light in color. Where portions of barriers project over adjacent spans, similar materials may also be used to provide ¾ inch nominal clearance.

Anchor bolts and associated nuts, washers, and plates for the barrier to slab attachment shall be galvanized. Bolts shall conform to ASTM A307 (or A36 threaded rod with tack welded nut). Threaded rods may be 0.906 inch minimum diameter with rolled threads. Nuts shall conform to A307 requirements and shall be tapped or chased after galvanizing. Bolts and nuts shall have Class 2A and 2B fit tolerances.

The centerline axis of the barrier shall be vertical except where the slab is superelevated in which case it shall be normal to the cross slope unless otherwise shown in the plans or directed by the Engineer.

The maximum offset from the center of the barrier to the true circular centerline shall be one inch for precast segments installed on horizontal curves. If this would require segment lengths of less than 15 feet, then the barrier shall be cast-in-place to the correct radius.

Shop drawings are not required for this barrier.

Anchorage systems equal to or stronger than those shown may be used provided the details of such systems are submitted to and approved by the Engineer prior to placement.

STATE DEPARTMENT OF HIGHWAYS AND PUBLIC TRANSPORTATION

CONCRETE TRAFFIC BARRIER TYPE 1

PRECAST OR CAST-IN-PLACE (BRIDGE)

CTBI(1)-85

ORIGINAL DRAWING DATE: OCTOBER 1985	STATE ENGINEER	FEDERAL REGION	FEDERAL AID PROJECT ID				SHEET
DR:-MPM		21	6	NH 92(58)M			118
CH:-JJP		COUNTY		CONTROL	SECTION	JOB	HIGHWAY
DR:-EDS		Hidalgo		39	17	97	4588
CH:-MPM							A-52

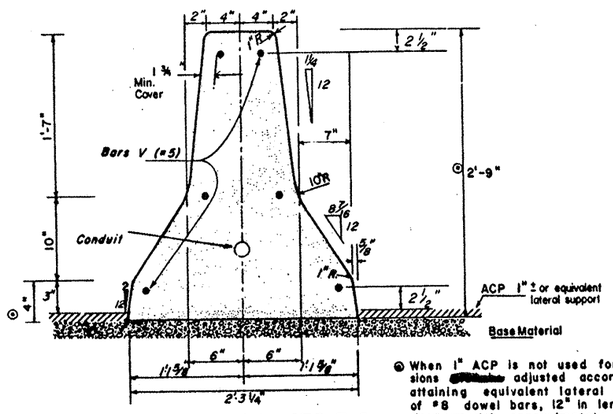

TYPICAL SECTION CTB Ty 2

(Rdwy Cast-in-Place)

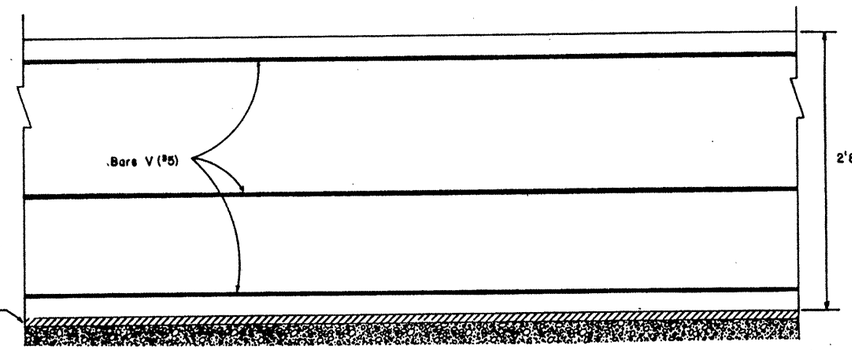

ELEVATION OF RDWY BARRIER CTB TY2

Ⓐ When 1" ACP is not used for lateral support, these dimensions [redacted] adjusted accordingly. Permissible methods of attaining equivalent lateral support include: (1) provision of #8 dowel bars, 12" in length, 4'c-c spacing, placed vertically — with approximately one-half the bar length embedded below the concrete traffic barrier, or (2) 1" (min) deep keyway in concrete pavement, excess width in keyway backfill with grout.

GENERAL NOTES

AXIS OF TRAFFIC BARRIER [redacted] VERTICAL, EXCEPT WHERE ROADWAY IS SUPERELEVATED, THEN AXIS [redacted] NORMAL TO ROADWAY SURFACE.

ALL STEEL FITTINGS [redacted] GALVANIZED AFTER FABRICATION.

UNLESS OTHERWISE SHOWN IN THE PLANS THE CONTRACTOR HAS THE OPTION OF PLACING EITHER PRECAST OR CAST-IN-PLACE CONCRETE TRAFFIC BARRIER.

CTB TY 2&3

BID PRICE PER LINEAR FOOT OF CTB TY 2&3, INCLUDING TERMINAL AND ANCHOR SECTIONS, [redacted] INCLUDE ALL OF THE CONCRETE, REINFORCEMENT, DRILLED SHAFT FOUNDATIONS AND AGGREGATE BACKFILL.

ALL CONCRETE FOR CTB TY 2&3, INCLUDING DRILLED SHAFT FOUNDATION, [redacted] CLASS A, C or H.

LONGITUDINAL AND VERTICAL BARS FOR ROADWAY BARRIER [redacted] CONFORM TO ASTM A-615 (GRADE 40).

AT CONSTRUCTION JOINTS FOR THE ROADWAY BARRIER, THE LONGITUDINAL BARS [redacted] EXTEND BEYOND THE JOINT SO THAT BAR SPLICES [redacted] A MINIMUM OF TWO FEET FROM THE CONSTRUCTION JOINT.

BAR SPLICES FOR ROADWAY BARRIER [redacted] A MINIMUM OF 24 TIMES THE NOMINAL DIAMETER OF THE BAR.

ANY METHOB DEVISED BY THE CONTRACTOR AND APPROVED BY THE ENGINEER THAT [redacted] ASSURE THE LONGITUDINAL ROADWAY STEEL FOR CTB TY 2&3 [redacted] POSITIONED ± ½-INCH AS DIMENSIONED [redacted] SATISFACTORY.

CONDUIT [redacted] PROVIDED ONLY WHEN CALLED FOR ELSEWHERE IN THE PLANS. POSITION OF CONDUIT [redacted] ADJUSTED TO FACILITATE CONSTRUCTION SUBJECT TO APPROVAL OF THE ENGINEER.

SEE SHEET CTBI(4) FOR LIGHTING, ANCHOR BOLT, AND CONDUIT DETAILS. SEE CTBI(3)-81 FOR DESIGN DETAILS OF BARRIER WITH ILLUMINATION.

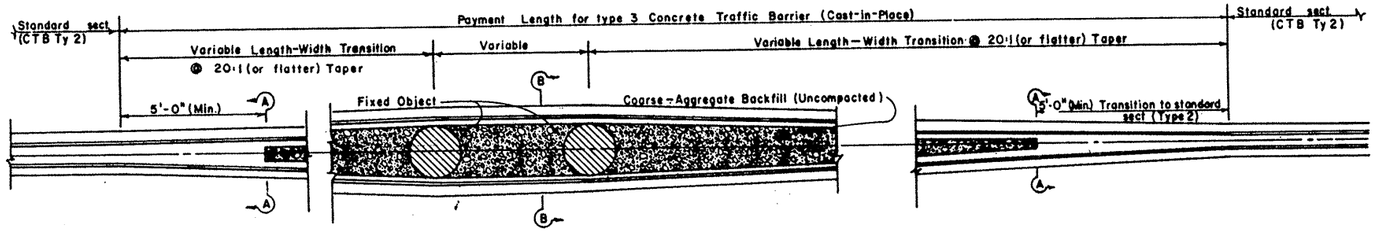

PLAN TYPE 3 BARRIER

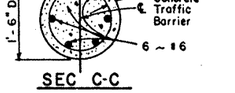

SEC C-C

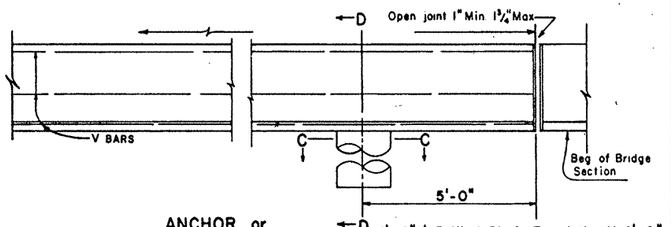

ANCHOR or TERMINAL-ELEVATION

1'-6" ϕ Drilled Shaft Foundation X 4'-0" Unless shown otherwise in the plans.

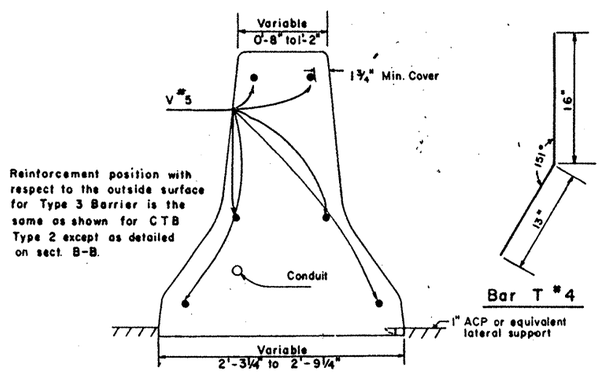

SECTION A-A TYPE 3 BARRIER

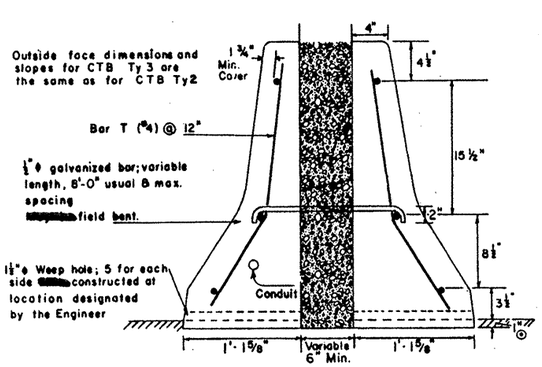

SECTION B-B TYPE 3 BARRIER

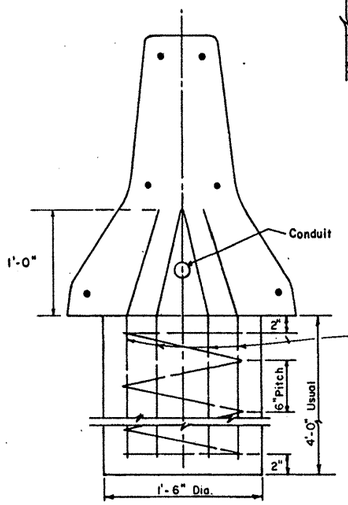

ANCHOR DETAIL - SECTION D-D

Rev. 7-28-83
Concrete for Barrier shall be Class A, C or H.

STATE DEPARTMENT OF HIGHWAYS AND PUBLIC TRANSPORTATION

CONCRETE TRAFFIC BARRIER TYPE 2 & 3 ROADWAY CTB CAST-IN-PLACE CTB(2)-81

DN.	DRAWING	DATE	FED. ROAD DIV. NO.	STATE	FEDERAL PROJECT NO.				SHEET NO.
CK. DN.	ORIGINAL		6	TEXAS	NH 92(50)M				119
DW.	REVISED								
CK. DW.	REVISED		STATE DIST. NO.	COUNTY		CONT.	SECT.	JOB	HIGHWAY NO.
TR.			21	Hidalgo		39	17	97	U1583
CK. TR.									A-53

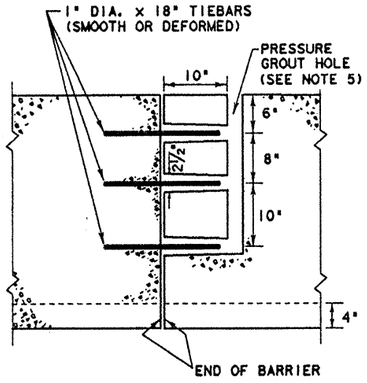

SECTION THROUGH ℄ AT JOINT
MALE-FEMALE DESIGN OPTION

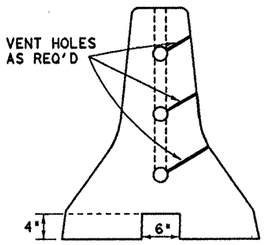

END VIEW
MALE-FEMALE DESIGN OPTION

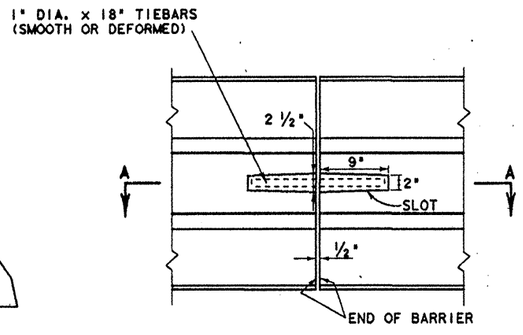

PLAN
SLOTTED DESIGN OPTION

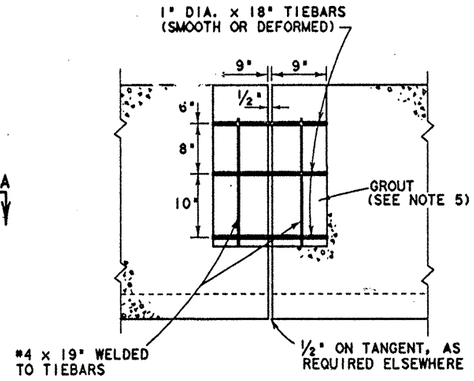

SECTION A-A (THROUGH ℄ AT JOINT)
SLOTTED DESIGN OPTION

JOINT TYPE A

GENERAL NOTES

1. WHERE ILLUMINATION IS [redacted] PLACED ON CONCRETE TRAFFIC BARRIER, A 10' CAST-IN-PLACE SECTION [redacted] PROVIDED AT EACH LIGHT POLE LOCATION AS SHOWN ON SHEET CTBI(3). POLE, ANCHOR BOLT, AND OTHER ILLUMINATION DETAILS ARE SHOWN ON SHEET CTBI(4).
2. CONCRETE [redacted] CLASS A, C or H.
3. REGARDLESS OF THE METHOD OF HANDLING, BARRIER SECTION LIFTING POINTS [redacted] 6 ¼ FEET FROM THE ENDS OF THE BARRIER. LIFTING DEVICES AND ATTACHMENTS TO BARRIER SECTIONS [redacted] AS APPROVED BY THE ENGINEER.
4. FOR JOINT TYPE A BARRIER THAT IS INSTALLED IN A TEMPORARY LOCATION, TIE BARS [redacted] PLACED IN THE SLOT WHEN THE SLOT DESIGN OPTION IS USED OR, FOR THE MALE-FEMALE DESIGN OPTION, THE MALE-FEMALE CONNECTIONS [redacted] MATED. NEITHER OF THE OPTIONAL JOINT TYPES [redacted] GROUTED FOR TEMPORARY LOCATIONS OF BARRIER.
5. WHEN INSTALLED IN A PERMANENT ROADWAY LOCATION, END CONNECTIONS OF THE JOINT TYPE A BARRIER [redacted] GROUTED WITH A MIXTURE OF TWO PART SAND AND AND ONE PART CEMENT WITH ENOUGH WATER TO MAKE THE MIXTURE PLASTIC. GROUTING [redacted] DONE IN A MANNER THAT [redacted] ASSURE A SMOOTH SURFACE AT THE JOINT.
6. SURFACE FINISHING AND GROUTING (WHERE REQUIRED) [redacted] CONSIDERED SUBSIDIARY TO THE VARIOUS BID ITEMS INVOLVED.
7. ALL STEEL FITTINGS FOR TYPE B BARRIER [redacted] GALVANIZED AFTER FABRICATION.
8. BARRIER LENGTH [redacted] 30 FEET (+\-4 INCHES) UNLESS SPECIFIED ELSEWHERE IN PLANS.
9. FORMS [redacted] CONSTRUCTED OF STEEL. EDGES OF BARRIER [redacted] ROUNDED OR CHAMFERED AS SHOWN ON SHEET PCTB(2).
10. THE CONTRACTOR HAS THE OPTION OF PLACING PRECAST (JOINT TYPES A, B, OR CAST-IN-PLACE TYPE 2 CONCRETE TRAFFIC BARRIER AS SHOWN ON SHEET CTB(2)-81 UNLESS OTHERWISE SHOWN IN THE PLANS.

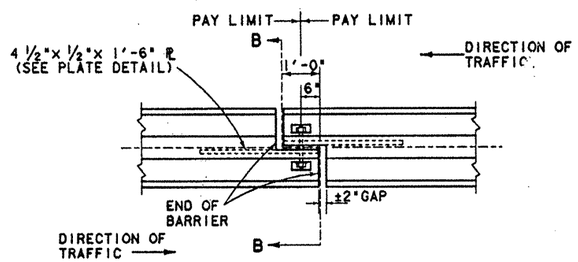

PLAN
END DETAIL

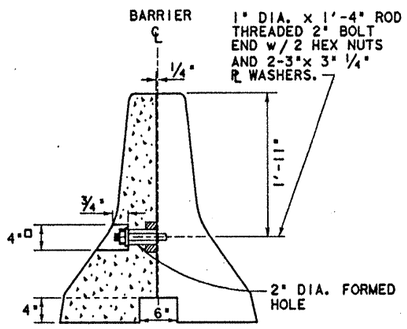

SECTION B-B

JOINT TYPE B

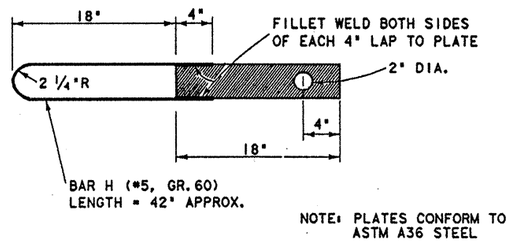

NOTE: PLATES CONFORM TO
ASTM A36 STEEL

PLATE DETAIL

STATE DEPARTMENT OF HIGHWAYS
AND PUBLIC TRANSPORTATION

PRECAST CONCRETE TRAFFIC BARRIER TYPE 2

PCTB(1)-90

MODIFICATIONS	FED. RD. DIV. NO.	STATE	FEDERAL AID PROJECT NO.			SHEET NO.
	6	TEXAS	NH 92(50)M			120
	STATE DIST. NO.	COUNTY	CONT.	SECT.	JOB	HIGHWAY NO.
	21	Hidalgo	39	17	97	1/583

A-56

GOVERNING SPECIFICATIONS FOR BOTH WIRE AND WELDED WIRE FABRIC [illegible] ASTM A 82, ASTM A 185, ASTM A 496 AND ASTM A 497. WIRE FABRIC [illegible] NOT [illegible] PAID FOR DIRECTLY AND [illegible] CONSIDERED SUBSIDIARY TO THE BID ITEM FOR CONCRETE TRAFFIC BARRIER.

CONFIGURATIONS OF WELDED WIRE FABRIC OTHER THAN AS SHOWN IN THE WWF DETAIL [illegible] PERMITTED WHEN THE CONDITIONS TABULATED BELOW ARE SATISFIED.

DESCRIPTION	LONGITUDINAL WIRES	VERTICAL WIRES
1. WIRE TYPE	DEFORMED	SMOOTH OR DEFORMED
2. MINIMUM (CUMULATIVE TOTAL) WIRE AREA	1.24 SQ. IN.	0.133 SQ. IN. PER FT. (REQ'D ONLY IN END 3'-4" OF PRECAST SECTIONS)
3. NO. OF WIRES MINIMUM MAXIMUM	 6 14	 4 @ 12" CC EA. PRECAST END 12 @ 4" CC EA. PRECAST END
4. BENDING RADIUS	N/A	MINIMUM RADIUS = TWO VERTICAL WIRE DIAMETERS
5. WIRE PLACEMENT A. TOP WIRES	NOT LESS THAN 4 NOR MORE THAN 5 VERTICAL WIRE DIAMETERS FROM THE UPPER BENDS IN THE VERTICAL WIRES	N/A
B. BOTTOM WIRES	4" PLUS OR MINUS ½" FROM BOTTOM OF BARRIER	N/A
C. OTHER WIRES	UNIFORMLY AND SYMMETRICALLY SPACED ALONG FACES OF BARRIER	MINIMUM SPACING 4" MAXIMUM SPACING 12"
6. MAXIMUM WIRE SIZE DIFFERENTIAL	THE SMALLER WIRE [illegible] HAVE AN AREA OF 40% OR MORE OF THE LARGER WIRE.	

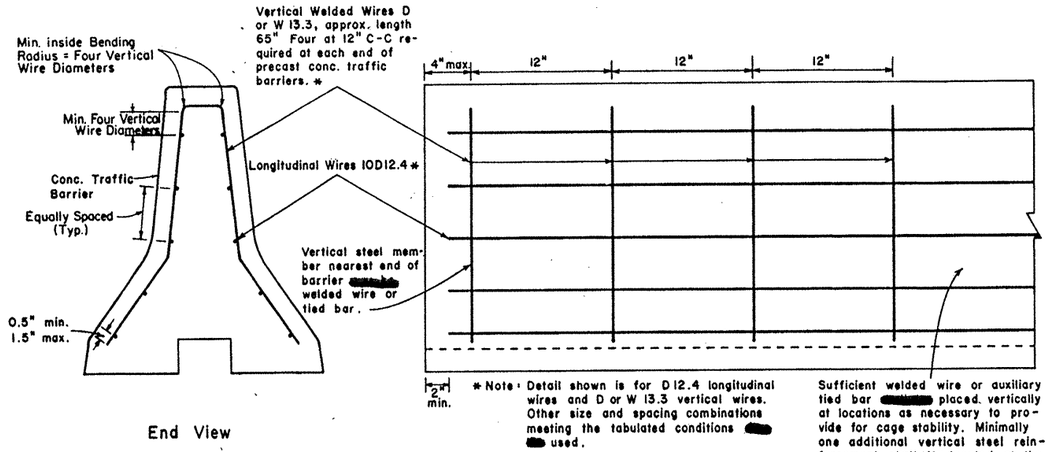

End View

Elevation - Each end of Concrete Traffic Barrier

DETAILS OF WELDED WIRE FABRIC OPTION

GENERAL NOTES

1. WHERE USED, REBAR REINFORCEMENT [illegible] CONFORM TO ASTM A-615 (GRADE 40).
2. BARRIER LENGTH [illegible] 30 FEET (+/-4 INCHES) UNLESS OTHERWISE SPECIFIED IN THE PLANS.

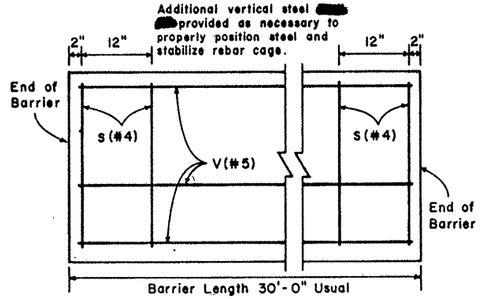

Elevation Near End of Barrier

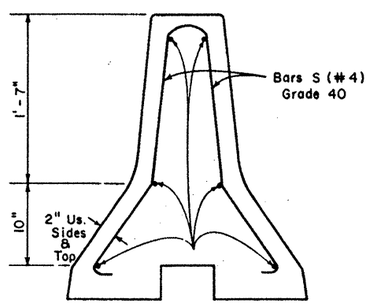

Section Near End of Barrier

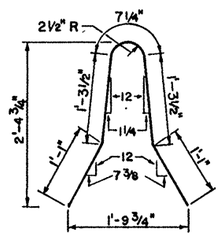

BARS S (#4)

DETAILS OF REBAR OPTION

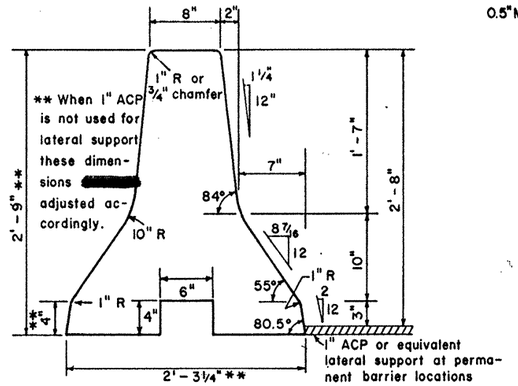

DETAILS OF BARRIER SHAPE

** WHEN 1" ACP IS NOT USED FOR LATERAL SUPPORT THESE DIMENSIONS [illegible] ADJUSTED ACCORDINGLY

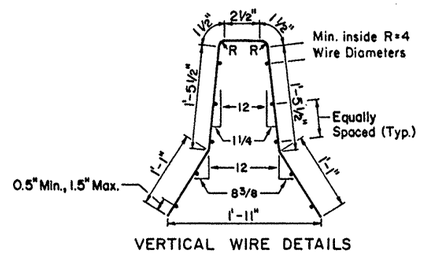

VERTICAL WIRE DETAILS

# APPROXIMATE P.L.F. QUANTITIES		
CONCRETE	CY.	0.112
REBAR	LB.	6.62
WELDED WIRE FABRIC	LB.	4.82

FOR CONTRACTOR'S INFORMATION ONLY

WEIGHT OF ONE 30' UNIT = APPROXIMATELY 7 TONS

STATE DEPARTMENT OF HIGHWAYS AND PUBLIC TRANSPORTATION

PRECAST CONCRETE TRAFFIC BARRIER TYPE 2

PCTB (2)-85

DN:	DRAWING	DATE	FED RD DIV NO.	STATE	FEDERAL PROJECT NO.			SHEET NO.
CK. DN.	ORIGINAL							
DW.	REVISED		6	TEXAS	NH 92(50)M			121
CK. DW.	REVISED		STATE DIST. NO.	COUNTY		CONT.	SECT.	JOB
TR								HIGHWAY NO.
CK. TR			21	Hidalgo		39	17	97 4543

A-57

APPROX. STA 1511+15
HOLE #4
(140 LT.)

℄ BENT NO. 2
STA. 1512+26

℄ BENT NO. 3
STA. 1512+78

APPROX. STA 1514+15
HOLE #5 (140' LT.)

EXIST. RET. WALL
WITH T2 RAIL
(REMAIN) IN PLACE.

EXIST EXIT RAMP

EXIST. 24' MAIN LANE

EXIST. CONC.
RIPRAP
(REMOVED)

EXIST CONC, RIPRAP
(REMOVED)

CONC. TRAFFIC BARRIER
TYPE CTB (2)
S 81°31'57.26" E

1510+00

EXIST 150' MBGF & T.A.S.
(REMOVED)

EXIST. 24' MAIN LANE

EXIST 300' MBGF & T.A.S. (REMOVED)

T501 RAIL WITH T.R.F.

BEGIN BRIDGE
LT. MAIN LANES
STA. 1511+85.25
ELEV =129.08

FACE OF RAIL
TY T2 (EXIST.)

BEGIN BRIDGE
RT. MAIN LANES
STA. 1511+85.25
ELEV =129.08

FACE OF RAIL
TY T2 (EXIST.)

BREAK BACK LINE

EXIST. RIPRAP
(TO REMAIN)

CONC.
RIPRAP

EXIST. 20'
TURNAROUND
LANE

EXIST. 14'

EXIST. 38'

EXIST. 4'
SIDEWALK

38° PROTECTIVE
ANGLE

US 281 ℄

℄ EXIST BEAM #7

℄ EXIST. BEAM #3

℄ BEAM #2

℄ BEAM #1

TY B CONST. JT.

ARMOR JT.
(2" PJS)

57'-1½" OVERALL WIDTH
55'-6" CLEAR ROWY

EXIST. 37'-10½"
REMAIN

19'-3" WID.

0.04"/FT.

1'-1½"

22'-0"

PRECAST
CONC. TRAFFIC
BARRIER TY CTB(2)

EXIST. 42'-3"
OVERALL WIDTH
EXIST. 40'-0"
CLR. ROWY.

EXIST.
CONC. CURB

38° PROTECTIVE ANGLE

EXIST.
PAVED MEDIAN

CITY OF PHARR
8" SAN SEWER

RGV GAS CO.
4" LINE

CITY OF PHARR
12" AC WATER LINE

SW BELL TEL CO.
EX TEL CONDUIT

43'
57'
62'

ALL BENTS ARE ON
BEARING: S 8°28'2.7" W

CRACKS AND JOINTS
SEALED. SEALING (SUBSIDIARY)
TO THE VARIOUS BID ITEMS.

EXIST. & OVERALL WIDTH
EXIST. 40'-0"
CLR. ROWY.

END BRIDGE
LT. MAIN LANES
STA. 1513+70.75
ELEV =129.12

EXIST. 187.5' MBGF & T.A.S. (REMOVED)

T501 RAIL WITH T.R.F.

EXIST. 24' MAIN LANE
(WEST BOUND)

LEFT MAIN LANES PGL

EXIST 150' MBGF & T.A.S.
(REMOVED)

TY B CONST. JT.

FACE OF CTB

1515+00

EXIST CONC, RIPRAP
(REMOVED)

22'

EXIST. CONC.
RIPRAP TO
REMOVED

FACE OF CTB

℄ US 83

CONC. TRAFFIC BARRIER TY CTB (2)

RIGHT MAIN LANES PGL

EXIST. 24' MAIN LANE
(EAST BOUND)

END BRIDGE
RT. MAIN LANES
STA. 1513+70.75
ELEV =129.12

EXIST EXIT RAMP

EXIST 25' MBGF & T.A.S.
(REMOVED)

T501 RAIL WITH T.R.F.

NOTE: CONTRACTOR VERIFY ALL DIMENSIONS AND ELEVATIONS IN THE FIELD PRIOR TO CONSTRUCTION AND ORDERING MATERIALS.

⊕ REMOVAL OF CONCRETE RIPRAP SUBSIDIARY TO ITEM 100 "ROW".

BEGIN BRIDGE
LT. & RT. MAIN LANES
STA. 1511+85.25
PGL ELEV. =129.08

BEGIN BRIDGE RAIL
FOR PAYMENT

VPI-STA. 1512+78
ELEV. =138.97
VC=1120'
EXT. =9.61'

END BRIDGE RAIL
FOR PAYMENT

END BRIDGE
LEFT & RIGHT MAIN LANES
STA. 1513+70.75
PGL ELEV. =129.12

CONC. TRAFFIC BARRIER (MEDIAN) TY CTB (2)

T501 RAIL WITH T.R.F. (RT. SIDE)

EXIST. M.B.G.F. (RT. SIDE) (REMOVED)

EXIST. RET. WALL W/TY T2 RAIL (REMAIN)

EXIST. & OVERALL LENGTH 185'-6"

TOTAL LENGTH OF PRECAST CTB (1) (BRIDGE) =185'-6"

CONC. TRAFFIC BARRIER (MEDIAN) TY CTB (2)

T501 RAIL WITH T.R.F. (BOTH SIDES)

(RT. SIDE) EXIST. M.B.G.F. (REMOVED)

(LT. SIDE) EXIST. M.B.G.F. (REMOVED)

140
130
120
110
100
90
80

10.25'

0.75'

EXIST. & 40' PREST. CONC. BEAM SPAN

EXIST. & 52' PREST. CONC. BEAM SPAN

EXIST. & 52' PREST. CONC. BEAM SPAN

EXIST. & 40' PREST. CONC. BEAM SPAN

38° PROTECTIVE ANGLE (NORTH)

38° PROTECTIVE ANGLE (SOUTH)

TY B PCB

3.4547%

3.4100%

EXIST. & 15.29' MIN VERT. CL.

EXIST. & 15.83' MIN VERT. CL.

EXIST. 20'

EXIST. 38' F-F

H=13'

EXIST. 4-#6 Ø DISPL. PILING X 25'

EXIST. 12-#6 Ø DISPL. PILING X 45'

EXIST. 6-30" Ø DRILLED SHAFTS X 33' W/5' BELLS

2-30" Ø DRILLED SHAFTS X 50'

2-30" Ø DRILLED SHAFTS X 55'

TIP ELEV. = 68'

TIP ELEV. = 60'

APPROX. STA 1511+15
HOLE #4
ELEV. = 109.00

50(5.5') 50(4.3')	BROWN CLAY, COMPACT MOIST	LOOSE DIRT
50(4.0') 50(4.1')		BROWN CL W/TRACES SAND, COMPT MOIST
50(5.8') 50(5.4')	BROWN CLAY WITH GRAY-GREEN CLAY MIXED IN	BROWN CLAY MOIST COMPACT
		BROWN CLAY, TRACES CHALK, MOIST COMPACT
50(5.8') 50(5.1')		TANNISH CL, MOIST COMPT, TRACE CHALK
29(6.0') 51(5.3')		2-30" Ø DRILLED SHAFTS X 55'

10(6.0') 9(6.0')		
10(6.0') 7(6.0')		
13(6.0') 13(6.0')		
14(6.0') 16(6.0')		
11(6.0') 11(6.0')		
21(6.0') 24(6.0')		

DRILLED SHAFTS WERE DESIGNED USING SKIN FRICTION & POINT BEARING.

50(6.0') 50(4.6')
33(6.0') 21(6.0')
SANDY CLAY, SLIGHTLY, COMP, MOIST
50(5.75') 50(4.8')

APPROX. STA 1514+15
HOLE #5
ELEV. = 109.00

	BLACK DIRT
10(6.0') 10(6.0')	BROWN CL, COMPACT MOIST
12(6.0') 7(6.0')	BROWN CLAY W/TRAC CHALK & CALICHE
7(6.0') 9(6.0')	BROWN CLAY COMPACT, MOIST, TRACES OF REDDISH-BROWN CLAY
14(6.0') 17(6.0')	
9(6.0') 10(6.0')	TANNISH BROWN CLAY W/ TRACES OF WHITE CHALK
30(6.0') 30(6.0')	
25(6.0') 27(6.0')	BROWN CLAY, COMPACT MOIST
30(6.0') 33(6.0')	

1510+00 1511+00 ① 1512+00 ② ③ 1513+00 ④ ⑤ 1514+00 1515+00

STATE OF TEXAS
JUDY R ELLINGTON
68708
REGISTERED
PROFESSIONAL ENGINEER
Judy R. Ellington
3-1-92

US 83
BRIDGE LAYOUT
US 281 OVERPASS LT. & RT.
MAIN LANES WIDENING

PERM. STR NOS. - 108 & 109

SHEET OF SHEETS 80

RD. DIV. NO.	STATE	FEDERAL AID PROJECT NO.	SHEET NO.
	TEXAS	NH 92C)M	122
STATE DIST. NO.	COUNTY	CONT. SECT. JOB	HWY. NO.
21	HIDALGO	39 17 97	US83/281

ZFA2: [325104] 281BL.DGN IPARM: SAME

AD-69-91

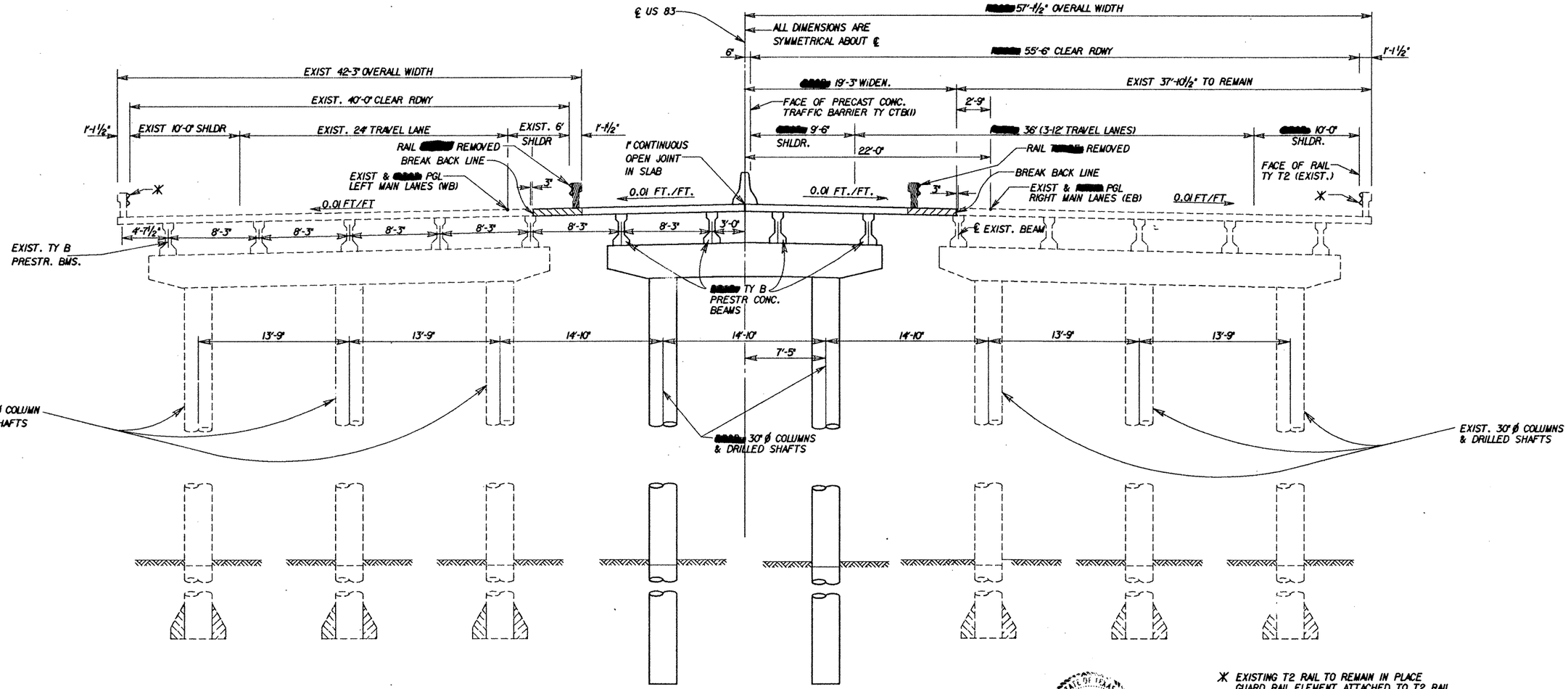

STATE OF TEXAS
JODY R. ELLINGTON
68706
REGISTERED PROFESSIONAL ENGINEER

Jody R. Ellington
2-27-92

* EXISTING T2 RAIL TO REMAIN IN PLACE GUARD RAIL ELEMENT ATTACHED TO T2 RAIL SHALL BE REMOVED. REMOVAL SHALL BE SUBSIDIARY TO THE VARIOUS BID ITEMS.

US 281 OVERPASS LEFT AND RIGHT MAIN LANES WIDENING TYPICAL SECTION

HS 20 LOADING

FED. RD. DIV. NO.	FEDERAL AID PROJECT NO.		SHEET NO.
6	NH 92( )M		123
STATE	STATE DIST. NO.	COUNTY	
TEXAS	21	HIDALGO	
CONT.	SECT.	JOB	HIGHWAY NO.
39	17	97	US83/281

80-76-0

SUMMARY OF ESTIMATED QUANTITIES

	ITEM / DESCRIPTION	DRILLED SHAFTS 30" ø L.F.	CLASS "C" CONCRETE FOR EXT. STRUCTURE ABUTMENT C.Y.	*CLASS "C" CONCRETE BENT C.Y.	REINF. CONC. SLAB FOR EXT. STRUCTURE S.F.	PRESTR. CONC. BEAM (TY B) L.F.	* CONCRETE TRAFFIC (PRECAST) TY CTB (1) L.F.	CONCRETE SURFACE TREATMENT S.Y.	STRUCT. STEEL ARMOR JT. LBS.	PREFORMED JOINT SEAL 2 IN. L.F.	RIPRAP (CONC) CL B CY	PROTECTIVE ANGLE EA
LT. MAIN LANES WID.	2 ~ ABUTMENTS	110	9.8				0.75					
	3 ~ INTERIOR BENTS	*150		17.1								
	2 ~ 40' PRESTR. CONC. BM. SPANS				1540	158.66	40.0	162	530	18.5		
	2 ~ 52' PRESTR. CONC. BM. SPANS				2002	206.66	52.0	210	530	18.5		
	LT. MAIN LANES TOTAL	260	9.8	17.1	3542	365.32	92.75	372	1060	37.0	5.0	1
RT. MAIN LANES WID.	2 ~ ABUTMENTS	110	9.8				0.75					
	3 ~ INTERIOR BENTS	*150		17.1								
	2 ~ 40' PRESTR. CONC. BM. SPANS				1540	158.66	40.0	162	530	18.5		
	2 ~ 52' PRESTR. CONC. BM. SPANS				2002	206.66	52.0	210	530	18.5		
	RT. MAIN LANES TOTAL	260	9.8	17.1	3542	363.32	92.75	372	1060	37.0	5.0	1
	TOTAL	520	19.6	34.2	7084	730.64	185.5	744	2120	74.0	10.0	2

* QUANTITIES ARE FOR SINGLE ELEMENT (BENT OR CTB), BUT [redacted] SPLIT EQUALLY BETWEEN LT. & RT. MAIN LANES WIDENINGS.

BEARING SEAT ELEVATIONS

LT. MAIN LANES WIDENING

			BEAM 1	BEAM 2
ABUT	1	(FWD)	125.544	125.462
BENT	2	(BK)	125.723	125.641
		(FWD)	125.686	125.604
BENT	3	(BK)	125.778	125.696
		(FWD)	125.779	125.696
BENT	4	(BK)	125.709	125.627
		(FWD)	125.747	125.664
ABUT	5	(BK)	125.585	125.503

RT. MAIN LANES WIDENING

			BEAM 1	BEAM 2
ABUT	1	(FWD)	125.544	125.462
BENT	2	(BK)	125.723	125.641
		(FWD)	125.686	125.604
BENT	3	(BK)	125.778	125.696
		(FWD)	125.779	125.696
BENT	4	(BK)	125.709	125.627
		(FWD)	125.747	125.664
ABUT	5	(BK)	125.585	125.503

STATE OF TEXAS
JODY R ELLINGTON
68708
REGISTERED PROFESSIONAL ENGINEER

Jody R. Ellington
2-27-92

ESTIMATED QUANTITIES AND BEARING SEAT ELEVATIONS

US 281 OVERPASS
LEFT & RIGHT MAIN LANES WIDENING

FED. RD. DIV. NO.	FEDERAL AID PROJECT NO.		SHEET NO.
6	NH 92( )M		124
STATE	STATE DIST. NO.	COUNTY	
TEXAS	21	HIDALGO	
CONT.	SECT.	JOB	HIGHWAY NO.
29	17	97	US83

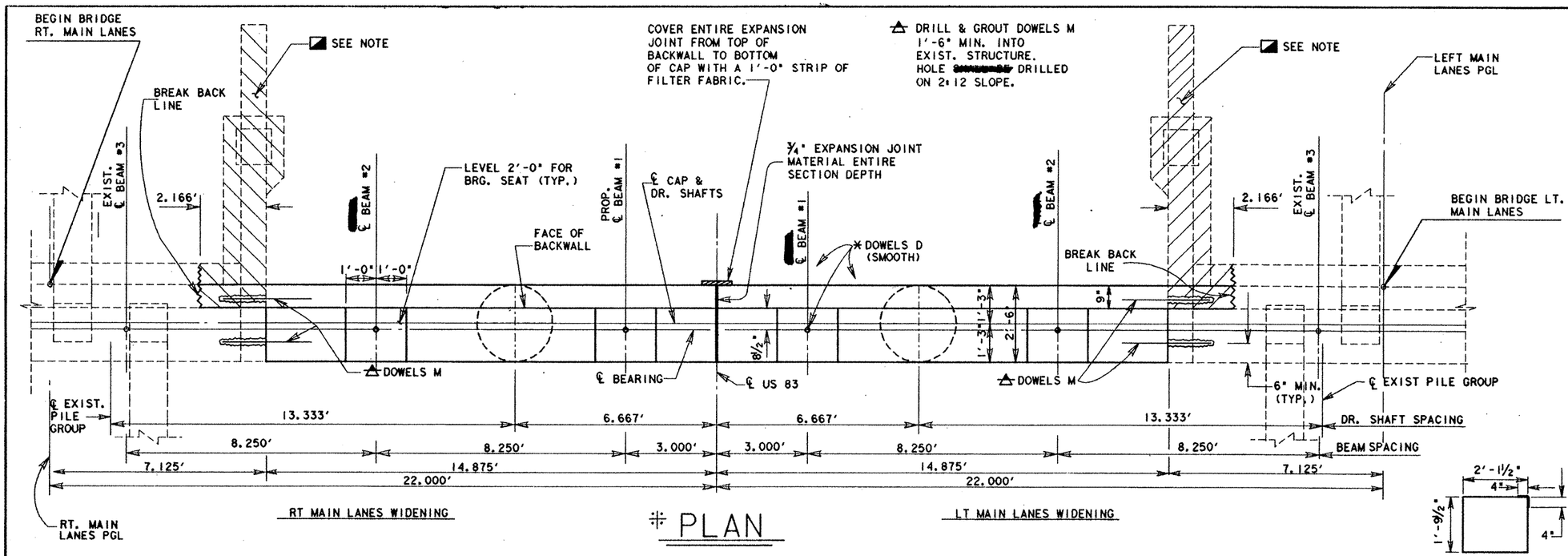

PLAN

TABLE OF ESTIMATED QUANTITIES ⊛				
BAR	NO.	SIZE	LENGTH	WEIGHT
A	7	#11	14'-7"	542
M	2	#9	3'-0"	20
V_1	16	#5	10'-3"	171
V_2	3	#5	7'-1"	22
S	15	#4	8'-6"	85
D	2	1¼" ∅	1'-6"	13
H	8	#5	16'-10"	140
⊕ REINF. STEEL			LBS.	993
CLASS "C" CONCRETE FOR EXT. STRUCT.			CY	4.9

⊛ QUANTITIES SHOWN ARE FOR ONE SIDE WIDENING OF ONE ABUTMENT ONLY.

⊕ FOR CONTRACTOR'S INFORMATION ONLY.

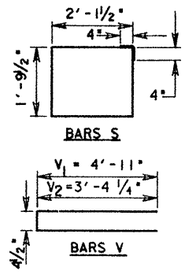

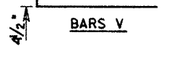

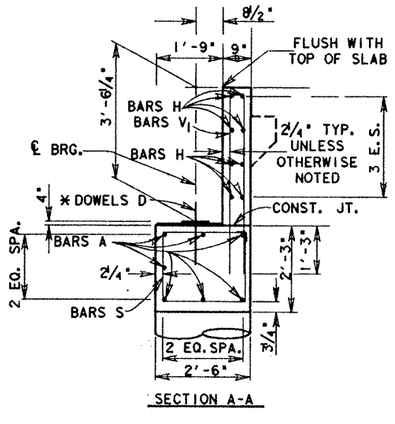

SECTION A-A

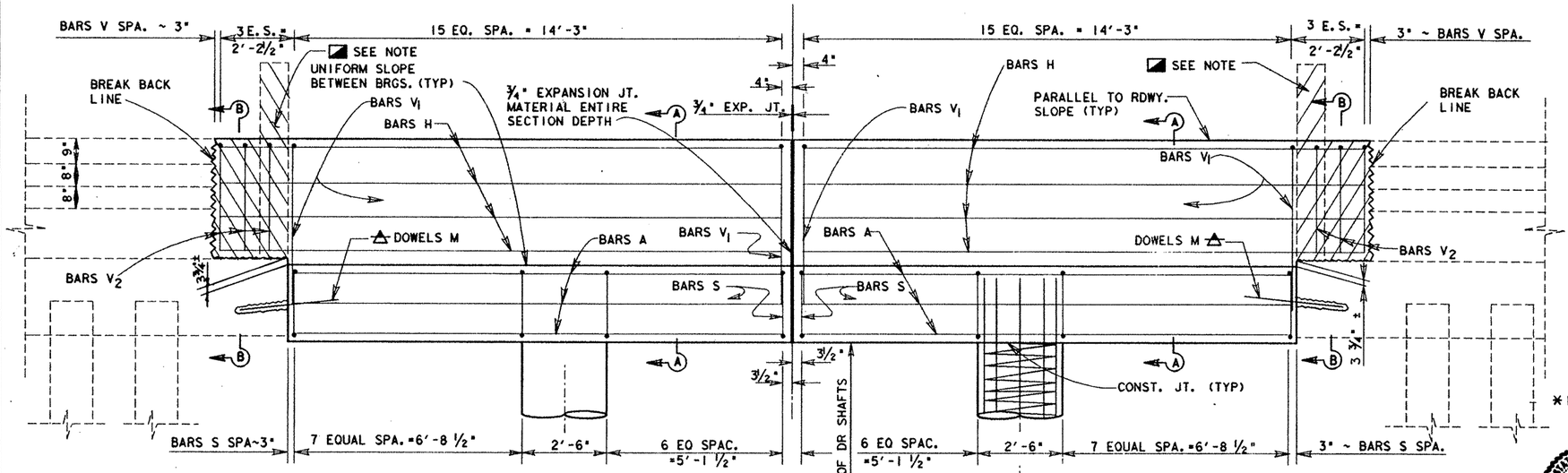

ELEVATION

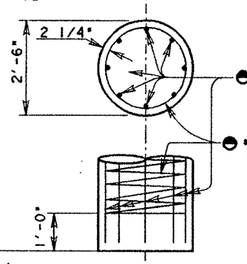

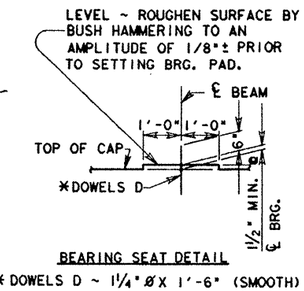

BEARING SEAT DETAIL

* DOWELS D ~ 1¼" ∅ X 1'-6" (SMOOTH)

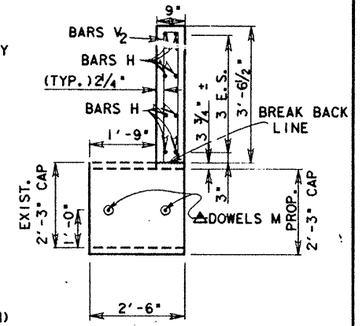

SECTION B-B

● INCLUDED IN PRICE BID FOR DRILLED SHAFTS.

◪ REMOVE EXIST. BACKWALL AND PAVING BRACKET TO TOP OF CAP AS SHOWN. CLEAN & EXTEND EXIST. BACKWALL REINFORCING 1'-6" MIN. INTO NEW CONSTRUCTION. CUT EXISTING PAVING BRACKET REINF. FLUSH WITH BREAK LINE, PAINT ENDS WITH ZINC-RICH PAINT, AND PATCH SURFACE WITH 1 ½" OF EXPOXY MORTAR. REMOVE EXIST. WINGWALL 1'-0" MIN. FROM BACK EDGE OF BACKWALL AND TO 1'-0" MIN. BELOW FINISHED GRADE.

⋕ ABUTMENT #1 SHOWN - OPPOSITE HAND FOR ABUTMENT #5

STATE OF TEXAS
JODY R. ELLINGTON
68708
REGISTERED PROFESSIONAL ENGINEER
Jody R. Ellington
3-1-92

GENERAL NOTES:

DESIGNED IN ACCORDANCE WITH AASHTO 1989 STANDARD & INTERIM SPECIFICATIONS.

CHAMFER ALL EXPOSED CORNERS 3/4" UNLESS OTHERWISE NOTED.

CALCULATED FOUNDATION LOAD=80 TONS/DR. SHAFT

US 281 OVERPASS
LT. & RT. MAIN LANES WIDENING
ABUTMENTS 1 & 5

SCALE: 1"=2'

HS 20 LOADING

FED. RD. DIV. NO.	FEDERAL AID PROJECT NO.		SHEET NO.
6	NH 922 (3)M		125
STATE	STATE DIST. NO.	COUNTY	
TEXAS	21	HIDALGO	
CONT.	SECT.	JOB	HIGHWAY NO.
39	17	97	US 83/281

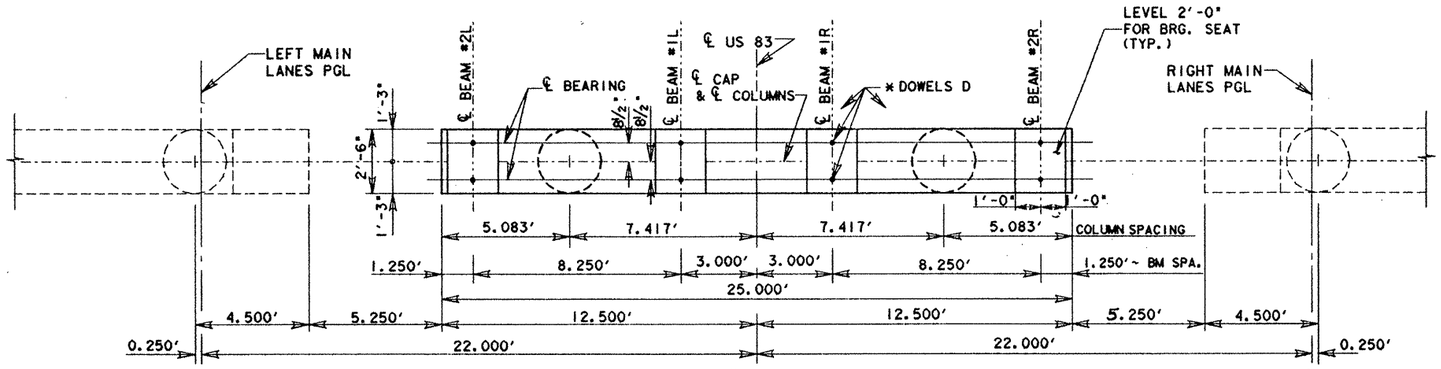

PLAN

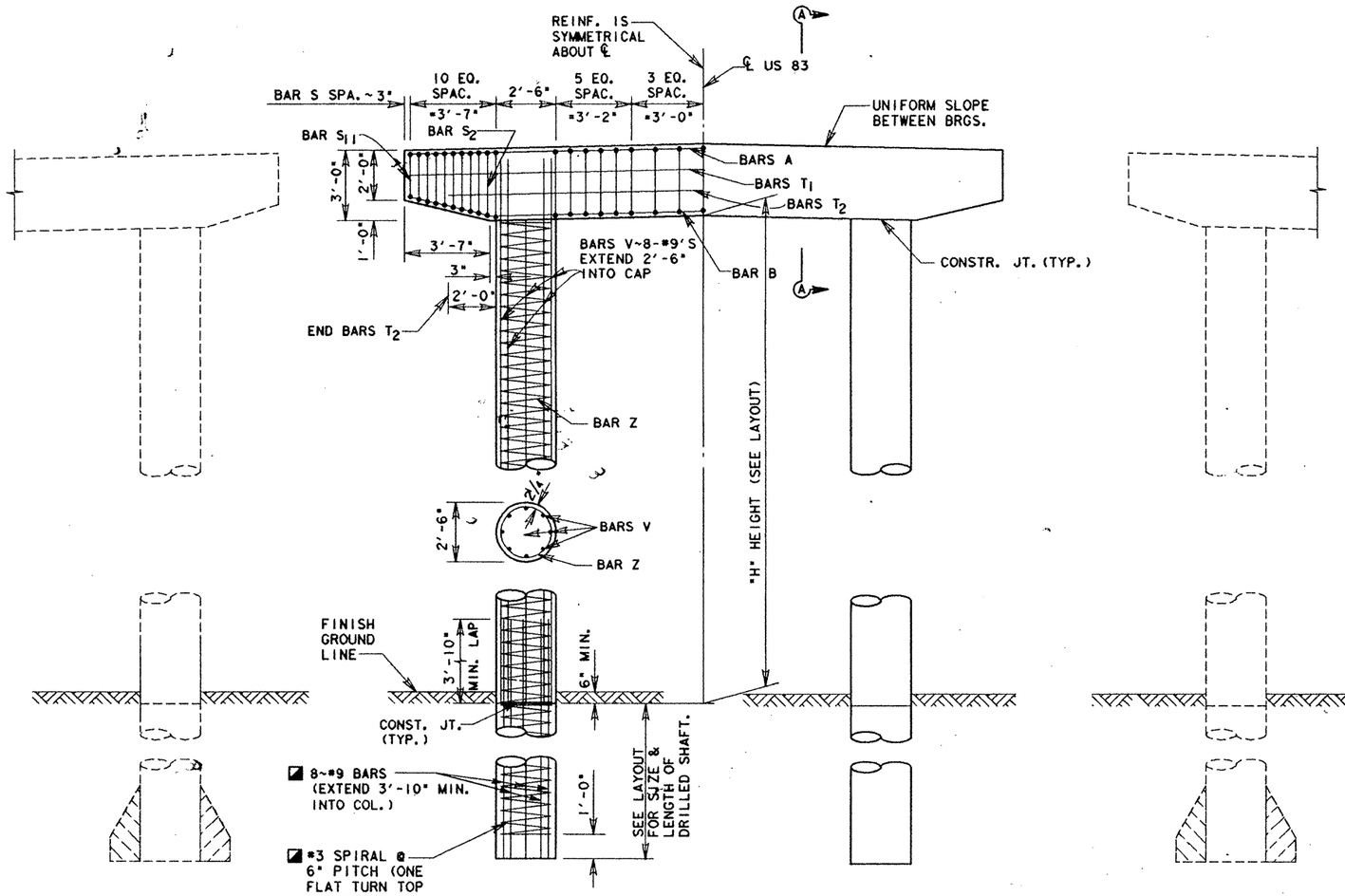

ELEVATION

■ INCLUDED IN PRICE BID FOR DRILLED SHAFT

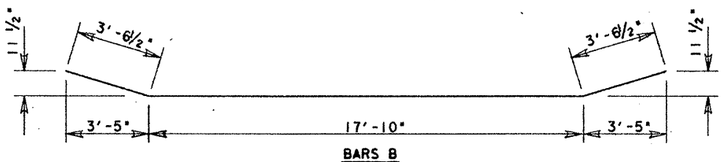

BARS B

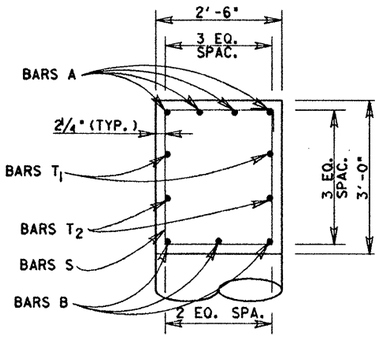

SECTION A-A

† TABLE OF CONSTANT QUANTITIES

BAR	NO.	SIZE	LENGTH	WEIGHT
A	4	#11	24'-8"	524
B	3	#11	24'-11"	397
S_1	19	#5	10'-4"	205
S_{2-11}	20	#5	9'-5" AVG.	196
▲D	8	1¼"Ø	1'-6"	50
T_1	2	#5	24'-8"	51
T_2	2	#5	21'-4"	45

⊕ REINF. STEEL ▲	LB	1468
CL. "C" CONC. (CAP)	CY	6.7

ALL CAP REINFORCEMENT [redacted] GR. 60.

† TABLE OF VARIABLE QUANTITIES

"H"	Class "C" Conc. (Cols.)	Bars Z 2~#3 Spirals		Bars V 16~#9 Bars		⊕▲ Reinf. Steel	Class "C" Conc.
Ft	CY	Length	Weight	Length	Weight	Lb	CY
11	4.0	161'	121	13'-6"	734	2323	10.7
12	4.4	174'	131	14'-6"	789	2388	11.1
13	4.7	187'	141	15'-6"	843	2452	11.4
14	5.1	201'	151	16'-6"	898	2517	11.8
15	5.5	214'	161	17'-6"	952	2581	12.2

† TOTAL ESTIMATED QUANTITIES

⊕ FOR CONTRACTOR'S INFORMATION ONLY

‡ QUANTITIES SHOWN ARE FOR ONE BENT ONLY.

▲ DEDUCT 8 BARS D (50 LBS.) FOR BENT NO. 2 AND BENT NO. 4

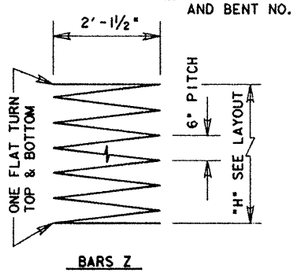

BARS Z

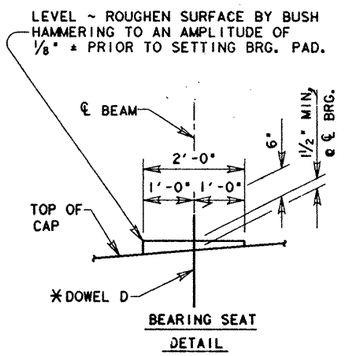

BEARING SEAT DETAIL

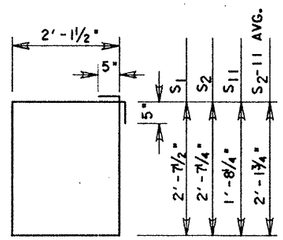

BARS S

* DOWEL D-1¼"Ø X 1'-6" SMOOTH AT BENT 3 (FWD) & 3 (BK) ONLY.

GENERAL NOTES:

DESIGNED IN ACCORDANCE WITH AASHTO 1989 STANDARD AND INTERIM SPECIFICATIONS.

CHAMFER ALL EXPOSED CORNERS ¾" UNLESS OTHERWISE NOTED.

CALCULATED DRILLED SHAFT LOAD =115 TONS/DRILLED SHAFT.

STATE OF TEXAS
JODY R. ELLINGTON
68704
REGISTERED PROFESSIONAL ENGINEER
Jody R. Ellington
2-27-92

US 281 OVERPASS
LEFT & RIGHT MAIN LANES WIDENING
INTERIOR BENTS 2-4

HS 20 LOADING

FED. RD. DIV. NO.	FEDERAL AID PROJECT NO.		SHEET NO.
6	NH 92( )M		126
STATE	STATE DIST. NO.	COUNTY	
TEXAS	21	HIDALGO	
CONT.	SECT.	JOB	HIGHWAY NO.
39	17	97	US 281

ZFA2: [325104]BW281.DGN [PARM. SAMP

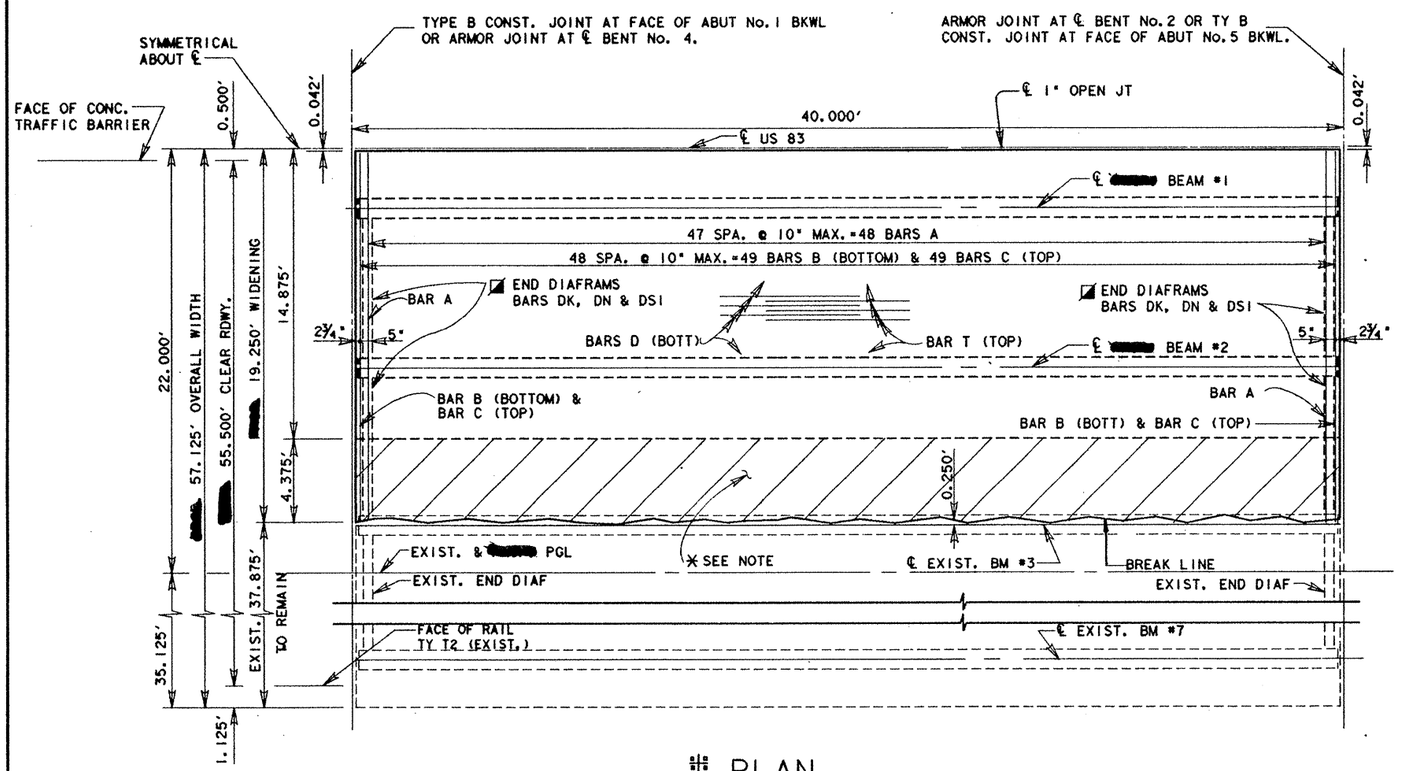

PLAN

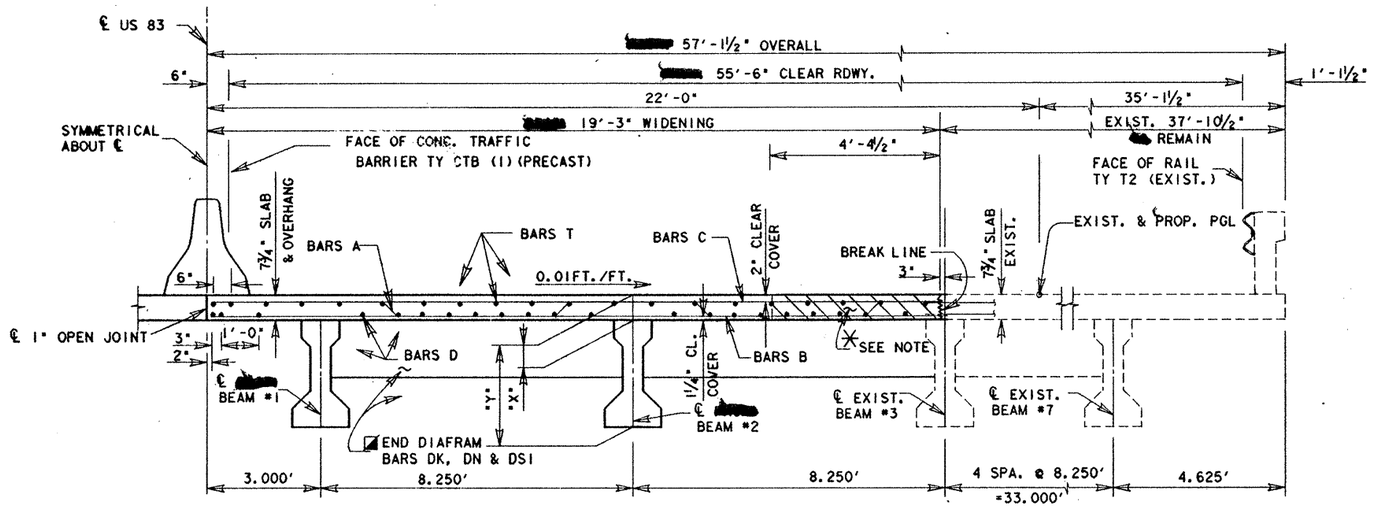

TRANSVERSE SECTION

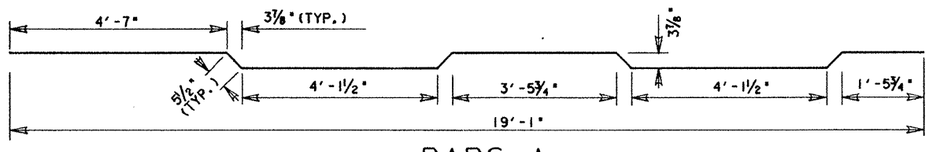

BARS A

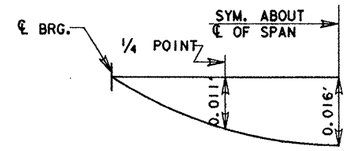

DEAD LOAD DEFLECTION DIAGRAM

NOTE: DEFLECTIONS SHOWN ARE DUE TO CAST-IN-PLACE CONCRETE ONLY. ($E = 5 \times 10^6$ PSI)

TABLE OF ESTIMATED QUANTITIES ⊛

Bar	No.	Size	Length	Weight
A	48	#5	19'-8"	985
B	49	#4	19'-1"	625
C	49	#5	19'-1"	975
D	21	#5	39'-8"	869
T	20	#4	39'-8"	530
DK	16	#5	6'-11"	115
DN	2	#8	16'-6"	88
DSI	32	#4	4'-10"	103

REINF. STEEL ⊕	LBS	4290
PRESTR. CONC. BM. ~ TY. B ▲	LF	79.33
CONC. SURF. TREAT.	SY	81
STRUCTURAL STEEL (ARMOR JT.) ǂ	LBS	265

REINF. CONC. SLAB FOR EXTEND STRUCT. (SF)	⊕ CLASS "S" CONC. FOR EXTEND STRUCT. (CY)	
	SLAB	DIAF
770	18.5	1.2

"X" @ ℄ BRG	♦ "X" @ ℄ SPAN	"Y" @ ℄ BRG
8¼"	7⅞"	3'-6¼"

♦ THEORETICAL DIMENSION FOR CONTRACTOR'S INFORMATION ONLY.

⊕ FOR CONTRACTOR'S INFORMATION ONLY.

⊛ QUANTITIES SHOWN ARE FOR ONE SIDE WIDENING ONLY.

▲ QUANTITY SHOWN IS THE SUMMATION OF ACTUAL BOTTOM FLANGE LENGTHS WITH ADJUSTMENTS MADE FOR BEAM SLOPE. EACH BEAM = 51.667

ǂ QUANTITY SHOWN IS FOR ONE HALF OF ONE COMPLETE ARMOR JOINT.

⊞ RIGHT MAIN LANES (EB) WIDENING SHOWN. LEFT MAIN LANES (WB) WIDENING IS SYMMETRICAL BY ROTATION ABOUT ℄ US 83.

✳ REMOVE SHADED PORTION OF EXIST. CONCRETE. CLEAN & EXTEND EXPOSED REINFORCING STEEL INTO NEW SLAB SO AS TO PROVIDE FOR A MINIMUM 1'-6" SPLICE WITH NEW SLAB REINF.

◪ BARS DN ARE [redacted] BUTT WELDED TO EXISTING DIAFRAM BARS. SEE GpC (MOD) FOR DETAILS.

GENERAL NOTES:

DESIGNED IN ACCORDANCE WITH AASHTO 1989 STANDARD & INTERIM SPECIFICATIONS.

DESIGN Fc = 1200 PSI

THE USE OF PMDF OR PRECAST CONC. PANELS [redacted] NOT [redacted] PERMITTED.

THE USE OF OPTIONAL END DIAFRAMS [redacted] NOT [redacted] PERMITTED.

STATE OF TEXAS — ANDY R. ELLINGTON — 68706 — REGISTERED PROFESSIONAL ENGINEER

Andy R. Ellington 2-27-92

HS 20 LOADING

US 281 OVERPASS
LT. AND RT. MAIN LANES WIDENING
SLAB DETAILS (40' SPAN)

FED. RD. DIV. NO.	FEDERAL AID PROJECT NO.	SHEET NO.
6	NH 92C)M	127
STATE	STATE DIST. NO	COUNTY
TEXAS	21	HIDALGO
CONT.	SECT.	JOB	HIGHWAY NO.
39	17	97	83/281

7542-5735(043)PW281A4 DGN 1BARM4 SA 45

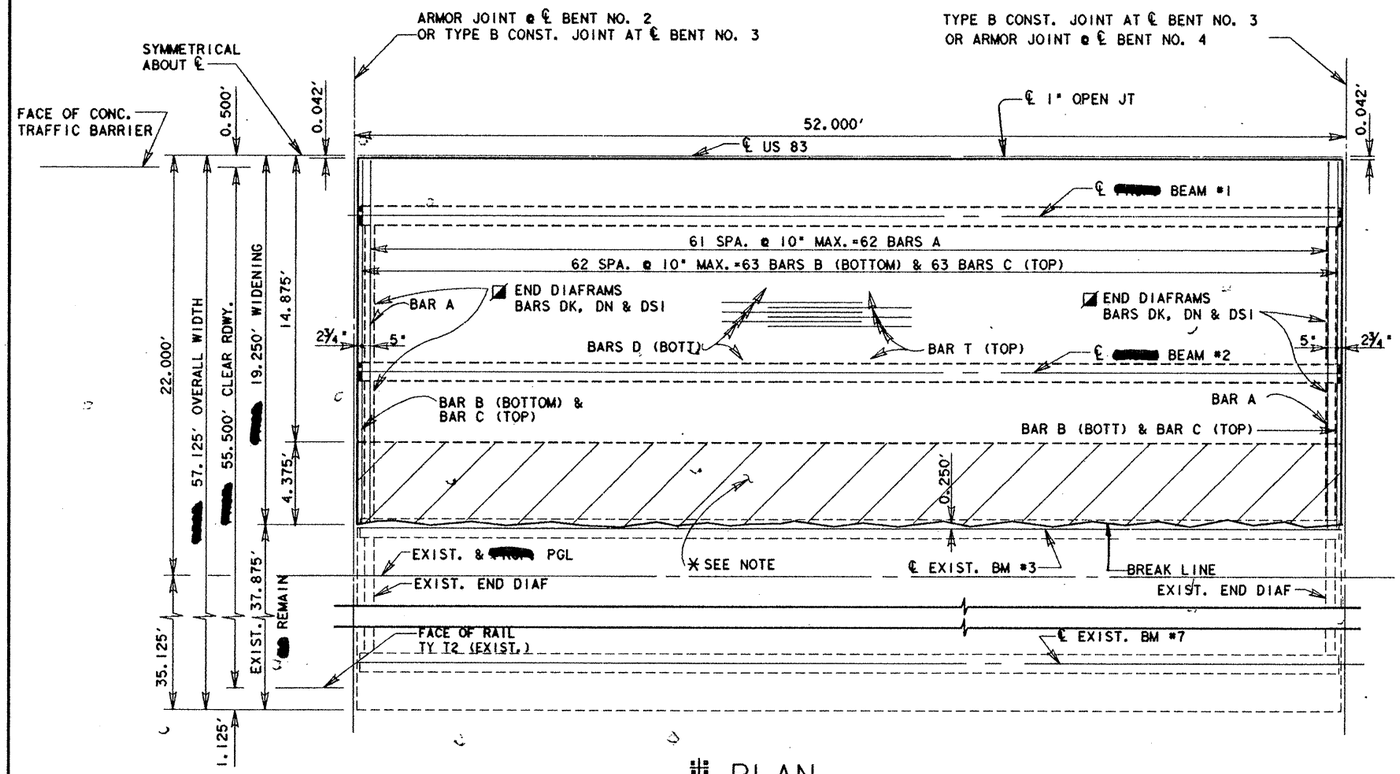

PLAN

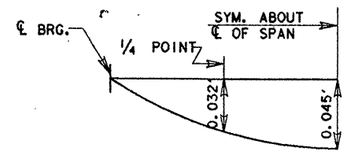

DEAD LOAD DEFLECTION DIAGRAM

NOTE: DEFLECTIONS SHOWN ARE DUE TO CAST-IN-PLACE CONCRETE ONLY. ($E=5X10^6$ PSI)

TABLE OF ESTIMATED QUANTITIES ⊛

Bar	No.	Size	Length	Weight
A	62	#5	19'-8"	1272
B	63	#4	19'-1"	803
C	63	#5	19'-1"	1254
D	21	#5	51'-8"	1132
T	20	#4	51'-8"	690
DK	16	#5	6'-11"	115
DN	2	#8	16'-6"	88
DSI	32	#4	4'-10"	103

REINF. STEEL ⊕	LBS	5457
PRESTR. CONC. BM. ~ TY. B △	LF	103.33
CONC. SURF. TREAT.	SY	105
STRUCTURAL STEEL (ARMOR JT.) ‡	LBS	265

REINF. CONC. SLAB FOR EXTEND STRUCT. (SF)	⊕ CLASS "S" CONC. FOR EXTEND STRUCT. (CY)	
	SLAB	DIAF
1001	24.1	1.2

"X" @ ℄ BRG	◆ "X" @ ℄ SPAN	"Y" @ ℄ BRG
8¾"	7⅞"	3'-6¾"

◆ THEORETICAL DIMENSION FOR CONTRACTOR'S INFORMATION ONLY.

⊕ FOR CONTRACTOR'S INFORMATION ONLY.

⊛ QUANTITIES SHOWN ARE FOR ONE SIDE WIDENING ONLY.

△ QUANTITY SHOWN IS THE SUMMATION OF ACTUAL BOTTOM FLANGE LENGTHS WITH ADJUSTMENTS MADE FOR BEAM SLOPE. EACH BEAM =51.667

‡ QUANTITY SHOWN IS FOR ONE HALF OF ONE COMPLETE ARMOR JOINT.

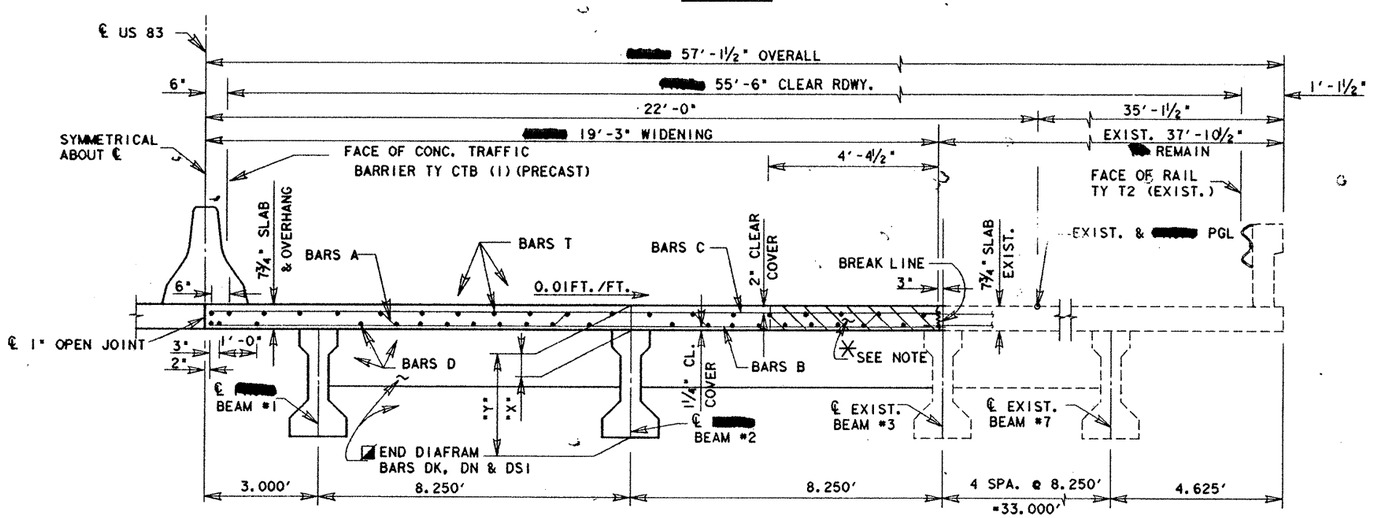

TRANSVERSE SECTION

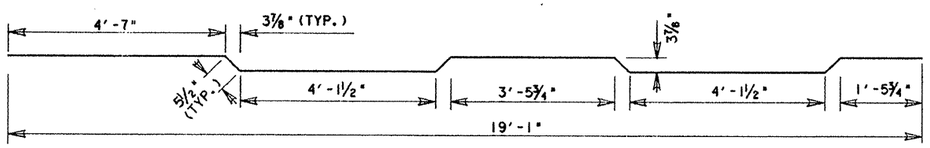

BARS A

▣ RIGHT MAIN LANES (EB) WIDENING SHOWN. LEFT MAIN LANES (WB) WIDENING IS SYMMETRICAL BY ROTATION ABOUT ℄ US 83.

✳ REMOVE SHADED PORTION OF EXIST. CONCRETE. CLEAN & EXTEND EXPOSED REINFORCING STEEL INTO NEW SLAB SO AS TO PROVIDE FOR A MINIMUM 1'-6" SPLICE WITH NEW SLAB REINF.

◪ BARS DN ARE [redacted] BUTT WELDED TO EXISTING DIAFRAM BARS. SEE GpC (MOD) FOR DETAILS.

GENERAL NOTES:

DESIGNED IN ACCORDANCE WITH AASHTO 1989 STANDARD & INTERIM SPECIFICATIONS.

DESIGN Fc = 1200 PSI

THE USE OF PMDF OR PRECAST CONC. PANELS [redacted] NOT [redacted] PERMITTED.

THE USE OF OPTIONAL END DIAFRAMS [redacted] NOT [redacted] PERMITTED.

STATE OF TEXAS
JODY R. ELLINGTON
68706
REGISTERED PROFESSIONAL ENGINEER
Jody R. Ellington
2-27-92

US 281 OVERPASS
LT. AND RT. MAIN LANES WIDENING
SLAB DETAILS (52' SPAN)

HS 20 LOADING

FED. RD. DIV. NO.	FEDERAL AID PROJECT NO.		SHEET NO.
6	NH 92C)M		128
STATE	STATE DIST. NO.	COUNTY	
TEXAS	21	HIDALGO	
CONT.	SECT.	JOB	HIGHWAY NO.
39	17	97	US 83/281

7EA2: [325104]BW281A.DGN [PARM: SAM]

CURVE DATA ℄ US 83
P.I. STA. = 1480+14.80
Δ = 55° 06' 30.40" RT
D = 1°30'
T = 1993.02'
L = 3673.90'
R = 3819.72
e = 0.042 '/FT.

TEST HOLE
STA. 1471+04
181.8' LT.

RGV GAS CO. 2" LP GAS LINE

CITY OF PHARR 6" PVC SANITARY SEWER

SIGN & BRACKET (14'-6" CLEARANCE)

SUGAR RD.

℄ BENT NO. 2L STA. 1470+98.94

℄ BENT NO. 3L STA. 1471+61.58

FACE OF T501 RAIL

SPAN NO. 1

SPAN NO. 2

SPAN NO. 3

ARMOR JT. (2" PJS)

0.042'/FT.

BREAK LINE

67'-6" CLEAR ROWY

EXIST. 6" REMAIN ~ VARIES

WID. VARIES

ARMOR JT. (2" PJS)

70'-2½" OVERALL WIDTH

EXIST. 42'-3" OVERALL

EXIST. 40'-0" ROWY

1½"

22'-0"

℄

1470+00

1471+00

1472+00

EDGE OF SLAB

67'-9½" OVERALL WIDTH

22'-0"

℄ STA. 1471+30.26

0.042'/FT.

FACE OF RAIL T501

1'-0"

26' BPA

EXIST. 52'-0" F-F

℄ BENT NO. 2R STA. 1470+98.88

℄ BENT NO. 3R STA. 1471+61.94

EXIST. 4'X4' SIDEWALK

6"

39'

38'

SUGAR RD.

EXIST. RIPRAP REMOVED (TYP.)

LIMITS OF RIPRAP (TYP.)

ALL BENTS ARE ON BRG: S 30°0' 49.94" E

RET. WALL WITH TY T501 RAIL

TY B CONST. JT.

END BRIDGE LT. MAIN LANES STA. 1472+07.07 FIN. GR. ELEV. =132.63

EXIST. 300' M.B.G.F. & T.A.S. (REMOVED)

N

EXIST. 940' M.B.G.F. AND T.A.S. (REMOVED)

BEG. BRIDGE LT. MAIN LANES STA. 1470+53.45 FIN. GR. ELEV. =132.66

EXIST. M.B.G.F. (REMOVED)

EXIST. 24' MAIN LANE

CONC. TRAFFIC BARRIER TY CTB (2)~ SPL

EXIST. CONC. RIPRAP (REMOVED)

EXIST. M.B.G.F. (REMOVED)

EXIST. RIPRAP REMOVED

1469+00

1470+00

BEG. BRIDGE RT. MAIN LANES STA. 1470+52.56 FIN. GR. ELEV. =132.66

EXIST RIPRAP (TO REMAIN)

EXIST. 750' M.B.G.F. AND T.A.S (REMOVED)

RET. WALL WITH TY T501 RAIL

M.B.G.F. REMOVED & RETURNED TO MAINTENANCE SECTION IN PHARR, TEXAS

BEGIN BRIDGE LT. MAIN LANES STA. 1470+53.45 FIN. GR. ELEV. =132.66

BEGIN BRIDGE RT. MAIN LANES STA. 1470+52.56 FIN. GR. ELEV. =132.66

EXIST. 24' MAIN LANE

EXIST. 150' M.B.G.F. & T.A.S. (REMOVED)

CONC. TRAFFIC BARRIER TY CTB (2)~ SPL

LEFT MAIN LANES (WB) PGL

EXIST. CONC. RIPRAP (REMOVED)

1472+00

1473+00

FACE OF C.T.B.

℄ US 83

RIGHT MAIN LANES (EB) PGL

END BRIDGE RT. MAIN LANES STA. 1472+07.96 FIN. GR. ELEV. =132.63

EXIST. 675' M.B.G.F. & T.A.S. (TO BE REMOVED)

RETAINING WALL W/TY T501 RAIL

⊕ REMOVAL OF CONCRETE RIPRAP SUBSIDIARY TO ITEM 100 "PREP ROW".

CRACKS AND JOINTS SEALED. SEALING SUBSIDIARY TO THE VARIOUS BID ITEMS.

NOTE: THE CONTRACTOR VERIFY ALL DIMENSIONS AND ELEVATIONS IN THE FIELD PRIOR TO CONSTRUCTION AND ORDERING MATERIALS.

VERT. CURVE DATA @ ℄ US 83

VC=960'
P.I.=STA.1471+30
ELEV.=139.86
EXT.=7.03

BEGIN BRIDGE RAIL FOR PAYMENT

TOTAL LENGTH OF CTB (1)~ SPL= 154'-6"

EXIST. & OVERALL LENGTH OF BRIDGE 154'-6"

TOTAL LENGTH OF RAIL TY T501 = 154'-6" (EA. SIDE)

END BRIDGE RAIL FOR PAYMENT

10.25'

EXIST. & 45' PREST. CONC. BEAM SPAN

EXIST. & 63' PREST. CONC. BEAM SPAN

EXIST. & 45' PREST. CONC. BEAM SPAN

-2.913%

-2.948%

0.75'

TY C & TY B PCB

SIGN & BRACKET (NORTH SIDE)

26' BPA (SOUTH SIDE)

CONC. TRAFFIC BARRIER TY CTB (2)~SPL (CENTER)

RETAINING WALL W/ T501 RAIL (LT & RT)

CONC. TRAFFIC BARRIER TY CTB (2)~ SPL (CENTER)

RETAINING WALL W/TY T501 RAIL (LT & RT)

150
140
130
120
110
100
90
80
70

TY B PCB

F

H=15'

CALC. VERT. CLEAR = 14.5' (SIGN 14'-6")

EXIST 52'-0" F-F

EXIST. 4-16" ⊕ DISPL. PILING X 28'

EXIST 12-16" ⊕ DISPL. PILING X 50'

4-30" Ø X43' DRILLED SHAFTS

EXIST. 6-30" Ø DRILL SHAFTS X 31' (5'-0" BELLS)

4-30" Ø DRILL SHAFTS X 32'

4-30" Ø DRILL SHAFTS X 12'

TEST HOLE
STA. 1471+04
LT. 181.8'
ELEV. =110.80'

CLAY BRN SILTY MOIST VERY HARD	50(4⅝")	50(4⅛")
CLAY, BRN. W/WHITE, SILTY MOIST HARD	48(6")	44(6")
CLAY BRN. W/SOME CALICHE, MOIST STIFF	44(6")	14(6")
CLAY TAN SILTY MOIST, STIFF	10(6")	12(6")
CLAY, TAN MOIST SILTY VERY STIFF	25(6")	31(6")
CLAY RUST GREENISH BLUEISH W/ SOME GRAY, HARD	41(6")	51(6")
CLAY, RUST BLUEISH GREENISH, W/ SOME GRAY VERY STIFF	24(6")	27(6")
CLAY, RUST SPOT, GREENISH, PATCHES OF GRAY, SOME BLACK VERY HARD	50(4½")	50(5")
CLAY SLIGHT RUST SPOT BROWNISH BLACKISH HARD	50(6")	40(6")
CLAY SLIGHT GREENISH RUST SPOTS SLIGHT WHITE	48(6")	52(5⅞")

DRILLED SHAFTS WERE DESIGNED USING SKIN FRICTION & POINT BEARING

1469+00
1470+00
1471+00
1472+00
1473+00

END BRIDGE LT. MAIN LANES STA. 1472+07.07 FIN. GR. ELEV. 132.63

END BRIDGE RT. MAIN LANES STA. 1472+07.96 FIN. GR. ELEV. 132.63

STATE OF TEXAS
JOEY R. ELLINGTON
84706
REGISTERED PROFESSIONAL ENGINEER
Joey R. Ellington
5-1-92

US-83
SUGAR ROAD OVERPASS LT. (WB) & RT. (EB)
MAIN LANES WIDENING

HORZ. SCALE: 1"=20'
VERT. SCALE: 1"=10'

PERM. STR NOS. 106 & 107

FED. RD. DIV. NO.	STATE	FEDERAL AID PROJECT NO.	SHEET NO.
6	TEXAS	NH 82 C (4)	129

STATE DIST. NO.	COUNTY	CONT.	SECT.	JOB	HWY. NO.
21	HIDALGO	39	17	97	US83/281

D21200A:ZFA2: [325104] FILE:SRPF.DGN PRF:SAME

AD-69-91

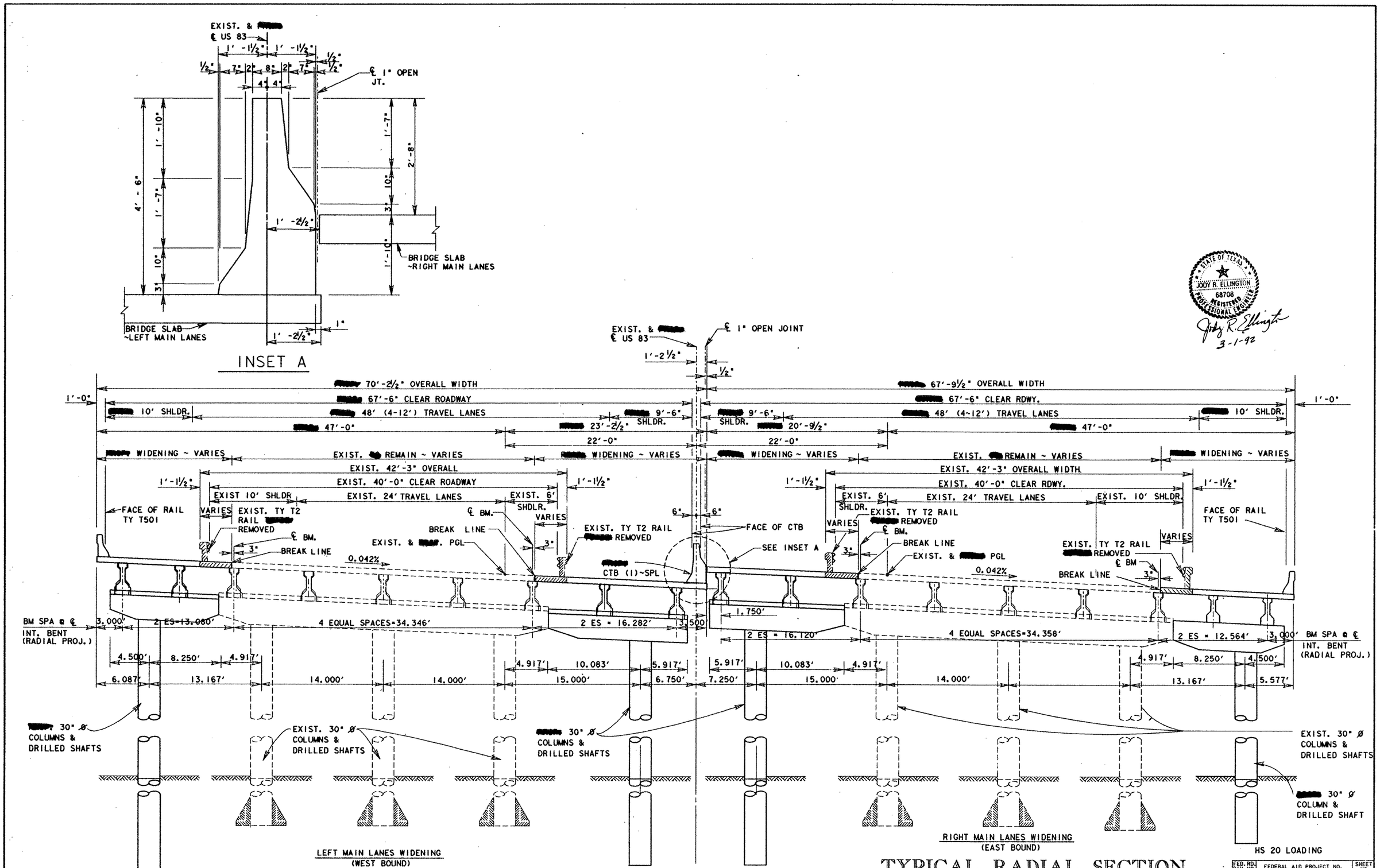

TYPICAL RADIAL SECTION
SUGAR ROAD OVERPASS
LT. & RT. MAIN LANES WIDENING

FED. RD. DIV. NO.	FEDERAL AID PROJECT NO.		SHEET NO.
6	NH 92( )M		130
STATE	STATE DIST. NO.	COUNTY	
TEXAS	21	HIDALGO	
CONT.	SECT.	JOB	HIGHWAY NO.
39	17	97	US 8

SUMMARY OF ESTIMATED QUANTITIES

	ITEM / DESCRIPTION	DRILLED SHAFTS 30" Ø	CLASS "C" CONCRETE FOR EXT. STRUCTURE	CLASS "C" CONCRETE	REINF. CONC. SLAB FOR EXT. STRUCTURE	PRESTR. CONC. BEAM (TY B)	PRESTR. CONC. BEAM (TY C)	CONCRETE TRAFFIC BARRIER	CONCRETE SURFACE TREATMENT	STRUCT. STEEL	PREFORMED JOINT SEAL	BRIDGE PROTECTIVE ASSEMBLY	SIGN AND BRACKET	RAILING TY T501	RIPRAP (CONC.) CL B
		L.F.	C.Y.	C.Y.	S.F.	L.F.	L.F.	TY CTB (1)-SPL L.F.	S.Y.	ARMOR JT. LBS.	2 IN. L.F.	EA.	EA.	L.F.	C.Y.
LT. MAIN LANES WID.	2 ~ ABUTMENTS	172	17.6					1.5						1.5	
	2 ~ INTERIOR BENTS	128		24.8											
	2 ~ 45' PRESTR. CONC. BM. SPANS				3182	357.32		90	318	998	34.9			90	
	1 ~ 63' PRESTR. CONC. BM. SPANS				2227		250.66	63	222	998	34.9		1	63	
	LT. (WB) MAIN LANES TOTAL	300	17.6	24.8	5409	357.32	250.66	154.5	540	1996	69.8		1	154.5	70.0
RT. MAIN LANES WID.	2 ~ ABUTMENTS	172	16.2											1.5	
	2 ~ INTERIOR BENTS	128		25.4											
	2 ~ 45' PRESTR. CONC. BM. SPANS				2966	357.32			316	914	32.4			90	
	1 ~ 63' PRESTR. CONC. BM. SPANS				2075	125.33	125.33		222	914	32.4	1		63	
	RT. (EB) MAIN LANES TOTAL	300	16.2	25.4	5041	482.65	125.33		538	1828	64.8	1		154.5	70.0
	TOTAL	600	33.8	50.2	10450	839.97	375.99	154.5	1078	3824	134.6	1	1	309.0	140.0

BEARING SEAT ELEVATIONS

LT. MAIN LANES (WB) WIDENING

			BEAM 1	BEAM 2	BEAM 8	BEAM 9
ABUT	1	(FWD)	130.750	130.488	128.424	128.069
BENT	2	(BK)	130.880	130.606	128.546	128.204
		(FWD)	130.341	130.066	128.006	127.664
BENT	3	(BK)	130.329	130.054	127.994	127.652
		(FWD)	130.868	130.593	128.533	128.191
ABUT	4	(BK)	130.721	130.459	128.395	128.039

RT. MAIN LANES (EB) WIDENING

			BEAM 1	BEAM 2	BEAM 8	BEAM 9
ABUT	1	(FWD)	129.695	129.369	127.320	127.042
BENT	2	(BK)	129.831	129.492	127.446	127.182
		(FWD)	129.333	128.994	127.385	127.121
BENT	3	(BK)	129.321	128.982	127.373	127.109
		(FWD)	129.818	129.480	127.433	127.169
ABUT	4	(BK)	129.666	129.340	127.290	127.012

STATE OF TEXAS
JODY R. ELLINGTON
68708
REGISTERED PROFESSIONAL ENGINEER
Jody R. Ellington
3-1-92

ESTIMATED QUANTITIES AND BEARING SEAT ELEVATIONS SUGAR RD. OVERPASS LT. (WB) & RT. (EB) MAIN LANES WIDENING

FED. RD. DIV. NO.	FEDERAL AID PROJECT NO.		SHEET NO.
6	NH 92C)M		131
STATE	STATE DIST. NO.	COUNTY	
TEXAS	21	HIDALGO	
CONT.	SECT.	JOB	HIGHWAY NO.
39	17	97	US83/281

7EAL:F325104JEQTAB7.DGN 1RADM-SANS

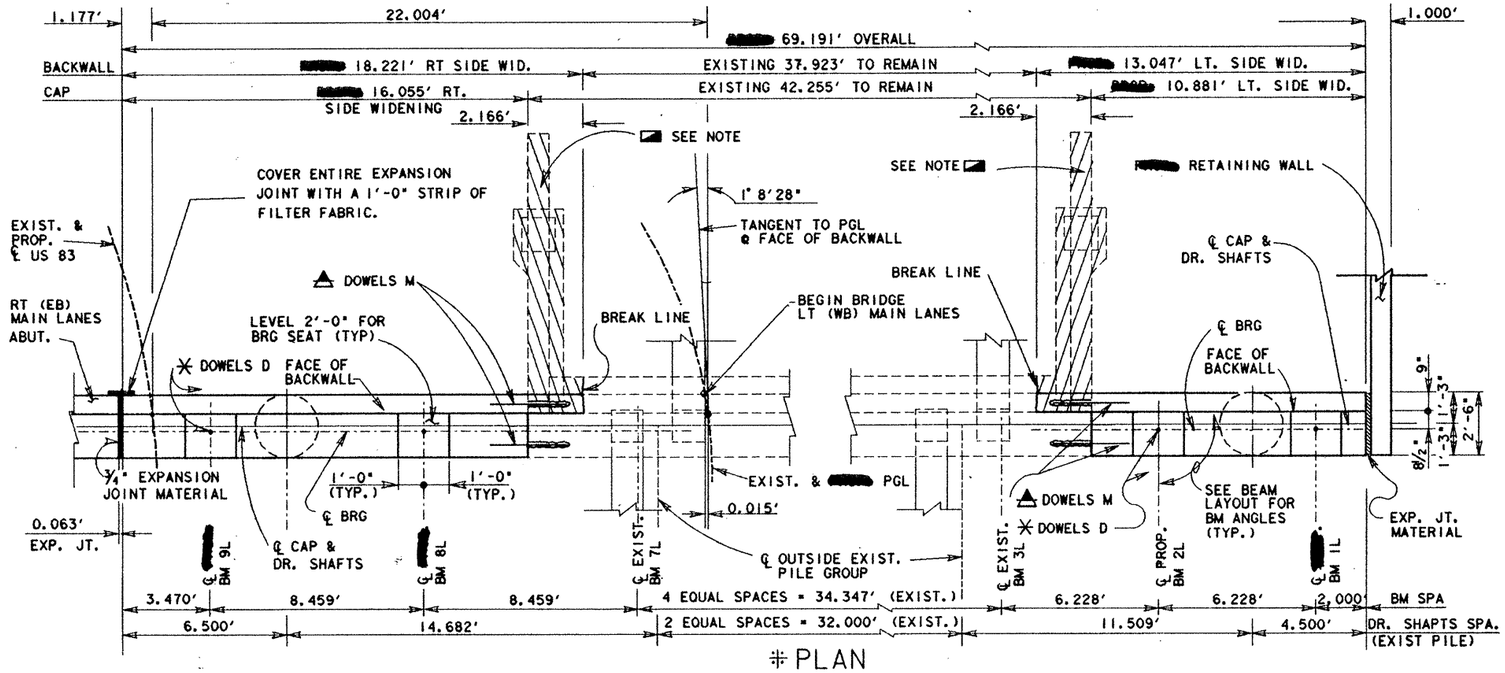

‡ PLAN

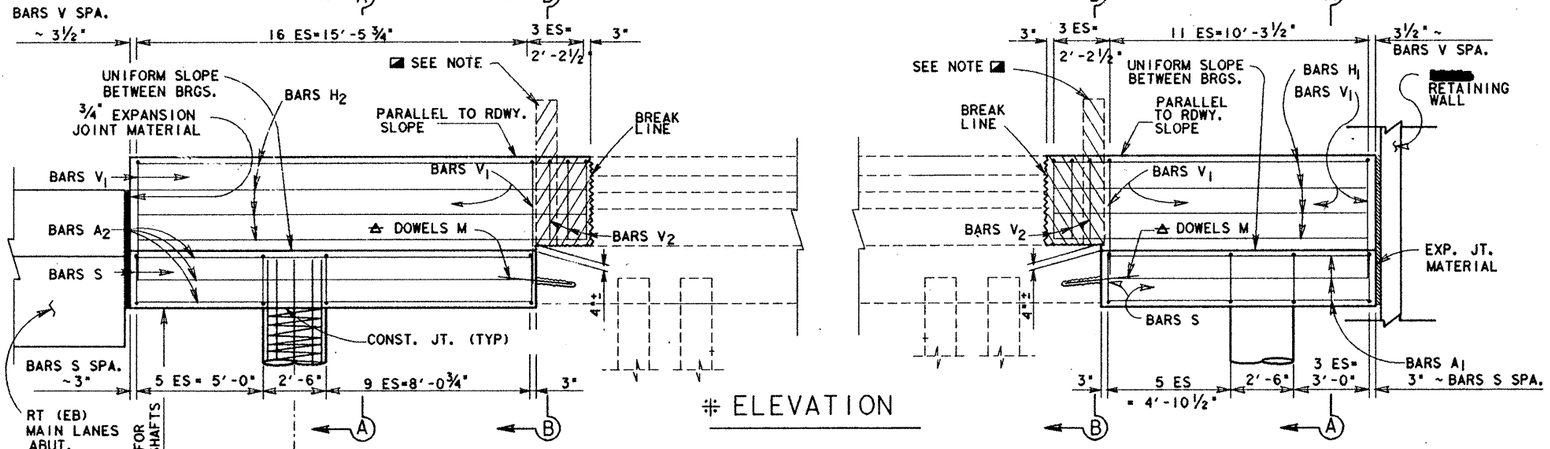

‡ ELEVATION

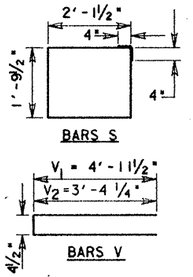

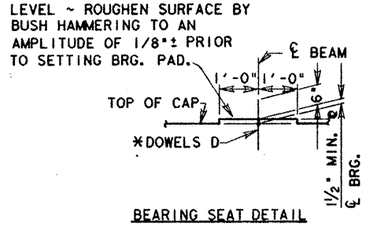

BEARING SEAT DETAIL

* DOWELS D ~ 1¼" Ø X 1'-6" (SMOOTH)

‡ TABLE OF ESTIMATED QUANTITIES
LT. SIDE WIDENING

BAR	NO.	SIZE	LENGTH	WEIGHT
A1	7	#11	10'-7"	394
D	2	1¼"ϕ	1'-6"	13
H1	8	#5	12'-11"	108
M	2	#9	3'-0"	20
S	10	#4	8'-6"	57
V1	12	#5	10'-4"	129
V2	3	#5	7'-1"	22
⊕ REINF. STEEL			LBS.	743
CLASS "C" CONCRETE FOR EXT. STRUCT.			CY	3.6

‡ TABLE OF ESTIMATED QUANTITIES
RT. SIDE WIDENING

BAR	NO.	SIZE	LENGTH	WEIGHT
A2	7	#11	15'-9"	586
D	2	1¼"ϕ	1'-6"	13
H2	8	#5	18'-0"	150
M	2	#9	3'-0"	20
S	16	#4	8'-6"	91
V1	17	#5	10'-4"	183
V2	3	#5	7'-1"	22
⊕ REINF. STEEL			LBS.	1065
CLASS "C" CONCRETE FOR EXT. STRUCT.			CY	5.2

⊕ FOR CONTRACTOR'S INFORMATION ONLY.

‡ QUANTITIES SHOWN ARE FOR ONE ABUTMENT ONLY.

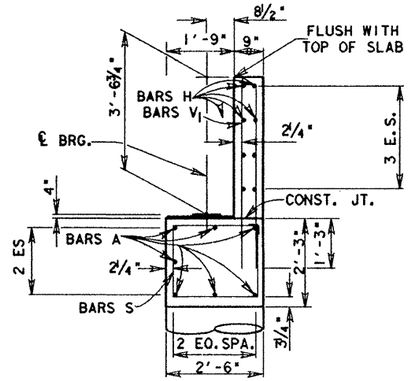

SECTION A-A

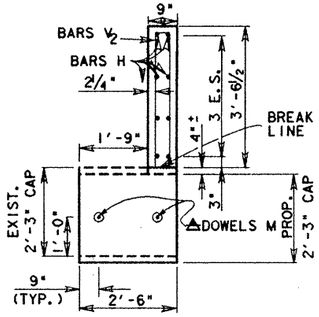

SECTION B-B

‡ ABUTMENT #1 SHOWN - OPPOSITE HAND FOR ABUTMENT #4.

REMOVE EXIST. BACKWALL AND PAVING BRACKET TO TOP OF CAP AS SHOWN. CLEAN & EXTEND EXIST. BACKWALL REINFORCING 1'-6" MIN. INTO NEW CONSTRUCTION. CUT EXISTING PAVING BRACKET REINF. FLUSH WITH BREAK LINE, PAINT ENDS WITH ZINC-RICH PAINT, AND PATCH SURFACE WITH 1½" OF EPOXY MORTAR. REMOVE EXIST. WINGWALL 1'-0" MIN. FROM BACK EDGE OF BACKWALL AND TO 1'-0" MIN. BELOW FINISHED GRADE.

△ DRILL & GROUT DOWELS M 1'-6" MIN. INTO EXIST. STRUCTURE. HOLES [redacted] DRILLED ON 2:12 SLOPE.

STATE OF TEXAS
JODY R. ELLINGTON
68708
REGISTERED PROFESSIONAL ENGINEER
Jody R. Ellington
2-27-92

GENERAL NOTES:

DESIGNED IN ACCORDANCE WITH AASHTO 1989 STANDARD AND INTERIM SPECIFICATIONS.

CALCULATED FOUNDATION LOAD=95 TONS/DR. SHAFT

ABUTMENTS 1 & 4
SUGAR RD OVERPASS
LT. (WB) MAIN LANES WIDENING

HS 20 LOADING

FED. RD. DIV. NO.	FEDERAL AID PROJECT NO.		SHEET NO.
6	NH 92C (JM)		132
STATE	DIST. NO.	COUNTY	
TEXAS	21	HIDALGO	
CONT.	SECT.	JOB	HIGHWAY NO.
39	17	97	US 83

D:\2000\...7E\DJ725104TEN\SRC2.DGN

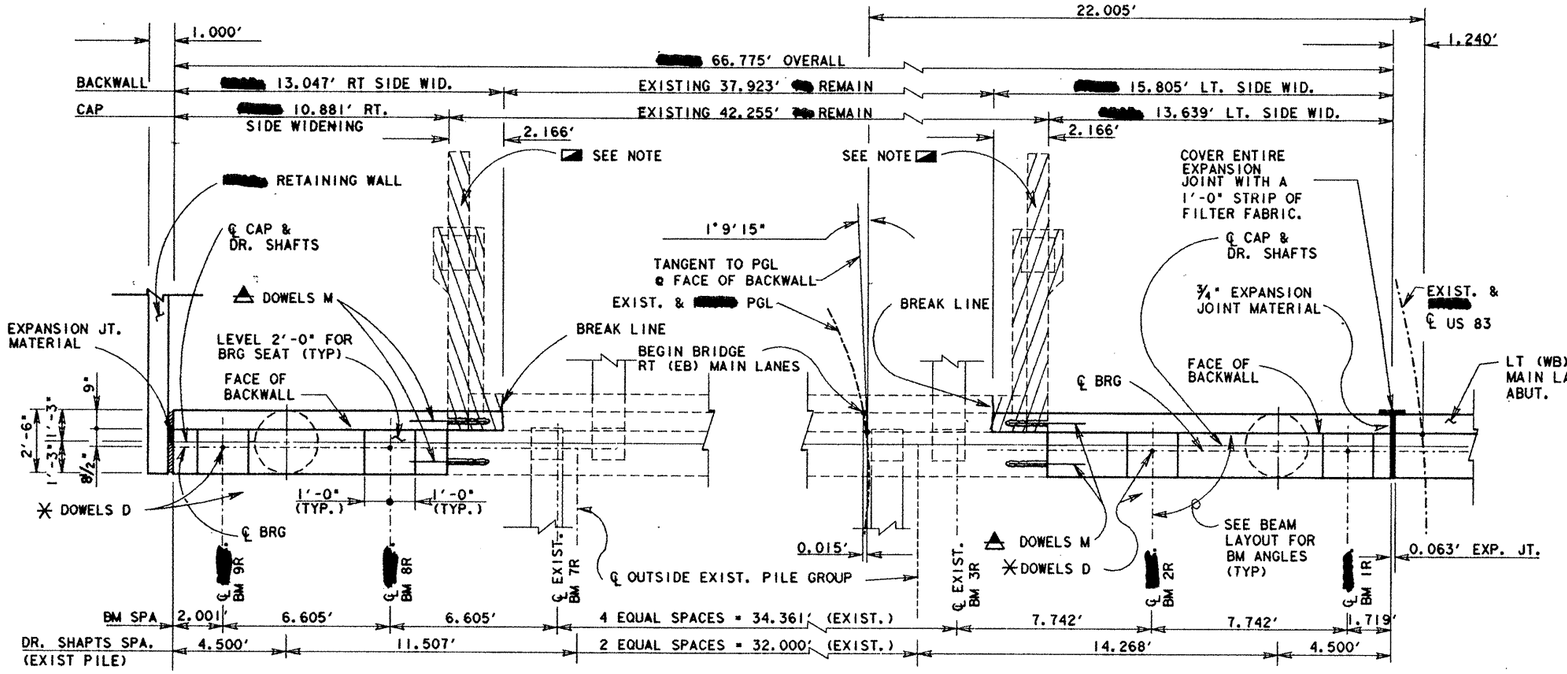

PLAN

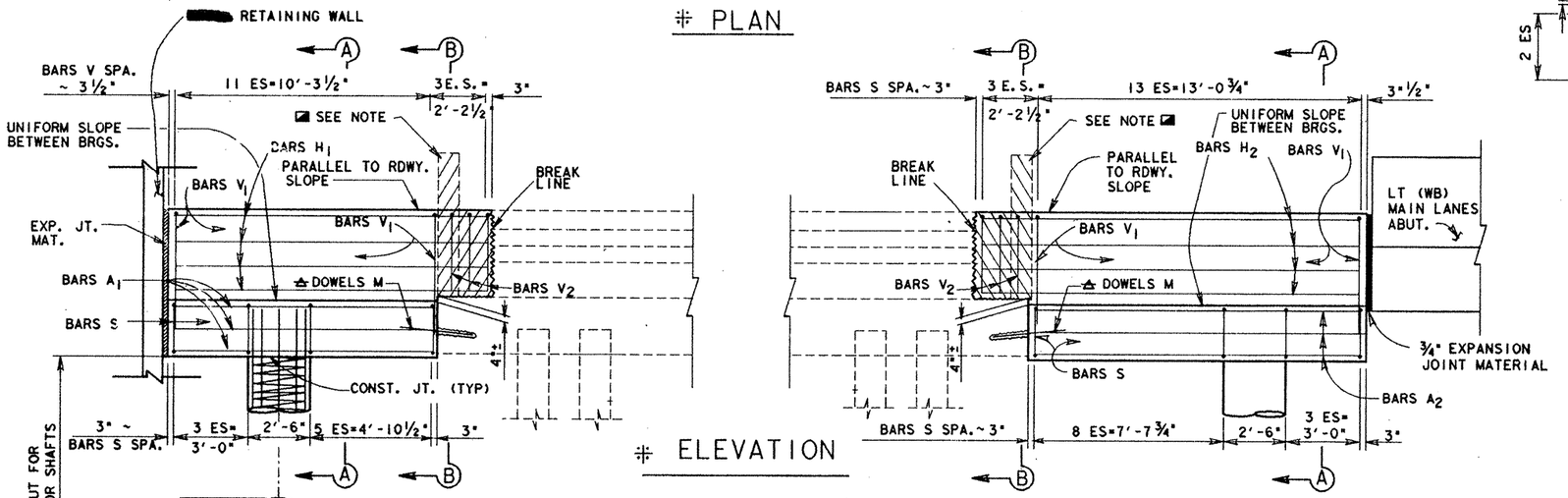

ELEVATION

● INCLUDED IN PRICE BID FOR DRILLED SHAFT

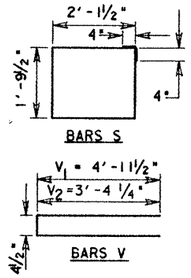

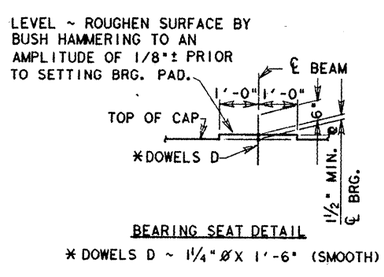

BEARING SEAT DETAIL

* DOWELS D ~ 1¼"Ø X 1'-6" (SMOOTH)

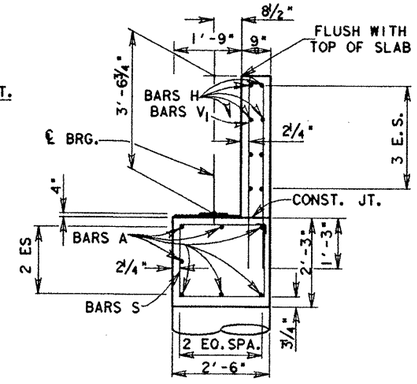

SECTION A-A

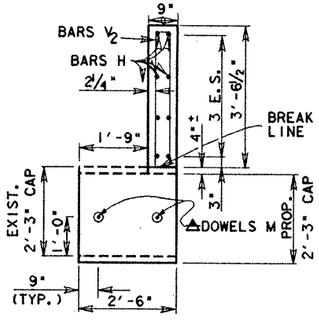

SECTION B-B

‡ ABUTMENT #1 SHOWN - OPPOSITE HAND FOR ABUTMENT #4.

REMOVE EXIST. BACKWALL AND PAVING BRACKET TO TOP OF CAP AS SHOWN. CLEAN & EXTEND EXIST. BACKWALL REINFORCING 1'-6" MIN. INTO NEW CONSTRUCTION. CUT EXISTING PAVING BRACKET REINF. FLUSH WITH BREAK LINE, PAINT ENDS WITH ZINC-RICH PAINT, AND PATCH SURFACE WITH 1½" OF EPOXY MORTAR. REMOVE EXIST. WINGWALL 1'-0" MIN. FROM BACK EDGE OF BACKWALL AND TO 1'-0" MIN. BELOW FINISHED GRADE.

DRILL & GROUT DOWELS M 1'-6" MIN. INTO EXIST. STRUCTURE. HOLES [redacted] DRILLED ON 2:12 SLOPE.

STATE OF TEXAS · JODY R. ELLINGTON · 68706 · REGISTERED PROFESSIONAL ENGINEER

Jody R. Ellington 3-1-92

‡ TABLE OF ESTIMATED QUANTITIES
LT. SIDE WIDENING

BAR	NO.	SIZE	LENGTH	WEIGHT
A_2	7	#11	13'-4"	496
D	2	1¼"ϕ	1'-6"	13
H_2	8	#5	15'-7"	130
M	2	#9	3'-0"	20
S	13	#4	8'-6"	74
V_1	14	#5	10'-4"	151
V_2	3	#5	7'-1"	22
⊕ REINF. STEEL			LBS.	906
CLASS "C" CONCRETE FOR EXT. STRUCT.			CY	4.5

‡ TABLE OF ESTIMATED QUANTITIES
RT. SIDE WIDENING

BAR	NO.	SIZE	LENGTH	WEIGHT
A1	7	#11	10'-7"	394
D	2	1¼"ϕ	1'-6"	13
H1	8	#5	12'-11"	108
M	2	#9	3'-0"	20
S	10	#4	8'-6"	57
V1	12	#5	10'-4"	129
V_2	3	#5	7'-1"	22
⊕ REINF. STEEL			LBS.	743
CLASS "C" CONCRETE FOR EXT. STRUCT.			CY	3.6

⊕ FOR CONTRACTOR'S INFORMATION ONLY.
‡ QUANTITIES SHOWN ARE FOR ONE ABUTMENT ONLY

GENERAL NOTES:

DESIGNED IN ACCORDANCE WITH AASHTO 1989 STANDARD AND INTERIM SPECIFICATIONS.
CALCULATED FOUNDATION LOAD=95 TONS/DR. SHAFT

ABUTMENTS 1 & 4
SUGAR RD OVERPASS
RT. (EB) MAIN LANES WIDENING

HS 20 LOADING

FED. RD. DIV. NO.	FEDERAL AID PROJECT NO.		SHEET NO.
6	NH 92( )M		133
STATE	DIST. NO.	COUNTY	
TEXAS	21	HIDALGO	
CONT.	SECT.	JOB	HIGHWAY NO.
39	11	97	US 83

D:\2000\...\ABUTMENTS\RSD1.DGN

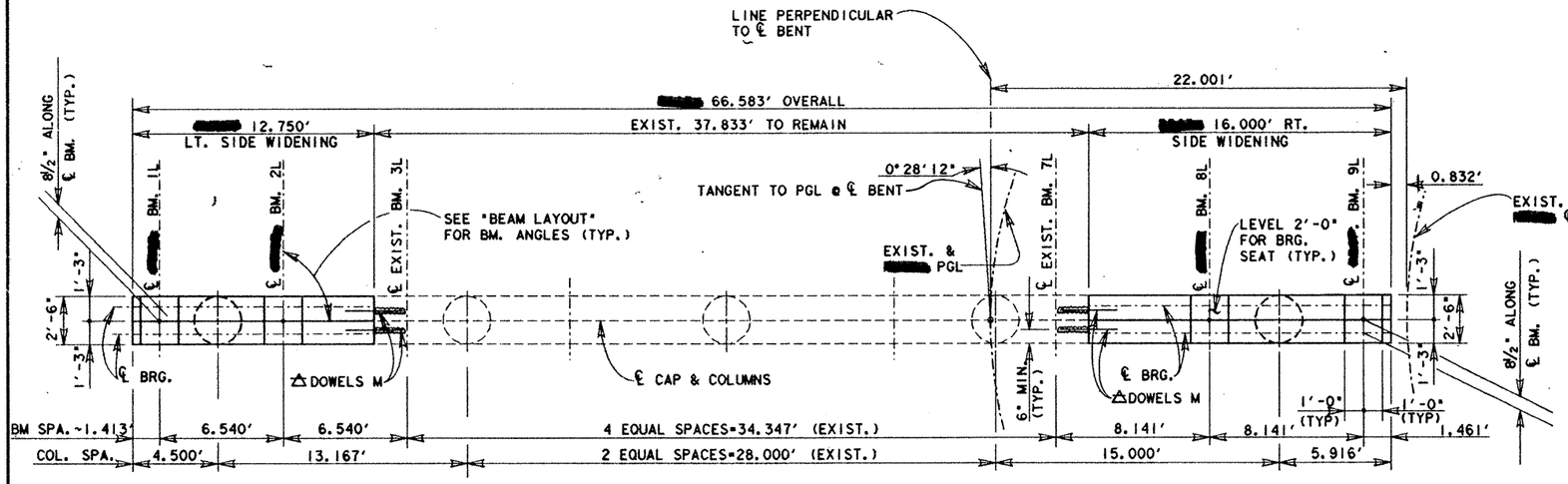

PLAN

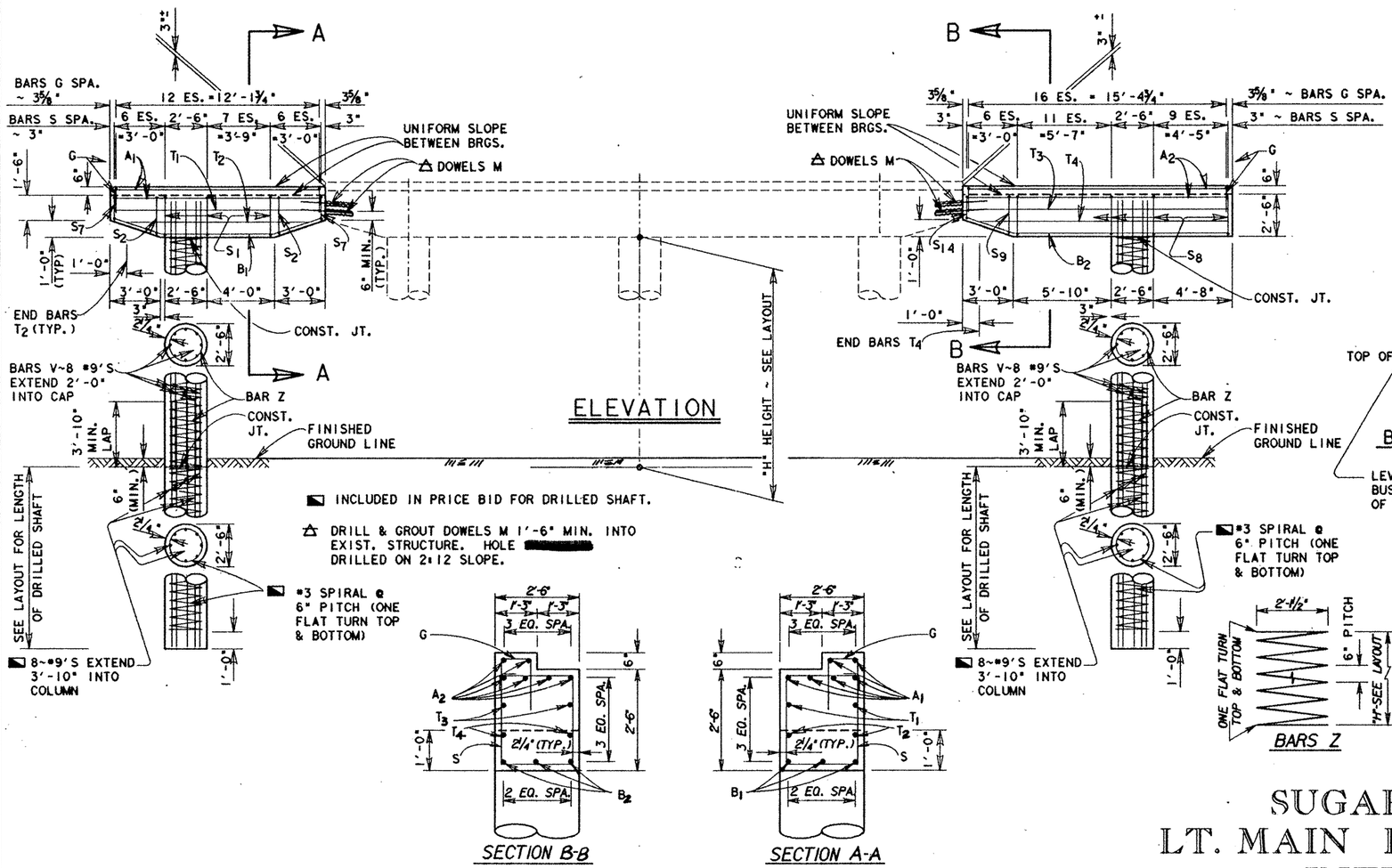

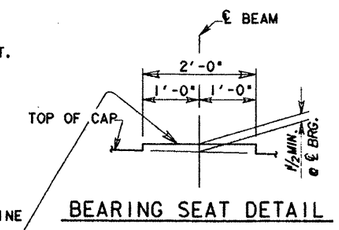

BEARING SEAT DETAIL

LEVEL ~ ROUGHEN SURFACE BY BUSH HAMMERING TO AN AMPLITUDE OF 1/8" ± PRIOR TO SETTING BRG. PAD.

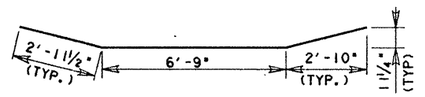

BARS B1

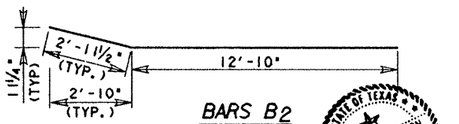

BARS B2

BARS Z

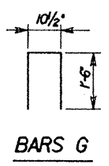

BARS G

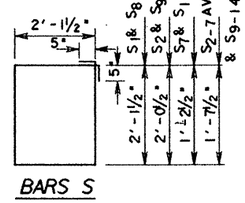

BARS S

TABLE OF CONSTANT QUANTITIES (LT. SIDE WIDEN.)

BAR	NO.	SIZE	LENGTH	WEIGHT
A_1	6	#9	12'-5"	253
B_1	3	#9	12'-8"	129
G	13	#5	3'-11"	53
M	4	#9	3'-0"	41
S_1	9	#5	9'-4"	88
S_{2-7}	12	#5	8'-4" AVG.	104
T_1	2	#5	12'-5"	26
T2	2	#5	10'-9"	22
REINF. STEEL ≠			LB	716
CL "C" CONC.			CY	3.0

TABLE OF CONSTANT QUANTITIES (RT. SIDE WIDEN.)

BAR	NO.	SIZE	LENGTH	WEIGHT
A_2	7	#11	15'-8"	583
B_2	3	#11	15'-10"	252
G	17	#5	3'-11"	69
M	4	#9	3'-0"	41
S_8	22	#5	9'-4"	214
S_{9-14}	6	#5	8'-4" AVG.	52
T_3	2	#6	15'-8"	47
T_4	2	#6	14'-10"	45
REINF. STEEL ≠			LB	1303
CL "C" CONC.			CY	4.0

ALL CAP STEEL SHALL BE GRADE 60

TABLE OF VARIABLE QUANTITIES

"H"	CLASS "C" CONC. (COLS.)	BARS Z 1 ~ #3 SPIRAL		BARS V 8 ~ #9		TOTAL ESTIMATED QUANTITIES (LT. SIDE WIDEN.) ≠ REINF. STEEL	TOTAL ESTIMATED QUANTITIES (LT. SIDE WIDEN.) CLASS "C" CONC.	TOTAL ESTIMATED QUANTITIES (RT. SIDE WIDEN.) ≠ REINF. STEEL	TOTAL ESTIMATED QUANTITIES (RT. SIDE WIDEN.) CLASS "C" CONC.
FT	CY	LENGTH	WEIGHT	LENGTH	WEIGHT	LB	CY	LB	CY
11	2.0	161'	61	13'-0"	354	1131	5.0	1718	6.0
12	2.2	174'	65	14'-0"	381	1162	5.2	1749	6.2
13	2.4	187'	70	15'-0"	408	1194	5.4	1781	6.4
14	2.5	201'	76	16'-0"	435	1227	5.5	1814	6.5
15	2.7	214'	80	17'-0"	462	1258	5.7	1845	6.7
16	2.9	228'	86	18'-0"	490	1292	5.9	1879	6.9
17	3.1	241'	91	19'-0"	517	1324	6.1	1911	7.1
18	3.3	254'	96	20'-0"	544	1356	6.3	1943	7.3
19	3.4	268'	101	21'-0"	571	1388	6.4	1975	7.4

● QUANTITIES SHOWN ARE FOR ONE SIDE WIDENING ONLY.
≠ FOR CONTRACTORS INFORMATION ONLY.

GENERAL NOTES:

DESIGNED IN ACCORDANCE WITH AASHTO 1989 STANDARD AND INTERIM SPECIFICATIONS.

CHAMFER ALL EXPOSED CORNERS 3/4" UNLESS OTHERWISE NOTED.

CALCULATED FOUNDATION LOAD = 130 TONS/DR. SHAFT

JOHN R. ELLINGTON 68708 REGISTERED PROFESSIONAL ENGINEER STATE OF TEXAS 3-1-92

SCALE: 1"=4'
HS 20 LOADING

SUGAR ROAD OVERPASS
LT. MAIN LANES (W.B.) WIDENING
INTERIOR BENT 2

FED. RD. DIV. NO.	FEDERAL AID PROJECT NO.		SHEET NO.
6	NH 92(2)M		134
STATE	STATE DIST. NO.	COUNTY	
TEXAS	21	HIDALGO	
CONT.	SECT.	JOB	HIGHWAY NO.
39	17	97	US 83

READJ 3RD ROAD SRI REV DGN 1BARLSAUF

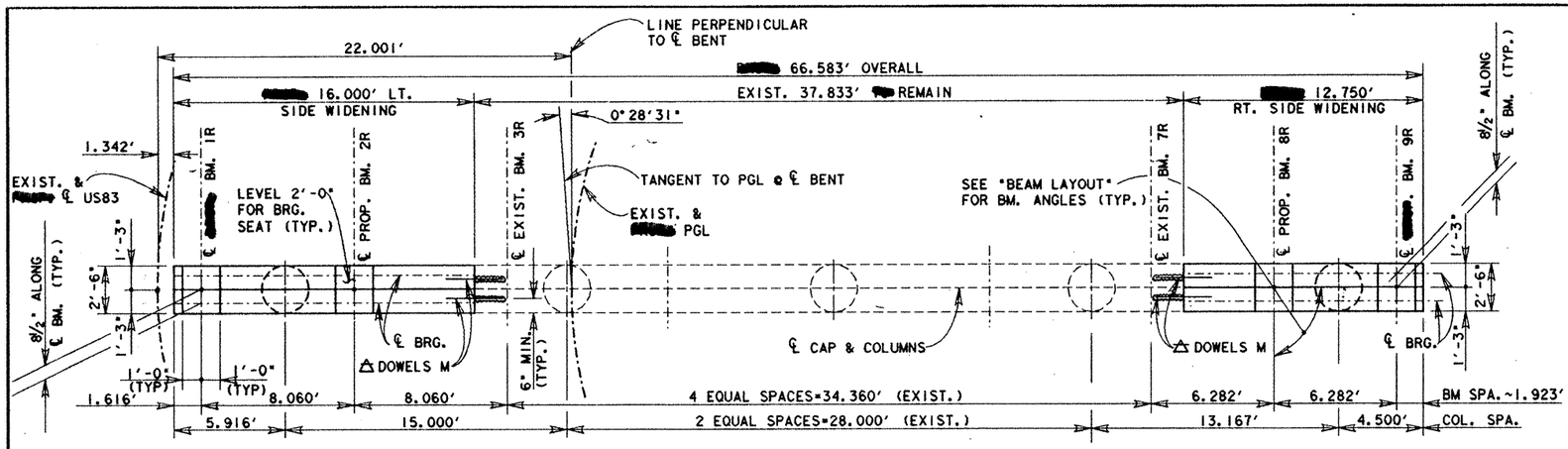

PLAN

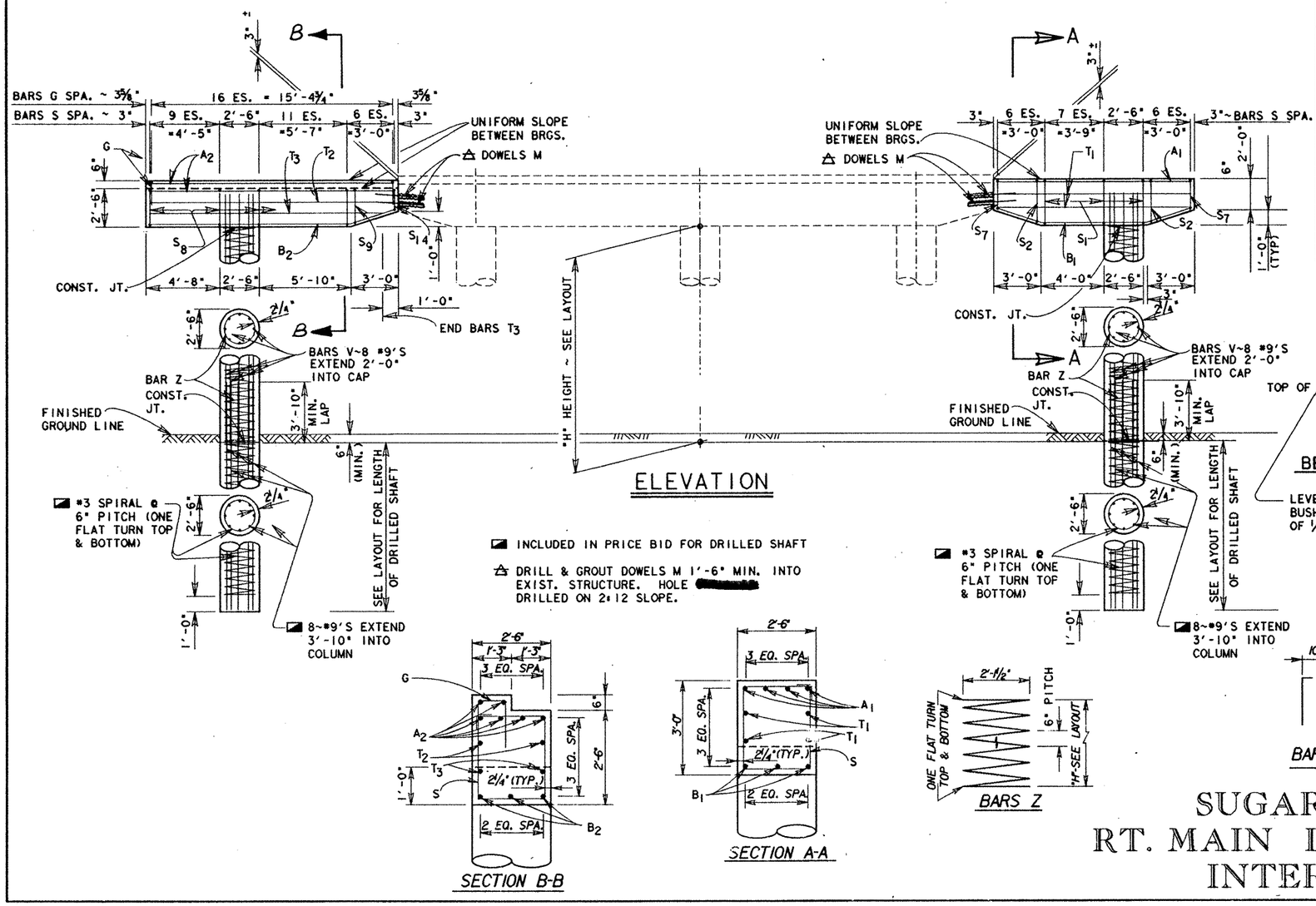

ELEVATION

INCLUDED IN PRICE BID FOR DRILLED SHAFT

DRILL & GROUT DOWELS M 1'-6" MIN. INTO EXIST. STRUCTURE. HOLE [redacted] DRILLED ON 2:12 SLOPE.

SECTION B-B

SECTION A-A

BARS Z

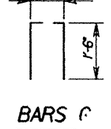

BARS C

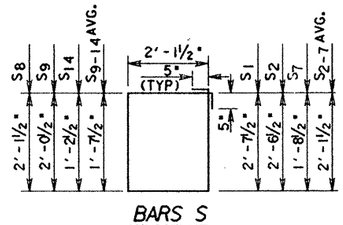

BARS S

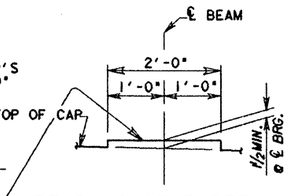

BEARING SEAT DETAIL

LEVEL ~ ROUGHEN SURFACE BY BUSH HAMMERING TO AN AMPLITUDE OF ⅛" ± PRIOR TO SETTING BRG. PAD.

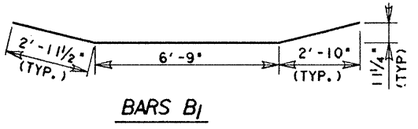

BARS B1

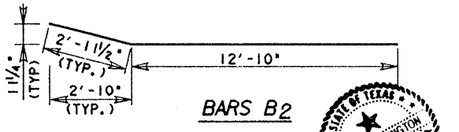

BARS B2

TABLE OF CONSTANT QUANTITIES (LT. SIDE WIDEN.)				
BAR	NO.	SIZE	LENGTH	WEIGHT
A_2	7	#11	15'-8"	583
B_2	3	#11	15'-10"	252
G	17	#5	3'-11"	69
M	4	#9	3'-0"	41
S_8	22	#5	9'-4"	214
S_{9-14}	6	#5	8'-4" AVG.	52
T_2	2	#6	15'-8"	47
T3	2	#6	14'-10"	45
REINF. STEEL			LB	1303
CL "C" CONC.			CY	4.0

TABLE OF CONSTANT QUANTITIES (RT. SIDE WIDEN.)				
BAR	NO.	SIZE	LENGTH	WEIGHT
A_1	4	#9	12'-5"	169
B_1	3	#9	12'-8"	129
M	4	#9	3'-0"	41
S_1	9	#5	10'-4"	97
S_{2-7}	12	#5	9'-4"AVG.	117
T_1	4	#5	12'-5"	52
REINF. STEEL			LB	605
CL "C" CONC.			CY	3.3

ALL CAP STEEL [redacted] GRADE 60

TABLE OF VARIABLE QUANTITIES						TOTAL ESTIMATED QUANTITIES (LT. SIDE WIDEN.)		TOTAL ESTIMATED QUANTITIES (RT. SIDE WIDEN.)	
"H"	CLASS "C" CONC. (COLS.)	BARS Z 1 ~ #3 SPIRAL		BARS V 8 ~ #9		REINF. STEEL	CLASS "C" CONC.	REINF. STEEL	CLASS "C" CONC.
FT	CY	LENGTH	WEIGHT	LENGTH	WEIGHT	LBS	CY	LBS	CY
11	2.0	161'	61	13'-0"	354	1718	6.0	1020	5.3
12	2.2	174'	65	14'-0"	381	1749	6.2	1051	5.5
13	2.4	187'	70	15'-0"	408	1781	6.4	1083	5.7
14	2.5	201'	76	16'-0"	435	1814	6.5	1116	5.8
15	2.7	214'	80	17'-0"	462	1845	6.7	1147	6.0
16	2.9	228'	86	18'-0"	490	1879	6.9	1181	6.2
17	3.1	241'	91	19'-0"	517	1911	7.1	1213	6.4
18	3.3	254'	96	20'-0"	544	1943	7.3	1245	6.6
19	3.4	268'	101	21'-0"	571	1975	7.4	1277	6.7

⊖ QUANTITIES SHOWN ARE FOR ONE SIDE WIDENING ONLY.
⫽ FOR CONTRACTORS INFORMATION ONLY.

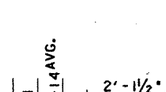

GENERAL NOTES:

DESIGNED IN ACCORDANCE WITH AASHTO 1989 STANDARD AND INTERIM SPECIFICATIONS.

CHAMFER ALL EXPOSED CORNERS 3/4" UNLESS OTHERWISE NOTED.

CALCULATED FOUNDATION LOAD = 130 TONS/DR. SHAFT

SUGAR ROAD OVERPASS
RT. MAIN LANES (E.B.) WIDENING
INTERIOR BENT 2

SCALE: 1"=1'
HS 20 LOADING

FED. RD. DIV. NO.	FEDERAL AID PROJECT NO.		SHEET NO.
6	NH 92( )M		135
STATE	STATE DIST. NO.	COUNTY	
TEXAS	21	HIDALGO	
CONT.	SECT.	JOB	HIGHWAY NO.
39	17	97	US 83

ZFA2:[325104]SRRBEN.DGN IPAR... E

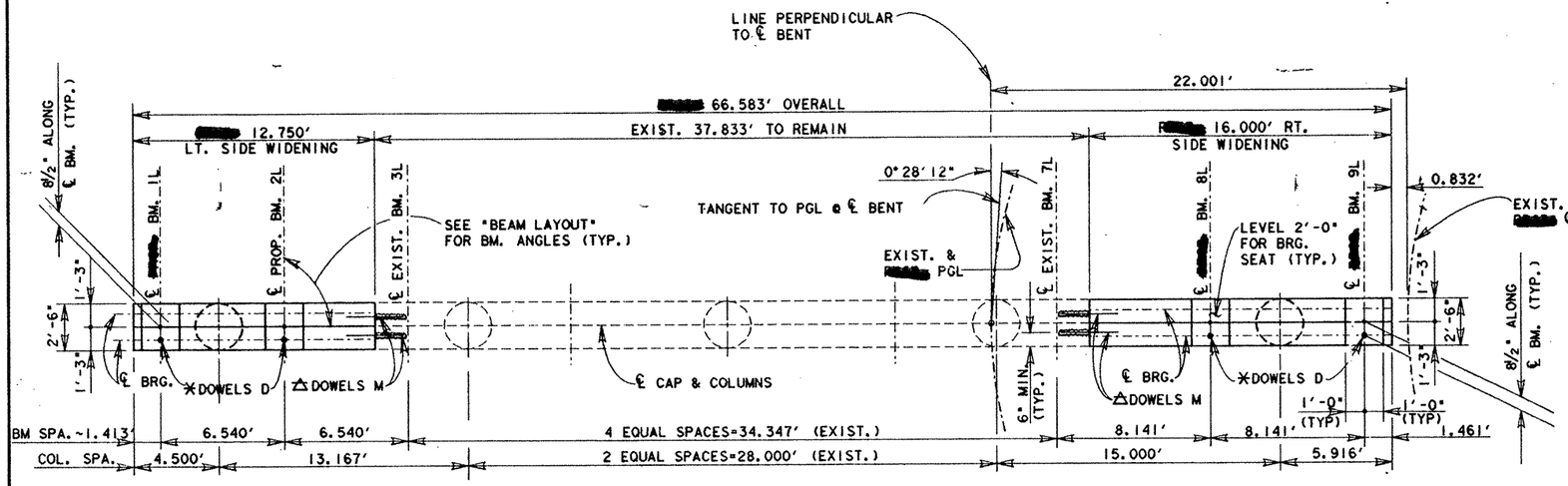

PLAN

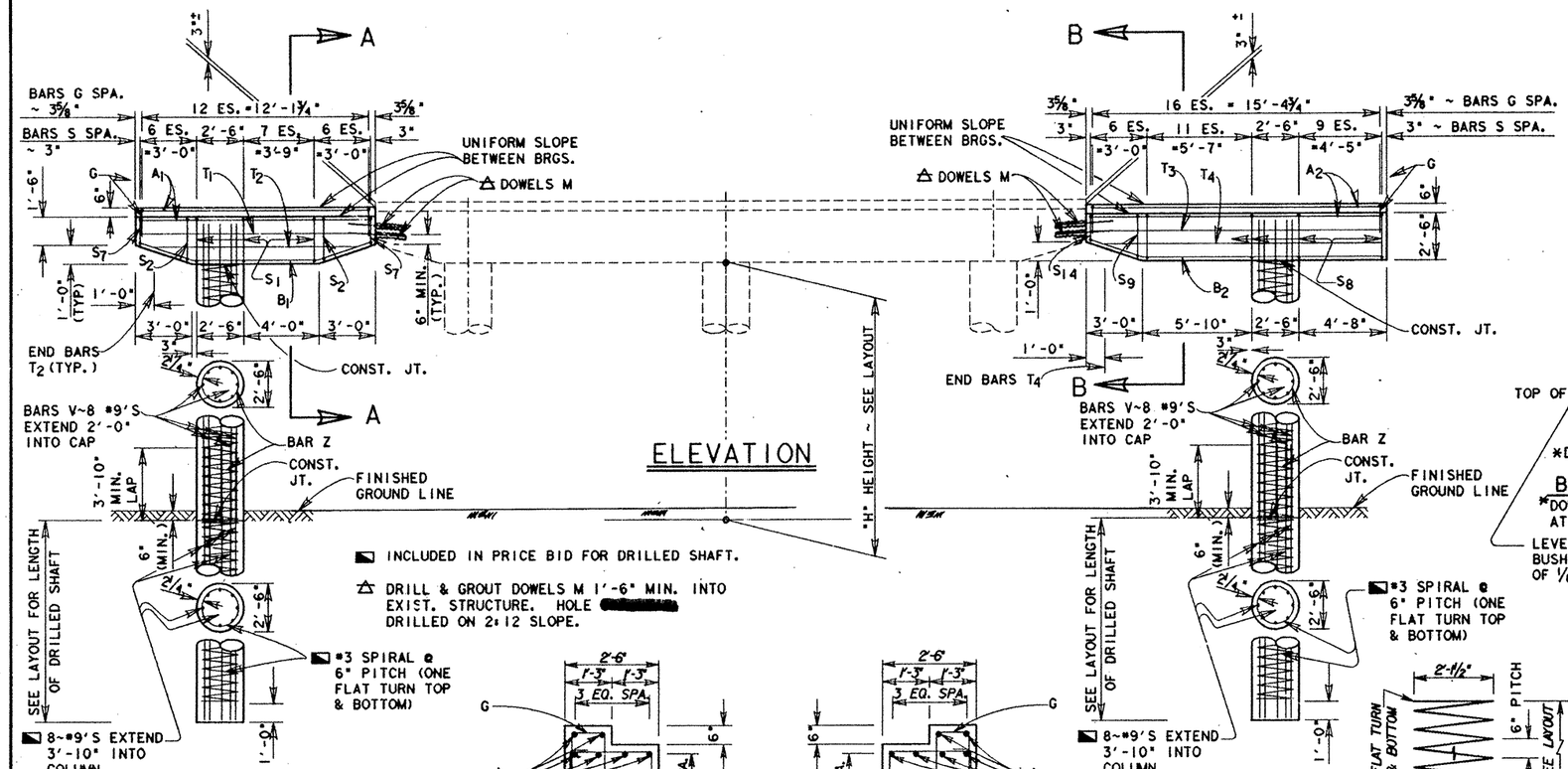

ELEVATION

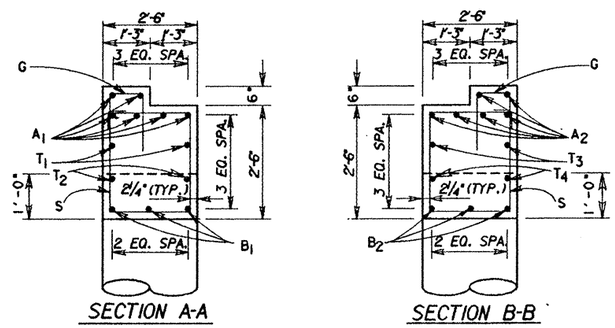

SECTION A-A SECTION B-B

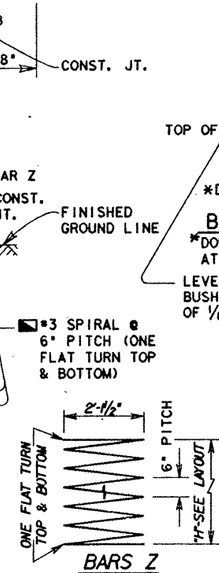

BEARING SEAT DETAIL

✱DOWELS D ~ 1¼"ø x 1'-6" (SMOOTH). AT 3 (BK) ONLY.

LEVEL ~ ROUGHEN SURFACE BY BUSH HAMMERING TO AN AMPLITUDE OF ⅛" ± PRIOR TO SETTING BRG. PAD.

BARS B1 BARS B2 BARS Z BARS G BARS S

TABLE OF CONSTANT QUANTITIES (LT. SIDE WIDEN.)

BAR	NO.	SIZE	LENGTH	WEIGHT
A_1	6	#9	12'-5"	253
B_1	3	#9	12'-8"	129
G	13	#5	3'-11"	53
M	4	#9	3'-0"	41
S_1	9	#5	9'-4"	88
S_{2-7}	12	#5	8'-4" AVG.	104
T_1	2	#5	12'-5"	26
T2	2	#5	10'-9"	22
D	2	1¼"ø	1'-6"	13
REINF. STEEL ≠			LB	729
CL "C" CONC.			CY	3.0

TABLE OF CONSTANT QUANTITIES (RT. SIDE WIDEN.)

BAR	NO.	SIZE	LENGTH	WEIGHT
A_2	7	#11	15'-8"	583
B_2	3	#11	15'-10"	252
G	17	#5	3'-11"	69
M	4	#9	3'-0"	41
S_8	22	#5	9'-4"	214
S_{9-14}	6	#5	8'-4" AVG.	52
T_3	2	#6	15'-8"	47
T_4	2	#6	14'-10"	45
D	2	1¼"ø	1'-6"	13
REINF. STEEL ≠			LB	1316
CL "C" CONC.			CY	4.0

ALL CAP STEEL [redacted] GRADE 60

⊖ TABLE OF VARIABLE QUANTITIES

"H"	CLASS "C" CONC. (COLS.)	BARS Z 1 ~ #3 SPIRAL		BARS V 8 ~ #9		TOTAL ESTIMATED QUANTITIES (LT. SIDE WIDEN.) ≠ REINF. STEEL	TOTAL ESTIMATED QUANTITIES (LT. SIDE WIDEN.) CLASS "C" CONC.	TOTAL ESTIMATED QUANTITIES (RT. SIDE WIDEN.) ≠ REINF. STEEL	TOTAL ESTIMATED QUANTITIES (RT. SIDE WIDEN.) CLASS "C" CONC.
FT	CY	LENGTH	WEIGHT	LENGTH	WEIGHT	LB	CY	LB	CY
11	2.0	161'	61	13'-0"	354	1144	5.0	1731	6.0
12	2.2	174'	65	14'-0"	381	1175	5.2	1762	6.2
13	2.4	187'	70	15'-0"	408	1207	5.4	1794	6.4
14	2.5	201'	76	16'-0"	435	1240	5.5	1827	6.5
15	2.7	214'	80	17'-0"	462	1271	5.7	1858	6.7
16	2.9	228'	86	18'-0"	490	1305	5.9	1892	6.9
17	3.1	241'	91	19'-0"	517	1337	6.1	1924	7.1
18	3.3	254'	96	20'-0"	544	1369	6.3	1956	7.3
19	3.4	268'	101	21'-0"	571	1401	6.4	1988	7.4

⊖ QUANTITIES SHOWN ARE FOR ONE SIDE WIDENING ONLY.

≠ FOR CONTRACTORS INFORMATION ONLY.

GENERAL NOTES:

DESIGNED IN ACCORDANCE WITH AASHTO 1989 STANDARD AND INTERIM SPECIFICATIONS.

CHAMFER ALL EXPOSED CORNERS 3/4" UNLESS OTHERWISE NOTED.

CALCULATED FOUNDATION LOAD = 130 TONS/DR. SHAFT

STATE OF TEXAS · JUDY R. ELLINGTON · 68706 · REGISTERED PROFESSIONAL ENGINEER · 3-1-92

SCALE: 1"=4'

HS 20 LOADING

SUGAR ROAD OVERPASS
LT. MAIN LANES (W.B.) WIDENING
INTERIOR BENT 3

FED. RD. DIV. NO.	FEDERAL AID PROJECT NO.		SHEET NO.
6	NH 92( )M		136
STATE	STATE DIST. NO.	COUNTY	
TEXAS	21	HIDALGO	
CONT.	SECT.	JOB	HIGHWAY NO.
39	11	97	US 83

TEAGUE SPRINGS SALBEND DRN IPARM:SAVE

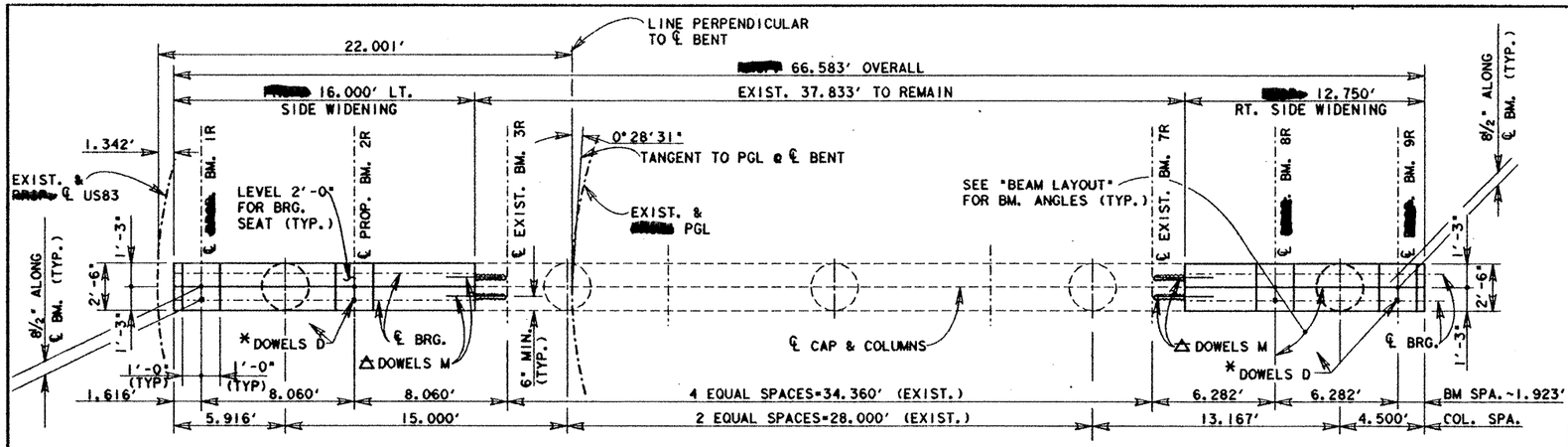

PLAN

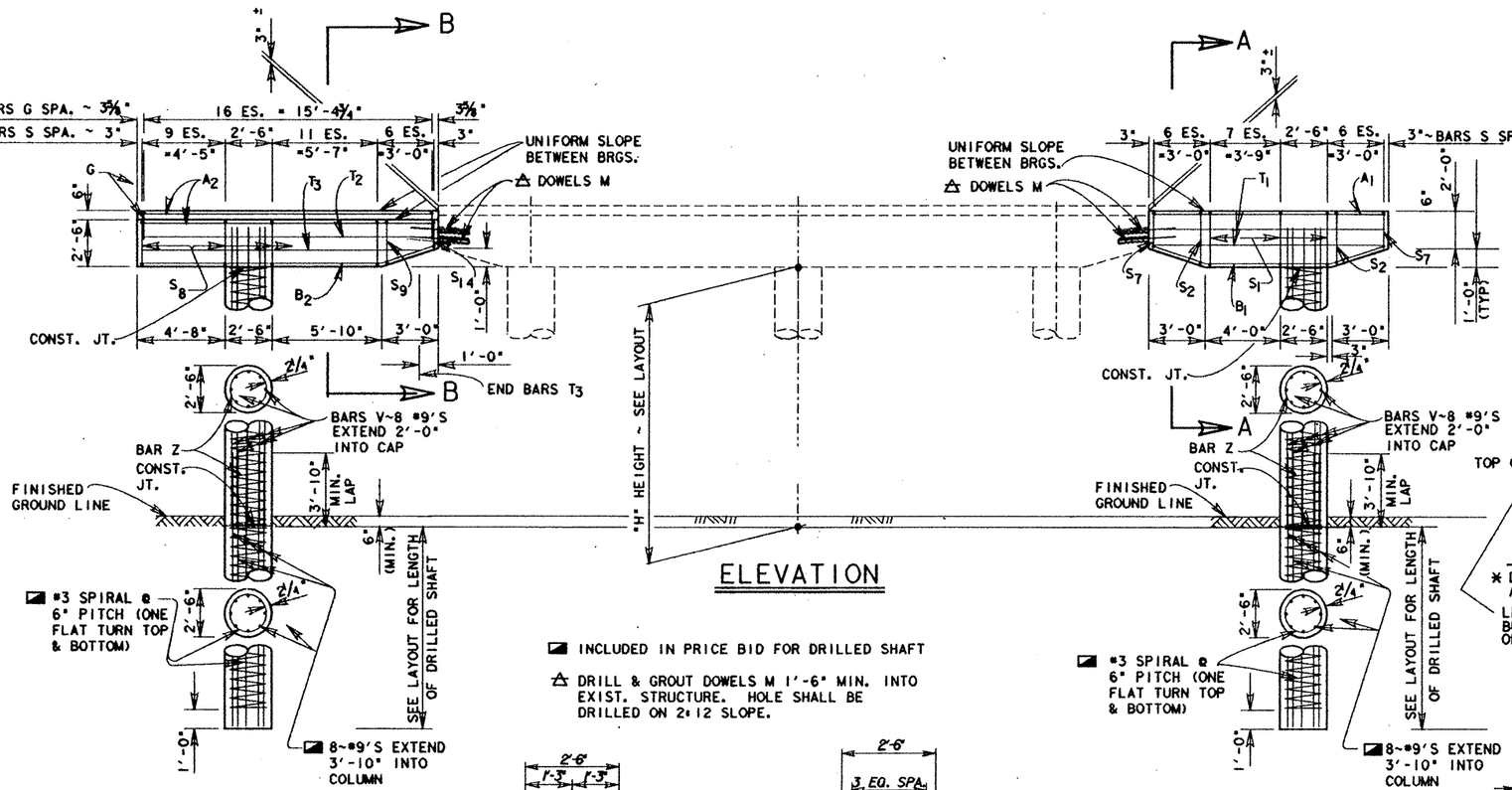

INCLUDED IN PRICE BID FOR DRILLED SHAFT

△ DRILL & GROUT DOWELS M 1'-6" MIN. INTO EXIST. STRUCTURE. HOLE SHALL BE DRILLED ON 2:12 SLOPE.

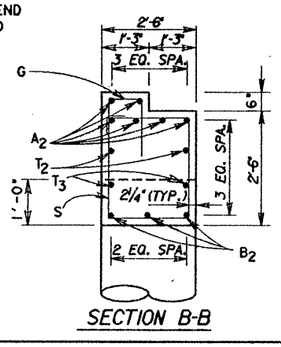

SECTION B-B

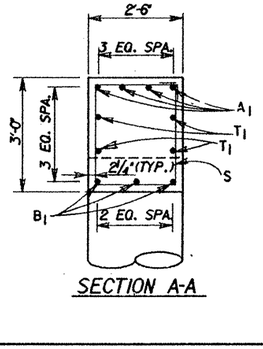

SECTION A-A

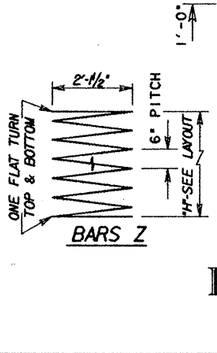

BARS Z

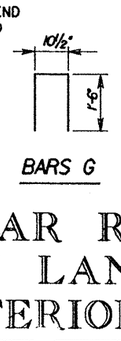

BARS G

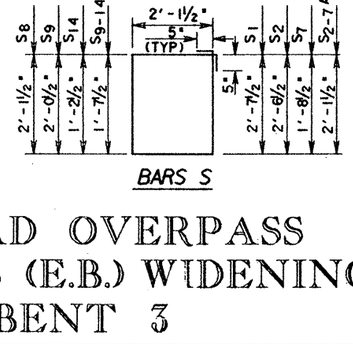

BARS S

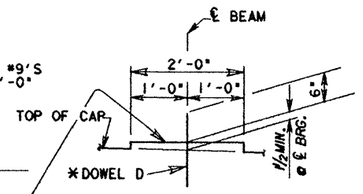

BEARING SEAT DETAIL

* DOWELS D - 1¼" ø X 1'-6" (SMOOTH) AT 3(BK) ONLY.

LEVEL ~ ROUGHEN SURFACE BY BUSH HAMMERING TO AN AMPLITUDE OF ⅛" - PRIOR TO SETTING BRG. PAD.

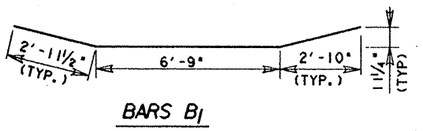

BARS B1

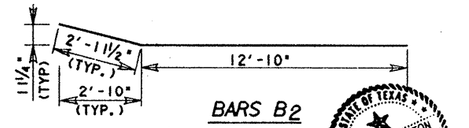

BARS B2

TABLE OF CONSTANT QUANTITIES (LT. SIDE WIDEN.)				
BAR	NO.	SIZE	LENGTH	WEIGHT
A_2	7	#11	15'-8"	583
B_2	3	#11	15'-10"	252
G	17	#5	3'-11"	69
M	4	#9	3'-0"	41
S_8	22	#5	9'-4"	214
S_{9-14}	6	#5	8'-4" AVG.	52
T_2	2	#6	15'-8"	47
T3	2	#6	14'-10"	45
D	2	1¼"	1'-6"	13
REINF. STEEL ≠			LB	1316
CL "C" CONC.			CY	4.0

ALL CAP STEEL [redacted] GRADE 60

TABLE OF CONSTANT QUANTITIES (RT. SIDE WIDEN.)				
BAR	NO.	SIZE	LENGTH	WEIGHT
A_1	4	#9	12'-5"	169
B_1	3	#9	12'-8"	129
M	4	#9	3'-0"	41
S_1	9	#5	10'-4"	97
S_{2-7}	12	#5	9'-4"AVG.	117
T_1	4	#5	12'-5"	52
D	2	1¼"	1'-6"	13
REINF. STEEL ≠			LB	618
CL "C" CONC.			CY	3.3

⊖ TABLE OF VARIABLE QUANTITIES						TOTAL ESTIMATED QUANTITIES (LT. SIDE WIDEN.)		TOTAL ESTIMATED QUANTITIES (RT. SIDE WIDEN.)	
"H"	CLASS "C" CONC. (COLS.)	BARS Z (~ #3 SPIRAL		BARS V 8 ~ #9		≠ REINF. STEEL	CLASS "C" CONC.	≠ REINF. STEEL	CLASS "C" CONC.
FT	CY	LENGTH	WEIGHT	LENGTH	WEIGHT	LBS	CY	LBS	CY
11	2.0	161'	61	13'-0"	354	1731	6.0	1033	5.3
12	2.2	174'	65	14'-0"	381	1762	6.2	1064	5.5
13	2.4	187'	70	15'-0"	408	1794	6.4	1096	5.7
14	2.5	201'	76	16'-0"	435	1827	6.5	1129	5.8
15	2.7	214'	80	17'-0"	462	1858	6.7	1160	6.0
16	2.9	228'	86	18'-0"	490	1892	6.9	1194	6.2
17	3.1	241'	91	19'-0"	517	1924	7.1	1226	6.4
18	3.3	254'	96	20'-0"	544	1956	7.3	1258	6.6
19	3.4	268'	101	21'-0"	571	1988	7.4	1290	6.7

⊖ QUANTITIES SHOWN ARE FOR ONE SIDE WIDENING ONLY.
≠ FOR CONTRACTORS INFORMATION ONLY.

GENERAL NOTES:

DESIGNED IN ACCORDANCE WITH AASHTO 1989 STANDARD AND INTERIM SPECIFICATIONS.

CHAMFER ALL EXPOSED CORNERS 3/4" UNLESS OTHERWISE NOTED.

CALCULATED FOUNDATION LOAD = 130 TONS/DR. SHAFT

STATE OF TEXAS · JOHN R. ELLINGTON · 68708 · REGISTERED PROFESSIONAL ENGINEER · 3-1-92

SUGAR ROAD OVERPASS
RT. MAIN LANES (E.B.) WIDENING
INTERIOR BENT 3

SCALE: 1"=1'
HS 20 LOADING

FED. RD. DIV. NO.	FEDERAL AID PROJECT NO.		SHEET NO.
6	NH 92C (M)		137
STATE	STATE DIST. NO.	COUNTY	
TEXAS	21	HIDALGO	
CONT.	SECT.	JOB	HIGHWAY NO.
39	17	97	US 83

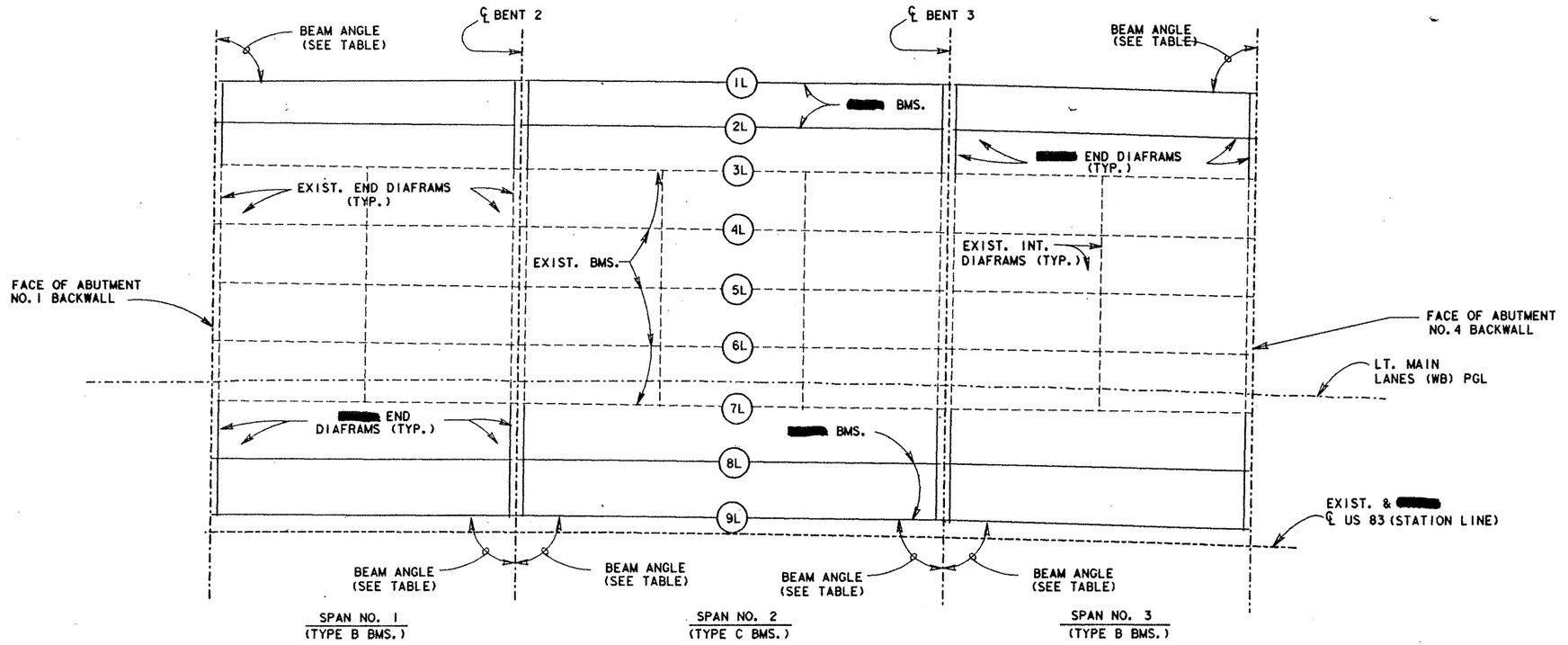

BEAM REPORT

BEAM REPORT, SPAN 1

	HORIZONTAL DISTANCE C-C BENT	C-C BRG.	TRUE DISTANCE BOT. BM. FLG.
BEAM 1	45.000	43.583	44.666
BEAM 2	44.996	43.580	44.663
BEAM 8	44.996	43.580	44.663
BEAM 9	45.000	43.583	44.667

BEAM REPORT, SPAN 2

	HORIZONTAL DISTANCE C-C BENT	C-C BRG.	TRUE DISTANCE BOT. BM. FLG.
BEAM 1	62.999	61.583	62.666
BEAM 2	62.999	61.583	62.666
BEAM 8	62.999	61.583	62.666
BEAM 9	62.999	61.583	62.666

BEAM REPORT, SPAN 3

	HORIZONTAL DISTANCE C-C BENT	C-C BRG.	TRUE DISTANCE BOT. BM. FLG.
BEAM 1	45.000	43.583	44.667
BEAM 2	44.996	43.580	44.663
BEAM 8	44.996	43.580	44.663
BEAM 9	45.000	43.583	44.667

DIAFRAM REPORT

SPAN NO. 1

	DIAPH.	DISTANCE TO BEAM END	DIAPH.	DISTANCE TO BEAM END	DIAPH.	DISTANCE TO BEAM END
BEAM 1	0.958	0.958	43.083	44.041	0.958	45.000
BEAM 2	0.958	0.958	43.080	44.038	0.958	44.996
BEAM 8	0.958	0.958	43.080	44.038	0.958	44.996
BEAM 9	0.958	0.958	43.083	44.041	0.958	45.000

SPAN NO. 2

	DIAPH.	DISTANCE TO BEAM END	DIAPH.	DISTANCE TO BEAM END	DIAPH.	DISTANCE TO BEAM END
BEAM 1	0.958	0.958	61.083	62.041	0.958	62.999
BEAM 2	0.958	0.958	61.083	62.041	0.958	62.999
BEAM 8	0.958	0.958	61.083	62.041	0.958	62.999
BEAM 9	0.958	0.958	61.083	62.041	0.958	62.999

SPAN NO. 3

	DIAPH.	DISTANCE TO BEAM END	DIAPH.	DISTANCE TO BEAM END	DIAPH.	DISTANCE TO BEAM END
BEAM 1	0.958	0.958	43.083	44.041	0.958	45.000
BEAM 2	0.958	0.958	43.080	44.038	0.958	44.996
BEAM 8	0.958	0.958	43.080	44.038	0.958	44.996
BEAM 9	0.958	0.958	43.083	44.041	0.958	45.000

DIAFRAM LENGTHS, SPAN 1

	DIAF 1	DIAF 2
BEAMS 1 - 2	6.234	6.533
BEAMS 2 - 3	6.234	6.533
BEAMS 7 - 8	8.452	8.148
BEAMS 8 - 9	8.452	8.148

DIAFRAM LENGTHS, SPAN 2

	DIAF 1	DIAF 2
BEAMS 1 - 2	6.540	6.540
BEAMS 2 - 3	6.540	6.540
BEAMS 7 - 8	8.141	8.141
BEAMS 8 - 9	8.141	8.141

DIAFRAM LENGTHS, SPAN 3

	DIAF 1	DIAF 2
BEAMS 1 - 2	6.533	6.234
BEAMS 2 - 3	6.533	6.234
BEAMS 7 - 8	8.148	8.452
BEAMS 8 - 9	8.148	8.452

BENT REPORT

ABUT NO. 1 (S 30 0 49.94 E)
DISTANCE BETWEEN STATION LINE AND BEAM 1 66.013 L

		BEAM SPAC. (C.L. BENT)	BEAM ANGLE D M S
SPAN 1	BEAM 1	0.000	89 12 14
	BEAM 2	6.228	89 36 9
	BEAM 3	6.228	90 0 0
	BEAM 7	34.347	90 0 0
	BEAM 8	8.459	89 35 46
	BEAM 9	8.459	89 11 26
	TOTAL	63.721	

BENT NO. 2 (S 30 0 49.94 E)
DISTANCE BETWEEN STATION LINE AND BEAM 1 66.002 L

		BEAM SPAC. (C.L. BENT)	BEAM ANGLE D M S
SPAN 1	BEAM 1	0.000	89 12 14
	BEAM 2	6.540	89 36 9
	BEAM 3	6.540	90 0 0
	BEAM 7	34.348	90 0 0
	BEAM 8	8.141	89 35 46
	BEAM 9	8.141	89 11 26
	TOTAL	63.710	
SPAN 2	BEAM 1	0.000	90 0 0
	BEAM 2	6.540	90 0 0
	BEAM 3	6.540	90 0 0
	BEAM 7	34.348	90 0 0
	BEAM 8	8.141	90 0 0
	BEAM 9	8.141	90 0 0
	TOTAL	63.710	

BENT NO. 3 (S 30 0 49.94 E)
DISTANCE BETWEEN STATION LINE AND BEAM 1 66.002 L

		BEAM SPAC. (C.L. BENT)	BEAM ANGLE D M S
SPAN 2	BEAM 1	0.000	90 0 0
	BEAM 2	6.540	90 0 0
	BEAM 3	6.540	90 0 0
	BEAM 7	34.348	90 0 0
	BEAM 8	8.141	90 0 0
	BEAM 9	8.141	90 0 0
	TOTAL	63.710	
SPAN 3	BEAM 1	0.000	89 12 14
	BEAM 2	6.540	89 36 9
	BEAM 3	6.540	90 0 0
	BEAM 7	34.348	90 0 0
	BEAM 8	8.141	89 35 46
	BEAM 9	8.141	89 11 26
	TOTAL	63.710	

ABUT NO. 4 (S 30 0 49.94 E)
DISTANCE BETWEEN STATION LINE AND BEAM 1 66.013 L

		BEAM SPAC. (C.L. BENT)	BEAM ANGLE D M S
SPAN 3	BEAM 1	0.000	89 12 14
	BEAM 2	6.228	89 36 9
	BEAM 3	6.228	90 0 0
	BEAM 7	34.347	90 0 0
	BEAM 8	8.459	89 35 46
	BEAM 9	8.459	89 11 26
	TOTAL	63.721	

STATE OF TEXAS
JODY R. ELLINGTON
68708
REGISTERED PROFESSIONAL ENGINEER
Jody R. Ellington
2-27-92

SUGAR RD. OVERPASS
LT. MAIN LANES (WB) WIDENING
BEAM LAYOUT

FED. RD. DIV. NO.	FEDERAL AID PROJECT NO.		SHEET NO.
6	NH 92( )M		138
STATE	STATE DIST. NO.	COUNTY	
TEXAS	21	HIDALGO	
CONT.	SECT.	JOB	HIGHWAY NO.
39	17	97	US 83

7EA2: F325104136PLLT DGN (RAPH: SAME

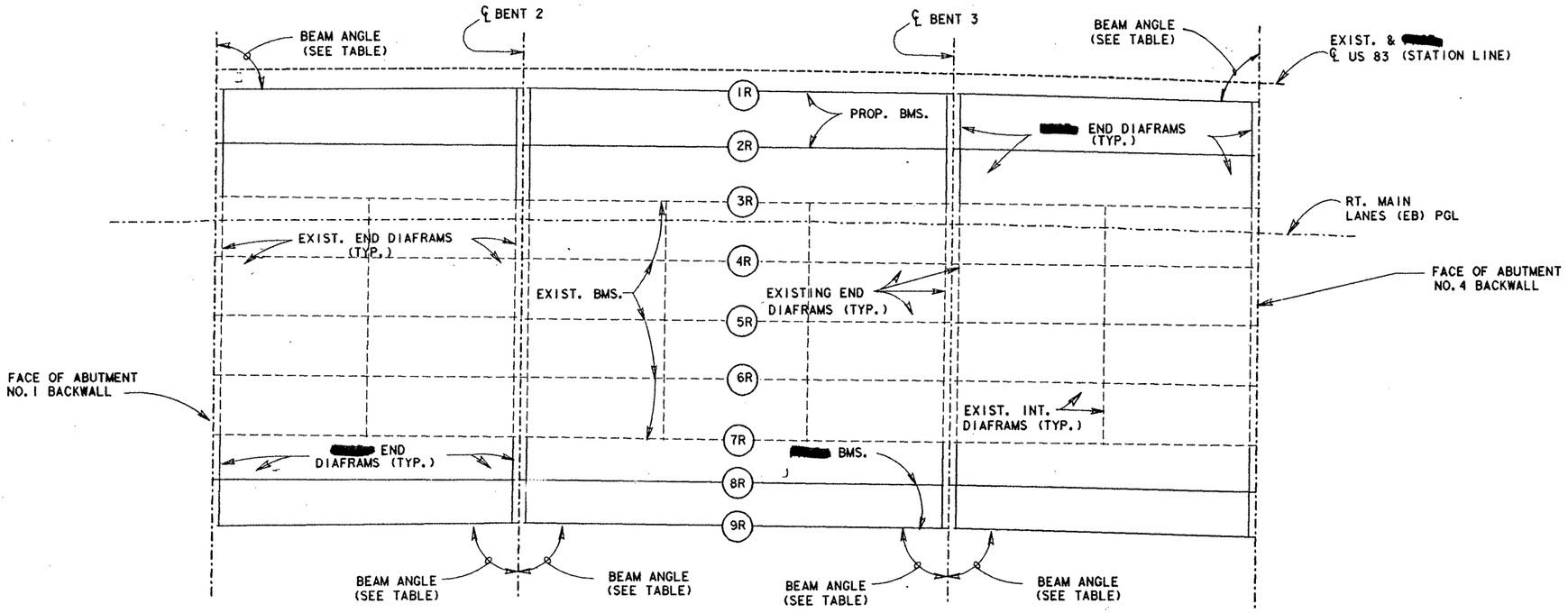

BEAM REPORT

BEAM REPORT, SPAN 1

	HORIZONTAL DISTANCE C-C BENT	C-C BRG.	TRUE DISTANCE BOT. BM. FLG.
BEAM 1	45.000	43.583	44.667
BEAM 2	44.996	43.580	44.663
BEAM 8	44.996	43.580	44.663
BEAM 9	45.000	43.583	44.667

BEAM REPORT, SPAN 2

	HORIZONTAL DISTANCE C-C BENT	C-C BRG.	TRUE DISTANCE BOT. BM. FLG.
BEAM 1	62.999	61.583	62.666
BEAM 2	62.999	61.583	62.666
BEAM 8	62.999	61.583	62.666
BEAM 9	62.999	61.583	62.666

BEAM REPORT, SPAN 3

	HORIZONTAL DISTANCE C-C BENT	C-C BRG.	TRUE DISTANCE BOT. BM. FLG.
BEAM 1	45.000	43.583	44.667
BEAM 2	44.996	43.580	44.663
BEAM 8	44.996	43.580	44.663
BEAM 9	45.000	43.583	44.667

DIAFRAM REPORT

SPAN NO. 1

	DISTANCE TO DIAPH.	BEAM END	DISTANCE TO DIAPH.	BEAM END	DISTANCE TO DIAPH.	BEAM END
BEAM 1	0.958	0.958	43.083	44.041	0.958	45.000
BEAM 2	0.958	0.958	43.080	44.038	0.958	44.996
BEAM 8	0.958	0.958	43.080	44.038	0.958	44.996
BEAM 9	0.958	0.958	43.083	44.042	0.958	45.000

SPAN NO. 2

	DISTANCE TO DIAPH.	BEAM END	DISTANCE TO DIAPH.	BEAM END	DISTANCE TO DIAPH.	BEAM END
BEAM 1	0.958	0.958	61.083	62.041	0.958	62.999
BEAM 2	0.958	0.958	61.083	62.041	0.958	62.999
BEAM 8	0.958	0.958	61.083	62.041	0.958	62.999
BEAM 9	0.958	0.958	61.083	62.041	0.958	62.999

SPAN NO. 3

	DISTANCE TO DIAPH.	BEAM END	DISTANCE TO DIAPH.	BEAM END	DISTANCE TO DIAPH.	BEAM END
BEAM 1	0.958	0.958	43.083	44.041	0.958	45.000
BEAM 2	0.958	0.958	43.080	44.038	0.958	44.996
BEAM 8	0.958	0.958	43.080	44.038	0.958	44.996
BEAM 9	0.958	0.958	43.083	44.042	0.958	45.000

DIAFRAM LENGTHS, SPAN 1

	DIAF 1	DIAF 2
BEAMS 1 - 2	7.748	8.053
BEAMS 2 - 3	7.748	8.053
BEAMS 7 - 8	6.598	6.288
BEAMS 8 - 9	6.598	6.288

DIAFRAM LENGTHS, SPAN 2

	DIAF 1	DIAF 2
BEAMS 1 - 2	8.060	8.060
BEAMS 2 - 3	8.060	8.060
BEAMS 7 - 8	6.281	6.281
BEAMS 8 - 9	6.281	6.281

DIAFRAM LENGTHS, SPAN 3

	DIAF 1	DIAF 2
BEAMS 1 - 2	8.053	7.748
BEAMS 2 - 3	8.053	7.748
BEAMS 7 - 8	6.288	6.598
BEAMS 8 - 9	6.288	6.598

BENT REPORT

ABUT NO. 1 (S 30 0 49.94 E)
DISTANCE BETWEEN STATION LINE AND BEAM 1 2.959 R

		BEAM SPAC. (C.L. BENT)	BEAM ANGLE D	M	S
SPAN 1	BEAM 1	0.000	89	11	22
	BEAM 2	7.742	89	35	42
	BEAM 3	7.742	90	0	0
	BEAM 7	34.361	90	0	0
	BEAM 8	6.605	89	35	19
	BEAM 9	6.605	89	10	33
	TOTAL	63.055			

BENT NO. 2 (S 30 0 49.94 E)
DISTANCE BETWEEN STATION LINE AND BEAM 1 2.958 R

		BEAM SPAC. (C.L. BENT)	BEAM ANGLE D	M	S
SPAN 1	BEAM 1	0.000	89	11	22
	BEAM 2	8.060	89	35	42
	BEAM 3	8.060	90	0	0
	BEAM 7	34.360	90	0	0
	BEAM 8	6.282	89	35	19
	BEAM 9	6.282	89	10	33
	TOTAL	63.044			
SPAN 2	BEAM 1	0.000	90	0	0
	BEAM 2	8.060	90	0	0
	BEAM 3	8.060	90	0	0
	BEAM 7	34.360	90	0	0
	BEAM 8	6.282	90	0	0
	BEAM 9	6.282	90	0	0
	TOTAL	63.044			

BENT NO. 3 (S 30 0 49.94 E)
DISTANCE BETWEEN STATION LINE AND BEAM 1 2.958 R

		BEAM SPAC. (C.L. BENT)	BEAM ANGLE D	M	S
SPAN 2	BEAM 1	0.000	90	0	0
	BEAM 2	8.060	90	0	0
	BEAM 3	8.060	90	0	0
	BEAM 7	34.360	90	0	0
	BEAM 8	6.282	90	0	0
	BEAM 9	6.282	90	0	0
	TOTAL	63.044			
SPAN 3	BEAM 1	0.000	89	11	22
	BEAM 2	8.060	89	35	42
	BEAM 3	8.060	90	0	0
	BEAM 7	34.360	90	0	0
	BEAM 8	6.282	89	35	19
	BEAM 9	6.282	89	10	33
	TOTAL	63.044			

ABUT NO. 4 (S 30 0 49.94 E)
DISTANCE BETWEEN STATION LINE AND BEAM 1 2.959 R

		BEAM SPAC. (C.L. BENT)	BEAM ANGLE D	M	S
SPAN 3	BEAM 1	0.000	89	11	22
	BEAM 2	7.742	89	35	42
	BEAM 3	7.742	90	0	0
	BEAM 7	34.361	90	0	0
	BEAM 8	6.605	89	35	19
	BEAM 9	6.605	89	10	33
	TOTAL	63.055			

STATE OF TEXAS
JODY R. ELLINGTON
68708
REGISTERED PROFESSIONAL ENGINEER

Jody R. Ellington
2-27-92

SUGAR RD. OVERPASS
RT. MAIN LANES (EB) WIDENING
BEAM LAYOUT

FED. RD. DIV. NO.	FEDERAL AID PROJECT NO.		SHEET NO.
6	NH 92 ( )M		189
STATE	STATE DIST. NO.	COUNTY	
TEXAS	21	HIDALGO	
CONT.	SECT.	JOB	HIGHWAY
39	17	97	US [illegible]

ZFA2: [325104]BGSR.DGN IPARM: SAMF

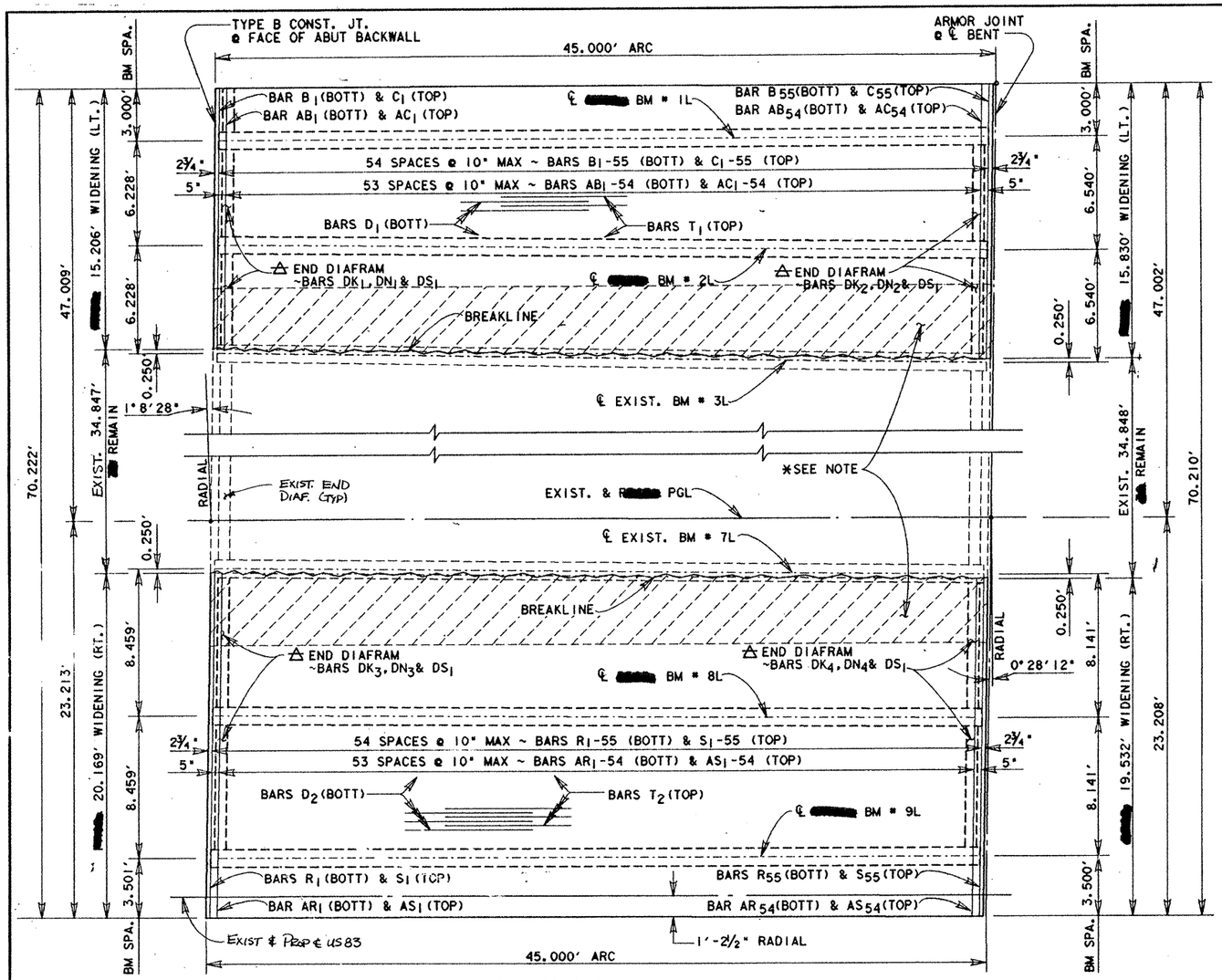

⊕ PLAN

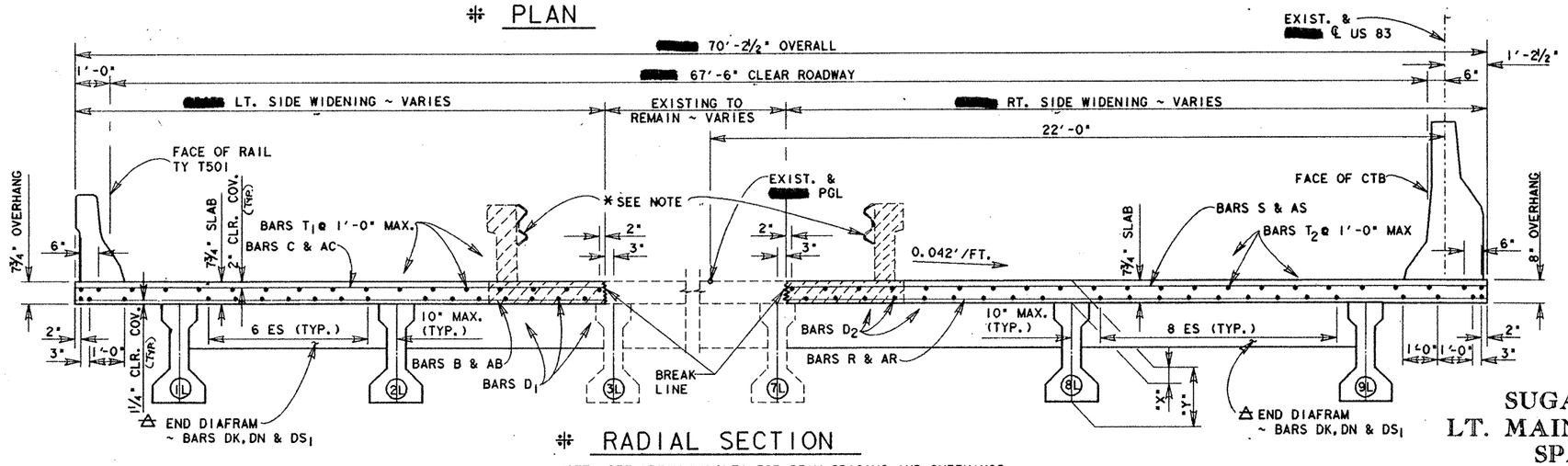

⊕ RADIAL SECTION

NOTE: SEE "BEAM LAYOUT" FOR BEAM SPACING AND OVERHANGS.

⊕ SPAN 1 SHOWN, OPPOSITE HAND FOR SPAN 3.

⊕ QUANTITIES SHOWN ARE FOR ONE SPAN ONLY.

⊕ TABLE OF ESTIMATED QUANTITIES
LEFT SIDE WIDENING

Bar	No.	Size	Length	Weight
AB1-54	54	#5	15'-5" AVG.	868
AC1-54	54	#5	15'-5" AVG.	868
B1-55	55	#4	15'-5" AVG.	566
C1-55	55	#5	15'-5" AVG.	884
D1	17	#5	44'-8"	792
DK1	8	#5	4'-11"	41
DK2	8	#5	5'-3"	44
DN1	1	#8	12'-6"	33
DN2	1	#8	13'-1"	35
DS1	24	#4	4'-10"	77
T1	17	#4	44'-8"	507

Reinforcing Steel †	Lbs	4715
Prestr. Conc. Bm. ~ Ty. B*	LF	89.33
Conc. Surface Treatment	SY	71
Str. Steel (Arm. Jt.) ⊟	Lbs	217

REINF. CONC. SLAB FOR EXT. STRUCT. SF	†CLASS 'S' CONC. FOR EXT. STRUCT. ~ CY	
	SLAB	DIAF.
698	16.9	0.9

⊕ TABLE OF ESTIMATED QUANTITIES
RIGHT SIDE WIDENING

Bar	No.	Size	Length	Weight
AR1-54	54	#5	19'-9" AVG.	1112
AS1-54	54	#5	19'-9" AVG.	1112
R1-55	55	#4	19'-9" AVG.	726
S1-55	55	#5	19'-9" AVG.	1133
D2	22	#5	44'-8"	1025
DK3	8	#5	7'-2"	60
DK4	8	#5	6'-10"	57
DN3	1	#8	16'-11"	45
DN4	1	#8	16'-3	43
DS1	32	#4	4'-10"	103
T2	22	#4	44'-8	656

Reinforcing Steel †	Lbs	6072
Prestr. Conc. Bm. ~ Ty. B*	LF	89.33
Conc. Surface Treatment	SY	88
Str. Steel (Arm. Jt.) ⊟	Lbs	282

REINF. CONC. SLAB FOR EXT. STRUCT. SF	†CLASS 'S' CONC. FOR EXT. STRUCT. ~ CY	
	SLAB	DIAF.
893	21.5	1.2

† FOR CONTRACTORS INFORMATION ONLY.

⊟ QUANTITY SHOWN IS FOR ONE-HALF OF ONE COMPLETE ARMOR JOINT.

⊖ QUANTITY SHOWN IS SUMMATION OF ACTUAL BOTTOM FLANGE LENGTHS WITH ADJUSTMENTS MADE FOR BEAM SLOPE. (SEE BEAM LAYOUT)

AB1 = 15'-1" ; AB54 = 15'-8½" ; AB1-54 = 15'-4¾" AVG.
AC1 = 15'-1" ; AC54 = 15'-8½" ; AC1-54 = 15'-4¾" AVG.
B1 = 15'-1" ; B55 = 15'-8½" ; B1-55 = 15'-4¾" AVG.
C1 = 15'-1" ; C55 = 15'-8½" ; C1-55 = 15'-4¾" AVG.

BARS AB1-54, AC1-54, B1-55 & C1-55

AR1 = 20'-0½" ; AR54 = 19-4½" ; AR1-54 = 19-8½" AVG.
AS1 = 20'-0½" ; AS54 = 19-4½" ; AS1-54 = 19-8½" AVG.
R1 = 20'-0½" ; R55 = 119'-4½" ; R1-55 = 19'8½" AVG.
S1 = 20'-0½" ; S55 = 119'-4½" ; S1-55 = 19'8½" AVG.

BARS AR1-54, AS1-54, R1-55 & S1-55

SPAN	BM	"X" @ ℄ BRG.	♦ "X" @ ℄ SPAN	"Y" @ ℄ BRG.
1 & 3	1L & 2L	8¾"	8"	3'-6¾"
1 & 3	8L & 9L	8¾"	8"	3'-6¾"

♦ THEORETICAL DIMENSION FOR CONTRACTORS INFORMATION ONLY.

* REMOVE SHADED PORTION OF EXISTING CONCRETE. CLEAN AND EXTEND EXPOSED REINFORCING INTO NEW SLAB SO AS TO PROVIDE FOR A 1'-6" MIN. SPLICE WITH NEW SLAB REINF.

△ BARS DN ARE [redacted] BUTT WELDED TO EXISTING DIAFRAM BARS. SEE GPC (MOD) FOR DETAILS.

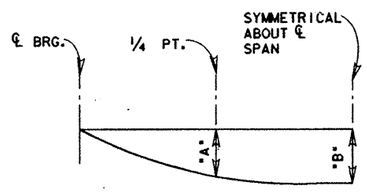

SPAN	BM	"A"	"B"
1 & 3	1L & 2L	.014'	.020'
1 & 3	8L & 9L	.018'	.026'

DEAD LOAD DEFLECTION DIAGRAM

NOTE: DEFLECTIONS SHOWN ARE DUE TO CAST-IN-PLACE CONCRETE ONLY. ($E_C = 5X10^6 PSI$)

STATE OF TEXAS
JODY R. ELLINGTON
68708
REGISTERED PROFESSIONAL ENGINEER
Jody R. Ellington
2-27-92

GENERAL NOTES:

DESIGNED IN ACCORDANCE WITH AASHTO 1989 STANDARD AND INTERIM SPECIFICATIONS.

DESIGN fc = 1200 psi.

THE USE OF PMDF OR PRECAST CONCRETE PANELS [redacted] NOT [redacted] PERMITTED.

THE USE OF OPTIONAL END DIAFRAMS [redacted] NOT [redacted] PERMITTED.

HS 20 LOADING

SUGAR ROAD OVERPASS
LT. MAIN LANES (WB) WIDENING
SPANS 1 & 3 DETAILS

FED. RD. DIV. NO.	FEDERAL AID PROJECT NO.		SHEET NO.
6	NH 92 ℄)M		140
STATE	STATE DIST. NO.	COUNTY	
TEXAS	21	HIDALGO	
CONT.	SECT.	JOB	HIGHWAY NO.
39	17	97	US83/28

7EA2: F325104183SRLT DGN [PARMS SA: F

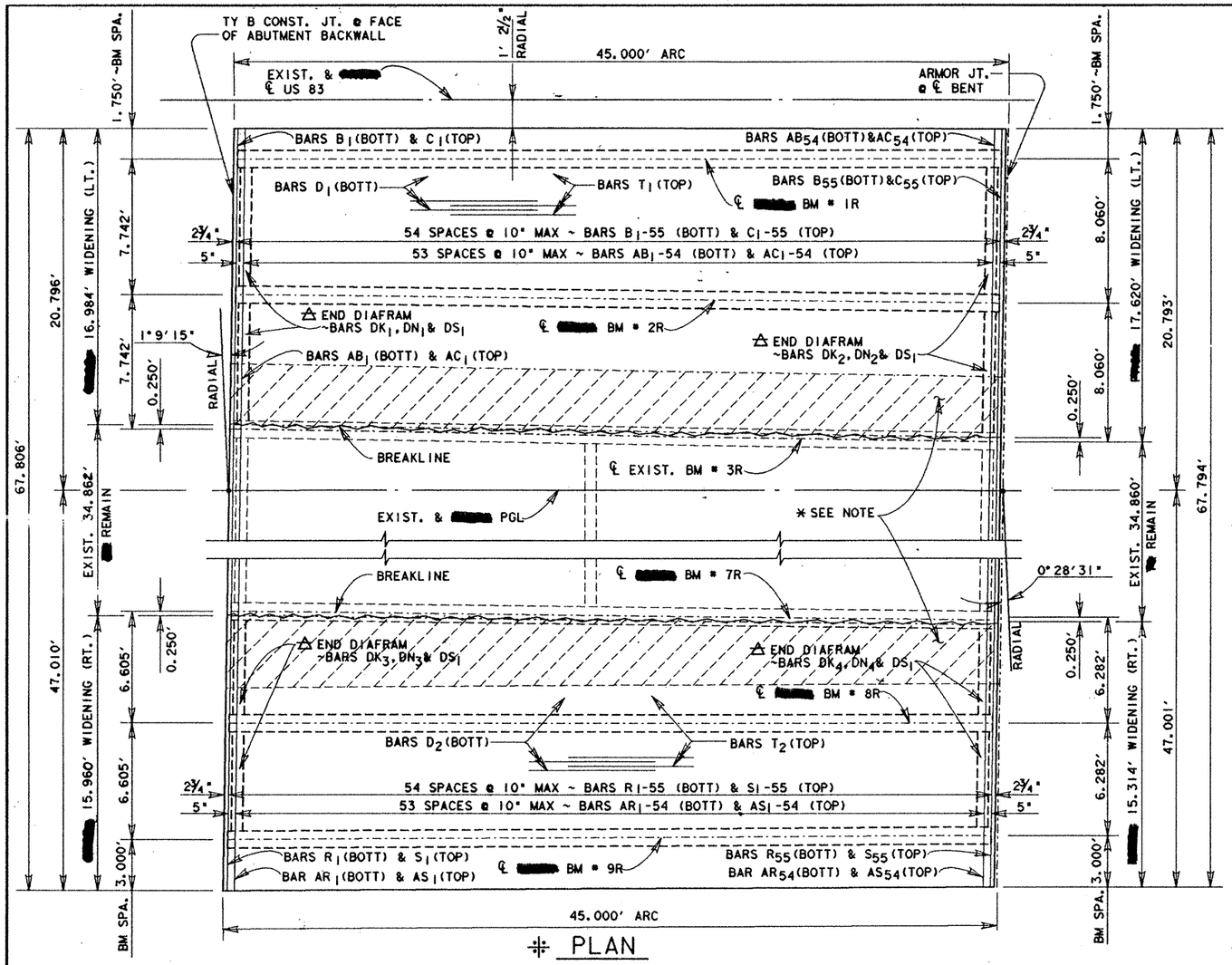

⌗ PLAN

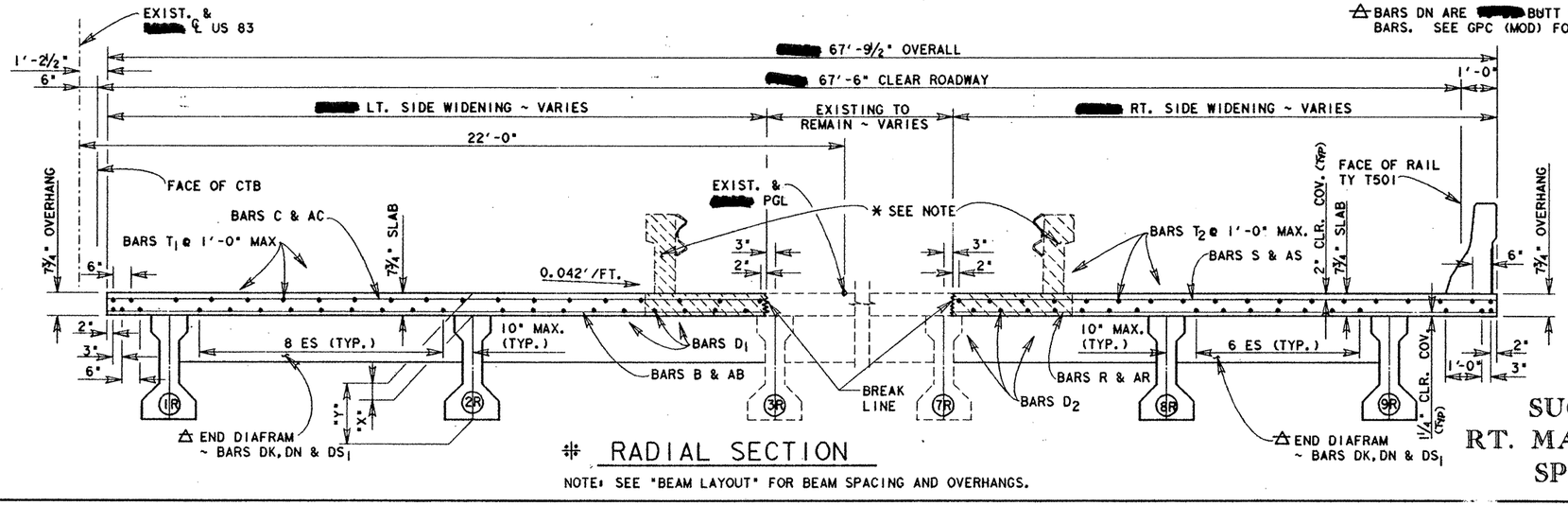

⌗ RADIAL SECTION

NOTE: SEE "BEAM LAYOUT" FOR BEAM SPACING AND OVERHANGS.

⌗ SPAN 1 SHOWN, OPPOSITE HAND FOR SPAN 3.

⊖ QUANTITIES SHOWN ARE FOR ONE SPAN ONLY.

⊖ TABLE OF ESTIMATED QUANTITIES — LEFT SIDE WIDENING

Bar	No.	Size	Length	Weight
AB1-54	54	#5	17'-2" AVG.	967
AC1-54	54	#5	17'-2" AVG.	967
B1-55	55	#4	17'-2" AVG.	631
C1-55	55	#5	17'-2" AVG.	985
D1	21	#5	44'-8"	978
DK1	8	#5	6'-5"	54
DK2	8	#5	6'-9"	56
DN1	1	#8	15'-6"	41
DN2	1	#8	16'-2"	43
DS1	28	#4	4'-10"	90
T1	19	#4	44'-8"	567

Reinforcing Steel †	Lbs	5379
Prestr. Conc. Bm. ~ Ty. B*	LF	89.33
Conc. Surface Treatment	SY	87
Str. Steel (Arm. Jt.) ⊟	Lbs	242

REINF. CONC. SLAB FOR EXT. STRUCT. SF	†CLASS "S" CONC. FOR EXT. STRUCT. ~ CY	
	SLAB	DIAF.
779	18.8	1.1

⊖ TABLE OF ESTIMATED QUANTITIES — RIGHT SIDE WIDENING

Bar	No.	Size	Length	Weight
AR1-54	54	#5	15'-6" AVG.	873
AS1-54	54	#5	15'-6" AVG.	873
D2	17	#5	44'-8"	792
DK3	8	#5	5'-3"	44
DK4	8	#5	4'-11"	41
DN3	1	#8	13'-3"	35
DN4	1	#8	12'-7"	34
DS1	24	#4	4'-10"	77
R1-55	55	#4	15'-6" AVG.	569
S1-55	55	#5	15'-6" AVG.	889
T2	18	#4	44'-8	537

Reinforcing Steel †	Lbs	4764
Prestr. Conc. Bm. ~ Ty. B*	LF	89.33
Conc. Surface Treatment	SY	71
Str. Steel (Arm. Jt.) ⊟	Lbs	215

REINF. CONC. SLAB FOR EXT. STRUCT. SF	†CLASS "S" CONC. FOR EXT. STRUCT. ~ CY	
	SLAB	DIAF.
704	17.0	0.9

† FOR CONTRACTORS INFORMATION ONLY.

⊖ QUANTITY SHOWN IS SUMMATION OF ACTUAL BOTTOM FLANGE LENGTHS WITH ADJUSTMENTS MADE FOR BEAM SLOPE. (SEE BEAM LAYOUT)

⊟ QUANTITY SHOWN IS FOR ONE-HALF OF ONE COMPLETE ARMOR JOINT.

AB1 = 16'-10" ; AB54 = 17'-5" ; AB1-54 = 17'-1½" AVG.
AC1 = 16'-10" ; AC54 = 17'-5" ; AC1-54 = 17'-1½" AVG.
B1 = 16'-10" ; B55 = 17'-5" ; B1-55 = 17'-1½" AVG.
C1 = 16'-10" ; C55 = 17'-5" ; C1-55 = 17'-1½" AVG.

BARS AB1-54, AC1-54, B1-55 & C1-55

SPAN	BM	"X" @ ℄ BRG.	"X" @ ℄ SPAN	"Y" @ ℄ BRG.
1 & 3	1R & 2R	8¾"	◆ 8⅛"	3'-6¾"
1 & 3	8R & 9R	8¾"	◆ 8⅛"	3'-6¾"

◆ THEORETICAL DIMENSION FOR CONTRACTORS INFORMATION ONLY.

AR1 = 15'-10" ; AR54 = 15'-2" ; AR1-54 = 15'-6" AVG.
AS1 = 15'-10" ; AS54 = 15'-2" ; AS1-54 = 15'-6" AVG.
R1 = 15'-10" ; R55 = 15'-2" ; R1-55 = 15'-6" AVG.
S1 = 15'-10" ; S55 = 15'-2" ; S1-55 = 15'-6" AVG.

BARS AR1-54, AS1-54, R1-55 & S1-55

* REMOVE SHADED PORTION OF EXISTING CONCRETE. CLEAN AND EXTEND EXPOSED REINFORCING INTO NEW SLAB SO AS TO PROVIDE FOR A 1'-6" MIN. SPLICE WITH NEW SLAB REINF.

△ BARS DN ARE [redacted] BUTT WELDED TO EXISTING DIAFRAM BARS. SEE GPC (MOD) FOR DETAILS.

STATE OF TEXAS
JODY R. ELLINGTON
68706
REGISTERED PROFESSIONAL ENGINEER
Jody R. Ellington
2-27-92

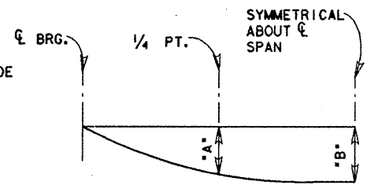

SPAN	BM	"A"	"B"
1 & 3	1R & 2R	.017'	.025'
1 & 3	8R & 9R	.014'	.020'

DEAD LOAD DEFLECTION DIAGRAM

NOTE: DEFLECTIONS SHOWN ARE DUE TO CAST-IN-PLACE CONCRETE ONLY. ($E_C = 5X10^6$ PSI)

GENERAL NOTES: DESIGNED IN ACCORDANCE WITH AASHTO 1989 STANDARD AND INTERIM SPECIFICATIONS.

DESIGN f'_c = 1200 psi.

THE USE OF PMDF OR PRECAST CONCRETE PANELS [redacted] NOT [redacted] PERMITTED.

THE USE OF OPTIONAL END DIAFRAMS [redacted] NOT [redacted] PERMITTED.

HS 20 LOADING

SUGAR ROAD OVERPASS
RT. MAIN LANES (EB) WIDENING
SPANS 1 & 3 DETAILS

FED. RD. DIV. NO.	FEDERAL AID PROJECT NO.		SHEET NO.
6	NH 92 ( )M		141
STATE	STATE DIST. NO.	COUNTY	
TEXAS	21	HIDALGO	
CONT.	SECT.	JOB	HIGHWAY NO.
39	17	97	US83/281

Z542: [3261041835PRT.DGN]RAPHY: SAME

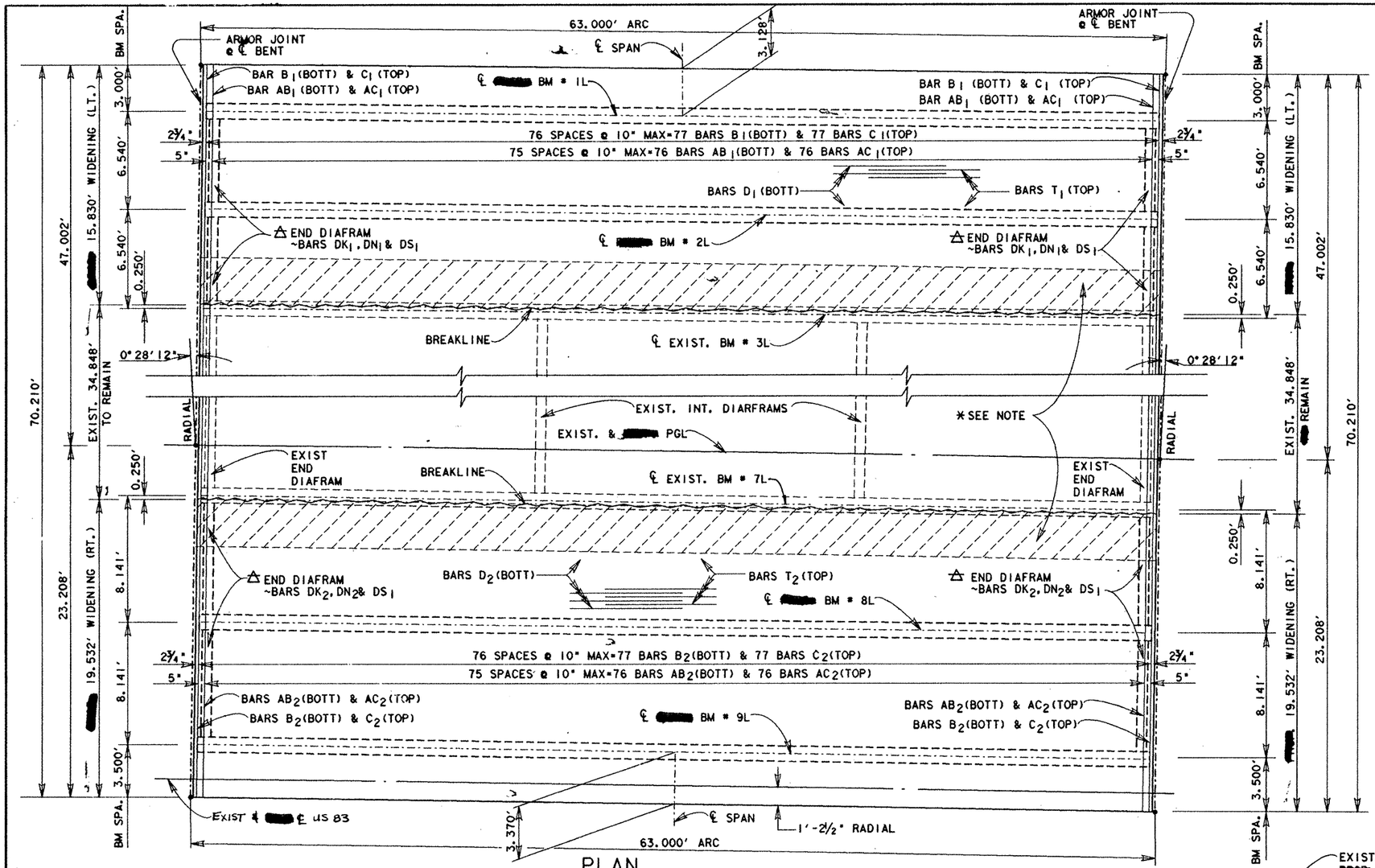

PLAN

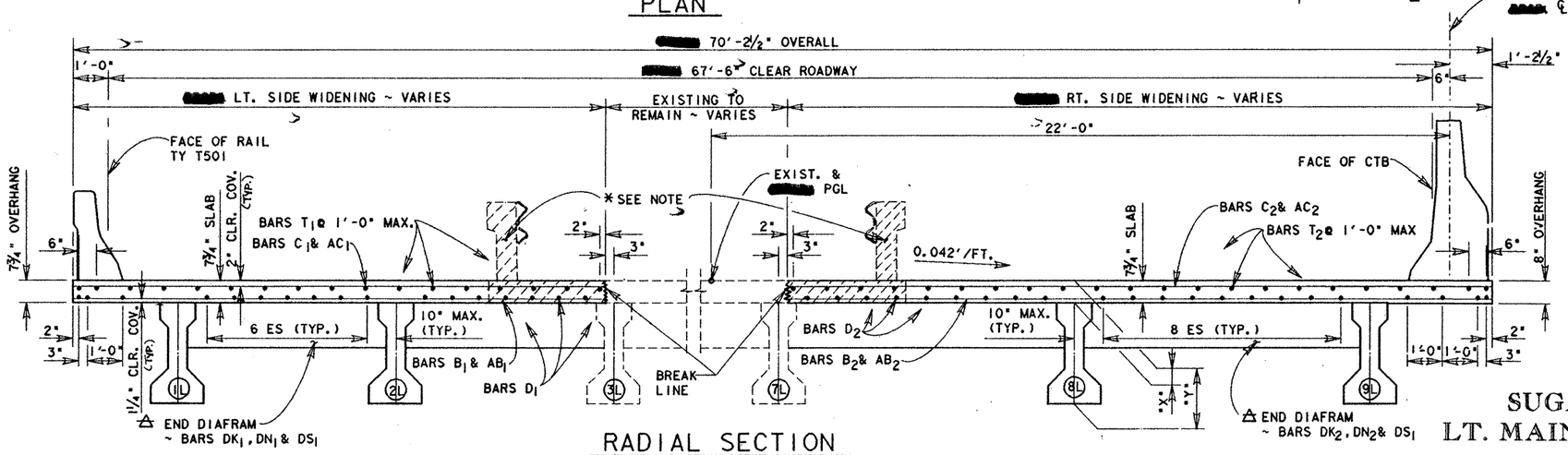

RADIAL SECTION

NOTE: SEE "BEAM LAYOUT" FOR BEAM SPACING AND OVERHANGS.

TABLE OF ESTIMATED QUANTITIES — LEFT SIDE WIDENING				
Bar	No.	Size	Length	Weight
AB_1	76	#5	15'-8"	1242
AC_1	76	#5	15'-8"	1242
B_1	77	#4	15'-8"	806
C_1	77	#5	15'-8"	1258
D_1	17	#5	⊖ 64'-1"	1136
DK_1	16	#5	5'-1"	85
DN_1	2	#8	13'-1"	70
DS_1	24	#4	4'-10"	77
T_1	17	#4	⊖⊖ 63'-10"	725
Reinforcing Steel †			Lbs	6641
Prestr. Conc. Bm. ~ Ty. C ◆			LF	125.33
Conc. Surface Treatment			SY	101
Str. Steel (Arm. Jt.) ⊟			Lbs	434
REINF. CONC. SLAB FOR EXT. STRUCT. SF	CLASS "S" CONC. FOR EXT. STRUCT. ~ CY: SLAB	DIAF.		
1001	24.3	0.9		

TABLE OF ESTIMATED QUANTITIES — RIGHT SIDE WIDENING				
Bar	No.	Size	Length	Weight
AB_2	76	#5	19'-5"	1539
AC_2	76	#5	19'-5"	1539
B_2	77	#4	19'-5"	999
C_2	77	#5	19'-5"	1559
D_2	22	#5	⊖ 64'-1"	1470
DK_2	16	#5	6'-8"	111
DN_2	2	#8	16'-3"	87
DS_1	28	#4	4'-10"	90
T_2	22	#4	⊖⊖ 63'-10"	938
Reinforcing Steel †			Lbs	8332
Prestr. Conc. Bm. ~ Ty. C ◆			LF	125.33
Conc. Surface Treatment			SY	121
Str. Steel (Arm. Jt.) ⊟			Lbs	564
REINF. CONC. SLAB FOR EXT. STRUCT. SF	CLASS "S" CONC. FOR EXT. STRUCT. ~ CY: SLAB	DIAF.		
1226	30.0	1.1		

† FOR CONTRACTORS INFORMATION ONLY.

⊖ QUANTITY SHOWN IS SUMMATION OF ACTUAL BOTTOM FLANGE LENGTHS WITH ADJUSTMENTS MADE FOR BEAM SLOPE (SEE BEAM LAYOUT).

⊟ QUANTITY SHOWN IS FOR ONE-HALF OF TWO COMPLETE ARMOR JOINTS.

⊖ INCLUDES 1 ~ 1'-5" MIN. LAP

⊖⊖ INCLUDES 1 ~ 1'-2" MIN. LAP

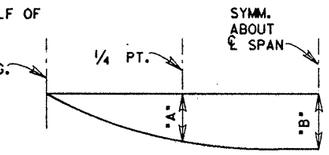

SPAN	BM	"A"	"B"
2	1L & 2L	.030'	.041'
2	8L & 9L	.037'	.052'

DEAD LOAD DEFLECTION DIAGRAM

NOTE: DEFLECTIONS SHOWN ARE DUE TO CAST-IN-PLACE CONCRETE ONLY. ($E_C = 5 \times 10^6$ PSI)

SPAN	BM	"X" @ ℄ BRG.	◆ "X" @ ℄ SPAN	"Y" @ ℄ BRG.
2	1L & 2L	9¼"	8⅛"	4'-1¼"
2	8L & 9L	9¼"	8¼"	4'-1¼"

◆ THEORETICAL DIMENSION FOR CONTRACTORS INFORMATION ONLY.

* REMOVE SHADED PORTION OF EXISTING CONCRETE. CLEAN AND EXTEND EXPOSED REINFORCING INTO NEW SLAB SO AS TO PROVIDE FOR A 1'-6" MIN. SPLICE WITH NEW SLAB REINF.

△ BARS DN ARE [redacted] BUTT WELDED TO EXISTING DIAFRAM BARS. SEE GPC-(MOD) FOR DETAILS.

STATE OF TEXAS — JODY R. ELLINGTON — 68708 — REGISTERED PROFESSIONAL ENGINEER

Jody R. Ellington 2-27-92

GENERAL NOTES:

DESIGNED IN ACCORDANCE WITH AASHTO 1989 STANDARD AND INTERIM SPECIFICATIONS.

DESIGN fc = 1200 psi.

THE USE OF PMDF OR PRECAST CONCRETE PANELS [redacted] NOT [redacted] PERMITTED.

THE USE OF OPTIONAL END DIAFRAMS [redacted] NOT [redacted] PERMITTED.

SUGAR ROAD OVERPASS
LT. MAIN LANES (WB) WIDENING
SPAN 2 DETAILS

HS 20 LOADING

FED. RD. DIV. NO.	FEDERAL AID PROJECT NO.		SHEET NO.
6	NH 92( )M		142
STATE	STATE DIST. NO.	COUNTY	
TEXAS	21	HIDALGO	
CONT.	SECT.	JOB	HIGHWAY NO.
39	17	97	US83/281

7EA2: [3251047833SPLT2.DGN 1PARM: SAME

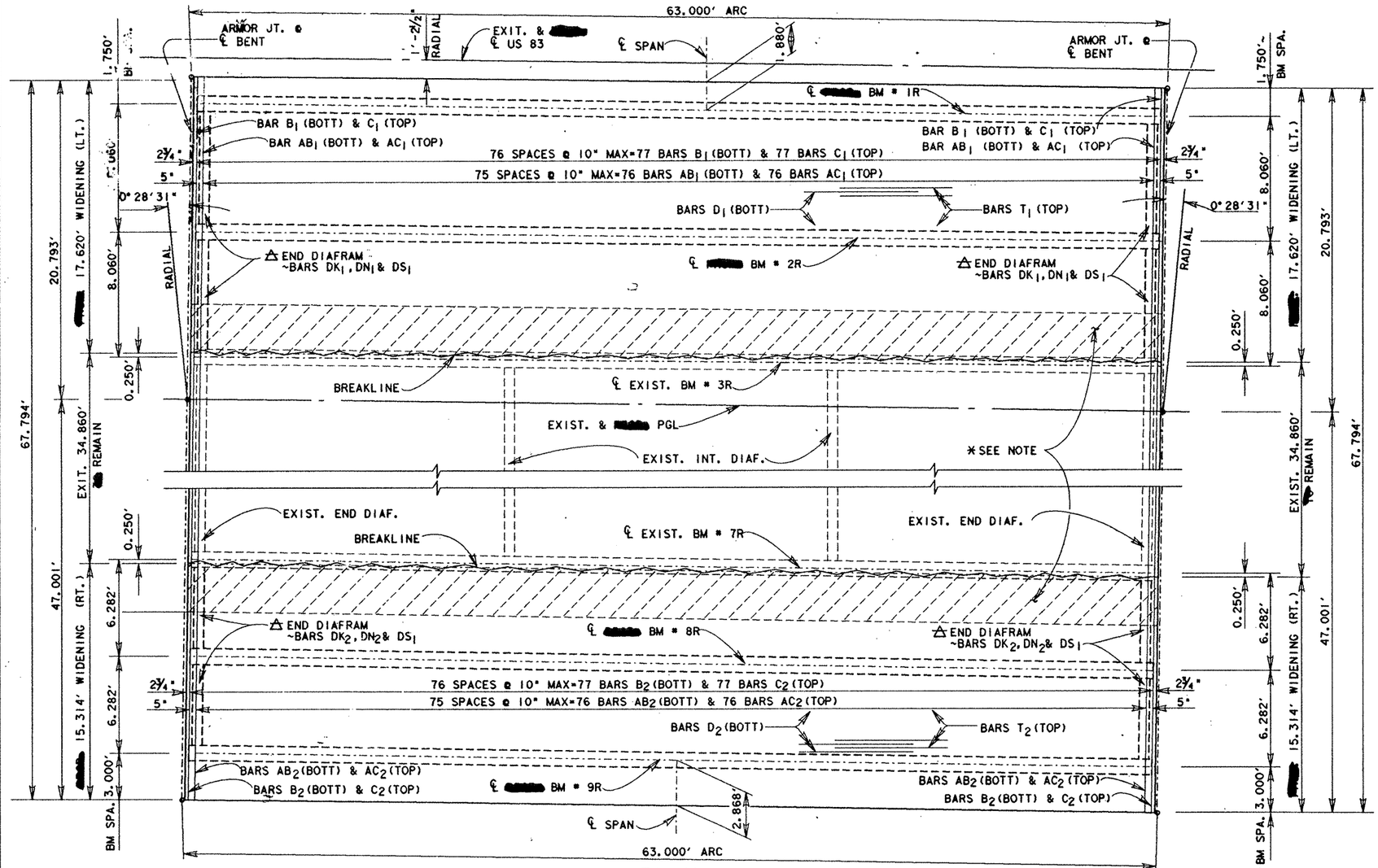

PLAN

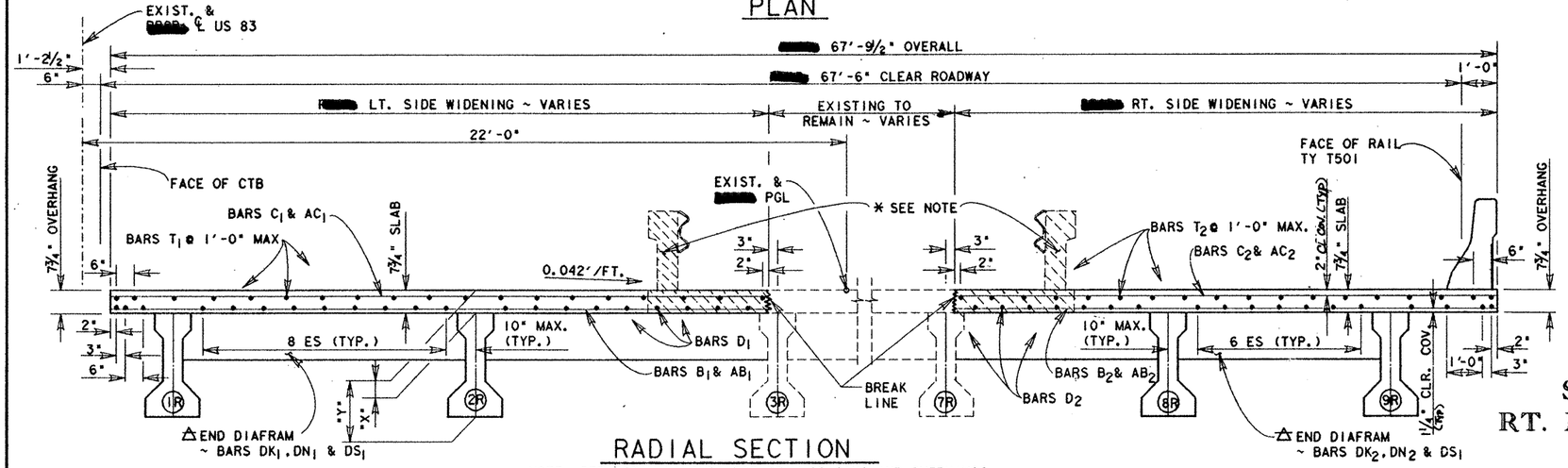

RADIAL SECTION

NOTE: SEE "BEAM LAYOUT" FOR BEAM SPACING AND OVERHANGS.

TABLE OF ESTIMATED QUANTITIES — LEFT SIDE WIDENING				
Bar	No.	Size	Length	Weight
AB1	76	#5	17'-5"	1381
AC1	76	#5	17'-5"	1381
B1	77	#4	17'-5"	896
C1	77	#5	17'-5"	1399
D1	21	#5	⊖ 64'-1"	1404
DK1	16	#5	6'-7"	110
DN1	2	#8	16'-2"	86
DS1	28	#4	4'-10"	90
T1	19	#4	⊖⊖ 63'-10"	810
Reinforcing Steel †			Lbs	7557
Prestr. Conc. Bm. ~ Ty. C◆			LF	125.33
Conc. Surface Treatment			SY	124
Str. Steel (Arm. Jt.) ⊟			Lbs	484

REINF. CONC. SLAB FOR EXT. STRUCT. SF	†CLASS "S" CONC. FOR EXT. STRUCT. ~ CY	
	SLAB	DIAF.
1114	26.9	1.1

TABLE OF ESTIMATED QUANTITIES — RIGHT SIDE WIDENING				
Bar	No.	Size	Length	Weight
AB2	76	#5	15'-2"	1202
AC2	76	#5	15'-2"	1202
B2	77	#4	15'-2"	780
C2	77	#5	15'-2"	1218
D2	17	#5	⊖ 64'-1"	1136
DK2	16	#5	4'-9"	79
DN2	2	#8	12'-7"	67
DS1	24	#4	4'-10"	77
T2	18	#4	⊖⊖ 63'-10"	768
Reinforcing Steel †			Lbs	6529
Prestr. Conc. Bm. ~ Ty. B◆			LF	125.33
Conc. Surface Treatment			SY	98
Str. Steel (Arm. Jt.) ⊟			Lbs	430

REINF. CONC. SLAB FOR EXT. STRUCT. SF	†CLASS "S" CONC. FOR EXT. STRUCT. ~ CY	
	SLAB	DIAF.
961	23.5	0.9

† FOR CONTRACTORS INFORMATION ONLY.

⊖ INCLUDES 1~1'-5" MIN. LAP

⊖⊖ INCLUDES 1~1'-2" MIN. LAP

⊖ QUANTITY SHOWN IS SUMMATION OF ACTUAL BOTTOM FLANGE LENGTHS WITH ADJUSTMENTS MADE FOR BEAM SLOPE. (SEE BEAM LAYOUT)

⊟ QUANTITY SHOWN IS FOR ONE-HALF OF TWO COMPLETE ARMOR JOINTS.

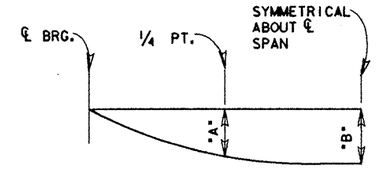

SPAN	BM	"A"	"B"
2	1R & 2R	0.036'	0.051'
2	8R & 9R	0.054'	0.076'

DEAD LOAD DEFLECTION DIAGRAM

NOTE: DEFLECTIONS SHOWN ARE DUE TO CAST-IN-PLACE CONCRETE ONLY. ($E_C = 5 \times 10^6$ PSI)

SPAN	BM	"X" @ ℄ BRG.	"X" @ ℄ SPAN	"Y" @ ℄ BRG.
2	1R & 2R	8¾"	◆ 8⅛"	4'-0¾"
2	8R & 9R	8¾"	◆ 8⅛"	3'-7½"

◆ THEORETICAL DIMENSION FOR CONTRACTORS INFORMATION ONLY.

* REMOVE SHADED PORTION OF EXISTING CONCRETE. CLEAN AND EXTEND EXPOSED REINFORCING INTO NEW SLAB SO AS TO PROVIDE FOR A 1'-6" MIN. SPLICE WITH NEW SLAB REINF.

△ BARS DN ARE [redacted] BUTT WELDED TO EXISTING DIAFRAM BARS. SEE GPC (MOD) FOR DETAILS.

STATE OF TEXAS
JODY R. ELLINGTON
68708
REGISTERED PROFESSIONAL ENGINEER

Jody R. Ellington
2-27-92

GENERAL NOTES:

DESIGNED IN ACCORDANCE WITH AASHTO 1989 STANDARD AND INTERIM SPECIFICATIONS.

DESIGN fc = 1200 psi.

THE USE OF PMDF OR PRECAST CONCRETE PANELS [redacted] NOT [redacted] PERMITTED.

THE USE OF OPTIONAL END DIAFRAMS [redacted] NOT [redacted] PERMITTED.

SUGAR ROAD OVERPASS
RT. MAIN LANES (EB) WIDENING
SPAN 2 DETAILS

HS 20 LOADING

FED. RD. DIV. NO.	FEDERAL AID PROJECT NO.		SHEET NO.
6	NH 92C (M)		143
STATE	STATE DIST. NO.	COUNTY	
TEXAS	21	HIDALGO	
CONT.	SECT.	JOB	HIGHWAY NO.
39	17	97	US83/281

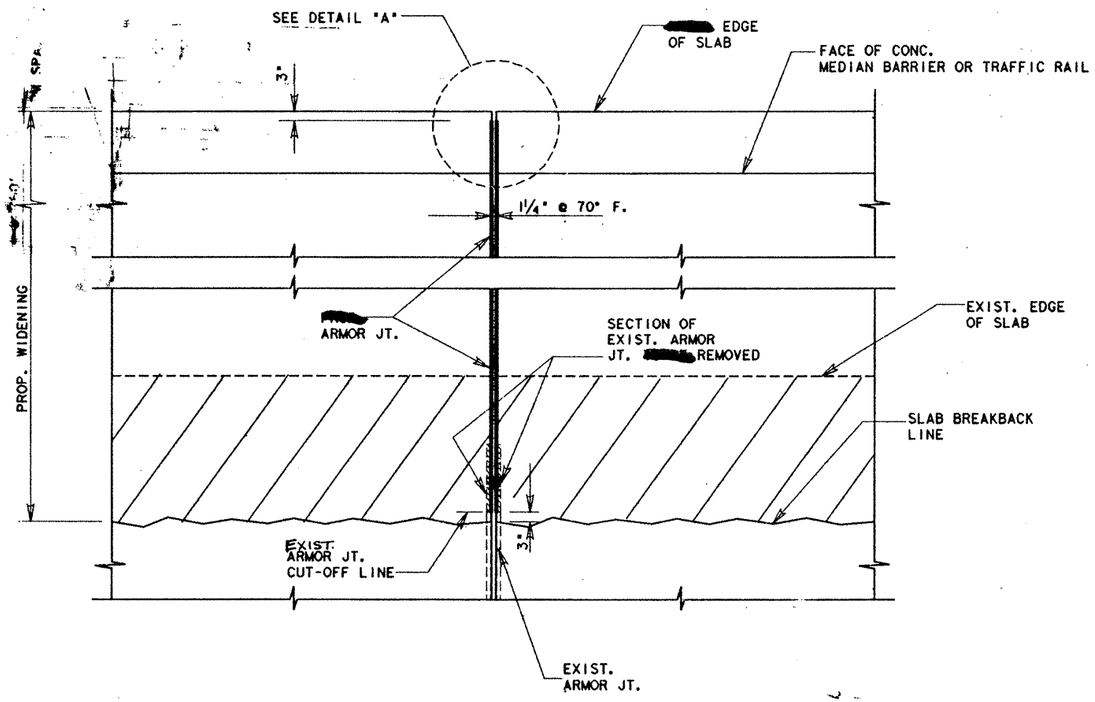

PLAN

SCALE: 1" = 2'

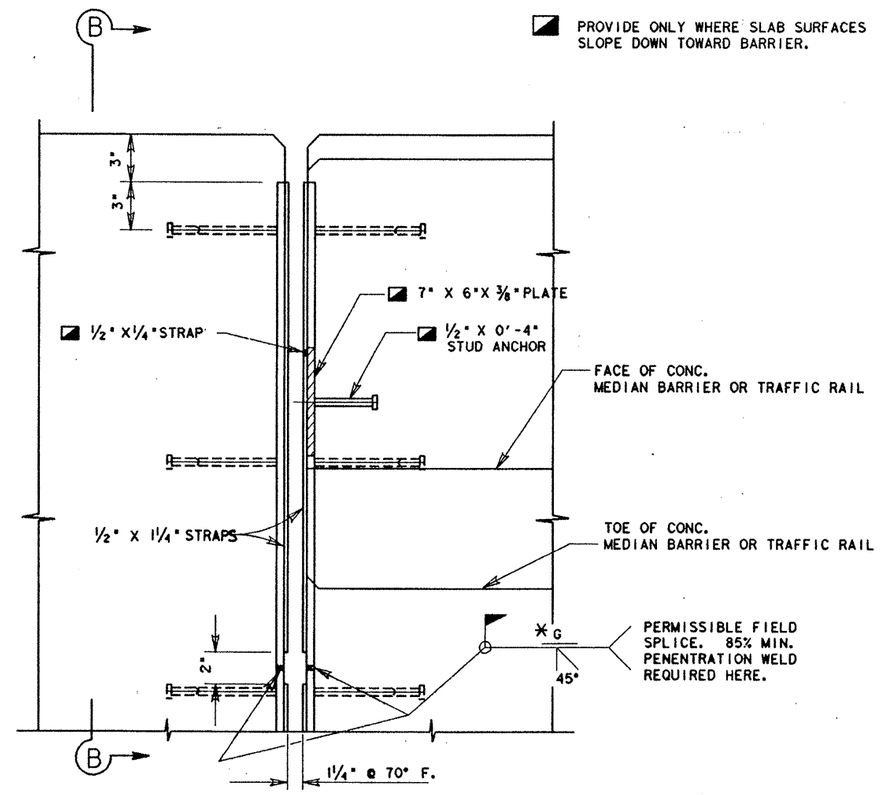

DETAIL "A"

△ PLATE DEPTH "†" = THICKNESS OF SLAB OVERHANG (SEE SPAN DETAILS).

‡ 85% MINIMUM PENETRATION WELD REQUIRED.

✱ PORTIONS OF WELDED SPLICES TO COME IN CONTACT WITH PREFORMED JOINT SEALER [redacted] GROUND SMOOTH.

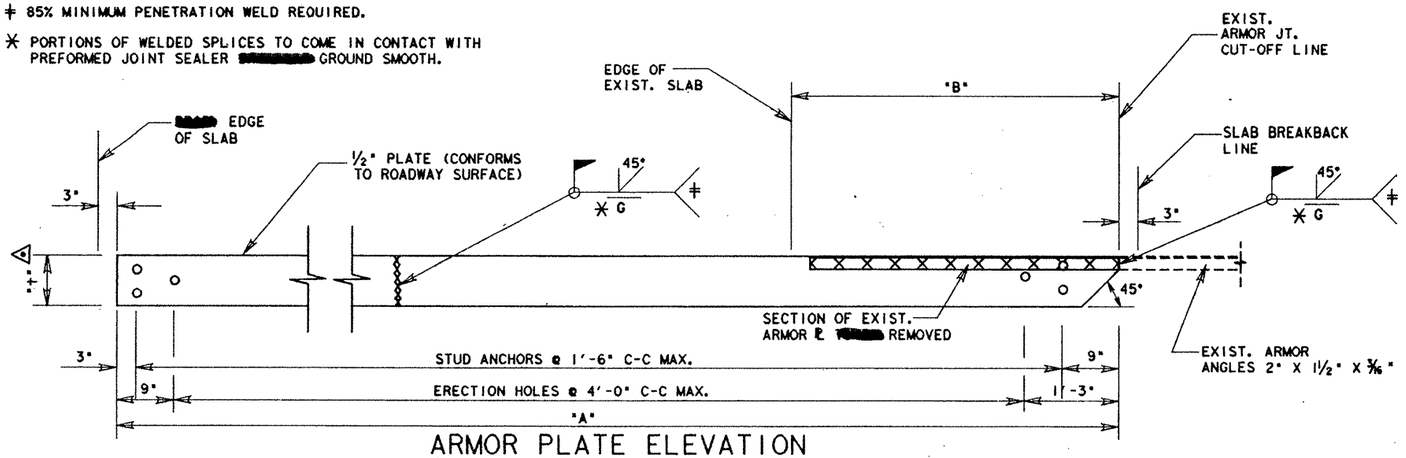

ARMOR PLATE ELEVATION

SCALE: 1" = 1'

	STRUCTURE	LEFT SIDE WIDENING "A"	LEFT SIDE WIDENING "B"	RIGHT SIDE WIDENING "A"	RIGHT SIDE WIDENING "B"
US 281 OVERPASS	LEFT MAIN LANES WIDENING (WB)	——	——	18'-9"	4'-1½"
US 281 OVERPASS	RIGHT MAIN LANES WIDENING (EB)	18'-9"	4'-1½"	——	——
SUGAR ROAD OVERPASS	LEFT MAIN LANES WIDENING (WB)	15'-4"	3'-8½"	19'-0"	3'-2½"
SUGAR ROAD OVERPASS	RIGHT MAIN LANES WIDENING (EB)	17'-1½"	3'-8½"	14'-9¾"	3'-2¼"

US 281 & SUGAR RD. OVERPASS WIDENINGS ARMOR JOINT DETAILS

SHEET 1 OF 2 SHEETS

STATE OF TEXAS
JODY R. ELLINGTON
68708
REGISTERED PROFESSIONAL ENGINEER

Jody R. Ellington
2-27-92

FED. RD. DIV. NO.	FEDERAL AID PROJECT NO.		SHEET NO.
6	NH 92( )M		144
STATE	STATE DIST. NO.	COUNTY	
TEXAS		HIDALGO	
CONT.	SECT.	JOB	HIGHWAY NO.
39	17	97	US 83/281

7FA2:[3251041 FILE:BWARMOR2.DGN 1F:RM:SAME

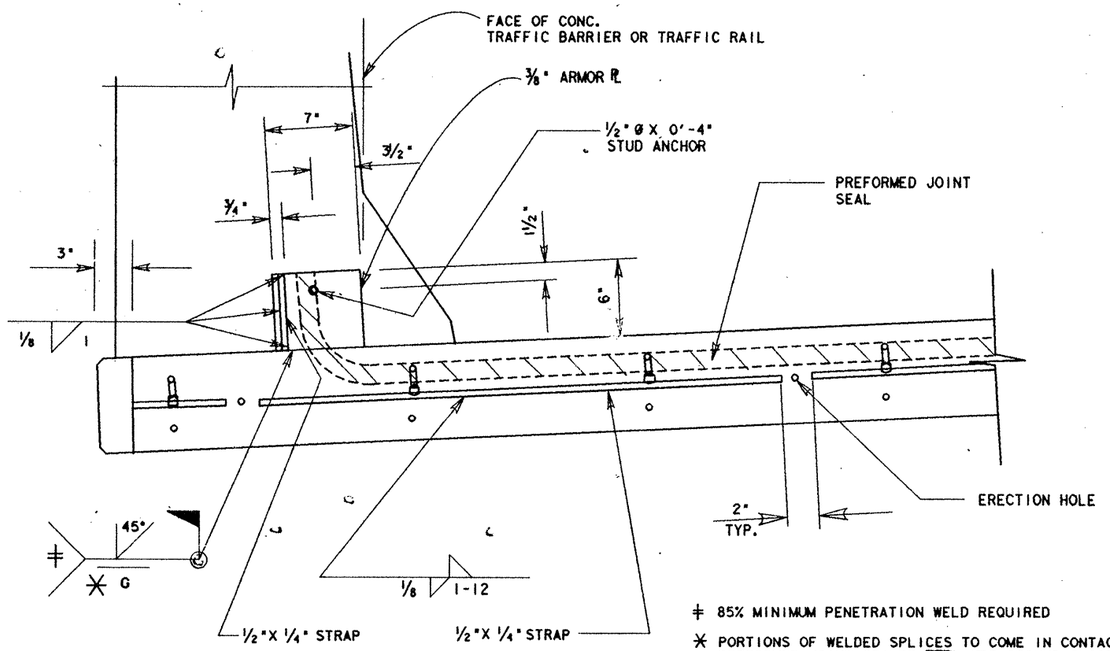

‡ 85% MINIMUM PENETRATION WELD REQUIRED

✱ PORTIONS OF WELDED SPLICES TO COME IN CONTACT WITH PREFORMED JOINT SEALER [redacted] GROUND SMOOTH.

VIEW B-B

SHOWING INSTALLATION AT BARRIER OR RAIL ON LOW SIDE OF STRUCTURE (SUGAR RD. OVERPASS)

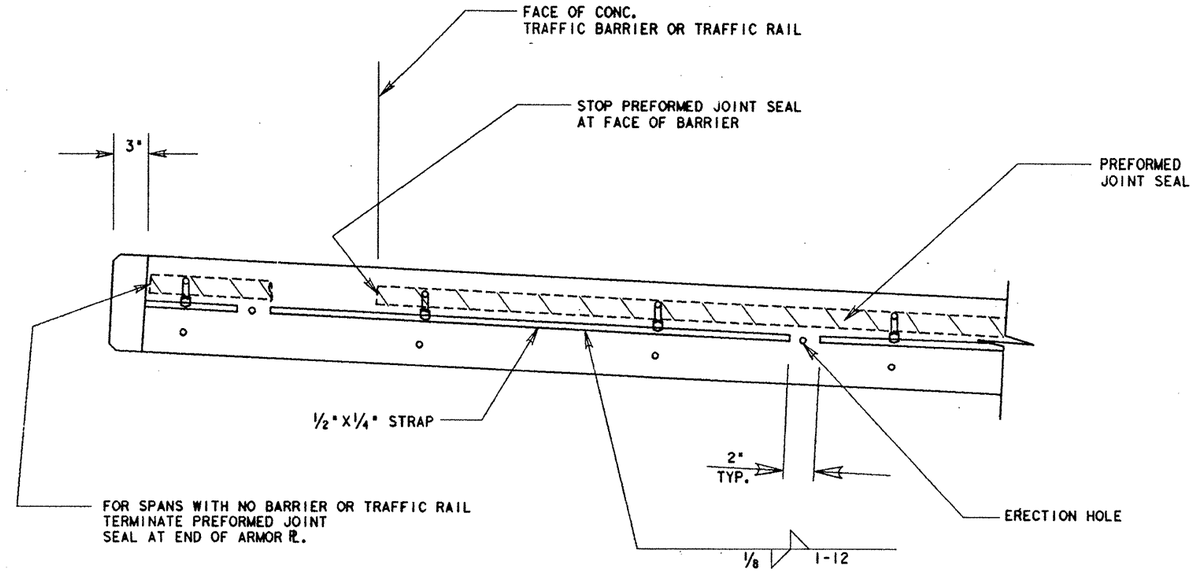

VIEW B-B

SHOWING INSTALLATION ON HIGH SIDE OF STRUCTURE

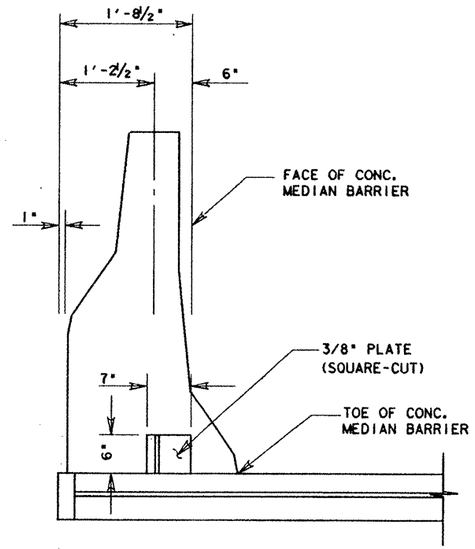

DETAIL OF PLATE FOR BARRIER ON SUGAR RD. OVERPASS

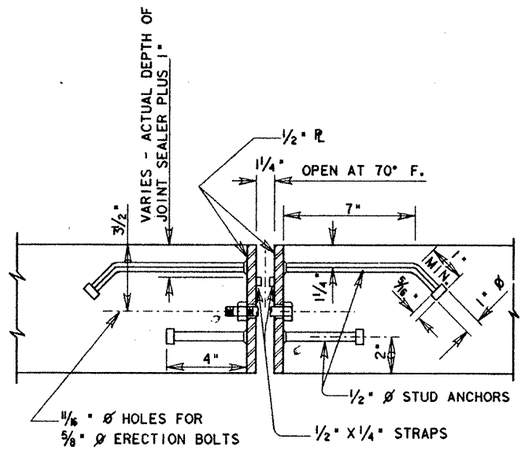

SECTION THRU ARMOR JOINT

P.L.F. QUANTITIES	
PLATE DEPTH "†"	WT. P.L.F. ▲ LB.
7 1/4"	26.58
7 1/2"	27.43
7 3/4"	28.28
8"	29.13
8 1/4"	29.98

▲ WEIGHTS OF ARMOR JOINTS WITH PREFORMED JOINT SEALER.

ADDITIONAL WEIGHT OF TWO PARAPET ARMOR PLATES WITH STRAPS = 10 LB.

GENERAL NOTES:

ARMOR JOINTS [redacted] PROVIDED AT ALL LOCATIONS SHOWN ON PLANS. PROVISION FOR PREFORMED JOINT SEALER [redacted] MADE WHEN THUS INDICATED ON BRIDGE LAYOUT: "ARMOR JOINT (PJS)" OR OTHERWISE NOTED IN PLANS.

STUD ANCHORS [redacted] ELECTRIC ARC END-WELDED TO THE PLATES WITH COMPLETE FUSION.

ERECTION HOLES [redacted] PUNCHED TO LINE UP IN FINAL POSITION OF ARMOR JOINT.

ARMOR PLATES [redacted] SHIPPED IN CONVENIENT LENGTHS (20'-0" MAX., 10'-0" MIN.) EXCEPT AS SHOWN OTHERWISE. CORRESPONDING PLATE SECTIONS [redacted] MATCH MARKED AND BOLTED TOGETHER FOR SHIPMENT.

FIELD SPLICES [redacted] MADE BY BUTT WELDING.

ERECTION BOLTS [redacted] CUT OFF FLUSH WITH ARMOR PLATES OR STRAPS PROMPTLY AFTER THE CONCRETE IN THE LATTER OF THE TWO PLACEMENTS HAS TAKEN INITIAL SET.

US 281 & SUGAR RD. OVERPASS WIDENINGS ARMOR JOINT DETAILS

SHEET 2 OF 2

STATE OF TEXAS
JODY R. ELLINGTON
68708
REGISTERED
PROFESSIONAL ENGINEER

Jody R. Ellington
2-27-92

FED. RD. DIV. NO.	FEDERAL AID PROJECT NO.		SHEET NO.
6	NH 92C)M		145
STATE	STATE DIST. NO.	COUNTY	
TEXAS	21	HIDALGO	
CONT.	SECT.	JOB	HIGHWAY NO.
38	17	37	US 83/281

ZEAS: [325104] FILE: RWARMOR.DGN

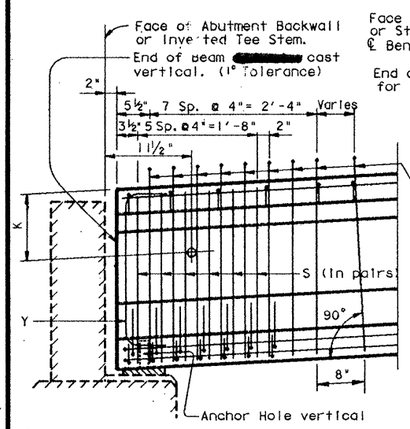

① ELEVATION OF BEAM AT ABUTMENT OR INVERTED TEE BENT

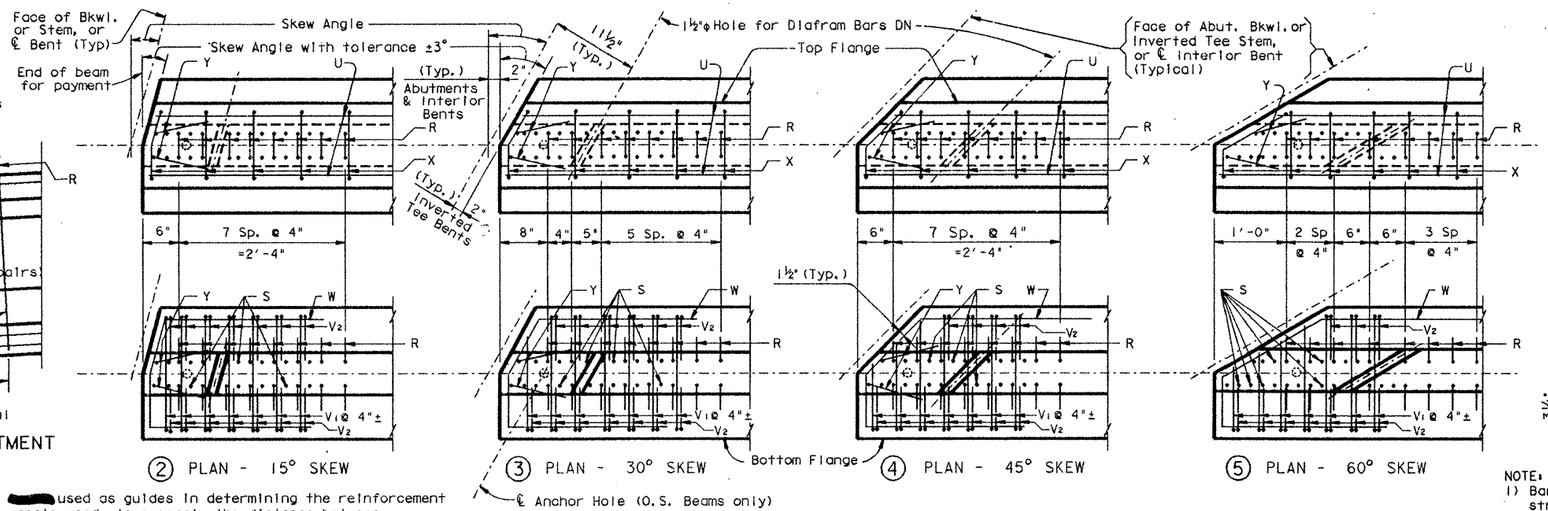

② PLAN - 15° SKEW ③ PLAN - 30° SKEW ④ PLAN - 45° SKEW ⑤ PLAN - 60° SKEW

NOTE: Reinforcing patterns shown above are [redacted] used as guides in determining the reinforcement for the actual beam type and the skew angle used. In general, the distance between consecutive Bars R and/or S [redacted] 2". This spacing [redacted] varied in order to avoid diafram holes. However, a minimum cross sectional area equivalent to that of Bars R and S in square beam end [redacted] provided.

DETAILS OF SKEWED BEAM ENDS

NOTE: It is permissible for bars or strands to come in contact with materials used in forming anchor and diafram holes.

NOTE: See span details for location of interior diaframs. For skewed spans, location of diaframs [redacted] vary from beam to beam.

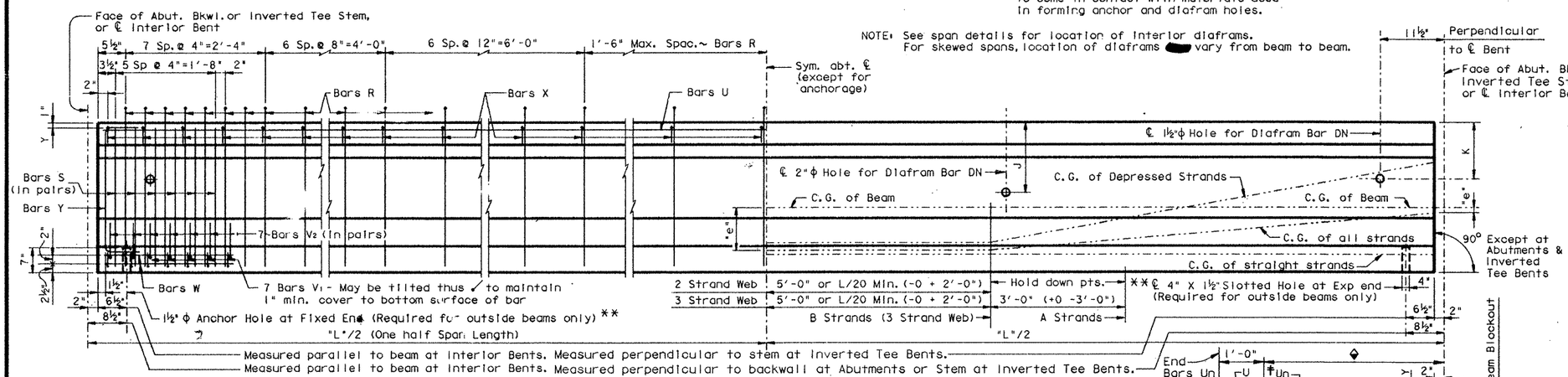

⑥ ELEVATION OF BEAM

♦ 4'-0" ÷ cosine of skew angle. Blockout square with beam for 2" at acute corner skews over 15°.

† Add 2 ~ #5 Bars Un.

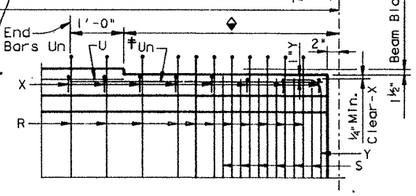

BLOCKOUT DETAIL (SEE Gp DO)

** NOTE:
Anchorage holes [redacted] tapered (4¾" x 1⅝" Exp End) (1⅝" Fixed End) at base. If holes are formed with sheet metal, forms [redacted] left in place. Holes at fixed end [redacted] extend full depth of beam. Plug top or fill with asphalt mastic. At the option of the Fabricator, inside beams [redacted] furnished with anchor holes.

BEAM DIMENSIONS AND SECTION PROPERTIES																
BEAM TYPE	A IN.	B IN.	C IN.	D IN.	E IN.	F IN.	G IN.	H IN.	J IN.	K IN.	W IN.	Yt IN.	Yb IN.	AREA IN.²	I IN.⁴	WT/LF LB.
A	12	16	5	28	5	11	3	4	13	15	6	15.39	12.61	275.4	22,658	287
B	12	18	6	34	5¾	14	2¾	5½	17	14	6½	19.07	14.93	380.3	43,177	375
C	14	22	7	40	7½	16	3½	6	21	15	7	22.91	17.09	494.9	82,602	516
54	16	16	8	54	5	32	5	4	35	15	6	28.47	25.53	493.4	164,023	514
72	22	22	11	72	7½	40½	7½	5½	47	15	7	38.27	33.73	863.4	532,060	899
IV	20	26	8	54	9	23	6	8	33	18	8	29.25	24.75	788.4	260,403	821

Tolerance for Dimensions J & K = (+ ½" ; - 1") (Same tolerance [redacted] applied to all holes for a given Diafram Bar DN)

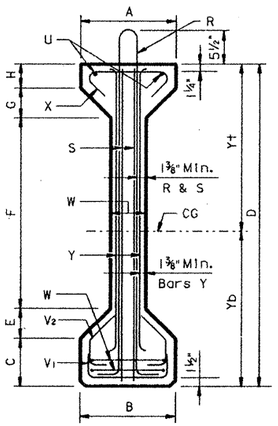

⑦ TYPES 54 & 72 BEAMS

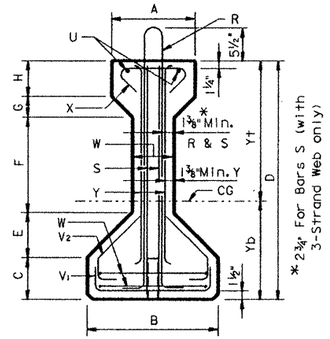

⑧ TYPES A, B, C, & IV BEAMS

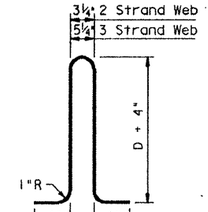

BARS R - #4

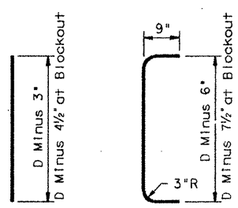

Ty. IV Bms. #7
All others #5

BARS S

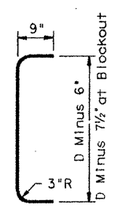

BARS Y - #6

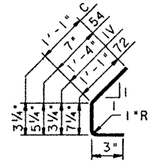

BARS V2 - #4

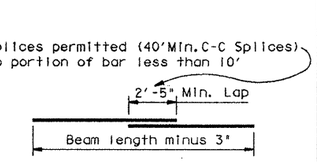

BARS U - #5

NOTE:
1) Bars V2 shall enclose second strand layer from bottom.
2) Match with Bars V1.
3) Not required for Type A & B Beams.

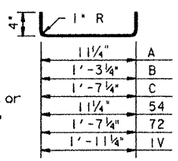

BARS V1 - #3

NOTE: Width tolerance for Bars V1 = ± ¼"

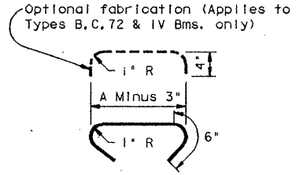

BARS X - #3

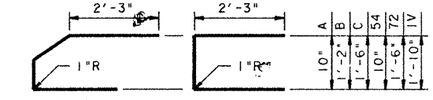

BARS W - #5

GENERAL NOTES:

Designed in accordance with current A.A.S.H.T.O. specifications.

All concrete [redacted] Class H.

Bottom corners of all beam flanges and outside corners of exterior beam ends [redacted] chamfered ¾" or rounded to a ¾" Radius.

The use of diafram holes for lifting purposes [redacted] not [redacted] permitted.

All reinforcing bars for beams [redacted] ASTM Grade 60 steel.

HS 20 LOADING

MODIFICATIONS: JRE 1-30-92
1. DIMENSION TO 1½" Ø BAR DN HOLE.
2. K DIMENSION FOR TYPE B BEAM.

STATE OF TEXAS — KNOX R. ELLINGTON — 68706 — REGISTERED PROFESSIONAL ENGINEER

Knox R Ellington 2-27-92

STATE DEPARTMENT OF HIGHWAYS AND PUBLIC TRANSPORTATION

PRESTRESSED CONCRETE BEAMS

US 281 & SUGAR RD. OVERPASS WIDENINGS

BEAM DETAILS GpA-2 (MOD)

D45350A: ZFAI: [3551101]GPPSTD001.DGN | PREPARED BY AND FOR USE OF TEXAS SDH&PT

ORIGINAL DRAWING DATE: JANUARY 1991	REVISIONS	STATE DISTRICT	FEDERAL REGION	FEDERAL AID PROJECT	SHEET
DN.: THD		6		NH 92C)M	146
CK.: THD		COUNTY	CONTROL	SECTION	JOB	HIGHWAY
DN.: AS		HIDALGO	39	17	97	US83/28
CK.: MLR						

ZFAI: [illegible] DGN [illegible]

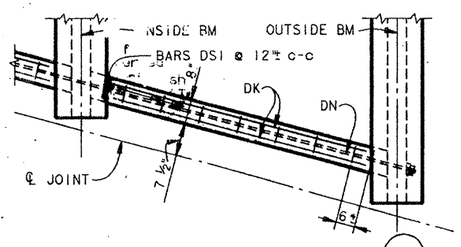

PLAN OF END DIAFRAMS (27)

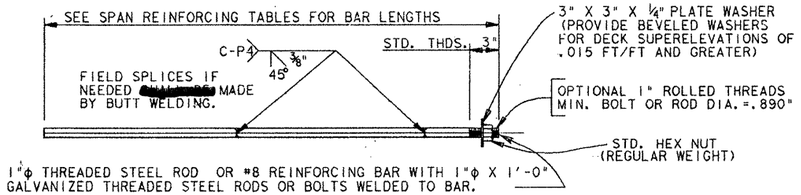

NOTE: AFTER FABRICATION, THE NUTS, PLATES, SLEEVES, AND NOT LESS THAN 10" OF EACH END OF THE THREADED BAR GALVANIZED. PLATE WASHERS, NUTS, AND PIPE SLEEVES ARE CONSIDERED SUBSIDIARY TO REINFORCING STEEL.

BARS DN (FOR NORMAL DIAFRAMS) (32)

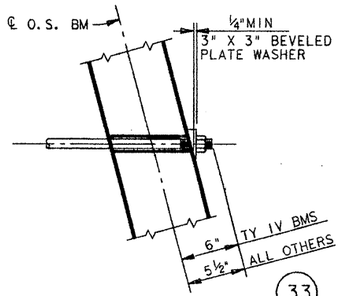

BARS DN (SKEWS THRU 15°) (33)

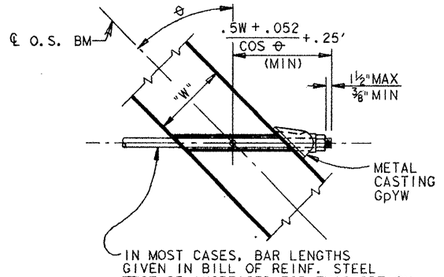

IN MOST CASES, BAR LENGTHS GIVEN IN BILL OF REINF. STEEL INCREASED FOR THIS OPTION.

BARS DN WITH OPTIONAL CASTING FOR ALL SKEWS (40)

NOTE:

DETAILS OF METAL CASTING GpYW ARE AVAILABLE UPON REQUEST FROM THE STATE DEPT. OF HIGHWAYS AND PUBLIC TRANSPORTATION. NO ADDITIONAL PAYMENT MADE FOR CASTINGS OR EXTRA BAR LENGTH FURNISHED UNDER THIS OPTION. CASTINGS ARE CONSIDERED SUBSIDIARY TO REINFORCING STEEL.

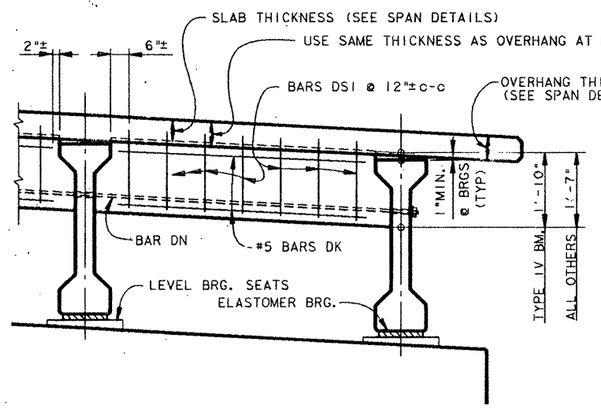

ELEVATION - END DIAFRAMS (28)

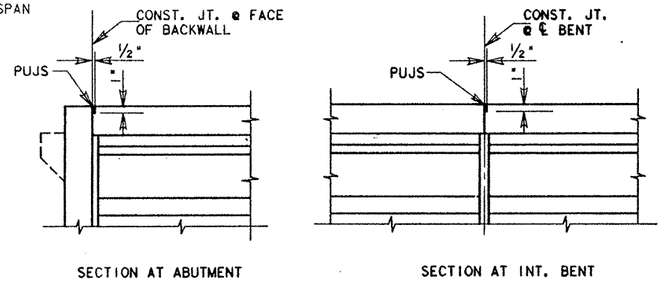

TYPE "B" CONSTRUCTION JOINT DETAILS

NOTE: A ONE-HALF INCH WIDE BY ONE INCH DEEP GROOVE SAWED INTO THE SLAB ON ONE SIDE OF THE CONSTRUCTION JOINT AFTER THE DECK SLAB HAS BEEN COMPLETED. THE SAWING DONE IN SUCH A MANNER TO PREVENT SPALLING. PRIOR TO PLACING THE SEATING MATERIAL, THE VERTICAL FACES OF THE JOINT CLEANED OF ALL LAITANCE BY SANDBLASTING OR BY MECHANICAL ROUTING. CRACKED OR SPALLED EDGES REPAIRED. THE JOINT BLOWN CLEAN OF ALL FOREIGN MATERIAL AND SEALED. (C)

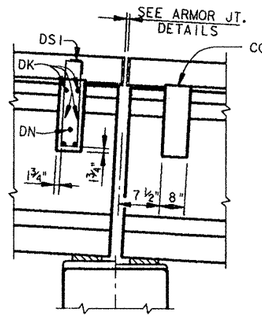

SECT THRU STRUCT AT INT. BENT (WITH ARMOR JOINT) (2)

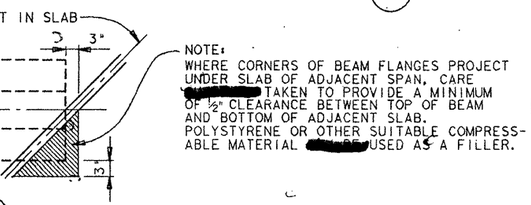

(39) TREATMENT OF BM. END FOR SKEWED SPANS

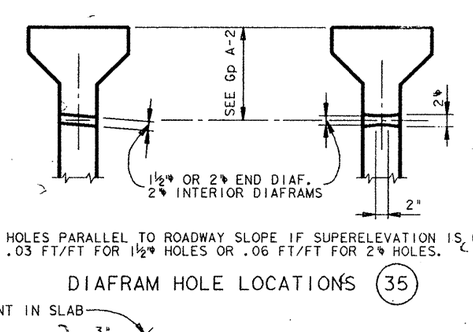

FORM HOLES PARALLEL TO ROADWAY SLOPE IF SUPERELEVATION IS GREATER THAN .03 FT/FT FOR 1½" HOLES OR .06 FT/FT FOR 2" HOLES.

DIAFRAM HOLE LOCATIONS (35)

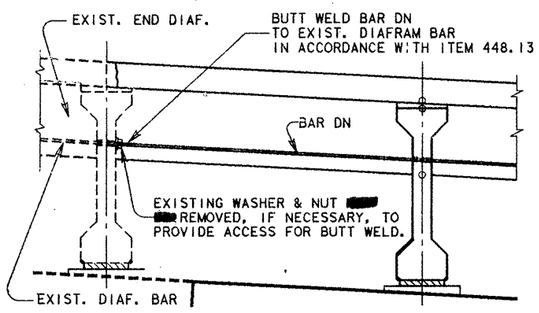

BARS DN ATTACH TO EXIST DIAFRAM (D)

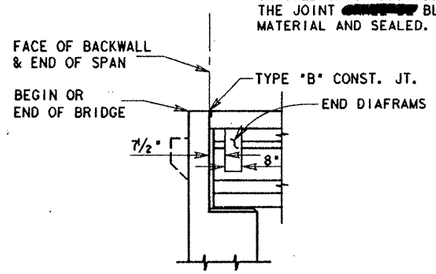

SECT THRU STRUCT AT ABUTMENT (B)

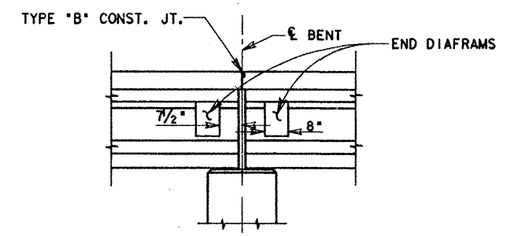

SECT THRU STRUCT AT INT. BENT (WITH TY B CONST. JT.) (A)

GENERAL NOTES:

DESIGNED IN ACCORDANCE WITH CURRENT A.A.S.H.T.O. SPECIFICATIONS.

ALL CAST-IN-PLACE CONCRETE CLASS S UNLESS OTHERWISE SHOWN ON SPAN DETAILS.

NO CONCRETE PLACED IN THE BRIDGE SLAB UNTIL THE DIAFRAMS ARE IN PLACE. THE DIAFRAM CONCRETE HAS REACHED A MINIMUM FLEXURAL STRENGTH OF 300 P.S.I., AND THE NUTS OF BARS DN HAVE SUBSEQUENTLY BEEN FIRMLY TIGHTENED.

US 281 & SUGAR RD.

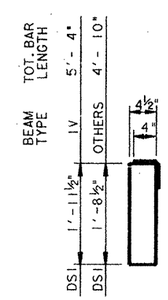

#4 BARS DS1

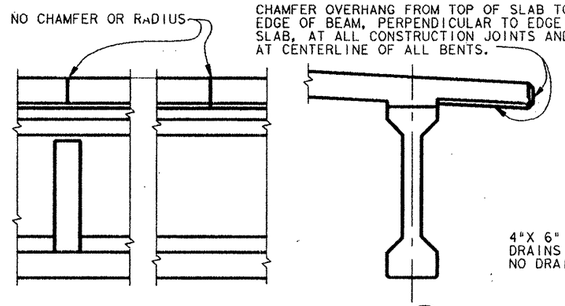

CONSTRUCTION JOINT DETAIL (38)

LOCATED AS SHOWN ON THE SPAN DETAILS.

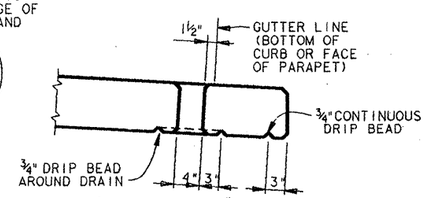

4"X 6" FORMED DRAIN. BEND REINFORCING STEEL TO CLEAR DRAIN 1". DRAINS IF ANY LOCATED AS DIRECTED BY THE ENGINEER. NO DRAINS PLACED OVER RAILROAD TRACKS OR ROADWAYS.

DRAIN DETAILS (37)

STATE OF TEXAS
JODY R. ELLINGTON
68708
REGISTERED PROFESSIONAL ENGINEER
Jody R. Ellington
2-27-92

MODIFICATIONS: JRE 1-30-92

1.) CHANGED DIMENSION FROM ℄ JOINT TO END DIAFRAM (7½").

2.) ADDED DETAILS A, B, C, & D

3.) CHANGED BAR DN (NO THREADS ON ONE END).

STATE DEPARTMENT OF HIGHWAYS AND PUBLIC TRANSPORTATION

PRESTRESSED CONCRETE BEAM SPAN DETAILS

CONSTRUCTION DETAILS

US 281 & SUGAR RD. OVERPASS WIDENINGS

Gp C (MOD)

D45200A: ZFAI: [3551101]GPPSTD006.DGN | PREPARED IN AND FOR USE OF TEXAS SDH&PT

ORIGINAL DRAWING DATE: April 1971

REVISIONS
DN: HJD Rev 5-77
CK: THD Rev 1-78 Removed 100 2
DW: LE Rev 9-78
CK: JRE Rev 4-79
Rev 2-83 GRAPHICS - DW AS - add section views on various levels - bracket at centerline

STATE DISTRICT	FEDERAL REGION	FEDERAL AID PROJECT		SHEET
21	6	NH 92C DM		147

COUNTY	CONTROL	SECTION	JOB	HIGHWAY
HIDALGO	39	17	97	83,28

7453: [3551101]GPPSTD006.DGN IRAD: SAME

DESIGNED BEAMS (DEPRESSED STRANDS)

STRUCTURE		SPAN	BEAM NO.	* BEAM TYPE	NON-STD. STRAND PATT.	PRESTRESSING STRANDS TOTAL NO.	SIZE	STRGTH.	"e" ℄ (In.)	"e" END (In.)	DEPRESSED NO.	DEPRESSED TO (In.)	CONCRETE RELEASE STRGTH. f'ci (psi)	CONCRETE MIN. 28 DAY COMP. STRGTH. f'c (psi)	OPTIONAL DESIGN DN. LOAD COMP. STRESS (TOP ℄) fct (psi)	OPTIONAL DESIGN DN. LOAD TENSILE STRESS (BOTT. ℄) fcb (psi)	OPTIONAL DESIGN REQUIRED MINIMUM ULTIMATE MOMENT CAPACITY (Ft. Kips)
US 281 OVERPASS	LEFT MAIN LANES (WE) WID.	2&3	A	B		16	½"	270K	11.93	8.43	4	A-18	4415	5000	2145	2918	1871
	RIGHT MAIN LANES (EB) WID.	2&3	A	B		16	½"	270K	11.93	8.43	4	A-18	4415	5000	2145	2918	1871
SUGAR ROAD OVERPASS	LEFT MAIN LANES (WB) WID.	1&3	ALL	B	1	14	½"	270K	11.50	8.93	6	A-12	4000	5000	1643	2457	1614
		2	ALL	C		22	½"	270K	13.82	9.91	6	A-24	4091	5000	2323	2850	2772
	RIGHT MAIN LANES (EB) WID.	1&3	ALL	B		18	½"	270K	12.26	8.93	4	A-14	4000	5000	1574	2156	1414
		2	1&2	C		16	½"	270K	14.20	10.20	4	A-22	4000	5000	2255	2555	2479
		2	8&9	B		20	½"	270K	11.33	7.13	6	A-20	5092	5092	2716	3394	2017

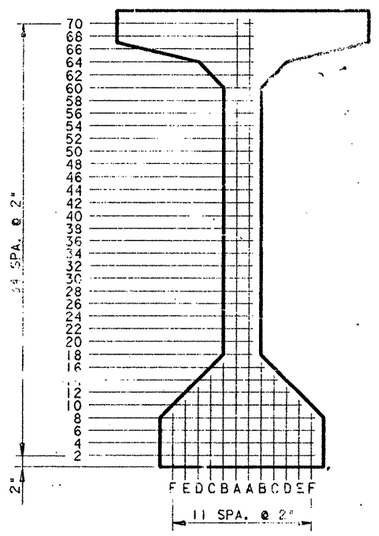

TYPE VI (MOD) BM.
*VIM DENOTES TYPE VI (MOD) BEAM.

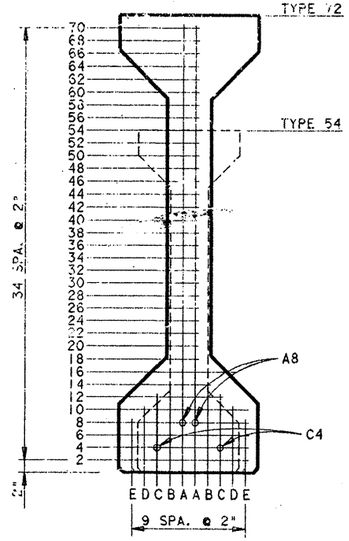

TYPES 54 & 72 BMS.

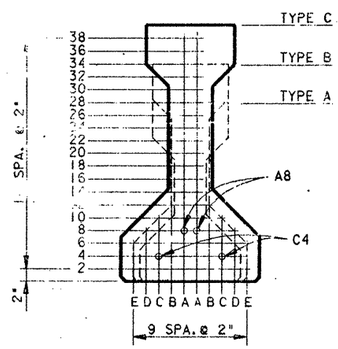

TYPES A, B, & C BMS.

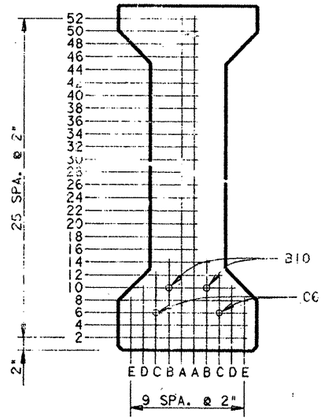

TYPE 54 (MOD) BM.
*54M DENOTES TYPE 54 (MOD) BEAM.

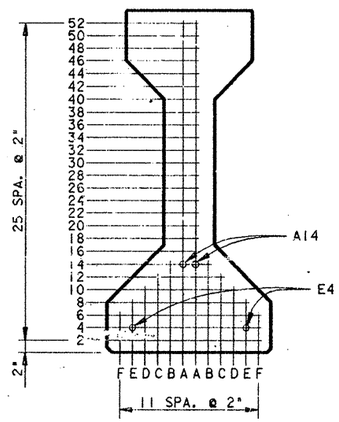

AASHTO TYPE IV BM.

NON STANDARD STRAND PATTERNS

PATTERN	STRAND ARRANGEMENT AT ℄ OF BEAM
1	6 @ 2", 6 @ 4" & 2 @ 6"

GENERAL NOTES:

Designed in accordance with current A.A.S.H.T.O. Specifications.

All concrete [redacted] Class H.

When shown on this sheet, the Fabricator has the option of furnishing either the designed depressed strand beam or an approved optional beam design using stress relieved or low relaxation strands. Optional designs for beams 120 foot or longer [redacted] have a calculated residual camber equal to or greater than that of the designed beam.

Prestress losses for the designed beams have been calculated according to the current A.A.S.H.T.O. Standard and Interim Specifications for a relative humidity of 75%. Optional designs [redacted] likewise conform.

Certain beams with depressed strands are subject to cracking in the ends of the beam. When such cracks occur, all subsequent beams of the same type and strand pattern [redacted] have strands wrapped in the following manner:

1. Alternate rows of depressed strands [redacted] wrapped 2 feet from each end of the beam.
2. One half of the straight strands, as nearly as possible, [redacted] wrapped for 4 feet from each end of the beam.
3. The wrapping pattern [redacted] symmetrical about the vertical axis of the beam for both depressed and straight strands.
4. Strands [redacted] wrapped so that the center of gravity of the depressed strands and the straight strands [redacted] remain within 1 inch of their original location.
5. Strands [redacted] tightly wrapped with plastic tubing. Both ends and the seam of the tube [redacted] be sealed with waterproof tape.
6. Revised shop drawings [redacted] not [redacted] required.

For depressed strand designed beams, strands [redacted] located as low as possible on the 2" grid system shown hereon unless a non-standard strand pattern is indicated. Fill row "2", then row "4", then row "6", etc., beginning each row in the "A" position and working outward until the required number of strands is reached. All strands in the "A" position [redacted] depressed, maintaining the 2" spacing so that the upper two strands are in the position shown in the table at the beam ends.

Initial pretension for ½" 270 K strands = 28.9 K for stress relieved strands or 31.0 K for low relaxation strands.

Design shown based on initial pretension of 31.0 K.

STATE OF TEXAS
JODY R. ELLINGTON
68706
REGISTERED PROFESSIONAL ENGINEER
Jody R. Ellington
2-11-92

STATE DEPARTMENT OF HIGHWAYS AND PUBLIC TRANSPORTATION

PRESTRESSED CONCRETE BEAMS

(NON-STANDARD SPANS)

US 281 & SUGAR RD. OVERPASS WIDENINGS

Gp-NS-LR

D45200A1 ZFA1 (355110)GPPSTD023.DGN | PREPARED BY AND FOR USE OF TEXAS

ORIGINAL DRAWING DATA

REVISIONS
Original prepared Oct 1989

STATE DISTRICT	PROJECT SECTION	FEDERAL AID PROJECT
21	6	NH 92C (M)

COUNTY	CONTROL	SECTION	JOB	SHEET
HIDALGO	39	17	97	1592

ZFA2 [redacted] 0416GPPSTD023.DGN [redacted] SAME

BEGIN BRIDGE
RAMPS 1 & 2 ABUT NO. 1
STA. 0+00 = ℄ STA. 846+22.51
FIN. GR. ELEV. = 131.87

PROVIDE FOR Q10 = 1.27 CFS OFF BRIDGE

EXIST. 84' F-F

℄ BENT 2
STA. 0+80

DECK DRAIN ⊕
STA. 0 + 95.50

DECK DRAIN ⊕
STA. 2 + 00.50

DECK DRAIN ⊕
STA. 3 + 10.50

DECK DRAIN ⊕
STA. 4 + 20.50

℄ BENT 5
STA. 4+15

S 85° 7' 18" E

12' LANE | 12' LANE | 10' SHDR | 4' SHDR

4° S.E.J.

40' OVERALL WIDTH | 38' CLEAR ROWY WIDTH | 1'-0" | 1'-0"

42' TO PGL

90° 4' 05"

℄ BEAM 1

℄ BEAM 5

.02'/FT.

NOMINAL FACE OF T501 RAIL

S 4°52'42"W

RAMPS 1 & 2 H.A.L. & P.G.L.

23'

WATCH LINE STA. 5+00

LIMITS OF ℄ "B" CONC. RIPRAP

S 4°52'42" W

2:1

EXIST. 25' TURNAROUND

CONCRETE PAVERS (SEE LANDSCAPING DETAILS)

STA. 849+00
TEST HOLE #1

℄ US 281

STA. 3+75

150' TRANSITION TO CROWN SECTION

850+00

DECK DRAIN ⊕
STA. 4 + 45
PIPE TO BENT 5

STA. 847+65.01

℄ FM 495
S 85° 11' 23" E

RAMPS 3 & 4 PGL & HAL

⊕ FOR DRAIN DETAILS SEE BRIDGE DRAIN DETAILS SHEET.

STATE OF TEXAS
Mark J. Bloodworth
52996
REGISTERED PROFESSIONAL ENGINEER
9-5-91

⊛ COLORED TEXTURIZED CONCRETE (4 IN) (SEE LANDSCAPING DETAILS)
CONSTRUCTED IN ACCORDANCE WITH STDS. RR 8-RR9.

DRILLED SHAFTS ARE DESIGNED WITH SKIN FRICTION AND POINT BEARING.

BEGIN BRIDGE
RAMPS 1 & 2 ABUT NO. 1
STA. 0+00 = ℄ STA. 846+22.51 (US 281)
FIN. GR. ELEV. = 131.87

M.B.G.F.

End of Rail for Payment

11' WING

OVERALL LENGTH OF BRIDGE (RAMPS 1 & 2) = 1204.51'
T501 RAIL (1215.6' LT. & 1215.6' RT.)

UNIT 1 – 305'-0" PRESTRESSED CONC. BEAM UNIT (90'-105'-110')

UNIT 2 – 330' PRESTRESSED CON. BEAM UNIT (110'-110'-110')

TOP OF T501 RAIL

P.G.L. +0.3310%

PRESTRESSED CONC. BEAM (TY IV)

2:1 SIDE SLOPE

MIN. CALC. CLR. = 16.99'

MIN. CALC. CLR. = 17.23'

MIN. CALC. CLR. = 17.49'

HT = 12' | 8.5' | 5.5'

HT = 13' | 8.5' | 5.5'

HT = 14'

HT = 14'

VARIES

EXIST. 25' TURN-AROUND

EXIST. 84' F-F

EXIST. 25' TURN-AROUND

EXIST. PROFILE AT RAMP 1 & 2 PGL

CONCRETE PAVERS

3~36"Ø X 47' DRILLED SHAFTS

2~60"Ø X 60' DRILLED SHAFTS

2~60"Ø x 59' DRILLED SHAFTS

2~60"Ø x 59' DRILLED SHAFTS

STA. 849+00
TEST HOLE #1
ELEV. = 109.0'

13(6.0")	13(6.0")	LOOSE BLACK DIRT
12(6.0")	10(6.0")	SANDY CL LOOSE, MST BROWN CL W/ PART. OF WHITE CHALK
7(6.0")	12(6.0")	CMPT, MST RED-BROWN CLAY COMPACT, MOIST
12(6.0")	4(6.0")	
12(6.0")	16(6.0")	BROWN CLAY W/ TRACES OF WHITE CHALK, MOIST COMPACT
28(6.0")	25(6.0")	
27(6.0")	41(6.0")	
44(6.0")	47(6.0")	RED-BROWN CLAY COMPACT, MOIST

44(6.0")	49(6.0")	
42(6.0")	46(6.0")	
50(5¼")	50(1¾")	
36(6.0")	54(2⅛")	LOOSE SAND MOIST
50(2¼")	50(1¾")	
50(3⅜")	50(1⅛")	

EL. = 77.00
EL. = 45.00
EL. = 45.00
EL. = 45.00

137.87
133.20
132.53
132.19
133.19
133.19

0+00(B)(C)
1+00(B)(C)
2+00(B)(C)
3+00(B)(C)
4+00(B)(C)
5+00(B)(C)

STATE OF TEXAS
MARK P. McCLELLAND
60710
REGISTERED PROFESSIONAL ENGINEER
8/29/91

STATE OF TEXAS
MARIO R. JORGE
65538
REGISTERED PROFESSIONAL ENGINEER
12-7-90

BRIDGE LAYOUT
US 83/231 INTERCHANGE
RAMPS 1 & 2

STA. 0+00 TO 5+00
SHEET 1 OF 23 SHEETS

SCALE:
PLAN 1" = 20' HORIZ.
PROFILE 1" = 10' VERT.

REFERENCE FILE	NAMED VIEW	
NEWINT2.DGN	REF2	1-28, 30-41
NEWINT.DGN	REF1	
[325161] RAMPBOOK.DGN		

PRF FILE | REF. PRF

FED. RD.	FEDERAL AID PROJECT NO.		SHEET NO.
6	NH 92 ( ) M		156
STATE	DIST.	COUNTY	
TEXAS	21	HIDALGO	
CONT.	SECT.	JOB	HIGHWAY NO.
	17	97	83, 281

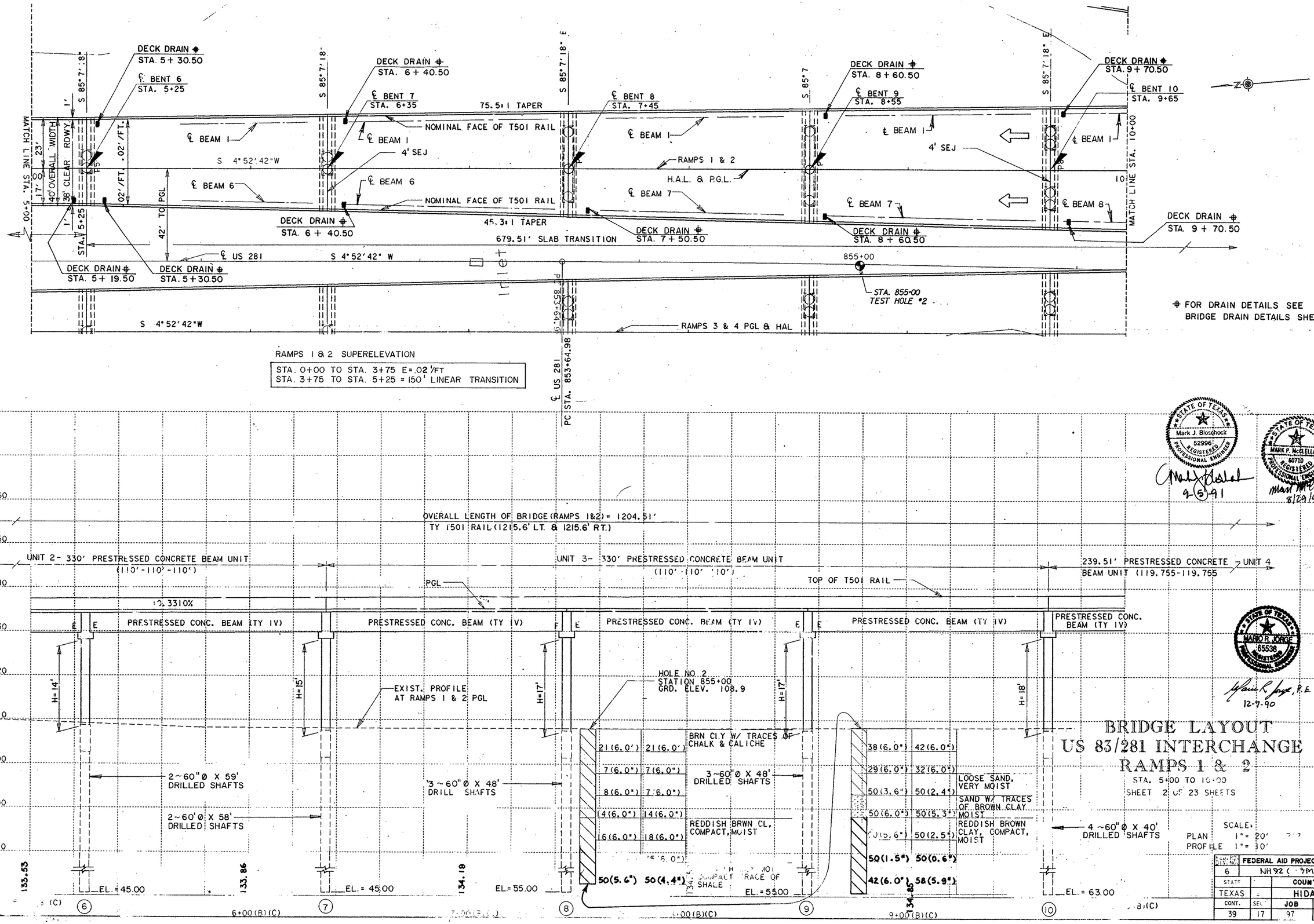

REFERENCE FILE	NAMED VIEW	SHEETS	PRF FILE
NEWINT2.DGN	REF2	1-62	RB2 . PRF
NEWINT.DGN	REF1	1-28, 30-41	

Mark J. Blosshock
52996
REGISTERED PROFESSIONAL ENGINEER
9-5-91

MARK P. McCLELLAND
60710
REGISTERED PROFESSIONAL ENGINEER
8/29/91

MARIO R. JORGE
65538
REGISTERED PROFESSIONAL ENGINEER
12-7-90

BRIDGE LAYOUT
US 83/281 INTERCHANGE
RAMPS 1 & 2

STA. 5+00 TO 10+00

SHEET 2 OF 23 SHEETS

SCALE:
PLAN 1" = 20'
PROFILE 1" = 10'

DIST.	COUNTY NO.	FEDERAL AID PROJECT NO.	SHEET NO.
6		NH92 ( ) PM	157
STATE		COUNTY	
TEXAS		HIDALGO	
CONT.	SEC.	JOB	HIGHWAY NO.
39	17	97	83/281

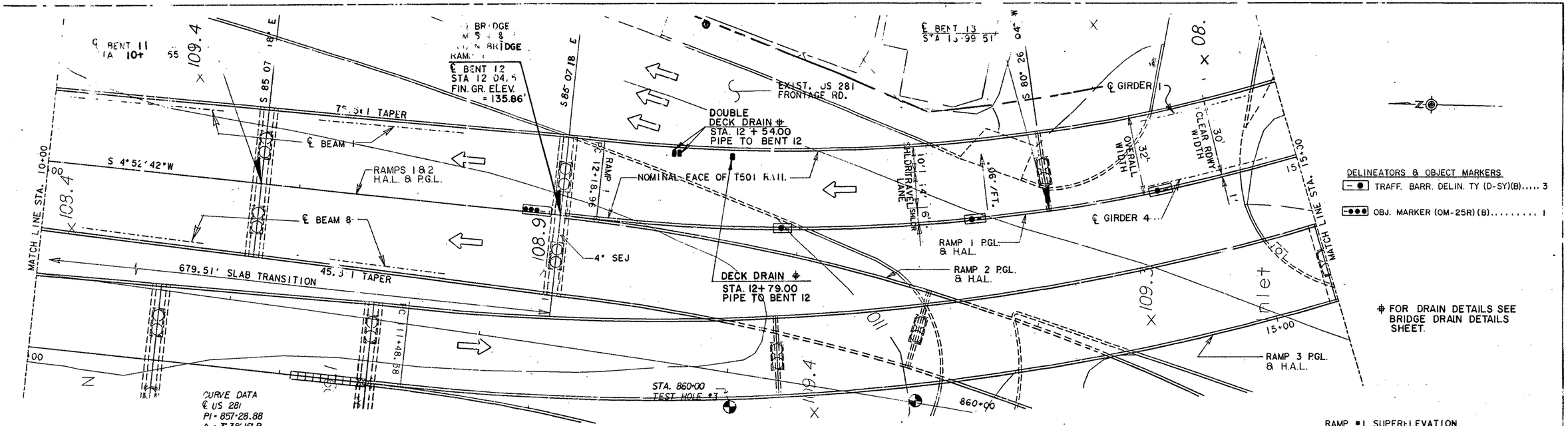

RAMP #1 SUPERELEVATION

STA. 11+18.96 TO STA. 12+68.96=150' TRANSITION, TY3
STA. 12+68.96 TO STA. 22+49 E=.06'/FT
STA. 22+49.06 TO STA. 23+99.06 = 150', TRANSITION, TY3

RAMP 1
STA = 14+50.00 (P)
EL = 136.67
VC = 400.00'
E = 0.06

Gin = +0.3310 %
Gout = +0.4488%

DRILLED SHAFTS ARE DESIGNED WITH SKIN FRICTION AND POINT BEARING.

END BRIDGE RAMPS 1 & 2
BEGIN BRIDGE RAMP 1
℄ BENT 12
STA. 12+04.51
FIN. GR. ELEV. = 135.86

OVERALL LENGTH OF BRIDGE (RAMPS 1 & 2) = 1204.51'
TY T501 RAIL (1215.6' LT. & 1215.6' RT.)

OVERALL LENGTH OF BRIDGE (RAMP 1) = 2270'
TY T501 RAIL (2221.7' LT. & 2270.0' RT.)

UNIT 4 - 239.51' PRESTRESSED CONCRETE BEAM UNIT (119.755' - 119.755')

UNIT 5 - 610' CURVED STEEL GIRDER UNIT (195' - 220' - 195')

PGL

TOP OF T501 RAIL

+0.3310%

VPC

VPT

PRESTRESSED CONC. BEAM (TY IV)

PRESTRESSED CONC. BEAM (TY IV)

CURVED STEEL GIRDER

CURVED STEEL GIRDER

H=18'

H=18'

H=18'

MIN. CALC. VERT. CLR. =19.00

TEST HOLE # 3
STA. 860+00
GRD. ELEV. 108.9

4~60"Ø x 48' DRILL SHAFTS

4~60"Ø x 40' DRILLED SHAFTS

2~60"Ø x 60' DRILL SHAFTS

EXIST. PROFILE AT RAMP 1 PGL

39 (6.0")	54 (6.0")	BROWN CLAY W/ TRACES GREEN & WHITE CHALK	
38 (6.0")	32 (6.0")		
48 (6.0")	52 (5.3")	SAND & CLAY SOFT, MOIST	
50 (2.3")	50 (1.8")		
50 (1.5")	50 (0.8")		
50 (1.9")	50 (1.3")	LOOSE SAND, VERY MOIST	
32 6.0")	58 (5.3")		

11 (6.0")	9 (6.0")	BRWN CLY, HARD, MOIST	
9 (6.0")	11 (6.0")		
12 (6.0")	12 (6.0")	BRN CLY, W/ TRACES OF CHK SUBS	
13 (6.0")	14 (6.0")		
13 (6.0")	14 (6.0")	REDDISH-BROWN CLAY, MOIST, COMPACT	
31 (6.0")	36 (6.0")	LT. BRWN CLY, MOIST, COMPACT	
23 6.0")	26 (6.0")		

EL. = 63.00

EL. = 55.00

EL = 44.00

35.51

35.51

136.18

136.54

136.96

10+00 (B)

11+00 (B)

12+00 (B)

13+00 (B)

14+00 (B)

15+00 (B)

Mark J. Bloschock 52996 REGISTERED PROFESSIONAL ENGINEER
9-5-91

MARK P. McCLELLAND 60710 REGISTERED PROFESSIONAL ENGINEER
8/29/91

MAJOR JORGE 65538 REGISTERED PROFESSIONAL ENGINEER
12-7-90

BRIDGE LAYOUT
US 83/281 INTERCHANGE
RAMP 1

STA. 10+00 TO 15+00

SHEET 3 OF 23 SHEETS

SCALE:
PLAN 1" = 20' HORIZ.
PROFILE 1" = 10' VERT.

FED. RD. DIV. NO.	FEDERAL AID PROJECT NO.	SHEET NO.
6	NH92 ( )M	158

STATE	DIST.	COUNTY	
TEXAS	21	HIDALGO	
CONT.	SECT.	JOB	HIGHWAY NO.
39	17	97	83/281

FILE NAME	RAMP01
REFERENCE FILE	NEWINT.DGN
NAMED VIEW	REF1
LEVELS	I-28, 30-41
PRF FILE	RB3 . PRF

SUMMARY OF ESTIMATED QUANTITIES

ITEM / DESCRIPTION	SLURRY DISPLACEMENT DRILLED SHAFTS		CLASS "C" CONCRETE		REINFORCED CONCRETE SLAB	PRESTRESSED CONCRETE BEAMS	SEALED EXPANSION JOINT	RAILING	CONCRETE SURFACE TREATMENT	Item 471 Frame & Grate (Br. Drain)					
	36" ϕ	60" ϕ	ABUTMENT	BENT		TY. IV	4"	TY. T501							
	L.F.	L.F.	C.Y.	C.Y.	S.F.	L.F.	L.F.	L.F.	S.Y.	Ea.					
1 ~ ABUTMENT	141		24.4				38	22.0							
11 ~ INTERIOR BENTS		1508		1513.2											
UNIT 1 ~ 305.00' PRESTR. CONC. BM UNIT					12200	1473.13	38	610.0	1260						
UNIT 2 ~ 330.00' PRESTR. CONC. BM UNIT					13414	1694.73	42	660.0	1387						
UNIT 3 ~ 330.00' PRESTR. CONC. BM UNIT					16405	2118.51	54	660.1	1719						
UNIT 4 ~ 239.51' PRESTR. CONC. BM UNIT					14316	1850.93	62	479.1	1515						
TOTAL	141	1508	24.4	1513.2	56335	7137.3	234	2431.2	5881	15					

BEARING SEAT ELEVATIONS

		BEAM 1	BEAM 2	BEAM 3	BEAM 4	BEAM 5	BEAM 6	BEAM 7	BEAM 8
ABUT 1	(FWD)	125.992	126.162	126.332	126.502	126.672			
BENT 2	(BK)	126.279	126.449	126.619	126.789	126.959			
	(FWD)	126.255	126.425	126.595	126.765	126.935			
BENT 3	(BK)	126.585	126.755	126.925	127.095	127.265			
	(FWD)	126.581	126.751	126.921	127.091	127.261			
BENT 4	(BK)	126.929	127.099	127.269	127.439	127.609			
	(FWD)	127.008	127.178	127.348	127.518	127.688			
BENT 5	(BK)	127.355	127.525	127.695	127.810	127.896			
	(FWD)	127.310	127.480	127.650	127.757	127.831			
BENT 6	(BK)	127.657	127.827	127.997	127.951	127.787			
	(FWD)	127.715	127.851	127.988	128.107	127.971	127.835		
BENT 7	(BK)	128.035	128.186	128.337	128.438	128.287	128.136		
	(FWD)	128.029	128.181	128.333	128.433	128.281	128.129		
BENT 8	(BK)	128.349	128.515	128.682	128.764	128.597	128.430		
	(FWD)	128.406	128.545	128.685	128.824	128.766	128.626	128.487	
BENT 9	(BK)	128.725	128.877	129.029	129.181	129.091	128.939	128.787	
	(FWD)	128.699	128.852	129.004	129.157	129.066	128.913	128.761	
BENT 10	(BK)	129.019	129.184	129.348	129.513	129.391	129.226	129.062	
	(FWD)	129.013	129.155	129.297	129.439	129.481	129.339	129.197	129.055
BENT 11	(BK)	129.362	129.516	129.669	129.823	129.844	129.691	129.537	129.384
	(FWD)	129.545	129.699	129.853	130.007	130.027	129.873	129.720	129.566
BENT 12	(BK)	129.198	129.562	129.927	130.291	130.266	129.851	129.436	129.021

RAMP 1

		BEAM 1	BEAM 2	BEAM 3	BEAM 4
BENT 12	(FWD)	129.028	129.430	129.833	130.236

RAMP 2

		BEAM 1	BEAM 2	BEAM 3	BEAM 4
BENT 12	(FWD)	130.406	129.955	129.504	129.052

SKETCH "A"
Field Change No. 23
NH 92(50)M
CSJ-0039-17-097
46-281/83

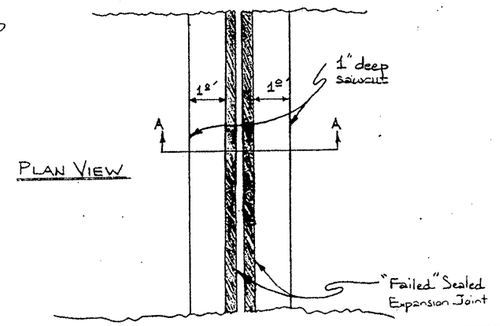

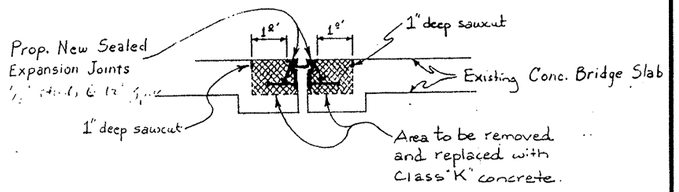

HS 20 LOADING

STATE DEPARTMENT OF HIGHWAYS AND PUBLIC TRANSPORTATION

ESTIMATED QUANTITIES AND BEARING SEAT ELEVATIONS

US 83/281 INTERCHANGE
UNITS 1-4, RAMPS 1 & 2

STATE OF TEXAS
MARK J. BLOSCHOCK
52996
REGISTERED PROFESSIONAL ENGINEER
3/13/92

REV. 3-30-92

D45350A1 ∘ ZFA2 ∘ E3551001J4379TAB02.DGN	PREPARED BY AND FOR USE OF TEXAS SDH&PT						
ORIGINAL DRAWING DATE: FEBRUARY 1991	STATE DISTRICT	FEDERAL REGION	FEDERAL AID PROJECT ∘				SHEET
DN.: KBA REVISIONS	21	6					159
CK.: LMW/MRL	COUNTY			CONTROL	SECTION	JOB	HIGHWAY
DW.: PSR	HIDALGO			0039	17	097	US 83/ SH 281
CK.: LMW/MRL							

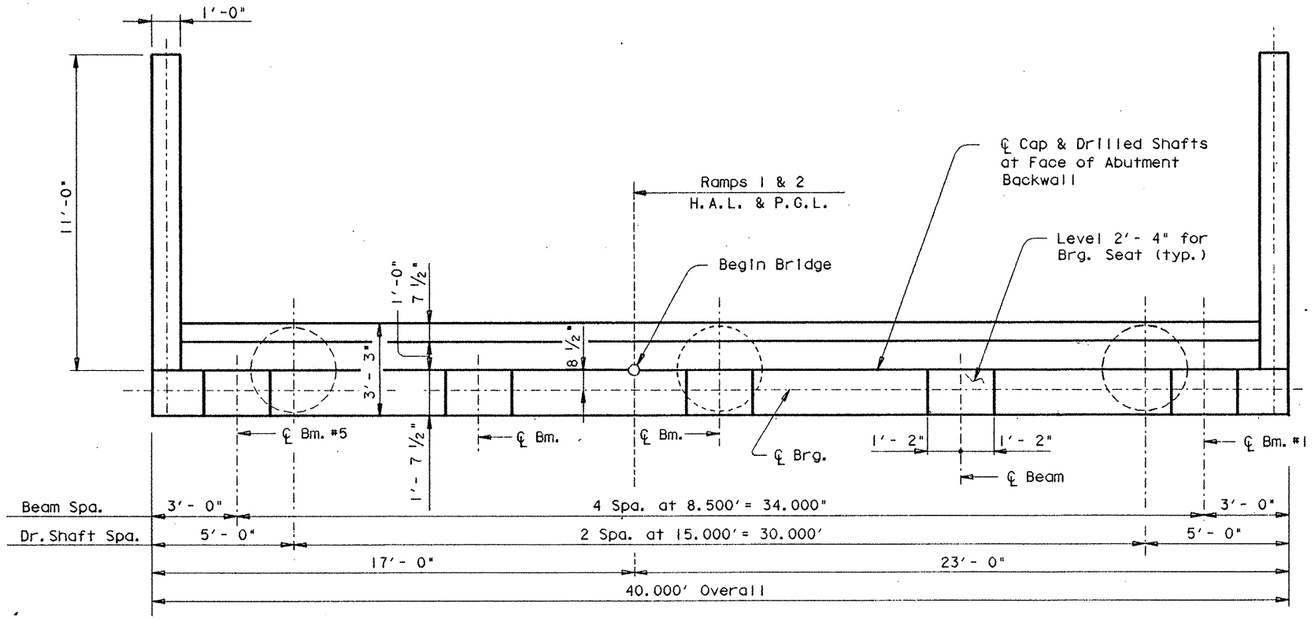

PLAN

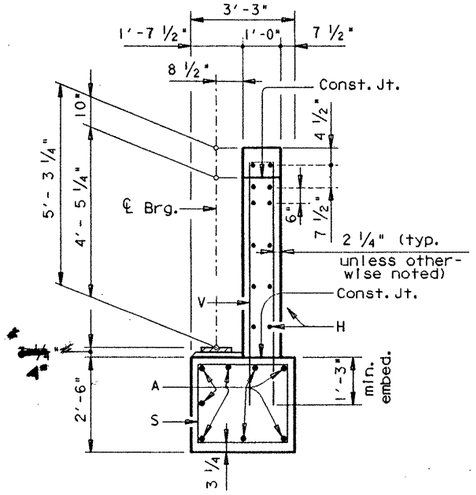

SECTION A-A

*Change due to 2 1/2" Brg. pad + 1 1/2 Brg. seat.

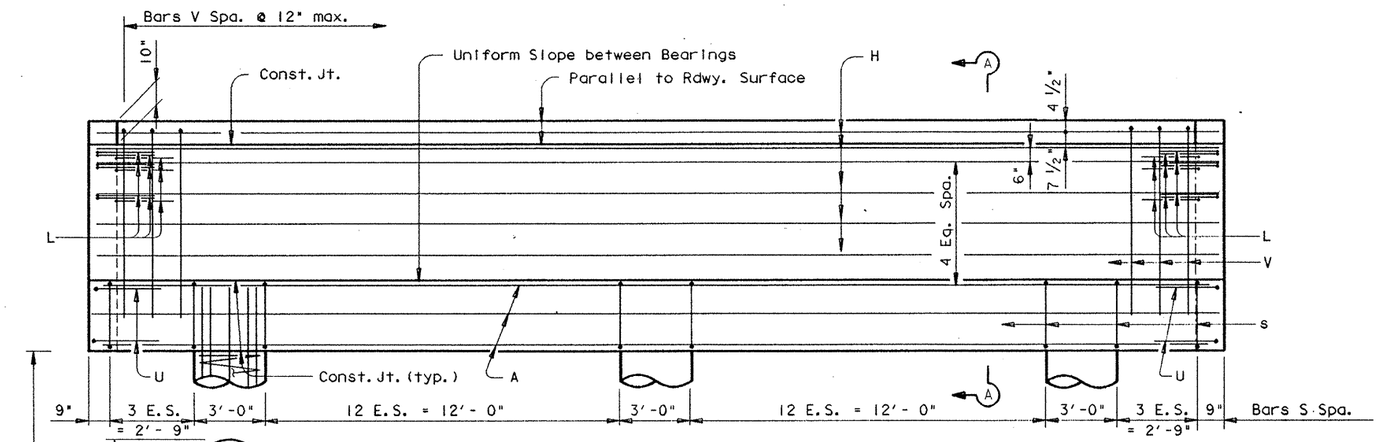

ELEVATION

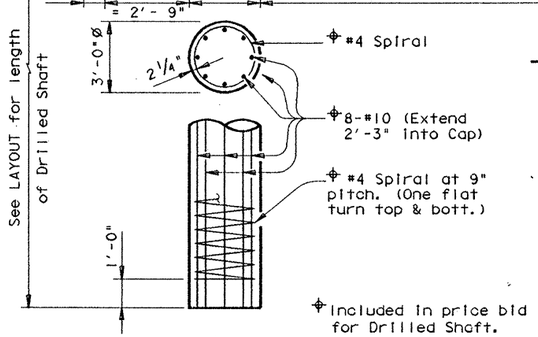

♦ TABLE OF ESTIMATED QUANTITIES

Bar	No.	Size	Length	Weight
A	8	# 11	39'- 0"	1658
H	12	# 5	39'- 8"	496
L	18	# 6	4'- 0"	108
S	34	# 4	10'- 6"	238
U	4	# 6	7'- 9"	47
V	39	# 5	13'-10"	563
WH1	12	# 6	10'- 8"	192
wH2	4	# 6	9'- 3"	56
wH3	4	# 6	8'- 0"	48
wH4	4	# 6	6'-10"	41
wH5	4	# 6	6'- 6"	39
wH6	4	# 6	4'- 3"	26
wV1	12	# 5	7'- 9"	97
wV2-7	24	# 5	4'- 1"	102
wU	10	# 4	1'- 7"	11
wP	4	# 6	11'- 2"	67
Reinforcing Steel			Lb	⌗ 3789
Class "C" Concrete			CY	24.4

⌗ For contractor's information only.
♦ Quantities shown are for one abutment only.

GENERAL NOTES:

Designed according to A.A.S.H.T.O. 1989 Standard Specifications.

Calculated Foundation Loads ~
Cap Drilled Shafts = 115 Tons/ Drilled Shaft

For Modified Bearing Seat Details see Gp C (SPL) Sheet.

HS 20 LOADING

Sheet 1 of 2

STATE DEPARTMENT OF HIGHWAYS AND PUBLIC TRANSPORTATION

ABUTMENT NO. 1

RAMPS 1 & 2

US 83/281 INTERCHANGE

STATE OF TEXAS
MARK J. BLOSCHOCK
52996
REGISTERED PROFESSIONAL ENGINEER

9-5-91

D45350A:ZFA1:[355163]4376ABT01.DGN

PREPARED BY AND FOR USE OF TEXAS SDH&PT

ORIGINAL DRAWING DATE: JULY 1990		STATE DISTRICT	FEDERAL REGION	FEDERAL AID PROJECT		SHEET
DN.: LMW	REVISIONS	21	6	NH 92C JM		160
CK.: KBA		COUNTY		CONTROL	SECTION	JOB	HIGHWAY
DW.: TKW		HIDALGO		0039	17	097	US 83/281
CK.: LMW /KBA							

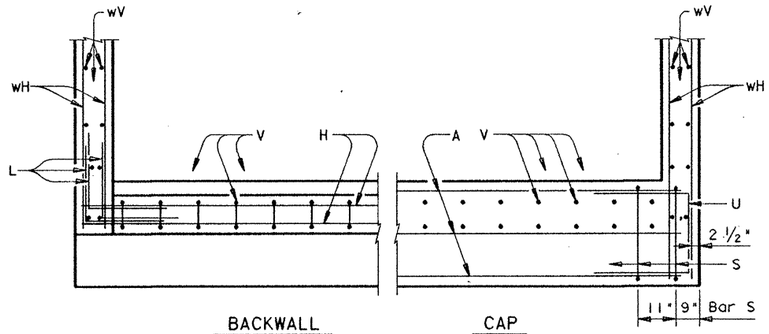

WINGWALL DETAILS

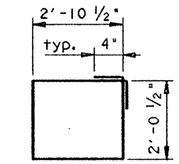

BARS S

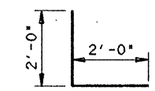

BARS L

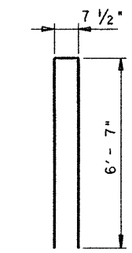

BARS V

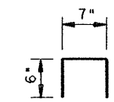

BARS wU

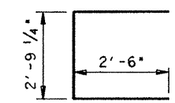

BARS U

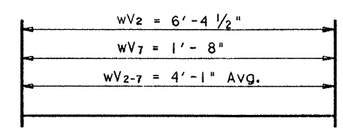

BARS wV2 - 7

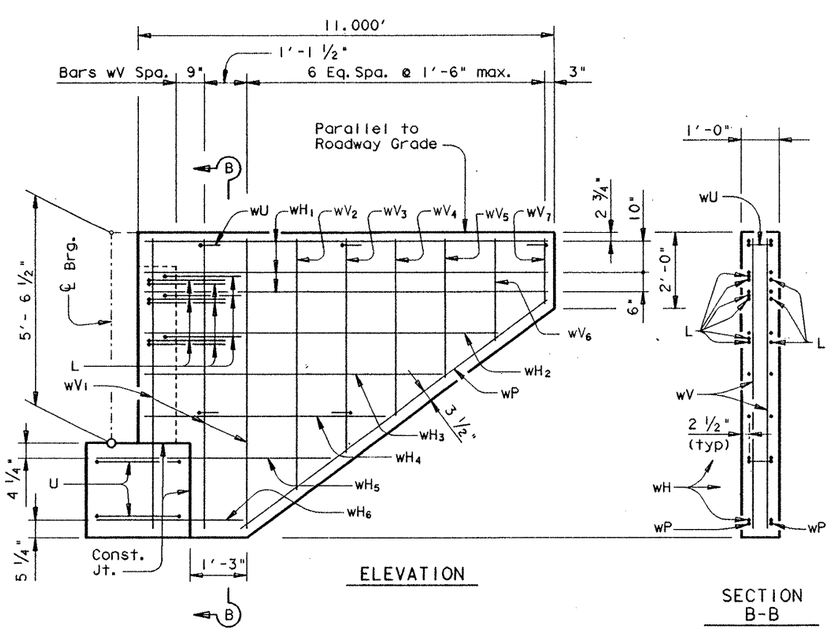

ELEVATION

SECTION B-B

WINGWALL DETAILS

HS 20 LOADING

Sheet 2 of 2

STATE DEPARTMENT OF HIGHWAYS AND PUBLIC TRANSPORTATION

ABUTMENT NO. 1

RAMPS 1 & 2

US 83/281 INTERCHANGE

STATE OF TEXAS
MARK J. BLOSCHOCK
52996
REGISTERED PROFESSIONAL ENGINEER

9-5-91

D45350A: ZFA1: [355163]4376ABT01.DGN

PREPARED BY AND FOR USE OF TEXAS SDH&PT

ORIGINAL DRAWING DATE: JULY 1990	STATE DISTRICT	FEDERAL REGION	FEDERAL AID PROJECT	SHEET
DN.: LMW / CK.: KBA / DN.: TKW / CK.: LMW /KBA — REVISIONS	21	6	NH 92C JM	161

COUNTY	CONTROL	SECTION	JOB	HIGHWAY
HIDALGO	0039	17	097	US 83/281

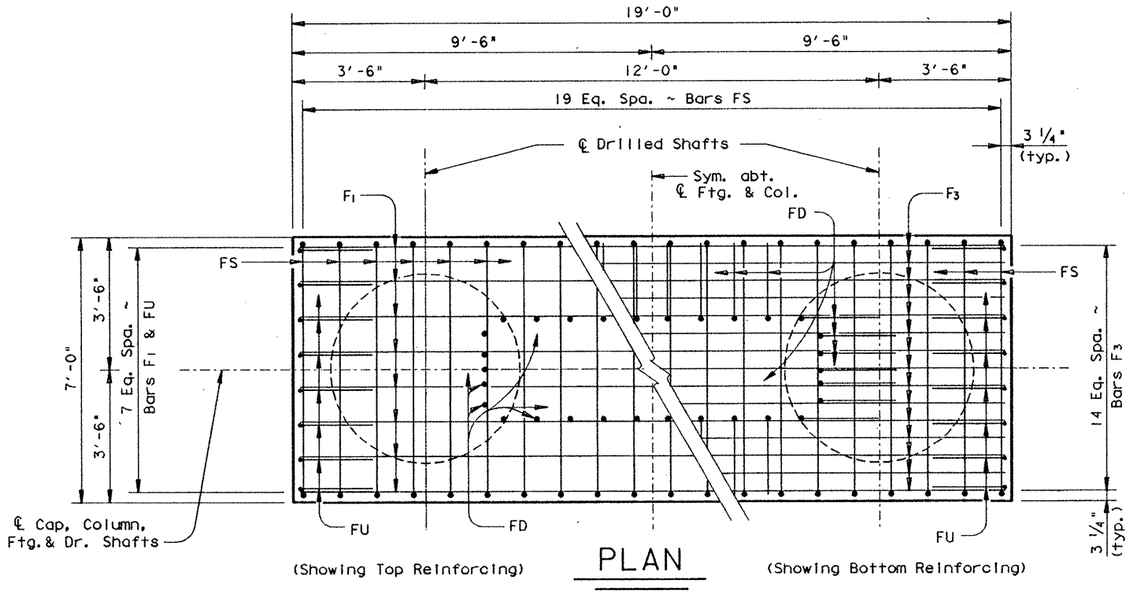

(Showing Top Reinforcing) PLAN (Showing Bottom Reinforcing)

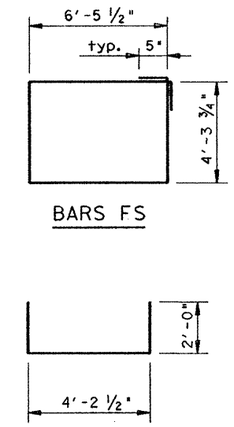

BARS FS

BARS FU

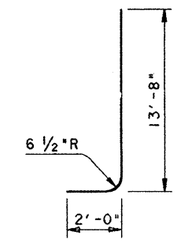

BARS FD

‡TABLE OF FOOTING QUANTITIES

Bar	No.	Size	Length	Weight
F_1	8	# 8	18'- 6"	395
F_2	8	# 5	18'- 6"	154
F_3	15	# 11	18'- 6"	1474
FD	30	# 11	15'- 6"	2471
FS	20	# 5	22'- 5"	468
FU	16	# 5	8'- 3"	139

Reinforcing Steel	Lb	‡ 5101
Class "C" Concrete	CY	24.6

‡ For Contractor's information only.

‡ Quantities shown are for one footing only.

All footing reinforcing [redacted] Grade 60.

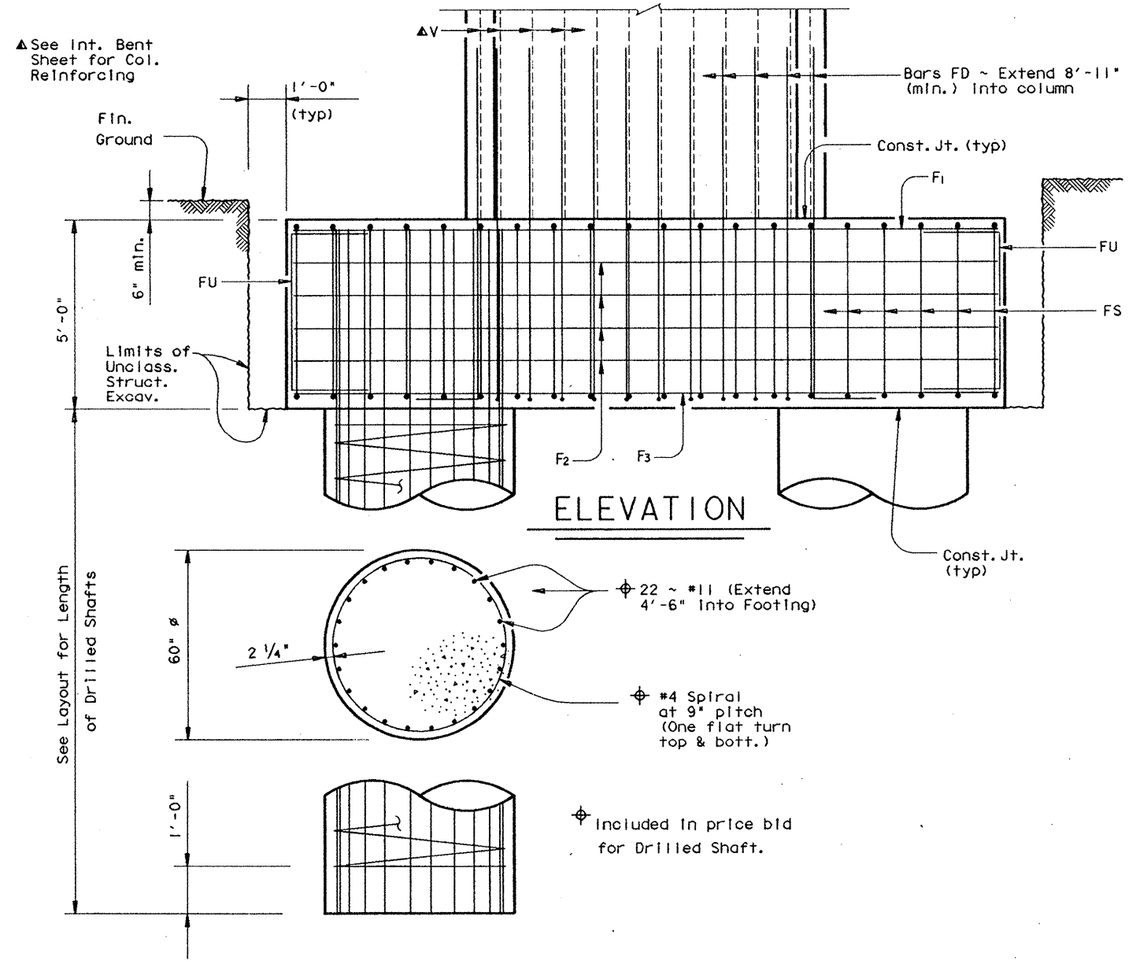

ELEVATION

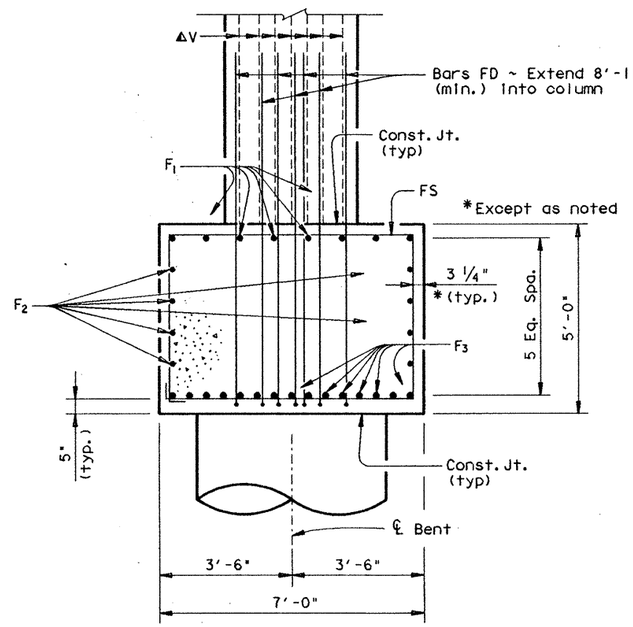

FOOTING SECTION

HS 20 LOADING

STATE DEPARTMENT OF HIGHWAYS AND PUBLIC TRANSPORTATION

FOOTING DETAILS BENT NOS. 2-7, 10 & 11 RAMPS 1 & 2

US 83/281 INTERCHANGE

STATE OF TEXAS
MARK J. BLOSCHOCK
52996
REGISTERED PROFESSIONAL ENGINEER

9-12-91

D45350A: ZFA2: [355100]4377MIS02.DGN	PREPARED BY AND FOR USE OF TEXAS SDH&PT					
ORIGINAL DRAWING DATE: JANUARY 1991	STATE DISTRICT	FEDERAL REGION	FEDERAL AID PROJECT			SHEET
DN.: GAF/MRL	21	6	NH 92C)M			162
CK.: MRL/GAF	COUNTY		CONTROL	SECTION	JOB	HIGHWAY
DW.: DRG/PSR	HIDALGO		0039	17	097	US 83/281
CK.: JCC						

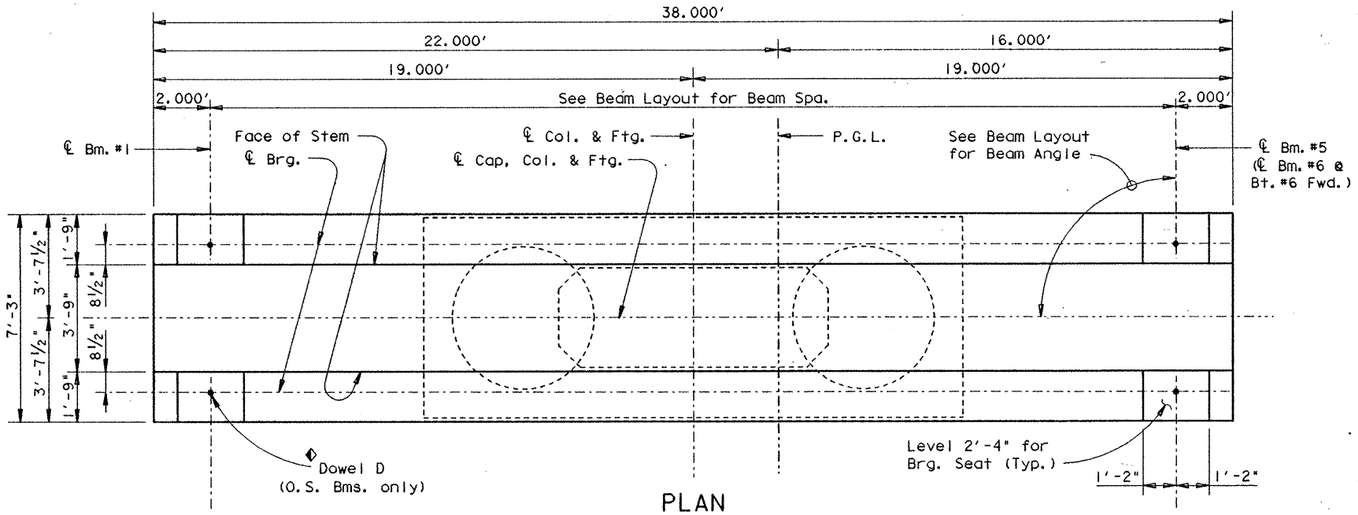

PLAN

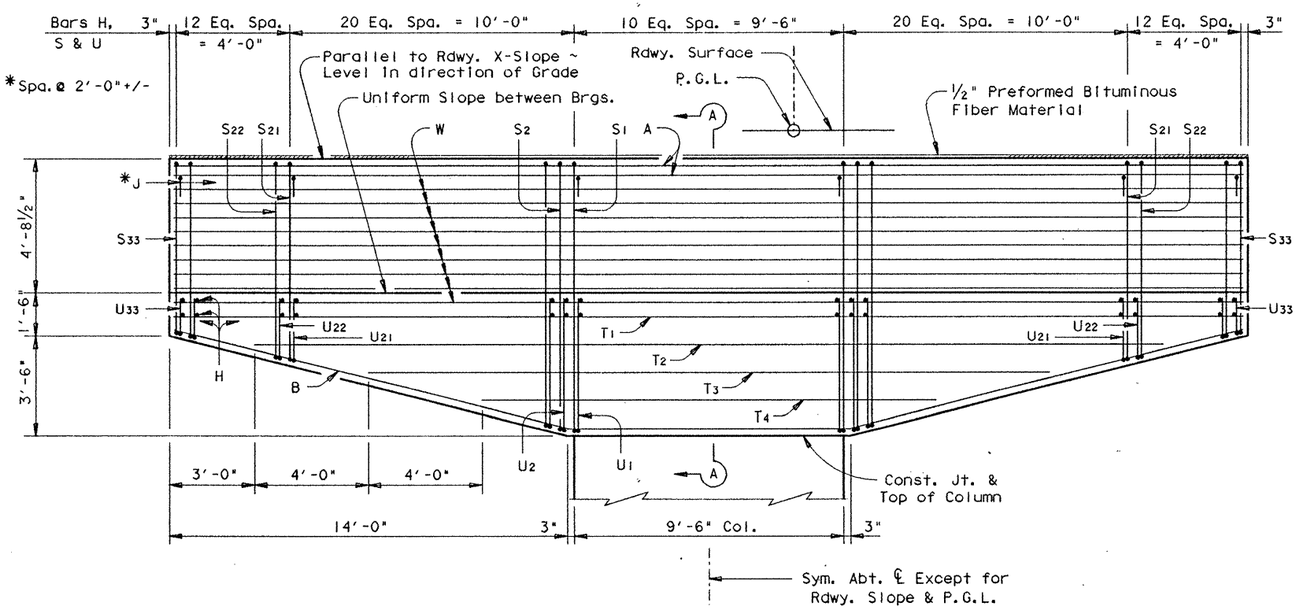

CAP ELEVATION

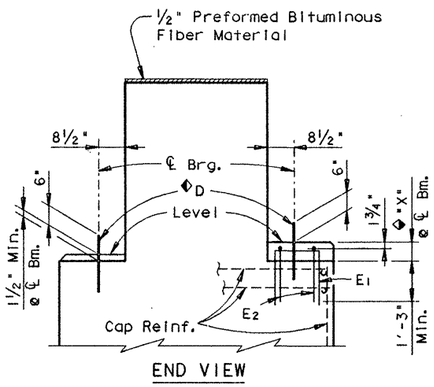

END VIEW

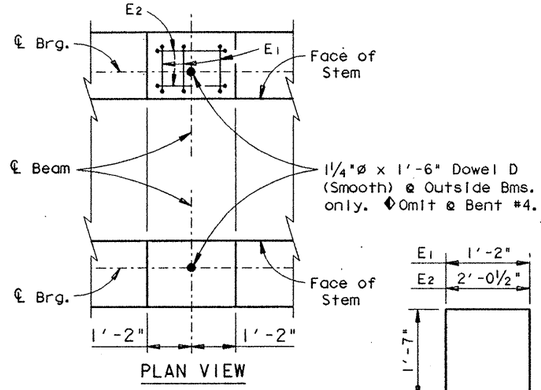

PLAN VIEW

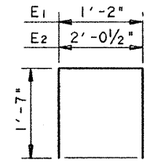

BARS E

BEARING SEAT DETAILS

◆Reinforced Pedestals [redacted] required where "X" is greater than 2½" and [redacted] considered subsidiary to the Bid Item "Class C Concrete (Bent)". Compare bearing seat elevations to determine value of "X".

NOTE: For Bearing Seat surface finish see GpC(SPL) sheet.

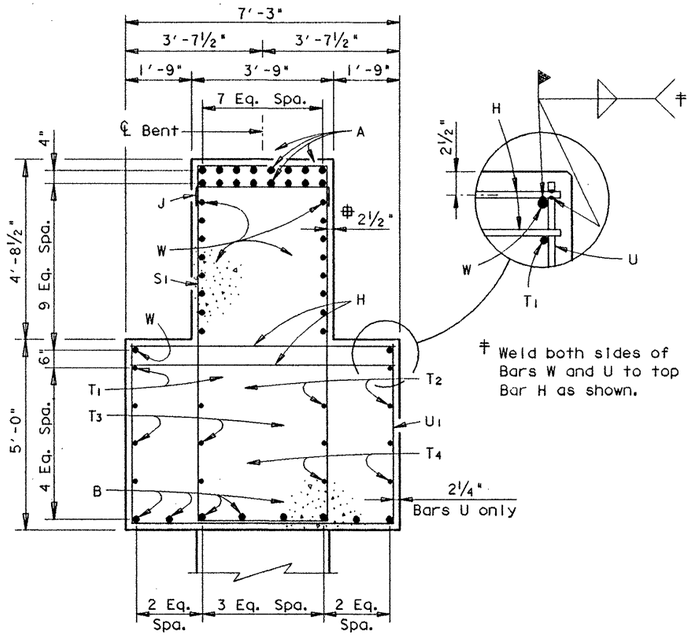

SECTION A-A

‡ Weld both sides of Bars W and U to top Bar H as shown.

Typical except as noted

HS 20 LOADING

SHEET 1 OF 2

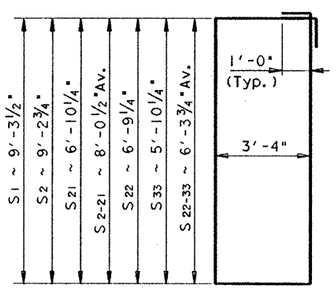

BARS S

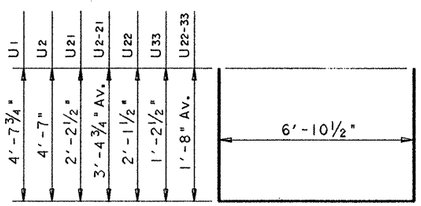

BARS U

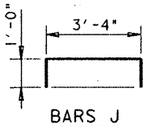

BARS J

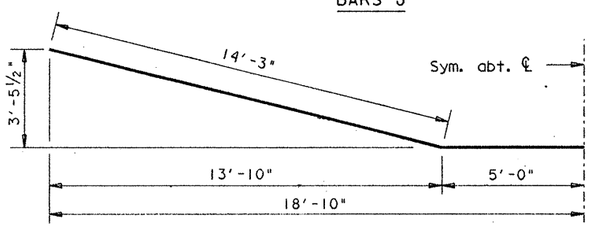

BARS B

STATE OF TEXAS
MARK J. BLOSCHOCK
52996
REGISTERED PROFESSIONAL ENGINEER
9-12-91

STATE DEPARTMENT OF HIGHWAYS AND PUBLIC TRANSPORTATION

INTERIOR BENT NOS. 2-6 RAMPS 1 & 2

US 83/281 INTERCHANGE

D45350A1 • ZFA2 • [3551051]4377INV01.DGN	PREPARED BY AND FOR USE OF TEXAS SDH&PT							
ORIGINAL DRAWING DATE: NOVEMBER 1990		STATE DISTRICT	FEDERAL REGION	FEDERAL AID PROJECT •				SHEET
CH.: JCC	REVISIONS	21	6	NH 92C)M				163
CK.: MAS		COUNTY			CONTROL	SECTION	JOB	HIGHWAY
DR.: DRG		HIDALGO			0039	17	097	US 83/281
CK.: JCC								

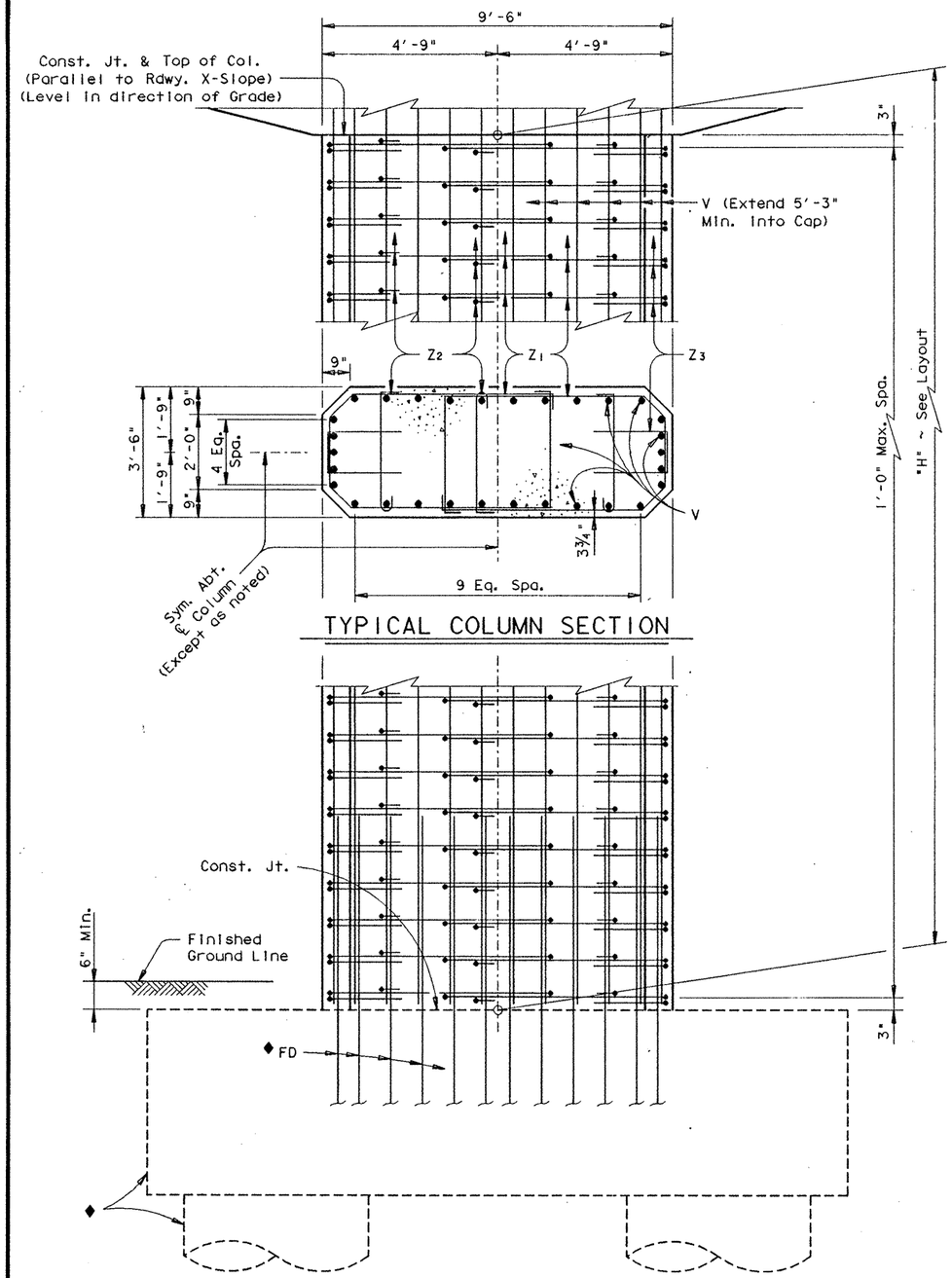

TYPICAL COLUMN SECTION

COLUMN ELEVATION

◆See Footing Details sheet for foundation details and quantities not shown.

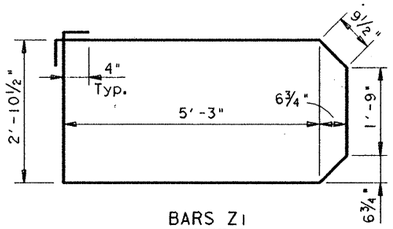

BARS Z1

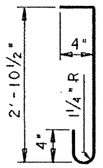

BARS Z2

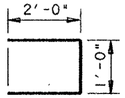

BARS Z3

▲ Quantities shown for one Bent only

For contractor's information only

◩ Omit Dowels D at Bent #4 (Deduct 25 Lbs)

All cap & column reinforcing steel [redacted] Grade 60.

GENERAL NOTES:

Designed according to A.A.S.H.T.O. 1989 Standard and current Interim Specifications.

Calculated Foundation Load = 625 Tons/Dr. Shaft

See "Form Liner Details" sheet for aesthetic treatment of columns and caps.

See Inverted Tee Bent Special Cap Details Sheet for details not shown.

▲ TABLE OF CONSTANT QUANTITIES

Bar	No.	Size	Length	Weight
A	16	# 11	37'- 8"	3202
B	8	# 11	38'- 6"	1636
D	4	1¼"Ø	1'- 6"	25
H	150	# 6	6'-11"	1559
J	20	# 6	5'- 4"	160
S1	11	# 6	27'- 3"	450
S2-21	40	# 6	24'- 9"Av	1487
S22-33	24	# 6	21'- 4"Av	769
T1	2	# 6	37'- 8"	113
T2	4	# 6	32'- 0"	192
T3	4	# 6	24'- 0"	144
T4	4	# 6	16'- 0"	96
U1	11	# 5	16'- 2"	186
U2-21	40	# 5	13'- 8"Av	570
U22-33	24	# 5	10'- 3"Av	257
W	18	# 9	37'- 8"	2305

Reinforcing Steel	Lb	#◩13151
Class "C" Concrete (Cap)	CY	62.9

TABLE OF VARIABLE QUANTITIES

▲■ TOTAL ESTIMATED QUANTITIES

"H"	Class "C" Conc. (Col.)	Bars Z1 17'-5" ~ #4		Bars Z2 3'-8" ~ #4		Bars Z3 5'-0" ~ #4		Bars V 30 ~ # 11		#◩ Reinf. Steel	Class "C" Conc.
Ft	CY	No.	Weight	No.	Weight	No.	Weight	Length	Weight	Lb	CY
10	11.9	22	256	33	81	22	73	15'- 3"	2431	21093	99.4
11	13.1	24	279	36	88	24	80	16'- 3"	2590	21289	100.6
12	14.3	26	303	39	96	26	87	17'- 3"	2749	21487	101.8
13	15.5	28	326	42	103	28	94	18'- 3"	2909	21684	103.0
14	16.7	30	349	45	110	30	100	19'- 3"	3068	21879	104.2
15	17.8	32	372	48	118	32	107	20'- 3"	3228	22077	105.3
16	19.0	34	396	51	125	34	114	21'- 3"	3387	22274	106.5

■ Includes Footing Quantities

HS 20 LOADING

SHEET 2 OF 2

STATE OF TEXAS
MARK J. BLOSCHOCK
52906
REGISTERED PROFESSIONAL ENGINEER

9-12-91

REV. 3-30-92

STATE DEPARTMENT OF HIGHWAYS AND PUBLIC TRANSPORTATION

INTERIOR BENT NOS. 2-6 RAMPS 1 & 2

US83/281 INTERCHANGE

D45350A1 ZFA2 E355105143771NV01.DGN	PREPARED BY AND FOR USE OF TEXAS SDH&PT				
ORIGINAL DRAWING DATE: NOVEMBER 1990	REVISIONS	STATE DISTRICT: 21	FEDERAL REGION: 6	FEDERAL AID PROJECT: NH 92C)4	SHEET: 164
DN.: MRL		COUNTY: HIDALGO	CONTROL: 0039	SECTION: 17	JOB: 097
CK.: GAF					H-GHWAY: US 83/281
DR.: DRG					
CK.: JCC					

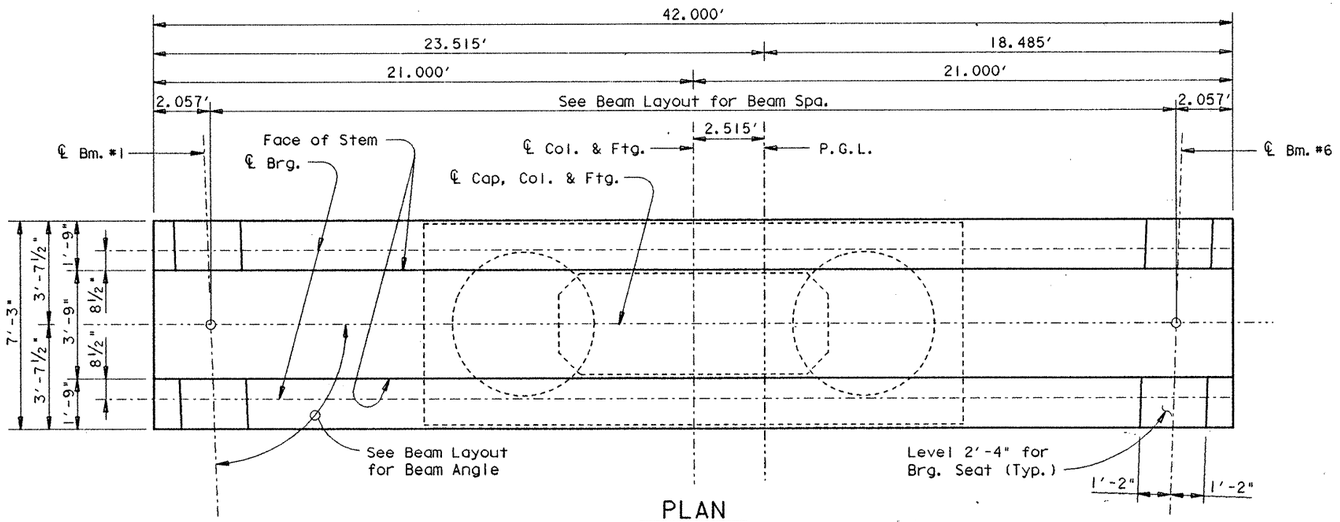

PLAN

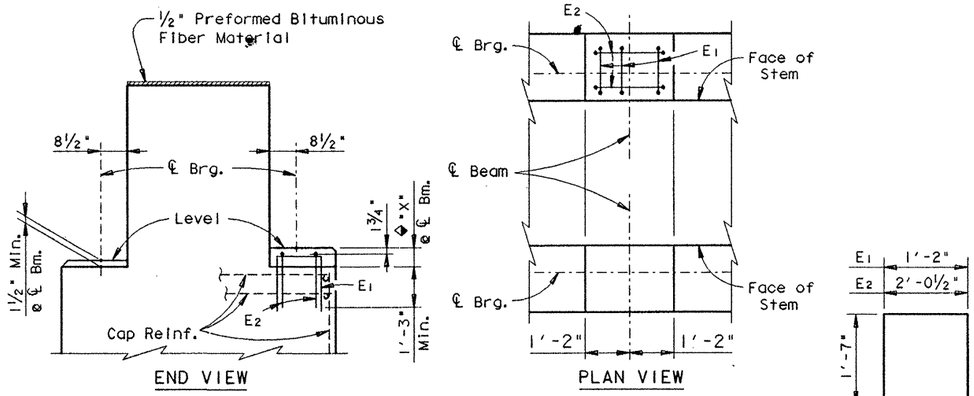

BEARING SEAT DETAILS

◆Reinforced Pedestals [redacted] required where "X" is greater than 2½" and [redacted] considered subsidiary to the Bid Item "Class C Concrete (Bent)". Compare bearing seat elevations to determine value of "X".

NOTE: For Bearing Seat surface finish see GpC(SPL) sheet.

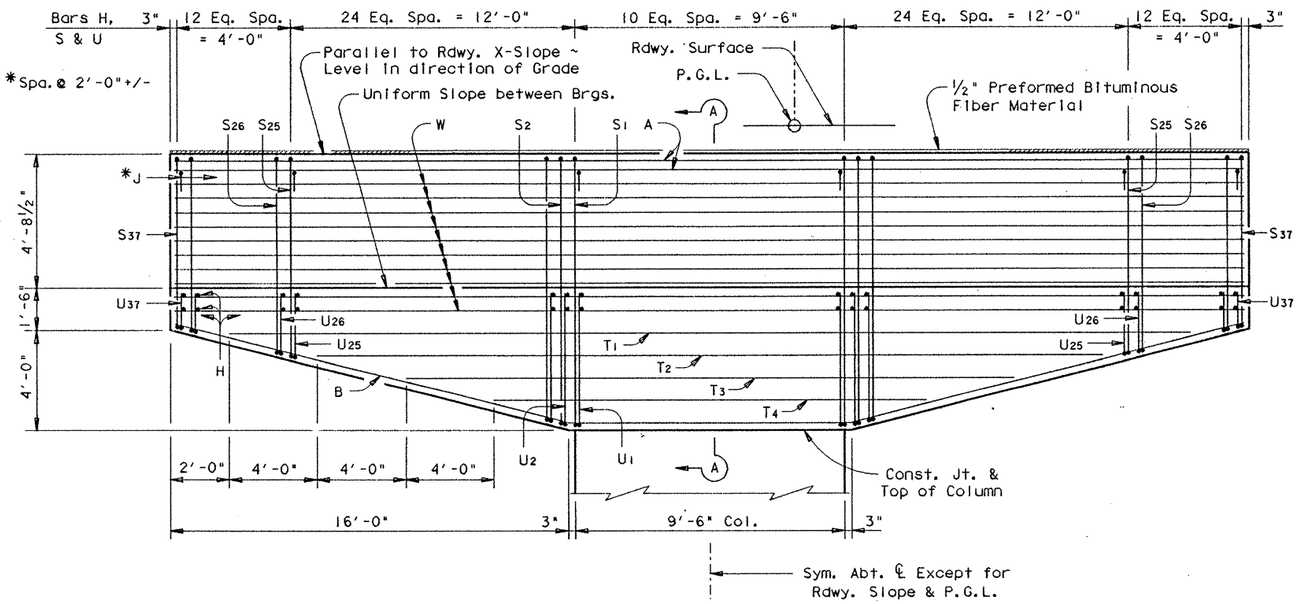

CAP ELEVATION

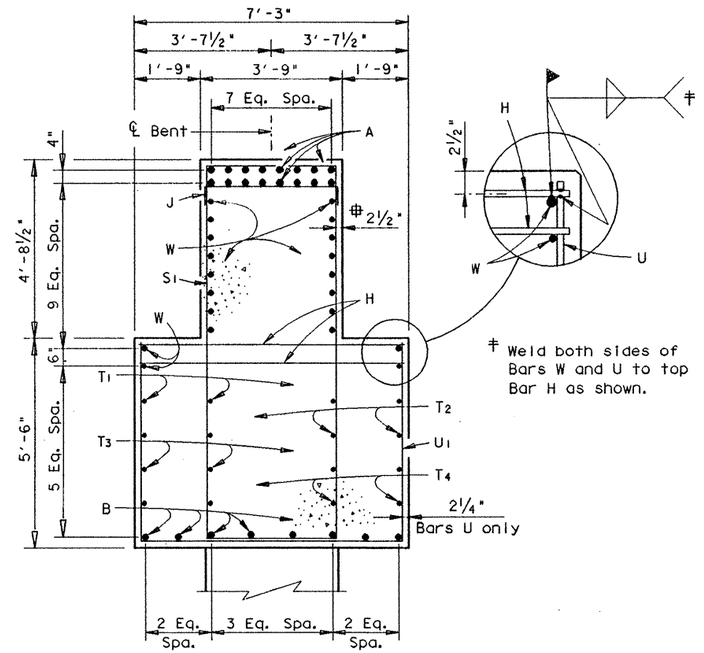

SECTION A-A

‡ Typical except as noted

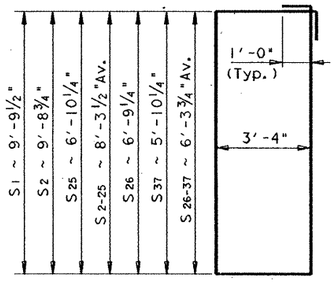

BARS S

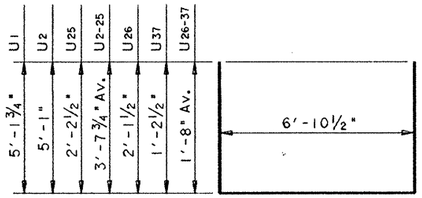

BARS U

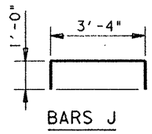

BARS J

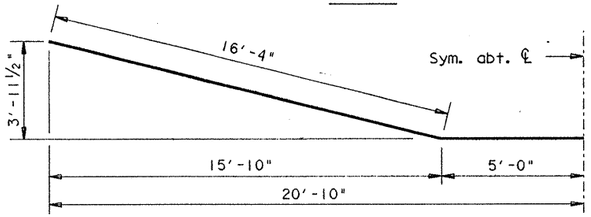

BARS B

HS 20 LOADING

SHEET 1 OF 2

STATE DEPARTMENT OF HIGHWAYS AND PUBLIC TRANSPORTATION

INTERIOR BENT NO. 7 RAMPS 1 & 2

US 83/281 INTERCHANGE

D45350A: ZFA2: (355105)4377INV17.DGN | PREPARED BY AND FOR USE OF TEXAS SDH&PT

ORIGINAL DRAWING DATE: DECEMBER 1990	REVISIONS	STATE DISTRICT	FEDERAL REGION	FEDERAL AID PROJECT #	SHEET
DN.: JCC		21	6	NH 92C)41	165
CK.: MAS		COUNTY	CONTROL	SECTION	JOB	HIGHWAY
DR.: DRG		HIDALGO	0039	17	097	US 83/281
CK.: JCC						

STATE OF TEXAS
MARK J. BLOSCHOCK
52996
REGISTERED
PROFESSIONAL ENGINEER

9-13-91

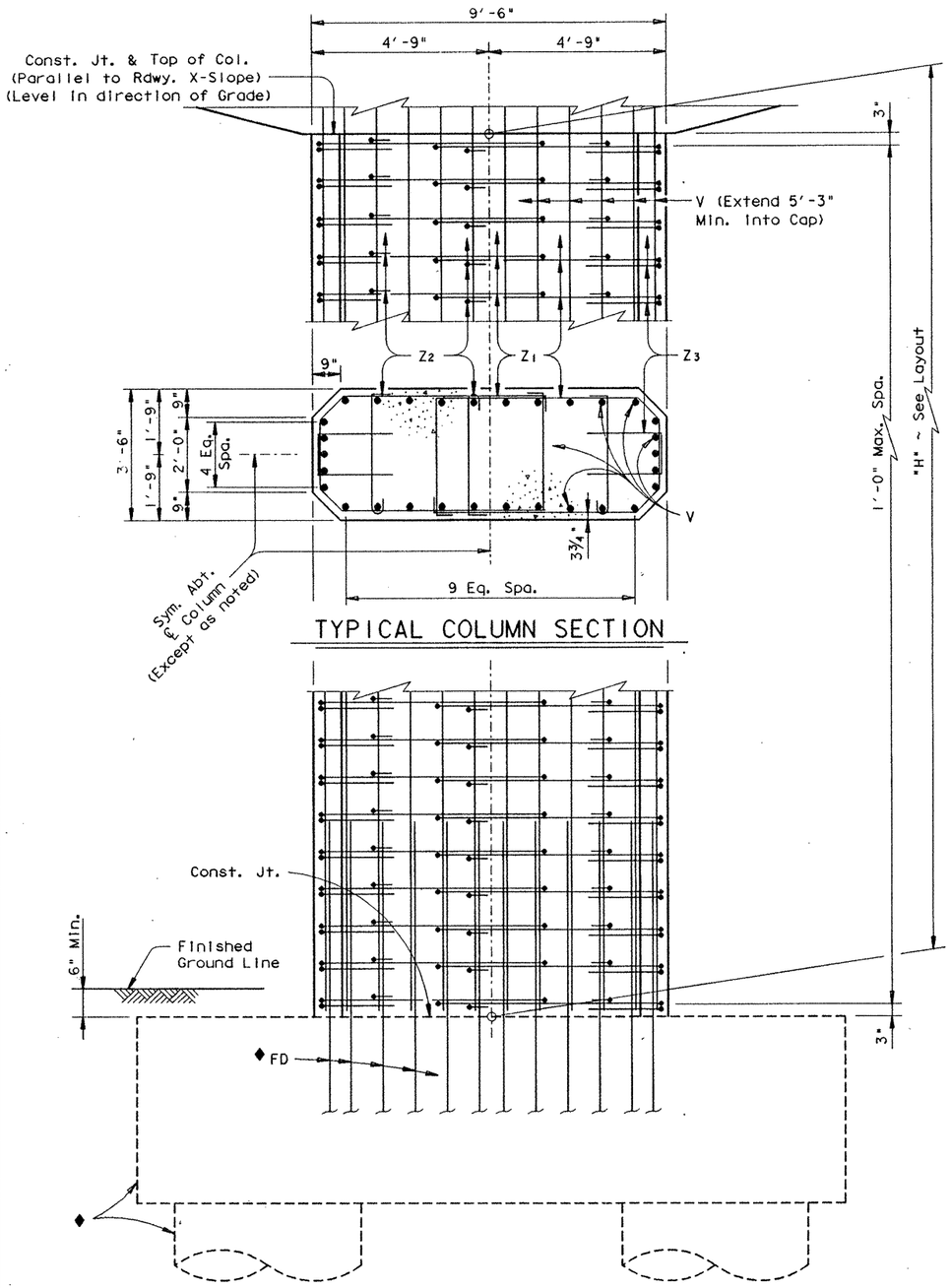

TYPICAL COLUMN SECTION

♦See Footing Details sheet for foundation details and quantities not shown.

COLUMN ELEVATION

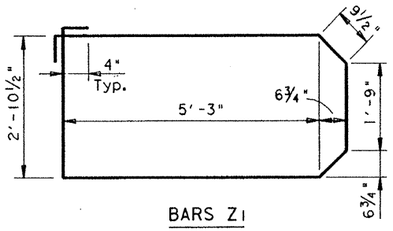

BARS Z1

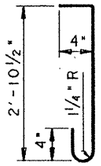

BARS Z2

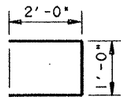

BARS Z3

TABLE OF CONSTANT QUANTITIES

Bar	No.	Size	Length	Weight
A	16	# 11	41'- 8"	3542
B	8	# 11	42'- 8"	1814
H	166	# 6	6'-11"	1725
J	22	# 6	5'- 4"	176
S1	11	# 6	28'- 3"	467
S2-25	48	# 6	25'- 3"Av	1820
S26-37	24	# 6	21'- 4"Av	769
T1	4	# 6	38'- 0"	228
T2	4	# 6	30'- 0"	180
T3	4	# 6	22'- 0"	132
T4	4	# 6	14'- 0"	84
U1	11	# 5	17'- 2"	197
U2-25	48	# 5	14'- 2"Av	709
U26-37	24	# 5	10'- 3"Av	257
W	20	# 9	41'- 8"	2834

Reinforcing Steel	Lb	⁜ 14934
Class "C" Concrete (Cap)	CY	72.5

⁜ For contractor's information only

All cap & column reinforcing steel [redacted] Grade 60.

GENERAL NOTES:

Designed according to A.A.S.H.T.O. 1989 Standard and current Interim Specifications.

Calculated Foundation Load = 625 Tons/Dr. Shaft

See "Form Liner Details" sheet for aesthetic treatment of column and cap.

See Inverted Tee Bent Special Cap Details Sheet for details not shown.

TABLE OF VARIABLE QUANTITIES

"H"	Class "C" Conc. (Col.)	Bars Z1 17'-5" ~ #4		Bars Z2 3'-8" ~ #4		Bars Z3 5'-0" ~ #4		Bars V 30 ~ # 11	
Ft	CY	No.	Weight	No.	Weight	No.	Weight	Length	Weight
13	15.5	28	326	42	103	28	94	18'- 3"	2909
14	16.7	30	349	45	110	30	100	19'- 3"	3068
15	17.8	32	372	48	118	32	107	20'- 3"	3228
16	19.0	34	396	51	125	34	114	21'- 3"	3387
17	20.2	36	419	54	132	36	120	22'- 3"	3546

■ TOTAL ESTIMATED QUANTITIES

⁜ Reinf. Steel	Class "C" Conc.
Lb	CY
23467	112.6
23662	113.8
23860	114.9
24057	116.1
24252	117.3

■ Includes Footing Quantities

HS 20 LOADING

SHEET 2 OF 2

STATE OF TEXAS
MARK J. BLOSCHOCK
52996
REGISTERED
PROFESSIONAL ENGINEER
9-13-91

REV. 3-30-92

STATE DEPARTMENT OF HIGHWAYS AND PUBLIC TRANSPORTATION

INTERIOR BENT NO. 7 RAMPS 1 & 2

US83/281 INTERCHANGE

D45350A1: ZFA2: (355105)4377INV17.DGN	PREPARED BY AND FOR USE OF TEXAS SDH&PT						
ORIGINAL DRAWING DATE: NOVEMBER 1990	REVISIONS	STATE DISTRICT	FEDERAL REGION	FEDERAL AID PROJECT •			SHEET
DN.: MRL		21	6	NH 92(3)M			166
CK.: GAF		COUNTY			CONTROL	SECTION	JOB	HIGHWAY
DR.: DRG		HIDALGO			0039	17	097	US 83/ 281
CK.: JCC							

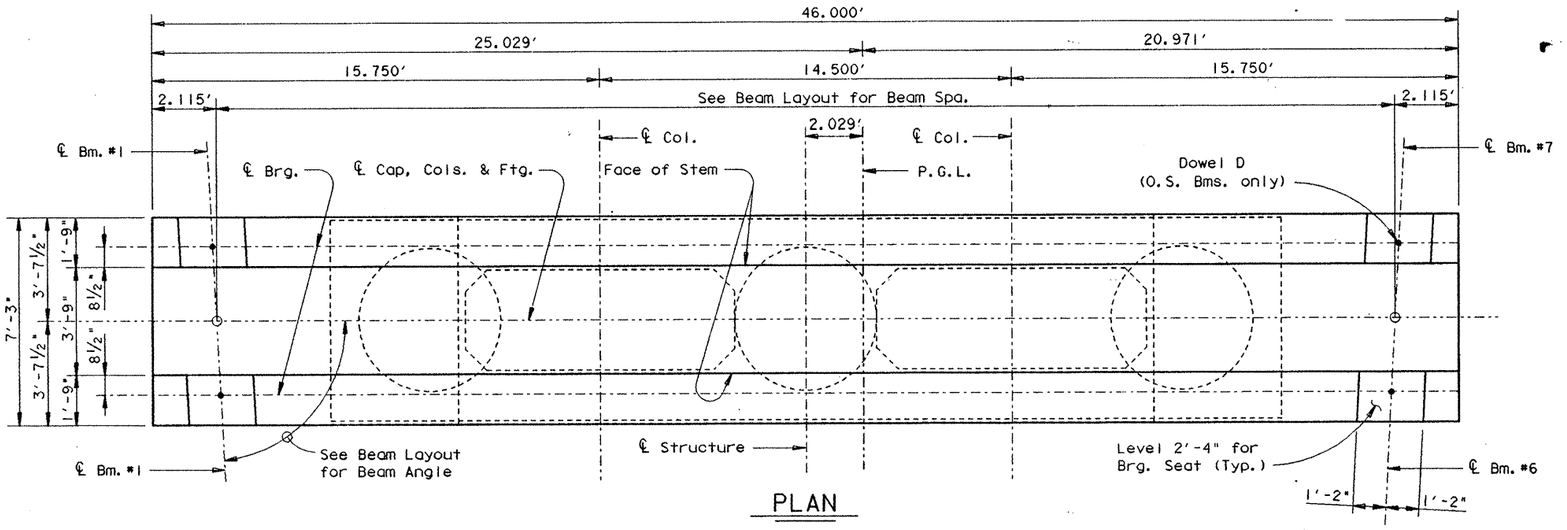

PLAN

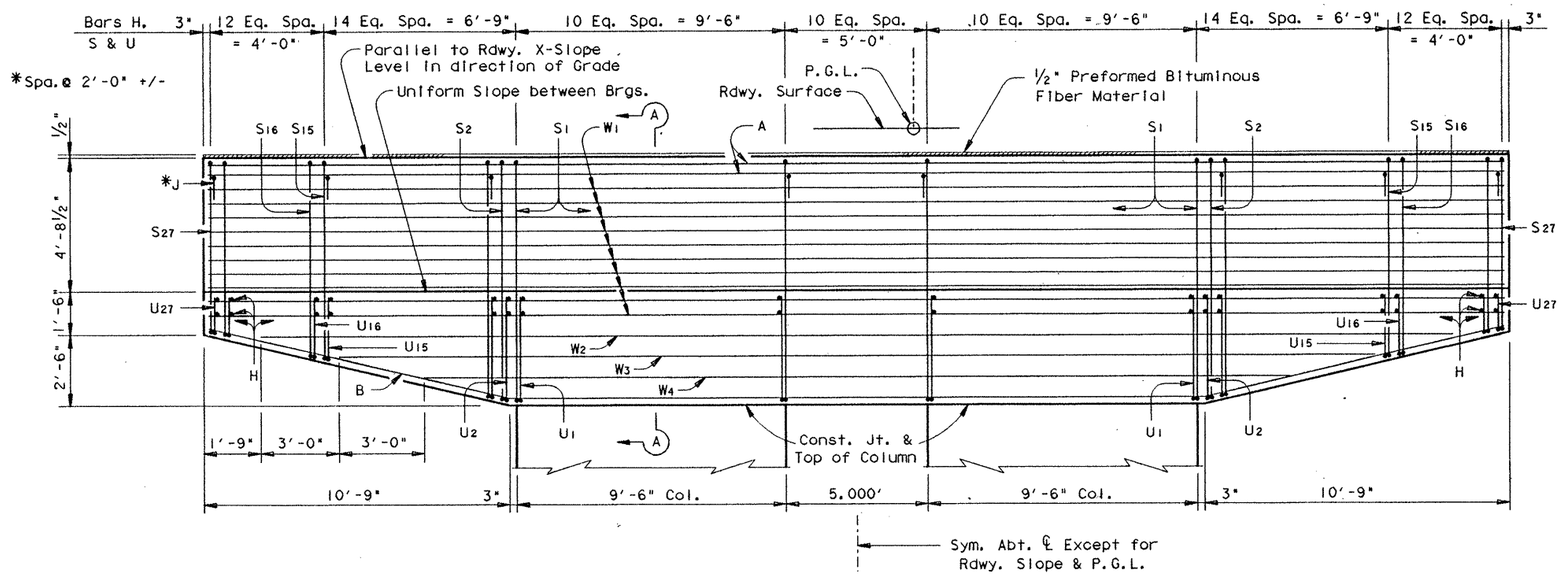

CAP ELEVATION

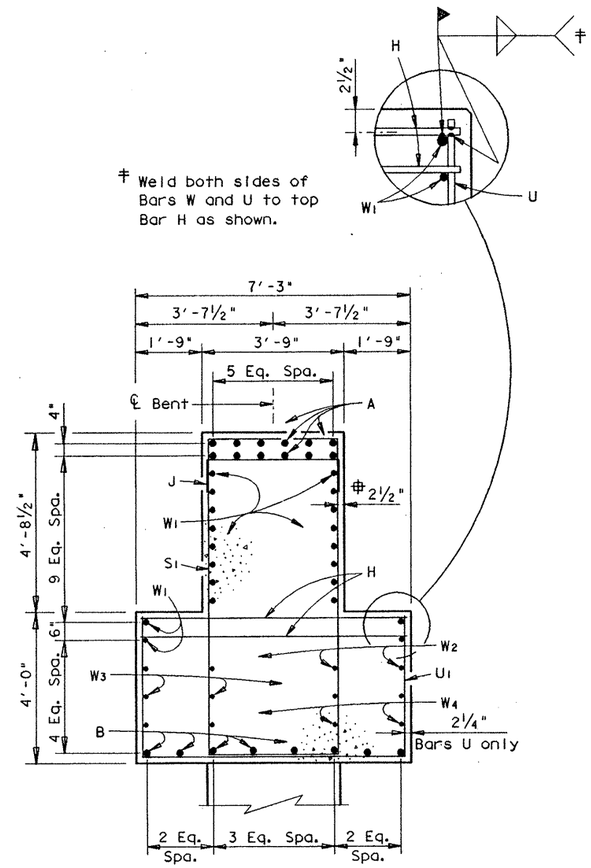

SECTION A-A

‡ Typical except as noted

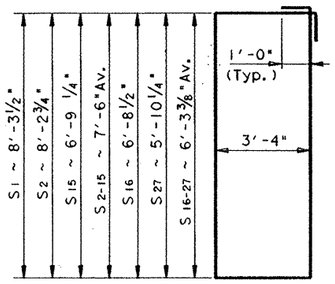

BARS S

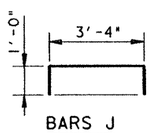

BARS J

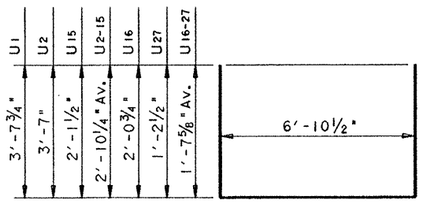

BARS U

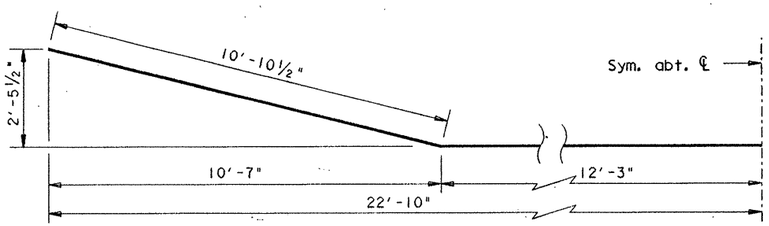

BARS B

STATE OF TEXAS
MARK J. BLOSCHOCK
52996
REGISTERED
PROFESSIONAL ENGINEER

9-13-91

HS 20 LOADING

SHEET 1 OF 3

STATE DEPARTMENT OF HIGHWAYS
AND PUBLIC TRANSPORTATION

INTERIOR BENT
NO. 8
RAMPS 1 & 2

US 83/281 INTERCHANGE

D45350A1 : ZFA2 : [355105]4377INV11.DGN	PREPARED BY AND FOR USE OF TEXAS SDH&PT					
ORIGINAL DRAWING DATE: NOVEMBER 1990	STATE DISTRICT	FEDERAL REGION	FEDERAL AID PROJECT			SHEET
DN.: JCC	21	6	NH 92(JM			167
CK.: MAS	COUNTY			CONTROL	SECTION	JOB	HIGHWAY
DW.: DRG	HIDALGO			0039	17	097	US 83/281
CK.: JCC							

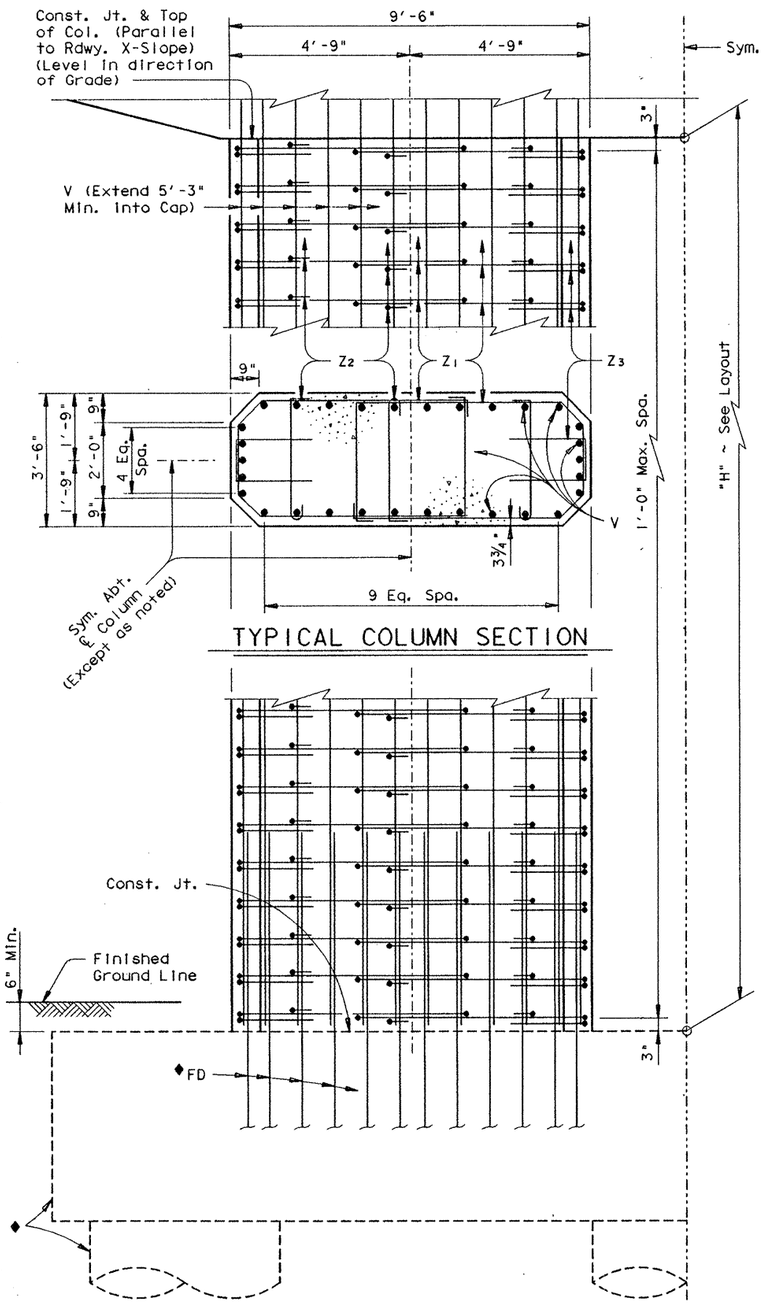

TYPICAL COLUMN SECTION

♦See Sheet 3 of 3 for foundation details and quantities not shown.

COLUMN ELEVATION

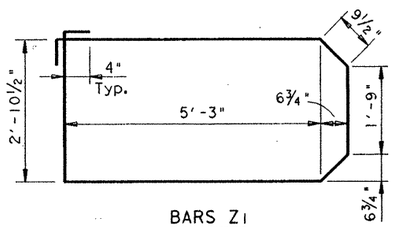

BARS Z1

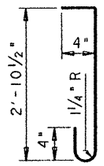

BARS Z2

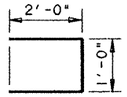

BARS Z3

GENERAL NOTES:

Designed according to A.A.S.H.T.O. 1989 Standard and current Interim Specifications.

Calculated Foundation Load = 470 Tons/Dr. Shaft

See "Form Liner Details" sheet for aesthetic treatment of columns and cap.

See Inverted Tee Bent Special Cap Details Sheet for details not shown.

TABLE OF CONSTANT QUANTITIES

Bar	No.	Size	Length	Weight
A	12	# 11	45'- 8"	2912
B	8	# 11	46'- 3"	1966
D	4	1¼"ø	1'- 6"	25
H	166	# 6	6'-11"	1725
J	24	# 6	5'- 4"	192
S1	31	# 6	25'- 3"	1176
S2-15	28	# 6	23'- 8"Av	995
S16-27	24	# 6	21'- 3"Av	766
U1	31	# 5	14'- 2"	458
U2-15	28	# 5	12'- 7"Av	367
U16-27	24	# 5	10'- 2"Av	255
W1	20	# 9	45'- 8"	3106
W2	4	# 9	42'- 6"	578
W3	4	# 9	36'- 6"	496
W4	4	# 9	30'- 6"	415

Reinforcing Steel	Lb	⁜15432
Class "C" Concrete (Cap)	CY	72.5

TABLE OF VARIABLE QUANTITIES

"H"	Class "C" Conc. (Col.)	Bars Z1 17'-5" ~ #4		Bars Z2 3'-8" ~ #4		Bars Z3 5'-0" ~ #4		Bars V 60 ~ # 11		⁜ Reinf. Steel	Class "C" Conc.
Ft	CY	No.	Weight	No.	Weight	No.	Weight	Length	Weight	Lb	CY
15	35.7	64	745	96	235	64	214	20'- 3"	6455	32589	151.6
16	38.1	68	791	102	250	68	227	21'- 3"	6774	32982	154.0
17	40.5	72	838	108	265	72	240	22'- 3"	7093	33376	156.4
18	42.8	76	884	114	279	76	254	23'- 3"	7412	33769	158.7
19	45.2	80	931	120	294	80	267	24'- 3"	7730	34162	161.1

⁜ For contractor's information only

All cap & column reinforcing steel [redacted] Grade 60.

▪ TOTAL ESTIMATED QUANTITIES

▪ Includes Footing Quantities

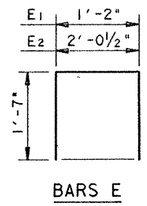

BARS E

NOTE: For Bearing Seat surface finish see GpC(SPL) sheet.

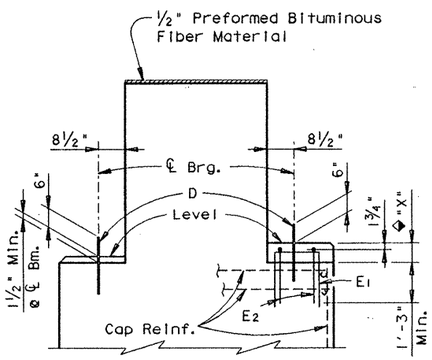

END VIEW

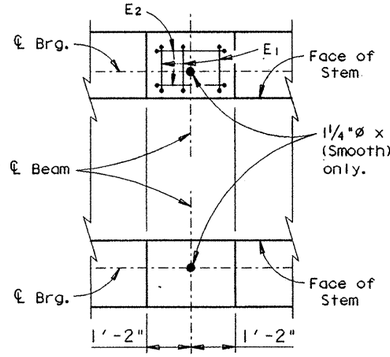

PLAN VIEW

BEARING SEAT DETAILS

♦Reinforced Pedestals w[redacted] required where "X" is greater than 2½" and [redacted] considered subsidiary to the Bid Item "Class C Concrete (Bent). Compare bearing seat elevations to determine value of "X".

STATE OF TEXAS
MARK J. BLOSCHOCK
52996
REGISTERED PROFESSIONAL ENGINEER
9-13-91

REV. 3-30-92

HS 20 LOADING

SHEET 2 OF 3

STATE DEPARTMENT OF HIGHWAYS AND PUBLIC TRANSPORTATION

INTERIOR BENT NO. 8 RAMPS 1 & 2

US 83/281 INTERCHANGE

D45350A1: ZFA2: [3551051437711NV11.DGN

PREPARED BY AND FOR USE OF TEXAS SDH&PT

ORIGINAL DRAWING DATE: NOVEMBER 1990

REVISIONS

DN.: MRL
CK.: GAF
DN.: DRG
CK.: JCC

STATE DISTRICT	FEDERAL REGION	FEDERAL AID PROJECT ▪	SHEET
21	6	NH 92L)M	168

COUNTY	CONTROL	SECTION	JOB	HIGHWAY
HIDALGO	0039	17	097	US 83/281

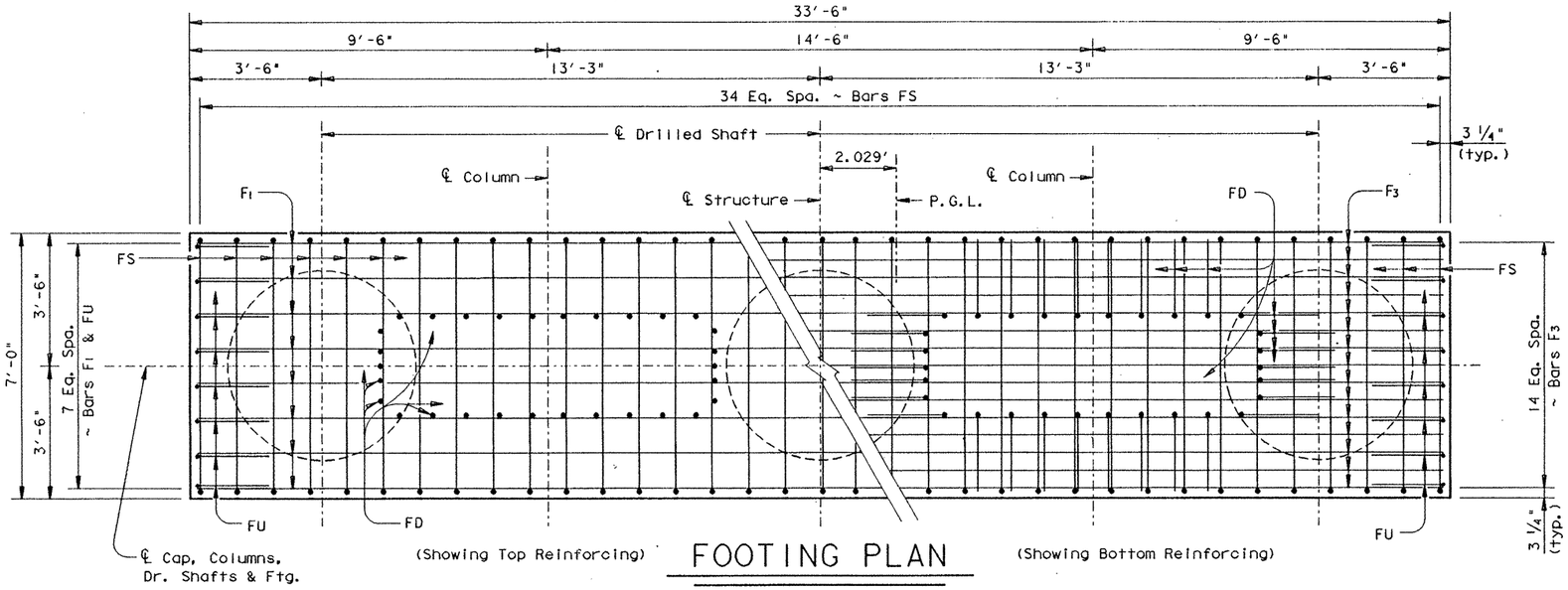

FOOTING PLAN

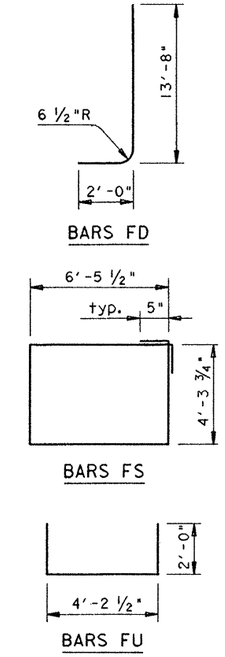

TABLE OF FOOTING QUANTITIES

Bar	No.	Size	Length	Weight
F_1	8	# 8	33'- 0"	705
F_2	8	# 5	33'- 0"	275
F_3	15	# 11	33'- 0"	2630
FD	60	# 11	15'- 6"	4941
FS	35	# 5	22'- 5"	818
FU	16	# 5	8'- 4"	139

Reinforcing Steel	Lb	⌗ 9508
Class "C" Concrete	CY	43.4

⌗ For Contractor's information only.
All footing reinforcing steel [redacted] Grade 60.

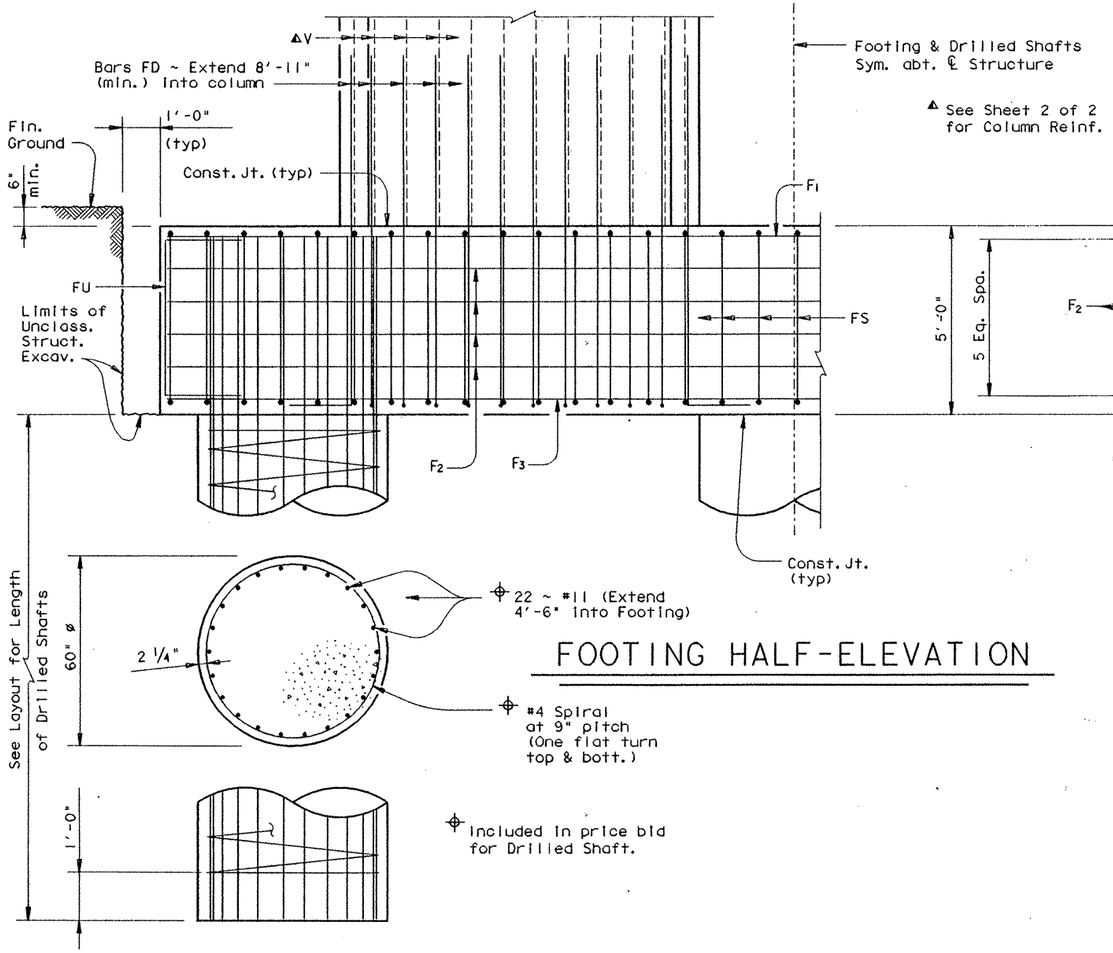

FOOTING HALF-ELEVATION

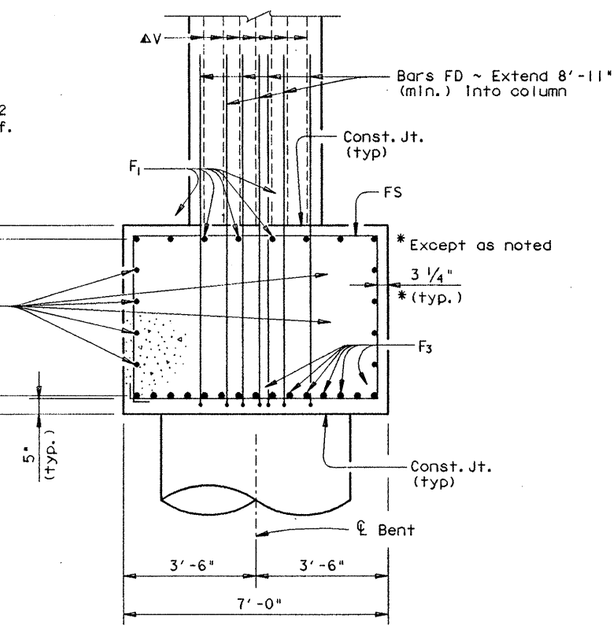

FOOTING SECTION

HS 20 LOADING

SHEET 3 OF 3

STATE DEPARTMENT OF HIGHWAYS AND PUBLIC TRANSPORTATION

INTERIOR BENT NO. 8 RAMPS 1 & 2

US 83/281 INTERCHANGE

STATE OF TEXAS
MARK J. BLOSCHOCK
52996
REGISTERED PROFESSIONAL ENGINEER

9-13-91

D45350A:ZFA2:[355105]43771NV11.DGN	PREPARED BY AND FOR USE OF TEXAS SDH&PT					
ORIGINAL DRAWING DATE: JANUARY 1991	STATE DISTRICT	FEDERAL REGION	FEDERAL AID PROJECT			SHEET
DN.: GAF/MRL	21	6	NH 92( )M			169
CK.: MRL/GAF	COUNTY		CONTROL	SECTION	JOB	HIGHWAY
DW.: DRG	HIDALGO		0039	17	097	US 83/281
CK.: JCC						

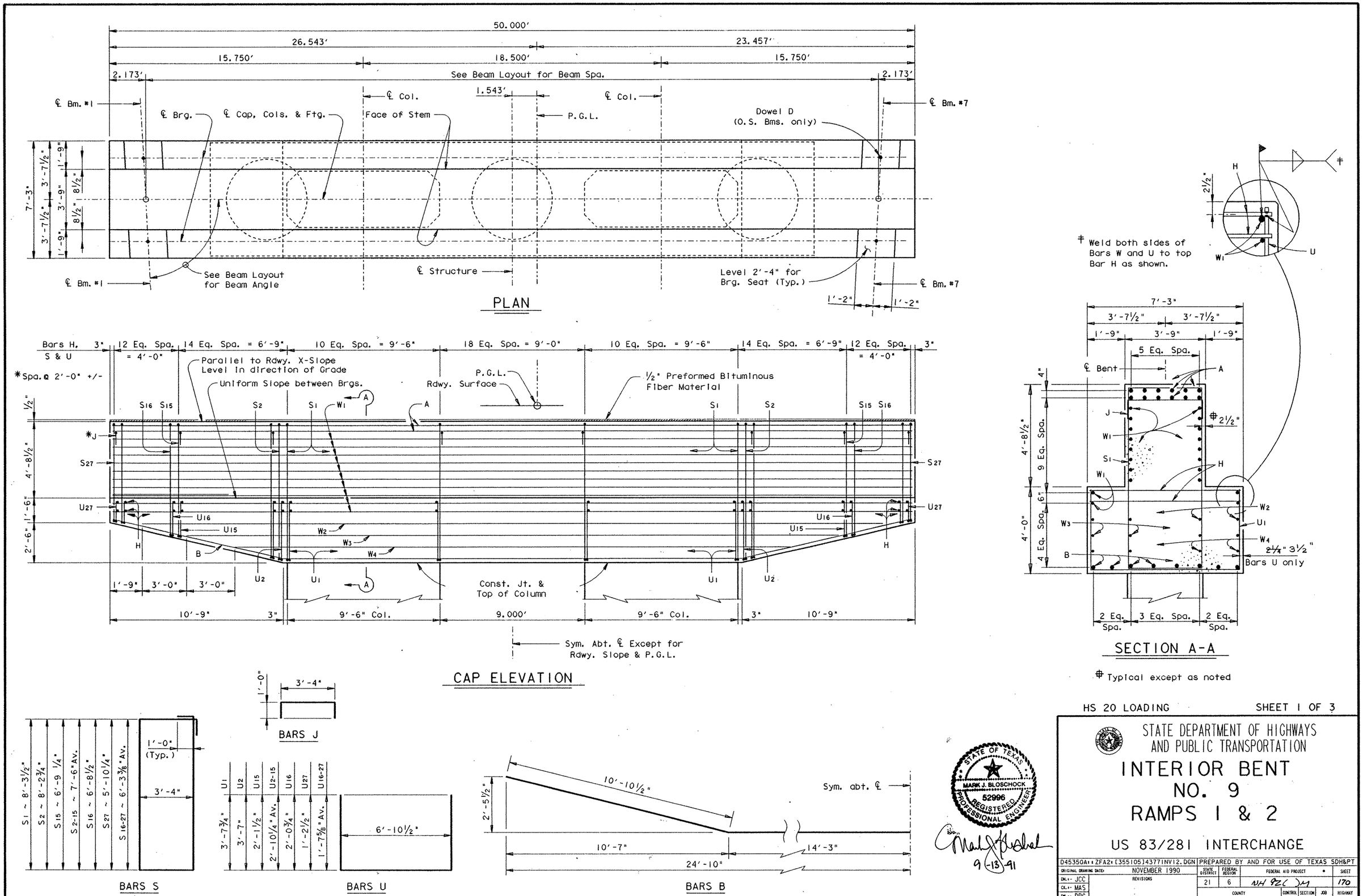

HS 20 LOADING

SHEET 1 OF 3

STATE DEPARTMENT OF HIGHWAYS AND PUBLIC TRANSPORTATION

INTERIOR BENT NO. 9 RAMPS 1 & 2

US 83/281 INTERCHANGE

D45350A1 : ZFA2: [355105]4377INV12.DGN	PREPARED BY AND FOR USE OF TEXAS SDH&PT				
ORIGINAL DRAWING DATE: NOVEMBER 1990	STATE DISTRICT	FEDERAL REGION	FEDERAL AID PROJECT		SHEET
DN.: JCC	21	6	NH 92( )M		170
CK.: MAS	COUNTY		CONTROL	SECTION	JOB	HIGHWAY
DW.: DRG	HIDALGO		0039	17	097	US 83/281
CK.: JCC						

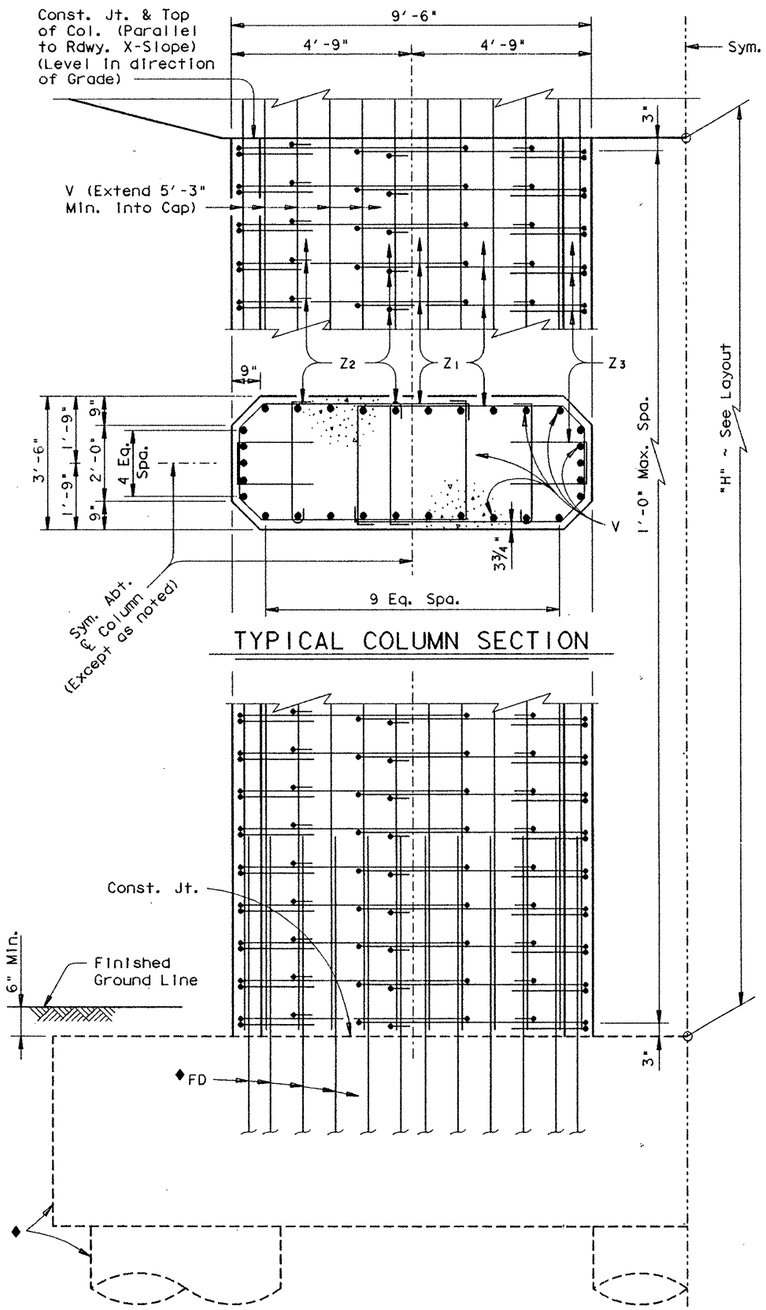

TYPICAL COLUMN SECTION

◆See Sheet 3 of 3 for foundation details and quantities not shown.

COLUMN ELEVATION

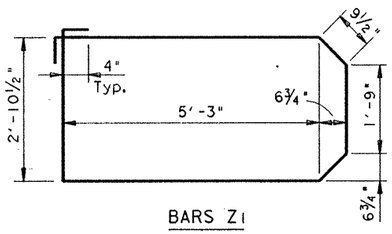

BARS Z1

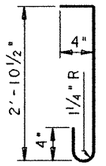

BARS Z2

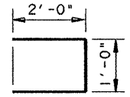

BARS Z3

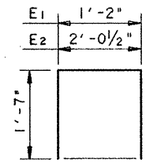

BARS E

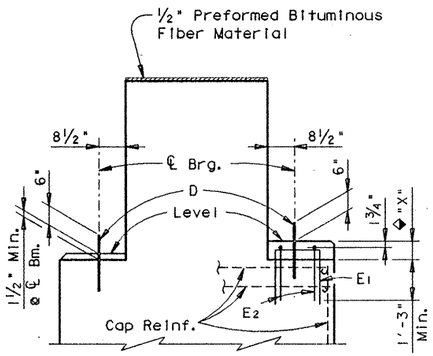

END VIEW

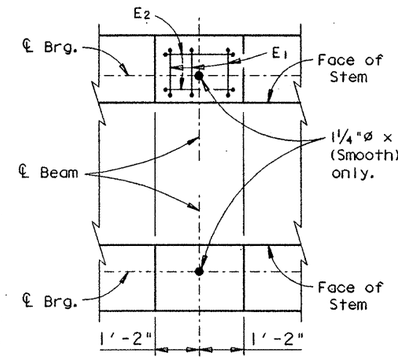

PLAN VIEW

BEARING SEAT DETAILS

◆Reinforced Pedestals [redacted] required where "X" is greater than 2½" and [redacted] considered subsidiary to the Bid Item "Class C Concrete (Bent). Compare bearing seat elevations to determine value of "X".

Ⱶ For contractor's information only

All cap & column reinforcing steel [redacted] Grade 60.

GENERAL NOTES:

Designed according to A.A.S.H.T.O. 1989 Standard and current interim Specifications.

Calculated Foundation Load = 470 Tons/Dr. Shaft

See "Form Liner Details" sheet for aesthetic treatment of columns and cap.

See Inverted Tee Bent Special Cap Details Sheet for details [redacted].

TABLE OF CONSTANT QUANTITIES

Bar	No.	Size	Length	Weight
A	12	# 11	49'- 8"	3167
B	8	# 11	50'- 3"	2136
D	4	1¼"ø	1'- 6"	25
H	182	# 6	6'-11"	1892
J	26	# 6	5'- 4"	208
S1	39	# 6	25'- 3"	1479
S2-15	28	# 6	23'- 8"Av	995
S16-27	24	# 6	21'- 3"Av	766
U1	39	# 5	14'- 2"	576
U2-15	28	# 5	12'- 7"Av	367
U16-27	24	# 5	10'- 2"Av	255
W1	20	# 9	49'- 8"	3378
W2	4	# 9	46'- 6"	632
W3	4	# 9	40'- 6"	551
W4	4	# 9	34'- 6"	469

Reinforcing Steel	Lb	Ⱶ16896
Class "C" Concrete (Cap)	CY	79.4

TABLE OF VARIABLE QUANTITIES

"H"	Class "C" Conc. (Col.)	Bars Z1 17'-5" ~ #4		Bars Z2 3'-8" ~ #4		Bars Z3 5'-0" ~ #4		Bars V 60 ~ # 11		■ TOTAL ESTIMATED QUANTITIES Ⱶ Reinf. Steel	Class "C" Conc.
Ft	CY	No.	Weight	No.	Weight	No.	Weight	Length	Weight	Lb	CY
15	35.7	64	745	96	235	64	214	20'- 3"	6455	34585	163.7
16	38.1	68	791	102	250	68	227	21'- 3"	6774	34978	166.1
17	40.5	72	838	108	265	72	240	22'- 3"	7093	35372	168.5
18	42.8	76	884	114	279	76	254	23'- 3"	7412	35765	170.8
19	45.2	80	931	120	294	80	267	24'- 3"	7730	36158	173.2

■ Includes Footing Quantities

NOTE: For Bearing Seat surface finish see GpC(SPL) sheet.

HS 20 LOADING

SHEET 2 OF 3

STATE DEPARTMENT OF HIGHWAYS AND PUBLIC TRANSPORTATION

INTERIOR BENT NO. 9 RAMPS 1 & 2

US 83/281 INTERCHANGE

STATE OF TEXAS
MARK J. BLOSCHOCK
52996
REGISTERED PROFESSIONAL ENGINEER

9-13-91

REV. 3-30-92

D45350A: ZFA2: [3551051437?INV12.DGN

PREPARED BY AND FOR USE OF TEXAS SDH&PT

ORIGINAL DRAWING DATE: NOVEMBER 1990

REVISIONS

DN.: MRL
CK.: GAF
DR.: DRG
CK.: JCC

STATE DISTRICT	FEDERAL REGION	FEDERAL AID PROJECT		SHEET
21	6	NH 926 JM		171
COUNTY		CONTROL	SECTION	JOB	HIGHWAY
HIDALGO		0039	17	097	US 83/281

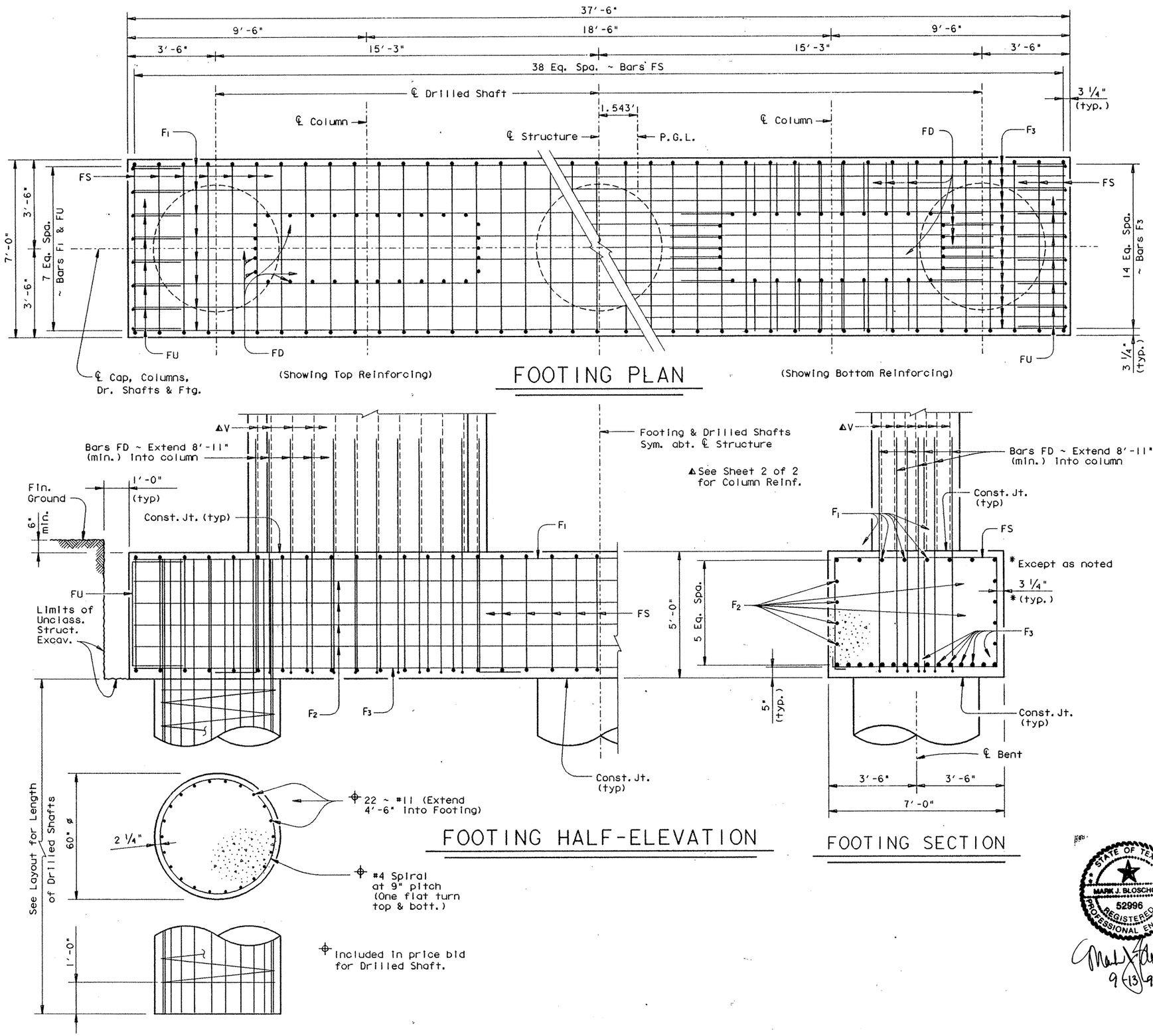

FOOTING PLAN

TABLE OF FOOTING QUANTITIES

Bar	No.	Size	Length	Weight
F_1	8	# 8	37'- 0"	790
F_2	8	# 5	37'- 0"	309
F_3	15	# 11	37'- 0"	2949
FD	60	# 11	15'- 6"	4941
FS	39	# 5	22'- 5"	912
FU	16	# 5	8'- 4"	139

Reinforcing Steel	Lb	‡10040
Class "C" Concrete	CY	48.6

‡ For Contractor's Information only.

All footing reinforcing steel [redacted] Grade 60.

FOOTING HALF-ELEVATION

FOOTING SECTION

STATE OF TEXAS
MARK J. BLOSCHOCK
52996
REGISTERED PROFESSIONAL ENGINEER

9-13-91

HS 20 LOADING

SHEET 3 OF 3

STATE DEPARTMENT OF HIGHWAYS AND PUBLIC TRANSPORTATION

INTERIOR BENT NO. 9 RAMPS 1 & 2

US 83/281 INTERCHANGE

D45350A:: ZFA2: [355105]43771NV12.DGN

PREPARED BY AND FOR USE OF TEXAS SDH&PT

ORIGINAL DRAWING DATE:	JANUARY 1991	STATE DISTRICT	FEDERAL REGION	FEDERAL AID PROJECT	SHEET
DN.: GAF/MRL	REVISIONS	21	6	NH 92L DM	172
CK.: MRL/GAF		COUNTY		CONTROL / SECTION / JOB	HIGHWAY
DW.: DRG		HIDALGO		0039 / 17 / 097	US 83/281
CK.: JCC					

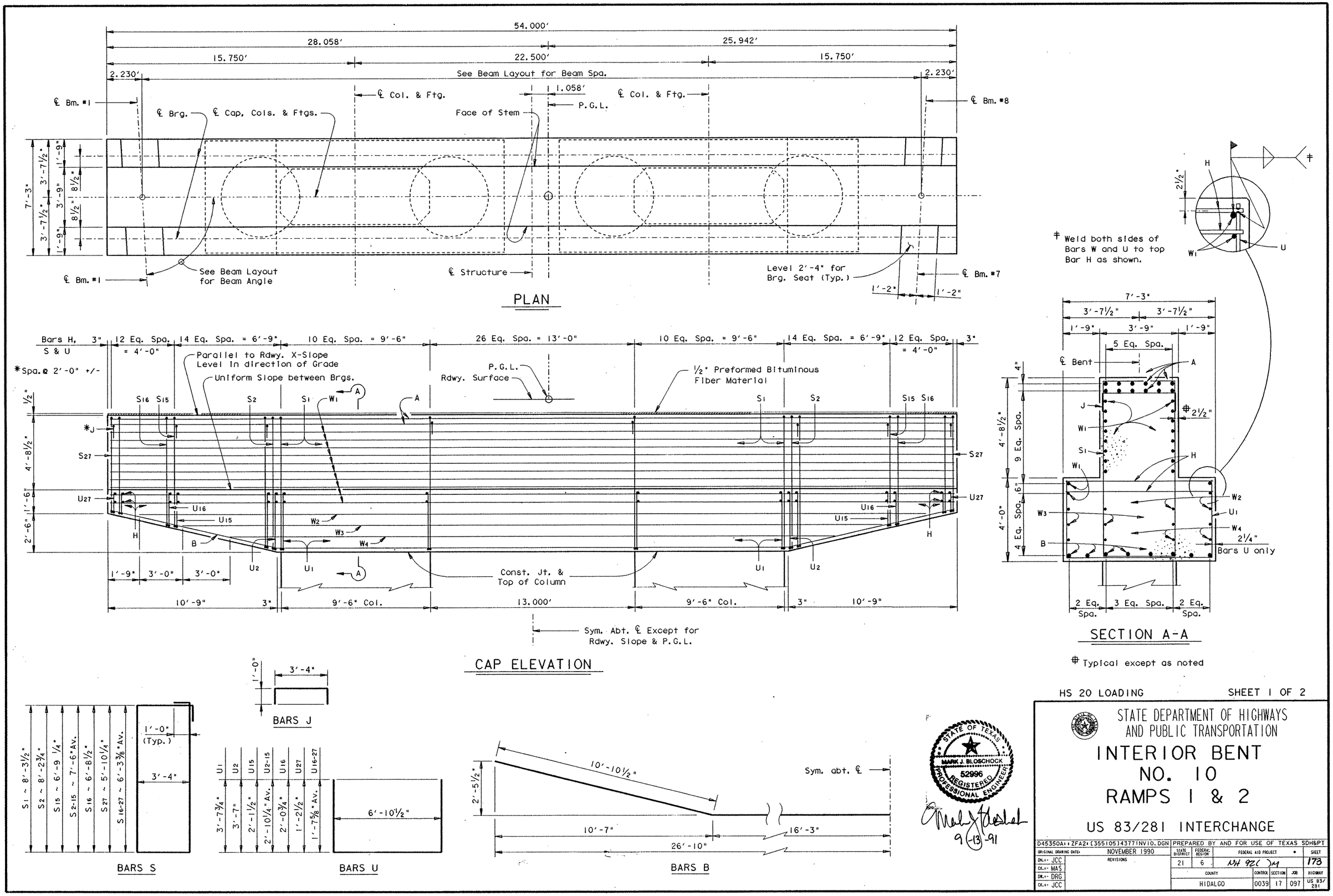

HS 20 LOADING

SHEET 1 OF 2

STATE DEPARTMENT OF HIGHWAYS AND PUBLIC TRANSPORTATION

INTERIOR BENT NO. 10 RAMPS 1 & 2

US 83/281 INTERCHANGE

D45350A1 : ZFA2 : [355105]4377INV10.DGN	PREPARED BY AND FOR USE OF TEXAS SDH&PT				
ORIGINAL DRAWING DATE: NOVEMBER 1990	STATE DISTRICT	FEDERAL REGION	FEDERAL AID PROJECT		SHEET
DN.: JCC	21	6	NH 92( )M		173
CK.: MAS	COUNTY		CONTROL	SECTION	JOB	HIGHWAY
DW.: DRG	HIDALGO		0039	17	097	US 83/281
CK.: JCC						

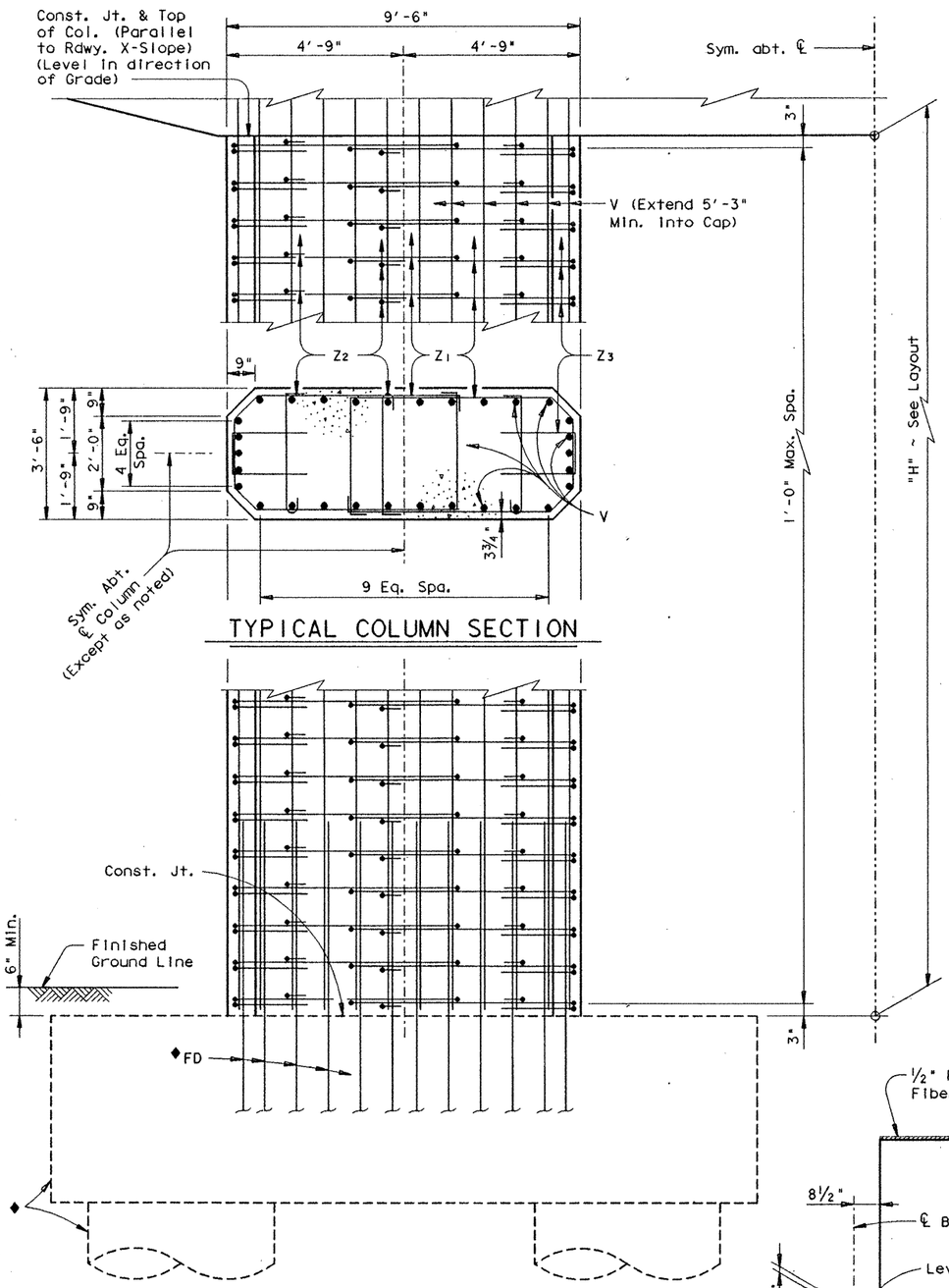

TYPICAL COLUMN SECTION

◆See Footing Details sheet for foundation details and quantities not shown.

COLUMN ELEVATION

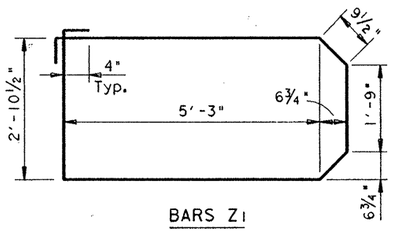

BARS Z1

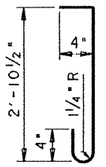

BARS Z2

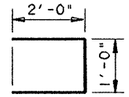

BARS Z3

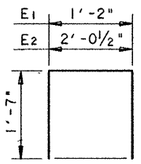

BARS E

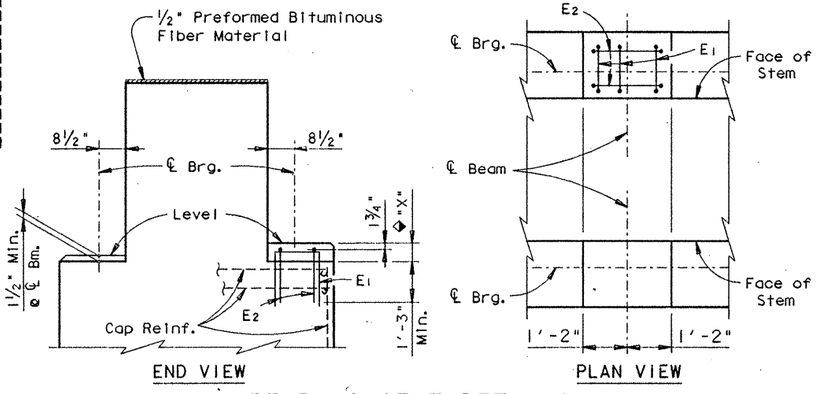

BEARING SEAT DETAILS

◆Reinforced Pedestals [redacted] required where "X" is greater than 2½" and s[redacted] considered subsidiary to the Bid item "Class C Concrete (Bent). Compare bearing seat elevations to determine value of "X".

NOTE: For Bearing Seat surface finish see GpC(SPL) sheet.

⁜ For contractor's information only

All cap & column reinforcing steel [redacted] Grade 60.

GENERAL NOTES:

Designed according to A.A.S.H.T.O. 1989 Standard and current Interim Specifications.

Calculated Foundation Load = 310 Tons/Dr. Shaft

See "Form Liner Details" sheet for aesthetic treatment of columns and cap.

See Inverted Tee Bent Special Cap Details Sheet for details [redacted]

TABLE OF CONSTANT QUANTITIES

Bar	No.	Size	Length	Weight
A	12	# 11	53'- 8"	3422
B	8	# 11	54'- 3"	2306
H	198	# 6	6'-11"	2058
J	28	# 6	5'- 4"	224
S1	47	# 6	25'- 3"	1782
S2-15	28	# 6	23'- 8"Av	995
S16-27	24	# 6	21'- 3"Av	766
U1	47	# 5	14'- 2"	695
U2-15	28	# 5	12'- 7"Av	367
U16-27	24	# 5	10'- 2"Av	255
W1	20	# 9	53'- 8"	3650
W2	4	# 9	50'- 6"	687
W3	4	# 9	44'- 6"	605
W4	4	# 9	38'- 6"	524
Reinforcing Steel			Lb	⁜18336
Class "C" Concrete (Cap)			CY	86.4

TABLE OF VARIABLE QUANTITIES

"H"	Class "C" Conc. (Col.)	Bars Z1 17'-5" ~ #4		Bars Z2 3'-8" ~ #4		Bars Z3 5'-0" ~ #4		Bars V 60 ~ # 11		■ TOTAL ESTIMATED QUANTITIES ⁜ Reinf. Steel	Class "C" Conc.
Ft	CY	No.	Weight	No.	Weight	No.	Weight	Length	Weight	Lb	CY
16	38.1	68	791	102	250	68	227	21'- 3"	6774	36580	173.7
17	40.5	72	838	108	265	72	240	22'- 3"	7093	36974	176.1
18	42.8	76	884	114	279	76	254	23'- 3"	7412	37367	178.4
19	45.2	80	931	120	294	80	267	24'- 3"	7730	37760	180.8
20	47.6	84	977	126	309	84	281	25'- 3"	8049	38154	183.2

■ Includes Footing Quantities

REV 3-30-92

HS 20 LOADING

SHEET 2 OF 2

STATE DEPARTMENT OF HIGHWAYS AND PUBLIC TRANSPORTATION

INTERIOR BENT NO. 10 RAMPS 1 & 2

US 83/281 INTERCHANGE

STATE OF TEXAS
MARK J. BLOSCHOCK
52996
REGISTERED PROFESSIONAL ENGINEER

9-13-91

D45350A1#ZFA2#[355105]4377INV10.DGN	PREPARED BY AND FOR USE OF TEXAS SDH&PT					
ORIGINAL DRAWING DATE: NOVEMBER 1990	STATE DISTRICT	FEDERAL REGION	FEDERAL AID PROJECT #		SHEET	
DN.: MRL CK.: CAF DN.: DRG CK.: JCC REVISIONS	21	6	NH 92C)M1		174	
	COUNTY		CONTROL	SECTION	JOB	HIGHWAY
	HIDALGO		0039	17	097	US 83/281

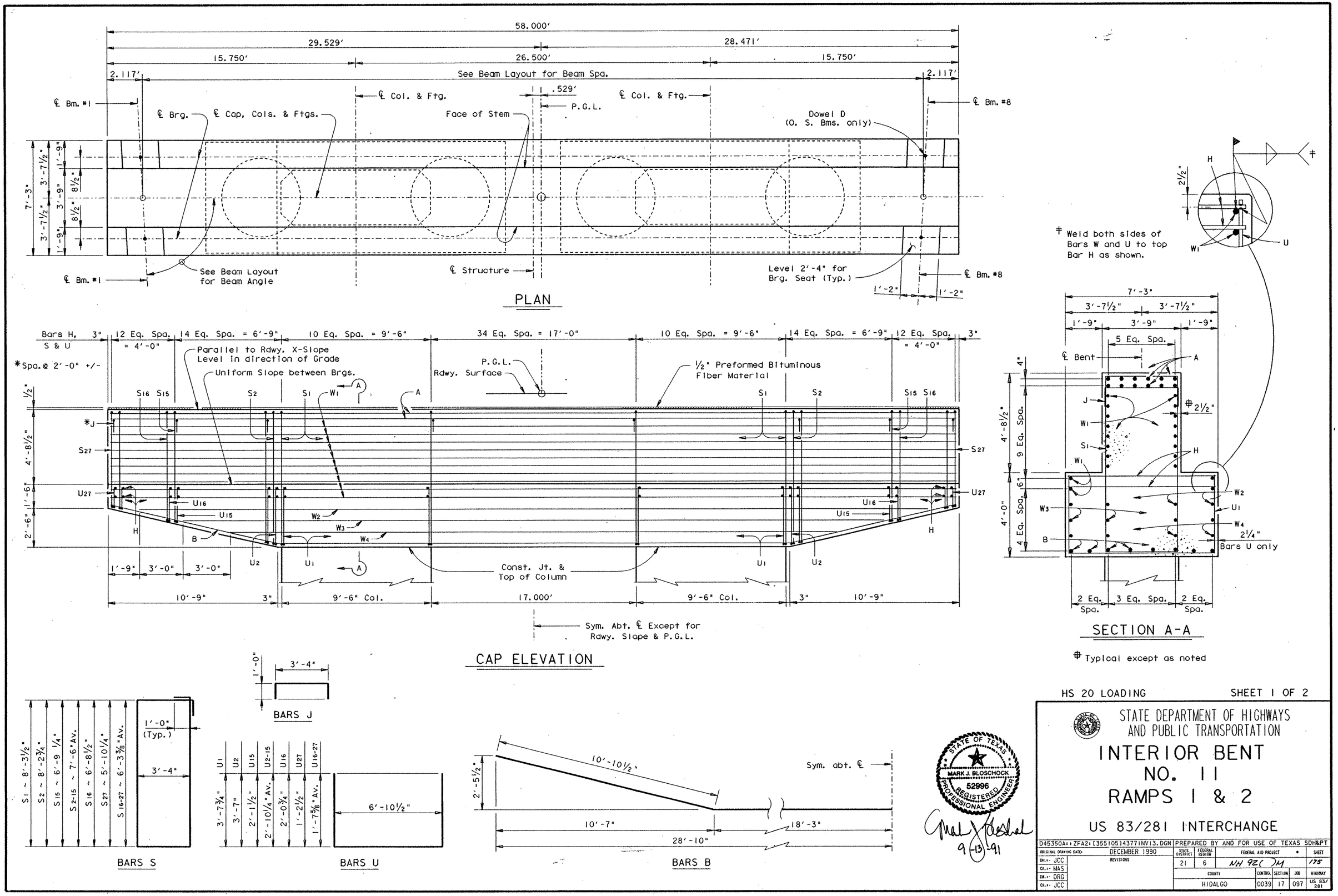

HS 20 LOADING

SHEET 1 OF 2

STATE DEPARTMENT OF HIGHWAYS AND PUBLIC TRANSPORTATION

INTERIOR BENT NO. 11 RAMPS 1 & 2

US 83/281 INTERCHANGE

STATE OF TEXAS
MARK J. BLOSCHOCK
52996
REGISTERED PROFESSIONAL ENGINEER

9-13-91

D45350A1:ZFA2:[355105]43771NV13.DGN	PREPARED BY AND FOR USE OF TEXAS SDH&PT					
ORIGINAL DRAWING DATE: DECEMBER 1990	STATE DISTRICT	FEDERAL REGION	FEDERAL AID PROJECT			SHEET
DN.: JCC	21	6	NH 92( )M			175
CK.: MAS	COUNTY		CONTROL	SECTION	JOB	HIGHWAY
DW.: DRG	HIDALGO		0039	17	097	US 83/281
CK.: JCC						

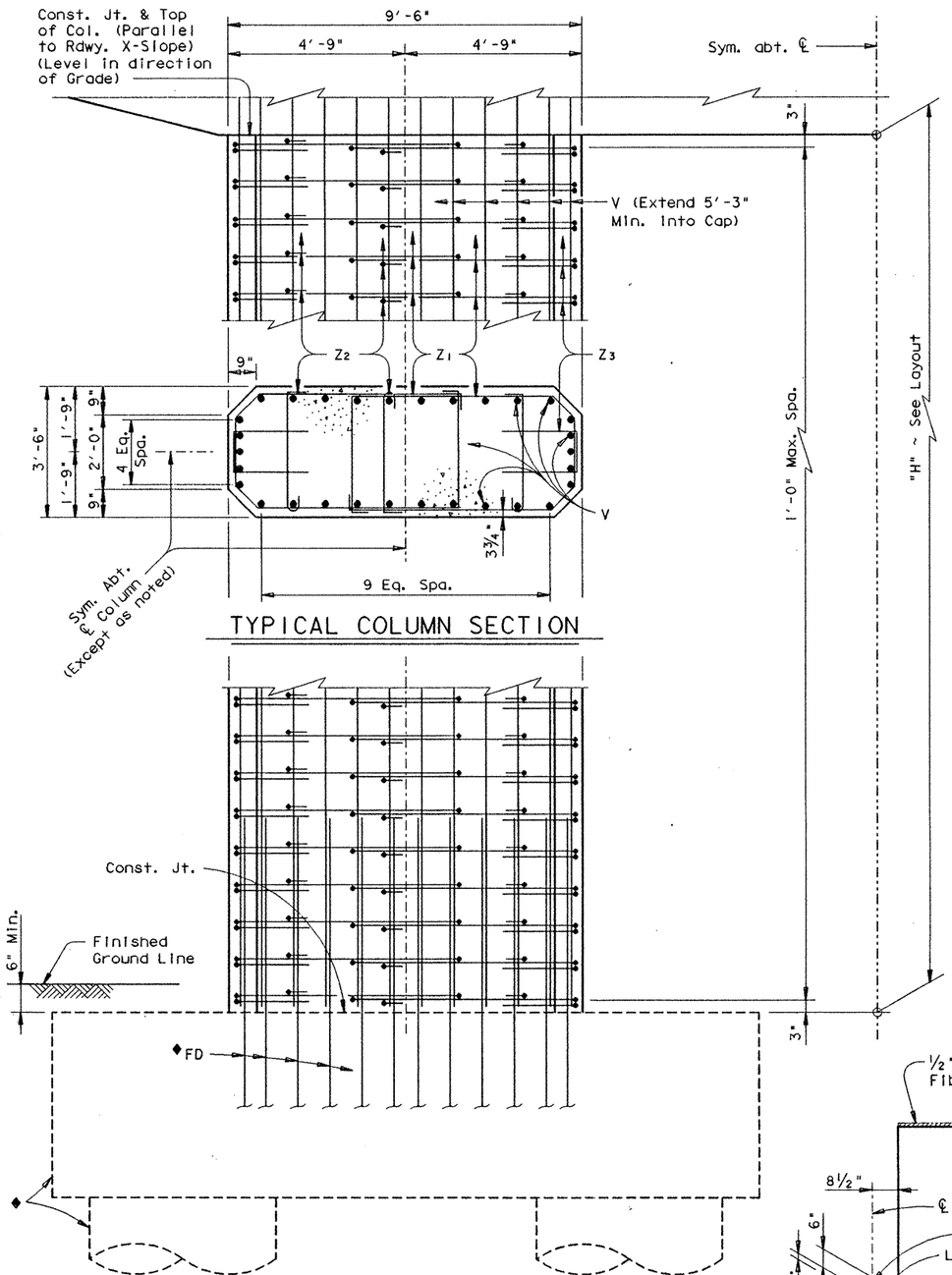

◆See Footing Details sheet for foundation details and quantities not shown.

COLUMN ELEVATION

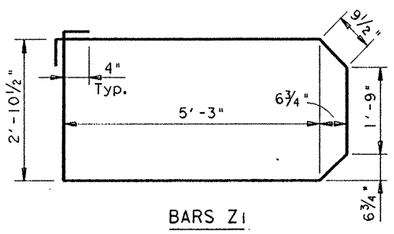

BARS Z1

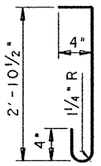

BARS Z2

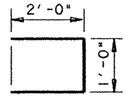

BARS Z3

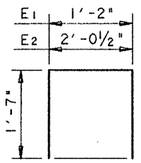

BARS E

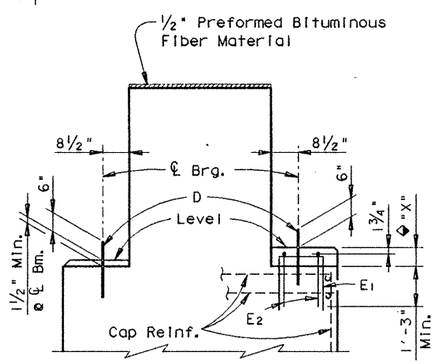

END VIEW

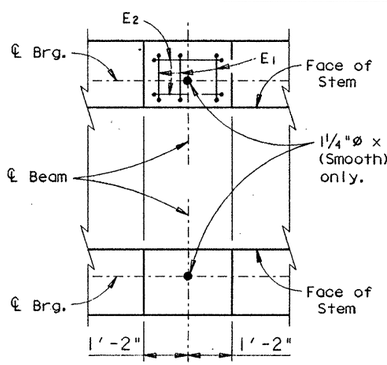

PLAN VIEW

BEARING SEAT DETAILS

◆Reinforced Pedestals [redacted] required where "X" is greater than 2½" and [redacted] considered subsidiary to the Bid Item "Class C Concrete (Bent). Compare bearing seat elevations to determine value of "X".

TABLE OF CONSTANT QUANTITIES

Bar	No.	Size	Length	Weight
A	12	# 11	57'- 8"	3677
B	8	# 11	58'- 3"	2476
D	4	1¼"ø	1'- 6"	25
H	214	# 6	6'-11"	2224
J	30	# 6	5'- 4"	240
S1	55	# 6	25'- 3"	2086
S2-15	28	# 6	23'- 8"Av	995
S16-27	24	# 6	21'- 3"Av	766
U1	55	# 5	14'- 2"	813
U2-15	28	# 5	12'- 7"Av	367
U16-27	24	# 5	10'- 2"Av	255
W1	20	# 9	57'- 8"	3922
W2	4	# 9	54'- 6"	741
W3	4	# 9	48'- 6"	660
W4	4	# 9	42'- 6"	578

Reinforcing Steel	Lb	‡19825
Class "C" Concrete (Cap)	CY	93.3

‡ For contractor's information only

All cap & column reinforcing steel [redacted] Grade 60.

GENERAL NOTES:

Designed according to A.A.S.H.T.O. 1989 Standard and current Interim Specifications.

Calculated Foundation Load = 310 Tons/Dr. Shaft

See "Form Liner Details" sheet for aesthetic treatment of columns and cap.

See Inverted Tee Bent Special Details Sheet for details [redacted] n.

TABLE OF VARIABLE QUANTITIES

"H"	Class "C" Conc. (Col.)	Bars Z1 17'-5" ~ #4		Bars Z2 3'-8" ~ #4		Bars Z3 5'-0" ~ #4		Bars V 60 ~ # 11		‡ Reinf. Steel	Class "C" Conc.
		No.	Weight	No.	Weight	No.	Weight	Length	Weight		
Ft	CY									Lb	CY
16	38.1	68	791	102	250	68	227	21'- 3"	6774	38069	180.6
17	40.5	72	838	108	265	72	240	22'- 3"	7093	38463	183.0
18	42.8	76	884	114	279	76	254	23'- 3"	7412	38856	185.3
19	45.2	80	931	120	294	80	267	24'- 3"	7730	39249	187.7
20	47.6	84	977	126	309	84	281	25'- 3"	8049	39643	190.1

■ TOTAL ESTIMATED QUANTITIES

■ Includes Footing Quantities

NOTE: For Bearing Seat surface finish see GpC(SPL) sheet.

HS 20 LOADING

SHEET 2 OF 2

STATE DEPARTMENT OF HIGHWAYS AND PUBLIC TRANSPORTATION

INTERIOR BENT NO. 11 RAMPS 1 & 2

US 83/281 INTERCHANGE

STATE OF TEXAS
MARK J. BLOSCHOCK
52996
REGISTERED
PROFESSIONAL ENGINEER

9-13-91

REV. 3-30-92

D45350A1:ZFA2:(355105)4377INV13.DGN

PREPARED BY AND FOR USE OF TEXAS SDH&PT

ORIGINAL DRAWING DATE: DECEMBER 1990

DN.: MRL CK.: GAF DR.: DRG CK.: JCC

REVISIONS

STATE DISTRICT	FEDERAL REGION	FEDERAL AID PROJECT	SHEET
21	6	NH 92L JM	176

COUNTY	CONTROL	SECTION	JOB	HIGHWAY
HIDALGO	0039	17	097	US 83/281

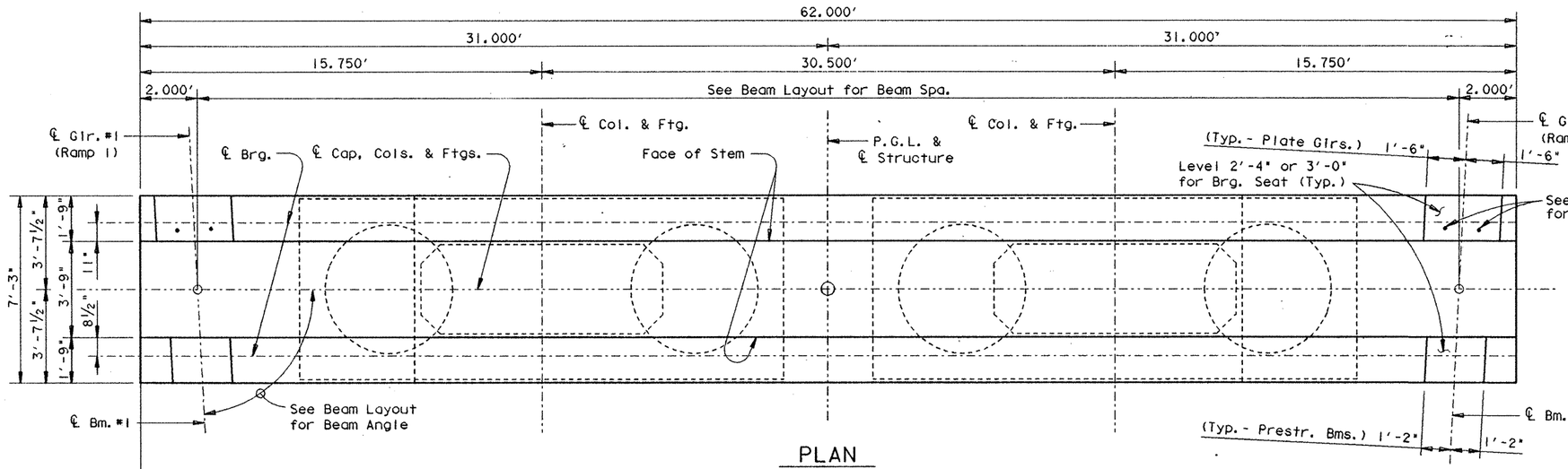

PLAN

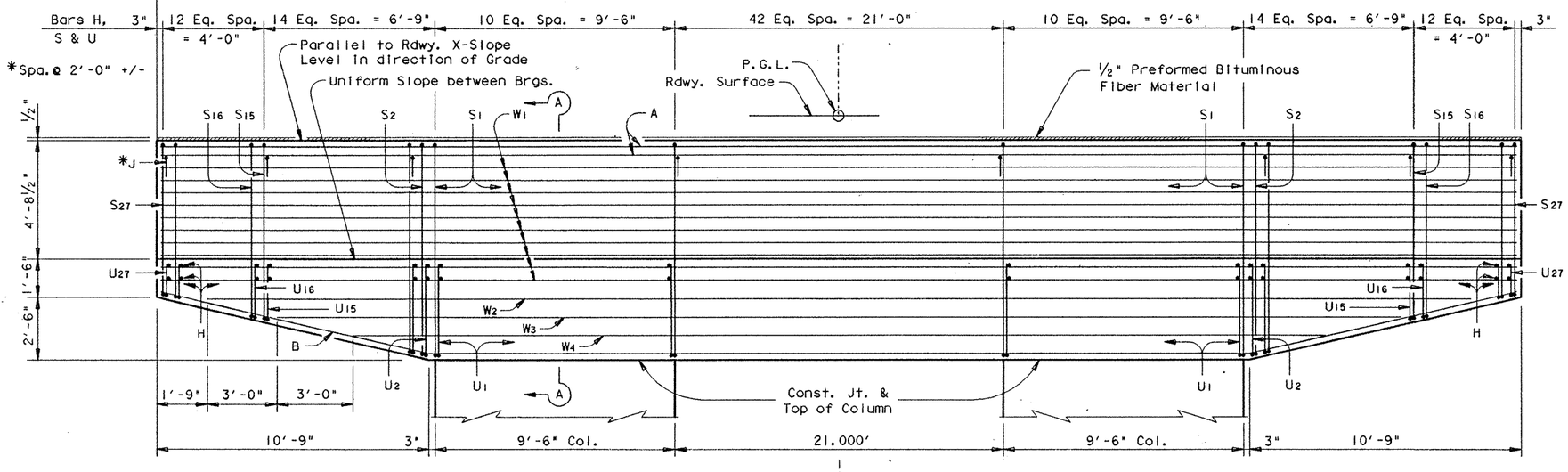

CAP ELEVATION

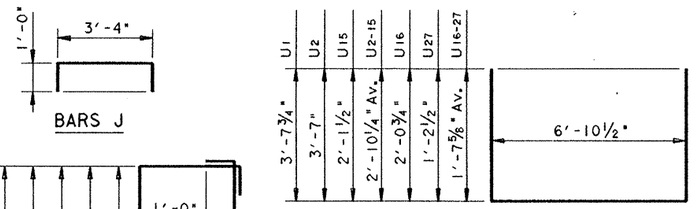

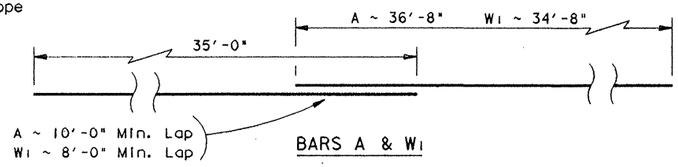

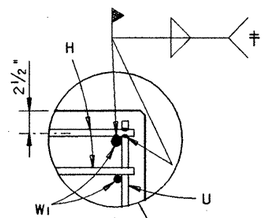

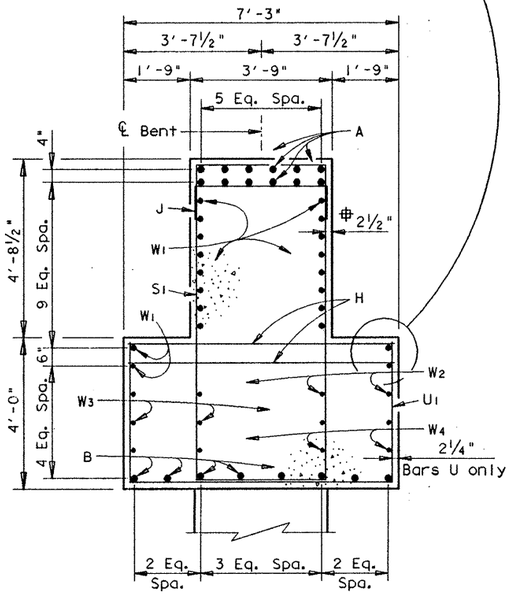

SECTION A-A

Typical except as noted

HS 20 LOADING

SHEET 1 OF 3

STATE DEPARTMENT OF HIGHWAYS AND PUBLIC TRANSPORTATION

INTERIOR BENT NO. 12 RAMPS 1 & 2

US 83/281 INTERCHANGE

STATE OF TEXAS
MARK J. BLOSCHOCK
52996
REGISTERED
PROFESSIONAL ENGINEER
9-13-91

D45350A1 : ZFA2 : [355105]4377INV14.DGN	PREPARED BY AND FOR USE OF TEXAS SDH&PT						
ORIGINAL DRAWING DATE: DECEMBER 1990	STATE DISTRICT	FEDERAL REGION	FEDERAL AID PROJECT			SHEET	
DN.: JCC CK.: MAS DR.: DRG CK.: JCC REVISIONS	21	6	NH 92C)4			177	
	COUNTY		CONTROL	SECTION	JOB	HIGHWAY	
	HIDALGO		0039	17	097	US 83/281	

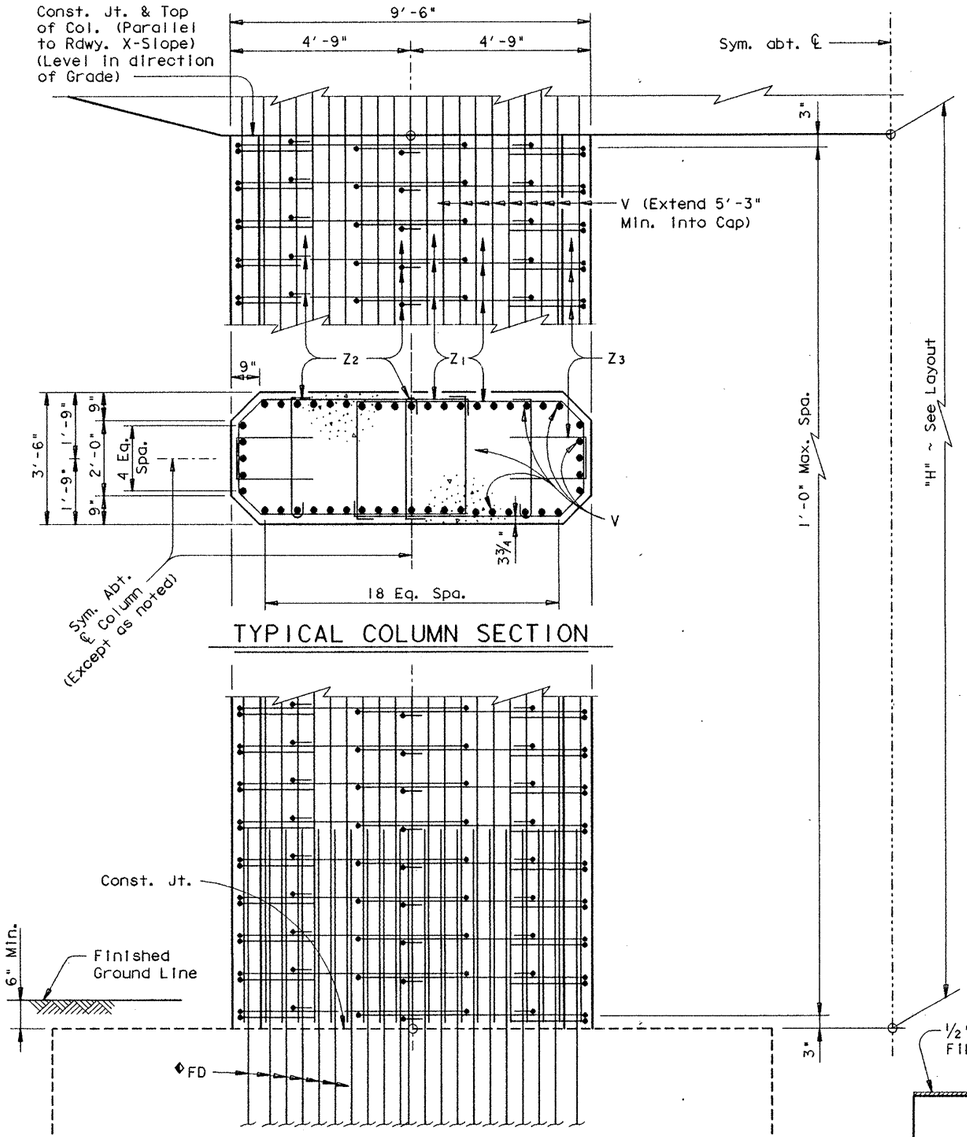

TYPICAL COLUMN SECTION

◆See Footing Details sheet for foundation details and quantities not shown.

COLUMN ELEVATION

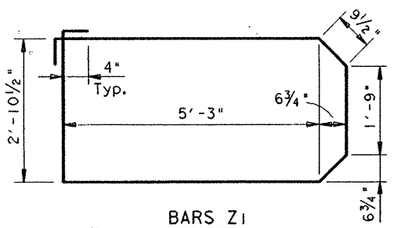

BARS Z1

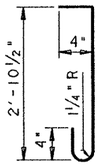

BARS Z2

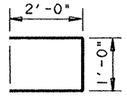

BARS Z3

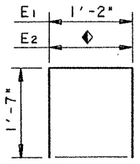

BARS E

◆2'-0½" @ Prestr. Bms.
2'-8½" @ Plate Girs.

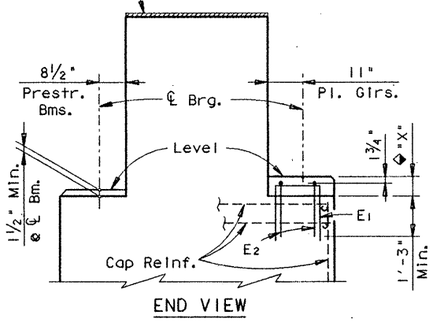

END VIEW

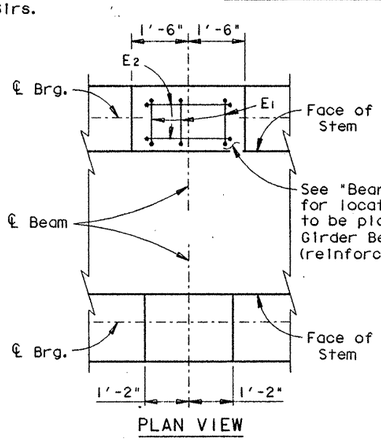

PLAN VIEW

BEARING SEAT DETAILS

◆Reinforced Pedestals [redacted] required where "X" is greater than 2½" and [redacted] considered subsidiary to the Bid Item "Class C Concrete (Bent)". Compare bearing seat elevations to determine value of "X".

NOTE: For Bearing Seat surface finish see GpC(SPL) sheet.

TABLE OF CONSTANT QUANTITIES

Bar	No.	Size	Length	Weight
A	12	# 11	▲ 71'- 8"	4569
B	8	# 11	▲▲ 69'- 5"	2951
H	230	# 6	6'-11"	2391
J	32	# 6	5'- 4"	256
S1	63	# 6	25'- 3"	2389
S2-15	28	# 6	23'- 8"Av	995
S16-27	24	# 6	21'- 3"Av	766
U1	63	# 5	14'- 2"	931
U2-15	28	# 5	12'- 7"Av	367
U16-27	24	# 5	10'- 2"Av	255
W1	20	# 9	◩ 69'- 8"	4738
W2	4	# 9	58'- 6"	796
W3	4	# 9	52'- 6"	714
W4	4	# 9	46'- 6"	632

Reinforcing Steel	Lb	⁜22750
Class "C" Concrete (Cap)	CY	100.3

⁜ For contractor's information only

All cap & column reinforcing steel [redacted] Grade 60.

▲ Includes 1 ~ 10'-0" Min. lap

▲▲ Includes 1 ~ 7'-2" Min. lap

◩ Includes 1 ~ 8'-0" Min. lap

GENERAL NOTES:

Designed according to A.A.S.H.T.O. 1989 Standard and current Interim Specifications.

Calculated Foundation Load = 440 Tons/Dr. Shaft

See "Form Liner Details" sheet for aesthetic treatment of columns and cap.

See Inverted Tee Bent Special Cap Details Sheet for details not shown.

TABLE OF VARIABLE QUANTITIES

"H"	Class "C" Conc. (Col.)	Bars Z1 17'-5" ~ #4		Bars Z2 3'-8" ~ #4		Bars Z3 5'-0" ~ #4		Bars V 96 ~ # 11		⁜ Reinf. Steel	Class "C" Conc.
Ft	CY	No.	Weight	No.	Weight	No.	Weight	Length	Weight	Lb	CY
16	38.1	68	791	102	250	68	227	21'- 3"	10839	48023	187.6
17	40.5	72	838	108	265	72	240	22'- 3"	11349	48608	190.0
18	42.8	76	884	114	279	76	254	23'- 3"	11859	49192	192.3
19	45.2	80	931	120	294	80	267	24'- 3"	12369	49777	194.7
20	47.6	84	977	126	309	84	281	25'- 3"	12879	50362	197.1

▪ TOTAL ESTIMATED QUANTITIES

▪ Includes Footing Quantities

HS 20 LOADING

SHEET 2 OF 3

STATE DEPARTMENT OF HIGHWAYS AND PUBLIC TRANSPORTATION

INTERIOR BENT NO. 12 RAMPS 1 & 2

US 83/281 INTERCHANGE

STATE OF TEXAS — MARK J. BLOSCHOCK — 52996 — REGISTERED PROFESSIONAL ENGINEER

9-13-91

REV. 3-30-92

D45350A1 ▪ ZFA2 ▪ [3551051437?INV14.DGN | PREPARED BY AND FOR USE OF TEXAS SDH&PT

ORIGINAL DRAWING DATE▪ DECEMBER 1990

REVISIONS

DN.▪ MRL
CK.▪ GAF
DN.▪ DRG
CK.▪ JCC

STATE DISTRICT	FEDERAL REGION	FEDERAL AID PROJECT ▪	SHEET
21	6	NH 92L)M	178

COUNTY	CONTROL	SECTION	JOB	HIGHWAY
HIDALGO	0039	17	097	US 83/281

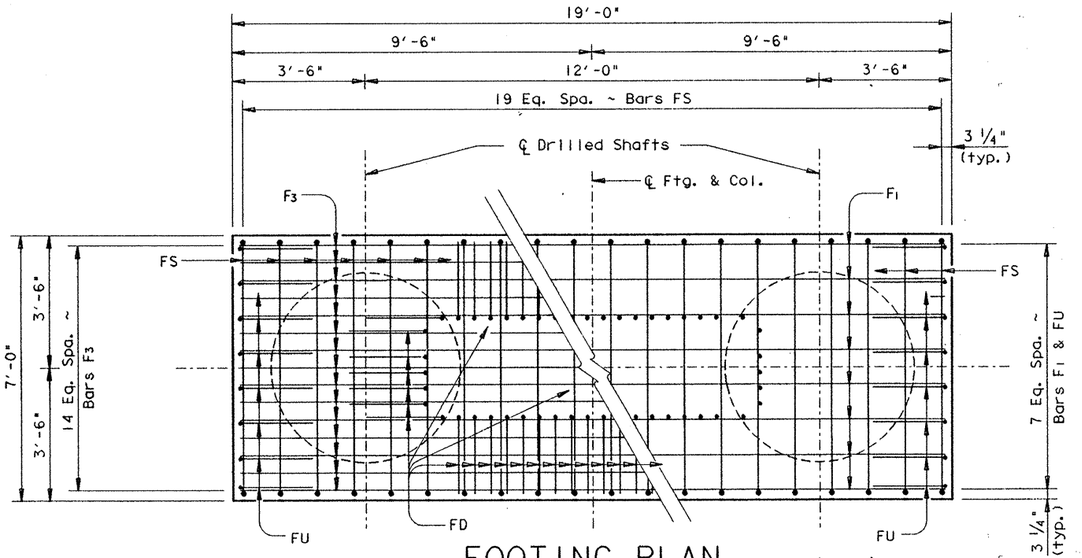

(Showing Bottom Reinforcing) FOOTING PLAN (Showing Top Reinforcing)

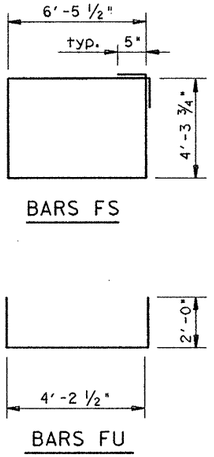

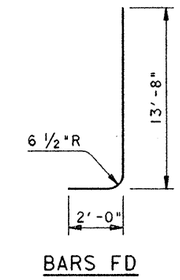

‡TABLE OF FOOTING QUANTITIES

Bar	No.	Size	Length	Weight
F_1	8	# 8	18'- 6"	395
F_2	8	# 5	18'- 6"	154
F_3	15	# 11	18'- 6"	1474
FD	48	# 11	15'- 6"	3953
FS	20	# 5	22'- 5"	468
FU	16	# 5	8'- 4"	139

Reinforcing Steel	Lb	‡ 6583
Class "C" Concrete	CY	24.6

‡ For Contractor's Information only.

‡ Quantities shown are for one footing only.

All Footing Reinforcing Steel [redacted] Grade 60.

▲See Int. Bent Sheet for Col. Reinforcing

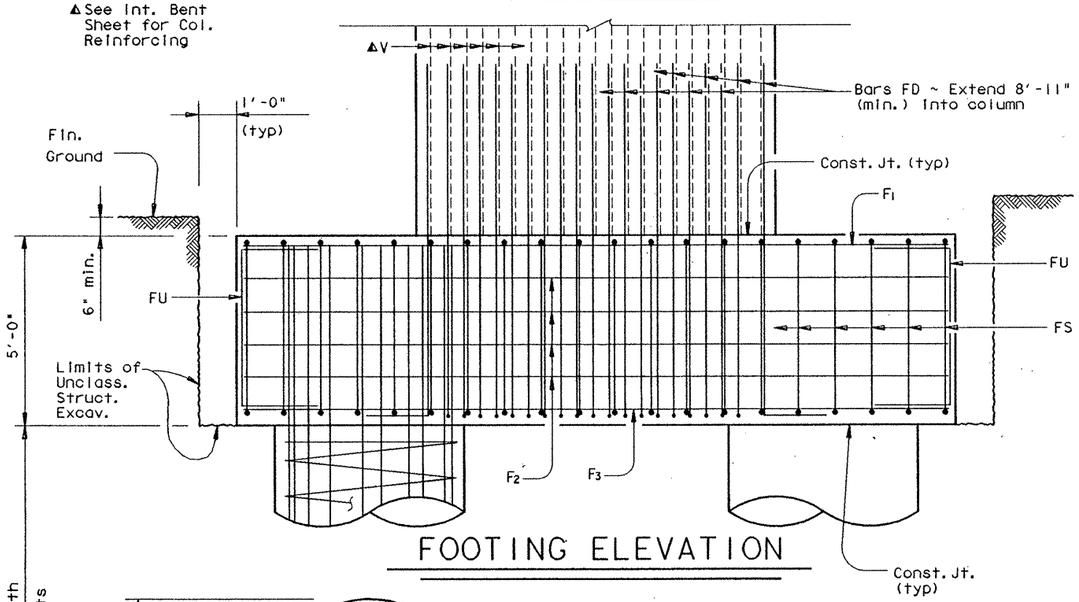

FOOTING ELEVATION

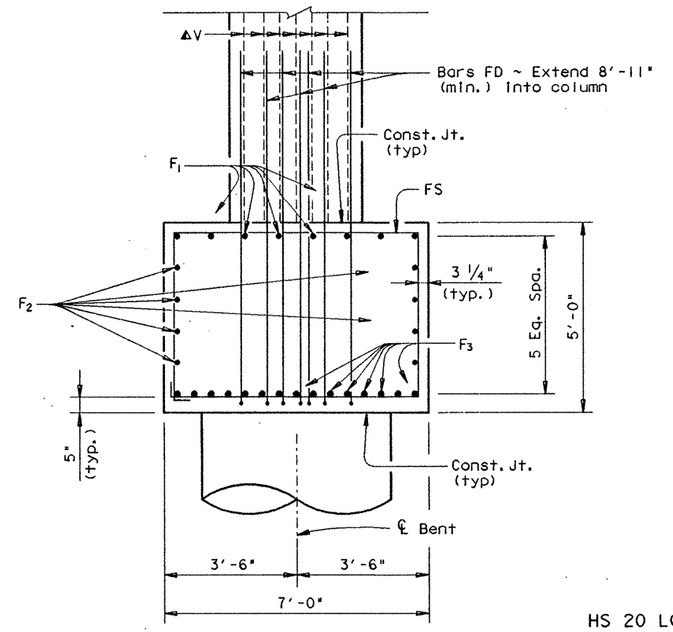

FOOTING SECTION

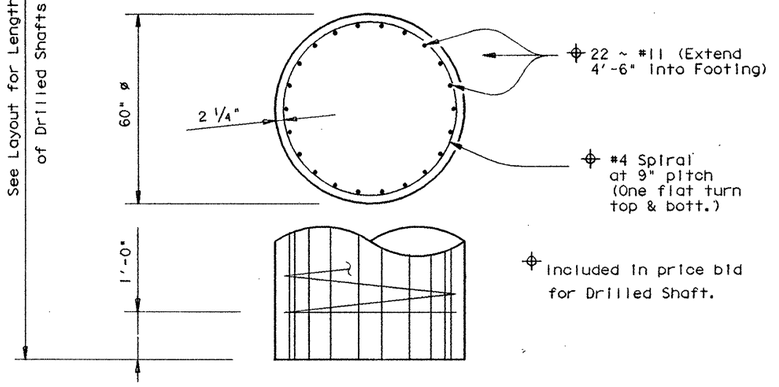

HS 20 LOADING

SHEET 3 OF 3

STATE DEPARTMENT OF HIGHWAYS AND PUBLIC TRANSPORTATION

INTERIOR BENT NO. 12 RAMPS 1 & 2

US 83/281 INTERCHANGE

STATE OF TEXAS
MARK J. BLOSCHOCK
52996
REGISTERED PROFESSIONAL ENGINEER

9-13-91

D45350A: ZFA2: [355105]43771NV14.DGN	PREPARED BY AND FOR USE OF TEXAS SDH&PT					
ORIGINAL DRAWING DATE: NOVEMBER 1990	STATE DISTRICT	FEDERAL REGION	FEDERAL AID PROJECT			SHEET
DN.: GAF/MRL	21	6	NH 92C)M			179
CK.: MRL/GAF	COUNTY		CONTROL	SECTION	JOB	HIGHWAY
DN.: PSR	HIDALGO		0039	17	097	US 83/281
CK.: GAF/MRL						

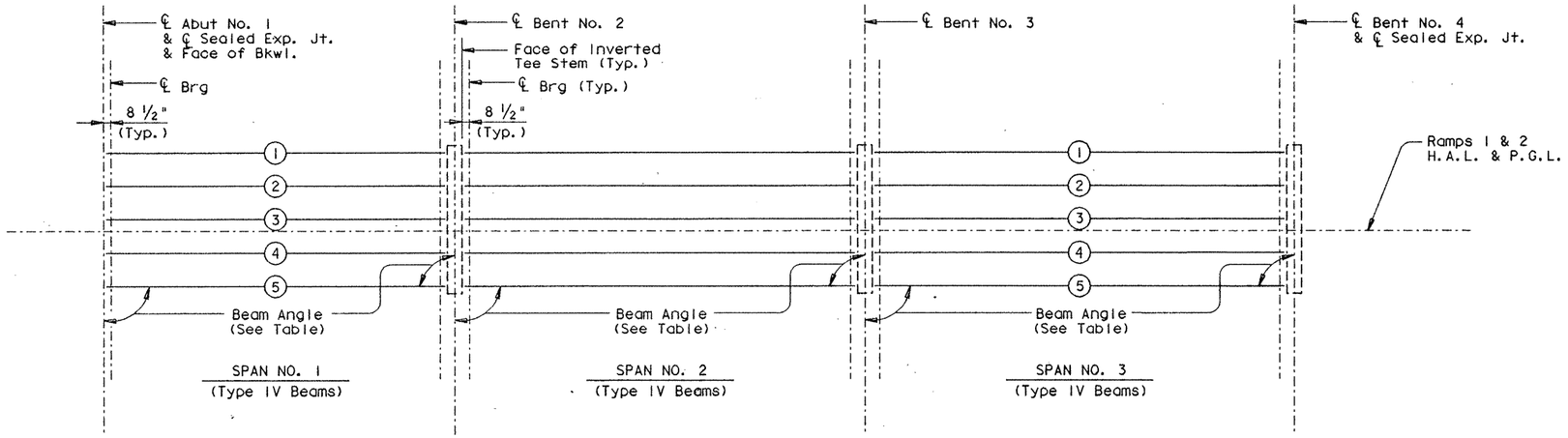

BEAM LAYOUT

BENT REPORT

ABUT NO. 1 (S 85 7 18.00 E)
DISTANCE BETWEEN STATION LINE AND BEAM 1 20.000 L

		BEAM SPAC. (C.L. BENT)	BEAM ANGLE D	M	S
SPAN 1	BEAM 1	0.000	90	0	0
	BEAM 2	8.500	90	0	0
	BEAM 3	8.500	90	0	0
	BEAM 4	8.500	90	0	0
	BEAM 5	8.500	90	0	0
	TOTAL	34.000			

BENT NO. 2 (S 85 7 18.00 E)
DISTANCE BETWEEN STATION LINE AND BEAM 1 20.000 L

		BEAM SPAC. (C.L. BENT)	BEAM ANGLE D	M	S
SPAN 1	BEAM 1	0.000	90	0	0
	BEAM 2	8.500	90	0	0
	BEAM 3	8.500	90	0	0
	BEAM 4	8.500	90	0	0
	BEAM 5	8.500	90	0	0
	TOTAL	34.000			
SPAN 2	BEAM 1	0.000	90	0	0
	BEAM 2	8.500	90	0	0
	BEAM 3	8.500	90	0	0
	BEAM 4	8.500	90	0	0
	BEAM 5	8.500	90	0	0
	TOTAL	34.000			

BENT REPORT

BENT NO. 3 (S 85 7 18.00 E)
DISTANCE BETWEEN STATION LINE AND BEAM 1 20.000 L

		BEAM SPAC. (C.L. BENT)	BEAM ANGLE D	M	S
SPAN 2	BEAM 1	0.000	90	0	0
	BEAM 2	8.500	90	0	0
	BEAM 3	8.500	90	0	0
	BEAM 4	8.500	90	0	0
	BEAM 5	8.500	90	0	0
	TOTAL	34.000			
SPAN 3	BEAM 1	0.000	90	0	0
	BEAM 2	8.500	90	0	0
	BEAM 3	8.500	90	0	0
	BEAM 4	8.500	90	0	0
	BEAM 5	8.500	90	0	0
	TOTAL	34.000			

BENT NO. 4 (S 85 7 18.00 E)
DISTANCE BETWEEN STATION LINE AND BEAM 1 20.000 L

		BEAM SPAC. (C.L. BENT)	BEAM ANGLE D	M	S
SPAN 3	BEAM 1	0.000	90	0	0
	BEAM 2	8.500	90	0	0
	BEAM 3	8.500	90	0	0
	BEAM 4	8.500	90	0	0
	BEAM 5	8.500	90	0	0
	TOTAL	34.000			

BEAM REPORT

BEAM REPORT, SPAN 1

	HORIZONTAL DISTANCE C-C BENT	C-C BRG.	TRUE DISTANCE BOT. BM. FLG.
BEAM 1	90.000	86.708	87.792
BEAM 2	90.000	86.708	87.792
BEAM 3	90.000	86.708	87.792
BEAM 4	90.000	86.708	87.792
BEAM 5	90.000	86.708	87.792

BEAM REPORT, SPAN 2

	HORIZONTAL DISTANCE C-C BENT	C-C BRG.	TRUE DISTANCE BOT. BM. FLG.
BEAM 1	105.000	99.833	100.917
BEAM 2	105.000	99.833	100.917
BEAM 3	105.000	99.833	100.917
BEAM 4	105.000	99.833	100.917
BEAM 5	105.000	99.833	100.917

BEAM REPORT, SPAN 3

	HORIZONTAL DISTANCE C-C BENT	C-C BRG.	TRUE DISTANCE BOT. BM. FLG.
BEAM 1	110.000	104.833	105.917
BEAM 2	110.000	104.833	105.917
BEAM 3	110.000	104.833	105.917
BEAM 4	110.000	104.833	105.917
BEAM 5	110.000	104.833	105.917

HS 20 LOADING

STATE OF TEXAS
MARK J. BLOSCHOCK
52996
REGISTERED
PROFESSIONAL ENGINEER
9-13-91

STATE DEPARTMENT OF HIGHWAYS
AND PUBLIC TRANSPORTATION

BEAM LAYOUT
UNIT NO. 1, RAMPS 1&2

US 83/281 INTERCHANGE

D45350A1:ZFA2:[3551001]4379BLY01.DGN		PREPARED BY AND FOR USE OF TEXAS SDH&PT				
ORIGINAL DRAWING DATE: JANUARY 1991		STATE DISTRICT: 21	FEDERAL REGION: 6	FEDERAL AID PROJECT: NH-92(C)M		SHEET: 180
DR.: LMW	REVISIONS	COUNTY: HIDALGO	CONTROL: 0039	SECTION: 17	JOB: 097	HIGHWAY: US 83/281
CK.: KBA						
DR.: PSR						
CK.: KBA						

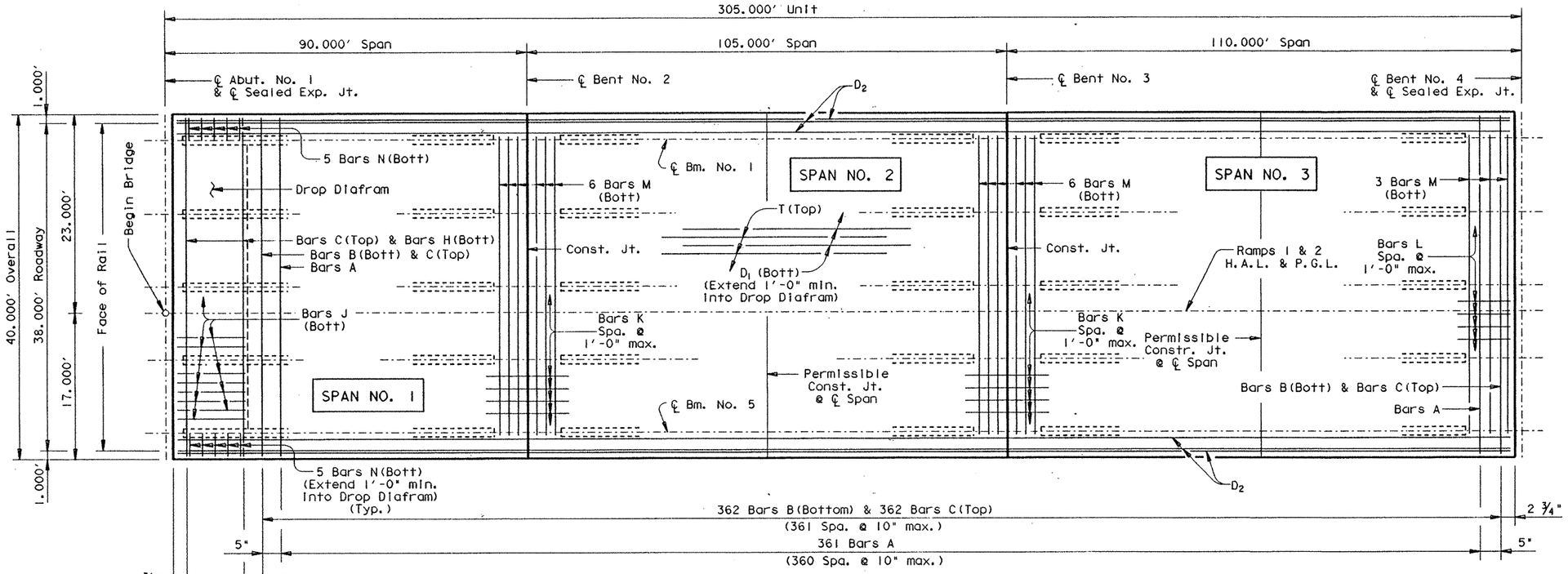

PLAN

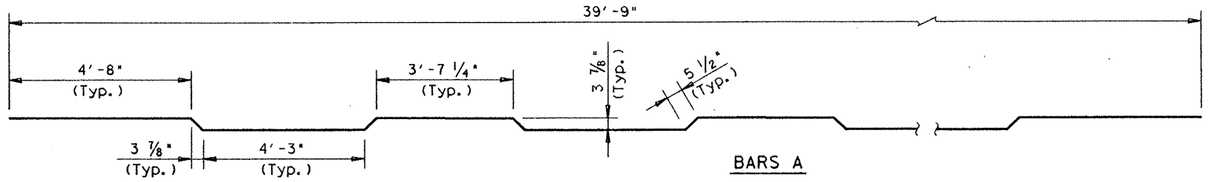

BARS A

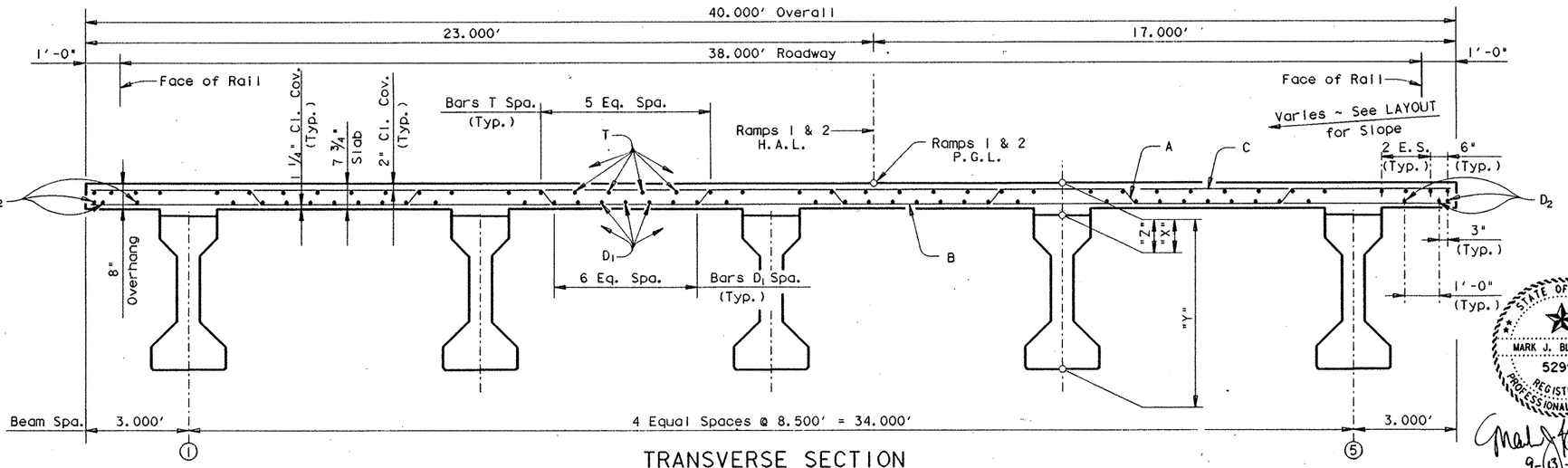

TRANSVERSE SECTION

Span	"A"	"B"
#1	0.048'	0.067'
#2	0.084'	0.118'
#3	0.102'	0.143'

NOTE: Deflections shown are due to cast-in-place concrete only.

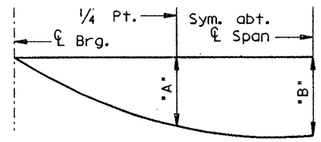

DEAD LOAD DEFLECTION DIAGRAM

(E_c = 5 X 10^6 psi)

TABLE OF ESTIMATED QUANTITIES

Bar	No.	Size	Length	Weight
A	361	# 5	40'-10"	15375
B	362	# 4	39'- 9"	9612
C	370	# 5	39'- 9"	15340
D_1	36	# 5	309'- 1" △	11605
D_2	6	# 5	311'- 9" △	1951
H	8	# 5	35'- 5"	296
J	32	# 5	3'- 6"	117
K	78	# 4	6'- 4"	330
L	39	# 4	3'- 0"	78
M	15	# 5	37'- 9"	591
N	10	# 5	3'- 4"	35
T	40	# 4	310'- 6" ◩	8297

Reinforcing Steel		Lb	⌗ 63627
Prestr. Conc. Bm. ~ Ty. IV		LF	⌗ 1473.13

Span	Reinf. Conc. Slab ~ SF	Class "S" Conc. ~ CY	
		⌗ Diaf.	⌗ Slab
# 1	3600	1.3	88.5
# 2	4200	—	104.0
# 3	4400	—	109.4
Total	12200	⌗	303.2

⌗ For contractor's information only.

△ Length shown includes 5 ~ 1'-5 " min. laps.

◩ Length shown includes 5 ~ 1'-2 " min. laps.

⌗ Length shown is bottom flange length with adjustments made for beam slope.

TABLE OF SECTION DEPTHS

Span	"X" at ℄ Brg.	"Y" at ℄ Brg.	"Z" at ℄ Span *
1	9 1/4"	5'-3 1/4"	8 1/4"
2	9 3/4"	5'-3 3/4"	8 1/4"
3	10"	5'-4"	8 1/4"

* Theoretical dimension

GENERAL NOTES:

Designed according to A.A.S.H.T.O. 1989 Standard Specifications.

Design fc = 1200 p.s.i.

See GpC (SPL) sheet for details not shown.

See GpA-2 (MOD) sheet for Beam Blockout details not shown.

For Drain Locations see Bridge Layout. For Drain Details see Bridge Drain Details Sheet.

HS 20 LOADING

STATE OF TEXAS
MARK J. BLOSCHOCK
52996
REGISTERED PROFESSIONAL ENGINEER

9-13-91

STATE DEPARTMENT OF HIGHWAYS AND PUBLIC TRANSPORTATION

UNIT NO. 1, RAMPS 1&2

305.00' PRESTRESSED CONCRETE BEAM UNIT (90.00' - 105.00' - 110.00') US 83/281 INTERCHANGE

D45350A: ZFA2: C35510014376PPB01.DGN	PREPARED BY AND FOR USE OF TEXAS SDH&PT						
ORIGINAL DRAWING DATE: JUNE 1990	STATE DISTRICT	FEDERAL REGION	FEDERAL AID PROJECT #				SHEET
DR.: LMW	21	6	NH 92 (3)M				181
CK.: KBA	COUNTY			CONTROL	SECTION	JOB	HIGHWAY
DR.: PSR	HIDALGO			0039	17	097	US 83/281
CK.: LMW	REVISIONS						

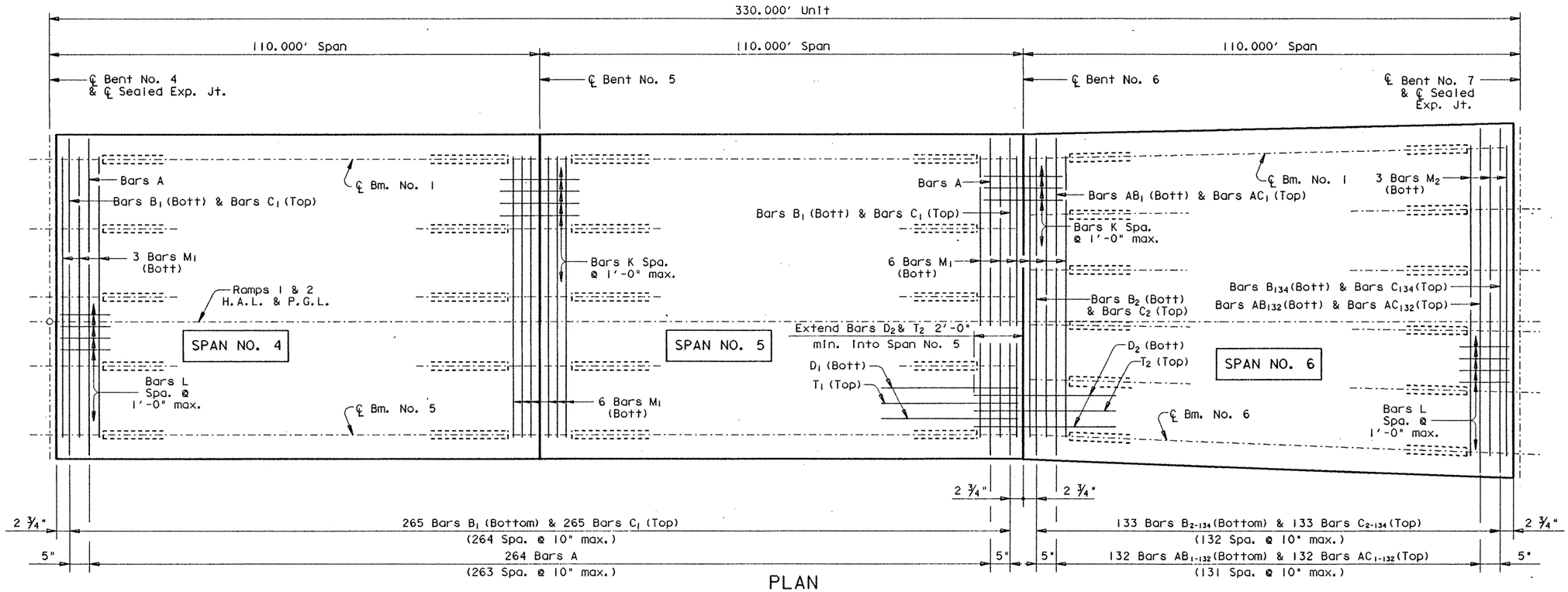

PLAN

(Showing Slab Reinforcing Only)

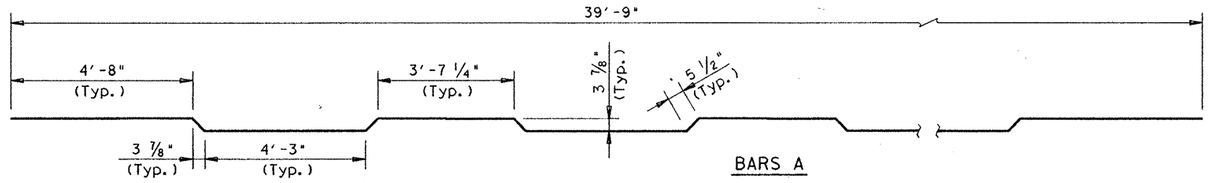

BARS A

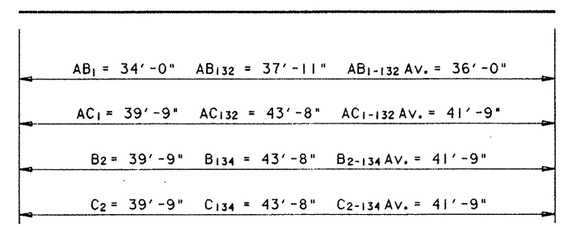

BARS AB, AC, B & C

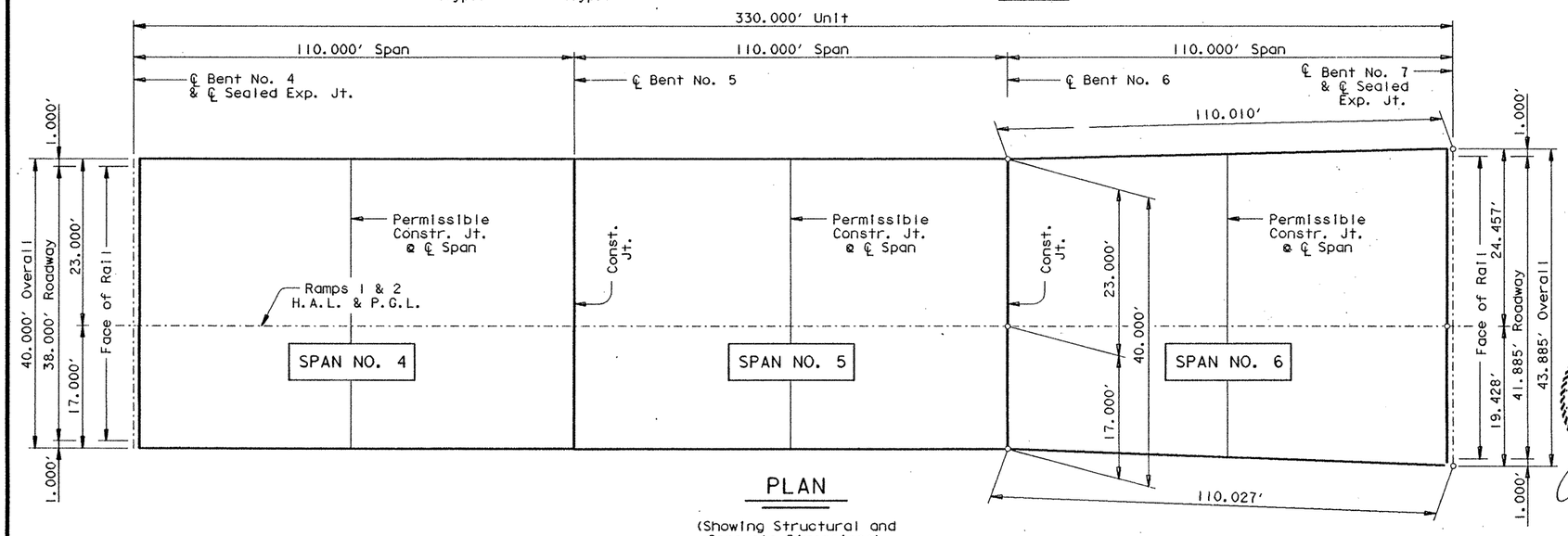

PLAN

(Showing Structural and Concrete Dimensions)

STATE OF TEXAS
MARK J. BLOSCHOCK
52996
REGISTERED PROFESSIONAL ENGINEER

9-13-91

HS 20 LOADING

Sheet 1 of 2

STATE DEPARTMENT OF HIGHWAYS AND PUBLIC TRANSPORTATION

UNIT NO. 2, RAMPS 1&2

330.00' PRESTRESSED CONCRETE BEAM UNIT (110.00' - 110.00' - 110.00') US 83/281 INTERCHANGE

D45350A: ZFA2: [355100]4376PPB05.DGN

PREPARED BY AND FOR USE OF TEXAS SDH&PT

ORIGINAL DRAWING DATE:	AUGUST 1990	STATE DISTRICT	FEDERAL REGION	FEDERAL AID PROJECT	SHEET
DN.: LMW	REVISIONS	21	6	NH 92( )M	182
CK.: KBA		COUNTY		CONTROL / SECTION / JOB	HIGHWAY
DW.: PSR		HIDALGO		0039 / 17 / 097	US 83/281
CK.: LMW					

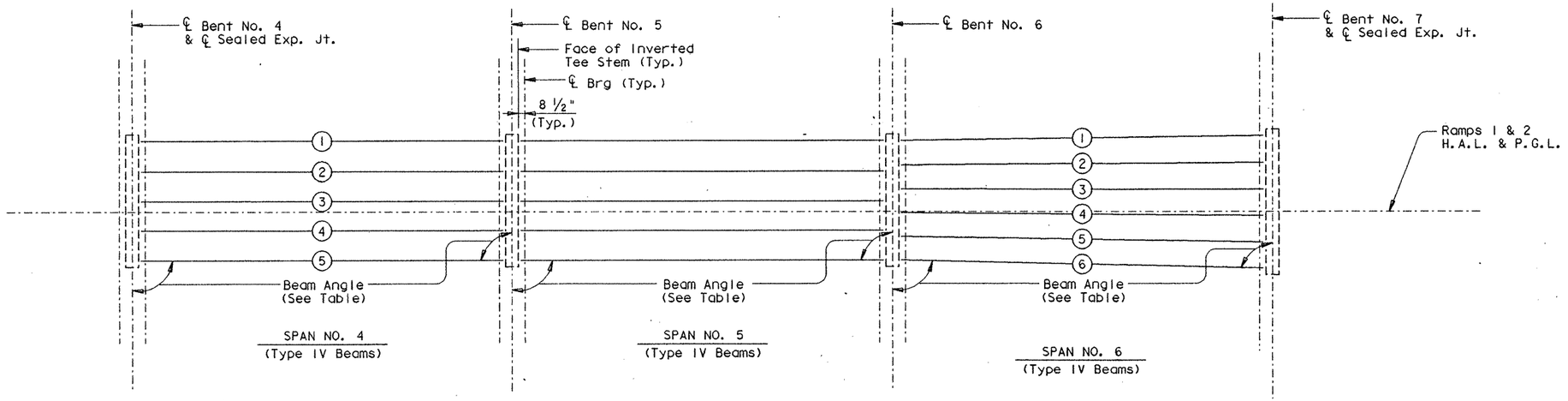

BEAM LAYOUT

BENT REPORT

BENT NO. 4 (S 85 7 18.00 E)
DISTANCE BETWEEN STATION LINE AND BEAM 1 20.000 L

		BEAM SPAC.	BEAM ANGLE D	M	S
SPAN 4	BEAM 1	0.000	90	0	0
	BEAM 2	8.500	90	0	0
	BEAM 3	8.500	90	0	0
	BEAM 4	8.500	90	0	0
	BEAM 5	8.500	90	0	0
	TOTAL	34.000			

BENT NO. 5 (S 85 7 18.00 E)
DISTANCE BETWEEN STATION LINE AND BEAM 1 20.000 L

		BEAM SPAC. (C.L. BENT)	BEAM ANGLE D	M	S
SPAN 4	BEAM 1	0.000	90	0	0
	BEAM 2	8.500	90	0	0
	BEAM 3	8.500	90	0	0
	BEAM 4	8.500	90	0	0
	BEAM 5	8.500	90	0	0
	TOTAL	34.000			
SPAN 5	BEAM 1	0.000	90	0	0
	BEAM 2	8.500	90	0	0
	BEAM 3	8.500	90	0	0
	BEAM 4	8.500	90	0	0
	BEAM 5	8.500	90	0	0
	TOTAL	34.000			

BENT REPORT

BENT NO. 6 (S 85 7 18.00 E)
DISTANCE BETWEEN STATION LINE AND BEAM 1 20.000 L

		BEAM SPAC. (C.L. BENT)	BEAM ANGLE D	M	S
SPAN 5	BEAM 1	0.000	90	0	0
	BEAM 2	8.500	90	0	0
	BEAM 3	8.500	90	0	0
	BEAM 4	8.500	90	0	0
	BEAM 5	8.500	90	0	0
	TOTAL	34.000			
SPAN 6	BEAM 1	0.000	89	14	29
	BEAM 2	6.800	89	38	45
	BEAM 3	6.800	89	56	58
	BEAM 4	6.800	89	32	41
	BEAM 5	6.800	89	8	25
	BEAM 6	6.800	88	44	9
	TOTAL	34.000			

BENT NO. 7 (S 85 7 18.00 E)
DISTANCE BETWEEN STATION LINE AND BEAM 1 21.457 L

		BEAM SPAC. (C.L. BENT)	BEAM ANGLE D	M	S
SPAN 6	BEAM 1	0.000	89	14	29
	BEAM 2	7.577	89	38	45
	BEAM 3	7.577	89	56	58
	BEAM 4	7.577	89	32	41
	BEAM 5	7.577	89	8	25
	BEAM 6	7.577	88	44	9
	TOTAL	37.884			

BEAM REPORT

BEAM REPORT, SPAN 4

	HORIZONTAL DISTANCE C-C BENT	C-C BRG.	TRUE DISTANCE BOT. BM. FLG.
BEAM 1	110.000	104.833	105.917
BEAM 2	110.000	104.833	105.917
BEAM 3	110.000	104.833	105.917
BEAM 4	110.000	104.833	105.917
BEAM 5	110.000	104.833	105.917

BEAM REPORT, SPAN 5

	HORIZONTAL DISTANCE C-C BENT	C-C BRG.	TRUE DISTANCE BOT. BM. FLG.
BEAM 1	110.000	104.833	105.917
BEAM 2	110.000	104.833	105.917
BEAM 3	110.000	104.833	105.917
BEAM 4	110.000	104.833	105.917
BEAM 5	110.000	104.833	105.917

BEAM REPORT, SPAN 6

	HORIZONTAL DISTANCE C-C BENT	C-C BRG.	TRUE DISTANCE BOT. BM. FLG.
BEAM 1	110.010	104.843	105.926
BEAM 2	110.002	104.835	105.919
BEAM 3	110.000	104.833	105.917
BEAM 4	110.003	104.837	105.921
BEAM 5	110.012	104.845	105.929
BEAM 6	110.027	104.859	105.943

HS 20 LOADING

STATE OF TEXAS
MARK J. BLOSCHOCK
52996
REGISTERED
PROFESSIONAL ENGINEER
9-18-91

STATE DEPARTMENT OF HIGHWAYS
AND PUBLIC TRANSPORTATION

BEAM LAYOUT
UNIT NO. 2, RAMPS 1&2

US 83/281 INTERCHANGE

D45350A1 ZFA2 [3551001]4379BLY01.DGN | PREPARED BY AND FOR USE OF TEXAS SDH&PT

ORIGINAL DRAWING DATE: JANUARY 1991	STATE DISTRICT	FEDERAL REGION	FEDERAL AID PROJECT	SHEET
DN.: LMW	21	6	NH 92C)M	183
CK.: KBA	COUNTY	CONTROL	SECTION	JOB	HIGHWAY
DW.: PSR	HIDALGO	0039	17	097	US 83/281
CK.: KBA					

REVISIONS

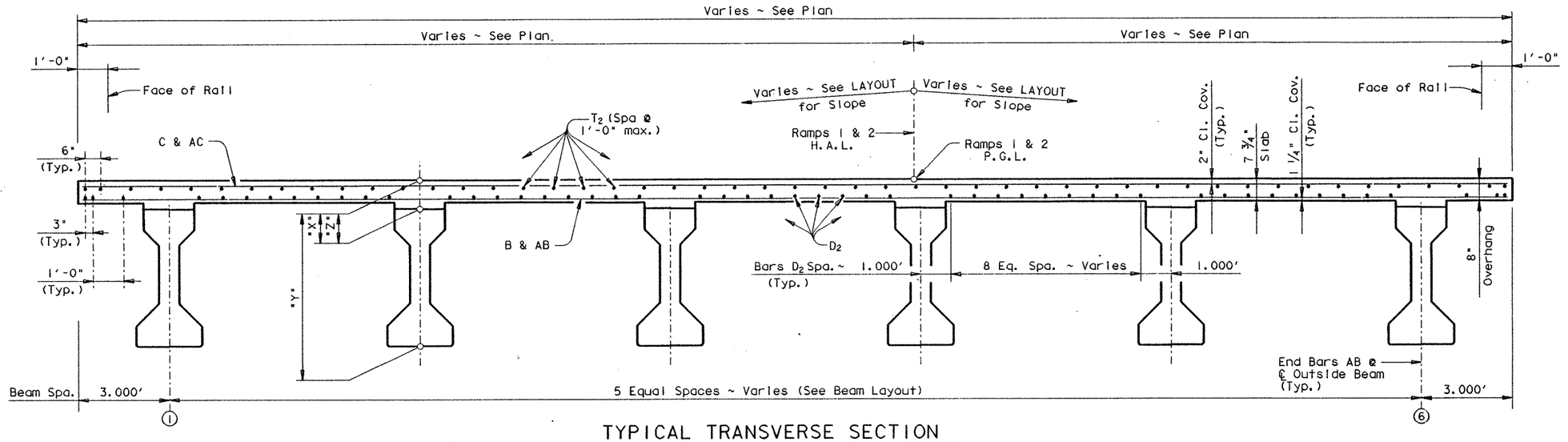

TYPICAL TRANSVERSE SECTION

(Showing Span No. 6)

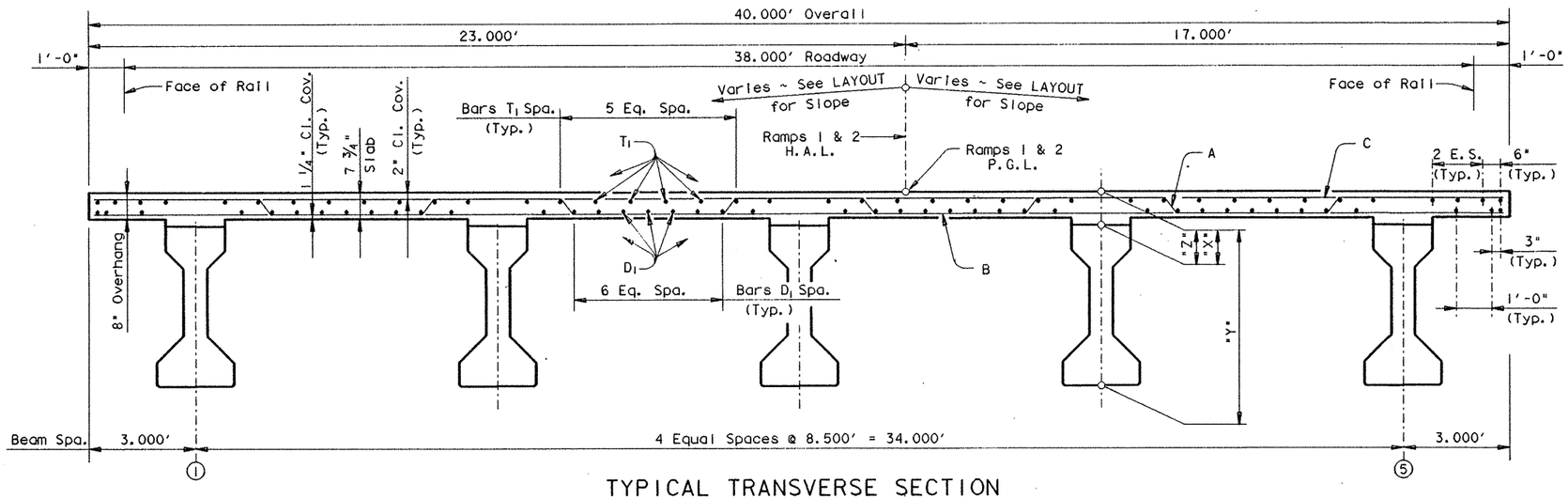

TYPICAL TRANSVERSE SECTION

(Showing Span Nos. 4 & 5)

TABLE OF SECTION DEPTHS			
Span	"X" at ℄ Brg.	"Y" at ℄ Brg.	"Z" at ℄ Span *
4	9 1/4"	5'-3 1/4"	8 1/2"
5	10"	5'-4"	8 1/4"
6	9 1/2"	5'-3 1/2"	8 1/4"

* Theoretical dimension

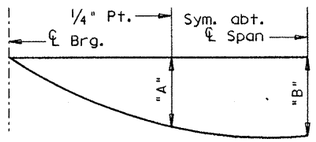

Span	"A"	"B"
#4	0.102'	0.143'
#5	0.102'	0.143'
#6	0.089'	0.125'

NOTE: Deflections shown are due to cast-in-place concrete only.

DEAD LOAD DEFLECTION DIAGRAM

(E_c = 5 X 10^6 psi)

TABLE OF ESTIMATED QUANTITIES

Bar	No.	Size	Length	Weight
A	264	# 5	40'-10"	11243
AB_{1-132}	132	# 5	36'-0"Av	4956
AC_{1-132}	132	# 5	41'-9"Av	5748
B_1	265	# 4	39'-9"	7037
B_{2-134}	133	# 4	41'-9"Av	3709
C_1	265	# 5	39'-9"	10987
C_{2-134}	133	# 5	41'-9"Av	5792
D_1	42	# 5	223'-11" ▲	9809
D_2	51	# 5	113'-3" ⬓	6024
K	78	# 4	6'-4"	330
L	82	# 4	3'-0"	164
M_1	15	# 5	37'-9"	591
M_2	3	# 5	41'-9"	131
T_1	40	# 4	223'-2" ◪	5963
T_2	46	# 4	113'-0" ◆	3472

Reinforcing Steel	LB #	75956
Prestr. Conc. Bm. ~ Ty. IV	LF #	1694.73

Span	Reinf. Conc. Slab ~ SF	Class "S" Conc. ~ CY # Diaf.	# Slab
# 4	4400	——	108.9
# 5	4400	——	109.1
# 6	4614	——	114.5
Total	13414	# 332.5	

For contractor's information only.

▲ Length shown includes 3 ~ 1'-5" min. laps.

◪ Length shown includes 3 ~ 1'-2" min. laps.

⬓ Length shown includes 1 ~ 1'-5" min. lap.

◆ Length shown includes 1 ~ 1'-2" min. lap.

Length shown is bottom flange length with adjustments made for beam slope.

GENERAL NOTES:

Designed according to A.A.S.H.T.O. 1989 Standard Specifications.

Design fc = 1200 p.s.i.

See GpC (SPL) sheet for details not shown.

For Drain Locations see Bridge Layout. For Drain Details see Bridge Drain Details Sheet.

HS 20 LOADING

STATE OF TEXAS
MARK J. BLOSCHOCK
52996
REGISTERED PROFESSIONAL ENGINEER
9-13-91

STATE DEPARTMENT OF HIGHWAYS AND PUBLIC TRANSPORTATION

UNIT NO. 2, RAMPS 1&2
330.00' PRESTRESSED CONCRETE BEAM UNIT
(110.00' - 110.00' - 110.00')
US 83/281 INTERCHANGE

D45350A: ZFA2: (35510014376PPB05.DGN | PREPARED BY AND FOR USE OF TEXAS SDH&PT

ORIGINAL DRAWING DATE: AUGUST 1990 | REVISIONS
DN.: LMW
CK.: KBA
DW.: PSR
CK.: LMW

STATE DISTRICT	FEDERAL REGION	FEDERAL AID PROJECT	SHEET
21	6	NH 92C)M	184

COUNTY	CONTROL	SECTION	JOB	HIGHWAY
HIDALGO	0039	17	097	US 83/281

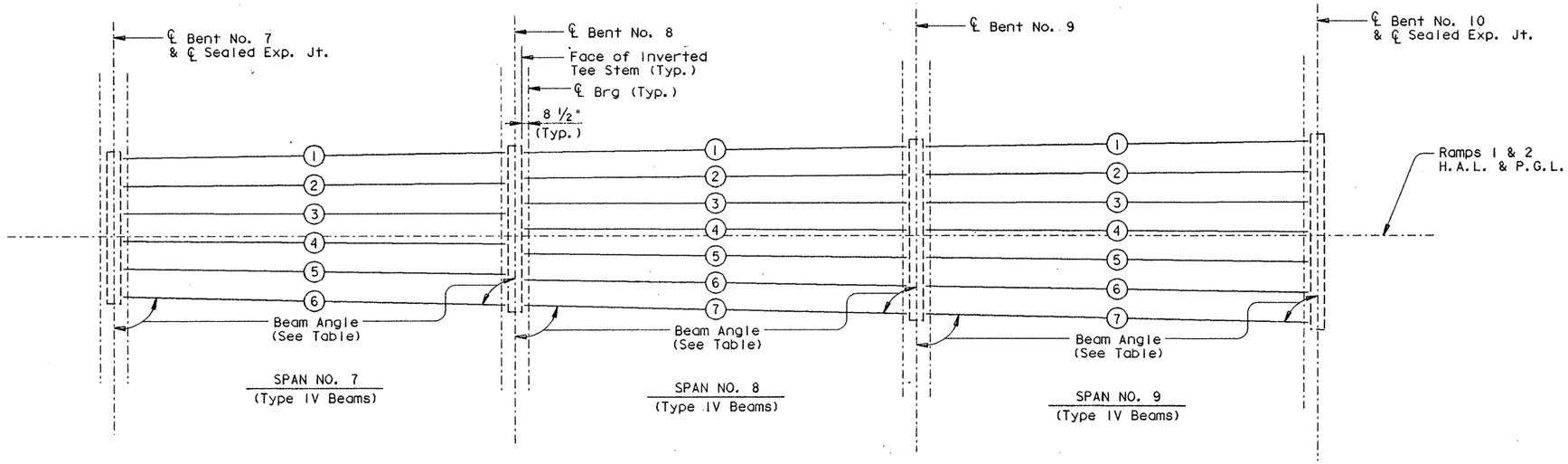

BEAM LAYOUT

BENT REPORT

BENT NO. 7 (S 85 7 18.00 E)
DISTANCE BETWEEN STATION LINE AND BEAM 1 21.457 L

		BEAM SPAC. (C.L. BENT)	BEAM ANGLE D M S
SPAN 7	BEAM 1	0.000	89 14 28
	BEAM 2	7.577	89 38 45
	BEAM 3	7.577	89 56 58
	BEAM 4	7.577	89 32 41
	BEAM 5	7.577	89 8 24
	BEAM 6	7.577	88 44 8
	TOTAL	37.884	

BENT NO. 8 (S 85 7 18.00 E)
DISTANCE BETWEEN STATION LINE AND BEAM 1 22.914 L

		BEAM SPAC. (C.L. BENT)	BEAM ANGLE D M S
SPAN 7	BEAM 1	0.000	89 14 28
	BEAM 2	8.354	89 38 45
	BEAM 3	8.354	89 56 58
	BEAM 4	8.354	89 32 41
	BEAM 5	8.354	89 8 24
	BEAM 6	8.354	88 44 8
	TOTAL	41.769	
SPAN 8	BEAM 1	0.000	89 14 28
	BEAM 2	6.962	89 34 42
	BEAM 3	6.962	89 54 56
	BEAM 4	6.962	89 44 49
	BEAM 5	6.962	89 24 35
	BEAM 6	6.962	89 4 21
	BEAM 7	6.962	88 44 8
	TOTAL	41.769	

BENT REPORT

BENT NO. 9 (S 85 7 18.00 E)
DISTANCE BETWEEN STATION LINE AND BEAM 1 24.371 L

		BEAM SPAC. (C.L. BENT)	BEAM ANGLE D M S
SPAN 8	BEAM 1	0.000	89 14 28
	BEAM 2	7.609	89 34 42
	BEAM 3	7.609	89 54 56
	BEAM 4	7.609	89 44 49
	BEAM 5	7.609	89 24 35
	BEAM 6	7.609	89 4 21
	BEAM 7	7.609	88 44 8
	TOTAL	45.654	
SPAN 9	BEAM 1	0.000	89 14 28
	BEAM 2	7.609	89 34 42
	BEAM 3	7.609	89 54 56
	BEAM 4	7.609	89 44 49
	BEAM 5	7.609	89 24 35
	BEAM 6	7.609	89 4 21
	BEAM 7	7.609	88 44 8
	TOTAL	45.654	

BENT NO. 10 (S 85 7 18.00 E)
DISTANCE BETWEEN STATION LINE AND BEAM 1 25.827 L

		BEAM SPAC. (C.L. BENT)	BEAM ANGLE D M S
SPAN 9	BEAM 1	0.000	89 14 28
	BEAM 2	8.257	89 34 42
	BEAM 3	8.257	89 54 56
	BEAM 4	8.257	89 44 49
	BEAM 5	8.257	89 24 35
	BEAM 6	8.257	89 4 21
	BEAM 7	8.257	88 44 8
	TOTAL	49.540	

BEAM REPORT

BEAM REPORT, SPAN 7

	HORIZONTAL DISTANCE C-C BENT	C-C BRG.	TRUE DISTANCE BOT. BM. FLG.
BEAM 1	110.010	104.843	105.926
BEAM 2	110.002	104.835	105.919
BEAM 3	110.000	104.833	105.917
BEAM 4	110.003	104.837	105.921
BEAM 5	110.012	104.845	105.929
BEAM 6	110.027	104.859	105.943

BEAM REPORT, SPAN 8

	HORIZONTAL DISTANCE C-C BENT	C-C BRG.	TRUE DISTANCE BOT. BM. FLG.
BEAM 1	110.010	104.843	105.926
BEAM 2	110.003	104.836	105.920
BEAM 3	110.000	104.833	105.917
BEAM 4	110.001	104.834	105.918
BEAM 5	110.006	104.839	105.923
BEAM 6	110.014	104.847	105.931
BEAM 7	110.027	104.859	105.943

BEAM REPORT, SPAN 9

	HORIZONTAL DISTANCE C-C BENT	C-C BRG.	TRUE DISTANCE BOT. BM. FLG.
BEAM 1	110.010	104.843	105.926
BEAM 2	110.003	104.836	105.920
BEAM 3	110.000	104.833	105.917
BEAM 4	110.001	104.834	105.918
BEAM 5	110.006	104.839	105.923
BEAM 6	110.014	104.847	105.931
BEAM 7	110.027	104.859	105.943

HS 20 LOADING

STATE OF TEXAS
MARK J. BLOSCHOCK
52996
REGISTERED
PROFESSIONAL ENGINEER
9-13-91

STATE DEPARTMENT OF HIGHWAYS
AND PUBLIC TRANSPORTATION

BEAM LAYOUT
UNIT NO. 3, RAMPS 1&2

US 83/281 INTERCHANGE

D45350A:1 ZFA2:[3551001]4379BLY01.DGN
ORIGINAL DRAWING DATE: JANUARY 1991
DN.: LMW CK.: KBA DW.: PSR CK.: KBA
REVISIONS

PREPARED BY AND FOR USE OF TEXAS SDH&PT

STATE DISTRICT	FEDERAL REGION	FEDERAL AID PROJECT	SHEET
21	6	NH 92 ( )M	185

COUNTY	CONTROL	SECTION	JOB	HIGHWAY
HIDALGO	0039	17	097	US 83/281

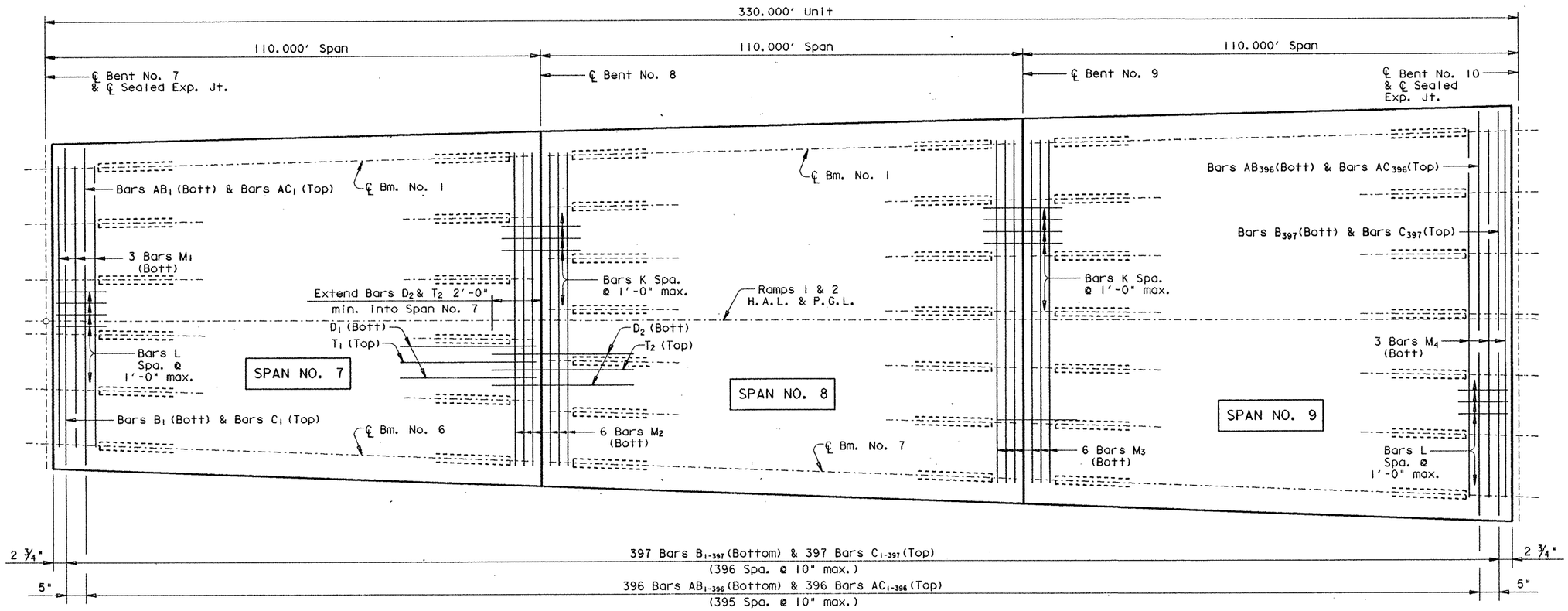

PLAN

(Showing Slab Reinforcing Only)

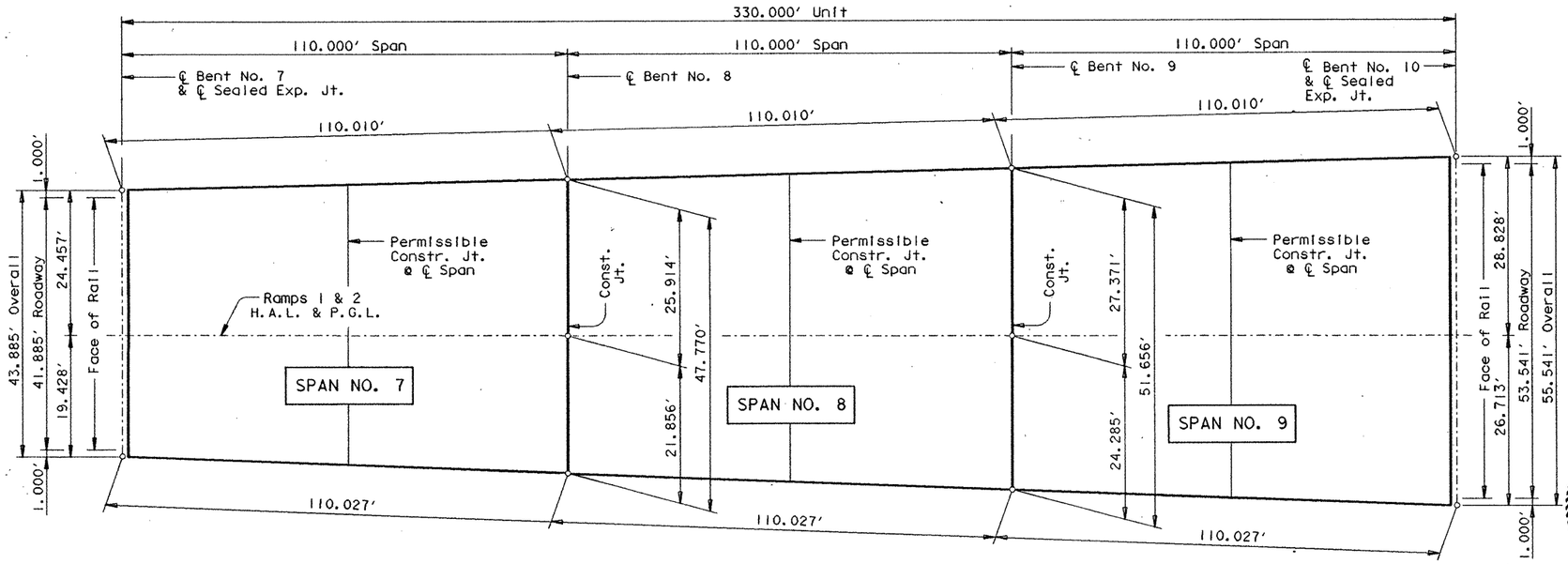

PLAN

(Showing Structural and Concrete Dimensions)

AB_1 = 37'-11" AB_{396} = 49'-6 ½" AB_{1-396} Av. = 43'-9"

AC_1 = 43'-8" AC_{396} = 55'-3 ½" AC_{1-396} Av. = 49'-6"

B_1 = 43'-8" B_{397} = 55'-3 ½" B_{1-397} Av. = 49'-6"

C_1 = 43'-8" C_{397} = 55'-3 ½" C_{1-397} Av. = 49'-6"

BARS AB, AC, B & C

HS 20 LOADING

Sheet 1 of 2

STATE DEPARTMENT OF HIGHWAYS AND PUBLIC TRANSPORTATION

UNIT NO. 3, RAMPS 1&2

330.00' PRESTRESSED CONCRETE BEAM UNIT

(110.00' - 110.00' - 110.00')

US 83/281 INTERCHANGE

STATE OF TEXAS
MARK J. BLOSCHOCK
52996
REGISTERED PROFESSIONAL ENGINEER
9-13-91

D45350A1 : ZFA2 : (355100)4376PPB06.DGN — PREPARED BY AND FOR USE OF TEXAS SDH&PT

ORIGINAL DRAWING DATE: AUGUST 1990

REVISIONS

DR.: LMW
CK.: KBA
DR.: PSR
CK.: LMW

STATE DISTRICT	FEDERAL REGION	FEDERAL AID PROJECT	SHEET
21	6	NH 92C)M	186

COUNTY	CONTROL	SECTION	JOB	HIGHWAY
HIDALGO	0039	17	097	US 83/281

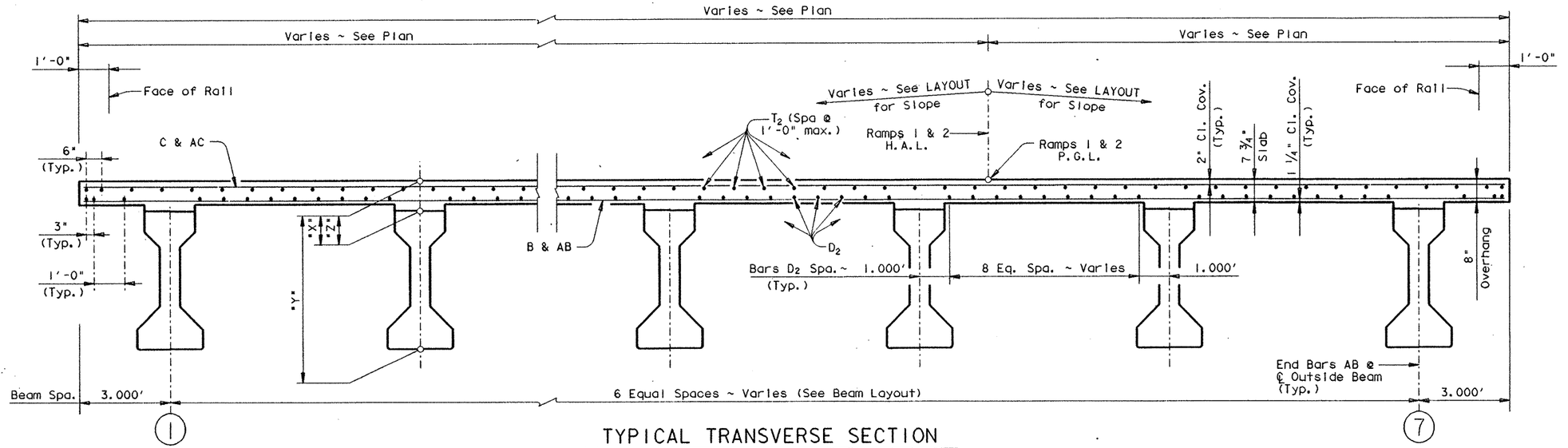

TYPICAL TRANSVERSE SECTION

(Showing Span Nos. 8 & 9)

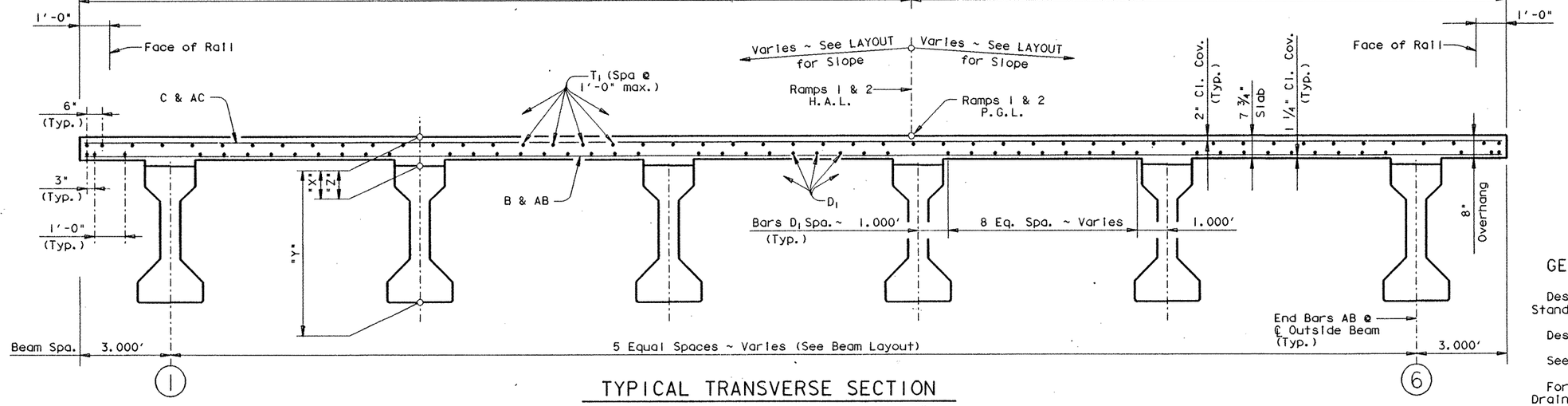

TYPICAL TRANSVERSE SECTION

(Showing Span No. 7)

TABLE OF SECTION DEPTHS

Span	"X" at ℄ Brg.	"Y" at ℄ Brg.	"Z" at ℄ Span *
7	9 3/4"	5'-3 3/4"	8 1/8"
8	9 1/4"	5'-3 1/4"	8"
9	9 3/4"	5'-3 3/4"	8 1/8"

* Theoretical dimension

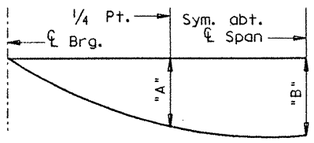

Span	"A"	"B"
#7	0.098'	0.138'
#8	0.090'	0.126'
#9	0.097'	0.137'

NOTE: Deflections shown are due to cast-in-place concrete only.

DEAD LOAD DEFLECTION DIAGRAM

(E_c = 5 X 10^6 psi)

TABLE OF ESTIMATED QUANTITIES

Bar	No.	Size	Length	Weight
AB_{1-396}	396	# 5	43'-9"Av	18070
AC_{1-396}	396	# 5	49'-6"Av	20445
B_{1-397}	397	# 4	49'-6"Av	13127
C_{1-397}	397	# 5	49'-6"Av	20497
D_1	51	# 5	111'-1" ▬	5909
D_2	60	# 5	226'-1" ▲	14148
K	98	# 4	6'-4"	415
L	98	# 4	3'-0"	196
M_1	3	# 5	41'-9"	131
M_2	6	# 5	45'-9"	286
M_3	6	# 5	49'-9"	311
M_4	3	# 5	53'-9"	168
T_1	50	# 4	110'-10" ◆	3702
T_2	58	# 4	225'-4" ◩	8730

Reinforcing Steel	Lb	106135 #
Prestr. Conc. Bm. ~ Ty. IV	LF	2118.51 #

Span	Reinf. Conc. Slab ~ SF	Class "S" Conc. ~ CY	
		# Diaf.	# Slab
# 7	5041	——	124.7
# 8	5468	——	134.4
# 9	5896	——	145.6
Total	16405	#	404.7

For contractor's information only.

▲ Length shown includes 3 ~ 1'-5 " min. laps.

◩ Length shown includes 3 ~ 1'-2 " min. laps.

▬ Length shown includes 1 ~ 1'-5 " min. lap.

◆ Length shown includes 1 ~ 1'-2 " min. lap.

Length shown is bottom flange length with adjustments made for beam slope.

GENERAL NOTES:

Designed according to A.A.S.H.T.O. 1989 Standard Specifications.

Design fc = 1200 p.s.i.

See GpC (SPL) sheet for details not shown.

For Drain Locations see Bridge Layout. For Drain Details see Bridge Drain Details Sheet.

HS 20 LOADING

Sheet 2 of 2

STATE OF TEXAS
MARK J. BLOSCHOCK
52996
REGISTERED PROFESSIONAL ENGINEER

9-13-91

STATE DEPARTMENT OF HIGHWAYS AND PUBLIC TRANSPORTATION

UNIT NO. 3, RAMPS 1&2
330.00' PRESTRESSED CONCRETE BEAM UNIT
(110.00' - 110.00' - 110.00')
US 83/281 INTERCHANGE

D45350A1 : ZFA2 : (355100)4376PPB06.DGN	PREPARED BY AND FOR USE OF TEXAS SDH&PT						
ORIGINAL DRAWING DATE: AUGUST 1990	STATE DISTRICT	FEDERAL REGION	FEDERAL AID PROJECT				SHEET
DN.: LMW REVISIONS	21	6	NH 92( )M				187
CK.: KBA	COUNTY			CONTROL	SECTION	JOB	HIGHWAY
DW.: PSR	HIDALGO			0039	17	097	US 83/281
CK.: LMW							

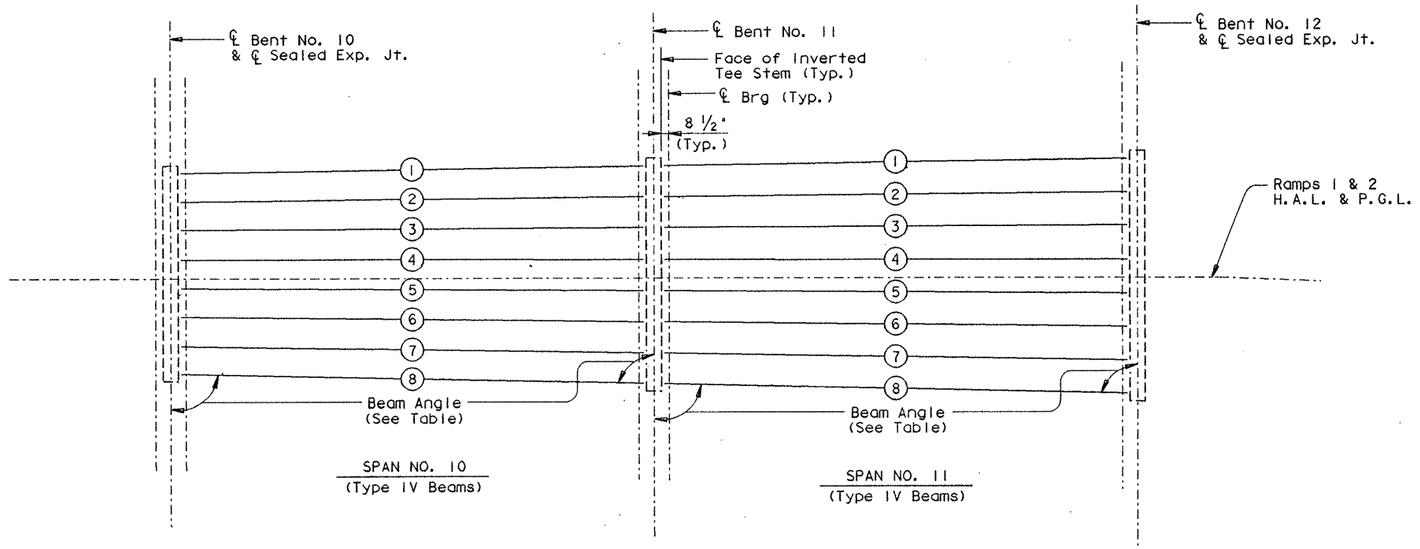

See Plate Girder Unit Sheets for Steel Framing Plans (Units 5 and 6)

BEAM LAYOUT

BENT REPORT

BENT NO. 10 (S 85 7 18.00 E)
DISTANCE BETWEEN STATION LINE AND BEAM 1 25.827 L

		BEAM SPAC. (C.L. BENT)	BEAM ANGLE D M S
SPAN10	BEAM 1	0.000	89 14 28
	BEAM 2	7.077	89 31 49
	BEAM 3	7.077	89 49 10
	BEAM 4	7.077	89 53 30
	BEAM 5	7.077	89 36 9
	BEAM 6	7.077	89 18 48
	BEAM 7	7.077	89 1 28
	BEAM 8	7.077	88 44 8
	TOTAL	49.540	

BENT NO. 11 (S 85 7 18.00 E)
DISTANCE BETWEEN STATION LINE AND BEAM 1 27.414 L

		BEAM SPAC. (C.L. BENT)	BEAM ANGLE D M S
SPAN10	BEAM 1	0.000	89 14 28
	BEAM 2	7.681	89 31 49
	BEAM 3	7.681	89 49 10
	BEAM 4	7.681	89 53 30
	BEAM 5	7.681	89 36 9
	BEAM 6	7.681	89 18 48
	BEAM 7	7.681	89 1 28
	BEAM 8	7.681	88 44 8
	TOTAL	53.769	

BENT REPORT

BENT NO. 11 (S 85 7 18.00 E)
DISTANCE BETWEEN STATION LINE AND BEAM 1 27.414 L

		BEAM SPAC. (C.L. BENT)	BEAM ANGLE D M S
SPAN11	BEAM 1	0.000	89 14 28
	BEAM 2	7.681	89 31 49
	BEAM 3	7.681	89 49 10
	BEAM 4	7.681	89 53 30
	BEAM 5	7.681	89 36 9
	BEAM 6	7.681	89 18 48
	BEAM 7	7.681	89 1 28
	BEAM 8	7.681	88 44 8
	TOTAL	53.769	

BENT NO. 12 (S 85 7 18.00 E)
DISTANCE BETWEEN STATION LINE AND BEAM 1 29.000 L

		BEAM SPAC. (C.L. BENT)	BEAM ANGLE D M S
SPAN11	BEAM 1	0.000	89 14 28
	BEAM 2	8.286	89 31 49
	BEAM 3	8.286	89 49 10
	BEAM 4	8.286	89 53 30
	BEAM 5	8.286	89 36 9
	BEAM 6	8.286	89 18 48
	BEAM 7	8.286	89 1 28
	BEAM 8	8.286	88 44 8
	TOTAL	57.999	

BEAM REPORT

BEAM REPORT, SPAN10

	HORIZONTAL DISTANCE C-C BENT	C-C BRG.	TRUE DISTANCE BOT. BM. FLG.
BEAM 1	119.766	114.598	115.682
BEAM 2	119.759	114.592	115.676
BEAM 3	119.756	114.589	115.673
BEAM 4	119.755	114.589	115.673
BEAM 5	119.758	114.591	115.675
BEAM 6	119.764	114.597	115.680
BEAM 7	119.772	114.605	115.689
BEAM 8	119.784	114.616	115.700

BEAM REPORT, SPAN11

	HORIZONTAL DISTANCE C-C BENT	C-C BRG.	TRUE DISTANCE BOT. BM. FLG.
BEAM 1	119.766	114.598	115.701
BEAM 2	119.759	114.592	115.687
BEAM 3	119.756	114.589	115.678
BEAM 4	119.755	114.589	115.674
BEAM 5	119.758	114.591	115.675
BEAM 6	119.764	114.597	115.680
BEAM 7	119.772	114.605	115.689
BEAM 8	119.784	114.616	115.701

HS 20 LOADING

STATE OF TEXAS
MARK J. BLOSCHOCK
52996
REGISTERED
PROFESSIONAL ENGINEER
9-13-91

STATE DEPARTMENT OF HIGHWAYS AND PUBLIC TRANSPORTATION

BEAM LAYOUT UNIT NO. 4, RAMPS 1&2

US 83/281 INTERCHANGE

D4535OA1 1 ZFA2 1 (355100)4379BLY01.DGN	PREPARED BY AND FOR USE OF TEXAS SDH&PT					
ORIGINAL DRAWING DATE: JANUARY 1991	STATE DISTRICT	FEDERAL REGION	FEDERAL AID PROJECT #			SHEET
DR.: LMW	REVISIONS	21	6	NH 92 C)M		188
CK.: KBA		COUNTY		CONTROL	SECTION	JOB	HIGHWAY
DW.: PSR		HIDALGO		0039	17	097	US 83/281
CK.: KBA							

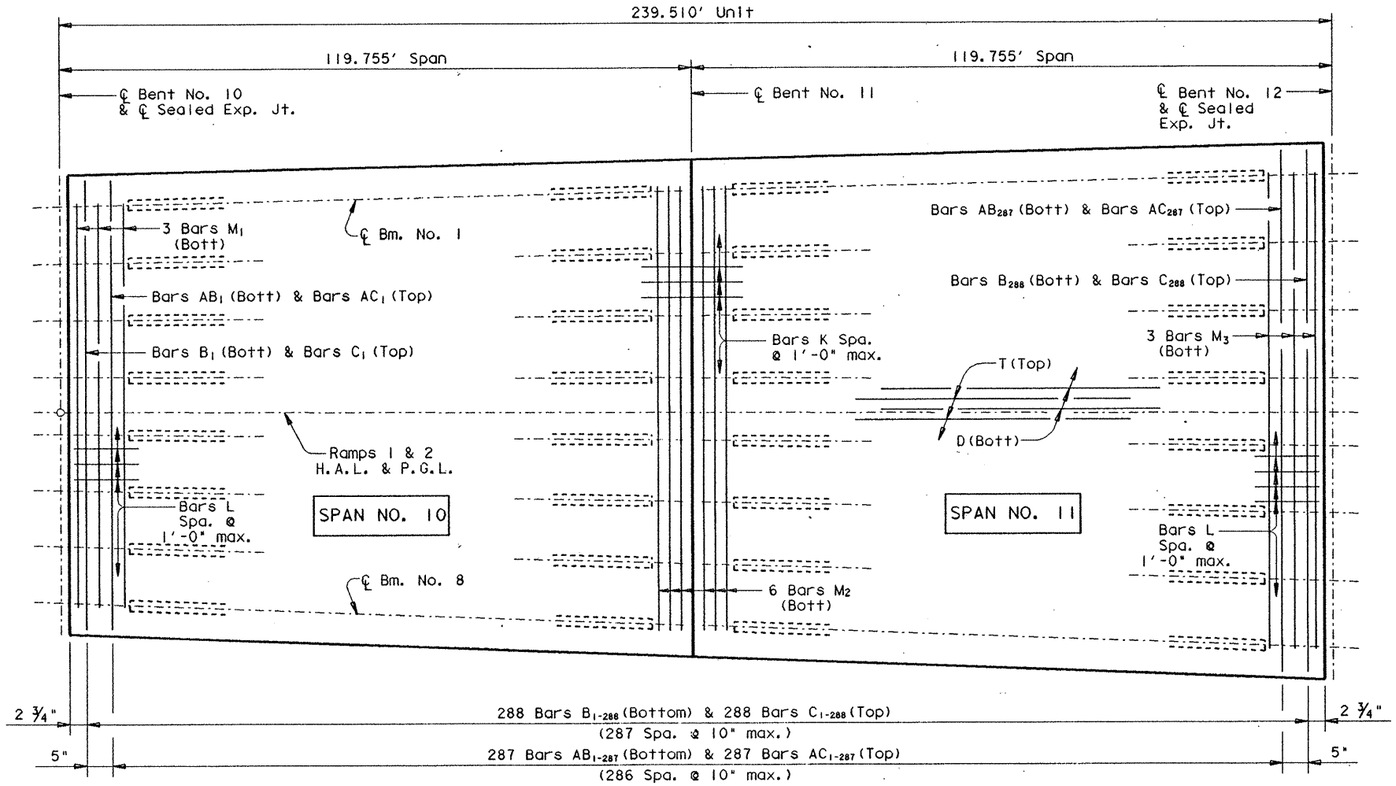

PLAN

(Showing Slab Reinforcing Only)

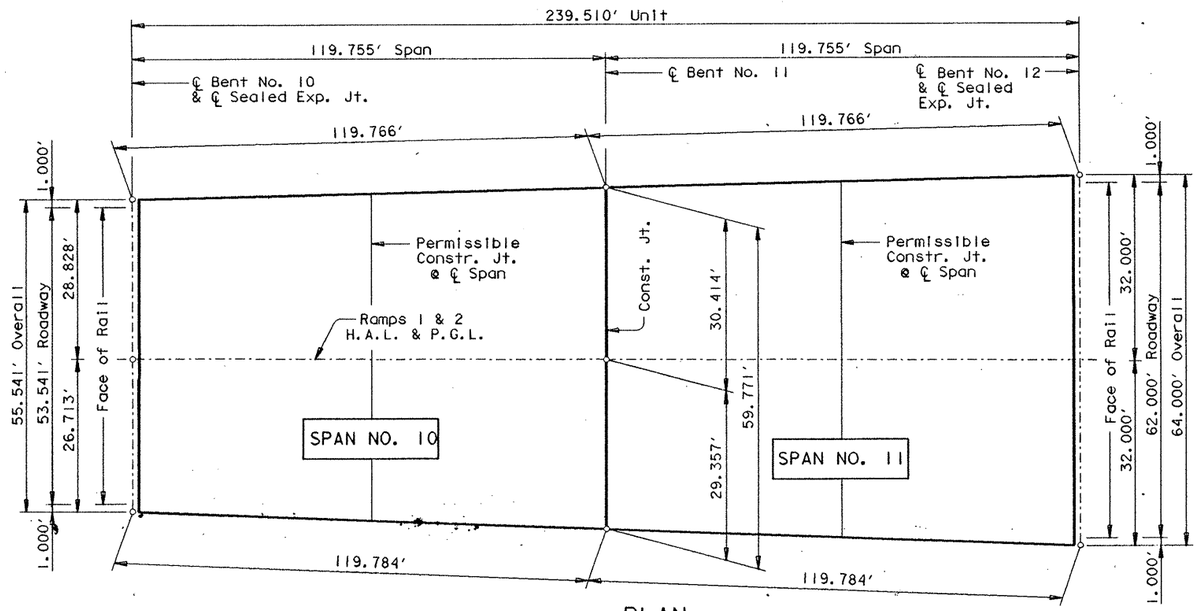

PLAN

(Showing Structural and Concrete Dimensions)

AB_1 = 49'-7" AB_{287} = 58'-0" AB_{1-287} Av. = 53'-10"

AC_1 = 55'-3" AC_{161} = 60'-0" AC_{1-161} Av. = 57'-8"

B_1 = 55'-3" B_{161} = 60'-0" B_{1-161} Av. = 57'-8"

C_1 = 55'-3" C_{161} = 60'-0" C_{1-161} Av. = 57'-8"

Bars AC & C	1'-5" min. lap
Bars B	1'-2" min. lap

AC_{162} = 61'-5" AC_{287} = 65'-2" $AC_{162-287}$ Av. = 63'-4"

B_{162} = 61'-2" B_{288} = 65'-0" $AC_{162-288}$ Av. = 63'-0"

C_{162} = 61'-5" C_{288} = 65'-2" $C_{162-288}$ Av. = 63'-4"

BARS AB, AC, B & C

HS 20 LOADING

Sheet 1 of 2

STATE DEPARTMENT OF HIGHWAYS AND PUBLIC TRANSPORTATION

UNIT NO. 4, RAMPS 1&2

239.51' PRESTRESSED CONCRETE BEAM UNIT (119.76' - 119.76')

US 83/281 INTERCHANGE

STATE OF TEXAS
MARK J. BLOSCHOCK
52996
REGISTERED PROFESSIONAL ENGINEER
9-13-91

D45350A: ZFA2: (355100)4376PPB07.DGN	PREPARED BY AND FOR USE OF TEXAS SDH&PT						
ORIGINAL DRAWING DATE: AUGUST 1990	STATE DISTRICT	FEDERAL REGION	FEDERAL AID PROJECT #				SHEET
DR.: LMW REVISIONS	21	6	NH 92 C)M				189
CK.: KBA	COUNTY			CONTROL	SECTION	JOB	HIGHWAY
DR.: PSR	HIDALGO			0039	17	097	US 83/281
CK.: LMW KBA							

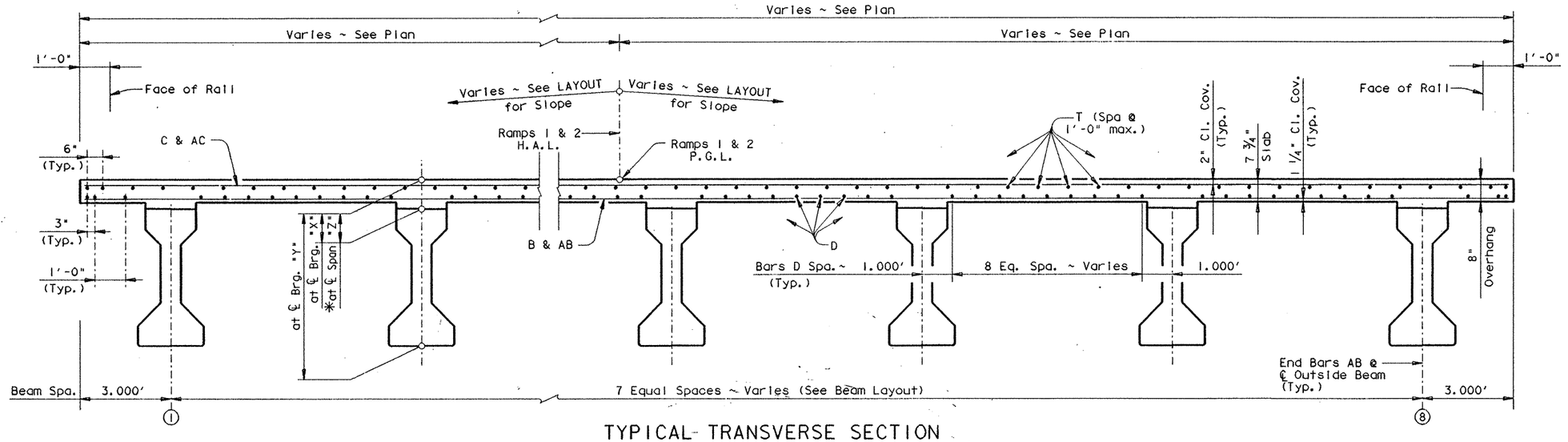

TYPICAL- TRANSVERSE SECTION

TABLE OF ESTIMATED QUANTITIES

Bar	No.	Size	Length	Weight
AB_{1-287}	287	#5	53'-10"Av	16115
AC_{1-161}	161	#5	57'- 8"Av	9684
$AC_{162-287}$	126	#5	63'- 4"Av ◆	8323
B_{1-161}	161	#4	57'- 8"Av	6202
$B_{162-288}$	127	#4	63'- 0"Av ▬	5345
C_{1-161}	161	#5	57'- 8"Av	9684
$C_{162-288}$	127	#5	63'- 4"Av ◆	8389
D	69	#5	244'-11" ▲	17626
K	59	#4	6'- 4"	250
L	118	#4	3'- 0"	236
M_1	3	#5	53'- 9"	168
M_2	6	#5	57'- 9"	361
M_3	3	#5	63'- 2"	198
T	66	#4	243'-11" ◩	10754

Reinforcing Steel	Lb #	93395
Prestr. Conc. Bm. ~ Ty. IV	LF ⊕	1850.93

Span	Reinf. Conc. Slab ~ SF	Class "S" Conc. ~ CY # Diaf.	# Slab
# 10	6905	——	171.7
# 11	7411	——	182.6
Total	14316	# 354.3	

For contractor's information only.

▲ Length shown includes 4 ~ 1'-5 " min. laps.

◩ Length shown includes 4 ~ 1'-2 " min. laps.

◆ Length shown includes 1 ~ 1'-5 " min. laps.

▬ Length shown includes 1 ~ 1'-2 " min. laps.

⊕ Length shown is bottom flange length with adjustments made for beam slope.

TABLE OF SECTION DEPTHS

Span	"X" at ℄ Brg.	"Y" at ℄ Brg.	"Z" at ℄ Span *
#10	10"	5'-4"	8 1/4"
#11	8"	5'-2"	9 5/8"

* Theoretical dimension

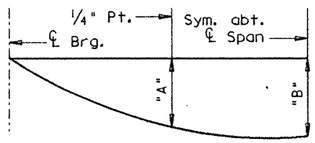

Span	"A"	"B"
#10	0.129'	0.181'
#11	0.140'	0.196'

NOTE: Deflections shown are due to cast-in-place concrete only.

DEAD LOAD DEFLECTION DIAGRAM

(E_c = 5 X 10^6 psi)

GENERAL NOTES:

Designed according to A.A.S.H.T.O. 1989 Standard Specifications.

Design fc = 1200 p.s.i.

See GpC (SPL) sheet for details not shown.

For Drain Locations see Bridge Layout. For Drain Details see Bridge Drain Details Sheet.

HS 20 LOADING

Sheet 2 of 2

STATE OF TEXAS
MARK J. BLOSCHOCK
52996
REGISTERED PROFESSIONAL ENGINEER
9-13-91

STATE DEPARTMENT OF HIGHWAYS AND PUBLIC TRANSPORTATION

UNIT NO. 4, RAMPS 1&2

239.51' PRESTRESSED CONCRETE BEAM UNIT (119.76' - 119.76')

US 83/281 INTERCHANGE

045350A1 ZFA2 [3551001437 6PPB07.DGN	PREPARED BY AND FOR USE OF TEXAS SDH&PT						
ORIGINAL DRAWING DATE: AUGUST 1990	STATE DISTRICT	FEDERAL REGION	FEDERAL AID PROJECT				SHEET
DR.:- LMW REVISIONS	21	6	NH 92C 2M				190
CK.:- KBA	COUNTY			CONTROL	SECTION	JOB	HIGHWAY
DW.:- PSR	HIDALGO			0039	17	097	US 83/281
CK.:- LMW KBA							

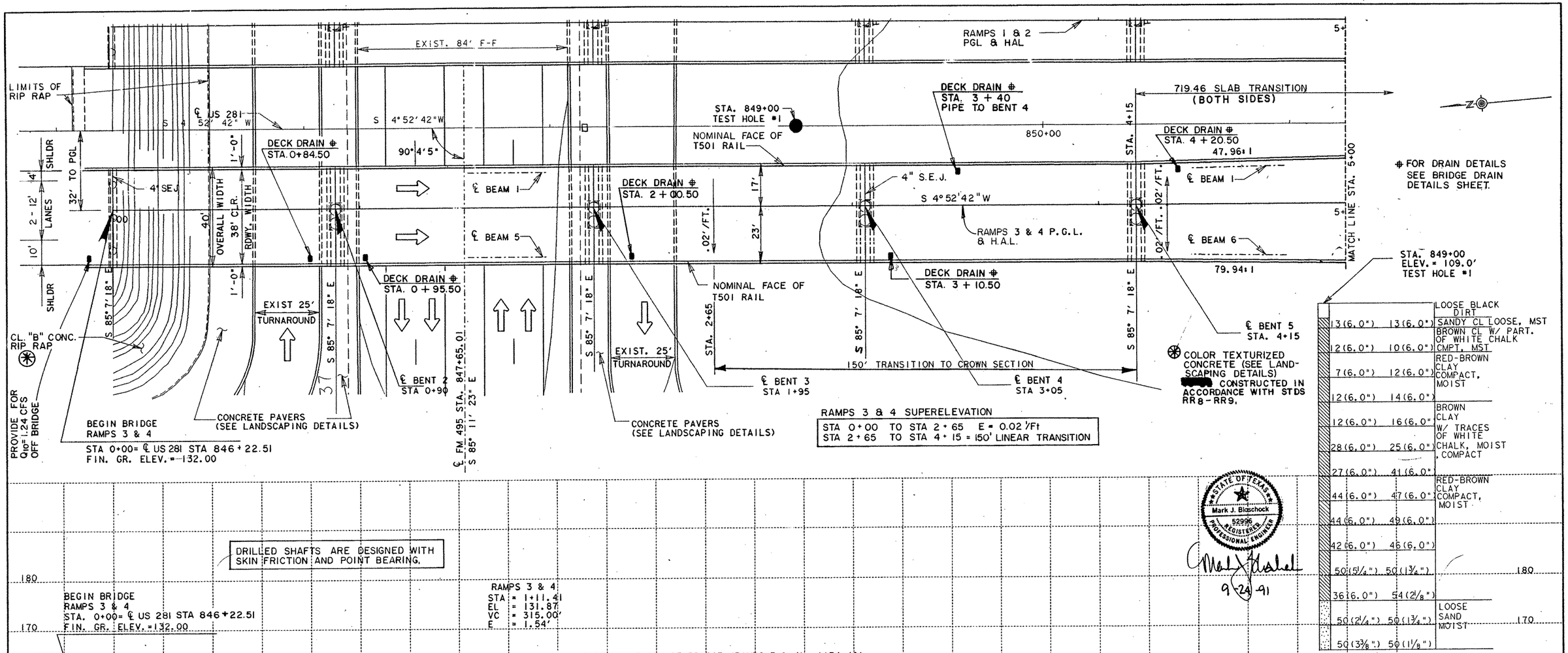

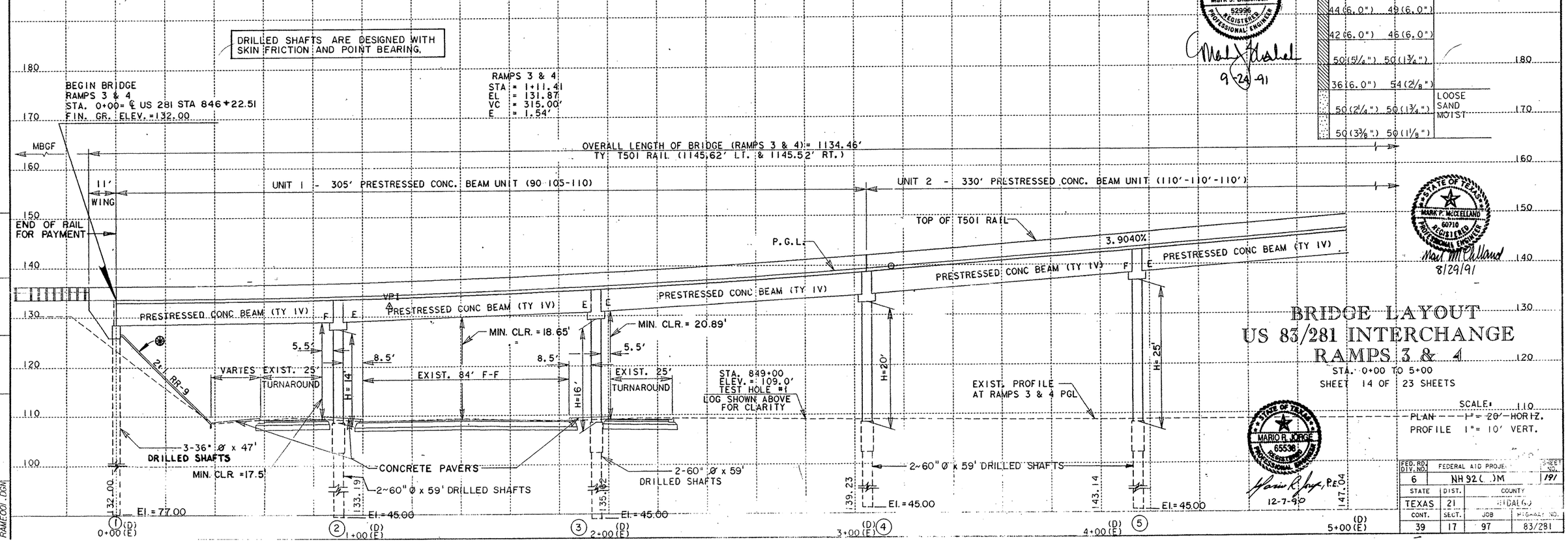

BRIDGE LAYOUT
US 83/281 INTERCHANGE
RAMPS 3 & 4

STA. 0+00 TO 5+00
SHEET 14 OF 23 SHEETS

SCALE: 1" = 20' HORIZ.
PROFILE 1" = 10' VERT.

STATE OF TEXAS — MARK P. McCLELLAND 60710 REGISTERED PROFESSIONAL ENGINEER
8/29/91

STATE OF TEXAS — MARIO R. JORGE 65536 REGISTERED PROFESSIONAL ENGINEER
12-7-90

FED. RD. DIV. NO.	FEDERAL AID PROJ.		SHEET NO.
6	NH 92( )M		191
STATE	DIST.	COUNTY	
TEXAS	21	HIDALGO	
CONT.	SECT.	JOB	HIGHWAY NO.
39	17	97	83/281

FILE NAME	REFERENCE FILE	NAMED VIEW			PRF FILE
[325116] RAMPS001.DGN	NEWINT.DGN	REF1		I-281, 30-41	REI. PRF
	NEWINT2.DGN	REF2		I-69	

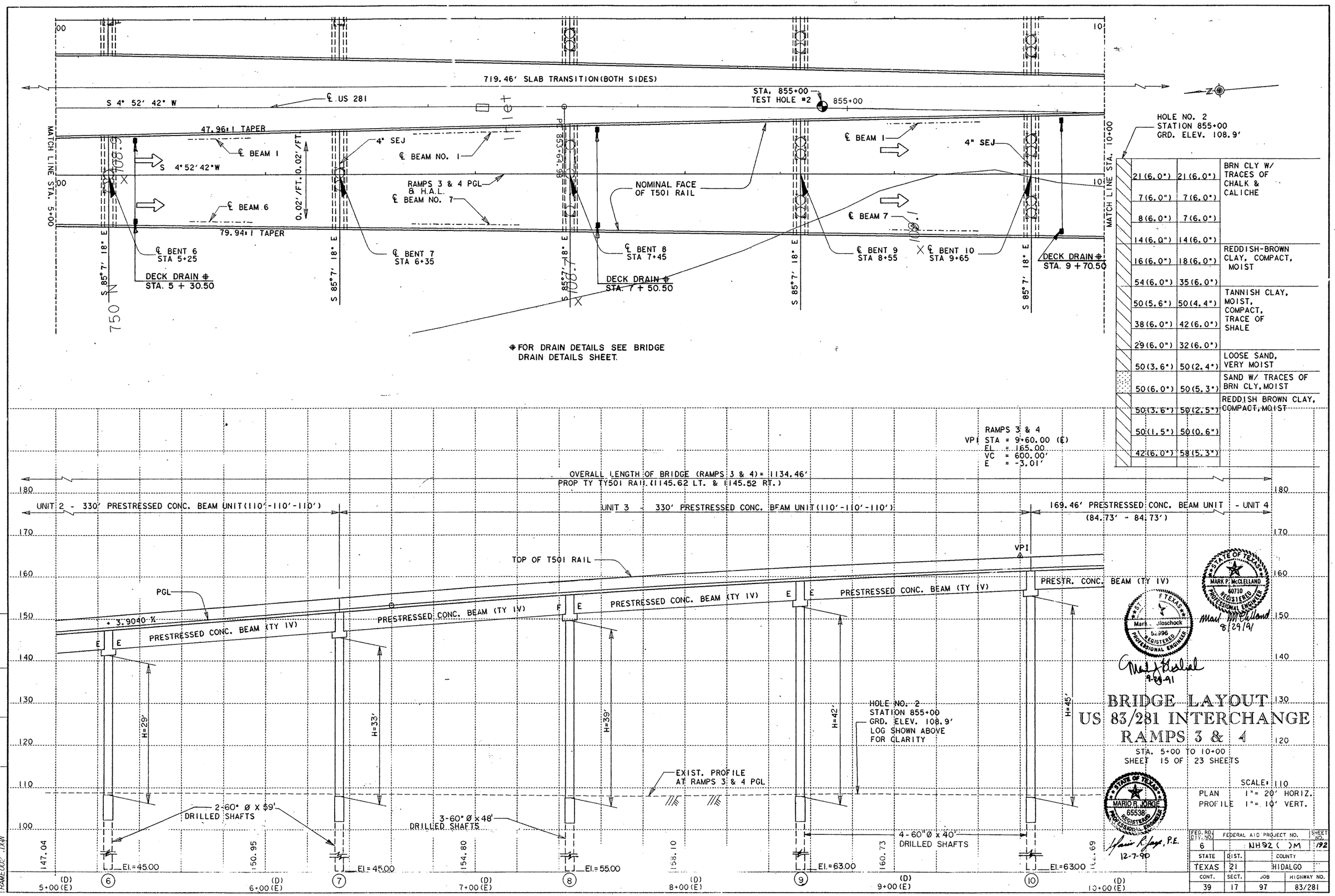

BRIDGE LAYOUT
US 83/281 INTERCHANGE
RAMPS 3 & 4

STA. 5+00 TO 10+00
SHEET 15 OF 23 SHEETS

SCALE:
PLAN 1" = 20' HORIZ.
PROFILE 1" = 10' VERT.

FED. RD. DIV. NO.	FEDERAL AID PROJECT NO.	SHEET NO.
6	NH92 ( )M	192

STATE	DIST.	COUNTY
TEXAS	21	HIDALGO

CONT.	SECT.	JOB	HIGHWAY NO.
39	17	97	83/281

FILL NAME	REFERENCE FILE	NAMED VIEW	LEVELS	PRF FILE
[325116]	NEWINT2.DGN	REF2	1-62	RE2 . PRF
RAME002 .DGN	NEWINT.DGN	REF1	1-28, 30-41	

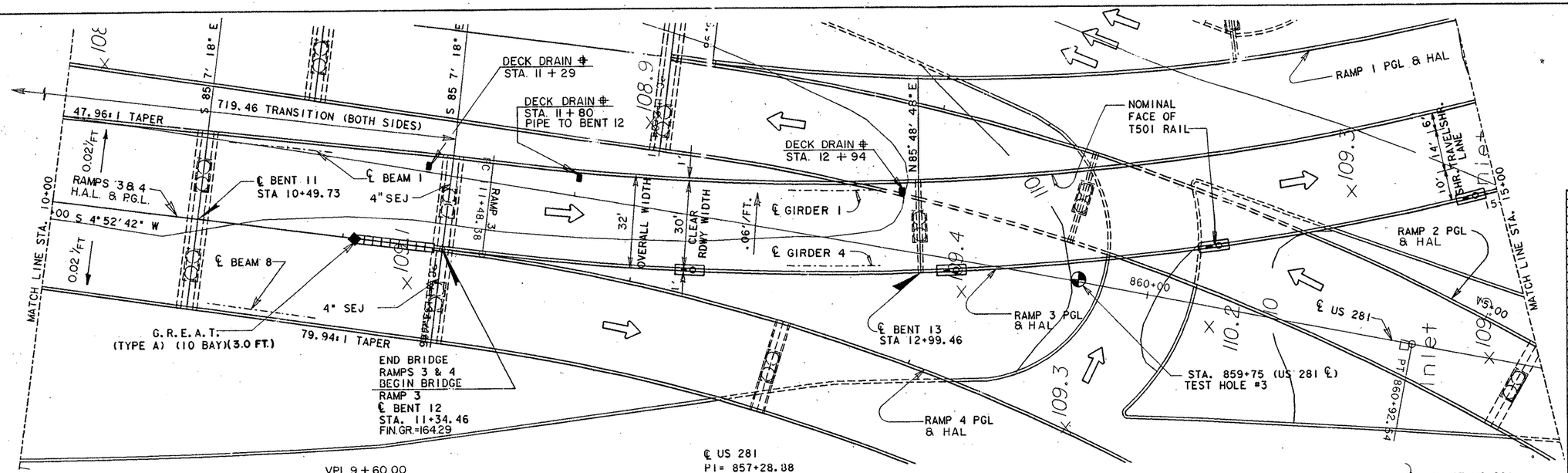

⊕ FOR DRAIN DETAILS SEE BRIDGE DRAIN DETAILS SHEET.

VPI 9+60.00
Elev. = 165.00
VC = 600.00
E = −3.0054
G in = +3.9041 %
Gout = −0.1031 %

℄ US 281
PI= 857+28.38
Δ = 3°38' 16.08"
D = 0°30' 00"
R = 11459.16'
L = 727.56'
T = 363.90'

RAMP 3 SUPERELEVATION

STA. 10+48.38 TO STA. 11+98.38=150' TRANSITION
STA. 11+98.38 TO STA. 25+38.55=0.06'/FT.
STA. 25+38.55 TO STA. 26+88.55=150' TRANSITION
TYPE 3 TRANSITION

DELINEATORS & OBJECT MARKERS
TRAFF BARR. DELIN. TY (D-SW) (B) . . . 4
OBJECT MARKER (OM-1R) (B) 1

TEST HOLE #3
STA. 859+75
ELEV. 108.9

11(6.0")	9 (6.0")	BRWN CLY, HARD, MOIST
9(6.0")	11(6.0")	
12(6.0")	12(6.0")	BRN CLY, W/ TRACES OF CHK SUBS
13(6.0")	14(6.0")	
13(6.0")	14(6.0")	REDDISH-BROWN CLAY, MOIST, COMPACT
31(6.0")	36(6.0")	LT. BRWN CLY, MOIST, COMPACT
23(6.0")	26(6.0")	
39(6.0")	54(6.0")	BROWN CLAY W/ TRACES GREEN & WHITE CHALK
28(6.0")	32(6.0")	
~~48(6.0")~~	~~52(5.3")~~	SAND & CLAY SOFT, MOIST
50(2.3")	50(1.8")	
50(1.5")	50(0.8")	
50(1.9")	50(1.3")	LOOSE SAND, VERY MOIST
32(6.0")	58(5.3")	

DRILLED SHAFTS ARE DESIGNED WITH SKIN FRICTION AND POINT BEARING.

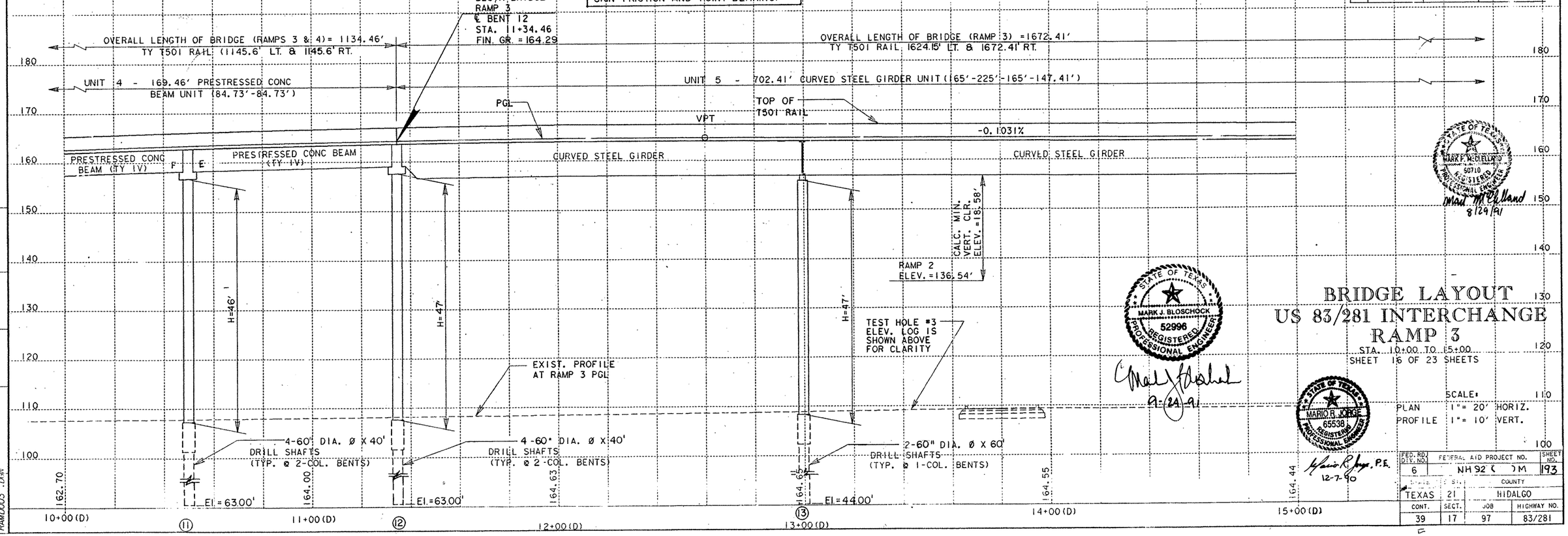

STATE OF TEXAS
MARK P. McCLELLAND
50710
LICENSED
PROFESSIONAL ENGINEER
Mark McClelland
8/29/91

STATE OF TEXAS
MARK J. BLOSCHOCK
52996
REGISTERED
PROFESSIONAL ENGINEER
9-24-91

STATE OF TEXAS
MARIO R. JORGE
65538
REGISTERED
PROFESSIONAL ENGINEER
12-7-90

BRIDGE LAYOUT
US 83/281 INTERCHANGE
RAMP 3

STA. 10+00 TO 15+00
SHEET 16 OF 23 SHEETS

SCALE:
PLAN 1"= 20' HORIZ.
PROFILE 1"= 10' VERT.

FED. RD. DIV. NO.	FEDERAL AID PROJECT NO.		SHEET NO.
6	NH 92 ( )M		193
STATE	DIST.	COUNTY	
TEXAS	21	HIDALGO	
CONT.	SECT.	JOB	HIGHWAY NO.
39	17	97	83/281

DATE REVISED: 5/02/90

FILE NAME	REFERENCE FILE	NAMED VIEW	LAYERS	PRF FILE
[325116]	NEWINT.DGN	REF1	1-28, 30-41	RD3 . PRF
RAMD003 .DGN	NEWINT2.DGN	REF2	1-62	

SUMMARY OF ESTIMATED QUANTITIES

ITEM / DESCRIPTION	Slurry Displacement Drilled Shafts		CLASS "C" CONCRETE		REINFORCED CONCRETE SLAB	PRESTRESSED CONCRETE BEAMS	SEALED EXPANSION JOINT	RAILING	CONCRETE SURFACE TREATMENT	Item 471 Frame & Grate (Br. Drain)					
	36" ϕ	60" ϕ	ABUTMENT	BENT		TY. IV	4"	TY. T501							
	L.F.	L.F.	C.Y.	C.Y.	S.F.	L.F.	L.F.	L.F.	S.Y.	Ea.					
I ~ ABUTMENT	141		24.4				38	22.0							
II ~ INTERIOR BENTS		1492		1951.4											
UNIT 1 ~ 305.00' PRESTR. CONC. BM UNIT					12200	1473.63	38	610.0	1260						
UNIT 2 ~ 330.00' PRESTR. CONC. BM UNIT					14007	1802.02	46	660.1	1452						
UNIT 3 ~ 330.00' PRESTR. CONC. BM UNIT					17438	2225.41	57	660.1	1834						
UNIT 4 ~ 169.46' PRESTR. CONC. BM UNIT					10367	1290.60	62	339.0	1099						
TOTAL	141	1492	24.4	1951.4	54012	6791.66	241	2291.2	5645	13					

BEARING SEAT ELEVATIONS

	BEAM 1	BEAM 2	BEAM 3	BEAM 4	BEAM 5	BEAM 6	BEAM 7	BEAM 8
BENT 1 (FWD)	126.702	126.532	126.362	126.192	126.022			
BENT 2 (BK)	127.671	127.501	127.331	127.161	126.991			
(FWD)	127.675	127.505	127.335	127.165	126.995			
BENT 3 (BK)	130.008	129.838	129.668	129.498	129.328			
(FWD)	130.163	129.993	129.823	129.653	129.483			
BENT 4 (BK)	133.801	133.715	133.600	133.430	133.260			
(FWD)	134.129	134.055	133.948	133.778	133.608			
BENT 5 (BK)	137.830	137.995	138.041	137.871	137.701			
(FWD)	138.063	138.199	138.335	138.216	138.080	137.943		
BENT 6 (BK)	142.112	142.262	142.413	142.311	142.160	142.010		
(FWD)	142.270	142.421	142.572	142.471	142.320	142.169		
BENT 7 (BK)	146.319	146.484	146.649	146.565	146.400	146.235		
(FWD)	146.602	146.740	146.878	146.933	146.795	146.657	146.519	
BENT 8 (BK)	150.424	150.574	150.724	150.808	150.658	150.508	150.359	
(FWD)	150.594	150.744	150.895	150.981	150.830	150.680	150.530	
BENT 9 (BK)	153.663	153.825	153.987	154.102	153.940	153.778	153.616	
(FWD)	153.795	153.958	154.120	154.237	154.074	153.912	153.749	
BENT 10 (BK)	156.094	156.269	156.443	156.588	156.414	156.240	156.066	
(FWD)	156.188	156.338	156.488	156.638	156.610	156.460	156.310	156.161
BENT 11 (BK)	157.416	157.573	157.730	157.888	157.871	157.709	157.547	157.385
(FWD)	157.521	157.680	157.796	157.954	157.936	157.769	157.644	157.477
BENT 12 (BK)	157.597	157.963	158.288	158.654	158.629	158.214	157.840	157.425

RAMP 3

	BEAM 1	BEAM 2	BEAM 3	BEAM 4
BENT 12 (FWD)	157.572	157.977	158.382	158.766

RAMP 4

	BEAM 1	BEAM 2	BEAM 3	BEAM 4
	158.542	158.091	157.639	157.188

HS 20 LOADING

STATE OF TEXAS
MARK J. BLOSCHOCK
52996
REGISTERED
PROFESSIONAL ENGINEER
3-23-92

REV. 3-30 -92

STATE DEPARTMENT OF HIGHWAYS AND PUBLIC TRANSPORTATION

ESTIMATED QUANTITIES AND BEARING SEAT ELEVATIONS

US 83/281 INTERCHANGE
UNITS 1-4, RAMPS 3 & 4

D45350A ▪ ZFA2 ▪ (355100)4379TAB02.DGN	PREPARED BY AND FOR USE OF TEXAS SDH&PT						
ORIGINAL DRAWING DATE: FEBRUARY 1991		STATE DISTRICT	FEDERAL REGION	FEDERAL AID PROJECT ▪			SHEET
DR.: KBA	REVISIONS	21	6				194
CK.: LMW/MRL		COUNTY			CONTROL	SECTION	JOB	HIGHWAY
DR.: PSR		HIDALGO			0039	17	097	US 83/281
CK.: LMW/MRL								

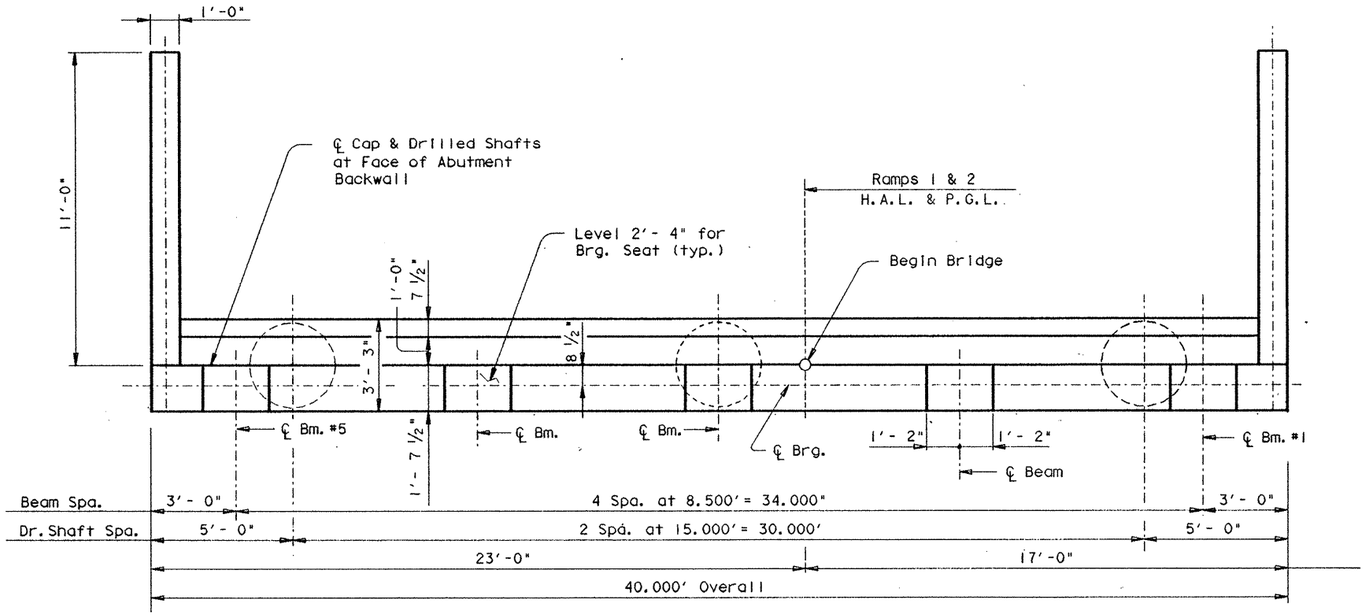

PLAN

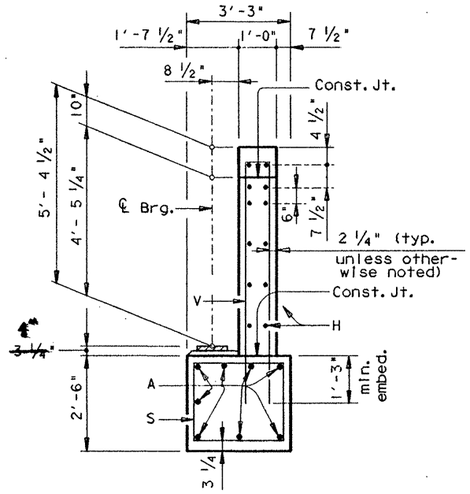

SECTION A-A

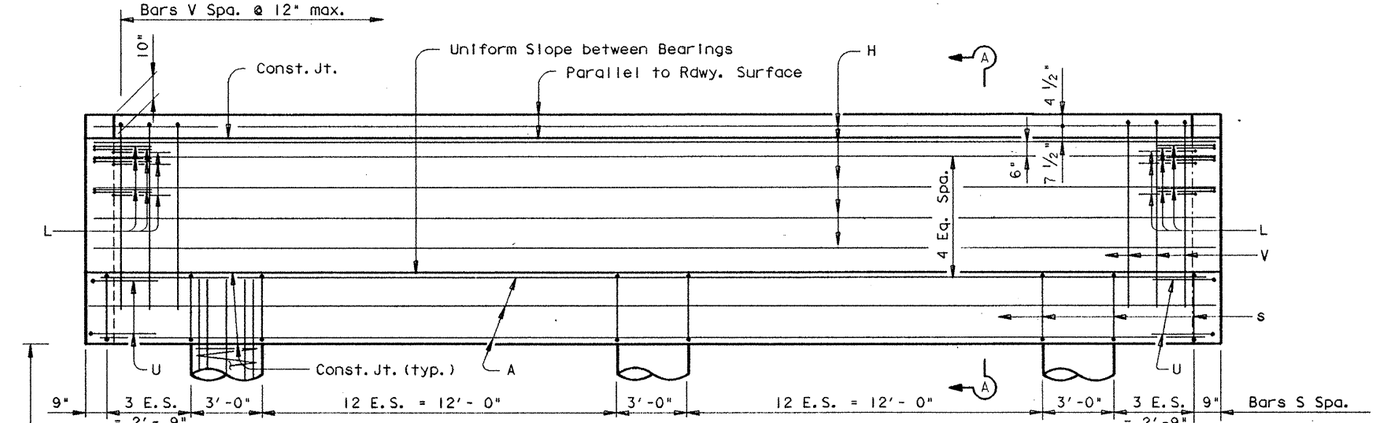

ELEVATION

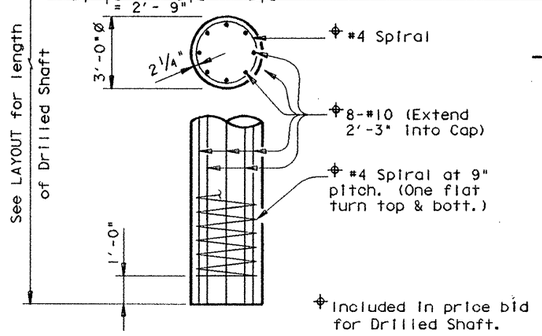

* TABLE OF ESTIMATED QUANTITIES

Bar	No.	Size	Length	Weight
A	8	# 11	39'- 0"	1658
H	12	# 5	39'- 8"	496
L	18	# 6	4'- 0"	108
S	34	# 4	10'- 6"	238
U	4	# 6	7'- 9"	47
V	39	# 5	13'-10"	563
WH1	12	# 6	10'- 8"	192
wH2	4	# 6	9'- 3"	56
wH3	4	# 6	8'- 0"	48
wH4	4	# 6	6'-10"	41
wH5	4	# 6	6'- 6"	39
wH6	4	# 6	4'- 3"	26
wV1	12	# 5	7'- 9"	97
wV2-7	24	# 5	4'- 1"	102
wU	10	# 4	1'- 7"	11
wP	4	# 6	11'- 2"	67
Reinforcing Steel			Lb	# 3789
Class "C" Concrete			CY	24.4

For contractor's information only.
* Quantities shown are for one abutment only.

GENERAL NOTES:

Designed according to A.A.S.H.T.O. 1989 Standard Specifications.

Calculated Foundation Loads ~
Cap Drilled Shafts = 115 Tons/ Drilled Shaft

For Modified Bearing Seat Details see Gp C (SPL) Sheet.

HS 20 LOADING

Sheet 1 of 2

STATE DEPARTMENT OF HIGHWAYS AND PUBLIC TRANSPORTATION

ABUTMENT NO. 1

RAMPS 3 & 4

US 83/281 INTERCHANGE

STATE OF TEXAS
MARK J. BLOSCHOCK
52996
REGISTERED PROFESSIONAL ENGINEER

9-24-91

D45350A: ZFA1: [355163]4379ABT01.DGN	PREPARED BY AND FOR USE OF TEXAS SDH&PT					
ORIGINAL DRAWING DATE: JULY 1990	STATE DISTRICT	FEDERAL REGION	FEDERAL AID PROJECT			SHEET
DN.: LMW / CK.: KBA / DW.: TKW / CK.: LMW /KBA — REVISIONS	21	6	NH 92( )M			195
	COUNTY		CONTROL	SECTION	JOB	HIGHWAY
	HIDALGO		0039	17	097	US 83/281

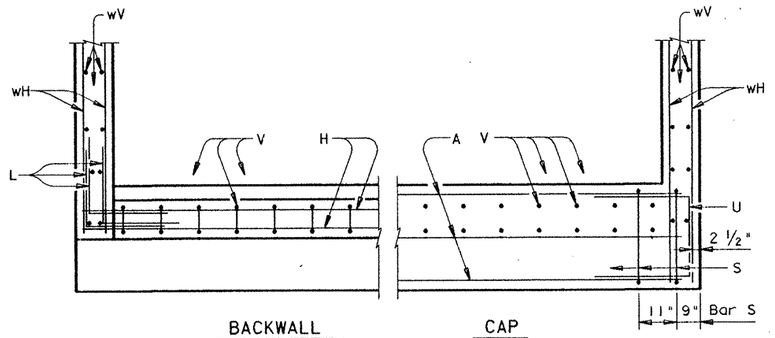

WINGWALL DETAILS

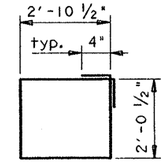

BARS S

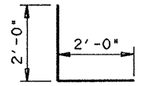

BARS L

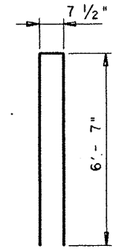

BARS V

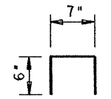

BARS wU

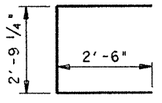

BARS U

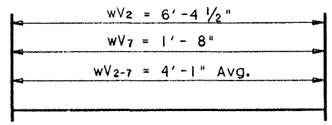

BARS wV2 - 7

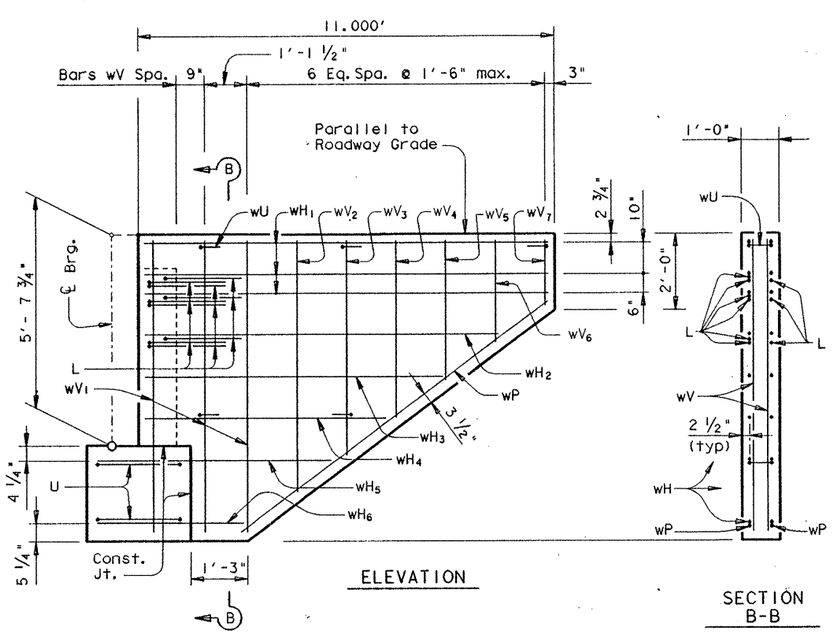

WINGWALL DETAILS

HS 20 LOADING

Sheet 2 of 2

STATE OF TEXAS
MARK J. BLOSCHOCK
52996
REGISTERED PROFESSIONAL ENGINEER
9-24-91

STATE DEPARTMENT OF HIGHWAYS AND PUBLIC TRANSPORTATION

ABUTMENT NO. 1

RAMPS 3 & 4

US 83/281 INTERCHANGE

D45350A • ZFA1 • (3551631)4379ABT01.DGN	PREPARED BY AND FOR USE OF TEXAS SDH&PT					
ORIGINAL DRAWING DATE• JULY 1990	STATE DISTRICT	FEDERAL REGION	FEDERAL AID PROJECT •			SHEET
DR.• LMW REVISIONS	21	6	NH 92 C)M			196
CK.• KBA	COUNTY		CONTROL	SECTION	JOB	HIGHWAY
DR.• TKW	HIDALGO		0039	17	097	US 83/ 281
CK.• LMW /KBA						

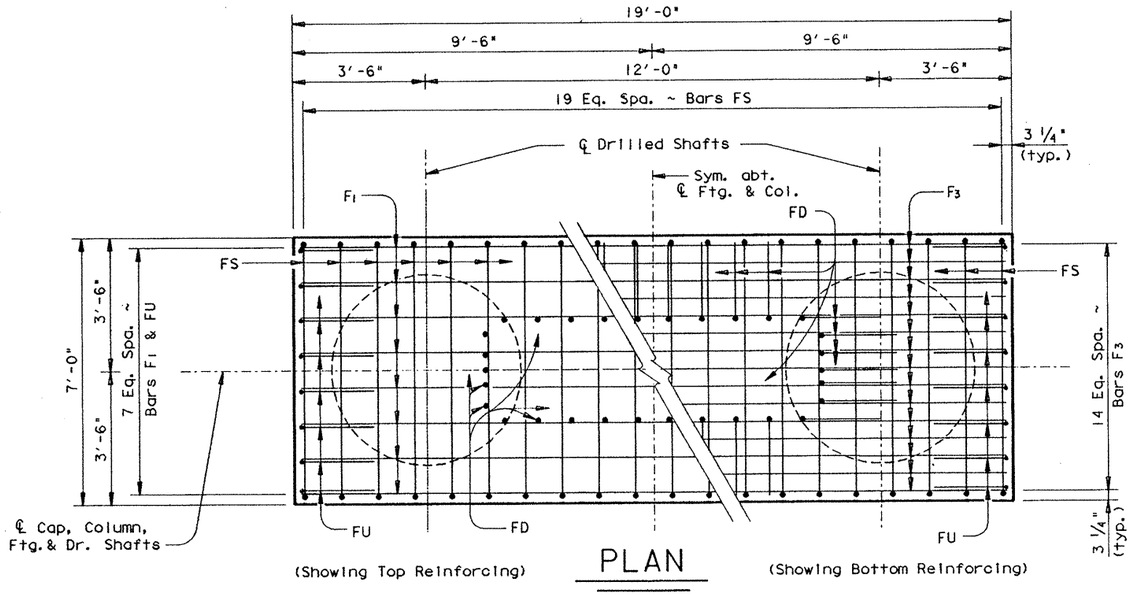

PLAN

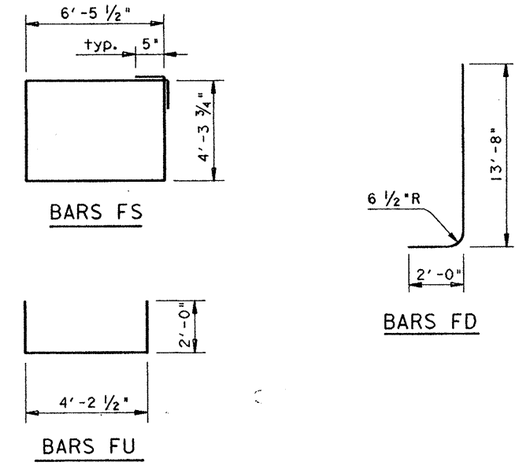

‡TABLE OF FOOTING QUANTITIES

Bar	No.	Size	Length	Weight
F_1	8	# 8	18'- 6"	395
F_2	8	# 5	18'- 6"	154
F_3	15	# 11	18'- 6"	1474
FD	30	# 11	15'- 6"	2471
FS	20	# 5	22'- 5"	468
FU	16	# 5	8'- 3"	139

Reinforcing Steel	Lb	‡ 5101
Class "C" Concrete	CY	24.6

‡ For Contractor's information only.

‡ Quantities shown are for one footing only.

All footing reinforcing [redacted] Grade 60.

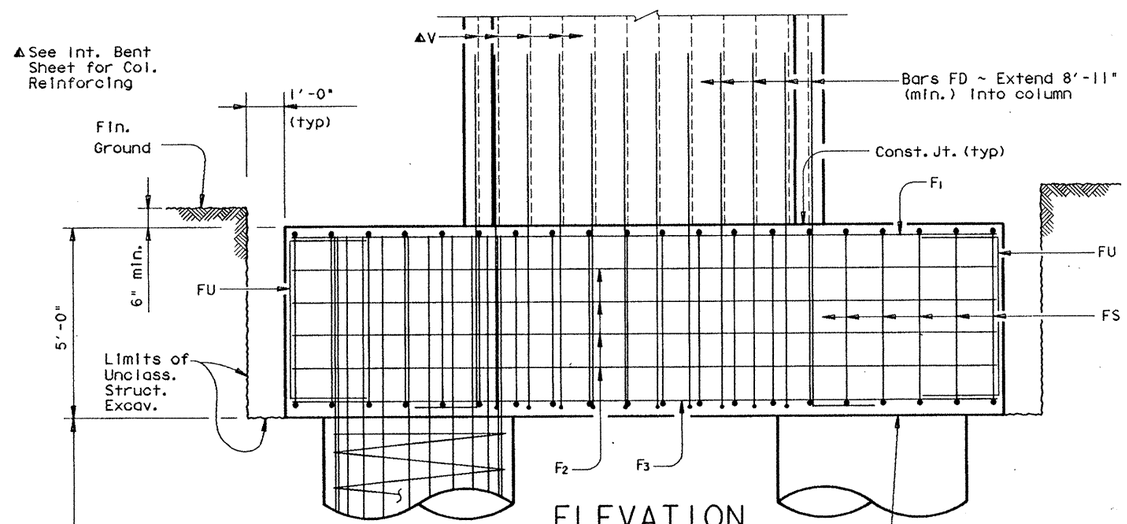

ELEVATION

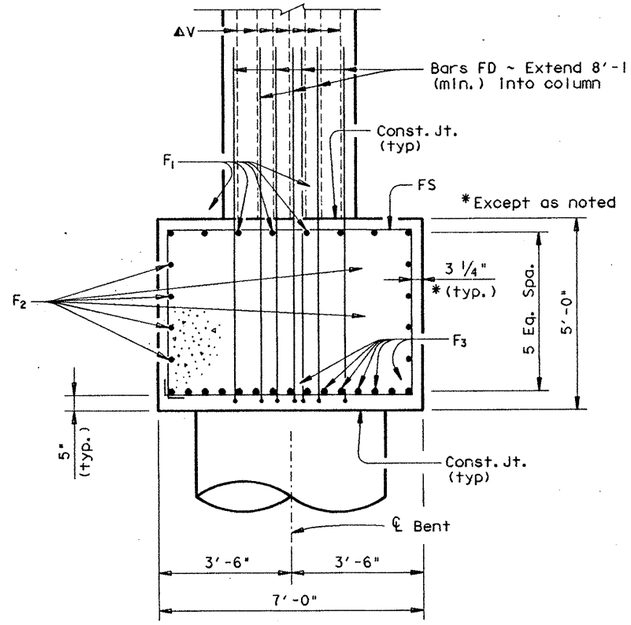

FOOTING SECTION

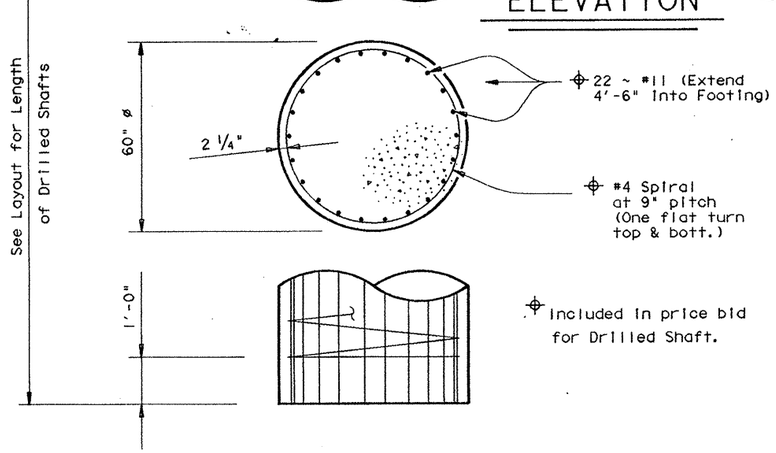

HS 20 LOADING

STATE DEPARTMENT OF HIGHWAYS AND PUBLIC TRANSPORTATION

FOOTING DETAILS BENT NOS. 2-7 & 9-11 RAMPS 3 & 4

US 83/281 INTERCHANGE

STATE OF TEXAS
MARK J. BLOSCHOCK
52996
REGISTERED PROFESSIONAL ENGINEER

9-24-91

D45350A: ZFA2: [355100]4377MIS03.DGN	PREPARED BY AND FOR USE OF TEXAS SDH&PT					
ORIGINAL DRAWING DATE: JANUARY 1991	STATE DISTRICT	FEDERAL REGION	FEDERAL AID PROJECT			SHEET
DN.: GAF/MRL	21	6	NH 92C JM			197
CK.: MRL/GAF	COUNTY		CONTROL	SECTION	JOB	HIGHWAY
DW.: DRG/PSR	HIDALGO		0039	17	097	US 83/281
CK.: JCC						

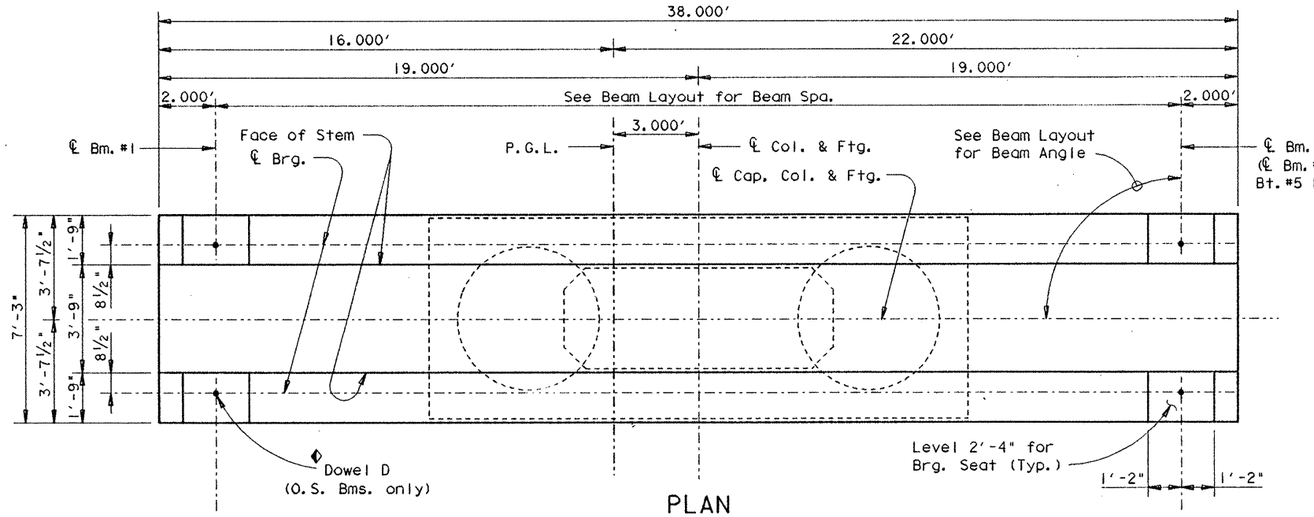

PLAN

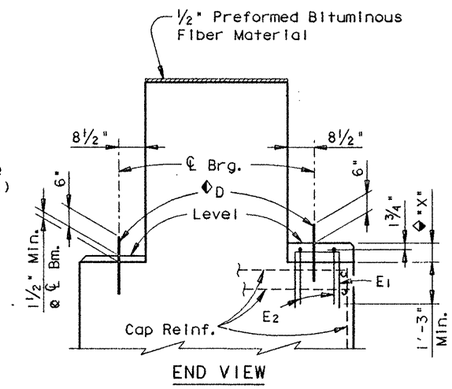

END VIEW

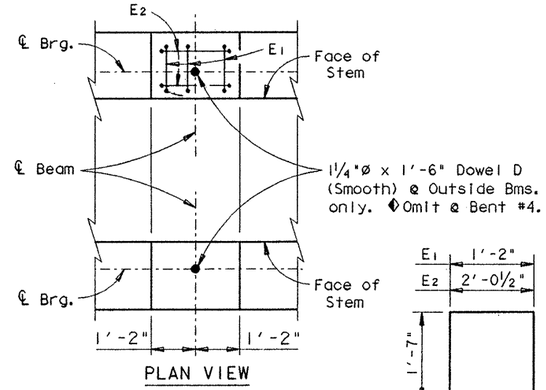

PLAN VIEW

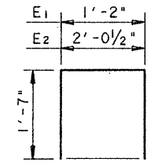

BARS E

BEARING SEAT DETAILS

◆Reinforced Pedestals [redacted] required where "X" is greater than 2½" and [redacted] considered subsidiary to the Bid Item "Class C Concrete (Bent). Compare bearing seat elevations to determine value of "X".

NOTE: For Bearing Seat surface finish see GpC(SPL) sheet.

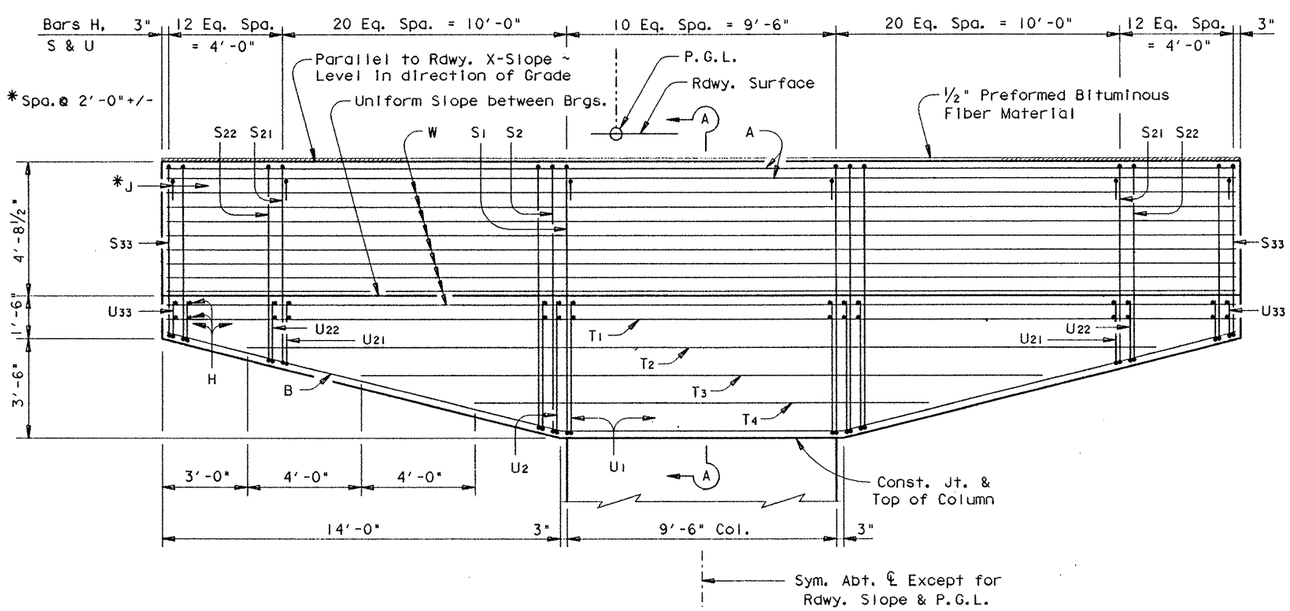

CAP ELEVATION

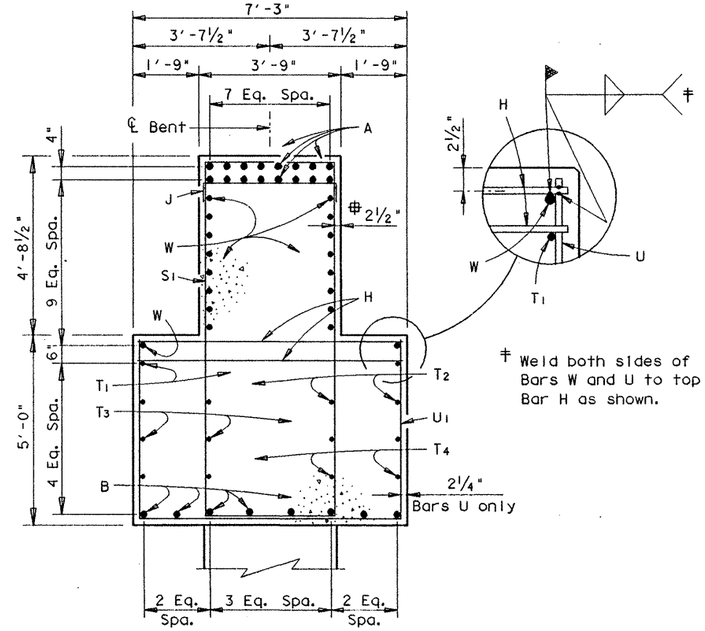

SECTION A-A

‡ Weld both sides of Bars W and U to top Bar H as shown.

Ⓗ Typical except as noted

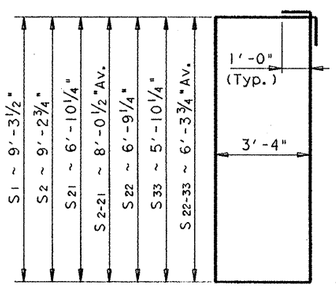

BARS S

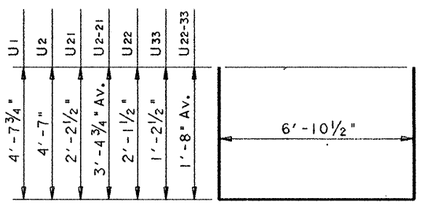

BARS U

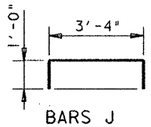

BARS J

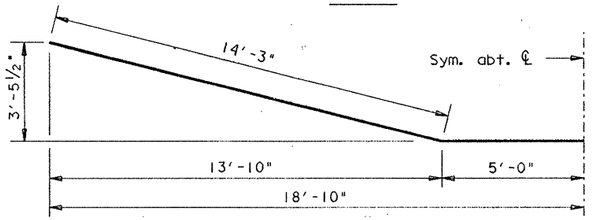

BARS B

STATE OF TEXAS
MARK J. BLOSCHOCK
52996
REGISTERED PROFESSIONAL ENGINEER

9-24-91

HS 20 LOADING SHEET 1 OF 2

STATE DEPARTMENT OF HIGHWAYS AND PUBLIC TRANSPORTATION

INTERIOR BENT NOS. 2-5 RAMPS 3 & 4

US 83/281 INTERCHANGE

D45350A1 • ZFA2 • (355)05)4377)INV05.DGN	PREPARED BY AND FOR USE OF TEXAS SDH&PT							
ORIGINAL DRAWING DATE • NOVEMBER 1990	STATE DISTRICT	FEDERAL REGION	FEDERAL AID PROJECT •				SHEET
DN.• JCC CK.• MAS DR.• DRG CK.• JCC REVISIONS	21	6	NH 92C)M7				198
	COUNTY			CONTROL	SECTION	JOB	HIGHWAY
	HIDALGO			0039	17	097	US 83/281

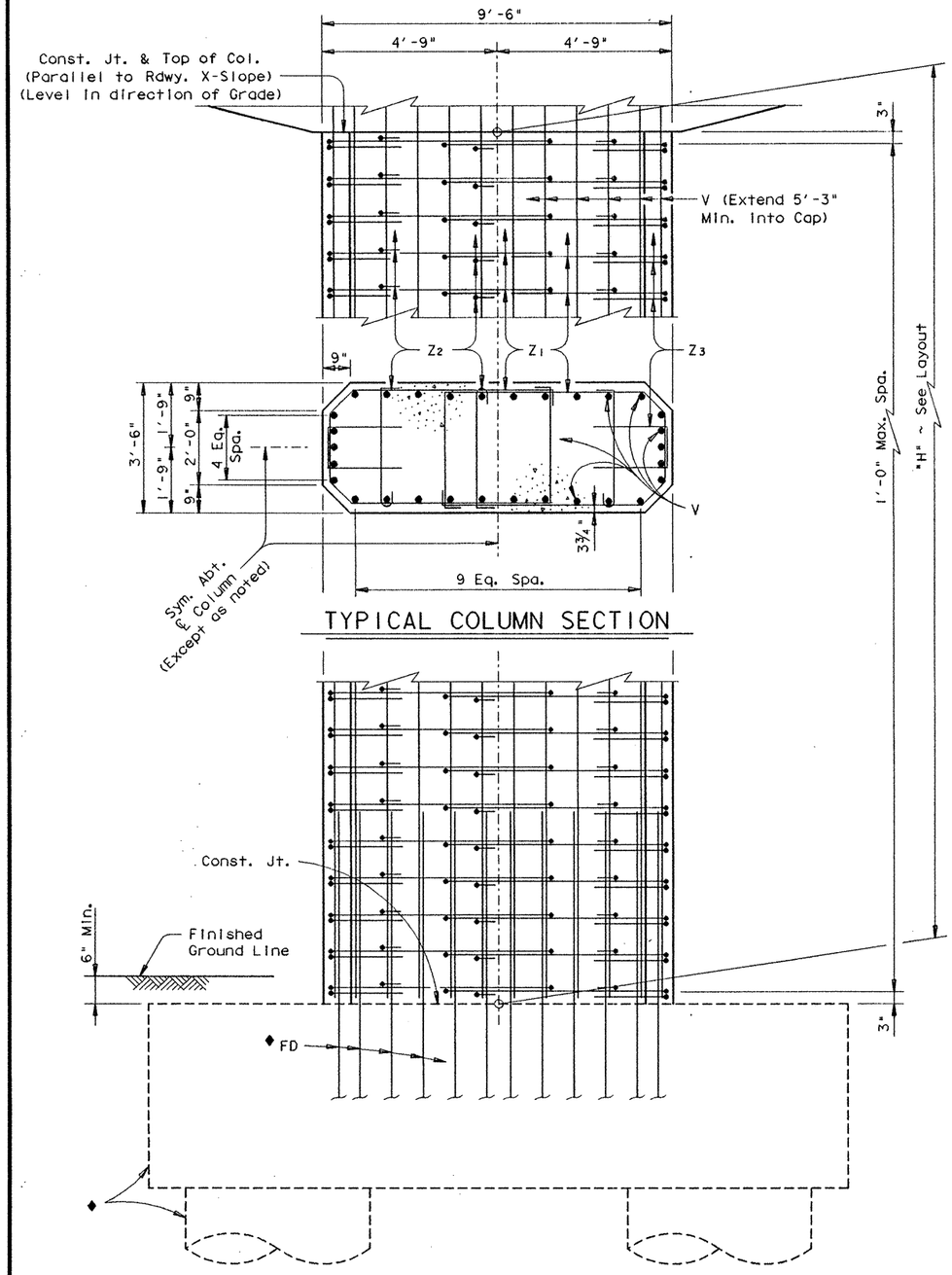

◆See Footing Details sheet for foundation details and quantities not shown.

COLUMN ELEVATION

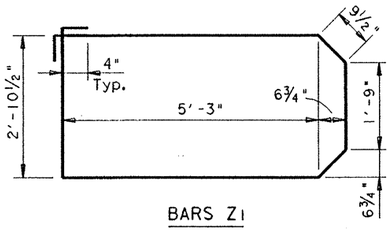

BARS Z1

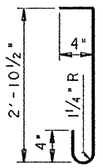

BARS Z2

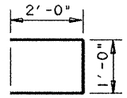

BARS Z3

▲ Quantities shown for one Bent only
For contractor's information only
◩ Omit Dowels D at Bent #4 (Deduct 25 Lbs)
All cap & column reinforcing steel [redacted] Grade 60.

GENERAL NOTES:

Designed according to A.A.S.H.T.O. 1989 Standard and current Interim Specifications.

Calculated Foundation Load = 625 Tons/Dr. Shaft

See "Form Liner Details" sheet for aesthetic treatment of columns and caps.

See Inverted Tee Bent Special Cap Details Sheet for details not shown.

▲ TABLE OF CONSTANT QUANTITIES

Bar	No.	Size	Length	Weight
A	16	# 11	37'- 8"	3202
B	8	# 11	38'- 6"	1636
D	4	1¼"Ø	1'- 6"	25
H	150	# 6	6'-11"	1559
J	20	# 6	5'- 4"	160
S1	11	# 6	27'- 3"	450
S2-21	40	# 6	24'- 9"Av	1487
S22-33	24	# 6	21'- 4"Av	769
T1	2	# 6	37'- 8"	113
T2	4	# 6	32'- 0"	192
T3	4	# 6	24'- 0"	144
T4	4	# 6	16'- 0"	96
U1	11	# 5	16'- 2"	186
U2-21	40	# 5	13'- 8"Av	570
U22-33	24	# 5	10'- 3"Av	257
W	18	# 9	37'- 8"	2305
Reinforcing Steel			Lb	#◩ 13151
Class "C" Concrete (Cap)			CY	62.9

TABLE OF VARIABLE QUANTITIES

"H"	Class "C" Conc. (Col.)	Bars Z1 17'-5" ~ #4		Bars Z2 3'-8" ~ #4		Bars Z3 5'-0" ~ #4		Bars V 30 ~ # 11		▲■ TOTAL ESTIMATED QUANTITIES #◩ Reinf. Steel	Class "C" Conc.
Ft	CY	No.	Weight	No.	Weight	No.	Weight	Length	Weight	Lb	CY
12	14.3	26	303	39	96	26	87	17'- 3"	2749	21487	101.8
13	15.5	28	326	42	103	28	94	18'- 3"	2909	21684	103.0
14	16.7	30	349	45	110	30	100	19'- 3"	3068	21879	104.2
15	17.8	32	372	48	118	32	107	20'- 3"	3228	22077	105.3
16	19.0	34	396	51	125	34	114	21'- 3"	3387	22274	106.5
17	20.2	36	419	54	132	36	120	22'- 3"	3546	22469	107.7
18	21.4	38	442	57	140	38	127	23'- 3"	3706	22667	108.9
19	22.6	40	465	60	147	40	134	24'- 3"	3865	22863	110.1
20	23.8	42	489	63	154	42	140	25'- 3"	4025	23060	111.3
21	25.0	44	512	66	162	44	147	26'- 3"	4184	23257	112.5
22	26.2	46	535	69	169	46	154	27'- 3"	4343	23453	113.7
23	27.4	48	559	72	177	48	160	28'- 3"	4503	23651	114.9
24	28.6	50	582	75	184	50	167	29'- 3"	4662	23847	116.1
25	29.7	52	605	78	191	52	174	30'- 3"	4822	24044	117.2
26	30.9	54	628	81	199	54	180	31'- 3"	4981	24240	118.4
27	32.1	56	652	84	206	56	187	32'- 3"	5140	24437	119.6

■ Includes Footing Quantities

HS 20 LOADING

SHEET 2 OF 2

STATE OF TEXAS
MARK J. BLOSCHOCK
52996
REGISTERED
PROFESSIONAL ENGINEER

9-25-91

REV. 3-30-92

STATE DEPARTMENT OF HIGHWAYS AND PUBLIC TRANSPORTATION

INTERIOR BENT NOS. 2-5 RAMPS 3 & 4

US83/281 INTERCHANGE

D45350A1 ZFA2 (355105143771NV05.DGN	PREPARED BY AND FOR USE OF TEXAS SDH&PT					
ORIGINAL DRAWING DATE: NOVEMBER 1990	STATE DISTRICT	FEDERAL REGION	FEDERAL AID PROJECT #		SHEET
DN.: MRL CK.: MAS DR.: DRG CK.: JCC REVISIONS	21	6	NH 92( )M		199
	COUNTY		CONTROL	SECTION	JOB	HIGHWAY
	HIDALGO		0039	17	097	US 83/ 281

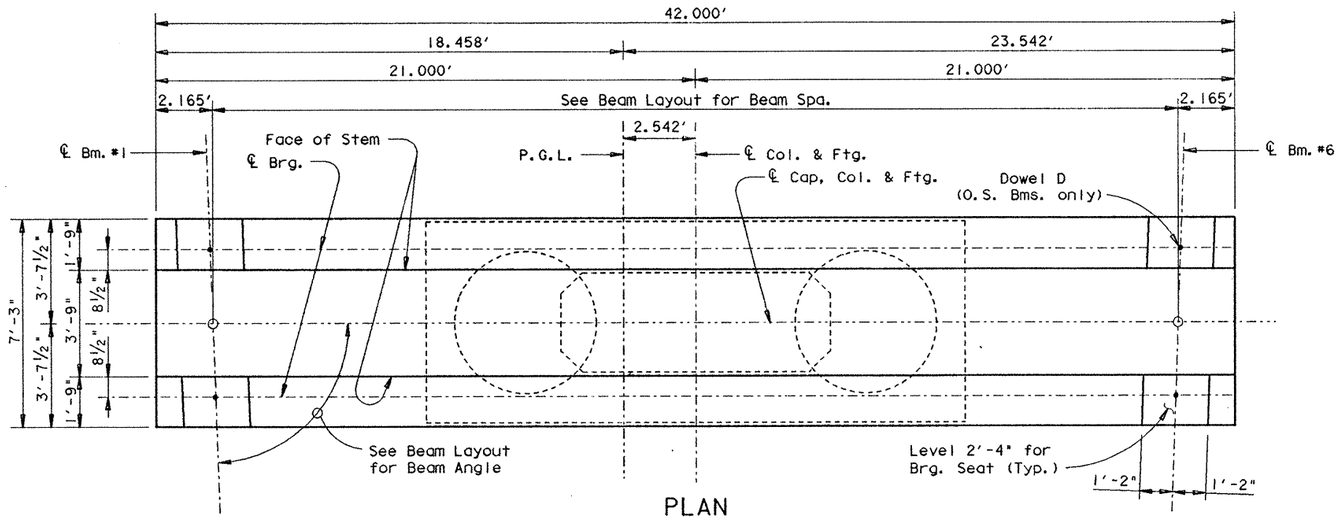

PLAN

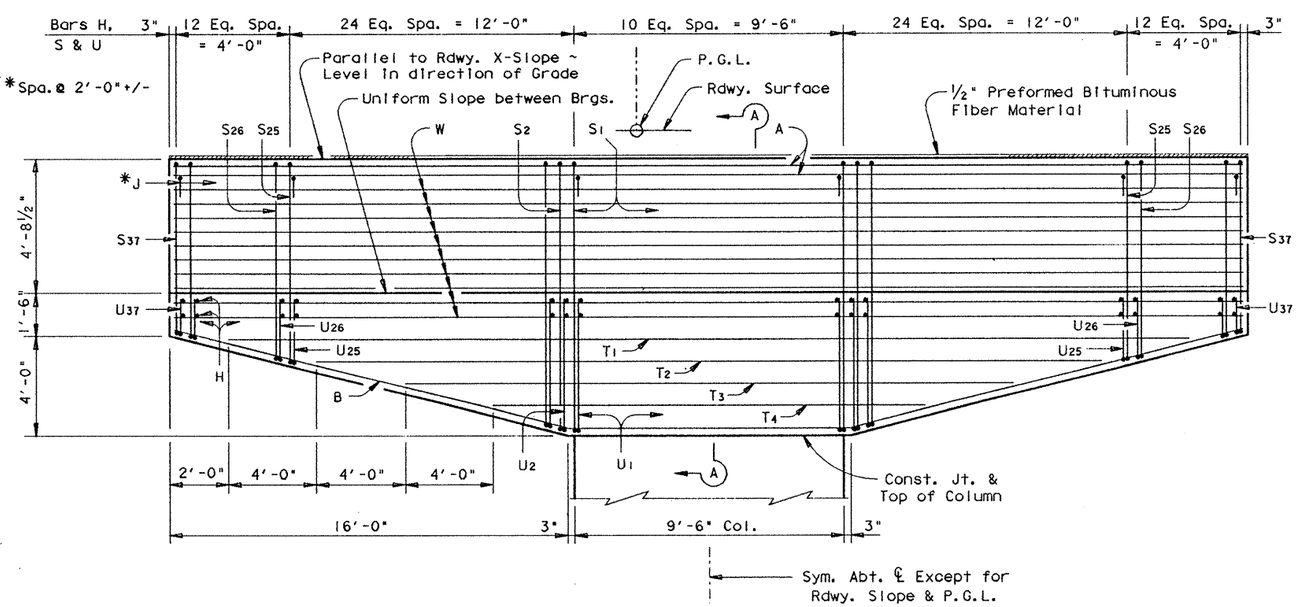

CAP ELEVATION

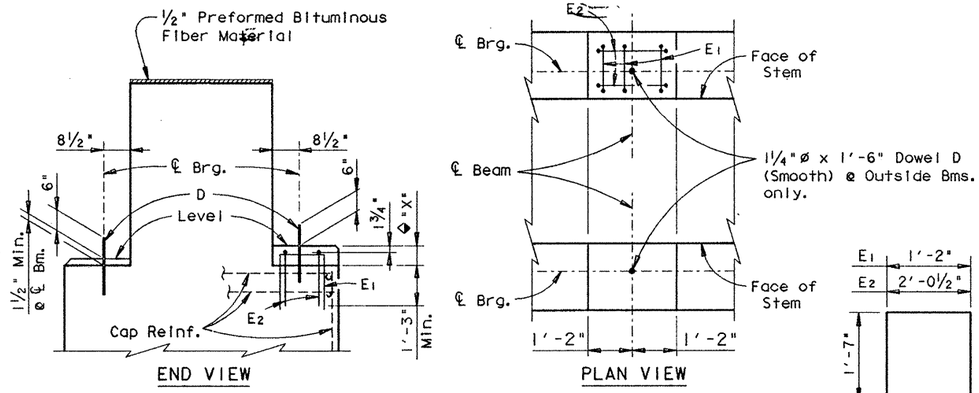

BEARING SEAT DETAILS

◆Reinforced Pedestals [redacted] required where "X" is greater than 2½" and [redacted] considered subsidiary to the Bid Item "Class C Concrete (Bent). Compare bearing seat elevations to determine value of "X".

NOTE: For Bearing Seat surface finish see GpC(SPL) sheet.

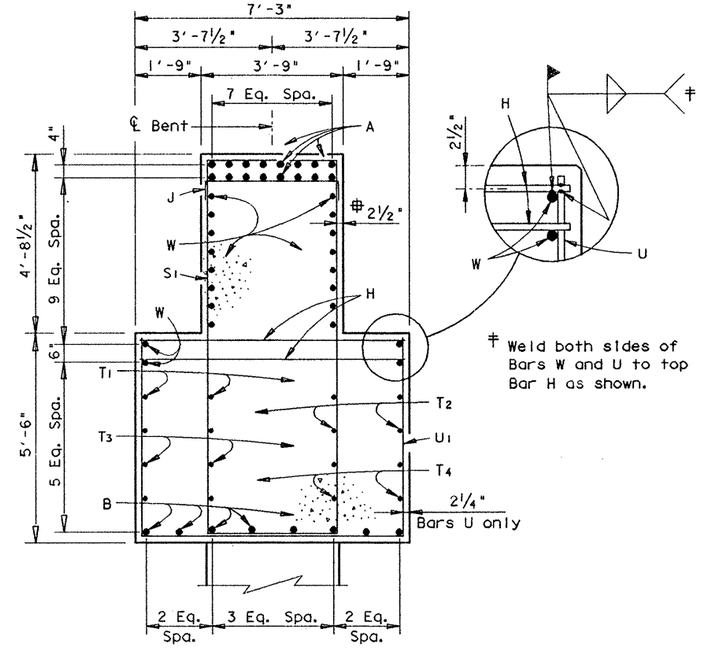

SECTION A-A

‡ Typical except as noted

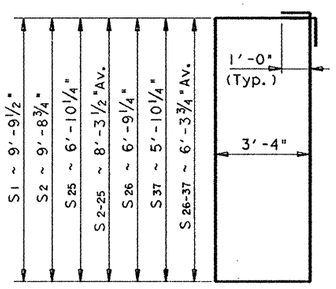

BARS S

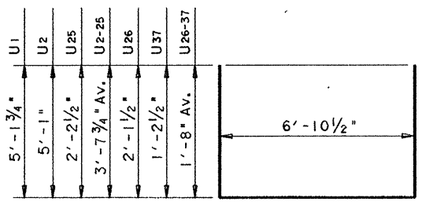

BARS U

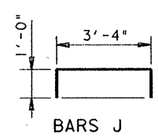

BARS J

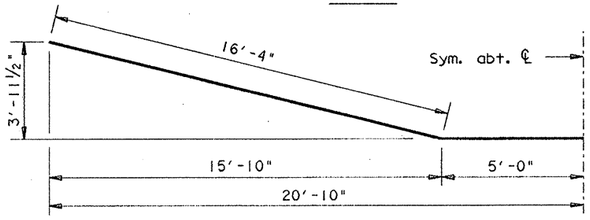

BARS B

STATE OF TEXAS
MARK J. BLOSCHOCK
52996
REGISTERED
PROFESSIONAL ENGINEER

9-25-91

HS 20 LOADING

SHEET 1 OF 2

STATE DEPARTMENT OF HIGHWAYS AND PUBLIC TRANSPORTATION

INTERIOR BENT NO. 6 RAMPS 3 & 4

US 83/281 INTERCHANGE

D45350A1: ZFA2: [355105]43771NV18.DGN	PREPARED BY AND FOR USE OF TEXAS SDH&PT					
ORIGINAL DRAWING DATE: DECEMBER 1990	STATE DISTRICT	FEDERAL REGION	FEDERAL AID PROJECT			SHEET
DN.: JCC	21	6	NH 92 ( )M			200
CK.: MAS	COUNTY		CONTROL	SECTION	JOB	HIGHWAY
DW.: DRG	HIDALGO		0039	17	097	US 83/281
CK.: JCC						

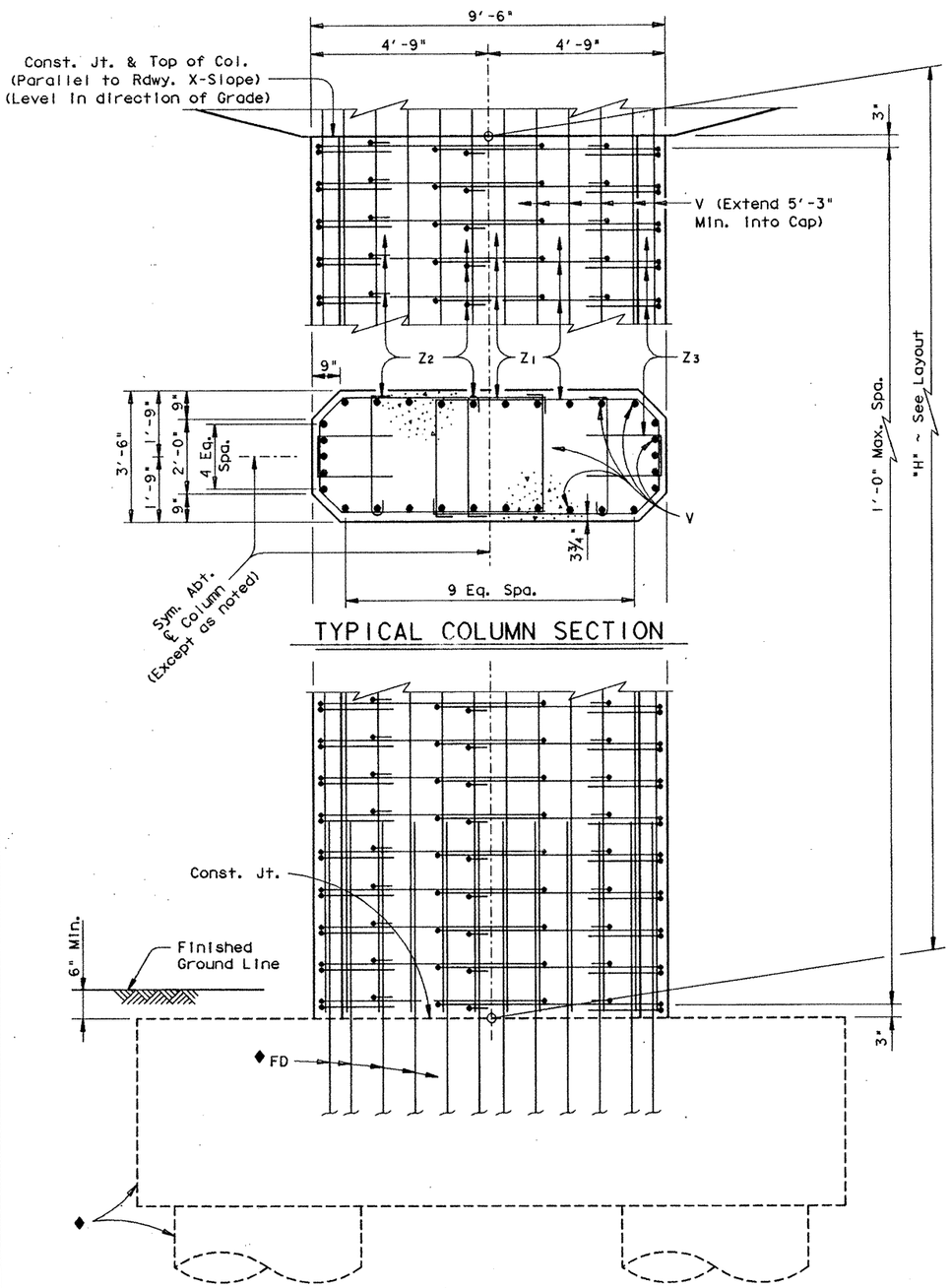

TYPICAL COLUMN SECTION

◆ See Footing Details sheet for foundation details and quantities not shown.

COLUMN ELEVATION

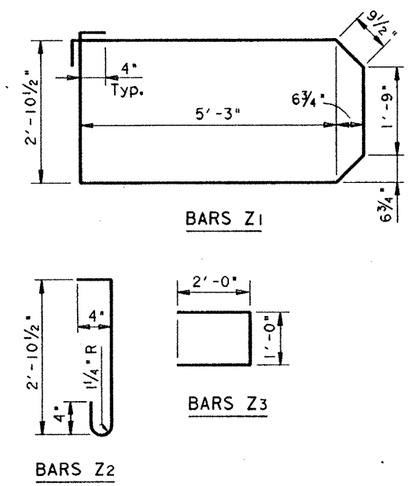

BARS Z1

BARS Z2

BARS Z3

⁜ For contractor's information only

All cap & column reinforcing steel [redacted] Grade 60.

GENERAL NOTES:

Designed according to A.A.S.H.T.O. 1989 Standard and current Interim Specifications.

Calculated Foundation Load = 625 Tons/Dr. Shaft

See "Form Liner Details" sheet for aesthetic treatment of column and cap.

See Inverted Tee Bent Special Cap Details Sheet for details not shown.

TABLE OF CONSTANT QUANTITIES

Bar	No.	Size	Length	Weight
A	16	# 11	41'- 8"	3542
B	8	# 11	42'- 8"	1814
D	4	1¼"ø	1'- 6"	25
H	166	# 6	6'-11"	1725
J	22	# 6	5'- 4"	176
S1	11	# 6	28'- 3"	467
S2-25	48	# 6	25'- 3"Av	1820
S26-37	24	# 6	21'- 4"Av	769
T1	4	# 6	38'- 0"	228
T2	4	# 6	30'- 0"	180
T3	4	# 6	22'- 0"	132
T4	4	# 6	14'- 0"	84
U1	11	# 5	17'- 2"	197
U2-25	48	# 5	14'- 2"Av	709
U26-37	24	# 5	10'- 3"Av	257
W	20	# 9	41'- 8"	2834

Reinforcing Steel	Lb	⁜ 14959
Class "C" Concrete (Cap)	CY	72.5

TABLE OF VARIABLE QUANTITIES

"H"	Class "C" Conc. (Col.)	Bars Z1 17'-5" ~ #4		Bars Z2 3'-8" ~ #4		Bars Z3 5'-0" ~ #4		Bars V 30 ~ # 11		⁜ Reinf. Steel	Class "C" Conc.
Ft	CY	No.	Weight	No.	Weight	No.	Weight	Length	Weight	Lb	CY
27	32.1	56	652	84	206	56	187	32'- 3"	5140	26245	129.2
28	33.3	58	675	87	213	58	194	33'- 3"	5300	26442	130.4
29	34.5	60	698	90	221	60	200	34'- 3"	5459	26638	131.6
30	35.7	62	721	93	228	62	207	35'- 3"	5618	26834	132.8
31	36.9	64	745	96	235	64	214	36'- 3"	5778	27032	134.0

⁜ TOTAL ESTIMATED QUANTITIES

⁜ Includes Footing Quantities

HS 20 LOADING

SHEET 2 OF 2

STATE OF TEXAS
MARK J. BLOSCHOCK
52996
REGISTERED PROFESSIONAL ENGINEER

9-25-91

REV. 3-30-92

STATE DEPARTMENT OF HIGHWAYS AND PUBLIC TRANSPORTATION

INTERIOR BENT NO. 6 RAMPS 3 & 4

US83/281 INTERCHANGE

D45350A1 ZFA2 [355105]43771NV18.DGN

PREPARED BY AND FOR USE OF TEXAS SDH&PT

ORIGINAL DRAWING DATE: DECEMBER 1990		STATE DISTRICT	FEDERAL REGION	FEDERAL AID PROJECT	SHEET
DN.: MRL	REVISIONS	21	6	NH 92( )M	201
CK.: GAF		COUNTY		CONTROL / SECTION / JOB	HIGHWAY
DW.: DRG		HIDALGO		0039 / 17 / 097	US 83/281
CK.: JCC					

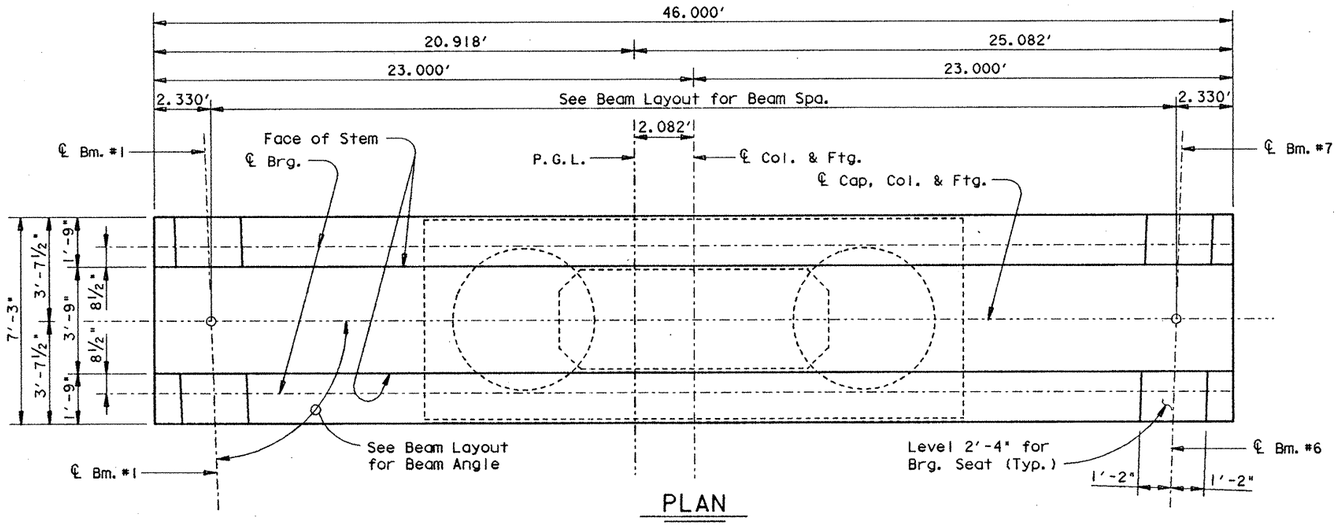

PLAN

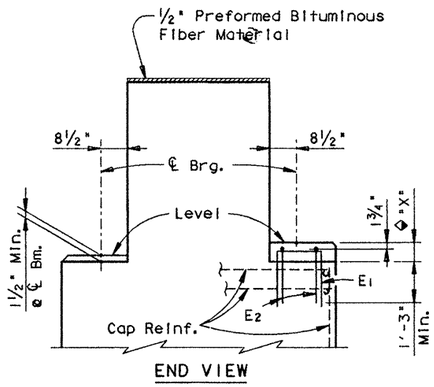

END VIEW

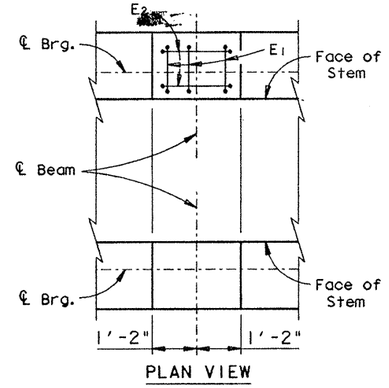

PLAN VIEW

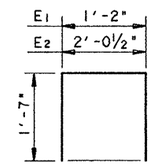

BARS E

BEARING SEAT DETAILS

◆Reinforced Pedestals [redacted] required where "X" is greater than 2½" and s[redacted] considered subsidiary to the Bid Item "Class C Concrete (Bent). Compare bearing seat elevations to determine value of "X".

NOTE: For Bearing Seat surface finish see GpC(SPL) sheet.

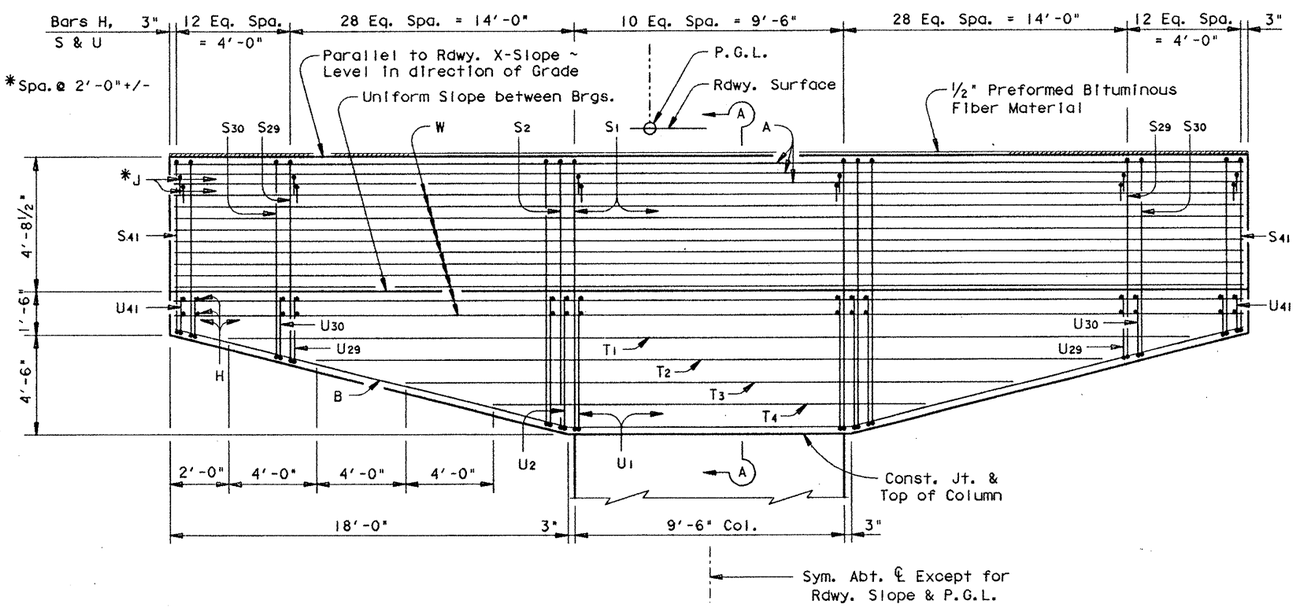

CAP ELEVATION

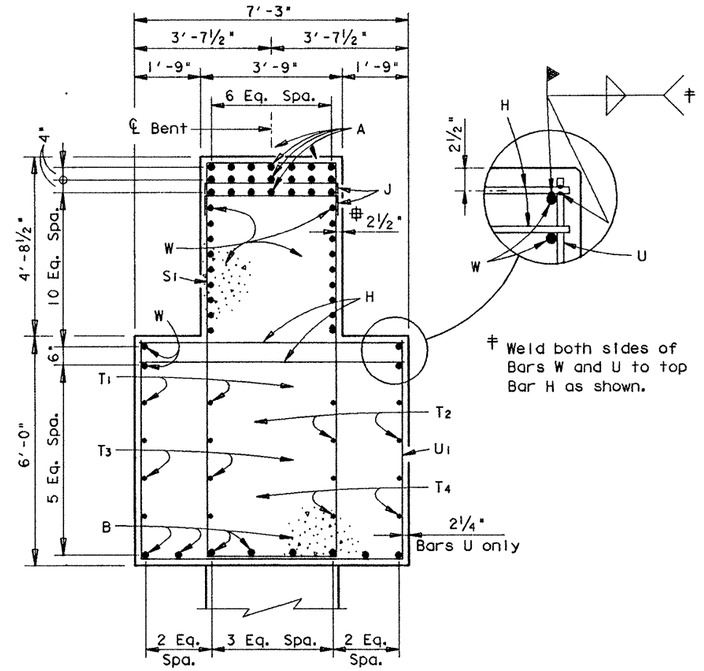

SECTION A-A

‡ Weld both sides of Bars W and U to top Bar H as shown.

Typical except as noted

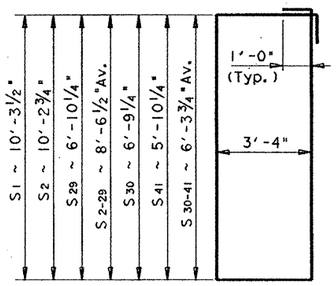

BARS S

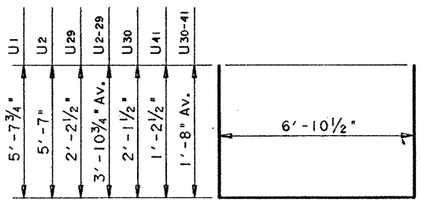

BARS U

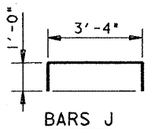

BARS J

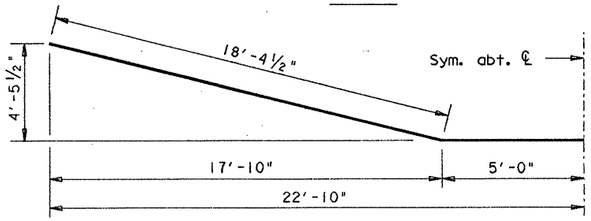

BARS B

STATE OF TEXAS
MARK J. BLOSCHOCK
52996
REGISTERED PROFESSIONAL ENGINEER

9-23-91

HS 20 LOADING

SHEET 1 OF 2

STATE DEPARTMENT OF HIGHWAYS AND PUBLIC TRANSPORTATION

INTERIOR BENT NO. 7 RAMPS 3 & 4

US 83/281 INTERCHANGE

D45350A: ZFA2: C355105J4377INV15.DGN	PREPARED BY AND FOR USE OF TEXAS SDH&PT						
ORIGINAL DRAWING DATE: DECEMBER 1990	STATE DISTRICT	FEDERAL REGION	FEDERAL AID PROJECT #				SHEET
DN.: JCC REVISIONS	21	6	NH 92C 2M				202
CK.: MAS	COUNTY			CONTROL	SECTION	JOB	HIGHWAY
DW.: DRG	HIDALGO			0039	17	097	US 83/281
CK.: JCC							

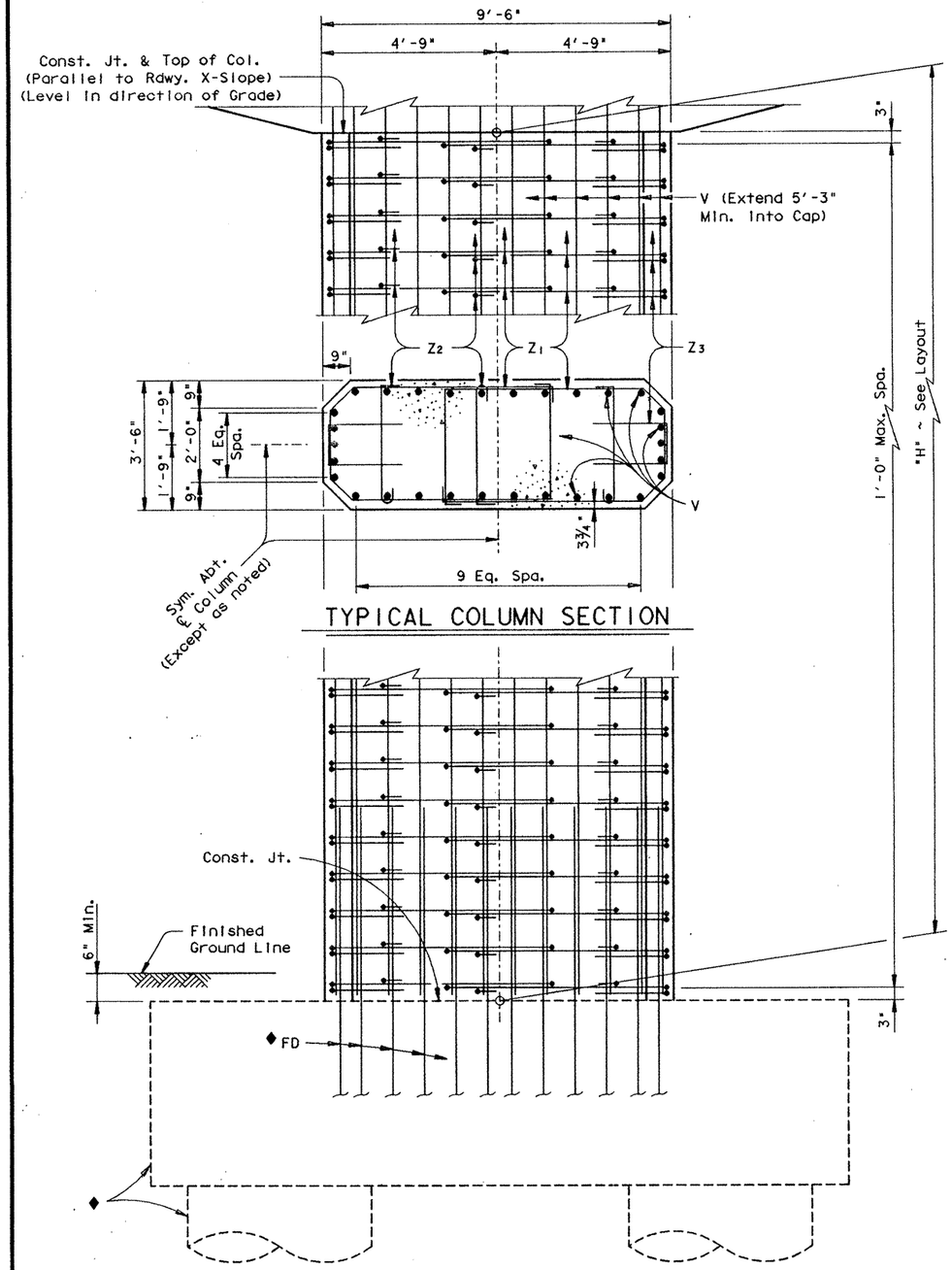

TYPICAL COLUMN SECTION

◆ See Footing Details sheet for foundation details and quantities not shown.

COLUMN ELEVATION

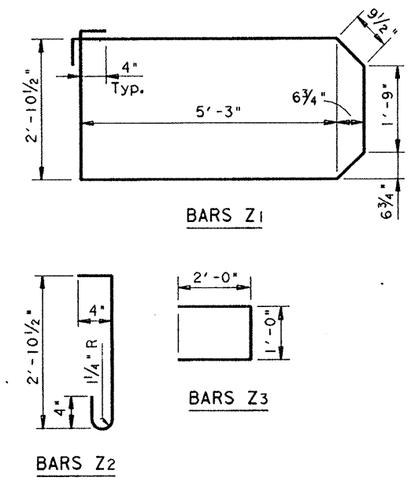

BARS Z1

BARS Z2

BARS Z3

‡ For contractor's information only

All cap & column reinforcing steel [redacted] Grade 60.

GENERAL NOTES:

Designed according to A.A.S.H.T.O. 1989 Standard and current Interim Specifications.

Calculated Foundation Load = 625 Tons/Dr. Shaft

See "Form Liner Details" sheet for aesthetic treatment of column and cap.

See Inverted Tee Bent Special Cap Details Sheet for details not shown.

TABLE OF CONSTANT QUANTITIES

Bar	No.	Size	Length	Weight
A	21	# 11	45'- 8"	5096
B	8	# 11	46'- 9"	1987
H	182	# 6	6'-11"	1892
J	48	# 6	5'- 4"	384
S1	11	# 6	29'- 3"	483
S2-29	56	# 6	25'- 9"Av	2166
S30-41	24	# 6	21'- 4"Av	769
T1	4	# 6	42'- 0"	252
T2	4	# 6	34'- 0"	204
T3	4	# 6	26'- 0"	156
T4	4	# 6	18'- 0"	108
U1	11	# 5	18'- 2"	208
U2-29	56	# 5	14'- 8"Av	857
U30-41	24	# 5	10'- 3"Av	257
W	22	# 9	45'- 8"	3416
Reinforcing Steel			Lb	‡ 18235
Class "C" Concrete (Cap)			CY	82.7

TABLE OF VARIABLE QUANTITIES

"H"	Class "C" Conc. (Col.)	Bars Z1 17'-5" ~ #4		Bars Z2 3'-8" ~ #4		Bars Z3 5'-0" ~ #4		Bars V 30 ~ # 11		■ TOTAL ESTIMATED QUANTITIES ‡ Reinf. Steel	Class "C" Conc.
Ft	CY	No.	Weight	No.	Weight	No.	Weight	Length	Weight	Lb	CY
31	36.9	64	745	96	235	64	214	36'- 3"	5778	30308	144.2
32	38.1	66	768	99	243	66	220	37'- 3"	5937	30504	145.4
33	39.3	68	791	102	250	68	227	38'- 3"	6097	30701	146.6
34	40.5	70	815	105	257	70	234	39'- 3"	6256	30898	147.8
35	41.6	72	838	108	265	72	240	40'- 3"	6415	31094	148.9

■ Includes Footing Quantities

HS 20 LOADING

SHEET 2 OF 2

STATE OF TEXAS
MARK J. BLOSCHOCK
52996
REGISTERED PROFESSIONAL ENGINEER

9-25-91

REV. 3-30-92

STATE DEPARTMENT OF HIGHWAYS AND PUBLIC TRANSPORTATION

INTERIOR BENT NO. 7 RAMPS 3 & 4

US83/281 INTERCHANGE

D45350A: ZFA2: [355105]43771NV15.DGN

PREPARED BY AND FOR USE OF TEXAS SDH&PT

ORIGINAL DRAWING DATE: DECEMBER 1990		STATE DISTRICT	FEDERAL REGION	FEDERAL AID PROJECT	SHEET
DN.: MRL	REVISIONS	21	6	NH 92C JM	203
CK.: GAF		COUNTY		CONTROL / SECTION / JOB	HIGHWAY
DW.: DRG		HIDALGO		0039 / 17 / 097	US 83/281
CK.: JCC					

61.500'
29.126'
32.374'
22.000'
17.500'
22.000'
6.250'
49.000'
6.250'
2.500'
1.997'
See Beam Layout for Beam Spa.
1.997'
2.500'
℄ Bm. #1
℄ Brg.
℄ Cap, Cols. & Ftg.
℄ Col.
1.624'
℄ Col.
P.G.L.
Face of Stem
Dowel D
(O.S. Bms. only)
℄ Bm. #7
℄ 30"ø Sign Bridge Column (Typ.)
~ 2 ¼"ø Anchor Bolts and Templates
with 36"ø bolt circle ~ See COSS-F
standard sheet.
1'-9"
3'-9"
1'-9"
8½"
8½"
3'-7½"
7'-3"
3'-7½"
See Beam Layout
for Beam Angle
℄ Bm. #1
℄ Ftg. &
℄ Structure
Level 2'-4" for
Brg. Seat (Typ.)
℄ Bm. #7
1'-2"
1'-2"

PLAN

‡ Weld both sides of Bars W and U to top Bar H as shown.

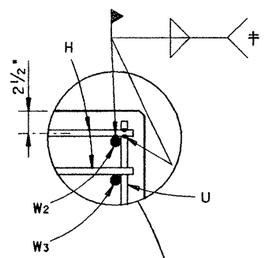

*Spa. @ 2'-0" +/-
3"
3"
12 Eq. Spa. = 5'-9"
12 Eq. Spa. = 4'-0"
14 Eq. Spa. = 6'-9"
10 Eq. Spa. = 9'-6"
16 Eq. Spa. = 8'-0"
10 Eq. Spa. = 9'-6"
14 Eq. Spa. = 6'-9"
12 Eq. Spa. = 4'-0"
3"
12 Eq. Spa. = 5'-9"
3" Bars H, S & U
Parallel to Rdwy. X-Slope
Level in direction of Grade
Uniform Slope between Brgs.
P.G.L.
Rdwy. Surface
½" Preformed Bituminous
Fiber Material
J
A2
S29
S28
S27
S16
S15
S2
S1
W1
A
A1
S1
S2
S15
S16
S27
S28
S29
A2
J
4'-9"
4'-8½"
1½"
3'-11½"
2'-6"
S41
S42
U27
U16
U15
H
B
W3
W4
W5
W6
U2
U1
W2
A
Const. Jt. &
Top of Column
2'-8"
2'-2"
3'-3"
3'-3"
3'-3"
6'-3"
10'-9"
3"
9'-6" Col.
8.000'
9'-6" Col.
3"
Sym. Abt. ℄ Except for
Rdwy. Slope & P.G.L.

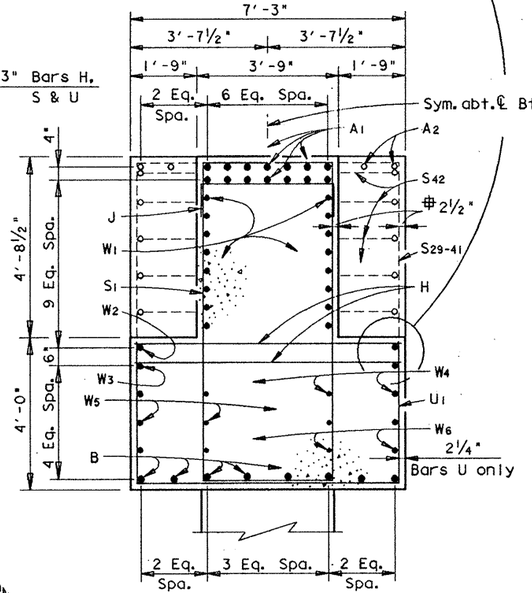

SECTION A-A

(SHOWING END BLOCK REINF.)

Typical except as noted

1'-0"
3'-4"

BARS J

S1 thru S28	3'-4"
S29 thru S41	6'-10"
S42	5'-9"

S1 ~ 8'-3½"
S2 ~ 8'-2¾"
S15 ~ 6'-9 ¼"
S2-15 ~ 7'-6"Av.
S16 ~ 6'-8½"
S27 ~ 6'-10¼"
S16-27 ~ 6'-3⅜"Av.
S28 ~ 5'-9½"
S29 ~ 5'-8¾"
S41 ~ 4'-4¾"
S29-41 ~ 5'-0¾"Av.
S42 ~ 6'-9"
1'-0" (Typ.)

BARS S

3'-7¾"	U1
3'-7"	U2
2'-1½"	U15
2'-10¼" Av.	U2-15
2'-0¾"	U16
1'-2½"	U27
1'-7⅝" Av.	U16-27

6'-10½"

BARS U

CAP ELEVATION

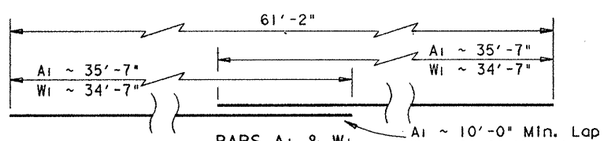

BARS A1 & W1

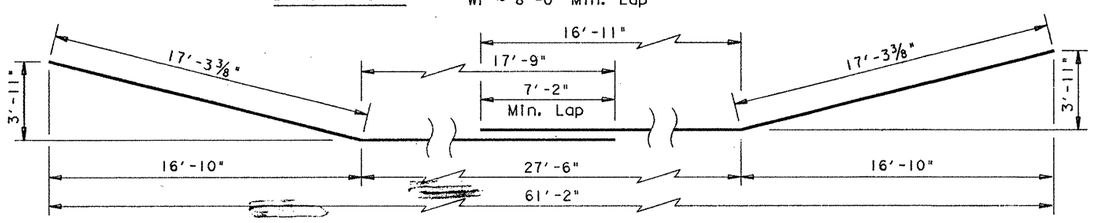

BARS B

STATE OF TEXAS
MARK J. BLOSCHOCK
52996
REGISTERED
PROFESSIONAL ENGINEER
9-25-91

HS 20 LOADING

SHEET 1 OF 3

STATE DEPARTMENT OF HIGHWAYS AND PUBLIC TRANSPORTATION

INTERIOR BENT NO. 8 RAMPS 3 & 4

US 83/281 INTERCHANGE

D45350A1 : ZFA2 : [355105143771NV16.DGN | PREPARED BY AND FOR USE OF TEXAS SDH&PT

ORIGINAL DRAWING DATE: NOVEMBER 1990		STATE DISTRICT	FEDERAL REGION	FEDERAL AID PROJECT		SHEET
DR.: JCC	REVISIONS	21	6	NH 92C 3M		204
CK.: MAS		COUNTY		CONTROL	SECTION	JOB	HIGHWAY
DR.: DRG		HIDALGO		0039	17	097	US 83/281
CK.: JCC							

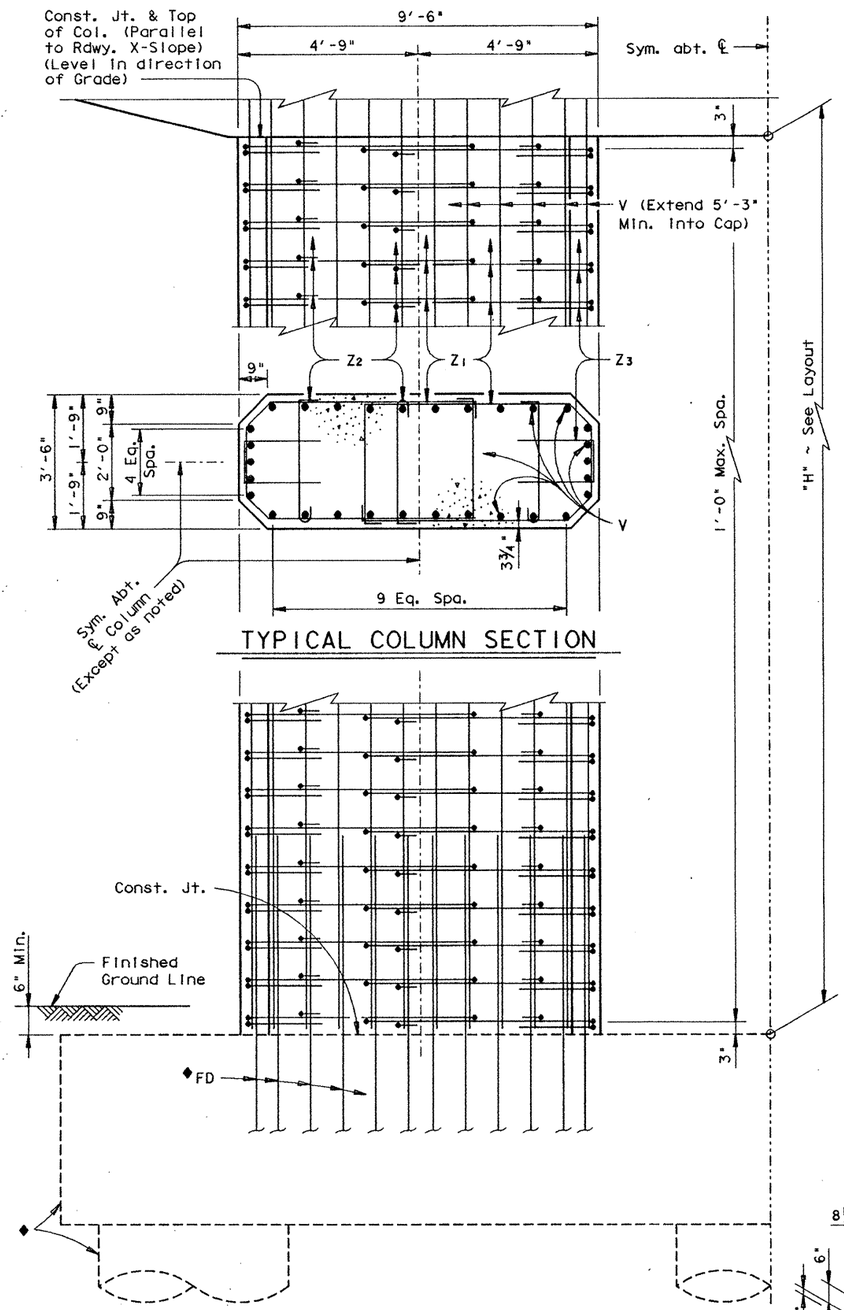

TYPICAL COLUMN SECTION

◆See Footing Details sheet for foundation details and quantities not shown.

COLUMN ELEVATION

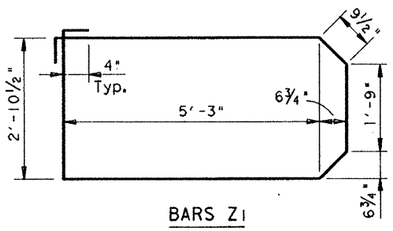

BARS Z1

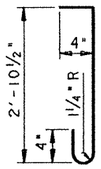

BARS Z2

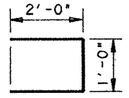

BARS Z3

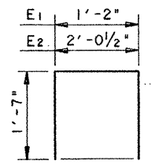

BARS E

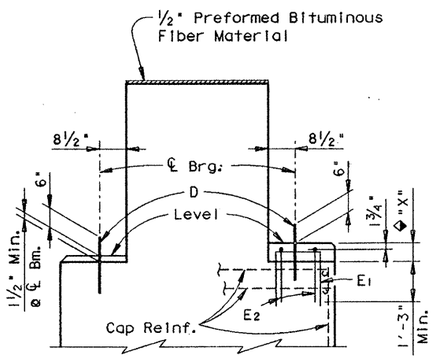

END VIEW

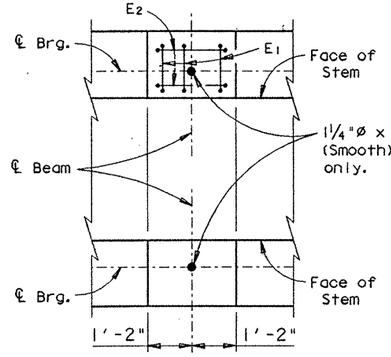

PLAN VIEW

BEARING SEAT DETAILS

◆Reinforced Pedestals [redacted] required where "X" is greater than 2½" and [redacted] considered subsidiary to the Bid Item "Class C Concrete (Bent). Compare bearing seat elevations to determine value of "X".

REK 3-30-92

TABLE OF CONSTANT QUANTITIES

Bar	No.	Size	Length	Weight
A1	14	# 11	▲ 71'- 2"	5294
A2	8	# 9	5'-11"	161
B	8	# 11	▲▲ 69'- 3"	2943
D	4	1¼"ø	1'- 6"	25
H	178	# 6	6'-11"	1850
J	32	# 6	5'- 4"	256
S1	37	# 6	25'- 3"	1403
S2-15	28	# 6	23'- 8"Av	995
S16-27	24	# 6	21'- 3"Av	766
S28	2	# 6	20'- 3"	61
S29-41	26	# 6	25'-10"Av	1009
S42	10	# 6	27'- 0"	406
U1	37	# 5	14'- 2"	547
U2-15	28	# 5	12'- 7"Av	367
U16-27	24	# 5	10'- 2"Av	255
W1	16	# 9	◩ 69'- 2"	3763
W2	2	# 9	56'- 2"	382
W3	2	# 9	51'-10"	352
W4	4	# 9	45'- 4"	616
W5	4	# 9	38'-10"	528
W6	4	# 9	32'- 4"	440

Reinforcing Steel	Lb	⁜22419
Class "C" Concrete (Cap)	CY	96.1

⁜ For contractor's information only

All cap & column reinforcing steel shall be Grade 60.

▲ Includes 1 ~ 10'-0" Min. lap

▲▲ Includes 1 ~ 7'-2" Min. lap

◩ Includes 1 ~ 8'-0" Min. lap

GENERAL NOTES:

Designed according to A.A.S.H.T.O. 1989 Standard and current Interim Specifications.

Calculated Foundation Load = 470 Tons/Dr. Shaft

See "Form Liner Details" sheet for aesthetic treatment of columns and cap.

See Inverted Tee Bent Special Cap Details Sheet for details not shown.

TABLE OF VARIABLE QUANTITIES

"H"	Class "C" Conc. (Col.)	Bars Z1 17'-5" ~ #4		Bars Z2 3'-8" ~ #4		Bars Z3 5'-0" ~ #4		Bars V 60 ~ # 11		⁜ Reinf. Steel	Class "C" Conc.
		No.	Weight	No.	Weight	No.	Weight	Length	Weight		
Ft	CY									Lb	CY
37	88.0	152	1769	228	559	152	508	42'- 3"	13468	48630	231.4
38	90.4	156	1815	234	574	156	521	43'- 3"	13787	49023	233.8
39	92.8	160	1862	240	588	160	534	44'- 3"	14106	49416	236.2
40	95.2	164	1908	246	603	164	548	45'- 3"	14425	49810	238.6
41	97.6	168	1955	252	618	168	561	46'- 3"	14744	50204	241.0

▪ TOTAL ESTIMATED QUANTITIES

▪ Includes Footing Quantities

NOTE: For Bearing Seat surface finish see GpC(SPL) sheet.

9-25-91

HS 20 LOADING

SHEET 2 OF 3

STATE DEPARTMENT OF HIGHWAYS AND PUBLIC TRANSPORTATION

INTERIOR BENT NO. 8 RAMPS 3 & 4

US 83/281 INTERCHANGE

D45350A1 ▪ ZFA2 ▪ [355105]4377INV16.DGN	PREPARED BY AND FOR USE OF TEXAS SDH&PT					
ORIGINAL DRAWING DATED NOVEMBER 1990	STATE DISTRICT	FEDERAL REGION	FEDERAL AID PROJECT ▪			SHEET
DN.▪ MRL REVISIONS	21	6	NH 92C JM			205
CK.▪ GAF	COUNTY		CONTROL	SECTION	JOB	HIGHWAY
DW.▪ DRG	HIDALGO		0039	17	097	US 83/281
CK.▪ JCC						

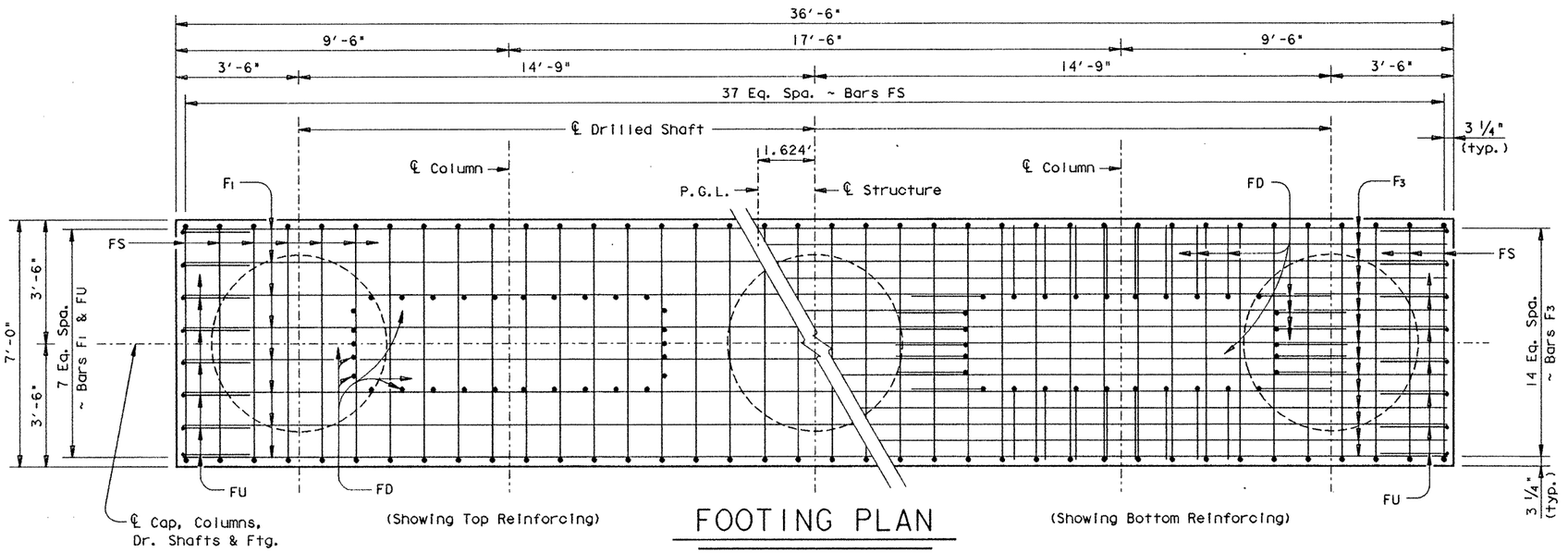

FOOTING PLAN

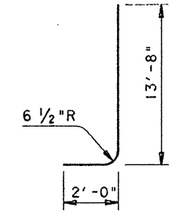

BARS FD

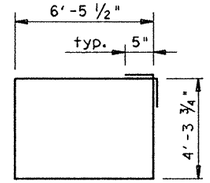

BARS FS

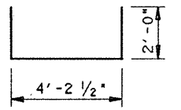

BARS FU

TABLE OF FOOTING QUANTITIES

Bar	No.	Size	Length	Weight
F_1	8	# 8	36'- 0"	769
F_2	8	# 5	36'- 0"	300
F_3	15	# 11	36'- 0"	2869
FD	60	# 11	15'- 6"	4941
FS	38	# 5	22'- 5"	889
FU	16	# 5	8'- 4"	139

Reinforcing Steel	Lb	⁜ 9907
Class "C" Concrete	CY	47.3

⁜ For Contractor's Information only.

All footing reinforcing steel ■ Grade 60.

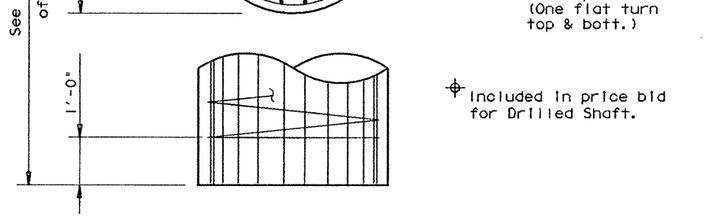

FOOTING HALF-ELEVATION

FOOTING SECTION

9-25-91

HS 20 LOADING

STATE DEPARTMENT OF HIGHWAYS AND PUBLIC TRANSPORTATION

INTERIOR BENT NO. 8 RAMPS 3 & 4

US 83/281 INTERCHANGE

D45350A: ZFA2: (355105)4327INV16.DGN	PREPARED BY AND FOR USE OF TEXAS SDH&PT						
ORIGINAL DRAWING DATE: NOVEMBER 1990	STATE DISTRICT	FEDERAL REGION	FEDERAL AID PROJECT #			SHEET
DN.: GAF/MRL	21	6	NH 92C)M			206
CK.: MRL/GAF	COUNTY		CONTROL	SECTION	JOB	HIGHWAY
DN.: DRG	HIDALGO		0039	17	097	US 83/281
CK.: JCC						

REVISIONS

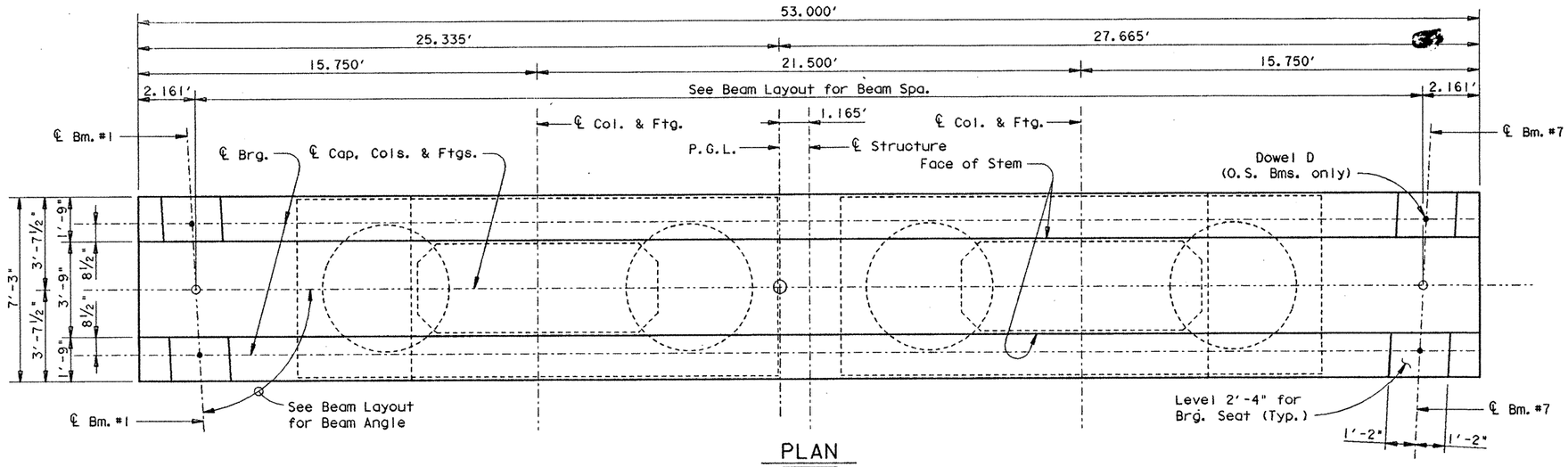

PLAN

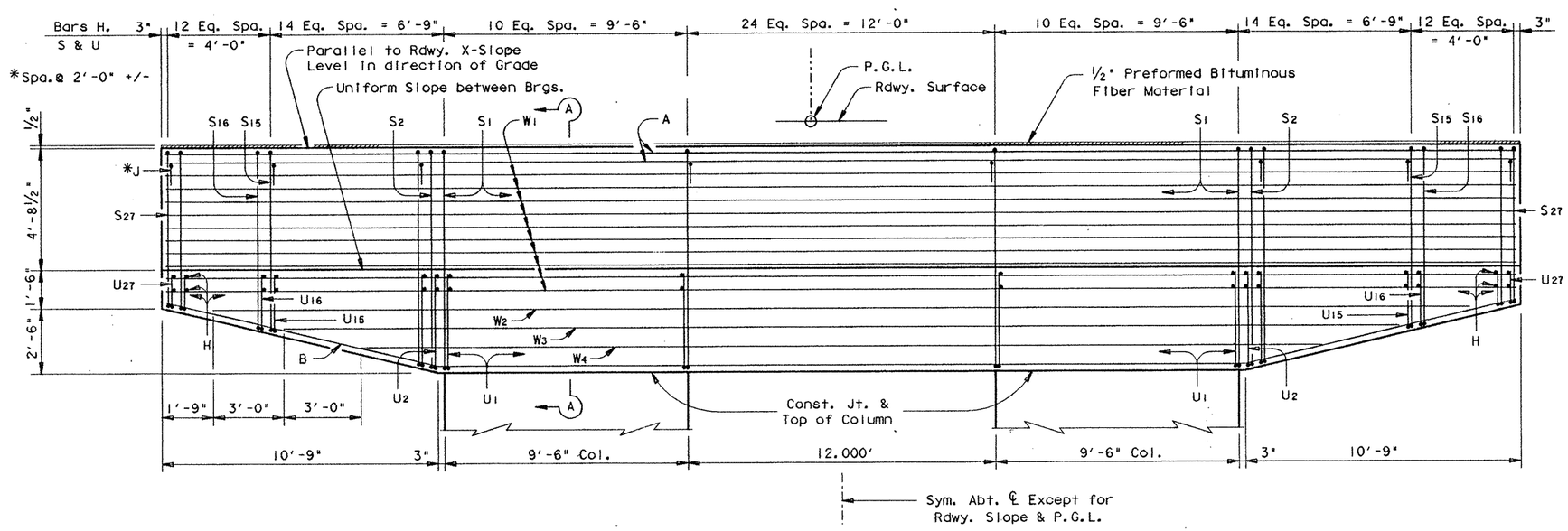

CAP ELEVATION

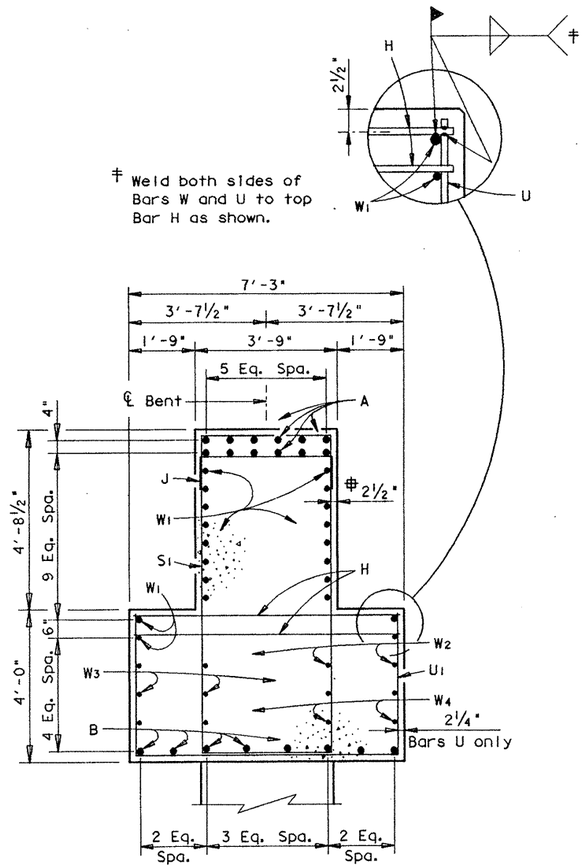

SECTION A-A

Weld both sides of Bars W and U to top Bar H as shown.

Typical except as noted

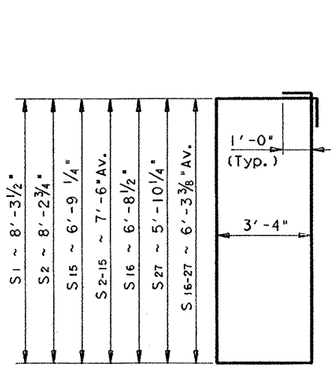

BARS S

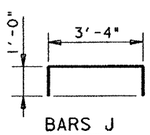

BARS J

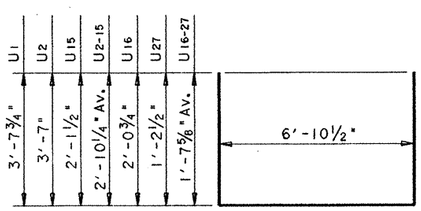

BARS U

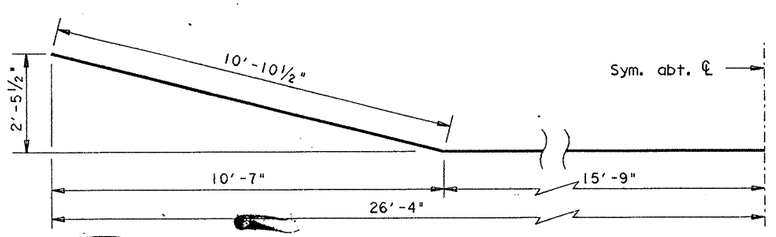

BARS B

STATE OF TEXAS
MARK J. BLOSCHOCK
52996
REGISTERED
PROFESSIONAL ENGINEER
9-25-91

HS 20 LOADING

SHEET 1 OF 2

STATE DEPARTMENT OF HIGHWAYS AND PUBLIC TRANSPORTATION

INTERIOR BENT NO. 9 RAMPS 3 & 4

US 83/281 INTERCHANGE

D45350A: ZFA2: [355105]4377INV19.DGN	PREPARED BY AND FOR USE OF TEXAS SDH&PT						
ORIGINAL DRAWING DATE: DECEMBER 1990	STATE DISTRICT	FEDERAL REGION	FEDERAL AID PROJECT				SHEET
DN.: JCC	REVISIONS	21	6	NH 92C)M			207
CK.: MAS		COUNTY		CONTROL	SECTION	JOB	HIGHWAY
DR.: DRG		HIDALGO		0039	17	097	US 83/281
CC.: JCC							

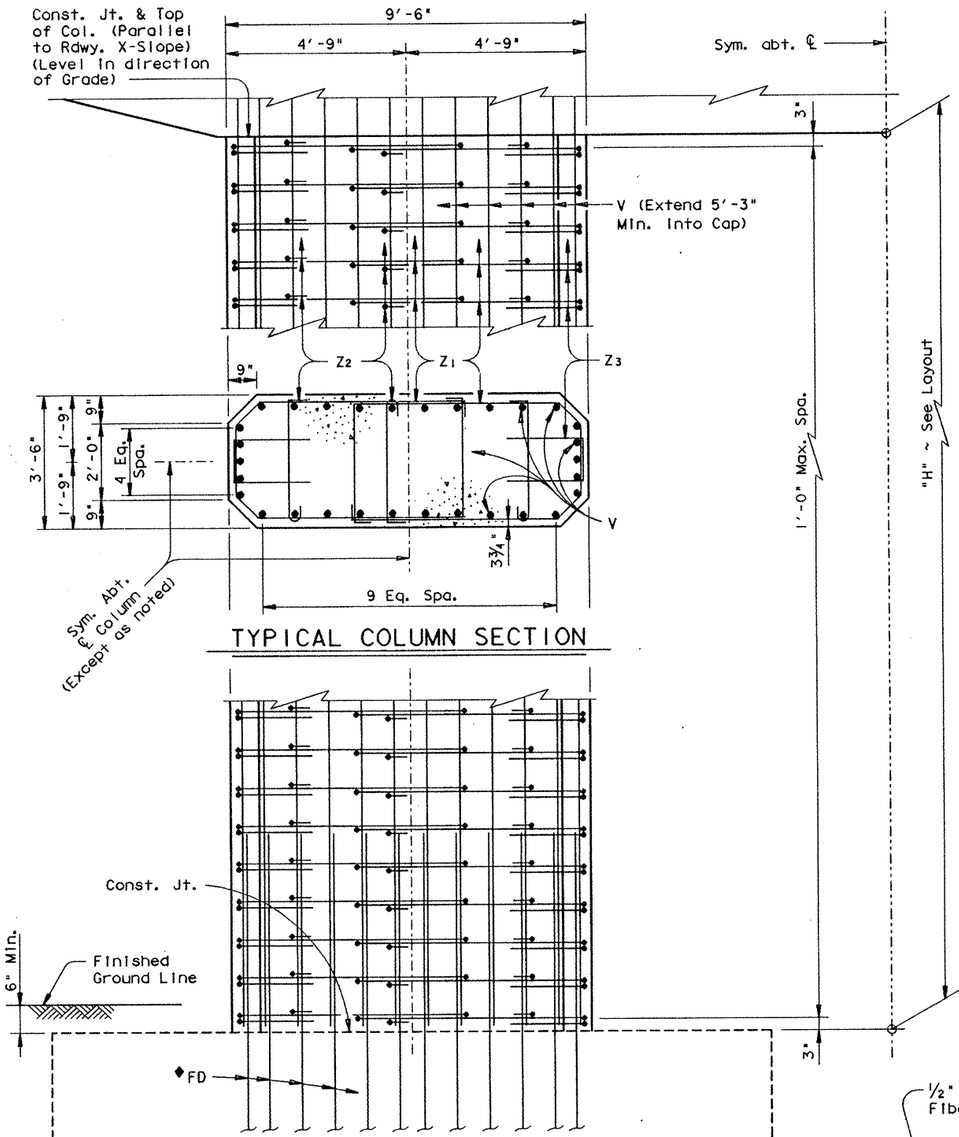

TYPICAL COLUMN SECTION

◆See Footing Details sheet for foundation details and quantities not shown.

COLUMN ELEVATION

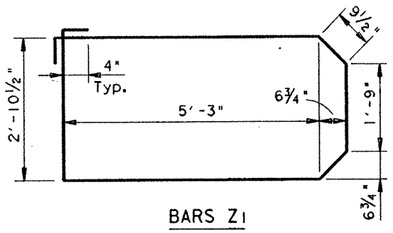

BARS Z1

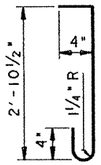

BARS Z2

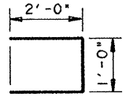

BARS Z3

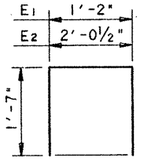

BARS E

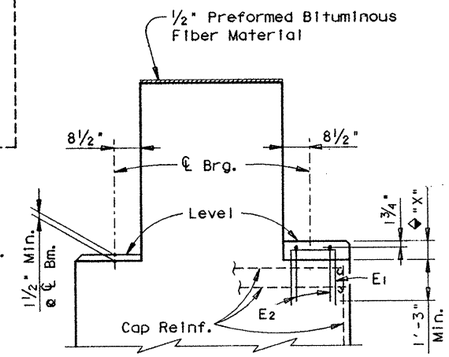

END VIEW

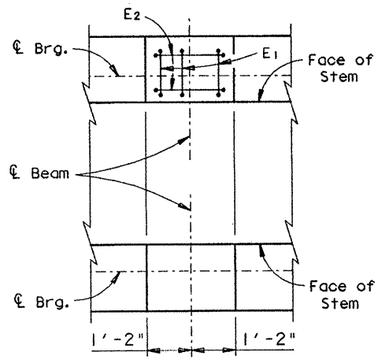

PLAN VIEW

BEARING SEAT DETAILS

◆Reinforced Pedestals [redacted] required where "X" is greater than 2½" and [redacted] considered subsidiary to the Bid Item "Class C Concrete (Bent). Compare bearing seat elevations to determine value of "X".

For contractor's information only

All cap & column reinforcing steel [redacted] Grade 60.

GENERAL NOTES:

Designed according to A.A.S.H.T.O. 1989 Standard and current Interim Specifications.

Calculated Foundation Load = 350 Tons/Dr. Shaft

See "Form Liner Details" sheet for aesthetic treatment of columns and cap.

See Inverted Tee Bent Special Cap Details Sheet for details not shown.

TABLE OF CONSTANT QUANTITIES

Bar	No.	Size	Length	Weight
A	12	# 11	56'- 8"	3613
B	8	# 11	57'- 3"	2433
H	210	# 6	6'-11"	2183
J	30	# 6	5'- 4"	240
S1	53	# 6	25'- 3"	2010
S2-15	28	# 6	23'- 8"Av	995
S16-27	24	# 6	21'- 3"Av	766
U1	53	# 5	14'- 2"	783
U2-15	28	# 5	12'- 7"Av	367
U16-27	24	# 5	10'- 2"Av	255
W1	20	# 9	56'- 8"	3854
W2	4	# 9	53'- 6"	728
W3	4	# 9	47'- 6"	646
W4	4	# 9	41'- 6"	564

Reinforcing Steel	Lb	#19437
Class "C" Concrete (Cap)	CY	91.6

TABLE OF VARIABLE QUANTITIES

"H"	Class "C" Conc. (Col.)	Bars Z1 17'-5" ~ #4		Bars Z2 3'-8" ~ #4		Bars Z3 5'-0" ~ #4		Bars V 60 ~ # 11	
Ft	CY	No.	Weight	No.	Weight	No.	Weight	Length	Weight
43	102.3	176	2048	264	647	176	588	48'- 3"	15381
44	104.7	180	2095	270	662	180	601	49'- 3"	15700
45	107.1	184	2141	276	677	184	615	50'- 3"	16019
46	109.5	188	2188	282	691	188	628	51'- 3"	16337
47	111.8	192	2234	288	706	192	641	52'- 3"	16656

■ TOTAL ESTIMATED QUANTITIES

# Reinf. Steel	Class "C" Conc.
Lb	CY
48303	243.1
48697	245.5
49091	247.9
49483	250.3
49876	252.6

■ Includes Footing Quantities

NOTE: For Bearing Seat surface finish see GpC(SPL) sheet.

HS 20 LOADING

SHEET 2 OF 2

STATE OF TEXAS
MARK J. BLOSCHOCK
52996
REGISTERED PROFESSIONAL ENGINEER
9-25-91

REV. 3-30-92

STATE DEPARTMENT OF HIGHWAYS AND PUBLIC TRANSPORTATION

INTERIOR BENT NO. 10 RAMPS 3 & 4

US 83/281 INTERCHANGE

D45350A: ZFA2: [355105]4377INV20.DGN | PREPARED BY AND FOR USE OF TEXAS SDH&PT

ORIGINAL DRAWING DATE: DECEMBER 1990

DN.: MRL
CK.: CAF
DW.: DRG
CK.: JCC

REVISIONS

STATE DISTRICT	FEDERAL REGION	FEDERAL AID PROJECT	SHEET
21	6	NH 92( )M	2/0

COUNTY	CONTROL	SECTION	JOB	HIGHWAY
HIDALGO	0039	17	097	US 83/281

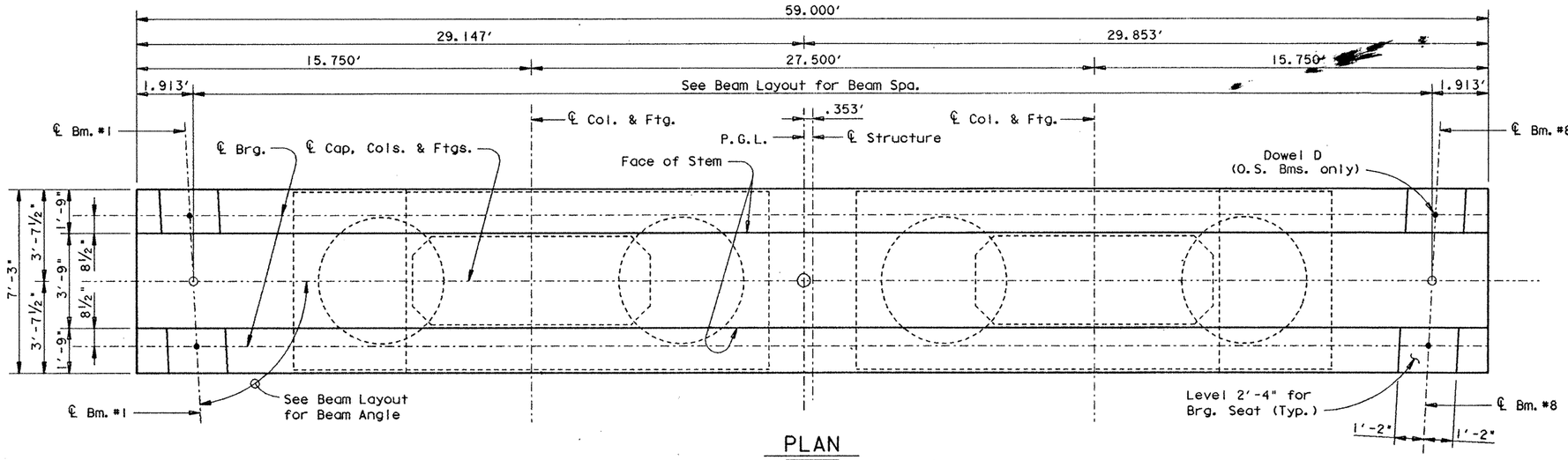

PLAN

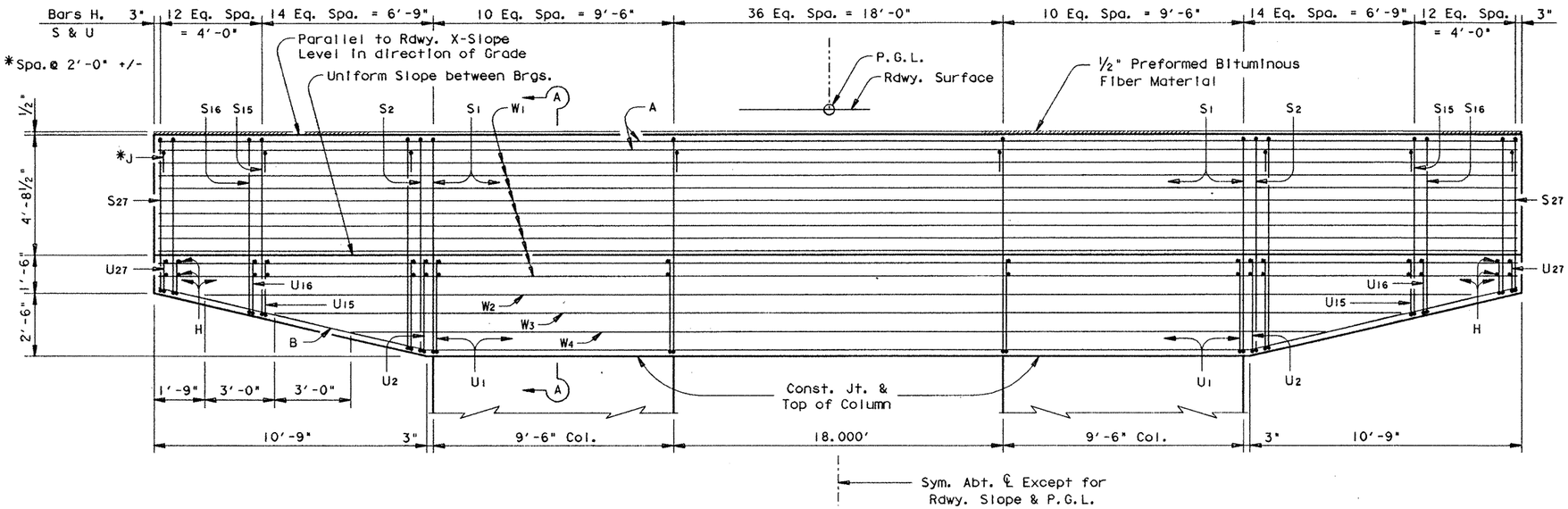

CAP ELEVATION

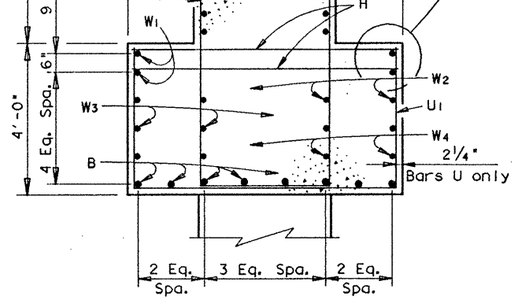

SECTION A-A

‡ Weld both sides of Bars W and U to top Bar H as shown.

Typical except as noted

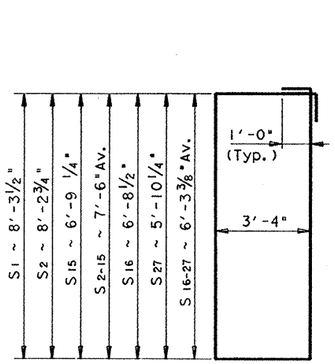

BARS S

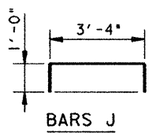

BARS J

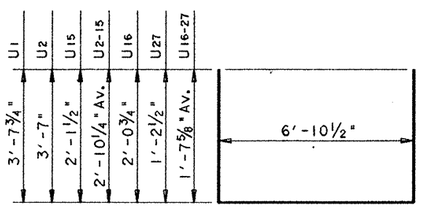

BARS U

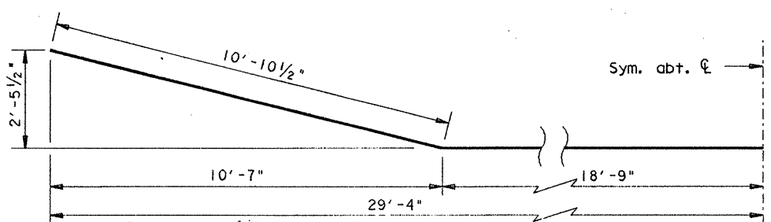

BARS B

STATE OF TEXAS
MARK J. BLOSCHOCK
52996
REGISTERED
PROFESSIONAL ENGINEER
9-24-91

HS 20 LOADING

SHEET 1 OF 2

STATE DEPARTMENT OF HIGHWAYS AND PUBLIC TRANSPORTATION

INTERIOR BENT NO. 11 RAMPS 3 & 4

US 83/281 INTERCHANGE

D45350A: ZFA2: (355105)4377INV21.DGN

PREPARED BY AND FOR USE OF TEXAS SDH&PT

ORIGINAL DRAWING DATE: DECEMBER 1990	STATE DISTRICT	FEDERAL REGION	FEDERAL AID PROJECT	SHEET
DN.: JCC	21	6	NH 92C)M	211
CK.: MAS	COUNTY	CONTROL	SECTION	JOB	HIGHWAY
DR.: DRG	HIDALGO	0039	17	097	US 83/281
CK.: JCC					

REVISIONS

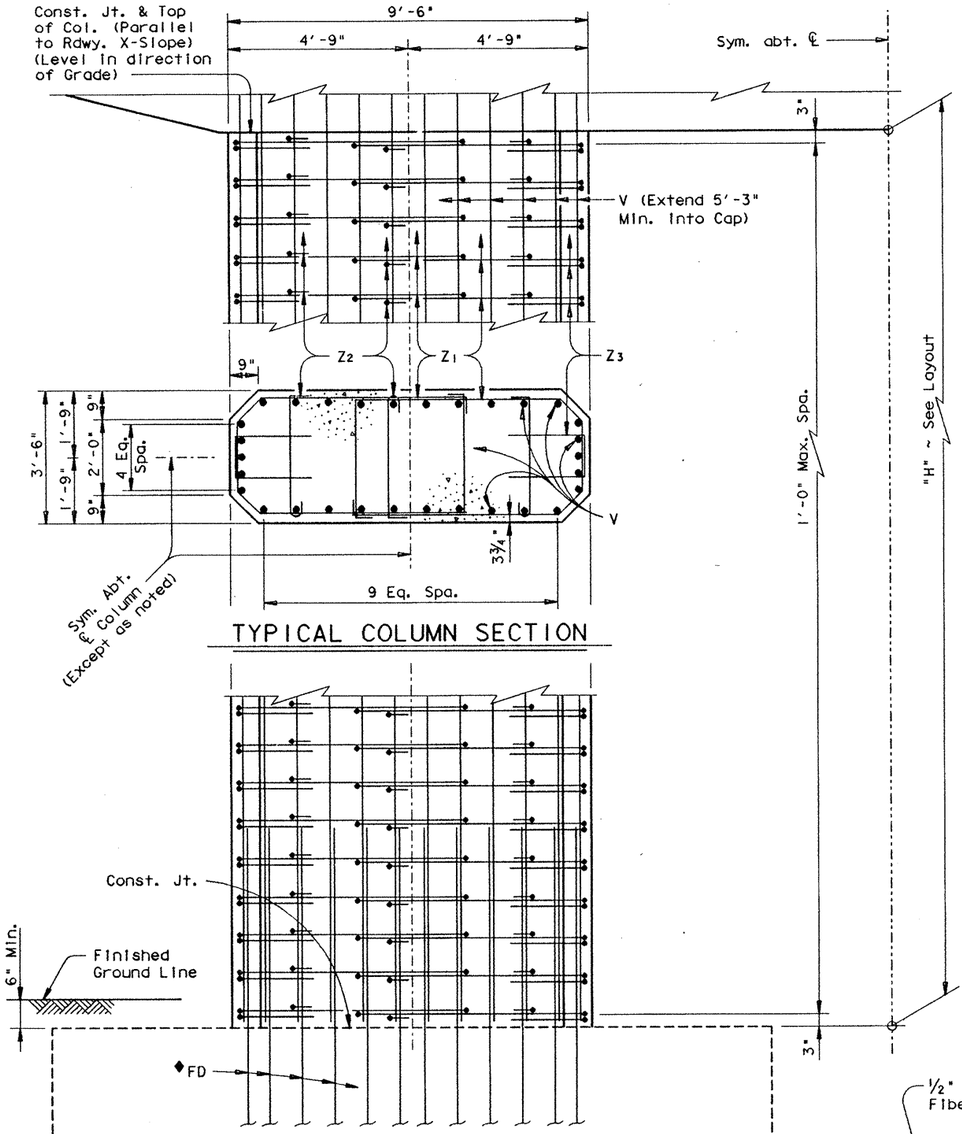

TYPICAL COLUMN SECTION

◆See Footing Details sheet for foundation details and quantities not shown.

COLUMN ELEVATION

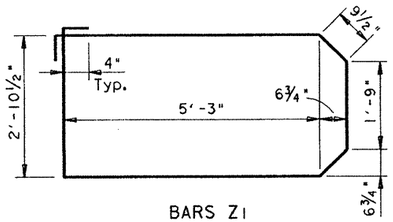

BARS Z1

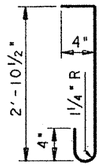

BARS Z2

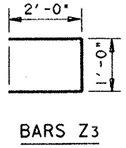

BARS Z3

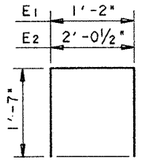

BARS E

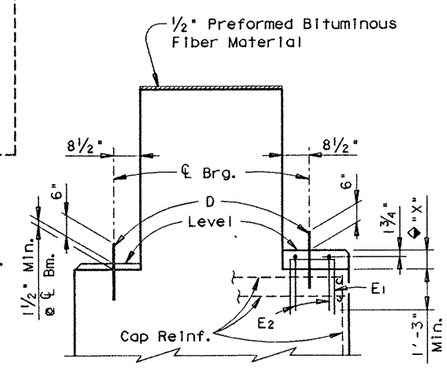

END VIEW

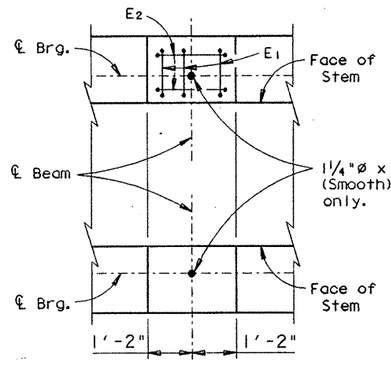

PLAN VIEW

BEARING SEAT DETAILS

◆Reinforced Pedestals [redacted] required where "X" is greater than 2½" and s[redacted] considered subsidiary to the Bid item "Class C Concrete (Bent). Compare bearing seat elevations to determine value of "X".

* For contractor's information only

All cap & column reinforcing steel [redacted] Grade 60.

GENERAL NOTES:

Designed according to A.A.S.H.T.O. 1989 Standard and current Interim Specifications.

Calculated Foundation Load = 350 Tons/Dr. Shaft

See "Form Liner Details" sheet for aesthetic treatment of columns and cap.

See Inverted Tee Bent Special Cap Details Sheet for details not shown.

TABLE OF CONSTANT QUANTITIES

Bar	No.	Size	Length	Weight
A	12	# 11	58'- 8"	3741
B	8	# 11	59'- 3"	2518
D	4	1¼"ø	1'- 6"	25
H	218	# 6	6'-11"	2266
J	31	# 6	5'- 4"	248
S1	57	# 6	25'- 3"	2162
S2-15	28	# 6	23'- 8"Av	995
S16-27	24	# 6	21'- 3"Av	766
U1	57	# 5	14'- 2"	842
U2-15	28	# 5	12'- 7"Av	367
U16-27	24	# 5	10'- 2"Av	255
W1	20	# 9	58'- 8"	3990
W2	4	# 9	55'- 6"	755
W3	4	# 9	49'- 6"	673
W4	4	# 9	43'- 6"	592

Reinforcing Steel	Lb	*20195
Class "C" Concrete (Cap)	CY	95.0

TABLE OF VARIABLE QUANTITIES

"H"	Class "C" Conc. (Col.)	Bars Z1 17'-5" ~ #4		Bars Z2 3'-8" ~ #4		Bars Z3 5'-0" ~ #4		Bars V 60 ~ # 11	
Ft	CY	No.	Weight	No.	Weight	No.	Weight	Length	Weight
44	104.7	180	2095	270	662	180	601	49'- 3"	15700
45	107.1	184	2141	276	677	184	615	50'- 3"	16019
46	109.5	188	2188	282	691	188	628	51'- 3"	16337
47	111.8	192	2234	288	706	192	641	52'- 3"	16656
48	114.2	196	2281	294	721	196	655	53'- 3"	16975

■ TOTAL ESTIMATED QUANTITIES

* Reinf. Steel	Class "C" Conc.
Lb	CY
49455	248.9
49849	251.3
50241	253.7
50634	256.0
51029	258.4

■ Includes Footing Quantities

NOTE: For Bearing Seat surface finish see GpC(SPL) sheet.

HS 20 LOADING

SHEET 2 OF 2

STATE DEPARTMENT OF HIGHWAYS AND PUBLIC TRANSPORTATION

INTERIOR BENT NO. 11 RAMPS 3 & 4

US 83/281 INTERCHANGE

STATE OF TEXAS
MARK J. BLOSCHOCK
52996
REGISTERED PROFESSIONAL ENGINEER
9-25-91

REV. 3-30-22

D45350A: ZFA2: [3551051437711NV21.DGN] PREPARED BY AND FOR USE OF TEXAS SDH&PT

ORIGINAL DRAWING DATE: DECEMBER 1990

DN.: MRL CK.: GAF DN.: DRG CK.: JCC

REVISIONS

STATE DISTRICT	FEDERAL REGION	FEDERAL AID PROJECT	SHEET
21	6	NH 926)M	212

COUNTY	CONTROL	SECTION	JOB	HIGHWAY
HIDALGO	0039	17	097	US 83/281

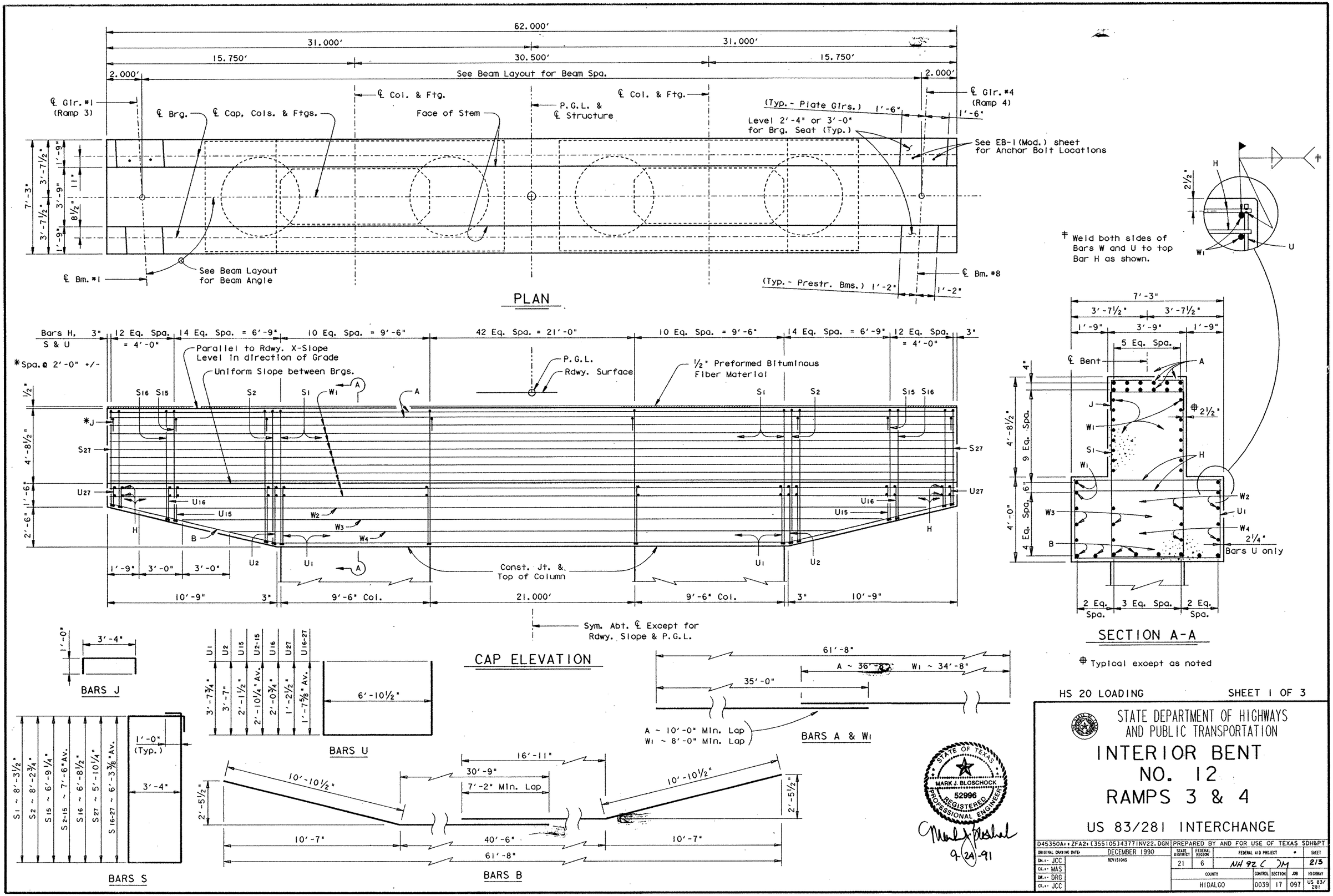

HS 20 LOADING

SHEET 1 OF 3

STATE DEPARTMENT OF HIGHWAYS AND PUBLIC TRANSPORTATION

INTERIOR BENT NO. 12 RAMPS 3 & 4

US 83/281 INTERCHANGE

D45350A: ZFA2: [355105]43771NV22.DGN	PREPARED BY AND FOR USE OF TEXAS SDH&PT					
ORIGINAL DRAWING DATE: DECEMBER 1990	STATE DISTRICT	FEDERAL REGION	FEDERAL AID PROJECT			SHEET
DN.: JCC	21	6	NH 92 C JM			213
CK.: MAS	COUNTY		CONTROL	SECTION	JOB	HIGHWAY
DW.: DRG	HIDALGO		0039	17	097	US 83/281
CK.: JCC						

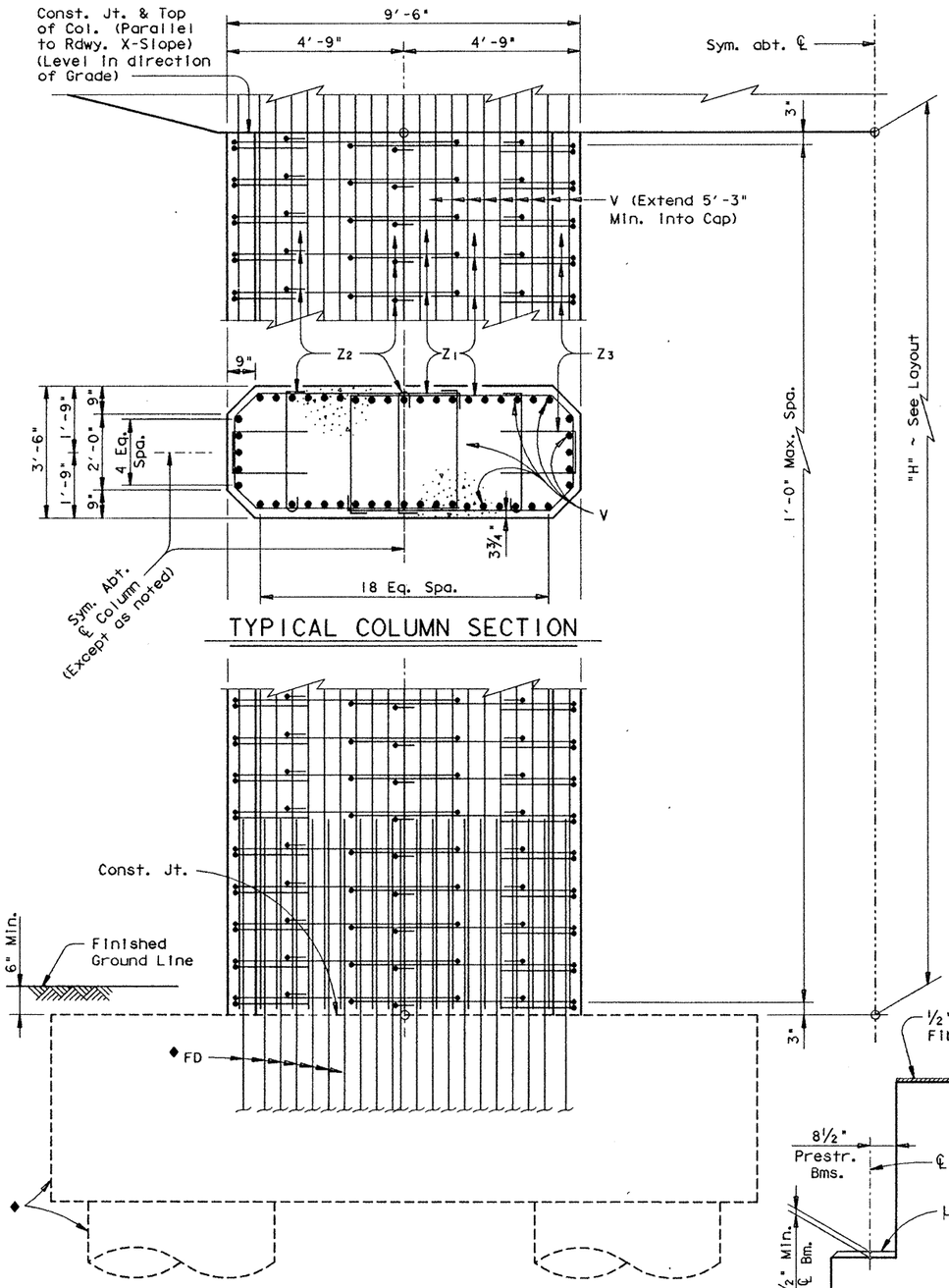

TYPICAL COLUMN SECTION

◆See Footing Details sheet for foundation details and quantities not shown.

COLUMN ELEVATION

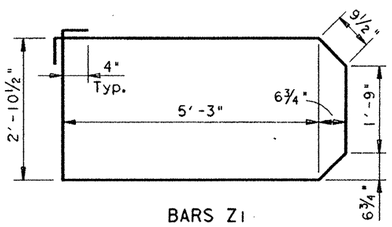

BARS Z1

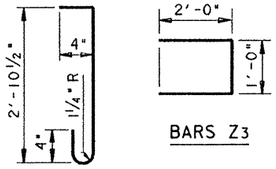

BARS Z2

BARS Z3

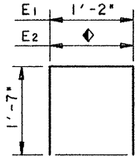

BARS E

◆2'-0½" ℄ Prestr. Bms.
2'-8½" ℄ Plate Girs.

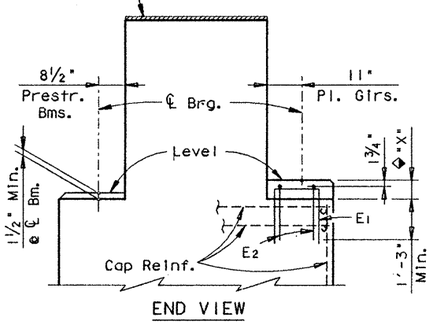

END VIEW

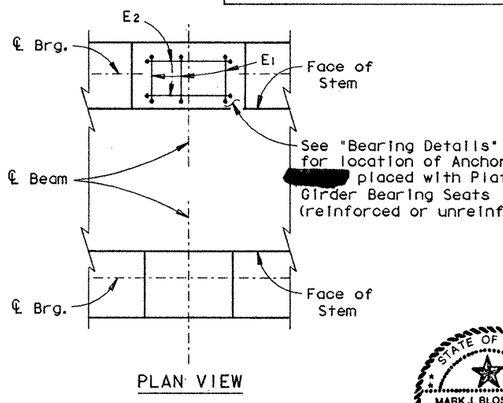

PLAN VIEW

BEARING SEAT DETAILS

◆Reinforced Pedestals [redacted] required where "X" is greater than 2½" and [redacted] considered subsidiary to the Bid Item "Class C Concrete (Bent). Compare bearing seat elevations to determine value of "X".

NOTE: For Bearing Seat surface finish see GpC(SPL) sheet.

⁜ For contractor's information only

All cap & column reinforcing steel [redacted] Grade 60.

△ Includes 1 ~ 10'-0" Min. lap

△△ Includes 1 ~ 7'-2" Min. lap

◩ Includes 1 ~ 8'-0" Min. lap

GENERAL NOTES:

Designed according to A.A.S.H.T.O. 1989 Standard and current Interim Specifications.

Calculated Foundation Load = 300 Tons/Dr. Shaft

See "Form Liner Details" sheet for aesthetic treatment of columns and cap.

See Inverted Tee Bent Special Cap Details Sheet for details not shown.

TABLE OF CONSTANT QUANTITIES

Bar	No.	Size	Length	Weight
A	12	# 11	△ 71'- 8"	4569
B	8	# 11	△△ 69'- 5"	2951
H	230	# 6	6'-11"	2391
J	32	# 6	5'- 4"	256
S1	63	# 6	25'- 3"	2389
S2-15	28	# 6	23'- 8"Av	995
S16-27	24	# 6	21'- 3"Av	766
U1	63	# 5	14'- 2"	931
U2-15	28	# 5	12'- 7"Av	367
U16-27	24	# 5	10'- 2"Av	255
W1	20	# 9	◩ 69'- 8"	4738
W2	4	# 9	58'- 6"	796
W3	4	# 9	52'- 6"	714
W4	4	# 9	46'- 6"	632
Reinforcing Steel			Lb	⁜22750
Class "C" Concrete (Cap)			CY	100.3

TABLE OF VARIABLE QUANTITIES

"H"	Class "C" Conc. (Col.)	Bars Z1 17'-5" ~ #4		Bars Z2 3'-8" ~ #4		Bars Z3 5'-0" ~ #4		Bars V 96 ~ # 11		▬ TOTAL ESTIMATED QUANTITIES ⁜ Reinf. Steel	▬ Class "C" Conc.
Ft	CY	No.	Weight	No.	Weight	No.	Weight	Length	Weight	Lb	CY
45	107.1	184	2141	276	677	184	615	50'- 3"	25630	64979	256.6
46	109.5	188	2188	282	691	188	628	51'- 3"	26140	65563	259.0
47	111.8	192	2234	288	706	192	641	52'- 3"	26650	66147	261.3
48	114.2	196	2281	294	721	196	655	53'- 3"	27160	66733	263.7
49	116.6	200	2327	300	735	200	668	54'- 3"	27670	67316	266.1

▬ Includes Footing Quantities

HS 20 LOADING

SHEET 2 OF 3

STATE DEPARTMENT OF HIGHWAYS AND PUBLIC TRANSPORTATION

INTERIOR BENT NO. 12 RAMPS 3 & 4

US 83/281 INTERCHANGE

STATE OF TEXAS
MARK J. BLOSCHOCK
52996
REGISTERED
PROFESSIONAL ENGINEER

9-25-91

REV. 3-30-92

D45350A1 • ZFA2 • (355105)4377INV22.DGN | PREPARED BY AND FOR USE OF TEXAS SDH&PT

ORIGINAL DRAWING DATE: DECEMBER 1990	STATE DISTRICT	FEDERAL REGION	FEDERAL AID PROJECT	SHEET
DN.: MRL	21	6	NH 92C)M	2/4
CK.: GAF	COUNTY		CONTROL SECTION JOB	HIGHWAY
DR.: DRG	HIDALGO		0039 17 097	US 83/ 281
CK.: JCC				

REVISIONS

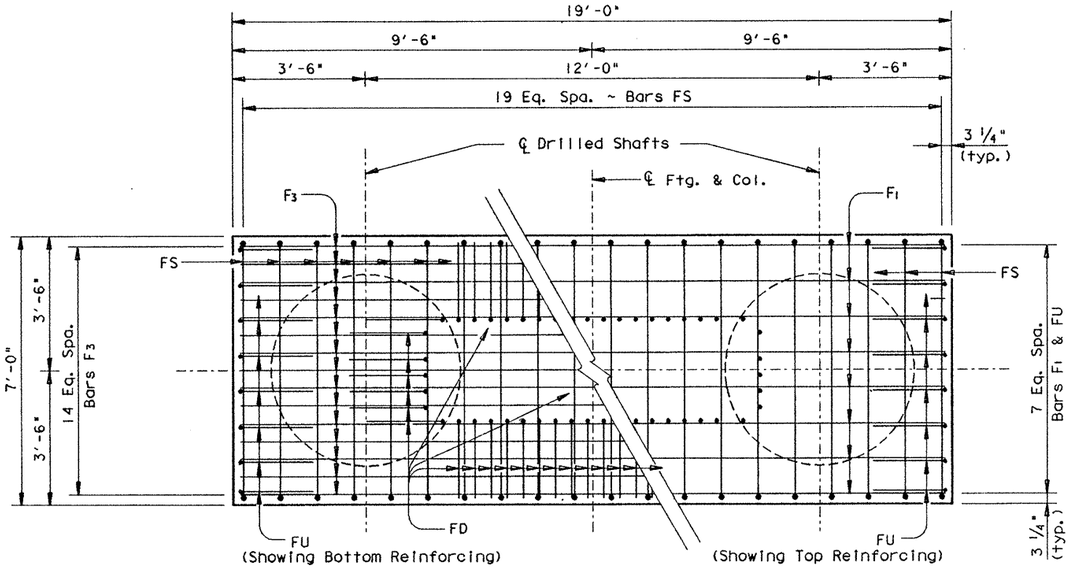

FOOTING PLAN

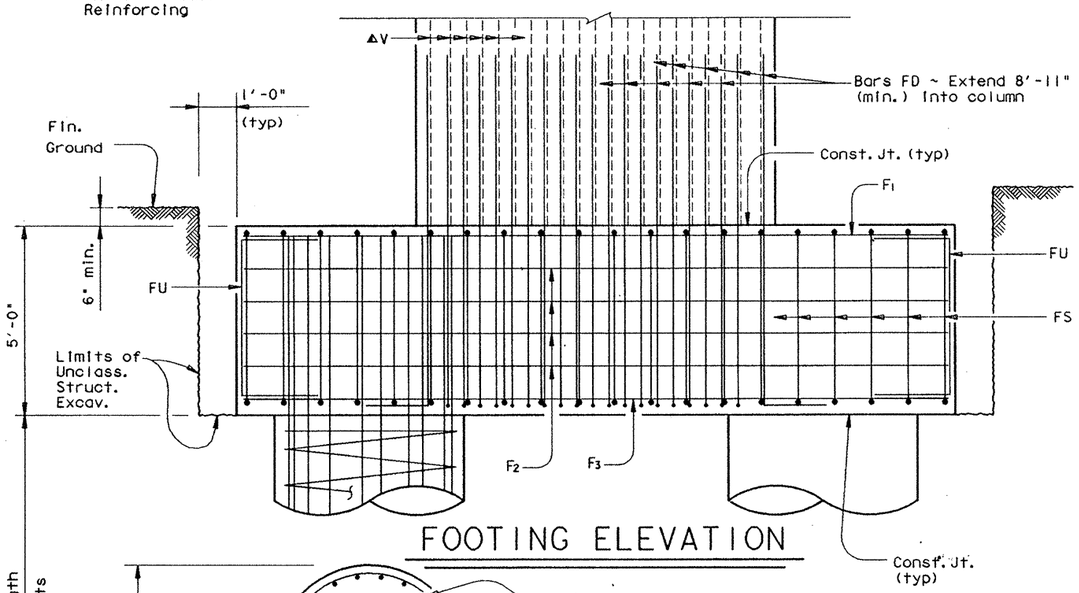

FOOTING ELEVATION

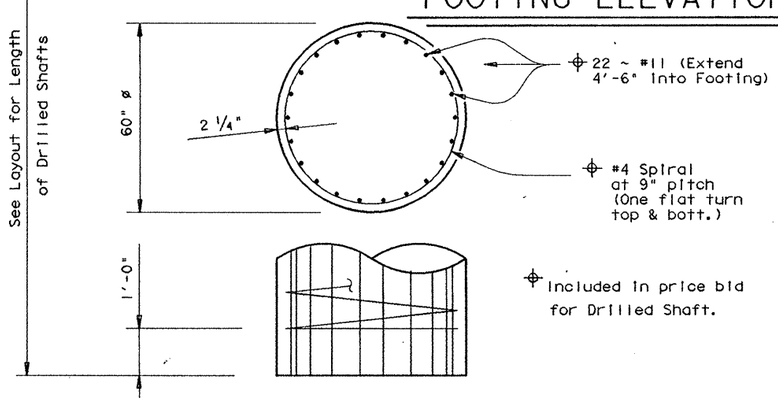

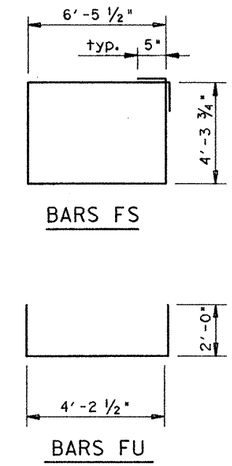

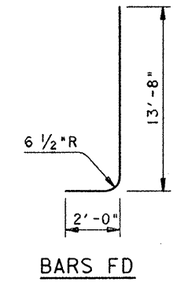

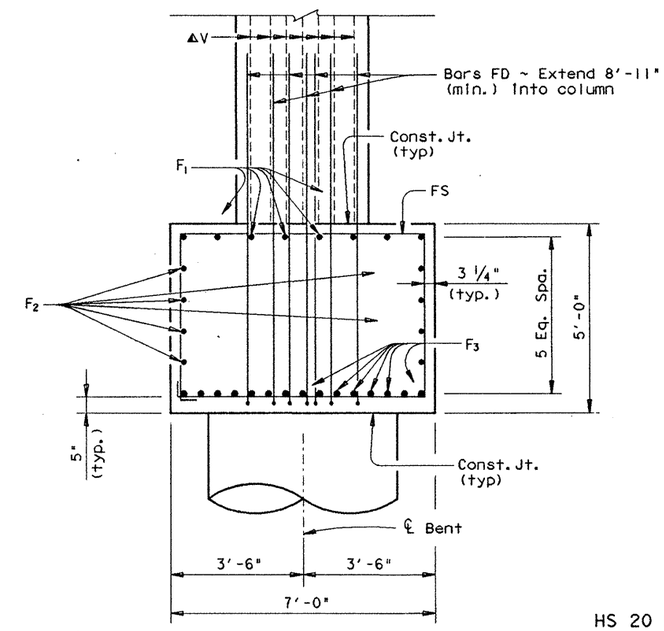

FOOTING SECTION

‡TABLE OF FOOTING QUANTITIES

Bar	No.	Size	Length	Weight
F_1	8	# 8	18'- 6"	395
F_2	8	# 5	18'- 6"	154
F_3	15	# 11	18'- 6"	1474
FD	48	# 11	15'- 6"	3953
FS	20	# 5	22'- 5"	468
FU	16	# 5	8'- 4"	139

Reinforcing Steel	Lb	‡ 6583
Class "C" Concrete	CY	24.6

‡ For Contractor's information only.

‡ Quantities shown are for one footing only.

All Footing Reinforcing Steel [redacted] Grade 60.

HS 20 LOADING

SHEET 3 OF 3

STATE DEPARTMENT OF HIGHWAYS AND PUBLIC TRANSPORTATION

INTERIOR BENT NO. 12 RAMPS 3 & 4

US 83/281 INTERCHANGE

STATE OF TEXAS
MARK J. BLOSCHOCK
52996
REGISTERED PROFESSIONAL ENGINEER

9-25-91

D45350A1:ZFA2:[355105]4377INV22.DGN	PREPARED BY AND FOR USE OF TEXAS SDH&PT					
ORIGINAL DRAWING DATE: NOVEMBER 1990	STATE DISTRICT	FEDERAL REGION	FEDERAL AID PROJECT			SHEET
DN.: GAF/MRL	21	6	NH 92C)M			215
CK.: MRL/GAF	COUNTY		CONTROL	SECTION	JOB	HIGHWAY
DW.: PSR	HIDALGO		0039	17	097	US 83/281
CK.: GAF/MRL						

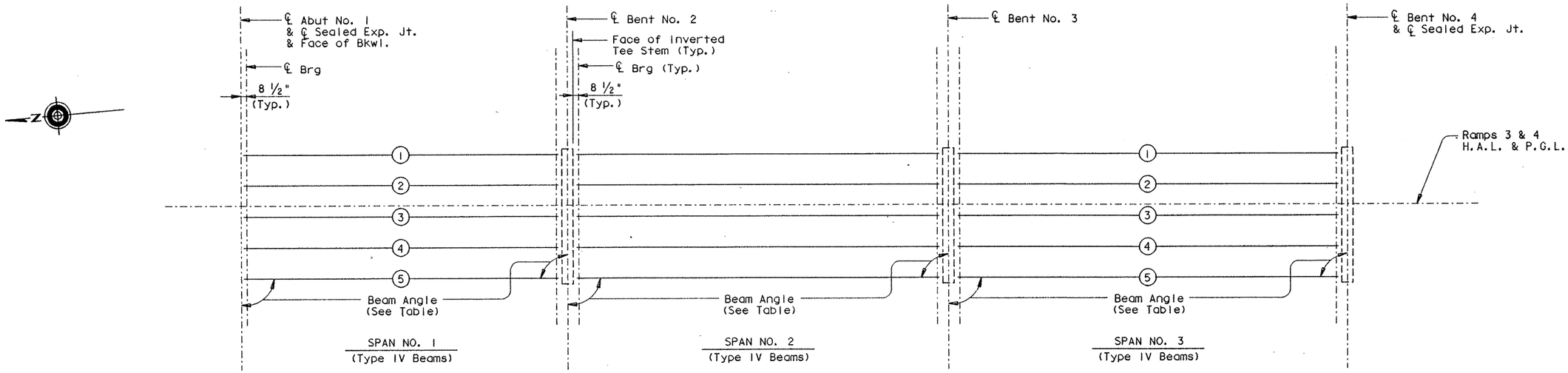

BEAM LAYOUT

BENT REPORT

ABUT NO. 1 (S 85 7 18.00 E)
DISTANCE BETWEEN STATION LINE AND BEAM 1 14.000 L

		BEAM SPAC. (C.L. BENT)	BEAM ANGLE D	M	S
SPAN 1	BEAM 1	0.000	90	0	0
	BEAM 2	8.500	90	0	0
	BEAM 3	8.500	90	0	0
	BEAM 4	8.500	90	0	0
	BEAM 5	8.500	90	0	0
	TOTAL	34.000			

BENT NO. 2 (S 85 7 18.00 E)
DISTANCE BETWEEN STATION LINE AND BEAM 1 14.000 L

		BEAM SPAC. (C.L. BENT)	BEAM ANGLE D	M	S
SPAN 1	BEAM 1	0.000	90	0	0
	BEAM 2	8.500	90	0	0
	BEAM 3	8.500	90	0	0
	BEAM 4	8.500	90	0	0
	BEAM 5	8.500	90	0	0
	TOTAL	34.000			
SPAN 2	BEAM 1	0.000	90	0	0
	BEAM 2	8.500	90	0	0
	BEAM 3	8.500	90	0	0
	BEAM 4	8.500	90	0	0
	BEAM 5	8.500	90	0	0
	TOTAL	34.000			

BENT REPORT

BENT NO. 3 (S 85 7 18.00 E)
DISTANCE BETWEEN STATION LINE AND BEAM 1 14.000 L

		BEAM SPAC. (C.L. BENT)	BEAM ANGLE D	M	S
SPAN 2	BEAM 1	0.000	90	0	0
	BEAM 2	8.500	90	0	0
	BEAM 3	8.500	90	0	0
	BEAM 4	8.500	90	0	0
	BEAM 5	8.500	90	0	0
	TOTAL	34.000			
SPAN 3	BEAM 1	0.000	90	0	0
	BEAM 2	8.500	90	0	0
	BEAM 3	8.500	90	0	0
	BEAM 4	8.500	90	0	0
	BEAM 5	8.500	90	0	0
	TOTAL	34.000			

BENT NO. 4 (S 85 7 18.00 E)
DISTANCE BETWEEN STATION LINE AND BEAM 1 14.000 L

		BEAM SPAC. (C.L. BENT)	BEAM ANGLE D	M	S
SPAN 3	BEAM 1	0.000	90	0	0
	BEAM 2	8.500	90	0	0
	BEAM 3	8.500	90	0	0
	BEAM 4	8.500	90	0	0
	BEAM 5	8.500	90	0	0
	TOTAL	34.000			

BEAM REPORT

BEAM REPORT, SPAN 1

	HORIZONTAL DISTANCE C-C BENT	C-C BRG.	TRUE DISTANCE BOT. BM. FLG.
BEAM 1	90.000	86.708	87.797
BEAM 2	90.000	86.708	87.797
BEAM 3	90.000	86.708	87.797
BEAM 4	90.000	86.708	87.797
BEAM 5	90.000	86.708	87.797

BEAM REPORT, SPAN 2

	HORIZONTAL DISTANCE C-C BENT	C-C BRG.	TRUE DISTANCE BOT. BM. FLG.
BEAM 1	105.000	99.833	100.944
BEAM 2	105.000	99.833	100.944
BEAM 3	105.000	99.833	100.944
BEAM 4	105.000	99.833	100.944
BEAM 5	105.000	99.833	100.944

BEAM REPORT, SPAN 3

	HORIZONTAL DISTANCE C-C BENT	C-C BRG.	TRUE DISTANCE BOT. BM. FLG.
BEAM 1	110.000	104.833	105.980
BEAM 2	110.000	104.833	105.983
BEAM 3	110.000	104.833	105.985
BEAM 4	110.000	104.833	105.985
BEAM 5	110.000	104.833	105.985

HS 20 LOADING

STATE OF TEXAS
MARK J. BLOSCHOCK
52996
REGISTERED
PROFESSIONAL ENGINEER
9-25-91

STATE DEPARTMENT OF HIGHWAYS
AND PUBLIC TRANSPORTATION

BEAM LAYOUT
UNIT NO. 1, RAMPS 3&4

US 83/281 INTERCHANGE

D45350A1 ZFA2 [355100]4379BLY02.DGN	PREPARED BY AND FOR USE OF TEXAS SDH&PT						
ORIGINAL DRAWING DATE: JANUARY 1991		STATE DISTRICT	FEDERAL REGION	FEDERAL AID PROJECT			SHEET
DN: LMW	REVISIONS	21	6	NH 92C 3M			2/6
CK: KBA		COUNTY		CONTROL	SECTION	JOB	HIGHWAY
DN: PSR		HIDALGO		0039	17	097	US 83/281
CK: LMW							

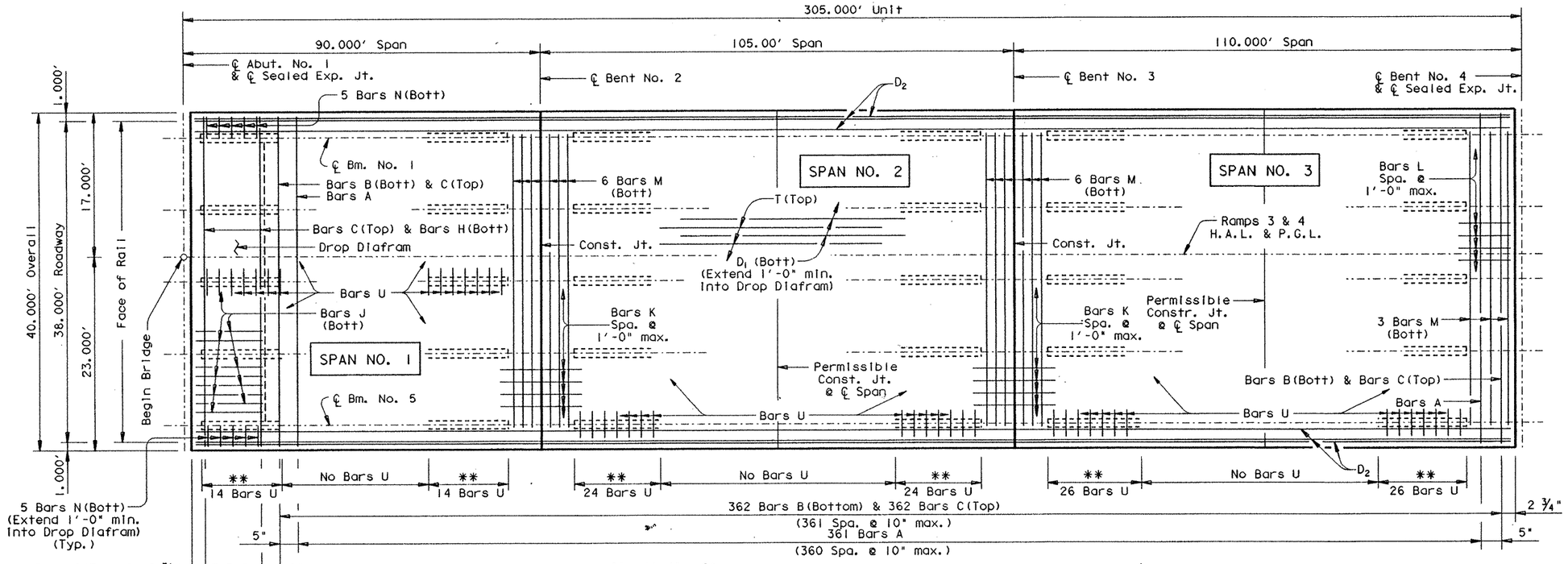

PLAN

** Bars U Spacing match Beam Bars R Spacing on All Beams in All Spans.

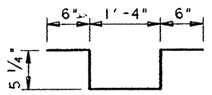

BARS U

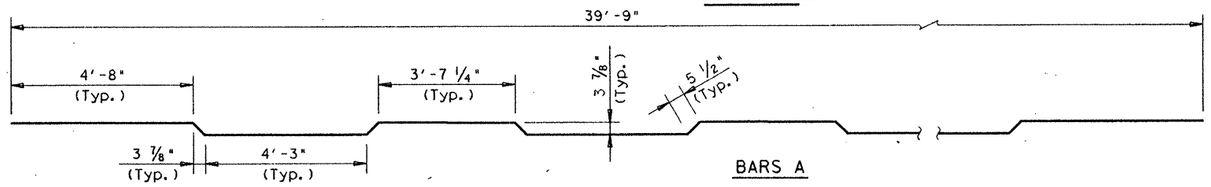

BARS A

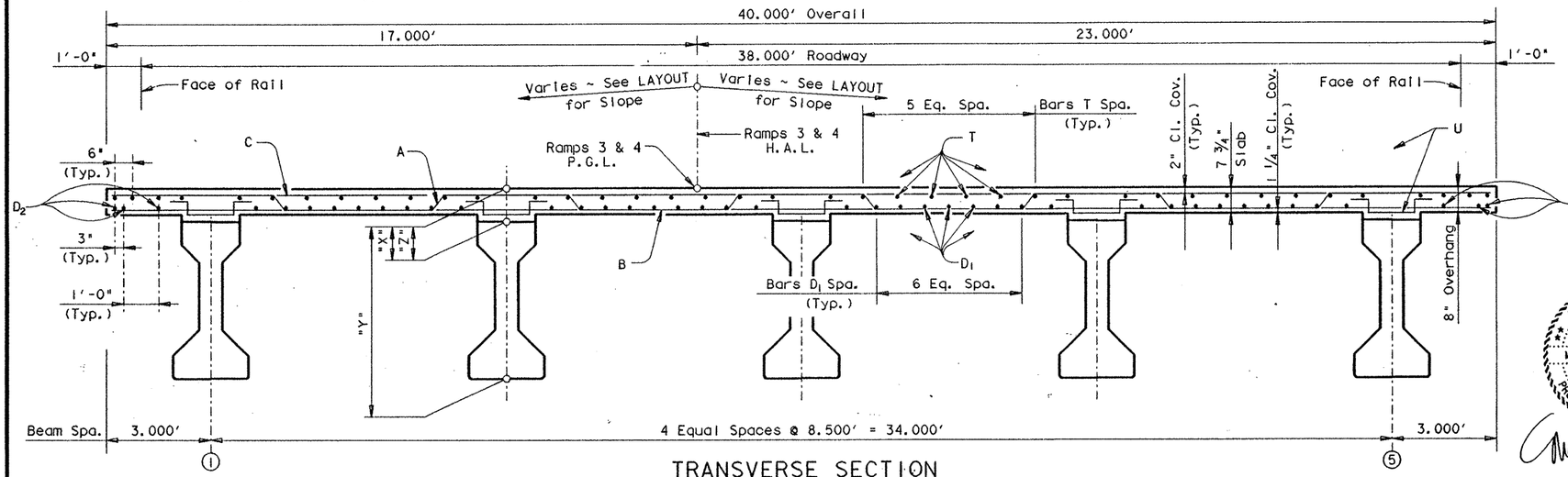

TRANSVERSE SECTION

Span	"A"	"B"
#1	0.048'	0.067'
#2	0.084'	0.118'
#3	0.102'	0.143'

NOTE: Deflections shown are due to cast-in-place concrete only.

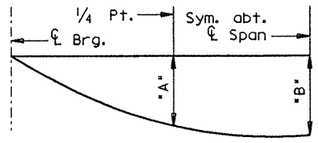

DEAD LOAD DEFLECTION DIAGRAM

(E_c = 5 X 10^6 psi)

TABLE OF ESTIMATED QUANTITIES

Bar	No.	Size	Length	Weight
A	361	# 5	40'-10"	15375
B	362	# 4	39'- 9"	9612
C	370	# 5	39'- 9"	15340
D_1	36	# 5	309'- 1" △	11605
D_2	6	# 5	311'- 9" △	1951
H	8	# 5	35'- 5"	296
J	32	# 5	3'- 6"	117
K	78	# 4	6'- 4"	330
L	39	# 4	3'- 0"	78
M	15	# 5	37'- 9"	591
N	10	# 5	3'- 4"	35
T	40	# 4	310'- 6" ◩	8297
U	640	# 4	3'- 3"	1389

Reinforcing Steel	Lb	⌗ 65016
Prestr. Conc. Bm. ~ Ty. IV	LF	⌗ 1473.63

Span	Reinf. Conc. Slab ~ SF	Class "S" Conc. ~ CY	
		⌗ Diaf.	⌗ Slab
# 1	3600	1.3	89.7
# 2	4200	——	106.3
# 3	4400	——	111.3
Total	12200	⌗	308.6

⌗ For contractor's information only.

△ Length shown includes 5 ~ 1'-5 " min. laps.

◩ Length shown includes 5 ~ 1'-2 " min. laps.

⌗ Length shown is bottom flange length with adjustments made for beam slope.

TABLE OF SECTION DEPTHS

Span	"X" at ℄ Brg.	"Y" at ℄ Brg.	"Z" at ℄ Span *
1	10 1/2"	5'-4 1/2"	8"
2 & 3	11 1/2"	5'-5 1/2"	8"

* Theoretical dimension

GENERAL NOTES:

Designed according to A.A.S.H.T.O. 1989 Standard Specifications.

Design fc = 1200 p.s.i.

See GpC (SPL) sheet for details not shown.

See GpA-2 (MOD) sheet for Beam Blockout details not shown.

For Drain Locations see Bridge Layout. For Drain Details see Bridge Drain Details Sheet.

HS 20 LOADING

STATE DEPARTMENT OF HIGHWAYS AND PUBLIC TRANSPORTATION

UNIT NO. 1, RAMPS 3&4

305.00' PRESTRESSED CONCRETE BEAM UNIT (90.00' - 105.00' - 110.00')

US 83/281 INTERCHANGE

STATE OF TEXAS
MARK J. BLOSCHOCK
52996
REGISTERED PROFESSIONAL ENGINEER

9-25-91

D45350A: ZFA2: [3551001437BPB01.DGN	PREPARED BY AND FOR USE OF TEXAS SDH&PT					
ORIGINAL DRAWING DATE: JUNE 1990	STATE DISTRICT	FEDERAL REGION	FEDERAL AID PROJECT			SHEET
DN.: LMW CK.: KBA DN.: PSR CK.: KBA REVISIONS	21	6	NH 92C)M			217
	COUNTY		CONTROL	SECTION	JOB	HIGHWAY
	HIDALGO		0039	17	097	US 83/281

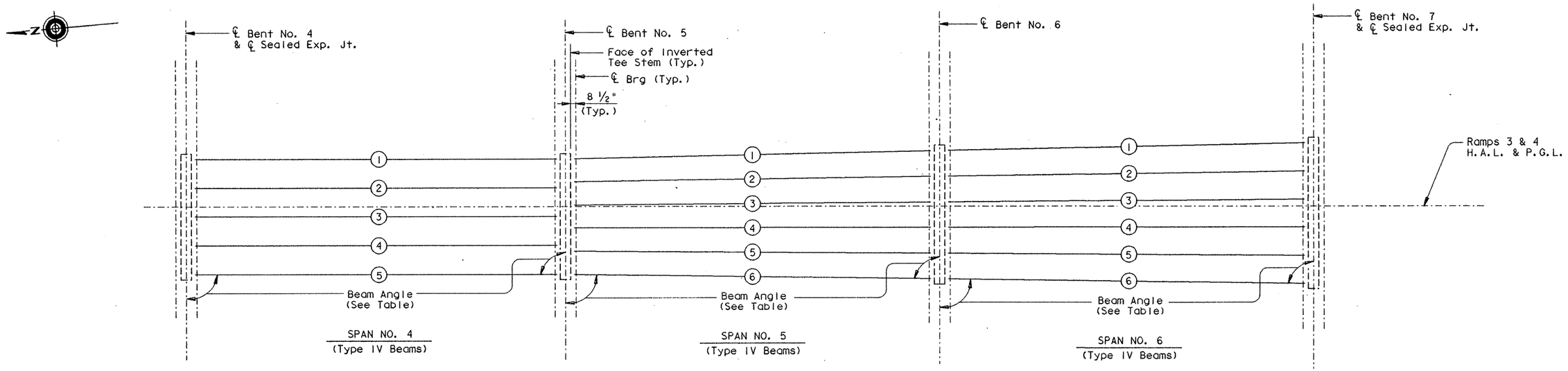

BEAM LAYOUT

BENT REPORT

BENT NO. 4 (S 85 7 18.00 E)
DISTANCE BETWEEN STATION LINE AND BEAM 1 14.000 L

		BEAM SPAC. (C.L. BENT)	BEAM ANGLE D M S
SPAN 4	BEAM 1	0.000	90 0 0
	BEAM 2	8.500	90 0 0
	BEAM 3	8.500	90 0 0
	BEAM 4	8.500	90 0 0
	BEAM 5	8.500	90 0 0
	TOTAL	34.000	

BENT NO. 5 (S 85 7 18.00 E)
DISTANCE BETWEEN STATION LINE AND BEAM 1 14.000 L

		BEAM SPAC. (C.L. BENT)	BEAM ANGLE D M S
SPAN 4	BEAM 1	0.000	90 0 0
	BEAM 2	8.500	90 0 0
	BEAM 3	8.500	90 0 0
	BEAM 4	8.500	90 0 0
	BEAM 5	8.500	90 0 0
	TOTAL	34.000	
SPAN 5	BEAM 1	0.000	88 48 21
	BEAM 2	6.800	89 11 17
	BEAM 3	6.800	89 34 12
	BEAM 4	6.800	89 57 8
	BEAM 5	6.800	89 39 56
	BEAM 6	6.800	89 17 0
	TOTAL	34.000	

BENT REPORT

BENT NO. 6 (S 85 7 18.00 E)
DISTANCE BETWEEN STATION LINE AND BEAM 1 16.293 L

		BEAM SPAC. (C.L. BENT)	BEAM ANGLE D M S
SPAN 5	BEAM 1	0.000	88 48 21
	BEAM 2	7.534	89 11 17
	BEAM 3	7.534	89 34 12
	BEAM 4	7.534	89 57 8
	BEAM 5	7.534	89 39 56
	BEAM 6	7.534	89 17 0
	TOTAL	37.669	
SPAN 6	BEAM 1	0.000	88 48 20
	BEAM 2	7.534	89 11 16
	BEAM 3	7.534	89 34 12
	BEAM 4	7.534	89 57 8
	BEAM 5	7.534	89 39 56
	BEAM 6	7.534	89 16 60
	TOTAL	37.669	

BENT NO. 7 (S 85 7 18.00 E)
DISTANCE BETWEEN STATION LINE AND BEAM 1 18.586 L

		BEAM SPAC. (C.L. BENT)	BEAM ANGLE D M S
SPAN 6	BEAM 1	0.000	88 48 20
	BEAM 2	8.268	89 11 16
	BEAM 3	8.268	89 34 12
	BEAM 4	8.268	89 57 8
	BEAM 5	8.268	89 39 56
	BEAM 6	8.268	89 16 60
	TOTAL	41.338	

BEAM REPORT

BEAM REPORT, SPAN 4

	HORIZONTAL DISTANCE C-C BENT	C-C BRG.	TRUE DISTANCE BOT. BM. FLG.
BEAM 1	110.000	104.833	105.983
BEAM 2	110.000	104.833	105.991
BEAM 3	110.000	104.833	105.997
BEAM 4	110.000	104.833	105.997
BEAM 5	110.000	104.833	105.997

BEAM REPORT, SPAN 5

	HORIZONTAL DISTANCE C-C BENT	C-C BRG.	TRUE DISTANCE BOT. BM. FLG.
BEAM 1	110.024	104.856	106.018
BEAM 2	110.011	104.844	106.007
BEAM 3	110.003	104.836	106.000
BEAM 4	110.000	104.833	105.997
BEAM 5	110.002	104.835	105.999
BEAM 6	110.009	104.842	106.005

BEAM REPORT, SPAN 6

	HORIZONTAL DISTANCE C-C BENT	C-C BRG.	TRUE DISTANCE BOT. BM. FLG.
BEAM 1	110.024	104.856	106.018
BEAM 2	110.011	104.844	106.007
BEAM 3	110.003	104.836	106.000
BEAM 4	110.000	104.833	105.997
BEAM 5	110.002	104.835	105.999
BEAM 6	110.009	104.842	106.005

HS 20 LOADING

STATE OF TEXAS
MARK J. BLOSCHOCK
52996
REGISTERED
PROFESSIONAL ENGINEER
9-25-91

STATE DEPARTMENT OF HIGHWAYS
AND PUBLIC TRANSPORTATION

BEAM LAYOUT
UNIT NO. 2, RAMPS 3&4

US 83/281 INTERCHANGE

D45350A: ZFA2: E3551001437 9BLY02.DGN	PREPARED BY AND FOR USE OF TEXAS SDH&PT					
ORIGINAL DRAWING DATE: JANUARY 1991	STATE DISTRICT	FEDERAL REGION	FEDERAL AID PROJECT			SHEET
DN.: LMW	21	6	NH 92C)M			218
CK.: KBA	COUNTY		CONTROL	SECTION	JOB	HIGHWAY
DW.: PSR	HIDALGO		0039	17	097	US 83/281
CK.: LMW						

REVISIONS

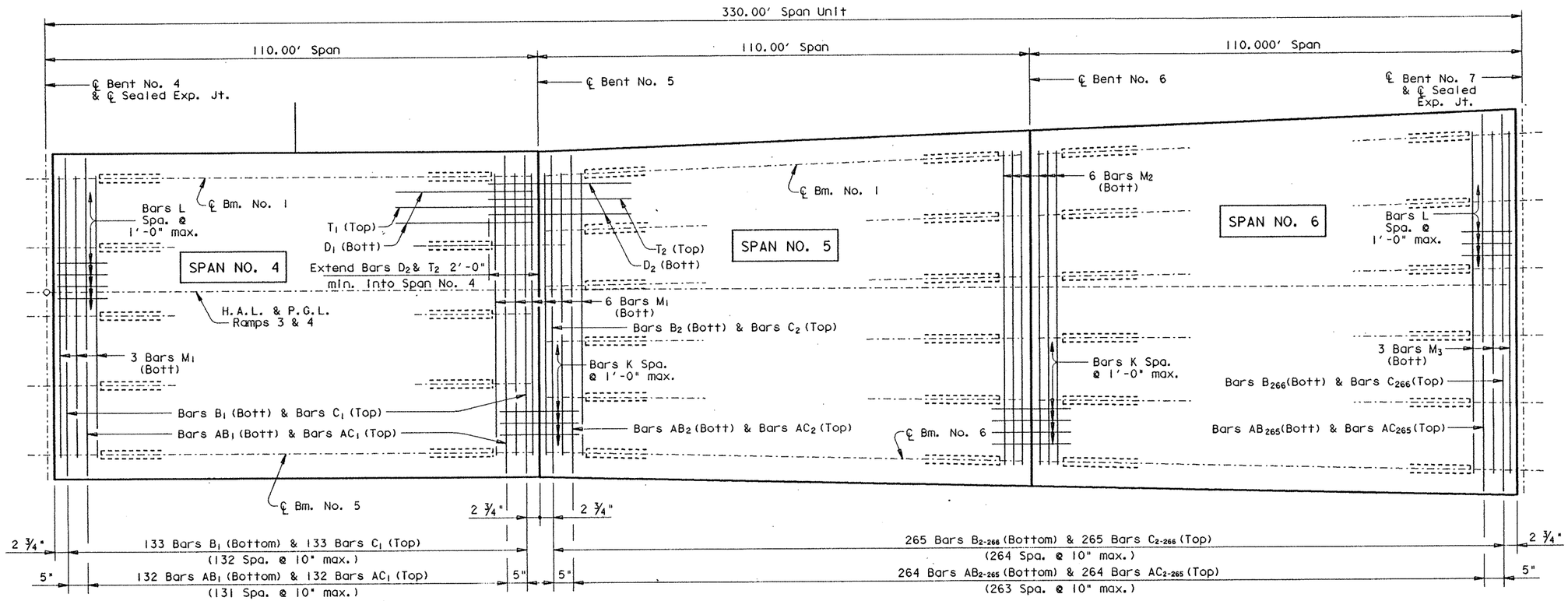

PLAN

(Showing Slab Reinforcing Only)

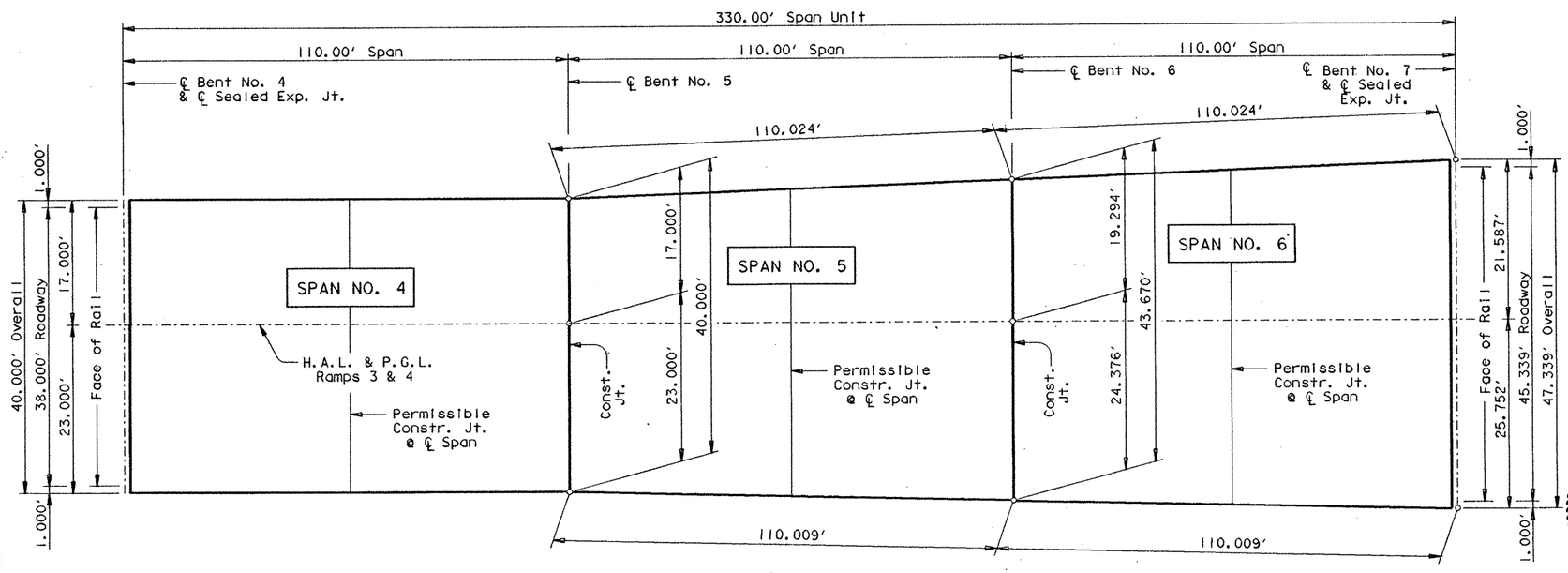

PLAN

(Showing Structural and Concrete Dimensions)

AB_2 = 34'-0" AB_{265} = 41'-4" $AB_{2\text{-}265}$ Av. = 37'-8"

AC_2 = 39'-9" AC_{265} = 47'-1" $AC_{2\text{-}265}$ Av. = 43'-5"

B_2 = 39'-9" B_{266} = 47'-1" $B_{2\text{-}266}$ Av. = 43'-5"

C_2 = 39'-9" C_{266} = 47'-1" $C_{2\text{-}266}$ Av. = 43'-5"

BARS AB, AC, B & C

HS 20 LOADING

STATE OF TEXAS
MARK J. BLOSCHOCK
52996
REGISTERED PROFESSIONAL ENGINEER

9-25-91

STATE DEPARTMENT OF HIGHWAYS AND PUBLIC TRANSPORTATION

UNIT NO. 2, RAMPS 3&4

330.00' PRESTRESSED CONCRETE BEAM UNIT

(110.00' - 110.00' - 110.00')

US 83/281 INTERCHANGE

D45350A: ZFA2: E3551003 4378PPB03.DGN	PREPARED BY AND FOR USE OF TEXAS SDH&PT								
ORIGINAL DRAWING DATE: AUGUST 1990	REVISIONS	STATE DISTRICT	FEDERAL REGION	FEDERAL AID PROJECT				SHEET	
DN.: LMW		21	6	NH 92C)M				219	
CK.: KBA		COUNTY			CONTROL	SECTION	JOB	HIGHWAY	
DW.: PSR		HIDALGO			0039	17	097	US 83/281	
CK.: KBA									

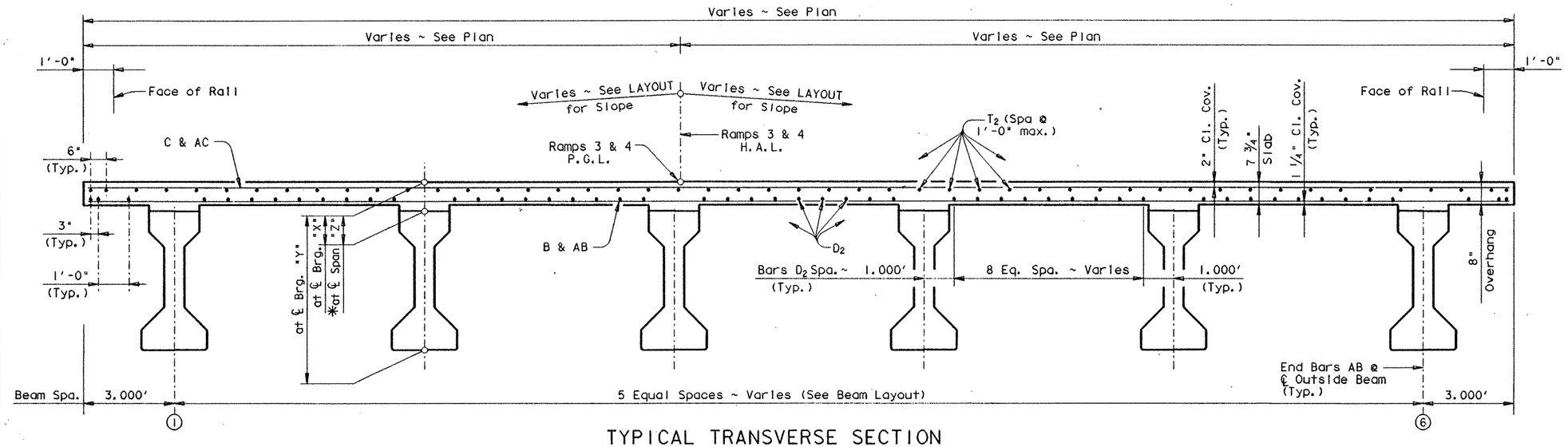

TYPICAL TRANSVERSE SECTION

(Showing Span Nos. 5 & 6)

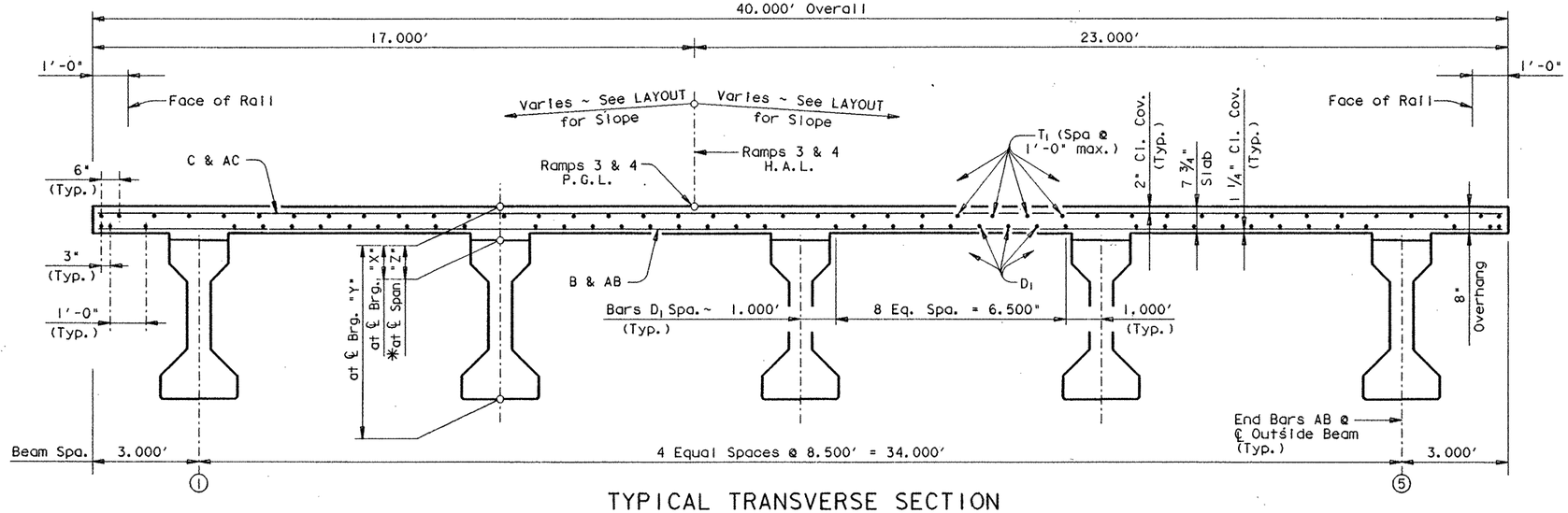

TYPICAL TRANSVERSE SECTION

(Showing Span No. 4)

TABLE OF SECTION DEPTHS

Span	"X" at ℄ Brg.	"Y" at ℄ Brg.	"Z" at ℄ Span *
#4	9 3/4"	5'-3 3/4"	8"
#5	9 1/4"	5'-3 1/4"	8"
#6	9 3/4"	5'-3 3/4"	8 1/8"

* Theoretical dimension

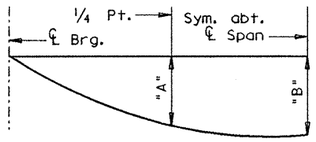

Span	"A"	"B"
#4	0.102'	0.143'
#5	0.088'	0.124'
#6	0.097'	0.136'

NOTE: Deflections shown are due to cast-in-place concrete only.

DEAD LOAD DEFLECTION DIAGRAM

(E_c = 5 X 10^6 psi)

TABLE OF ESTIMATED QUANTITIES

Bar	No.	Size	Length	Weight
AB_1	132	# 5	34'- 0"	4681
AB_{2-265}	264	# 5	37'- 8"Av	10372
AC_1	132	# 5	39'- 9"	5473
AC_{2-265}	264	# 5	43'- 5"Av	11955
B_1	133	# 4	39'- 9"	3532
B_{2-266}	265	# 4	43'- 5"Av	7686
C_1	133	# 5	39'- 9"	5514
C_{2-266}	265	# 5	43'- 5"Av	12000
D_1	42	# 5	111'- 1" ▬	4866
D_2	51	# 5	226'- 2" ▲	12030
K	82	# 4	6'- 4"	347
L	86	# 4	3'- 0"	172
M_1	9	# 5	37'- 9"	354
M_2	6	# 5	41'- 9"	255
M_3	3	# 5	45'- 9"	143
T_1	42	# 4	110'-10" ◆	3110
T_2	49	# 4	225'- 5" ◩	7378

Reinforcing Steel	Lb	#	89868
Prestr. Conc. Bm. ~ Ty. IV	LF	#	1802.02

Span	Reinf. Conc. Slab ~ SF	Class "S" Conc. ~ CY # Diaf.	# Slab
# 4	4400	——	109.0
# 5	4602	——	113.7
# 6	5005	——	124.2
Total	14007	# 346.9	

For contractor's information only.

▲ Length shown includes 3 ~ 1'-5 " min. laps.

◩ Length shown includes 3 ~ 1'-2 " min. laps.

▬ Length shown includes 1 ~ 1'-5 " min. laps.

◆ Length shown includes 1 ~ 1'-2 " min. laps.

Length shown is bottom flange length with adjustments made for beam slope.

GENERAL NOTES:

Designed according to A.A.S.H.T.O. 1989 Standard Specifications.

Design fc = 1200 p.s.i.

See GpC (SPL) sheet for details not shown.

For Drain Locations see Bridge Layout. For Drain Details see Bridge Drain Details Sheet.

HS 20 LOADING

Sheet 2 of 2

STATE DEPARTMENT OF HIGHWAYS AND PUBLIC TRANSPORTATION

UNIT NO. 2, RAMPS 3&4

330.00' PRESTRESSED CONCRETE BEAM UNIT (110.00' - 110.00' - 110.00')

US 83/281 INTERCHANGE

STATE OF TEXAS
MARK J. BLOSCHOCK
52996
REGISTERED PROFESSIONAL ENGINEER
9-25-91

D45350A: ZFA2: C35510014378PPB03.DGN

PREPARED BY AND FOR USE OF TEXAS SDH&PT

ORIGINAL DRAWING DATE:	AUGUST 1990
DN.: LMW	REVISIONS
CK.: KBA	
DN.: PSR	
CK.: KBA	

STATE DISTRICT	FEDERAL REGION	FEDERAL AID PROJECT #	SHEET
21	6	NH 92C)M	220

COUNTY	CONTROL	SECTION	JOB	HIGHWAY
HIDALGO	0039	17	097	US 83/281

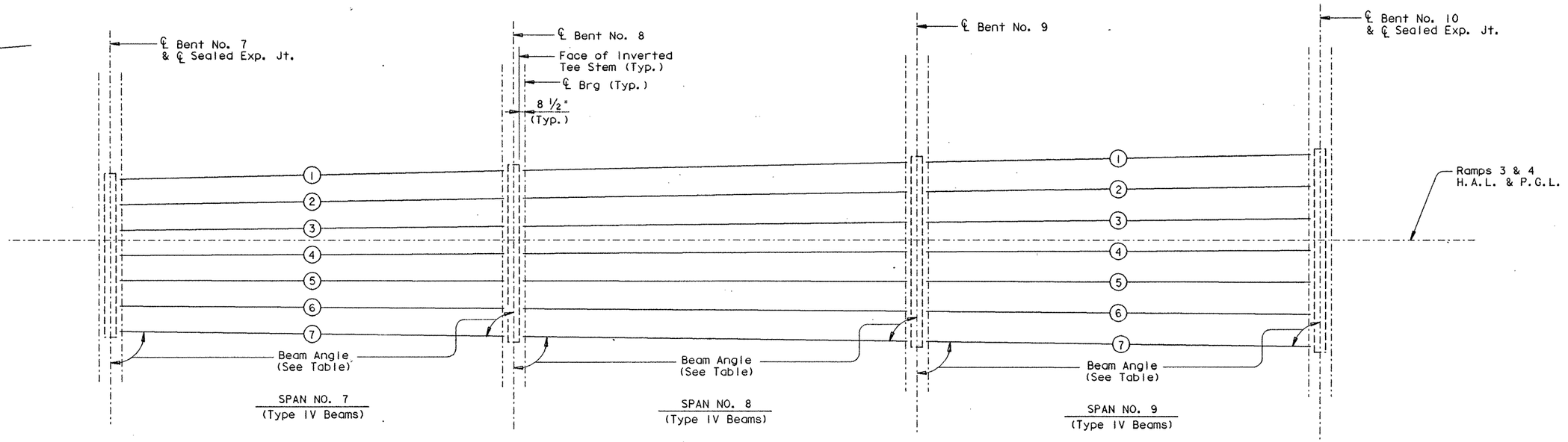

BEAM LAYOUT

BENT REPORT

BENT NO. 7 (S 85 7 18.00 E)
DISTANCE BETWEEN STATION LINE AND BEAM 1 18.586 L

		BEAM SPAC. (C.L. BENT)	BEAM ANGLE D M S
SPAN 7	BEAM 1	0.000	88 48 20
	BEAM 2	6.890	89 7 27
	BEAM 3	6.890	89 26 33
	BEAM 4	6.890	89 45 40
	BEAM 5	6.890	89 55 13
	BEAM 6	6.890	89 36 7
	BEAM 7	6.890	89 16 60
	TOTAL	41.338	

BENT NO. 8 (S 85 7 18.00 E)
DISTANCE BETWEEN STATION LINE AND BEAM 1 20.880 L

		BEAM SPAC. (C.L. BENT)	BEAM ANGLE D M S
SPAN 7	BEAM 1	0.000	88 48 20
	BEAM 2	7.501	89 7 27
	BEAM 3	7.501	89 26 33
	BEAM 4	7.501	89 45 40
	BEAM 5	7.501	89 55 13
	BEAM 6	7.501	89 36 7
	BEAM 7	7.501	89 16 60
	TOTAL	45.007	
SPAN 8	BEAM 1	0.000	88 48 20
	BEAM 2	7.501	89 7 27
	BEAM 3	7.501	89 26 33
	BEAM 4	7.501	89 45 40
	BEAM 5	7.501	89 55 13
	BEAM 6	7.501	89 36 7
	BEAM 7	7.501	89 16 60
	TOTAL	45.007	

BENT REPORT

BENT NO. 9 (S 85 7 18.00 E)
DISTANCE BETWEEN STATION LINE AND BEAM 1 23.173 L

		BEAM SPAC. (C.L. BENT)	BEAM ANGLE D M S
SPAN 8	BEAM 1	0.000	88 48 20
	BEAM 2	8.113	89 7 27
	BEAM 3	8.113	89 26 33
	BEAM 4	8.113	89 45 40
	BEAM 5	8.113	89 55 13
	BEAM 6	8.113	89 36 7
	BEAM 7	8.113	89 16 60
	TOTAL	48.677	
SPAN 9	BEAM 1	0.000	88 48 20
	BEAM 2	8.113	89 7 27
	BEAM 3	8.113	89 26 33
	BEAM 4	8.113	89 45 40
	BEAM 5	8.113	89 55 13
	BEAM 6	8.113	89 36 7
	BEAM 7	8.113	89 16 60
	TOTAL	48.677	

BENT NO.10 (S 85 7 18.00 E)
DISTANCE BETWEEN STATION LINE AND BEAM 1 25.466 L

		BEAM SPAC. (C.L. BENT)	BEAM ANGLE D M S
SPAN 9	BEAM 1	0.000	88 48 20
	BEAM 2	8.724	89 7 27
	BEAM 3	8.724	89 26 33
	BEAM 4	8.724	89 45 40
	BEAM 5	8.724	89 55 13
	BEAM 6	8.724	89 36 7
	BEAM 7	8.724	89 16 60
	TOTAL	52.346	

BEAM REPORT

BEAM REPORT, SPAN 7

	HORIZONTAL DISTANCE C-C BENT	C-C BRG.	TRUE DISTANCE BOT. BM. FLG.
BEAM 1	110.024	104.856	106.010
BEAM 2	110.013	104.846	106.000
BEAM 3	110.005	104.838	105.993
BEAM 4	110.001	104.834	105.990
BEAM 5	110.000	104.833	105.989
BEAM 6	110.003	104.836	105.991
BEAM 7	110.009	104.842	105.996

BEAM REPORT, SPAN 8

	HORIZONTAL DISTANCE C-C BENT	C-C BRG.	TRUE DISTANCE BOT. BM. FLG.
BEAM 1	110.024	104.856	105.985
BEAM 2	110.013	104.846	105.975
BEAM 3	110.005	104.838	105.968
BEAM 4	110.001	104.834	105.965
BEAM 5	110.000	104.833	105.963
BEAM 6	110.003	104.836	105.965
BEAM 7	110.009	104.842	105.971

BEAM REPORT, SPAN 9

	HORIZONTAL DISTANCE C-C BENT	C-C BRG.	TRUE DISTANCE BOT. BM. FLG.
BEAM 1	110.024	104.856	105.965
BEAM 2	110.013	104.846	105.955
BEAM 3	110.005	104.838	105.948
BEAM 4	110.001	104.834	105.944
BEAM 5	110.000	104.833	105.943
BEAM 6	110.003	104.836	105.945
BEAM 7	110.009	104.842	105.951

HS 20 LOADING

STATE OF TEXAS
MARK J. BLOSCHOCK
52996
REGISTERED
PROFESSIONAL ENGINEER
9-25-91

STATE DEPARTMENT OF HIGHWAYS
AND PUBLIC TRANSPORTATION

BEAM LAYOUT
UNIT NO. 3, RAMPS 3&4

US 83/281 INTERCHANGE

D45350A: ZFA2: [3551001]4379BLY02.DGN	PREPARED BY AND FOR USE OF TEXAS SDH&PT					
ORIGINAL DRAWING DATE: JANUARY 1991		STATE DISTRICT	FEDERAL REGION	FEDERAL AID PROJECT		SHEET
DN.: LMW	REVISIONS	21	6	NH 92C)M		221
CK.: KBA		COUNTY		CONTROL	SECTION	JOB	HIGHWAY
DW.: PSR		HIDALGO		0039	17	097	US 83/281
CK.: LMW							

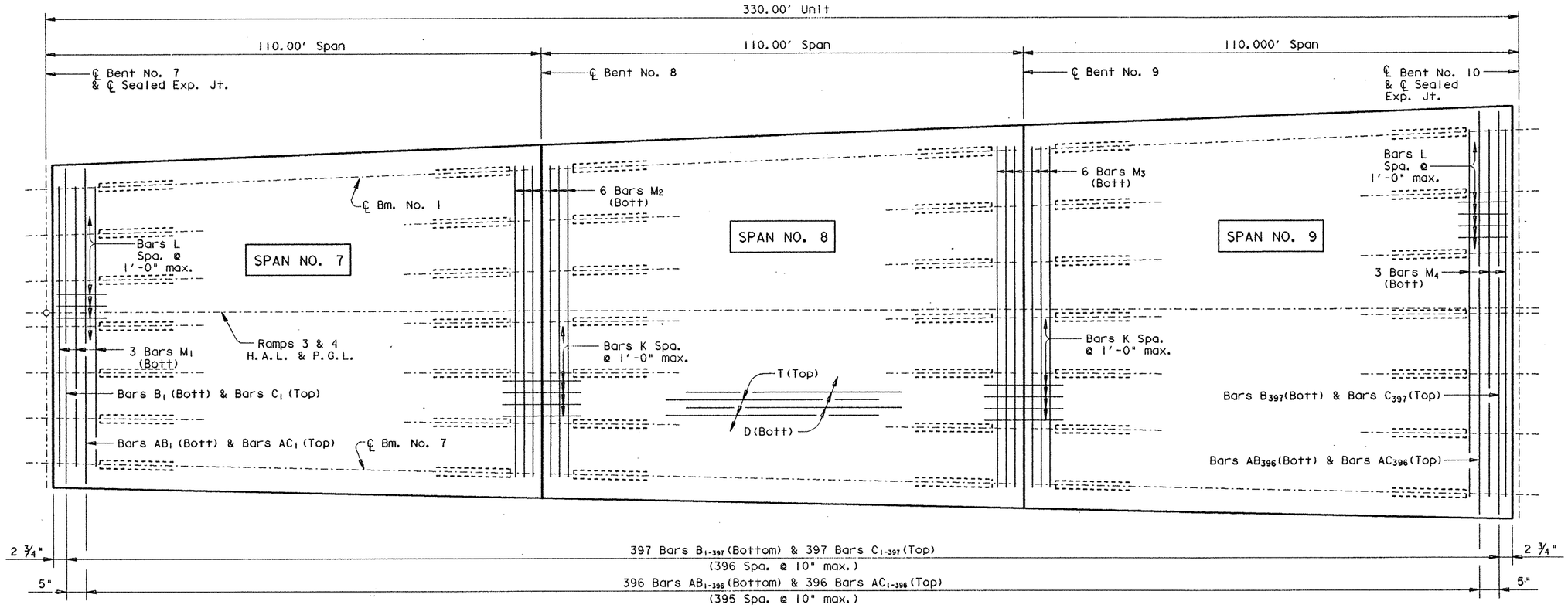

PLAN

(Showing Slab Reinforcing Only)

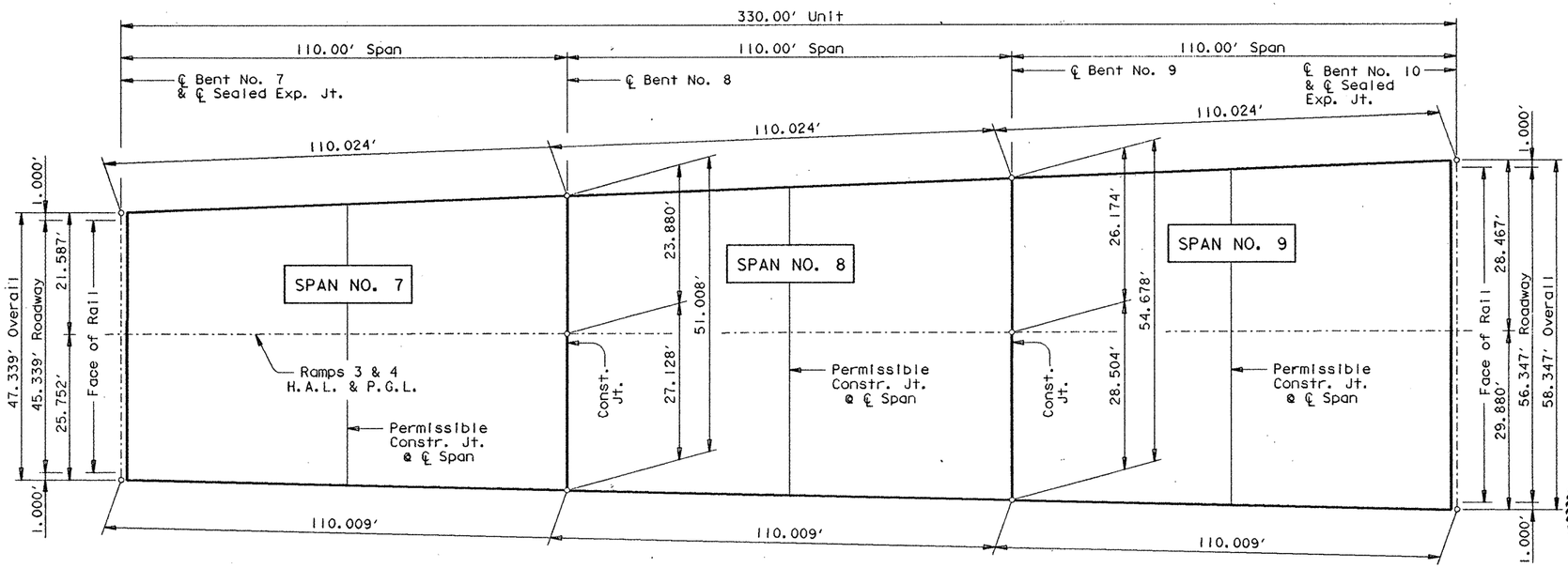

PLAN

(Showing Structural and Concrete Dimensions)

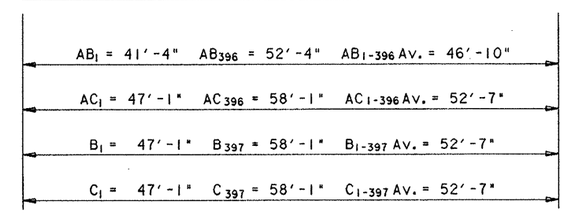

BARS AB, AC, B & C

HS 20 LOADING

Sheet 1 of 2

STATE DEPARTMENT OF HIGHWAYS AND PUBLIC TRANSPORTATION

UNIT NO. 3, RAMPS 3&4

330.00' PRESTRESSED CONCRETE BEAM UNIT (110.00' - 110.00' - 110.00') US 83/281 INTERCHANGE

STATE OF TEXAS
MARK J. BLOSCHOCK
52996
REGISTERED PROFESSIONAL ENGINEER

9-25-91

D45350A1 : ZFA2 : [355100]4378PPB04.DGN	PREPARED BY AND FOR USE OF TEXAS SDH&PT					
ORIGINAL DRAWING DATE: AUGUST 1990	STATE DISTRICT	FEDERAL REGION	FEDERAL AID PROJECT			SHEET
DN.: LMW	21	6	NH 92C 7M			222
CK.: KBA	COUNTY		CONTROL	SECTION	JOB	HIGHWAY
DW.: PSR	HIDALGO		0039	17	097	US 83/281
CK.: KBA						

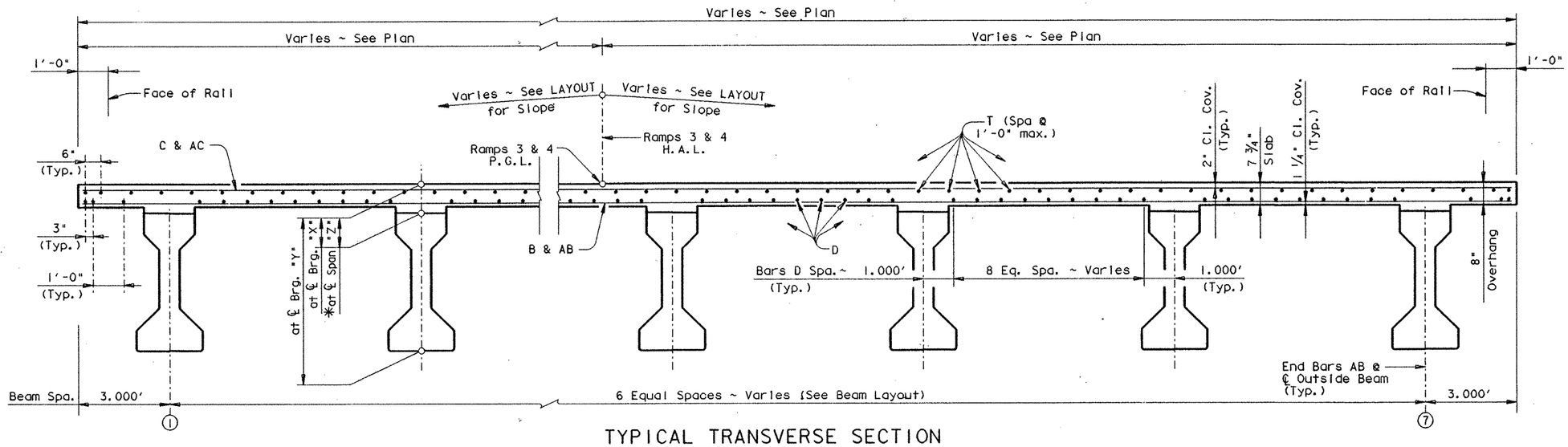

TYPICAL TRANSVERSE SECTION

TABLE OF ESTIMATED QUANTITIES

Bar	No.	Size	Length	Weight
AB_{1-396}	396	# 5	46'-10"Av	19343
AC_{1-396}	396	# 5	52'- 7"Av	21718
B_{1-397}	397	# 4	52'- 7"Av	13945
C_{1-397}	397	# 5	52'- 7"Av	21773
D	60	# 5	336'- 9" △	21074
K	104	# 4	6'- 4"	440
L	105	# 4	3'- 0"	210
M_1	3	# 5	45'- 9"	143
M_2	6	# 5	48'- 9"	305
M_3	6	# 5	52'- 9"	330
M_4	3	# 5	56'- 9"	178
T	60	# 4	335'- 6" ◩	13447
Reinforcing Steel			Lb	112906 ⁜
Prestr. Conc. Bm. ~ Ty. IV			LF	2225.41 #

Span	Reinf. Conc. Slab ~ SF	Class "S" Conc. ~ CY ⁜ Diaf.	⁜ Slab
# 7	5409	——	133.4
# 8	5813	——	142.4
# 9	6216	——	151.7
Total	17438	⁜ 427.5	

⁜ For contractor's information only.

△ Length shown includes 5 ~ 1'-5 " min. laps.

◩ Length shown includes 5 ~ 1'-2 " min. laps.

Length shown is bottom flange length with adjustments made for beam slope.

TABLE OF SECTION DEPTHS

Span	"X" at ℄ Brg.	"Y" at ℄ Brg.	"Z" at ℄ Span *
#7	8 3/4"	5'-2 3/4"	8 1/2"
#8	8 3/4"	5'-2 3/4"	8 1/4"
#9	8 3/4"	5'-2 3/4"	8 1/8"

* Theoretical dimension

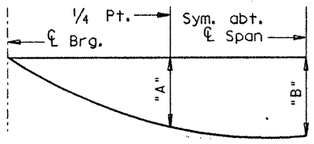

Span	"A"	"B"
#7	0.088'	0.124'
#8	0.096'	0.134'
#9	0.103'	0.145'

NOTE: Deflections shown are due to cast-in-place concrete only.

DEAD LOAD DEFLECTION DIAGRAM

(E_c = 5 X 10^6 psi)

GENERAL NOTES:

Designed according to A.A.S.H.T.O. 1989 Standard Specifications.

Design fc = 1200 p.s.i.

See GpC (SPL) sheet for details not shown.

For Drain Locations see Bridge Layout. For Drain Details see Bridge Drain Details Sheet.

HS 20 LOADING

STATE OF TEXAS
MARK J. BLOSCHOCK
52996
REGISTERED PROFESSIONAL ENGINEER
9-25-91

STATE DEPARTMENT OF HIGHWAYS AND PUBLIC TRANSPORTATION

UNIT NO. 3, RAMPS 3&4

330.00' PRESTRESSED CONCRETE BEAM UNIT

(110.00' - 110.00' - 110.00')

US 83/281 INTERCHANGE

D45350A# ZFA2# [355100]4378PPB04.DGN	PREPARED BY AND FOR USE OF TEXAS SDH&PT						
ORIGINAL DRAWING DATE: AUGUST 1990	STATE DISTRICT	FEDERAL REGION	FEDERAL AID PROJECT #				SHEET
DN.: LMW CK.: KBA DR.: PSR CK.: KBA REVISIONS	21	6	NH 92C)M				223
	COUNTY			CONTROL	SECTION	JOB	HIGHWAY
	HIDALGO			0039	17	097	US 83/281

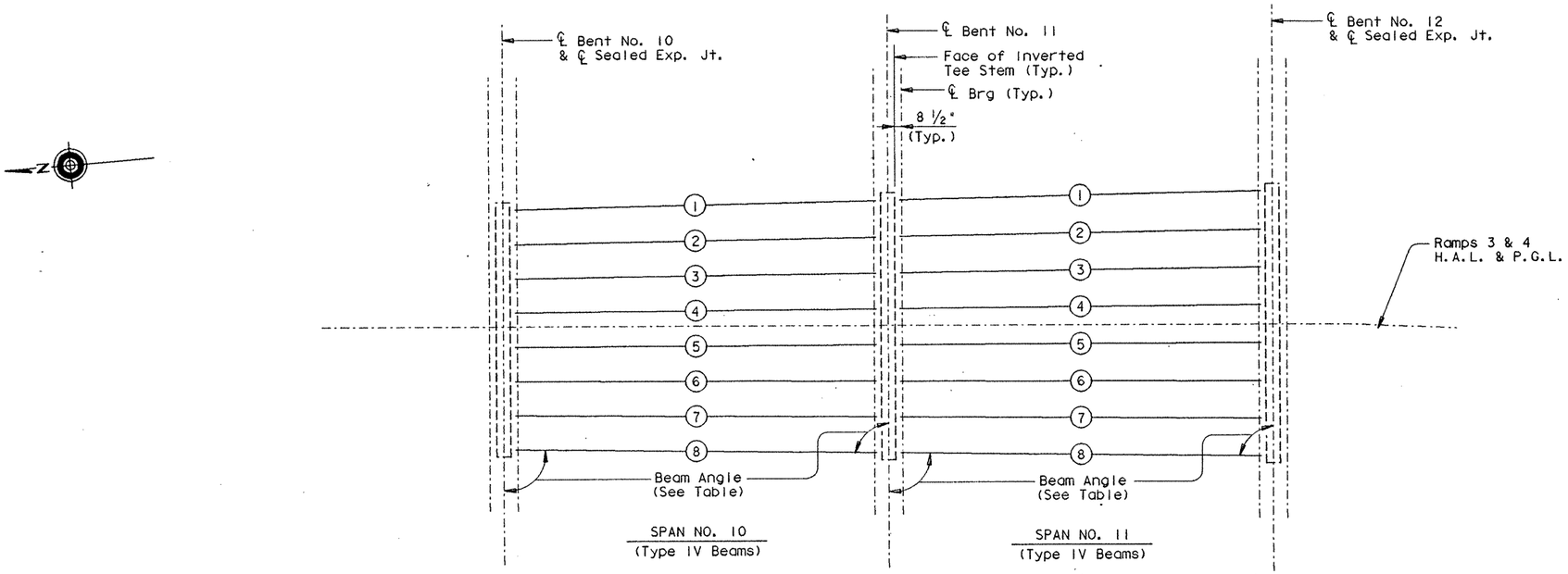

BEAM LAYOUT

BENT REPORT

BENT NO.10 (S 85 7 18.00 E)
DISTANCE BETWEEN STATION LINE AND BEAM 1 25.466 L

		BEAM SPAC. (C.L. BENT)	BEAM ANGLE D	M	S
SPAN10	BEAM 1	0.000	88	48	20
	BEAM 2	7.478	89	4	43
	BEAM 3	7.478	89	21	6
	BEAM 4	7.478	89	37	28
	BEAM 5	7.478	89	53	51
	BEAM 6	7.478	89	49	46
	BEAM 7	7.478	89	33	23
	BEAM 8	7.478	89	16	60
	TOTAL	52.346			

BENT NO.11 (S 85 7 18.00 E)
DISTANCE BETWEEN STATION LINE AND BEAM 1 27.233 L

		BEAM SPAC. (C.L. BENT)	BEAM ANGLE D	M	S
SPAN10	BEAM 1	0.000	88	48	20
	BEAM 2	7.882	89	4	43
	BEAM 3	7.882	89	21	6
	BEAM 4	7.882	89	37	28
	BEAM 5	7.882	89	53	51
	BEAM 6	7.882	89	49	46
	BEAM 7	7.882	89	33	23
	BEAM 8	7.882	89	16	60
	TOTAL	55.173			

BENT REPORT

BENT NO.11 (S 85 7 18.00 E)
DISTANCE BETWEEN STATION LINE AND BEAM 1 27.233 L

		BEAM SPAC. (C.L. BENT)	BEAM ANGLE D	M	S
SPAN11	BEAM 1	0.000	88	48	20
	BEAM 2	7.882	89	4	43
	BEAM 3	7.882	89	21	6
	BEAM 4	7.882	89	37	28
	BEAM 5	7.882	89	53	51
	BEAM 6	7.882	89	49	46
	BEAM 7	7.882	89	33	23
	BEAM 8	7.882	89	16	60
	TOTAL	55.173			

BENT NO.12 (S 85 7 17.46 E)
DISTANCE BETWEEN STATION LINE AND BEAM 1 28.999 L

		BEAM SPAC. (C.L. BENT)	BEAM ANGLE D	M	S
SPAN11	BEAM 1	0.000	88	48	20
	BEAM 2	8.286	89	4	42
	BEAM 3	8.286	89	21	5
	BEAM 4	8.286	89	37	28
	BEAM 5	8.286	89	53	51
	BEAM 6	8.286	89	49	46
	BEAM 7	8.286	89	33	23
	BEAM 8	8.286	89	17	0
	TOTAL	57.999			

BEAM REPORT

BEAM REPORT, SPAN10

	HORIZONTAL DISTANCE C-C BENT	C-C BRG.	TRUE DISTANCE BOT. BM. FLG.
BEAM 1	84.748	79.581	80.674
BEAM 2	84.741	79.574	80.667
BEAM 3	84.735	79.568	80.662
BEAM 4	84.732	79.565	80.658
BEAM 5	84.730	79.563	80.657
BEAM 6	84.730	79.564	80.657
BEAM 7	84.733	79.566	80.659
BEAM 8	84.737	79.570	80.662

BEAM REPORT, SPAN11

	HORIZONTAL DISTANCE C-C BENT	C-C BRG.	TRUE DISTANCE BOT. BM. FLG.
BEAM 1	84.748	79.581	80.703
BEAM 2	84.741	79.574	80.682
BEAM 3	84.735	79.568	80.666
BEAM 4	84.732	79.565	80.655
BEAM 5	84.730	79.563	80.650
BEAM 6	84.730	79.564	80.648
BEAM 7	84.732	79.566	80.649
BEAM 8	84.737	79.569	80.653

HS 20 LOADING

STATE OF TEXAS
MARK J. BLOSCHOCK
52996
REGISTERED
PROFESSIONAL ENGINEER
9-25-91

STATE DEPARTMENT OF HIGHWAYS
AND PUBLIC TRANSPORTATION

BEAM LAYOUT
UNIT NO. 4, RAMPS 3&4

US 83/281 INTERCHANGE

D45350A1 : ZFA2 : [3551001]4379BLY02.DGN	PREPARED BY AND FOR USE OF TEXAS SDH&PT					
ORIGINAL DRAWING DATE: JANUARY 1991	STATE DISTRICT	FEDERAL REGION	FEDERAL AID PROJECT			SHEET
DN.: LMW REVISIONS	21	6	NH 92C)M			224
CK.: KBA	COUNTY		CONTROL	SECTION	JOB	HIGHWAY
DW.: PSR	HIDALGO		0039	17	097	US 83/ 281
CK.: LMW						

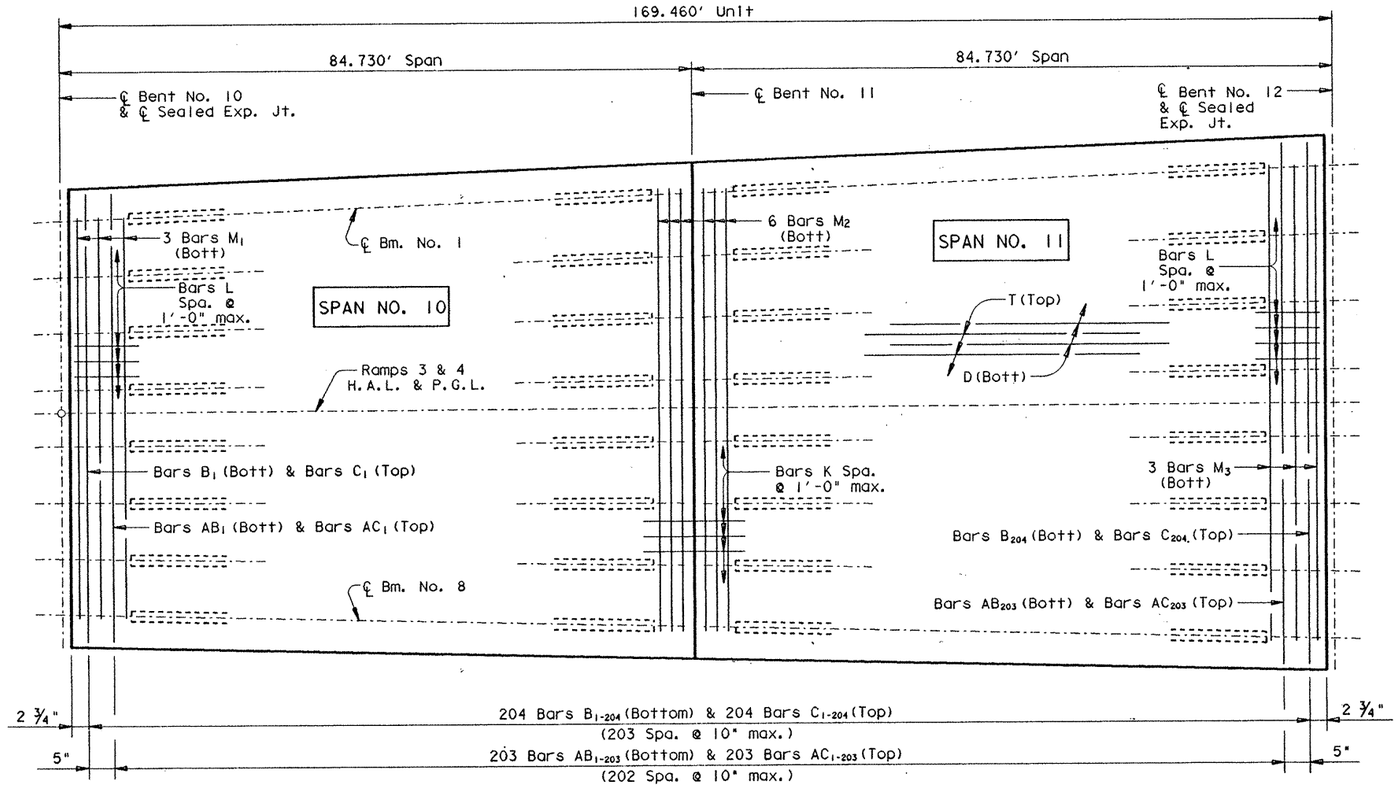

PLAN

(Showing Slab Reinforcing Only)

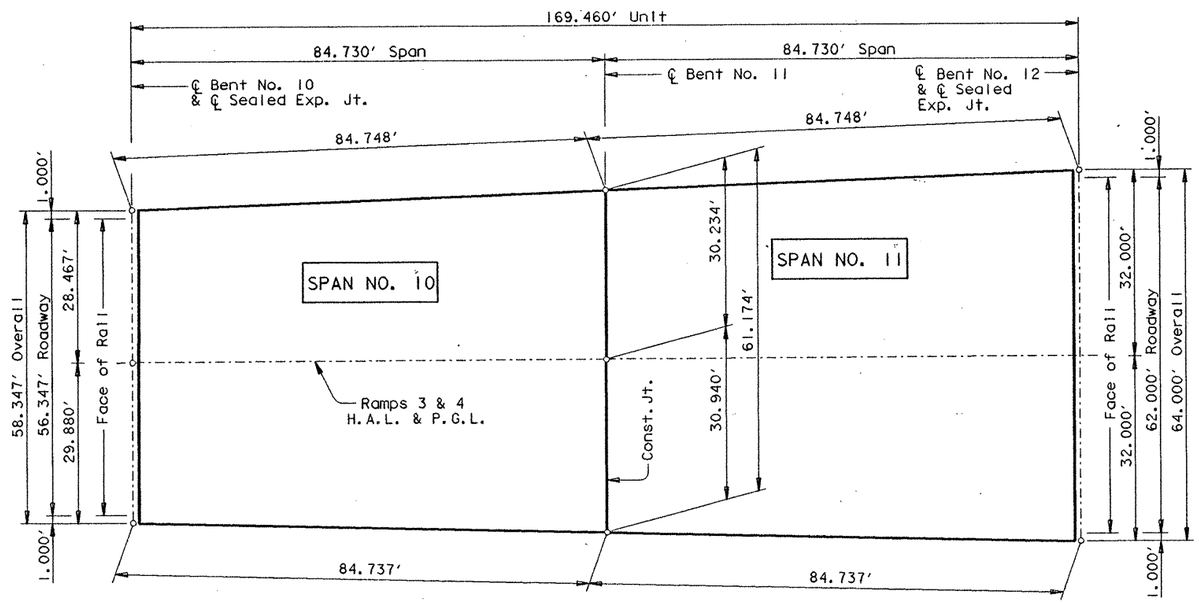

PLAN

(Showing Structural and Concrete Dimensions)

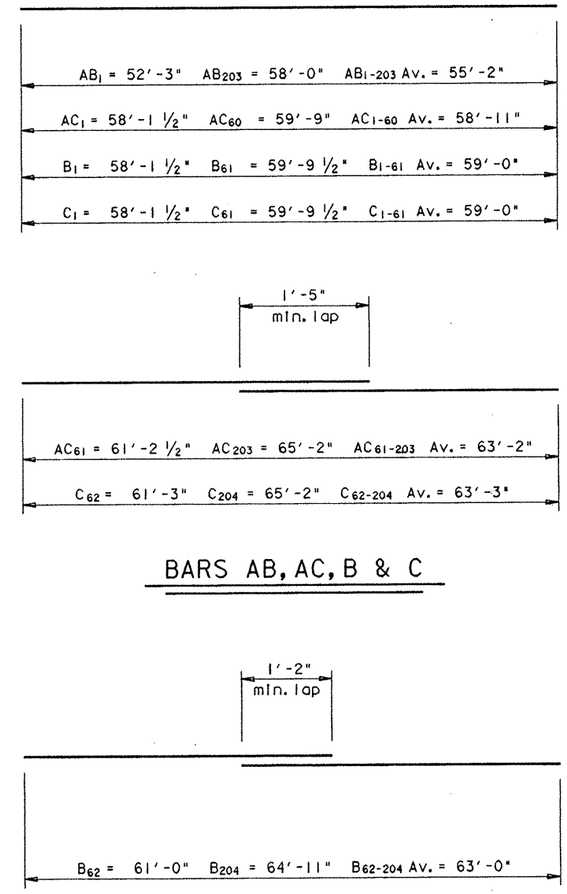

BARS AB, AC, B & C

BARS B

HS 20 LOADING

Sheet 1 of 2

STATE DEPARTMENT OF HIGHWAYS AND PUBLIC TRANSPORTATION

UNIT NO. 4, RAMPS 3&4

169.46' PRESTRESSED CONCRETE BEAM UNIT (84.73' - 84.73') US 83/281 INTERCHANGE

STATE OF TEXAS
MARK J. BLOSCHOCK
52996
REGISTERED PROFESSIONAL ENGINEER

9-25-91

D45350A: ZFA2: [355100]4378PPB05.DGN	PREPARED BY AND FOR USE OF TEXAS SDH&PT					
ORIGINAL DRAWING DATE: AUGUST 1990	STATE DISTRICT	FEDERAL REGION	FEDERAL AID PROJECT			SHEET
DN.: LMW	21	6	NH 92( )M			225
CK.: KBA	COUNTY		CONTROL	SECTION	JOB	HIGHWAY
DN.: PSR	HIDALGO		0039	17	097	US 83/281
CK.: KBA						

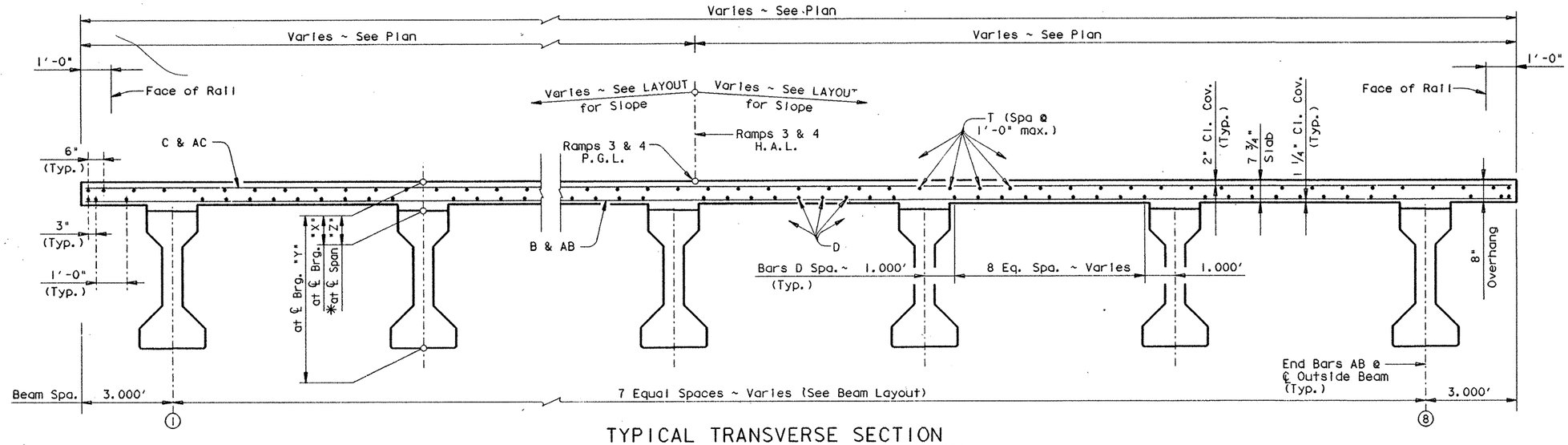

TYPICAL TRANSVERSE SECTION

TABLE OF ESTIMATED QUANTITIES

Bar	No.	Size	Length	Weight
AB_{1-203}	203	#5	55'- 2"Av	11680
AC_{1-60}	60	#5	58'-11"Av	3687
AC_{61-203}	143	#5	63'- 2"Av ◆	9421
B_{1-61}	61	#4	59'- 0"Av	2404
B_{62-204}	143	#4	63'- 0"Av ▬	6018
C_{1-61}	61	#5	59'- 0"Av	3754
C_{62-204}	143	#5	63'- 3"Av ◆	9434
D	69	#5	172'- 0" ▲	12378
K	60	#4	6'- 4"	254
L	121	#4	3'- 0"	242
M_1	3	#5	56'- 9"	178
M_2	6	#5	58'- 9"	368
M_3	3	#5	63'- 2" ◆	198
T	66	#4	171'- 6" ◩	7561

Reinforcing Steel	Lb ⌗	67577
Prestr. Conc. Bm. ~ Ty. IV	LF ⊕	1290.60

Span	Reinf. Conc. Slab ~ SF	Class "S" Conc. ~ CY	
		⌗ Diaf.	⌗ Slab
# 10	5064	——	124.7
# 11	5303	——	130.7
Total	10367	⌗	255.4

⌗ For contractor's information only.

▲ Length shown includes 2 ~ 1'-5 " min. laps.

◩ Length shown includes 2 ~ 1'-2 " min. laps.

◆ Length shown includes 1 ~ 1'-5 " min. laps.

▬ Length shown includes 1 ~ 1'-2 " min. laps.

⌗ Length shown is bottom flange length with adjustments made for beam slope.

TABLE OF SECTION DEPTHS

Span	Beams	"X" at ℄ Brg.	"Y" at ℄ Brg.	"Z" at ℄ Span *
#10	ALL	8 3/4"	5'-2 3/4"	8 3/4"
#11	1, 2, 7 & 8	8 1/4"	5'-2 1/4"	9 1/8"
	3, 4, 5 & 6	8 3/4"	5'-2 3/4"	8 7/8"

* Theoretical dimension

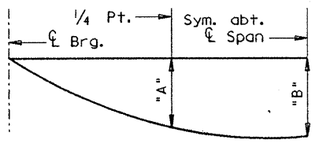

DEAD LOAD DEFLECTION DIAGRAM

(E_c = 5 X 10^6 psi)

Span	"A"	"B"
#10	0.031'	0.044'
#11	0.033'	0.046'

NOTE: Deflections shown are due to cast-in-place concrete only.

GENERAL NOTES:

Designed according to A.A.S.H.T.O. 1989 Standard Specifications.

Design fc = 1200 p.s.i.

See GpC (SPL) sheet for details not shown.

For Drain Locations see Bridge Layout. For Drain Details see Bridge Drain Details Sheet.

HS 20 LOADING

Sheet 2 of 2

STATE OF TEXAS
MARK J. BLOSCHOCK
52996
REGISTERED PROFESSIONAL ENGINEER
9-25-91

STATE DEPARTMENT OF HIGHWAYS AND PUBLIC TRANSPORTATION

UNIT NO. 4, RAMPS 3&4
169.46' PRESTRESSED CONCRETE BEAM UNIT (84.73' - 84.73')
US 83/281 INTERCHANGE

D45350A: ZFA2: E355100J4378PPB05.DGN	PREPARED BY AND FOR USE OF TEXAS SDH&PT						
ORIGINAL DRAWING DATE: AUGUST 1990	STATE DISTRICT	FEDERAL REGION	FEDERAL AID PROJECT				SHEET
DR.: LMW	REVISIONS	21	6	NH 92C 2M			226
CK.: KBA		COUNTY			CONTROL	SECTION	JOB	HIGHWAY
DR.: PSR		HIDALGO			0039	17	097	US 83/281
CK.: KBA								

℄ BENT 11
STA 10+84.755

END BRIDGE
RAMPS 1 & 2
BEGIN BRIDGE
RAMP 1
℄ BENT 12
STA 12+04.51
FIN. GR. ELEV.
= 135.86'

℄ BENT 13
STA 13+99.51

S 85° 07' 18" E

S 80° 26' 04" E

EXIST. US 281
FRONTAGE RD.

℄ GIRDER 1

75.51' TAPER

℄ BEAM 1

DOUBLE
DECK DRAIN ⊕
STA. 12 + 54.00
PIPE TO BENT 12

RAMPS 1 & 2
H.A.L. & P.G.L.

S 4° 52' 42" W

MATCH LINE STA. 10+00

NOMINAL FACE OF T501 RAIL

10'-1" TRAVEL LANE

6' SHL

SHL

.06'/FT.

32' OVERALL WIDTH

30' CLEAR RDWY WIDTH

1'

℄ GIRDER 4

RAMP 1 P.G.L.
& H.A.L.

℄ BEAM 8

679.51' SLAB TRANSITION

45.31' TAPER

4" SEJ

DECK DRAIN ⊕
STA. 12+79.00
PIPE TO BENT 12

RAMP 2 P.G.L.
& H.A.L.

MATCH LINE STA. 15+00

RAMP 3 P.G.L.
& H.A.L.

STA. 860+00
TEST HOLE #3

860+00

CURVE DATA
℄ US 281
PI = 857+28.88
Δ = 3° 38' 16" R.
D = 0° 30'
R = 11459.16'
L = 727.56'
T = 363.90'

⊕ FOR DRAIN DETAILS SEE BRIDGE DRAIN DETAILS SHEET.

DELINEATORS & OBJECT MARKERS
TRAFF. BARR. DELIN. TY (D-SY)(B)..... 3
OBJ. MARKER (OM-25R)(B)..... 1

RAMP #1 SUPERELEVATION
STA. 11+18.96 TO STA. 12+68.96=150' TRANSITION, TY3
STA. 12+68.96 TO STA. 22+49 E=.06'/FT
STA. 22+49.06 TO STA. 23+99.06 = 150', TRANSITION, TY3

RAMP 1
STA = 14+50.00 (B)
EL = 136.67
VC = 400.00'
E = 0.06

Gin = +0.3310 %
Gout = +0.4488%

DRILLED SHAFTS ARE DESIGNED WITH SKIN FRICTION AND POINT BEARING.

END BRIDGE
RAMPS 1 & 2
BEGIN BRIDGE
RAMP 1
℄ BENT 12
STA. 12+04.51
FIN. GR. ELEV. = 135.86

OVERALL LENGTH OF BRIDGE (RAMPS 1 & 2) = 1204.51'
TY T501 RAIL (1215.6' LT. & 1215.6' RT.)

OVERALL LENGTH OF BRIDGE (RAMP 1) = 2270'
TY T501 RAIL (2221.7' LT. & 2270.0' RT.)

UNIT 4 - 239.51' PRESTRESSED CONCRETE BEAM UNIT (119.755' - 119.755')

UNIT 5 - 610' CURVED STEEL GIRDER UNIT (195' - 220' - 195')

PGL

TOP OF T501 RAIL

+0.3310%

VPC

VPI

PRESTRESSED CONC. BEAM (TY IV)

PRESTRESSED CONC. BEAM (TY IV)

CURVED STEEL GIRDER

CURVED STEEL GIRDER

H=18'

H=18'

H=18'

MIN. CALC. VERT. CLR. = 19.00

TEST HOLE # 3
STA. 860+00
GRD. ELEV. 108.9

4~60"Ø x 48' DRILL SHAFTS

EXIST. PROFILE AT RAMP 1 PGL

11 (6.0")	9 (6.0")	BRWN CLY, HARD, MOIST
9 (6.0")	11 (6.0")	
12 (6.0")	12 (6.0")	BRN CLY, W/ TRACES OF CHK SUBS
13 (6.0")	14 (6.0")	
13 (6.0")	14 (6.0")	REDDISH-BROWN CLAY, MOIST, COMPACT
31 (6.0")	36 (6.0")	LT. BRWN CLY, MOIST, COMPACT
23 (6.0")	26 (6.0")	

39 (6.0")	54 (6.0")	BROWN CLAY W/ TRACES GREEN & WHITE CHALK
28 (6.0")	32 (6.0")	
40 (6.0")	52 (5.3")	SAND & CLAY, SOFT, MOIST
50 (2.3")	50 (1.8")	
50 (1.5")	50 (0.8")	
50 (1.9")	50 (1.3")	LOOSE SAND, VERY MOIST
32 (6.0")	56 (5.3")	

4~60"Ø x 40' DRILLED SHAFTS

2~60"Ø x 60' DRILL SHAFTS

EL. = 63.00

EL. = 55.00

EL = 44.00

135.17

135.51

135.51

136.18

136.54

136.96

10+00 (B)

11+00 (B)

12+00 (B)

13+00 (B)

14+00 (B)

15+00 (B)

160 150 140 130 120 110 100 90 80

BRIDGE LAYOUT
US 83/281 INTERCHANGE
RAMP 1

STA. 10+00 TO 15+00

SHEET 3 OF 23 SHEETS

SCALE:
PLAN 1" = 20' HORIZ.
PROFILE 1" = 10' VERT

FED. RD. DIV. NO.	FEDERAL AID PROJECT NO.	SHEET NO.
6	NH92 ( )M	127

STATE	DIST.	COUNTY	
TEXAS	21	HIDALGO	
CONT.	SECT.	JOB	HIGHWAY NO.
39	17	97	83/281

STATE OF TEXAS — Mark J. Bloschock — 52996 — REGISTERED PROFESSIONAL ENGINEER

STATE OF TEXAS — MARK P. McLELLAND — 60710 — REGISTERED PROFESSIONAL ENGINEER

9-5-91

8/29/91

STATE OF TEXAS — MARIO R. JORGE — 65536 — REGISTERED PROFESSIONAL ENGINEER

12-7-90

FILE NAME	REFERENCE FIL.	NAMED VIEW	LAYERS	PRF FILE
E3*5I6J IRAMP003 .DGN	NEWINT2.DGN	REF2	I-621	RB3 . PRF
	NEWINT. DGN	REF1	I-28, 30-41	

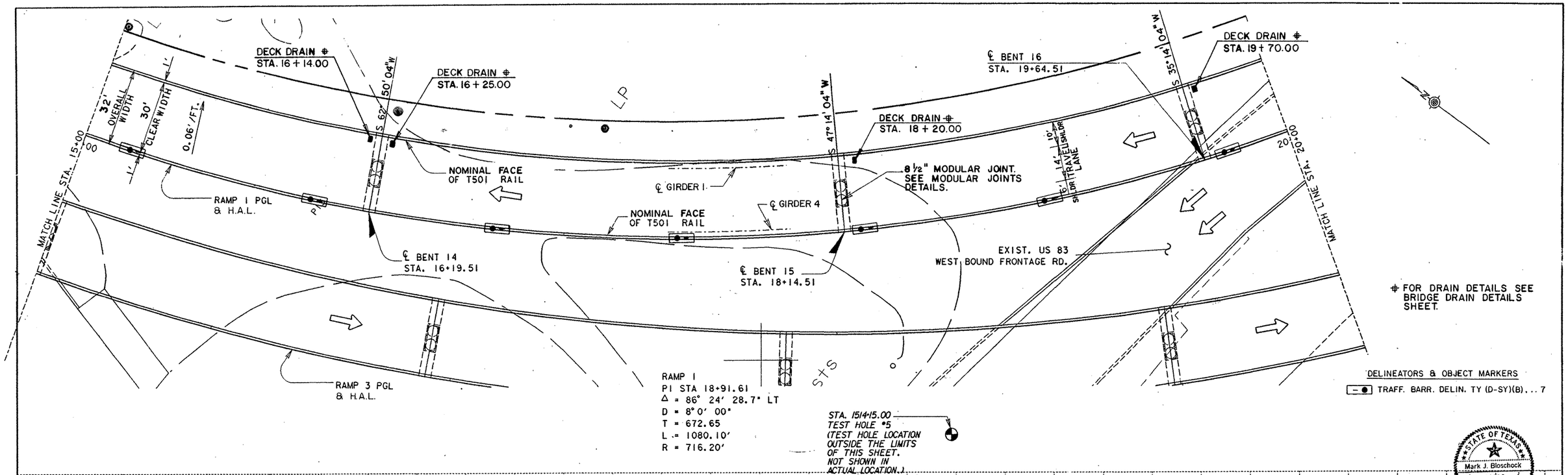

RAMP I
PI STA = 14+50.00(B)
EL = 136.67'
VC = 400.00'
E = +0.06

Gin = +0.3310%
Gout = +0.4488%

OVERALL LENGTH OF BRIDGE (RAMP 1) = 2270'
TY T501 RAIL (2221.7' LT. & 2270.0' RT.)

UNIT 5 - 610' CURVED STEEL GIRDER UNIT (195'-220'-195')

UNIT 6 - 520' CURVED STEEL GIRDER UNIT (150'-220'-150')

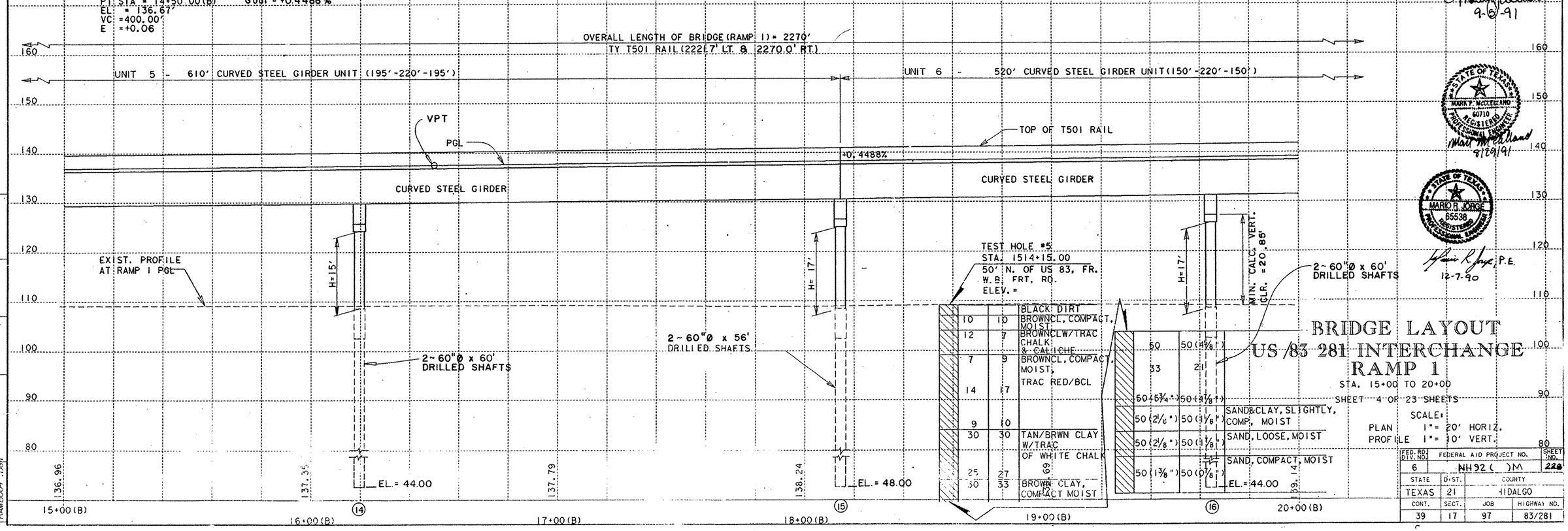

10	10		
12	7		
7	9		
14	17		
9	10		
30	30		
25	27		
30	33		

50	50 (4⅞")	
33	21	
50 (5¾")	50 (4⅛")	
50 (2½")	50 (1⅛")	
50 (2⅝")	50 (1⅛")	
50 (1⅜")	50 (0⅛")	

BRIDGE LAYOUT
US 83 281 INTERCHANGE
RAMP 1

STA. 15+00 TO 20+00

SHEET 4 OF 23 SHEETS

SCALE:
PLAN 1"= 20' HORIZ.
PROFILE 1"= 10' VERT.

FED. RD. DIV. NO.	FEDERAL AID PROJECT NO.		SHEET NO.
6	NH92 ( )M		228
STATE	DIST.	COUNTY	
TEXAS	21	HIDALGO	
CONT.	SECT.	JOB	HIGHWAY NO.
39	17	97	83/281

STATE OF TEXAS — Mark J. Bloschock — 52996 — REGISTERED PROFESSIONAL ENGINEER
9-5-91

STATE OF TEXAS — MARK P. McCLELLAND — 60710 — REGISTERED PROFESSIONAL ENGINEER
8/29/91

STATE OF TEXAS — MARIO R. JORGE — 65538 — REGISTERED PROFESSIONAL ENGINEER
12-7-90

FILE NAME	REFERENCE FILE	NAMED VIEW	LEVELS	PRF FILE
[3,325167] RAMB004.DGN	NEWINT.DGN	REF1	1-28, 30-41	RB4.PRF
	NEWINT2.DGN	REF2	1-62	

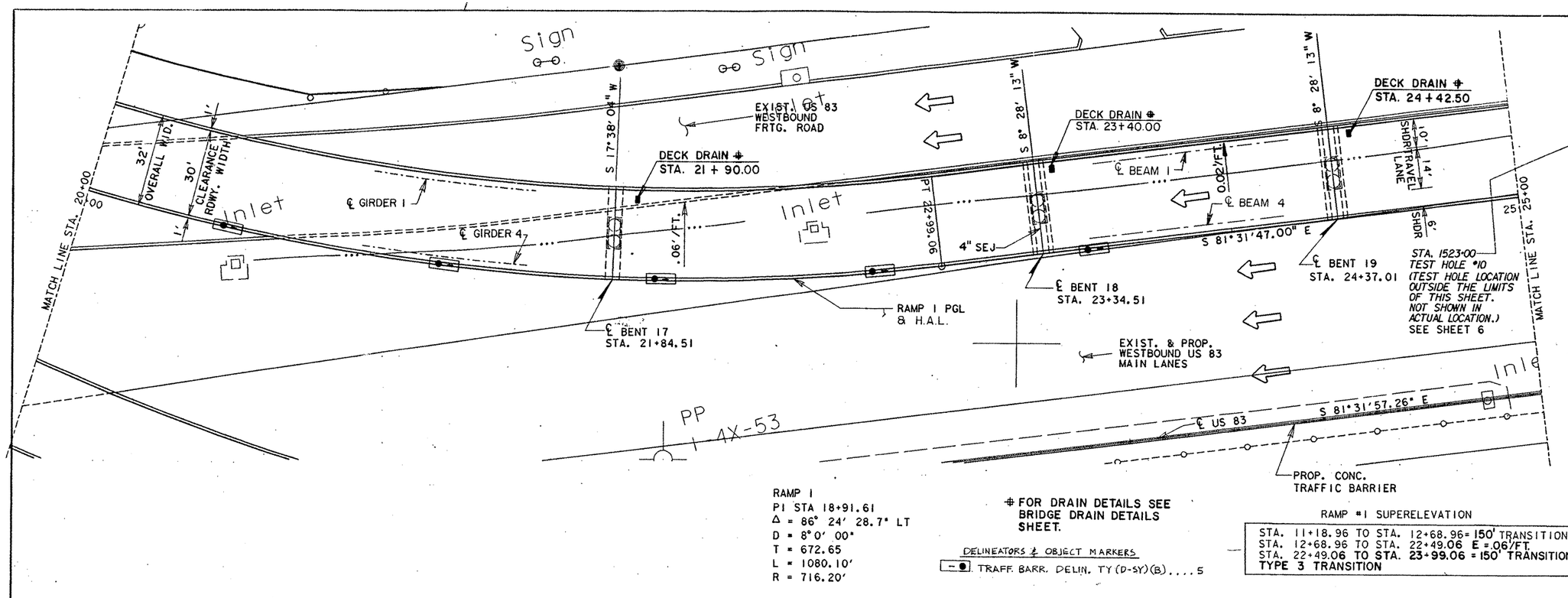

TEST HOLE #10
STA. 1523+00
ELEV. = 109.00'

5 (6.0")	5 (6.0")	CLAY, COMPACT, MOIST, BROWN
8 (6.0")	8 (6.0")	
12 (6.0")	14 (6.0")	
16 (6.0")	17 (6.0")	CLAY, COMPACT, MOIST, REDDISH-BRN
16 (6.0")	15 (6.0")	
29 (6.0")	33 (6.0")	
40 (6.0")	41 (6.0")	
50 (5.4")	50 (5.2")	
47 (6.0")	50 (6.0")	
19 (6.0")	24 (6.0")	SAND AND CLAY SLIGHTLY, CMPT
21 (6.0")	27 (6.0")	
42 (6.0")	56 (6.0")	
43 (6.0")	42 (6.0")	
50 (1.8")	50 (7.5")	

RAMP 1
PI STA 18+91.61
Δ = 86° 24' 28.7" LT
D = 8° 0' 00"
T = 672.65
L = 1080.10'
R = 716.20'

FOR DRAIN DETAILS SEE BRIDGE DRAIN DETAILS SHEET.

DELINEATORS & OBJECT MARKERS
TRAFF. BARR. DELIN. TY (D-SY)(B) 5

RAMP #1 SUPERELEVATION
STA. 11+18.96 TO STA. 12+68.96 = 150' TRANSITION
STA. 12+68.96 TO STA. 22+49.06 E = .06'/FT.
STA. 22+49.06 TO STA. 23+99.06 = 150' TRANSITION
TYPE 3 TRANSITION

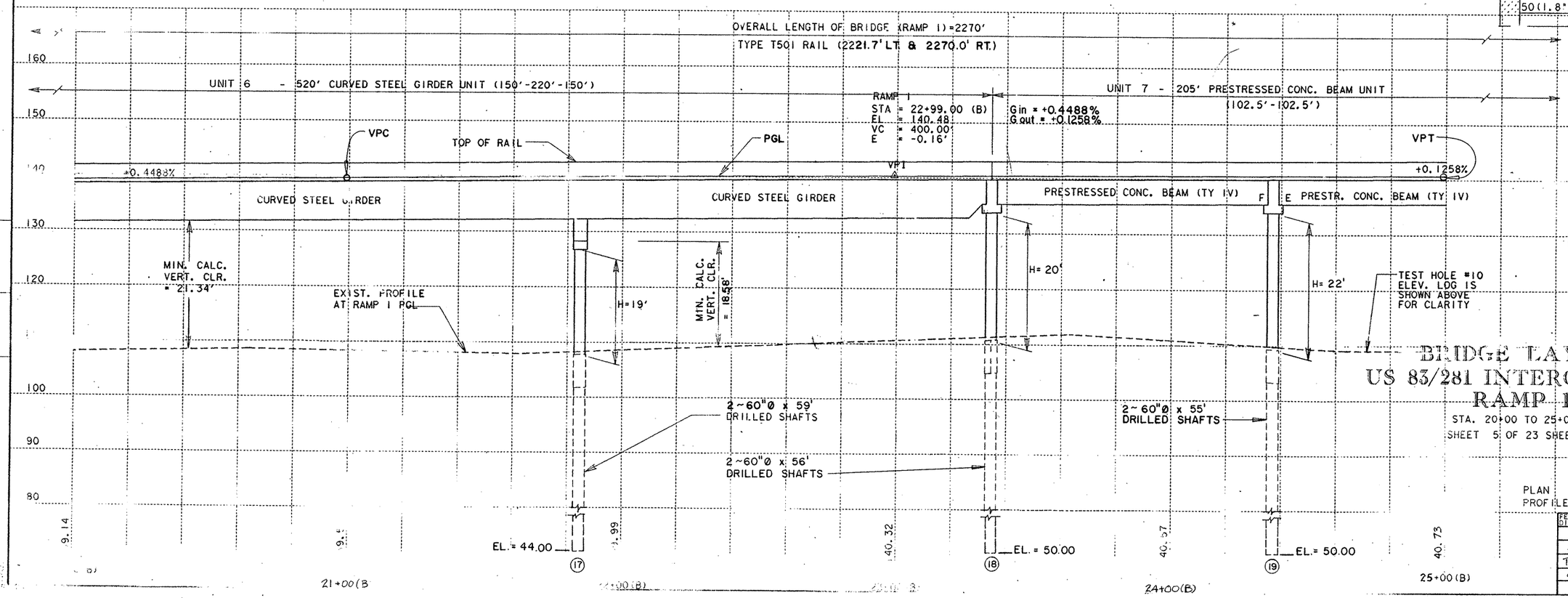

STATE OF TEXAS
Mark J. Bloschock
52996
REGISTERED PROFESSIONAL ENGINEER
9-5-91

STATE OF TEXAS
MARIO R. JORGE
65538
REGISTERED PROFESSIONAL ENGINEER
12-7-90

BRIDGE LAYOUT
US 83/281 INTERCHANGE
RAMP 1

STA. 20+00 TO 25+00
SHEET 5 OF 23 SHEETS

SCALE:
PLAN 1" = 20' HO
PROFILE 1" = 10' VE

FED. RD. DIV. NO.	FEDERAL AID PROJECT NO.	
6	NH92( )M	229

STATE	DIST.	COUNTY	
TEXAS	21	HIDALGO	
COUNTY	SECT.	JOB	HIGHWAY NO.
39	17	97	83/281

NAME	REFERENCE FILE	NAMED VIEW		PRF FILE
	NT2.DGN	REF2		RB5 . PRF
	NT.DGN	REF1	30-41	

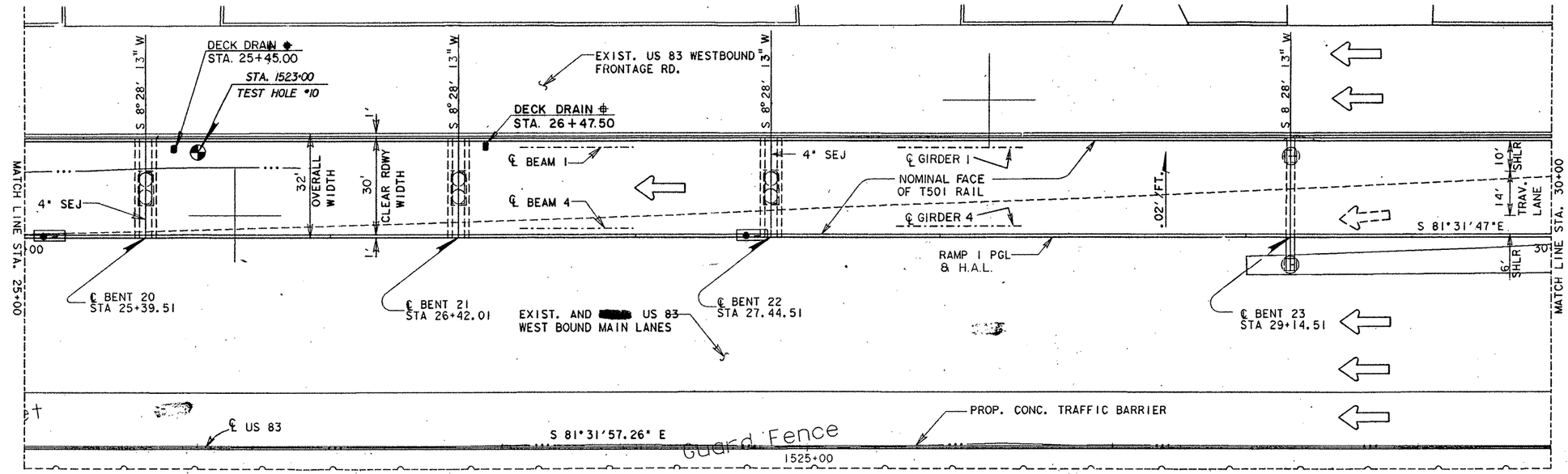

⊕ FOR DRAIN DETAILS SEE BRIDGE DRAIN DETAILS SHEET.

DELINEATORS & OBJECT MARKERS

TRAFF. BARR. DELIN. TY (D-SY)(B).... 2

STATE OF TEXAS
Mark J. Bloschock
52996
REGISTERED PROFESSIONAL ENGINEER
9-6-91

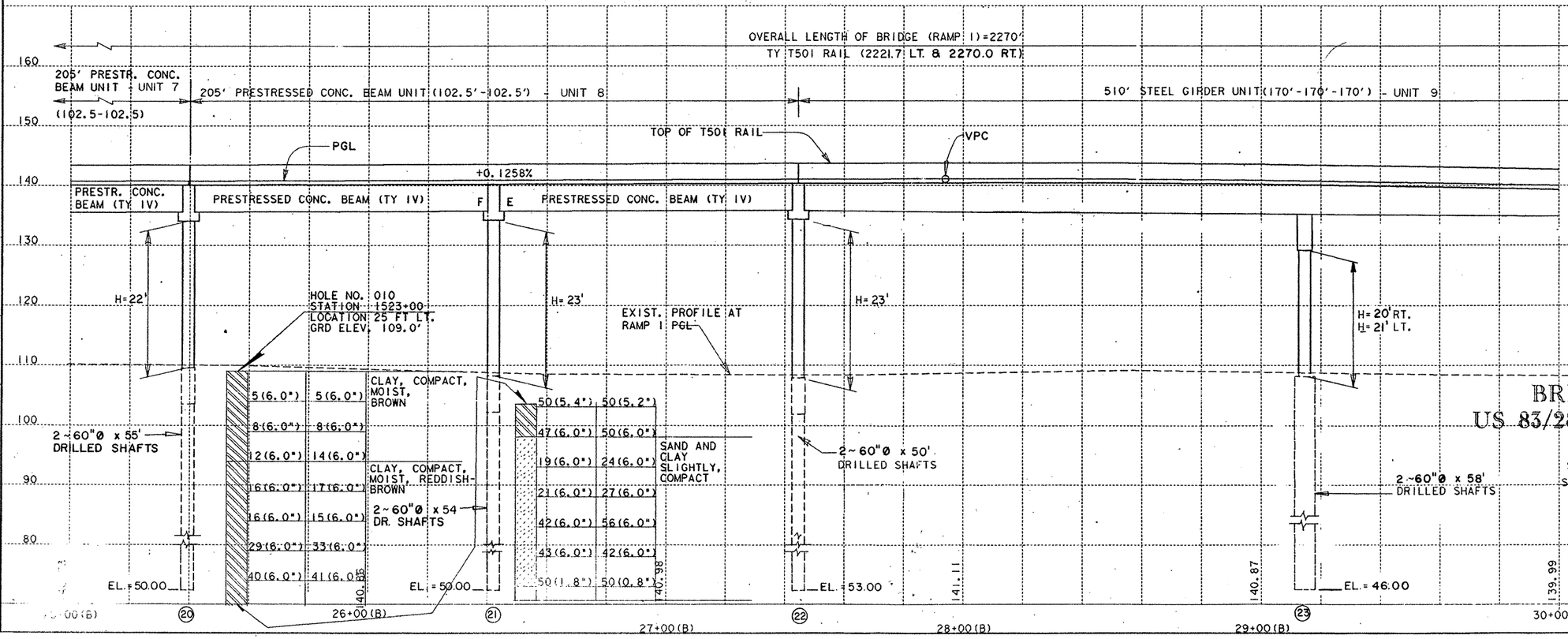

STATE OF TEXAS
MARK P. McCLELLAND
60710
REGISTERED PROFESSIONAL ENGINEER
8/29/91

STATE OF TEXAS
MARIO R. JORGE
65538
REGISTERED PROFESSIONAL ENGINEER
12-7-90

BRIDGE LAYOUT
US 83/281 INTERCHANGE
RAMP 1

STA. 25+00 TO 30+00

SHEET 6 OF 23 SHEETS

SCALE:
PLAN 1"= 20' HORIZ.
PROFILE 1"= 10' VERT.

FED. RD. DIV. NO.	FEDERAL AID PROJECT NO.		SHEET NO.
6	NH 92 ( )M		230
STATE	DIST.	COUNTY	
TEXAS	21	HIDALGO	
CONT.	SECT.	JOB	HIGHWAY NO.
39	17	97	83/281

FILE NAME	REFERENCE FILE	NAMED VIEW	LEVELS	PRF FILE
C325W67.DGN	NEWINT2.DGN	REF2	1-62	RB6.PRF
RAMP006.DGN	NEWINT.DGN	REF1	1-28, 30-41	

D21200A1:ZFA2:

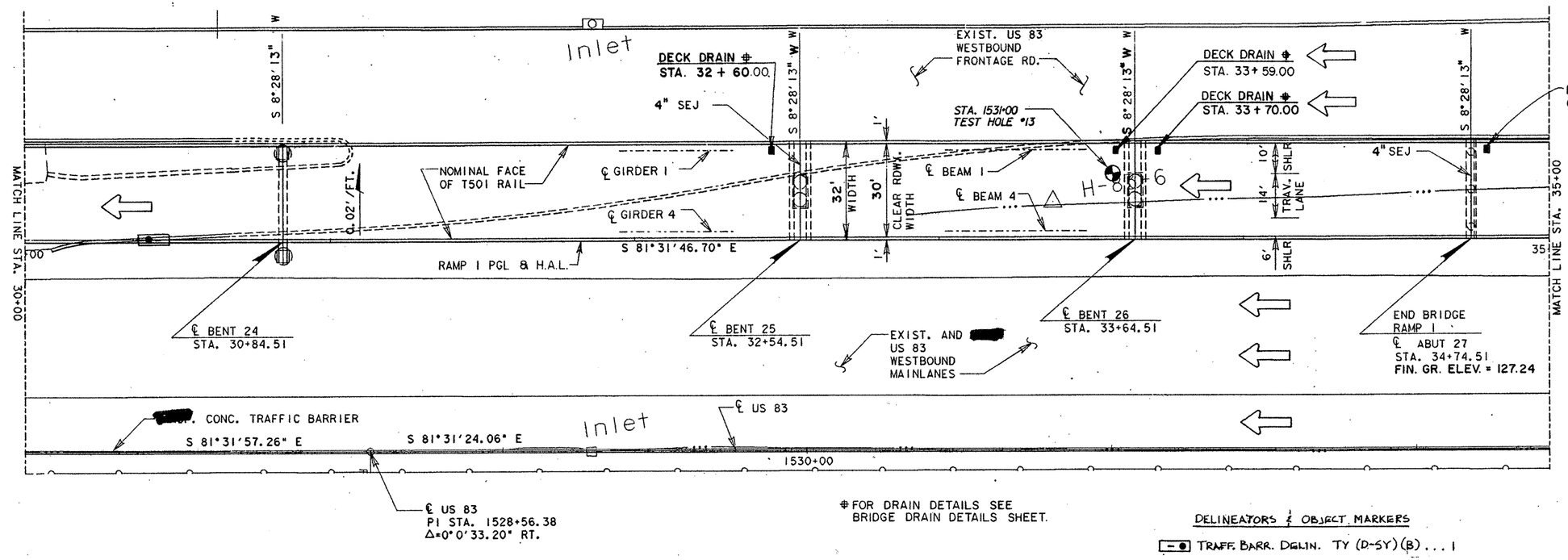

⊕ FOR DRAIN DETAILS SEE BRIDGE DRAIN DETAILS SHEET.

DELINEATORS & OBJECT MARKERS

TRAFF. BARR. DGLN. TY (D-SY)(B) . . . 1

TEST HOLE # 13
STA. 1531+00
ELEV. = 107.00

16	14	LOOSE DIRT, TRACES OF BROWN CLAY
9	9	BROWN CLAY, COMPACT, MOIST.
7	8	
13	14	BROWN CLAY W/ PARTICLES OF CHACK COMPACT, MOIST.
12	12	
33	43	BROWN CLAY, COMPACT, MOIST.
32	35	
39	41	
27	28	
37	46	SAND & CLAY, COMPACT, MOIST.
37	34	
50 (3⅝")	50 (7/8")	WATER-BEARING SAND, LOOSE
50 (4¾")	50 (4")	
50 (2")	50 (1⅛")	

RAMP 1
STA = 30+94.00 (B)
EL = 141.48
VC = 600.00'
E = -2.90'
Gin = +0.1258%
Gout = -3.7423%

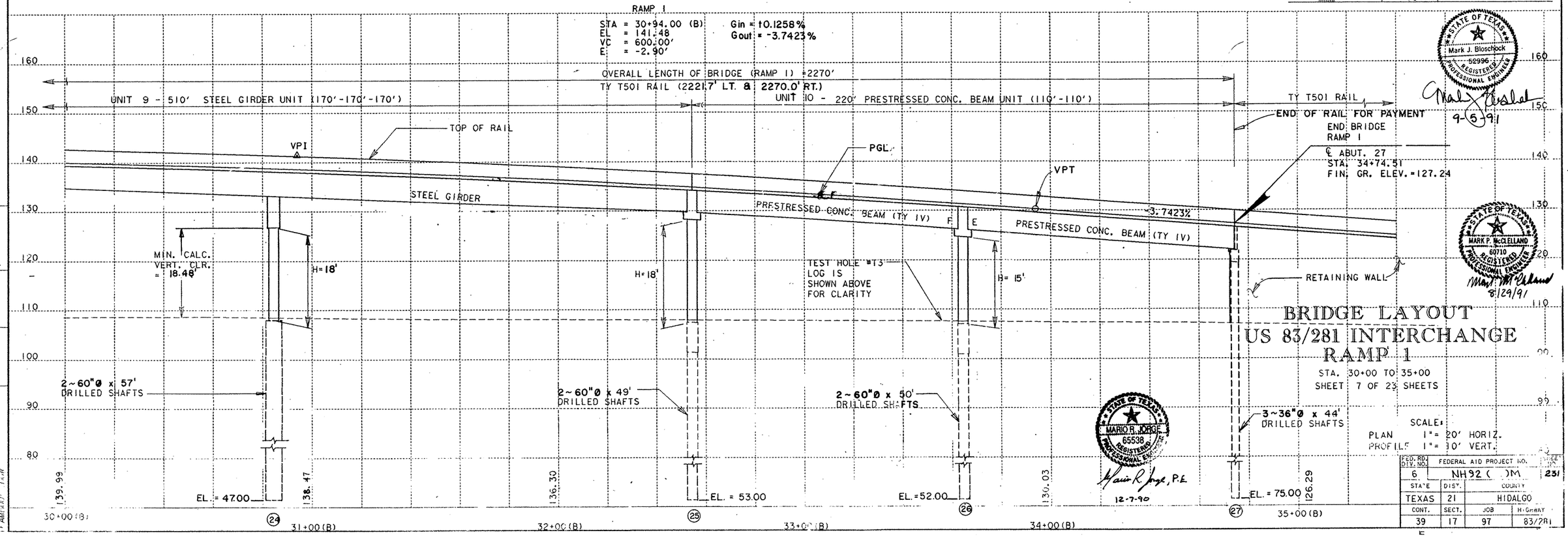

STATE OF TEXAS
Mark J. Bloschock
52996
REGISTERED
PROFESSIONAL ENGINEER
9-5-91

STATE OF TEXAS
MARK P. McCLELLAND
60710
REGISTERED
PROFESSIONAL ENGINEER
6/29/91

STATE OF TEXAS
MARIO R. JORGE
65538
REGISTERED
PROFESSIONAL ENGINEER
12-7-90

BRIDGE LAYOUT
US 83/281 INTERCHANGE
RAMP 1

STA. 30+00 TO 35+00
SHEET 7 OF 23 SHEETS

SCALE:
PLAN 1" = 20' HORIZ.
PROFILE 1" = 10' VERT.

FED. RD. DIV. NO.	FEDERAL AID PROJECT NO.			SHEET NO.
6	NH92 ( )DM			231
STATE	DIST.	COUNTY		
TEXAS	21	HIDALGO		
CONT.	SECT.	JOB	HIGHWAY	
39	17	97	83/281	

REFERENCE FILE | NAMED VIEW | LEVELS | PRF FILE
NEWINT2.DGN | REF2 | I-62 |
NEWINT1.DGN | REF1 | I-28, 30-41 | RBT . PRF

SUMMARY OF ESTIMATED QUANTITIES

ITEM / DESCRIPTION	*STRUCTURAL EXCAVATION	Slurry Displacement Shafts		CLASS "C" CONCRETE		REINF. CONC. SLAB	PRESTR. CONC. BEAM TYPE IV	STRUCTURAL STEEL		SEALED EXPANSION JOINT (4")	CONCRETE SURFACE TREATMENT	RAIL TY T-501	MODULAR JOINT (8 1/2")	Item 471 Frame & Grate (Br. Drain)	
		36" ø	60" ø	ABUTMENT	BENT			H.S.	H.Y.C.						
	C.Y.	L.F.	L.F.	C.Y.	C.Y.	S.F.	L.F.	L.B.	L.B.	L.F.	S.Y.	L.F.	L.F.	Ea.	
1 ~ ABUTMENT		132		15.3											
14 ~ INTERIOR BENTS	450.		1,558		1,087										
1 ~ 610.00' PLATE GIRDER UNIT						19,084		1,061,249	82,899		2,113	1,193	32		
1 ~ 520.00' PLATE GIRDER UNIT						16,294		723,083	70,882	30	1,269	1,018			
1 ~ 205.00' PRESTR. CONC. BEAM UNIT						6,560	787.34			30	729	410			
1 ~ 205.00' PRESTR. CONC. BEAM UNIT						6,560	787.34			30	729	410			
1 ~ 510.00' PLATE GIRDER UNIT						16,320		550,800	31,700	30	1,653	1,020			
1 ~ 220.00' PRESTR. CONC. BEAM UNIT						7,040	855.35			30	782	440			
TOTAL	450.	132	1,558	15.3	1,087	71,858	2,430.03	2,335,132	185,481	150	7,275	4,491	32	15	

ITEM / DESCRIPTION	SLIDING ELASTOMERIC BRGS.	ELASTOMERIC BEARINGS												
	SE3	SE7	1E7	1F5	1F8	1E12	1E12(MOD)							
	EA.	EA.	EA.	EA.	EA.	EA.								
1 ~ ABUTMENT														
14 ~ INTERIOR BENTS														
1 ~ 610.00' PLATE GIRDER UNIT		8					4							
1 ~ 520.00' PLATE GIRDER UNIT	8				4	4								
1 ~ 205.00' PRESTR. CONC. BEAM UNIT														
1 ~ 205.00' PRESTR. CONC. BEAM UNIT														
1 ~ 510.00' PLATE GIRDER UNIT	8		4	4										
1 ~ 220.00' PRESTR. CONC. BEAM UNIT														
TOTAL	16	8	4	4	4	4	4							

*FOR CONTRACTOR'S INFORMATION ONLY. (NON PAY)

BEARING SEAT ELEVATIONS

		BEAM 1	BEAM 2	BEAM 3	BEAM 4
BENT 12	(FWD)	129.028	129.430	129.833	130.236
BENT 13		Top of Column Elevation = 126.340'			
BENT 14		128.350	128.849	129.369	129.889
BENT 15	(BK)	129.654	130.175	130.695	131.215
	(FWD)	129.767	130.287	130.807	131.327
BENT 16		130.112	130.612	131.090	131.610
BENT 17		131.000	131.500	131.978	132.498
BENT 18	(BK)	133.724	134.037	134.350	134.663
	(FWD)	134.050	134.300	134.592	134.821
BENT 19	(BK)	134.657	134.~~344~~ 811	134.962	135.073
	(FWD)	134.562	134.735	134.909	135.082
BENT 20	(BK)	134.699	134.872	135.045	135.219
	(FWD)	134.705	134.879	135.052	135.225
BENT 21	(BK)	134.828	135.001	135.174	135.348
	(FWD)	134.834	135.008	135.181	135.354
BENT 22	(BK)	134.957	135.130	135.303	135.477
	(FWD)	134.744	134.917	135.091	135.264
BENT 23		134.182	134.355	134.529	134.702
BENT 24		132.104	132.277	132.451	132.624
BENT 25	(BK)	128.626	128.799	128.972	129.146
	(FWD)	128.693	128.866	129.039	129.213
BENT 26	(BK)	125.340	125.514	125.687	125.860
	(FWD)	125.115	125.289	125.462	125.635
ABUT 27	(BK)	121.146	121.319	121.492	121.666

HS 20 LOADING

STATE OF TEXAS
MARK J. BLOSCHOCK
52996
REGISTERED
PROFESSIONAL ENGINEER

3-13-92

REV. 3-30-92

STATE DEPARTMENT OF HIGHWAYS AND PUBLIC TRANSPORTATION

ESTIMATED QUANTITIES AND BEARING SEAT ELEVATIONS

US 83/281 INTERCHANGE
UNITS 5-10, RAMP I

D45350A: ZFA2: [3551001]4379TAB02.DGN	PREPARED BY AND FOR USE OF TEXAS SDH&PT				
ORIGINAL DRAWING DATE: FEBRUARY 1991	STATE DISTRICT: 21	FEDERAL REGION: 6	FEDERAL AID PROJECT: *		SHEET: 232
DN.: KBA CK.: LMW/MRL	REVISIONS				
DN.: PSR CK.: LMW/MRL		COUNTY: HIDALGO	CONTROL: 0039	SECTION: 17	JOB: 097	HIGHWAY: US 83/281

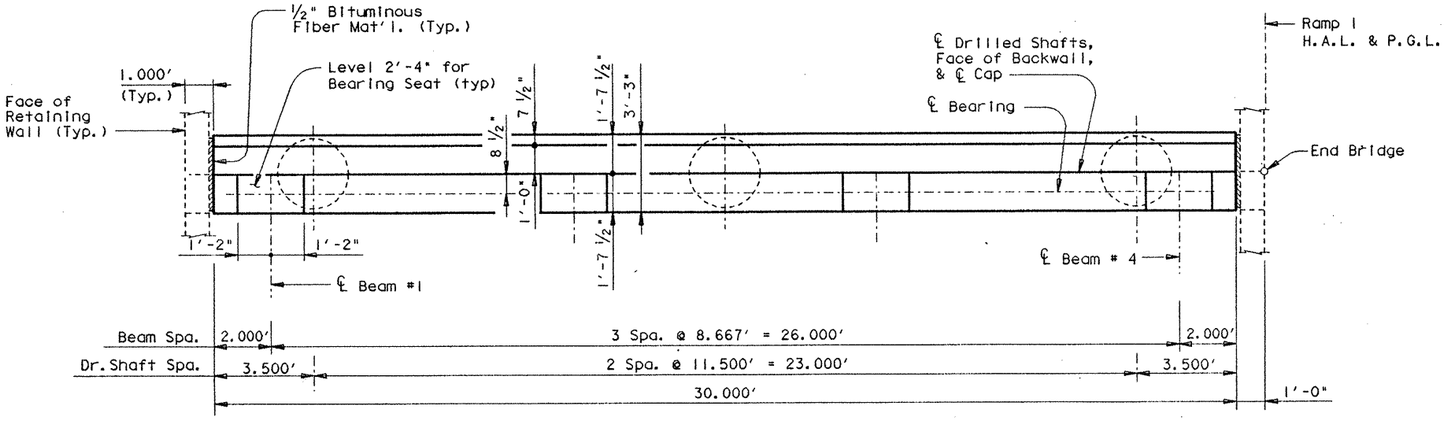

PLAN

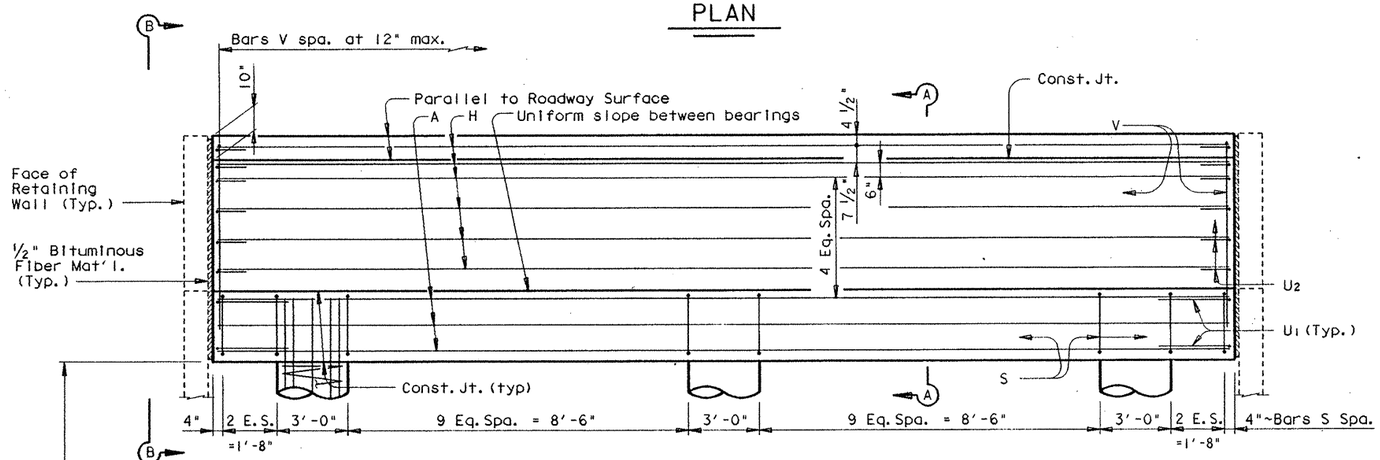

ELEVATION

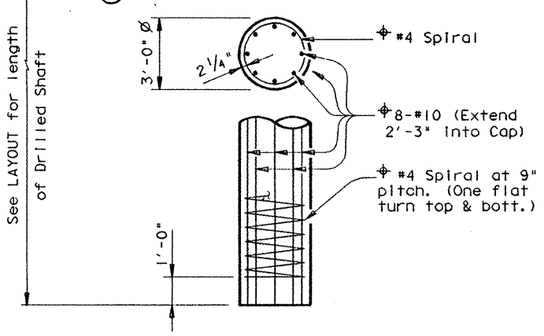

⌖ Included in price bid for Drilled Shaft.

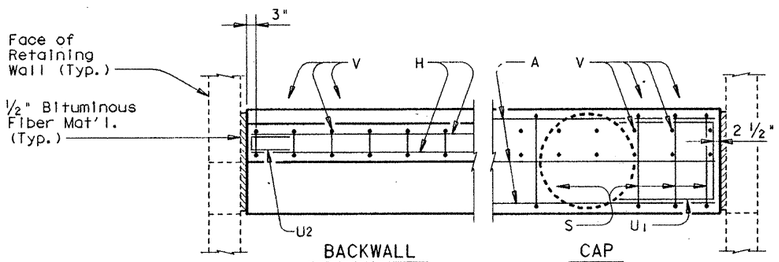

CORNER DETAILS

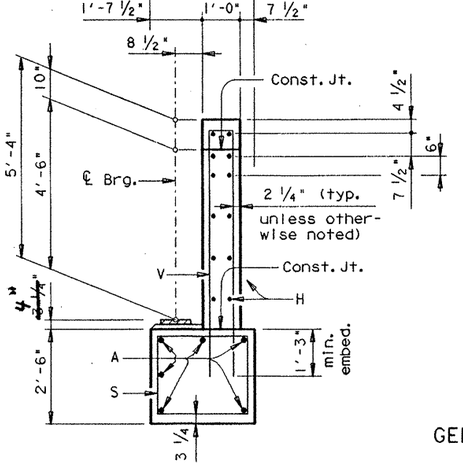

SECTION A-A

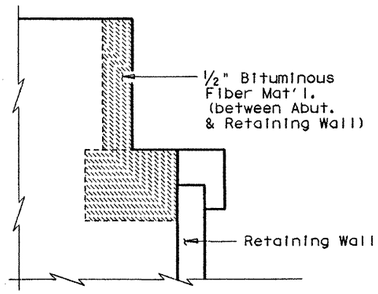

ELEVATION B-B

(SHOWING RETAINING WALL AT ABUTMENT)

TABLE OF ESTIMATED QUANTITIES

Bar	No.	Size	Length	Weight
A	6	# 11	29'- 8"	946
H	12	# 5	29'- 8"	371
S	26	# 4	10'- 6"	182
U1	4	# 6	7'-10"	47
U2	12	# 5	2'- 7"	32
V	31	# 5	13'-10"	447

Reinforcing Steel		Lb	# 2025
Class "C" Concrete		CY	15.3

For contractor's information only.

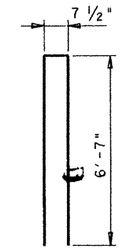

BARS V

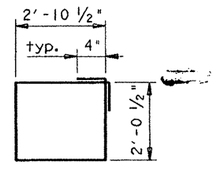

BARS S

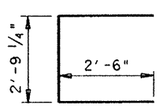

BARS U1

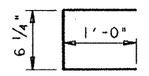

BARS U2

GENERAL NOTES:

Designed according to A.A.S.H.T.O. 1989 Standard Specifications.

Calculated Foundation Loads ~
Cap Drilled Shafts = 100 Tons/Drilled Shaft

For Modified Bearing Seat Details see Gp C (SPL) Sheet.

HS 20 LOADING

STATE OF TEXAS
MARK J. BLOSCHOCK
52996
REGISTERED PROFESSIONAL ENGINEER

9-13-91

STATE DEPARTMENT OF HIGHWAYS AND PUBLIC TRANSPORTATION

ABUTMENT NO. 27 RAMP I

US 83/281 INTERCHANGE

D45350A1 ZFA1 (3551633)4376RWA01.DGN	PREPARED BY AND FOR USE OF TEXAS SDH&PT						
ORIGINAL DRAWING DATE: July 1990	STATE DISTRICT	FEDERAL REGION	FEDERAL AID PROJECT				SHEET
DN.: LMW CK.: KBA DN.: TKW CK.: LMW REVISIONS	21	6	NH92(3)M				233
	COUNTY			CONTROL	SECTION	JOB	HIGHWAY
	Hidalgo			0039	17	097	US 83/281

F N

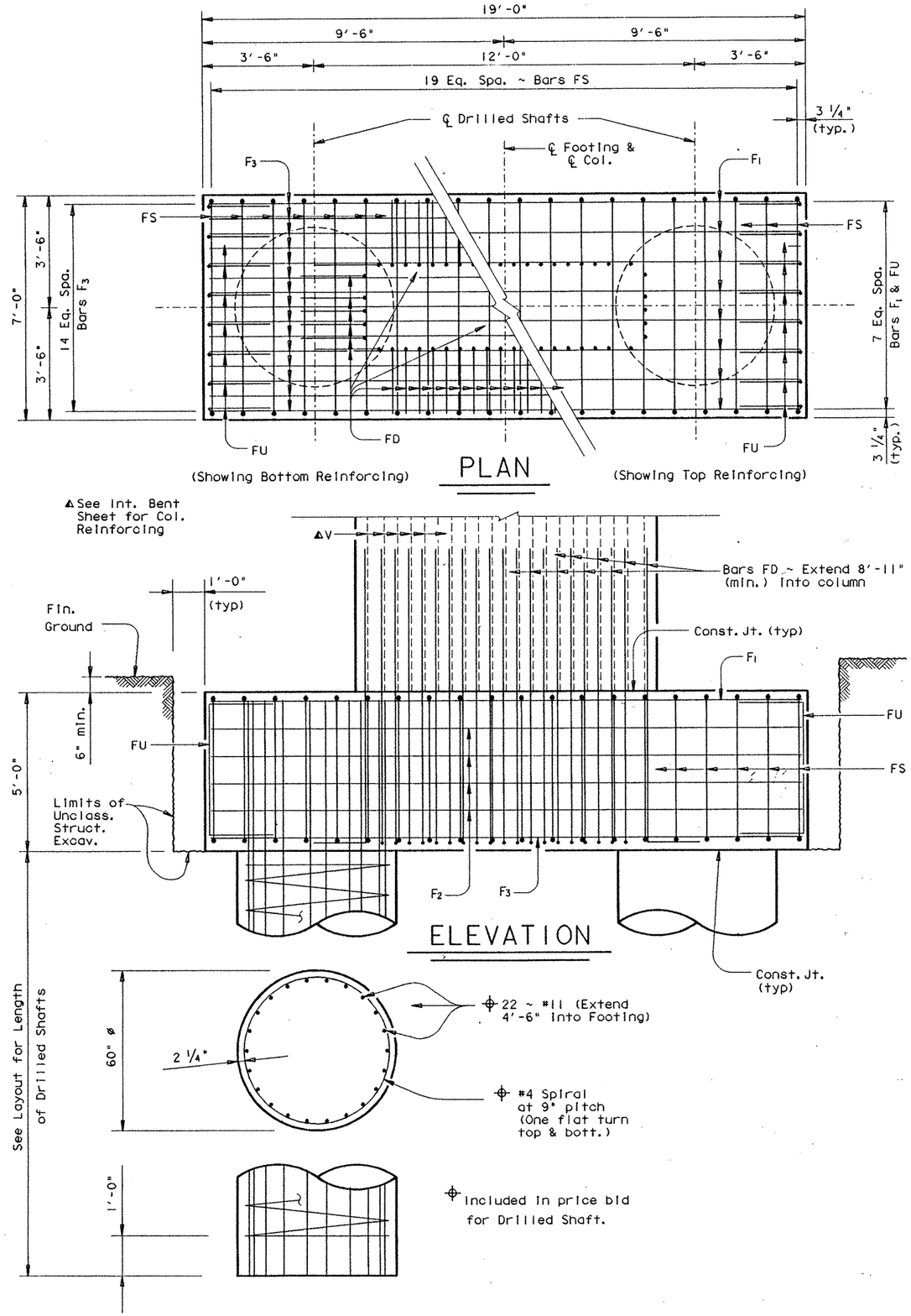

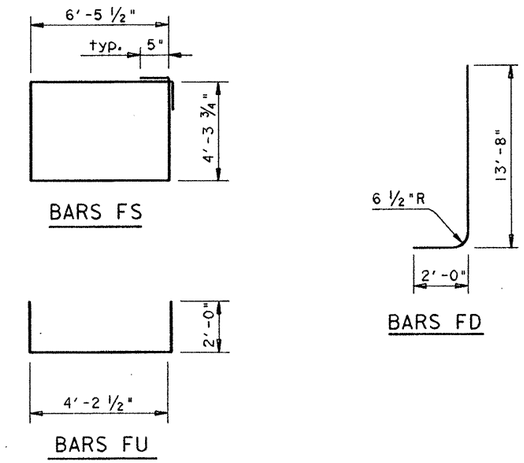

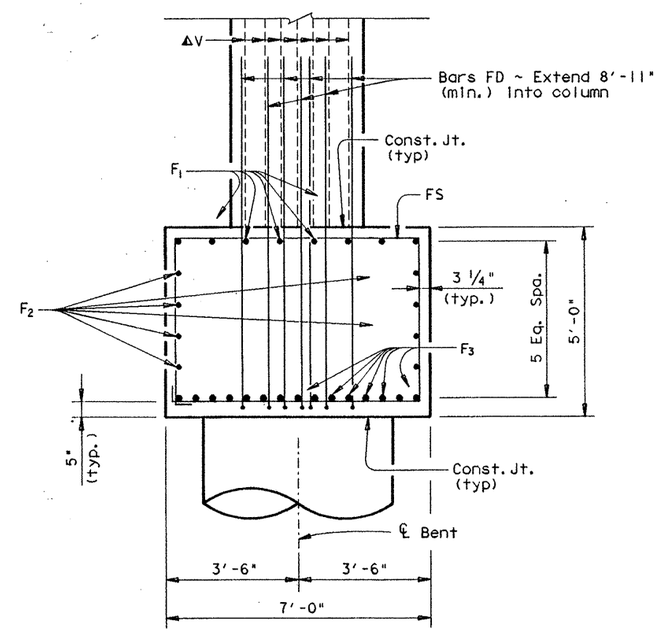

FOOTING SECTION

‡TABLE OF FOOTING QUANTITIES

Bar	No.	Size	Length	Weight
F_1	8	# 8	18'- 6"	395
F_2	8	# 5	18'- 6"	154
F_3	15	# 11	18'- 6"	1474
FD	48	# 11	15'- 6"	3953
FS	20	# 5	22'- 5"	468
FU	16	# 5	8'- 3"	139

Reinforcing Steel	Lb	‡ 6583
Class "C" Concrete	CY	24.6

‡ For Contractor's information only.

‡ Quantities shown are for one footing only.

All Footing Reinforcing Steel [redacted] Grade 60.

HS 20 LOADING

STATE DEPARTMENT OF HIGHWAYS AND PUBLIC TRANSPORTATION

FOOTING DETAILS BENT NOS. 12-18, 22&25 RAMP I

US 83/281 INTERCHANGE

STATE OF TEXAS
MARK J. BLOSCHOCK
52996
REGISTERED PROFESSIONAL ENGINEER

9-13-91

D45350A1 : ZFA2: [355100]4378MISO1.DGN

PREPARED BY AND FOR USE OF TEXAS SDH&PT

ORIGINAL DRAWING DATE:	NOVEMBER 1990	STATE DISTRICT	FEDERAL REGION	FEDERAL AID PROJECT	SHEET
DN.: GAF/MRL	REVISIONS	21	6	NH 92( )M	234
CK.: MRL/GAF		COUNTY	CONTROL	SECTION	JOB	HIGHWAY
DW.: PSR		HIDALGO	0039	17	097	US 83/281
CK.: GAF/MRL					

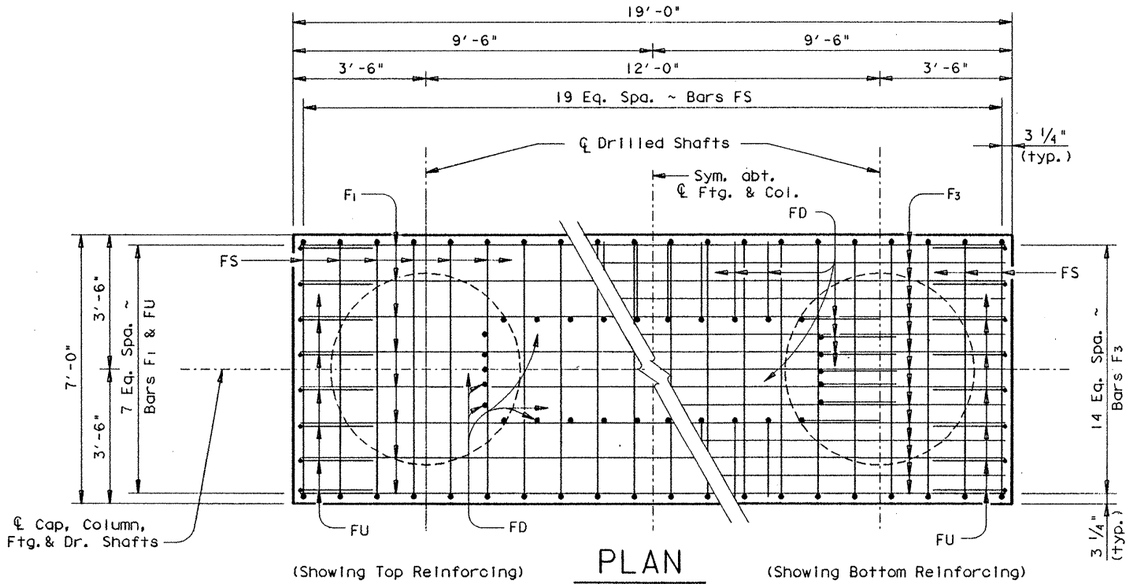

(Showing Top Reinforcing) PLAN (Showing Bottom Reinforcing)

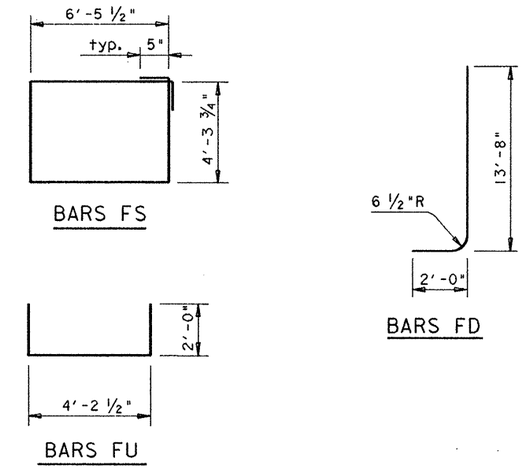

‡TABLE OF FOOTING QUANTITIES

Bar	No.	Size	Length	Weight
F_1	8	# 8	18'- 6"	395
F_2	8	# 5	18'- 6"	154
F_3	15	# 11	18'- 6"	1474
FD	30	# 11	15'- 6"	2471
FS	20	# 5	22'- 5"	468
FU	16	# 5	8'- 3"	139

Reinforcing Steel	Lb	‡ 5101
Class "C" Concrete	CY	24.6

‡ For Contractor's information only.

‡ Quantities shown are for one footing only.

All footing reinforcing [redacted] Grade 60.

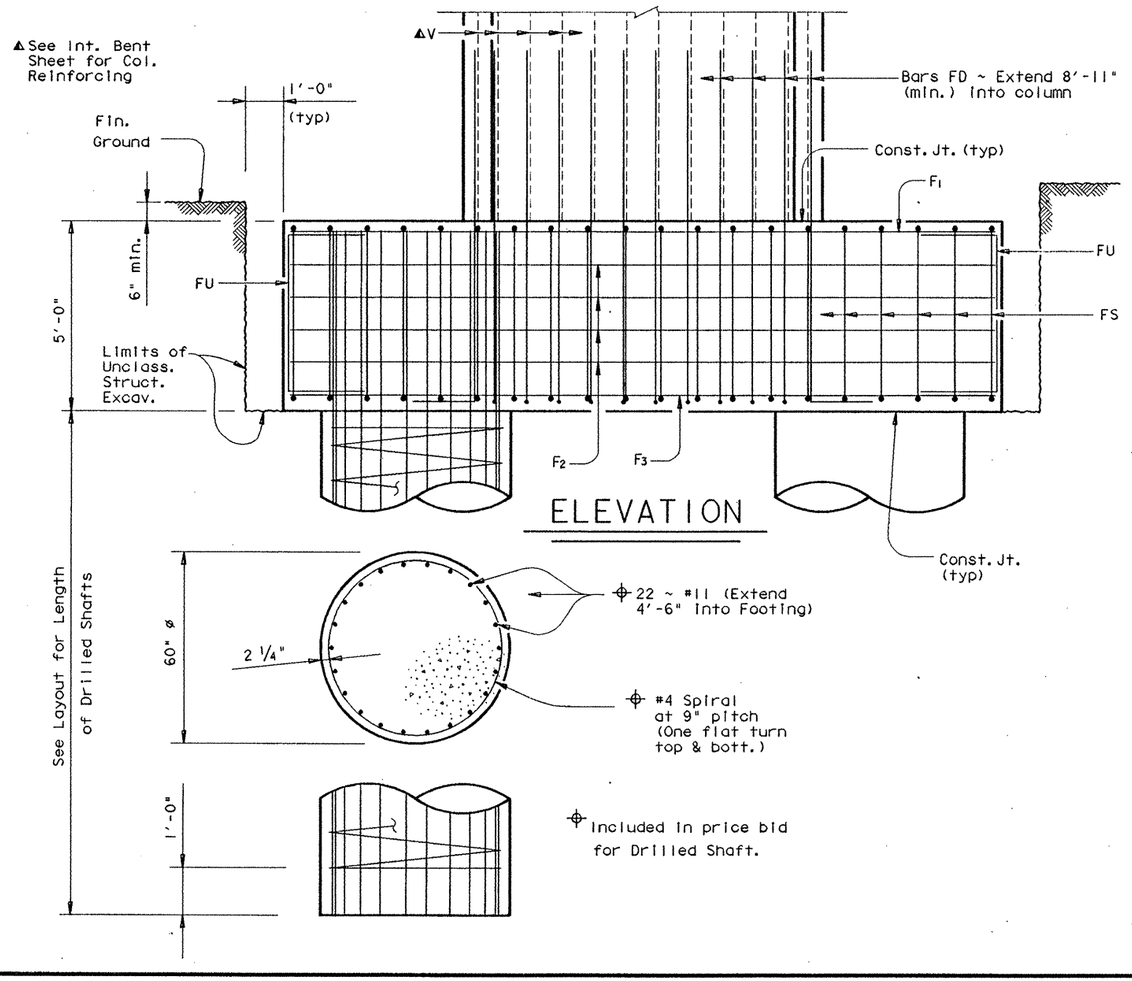

ELEVATION

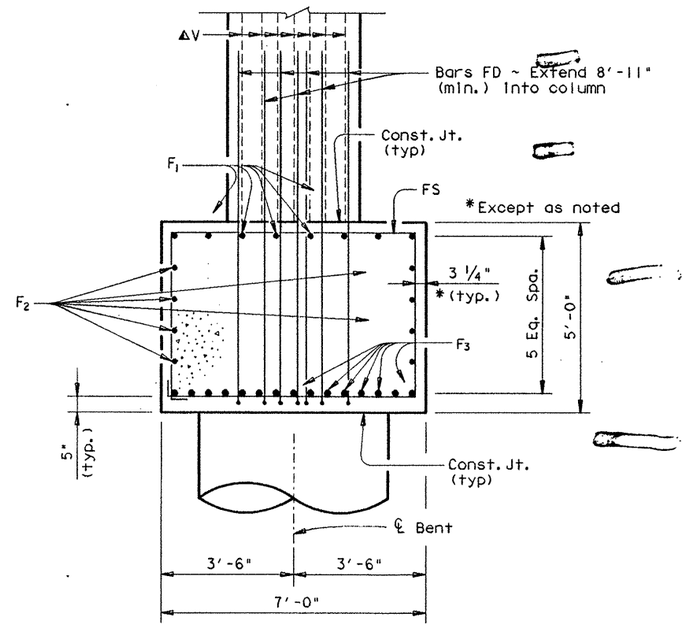

FOOTING SECTION

HS 20 LOADING

STATE DEPARTMENT OF HIGHWAYS AND PUBLIC TRANSPORTATION

FOOTING DETAILS BENT NOS. 19-21 & 26 RAMP I

US 83/281 INTERCHANGE

STATE OF TEXAS
MARK J. BLOSCHOCK
52996
REGISTERED PROFESSIONAL ENGINEER
9-13-91

D45350A: ZFA2: [355100]4377MIS02.DGN	PREPARED BY AND FOR USE OF TEXAS SDH&PT					
ORIGINAL DRAWING DATE: JANUARY 1991	STATE DISTRICT	FEDERAL REGION	FEDERAL AID PROJECT			SHEET
DN.: GAF/MRL	21	6	NH 92C JM			235
CK.: MRL/GAF	COUNTY		CONTROL	SECTION	JOB	HIGHWAY
DW.: DRG/PSR	HIDALGO		0039	17	097	US 83/281
CK.: JCC						

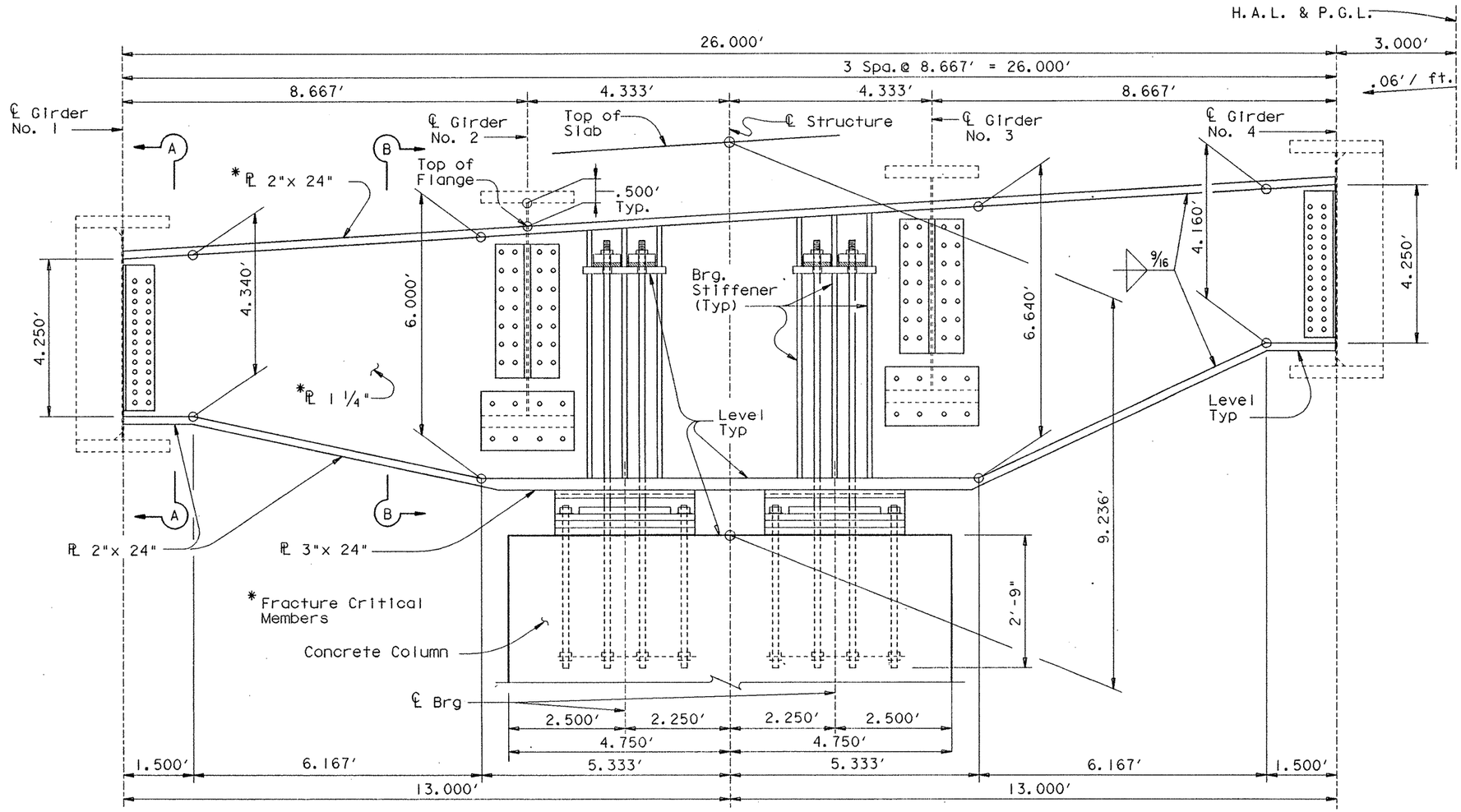

ELEVATION

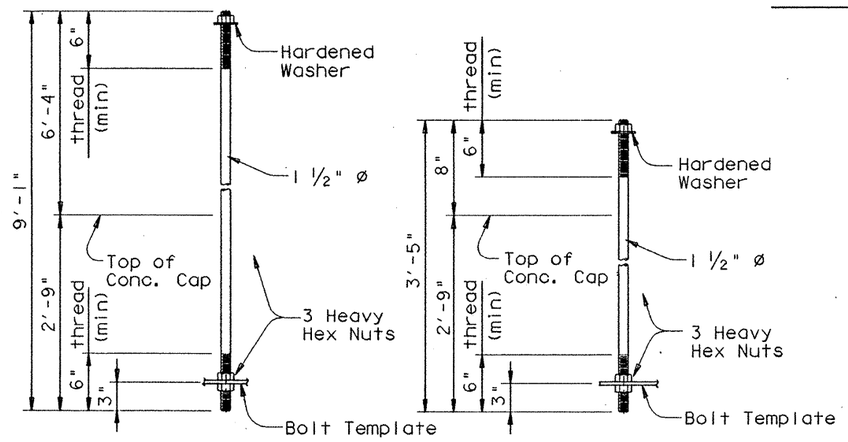

HOLD-DOWN BOLT DETAIL

ANCHOR BOLT DETAIL

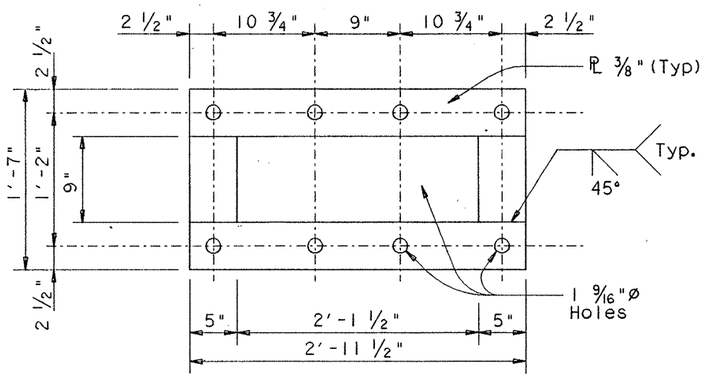

BOLT TEMPLATE

GENERAL NOTES:

Designed in accordance with A.A.S.H.T.O. 1989 Standard Specifications.

Material for Steel Cap and all connections [redacted] conform to the item "Steel Structures" A572.

Flange splices s[redacted] made by full penetration grove welds in accordance with the Item "Steel Structures".

The web and top flange are fracture critical and [redacted] conform to Fracture control Plan.

All bolts used in Girder to Cap connections [redacted] be 1" ø A325 bolts.

Anchor Bolts and Hold Down Bolts [redacted] galvanized and conform to the item "Metal For Structures A.S.T.M. A 193-B7 Anchor Bolts".

Nuts [redacted] heavy hex nuts and conform to ASTM A 194 2H.

The steel bent cap [redacted] erected with the web set vertical and all anchor and hold-down bolts uniformly tightened. Adjustment of girders for proper splice alignment can be made by loosening nuts on one side of the cap while tightening nuts on the other side by an equal amount. After the slab and rail have been placed and dead load deflection has occured, all hold-down bolts [redacted] loosened and uniformly retightened to snug tight plus 1/4 turn condition.

Estimated weight of "Structural Steel (HS)" for one steel cap and it's connections = 39,400 Lbs.

Quanity included in total weight for 610.00' Plate Girder Unit.

HS 20 LOADING Sheet 1 of 4

STATE DEPARTMENT OF HIGHWAYS AND PUBLIC TRANSPORTATION

INTERIOR BENT

RAMP 1 BENT 13

US 83/281 INTERCHANGE

D45350A##ZFA2#(355#21)4377INS01.DGN	PREPARED BY AND FOR USE OF TEXAS SDH&PT						
ORIGINAL DRAWING DATE: JANUARY 1990	REVISIONS	STATE DISTRICT	FEDERAL REGION	FEDERAL AID PROJECT			SHEET
DN.:- MRL		21	6	NH92( )M			236
CK.:- GAF		COUNTY		CONTROL	SECTION	JOB	HIGHWAY
DW.:- MMM		HIDALGO		0039	17	097	US 83/281
CK.:- MRL							

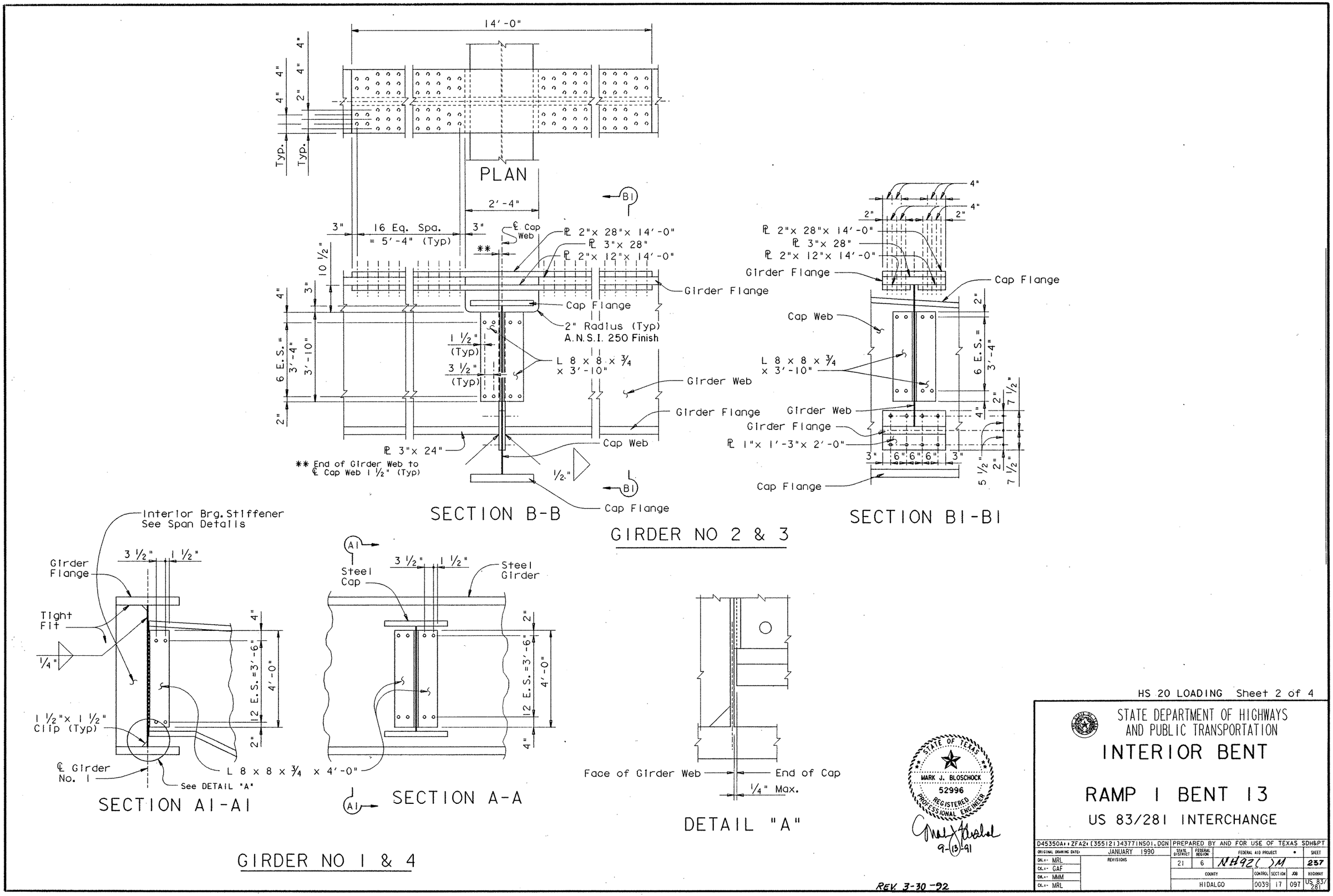

HS 20 LOADING Sheet 2 of 4

STATE DEPARTMENT OF HIGHWAYS AND PUBLIC TRANSPORTATION

INTERIOR BENT

RAMP 1 BENT 13

US 83/281 INTERCHANGE

D45350A1:ZFA2:[355121]4377INS01.DGN	PREPARED BY AND FOR USE OF TEXAS SDH&PT					
ORIGINAL DRAWING DATE: JANUARY 1990	STATE DISTRICT	FEDERAL REGION	FEDERAL AID PROJECT			SHEET
DN.: MRL	21	6	NH92( )M			237
CK.: GAF	COUNTY		CONTROL	SECTION	JOB	HIGHWAY
DN.: MMM	HIDALGO		0039	17	097	US 83/281
CK.: MRL						

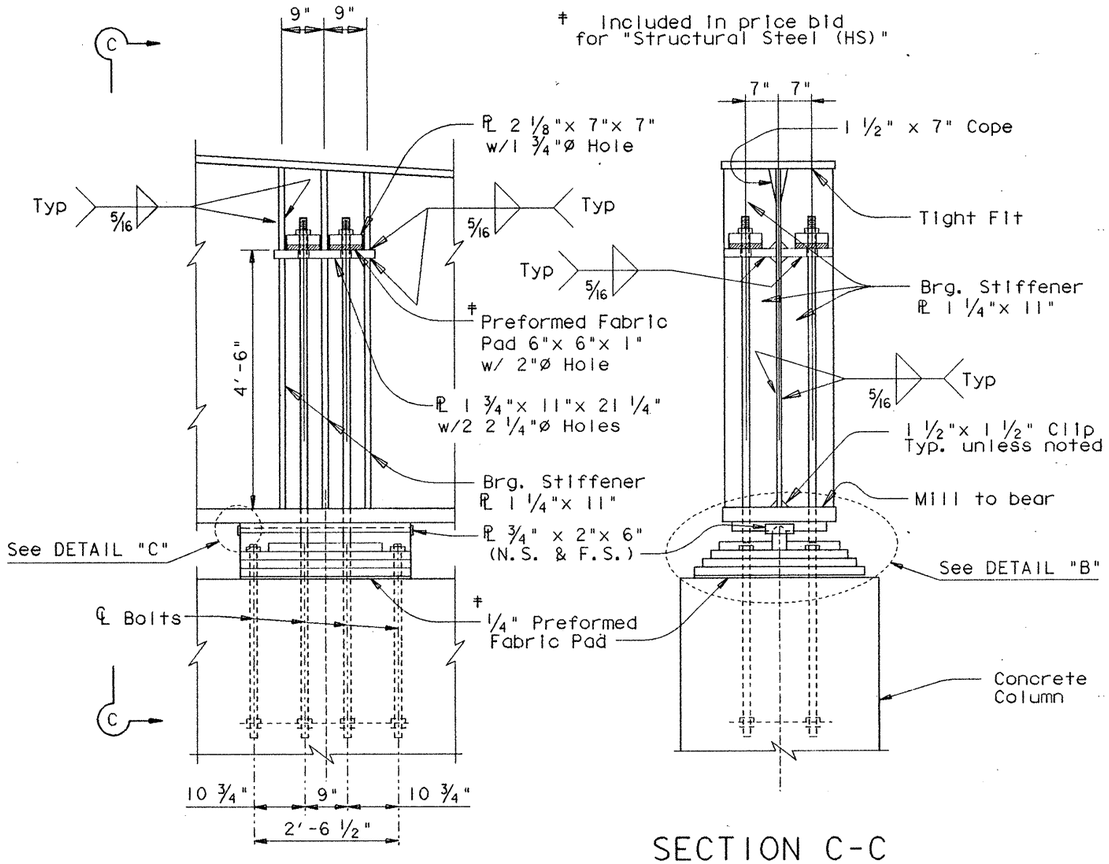

SECTION C-C

BEARING DETAILS

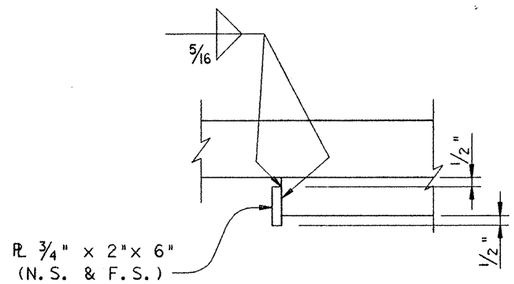

DETAIL "C"

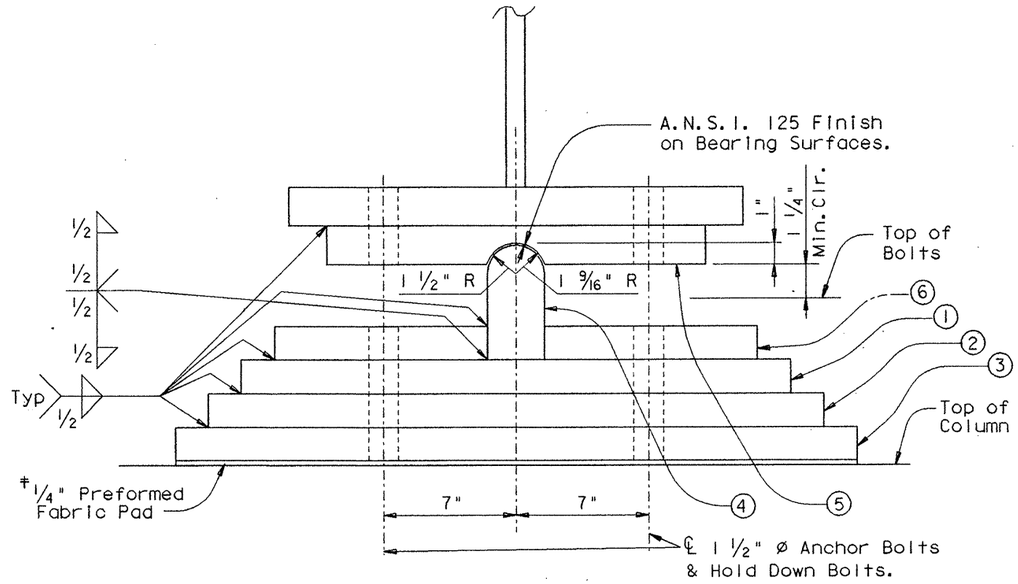

DETAIL "B"

1. PL 1 3/4"x 29"x 3'-0" with 1 3/4" Ø holes for Anchor Bolts & Hold-down Bolts.
2. PL 1 3/4"x 32 1/2"x 3'-0" with 1 3/4" Ø holes for Anchor Bolts & Hold-down Bolts.
3. PL 1 3/4"x 36"x 3'-0" with 1 3/4" Ø holes for Anchor Bolts & Hold-down Bolts.
4. PL 3"x 5"x 3'-0" R=1 1/2"
5. PL 2"x 20"x 3'-0" R=1 9/16" with 1 3/4" Ø holes for Hold-down Bolts.
6. 2 ~ PL 1"x 11 1/4"x 1'-6" with 1 3/4" Ø holes for Hold-down Bolts.

HS 20 LOADING Sheet 3 of 4

STATE OF TEXAS
MARK J. BLOSCHOCK
52996
REGISTERED PROFESSIONAL ENGINEER

9-13-91

STATE DEPARTMENT OF HIGHWAYS AND PUBLIC TRANSPORTATION

INTERIOR BENT

RAMP 1 BENT 13

US 83/281 INTERCHANGE

D45350A: ZFA2: [355121]4377INS01.DGN	PREPARED BY AND FOR USE OF TEXAS SDH&PT					
ORIGINAL DRAWING DATE: JANUARY 1990	STATE DISTRICT	FEDERAL REGION	FEDERAL AID PROJECT			SHEET
DN.: MRL	21	6	NH92( )M			238
CK.: GAF	COUNTY		CONTROL	SECTION	JOB	HIGHWAY
DW.: MMM	HIDALGO		0039	17	097	US 83/281
CK.: MRL						

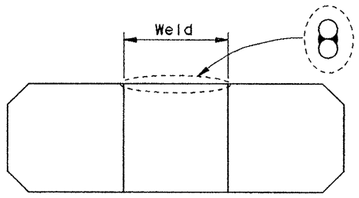

BARS Z_1 WELD DETAIL

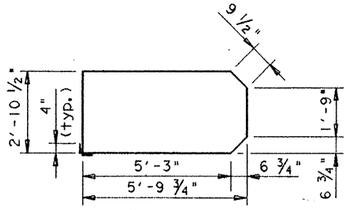

BARS Z_1

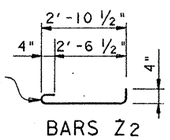

BARS Z_2

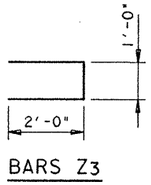

BARS Z_3

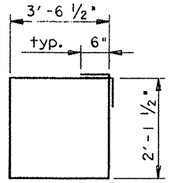

BARS S

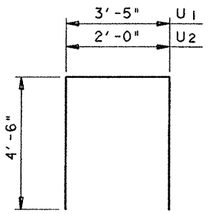

BARS U

TABLE OF CONSTANT QUANTITIES				
Bar	No	Sz.	Length	Weight
S	14	#6	12'- 5"	261
U_1	2	#6	12'- 5"	37
U_2	16	#6	11'- 0"	264
REINF STEEL (COL)			Lb ‡	562

‡ For Contractors Info. Only.

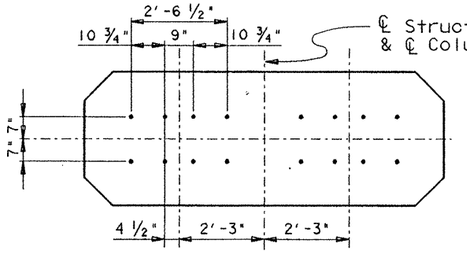

ANCHOR BOLT PLAN

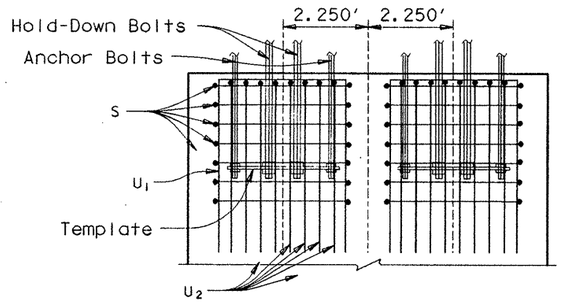

ANCHOR BOLT DETAIL

TABLE OF VARIABLE QUANTITIES										▲TOTAL EST. QUANTITIES	
H	CL. "C" CONC.	BARS Z_1 #4 x 17'-5"		BARS Z_2 #4 x 3'-8"		BARS Z_3 #4 x 5'-0"		BARS V 48 ~ # 11		REINF. STEEL ‡	CL. "C" CONC.
FT.	C. Y.	NO.	WT.	NO.	WT.	NO.	WT.	LGTH.	WT.	LB.	C. Y.
17	20.2	40	465	51	125	34	114	16'-9 "	4272	12121	44.8
18	21.4	42	489	54	132	36	120	17'-9 "	4527	12413	46.0
19	22.6	44	512	57	140	38	127	18'-9 "	4782	12706	47.2
20	23.8	46	535	60	147	40	134	19'-9 "	5037	12998	48.4
21	25.0	48	558	63	154	42	140	20'-9 "	5292	13289	49.6

▲ Includes Footing Quantities

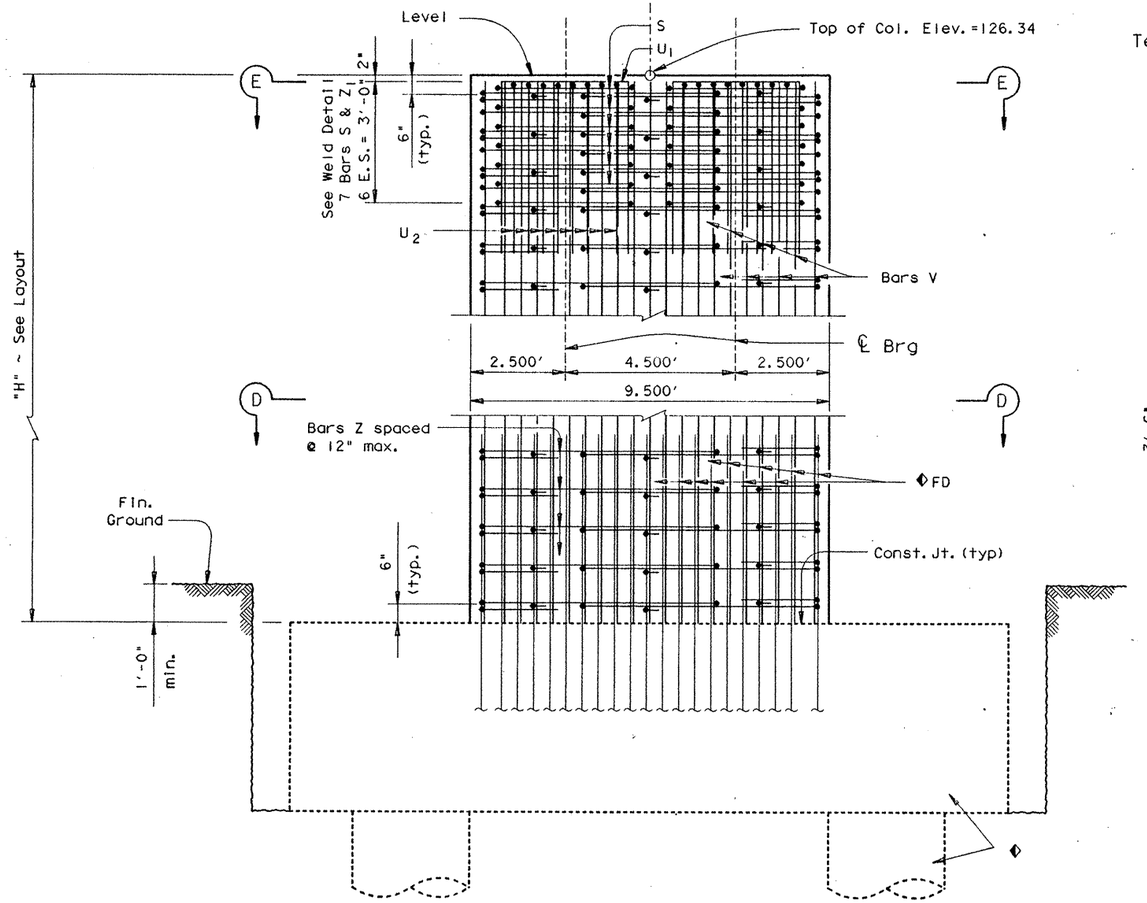

ELEVATION

◆ See Footing Details Sheet for Footing Quantities and Details not shown.

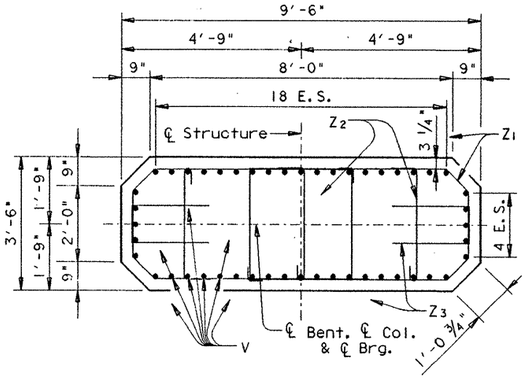

SECTION D-D

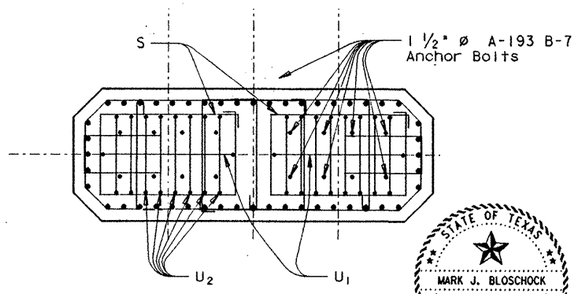

SECTION E-E

See Section D-D for details not shown

GENERAL NOTES:

Designed according to A.A.S.H.T.O. 1989 Standard and current Interim Specifications.

Calculated Drilled Shaft Loads = 730 TONS/DR SHAFT

All reinforcing steel [redacted] Grade 60.

See "Formliner Details" sheet for asthetic treatment of columns.

[redacted]

HS 20 LOADING Sheet 4 of 4

STATE DEPARTMENT OF HIGHWAYS AND PUBLIC TRANSPORTATION

INTERIOR BENT

RAMP I BENT 13

US 83/281 INTERCHANGE

STATE OF TEXAS
MARK J. BLOSCHOCK
52996
REGISTERED PROFESSIONAL ENGINEER
9-16-91

D45350A: ZFA2: [35512] 4377INS01.DGN	PREPARED BY AND FOR USE OF TEXAS SDH&PT						
ORIGINAL DRAWING DATE: JANUARY 1990	STATE DISTRICT	FEDERAL REGION	FEDERAL AID PROJECT				SHEET
DR.: MRL	21	6	NH92(3)M				239
CK.: GAF	COUNTY			CONTROL	SECTION	JOB	HIGHWAY
DR.: MMM	HIDALGO			0039	17	097	US 83/281
CK.: MRL							

REVISIONS

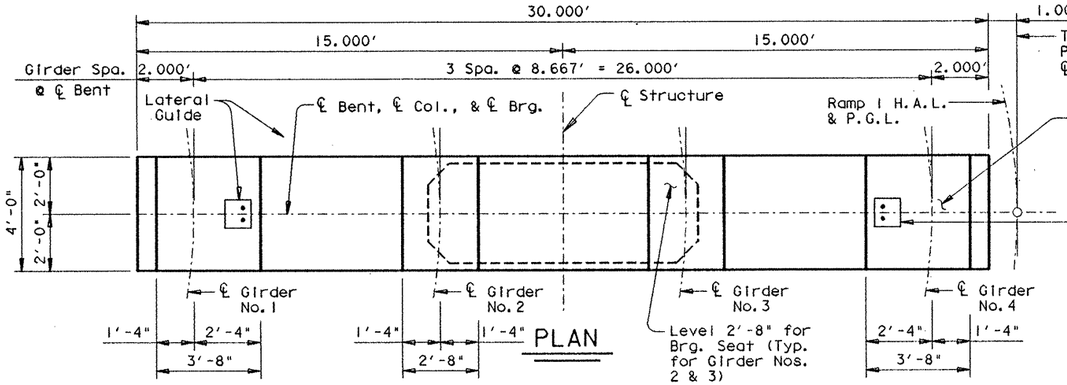

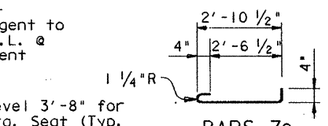

BARS Z2

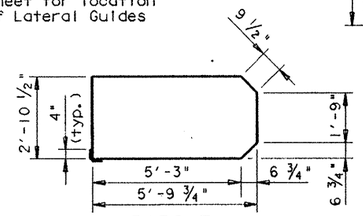

BARS Z1

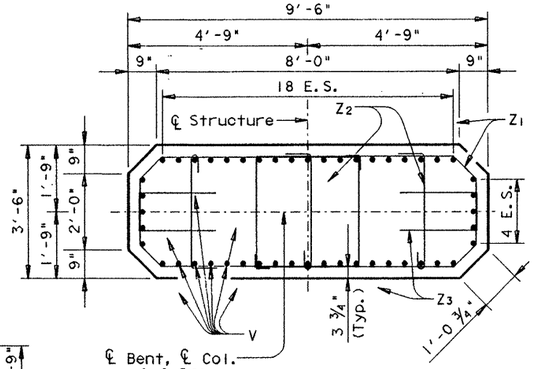

SECTION B-B

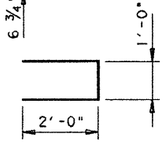

BARS Z3

◩ TABLE OF CONSTANT QUANTITIES

Bar	No	Sz.	Length	Weight
A	18	#11	29'- 8"	2837
B	5	#11	30'- 4"	806
DS1	2	#5	15'-11"	33
DS2-19	36	#5	13'- 5"	504
J	11	#5	5'- 8"	65
S1	11	#5	19'- 4"	223
S2-19	36	#5	16'-10"Av	632
T1	10	#6	29'- 8"	446
T2-6	10	#6	20'-11"Av	314
Reinf. Steel (Cap)			Lb ‡	5860
Cl. "C" Conc. (Cap)			CY	23.2

‡ For Contractors Info. Only.

TABLE OF VARIABLE QUANTITIES

H	Cl. "C" Conc.	Bars Z1 #4 x 17'-5"		Bars Z2 #4 x 3'-8"		Bars Z3 #4 x 5'-0"		Bars V 48 ~ # 11		▲Total Est. ◩ Quantities Reinf. Steel ‡	Cl. "C" Conc.
FT.	C.Y.	NO.	WT.	NO.	WT.	NO.	WT.	LGTH.	WT.	LB.	C.Y.
13	15.5	28	326	42	103	28	94	18'- 3"	4654	17620	63.3
14	16.7	30	349	45	110	30	100	19'- 3"	4909	17911	64.5
15	17.8	32	372	48	118	32	107	20'- 3"	5164	18204	65.6
16	19.0	34	396	51	125	34	114	21'- 3"	5419	18497	66.8
17	20.2	36	419	54	132	36	120	22'- 3"	5674	18788	68.0
18	21.4	38	442	57	140	38	127	23'- 3"	5929	19081	69.2
19	22.6	40	465	60	147	40	134	24'- 3"	6184	19373	70.4
20	23.8	42	489	63	154	42	140	25'- 3"	6439	19665	71.6
21	25.0	44	512	66	162	44	147	26'- 3"	6694	19958	72.8

▲ Includes Footing Quantities
◩ Quantities Shown are for one Bent only.

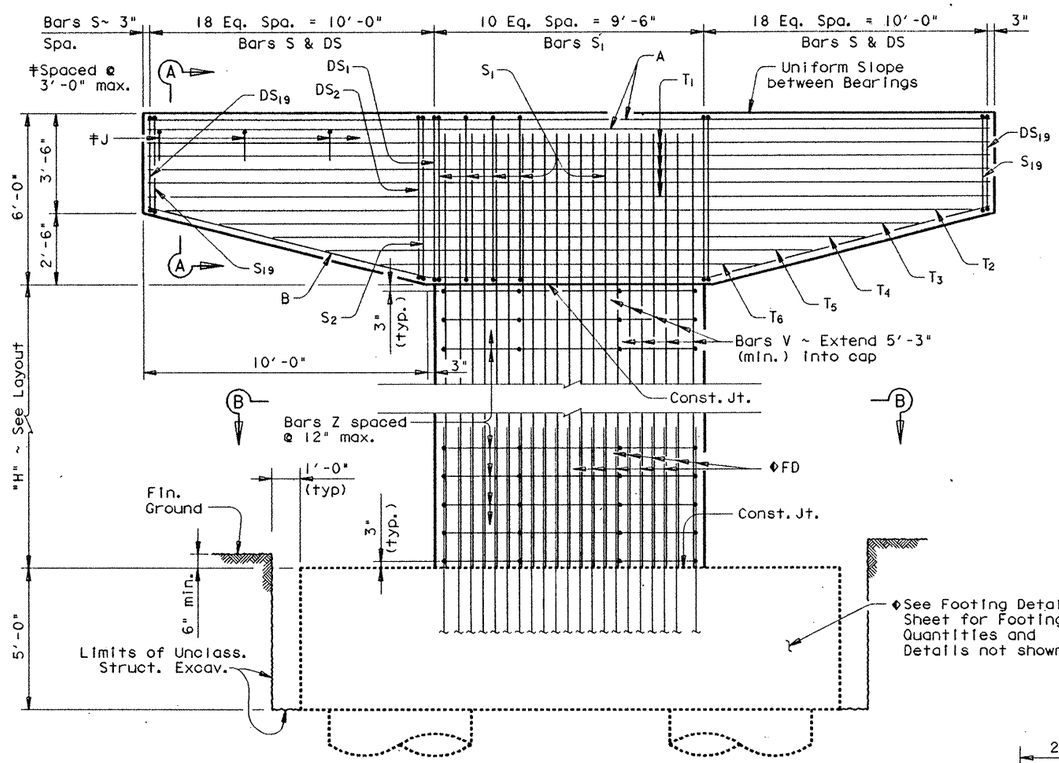

ELEVATION

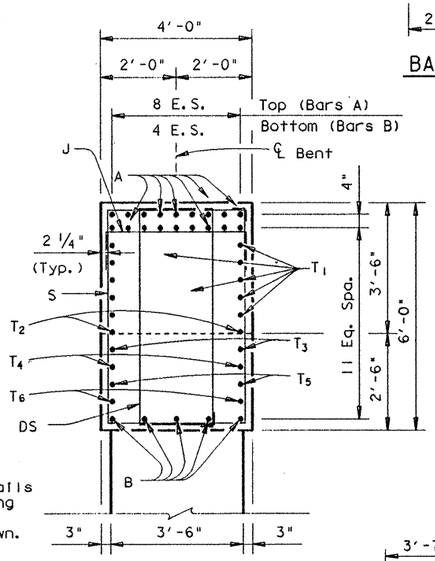

SECTION A-A

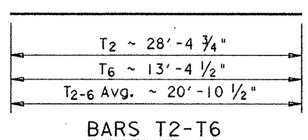

BARS T2-T6

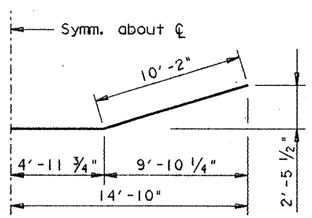

BARS B

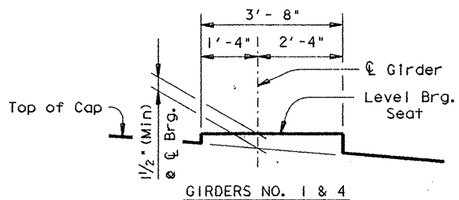

BEARING SEAT DETAIL
(Showing Grider No. 1)

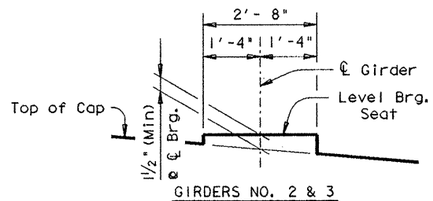

BEARING SEAT DETAIL

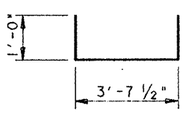

BARS J

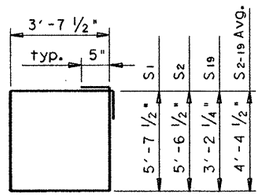

BARS S

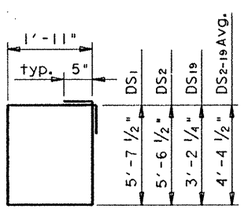

BARS DS

GENERAL NOTES:

Designed in accordance with A.A.S.H.T.O. 1989 Specifications.

Calculated Drilled Shaft Loads Bent 14 = 770 T/Dr. Shaft.

Calculated Drilled Shaft Loads Bent 17 = 700 T/Dr. Shaft.

All Cap & Column Steel [redacted] Grade 60.

See "Form Liner Details" Sheet for aesthetic treatment of Columns and Caps.

See Inverted Tee Bent Special Cap Details Sheet for details not shown.

HS 20 LOADING

STATE OF TEXAS
MARK J. BLOSCHOCK
52996
REGISTERED PROFESSIONAL ENGINEER

9-16-91

REV. 3-30-92

STATE DEPARTMENT OF HIGHWAYS AND PUBLIC TRANSPORTATION

INTERIOR BENT NOS. 14 & 17 RAMP I

US 83/281 INTERCHANGE

D45350A1 ▪ ZFA2 ▪ [3551001437815C01.DGN | PREPARED BY AND FOR USE OF TEXAS SDH&PT

ORIGINAL DRAWING DATE: NOVEMBER 1990	STATE DISTRICT	FEDERAL REGION	FEDERAL AID PROJECT	SHEET
DN.: GAF/MRL	21	6	NH92(2)M	240
CK.: MRL/GAF	COUNTY	CONTROL	SECTION	JOB	HIGHWAY
DN.: PSR	HIDALGO	0039	17	097	US 83/281
CK.: GAF/MRL					

REVISIONS

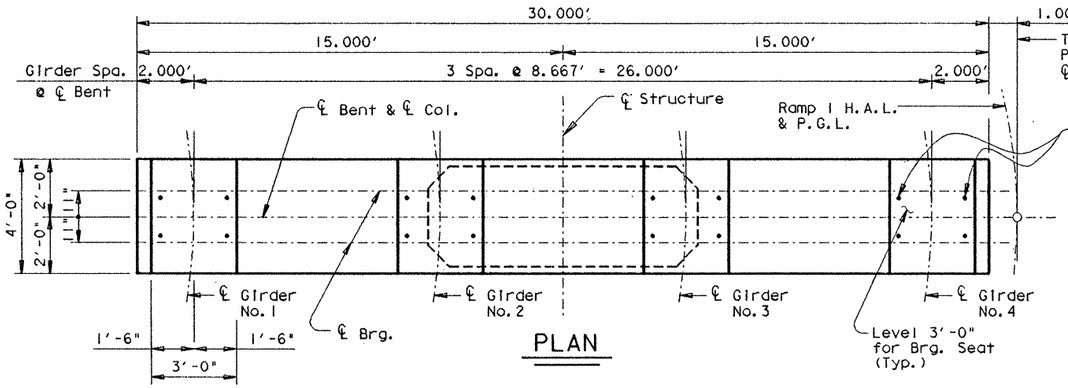

PLAN

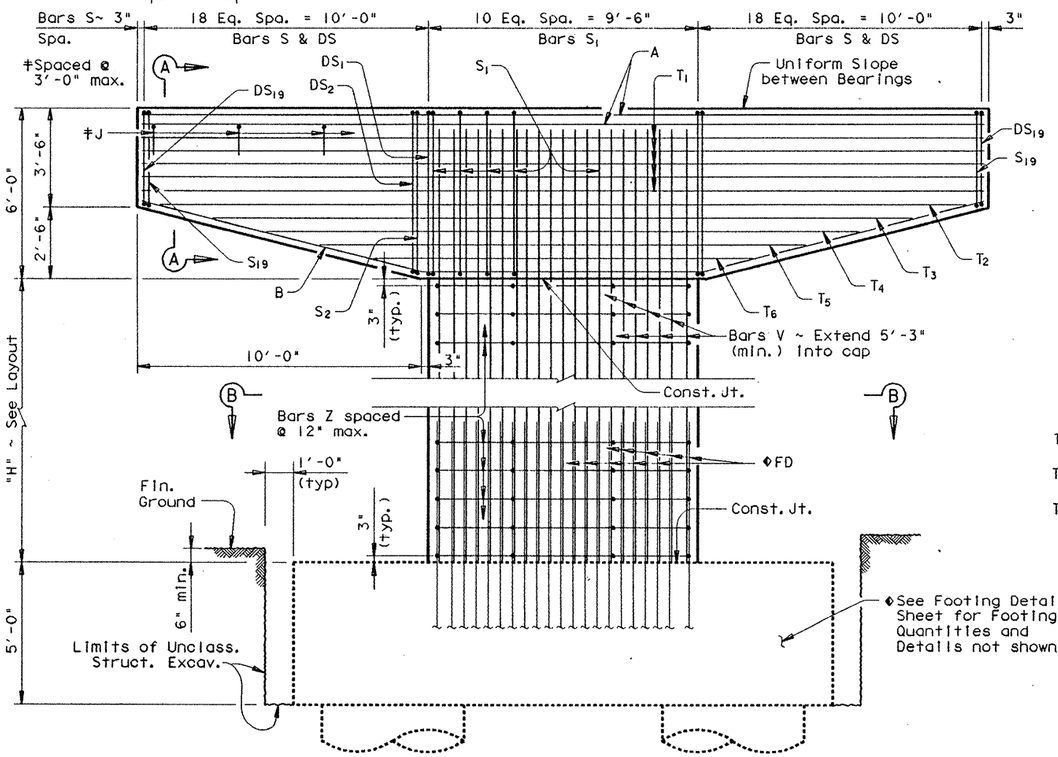

ELEVATION

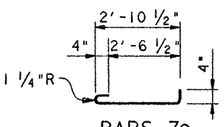

BARS Z2

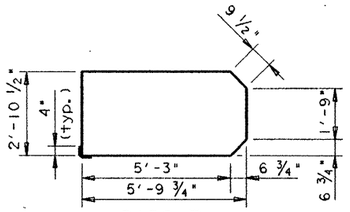

BARS Z1

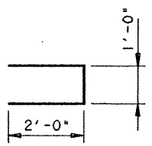

BARS Z3

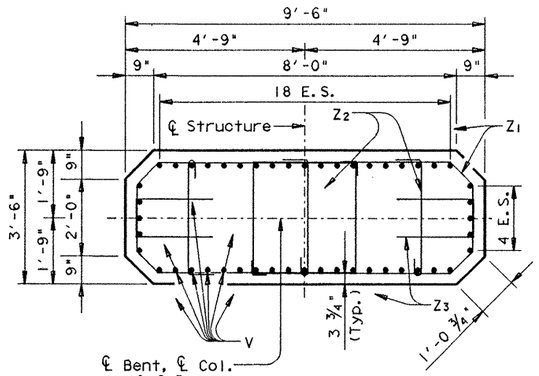

SECTION B-B

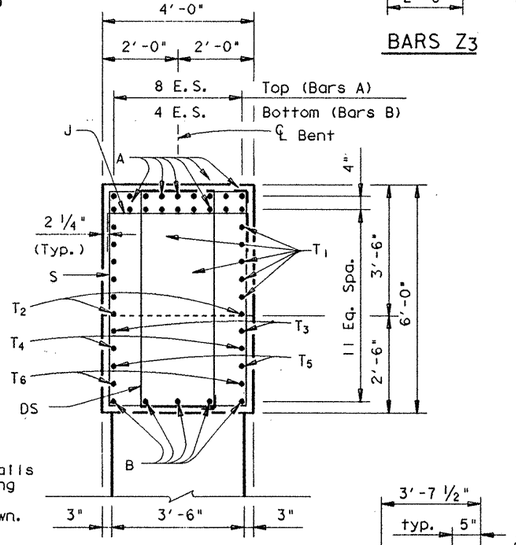

SECTION A-A

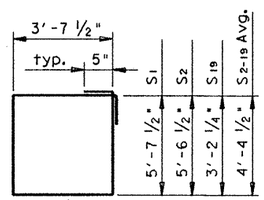

BARS S

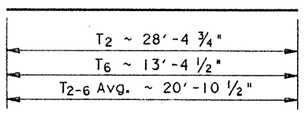

BARS T2-T6

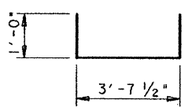

BARS J

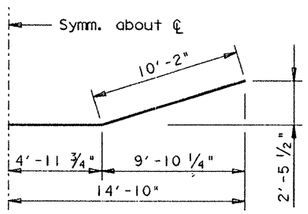

BARS B

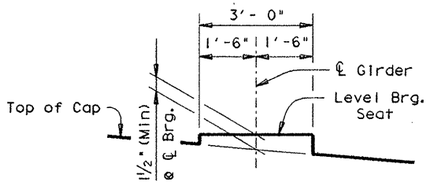

BEARING SEAT DETAIL

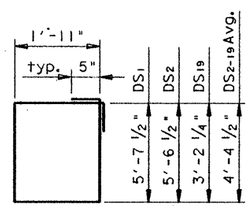

BARS DS

TABLE OF CONSTANT QUANTITIES				
Bar	No	Sz.	Length	Weight
A	18	#11	29'- 8"	2837
B	5	#11	30'- 4"	806
DS1	2	#5	15'-11"	33
DS2-19	36	#5	13'- 5"	504
J	11	#5	5'- 8"	65
S1	11	#5	19'- 4"	223
S2-19	36	#5	16'-10"Av	632
T1	10	#6	29'- 8"	446
T2-6	10	#6	20'-11"Av	314
Reinf. Steel (Cap)			LB	‡ 5860
Cl. "C" Conc. (Cap)			CY	23.2

‡ For Contractors Info. Only.

TABLE OF VARIABLE QUANTITIES										▲TOTAL EST. QUANTITIES	
H	CL. "C" CONC.	BARS Z1 #4 x 17'-5"		BARS Z2 #4 x 3'-8"		BARS Z3 #4 x 5'-0"		BARS V 48 ~ # 11		REINF. STEEL ‡	CL. "C" CONC.
FT.	C.Y.	NO.	WT.	NO.	WT.	NO.	WT.	LGTH.	WT.	LB.	C.Y.
15	17.8	32	372	48	118	32	107	20'- 3"	5164	18204	65.6
16	19.0	34	396	51	125	34	114	21'- 3"	5419	18497	66.8
17	20.2	36	419	54	132	36	120	22'- 3"	5674	18788	68.0
18	21.4	38	442	57	140	38	127	23'- 3"	5929	19081	69.2
19	22.6	40	465	60	147	40	134	24'- 3"	6184	19373	70.4

▲ Includes Footing Quantities

GENERAL NOTES:

Designed in accordance with A.A.S.H.T.O. 1989 Specifications.

Calculated Drilled Shaft Loads = 575 T/Dr. Shaft.

All Cap & Column Steel [redacted] Grade 60.

See "Form Liner Details" Sheet for aesthetic treatment of Columns and Caps.

See Inverted Tee Bent Special Cap Details Sheet for details not shown.

HS 20 LOADING

STATE DEPARTMENT OF HIGHWAYS AND PUBLIC TRANSPORTATION

INTERIOR BENT NO. 15 RAMP I

US 83/281 INTERCHANGE

STATE OF TEXAS
MARK J. BLOSCHOCK
52996
REGISTERED PROFESSIONAL ENGINEER
9-16-91

REV 3-30-92

D4535OA1 ZFA2 C355100J43781SC02.DGN	PREPARED BY AND FOR USE OF TEXAS SDH&PT					
ORIGINAL DRAWING DATE: NOVEMBER 1990	STATE DISTRICT	FEDERAL REGION	FEDERAL AID PROJECT			SHEET
DN.: GAF/MRL	21	6	NHSC 2M			241
CK.: MRL/GAF	COUNTY		CONTROL	SECTION	JOB	HIGHWAY
DN.: PSR	HIDALGO		0039	17	097	US 83/281
CK.: GAF/MRL						

REVISIONS

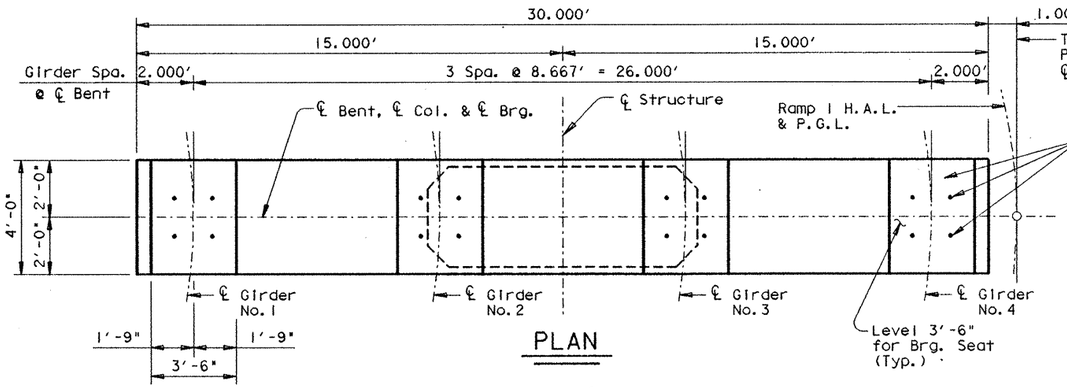

PLAN

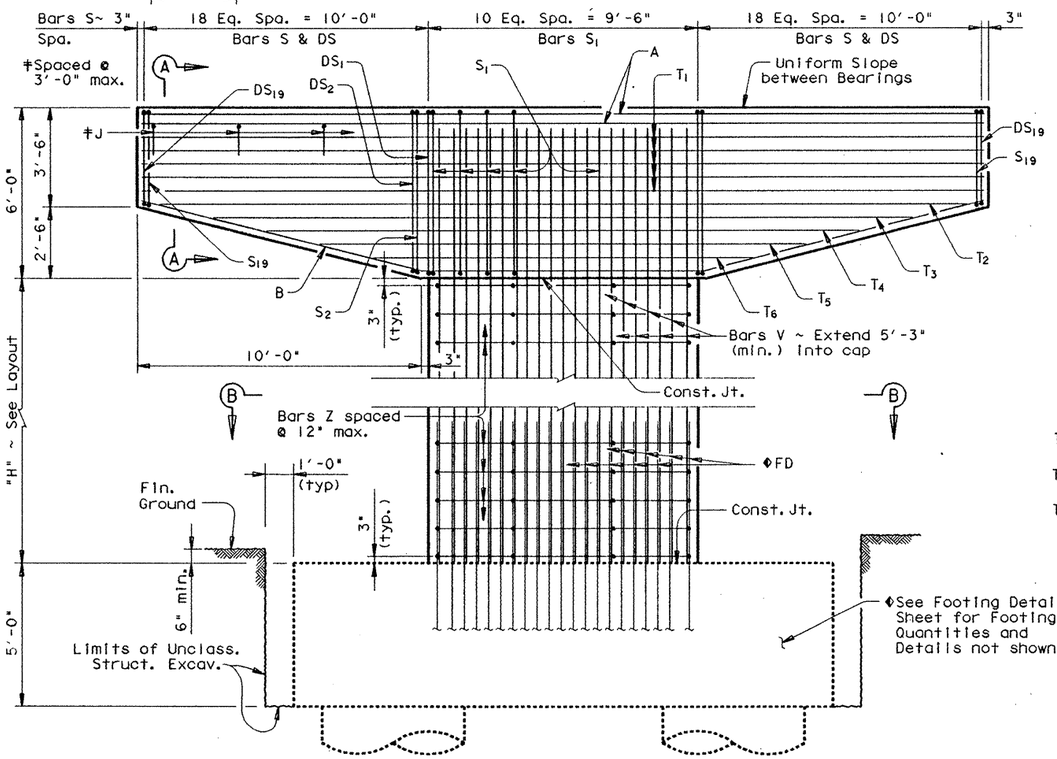

ELEVATION

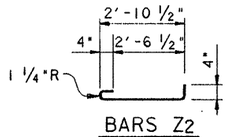

BARS Z2

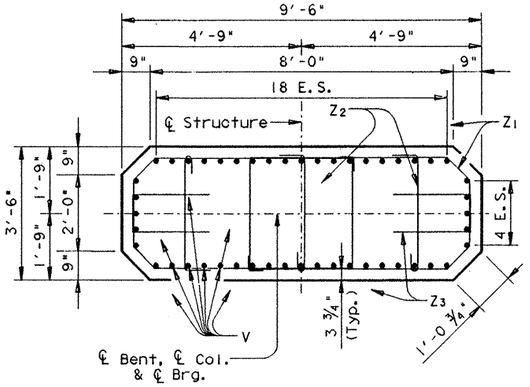

SECTION B-B

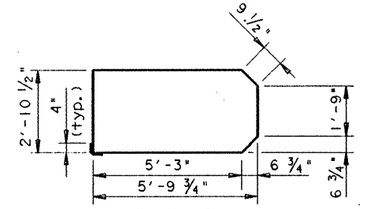

BARS Z1

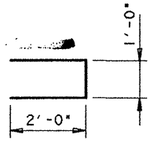

BARS Z3

TABLE OF CONSTANT QUANTITIES				
Bar	No	Sz.	Length	Weight
A	18	#11	29'- 8"	2837
B	5	#11	30'- 4"	806
DS1	2	#5	15'-11"	33
DS2-19	36	#5	13'- 5"	504
J	11	#5	5'- 8"	65
S1	11	#5	19'- 4"	223
S2-19	36	#5	16'-10"Av	632
T1	10	#6	29'- 8"	446
T2-6	10	#6	20'-11"Av	314
Reinf. Steel (Cap)			Lb ♯	5860
Cl. "C" Conc. (Cap)			CY	23.2

♯ For Contractors Info. Only.

TABLE OF VARIABLE QUANTITIES										▲TOTAL EST. QUANTITIES	
H	CL. "C" CONC.	BARS Z1 #4 × 17'-5"		BARS Z2 #4 × 3'-8"		BARS Z3 #4 × 5'-0"		BARS V 48 ~ # 11		REINF. STEEL ♯	CL. "C" CONC.
FT.	C.Y.	NO.	WT.	NO.	WT.	NO.	WT.	LGTH.	WT.	LB.	C.Y.
15	17.8	32	372	48	118	32	107	20'- 3"	5164	18204	65.6
16	19.0	34	396	51	125	34	114	21'- 3"	5419	18497	66.8
17	20.2	36	419	54	132	36	120	22'- 3"	5674	18788	68.0
18	21.4	38	442	57	140	38	127	23'- 3"	5929	19081	69.2
19	22.6	40	465	60	147	40	134	24'- 3"	6184	19373	70.4

▲ Includes Footing Quantities

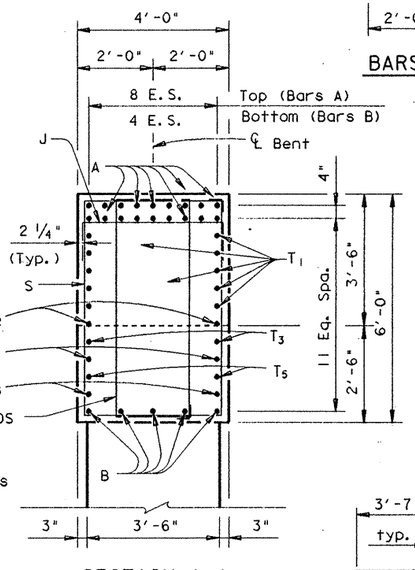

SECTION A-A

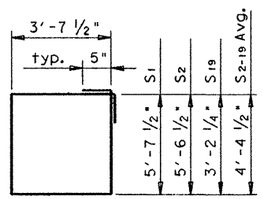

BARS S

GENERAL NOTES:

Designed in accordance with A.A.S.H.T.O. 1989 Specifications.

Calculated Drilled Shaft Loads = 700 T/Dr. Shaft.

All Cap & Column Steel [redacted] Grade 60.

See "Form Liner Details" Sheet for aesthetic treatment of Columns and Caps.

See Inverted Tee Bent Special Cap Details Sheet for details not shown.

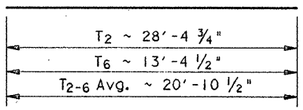

BARS T2-T6

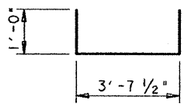

BARS J

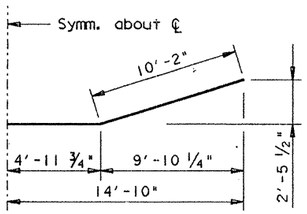

BARS B

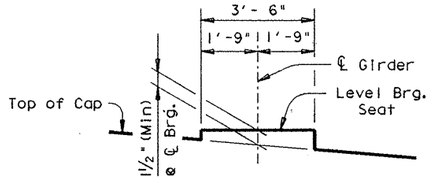

BEARING SEAT DETAIL

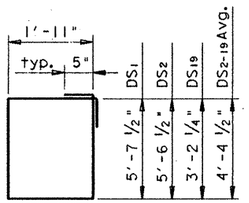

BARS DS

REV. 3-30-92

HS 20 LOADING

STATE DEPARTMENT OF HIGHWAYS AND PUBLIC TRANSPORTATION

INTERIOR BENT NO. 16 RAMP I

US 83/281 INTERCHANGE

D45350A ♯ ZFA2 ♯ [3551001437815C03.DGN	PREPARED BY AND FOR USE OF TEXAS SDH&PT					
ORIGINAL DRAWING DATE: NOVEMBER 1990	STATE DISTRICT	FEDERAL REGION	FEDERAL AID PROJECT ♯			SHEET
DR. ♯ - GAF/MRL	21	6	NH9Z( )M			242
CK. ♯ - MRL/GAF	COUNTY		CONTROL	SECTION	JOB	HIGHWAY
DW. ♯ - PSR	HIDALGO		0039	17	097	US 83/281
CK. ♯ - GAF/MRL						

REVISIONS

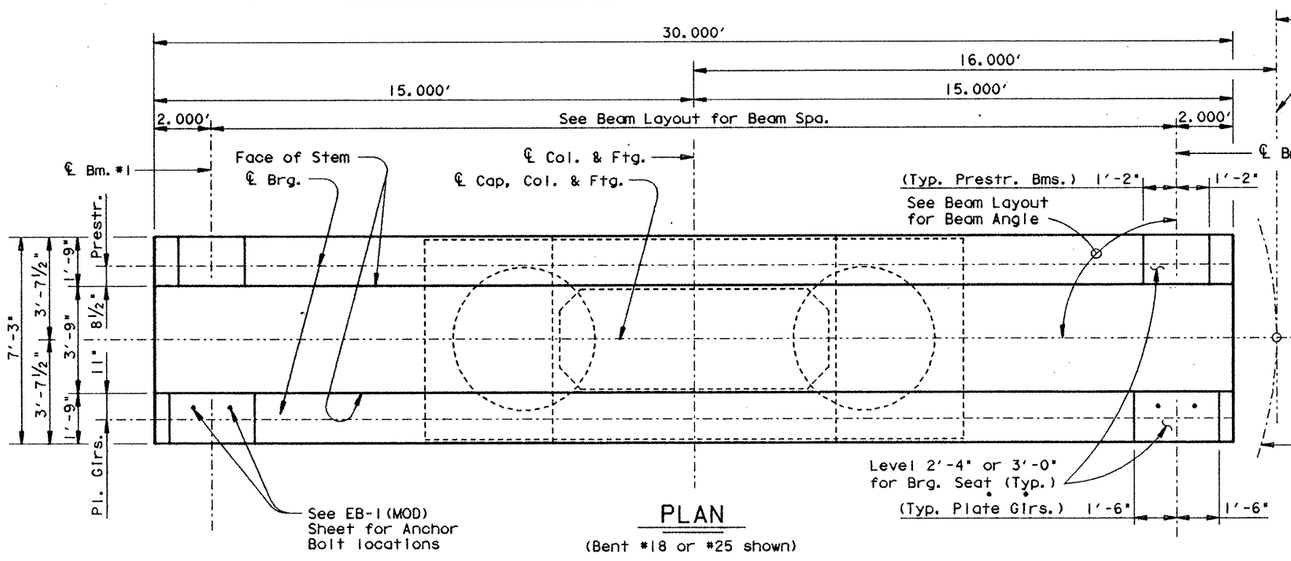

PLAN

(Bent #18 or #25 shown)

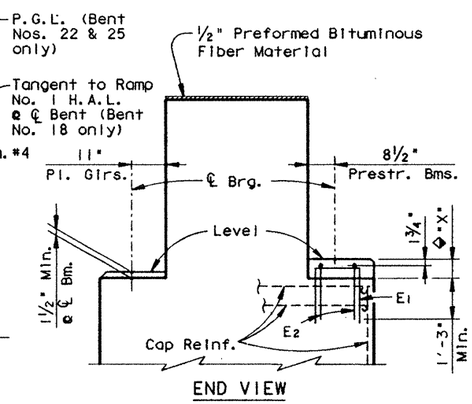

END VIEW

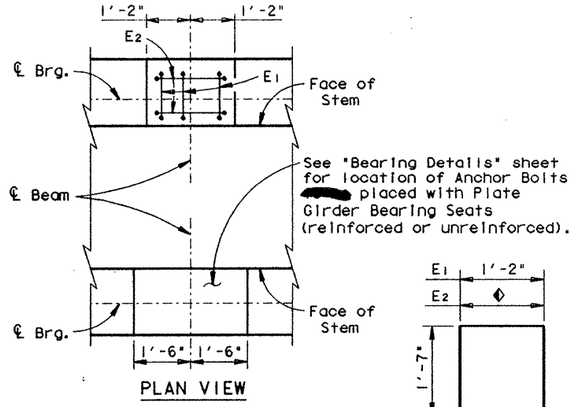

PLAN VIEW

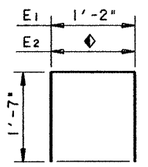

BARS E

BEARING SEAT DETAILS

◆ Reinforced Pedestals [redacted] required where "X" is greater than 2½" and [redacted] considered subsidiary to the Bid Item "Class C Concrete (Bent). Compare bearing seat elevations to determine value of "X".

◆ 2'-0½" ℄ Prestr. Bms.
2'-8½" ℄ Plate Girs.

NOTE: For Bearing Seat surface finish see GpC(SPL) sheet.

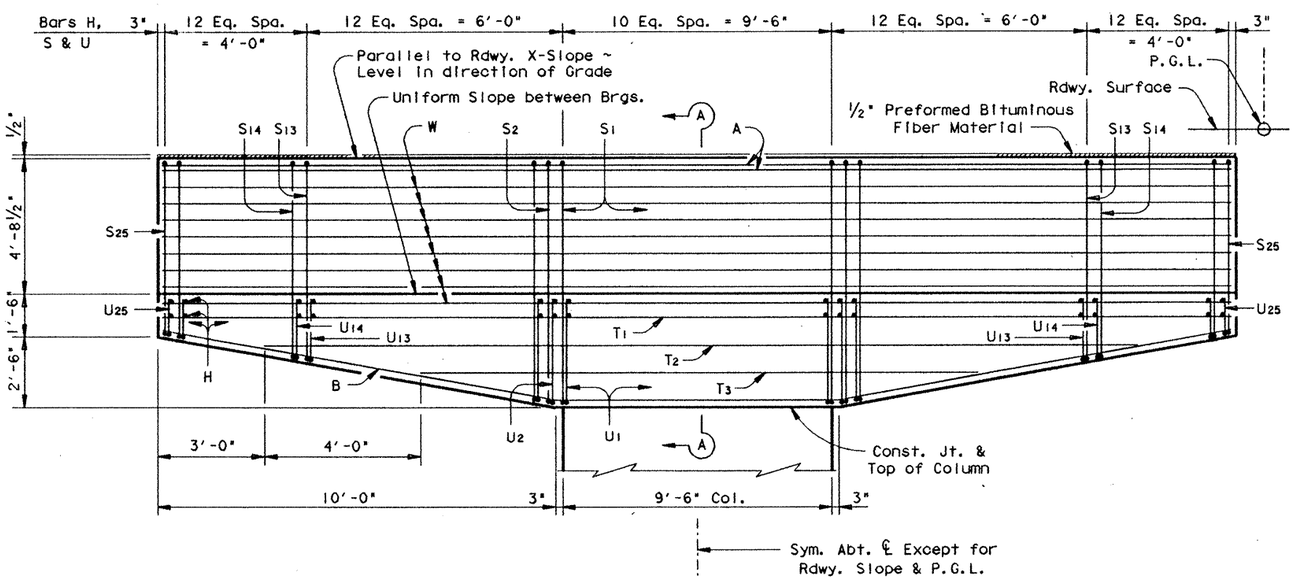

CAP ELEVATION

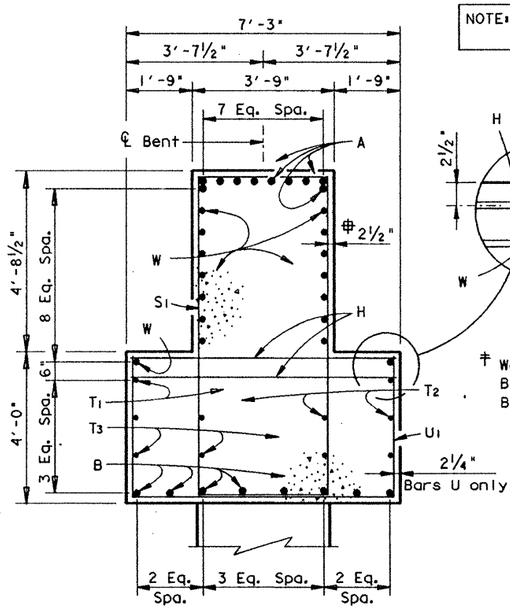

SECTION A-A

Typical except as noted

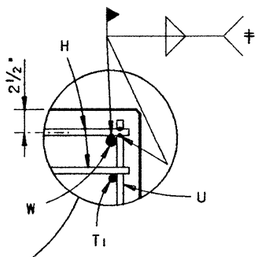

‡ Weld both sides of Bars W and U to top Bar H as shown.

NOTE: See Inverted Tee Bent Special Cap Details Sheet for details not shown.

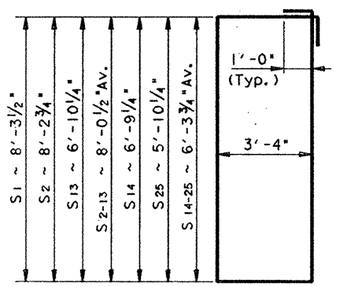

BARS S

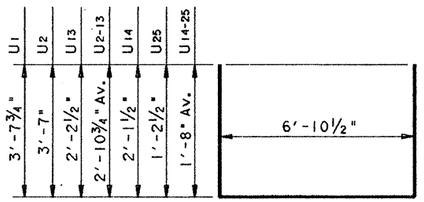

BARS U

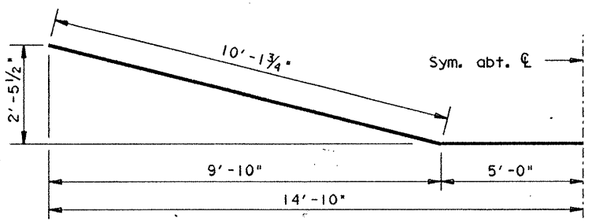

BARS B

STATE OF TEXAS
MARK J. BLOSCHOCK
52996
REGISTERED PROFESSIONAL ENGINEER
9-16-91

REV 3-30-92

HS 20 LOADING SHEET 1 OF 2

STATE DEPARTMENT OF HIGHWAYS AND PUBLIC TRANSPORTATION

INTERIOR BENT NOS. 18, 22 & 25 RAMP I

US 83/281 INTERCHANGE

D45350A: ZFA2: (3551001437) INV07.DGN		PREPARED BY AND FOR USE OF TEXAS SDH&PT						
ORIGINAL DRAWING DATE: NOVEMBER 1990		STATE DISTRICT	FEDERAL REGION	FEDERAL AID PROJECT				SHEET
DR.: JCC	REVISIONS	21	6	NH92C)M				243
CK.: MAS		COUNTY			CONTROL	SECTION	JOB	HIGHWAY
DR.: DRG/PSR		HIDALGO			0039	17	097	US 83/281
CK.: JCC								

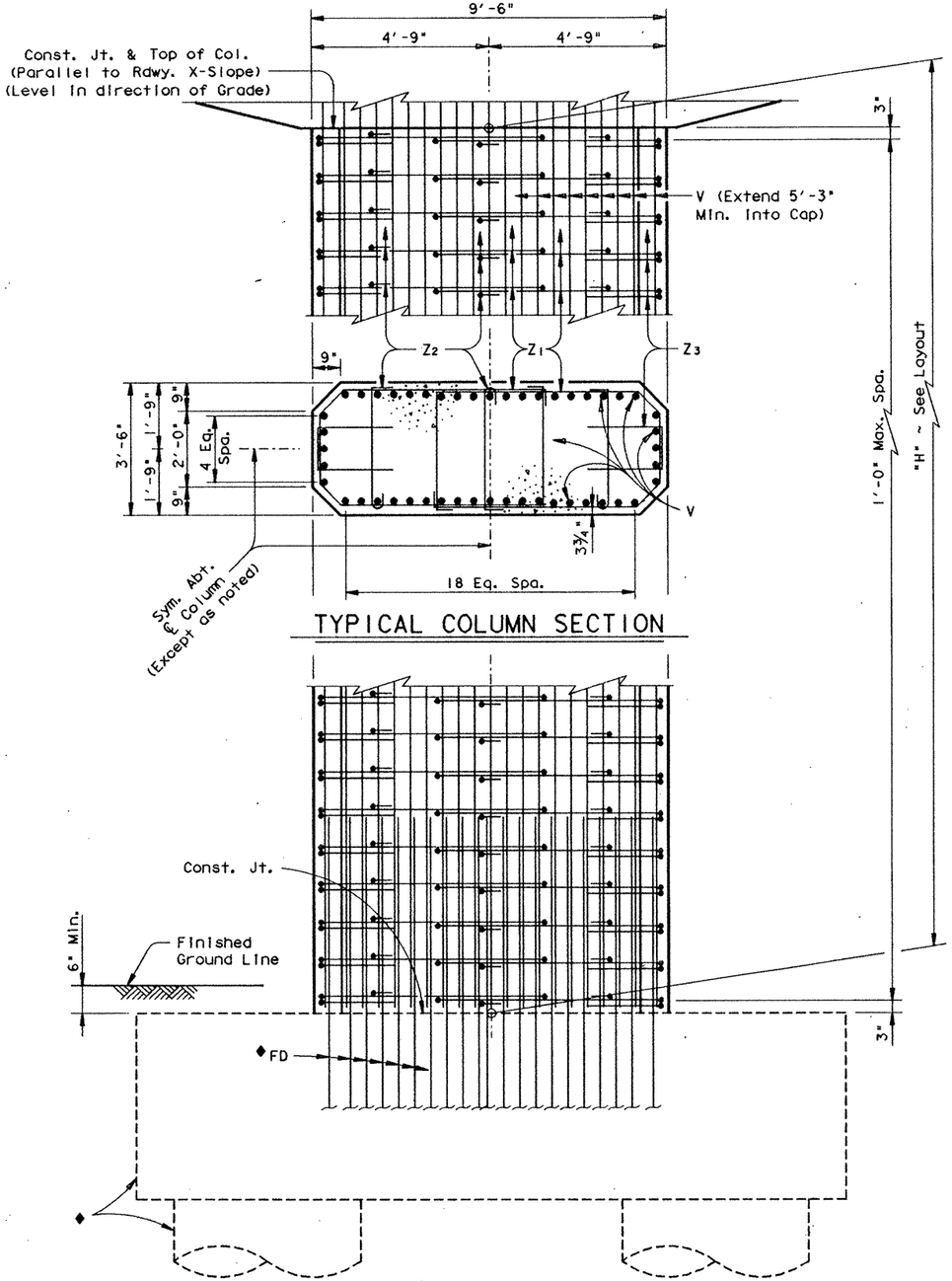

TYPICAL COLUMN SECTION

◆See Footing Details sheet for foundation details and quantities not shown.

COLUMN ELEVATION

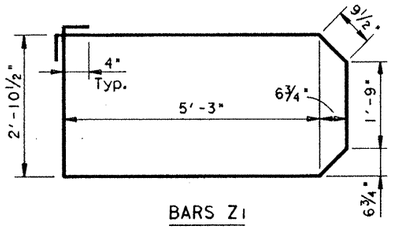

BARS Z1

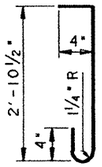

BARS Z2

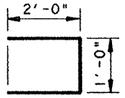

BARS Z3

GENERAL NOTES:

Designed according to A.A.S.H.T.O. 1989 Standard and current Interim Specifications.

Calculated Foundation Load Bent 18 = 480 Tons/Dr. Shaft

Calculated Foundation Load Bents 22 & 25 = 430 Tons/Dr. Shaft

See "Form Liner Details" sheet for aesthetic treatment of columns and caps.

△ TABLE OF CONSTANT QUANTITIES

Bar	No.	Size	Length	Weight
A	10	# 11	29'- 8"	1576
B	8	# 11	30'- 4"	1289
H	118	# 6	6'-11"	1226
S1	11	# 6	25'- 3"	417
S2-13	24	# 6	23'- 9"Av	856
S14-25	24	# 6	21'- 4"Av	769
T1	2	# 6	29'- 8"	89
T2	4	# 6	24'- 0"	144
T3	4	# 6	16'- 0"	96
U1	11	# 5	14'- 2"	163
U2-13	24	# 5	12'- 8"Av	317
U14-25	24	# 5	10'- 3"Av	257
W	16	# 9	29'- 8"	1614

Reinforcing Steel	Lb	# 8813
Class "C" Concrete (Cap)	CY	45.3

TABLE OF VARIABLE QUANTITIES

"H"	Class "C" Conc. (Col.)	Bars Z1 17'-5" ~ #4		Bars Z2 3'-8" ~ #4		Bars Z3 5'-0" ~ #4		Bars V 48 ~ # 11		△■ TOTAL ESTIMATED QUANTITIES # Reinf. Steel	Class "C" Conc.
		No.	Weight	No.	Weight	No.	Weight	Length	Weight		
Ft	CY									Lb	CY
16	19.0	34	396	51	125	34	114	21'- 3"	5419	21450	88.9
17	20.2	36	419	54	132	36	120	22'- 3"	5674	21741	90.1
18	21.4	38	442	57	140	38	127	23'- 3"	5929	22034	91.3
19	22.6	40	465	60	147	40	134	24'- 3"	6184	22326	92.5
20	23.8	42	489	63	154	42	140	25'- 3"	6439	22618	93.7
21	25.0	44	512	66	162	44	147	26'- 3"	6694	22911	94.9
22	26.2	46	535	69	169	46	154	27'- 3"	6949	23203	96.1
23	27.4	48	559	72	177	48	160	28'- 3"	7204	23496	97.3
24	28.6	50	582	75	184	50	167	29'- 3"	7459	23788	98.5
25	29.7	52	605	78	191	52	174	30'- 3"	7714	24080	99.6

■ Includes Footing Quantities.
△ Quantities shown for one Bent only
For contractor's information only
All cap & column reinforcing steel ● Grade 60.

HS 20 LOADING

SHEET 2 OF 2

STATE OF TEXAS
MARK J. BLOSCHOCK
52996
REGISTERED PROFESSIONAL ENGINEER
9-16-91

STATE DEPARTMENT OF HIGHWAYS AND PUBLIC TRANSPORTATION

INTERIOR BENT NOS. 18, 22 & 25 RAMP I

US 83/281 INTERCHANGE

D45350A# ZFA2# [3551001]4377 INV07. DGN	PREPARED BY AND FOR USE OF TEXAS SDH&PT					
ORIGINAL DRAWING DATE: NOVEMBER 1990	STATE DISTRICT: 21	FEDERAL REGION: 6	FEDERAL AID PROJECT: NH92C)M			SHEET: 244
DN.+- MRL	REVISIONS	COUNTY	CONTROL	SECTION	JOB	HIGHWAY
CK.+- CAF		HIDALGO	0039	17	097	US 83/281
DN.+- DRG/PSR						
CK.+- JCC						

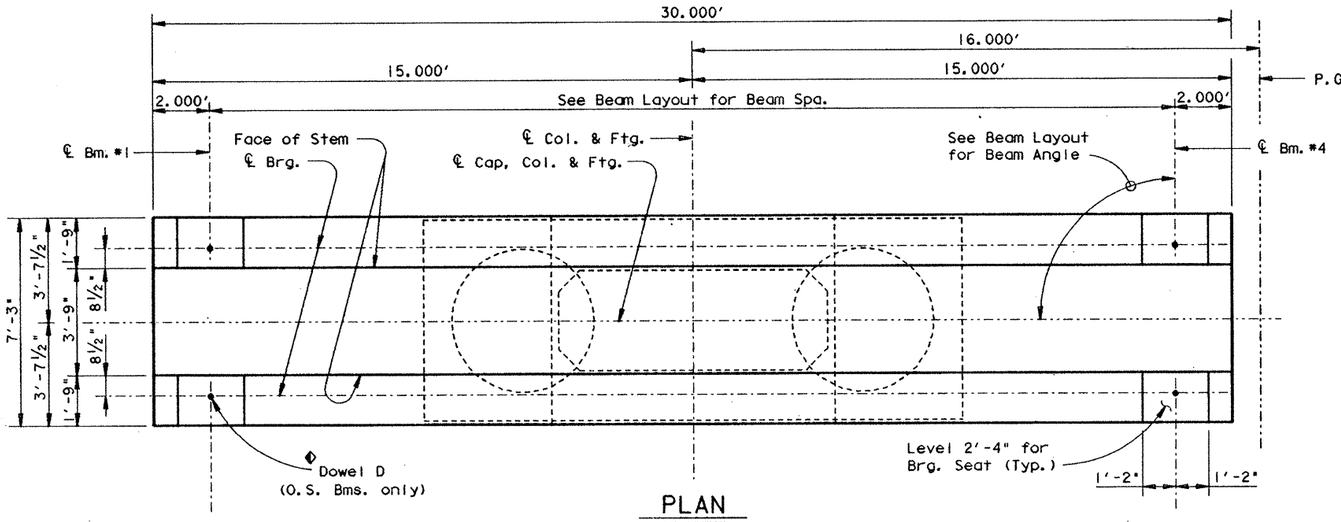

PLAN

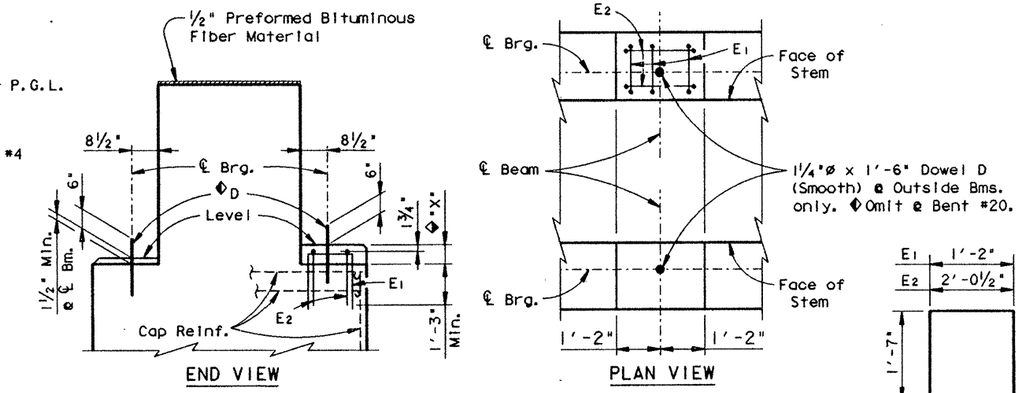

BEARING SEAT DETAILS

Reinforced Pedestals [redacted] required where "X" is greater than 2½" and [redacted] considered subsidiary to the Bid Item "Class C Concrete (Bent). Compare bearing seat elevations to determine value of "X".

NOTE: For Bearing Seat surface finish see GpC(SPL) sheet.

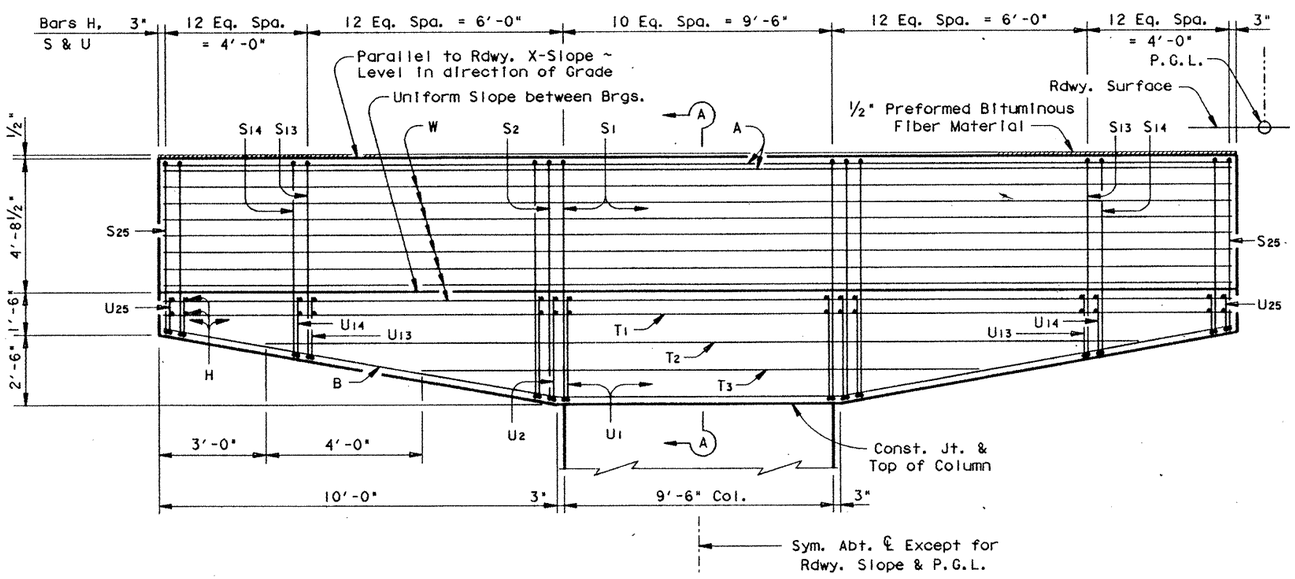

CAP ELEVATION

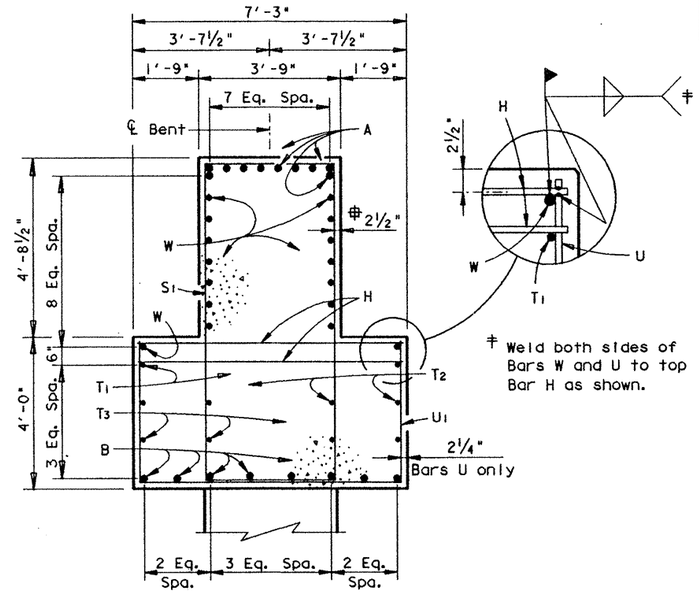

‡ Weld both sides of Bars W and U to top Bar H as shown.

SECTION A-A

‡ Typical except as noted

HS 20 LOADING

SHEET 1 OF 2

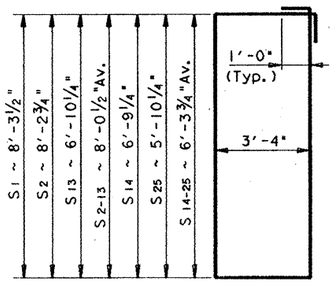

BARS S

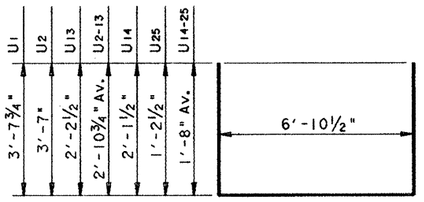

BARS U

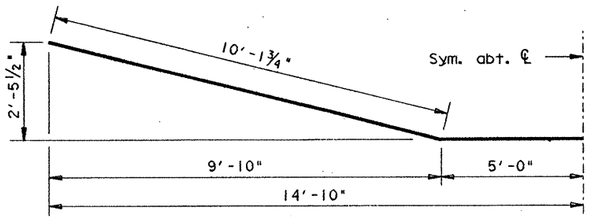

BARS B

STATE OF TEXAS
MARK J. BLOSCHOCK
52996
REGISTERED PROFESSIONAL ENGINEER

9-16-91

STATE DEPARTMENT OF HIGHWAYS AND PUBLIC TRANSPORTATION

INTERIOR BENT NOS. 19-21 & 26 RAMP I

US 83/281 INTERCHANGE

D45350A1:ZFA2:[355100]43771NV02.DGN	PREPARED BY AND FOR USE OF TEXAS SDH&PT					
ORIGINAL DRAWING DATE: NOVEMBER 1990	STATE DISTRICT	FEDERAL REGION	FEDERAL AID PROJECT			SHEET
DN.: JCC	21	6	NH92C JM			245
CK.: MAS	COUNTY		CONTROL	SECTION	JOB	HIGHWAY
DW.: DRG/PSR	HIDALGO		0039	17	097	US 83/281
CK.: JCC						

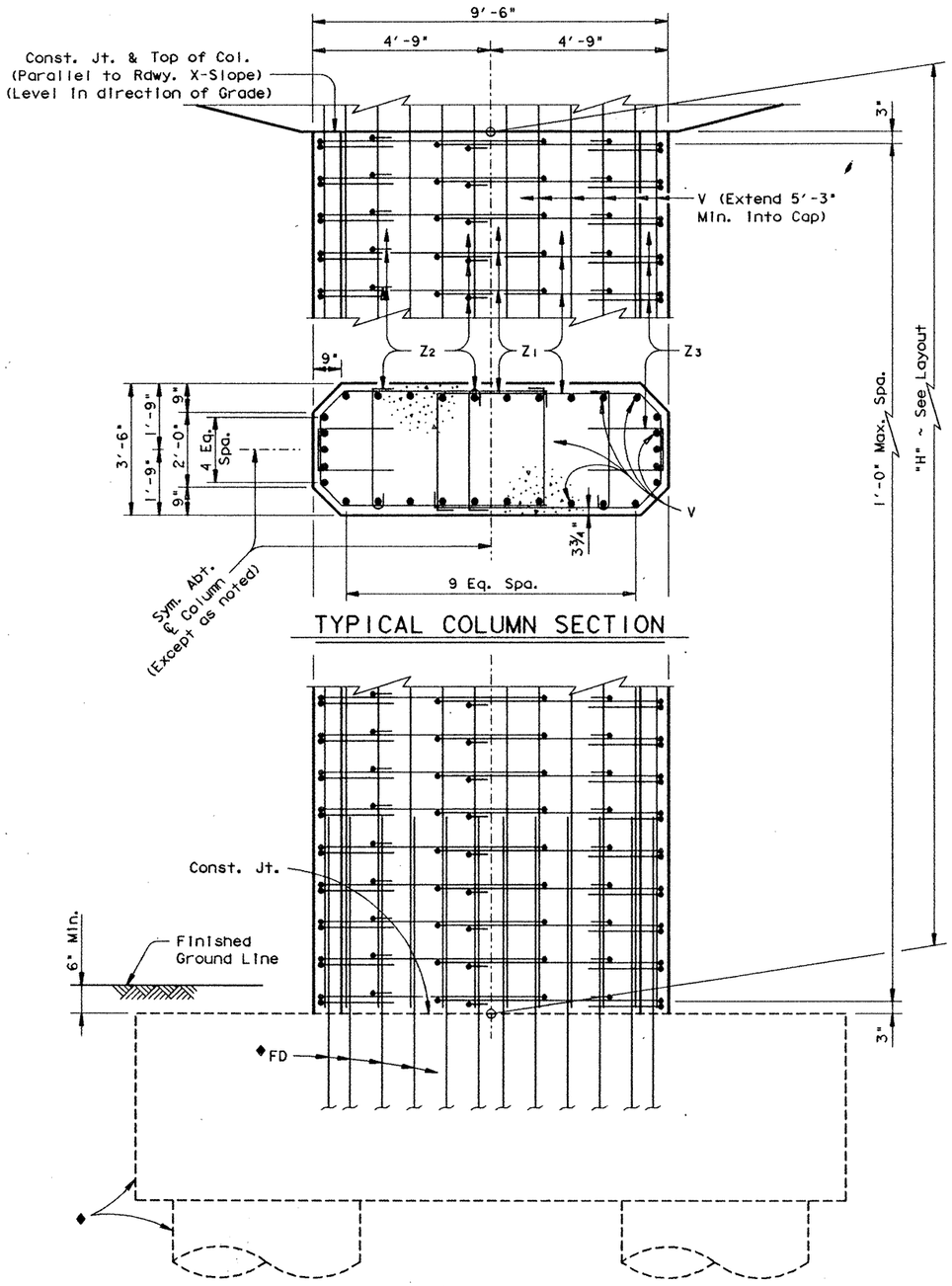

TYPICAL COLUMN SECTION

◆See Footing Details sheet for foundation details and quantities not shown.

COLUMN ELEVATION

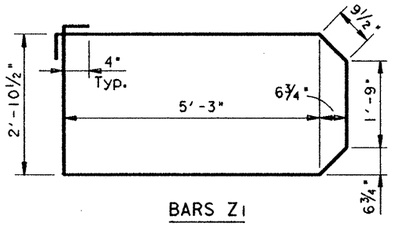

BARS Z1

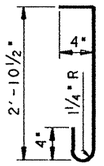

BARS Z2

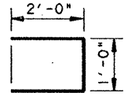

BARS Z3

GENERAL NOTES:

Designed according to A.A.S.H.T.O. 1989 Standard and current interim Specifications.

Calculated Foundation Load Bent 26 = 450 Tons/Dr. Shaft

Calculated Foundation Load Bents 19 - 21 = 460 Tons/Dr. Shaft

See "Form Liner Details" sheet for aesthetic treatment of columns and caps.

See Inverted Tee Bent Special Cap Details sheet for details not shown.

▲ TABLE OF CONSTANT QUANTITIES

Bar	No.	Size	Length	Weight
A	10	# 11	29'- 8"	1576
B	8	# 11	30'- 4"	1289
D	4	1¼"Ø	1'- 6"	25
H	118	# 6	6'-11"	1226
S1	11	# 6	25'- 3"	417
S2-13	24	# 6	23'- 9"Av	856
S14-25	24	# 6	21'- 4"Av	769
T1	2	# 6	29'- 8"	89
T2	4	# 6	24'- 0"	144
T3	4	# 6	16'- 0"	96
U1	11	# 5	14'- 2"	163
U2-13	24	# 5	12'- 8"Av	317
U14-25	24	# 5	10'- 3"Av	257
W	16	# 9	29'- 8"	1614
Reinforcing Steel			Lb	⌗◪ 8838
Class "C" Concrete (Cap)			CY	45.3

TABLE OF VARIABLE QUANTITIES

"H"	Class "C" Conc. (Col.)	Bars Z1 17'-5" ~ #4		Bars Z2 3'-8" ~ #4		Bars Z3 5'-0" ~ #4		Bars V 30 ~ # 11	
Ft	CY	No.	Weight	No.	Weight	No.	Weight	Length	Weight
13	15.5	28	326	42	103	28	94	18'- 3"	2909
14	16.7	30	349	45	110	30	100	19'- 3"	3068
15	17.9	32	372	48	118	32	107	20'- 3"	3228
16	19.0	34	396	51	125	34	114	21'- 3"	3387
17	20.2	36	419	54	132	36	120	22'- 3"	3546
18	21.4	38	442	57	140	38	127	23'- 3"	3706
19	22.6	40	465	60	147	40	134	24'- 3"	3865
20	23.8	42	489	63	154	42	140	25'- 3"	4025
21	25.0	44	512	66	162	44	147	26'- 3"	4184
22	26.2	46	535	69	169	46	154	27'- 3"	4343
23	27.4	48	559	72	177	48	160	28'- 3"	4503
24	28.6	50	582	75	184	50	167	29'- 3"	4662
25	29.7	52	605	78	191	52	174	30'- 3"	4822

▲◪ TOTAL ESTIMATED QUANTITIES

⌗◪ Reinf. Steel	Class "C" Conc.
Lb	CY
17371	85.4
17566	86.6
17764	87.8
17961	88.9
18156	90.1
18354	91.3
18550	92.5
18747	93.7
18944	94.9
19140	96.1
19338	97.3
19534	98.5
19731	99.6

◪ Includes Footing Quantities.
▲ Quantities shown for one Bent only
⌗ For contractor's information only
◪ Omit Dowels D at Bent #20 (Deduct 25 Lbs).
All cap & column reinforcing steel [redacted] Grade 60.

HS 20 LOADING

SHEET 2 OF 2

STATE OF TEXAS
MARK J. BLOSCHOCK
52996
REGISTERED PROFESSIONAL ENGINEER
9-16-91

REV. 3-30-92

STATE DEPARTMENT OF HIGHWAYS AND PUBLIC TRANSPORTATION

INTERIOR BENT NOS. 19-21 & 26 RAMP I

US 83/281 INTERCHANGE

D45350A# ZFA2# (355100)4377INV02.DGN | PREPARED BY AND FOR USE OF TEXAS SDH&PT

ORIGINAL DRAWING DATE: NOVEMBER 1990

DN.- MRL	REVISIONS
CK.- GAF	
DW.- DRG/PSR	
CK.- JCC	

STATE DISTRICT	FEDERAL REGION	FEDERAL AID PROJECT	SHEET
21	6	NH92(5)M	246

COUNTY	CONTROL	SECTION	JOB	HIGHWAY
HIDALGO	0039	17	097	US 83/281

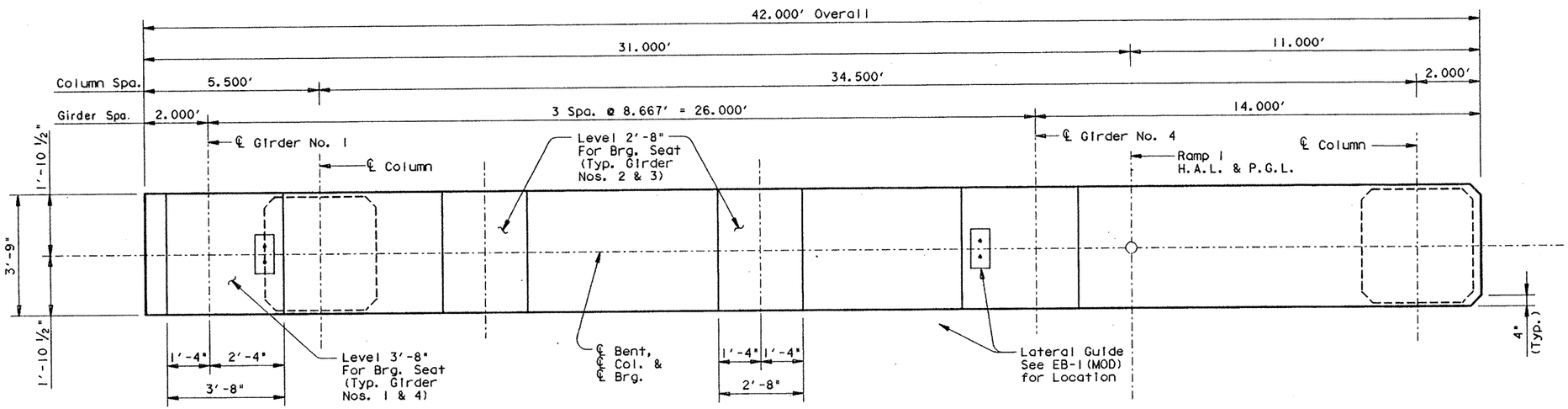

PLAN

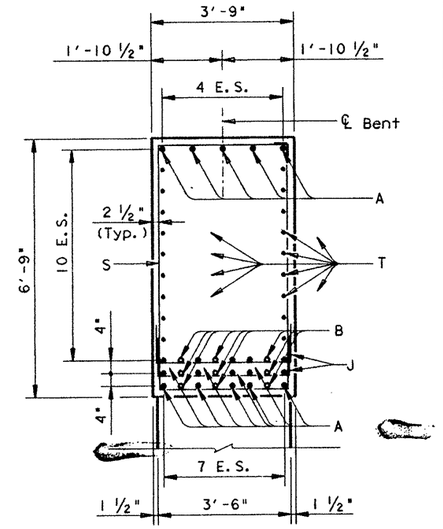

SECTION A-A

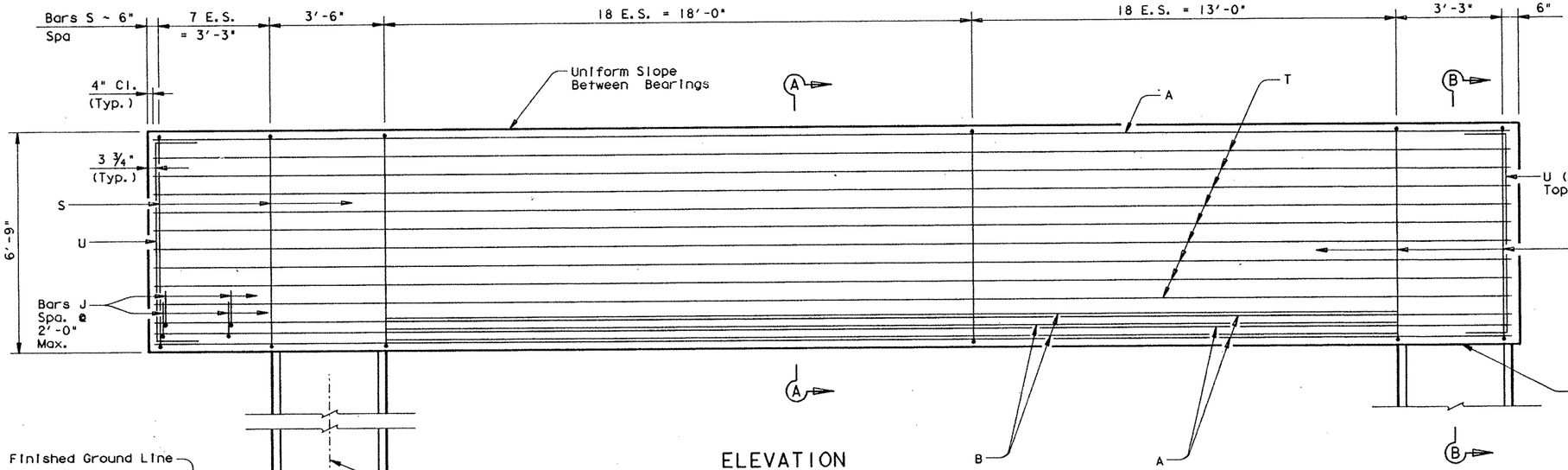

ELEVATION

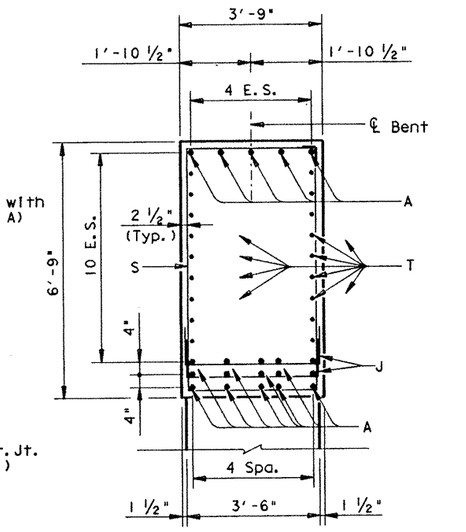

SECTION B-B

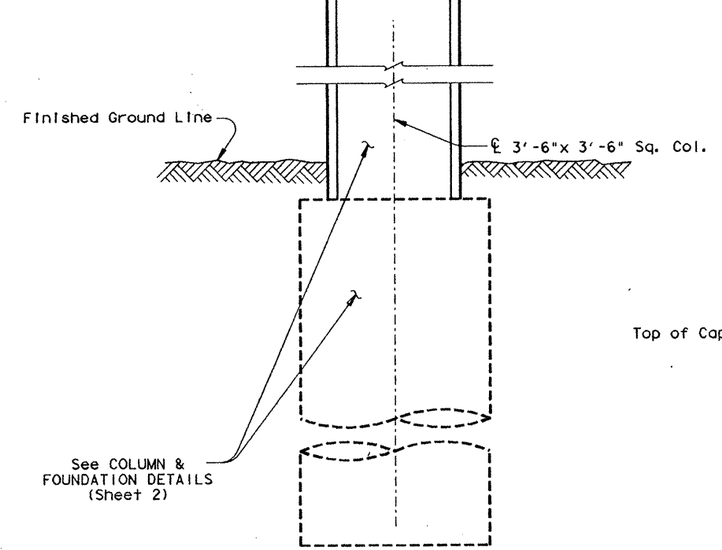

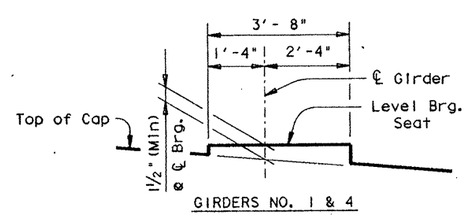

GIRDERS NO. 1 & 4

BEARING SEAT DETAIL

(Showing Grider No. 1)

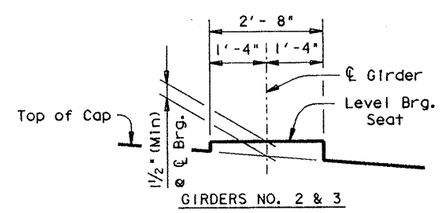

GIRDERS NO. 2 & 3

BEARING SEAT DETAIL

STATE OF TEXAS
MARK J. BLOSCHOCK
52996
REGISTERED PROFESSIONAL ENGINEER

9-16-91

HS 20 LOADING

SHEET 1 OF 2

STATE DEPARTMENT OF HIGHWAYS AND PUBLIC TRANSPORTATION

INTERIOR BENT NO. 23 RAMP I

US 83/281 INTERCHANGE

D45350A:ZFA2:[355100]43760BT01.DGN

ORIGINAL DRAWING DATE: FEBRUARY 1991

REVISIONS

DN.: GAF
CK.: MRL
DW.: PSR
CK.: GAF

PREPARED BY AND FOR USE OF TEXAS SDH&PT

STATE DISTRICT	FEDERAL REGION	FEDERAL AID PROJECT	SHEET
	6	NH92C JM	247

COUNTY	CONTROL	SECTION	JOB	HIGHWAY
HIDALGO	0039	17	097	US 83/281

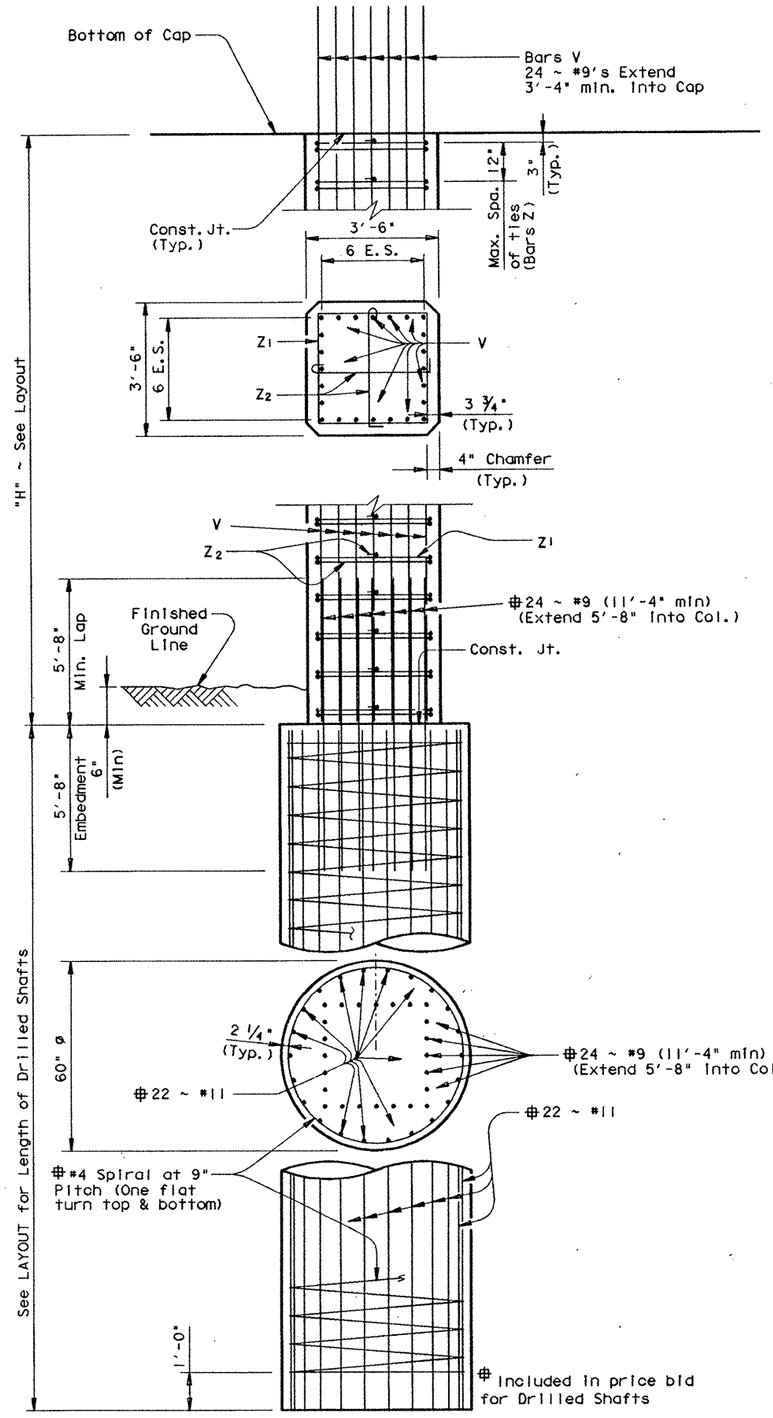

COLUMNS AND FOUNDATION DETAILS.

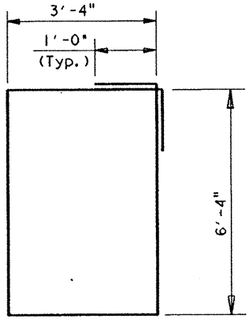

BARS S

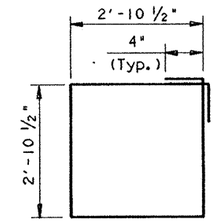

BARS Z1

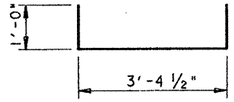

BARS J

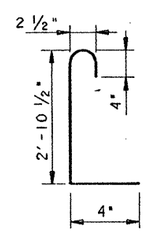

BARS Z2

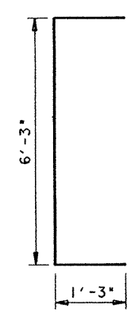

BARS U

TABLE OF CONSTANT QUANTITIES

Bar	No.	Size	Length	Weight
A	20	# 11	41'- 4"	4392
B	9	# 11	31'- 0"	1482
J	44	# 5	5'- 5"	249
S	46	# 6	21'- 6"	1485
T	18	# 8	41'- 4"	1986
U	10	# 5	8'- 9"	91
Reinforcing Steel			Lb	# 9685
Class "C" Conc. (Cap)			CY	39.4

All Cap, & Column reinforcing [redacted] Grade 60.

TABLE OF VARIABLE QUANTITIES / TOTAL ESTIMATED QUANTITIES

"H"	Class "C" Conc. (Cols.)	Bars Z1 #4 ~ 12'-2"		Bars Z2 #4 ~ 3'-8"		Bars V 48 ~ # 9		Reinf. Steel #	Class "C" Conc.
Ft	CY	No.	Weight	No.	Weight	Length	Weight	Lb	CY
18	16.0	38	309	76	186	21'- 4"	3482	13662	55.4
19	16.9	40	325	80	196	22'- 4"	3645	13851	56.3
20	17.8	42	341	84	206	23'- 4"	3808	14040	57.2
21	18.7	44	358	88	216	24'- 4"	3971	14230	58.1
22	19.6	46	374	92	225	25'- 4"	4134	14418	59.0
23	20.5	48	390	96	235	26'- 4"	4298	14608	59.9

For contractor's information only.

GENERAL NOTES:

Designed in accordance with A.A.S.H.T.O. 1989 Specifications.

Calculated Drilled Shaft Loads = 590 T/Dr. Shaft.

See EB-1(MOD) sheet for Bearing Details not shown.

See "Form Liner Details Sheet" for aesthetic treatment of Cap and Columns.

HS 20 LOADING

SHEET 2 OF 2

STATE OF TEXAS
MARK J. BLOSCHOCK
52996
REGISTERED PROFESSIONAL ENGINEER

9-16-91

STATE DEPARTMENT OF HIGHWAYS AND PUBLIC TRANSPORTATION

INTERIOR BENT NO. 23 RAMP I

US 83/281 INTERCHANGE

D45350A:: ZFA2: [355100]43760BT01.DGN

PREPARED BY AND FOR USE OF TEXAS SDH&PT

ORIGINAL DRAWING DATE: FEBRUARY 1991	STATE DISTRICT	FEDERAL REGION	FEDERAL AID PROJECT	SHEET
DN.: GAF	21	6	NH 92( )M	248
CK.: MRL	COUNTY		CONTROL	SECTION	JOB	HIGHWAY
DW.: PSR	HIDALGO		0039	17	097	US 83/281
CK.: GAF						

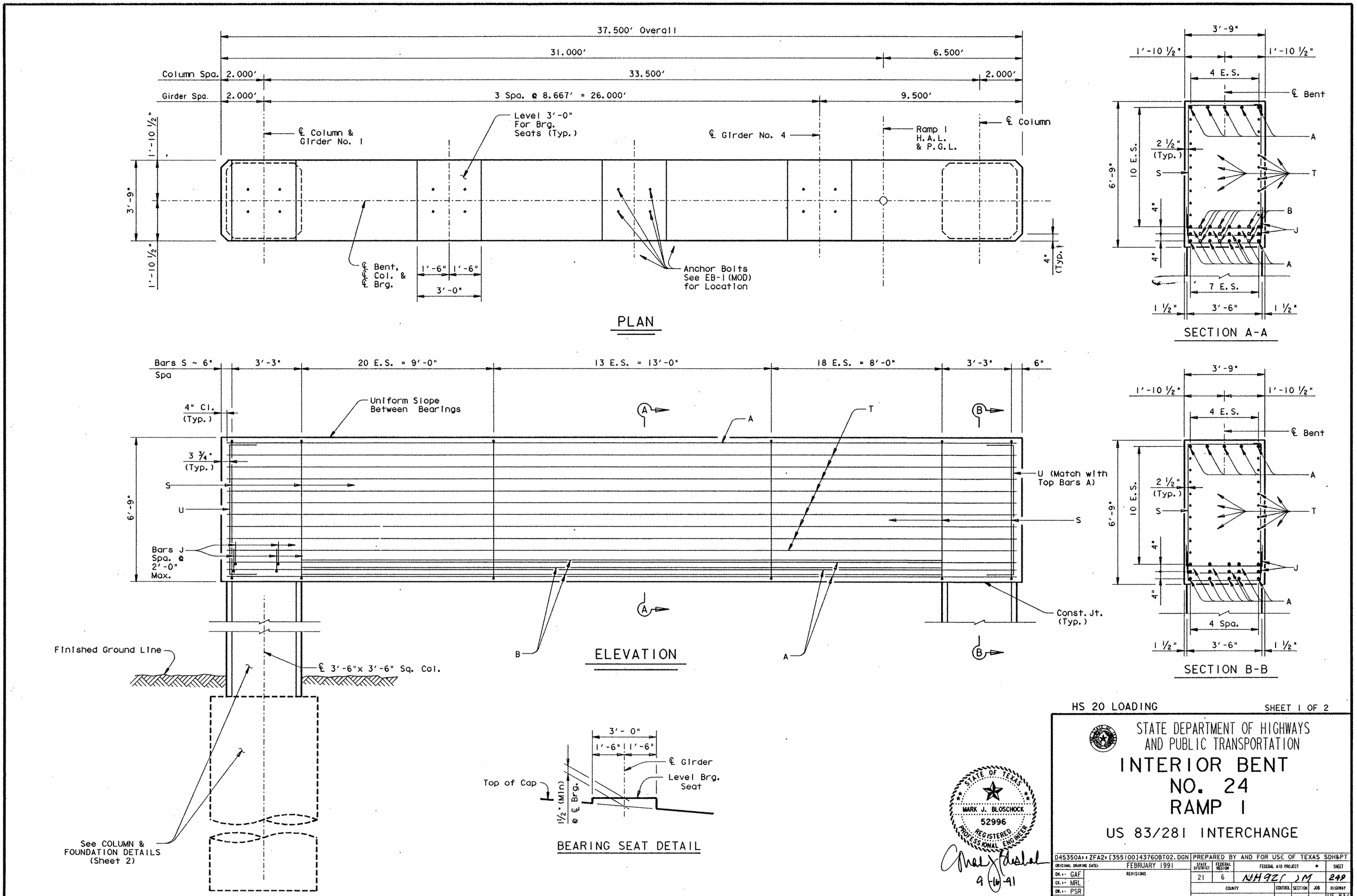

HS 20 LOADING

SHEET 1 OF 2

STATE DEPARTMENT OF HIGHWAYS AND PUBLIC TRANSPORTATION

INTERIOR BENT NO. 24 RAMP I

US 83/281 INTERCHANGE

D45350A: ZFA2: [355100]43760BT02.DGN	PREPARED BY AND FOR USE OF TEXAS SDH&PT					
ORIGINAL DRAWING DATE: FEBRUARY 1991	STATE DISTRICT	FEDERAL REGION	FEDERAL AID PROJECT			SHEET
DN.: GAF	21	6	NH92( )M			249
CK.: MRL	COUNTY		CONTROL	SECTION	JOB	HIGHWAY
DW.: PSR	HIDALGO		0039	17	097	US 83/281
CK.: GAF						

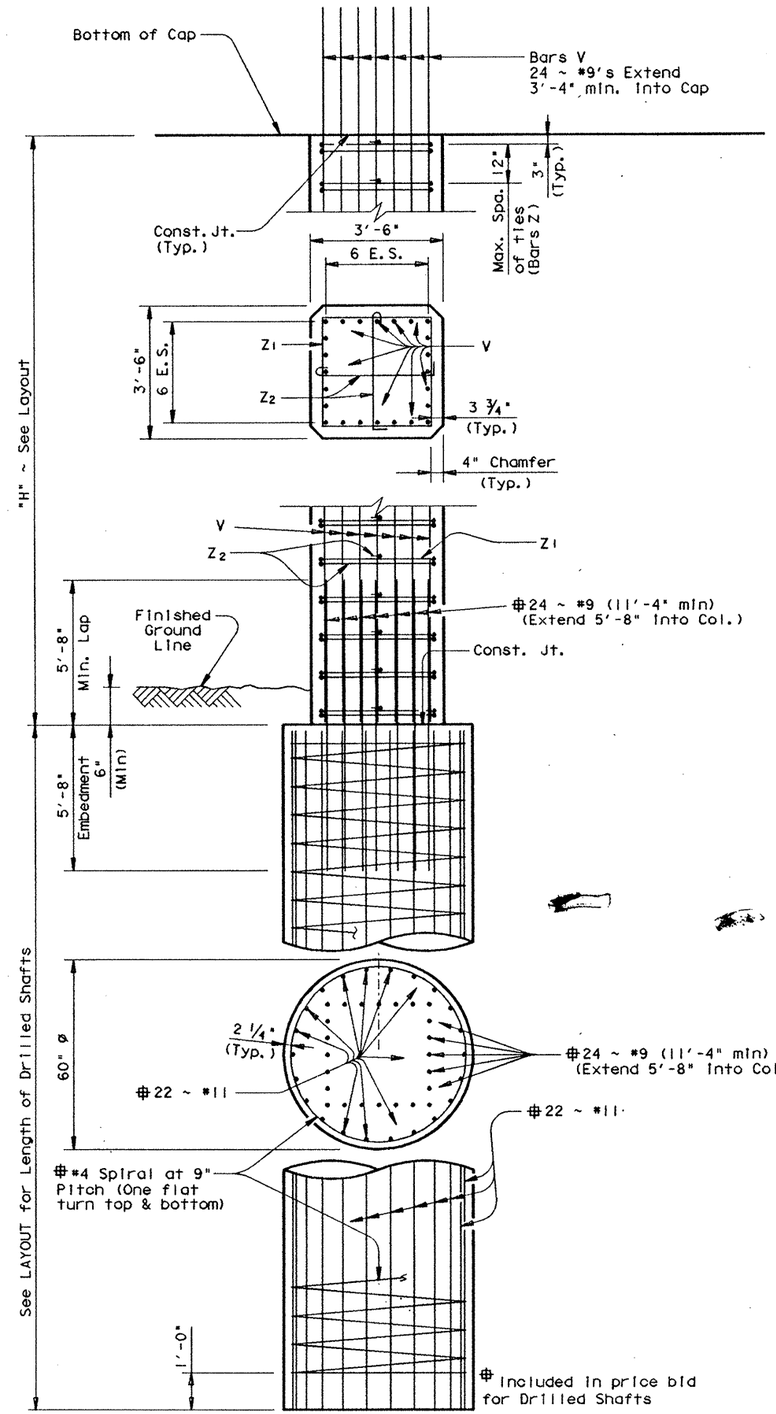

COLUMNS AND FOUNDATION DETAILS

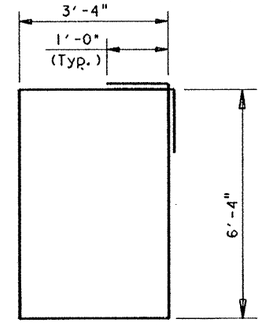

BARS S

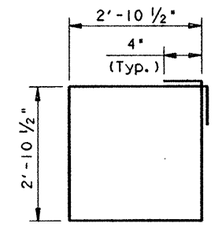

BARS Z1

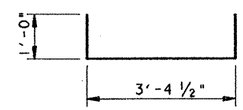

BARS J

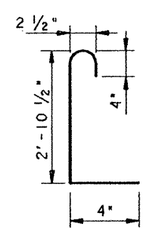

BARS Z2

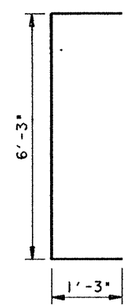

BARS U

TABLE OF CONSTANT QUANTITIES

Bar	No.	Size	Length	Weight
A	20	# 11	36'-10"	3914
B	9	# 11	30'- 0"	1435
J	40	# 5	5'- 5"	226
S	54	# 6	21'- 6"	1744
T	18	# 8	36'-10"	1770
U	10	# 5	8'- 9"	91
Reinforcing Steel			Lb	# 9180
Class "C" Conc. (Cap)			CY	35.4

All Cap & Column reinforcing steel [redacted] Grade 60.

TABLE OF VARIABLE QUANTITIES / TOTAL ESTIMATED QUANTITIES

"H"	Class "C" Conc. (~~Cols.~~)	Bars Z1 #4 ~ 12'-2"		Bars Z2 #4 ~ 3'-8"		Bars V 48 ~ # 9		Reinf. Steel #	Class "C" Conc.
Ft	CY	No.	Weight	No.	Weight	Length	Weight	Lb	CY
16	14.2	34	276	68	167	19'- 4"	3155	12778	49.6
17	15.1	36	293	72	176	20'- 4"	3318	12967	50.5
18	16.0	38	309	76	186	21'- 4"	3482	13157	51.4
19	16.9	40	325	80	196	22'- 4"	3645	13346	52.3
20	17.8	42	341	84	206	23'- 4"	3808	13535	53.2

For contractor's information only.

GENERAL NOTES:

Designed in accordance with A.A.S.H.T.O. 1989 Specifications.

Calculated Drilled Shaft Loads = 520 T/Dr. Shaft.

See EB-1(MOD) sheet for Bearing Details not shown.

See "Form Liner Details Sheet" for aesthetic treatment of Cap and Columns.

HS 20 LOADING

SHEET 2 OF 2

STATE OF TEXAS
MARK J. BLOSCHOCK
52996
REGISTERED PROFESSIONAL ENGINEER

9-16-91

STATE DEPARTMENT OF HIGHWAYS AND PUBLIC TRANSPORTATION

INTERIOR BENT NO. 24 RAMP I

US 83/281 INTERCHANGE

D45350A:: ZFA2: [355100]43760BT02.DGN

PREPARED BY AND FOR USE OF TEXAS SDH&PT

ORIGINAL DRAWING DATE: FEBRUARY 1991

REVISIONS

DN.: GAF
CK.: MRL
DW.: PSR
CK.: GAF

STATE DISTRICT	FEDERAL REGION	FEDERAL AID PROJECT	SHEET
21	6	NH 92( )M	250

COUNTY	CONTROL	SECTION	JOB	HIGHWAY
HIDALGO	0039	17	097	US 83/281

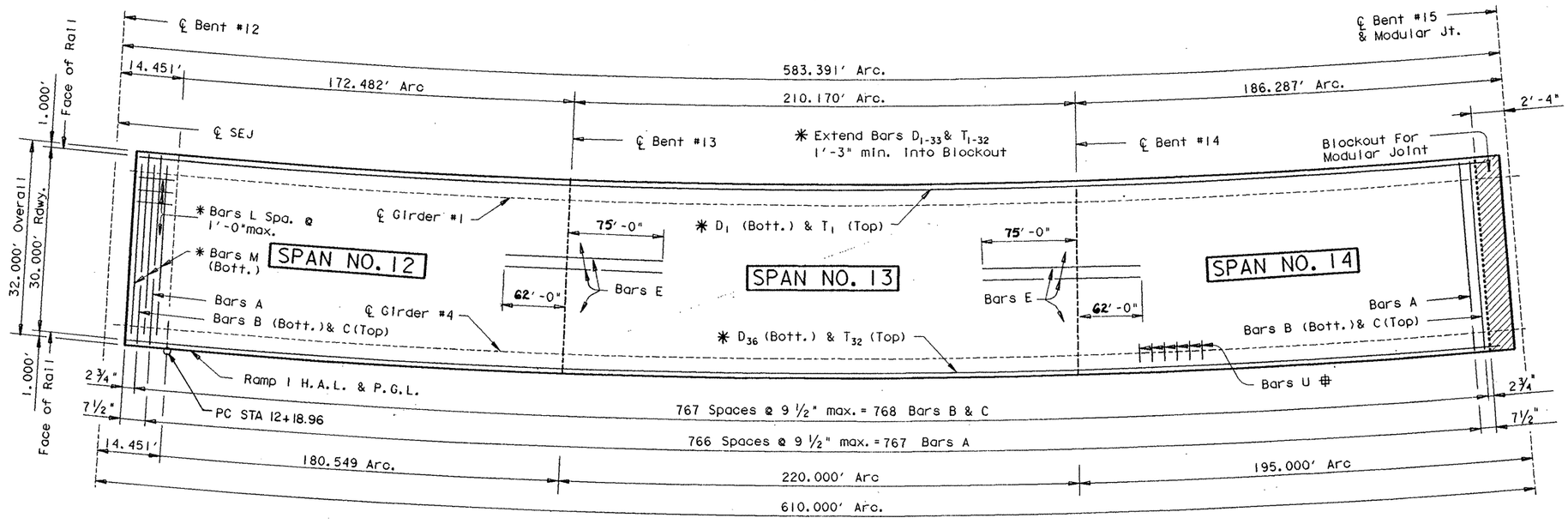

PLAN

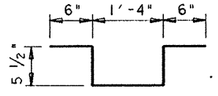

BARS U

NOTE:

Bars U S[redacted] Spaced at 2'-0" along the entire length of each Girder except, there sh[redacted] no Bars U at locations where the Girder top Flange exceeds 2 1/4" in thickness nor [redacted] there be bars U in the Blockout For Modular Joint. (See Girder Elevations)

✱ See GpC (SPL) for Details

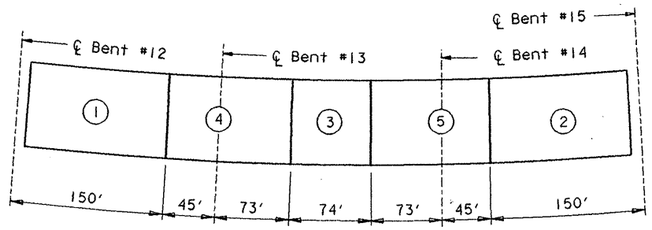

CONCRETE PLACING SEQUENCE

At Contractors option, Continuous placement [redacted] used. For Continuous placement, the minimum rate of Concrete placing and Finishing [redacted] not be less than 30 linear feet of bridge deck per hour.

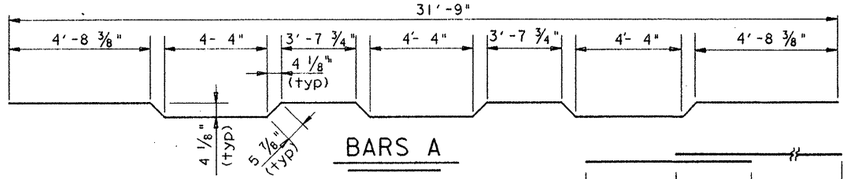

BARS A

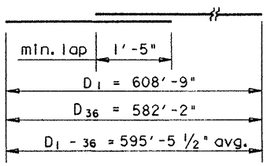

BARS D

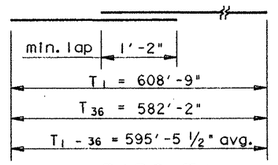

BARS T

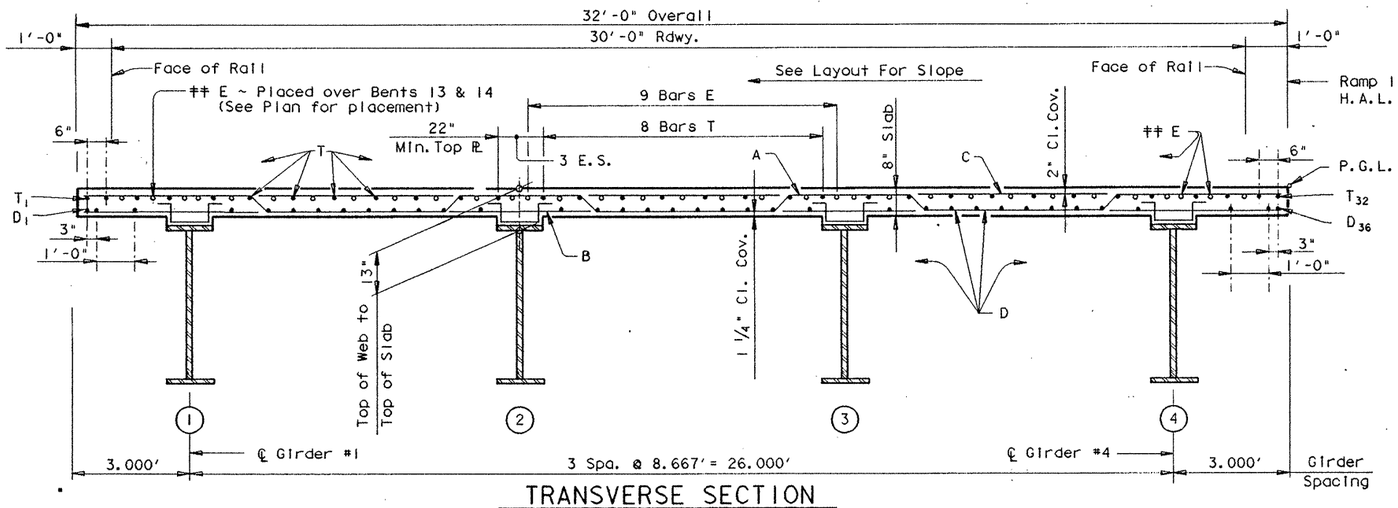

TRANSVERSE SECTION

REV. 3-30-92

TABLE OF ESTIMATED QUANTITIES

Bar	No.	Size	Length	Weight
A	767	# 5	32'- 7"	26066
B	768	# 4	31'- 9"	16289
C	768	# 5	31'- 9"	25433
D_{1-36}	36	# 5	609'-8 "Av◩	22892
E	66	# 6	142'- 3" ▲	14102
L	31	# 4	3'- 0"	62
M	3	# 5	30'- 9"	96
T_{1-32}	32	# 4	607'- 2"Av◪	12979
U	953	# 4	3'-3"	2047

Reinforcing Steel		Lb	⁜ 119965
Str. Steel (HS)	▲	Lb	1061249
Str. Steel (HYC)	◆	Lb	82899

Span	Reinf. Conc. Slab ~ SF	Class "S" Conc. ~ CY Slab ⁜
# 12	6111	167.2
# 13	6883	188.3
# 14	6090	166.6
Total	19084	522.1

⁜ For contractor's information only.

◩ Length shown includes 10 ~ 1'-5" min. lap.

◪ Length shown includes 10 ~ 1'-2" min. lap.

▲ Length shown includes 3 ~ 1'-9" min. lap.

▲ Quantity shown includes 39,400 Lbs. for Thru Girder Bent No. 13 as well as Girder Flanges and Webs.

◆ Diaframs, Stiffeners & Stud Connectors

GENERAL NOTES:

Designed according to A.A.S.H.T.O. 1989 Standard and current Interim Specifications.

Design fc = 1200 p.s.i.

The use of Precast Concrete Panels [redacted] not be permitted.

See Modular Jt. Details Sheet for Type B(MOD) diafram and joint details not shown.

See GpC (SPL) for Details not shown.

See Special Bearings Detail Sheet for SE7 Bearing.

For Drain locations see Bridge Layout. For Drain Details see Bridge Drain Details Sheet.

HS 20 LOADING

Sheet 1 of 5

STATE OF TEXAS
MARK J. BLOSCHOCK
52996
REGISTERED PROFESSIONAL ENGINEER
9-14-91

STATE DEPARTMENT OF HIGHWAYS AND PUBLIC TRANSPORTATION

UNIT NO. 5, RAMP 1

610.00' PLATE GIRDER UNIT (195.00'-220.00'-195.00')

US 83/281 INTERCHANGE

D45350A: ZFAI: (355163)4376SFC02.DGN	PREPARED BY AND FOR USE OF TEXAS SDH&PT					
ORIGINAL DRAWING DATE:	STATE DISTRICT	FEDERAL REGION	FEDERAL AID PROJECT			SHEET
DR.: CRW	21	6	NH 92( )M			251
CK.: MRL	COUNTY		CONTROL	SECTION	JOB	HIGHWAY
DR.: TKW	HIDALGO		0039	17	097	83/281
CK.: CRW						

REVISIONS

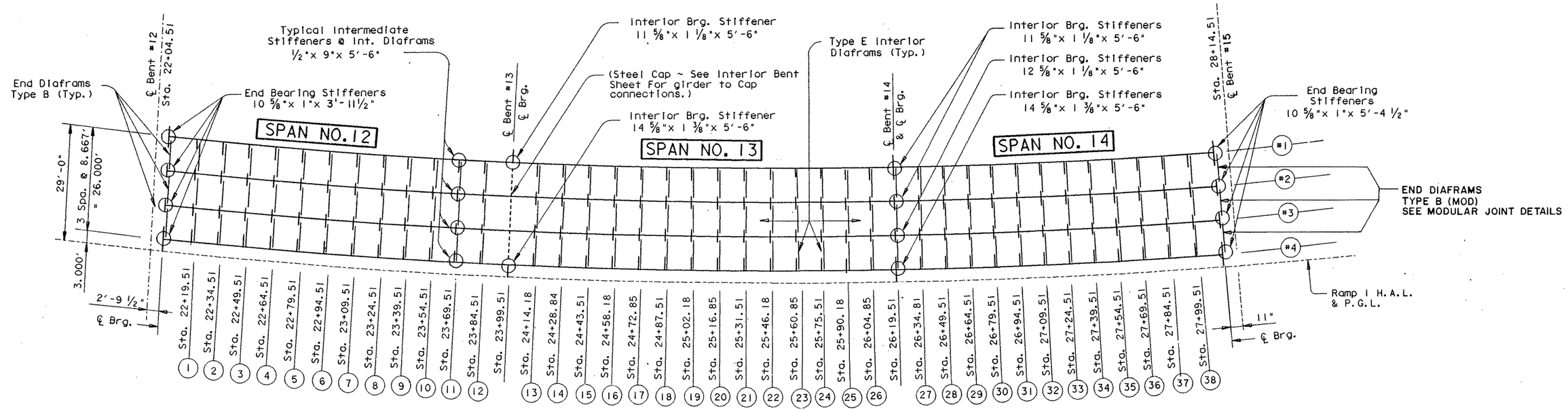

FRAMING PLAN

TABLE OF RADII	
P.G.L.	716.200
Girder #1	687.200
Girder #2	695.867
Girder #3	704.533
Girder #4	713.200

HS 20 LOADING

Sheet 2 of 5

STATE DEPARTMENT OF HIGHWAYS AND PUBLIC TRANSPORTATION

UNIT NO. 5, RAMP I

610.00' PLATE GIRDER UNIT
(195.00'-220.00'-195.00')

US 83/281 INTERCHANGE

STATE OF TEXAS
MARK J. BLOSCHOCK
52996
REGISTERED PROFESSIONAL ENGINEER

9-16-91

D45350A::ZFA1:[355163]4376SFC02.DGN

PREPARED BY AND FOR USE OF TEXAS SDH&PT

ORIGINAL DRAWING DATE:	REVISIONS	STATE DISTRICT	FEDERAL REGION	FEDERAL AID PROJECT	SHEET
DN.: CRW		21	6	NH 92( )M	252
CK.: MRL		COUNTY	CONTROL	SECTION	JOB	HIGHWAY
DW.: TKW		HIDALGO	0039	17	097	83/281
CK.: CRW						

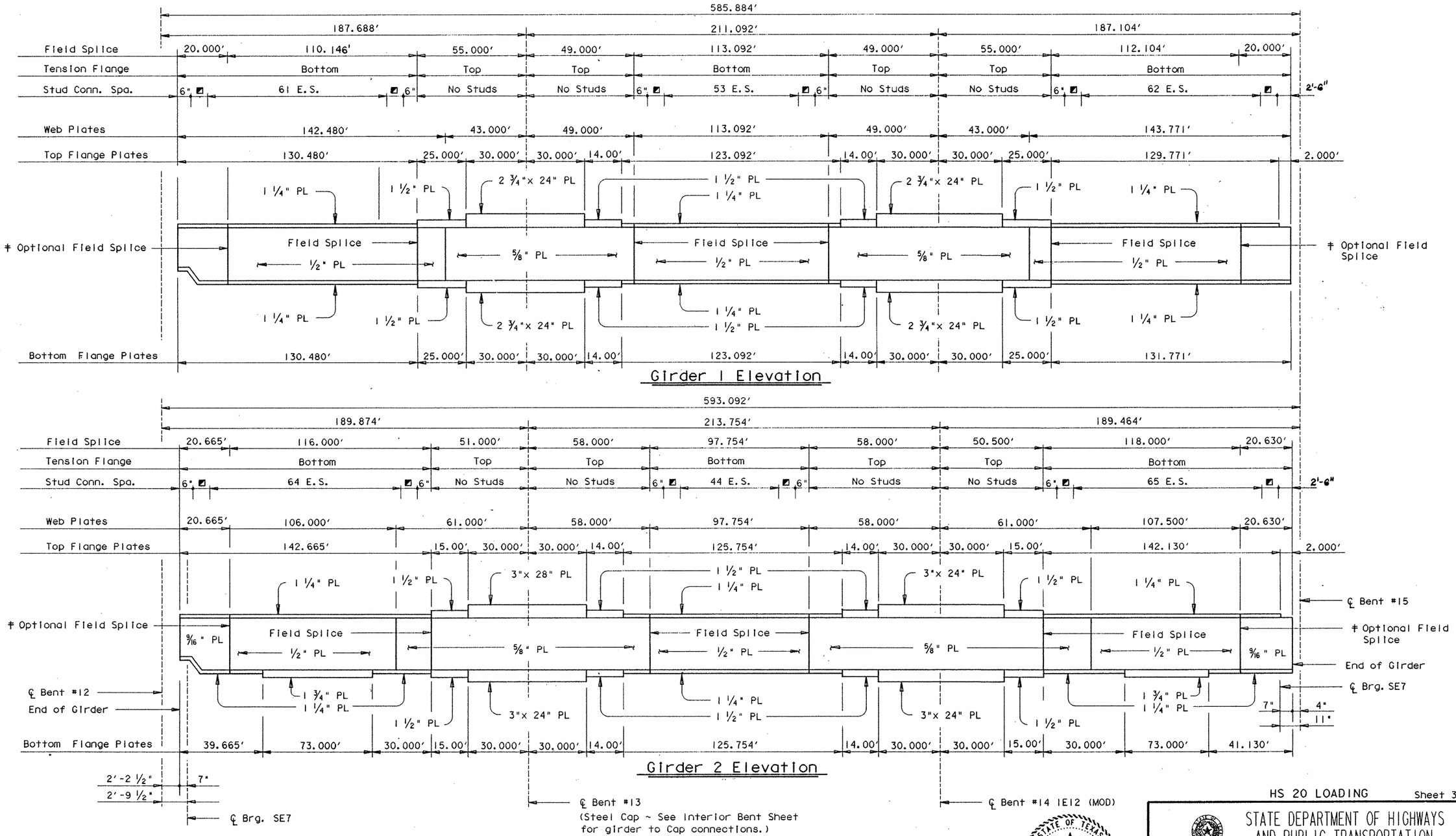

Girder 1 Elevation

Girder 2 Elevation

◪ 4 E.S. = 4'-0"

‡ An optional field splice is provided to facilitate handling and hauling and [redacted] made prior to lifting the girder to its final position.

All Web Plates are 66" high unless otherwise noted and are H.S. Steel (GR50)
All Flange Plates are H.S. Steel (GR50)
All Flange Plates are 22" wide unless otherwise noted.

STATE OF TEXAS
MARK J. BLOSCHOCK
52996
REGISTERED PROFESSIONAL ENGINEER

9-16-91

HS 20 LOADING

Sheet 3 of 5

STATE DEPARTMENT OF HIGHWAYS AND PUBLIC TRANSPORTATION

UNIT NO. 5, RAMP 1

610.00' PLATE GIRDER UNIT (195.00'-220.00'-195.00')

US 83/281 INTERCHANGE

D45350A1:ZFA1:[355163]4376SFC03.DGN	PREPARED BY AND FOR USE OF TEXAS SDH&PT					
ORIGINAL DRAWING DATE:	STATE DISTRICT	FEDERAL REGION	FEDERAL AID PROJECT			SHEET
DK.: CRW	21	6	NH 92( )M			253
CK.: MLR	COUNTY		CONTROL	SECTION	JOB	HIGHWAY
DK.: TKW	HIDALGO		0039	17	097	83/281
CK.: CRW						

REVISIONS

REV. 3-30-92

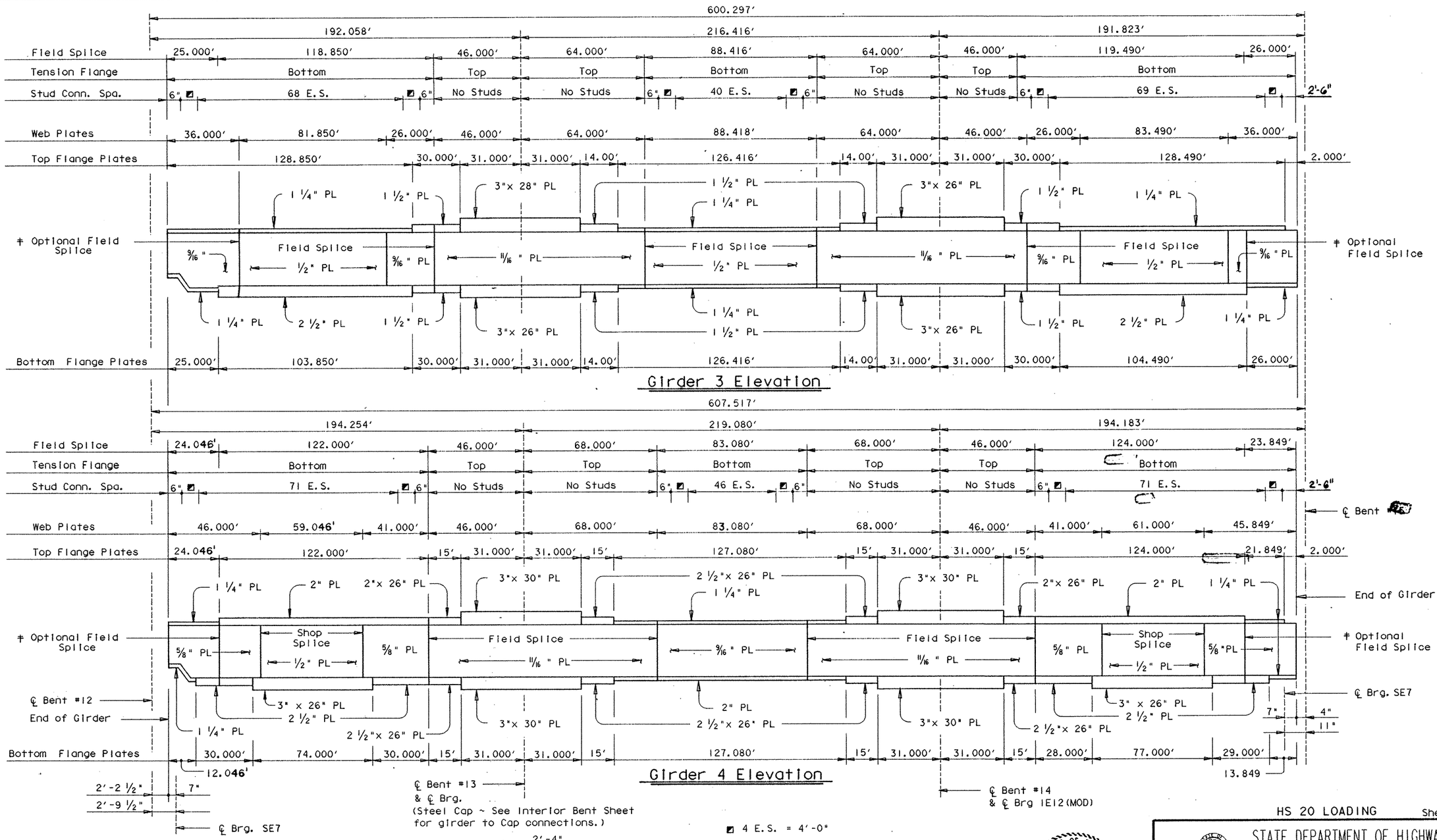

Girder 3 Elevation

Girder 4 Elevation

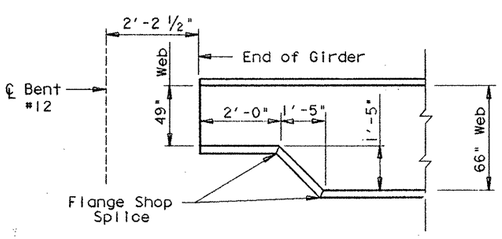

TYPICAL END OF GIRDER DETAIL @ BENT # 12

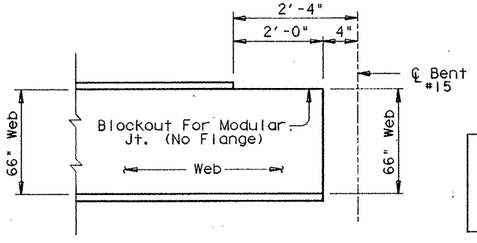

TYPICAL END OF GIRDER DETAIL @ BENT # 15

▩ 4 E.S. = 4'-0"

‡ An optional field splice is provided to facilitate handling and hauling and [redacted] made prior to lifting the girder to its final position.

All Web Plates are 66" high unless otherwise noted and are H.S. Steel (GR50)
All Flange Plates are H.S. Steel (GR50)
All Flange Plates are 22" wide unless otherwise noted.

STATE OF TEXAS
MARK J. BLOSCHOCK
52996
REGISTERED PROFESSIONAL ENGINEER
9-16-91

HS 20 LOADING

Sheet 4 of 5

STATE DEPARTMENT OF HIGHWAYS AND PUBLIC TRANSPORTATION

UNIT NO. 5, RAMP I

610.00' PLATE GIRDER UNIT
(195.00'-220.00'-195.00')

US 83/281 INTERCHANGE

D45350A: ZFAI: E355163J4376SFC03.DGN | PREPARED BY AND FOR USE OF TEXAS SDH&PT

ORIGINAL DRAWING DATE:	REVISIONS	STATE DISTRICT	FEDERAL REGION	FEDERAL AID PROJECT	SHEET
DR.:- CRW		21	6	NH-[illegible]M	254
CK.:- MRL		COUNTY	CONTROL	SECTION	JOB	HIGHWAY
DR.:- TKW		HIDALGO	0039	17	097	83/281
CK.:- CRW						

REV. 3-30-92

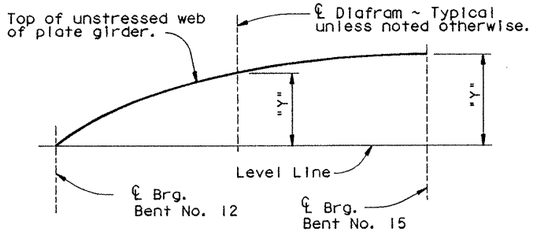

WEB CUTTING DIAGRAM

Note: Web may be cut on straight lines between ordinates or to a smooth curve at the fabricator's option. Values listed include all dead load deflection's and vertical curve corrections.

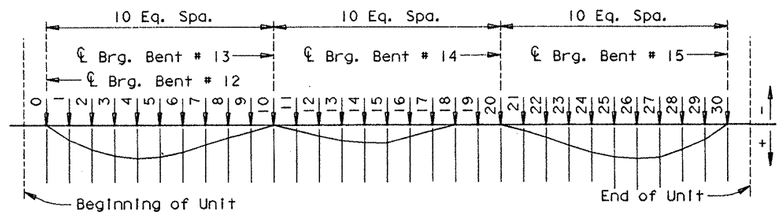

DEAD LOAD DEFLECTION DIAGRAM

Deflections shown are due to cast-in-place concrete slab only.

WEB CUTTING TABLE

DIAFRAM		GIRDER 1 "Y"	2 "Y"	3 "Y"	4 "Y"
SPAN 12	℄ Brg.	0.000	0.000	0.000	0.000
	1	-0.036	0.051	0.130	0.175
	2	-0.049	0.129	0.287	0.377
	3	-0.029	0.213	0.432	0.549
	4	0.020	0.304	0.563	0.693
	5	0.081	0.385	0.662	0.797
	6	0.129	0.440	0.722	0.861
	7	0.157	0.460	0.738	0.882
	8	0.170	0.457	0.721	0.869
	9	0.176	0.435	0.677	0.825
	10	0.181	0.405	0.619	0.764
	11	0.195	0.383	0.563	0.702
	12	0.226	0.377	0.527	0.655
SPAN 13	℄ Brg	0.277	0.394	0.511	0.629
	13	0.358	0.443	0.532	0.640
	14	0.456	0.513	0.577	0.676
	15	0.568	0.601	0.643	0.732
	16	0.685	0.703	0.733	0.810
	17	0.799	0.807	0.827	0.897
	18	0.899	0.902	0.918	0.980
	19	0.978	0.979	0.993	1.053
	20	1.038	1.038	1.053	1.112
	21	1.078	1.080	1.094	1.156
	22	1.097	1.104	1.122	1.190
	23	1.104	1.120	1.147	1.223
	24	1.106	1.137	1.177	1.264
	25	1.113	1.170	1.230	1.330
	26	1.134	1.218	1.308	1.415
SPAN 14	℄ Brg	1.174	1.291	1.408	1.525
	27	1.245	1.399	1.547	1.676
	28	1.338	1.527	1.710	1.849
	29	1.447	1.674	1.890	2.037
	30	1.563	1.827	2.073	2.224
	31	1.680	1.972	2.241	2.393
	32	1.786	2.099	2.382	2.531
	33	1.878	2.197	2.488	2.633
	34	1.952	2.266	2.549	2.690
	35	2.005	2.302	2.568	2.706
	36	2.037	2.303	2.540	2.677
	37	2.053	2.278	2.479	2.611
	38	2.051	2.223	2.384	2.508
	℄ Brg	2.043	2.160	2.277	2.395

TABLE OF DEAD LOAD DEFLECTIONS

		GIRDER 1	2	3	4
SPAN 12	0	0.000′	0.000′	0.000′	0.000′
	1	0.061′	0.102′	0.137′	0.139′
	2	0.111′	0.187′	0.248′	0.251′
	3	0.141′	0.242′	0.326′	0.328′
	4	0.151′	0.264′	0.359′	0.364′
	5	0.140′	0.252′	0.348′	0.356′
	6	0.110′	0.212′	0.298′	0.311′
	7	0.069′	0.151′	0.219′	0.235′
	8	0.031′	0.085′	0.131′	0.146′
	9	0.005′	0.032′	0.054′	0.874′
	10	0.000′	0.000′	0.000′	0.000′
SPAN 13	11	0.028′	0.002′	-0.022	-0.032
	12	0.080′	0.030′	-0.013	-0.034
	13	0.138′	0.075′	0.024′	-0.101
	14	0.182′	0.115′	0.059′	0.017′
	15	0.198′	0.129′	0.072′	0.028′
	16	0.182′	0.114′	0.057′	0.015′
	17	0.138′	0.074′	0.021′	-0.014
	18	0.079′	0.029′	-0.015	-0.037
	19	0.028′	0.000′	-0.024	-0.034
	20	0.000′	0.000′	0.000′	0.000′
SPAN 14	21	0.006′	0.033′	0.057′	0.066′
	22	0.033′	0.089′	0.137′	0.153′
	23	0.073′	0.157′	0.230′	0.247′
	24	0.114′	0.221′	0.311′	0.326′
	25	0.144′	0.262′	0.362′	0.375′
	26	0.155′	0.274′	0.373′	0.382′
	27	0.145′	0.252′	0.338′	0.345′
	28	0.113′	0.196′	0.260′	0.265′
	29	0.063′	0.107′	0.143′	0.146′
	30	0.000′	0.000′	0.000′	0.000′

PLATE GIRDER FABRICATION NOTE:

Girder tension flanges and webs are classified as main members and [redacted] conform to Item 442.3(1).

Except at changes in section, shop or field flange and web splices in plate girders may be located as desirable to optimize plate lengths and erection procedures, except that splices will not [redacted] allowed where a 40′ or less unspliced length would suffice; neither will tension flange splices [redacted] allowed within .05S either side of interior bearings, within .10S either side of the centerlines of the interior span, nor within the range between .30S and .50S from the end bearings. (S=length c.c. Bearing of Span in which the splice is made).

Flange and Web Splices [redacted] made by full penetration groove welds in accordance with the Item "Steel Structures".

HS 20 LOADING

STATE OF TEXAS
MARK J. BLOSCHOCK
52996
REGISTERED PROFESSIONAL ENGINEER
9-16-91

STATE DEPARTMENT OF HIGHWAYS AND PUBLIC TRANSPORTATION

UNIT NO. 5, RAMP I

610.00′ PLATE GIRDER UNIT
(195.00′-220.00′-195.00′)

US 83/281 INTERCHANGE

D45350A: ZFAI: (3551631437 6SFC02.DGN | PREPARED BY AND FOR USE OF TEXAS SDH&PT

ORIGINAL DRAWING DATE:	REVISIONS	STATE DISTRICT	FEDERAL REGION	FEDERAL AID PROJECT	SHEET
DR.: CRW		21	6	NH 92 ( )M	255
CK.: MRL		COUNTY	CONTROL	SECTION	JOB	HIGHWAY
DR.: TKW		HIDALGO	0039	17	097	83/281
CK.: CRW						

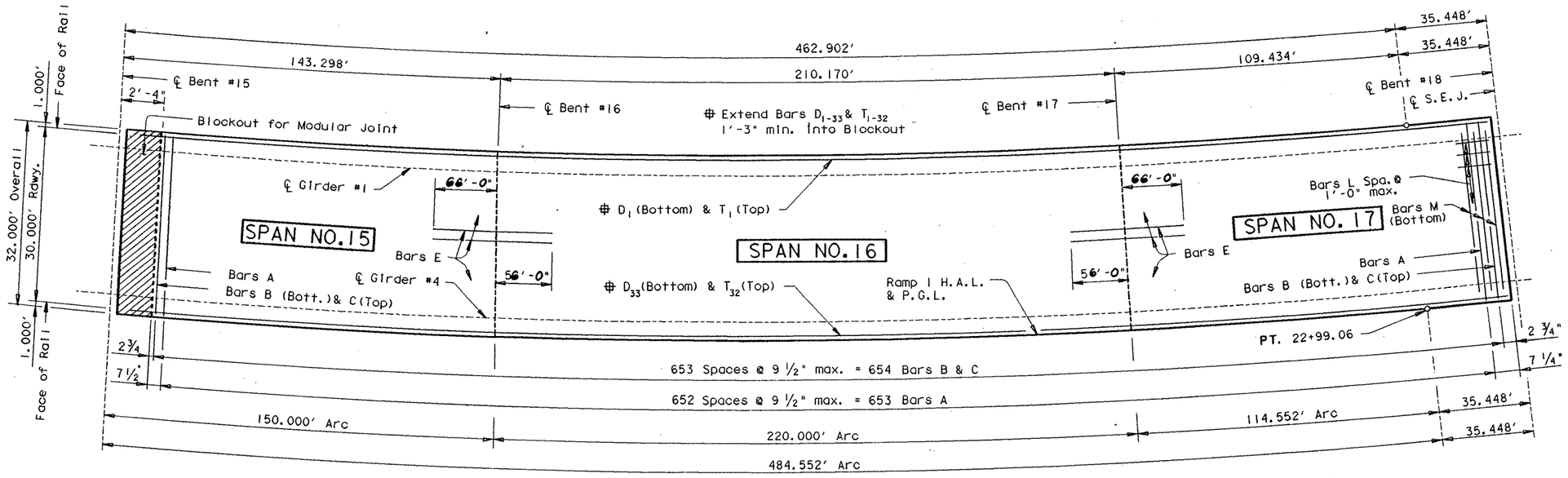

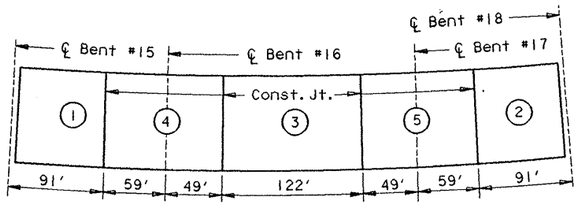

CONCRETE PLACING SEQUENCE

At Contractors option, Continuous placement [redacted] used. For Continuous placement, the minimum rate of Concrete placing and Finishing [redacted] not [redacted] less than 30 linear feet of bridge deck per hour.

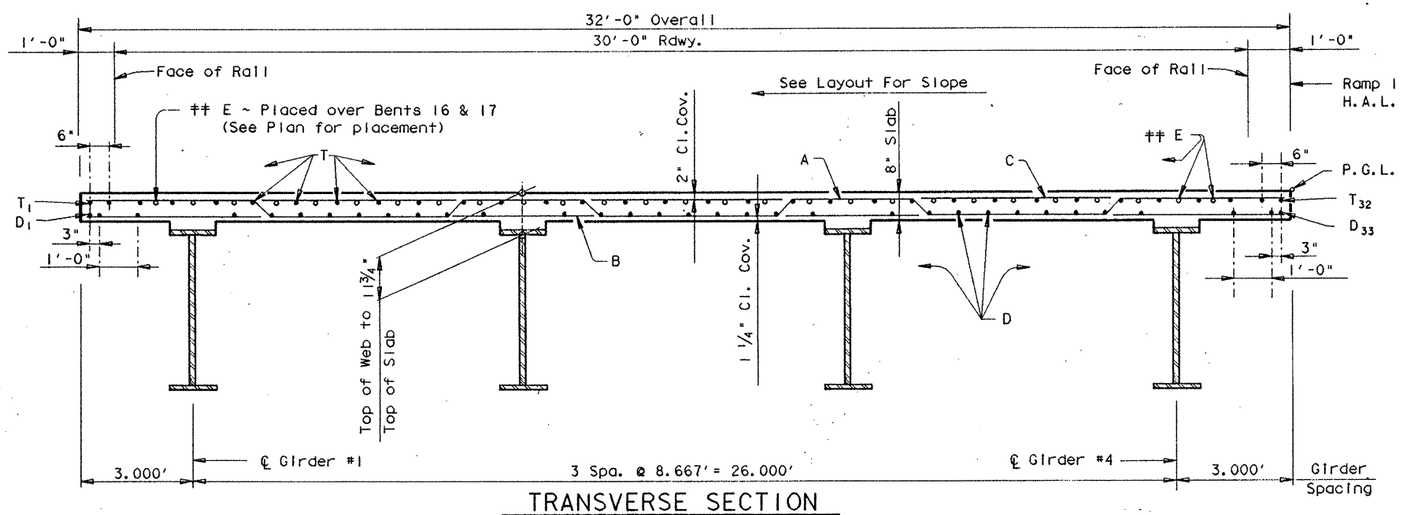

TRANSVERSE SECTION

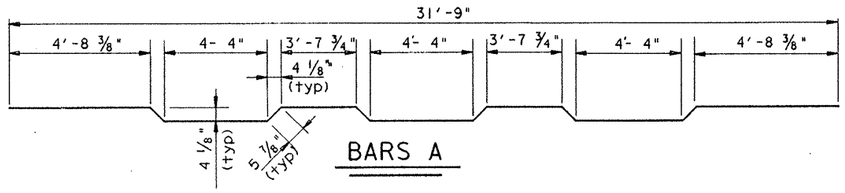

BARS A

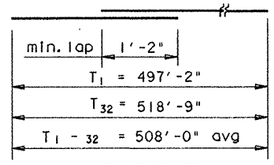

BARS T

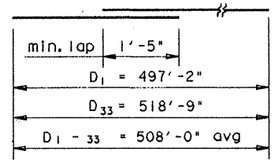

BARS D

TABLE OF ESTIMATED QUANTITIES

Bar	No.	Size	Length	Weight
A	653	# 5	32'- 7"	22189
B	654	# 4	31'- 9"	13871
C	654	# 5	31'- 9"	21657
D_{1-33}	33	# 5	519'- 4" Av◩	17875
E	54	# 6	127'- 3" ▲	10321
L	31	# 4	3'- 0"	62
M	3	# 5	29'- 9"	93
T_{1-32}	32	# 4	517'- 4" Av◪	11059

Reinforcing Steel	Lb	# 97127
Str. Steel (HS) *	Lb	723083
Str. Steel (HYC) **	Lb	70882

Span	Reinf. Conc. Slab ~ SF	Class "S" Conc. ~ CY Slab #
# 15	4693	118.8
# 16	6883	174.1
# 17	4718	118.8
Total	16294	411.7

For contractor's information only.
◩ Length shown includes 8 ~ 1'-5" min. lap.
◪ Length shown includes 8 ~ 1'-2" min. lap.
▲ Length shown includes 3 ~ 1'-9" min. lap.
* Girder Flanges & Webs
** Diaframs, Stiffeners and Stud Connectors

GENERAL NOTES:

Designed according to A.A.S.H.T.O. 1989 Standard Specifications.

Design fc = 1200 p.s.i.

The use of Precast Concrete Panels [redacted] not [redacted] permitted.

See Modular Joint Details sheet for Type B (MOD) diaf. and joint details not shown.

See GpC (SPL) sheet for details not shown.

For Drain Locations see Bridge Layout. For Drain Details see Bridge Drain Details Sheet.

HS 20 LOADING

Sheet 1 of 5

STATE OF TEXAS
MARK J. BLOSCHOCK
52996
REGISTERED PROFESSIONAL ENGINEER
9-16-91

REV. 3-30-92

STATE DEPARTMENT OF HIGHWAYS AND PUBLIC TRANSPORTATION

UNIT NO. 6, RAMP I

520.00' PLATE GIRDER UNIT (150.00'-220.00'-150.00')

US 83/281 INTERCHANGE

D45350A1 • ZFA1 • (355163)4379SFC07.DGN | PREPARED BY AND FOR USE OF TEXAS SDH&PT

ORIGINAL DRAWING DATE•	REVISIONS	STATE DISTRICT	FEDERAL REGION	FEDERAL AID PROJECT •	SHEET
DN.• MRL		21	6	NH 92( )M	256
CK.• LMW					
DW.• TKW		COUNTY	CONTROL	SECTION	JOB	HIGHWAY
CK.• MRL		HIDALGO	0039	17	097	83/281

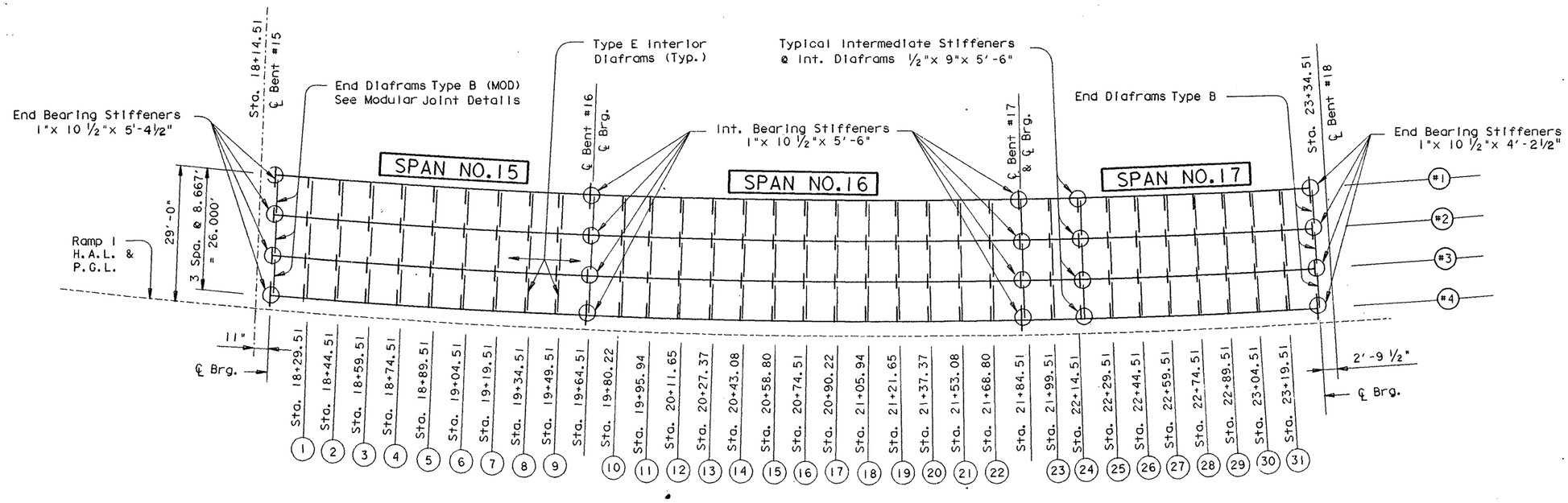

FRAMING PLAN

TABLE OF RADII	
P.G.L	716.200'
Girder #1	687.199'
Girder #2	695.866'
Girder #3	704.533'
Girder #4	713.200'

HS 20 LOADING

STATE OF TEXAS
MARK J. BLOSCHOCK
52996
REGISTERED PROFESSIONAL ENGINEER
9-16-91

STATE DEPARTMENT OF HIGHWAYS AND PUBLIC TRANSPORTATION

UNIT NO. 6, RAMP I

520.00' PLATE GIRDER UNIT
(150.00'-220.00'-150.00')

US 83/281 INTERCHANGE

D45350A++ZFA1+(355163)4379SFC07.DGN | PREPARED BY AND FOR USE OF TEXAS SDH&PT

ORIGINAL DRAWING DATE:	REVISIONS	STATE DISTRICT	FEDERAL REGION	FEDERAL AID PROJECT	SHEET
DR.:- MRL		21	6	NH 92( )M	257
CK.:- LMW		COUNTY		CONTROL	SECTION	JOB	HIGHWAY
DR.:- TKW		HIDALGO		0039	17	097	83/281
CK.:- MRL							

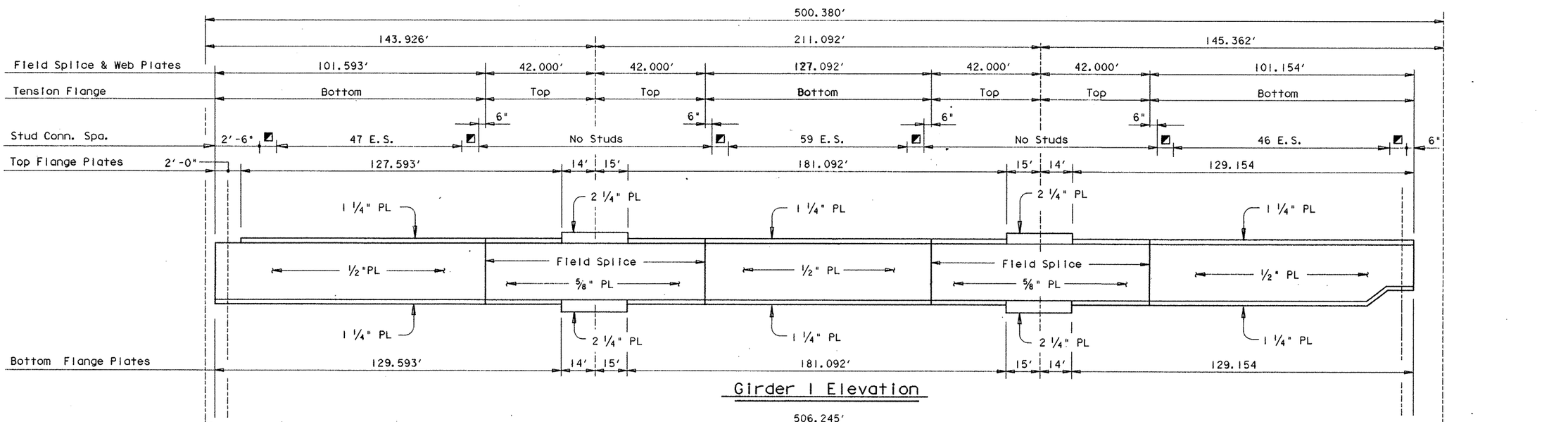

Girder 1 Elevation

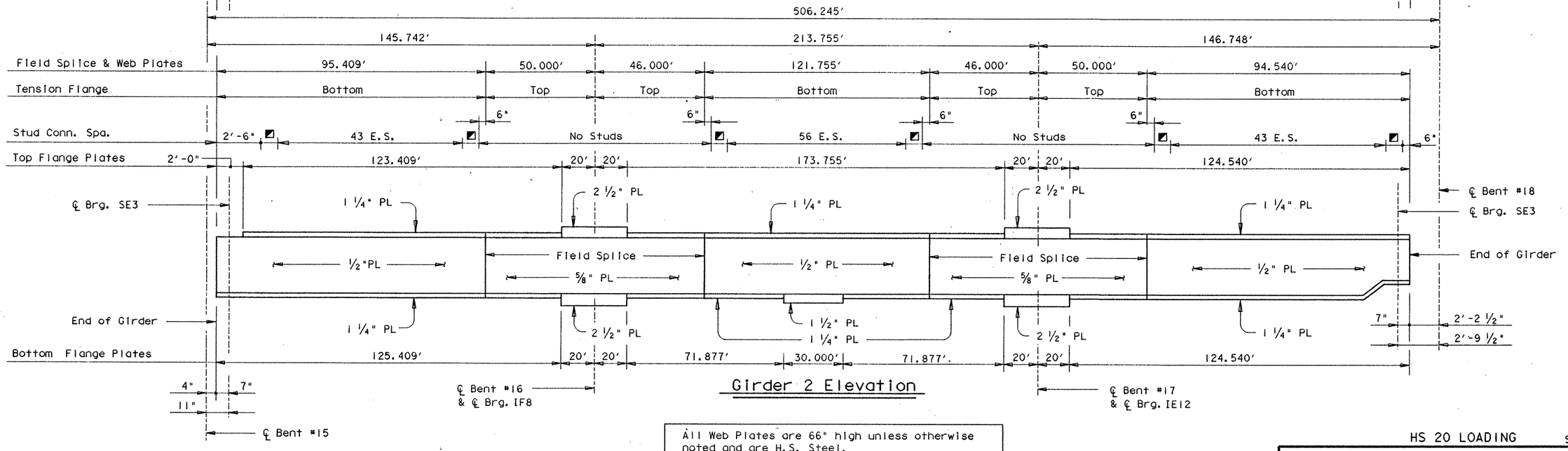

Girder 2 Elevation

All Web Plates are 66" high unless otherwise noted and are H.S. Steel.
All Flange Plates are H.S. Steel (GR50)
All Flange Plates are 22" Wide unless otherwise noted.

■ 8 E.S. = 4'-0"

HS 20 LOADING

STATE DEPARTMENT OF HIGHWAYS AND PUBLIC TRANSPORTATION

UNIT NO. 6, RAMP 1

520.00' PLATE GIRDER UNIT (150.00'-220.00'-150.00')

US 83/281 INTERCHANGE

STATE OF TEXAS
MARK J. BLOSCHOCK
52996
REGISTERED PROFESSIONAL ENGINEER
9-14-91

D45350A1.ZFA1.C35516314379SFC07.DGN | PREPARED BY AND FOR USE OF TEXAS SDH&PT

ORIGINAL DRAWING DATE	REVISIONS	STATE DISTRICT	FEDERAL REGION	FEDERAL AID PROJECT	SHEET
DR.: MRL		21	6	NH 92( )M	258
CK.: LMW		COUNTY		CONTROL	SECTION	JOB	HIGHWAY
DR.: TKW		HIDALGO		0039	17	09T	83/281
CK.: MPL							

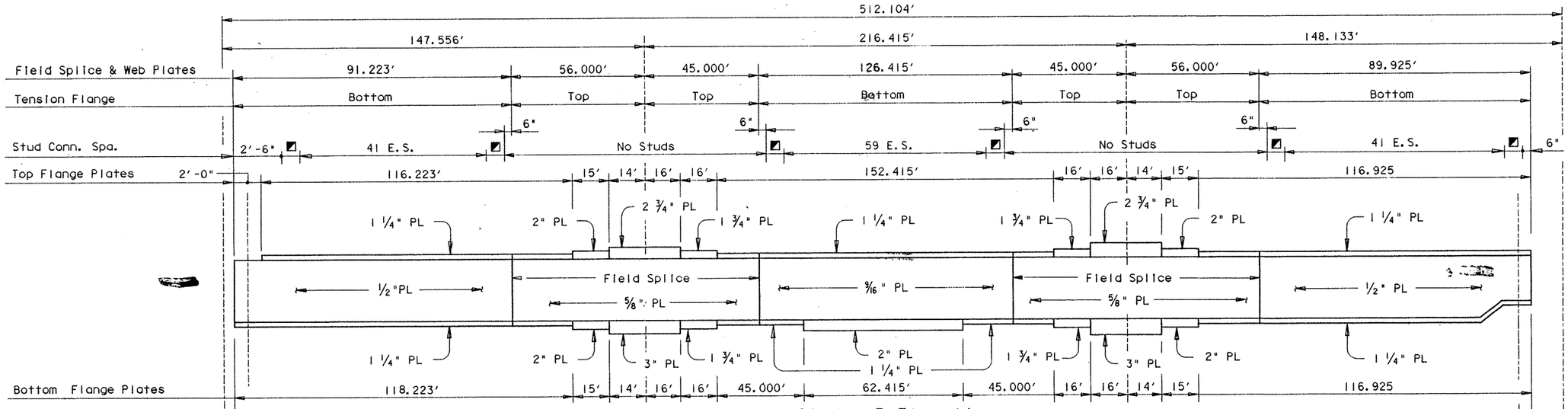

Girder 3 Elevation

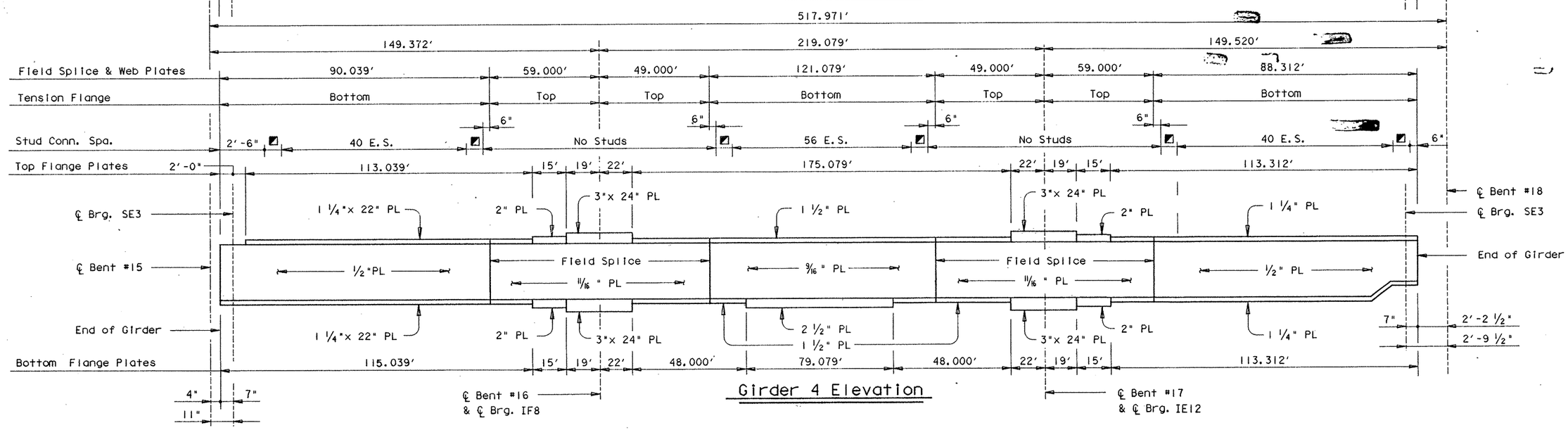

Girder 4 Elevation

▨ 8 E.S. = 4'-0"

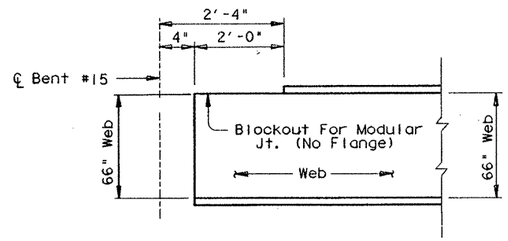

TYPICAL END OF GIRDER DETAIL @ BENT 15

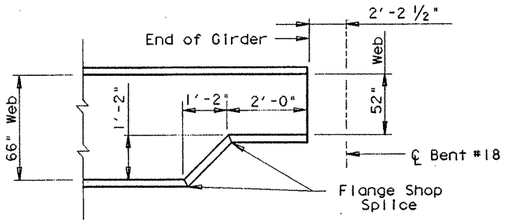

TYPICAL END OF GIRDER DETAIL @ BENT 18

STATE OF TEXAS
MARK J. BLOSCHOCK
52996
REGISTERED PROFESSIONAL ENGINEER

9-16-91

HS 20 LOADING

Sheet 4 of 5

STATE DEPARTMENT OF HIGHWAYS AND PUBLIC TRANSPORTATION

UNIT NO. 6, RAMP I

520.00' PLATE GIRDER UNIT (150.00'-220.00'-150.00')

US 83/281 INTERCHANGE

D45350A:: ZFA1: [355163]4379SFC07.DGN

PREPARED BY AND FOR USE OF TEXAS SDH&PT

ORIGINAL DRAWING DATE:		STATE DISTRICT	FEDERAL REGION	FEDERAL AID PROJECT	SHEET
DN.: MRL	REVISIONS	21	6	NH 92C JM	259
CK.: LMW		COUNTY		CONTROL SECTION JOB	HIGHWAY
DW.: TKW		HIDALGO		0039 17 097	83/281
CK.: MRL					

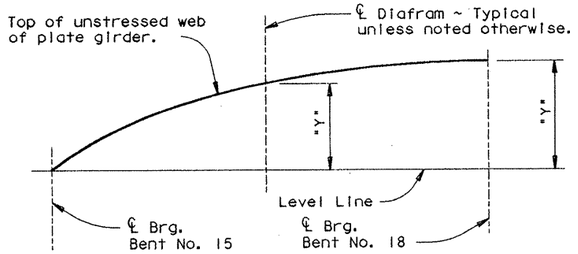

WEB CUTTING DIAGRAM

Note: Web [redacted] cut on straight lines between ordinates or to a smooth curve at the fabricator's option. Values listed include all dead load deflection's and vertical curve corrections.

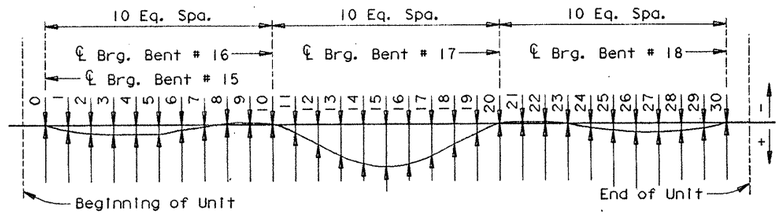

DEAD LOAD DEFLECTION DIAGRAM

Deflections shown are due to cast-in-place concrete slab only.

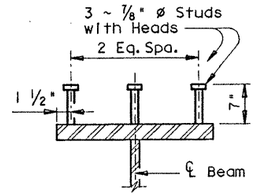

SHEAR CONNECTOR STUD DETAIL

Studs s[redacted] Electric arc end-welded to the flanges with complete fusion.

WEB CUTTING TABLE

	DIAFRAM	GIRDER 1 "Y"	GIRDER 2 "Y"	GIRDER 3 "Y"	GIRDER 4 "Y"
SPAN 15	℄ Brg.	0.000	0.000	0.000	0.000
	1	0.114	0.111	0.110	0.109
	2	0.223	0.215	0.213	0.211
	3	0.316	0.305	0.298	0.292
	4	0.391	0.374	0.361	0.350
	5	0.447	0.423	0.405	0.390
	6	0.489	0.460	0.437	0.417
	7	0.520	0.491	0.465	0.446
	8	0.522	0.527	0.507	0.481
	9	0.599	0.587	0.575	0.566
	℄ Brg	0.669	0.669	0.669	0.669
SPAN 16	10	0.775	0.791	0.807	0.816
	11	0.906	0.937	0.974	0.999
	12	1.051	1.103	1.163	1.188
	13	1.194	1.265	1.349	1.380
	14	1.323	1.413	1.515	1.549
	15	1.431	1.531	1.643	1.683
	16	1.516	1.620	1.738	1.779
	17	1.571	1.672	1.784	1.825
	18	1.603	1.694	1.797	1.834
	19	1.613	1.686	1.772	1.804
	20	1.608	1.661	1.724	1.750
	21	1.597	1.631	1.670	1.690
	22	1.601	1.618	1.634	1.647
	℄ Brg	1.627	1.627	1.627	1.627
SPAN 17	23	1.681	1.667	1.653	1.643
	24	1.759	1.731	1.706	1.685
	25	1.848	1.815	1.783	1.755
	26	1.935	1.901	1.870	1.838
	27	2.020	1.988	1.957	1.926
	28	2.132	2.089	2.048	2.005
	29	2.270	2.202	2.137	2.070
	30	2.431	2.327	2.223	2.117
	31	2.621	2.465	2.307	2.151
	℄ Brg	2.791	2.584	2.377	2.170

TABLE OF DEAD LOAD DEFLECTIONS

		GIRDER 1	GIRDER 2	GIRDER 3	GIRDER 4
SPAN 15	0	0.000′	0.000′	0.000′	0.000′
	1	0.033′	0.031′	0.031′	0.034′
	2	0.060′	0.056′	0.056′	0.059′
	3	0.078′	0.071′	0.067′	0.069′
	4	0.083′	0.071	0.066′	0.066′
	5	0.075′	0.061′	0.051′	0.048′
	6	0.059′	0.041′	0.028′	0.022′
	7	0.035′	0.017′	0.003′	-0.004′
	8	0.012′	-0.004′	-0.015′	-0.021′
	9	-0.002′	-0.010′	-0.017′	-0.020′
SPAN 16	10	0.000′	0.000′	0.000′	0.000′
	11	0.036′	0.049′	0.062′	0.063′
	12	0.101′	0.130′	0.160′	0.159′
	13	0.166′	0.214′	0.263′	0.259′
	14	0.212′	0.275′	0.334′	0.329′
	15	0.228′	0.296′	0.361′	0.355′
	16	0.212′	0.274′	0.336′	0.330′
	17	0.164′	0.214′	0.264′	0.261′
	18	0.098′	0.130′	0.162′	0.162′
	19	0.035′	0.049′	0.064′	0.066′
	20	0.000′	0.000′	0.000′	0.000′
SPAN 17	21	-0.001′	-0.010′	-0.018′	-0.022′
	22	0.014′	-0.003′	-0.018′	-0.027′
	23	0.038′	0.016′	-0.003′	-0.016′
	24	0.061′	0.040′	0.021	0.007′
	25	0.079′	0.059′	0.043′	0.031′
	26	0.086′	0.070′	0.058′	0.049′
	27	0.081′	0.069′	0.060′	0.055′
	28	0.062′	0.055′	0.049′	0.047′
	29	0.034′	0.030′	0.029′	0.027′
	30	0.000′	0.000′	0.000′	0.000′

PLATE GIRDER FABRICATION NOTE:

Girder tension flanges and webs are classified as main members and s[redacted] conform to Item 442.3(1).

Except at changes in section, shop or field flange and web splices in plate girders [redacted] located as desirable to optimize plate lengths and erection procedures, except that splices [redacted] not [redacted] allowed where a 40′ or less unspliced length would suffice; neither will tension flange splices [redacted] allowed within .05S either side of interior bearings, within .10S either side of the centerlines of the interior span, nor within the range between .30S and .50S from the end bearings. (S=length c.c. Bearing of Span in which the splice is made).

Flange and Web Splices [redacted] made by full penetration groove welds in accordance with the Item "Steel Structures".

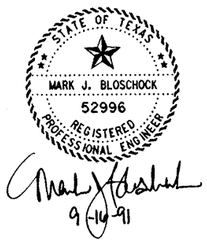

HS 20 LOADING

Sheet 5 of 5

STATE DEPARTMENT OF HIGHWAYS AND PUBLIC TRANSPORTATION

UNIT NO. 6, RAMP I

520.00′ PLATE GIRDER UNIT
(150.00′-220.00′-150.00′)

US 83/281 INTERCHANGE

D45350A: ZFA1: C3551631J4379SFC07.DGN | PREPARED BY AND FOR USE OF TEXAS SDH&PT

ORIGINAL DRAWING DATE:	REVISIONS	STATE DISTRICT	FEDERAL REGION	FEDERAL AID PROJECT	SHEET
DR.: MRL		21	6	NH 92 ( ) M	260
CK.: LMW		COUNTY	CONTROL	SECTION	JOB	HIGHWAY
DR.: TKW		HIDALGO	0039	17	097	83/281
CK.: MRL						

F

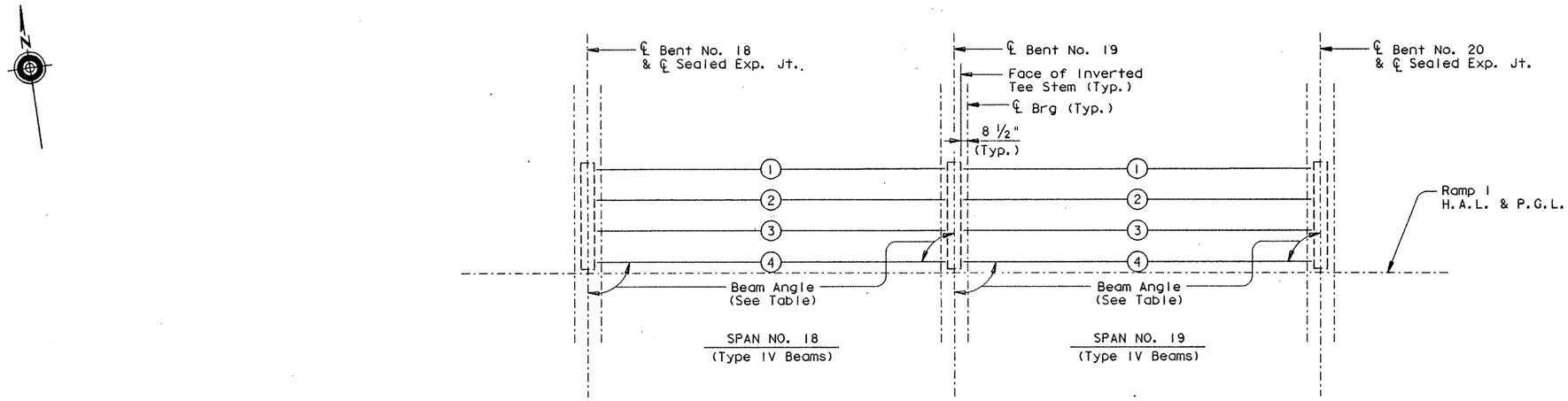

BEAM LAYOUT

BENT REPORT

BENT NO. 18 (N 8 28 13.00 E)
DISTANCE BETWEEN STATION LINE AND BEAM I 29.000 L

		BEAM SPAC. (C.L. BENT)	BEAM ANGLE D	M	S
SPAN18	BEAM I	0.000	90	0	0
	BEAM 2	8.667	90	0	0
	BEAM 3	8.667	90	0	0
	BEAM 4	8.667	90	0	0
	TOTAL	26.000			

BENT NO. 19 (N 8 28 13.00 E)
DISTANCE BETWEEN STATION LINE AND BEAM I 29.000 L

		BEAM SPAC. (C.L. BENT)	BEAM ANGLE D	M	S
SPAN18	BEAM I	0.000	90	0	0
	BEAM 2	8.667	90	0	0
	BEAM 3	8.667	90	0	0
	BEAM 4	8.667	90	0	0
	TOTAL	26.000			
SPAN19	BEAM I	0.000	90	0	0
	BEAM 2	8.667	90	0	0
	BEAM 3	8.667	90	0	0
	BEAM 4	8.667	90	0	0
	TOTAL	26.000			

BENT NO. 20 (N 8 28 13.00 E)
DISTANCE BETWEEN STATION LINE AND BEAM I 29.000 L

		BEAM SPAC. (C.L. BENT)	BEAM ANGLE D	M	S
SPAN19	BEAM I	0.000	90	0	0
	BEAM 2	8.667	90	0	0
	BEAM 3	8.667	90	0	0
	BEAM 4	8.667	90	0	0
	TOTAL	26.000			

BEAM REPORT

BEAM REPORT, SPAN18

	HORIZONTAL DISTANCE C-C BENT	C-C BRG.	TRUE DISTANCE BOT. BM. FLG.
BEAM I	102.500	97.333	98.419
BEAM 2	102.500	97.333	98.418
BEAM 3	102.500	97.333	98.417
BEAM 4	102.500	97.333	98.417

BEAM REPORT, SPAN19

	HORIZONTAL DISTANCE C-C BENT	C-C BRG.	TRUE DISTANCE BOT. BM. FLG.
BEAM I	102.500	97.333	98.417
BEAM 2	102.500	97.333	98.417
BEAM 3	102.500	97.333	98.417
BEAM 4	102.500	97.333	98.417

HS 20 LOADING

STATE OF TEXAS
MARK J. BLOSCHOCK
52996
REGISTERED PROFESSIONAL ENGINEER

9-16-91

STATE DEPARTMENT OF HIGHWAYS AND PUBLIC TRANSPORTATION

BEAM LAYOUT
UNIT NO. 7, RAMP I

US 83/281 INTERCHANGE

D45350A1 : ZFA2 : [35510014379BLY03.DGN

PREPARED BY AND FOR USE OF TEXAS SDH&PT

ORIGINAL DRAWING DATE: JANUARY 1991	STATE DISTRICT	FEDERAL REGION	FEDERAL AID PROJECT	SHEET
DN.: LMW	21	6	NH 92 (3) M	261
CK.: KBA				
DW.: PSR				
CK.: CRW				

COUNTY	CONTROL	SECTION	JOB	HIGHWAY
HIDALGO	0039	17	097	US 83/281

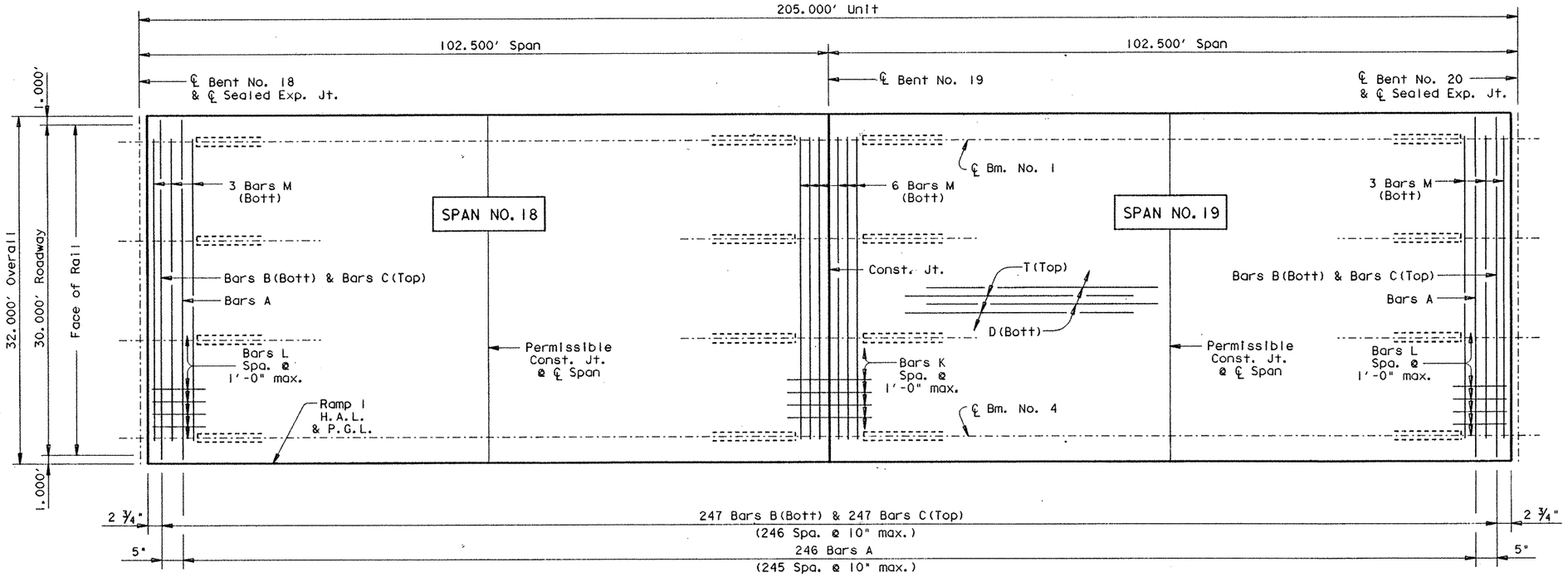

PLAN

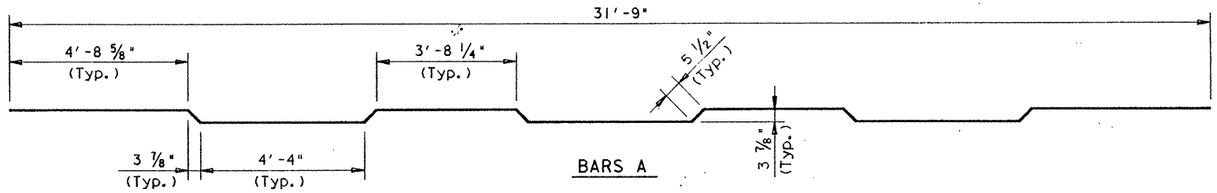

BARS A

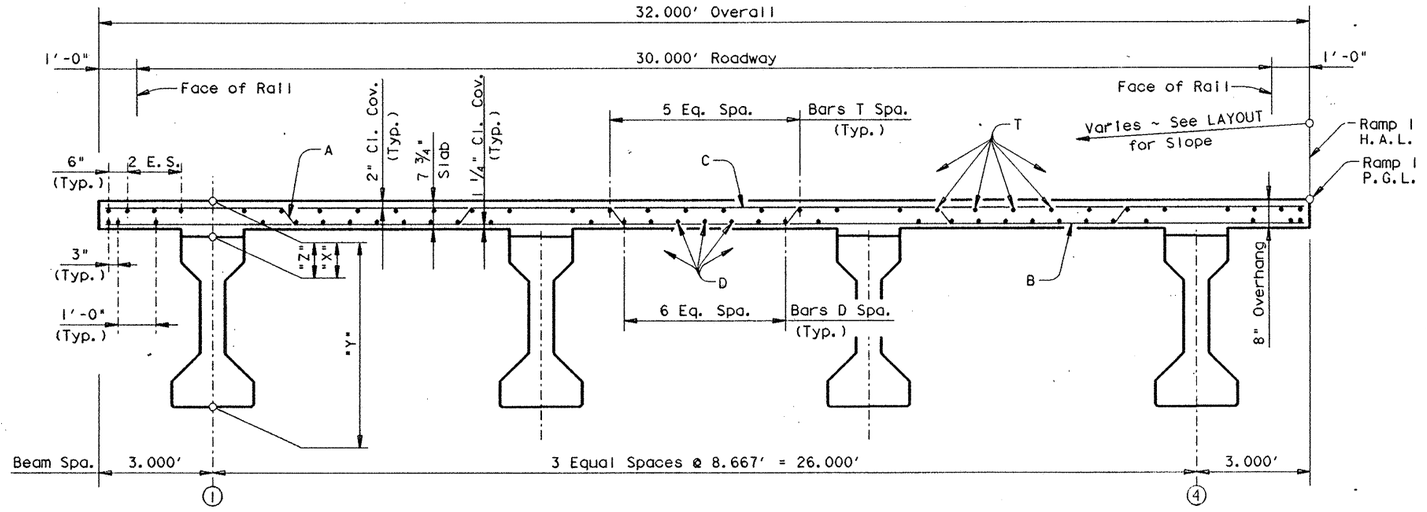

TRANSVERSE SECTION

TABLE OF SECTION DEPTHS

Span	Beams	"X" at ℄ Brg.	"Y" at ℄ Brg.	"Z" at ℄ Span *
#18	#1	8 1/4"	5'-2 1/4"	9 1/8"
	#2	8 1/4"	5'-2 1/4"	8 3/8"
	#3	8 3/4"	5'-2 3/4"	8 1/4"
	#4	9 1/2"	5'-3 1/2"	8 3/8"
#19	ALL	9 1/2"	5'-3 1/2"	8 1/8"

* Theoretical dimension

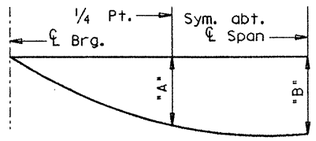

Span	"A"	"B"
ALL	0.077'	0.109'

NOTE: Deflections shown are due to cast-in-place concrete only. (E_c = 5 X 10^6 psi)

DEAD LOAD DEFLECTION DIAGRAM

9-16-91

TABLE OF ESTIMATED QUANTITIES

Bar	No.	Size	Length	Weight
A	246	# 5	32'- 7"	8360
B	247	# 4	31'- 9"	5239
C	247	# 5	31'- 9"	8179
D	33	# 5	209'- 0" ▲	7194
K	31	# 4	6'- 4"	131
L	62	# 4	3'- 0"	124
M	12	# 5	29'- 9"	372
T	32	# 4	208'- 3" ◩	4452
Reinforcing Steel			Lb	⌗ 34051
Prestr. Conc. Bm. ~ Ty. IV			LF	⊕ 787.34

Span	Reinf. Conc. Slab ~ SF	Class 'S' Conc. ~ CY	
		⌗ Diaf.	⌗ Slab
# 18	3280	——	80.9
# 19	3280	——	81.0
Total	6560	⌗	161.9

⌗ For contractor's information only.

▲ Length shown includes 3 ~ 1'-5 " min. laps.

◩ Length shown includes 3 ~ 1'-2 " min. laps.

⊕ Length shown is bottom flange length with adjustments made for beam slope.

GENERAL NOTES:

Designed according to A.A.S.H.T.O. 1989 Standard Specifications.

Design fc = 1200 p.s.i.

See GpC (SPL) sheet for details not shown.

For Drain Locations see Bridge Layout. For Drain Details see Bridge Drain Details Sheet.

HS 20 LOADING

STATE DEPARTMENT OF HIGHWAYS AND PUBLIC TRANSPORTATION

UNIT NO. 7, RAMP I

205.00' PRESTRESSED CONCRETE BEAM UNIT (102.50' - 102.50')

US 83/281 INTERCHANGE

D45350A: : ZFA2: [3551001]4376PPB02.DGN	PREPARED BY AND FOR USE OF TEXAS SDH&PT						
ORIGINAL DRAWING DATE: JUNE 1990	STATE DISTRICT	FEDERAL REGION	FEDERAL AID PROJECT *				SHEET
DN.: LMW REVISIONS	21	6	NH 92(3)M				262
CK.: KBA	COUNTY			CONTROL	SECTION	JOB	HIGHWAY
DN.: PSR	HIDALGO			0039	17	097	US 83/281
CK.: LMW							

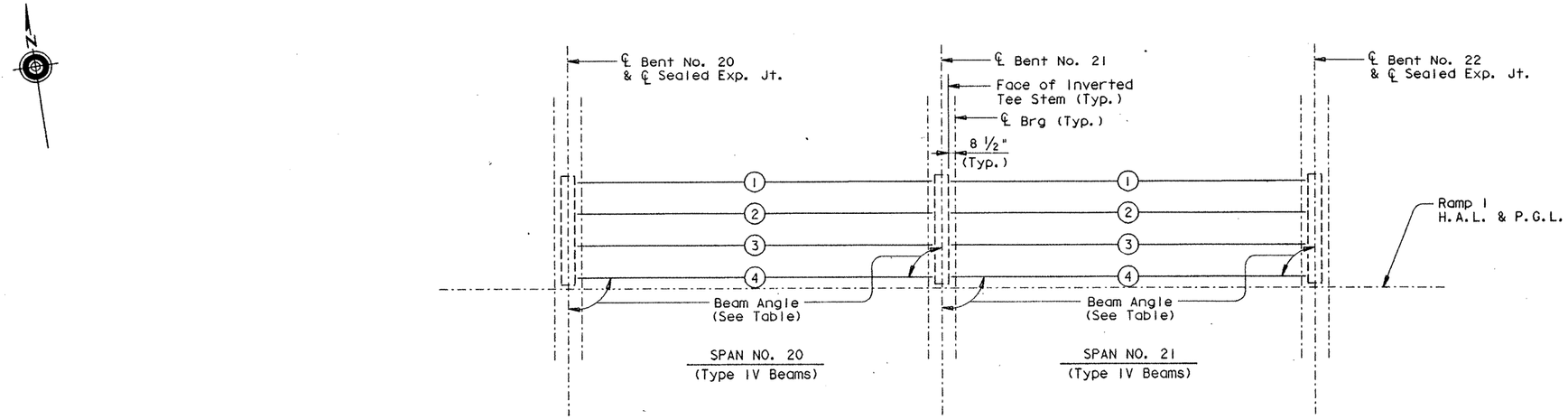

BEAM LAYOUT

BENT REPORT

BENT NO.20 (N 8 28 13.00 E)
DISTANCE BETWEEN STATION LINE AND BEAM I 29.000 L

		BEAM SPAC. (C.L. BENT)	BEAM ANGLE D	M	S
SPAN20	BEAM I	0.000	90	0	0
	BEAM 2	8.667	90	0	0
	BEAM 3	8.667	90	0	0
	BEAM 4	8.667	90	0	0
	TOTAL	26.000			

BENT NO.21 (N 8 28 13.00 E)
DISTANCE BETWEEN STATION LINE AND BEAM I 29.000 L

		BEAM SPAC. (C.L. BENT)	BEAM ANGLE D	M	S
SPAN20	BEAM I	0.000	90	0	0
	BEAM 2	8.667	90	0	0
	BEAM 3	8.667	90	0	0
	BEAM 4	8.667	90	0	0
	TOTAL	26.000			
SPAN21	BEAM I	0.000	90	0	0
	BEAM 2	8.667	90	0	0
	BEAM 3	8.667	90	0	0
	BEAM 4	8.667	90	0	0
	TOTAL	26.000			

BENT NO.22 (N 8 28 13.00 E)
DISTANCE BETWEEN STATION LINE AND BEAM I 29.000 L

		BEAM SPAC. (C.L. BENT)	BEAM ANGLE D	M	S
SPAN21	BEAM I	0.000	90	0	0
	BEAM 2	8.667	90	0	0
	BEAM 3	8.667	90	0	0
	BEAM 4	8.667	90	0	0
	TOTAL	26.000			

BEAM REPORT

BEAM REPORT, SPAN20

	HORIZONTAL DISTANCE C-C BENT	C-C BRG.	TRUE DISTANCE BOT. BM. FLG.
BEAM I	102.500	97.333	98.417
BEAM 2	102.500	97.333	98.417
BEAM 3	102.500	97.333	98.417
BEAM 4	102.500	97.333	98.417

BEAM REPORT, SPAN21

	HORIZONTAL DISTANCE C-C BENT	C-C BRG.	TRUE DISTANCE BOT. BM. FLG.
BEAM I	102.500	97.333	98.417
BEAM 2	102.500	97.333	98.417
BEAM 3	102.500	97.333	98.417
BEAM 4	102.500	97.333	98.417

HS 20 LOADING

STATE OF TEXAS
MARK J. BLOSCHOCK
52996
REGISTERED
PROFESSIONAL ENGINEER

9-16-91

STATE DEPARTMENT OF HIGHWAYS
AND PUBLIC TRANSPORTATION

BEAM LAYOUT
UNIT NO. 8, RAMP I

US 83/281 INTERCHANGE

D45350A: ZFA2: [355100]4379BLY03.DGN	PREPARED BY AND FOR USE OF TEXAS SDH&PT					
ORIGINAL DRAWING DATE: JANUARY 1991	STATE DISTRICT	FEDERAL REGION	FEDERAL AID PROJECT			SHEET
DN.: LMW / CK.: KBA / DW.: PSR / CK.: CRW — REVISIONS	21	6	NH 92( )M			263
	COUNTY		CONTROL	SECTION	JOB	HIGHWAY
	HIDALGO		0039	17	097	US 83/281

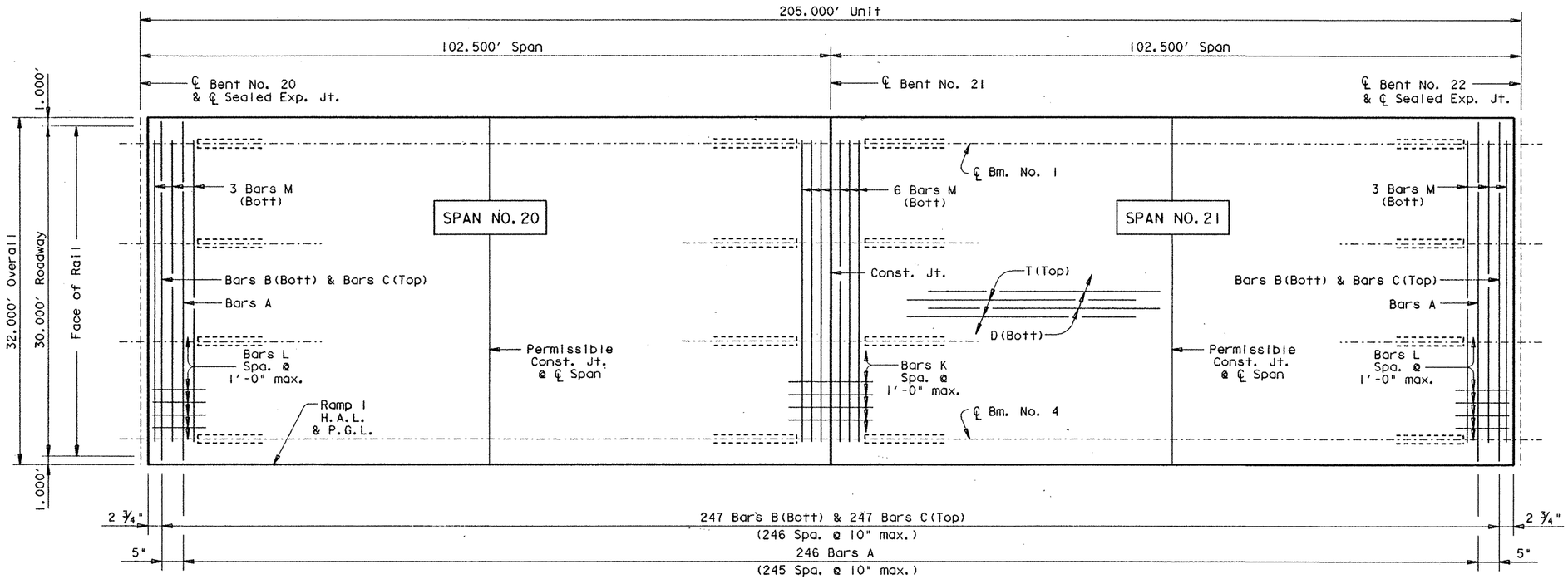

PLAN

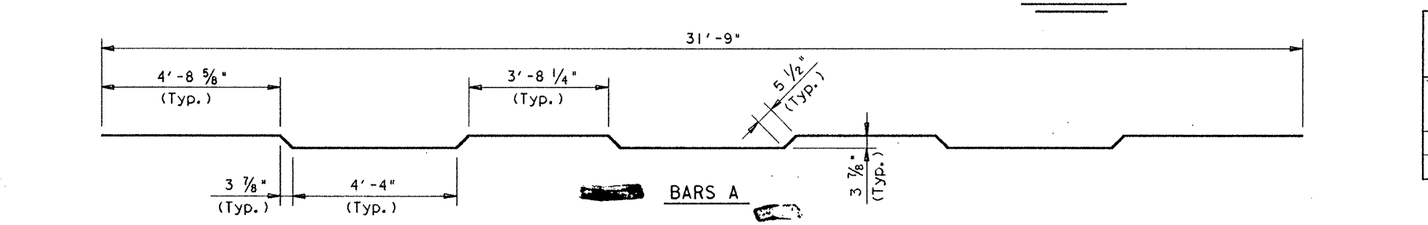

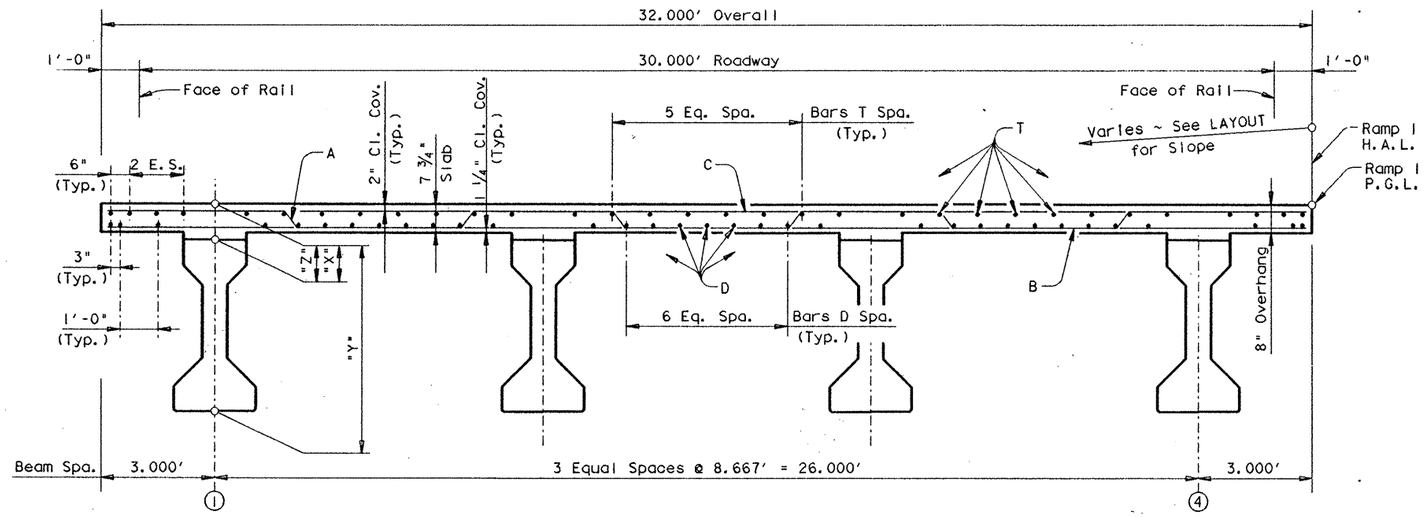

TRANSVERSE SECTION

TABLE OF ESTIMATED QUANTITIES

Bar	No.	Size	Length	Weight
A	246	# 5	32′- 7"	8360
B	247	# 4	31′- 9"	5239
C	247	# 5	31′- 9"	8179
D	33	# 5	209′- 0" ▲	7194
K	31	# 4	6′- 4"	131
L	62	# 4	3′- 0"	124
M	12	# 5	29′- 9"	372
T	32	# 4	208′- 3" ◩	4452

Reinforcing Steel	Lb	⁜ 34051
Prestr. Conc. Bm. ~ Ty. IV	LF	⊕ 787.34

Span	Reinf. Conc. Slab ~ SF	Class 'S' Conc. ~ CY ⁜ Diaf.	⁜ Slab
# 20	3280	——	81.0
# 21	3280	——	81.0
Total	6560	⁜	162.0

⁜ For contractor's information only.

▲ Length shown includes 3 ~ 1′-5 " min. laps.

◩ Length shown includes 3 ~ 1′-2 " min. laps.

⊕ Length shown is bottom flange length with adjustments made for beam slope.

TABLE OF SECTION DEPTHS

Span	"X" at ℄ Brg.	"Y" at ℄ Brg.	"Z" at ℄ Span ✳
ALL	9 1/2"	5′-3 1/2"	8 1/8"

✳ Theoretical dimension

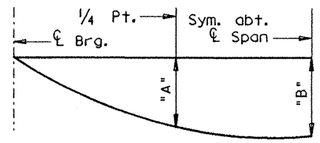

Span	"A"	"B"
ALL	0.077′	0.109′

NOTE: Deflections shown are due to cast-in-place concrete only. (E_c = 5 X 10^6 psi)

DEAD LOAD DEFLECTION DIAGRAM

STATE OF TEXAS
MARK J. BLOSCHOCK
52996
REGISTERED PROFESSIONAL ENGINEER

Mark J. Bloschock 9-16-91

GENERAL NOTES:

Designed according to A.A.S.H.T.O. 1989 Standard Specifications.

Design fc = 1200 p.s.i.

See GpC (SPL) sheet for details not shown.

For Drain Locations see Bridge Layout. For Drain Details see Bridge Drain Details Sheet.

HS 20 LOADING

STATE DEPARTMENT OF HIGHWAYS AND PUBLIC TRANSPORTATION

UNIT NO. 8, RAMP I

205.00′ PRESTRESSED CONCRETE BEAM UNIT (102.50′ - 102.50′) US 83/281 INTERCHANGE

D45350A1 ZFA2 [3551001]4376PPB03.DGN	PREPARED BY AND FOR USE OF TEXAS SDH&PT						
ORIGINAL DRAWING DATE: JUNE 1990	STATE DISTRICT: 21	FEDERAL REGION: 6	FEDERAL AID PROJECT: NH 92( )M				SHEET: 264
DR.: LMW	REVISIONS	COUNTY: HIDALGO		CONTROL: 0039	SECTION: 17	JOB: 097	HIGHWAY: US 83/281
CK.: KBA							
DW.: PSR							
CK.: LMW							

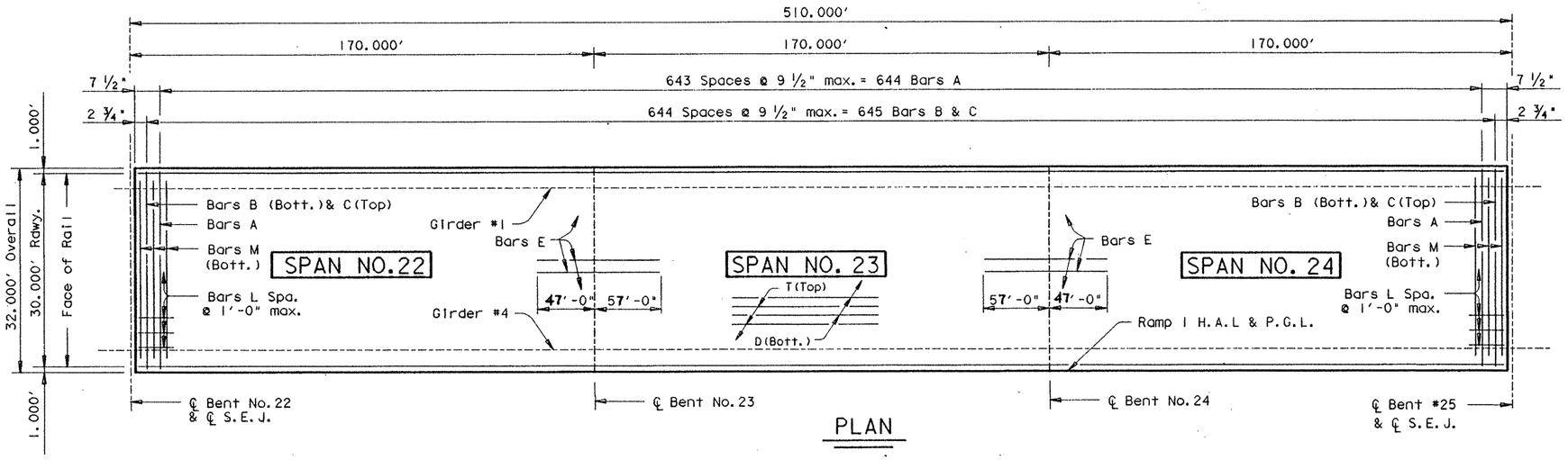

PLAN

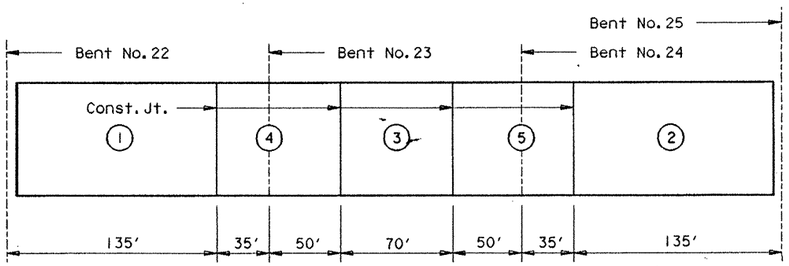

CONCRETE PLACING SEQUENCE

At Contractors option, Continuous placement [redacted] used. For Continuous placement, the minimum rate of Concrete placing and Finishing [redacted] not be less than 30 linear feet of bridge deck per hour.

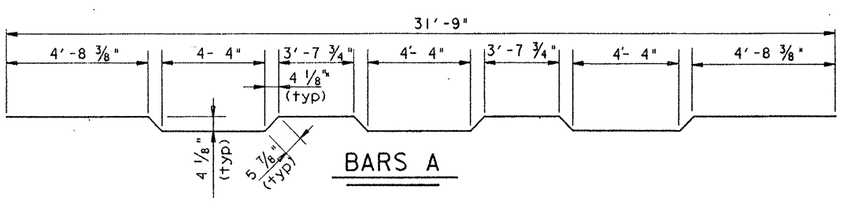

BARS A

TABLE OF ESTIMATED QUANTITIES

Bar	No.	Size	Length	Weight
A	644	# 5	32'- 7"	21886
B	645	# 4	31'- 9"	13680
C	645	# 5	31'- 9"	21359
D_{1-33}	33	# 5	521'-0 "Av◩	17932
E	54	# 6	105'- 9" ▲	**8577**
L	62	# 4	3'- 0"	124
M	6	# 5	30'- 9"	192
T_{1-32}	32	# 4	519'- 0"Av◪	11094

Reinforcing Steel	Lb	⁜ 94**844**
Str. Steel (HS) *	Lb	550800
Str. Steel (HYC) **	Lb	31700

Span	Reinf. Conc. Slab ~ SF	Class "S" Conc. ~ CY Slab ⁜
# 22	5440	146.6
# 23	5440	146.6
# 24	5440	146.6
Total	16320	439.8

⁜ For contractor's information only.
◩ Length shown includes 8 ~ 1'-5" min. lap.
◪ Length shown includes 8 ~ 1'-2" min. lap.
▲ Length shown includes 1 ~ 1'-9" min. lap.
* Girder Flanges & Webs
** Diaframs, Stiffeners and Stud Connectors

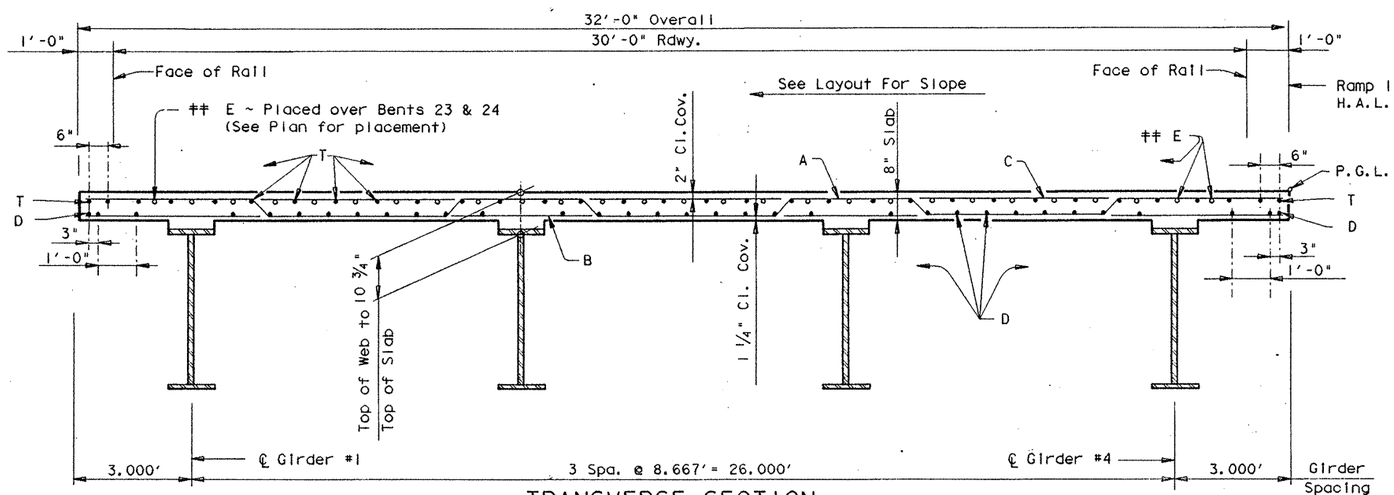

TRANSVERSE SECTION

REV. 3-30-92

GENERAL NOTES:

Designed according to A.A.S.H.T.O. 1989 Standard Specifications.

Design fc = 1200 p.s.i.

The use of Precast Concrete Panels Shall not be permitted.

See GpC (SPL) for Details not shown.

For Drain Locations see Bridge Layout. For Drain Details see Bridge Drain Details Sheet.

HS 20 LOADING

Sheet 1 of 3

STATE OF TEXAS
MARK J. BLOSCHOCK
52996
REGISTERED PROFESSIONAL ENGINEER
9-16-91

STATE DEPARTMENT OF HIGHWAYS AND PUBLIC TRANSPORTATION

UNIT NO. 9, RAMP 1

510.00' PLATE GIRDER UNIT (170.00'-170.00'-170.00')

US 83/281 INTERCHANGE

D45350A=ZFAI=(355163)4376SFC04.DGN	PREPARED BY AND FOR USE OF TEXAS SDH&PT					
ORIGINAL DRAWING DATE= Feb 1991	STATE DISTRICT	FEDERAL REGION	FEDERAL AID PROJECT			SHEET
DR.= MAS	REVISIONS	21	6	NH 92( )M		265
CK.= GAF		COUNTY		CONTROL	SECTION	JOB	HIGHWAY
DR.= TKW		HIDALGO		0039	17	097	83/281
CK.= MAS							

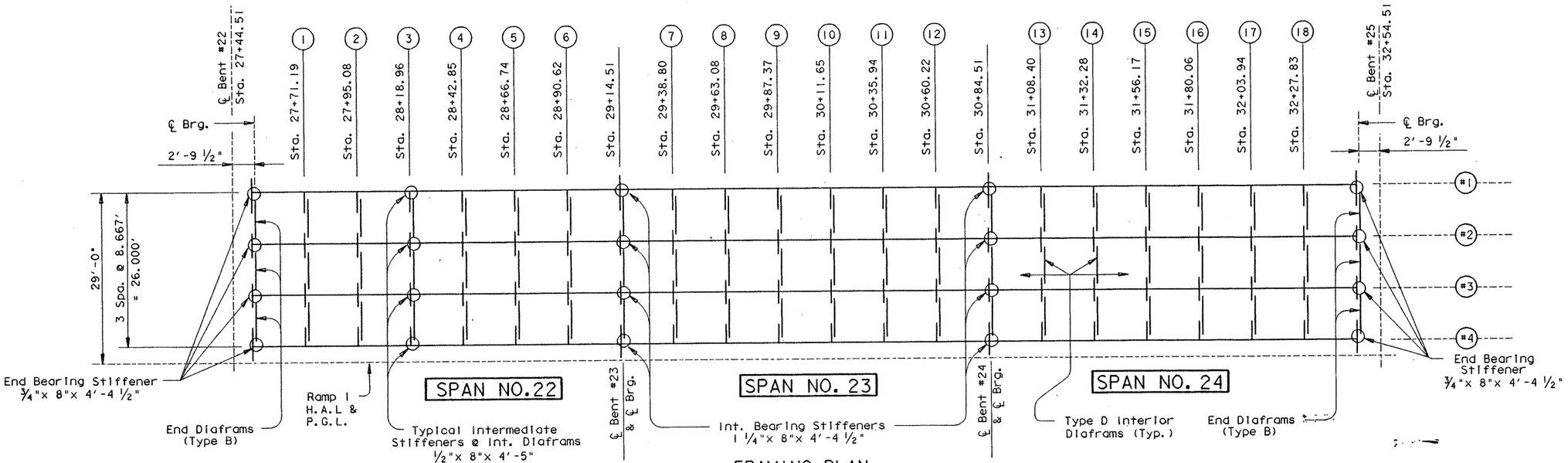

FRAMING PLAN

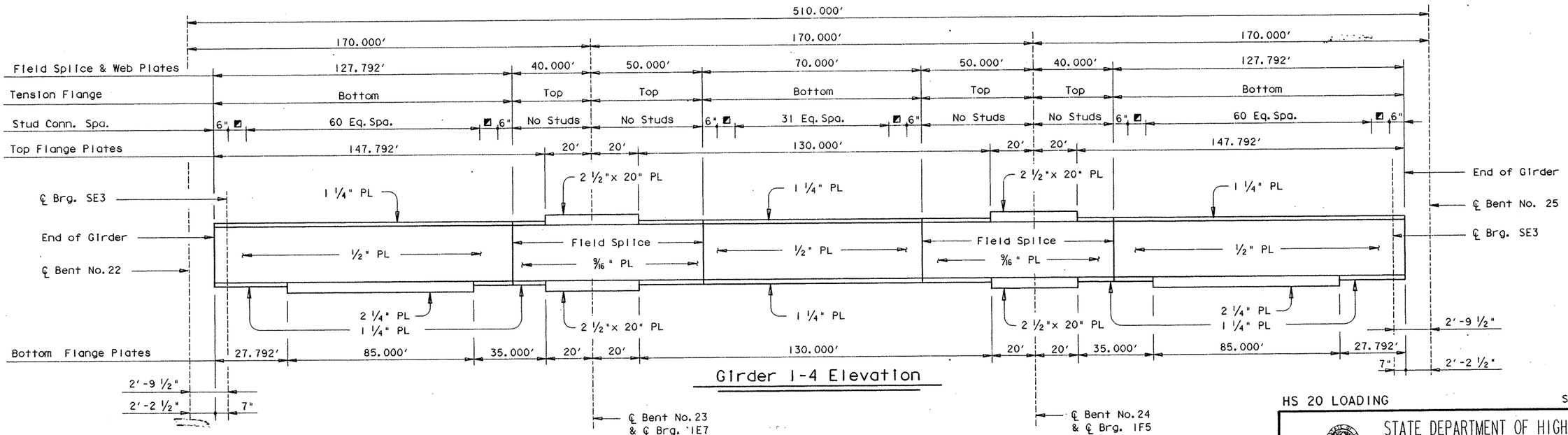

Girder 1-4 Elevation

All Web Plates are 54" high and are H.S. Steel
All Flange Plates are 18" wide (except where noted) and are H.S. Steel.

◩ 8 E.S. = 4'-0"

STATE OF TEXAS
MARK J. BLOSCHOCK
52996
REGISTERED PROFESSIONAL ENGINEER
9-16-91

HS 20 LOADING

Sheet 2 of 3

STATE DEPARTMENT OF HIGHWAYS AND PUBLIC TRANSPORTATION

UNIT NO. 9, RAMP I

510.00' PLATE GIRDER UNIT (170.00'-170.00'-170.00')

US 83/281 INTERCHANGE

D45350A: ZFAI: (355163)4376SFC04.DGN	PREPARED BY AND FOR USE OF TEXAS SDH&PT						
ORIGINAL DRAWING DATE: Feb 1991	REVISIONS	STATE DISTRICT	FEDERAL REGION	FEDERAL AID PROJECT			SHEET
DR.: MAS		21	6	NH 92C)M			266
CK.: GAF		COUNTY		CONTROL	SECTION	JOB	HIGHWAY
DW.: TKW		HIDALGO		0039	17	097	83/281
CK.: MAS							

WEB CUTTING # TABLE

DIAFRAM		"Y"
SPAN 22	℄ Brg.	6.122
	1	6.475
	2	6.726
	3	6.824
	4	6.742
	5	6.503
	6	6.174
	℄ Brg.	5.862
SPAN 23	7	5.616
	8	5.423
	9	5.206
	10	4.915
	11	4.549
	12	4.160
	℄ Brg.	3.824
SPAN 24	13	3.563
	14	3.319
	15	2.985
	16	2.495
	17	1.824
	18	0.980
	℄ Brg.	0.000

Values apply to all girders.

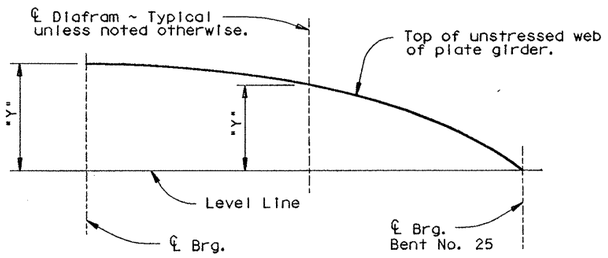

WEB CUTTING DIAGRAM

Note: Web [redacted] cut on straight lines between ordinates or to a smooth curve at the fabricator's option. Values listed include all dead load deflection's and vertical curve corrections.

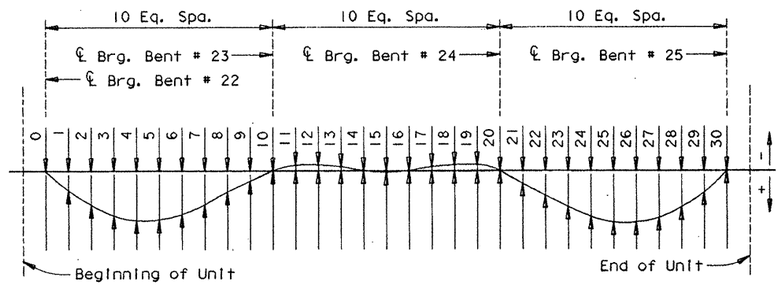

DEAD LOAD DEFLECTION DIAGRAM

Deflections shown are due to cast-in-place concrete slab only.

TABLE OF DEAD LOAD DEFLECTIONS

SPAN 22	0	0.000'
	1	0.154'
	2	0.281'
	3	0.370'
	4	0.413'
	5	0.409'
	6	0.360'
	7	0.276'
	8	0.171'
	9	0.072'
	10	0.000'
SPAN 23	11	-0.037'
	12	-0.041'
	13	-0.022'
	14	-0.001'
	15	0.007'
	16	-0.001'
	17	-0.022'
	18	-0.041'
	19	-0.037'
	20	0.000'
SPAN 24	21	0.072'
	22	0.171'
	23	0.276'
	24	0.360'
	25	0.409'
	26	0.413'
	27	0.370'
	28	0.281'
	29	0.154'
	30	0.000'

Values apply to all girders.

PLATE GIRDER FABRICATION NOTE:

Girder tension flanges and webs are classified as main menbers and [redacted] conform to Item 442.3(1).

Except at changes in section, shop or field flange and web splices in plate girders [redacted] located as desirable to optimize plate lengths and erection procedures, except that splices [redacted] not [redacted] allowed where a 40' or less unspliced length would suffice; neither [redacted] tension flange splices [redacted] allowed within .05S either side of interior bearings, within .10S either side of the centerlines of the interior span, nor within the range between .30S and .50S from the end bearings. (S=length c.c. Bearing of Span in which the splice is made).

Flange and Web Splices [redacted] made by full penetration groove welds in accordance with the Item "Steel Structures".

STATE OF TEXAS
MARK J. BLOSCHOCK
52996
REGISTERED PROFESSIONAL ENGINEER

9-16-91

HS 20 LOADING

Sheet 3 of 3

STATE DEPARTMENT OF HIGHWAYS AND PUBLIC TRANSPORTATION

UNIT NO. 9, RAMP I

510.00' PLATE GIRDER UNIT
(170.00'-170.00'-170.00')

US 83/281 INTERCHANGE

D45350A: ZFA1: [355163]4376SFC04.DGN	PREPARED BY AND FOR USE OF TEXAS SDH&PT					
ORIGINAL DRAWING DATE: Feb 1991	STATE DISTRICT	FEDERAL REGION	FEDERAL AID PROJECT			SHEET
DN.: MAS	21	6	NH 92(2)M			267
CK.: GAF	COUNTY		CONTROL	SECTION	JOB	HIGHWAY
DW.: TKW	HIDALGO		0039	17	097	83/281
CK.: MAS						

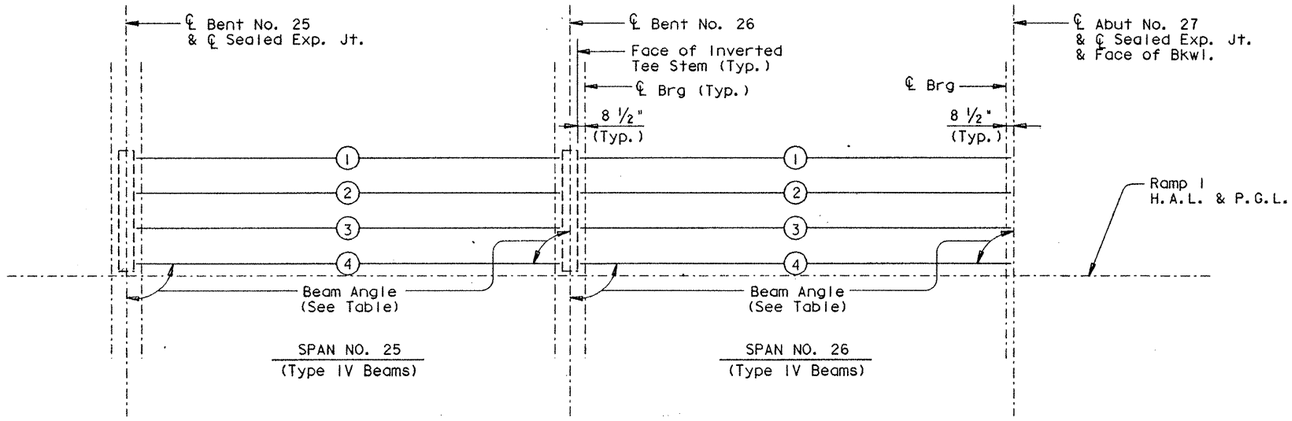

BEAM LAYOUT

BENT REPORT

BENT NO.25 (N 8 28 13.00 E)
DISTANCE BETWEEN STATION LINE AND BEAM 1 29.000 L

		BEAM SPAC. (C.L. BENT)	BEAM ANGLE D	M	S
SPAN25	BEAM 1	0.000	90	0	0
	BEAM 2	8.667	90	0	0
	BEAM 3	8.667	90	0	0
	BEAM 4	8.667	90	0	0
	TOTAL	26.000			

BENT NO.26 (N 8 28 13.00 E)
DISTANCE BETWEEN STATION LINE AND BEAM 1 29.000 L

		BEAM SPAC. (C.L. BENT)	BEAM ANGLE D	M	S
SPAN25	BEAM 1	0.000	90	0	0
	BEAM 2	8.667	90	0	0
	BEAM 3	8.667	90	0	0
	BEAM 4	8.667	90	0	0
	TOTAL	26.000			
SPAN26	BEAM 1	0.000	90	0	0
	BEAM 2	8.667	90	0	0
	BEAM 3	8.667	90	0	0
	BEAM 4	8.667	90	0	0
	TOTAL	26.000			

BENT NO.27 (N 8 28 13.00 E)
DISTANCE BETWEEN STATION LINE AND BEAM 1 29.000 L

		BEAM SPAC. (C.L. BENT)	BEAM ANGLE D	M	S
SPAN26	BEAM 1	0.000	90	0	0
	BEAM 2	8.667	90	0	0
	BEAM 3	8.667	90	0	0
	BEAM 4	8.667	90	0	0
	TOTAL	26.000			

BEAM REPORT

BEAM REPORT, SPAN25

	HORIZONTAL DISTANCE C-C BENT	C-C BRG.	TRUE DISTANCE BOT. BM. FLG.
BEAM 1	110.000	104.833	105.971
BEAM 2	110.000	104.833	105.971
BEAM 3	110.000	104.833	105.971
BEAM 4	110.000	104.833	105.971

BEAM REPORT, SPAN26

	HORIZONTAL DISTANCE C-C BENT	C-C BRG.	TRUE DISTANCE BOT. BM. FLG.
BEAM 1	110.000	106.708	107.866
BEAM 2	110.000	106.708	107.866
BEAM 3	110.000	106.708	107.866
BEAM 4	110.000	106.708	107.866

HS 20 LOADING

STATE OF TEXAS
MARK J. BLOSCHOCK
52996
REGISTERED
PROFESSIONAL ENGINEER

9-16-91

STATE DEPARTMENT OF HIGHWAYS
AND PUBLIC TRANSPORTATION

BEAM LAYOUT
UNIT NO. 10, RAMP I

US 83/281 INTERCHANGE

D45350A: ZFA2: [355100]4379BLY03.DGN	PREPARED BY AND FOR USE OF TEXAS SDH&PT						
ORIGINAL DRAWING DATE: JANUARY 1991	STATE DISTRICT	FEDERAL REGION	FEDERAL AID PROJECT				SHEET
DR.: LMW REVISIONS	21	6	NH 92(3)M				268
CK.: KBA	COUNTY			CONTROL	SECTION	JOB	HIGHWAY
DW.: PSR	HIDALGO			0039	17	097	US 83/281
CK.: CRW							

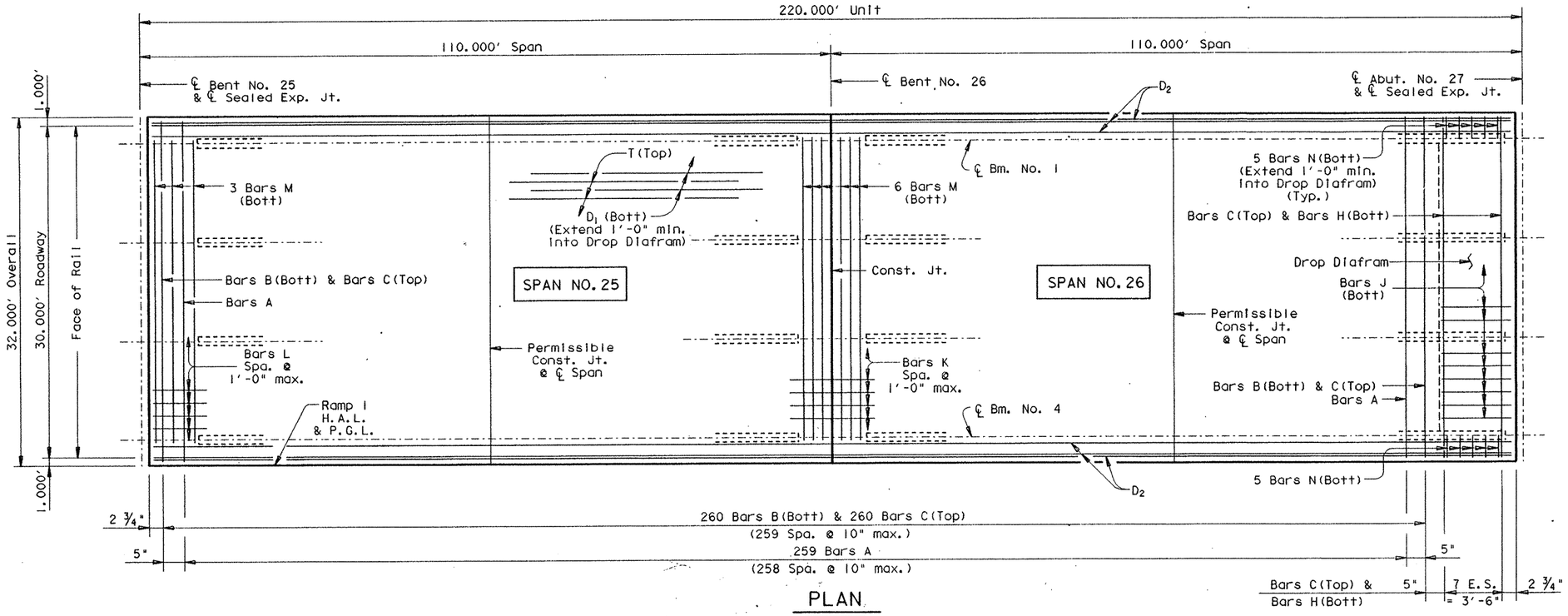

PLAN

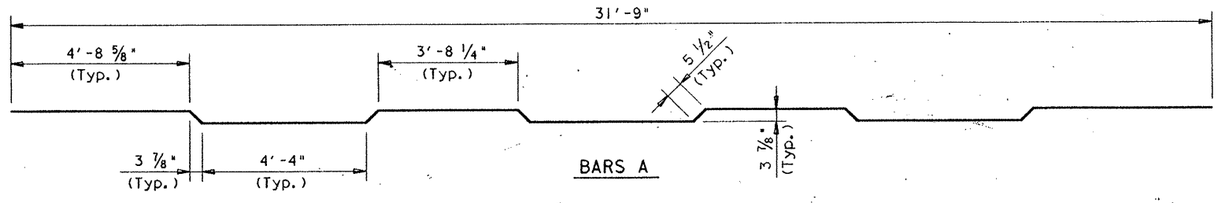

BARS A

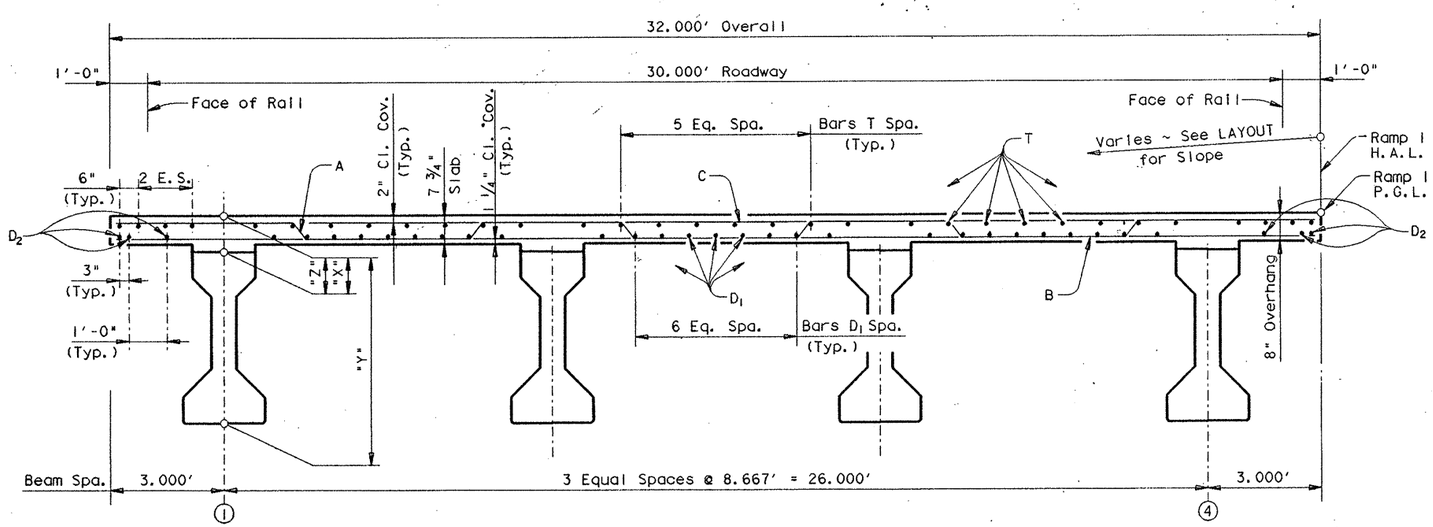

TRANSVERSE SECTION

TABLE OF SECTION DEPTHS

Span	"X" at ℄ Brg.	"Y" at ℄ Brg.	"Z" at ℄ Span *
#25	9 1/4"	5'-3 1/4"	8 1/4"
#26	10"	5'-4"	8 1/8"

* Theoretical dimension

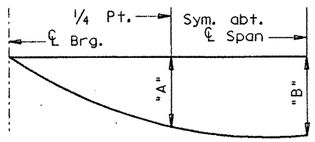

Span	"A"	"B"
#25	0.104'	0.146'
#26	0.112'	0.157'

NOTE: Deflections shown are due to cast-in-place concrete only. (E_c = 5 X 10⁶ psi)

DEAD LOAD DEFLECTION DIAGRAM

STATE OF TEXAS
MARK J. BLOSCHOCK
52996
REGISTERED PROFESSIONAL ENGINEER

9-16-91

TABLE OF ESTIMATED QUANTITIES

Bar	No.	Size	Length	Weight
A	259	# 5	32'- 7"	8802
B	260	# 4	31'- 9"	5514
C	268	# 5	31'- 9"	8875
D_1	27	# 5	221'- 2" ▲	6228
D_2	6	# 5	224'- 0" ▲	1402
H	8	# 5	31'- 9"	265
J	24	# 5	3'- 6"	88
K	31	# 4	6'- 4"	131
L	31	# 4	3'- 0"	62
M	9	# 5	29'- 9"	279
N	10	# 5	3'- 4"	40
T	32	# 4	223'- 2" ◪	4470

Reinforcing Steel	Lb	⋕ 36156
Prestr. Conc. Bm. ~ Ty. IV	LF	⋕ 855.35

Span	Reinf. Conc. Slab ~ SF	Class "S" Conc. ~ CY ⋕ Diaf.	⋕ Slab
# 25	3520	——	86.8
# 26	3520	1.0	87.2
Total	7040	⋕ 175.0	

⋕ For contractor's information only.

▲ Length shown includes 3 ~ 1'-5 " min. laps.

◪ Length shown includes 3 ~ 1'-2 " min. laps.

⋕ Length shown is bottom flange length with adjustments made for beam slope.

GENERAL NOTES:

Designed according to A.A.S.H.T.O. 1989 Standard Specifications.

Design fc = 1200 p.s.i.

See GpC (SPL) sheet for details not shown.

See GpA-2 (MOD) sheet for Beam Blockout details not shown.

For Drain Locations see Bridge Layout. For Drain Details see Bridge Drain Details Sheet.

HS 20 LOADING

STATE DEPARTMENT OF HIGHWAYS AND PUBLIC TRANSPORTATION

UNIT NO. 10, RAMP I
220.00' PRESTRESSED CONCRETE BEAM UNIT (110.00' - 110.00')
US 83/281 INTERCHANGE

D45350A1 • ZFA2 • (3551001)4376PPB04.DGN	PREPARED BY AND FOR USE OF TEXAS SDH&PT						
ORIGINAL DRAWING DATE: JUNE 1990	STATE DISTRICT	FEDERAL REGION	FEDERAL AID PROJECT				SHEET
DR.: LMW REVISIONS	21	6	NH 92 ( ) M				269
CK.: KBA	COUNTY			CONTROL	SECTION	JOB	HIGHWAY
DW.: PSR	HIDALGO			0039	17	097	US 83/281
CK.: LMW							

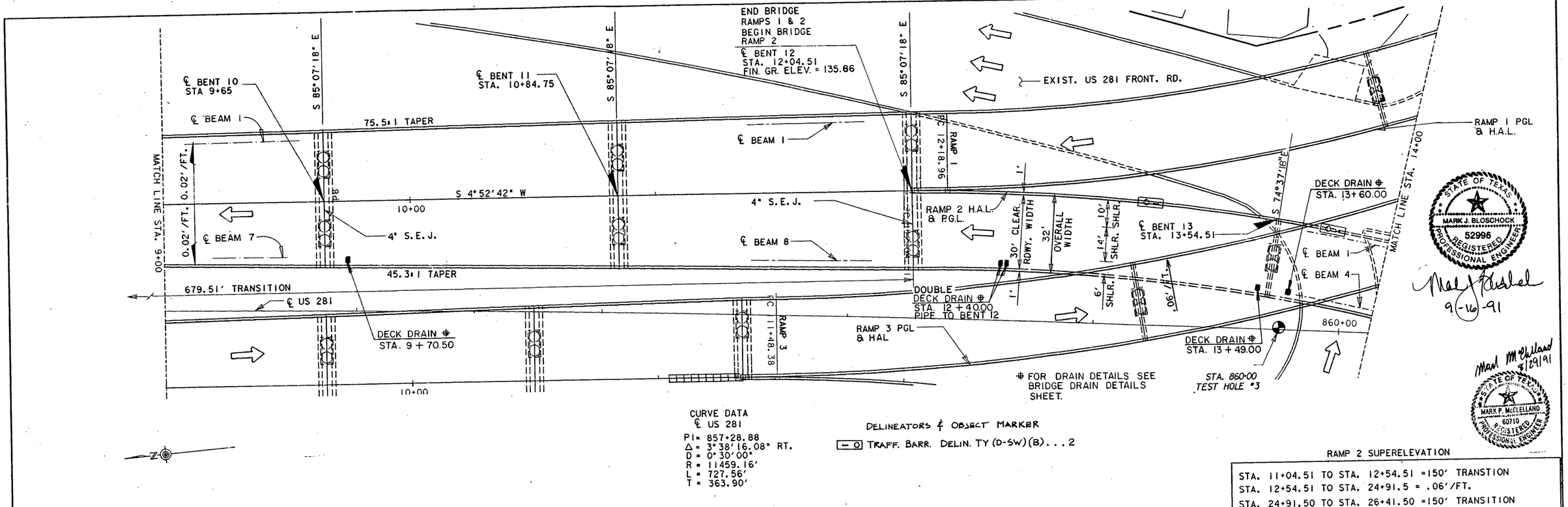

CURVE DATA
℄ US 281
PI = 857+28.88
Δ = 3°38'16.08" RT.
D = 0°30'00"
R = 11459.16'
L = 727.56'
T = 363.90'

DELINEATORS & OBJECT MARKER
TRAFF. BARR. DELIN. TY (D-SW)(B)...2

RAMP 2 SUPERELEVATION

STA. 11+04.51 TO STA. 12+54.51 =150' TRANSTION
STA. 12+54.51 TO STA. 24+91.5 = .06'/FT.
STA. 24+91.50 TO STA. 26+41.50 =150' TRANSITION
TYPE 3 TRANSITION

STATE OF TEXAS
MARK J. BLOSCHOCK
52996
REGISTERED
PROFESSIONAL ENGINEER
9-16-91

STATE OF TEXAS
MARK P. McCLELLAND
60710
REGISTERED
PROFESSIONAL ENGINEER
5/29/91

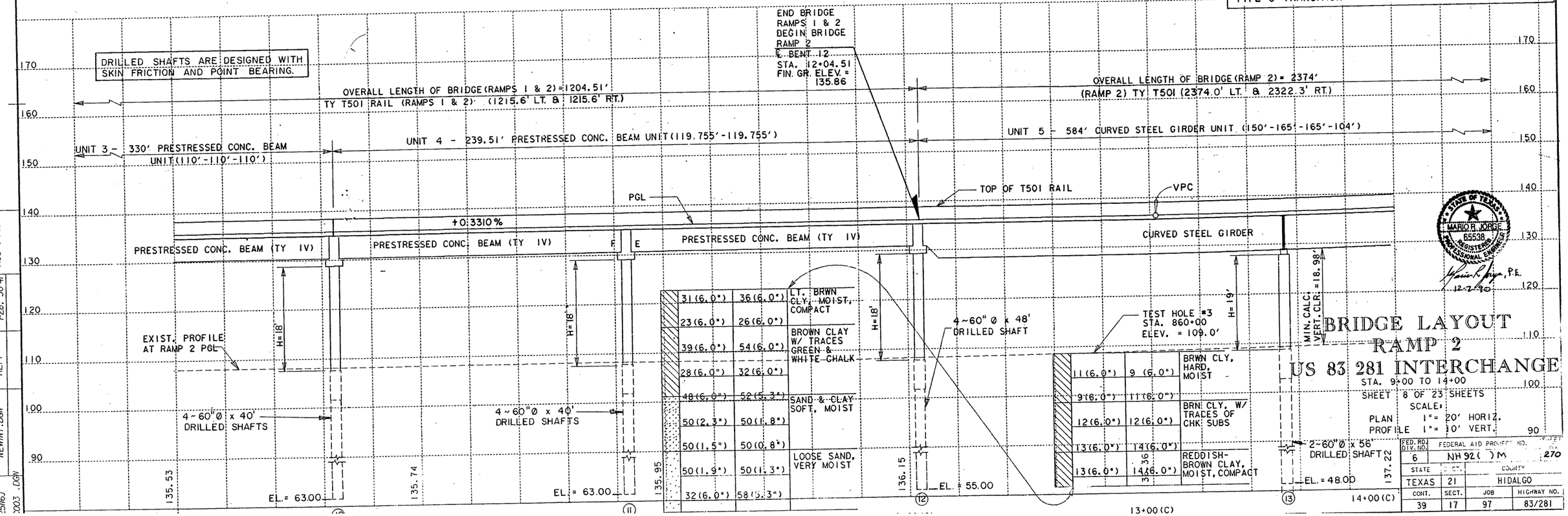

STATE OF TEXAS
MARIO R. JORGE
65538
REGISTERED
PROFESSIONAL ENGINEER
12-2-90

BRIDGE LAYOUT
RAMP 2
US 83 281 INTERCHANGE

STA. 9+00 TO 14+00

SHEET 8 OF 23 SHEETS

SCALE:
PLAN 1" = 20' HORIZ.
PROFILE 1" = 10' VERT.

FED. RD. DIV. NO.	FEDERAL AID PROJECT NO.			SHEET NO.
6	NH 92 ( ) M			270
STATE	DIST.	COUNTY		
TEXAS	21	HIDALGO		
CONT.	SECT.	JOB	HIGHWAY NO.	
39	17	97	83/281	

NAME	REFERENCE FILE	NAMED VIEW	LEVELS	PRF FILE
25IGJ	NEWINT2.DGN	REF2	1-62	RC3 . PRF
003 .DGN	NEWINT.DGN	REF1	1-28, 30-41	

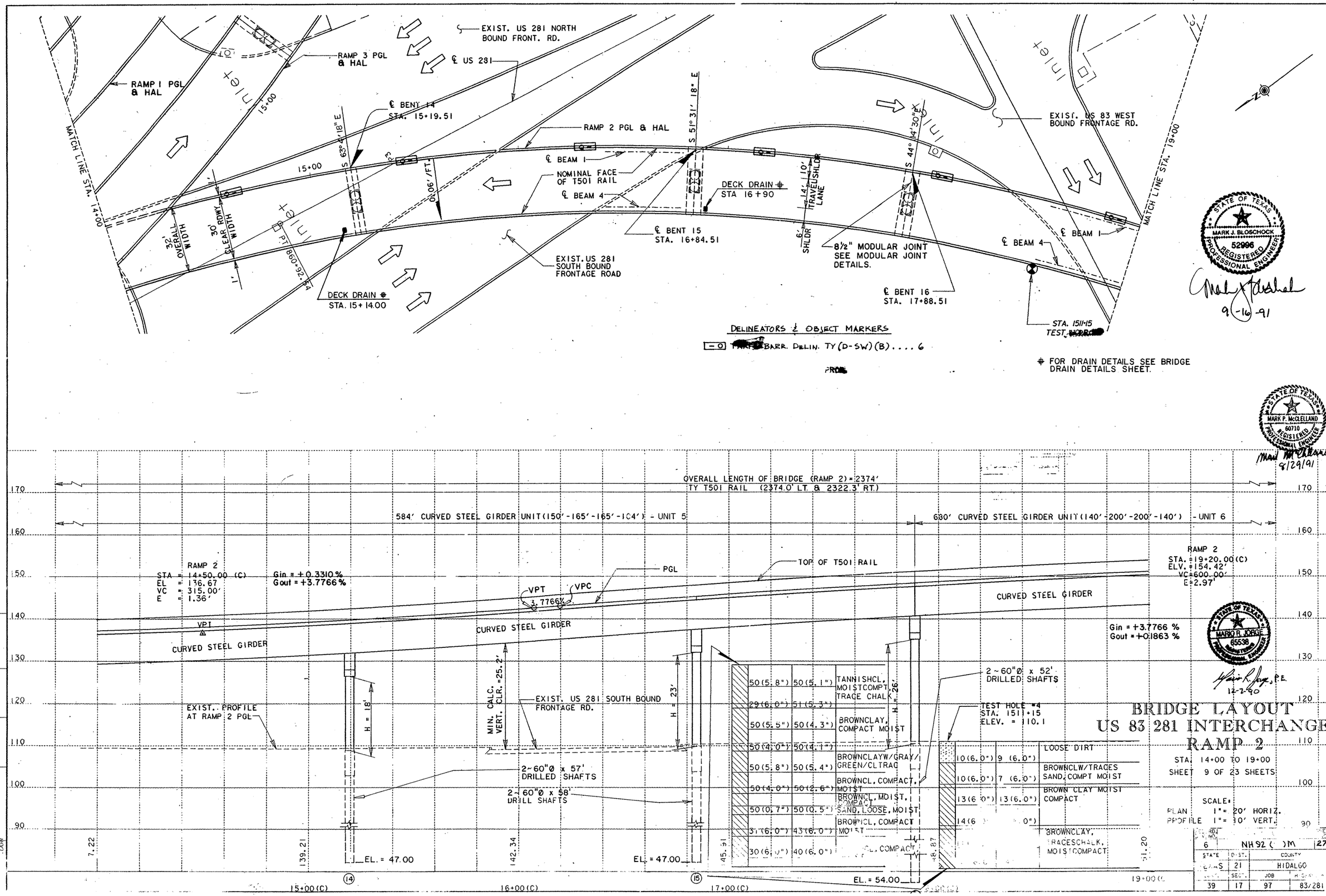

BRIDGE LAYOUT
US 83 281 INTERCHANGE
RAMP 2

STA. 14+00 TO 19+00
SHEET 9 OF 23 SHEETS

SCALE:
PLAN 1" = 20' HORIZ.
PROFILE 1" = 10' VERT.

STATE	DIST.	COUNTY	
6		NH 92 ( )M	271
STATE	DIST.	COUNTY	
TEXAS	21	HIDALGO	
DIST.	SECT.	JOB	HIGHWAY
39	17	97	83/281

STATE OF TEXAS MARK J. BLOSCHOCK 52996 REGISTERED PROFESSIONAL ENGINEER
9-16-91

STATE OF TEXAS MARK P. McCLELLAND 60710 REGISTERED PROFESSIONAL ENGINEER
8/29/91

STATE OF TEXAS MARIO R. JORGE 65538 REGISTERED PROFESSIONAL ENGINEER
12-2-90

NAME	REFERENCE FILE	NAMED VIEW	LS	PRF FILE
67	NEWINT2.DGN	REF2	1-62	RC4 . PRF
.DGN	NEWINT.DGN	REF1	1-28, 30-41	

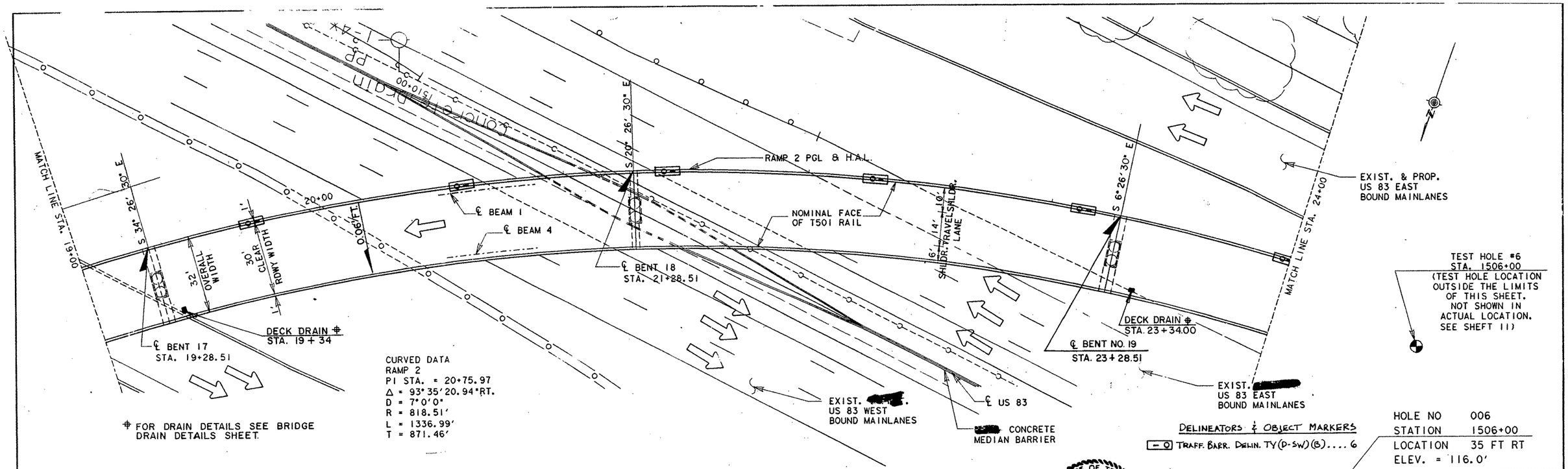

7 (6.0")	5 (6.0")	BRN CLAY, COMPACT, MOIST
9 (6.0")	9 (6.0")	
12 (6.0")	12 (6.0")	
15 (6.0")	15 (6.0")	BRN CLY W/TRACES OF CHK, CMPT, MOI
18 (6.0")	20 (6.0")	
27 (6.0")	33 (6.0")	
37 (6.0")	44 (6.0")	BRN CLY COMPACT, MOIST
47 (6.0")	45 (6.0")	
46 (6.0")	54 (5.6")	
50 (4.8")	50 (4.4")	
50 (3.9")	50 (4.4")	
50 (4.1")	50 (3.6")	WATER-BEARING SAND, CLAY
50 (2.6")	50 (1.3")	SANDY CLAY, MOIST, SLIGHTLY COMPACT
50 (1.4")	50 (0.9")	

STATE OF TEXAS
MARK J. BLOSCHOCK
52996
REGISTERED PROFESSIONAL ENGINEER
9-16-91

STATE OF TEXAS
MARK P. McCLELLAND
60710
REGISTERED PROFESSIONAL ENGINEER
8/29/91

STATE OF TEXAS
MARIO R. JORGE
65536
REGISTERED PROFESSIONAL ENGINEER
12-7-90

BRIDGE LAYOUT
US 83/281 INTERCHANGE
RAMP 2

STA. 19+00 TO 24+00
SHEET 10 OF 23 SHEETS

SCALE:
PLAN 1" = 20' HORIZ.
PROFILE 1" = 10' VERT.

FED. RD. DIV. NO.	FEDERAL AID PROJECT NO.		SHEET NO.
6	NH92( )M		272
STATE	DIST.	COUNTY	
TEXAS	21	HIDALGO	
CONT.	SECT.	JOB	HIGHWAY NO.
39	17	97	83/281

FILE NAME	REFERENCE FILE	NAMED VIEW		PRF FILE
[325116]	NEWINT2.DGN	REF2	1-62	RC5.. PRF
RAMCC05 DGN	NEWINT.DGN	REF1	1-28, 30-41	

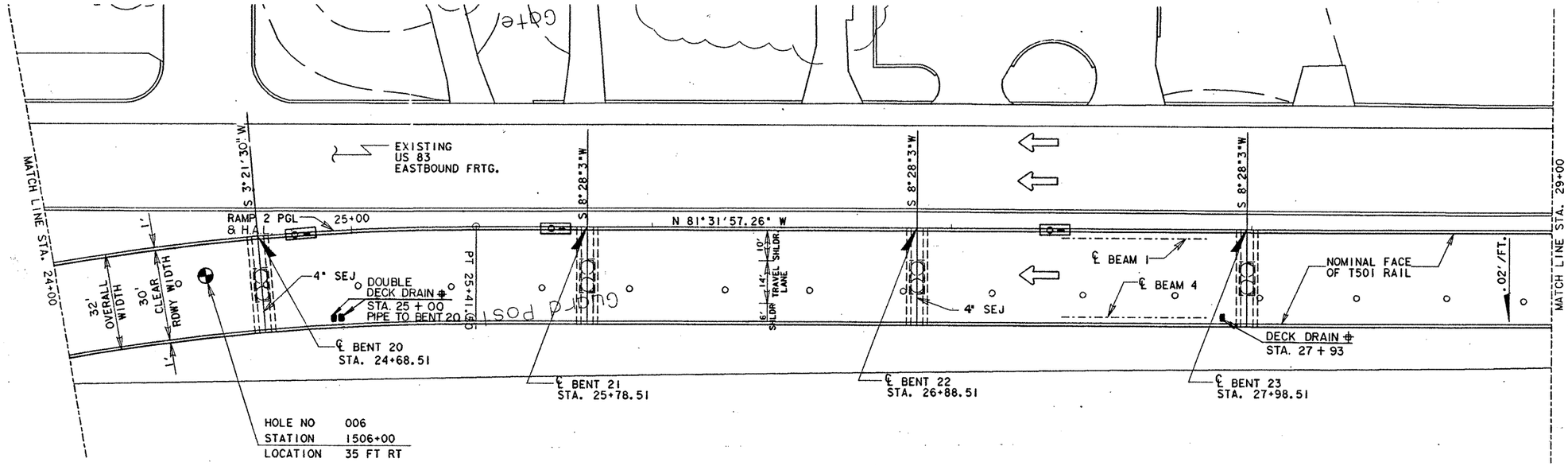

DELINEATORS & OBJECT MARKERS

[-O] TRAFF. BARR. DELIN. TY (D-SW)(B)... 3

⊕ FOR DRAIN DETAILS SEE BRIDGE DRAIN DETAILS SHEET.

RAMP 2 SUPERELEVATION

STA. 11+04.51 TO STA. 12+54.51 =150' TRANSTION
STA. 12+54.51 TO STA. 24+91.5 = .06'/FT.
STA. 24+91.50 TO STA. 26+41.50 =150' TRANSITION
TYPE 3 TRANSITION

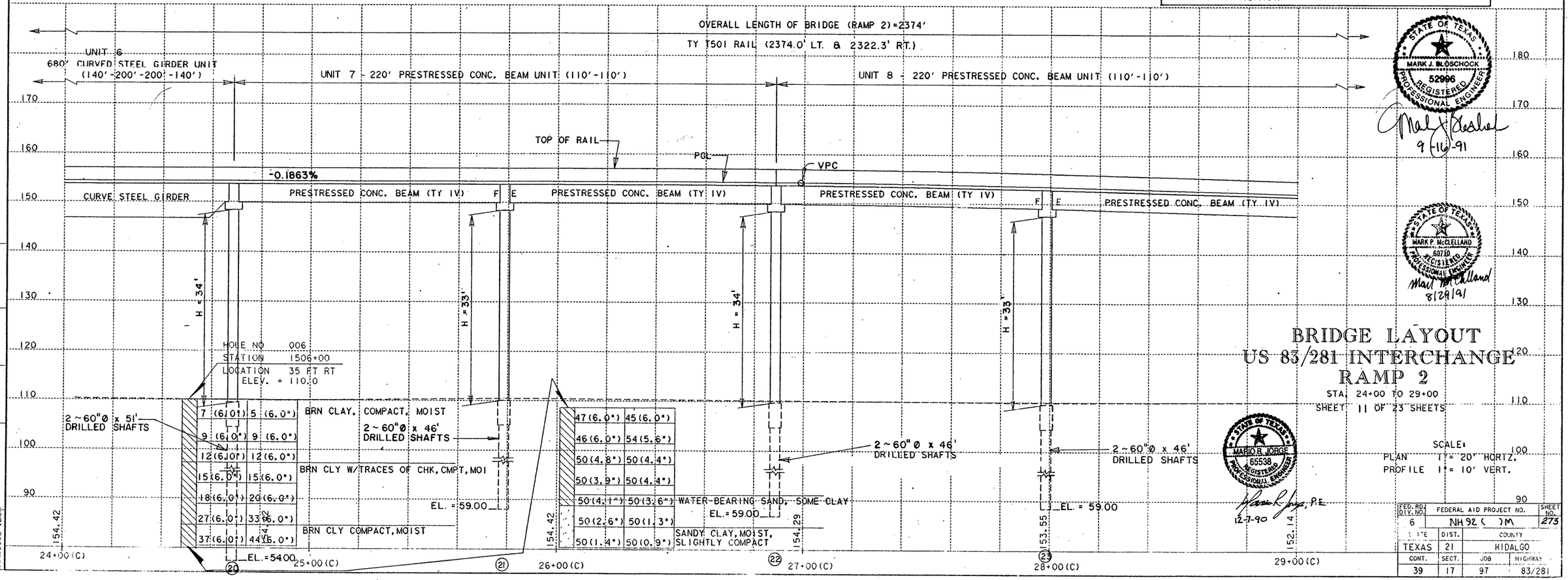

STATE OF TEXAS
MARK J. BLOSCHOCK
52996
REGISTERED PROFESSIONAL ENGINEER
9-11-91

STATE OF TEXAS
MARK P. McCLELLAND
60710
REGISTERED PROFESSIONAL ENGINEER
8/29/91

STATE OF TEXAS
MARIO R. JORGE
65538
REGISTERED PROFESSIONAL ENGINEER
12-7-90

BRIDGE LAYOUT
US 83/281 INTERCHANGE
RAMP 2

STA. 24+00 TO 29+00
SHEET 11 OF 23 SHEETS

SCALE:
PLAN 1" = 20' HORTZ.
PROFILE 1" = 10' VERT.

FED. RD. DIV. NO.	FEDERAL AID PROJECT NO.		SHEET NO.
6	NH 92 ( )M		273
STATE	DIST.	COUNTY	
TEXAS	21	HIDALGO	
CONT.	SECT.	JOB	HIGHWAY
39	17	97	83/281

FILE NAME	REFERENCE FILE	NAMED VIEW	LEVELS	PRF FILE
L325116J RAMC006 .DGN	NEWINT2.DGN	REF2	1-62	RC6 . PRF
	NEWINT.DGN	REF1	1-28, 30-41	

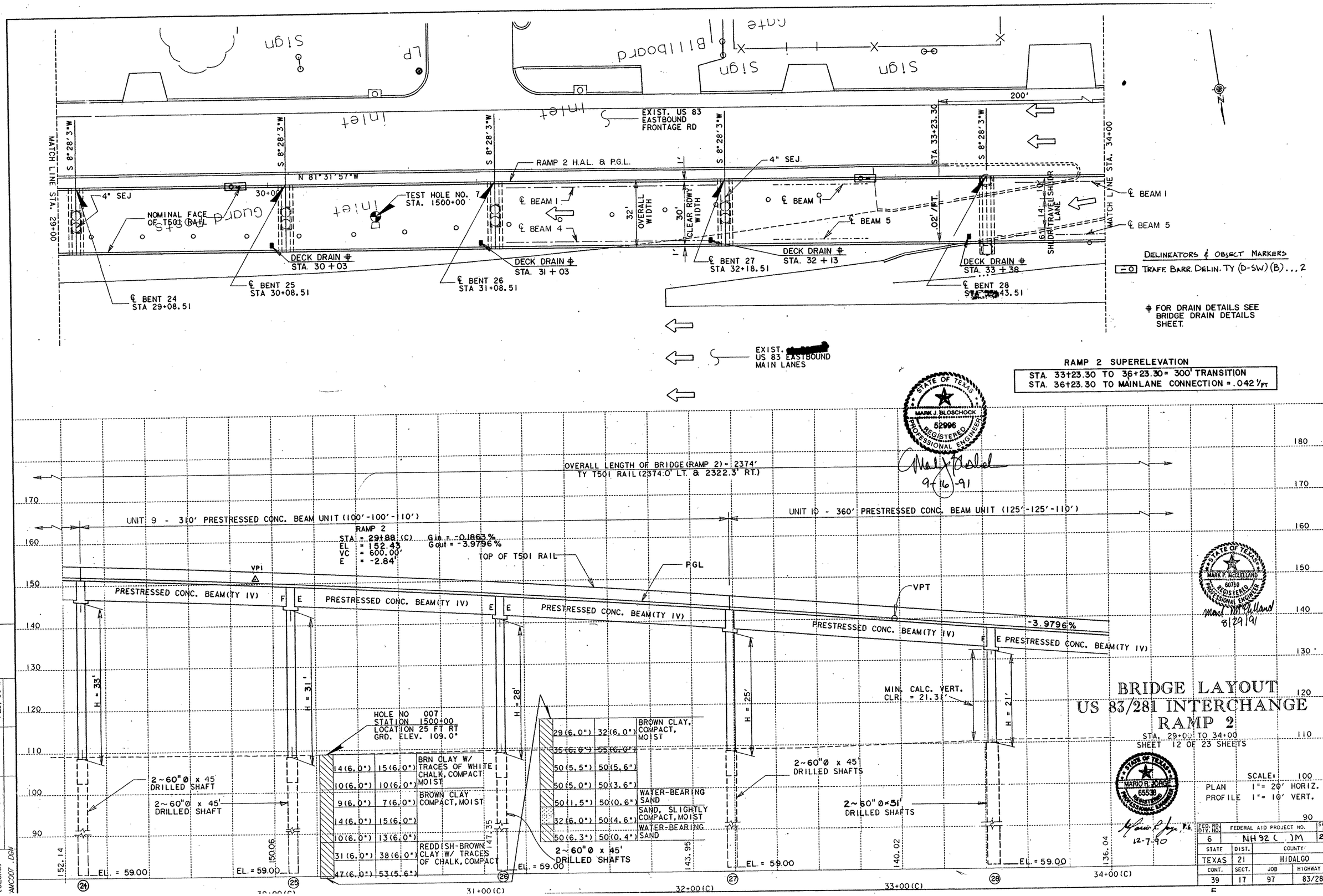

BRIDGE LAYOUT
US 83/281 INTERCHANGE
RAMP 2

STA. 29+00 TO 34+00
SHEET 12 OF 23 SHEETS

SCALE:
PLAN 1" = 20' HORIZ.
PROFILE 1" = 10' VERT.

FED. RD. DIV. NO.	FEDERAL AID PROJECT NO.	SHEET NO.
6	NH 92 ( )M	274

STATE	DIST.	COUNTY	
TEXAS	21	HIDALGO	
CONT.	SECT.	JOB	HIGHWAY NO.
39	17	97	83/281

FILE NAME	REFERENCE FILE	NAMED VIEW	LEVELS	PRF FILE
[325116]	NEWINT2.DGN	REF2	1-62	RCT. PRF
AMC007.DGN	NEWINT.DGN	REF1	1-28, 30-41	

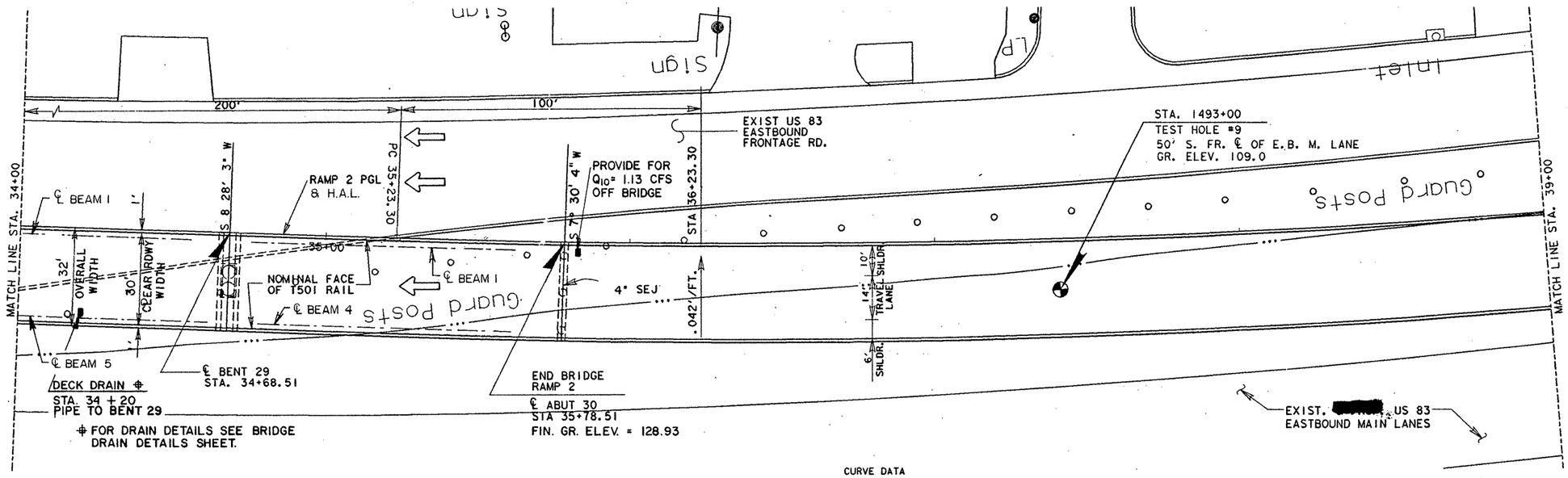

RAMP 2 SUPERELEVATION

STA. 33+23.30 TO 36+23.30 = 300'
STA. 36+23.30 TO MAINLANE CONNECTION = .042%
TYPE 3 TRANSITION

CURVE DATA
RAMP 2
PI STA. =39+55.8093
Δ =15°3'2.74" LT.
D =1°45'00"
R =3274.04'
L =860.04'
T =432.51'

STATE OF TEXAS
MARK J. BLOSCHOCK
52996
REGISTERED
PROFESSIONAL ENGINEER
9-16-91

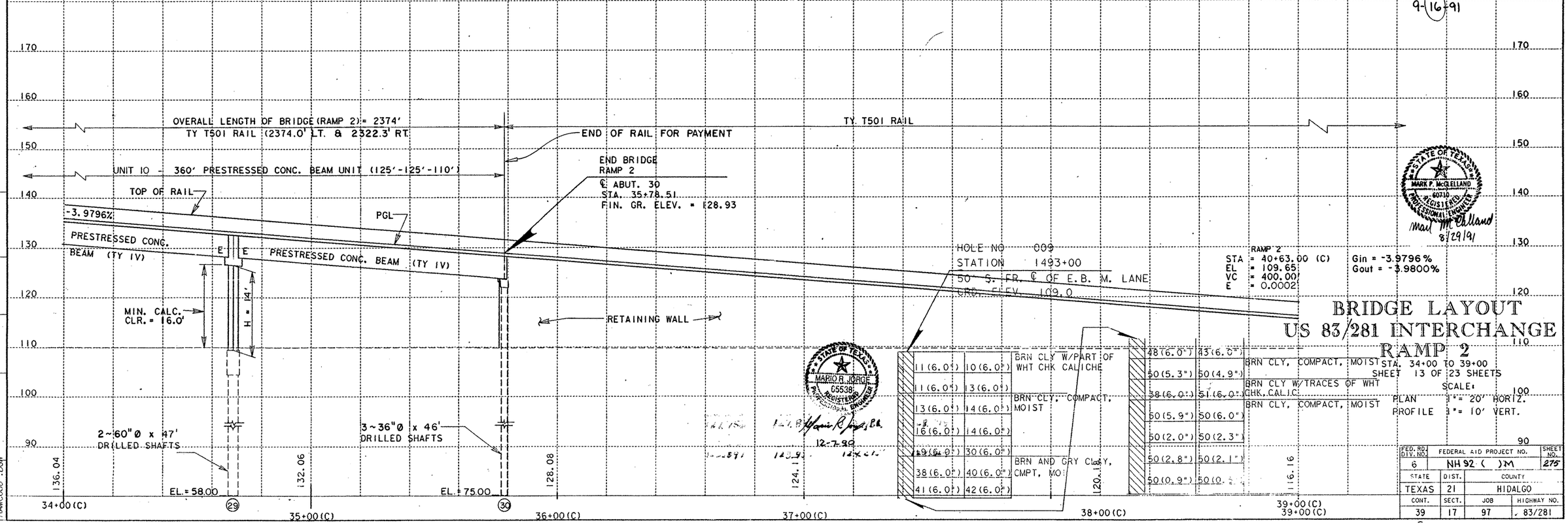

STATE OF TEXAS
MARIO R. JORGE
65538
REGISTERED
PROFESSIONAL ENGINEER
12-7-99

STATE OF TEXAS
MARK P. McCLELLAND
60710
REGISTERED
PROFESSIONAL ENGINEER
8/29/91

BRIDGE LAYOUT
US 83/281 INTERCHANGE
RAMP 2

STA. 34+00 TO 39+00
SHEET 13 OF 23 SHEETS
SCALE:
PLAN 1" = 20' HORIZ.
PROFILE 1" = 10' VERT.

FED. RD. DIV. NO.	FEDERAL AID PROJECT NO.		SHEET NO.
6	NH 92 ( )M		275
STATE	DIST.	COUNTY	
TEXAS	21	HIDALGO	
CONT.	SECT.	JOB	HIGHWAY NO.
39	17	97	83/281

FILE NAME	REFERENCE FILE	NAMED VIEW	LEVELS	PRF FILE
C325I16J RAMC008 .DGN	NEWINT2.DGN NEWINT.DGN	REF2 REF1	1-62 1-28, 30-41	RC8 . PRF

SUMMARY OF ESTIMATED QUANTITIES

DESCRIPTION \ ITEM	*STRUCTURAL EXCAVATION	‡ Slurry Displacement Drilled Shafts		CLASS "C" CONCRETE		REINF. CONC. SLAB	PRESTR. CONC. BEAM TYPE IV	STRUCTURAL STEEL		SEALED EXPANSION JOINT (4")	MODULAR JOINT	CONCRETE SURFACE TREATMENT	RAIL TY T-501	FRAME & GRATE	
		36" ø	60" ø	ABUTMENT	BENT ‡			H.S.	H.Y.C.						
	C.Y.	L.F.	L.F.	C.Y.	C.Y.	S.F.	L.F.	LB.	LB.	L.F.	L.F.	S.Y.	L.F.	EA.	
1 ~ ABUTMENT		138		15.3											
17~ INTERIOR BENTS	616		1796		1483.9										
UNIT 5 ~ 584.00' PLATE GIRDER UNIT						18323		639400	71600		32	1856	1145		
UNIT 6 ~ 680.00' PLATE GIRDER UNIT						21334		890500	89900	30		2161	1333		
UNIT 7 ~ 220.00' PRESTR. CONC. BM. UNIT						6994	841.42			30		708	437		
UNIT 8 ~ 220.00' PRESTR. CONC. BM. UNIT						7040	847.37			30		713	440		
UNIT 9 ~ 310.00' PRESTR. CONC. BM. UNIT						9920	1191.41			30		1005	620		
UNIT 10 ~ 360.00' PRESTR. CONC. BM. UNIT						11520	1642.52			30		1167	720		
TOTAL	* 616	138	1796	15.3	1483.9	75131	4522.72	1529900	161500	150	32	7610	4695	16	

DESCRIPTION \ ITEM	SLIDING ELASTOMERIC BEARINGS		ELASTOMERIC BEARINGS											
	SE3	SE6	IF5	IF7	IE12									
	EA.	EA.	EA.	EA.	EA.									
1 ~ ABUTMENT														
17~ INTERIOR BENTS														
UNIT 5 ~ 584.00' PLATE GIRDER UNIT	4	4	4		4									
UNIT 6 ~ 680.00' PLATE GIRDER UNIT	4	4		4	4									
UNIT 7 ~ 220.00' PRESTR. CONC. BM. UNIT														
UNIT 8 ~ 220.00' PRESTR. CONC. BM. UNIT														
UNIT 9 ~ 310.00' PRESTR. CONC. BM. UNIT														
UNIT 10 ~ 360.00' PRESTR. CONC. BM. UNIT														
TOTAL	8	8	4	4	8									

*For Contractor's Information only.

‡Quantities for Bent No. 12 are included on E.O. Sheet for Ramps 1 & 2.

BEARING SEAT ELEVATIONS

		BEAM 1	BEAM 2	BEAM 3	BEAM 4	BEAM 5
BENT 12	(FWD)	130.406	129.955	129.504	129.052	
BENT 13		TOP OF COLUMN @ ℄ STRUCTURE: 127.326				
BENT 14		133.246	132.725	132.226	131.727	
BENT 15		138.887	138.388	137.889	137.390	
BENT 16	(BK)	142.425	141.904	141.385	140.864	
	(FWD)	142.474	141.954	141.456	140.936	
BENT 17		144.096	143.597	143.077	142.578	
BENT 18		TOP OF COLUMN @ ℄ STRUCTURE: 143.559				
BENT 19		146.227	145.728	145.208	144.709	
BENT 20	(BK)	147.336	146.816	146.317	145.797	
	(FWD)	147.516	146.913	146.310	145.727	
BENT 21	(BK)	147.401	147.012	146.623	146.255	
	(FWD)	147.672	147.386	147.100	146.815	
BENT 22	(BK)	147.516	147.342	147.169	146.996	
	(FWD)	147.443	147.270	147.097	146.923	
BENT 23	(BK)	146.880	146.707	146.534	146.360	
	(FWD)	146.834	146.661	146.488	146.314	
BENT 24	(BK)	145.542	145.369	145.195	145.022	
	(FWD)	145.502	145.329	145.155	144.982	
BENT 25	(BK)	143.703	143.530	143.357	143.183	
	(FWD)	143.589	143.416	143.243	143.069	
BENT 26	(BK)	141.191	141.018	140.844	140.671	
	(FWD)	141.003	140.829	140.656	140.483	
BENT 27	(BK)	137.656	137.482	137.309	137.136	
	(FWD)	137.473	137.343	137.213	137.083	136.953
BENT 28	(BK)	132.847	132.719	132.592	132.465	132.338
	(FWD)	132.518	132.392	132.267	132.079	131.953
BENT 29	(BK)	127.830	127.883	127.935	127.924	127.976
	(FWD)	~~127.673~~ 127.756	~~127.760~~ 127.844	~~127.848~~ 127.931	~~127.935~~ 128.019	
BENT 30	(BK)	~~123.513~~ 123.897	~~123.853~~ 123.936	~~124.191~~ 124.275	~~124.531~~ 124.614	

REV. 3-30-92

HS 20 LOADING

STATE DEPARTMENT OF HIGHWAYS AND PUBLIC TRANSPORTATION

ESTIMATED QUANTITIES AND BEARING SEAT ELEVATIONS

US 83/281 INTERCHANGE
UNITS 5-10, RAMP 2

STATE OF TEXAS
MARK J. BLOSCHOCK
52996
REGISTERED PROFESSIONAL ENGINEER
3-13-92

D45350A: ZFA2: (355100)4379TAB02.DGN	PREPARED BY AND FOR USE OF TEXAS SDH&PT				
ORIGINAL DRAWING DATE: FEBRUARY 1991	STATE DISTRICT	FEDERAL REGION	FEDERAL AID PROJECT		SHEET
DN.: LMW REVISIONS	21	6			276
CK.: GAF	COUNTY		CONTROL	SECTION	JOB	HIGHWAY
DW.: PSR /TKW	HIDALGO		0039	17	097	US 83/281
CK.: LMW						

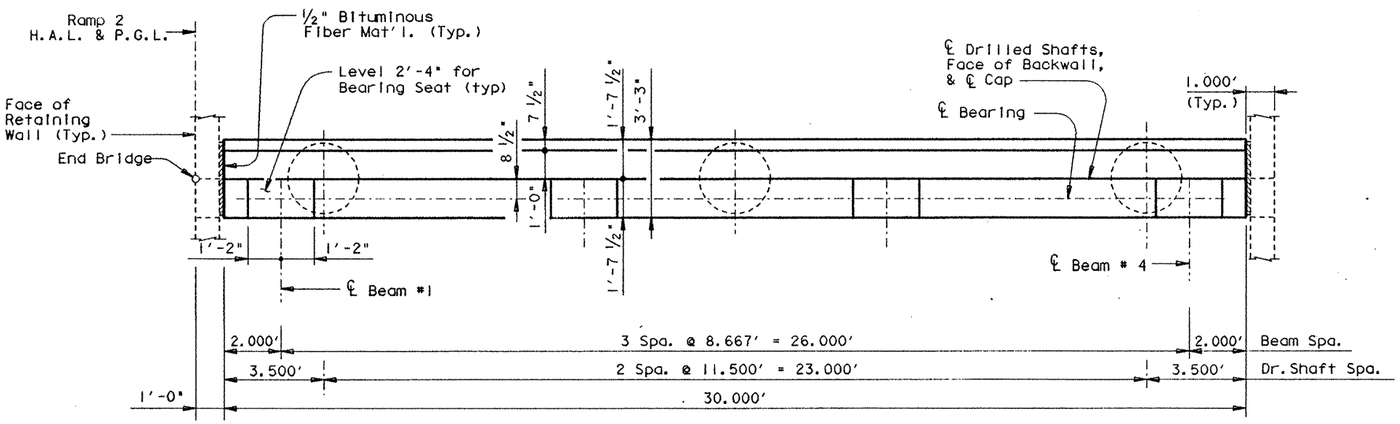

PLAN

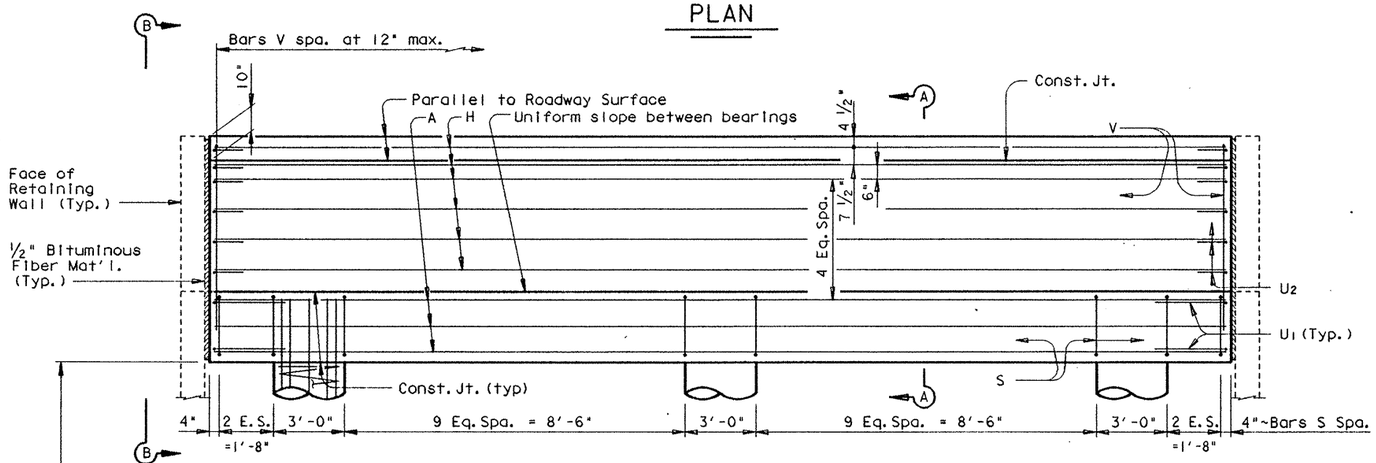

ELEVATION

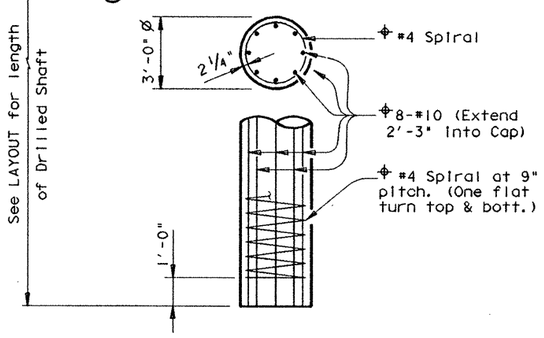

⌖ Included in price bid for Drilled Shaft.

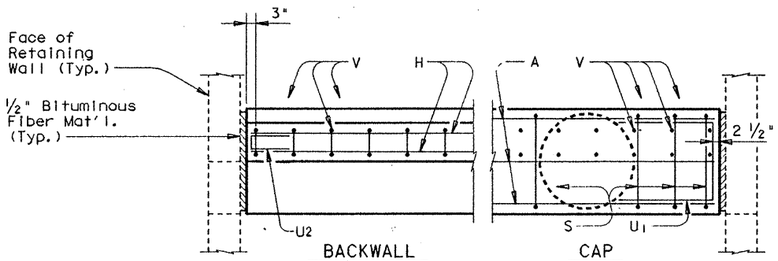

CORNER DETAILS

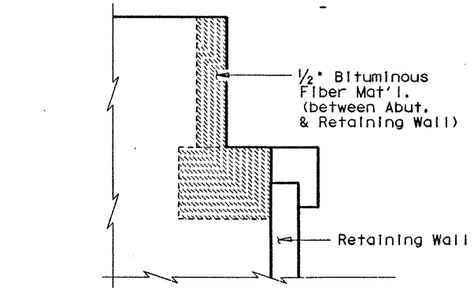

ELEVATION B-B

(SHOWING RETAINING WALL AT ABUTMENT)

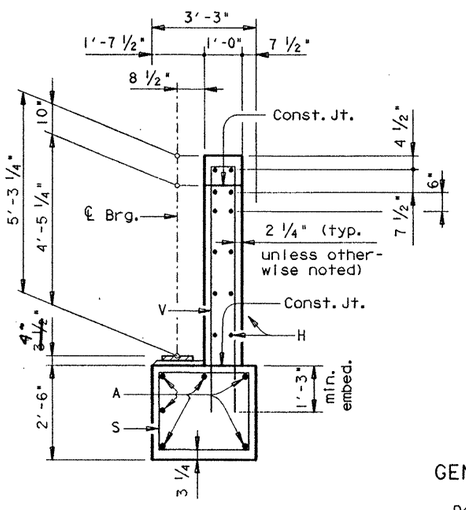

SECTION A-A

TABLE OF ESTIMATED QUANTITIES

Bar	No.	Size	Length	Weight
A	6	# 11	29'- 8"	946
H	12	# 5	29'- 8"	371
S	26	# 4	10'- 6"	182
U1	4	# 6	7'-10"	47
U2	12	# 5	2'- 7"	32
V	31	# 5	13'-10"	447

Reinforcing Steel	Lb	⌗	2025
Class "C" Concrete	CY		15.3

⌗ For contractor's information only.

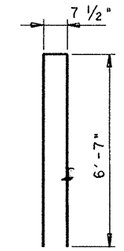

BARS V

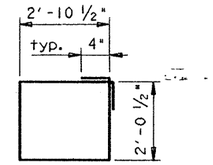

BARS S

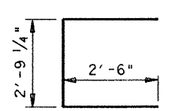

BARS U1

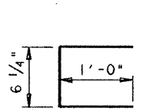

BARS U2

GENERAL NOTES:

Designed according to A.A.S.H.T.O. 1989 Standard Specifications.

Calculated Foundation Loads ~
Cap Drilled Shafts = 100 Tons/Drilled Shaft

For Modified Bearing Seat Details see Gp C (SPL) Sheet.

HS 20 LOADING

STATE DEPARTMENT OF HIGHWAYS AND PUBLIC TRANSPORTATION

ABUTMENT NO. 30 RAMP 2

US 83/281 INTERCHANGE

STATE OF TEXAS
MARK J. BLOSCHOCK
52996
REGISTERED
PROFESSIONAL ENGINEER
9-16-91

D45350A1:ZFA1:[3551631]4377RWA01.DGN	PREPARED BY AND FOR USE OF TEXAS SDH&PT						
ORIGINAL DRAWING DATE: July 1990	STATE DISTRICT	FEDERAL REGION	FEDERAL AID PROJECT				SHEET
DN.: LMW	21	6	NH 92( )M				277
CK.: KBA	COUNTY			CONTROL	SECTION	JOB	HIGHWAY
DN.: TKW	Hidalgo			0039	17	097	US 83/281
CK.: LMW							

REVISIONS

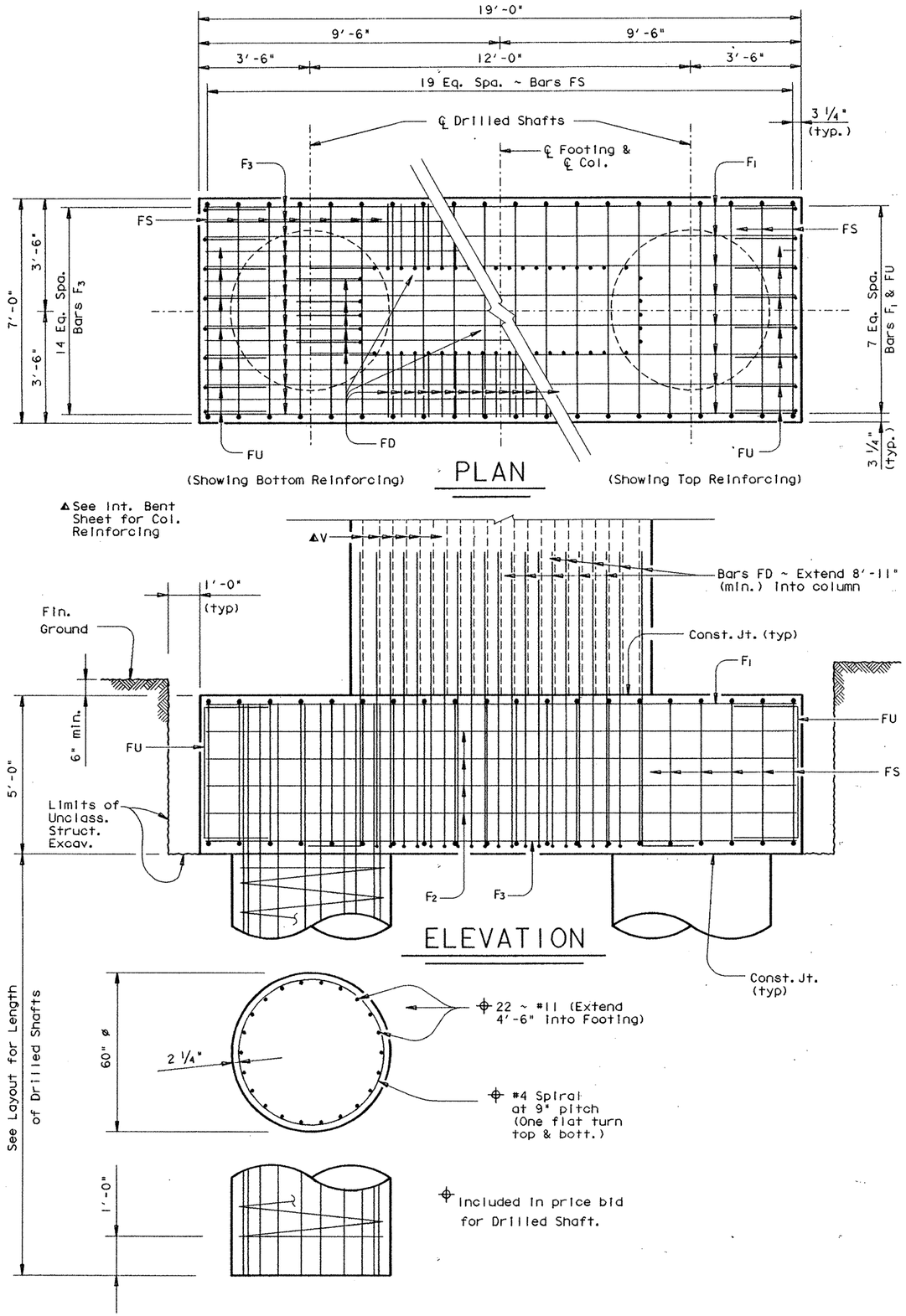

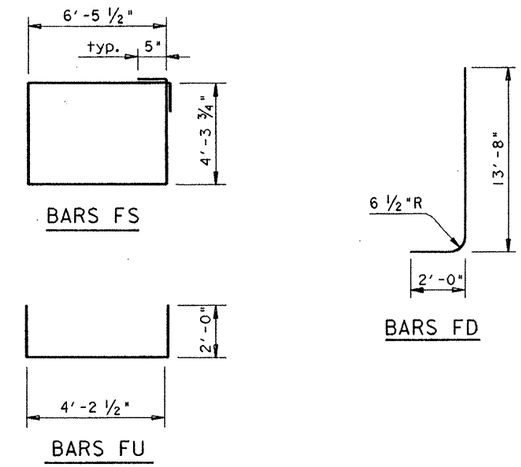

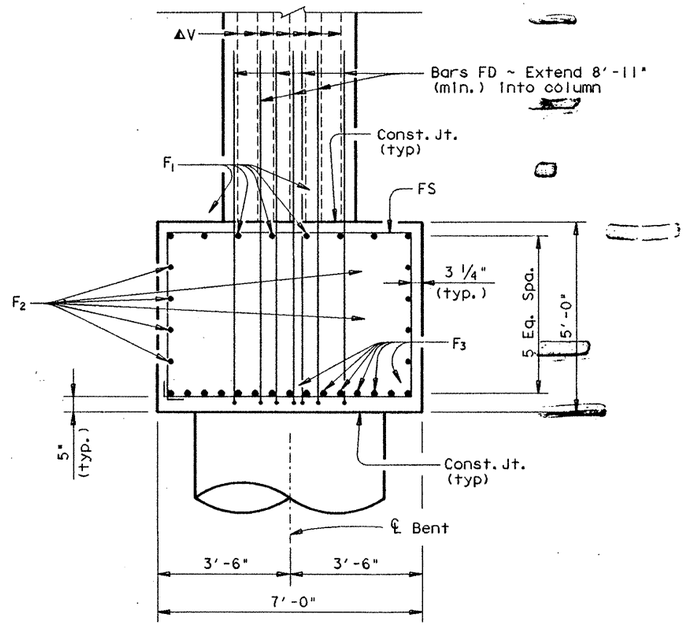

‡TABLE OF FOOTING QUANTITIES

Bar	No.	Size	Length	Weight
F_1	8	# 8	18'- 6"	395
F_2	8	# 5	18'- 6"	154
F_3	15	# 11	18'- 6"	1474
FD	48	# 11	15'- 6"	3953
FS	20	# 5	22'- 5"	468
FU	16	# 5	8'- 3"	139

Reinforcing Steel	Lb	‡ 6583
Class "C" Concrete	CY	24.6

‡ For Contractor's information only.

‡ Quantities shown are for one footing only.

All Footing Reinforcing Steel [redacted] Grade 60.

HS 20 LOADING

STATE DEPARTMENT OF HIGHWAYS AND PUBLIC TRANSPORTATION

FOOTING DETAILS BENT NOS. 13-20 RAMP 2

US 83/281 INTERCHANGE

STATE OF TEXAS
MARK J. BLOSCHOCK
52996
REGISTERED PROFESSIONAL ENGINEER

9-17-91

D45350A: ZFA2: [355100]4377MIS02.DGN

PREPARED BY AND FOR USE OF TEXAS SDH&PT

ORIGINAL DRAWING DATE:	NOVEMBER 1990	STATE DISTRICT	FEDERAL REGION	FEDERAL AID PROJECT	SHEET
DN.: GAF/MRL	REVISIONS	21	6	NH 92( )M	278
CK.: MRL/GAF		COUNTY		CONTROL / SECTION / JOB	HIGHWAY
DW.: PSR		HIDALGO		0039 / 17 / 097	US 83/281
CK.: GAF/MRL					

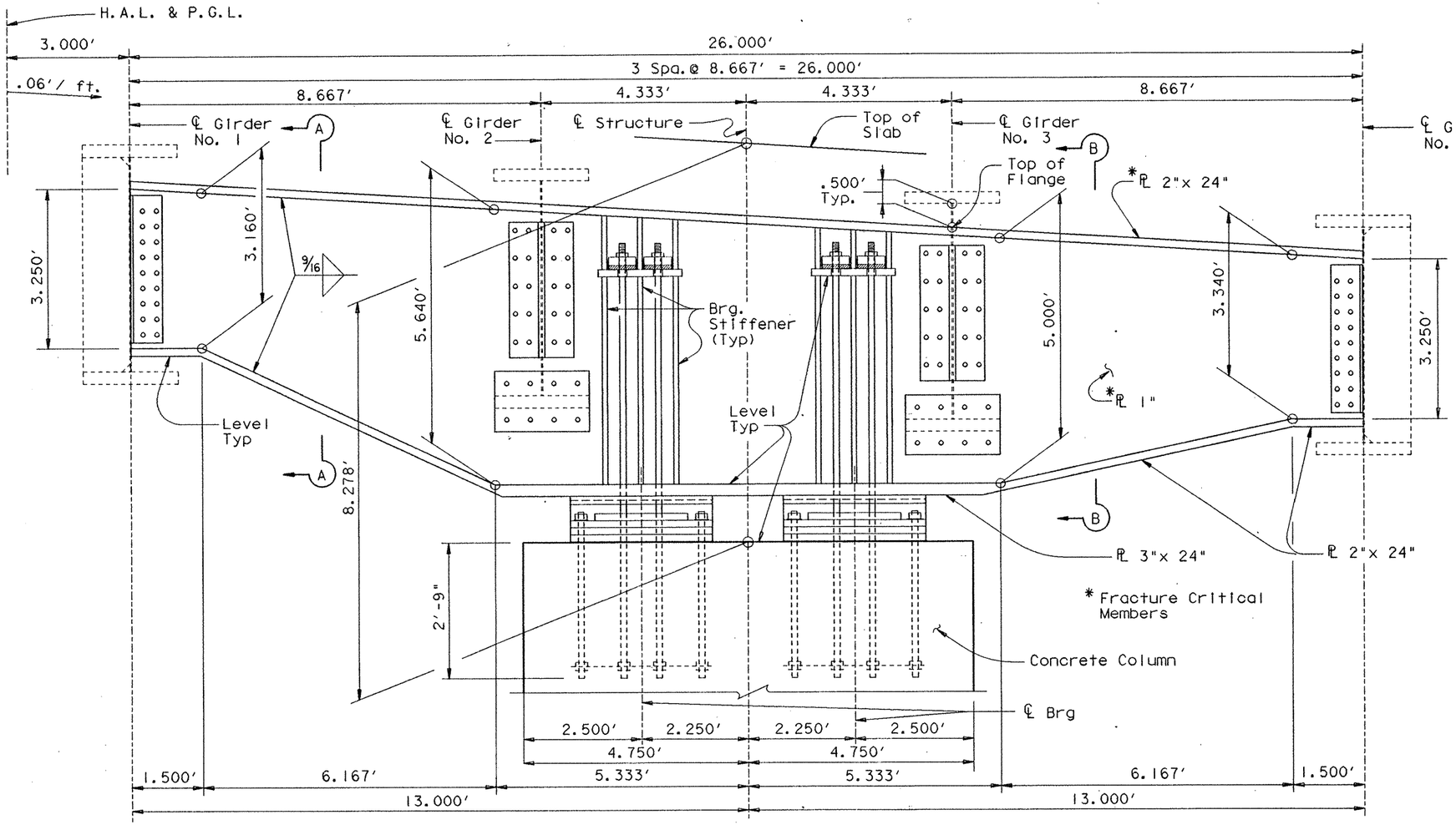

ELEVATION

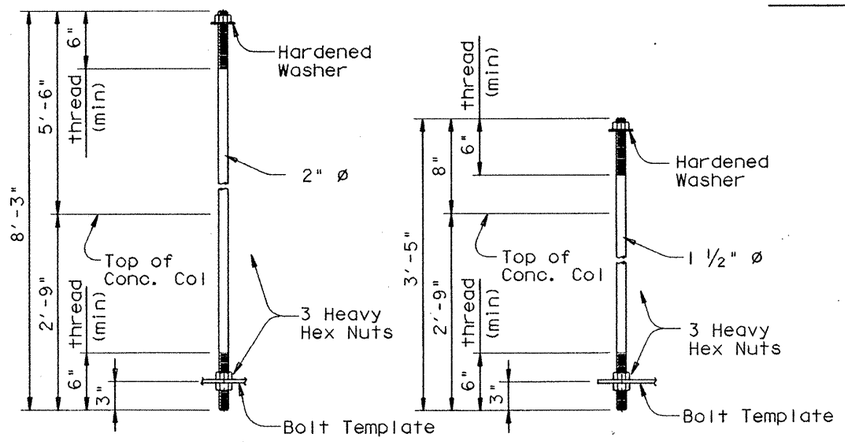

HOLD-DOWN BOLT DETAIL

ANCHOR BOLT DETAIL

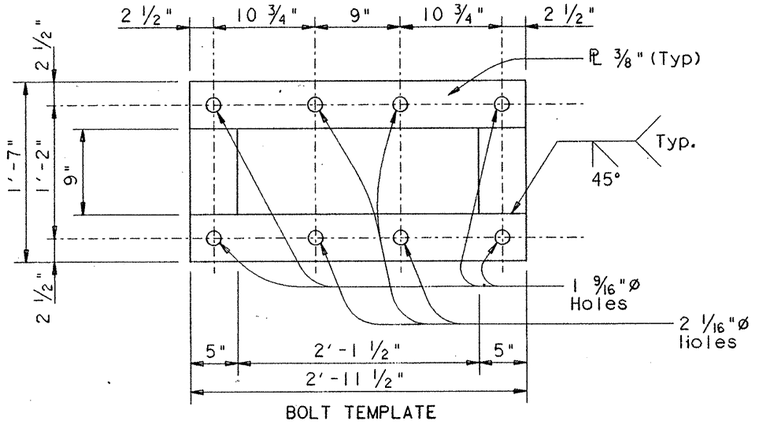

BOLT TEMPLATE

GENERAL NOTES:

Designed according to A.A.S.H.T.O. 1989 Standard and current Interim Specifications.

Material for Steel Cap and all connections [redacted] conform to the item "Steel Structures" A572.
Flange splices [redacted] made by full penetration grove welds in accordance with the item "Steel Structures".
The web and top flange are fracture critical and [redacted] conform to Fracture control Plan.

All bolts used in Girder to Cap connections [redacted] 1" ø A325 bolts.
Anchor Bolts and Hold Down Bolts [redacted] galvanized and conform to the item "Metal For Structures A.S.T.M. A 193-B7 Anchor Bolts".
Nuts [redacted] heavy hex nuts and conform to ASTM A 194 2H.

The steel bent cap [redacted] erected with the web set vertical and all hold-down bolts uniformly tightened. Adjustment of girders for proper splice alignment [redacted] made by loosening nuts on one side of the cap while tightening nuts on the other side by an equal amount. After the slab and rail have been placed and dead load deflection has occured, all hold-down bolts [redacted] loosened and uniformly retightened to snug tight plus ¼ turn condition.

Estimated weight of "Structural Steel (HS)" for one steel cap and it's connections = 31300
Quanity included in total weight for 584.00' Plate Girder Unit.

HS 20 LOADING Sheet 1 of 4

STATE OF TEXAS
MARK J. BLOSCHOCK
52996
REGISTERED PROFESSIONAL ENGINEER

9-17-91

STATE DEPARTMENT OF HIGHWAYS AND PUBLIC TRANSPORTATION

INTERIOR BENT

RAMP 2 BENT 13

US 83/281 INTERCHANGE

D45350A1:ZFA2:(355121)4377INS02.DGN		PREPARED BY AND FOR USE OF TEXAS SDH&PT						
ORIGINAL DRAWING DATE: JANUARY 1990		STATE DISTRICT	FEDERAL REGION	FEDERAL AID PROJECT #			SHEET	
DN.: MRL	REVISIONS	21	6	NH 92( )M			279	
CK.: GAF		COUNTY		CONTROL	SECTION	JOB	HIGHWAY	
DN.: MMM		HIDALGO		0039	17	097	US 83 281	
CK.: MRL								

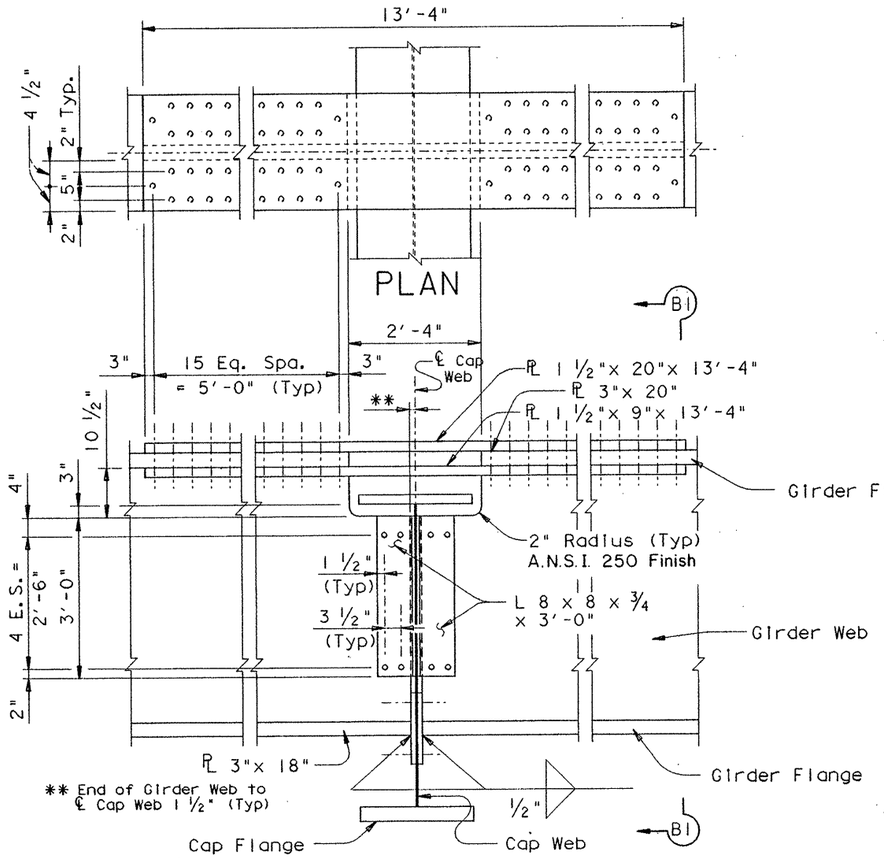

SECTION B-B

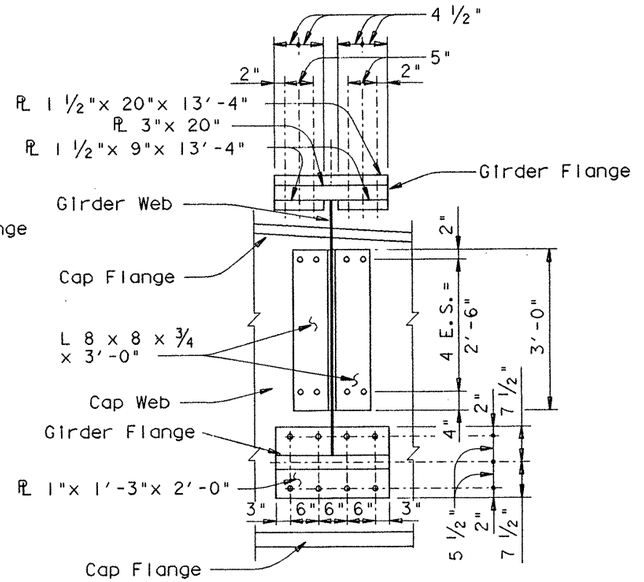

SECTION B1-B1

GIRDER NO 2 & 3

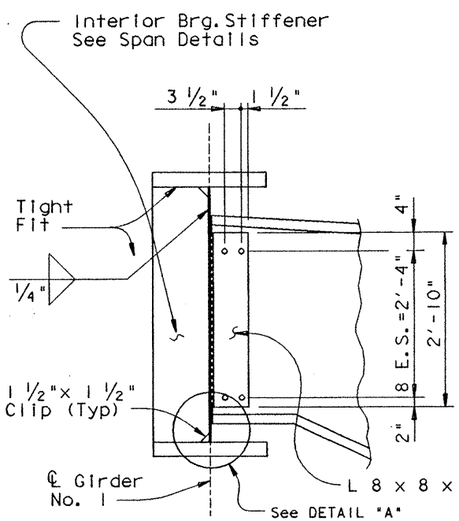

SECTION A1-A1

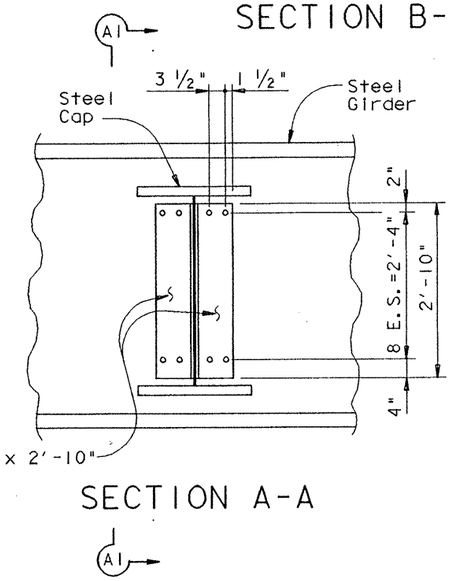

SECTION A-A

GIRDER NO 1 & 4

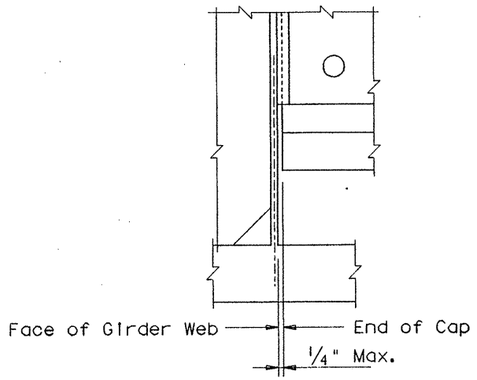

DETAIL "A"

STATE OF TEXAS
MARK J. BLOSCHOCK
52996
REGISTERED
PROFESSIONAL ENGINEER

9-17-91

HS 20 LOADING Sheet 2 of 4

STATE DEPARTMENT OF HIGHWAYS AND PUBLIC TRANSPORTATION

INTERIOR BENT

RAMP 2 BENT 13

US 83/281 INTERCHANGE

D45350A1 ZFA2 [355121]43771NS02.DGN	PREPARED BY AND FOR USE OF TEXAS SDH&PT						
ORIGINAL DRAWING DATE: JANUARY 1990	STATE DISTRICT	FEDERAL REGION	FEDERAL AID PROJECT				SHEET
DN.: MRL	21	6	NH 92( )M				280
CK.: GAF	COUNTY			CONTROL	SECTION	JOB	HIGHWAY
DW.: MMM	HIDALGO			0039	17	097	US 83/281
CK.: MRL							

REV. 3-30-92

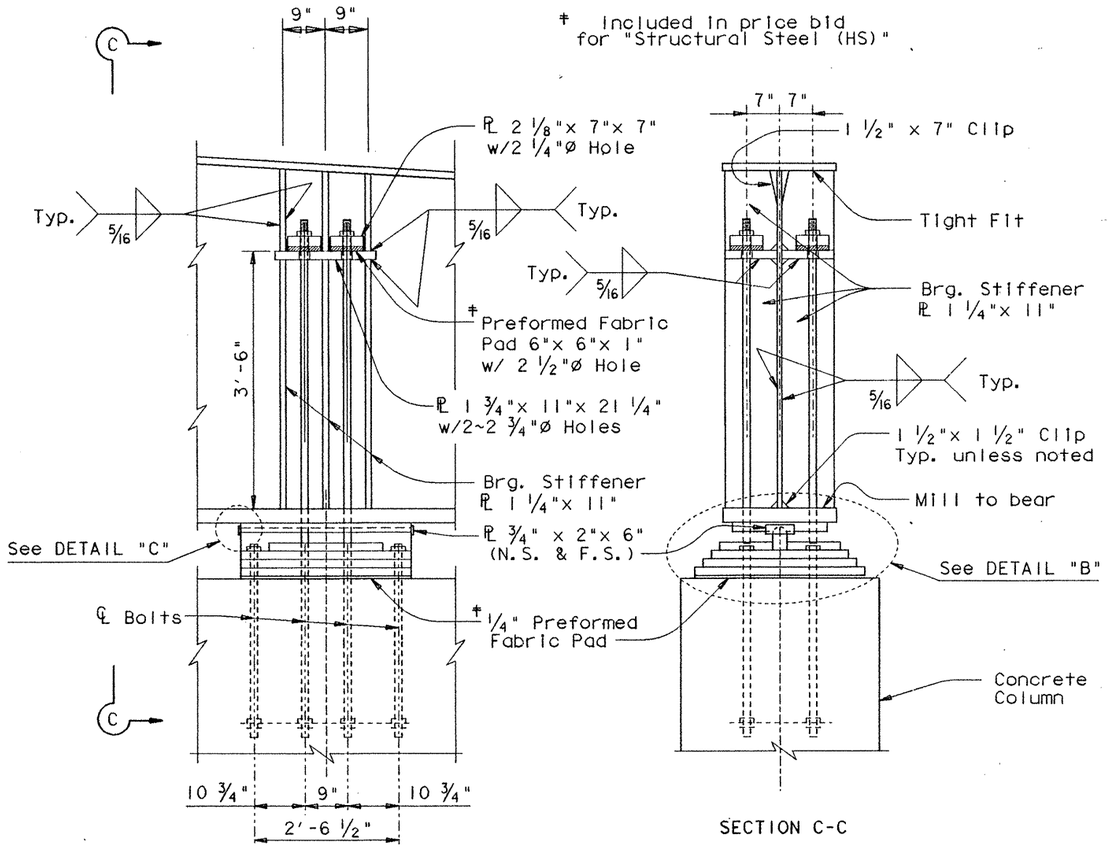

BEARING DETAILS

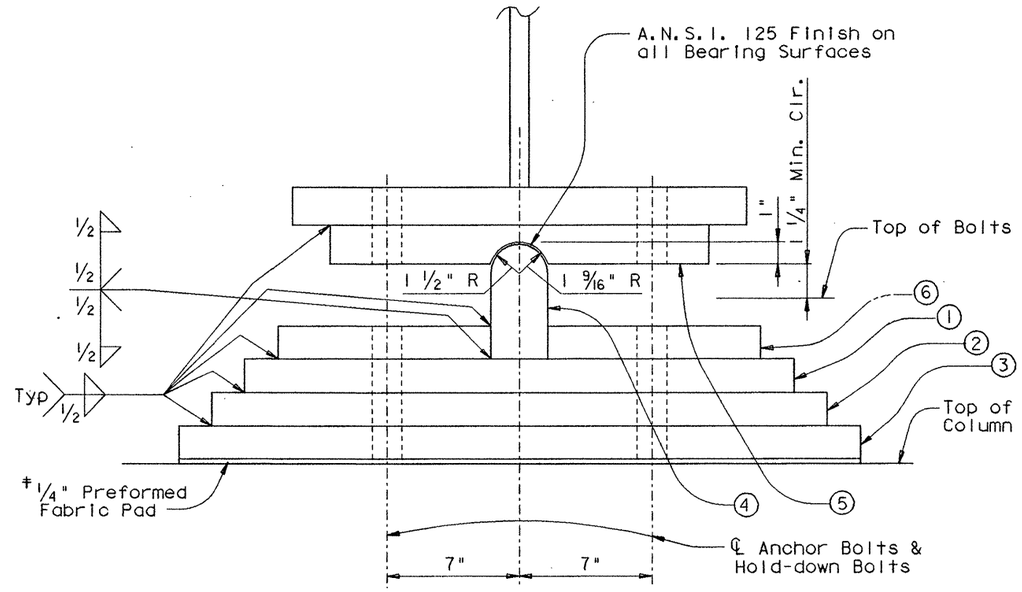

DETAIL "B"

① PL 1 3/4"x 29"x 3'-0" with 2 1/4" Ø hole for Hold-down Bolts & 1 3/4" Ø hole for Anchor Bolts.
② PL 1 3/4"x 32 1/2"x 3'-0" with 2 1/4" Ø hole for Hold-down Bolts & 1 3/4" Ø hole for Anchor Bolts.
③ PL 1 3/4"x 36"x 3'-0" with 2 1/4" Ø hole for Hold-down Bolts & 1 3/4" Ø hole for Anchor Bolts.
④ PL 3"x 5"x 3'-0" R=1 1/2"
⑤ PL 2"x 20"x 3'-0" R=1 9/16" with 2 1/4" Ø hole for Hold-down Bolts.
⑥ 2 ~ PL 1"x 11 1/4"x 1'-6" with 2 1/4" Ø hole for Hold-down Bolts.

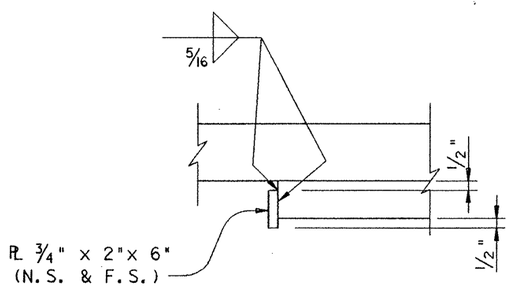

DETAIL "C"

HS 20 LOADING Sheet 3 of 4

STATE DEPARTMENT OF HIGHWAYS AND PUBLIC TRANSPORTATION

INTERIOR BENT

RAMP 2 BENT 13

US 83/281 INTERCHANGE

STATE OF TEXAS MARK J. BLOSCHOCK 52996 REGISTERED PROFESSIONAL ENGINEER

9-17-91

D45350A: ZFA2: [355121]43771NS02.DGN	PREPARED BY AND FOR USE OF TEXAS SDH&PT					
ORIGINAL DRAWING DATE: JANUARY 1990	STATE DISTRICT	FEDERAL REGION	FEDERAL AID PROJECT			SHEET
DN.: MRL	21	6	NH 92 ( ) M			281
CK.: GAF	COUNTY		CONTROL	SECTION	JOB	HIGHWAY
DN.: MMM	HIDALGO		0039	17	097	US 83/281
CK.: MRL						

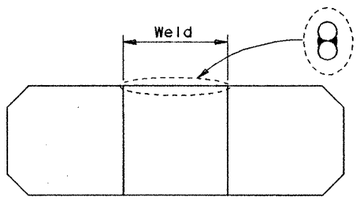

BARS Z1 WELD DETAIL

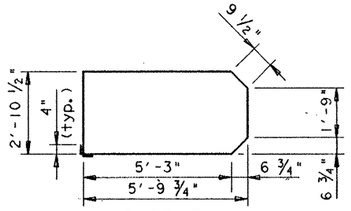

BARS Z1

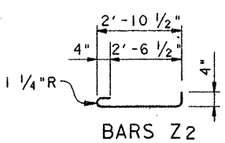

BARS Z2

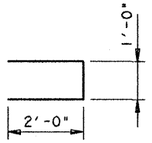

BARS Z3

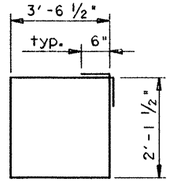

BARS S

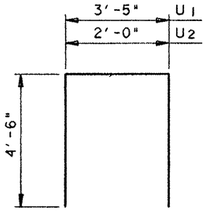

BARS U

TABLE OF CONSTANT QUANTITIES				
Bar	No	Sz.	Length	Weight
S	14	#6	12'- 5"	261
U1	2	#6	12'- 5"	37
U2	16	#6	11'- 0"	264
REINF STEEL (COL)			Lb #	562

For Contractors Info. Only.

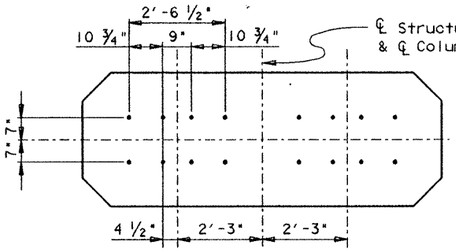

ANCHOR BOLT PLAN

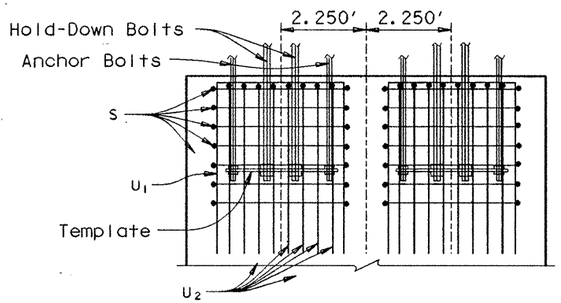

ANCHOR BOLT DETAIL

TABLE OF VARIABLE QUANTITIES										▲TOTAL EST. QUANTITIES	
H	CL. "C" CONC.	BARS Z1 #4 x 17'-5"		BARS Z2 #4 x 3'-8"		BARS Z3 #4 x 5'-0"		BARS V 48 ~ # 11		REINF. STEEL #	CL. "C" CONC.
FT.	C.Y.	NO.	WT.	NO.	WT.	NO.	WT.	LGTH.	WT.	LB.	C.Y.
17	20.2	40	465	51	125	34	114	16'-9 "	4272	12121	44.8
18	21.4	42	489	54	132	36	120	17'-9 "	4527	12413	46.0
19	22.6	44	512	57	140	38	127	18'-9 "	4782	12706	47.2
20	23.8	46	535	60	147	40	134	19'-9 "	5037	12998	48.4
21	25.0	48	558	63	154	42	140	20'-9 "	5292	13289	49.6

▲ Includes Footing Quantities

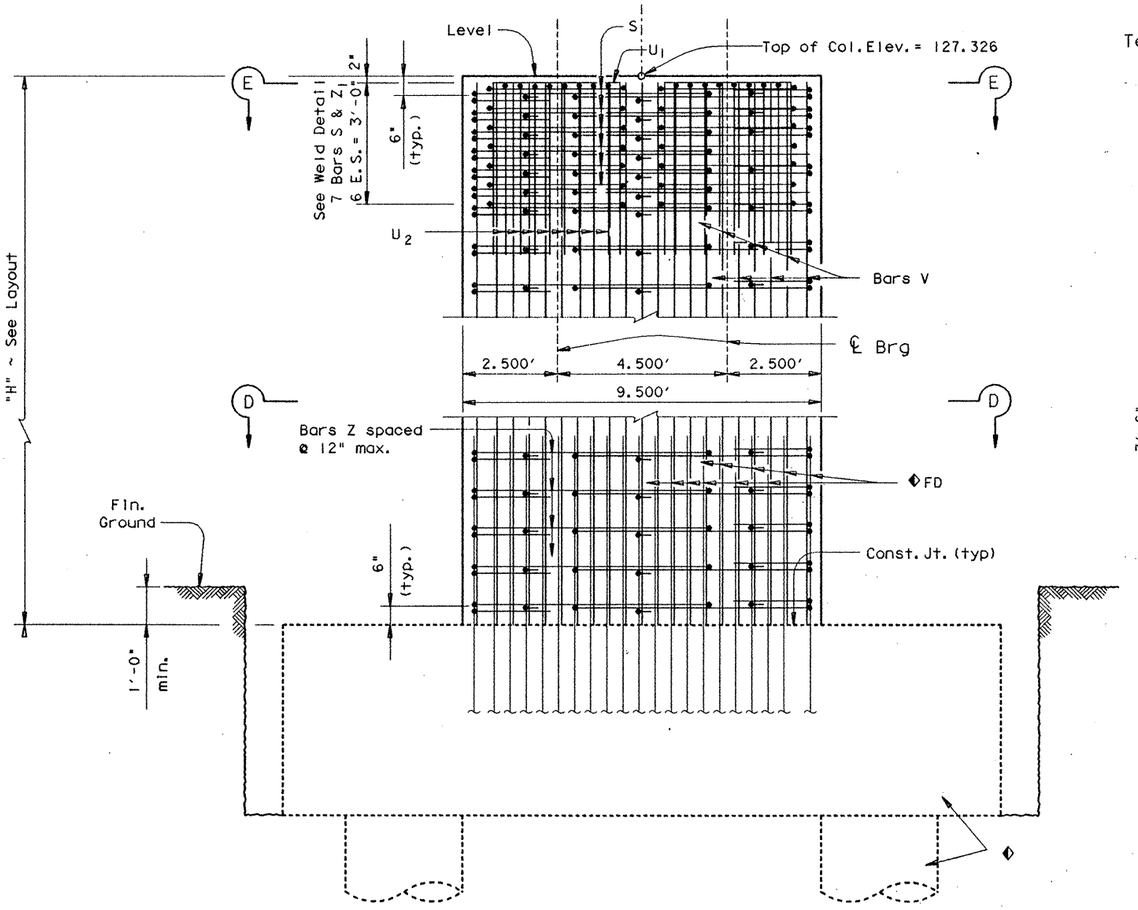

ELEVATION

◆ See Footing Details Sheet for Footing Quantities and Details not shown.

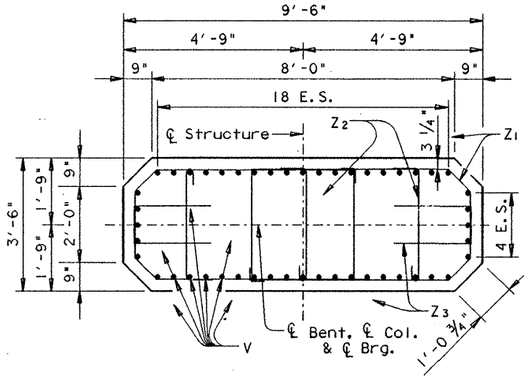

SECTION D-D

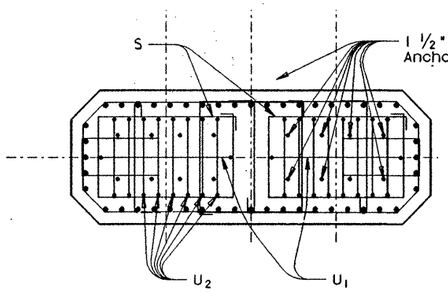

SECTION E-E

See Section D-D for details not shown

GENERAL NOTES:

Designed according to A.A.S.H.T.O. 1989 Standard and current Interim Specifications.

Calculated Foundation Load = 560 Tons/Drilled Shaft

See "Formliner Details" sheet for asthetic treatment of columns.

All reinforcing steel [redacted] Grade 60.

[redacted]

STATE OF TEXAS
MARK J. BLOSCHOCK
52998
REGISTERED
PROFESSIONAL ENGINEER
9-17-91

HS 20 LOADING Sheet 4 of 4

STATE DEPARTMENT OF HIGHWAYS AND PUBLIC TRANSPORTATION

INTERIOR BENT

RAMP 2 BENT 13

US 83/281 INTERCHANGE

D45350A:: ZFA2: [355121]4377INS02.DGN			PREPARED BY AND FOR USE OF TEXAS SDH&PT						
ORIGINAL DRAWING DATE: JANUARY 1990			STATE DISTRICT	FEDERAL REGION	FEDERAL AID PROJECT #			SHEET	
DR.: MRL	REVISIONS		21	6	NH 92( )M			282	
CK.: GAF			COUNTY			CONTROL	SECTION	JOB	HIGHWAY
DR.: MWM			HIDALGO			0039	17	097	US 83/ 281
CK.: MRL									

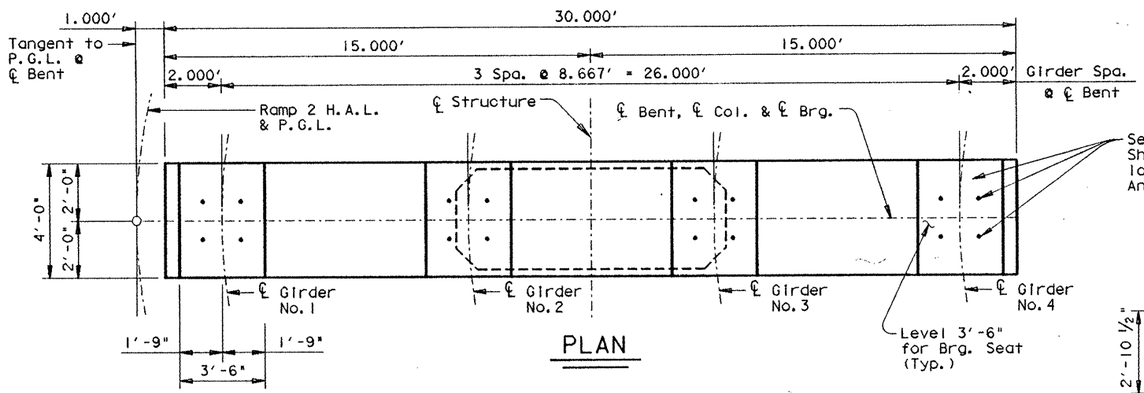

PLAN

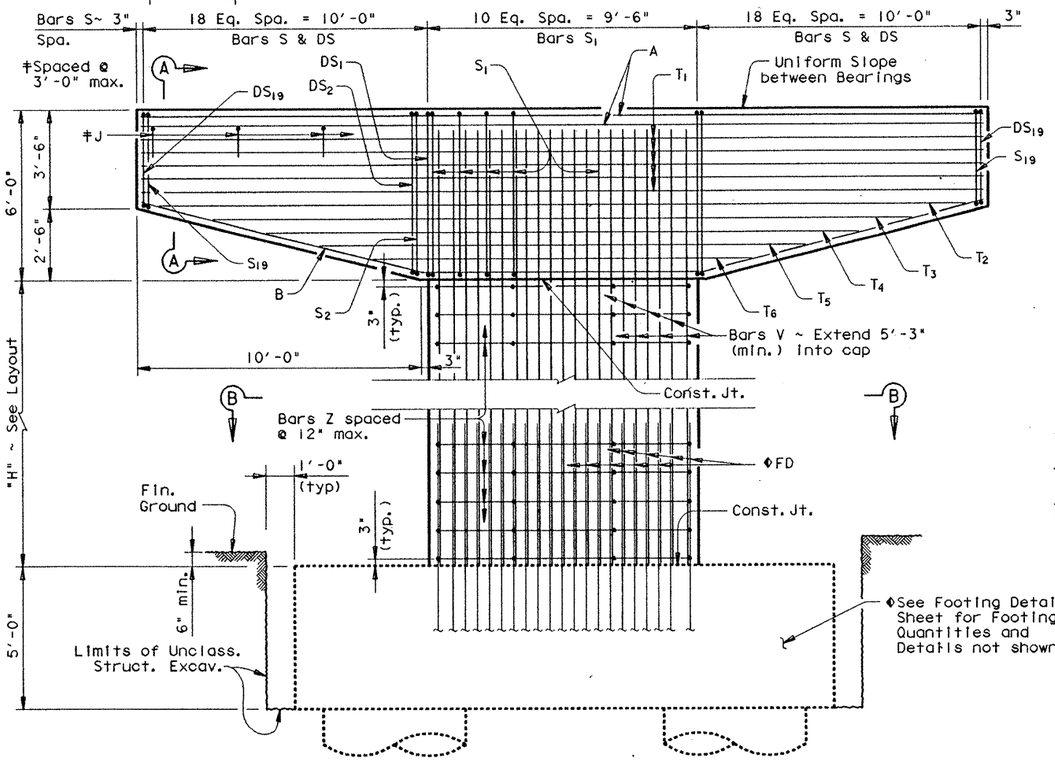

ELEVATION

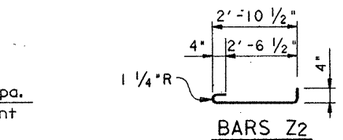

BARS Z2

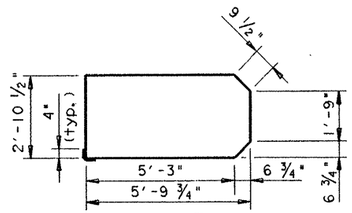

BARS Z1

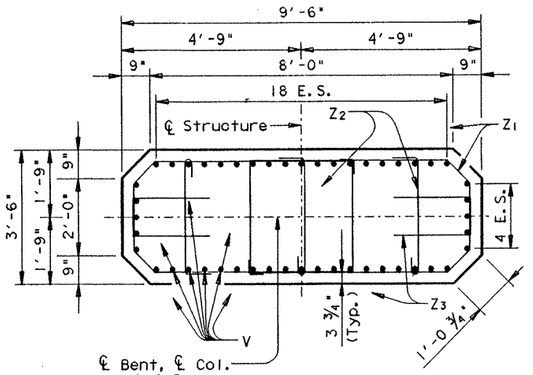

SECTION B-B

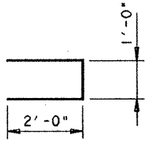

BARS Z3

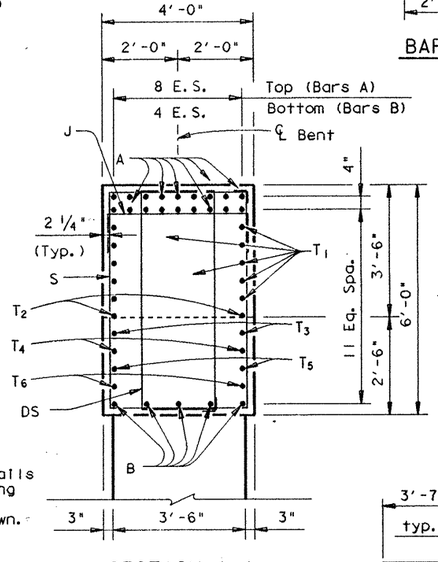

SECTION A-A

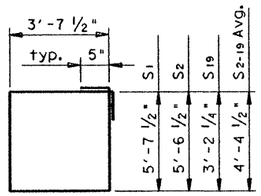

BARS S

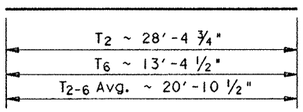

BARS T2-T6

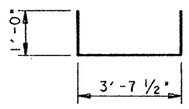

BARS J

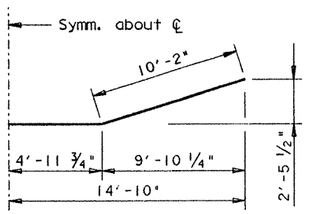

BARS B

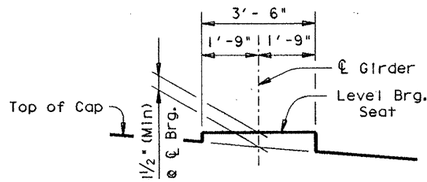

BEARING SEAT DETAIL

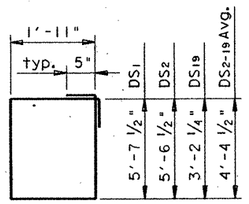

BARS DS

TABLE OF CONSTANT QUANTITIES				
Bar	No	Sz.	Length	Weight
A	18	#11	29'- 8"	2837
B	5	#11	30'- 4"	806
DS1	2	#5	15'-11"	33
DS2-19	36	#5	13'- 5"	504
J	11	#5	5'- 8"	65
S1	11	#5	19'- 4"	223
S2-19	36	#5	16'-10"Av	632
T1	10	#6	29'- 8"	446
T2-6	10	#6	20'-11"Av	314
Reinf. Steel (Cap)			Lb ‡	5860
Cl. "C" Conc. (Cap)			CY	23.2

‡ For Contractors Info. Only.

TABLE OF VARIABLE QUANTITIES										▲TOTAL EST. ◪ QUANTITIES	
H	CL. "C" CONC.	BARS Z1 #4 x 17'-5"		BARS Z2 #4 x 3'-8"		BARS Z3 #4 x 5'-0"		BARS V 48 ~ # 11		REINF. STEEL ‡	CL. "C" CONC.
FT.	C.Y.	NO.	WT.	NO.	WT.	NO.	WT.	LGTH.	WT.	LB.	C.Y.
16	19.0	34	396	51	125	34	114	21'- 3"	5419	18497	66.8
17	20.2	36	419	54	132	36	120	22'- 3"	5674	18788	68.0
18	21.4	38	442	57	140	38	127	23'- 3"	5929	19081	69.2
19	22.6	40	465	60	147	40	134	24'- 3"	6184	19373	70.4
20	23.8	42	489	63	154	42	140	25'- 3"	6439	19665	71.6
25	29.7	52	605	78	191	52	174	30'- 3"	7714	21127	77.5
26	30.9	54	628	81	198	54	180	31'- 3"	7970	21419	78.7
27	32.1	56	652	84	206	56	187	32'- 3"	8225	21713	79.9
28	33.3	58	675	87	213	58	194	33'- 3"	8480	22005	81.1
29	34.5	60	698	90	220	60	200	34'- 3"	8735	22296	82.3

▲ Includes Footing Quantities
◪ Quantities Shown are for one Bent only.

GENERAL NOTES:

Designed in accordance with A.A.S.H.T.O. 1989 Specifications.

Calculated Drilled Shaft Loads Bent 14 = 600 T/Dr. Shaft.

Calculated Drilled Shaft Loads Bent 19 = 840 T/Dr. Shaft.

All Cap & Column Steel [redacted] Grade 60.

See "Form Liner Details" Sheet for aesthetic treatment of Columns and Caps.

HS 20 LOADING

STATE DEPARTMENT OF HIGHWAYS AND PUBLIC TRANSPORTATION

INTERIOR BENT NOS. 14 & 19 RAMP 2

US 83/281 INTERCHANGE

STATE OF TEXAS
MARK J. BLOSCHOCK
52996
REGISTERED PROFESSIONAL ENGINEER
9-17-91

D45350A1 x ZFA2 x [3551001437815C03.DGN	PREPARED BY AND FOR USE OF TEXAS SDH&PT				
ORIGINAL DRAWING DATE: NOVEMBER 1990	STATE DISTRICT	FEDERAL REGION	FEDERAL AID PROJECT	♦	SHEET
DN.: GAF/MRL CK.: MRL/GAF DW.: PSR CK.: GAF/MRL REVISIONS	21	6	NH 92( )M		283
	COUNTY		CONTROL	SECTION	JOB	HIGHWAY
	HIDALGO		0039	17	097	US 83/ SH 281

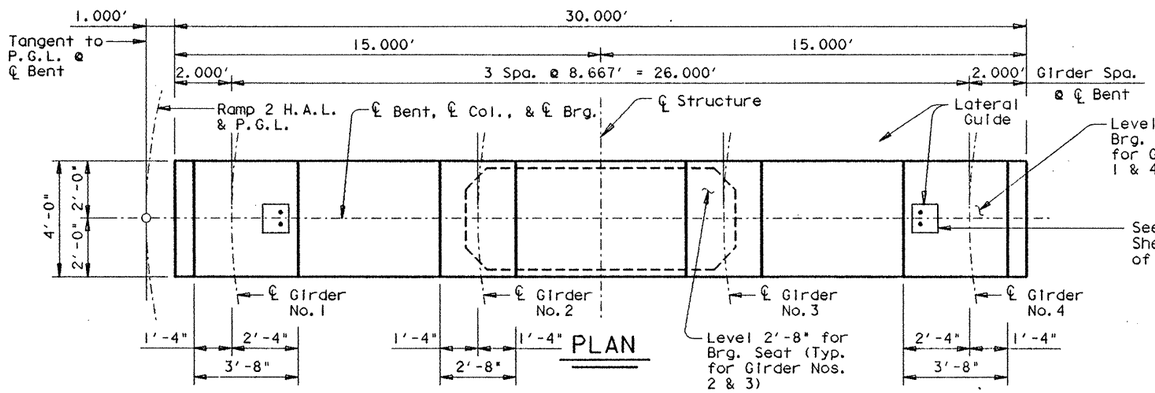

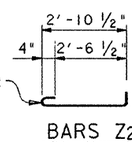

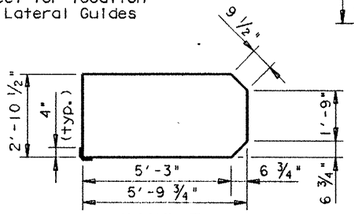

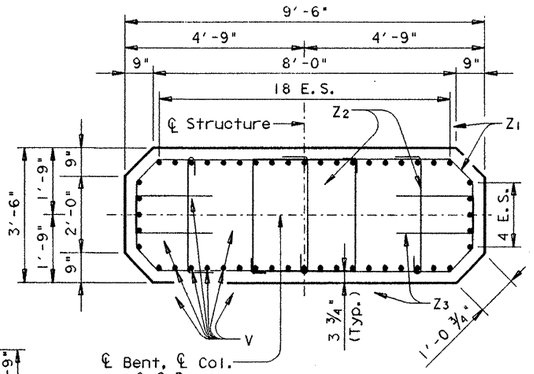

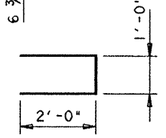

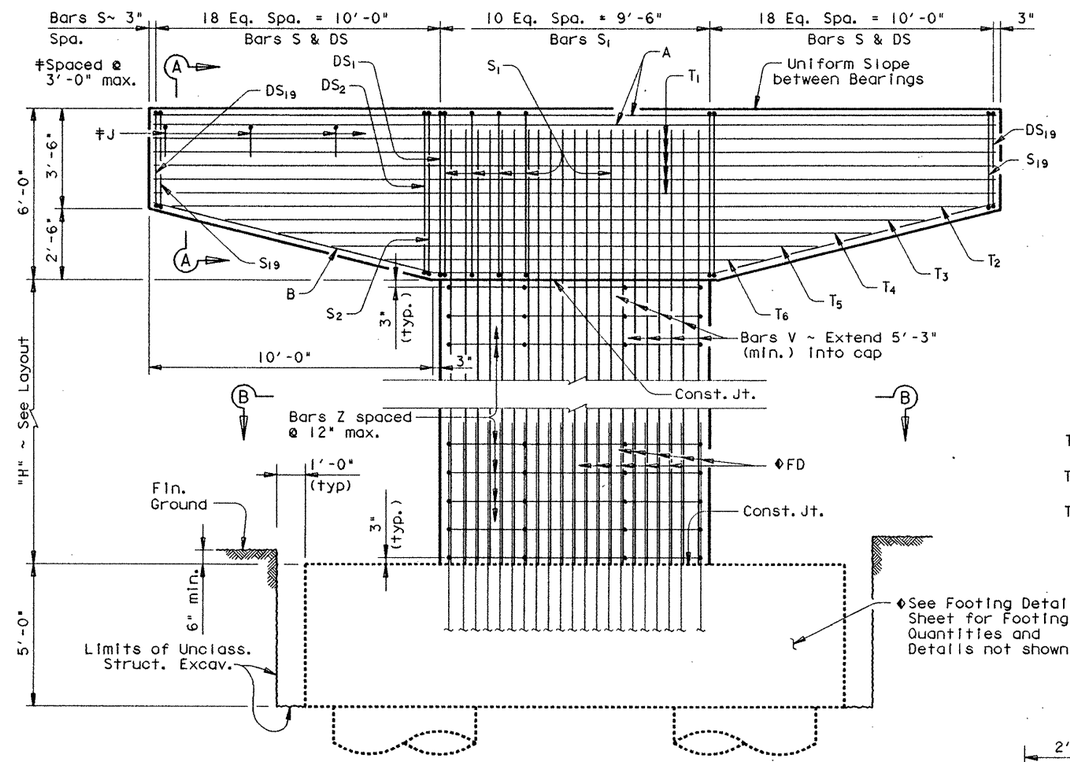

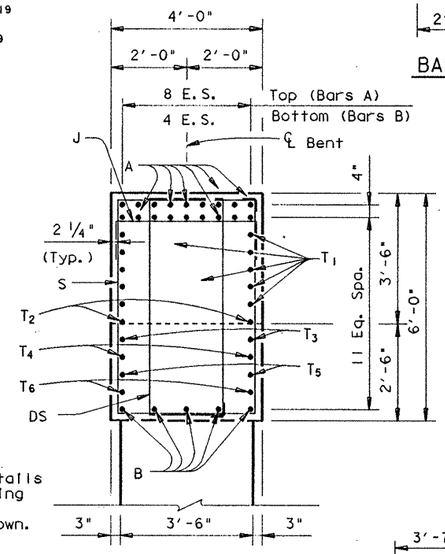

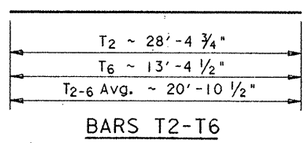

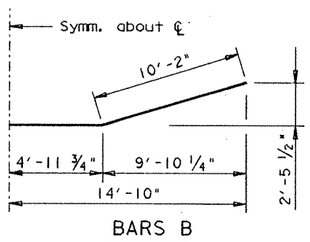

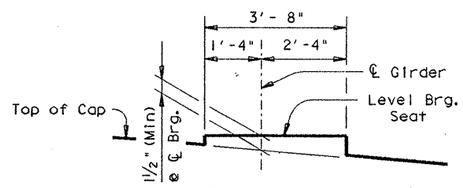

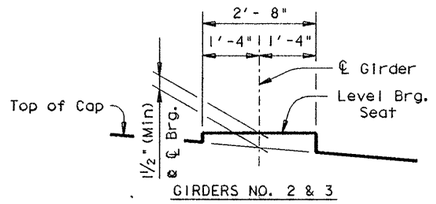

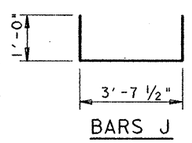

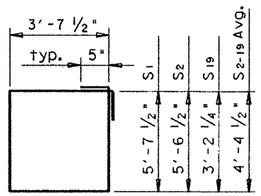

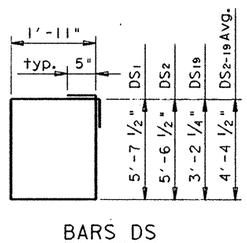

TABLE OF CONSTANT QUANTITIES				
Bar	No	Sz.	Length	Weight
A	18	#11	29'- 8"	2837
B	5	#11	30'- 4"	806
DS1	2	#5	15'-11"	33
DS2-19	36	#5	13'- 5"	504
J	11	#5	5'- 8"	65
S1	11	#5	19'- 4"	223
S2-19	36	#5	16'-10"Av	632
T1	10	#6	29'- 8"	446
T2-6	10	#6	20'-11"Av	314
Reinf. Steel (Cap)			Lb ‡	5860
Cl. "C" Conc. (Cap)			CY	23.2

‡ For Contractors Info. Only.

TABLE OF VARIABLE QUANTITIES										▲TOTAL EST. ◩ QUANTITIES	
H	CL. "C" CONC.	BARS Z1 #4 x 17'-5"		BARS Z2 #4 x 3'-8"		BARS Z3 #4 x 5'-0"		BARS V 48 ~ # 11		REINF. STEEL ‡	CL. "C" CONC.
FT.	C.Y.	NO.	WT.	NO.	WT.	NO.	WT.	LGTH.	WT.	LB.	C.Y.
21	25.0	44	512	66	162	44	147	26'- 3"	6694	19958	72.8
22	26.2	46	535	69	169	46	154	27'- 3"	6949	20250	74.0
23	27.4	48	558	72	176	48	160	28'- 3"	7204	20541	75.2
24	28.6	50	582	75	184	50	167	29'- 3"	7459	20835	76.4
25	29.7	52	605	78	191	52	174	30'- 3"	7714	21127	77.5
26	30.9	54	628	81	198	54	180	31'- 3"	7970	21419	78.7
27	32.1	56	652	84	206	56	187	32'- 3"	8225	21713	79.9
28	33.3	58	675	87	213	58	194	33'- 3"	8480	22005	81.1
29	34.5	60	698	90	220	60	200	34'- 3"	8735	22296	82.3

▲ Includes Footing Quantities
◩ Quantities Shown are for one Bent only.

GENERAL NOTES:

Designed in accordance with A.A.S.H.T.O. 1989 Specifications.

Calculated Drilled Shaft Loads Bent 15 = 600 T/Dr. Shaft.

Calculated Drilled Shaft Loads Bent 17 = 840 T/Dr. Shaft.

All Cap & Column Steel [redacted] Grade 60.

See "Form Liner Details" Sheet for aesthetic treatment of Columns and Caps.

HS 20 LOADING

STATE DEPARTMENT OF HIGHWAYS AND PUBLIC TRANSPORTATION

INTERIOR BENT NOS. 15 & 17 RAMP 2

US 83/281 INTERCHANGE

STATE OF TEXAS
MARK J. BLOSCHOCK
52996
REGISTERED PROFESSIONAL ENGINEER
9-17-91

D45350A1 : ZFA2 : [3551001437815C01.DGN]	PREPARED BY AND FOR USE OF TEXAS SDH&PT					
ORIGINAL DRAWING DATE: NOVEMBER 1990	STATE DISTRICT	FEDERAL REGION	FEDERAL AID PROJECT •			SHEET
DR.: GAF/MRL REVISIONS	21	6	NH 92( )M			284
CK.: MRL/GAF	COUNTY		CONTROL	SECTION	JOB	HIGHWAY
DN.: PSR	HIDALGO		0039	17	097	US 83/ 281
CK.: GAF/MRL						

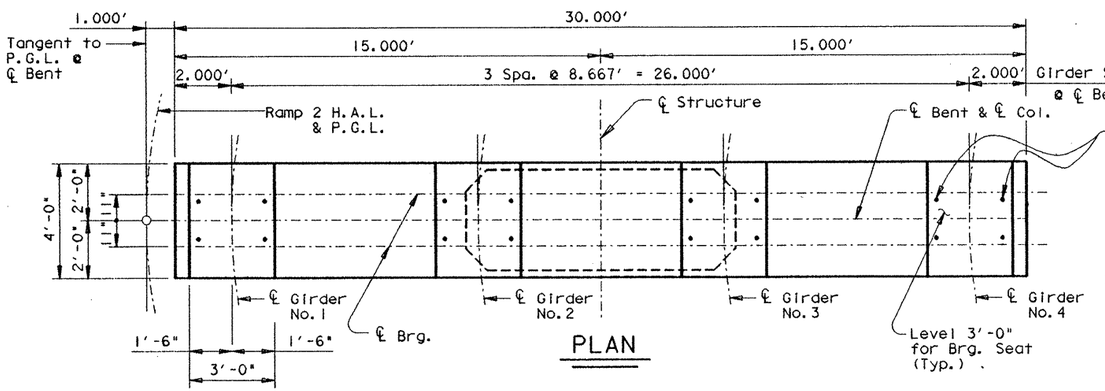

PLAN

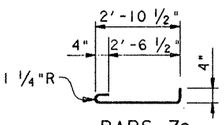

BARS Z2

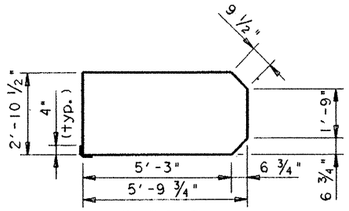

BARS Z1

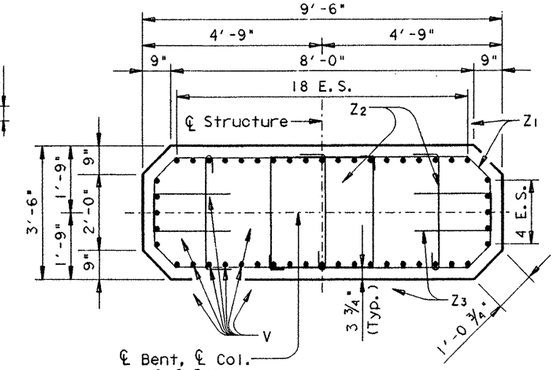

SECTION B-B

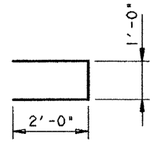

BARS Z3

TABLE OF CONSTANT QUANTITIES				
Bar	No	Sz.	Length	Weight
A	18	#11	29'- 8"	2837
B	5	#11	30'- 4"	806
DS1	2	#5	15'-11"	33
DS2-19	36	#5	13'- 5"	504
J	11	#5	5'- 8"	65
S1	11	#5	19'- 4"	223
S2-19	36	#5	16'-10"Av	632
T1	10	#6	29'- 8"	446
T2-6	10	#6	20'-11"Av	314
Reinf. Steel (Cap)			Lb ‡	5860
Cl. "C" Conc. (Cap)			CY	23.2

‡ For Contractors Info. Only.

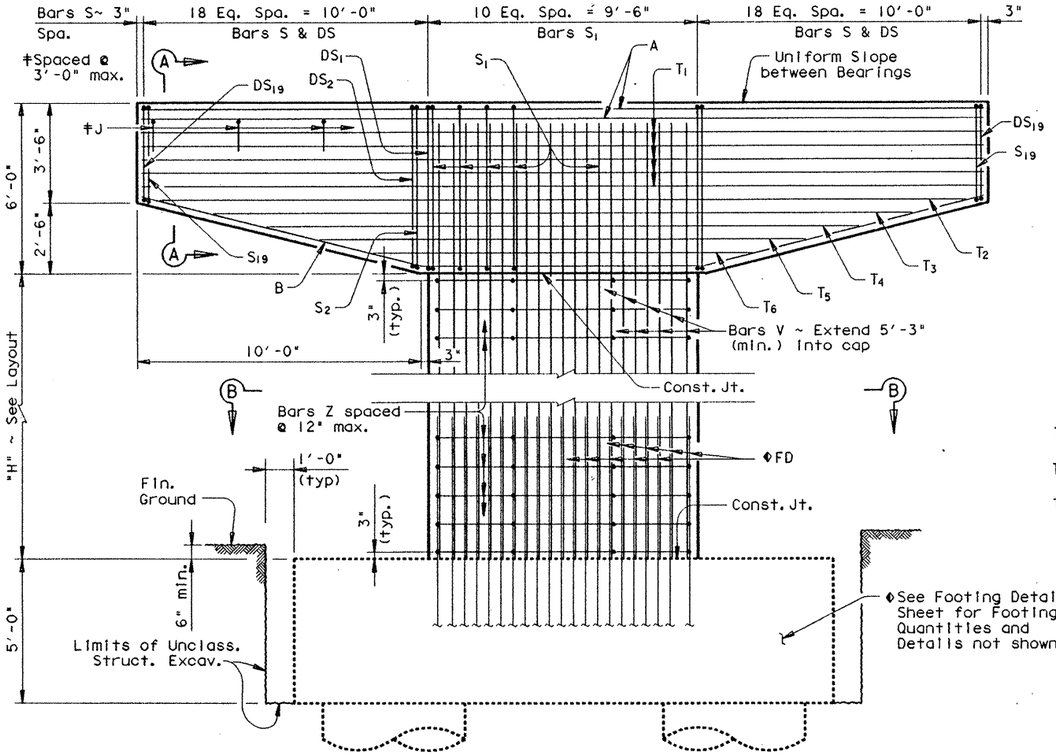

ELEVATION

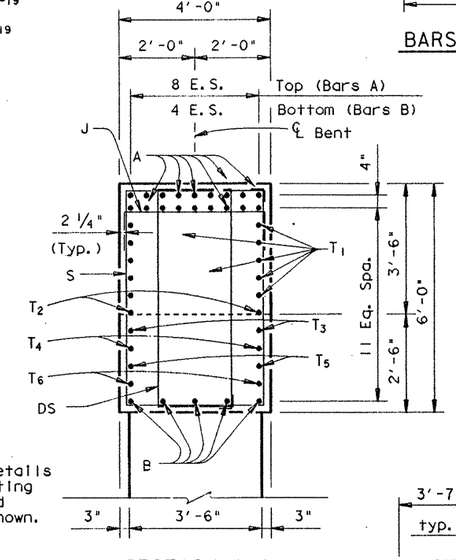

SECTION A-A

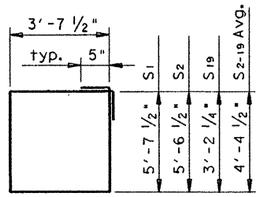

BARS S

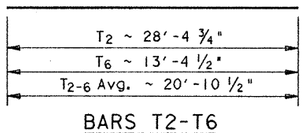

BARS T2-T6

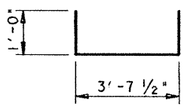

BARS J

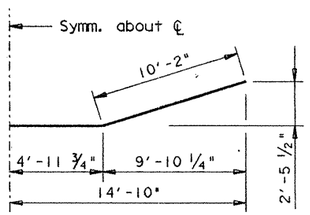

BARS B

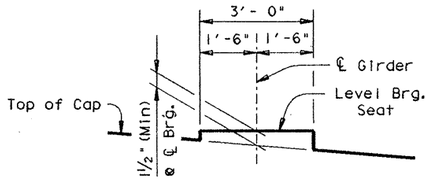

BEARING SEAT DETAIL

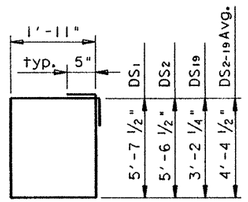

BARS DS

TABLE OF VARIABLE QUANTITIES										▲TOTAL EST. QUANTITIES	
H	CL. "C" CONC.	BARS Z1 #4 x 17'-5"		BARS Z2 #4 x 3'-8"		BARS Z3 #4 x 5'-0"		BARS V 48 ~ # 11		REINF. STEEL ‡	CL. "C" CONC.
FT.	C.Y.	NO.	WT.	NO.	WT.	NO.	WT.	LGTH.	WT.	LB.	C.Y.
24	28.6	50	582	75	184	50	167	29'- 3"	7459	20835	76.4
25	29.7	52	605	78	191	52	174	30'- 3"	7714	21127	77.5
26	30.9	54	628	81	198	54	180	31'- 3"	7970	21419	78.7
27	32.1	56	652	84	206	56	187	32'- 3"	8225	21713	79.9
28	33.3	58	675	87	213	58	194	33'- 3"	8480	22005	81.1

▲ Includes Footing Quantities

GENERAL NOTES:

Designed in accordance with A.A.S.H.T.O. 1989 Specifications.

Calculated Drilled Shaft Loads = 465 T/Dr. Shaft.

All Cap & Column Steel [redacted] Grade 60.

See "Form Liner Details" Sheet for aesthetic treatment of Columns and Caps.

HS 20 LOADING

STATE DEPARTMENT OF HIGHWAYS AND PUBLIC TRANSPORTATION

INTERIOR BENT NO. 16 RAMP 2

US 83/281 INTERCHANGE

STATE OF TEXAS
MARK J. BLOSCHOCK
52996
REGISTERED PROFESSIONAL ENGINEER
9-17-91

D45350A1 : ZFA2 : C355100143781SC02.DGN	PREPARED BY AND FOR USE OF TEXAS SDH&PT						
ORIGINAL DRAWING DATE: NOVEMBER 1990	STATE DISTRICT	FEDERAL REGION	FEDERAL AID PROJECT			SHEET	
DR.: GAF/MRL	REVISIONS	21	6	NH 92C	JM		285
CK.: MRL/GAF		COUNTY		CONTROL	SECTION	JOB	HIGHWAY
DR.: PSR		HIDALGO		0039	17	097	US 83/281
CK.: GAF/MRL							

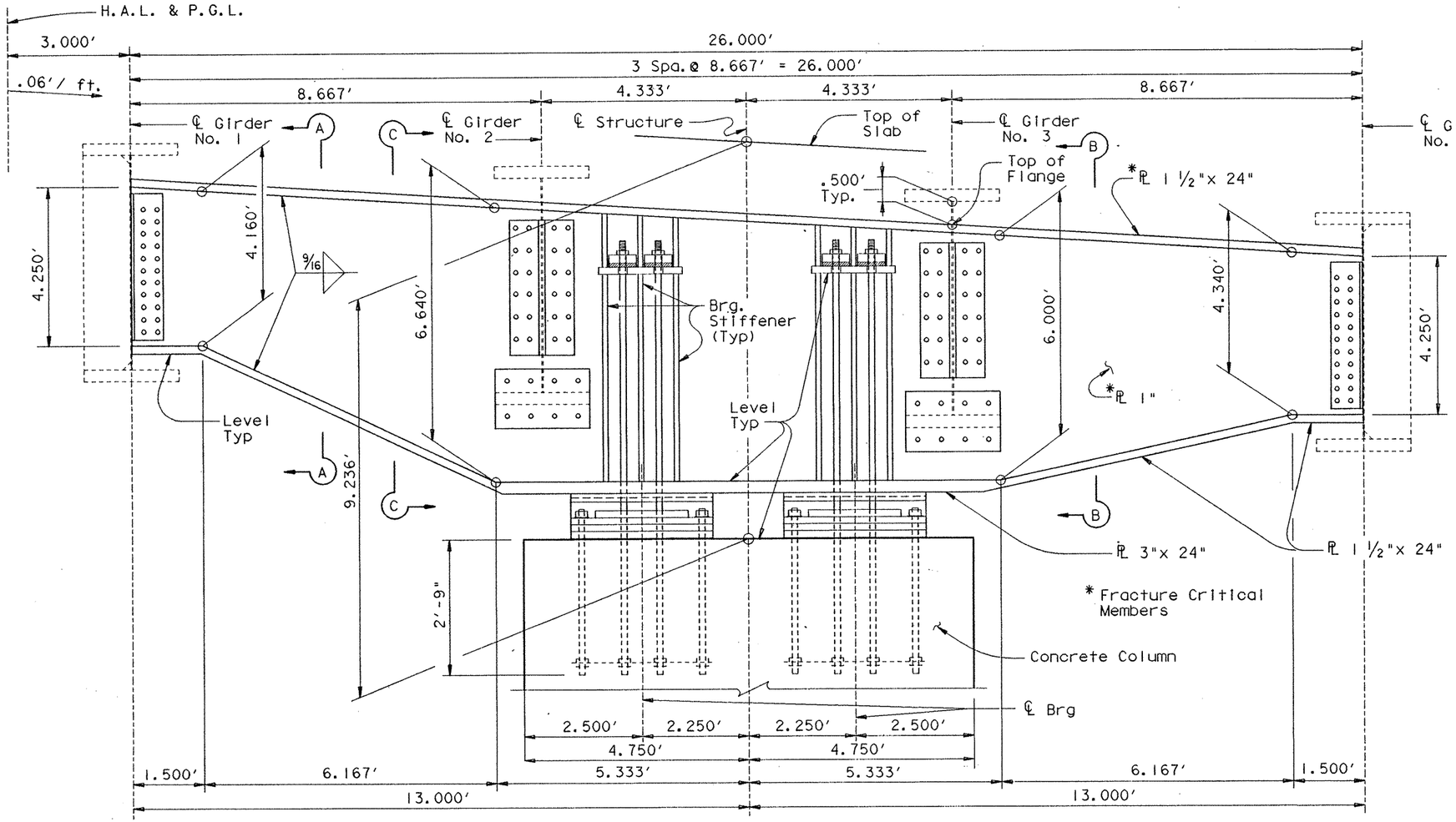

ELEVATION

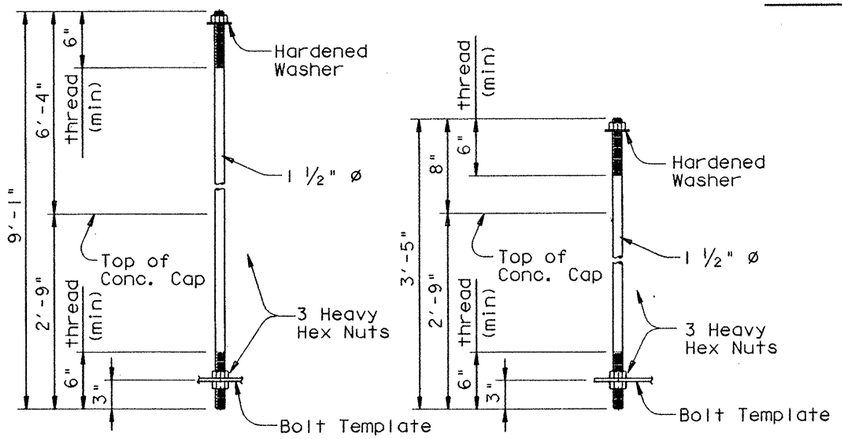

HOLD-DOWN BOLT DETAIL

ANCHOR BOLT DETAIL

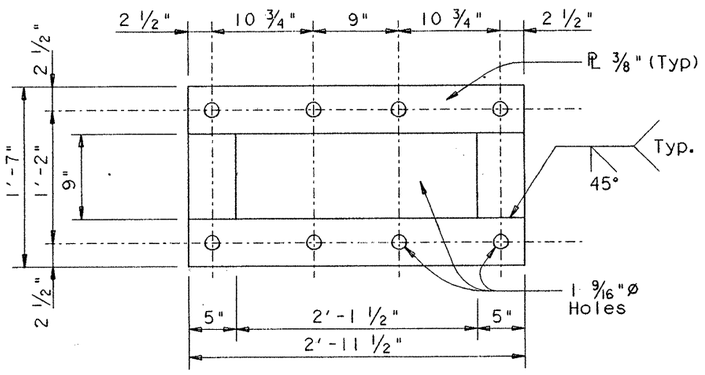

BOLT TEMPLATE

GENERAL NOTES:

Designed in accordance with A.A.S.H.T.O. 1989 Standard Specifications.

Material for Steel Cap and all connections [redacted] conform to the item "Steel Structures" A572.
Flange splices [redacted] made by full penetration grove welds in accordance with the item "Steel Structures".
The web and top flange are fracture critical and [redacted] conform to Fracture control Plan.

All bolts used in Girder to Cap connections sha[redacted] 1" ø A325 bolts.
Anchor Bolts and Hold Down Bolts [redacted] galvanized and conform to the item "Metal For Structures A.S.T.M. A 193-B7 Anchor Bolts".
Nuts s[redacted] heavy hex nuts and conform to ASTM A 194 2H.

The steel bent cap s[redacted] erected with the web set vertical and all anchor bolts uniformly tightened. Adjustment of girders for proper splice alignment [redacted] made by loosening nuts on one side of the cap while tightening nuts on the other side by an equal amount. After the slab and rail [redacted] placed and dead load deflection has occured, all hold-down bolts [redacted] loosened and uniformly retightened to snug tight plus 1/4 turn condition.

Estimated weight of "Structural Steel (HS)" for one steel cap and it's connections = 34600
Quanity included in total weight for 680.00' Plate Girder Unit.

HS 20 LOADING Sheet 1 of 4

STATE OF TEXAS
MARK J. BLOSCHOCK
52996
REGISTERED
PROFESSIONAL ENGINEER
9-17-91

STATE DEPARTMENT OF HIGHWAYS AND PUBLIC TRANSPORTATION

INTERIOR BENT

RAMP 2 BENT 18

US 83/281 INTERCHANGE

D45350A: *ZFA2* [355121]4377INS03.DGN | PREPARED BY AND FOR USE OF TEXAS SDH&PT

ORIGINAL DRAWING DATE: JANUARY 1990	REVISIONS	STATE DISTRICT	FEDERAL REGION	FEDERAL AID PROJECT	SHEET
DR.: MRL		21	6	NH-92( )M	266
CK.: GAF		COUNTY	CONTROL	SECTION	JOB	HIGHWAY
DR.: MMM		HIDALGO	0039	17	097	US 83/281
CK.: MRL						

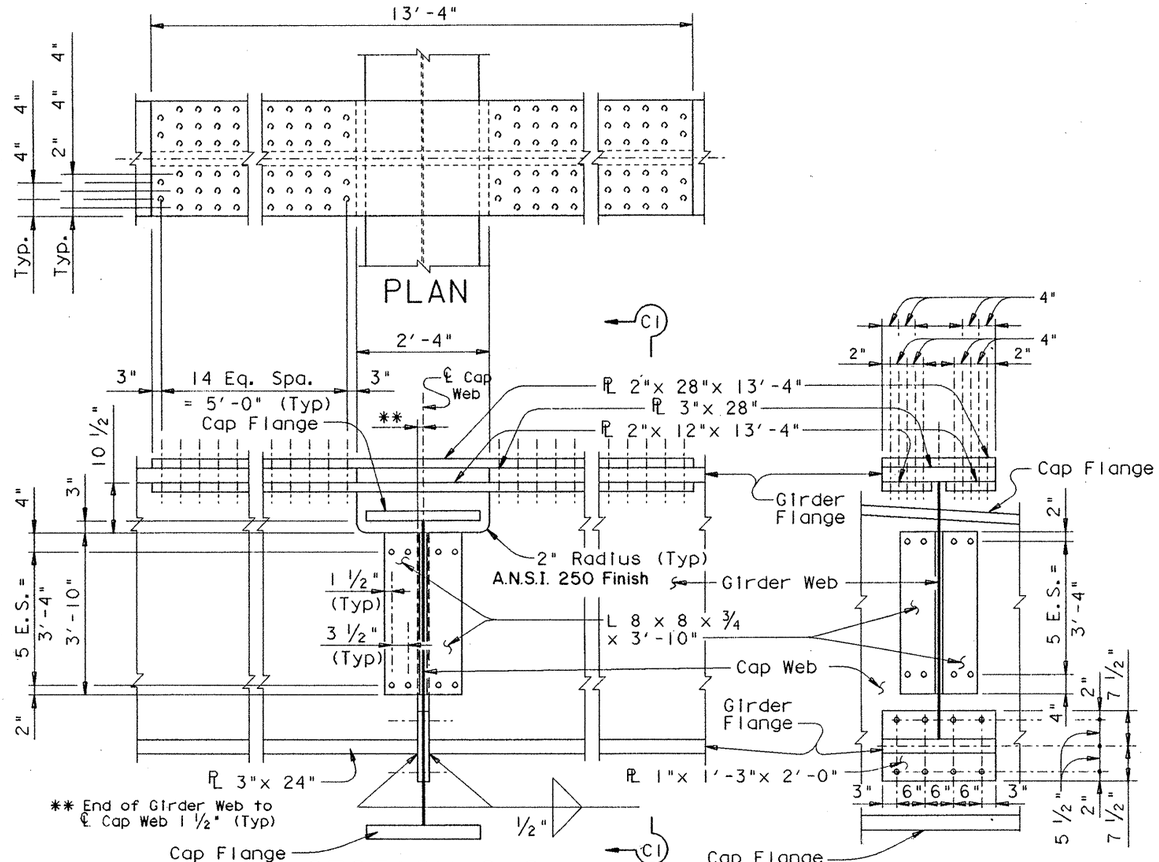

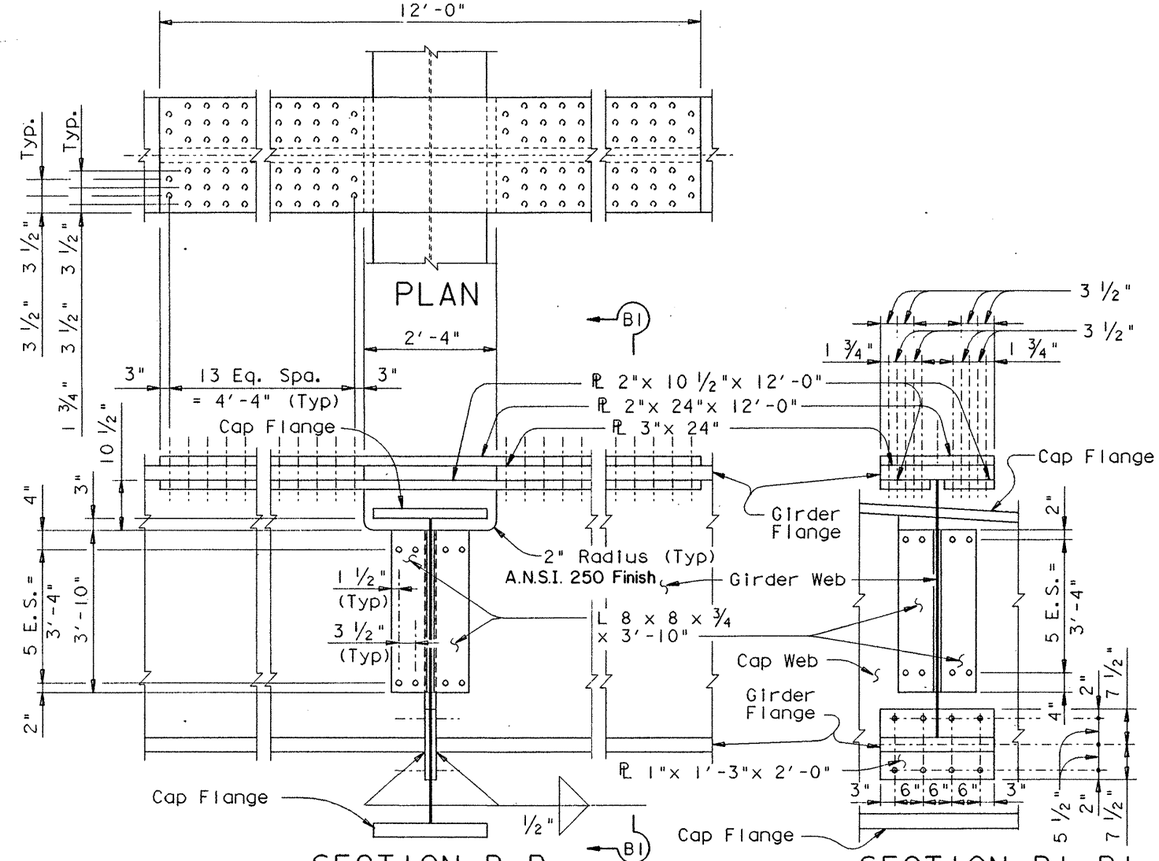

GIRDER NO 3

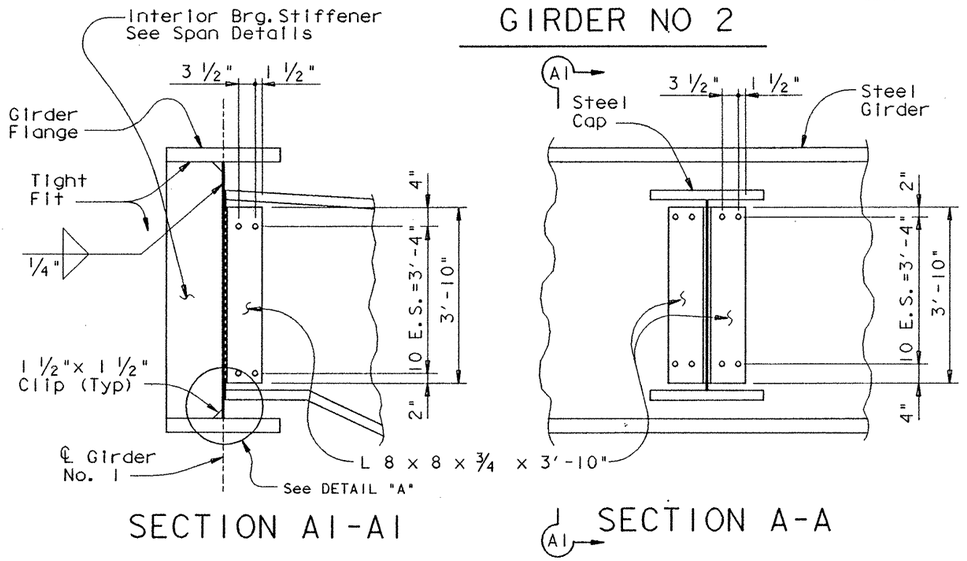

GIRDER NO 2

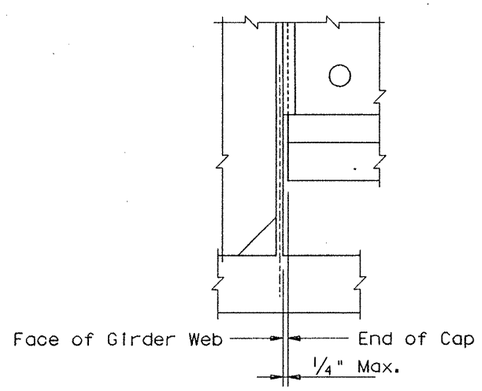

GIRDER NO 1 & 4

REV. 3-30-92

HS 20 LOADING Sheet 2 of 4

STATE DEPARTMENT OF HIGHWAYS AND PUBLIC TRANSPORTATION

INTERIOR BENT

RAMP 2 BENT 18

US 83/281 INTERCHANGE

STATE OF TEXAS
MARK J. BLOSCHOCK
52996
REGISTERED PROFESSIONAL ENGINEER
9-17-91

D45350A1ZFA2(355121)43771NS03.DGN	PREPARED BY AND FOR USE OF TEXAS SDH&PT						
ORIGINAL DRAWING DATE: JANUARY 1990	STATE DISTRICT	FEDERAL REGION	FEDERAL AID PROJECT				SHEET
DN.: MRL REVISIONS	21	6	NH 92( )M				287
CK.: GAF	COUNTY			CONTROL	SECTION	JOB	HIGHWAY
DN.: MWM	HIDALGO			0039	17	097	US 83/281
CK.: MRL							

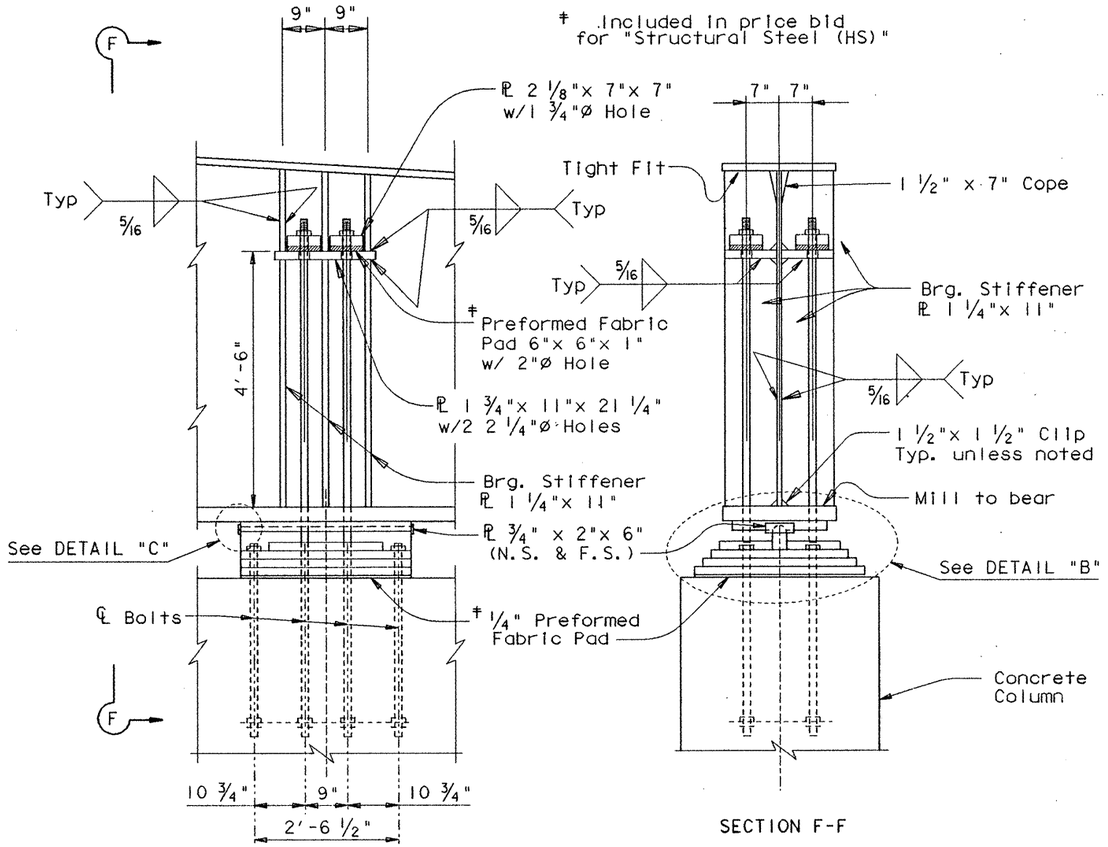

SECTION F-F

BEARING DETAILS

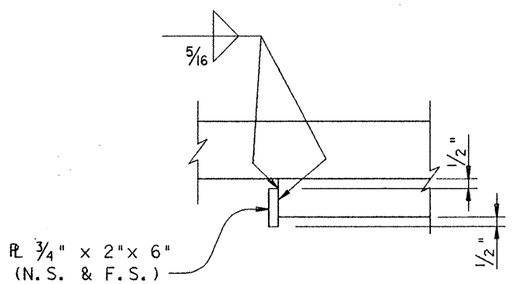

DETAIL "C"

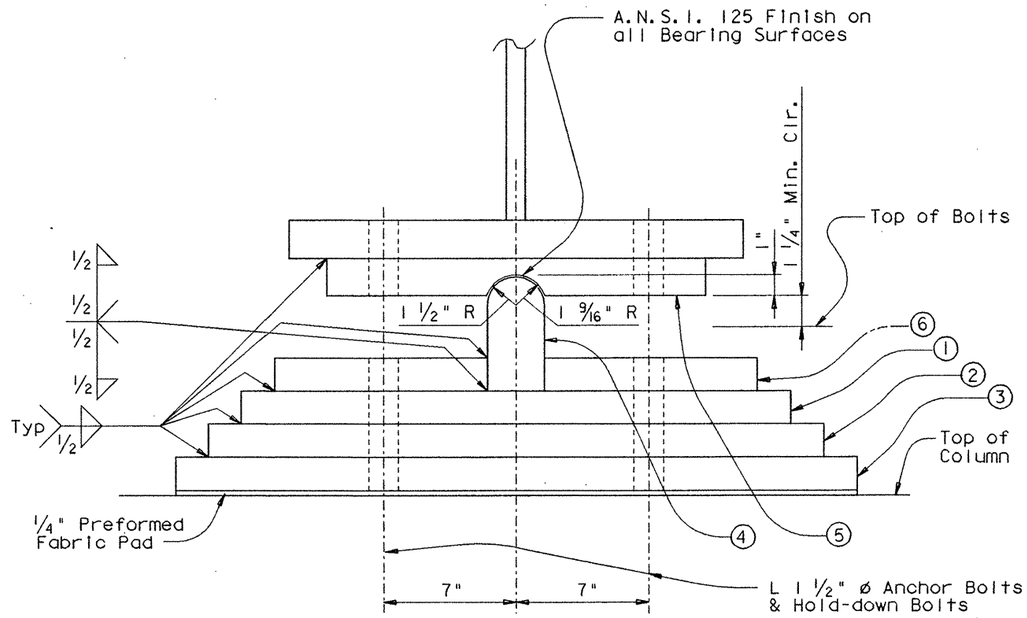

DETAIL "B"

① ℄ 1 3/4"x 29"x 3'-0" with 1 3/4" ø holes for Anchor Bolts & Hold-down Bolts.
② ℄ 1 3/4"x 32 1/2"x 3'-0" with 1 3/4" ø holes for Anchor Bolts & Hold-down Bolts.
③ ℄ 1 3/4"x 36"x 3'-0" with 1 3/4" ø holes for Anchor Bolts & Hold-down Bolts.
④ ℄ 3"x 5"x 3'-0" R=1 1/2"
⑤ ℄ 2"x 20"x 3'-0" R=1 9/16" with 1 3/4" ø holes for Hold-down Bolts.
⑥ 2 ~ ℄ 1"x 11 1/4"x 1'-6" with 1 3/4" ø holes for Hold-down Bolts.

HS 20 LOADING Sheet 3 of 4

STATE DEPARTMENT OF HIGHWAYS AND PUBLIC TRANSPORTATION

INTERIOR BENT

RAMP 2 BENT 18

US 83/281 INTERCHANGE

STATE OF TEXAS
MARK J. BLOSCHOCK
52996
REGISTERED PROFESSIONAL ENGINEER
9-19-91

D45350A: ZFA2: [35512]4377INS03.DGN	PREPARED BY AND FOR USE OF TEXAS SDH&PT					
ORIGINAL DRAWING DATE: JANUARY 1990	STATE DISTRICT	FEDERAL REGION	FEDERAL AID PROJECT #			SHEET
DR.: MRL	21	6	NH 92( )M			288
CK.: GAF	COUNTY		CONTROL	SECTION	JOB	HIGHWAY
DR.: MAM	HIDALGO		0039	17	097	US 83/281
CK.: MRL						

REVISIONS

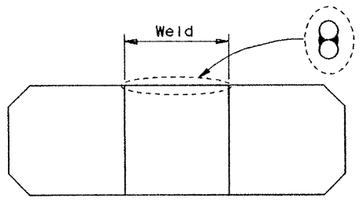

BARS Z1 WELD DETAIL

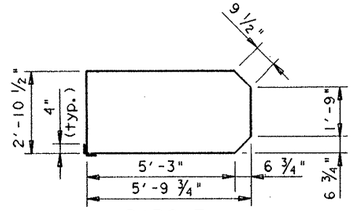

BARS Z1

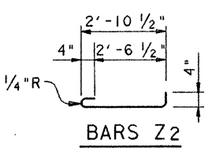

BARS Z2

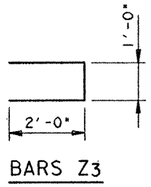

BARS Z3

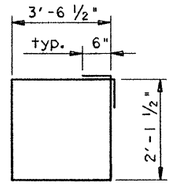

BARS S

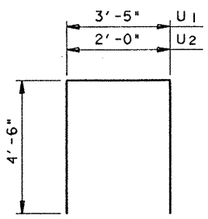

BARS U

TABLE OF CONSTANT QUANTITIES				
Bar	No	Sz.	Length	Weight
S	14	#6	12'- 5"	261
U1	2	#6	12'- 5"	37
U2	16	#6	11'- 0"	264
REINF STEEL (COL)			Lb #	562

For Contractors Info. Only.

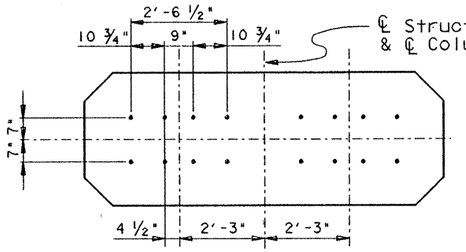

ANCHOR BOLT PLAN

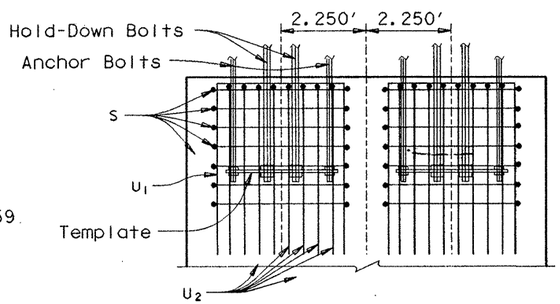

ANCHOR BOLT DETAIL

TABLE OF VARIABLE QUANTITIES										▲TOTAL EST. QUANTITIES	
H	CL. "C" CONC.	BARS Z1 #4 x 17'-5"		BARS Z2 #4 x 3'-8"		BARS Z3 #4 x 5'-0"		BARS V 48 ~ # 11		REINF. STEEL #	CL. "C" CONC.
FT.	C.Y.	NO.	WT.	NO.	WT.	NO.	WT.	LGTH.	WT.	LB.	C.Y.
20	23.8	46	535	60	147	40	134	19'-9 "	5037	12998	48.4
21	25.0	48	558	63	154	42	140	20'-9 "	5292	13289	49.6
22	26.2	50	582	66	162	44	147	21'-9 "	5547	13583	50.8
23	27.4	52	605	69	169	46	154	22'-9 "	5802	13875	52.0
24	28.6	54	628	72	176	48	160	23'-9 "	6057	14166	53.2

▲ Includes Footing Quantities

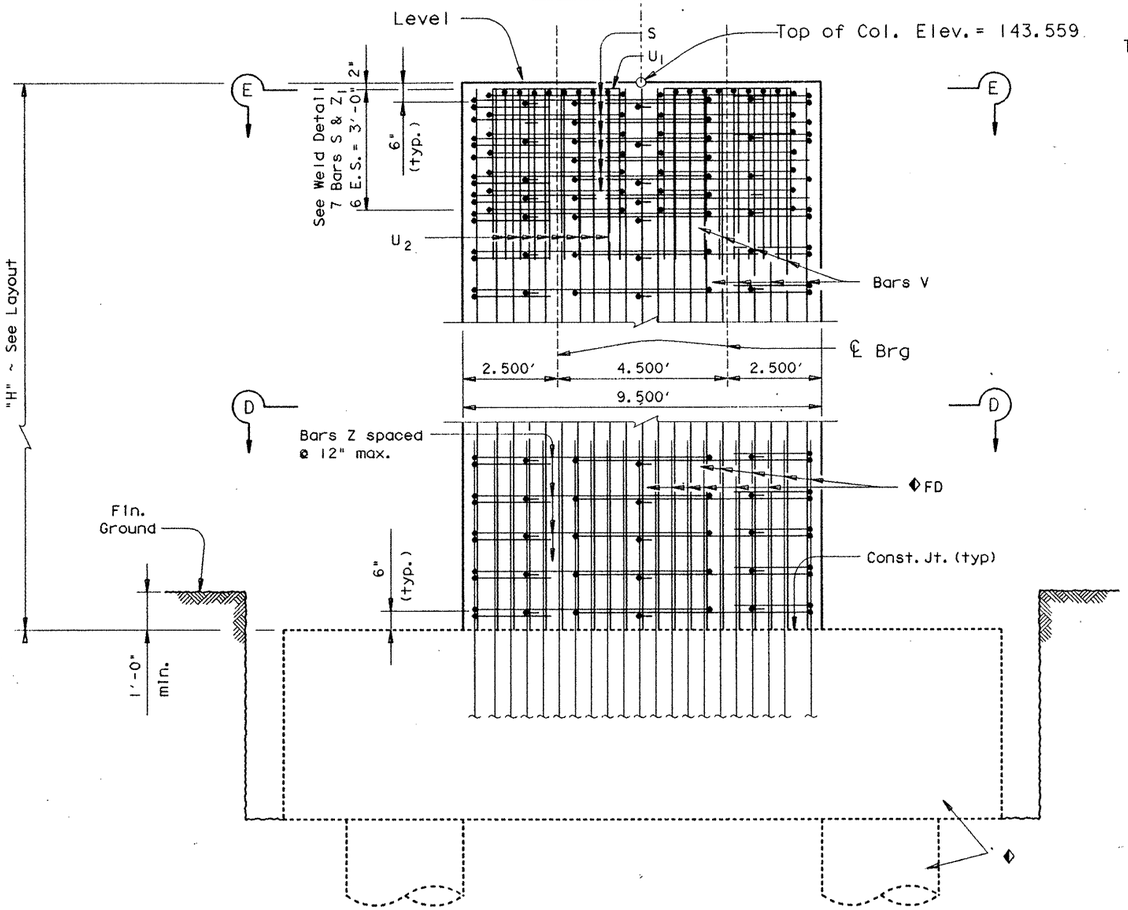

ELEVATION

◆ See Footing Details Sheet for Footing Quantities and Details not shown.

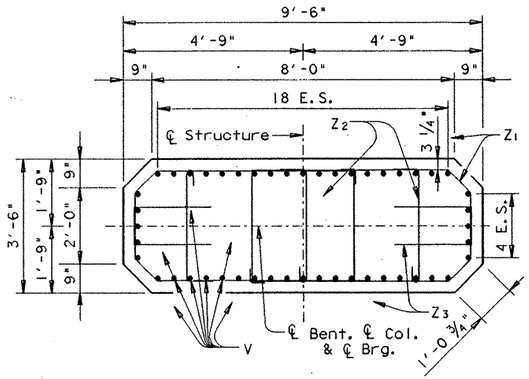

SECTION D-D

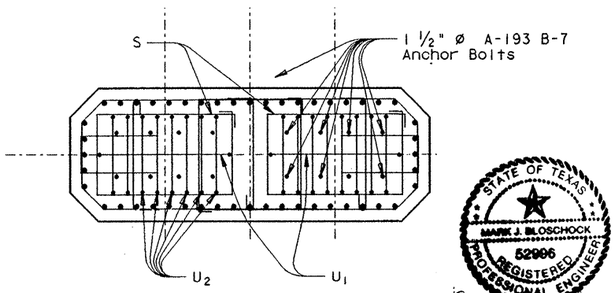

SECTION E-E

See Section D-D for details not shown

GENERAL NOTES:

Designed according to A.A.S.H.T.O. 1989 Standard and current Interim Specifications.

Calculated Foundation Load = 800 Tons/Drilled Shaft

All reinforcing steel [redacted] Grade 60.

See "Form Liner" Details for aesthetic treatment of columns.

STATE OF TEXAS
MARK J. BLOSCHOCK
52996
REGISTERED
PROFESSIONAL ENGINEER

9-17-91

HS 20 LOADING Sheet 4 of 4

STATE DEPARTMENT OF HIGHWAYS AND PUBLIC TRANSPORTATION

INTERIOR BENT

RAMP 2 BENT 18

US 83/281 INTERCHANGE

D45350A ZFA2 [355121]4377INS03.DGN		PREPARED BY AND FOR USE OF TEXAS SDH&PT					
ORIGINAL DRAWING DATE: JANUARY 1990		STATE DISTRICT	FEDERAL REGION	FEDERAL AID PROJECT			SHEET
DN.: MRL	REVISIONS	21	6	NH 92 C) M			289
CK.: GAF		COUNTY		CONTROL	SECTION	JOB	HIGHWAY
DR.: MMM		HIDALGO		0039	17	097	US 83/281
CK.: MRL							

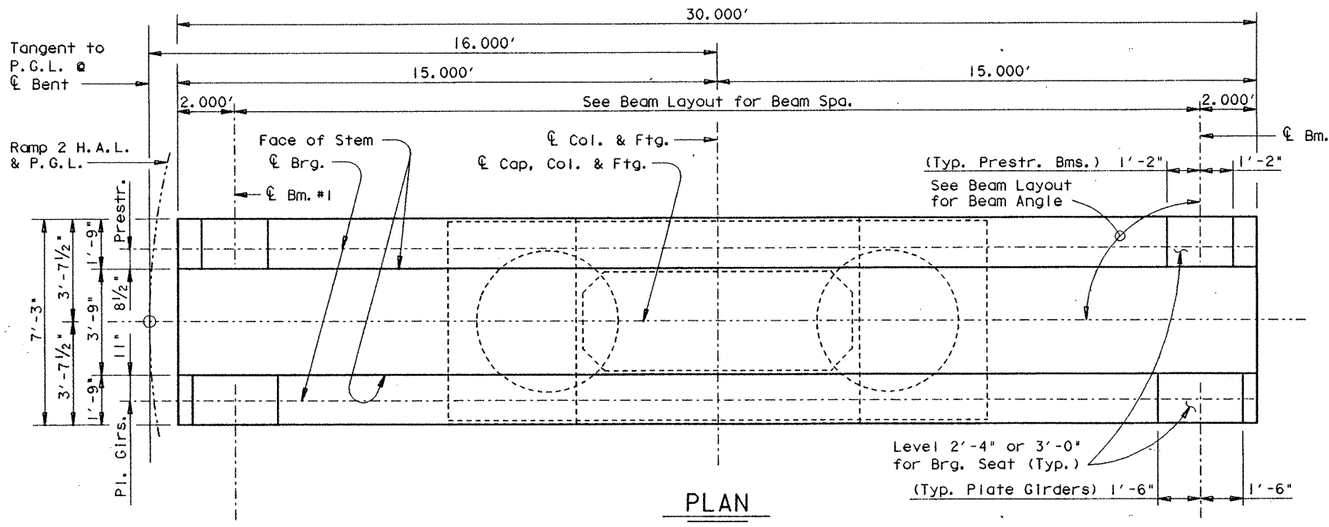

PLAN

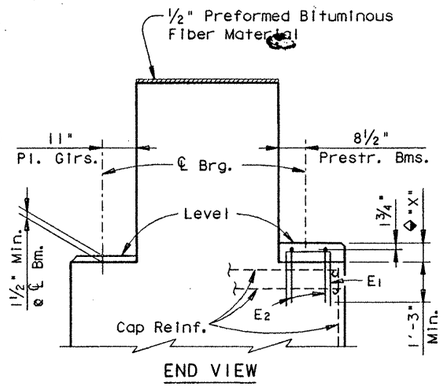

END VIEW

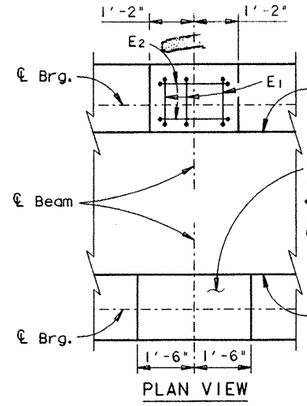

PLAN VIEW

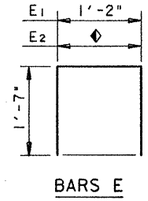

BARS E

BEARING SEAT DETAILS

◆ Reinforced Pedestals [redacted] required where "X" is greater than 2½" and s[redacted] considered subsidiary to the Bid Item "Class C Concrete (Bent). Compare bearing seat elevations to determine value of "X".

◆ 2'-0½" ℄ Prestr. Bms.
2'-8½" ℄ Plate Girs.

NOTE: For Bearing Seat surface finish see GpC(SPL) sheet.

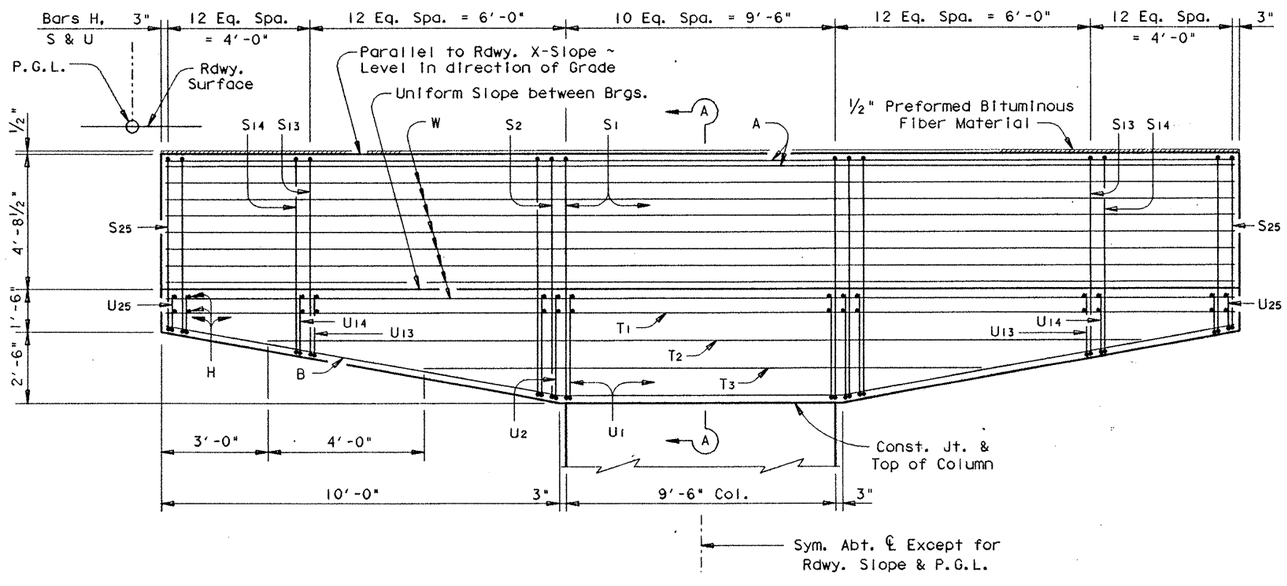

CAP ELEVATION

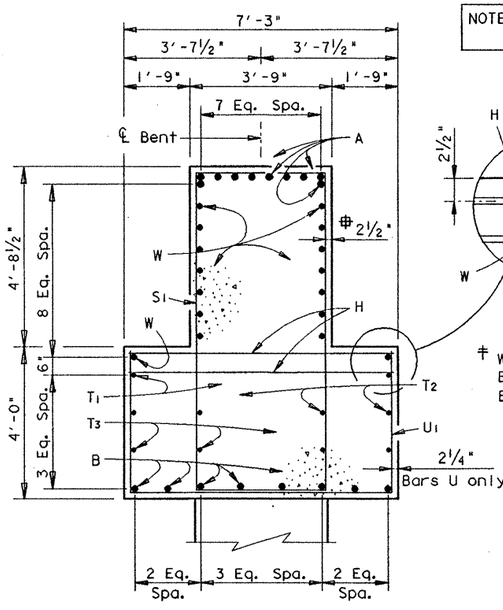

SECTION A-A

Typical except as noted

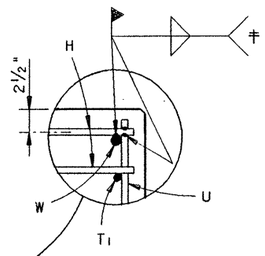

‡ Weld both sides of Bars W and U to top Bar H as shown.

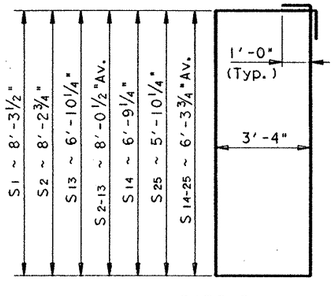

BARS S

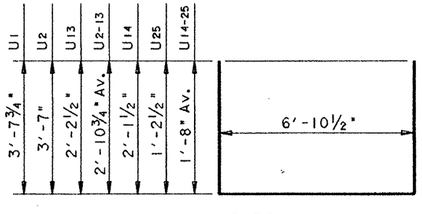

BARS U

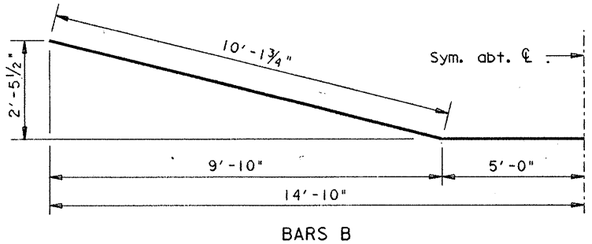

BARS B

HS 20 LOADING

SHEET 1 OF 2

STATE DEPARTMENT OF HIGHWAYS AND PUBLIC TRANSPORTATION

INTERIOR BENT NO. 20 RAMP 2

US 83/281 INTERCHANGE

STATE OF TEXAS
MARK J. BLOSCHOCK
52996
REGISTERED PROFESSIONAL ENGINEER

9-17-91

D45350A: ZFA2: C35510514377INV08.DGN

PREPARED BY AND FOR USE OF TEXAS SDH&PT

ORIGINAL DRAWING DATE: NOVEMBER 1990	STATE DISTRICT	FEDERAL REGION	FEDERAL AID PROJECT	◆	SHEET
DR.: JCC	21	6	NH92 ( ) M		290
CK.: MAS	COUNTY		CONTROL	SECTION	JOB	HIGHWAY
DR.: DRC	HIDALGO		0039	17	097	US 83/281
CK.: JCC						

REVISIONS

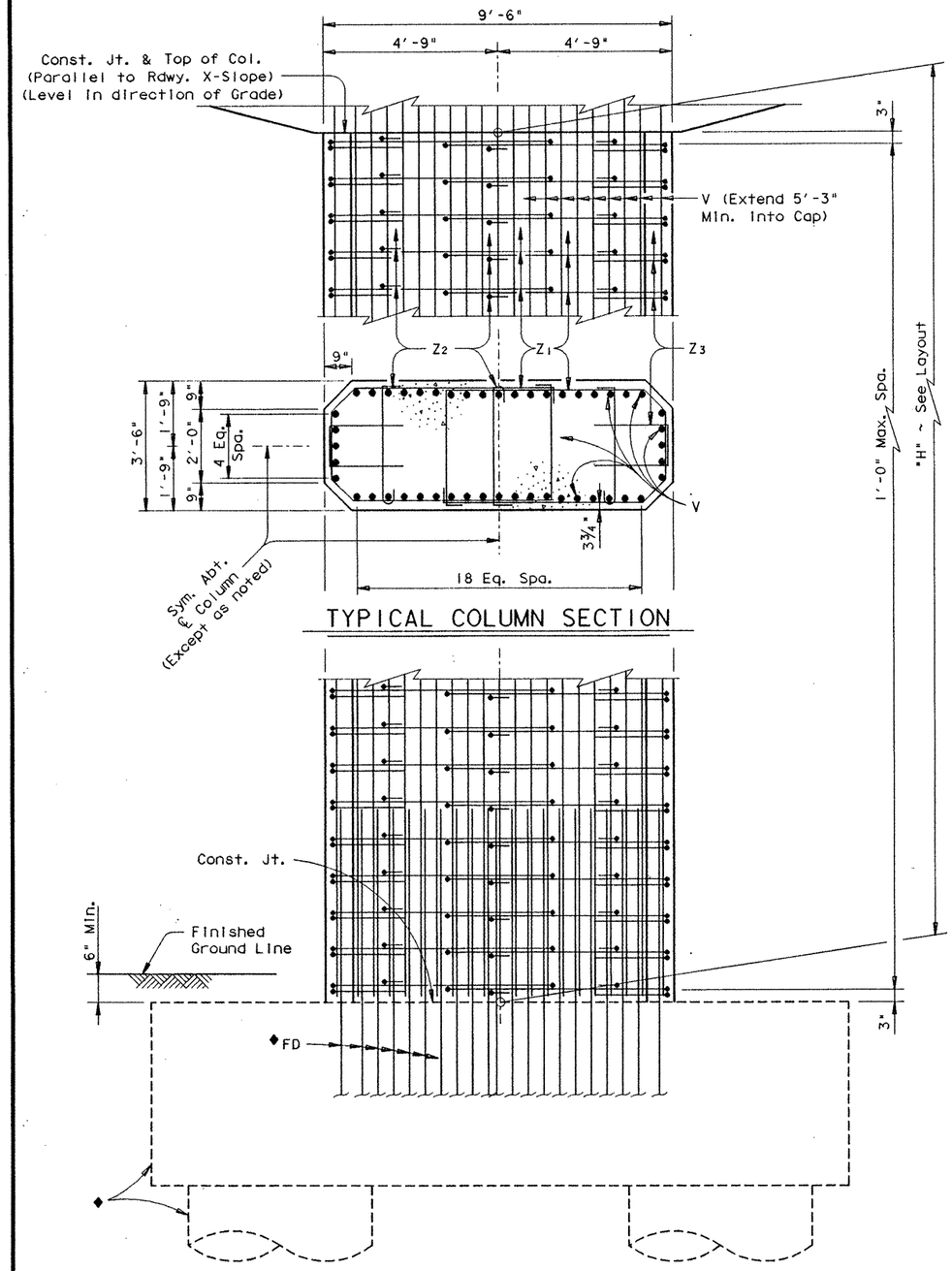

TYPICAL COLUMN SECTION

◆See Footing Details sheet for foundation details and quantities not shown.

COLUMN ELEVATION

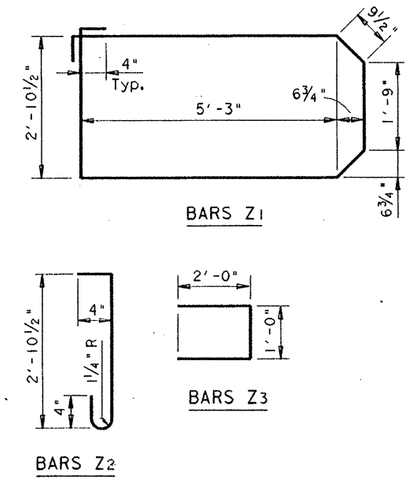

BARS Z1

BARS Z2

BARS Z3

For contractor's information only

All cap & column reinforcing steel [redacted] Grade 60.

GENERAL NOTES:

Designed according to A.A.S.H.T.O. 1989 Standard and current Interim Specifications.

Calculated Foundation Load = 540 Tons/Dr. Shaft

See "Form Liner Details" sheet for aesthetic treatment of column and cap.

See Inverted Tee Bent Special Cap Details Shee for details not shown.

TABLE OF CONSTANT QUANTITIES

Bar	No.	Size	Length	Weight
A	10	# 11	29'- 8"	1576
B	8	# 11	30'- 4"	1289
H	118	# 6	6'-11"	1226
S1	11	# 6	25'- 3"	417
S2-13	24	# 6	23'- 9"Av	856
S14-25	24	# 6	21'- 4"Av	769
T1	2	# 6	29'- 8"	89
T2	4	# 6	24'- 0"	144
T3	4	# 6	16'- 0"	96
U1	11	# 5	14'- 2"	163
U2-13	24	# 5	12'- 8"Av	317
U14-25	24	# 5	10'- 3"Av	257
W	16	# 9	29'- 8"	1614

Reinforcing Steel	Lb	# 8813
Class "C" Concrete (Cap)	CY	45.3

TABLE OF VARIABLE QUANTITIES

"H"	Class "C" Conc. (Col.)	Bars Z1 17'-5" ~ #4		Bars Z2 3'-8" ~ #4		Bars Z3 5'-0" ~ #4		Bars V 48 ~ # 11		■ TOTAL ESTIMATED QUANTITIES # Reinf. Steel	Class "C" Conc.
Ft	CY	No.	Weight	No.	Weight	No.	Weight	Length	Weight	Lb	CY
32	38.1	66	768	99	243	66	220	37'- 3"	9500	26127	108.0
33	39.3	68	791	102	250	68	227	38'- 3"	9755	26419	109.2
34	40.5	70	815	105	257	70	234	39'- 3"	10010	26712	110.4
35	41.6	72	838	108	265	72	240	40'- 3"	10265	27004	111.5
36	42.8	74	861	111	272	74	247	41'- 3"	10520	27296	112.7

■ Includes Footing Quantities

HS 20 LOADING

SHEET 2 OF 2

STATE DEPARTMENT OF HIGHWAYS AND PUBLIC TRANSPORTATION

INTERIOR BENT NO. 20 RAMP 2

US 83/281 INTERCHANGE

STATE OF TEXAS
MARK J. BLOSCHOCK
52996
REGISTERED PROFESSIONAL ENGINEER

9-17-91

REV. 3-30-92

D45350A: ZFA2: [355105]4377INV08.DGN

PREPARED BY AND FOR USE OF TEXAS SDH&PT

ORIGINAL DRAWING DATE: NOVEMBER 1990

DN.: MRL
CK.: GAF
DW.: DRG
CK.: JCC

REVISIONS

STATE DISTRICT	FEDERAL REGION	FEDERAL AID PROJECT	SHEET
21	6	NH 92( )M	291

COUNTY	CONTROL	SECTION	JOB	HIGHWAY
HIDALGO	0039	17	097	US 83/281

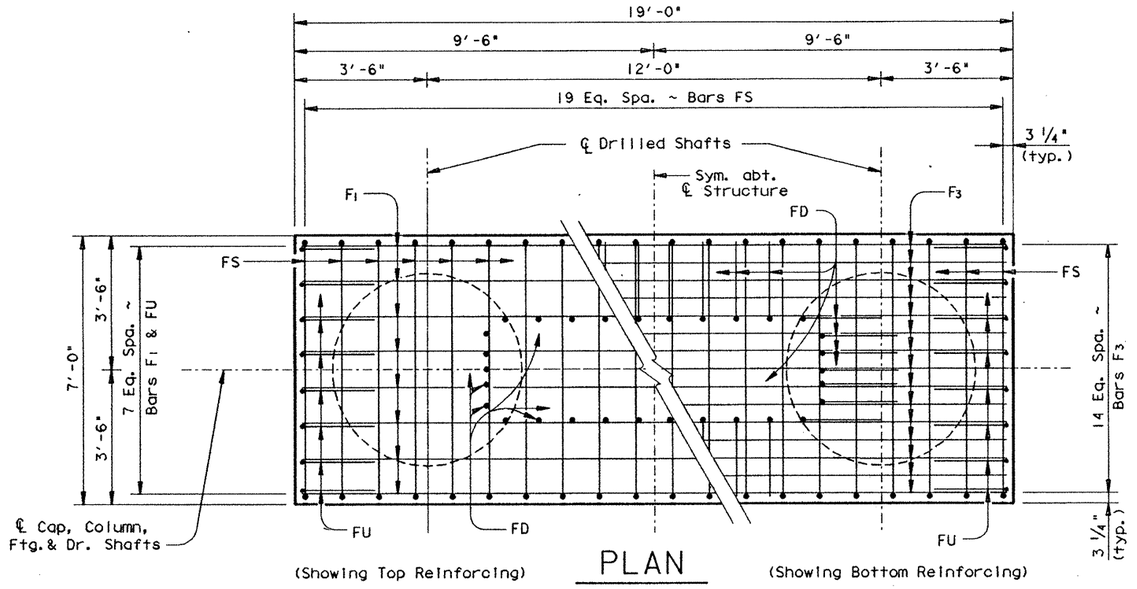

(Showing Top Reinforcing) PLAN (Showing Bottom Reinforcing)

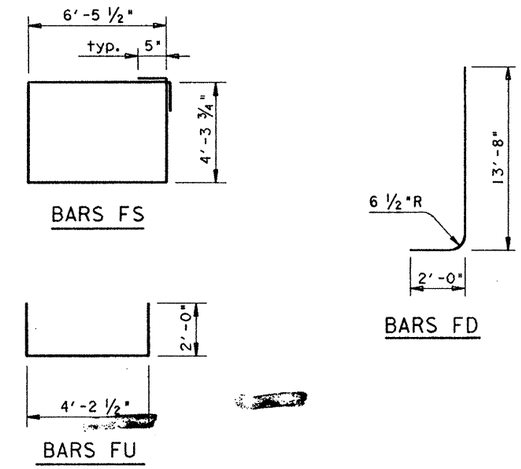

‡TABLE OF FOOTING QUANTITIES

Bar	No.	Size	Length	Weight
F1	8	# 8	18'- 6"	395
F2	8	# 5	18'- 6"	154
F3	15	# 11	18'- 6"	1474
FD	30	# 11	15'- 6"	2471
FS	20	# 5	22'- 5"	468
FU	16	# 5	8'- 3"	139

Reinforcing Steel	Lb	‡ 5101
Class "C" Concrete	CY	24.6

‡ For Contractor's information only.

‡ Quantities shown are for one footing only.

All footing reinforcing [redacted] Grade 60.

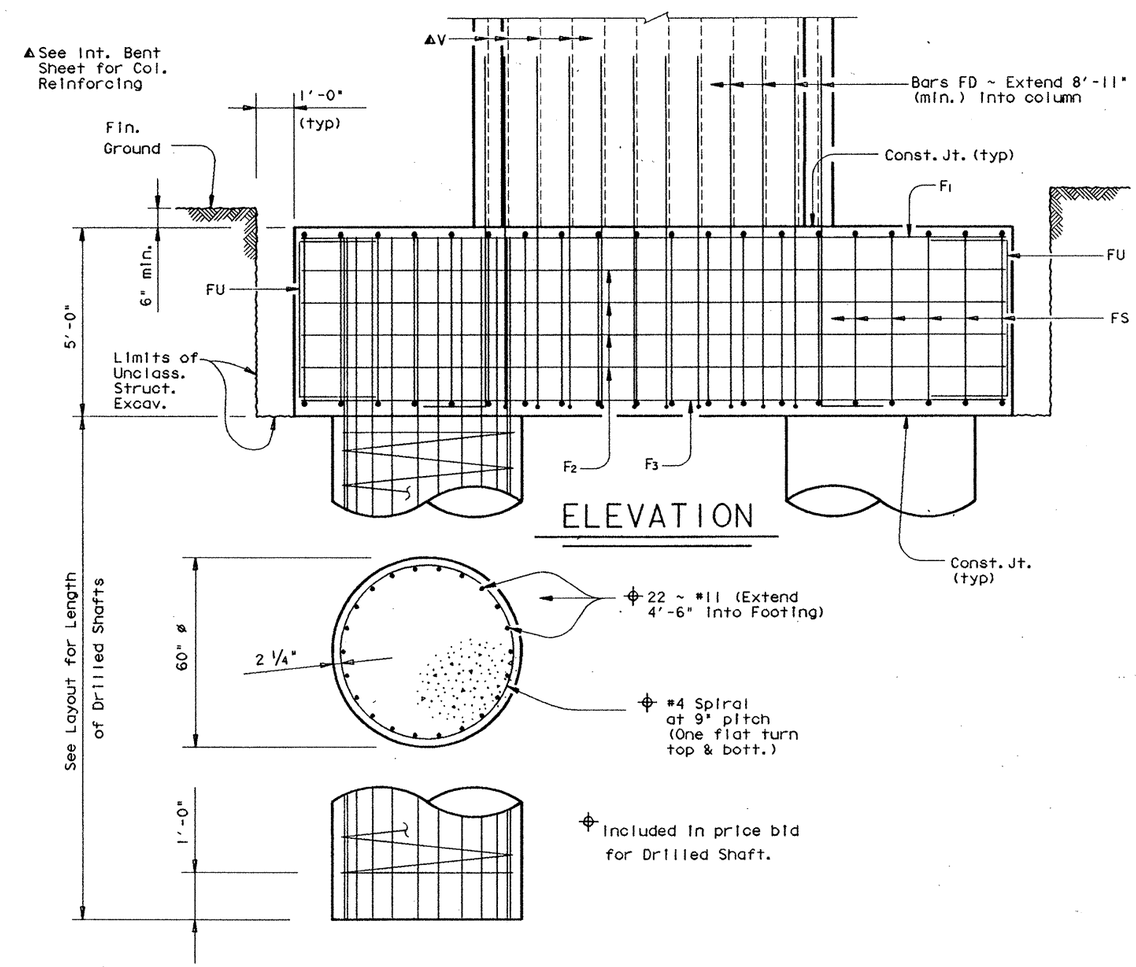

ELEVATION

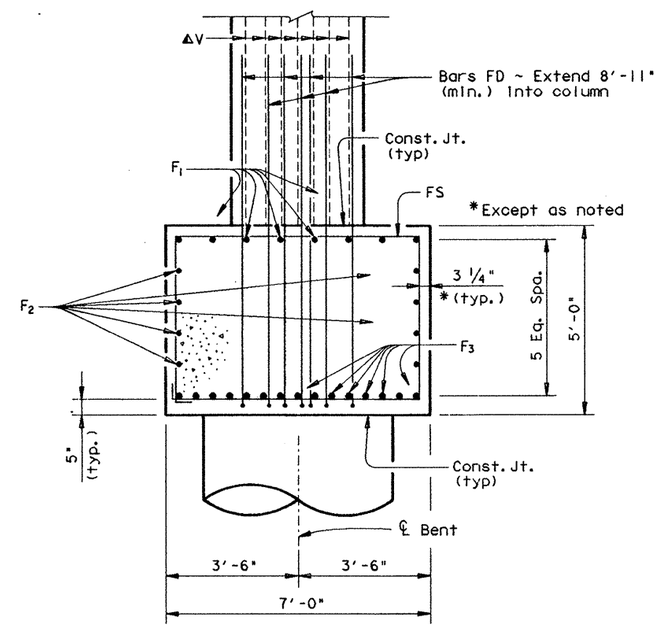

FOOTING SECTION

HS 20 LOADING

STATE DEPARTMENT OF HIGHWAYS AND PUBLIC TRANSPORTATION

FOOTING DETAILS BENT NOS. 21-27, 29 RAMP 2

US 83/281 INTERCHANGE

STATE OF TEXAS
MARK J. BLOSCHOCK
52996
REGISTERED PROFESSIONAL ENGINEER

9-17-91

D45350A1 : ZFA2: [355100]4377MIS02.DGN	PREPARED BY AND FOR USE OF TEXAS SDH&PT					
ORIGINAL DRAWING DATE: JANUARY 1991	STATE DISTRICT	FEDERAL REGION	FEDERAL AID PROJECT			SHEET
DN.: GAF/MRL	21	6	NH 92 6) M-1			292
CK.: MRL/GAF	COUNTY		CONTROL	SECTION	JOB	HIGHWAY
DW.: DRG/PSR	HIDALGO		0039	17	097	US 83/281
CK.: JCC						

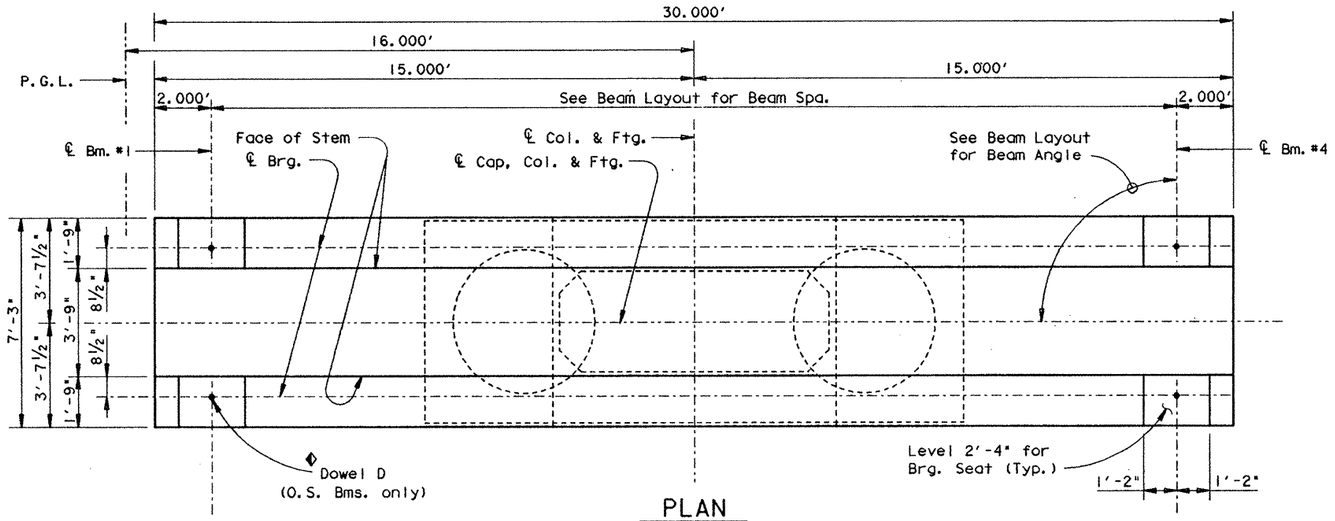

PLAN

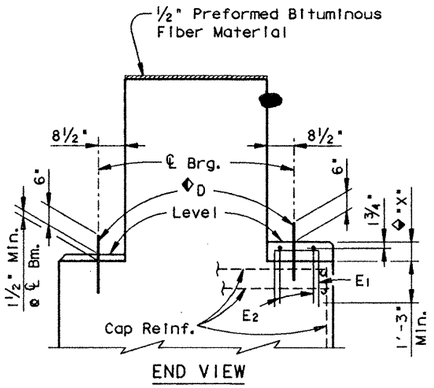

END VIEW

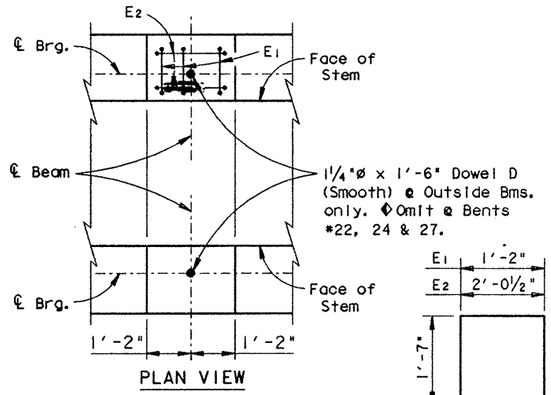

PLAN VIEW

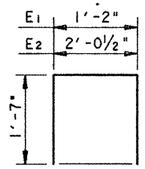

BARS E

BEARING SEAT DETAILS

◆Reinforced Pedestals [redacted] required where "X" is greater than 2½" and [redacted] considered subsidiary to the Bid Item "Class C Concrete (Bent). Compare bearing seat elevations to determine value of "X".

NOTE: For Bearing Seat surface finish see GpC(SPL) sheet.

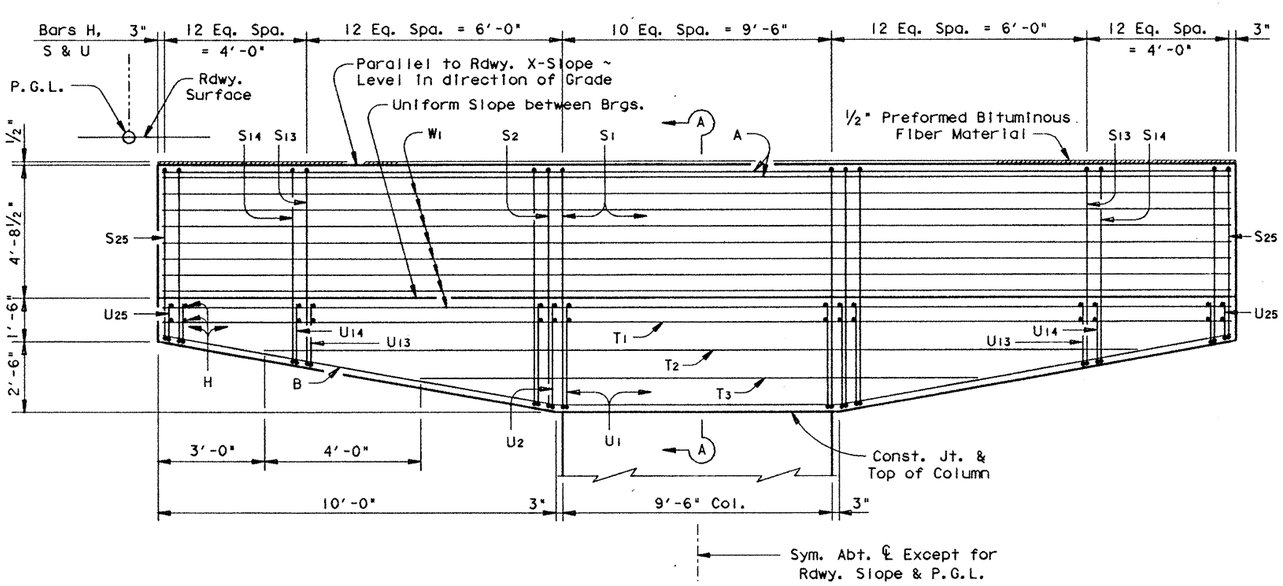

CAP ELEVATION

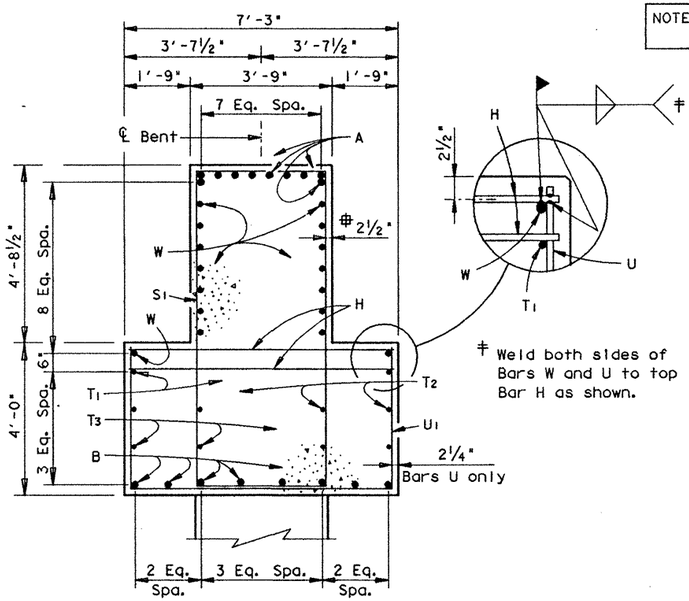

SECTION A-A

‡ Weld both sides of Bars W and U to top Bar H as shown.

Typical except as noted

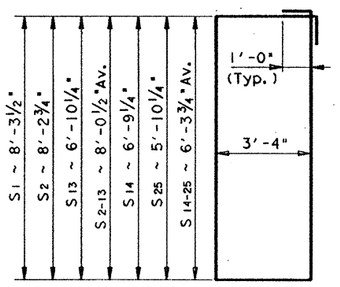

BARS S

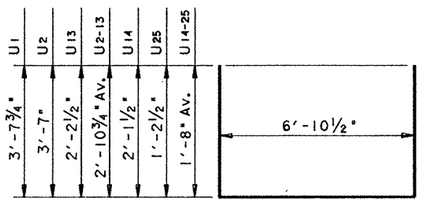

BARS U

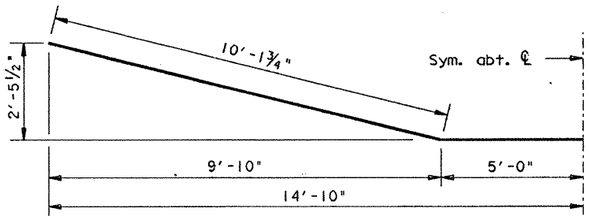

BARS B

STATE OF TEXAS
MARK J. BLOSCHOCK
52996
REGISTERED
PROFESSIONAL ENGINEER

9-17-91

HS 20 LOADING

SHEET 1 OF 2

STATE DEPARTMENT OF HIGHWAYS AND PUBLIC TRANSPORTATION

INTERIOR BENT NOS. 21-27 & 29 RAMP 2

US 83/281 INTERCHANGE

D45350A1 : ZFA2 : [355105]4377INV04.DGN	PREPARED BY AND FOR USE OF TEXAS SDH&PT					
ORIGINAL DRAWING DATE: NOVEMBER 1990	STATE DISTRICT	FEDERAL REGION	FEDERAL AID PROJECT			SHEET
DR.:- JCC	21	6	NH 92 ( ) M			295
CK.:- MAS	COUNTY		CONTROL	SECTION	JOB	HIGHWAY
DR.:- DRG	HIDALGO		0039	17	097	US 83/281
CK.:- JCC						

REVISIONS

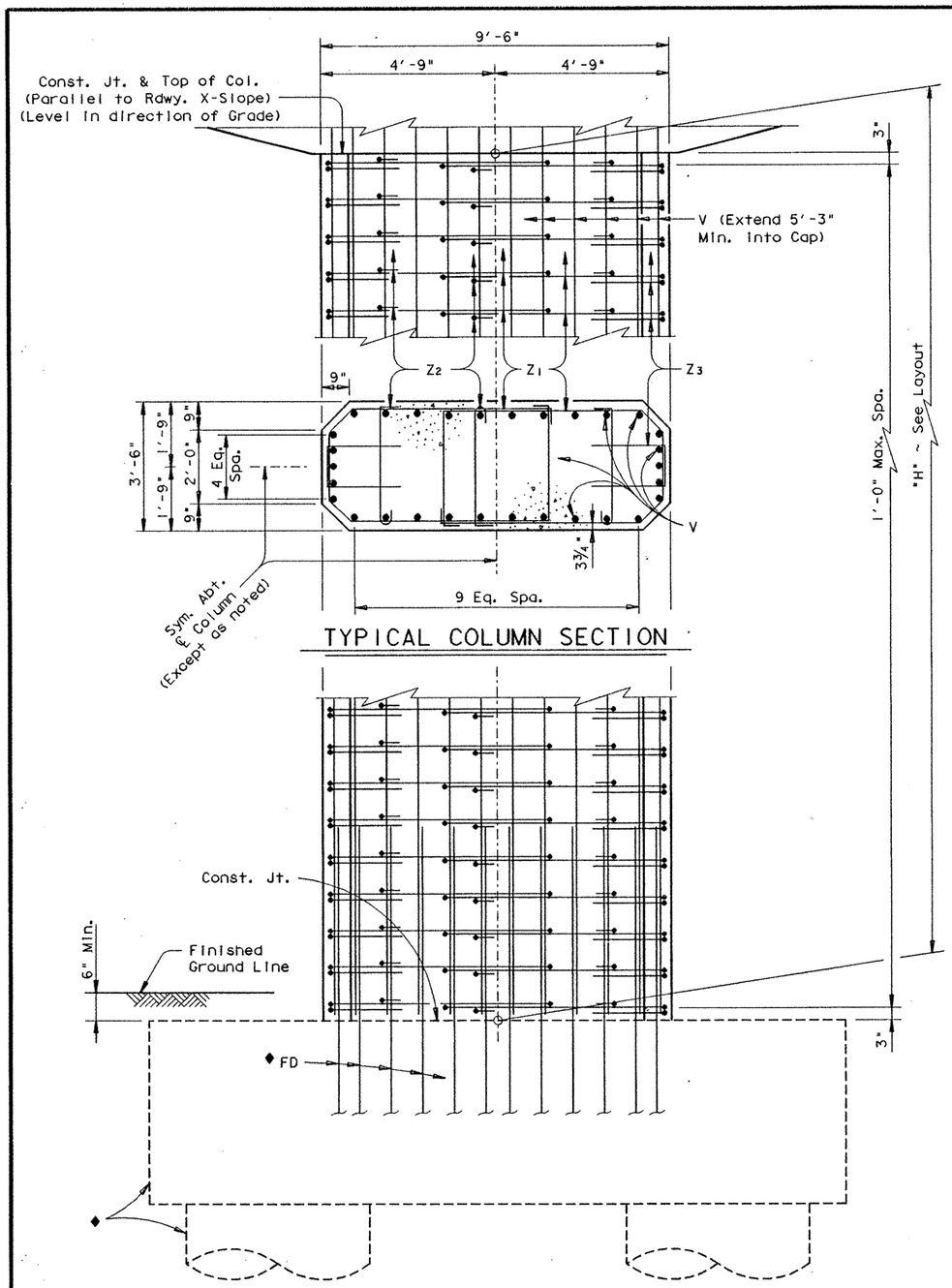

TYPICAL COLUMN SECTION

◆See Footing Details sheet for foundation details and quantities not shown.

COLUMN ELEVATION

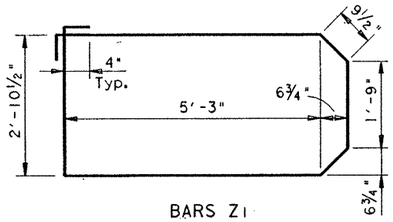

BARS Z1

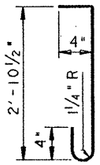

BARS Z2

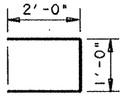

BARS Z3

▲ Quantities shown for one Bent only

For contractor's information only

◩ Omit Dowels D at Bents #22, 24 & 27 (Deduct 25 Lbs).

All cap & column reinforcing steel ■ Grade 60.

GENERAL NOTES:

Designed according to A.A.S.H.T.O. 1989 Standard and current interim Specifications.

Calculated Foundation Load = 480 Tons/Dr. Shaft

See "Form Liner Details" sheet for aesthetic treatment of columns and caps.

See Inverted Tee Bent Special Cap Details Shee for detail not shown.

▲ TABLE OF CONSTANT QUANTITIES

Bar	No.	Size	Length	Weight
A	10	# 11	29'- 8"	1576
B	8	# 11	30'- 4"	1289
D	4	1¼"Ø	1'- 6"	25
H	118	# 6	6'-11"	1226
S1	11	# 6	25'- 3"	417
S2-13	24	# 6	23'- 9"Av	856
S14-25	24	# 6	21'- 4"Av	769
T1	2	# 6	29'- 8"	89
T2	4	# 6	24'- 0"	144
T3	4	# 6	16'- 0"	96
U1	11	# 5	14'- 2"	163
U2-13	24	# 5	12'- 8"Av	317
U14-25	24	# 5	10'- 3"Av	257
W	16	# 9	29'- 8"	1614

Reinforcing Steel	Lb	#◩ 8838
Class "C" Concrete (Cap)	CY	45.3

TABLE OF VARIABLE QUANTITIES

▲■ TOTAL ESTIMATED QUANTITIES

"H"	Class "C" Conc. (Col.)	Bars Z1 17'-5" ~ #4		Bars Z2 3'-8" ~ #4		Bars Z3 5'-0" ~ #4		Bars V 30 ~ # 11		#◩ Reinf. Steel	Class "C" Conc.
Ft	CY	No.	Weight	No.	Weight	No.	Weight	Length	Weight	Lb	CY
12	14.3	26	303	39	96	26	87	17'- 3"	2749	17174	84.2
13	15.5	28	326	42	103.	28	94	18'- 3"	2909	17371	85.4
14	16.7	30	349	45	110	30	100	19'- 3"	3068	17566	86.6
15	17.8	32	372	48	118	32	107	20'- 3"	3228	17764	87.7
16	19.0	34	396	51	125	34	114	21'- 3"	3387	17961	88.9
23	27.4	48	559	72	177	48	160	28'- 3"	4503	19338	97.3
24	28.6	50	582	75	184	50	167	29'- 3"	4662	19534	98.5
25	29.7	52	605	78	191	52	174	30'- 3"	4822	19731	99.6
26	30.9	54	628	81	199	54	180	31'- 3"	4981	19927	100.8
27	32.1	56	652	84	206	56	187	32'- 3"	5140	20124	102.0
28	33.3	58	675	87	213	58	194	33'- 3"	5300	20321	103.2
29	34.5	60	698	90	221	60	200	34'- 3"	5459	20517	104.4
30	35.7	62	721	93	228	62	207	35'- 3"	5618	20713	105.6
31	36.9	64	745	96	235	64	214	36'- 3"	5778	20911	106.8
32	38.1	66	768	99	243	66	220	37'- 3"	5937	21107	108.0
33	39.3	68	791	102	250	68	227	38'- 3"	6097	21304	109.2
34	40.5	70	815	105	257	70	234	39'- 3"	6256	21501	110.4
35	41.6	72	838	108	265	72	240	40'- 3"	6415	21697	111.5
36	42.8	74	861	111	272	74	247	41'- 3"	6575	21894	112.7

■ Includes Footing Quantities

HS 20 LOADING

SHEET 2 OF 2

STATE OF TEXAS
MARK J. BLOSCHOCK
52996
REGISTERED PROFESSIONAL ENGINEER

9-17-91

REV 3-30-92

STATE DEPARTMENT OF HIGHWAYS AND PUBLIC TRANSPORTATION

INTERIOR BENT NOS. 21-27 & 29 RAMP 2

US 83/281 INTERCHANGE

D45350A: # ZFA2: [355105]4377INV04.DGN	PREPARED BY AND FOR USE OF TEXAS SDH&PT					
ORIGINAL DRAWING DATE: NOVEMBER 1990	STATE DISTRICT	FEDERAL REGION	FEDERAL AID PROJECT #			SHEET
DN.: MRL CK.: GAF DR.: DRG CK.: JCC REVISIONS	21	6	NH 192( ):MH			294
	COUNTY		CONTROL	SECTION	JOB	HIGHWAY
	HIDALGO		0039	17	097	US 83/281

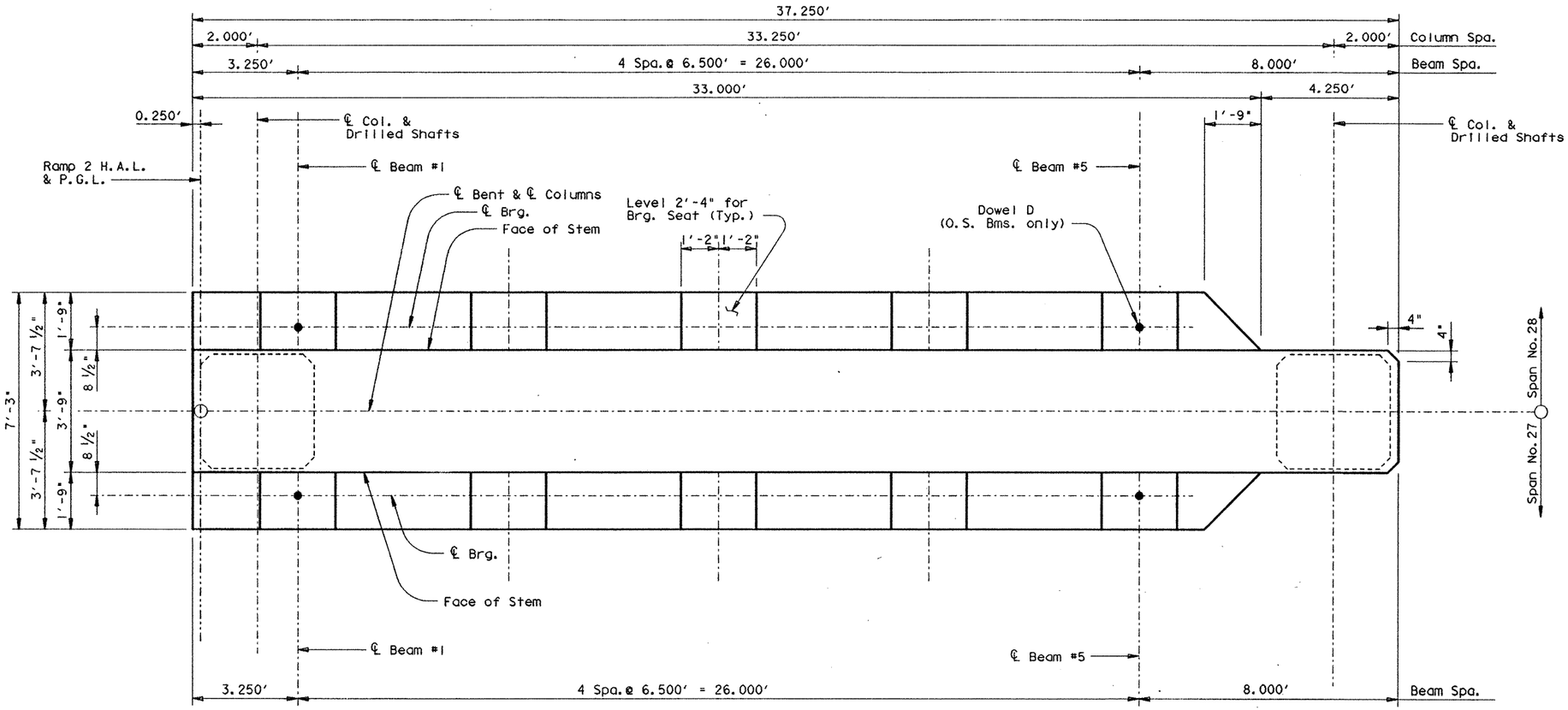

CAP PLAN

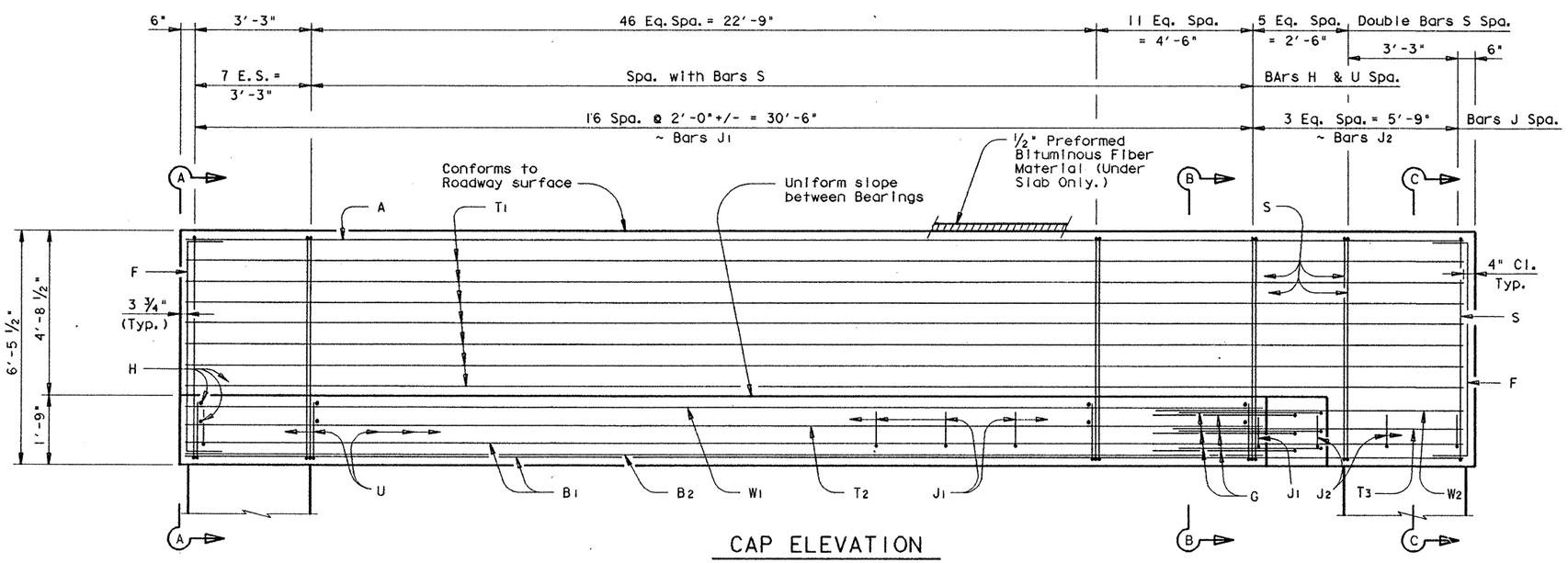

CAP ELEVATION

HS 20 LOADING

SHEET 1 OF 3

STATE DEPARTMENT OF HIGHWAYS AND PUBLIC TRANSPORTATION

INTERIOR BENT NO. 28 RAMP 2

US 83/281 INTERCHANGE

D45350A: ZFA2: [3551001]4377INV23.DGN

PREPARED BY AND FOR USE OF TEXAS SDH&PT

ORIGINAL DRAWING DATE: FEBRUARY 1991

REVISIONS

DN.: GAF
CK.: MRL
DN.: DRG/PSR
CK.: GAF

STATE DISTRICT	FEDERAL REGION	FEDERAL AID PROJECT	SHEET
21	6	NH-92(C) M	295

COUNTY	CONTROL	SECTION	JOB	HIGHWAY
HIDALGO	0039	17	097	US 83/281

STATE OF TEXAS
MARK J. BLOSCHOCK
52996
REGISTERED PROFESSIONAL ENGINEER

9-24-91

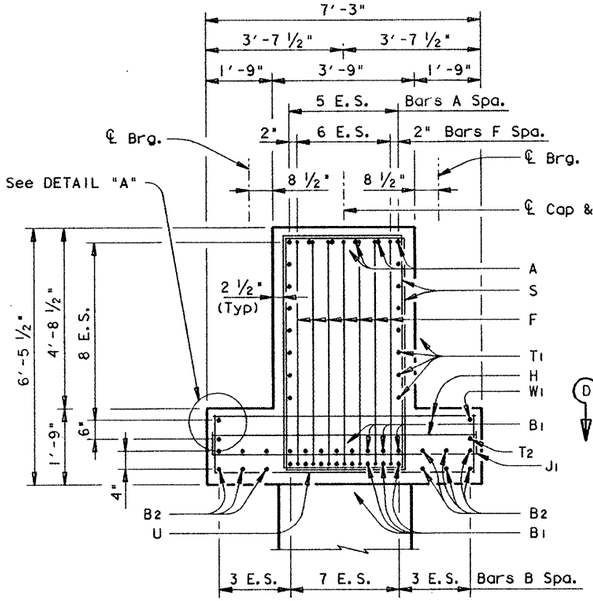

SECTION A-A

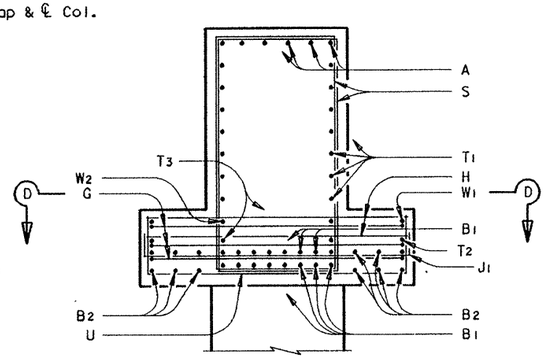

SECTION B-B

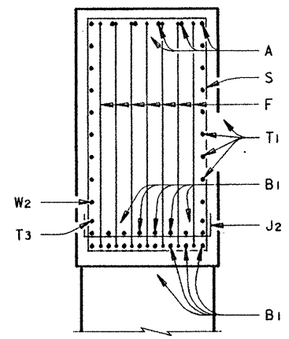

SECTION C-C

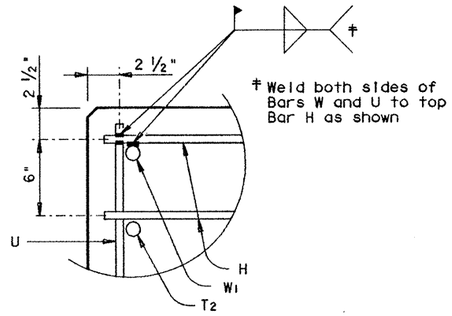

DETAIL "A"

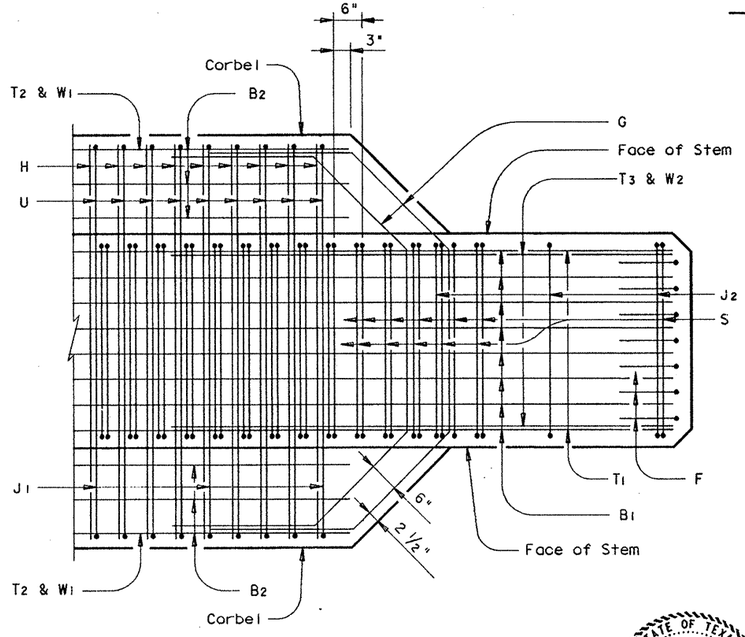

SECTION D-D

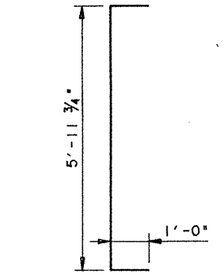

BARS F

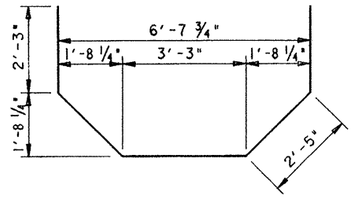

BARS G

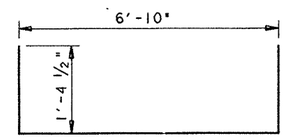

BARS U

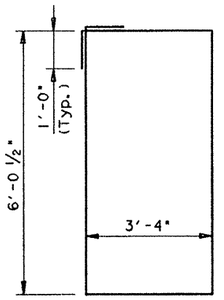

BARS S

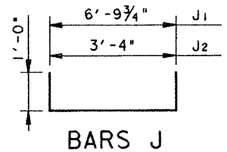

BARS J

NOTE: For Bearing Seat surface finish see GpC(SPL) sheet.

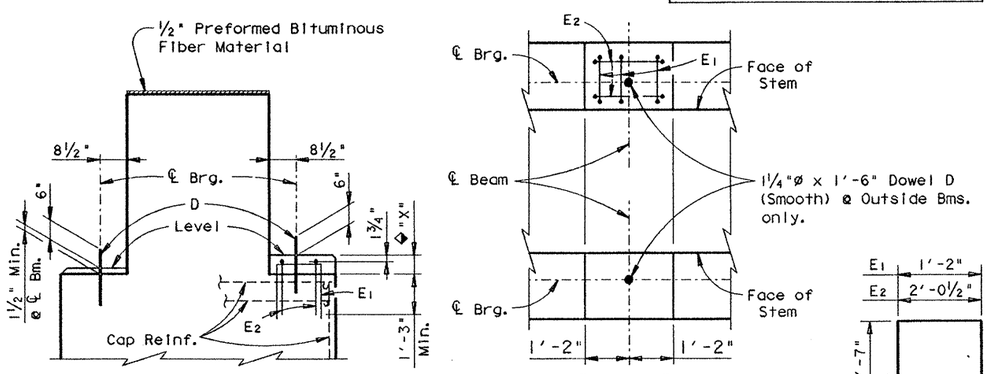

END VIEW

PLAN VIEW

BEARING SEAT DETAILS

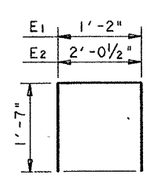

BARS E

◆ Reinforced Pedestals [redacted] required where "X" is greater than 2 1/2" and [redacted] considered subsidiary to the Bid Item "Class C Concrete (Bent). Compare bearing seat elevations to determine value of "X".

HS 20 LOADING

SHEET 2 OF 3

STATE DEPARTMENT OF HIGHWAYS AND PUBLIC TRANSPORTATION

INTERIOR BENT NO. 28 RAMP 2

US 83/281 INTERCHANGE

STATE OF TEXAS
MARK J. BLOSCHOCK
52996
REGISTERED PROFESSIONAL ENGINEER

9-24-91

D45350A: ZFA2: [355100]4377INV23.DGN	PREPARED BY AND FOR USE OF TEXAS SDH&PT					
ORIGINAL DRAWING DATE: FEBRUARY 1991	STATE DISTRICT	FEDERAL REGION	FEDERAL AID PROJECT			SHEET
DN.: GAF	21	6	NH 92( ) M			296
CK.: MRL	COUNTY		CONTROL	SECTION	JOB	HIGHWAY
DW.: DRG/PSR	HIDALGO		0039	17	097	US 83/281
CK.: GAF						

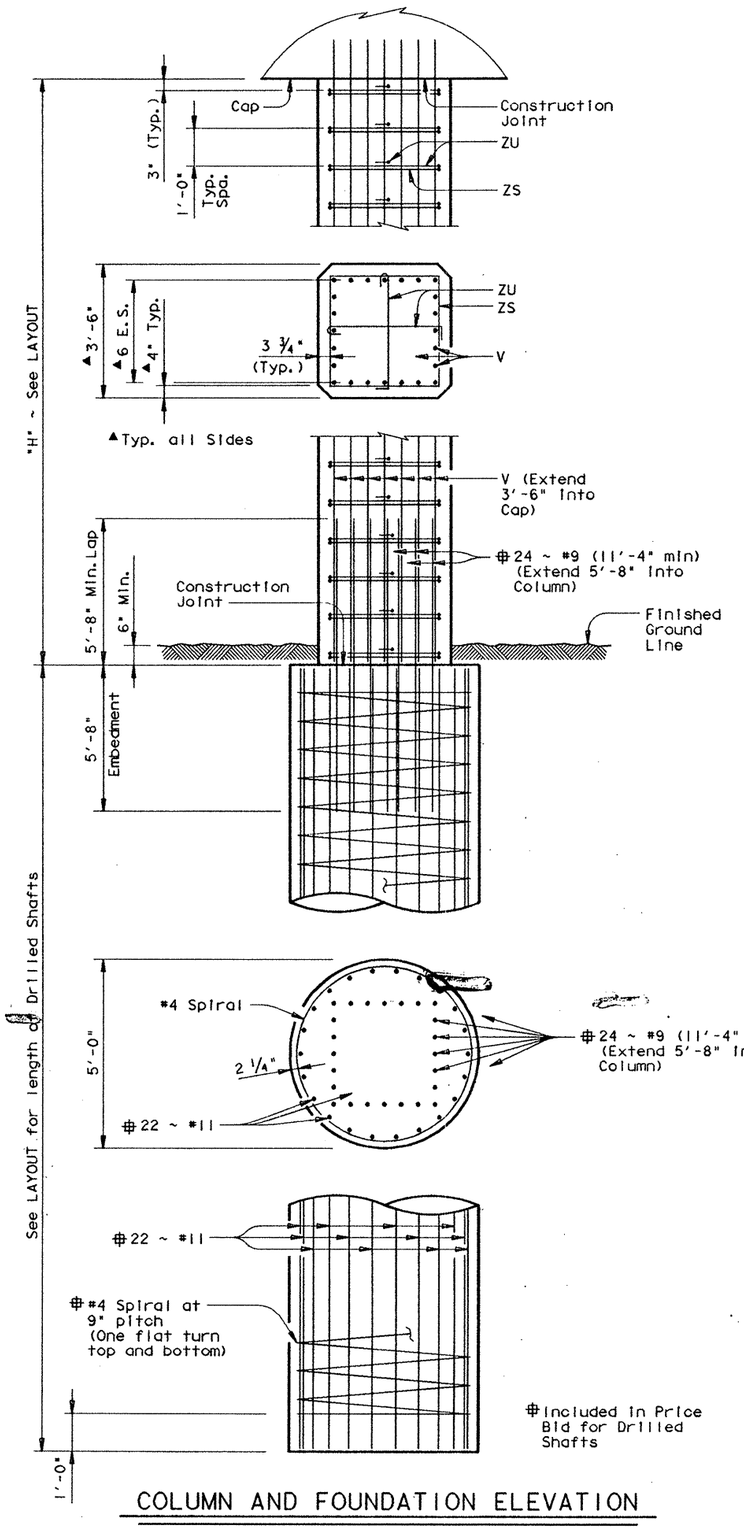

COLUMN AND FOUNDATION ELEVATION

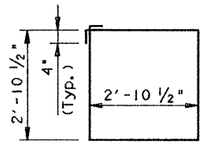

BARS ZS

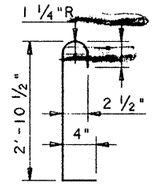

BARS ZU

TABLE OF CONSTANT QUANTITIES

Bar	No.	Size	Length	Weight
A	6	# 11	36'- 7"	1166
B1	16	# 11	36'- 7"	3110
B2	12	# 11	30'-11"	1971
D	4	1¼"ø	1'- 6"	25
F	14	# 5	8'- 0"	117
G	6	# 9	12'- 7"	257
H	130	# 6	6'-11"	1351
J1	17	# 6	8'-10"	225
J2	3	# 6	5'- 4"	24
S	128	# 6	20'- 9"	3989
T1	14	# 8	36'- 7"	1367
T2	2	# 8	30'-11"	165
T3	2	# 8	8'- 6"	45
U	65	# 5	9'- 7"	649
W1	2	# 9	30'-11"	210
W2	2	# 9	9'- 2"	62

Reinforcing Steel	Lb	#14733
Class "C" Conc. (Cap)	CY	40.9

TABLE OF VARIABLE QUANTITIES

"H"	Class "C" Conc. (Cols.)	Bars ZS # 4 ~ 12'-2"		Bars ZU # 4 ~ 3'-8"		Bars V 48 ~ # 9	
Ft	CY	No.	Weight	No.	Weight	Length	Weight
20	17.8	42	341	84	206	23'- 6"	3835
21	18.7	44	358	88	216	24'- 6"	3998
22	19.6	46	374	92	225	25'- 6"	4162
23	20.5	48	390	96	235	26'- 6"	4325
24	21.4	50	406	100	245	27'- 6"	4488

TOTAL ESTIMATED QUANTITIES

Reinf. Steel #	Class "C" Conc.
Lb	CY
19115	58.7
19305	59.6
19494	60.5
19683	61.4
19872	62.3

For contractor's information only.
All cap & column reinforcing steel [redacted] Grade 60.

GENERAL NOTES:

Designed according to A.A.S.H.T.O. 1989 Standard Specifications.

Calculated Foundation Load = 450 Tons/Drilled Shaft

See "Form Liner Details" Sheet for aesthetic treatment of Columns and Cap.
See Inverted Tee Bent Special Cap Details Sheet for details not shown.

HS 20 LOADING

SHEET 3 OF 3

STATE OF TEXAS
MARK J. BLOSCHOCK
52996
REGISTERED PROFESSIONAL ENGINEER
9-24-91

REV. 3-30-92

STATE DEPARTMENT OF HIGHWAYS AND PUBLIC TRANSPORTATION

INTERIOR BENT NO. 28 RAMP 2

US 83/281 INTERCHANGE

D45350A1 ZFA2 (355100)4377INV23.DGN | PREPARED BY AND FOR USE OF TEXAS SDH&PT

ORIGINAL DRAWING DATE: FEBRUARY 1991	STATE DISTRICT	FEDERAL REGION	FEDERAL AID PROJECT	SHEET
DR.:- GAF	21	6	NH92( )M	297
CK.:- MRL	COUNTY	CONTROL	SECTION	JOB	HIGHWAY
DW.:- DRG/PSR	HIDALGO	0039	17	097	US 83/281
CK.:- GAF					

REVISIONS

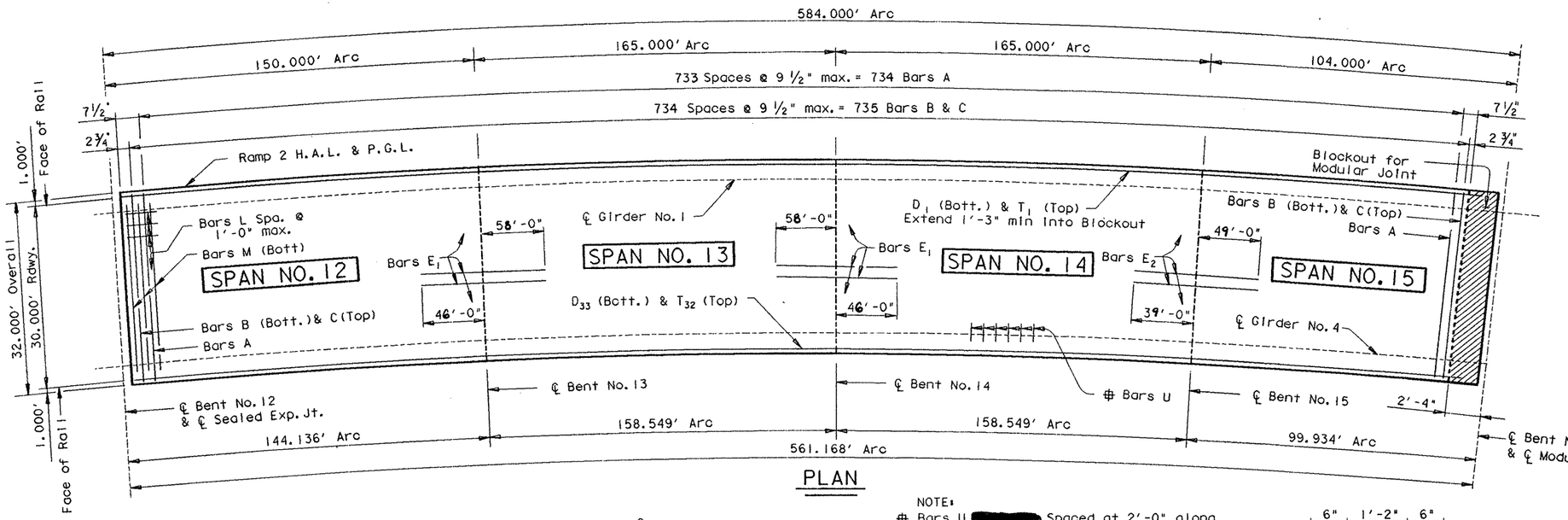

PLAN

NOTE:

Bars U [redacted] Spaced at 2'-0" along the entire length of each Girder except, there [redacted] no Bars U at locations where the Girder top Flange exceeds 2 1/4" in thickness nor [redacted] there [redacted] bars U in the Blockout For Modular Joint. (See Girder Elevations)

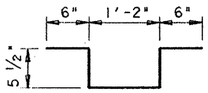

BARS U

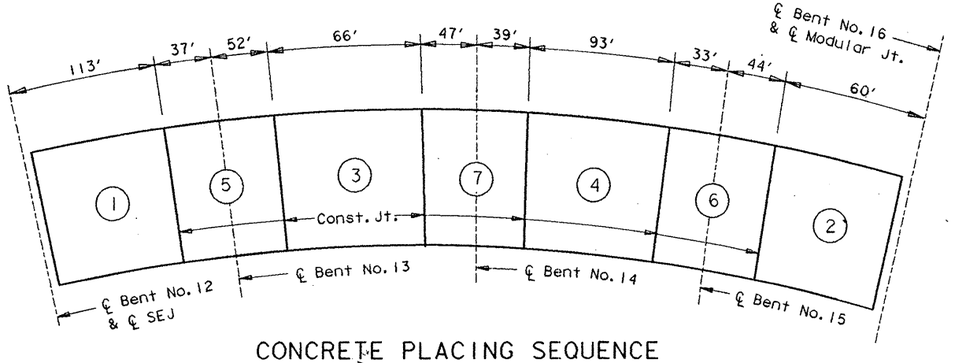

CONCRETE PLACING SEQUENCE

At Contractors option, Continuous placement [redacted] used. For Continuous placement, the minimum rate of Concrete placing and Finishing [redacted] not [redacted] less than 30 linear Feet of bridge deck per hour.

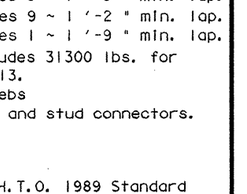

BARS A

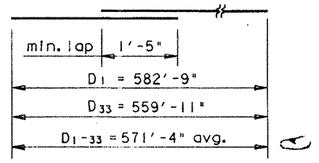

BARS D

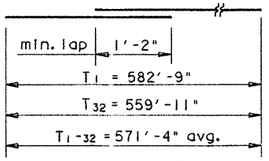

BARS T

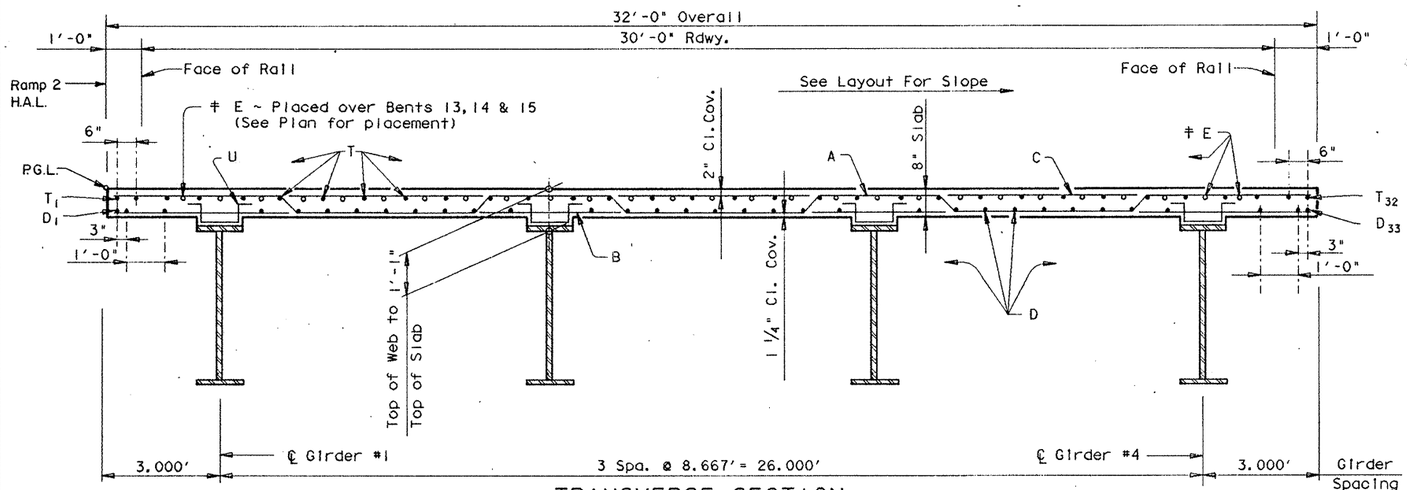

TRANSVERSE SECTION

REV. 3-30-22

TABLE OF ESTIMATED QUANTITIES

Bar	No.	Size	Length	Weight
A	734	# 5	32'- 7"	24944
B	735	# 4	31'- 9"	15589
C	735	# 5	31'- 9"	24340
D 1-33	33	# 5	584'- 1" Av ◩	20104
E1	54	# 6	105'- 9" ▲	8577
E2	27	# 6	89'- 9" ▲	3640
L	32	# 4	3'- 0"	64
M	3	# 5	30'- 9"	96
U	1052	# 4	3'- 1"	2167
T 1-32	32	# 4	581'- 10" Av ◪	12437

Reinforcing Steel #	Lb	111958
Str. Steel (HS) * ◆	Lb	639400
Str. Steel (HYC) ◆	Lb	71600

Span	Reinf. Conc. Slab * SF	Class "S" Conc. ~ CY Slab #
# 12	4706	128.6
# 13	5177	140.3
# 14	5177	140.6
# 15	3263	90.0
Total	18323	499.5

For contractor's information only.

◩ Length shown includes 9 ~ 1'-5" min. lap.
◪ Length shown includes 9 ~ 1'-2" min. lap.
▲ Length shown includes 1 ~ 1'-9" min. lap.
◆ Quantity shown includes 31300 lbs. for Steel Cap, Bent No. 13.
* Girders flanges & webs
◆ Diaframs, stiffeners and stud connectors.

GENERAL NOTES:

Designed according to A.A.S.H.T.O. 1989 Standard Specifications.

Design fc = 1200 p.s.i.

The use of Precast Concrete Panels [redacted] not [redacted] permitted.

See Modular Joint Details sheet for Type B (MOD) diaf. and joint details not shown.

See Special Bearings detail Sheet for SE6 Bearings.

See GpC (MOD) sheet for detail not shown.

For Drain Locations see Bridge Layout. For Drain Details see Bridge Drain Details Sheet.

HS 20 LOADING

Sheet 1 of 5

STATE OF TEXAS
MARK J. BLOSCHOCK
52996
REGISTERED PROFESSIONAL ENGINEER
9-24-91

STATE DEPARTMENT OF HIGHWAYS AND PUBLIC TRANSPORTATION

UNIT NO. 5, RAMP 2

584.00' PLATE GIRDER UNIT
150.00'-165.00'-165.00'-104.00'

US. 83/281 INTERCHANGE

D45350A: ZFA1: [3551634377SFC04.DGN	PREPARED BY AND FOR USE OF TEXAS SDH&PT						
ORIGINAL DRAWING DATE:	REVISIONS	STATE DISTRICT	FEDERAL REGION	FEDERAL AID PROJECT			SHEET
DN.: LMW		21	6	NH 92 ( ) M			298
CK.: MRL		COUNTY			CONTROL	SECTION	JOB	HIGHWAY
DW.: TKW		HIDALGO			0039	17	097	US 83/281
CK.: LMW								

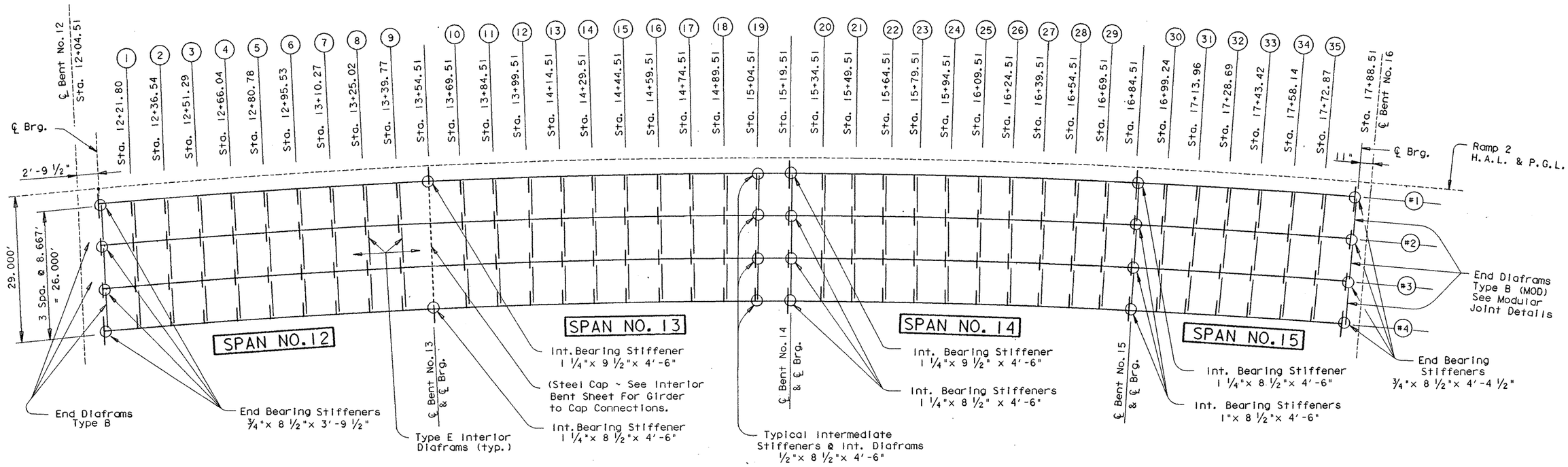

FRAMING PLAN

TABLE OF RADII	
P.G.L.	818.510'
Girder #1	815.510
Girder #2	806.840'
Girder #3	798.180'
Girder #4	789.510'

HS 20 LOADING

Sheet 2 of 5

STATE OF TEXAS
MARK J. BLOSCHOCK
52996
REGISTERED
PROFESSIONAL ENGINEER

9-24-91

STATE DEPARTMENT OF HIGHWAYS
AND PUBLIC TRANSPORTATION

UNIT NO. 5, RAMP 2

584.00' PLATE GIRDER UNIT
150.00'-165.00'-165.00'-104.00'

US 83/281 INTERCHANGE

D45350A:: ZFA1: [355163]4377SFC04.DGN

PREPARED BY AND FOR USE OF TEXAS SDH&PT

ORIGINAL DRAWING DATE:	REVISIONS	STATE DISTRICT	FEDERAL REGION	FEDERAL AID PROJECT	SHEET
DN.:- LMW		21	6	NH 92C)M	299
CK.:- MRL		COUNTY		CONTROL SECTION JOB	HIGHWAY
DW.:- TKW		HIDALGO		0039 17 097	US 83/281
CK.:- LMW					

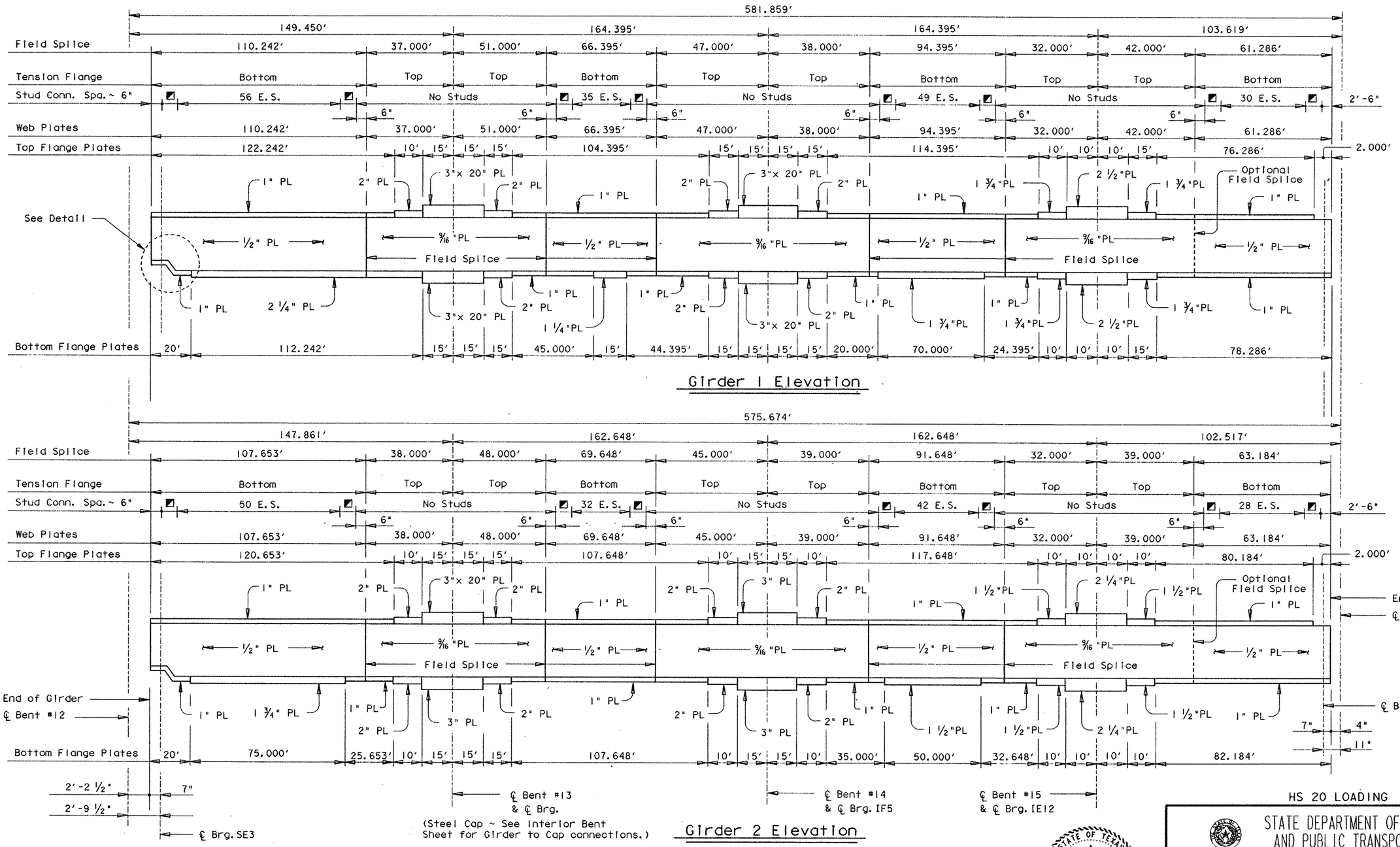

8 E.S. = 4'-0"

All Web Plates are 54" high unless otherwise noted and are H.S. Steel.
All Flange Plates are H.S. Steel
All flange plates are 18" Wide unless otherwise noted. See Girder Elevation for Girders 1-3 Flange Widths.

STATE OF TEXAS
MARK J. BLOSCHOCK
52996
REGISTERED PROFESSIONAL ENGINEER
9-24-91

HS 20 LOADING

STATE DEPARTMENT OF HIGHWAYS AND PUBLIC TRANSPORTATION

UNIT NO. 5, RAMP 2

584.00' PLATE GIRDER UNIT
150.00'-165.00'-165.00'-104.00'

US 83/281 INTERCHANGE

D45350A: ZFA1: [3551631]4377SFC05.DGN	PREPARED BY AND FOR USE OF TEXAS SDH&PT					
ORIGINAL DRAWING DATE:	STATE DISTRICT	FEDERAL REGION	FEDERAL AID PROJECT			SHEET
DN.: LMW	21	6	NH 92C) M			300
CK.: MRL	COUNTY		CONTROL	SECTION	JOB	HIGHWAY
DN.: TKW	HIDALGO		0039	17	097	US 83/281
CK.: LMW						

REVISIONS

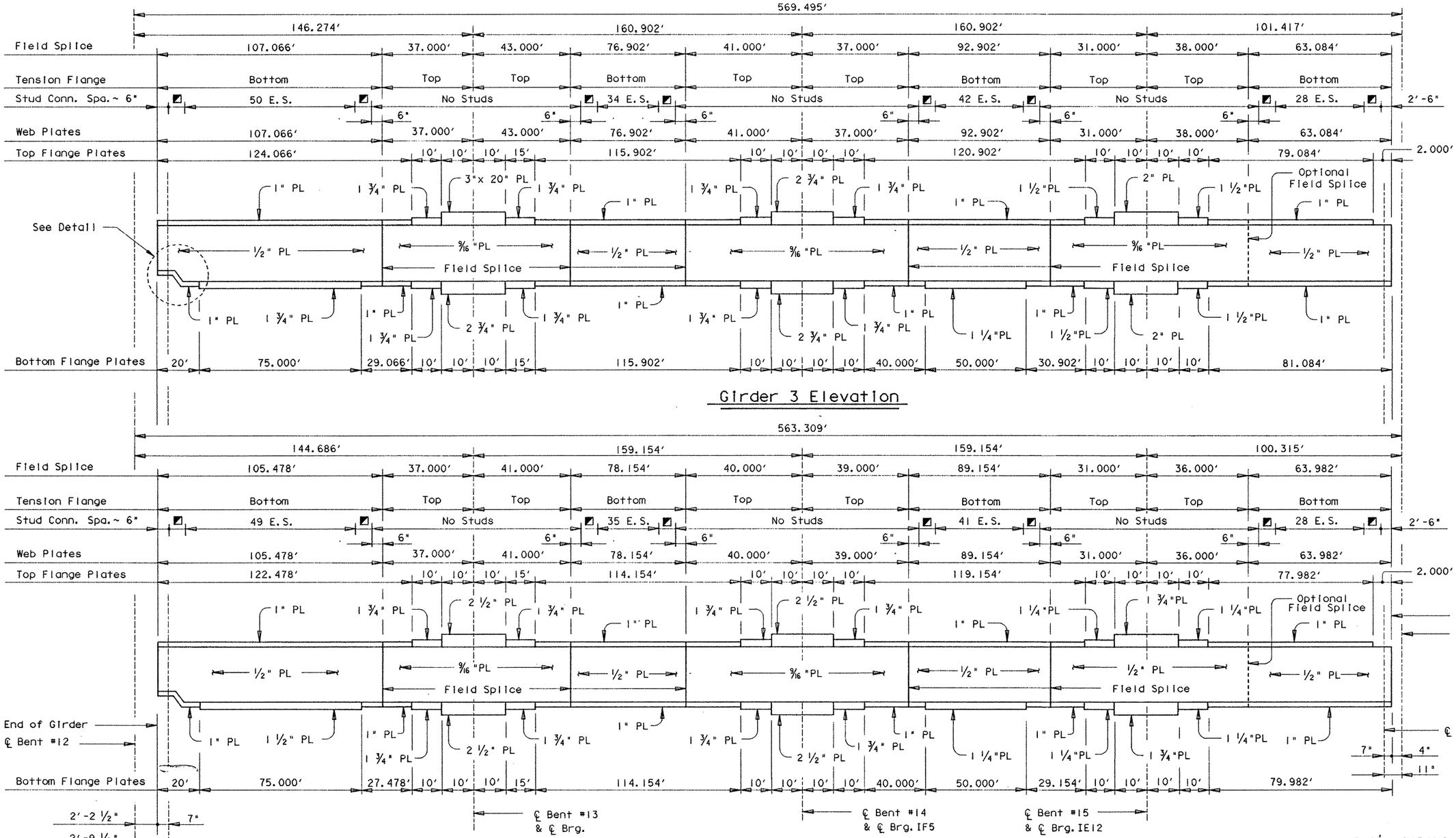

Girder 3 Elevation

(Steel Cap ~ See Interior Bent Sheet for Girder to Cap connections.)

Girder 4 Elevation

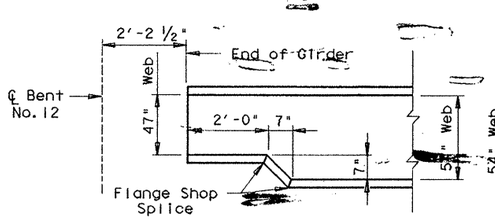

TYPICAL END OF GIRDER DETAIL @ BENT 12

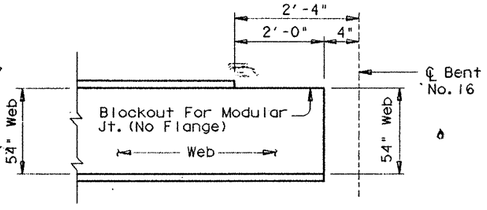

TYPICAL END OF GIRDER DETAIL @ BENT 16

All Web Plates are 54" high unless otherwise noted and are H.S. Steel.
All Flange Plates are H.S. Steel
All flange Plates are 18" Wide unless otherwise noted. See Girder Elevation for Girders 1-3 Flange Widths.

8 E.S. = 4'-0"

STATE OF TEXAS
MARK J. BLOSCHOCK
52996
REGISTERED PROFESSIONAL ENGINEER

9-24-91

HS 20 LOADING

Sheet 4 of 5

STATE DEPARTMENT OF HIGHWAYS AND PUBLIC TRANSPORTATION

UNIT NO. 5, RAMP 2

584.00' PLATE GIRDER UNIT
150.00'-165.00'-165.00'-104.00'

US 83/281 INTERCHANGE

D45350A: ZFA1: [355163]4377SFC05.DGN

PREPARED BY AND FOR USE OF TEXAS SDH&PT

ORIGINAL DRAWING DATE:		STATE DISTRICT	FEDERAL REGION	FEDERAL AID PROJECT	SHEET
DN.: LMW	REVISIONS	21	6	NH92( )M	301
CK.: MRL		COUNTY		CONTROL SECTION JOB	HIGHWAY
DW.: TKW		HIDALGO		0039 17 097	83/281
CK.: LMW					

WEB CUTTING TABLE

DIAFRAM		GIRDER 1 "Y"	GIRDER 2 "Y"	GIRDER 3 "Y"	GIRDER 4 "Y"
SPAN 12	℄ Brg.	0.000	0.000	0.000	0.000
	1	0.202	0.147	0.086	0.028
	2	0.378	0.286	0.180	0.081
	3	0.516	0.404	0.275	0.153
	4	0.606	0.488	0.351	0.223
	5	0.644	0.526	0.389	0.261
	6	0.634	0.521	0.393	0.270
	7	0.606	0.502	0.385	0.275
	8	0.588	0.493	0.393	0.296
	9	0.605	0.524	0.436	0.356
SPAN 13	℄ Brg.	0.674	0.605	0.537	0.469
	10	0.804	0.747	0.700	0.643
	11	0.990	0.945	0.919	0.871
	12	1.228	1.192	1.181	1.136
	13	1.501	1.470	1.465	1.420
	14	1.790	1.760	1.757	1.709
	15	2.082	2.051	2.046	1.996
	16	2.378	2.341	2.332	2.280
	17	2.685	2.642	2.622	2.569
	18	3.018	2.968	2.930	2.877
	19	3.397	3.339	3.282	3.225

DIAFRAM		GIRDER 1 "Y"	GIRDER 2 "Y"	GIRDER 3 "Y"	GIRDER 4 "Y"
SPAN 14	℄ Brg.	3.829	3.760	3.691	3.623
	20	4.317	4.238	4.158	4.082
	21	4.852	4.766	4.681	4.591
	22	5.422	5.332	5.241	5.140
	23	6.005	5.911	5.817	5.705
	24	6.582	6.486	6.390	6.274
	25	7.145	7.050	6.955	6.838
	26	7.674	7.584	7.491	7.381
	27	8.158	8.074	7.986	7.888
	28	8.608	8.530	8.450	8.363
	29	9.048	8.975	8.901	8.826
SPAN 15	℄ Brg.	9.499	9.430	9.362	9.294
	30	9.961	9.896	9.833	9.772
	31	10.439	10.376	10.316	10.259
	32	10.919	10.858	10.798	10.741
	33	11.384	11.321	11.258	11.200
	34	11.820	11.755	11.690	11.628
	35	12.224	12.158	12.090	12.025
	℄ Brg.	12.602	12.533	12.464	12.396

TABLE OF DEAD LOAD DEFLECTIONS

		GIRDER 1	GIRDER 2	GIRDER 3	GIRDER 4
SPAN 12	0	0.000′	0.000′	0.000′	0.000′
	1	0.111′	0.100′	0.083′	0.069′
	2	0.199′	0.183′	0.151′	0.124′
	3	0.261′	0.238′	0.196′	0.162′
	4	0.288′	0.263′	0.215′	0.176′
	5	0.279′	0.254′	0.207′	0.169′
	6	0.238′	0.216′	0.176′	0.141′
	7	0.176′	0.158′	0.125′	0.098′
	8	0.105′	0.091′	0.070′	0.052′
	9	0.044′	0.037′	0.024′	0.016′
SPAN 13	10	0.000′	0.000′	0.000′	0.000′
	11	-0.022′	-0.014′	0.002′	0.010′
	12	-0.017′	-0.003′	0.029′	0.043′
	13	0.007′	0.028′	0.070′	0.085′
	14	0.035′	0.057′	0.102′	0.117′
	15	0.049′	0.070′	0.116′	0.129′
	16	0.044′	0.063′	0.105′	0.117′
	17	0.021′	0.038′	0.073′	0.085′
	18	-0.003′	0.008′	0.032′	0.043′
	19	-0.013′	-0.007′	0.003′	0.010′
	20	0.000′	0.000′	0.000′	0.000′

		GIRDER 1	GIRDER 2	GIRDER 3	GIRDER 4
SPAN 14	20	0.000′	0.000′	0.000′	0.000′
	21	0.038′	0.033′	0.025′	0.018′
	22	0.096′	0.086′	0.075′	0.060′
	23	0.159′	0.148′	0.133′	0.109′
	24	0.207′	0.194′	0.179′	0.148′
	25	0.228′	0.215′	0.199′	0.166′
	26	0.216′	0.204′	0.189′	0.158′
	27	0.171′	0.164′	0.151′	0.128′
	28	0.108′	0.103′	0.095′	0.081′
	29	0.043′	0.041′	0.038′	0.032′
SPAN 15	30	0.000′	0.000′	0.000′	0.000′
	31	-0.013′	-0.012′	-0.009′	-0.005′
	32	-0.015′	-0.013′	-0.009′	-0.002′
	33	-0.009′	-0.005′	-0.001′	0.007′
	34	0.003′	0.006′	0.011′	0.020′
	35	0.015′	0.019′	0.021′	0.029′
	36	0.023′	0.026′	0.028′	0.035′
	37	0.026′	0.028′	0.029′	0.034′
	38	0.023′	0.023′	0.025′	0.027′
	39	0.013′	0.013′	0.014′	0.015′
	40	0.000′	0.000′	0.000′	0.000′

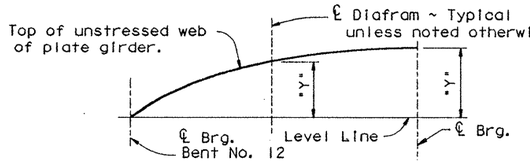

WEB CUTTING DIAGRAM

Note: Web [redacted] cut on straight lines between ordinates or to a smooth curve at the fabricator's option. Values listed include all dead load deflections and vertical curve corrections.

PLATE GIRDER FABRICATION NOTE:

Girder tension flanges and webs are classified as main members and s[redacted] conform to Item 442.3(1).

Except at changes in section, shop or field flange and web splices in plate girders [redacted] located as desirable to optimize plate lengths and erection procedures, except that splices [redacted] not [redacted] allowed where a 40′ or less unspliced length [redacted] suffice; neither [redacted] tension flange splices [redacted] allowed within .05S either side of interior bearings, within .10S either side of the centerlines of the interior span, nor within the range between .30S and .50S from the end bearings. (S=length c.c. Bearing of Span in which the splice is made).

Flange and Web Splices [redacted] be made by full penetration groove welds in accordance with the Item "Steel Structures".

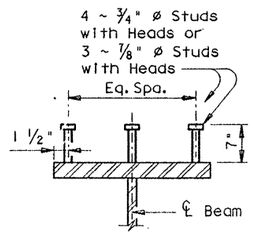

SHEAR CONNECTOR STUD DETAIL

Studs [redacted] Electric arc end-welded to the flanges with complete fusion.

DEAD LOAD DEFLECTION DIAGRAM

[redacted]ections shown are due to cast-in-place concrete slab only.

HS 20 LOADING

STATE DEPARTMENT OF HIGHWAYS AND PUBLIC TRANSPORTATION

UNIT NO. 5, RAMP 2

584.00′ PLATE GIRDER UNIT
150.00′-165.00′-165.00′-104.00′

US 83/281 INTERCHANGE

STATE OF TEXAS
MARK J. BLOSCHOCK
52996
REGISTERED PROFESSIONAL ENGINEER

9-24-91

D45350A: ZFA1: [355163]4377SFC04.DGN
ORIGINAL DRAWING DATE:

REVISIONS	
DN.: LMW	
CK.: MRL	
DW.: TKW	
CK.: LMW	

PREPARED BY AND FOR USE OF TEXAS SDH&PT

STATE DISTRICT	FEDERAL REGION	FEDERAL AID PROJECT	SHEET
21	6	NH92( )M	302

COUNTY	CONTROL	SECTION	JOB	HIGHWAY
HIDALGO	0039	17	097	US 83/281

** Extend 1'-3" Min. into Blockout

* See GDC(MOD) sheet for details not shown.

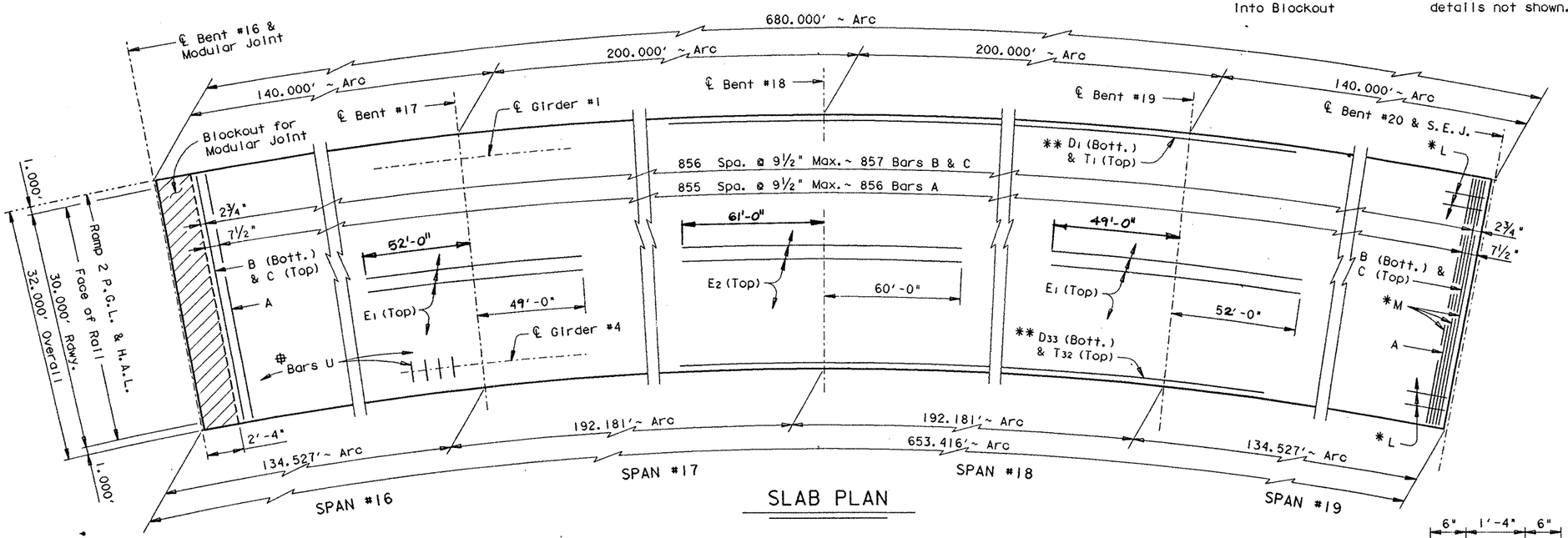

SLAB PLAN

Bars [redacted] be spaced at 2'-0" along the entire length of each girder, except there[redacted] no Bars U at locations where the girder top flange exceeds 2 ¼" in thickness, nor [redacted] there[redacted] Bars U in the Blockout For Modular Joint. (See Girder Elevations)

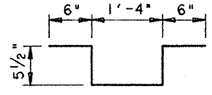

BARS U

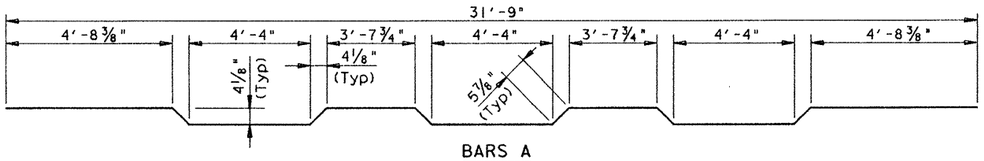

BARS A

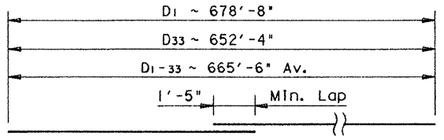

BARS D

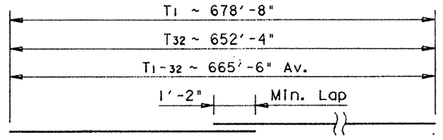

BARS T

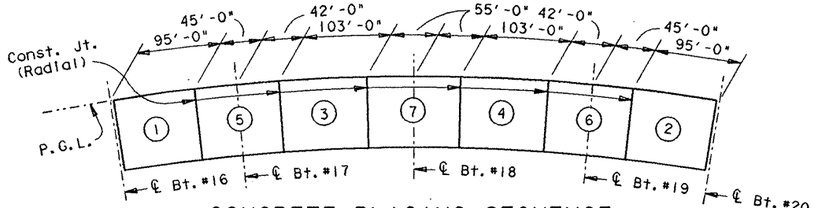

CONCRETE PLACING SEQUENCE

Continuous placement [redacted] used at Contractor's option. For continuous placement, the minimum rate of concrete placing and finishing [redacted] not [redacted] less than 30 linear feet of bridge deck per hour.

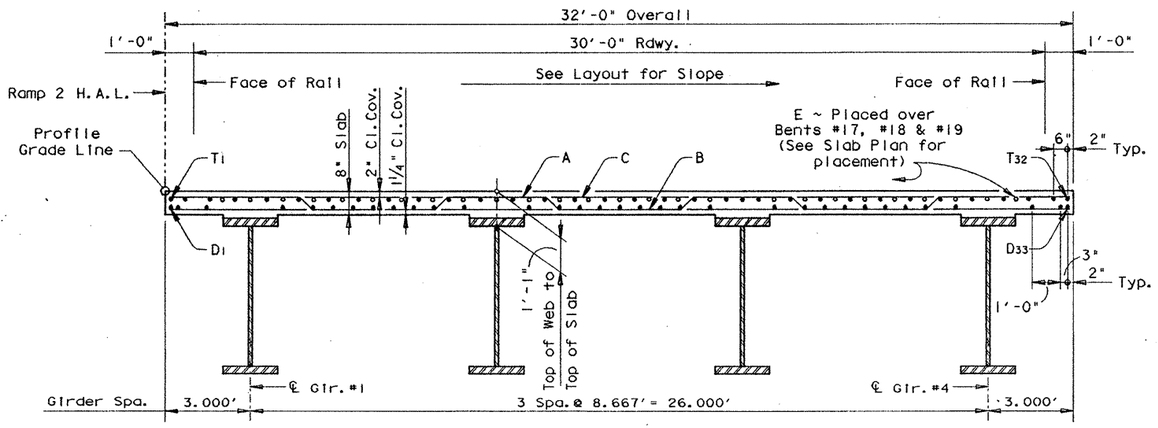

TYPICAL RADIAL SECTION

TABLE OF ESTIMATED QUANTITIES

Bar	No.	Size	Length	Weight
A	856	# 5	32'- 7"	29088
B	857	# 4	31'- 9"	18176
C	857	# 5	31'- 9"	28380
D1-33	33	# 5	▬681'- 1"Av	23442
E1	54	# 6	▲102'- 9"	8334
E2	27	# 6	▲▲124'- 6"	5049
L	32	# 4	3'- 0"	64
M	3	# 5	30'- 9"	96
T1-32	32	# 4	◆678'- 4"Av	14500
U	1242	# 4	3'- 3"	2696

Reinforcing Steel	Lb	‡ 129825
Structural Steel (HS)	LF	‡ 890500
Structural Steel (HYC)	Lb	89900

Span	Reinf. Conc. Slab ~ SF	Class "S" Conc. ~ CY Slab
# 16	4392	‡ 119.8
# 17	6275	‡ 170.3
# 18	6275	‡ 170.3
# 19	4392	‡ 119.8
Total	21334	‡ 580.2

▬ Includes 11 ~ 1'-5" Min. laps

▲ Includes 1 ~ 1'-9" Min. lap

▲▲ Includes 2 ~ 1'-9" Min. laps

◆ Includes 11 ~ 1'-2" Min. laps

‡ For contractor's Information only.

† Quantity shown includes 34600 Lbs. for Steel Cap, Bent No. 18

GENERAL NOTES:

Designed according to A.A.S.H.T.O. 1989 Standard and current Interim Specifications.

Design f'c = 1200 p.s.i.

The use of Precast Concrete Panels [redacted] not [redacted] permitted.

See Modular Joint Details sheet for Type B (Mod) diafram and Joint details not shown.

See Special Bearings detail sheet for SE6 Bearings.

For Drain Locations see Bridge Layout. For Drain Details see Bridge Drain Details sheet.

HS 20 LOADING

SHEET 1 OF 5

STATE DEPARTMENT OF HIGHWAYS AND PUBLIC TRANSPORTATION

UNIT NO. 6, RAMP 2

680.00' PLATE GIRDER UNIT

140.00'-200.00'-200.00'-140.00'

US 83/281 INTERCHANGE

STATE OF TEXAS
MARK J. BLOSCHOCK
52996
REGISTERED PROFESSIONAL ENGINEER

9-24-91

REV. 3-30-92

D45350A1 : ZFA2 : (355105)4377SFC01.DGN	PREPARED BY AND FOR USE OF TEXAS SDH&PT					
ORIGINAL DRAWING DATE: OCTOBER 1990	STATE DISTRICT	FEDERAL REGION	FEDERAL AID PROJECT			SHEET
REVISIONS	21	6	NH92( )M			303
DN.:- LMW	COUNTY		CONTROL	SECTION	JOB	HIGHWAY
CK.:- MRL	HIDALGO		0039	17	097	US 83/281
DR.:- DRG						
CK.:- LMW						

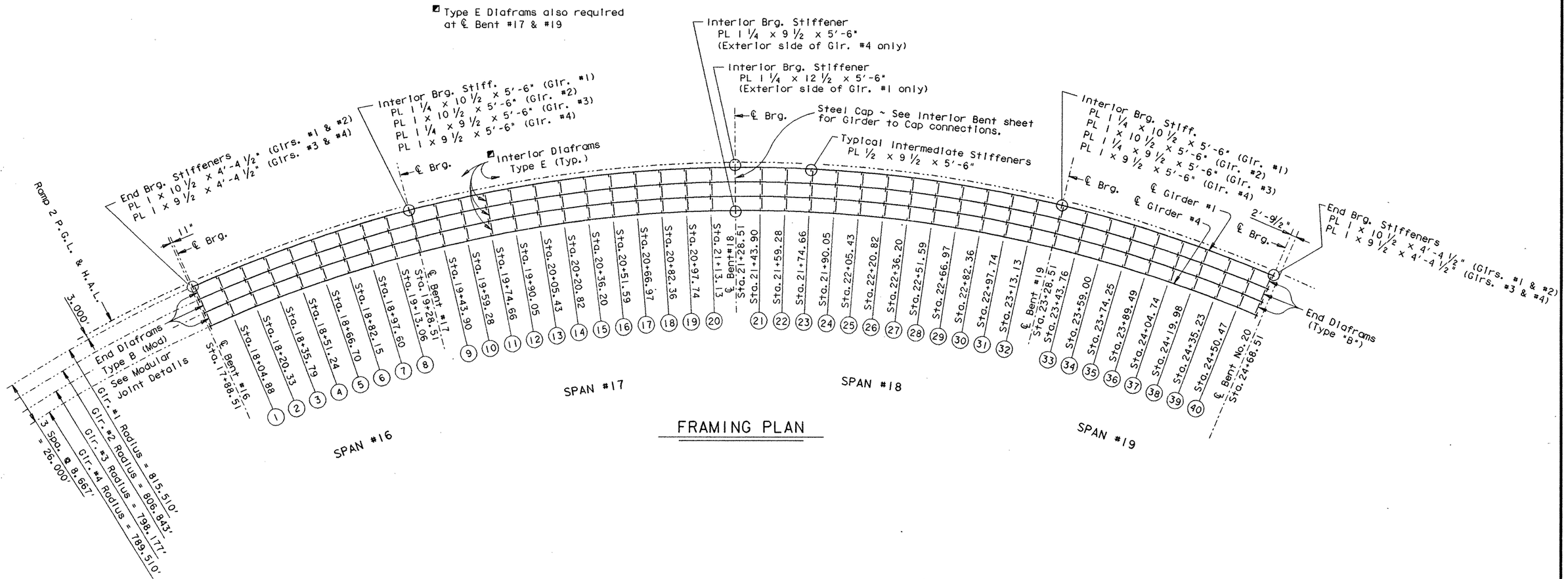

FRAMING PLAN

HS 20 LOADING

SHEET 2 OF 5

STATE DEPARTMENT OF HIGHWAYS AND PUBLIC TRANSPORTATION

UNIT NO. 6, RAMP 2

680.00' PLATE GIRDER UNIT
140.00'-200.00'-200.00'-140.00'

US 83/281 INTERCHANGE

STATE OF TEXAS
MARK J. BLOSCHOCK
52996
REGISTERED PROFESSIONAL ENGINEER

9-24-91

D45350A1:1.ZFA2:[355105]4377SFC01.DGN	PREPARED BY AND FOR USE OF TEXAS SDH&PT						
ORIGINAL DRAWING DATE: OCTOBER 1990	STATE DISTRICT	FEDERAL REGION	FEDERAL AID PROJECT				SHEET
DN.: LMW	21	6	NH92( )M				304
CK.: MRL	COUNTY		CONTROL	SECTION	JOB		HIGHWAY
DR.: DRG	HIDALGO		0039	17	097		US 83/281
CK.: LMW							

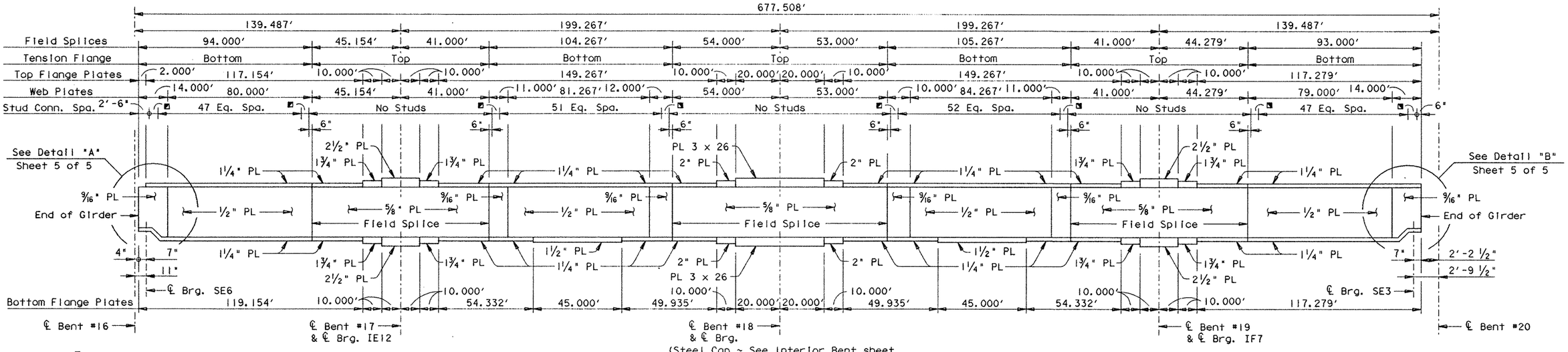

(Steel Cap ~ See Interior Bent sheet for Girder to Cap connections.)

GIRDER #1 ELEVATION

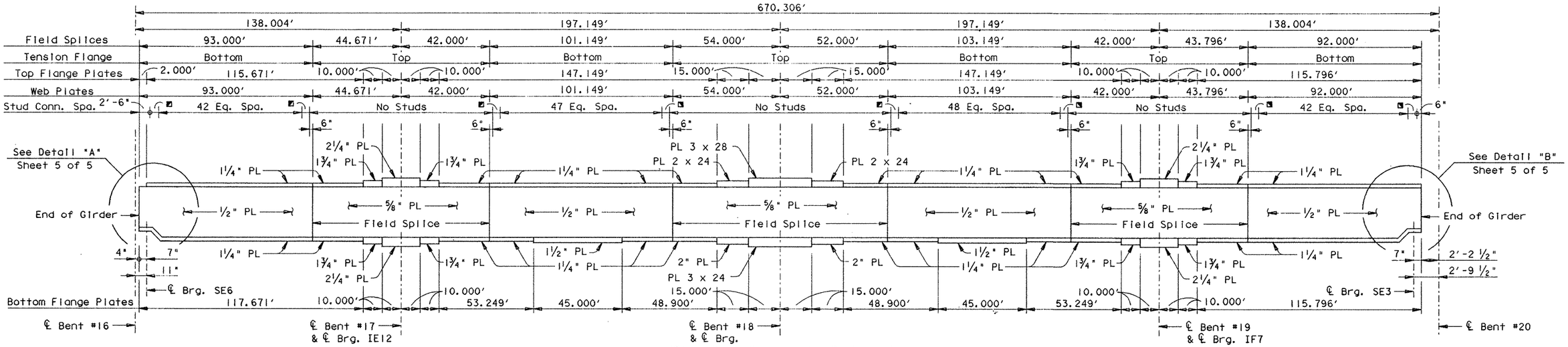

(Steel Cap ~ See Interior Bent sheet for Girder to Cap connections.)

GIRDER #2 ELEVATION

Girders #1 & #2:

All Flange Plates are 22" wide except as noted at Bent #18.

All Web Plates are 66" high except at Detail "A".

All Flange and Web Plates are H.S. Steel.

HS 20 LOADING

STATE OF TEXAS
MARK J. BLOSCHOCK
52996
REGISTERED PROFESSIONAL ENGINEER

9-24-91

STATE DEPARTMENT OF HIGHWAYS AND PUBLIC TRANSPORTATION

UNIT NO. 6, RAMP 2

680.00' PLATE GIRDER UNIT

140.00'-200.00'-200.00'-140.00'

US 83/281 INTERCHANGE

D45350A1: ZFA2: (3551061)4377SFC02.DGN	PREPARED BY AND FOR USE OF TEXAS SDH&PT							
ORIGINAL DRAWING DATE: OCTOBER 1990	STATE DISTRICT	FEDERAL REGION	FEDERAL AID PROJECT #				SHEET
DN.: LMW	REVISIONS	21	6	NH 92( )M				305
CK.: MRL		COUNTY		CONTROL	SECTION	JOB	HIGHWAY
DN.: DRG		HIDALGO		0039	17	097	US 83/281
CK.: LMW							

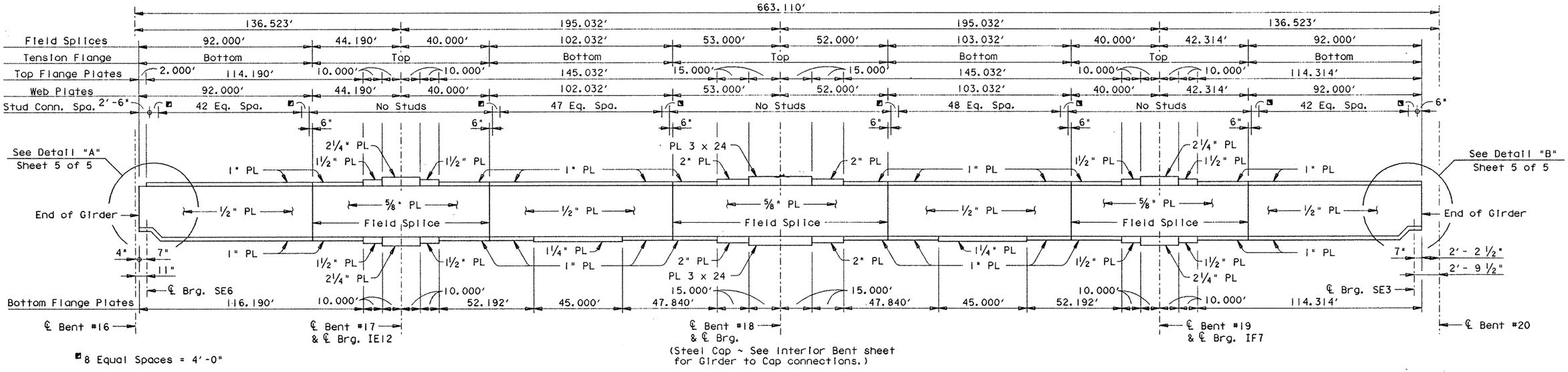

(Steel Cap ~ See Interior Bent sheet for Girder to Cap connections.)

GIRDER #3 ELEVATION

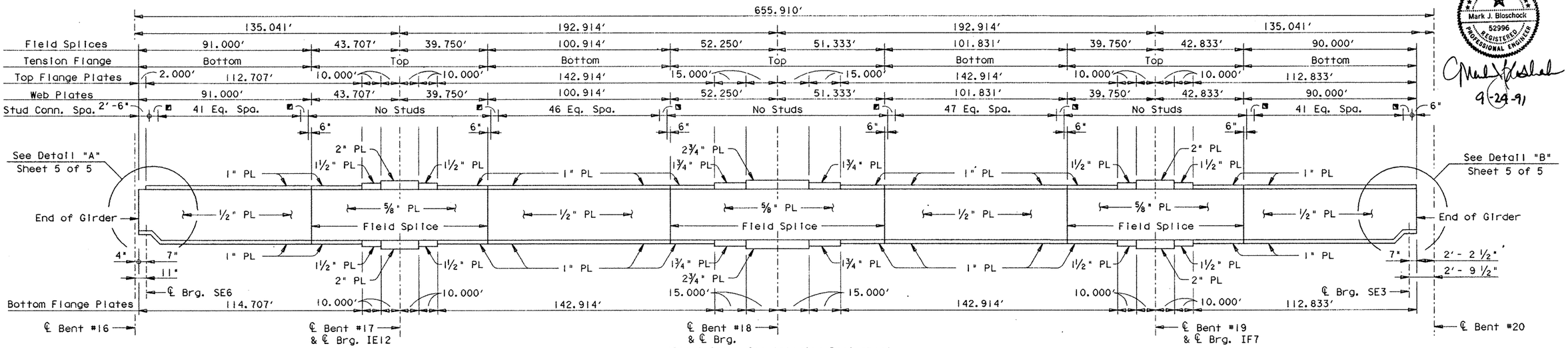

(Steel Cap ~ See Interior Bent sheet for Girder to Cap connections.)

GIRDER #4 ELEVATION

STATE OF TEXAS
Mark J. Bloschock
52996
REGISTERED PROFESSIONAL ENGINEER

9-24-91

Girders #3 & #4:

All Flange Plates are 20" wide except as noted at Bent #18.

All Web Plates are 66" high except at Detail "A".

All Flange and Web Plates are H.S. Steel.

PLATE GIRDER FABRICATION NOTES:

Girder tension flanges and webs are classified as main members and [redacted] conform to Item 442.3(1).

Except at changes in section, shop or field splices for both flanges and webs in plate girders [redacted] located as desirable to optimize plate lengths and erection procedures, except that splices [redacted] not [redacted] allowed where a 40' or less unspliced length [redacted] suffice; nor [redacted] tension flange splices be allowed within .05S either side of interior bearings, within .10S either side of the centerlines of the interior span, nor within the range between .30S and .50S from the end bearings (S = length c.c. Bearing of Span in which the splice is made).

Flange and web splices [redacted] made by full penetration groove welds in accordance with the Item "Steel Structures".

HS 20 LOADING

SHEET 4 OF 5

STATE DEPARTMENT OF HIGHWAYS AND PUBLIC TRANSPORTATION

UNIT NO. 6, RAMP 2

680.00' PLATE GIRDER UNIT
140.00'-200.00'-200.00'-140.00'

US 83/281 INTERCHANGE

D45350A1 : ZFA2: [355105]4377SFC02.DGN	PREPARED BY AND FOR USE OF TEXAS SDH&PT					
ORIGINAL DRAWING DATE: OCTOBER 1990	STATE DISTRICT	FEDERAL REGION	FEDERAL AID PROJECT			SHEET
DN.: LMW	21	6	NH 92( )M			306
CK.: MRL	COUNTY		CONTROL	SECTION	JOB	HIGHWAY
DR.: DRG	HIDALGO		0039	17	097	US 83/281
CK.: LMW						

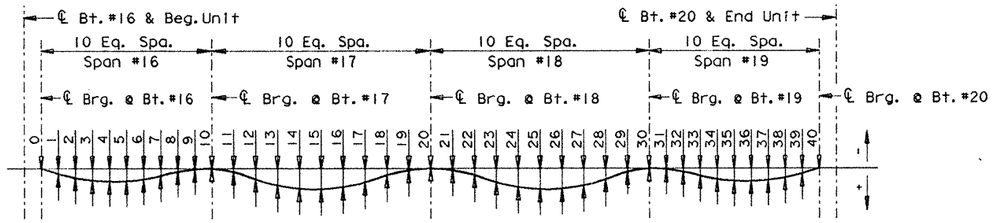

DEAD LOAD DEFLECTION DIAGRAM

Note: Deflections shown due to cast-in-place concrete slab only.

TABLE OF DEAD LOAD DEFLECTIONS

	TENTH POINT	GIRDER 1	GIRDER 2	GIRDER 3	GIRDER 4
SPAN 16	0	0.000′	0.000′	0.000′	0.000′
	1	0.037′	0.033′	0.038′	0.034′
	2	0.067′	0.061′	0.070′	0.060′
	3	0.085′	0.077′	0.089′	0.078′
	4	0.089′	0.082′	0.094′	0.083′
	5	0.081′	0.074′	0.085′	0.076′
	6	0.061′	0.056′	0.064′	0.059′
	7	0.035′	0.033′	0.038′	0.035′
	8	0.010′	0.011′	0.014′	0.013′
	9	-0.003′	-0.003′	-0.001′	-0.001′
	10	0.000′	0.000′	0.000′	0.000′
SPAN 17	11	0.033′	0.031′	0.032′	0.031′
	12	0.091′	0.086′	0.089′	0.084′
	13	0.152′	0.141′	0.149′	0.139′
	14	0.192′	0.177′	0.189′	0.177′
	15	0.199′	0.184′	0.198′	0.185′
	16	0.172′	0.161′	0.172′	0.164′
	17	0.119′	0.114′	0.122′	0.117′
	18	0.058′	0.057′	0.061′	0.061′
	19	0.016′	0.015′	0.017′	0.017′
	20	0.000′	0.000′	0.000′	0.000′
SPAN 18	21	0.017′	0.017′	0.017′	0.016′
	22	0.062′	0.059′	0.063′	0.059′
	23	0.124′	0.116′	0.125′	0.116′
	24	0.178′	0.165′	0.176′	0.161′
	25	0.204′	0.188′	0.200′	0.184′
	26	0.198′	0.181′	0.192′	0.174′
	27	0.157′	0.144′	0.153′	0.138′
	28	0.096′	0.088′	0.093′	0.083′
	29	0.036′	0.032′	0.034′	0.030′
	30	0.000′	0.000′	0.000′	0.000′
SPAN 19	31	-0.005′	-0.004′	-0.005′	-0.001′
	32	0.006′	0.008′	0.008′	0.011′
	33	0.028′	0.029′	0.033′	0.033′
	34	0.052′	0.051′	0.058′	0.053′
	35	0.071′	0.067′	0.077′	0.070′
	36	0.080′	0.074′	0.086′	0.077′
	37	0.077′	0.072′	0.082′	0.072′
	38	0.060′	0.056′	0.064′	0.057′
	39	0.034′	0.031′	0.035′	0.031′
	40	0.000′	0.000′	0.000′	0.000′

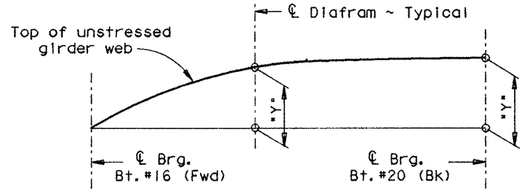

WEB CUTTING DIAGRAM

Note: Web [redacted] cut on straight lines between ordinates or to a smooth curve at the fabricator's option. Values listed include all dead load deflections and vertical curve corrections.

TABLE OF WEB CUTTING VALUES

DIAFRAM	GIRDER 1 "Y"	GIRDER 2 "Y"	GIRDER 3 "Y"	GIRDER 4 "Y"
SPAN 16 ℄ Brg.	0.000′	0.000′	0.000′	0.000′
1	0.464′	0.458′	0.462′	0.455′
2	0.899′	0.888′	0.897′	0.884′
3	1.294′	1.282′	1.293′	1.278′
4	1.648′	1.637′	1.647′	1.634′
5	1.963′	1.955′	1.964′	1.953′
6	2.246′	2.241′	2.248′	2.243′
7	2.510′	2.511′	2.514′	2.513′
8	2.777′	2.778′	2.778′	2.780′
SPAN 17 ℄ Brg.	3.057′	3.057′	3.057′	3.056′
9	3.354′	3.353′	3.351′	3.349′
10	3.661′	3.655′	3.654′	3.647′
11	3.966′	3.952′	3.953′	3.941′
12	4.247′	4.229′	4.232′	4.214′
13	4.493′	4.470′	4.475′	4.453′
14	4.694′	4.670′	4.677′	4.654′
15	4.848′	4.826′	4.832′	4.812′
16	4.957′	4.939′	4.945′	4.929′
17	5.027′	5.017′	5.021′	5.010′
18	5.072′	5.068′	5.071′	5.066′
19	5.109′	5.109′	5.112′	5.110′
20	5.158′	5.158′	5.159′	5.158′
SPAN 18 ℄ Brg.	5.214′	5.214′	5.214′	5.213′
21	5.289′	5.287′	5.288′	5.286′
22	5.372′	5.369′	5.370′	5.366′
23	5.464′	5.457′	5.459′	5.450′
24	5.549′	5.536′	5.539′	5.521′
25	5.609′	5.588′	5.592′	5.569′
26	5.630′	5.604′	5.608′	5.580′
27	5.613′	5.586′	5.589′	5.559′
28	5.564′	5.538′	5.542′	5.511′
29	5.487′	5.464′	5.467′	5.440′
30	5.388′	5.372′	5.372′	5.352′
31	5.280′	5.272′	5.271′	5.258′
SPAN 19 ℄ Brg.	5.118′	5.118′	5.117′	5.117′
33	5.083′	5.084′	5.085′	5.089′
34	5.075′	5.079′	5.081′	5.082′
35	5.087′	5.086′	5.091′	5.090′
36	5.096′	5.093′	5.101′	5.094′
37	5.093′	5.086′	5.095′	5.085′
38	5.068′	5.059′	5.068′	5.057′
39	5.018′	5.011′	5.018′	5.007′
40	4.946′	4.943′	4.945′	4.940′
℄ Brg.	4.862′	4.862′	4.862′	4.862′

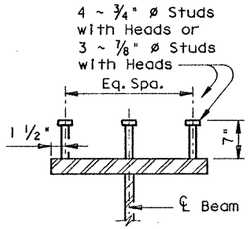

SHEAR CONNECTOR STUD DETAIL

Studs [redacted] Electric arc end-welded to the flanges with complete fusion.

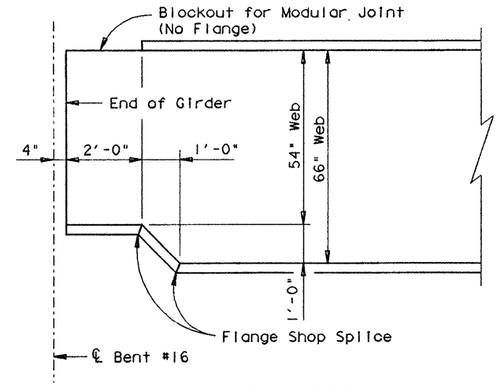

DETAIL "A"

(Typical End of Girder Detail at Bent #16)

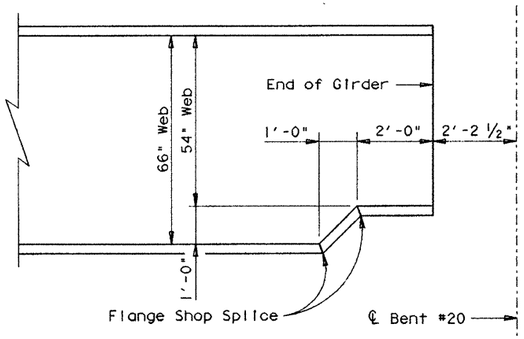

DETAIL "B"

(Typical End of Girder Detail at Bent #20)

HS 20 LOADING SHEET 5 OF 5

STATE DEPARTMENT OF HIGHWAYS AND PUBLIC TRANSPORTATION

UNIT NO. 6, RAMP 2

680.00′ PLATE GIRDER UNIT
140.00′-200.00′-200.00′-140.00′

US 83/281 INTERCHANGE

D45350A1 • ZFA2 • [3551051437?SFC03.DGN | PREPARED BY AND FOR USE OF TEXAS SDH&PT

ORIGINAL DRAWING DATE: OCTOBER 1990	STATE DISTRICT	FEDERAL REGION	FEDERAL AID PROJECT	SHEET
DN.• LMW REVISIONS	21	6	*NH 92( )M	307
CK.• MRL	COUNTY	CONTROL	SECTION	JOB	HIGHWAY
DR.• DRG	HIDALGO	0039	17	097	US 83/281
CK.• LMW					

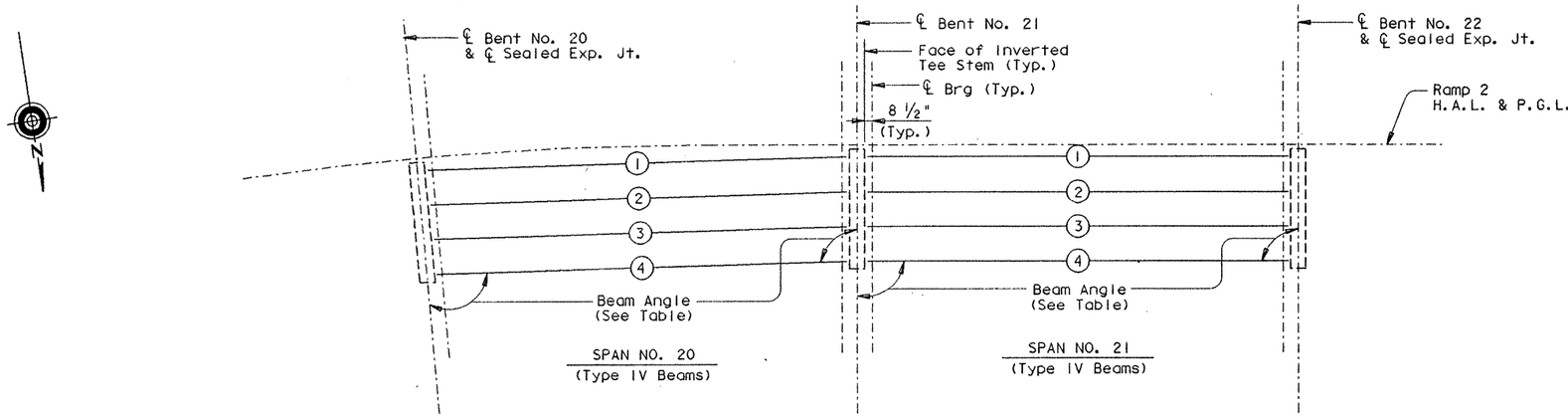

BEAM LAYOUT

BENT REPORT

BENT NO. 20 (S 8 28 2.74 W)
DISTANCE BETWEEN STATION LINE AND BEAM 1 3.000 R

		BEAM SPAC. (C.L. BENT)	BEAM ANGLE D	M	S
SPAN20	BEAM 1	0.000	86	35	1
	BEAM 2	8.667	86	34	39
	BEAM 3	8.667	86	34	17
	BEAM 4	8.667	86	33	54
	TOTAL	26.000			

BENT NO. 21 (S 8 28 2.74 W)
DISTANCE BETWEEN STATION LINE AND BEAM 1 3.000 R

		BEAM SPAC. (C.L. BENT)	BEAM ANGLE D	M	S
SPAN20	BEAM 1	0.000	88	18	26
	BEAM 2	8.667	88	18	48
	BEAM 3	8.667	88	19	10
	BEAM 4	8.667	88	19	33
	TOTAL	26.000			
SPAN21	BEAM 1	0.000	90	0	0
	BEAM 2	8.667	90	0	0
	BEAM 3	8.667	90	0	0
	BEAM 4	8.667	90	0	0
	TOTAL	26.000			

BENT NO. 22 (S 8 28 2.74 W)
DISTANCE BETWEEN STATION LINE AND BEAM 1 3.000 R

		BEAM SPAC. (C.L. BENT)	BEAM ANGLE D	M	S
SPAN21	BEAM 1	0.000	90	0	0
	BEAM 2	8.667	90	0	0
	BEAM 3	8.667	90	0	0
	BEAM 4	8.667	90	0	0
	TOTAL	26.000			

BEAM REPORT

BEAM REPORT, SPAN20

	HORIZONTAL DISTANCE C-C BENT	C-C BRG.	TRUE DISTANCE BOT. BM. FLG.
BEAM 1	109.684	104.512	105.595
BEAM 2	108.912	103.739	104.823
BEAM 3	108.139	102.967	104.050
BEAM 4	107.367	102.194	103.279

BEAM REPORT, SPAN21

	HORIZONTAL DISTANCE C-C BENT	C-C BRG.	TRUE DISTANCE BOT. BM. FLG.
BEAM 1	110.000	104.833	105.917
BEAM 2	110.000	104.833	105.917
BEAM 3	110.000	104.833	105.917
BEAM 4	110.000	104.833	105.917

HS 20 LOADING

STATE OF TEXAS
MARK J. BLOSCHOCK
52996
REGISTERED PROFESSIONAL ENGINEER

9-24-91

STATE DEPARTMENT OF HIGHWAYS AND PUBLIC TRANSPORTATION

BEAM LAYOUT UNIT NO. 7, RAMP 2

US 83/281 INTERCHANGE

D45350A: ZFA2: [355100]4379BLY01.DGN
ORIGINAL DRAWING DATE: JANUARY 1991
DN.: LMW
CK.: KBA
DW.: PSR
CK.: KBA
REVISIONS

PREPARED BY AND FOR USE OF TEXAS SDH&PT

STATE DISTRICT	FEDERAL REGION	FEDERAL AID PROJECT	SHEET
21	6	NH92( )M	308

COUNTY	CONTROL	SECTION	JOB	HIGHWAY
HIDALGO	0039	17	097	US 83/281

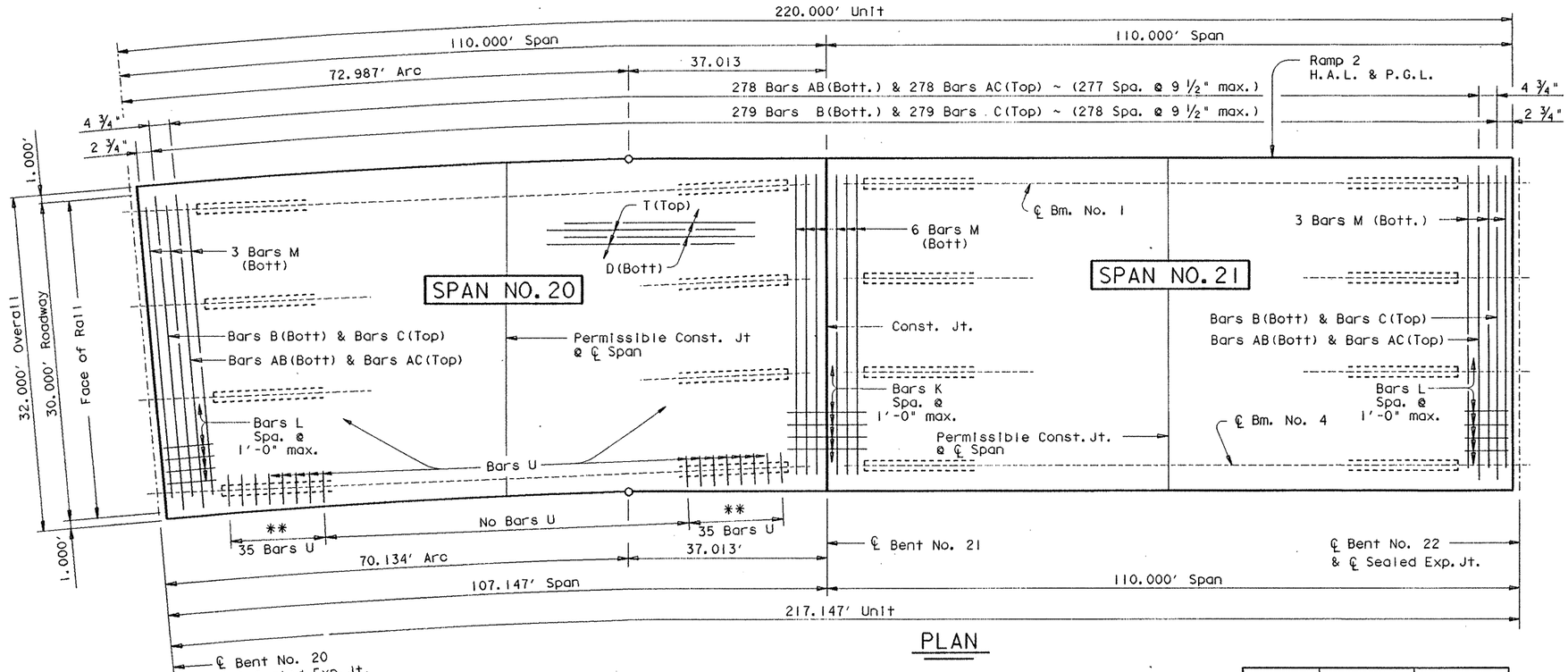

PLAN

** Bars U Spacing match Beam Bars R Spacing on All Beams in Span No. 20.

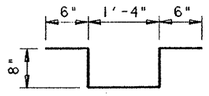

BARS U

TABLE OF SECTION DEPTHS				
Span	Beam	"X" at ℄ Brg.	"Y" at ℄ Brg.	*"Z" at ℄ Span
#20	#1	11 3/4"	5'-5 3/4"	8 5/8"
	#2	1'-0 3/4"	5'-6 3/4"	8 7/8"
	#3	1'-1 3/4"	5'-7 3/4"	8 5/8"
	#4	1'-2 1/2"	5'-8 1/2"	8 5/8"
#21	All	8 1/2"	5'-2 1/2"	8 7/8"

* Theoretical dimension

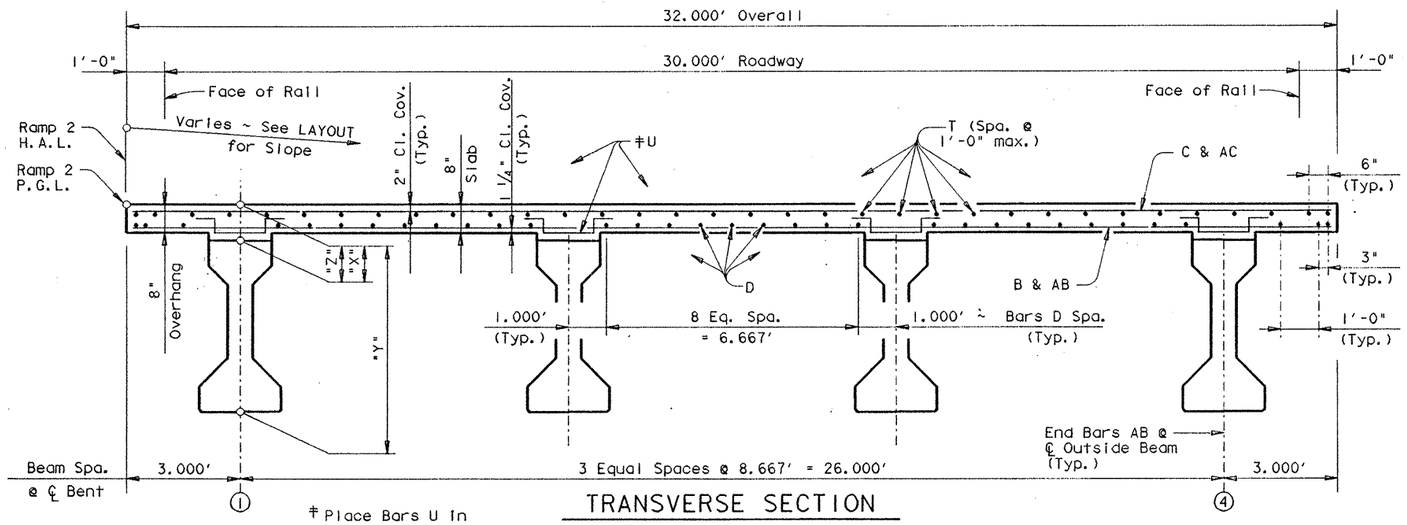

‡ Place Bars U In Span No. 20 Only

TRANSVERSE SECTION

Span	"A"	"B"
ALL	0.107'	0.151'

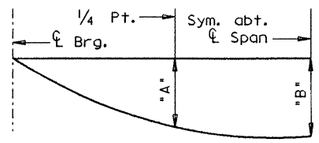

NOTE: Deflections shown are due to cast-in-place concrete only.

(E_c = 5 X 10^6 psi)

DEAD LOAD DEFLECTION DIAGRAM

TABLE OF ESTIMATED QUANTITIES

Bar	No.	Size	Length	Weight
AB	278	# 5	26'- 0"	7539
AC	278	# 5	31'- 9"	9206
B	279	# 4	31'- 9"	5917
C	279	# 5	31'- 9"	9239
D	33	# 5	223'-11" ▲	7707
K	31	# 4	6'- 4"	131
L	62	# 4	3'- 0"	124
M	12	# 5	27'- 5"	343
T	34	# 4	223'- 2" ◪	5069
U	280	# 4	3'- 8"	686

Reinforcing Steel		Lb	⌗ 45961
Prestr. Conc. Bm. ~ Ty. IV		LF	⌗ 841.42

Span	Reinf. Conc. Slab ~ SF	Class "S" Conc. ~ CY	
		⌗ Diaf.	⌗ Slab
# 20	3474	——	91.8
# 21	3520	——	88.6
Total	6994	⌗	180.4

⌗ For contractor's information only.

▲ Length shown includes 3 ~ 1'-5 " min. laps.
◪ Length shown includes 3 ~ 1'-2 " min. laps.
⌗ Length shown is bottom flange length with adjustments made for beam slope.

GENERAL NOTES:

Designed according to A.A.S.H.T.O. 1989 Standard Specifications.

Design fc = 1200 p.s.i.

See GpC (SPL) sheet for details not shown.

For Drain Locations see Bridge Layout. For Drain Details see Bridge Drain Details Sheet.

HS 20 LOADING

STATE DEPARTMENT OF HIGHWAYS AND PUBLIC TRANSPORTATION

UNIT NO. 7, RAMP 2

220.00' PRESTRESSED CONCRETE BEAM UNIT 110.00' - 110.00' US 83/281 INTERCHANGE

STATE OF TEXAS
MARK J. BLOSCHOCK
52996
REGISTERED PROFESSIONAL ENGINEER

9-24-91

D45350A: ZFA2: [3551001]4379PPB03.DGN
ORIGINAL DRAWING DATE: AUGUST 1990
DR.: LMW
CK.: KBA
DR.: TKW/PSR
CK.: LMW
REVISIONS

PREPARED BY AND FOR USE OF TEXAS SDH&PT

STATE DISTRICT	FEDERAL REGION	FEDERAL AID PROJECT		SHEET
21	6	NH92( )M		309

COUNTY	CONTROL	SECTION	JOB	HIGHWAY
HIDALGO	0039	17	097	US 83/281

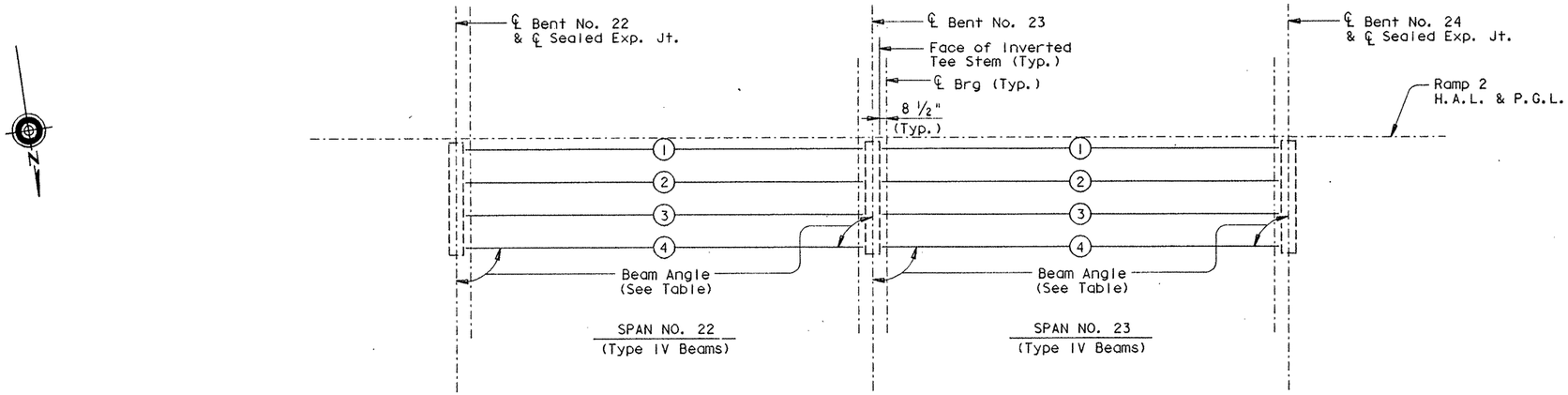

BEAM LAYOUT

BENT REPORT

BENT NO.22 (S 8 28 2.74 W)
DISTANCE BETWEEN STATION LINE AND BEAM 1 3.000 R

		BEAM SPAC. (C.L. BENT)	BEAM ANGLE D	M	S
SPAN22	BEAM 1	0.000	90	0	0
	BEAM 2	8.667	90	0	0
	BEAM 3	8.667	90	0	0
	BEAM 4	8.667	90	0	0
	TOTAL	26.000			

BENT NO.23 (S 8 28 2.74 W)
DISTANCE BETWEEN STATION LINE AND BEAM 1 3.000 R

		BEAM SPAC. (C.L. BENT)	BEAM ANGLE D	M	S
SPAN22	BEAM 1	0.000	90	0	0
	BEAM 2	8.667	90	0	0
	BEAM 3	8.667	90	0	0
	BEAM 4	8.667	90	0	0
	TOTAL	26.000			
SPAN23	BEAM 1	0.000	90	0	0
	BEAM 2	8.667	90	0	0
	BEAM 3	8.667	90	0	0
	BEAM 4	8.667	90	0	0
	TOTAL	26.000			

BENT NO.24 (S 8 28 2.74 W)
DISTANCE BETWEEN STATION LINE AND BEAM 1 3.000 R

		BEAM SPAC. (C.L. BENT)	BEAM ANGLE D	M	S
SPAN23	BEAM 1	0.000	90	0	0
	BEAM 2	8.667	90	0	0
	BEAM 3	8.667	90	0	0
	BEAM 4	8.667	90	0	0
	TOTAL	26.000			

BEAM REPORT

BEAM REPORT, SPAN22

	HORIZONTAL DISTANCE C-C BENT	C-C BRG.	TRUE DISTANCE BOT. BM. FLG.
BEAM 1	110.000	104.833	105.918
BEAM 2	110.000	104.833	105.918
BEAM 3	110.000	104.833	105.918
BEAM 4	110.000	104.833	105.918

BEAM REPORT, SPAN23

	HORIZONTAL DISTANCE C-C BENT	C-C BRG.	TRUE DISTANCE BOT. BM. FLG.
BEAM 1	110.000	104.833	105.925
BEAM 2	110.000	104.833	105.925
BEAM 3	110.000	104.833	105.925
BEAM 4	110.000	104.833	105.925

HS 20 LOADING

STATE OF TEXAS
MARK J. BLOSCHOCK
52996
REGISTERED PROFESSIONAL ENGINEER

9-24-91

STATE DEPARTMENT OF HIGHWAYS AND PUBLIC TRANSPORTATION

BEAM LAYOUT UNIT NO. 8, RAMP 2

US 83/281 INTERCHANGE

D45350A: ZFA2: [355100]4379BLY01.DGN
ORIGINAL DRAWING DATE: JANUARY 1991
DN.: LMW
CK.: KBA
DW.: PSR
CK.: KBA
REVISIONS

PREPARED BY AND FOR USE OF TEXAS SDH&PT

STATE DISTRICT	FEDERAL REGION	FEDERAL AID PROJECT	SHEET
21	6	NH92( )M	310

COUNTY	CONTROL	SECTION	JOB	HIGHWAY
HIDALGO	0039	17	097	US 83/281

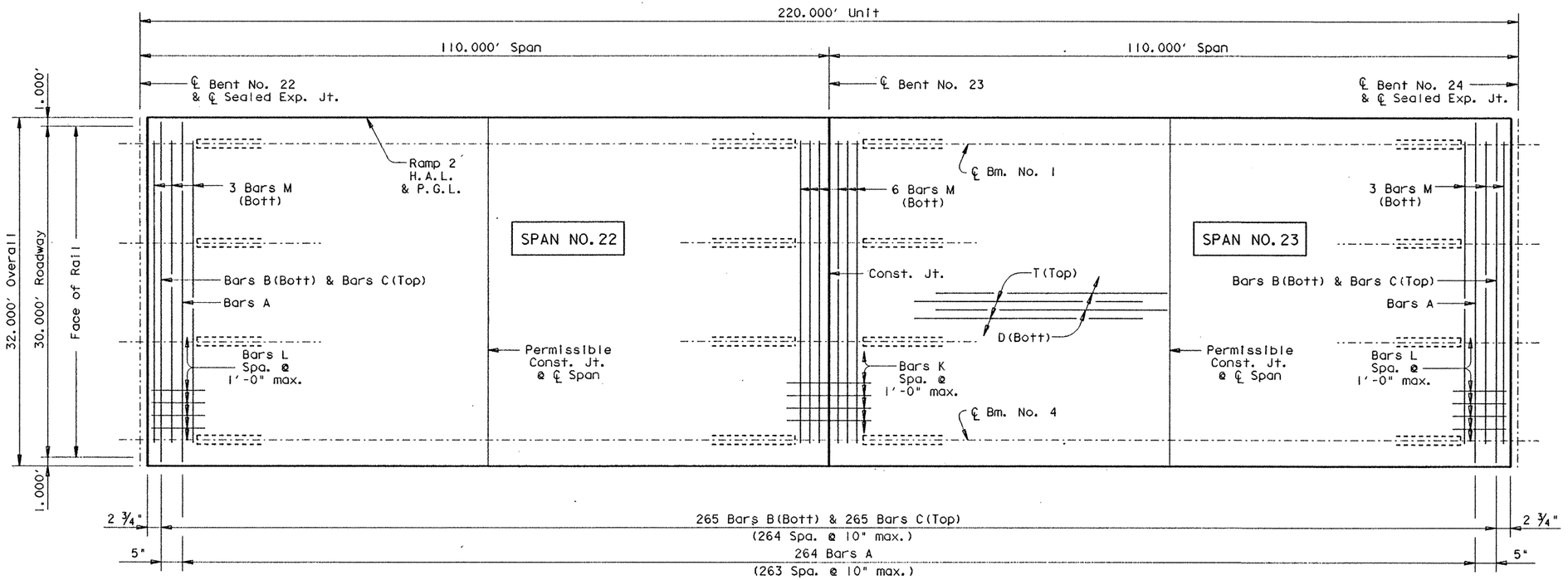

PLAN

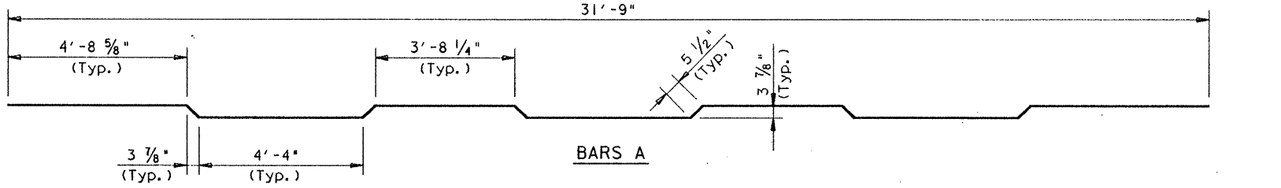

BARS A

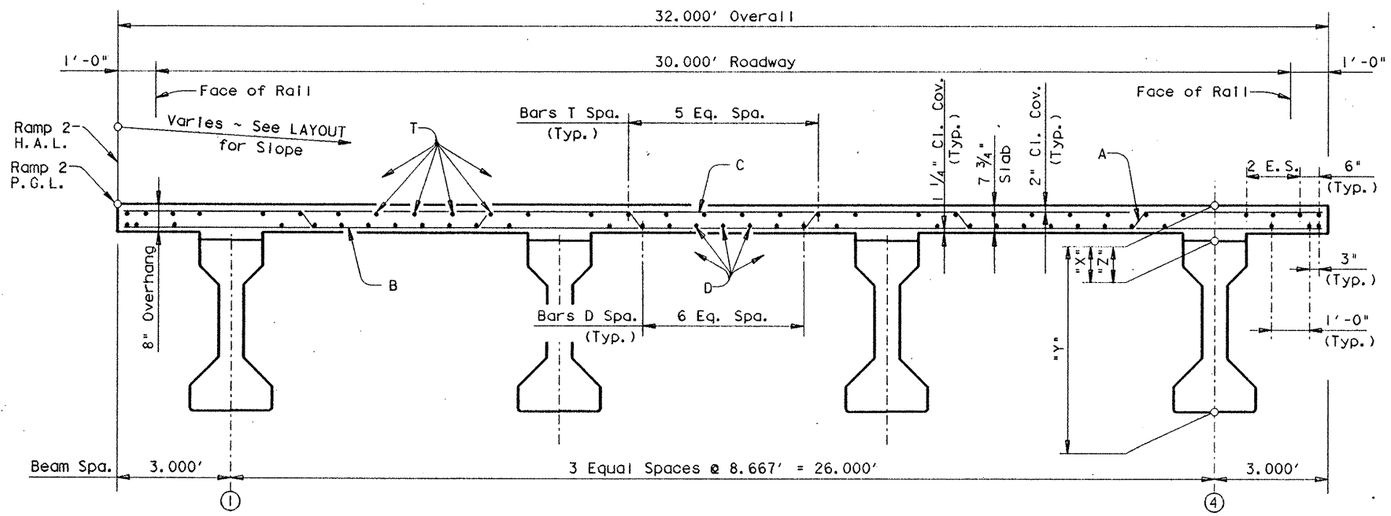

TRANSVERSE SECTION

Span	"A"	"B"
ALL	0.104'	0.146'

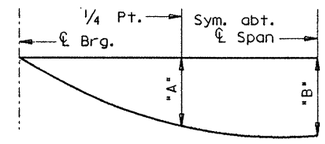

NOTE: Deflections shown are due to cast-in-place concrete only.

(E_c = 5 X 10^6 psi)

DEAD LOAD DEFLECTION DIAGRAM

TABLE OF ESTIMATED QUANTITIES

Bar	No.	Size	Length	Weight
A	264	# 5	32'- 7"	8972
B	265	# 4	31'- 9"	5620
C	265	# 5	31'- 9"	8776
D	33	# 5	223'-11" ▲	7707
K	31	# 4	6'- 4"	131
L	62	# 4	3'- 0"	124
M	12	# 5	29'- 9"	372
T	32	# 4	223'- 2" ◩	4770

Reinforcing Steel	Lb	⌗ 36472
Prestr. Conc. Bm. ~ Ty. IV	LF	⌗ 847.37

Span	Reinf. Conc. Slab ~ SF	Class 'S' Conc. ~ CY	
		⌗ Diaf.	⌗ Slab
# 22	3520	---	86.9
# 23	3520	---	86.9
Total	7040	⌗	173.8

⌗ For contractor's information only.

▲ Length shown includes 3 ~ 1'-5 " min. laps.

◩ Length shown includes 3 ~ 1'-2 " min. laps.

⌗ Length shown is bottom flange length with adjustments made for beam slope.

TABLE OF SECTION DEPTHS

Span	"X" at ℄ Brg.	"Y" at ℄ Brg.	"Z" at ℄ Span *
ALL	9 1/4"	5'-3 1/4"	8 1/4"

* Theoretical dimension

GENERAL NOTES:

Designed according to A.A.S.H.T.O. 1989 Standard Specifications.

Design fc = 1200 p.s.i.

See GpC (SPL) sheet for details not shown.

For Drain Locations see Bridge Layout. For Drain Details see Bridge Drain Details Sheet.

HS 20 LOADING

STATE DEPARTMENT OF HIGHWAYS AND PUBLIC TRANSPORTATION

UNIT NO. 8, RAMP 2

220.00' PRESTRESSED CONCRETE BEAM UNIT (110.00' - 110.00')

US 83/281 INTERCHANGE

STATE OF TEXAS
MARK J. BLOSCHOCK
52996
REGISTERED PROFESSIONAL ENGINEER

9-24-91

D45350A: ZFA2: [3551001]4377PPB01.DGN	PREPARED BY AND FOR USE OF TEXAS SDH&PT					
ORIGINAL DRAWING DATE: JUNE 1990	STATE DISTRICT	FEDERAL REGION	FEDERAL AID PROJECT			SHEET
DR.: LMW	21	6	NH 9,2( )M			311
CK.: KBA	COUNTY		CONTROL	SECTION	JOB	HIGHWAY
DW.: PSR	HIDALGO		0039	17	097	US 83/281
CK.: LMW						
REVISIONS						

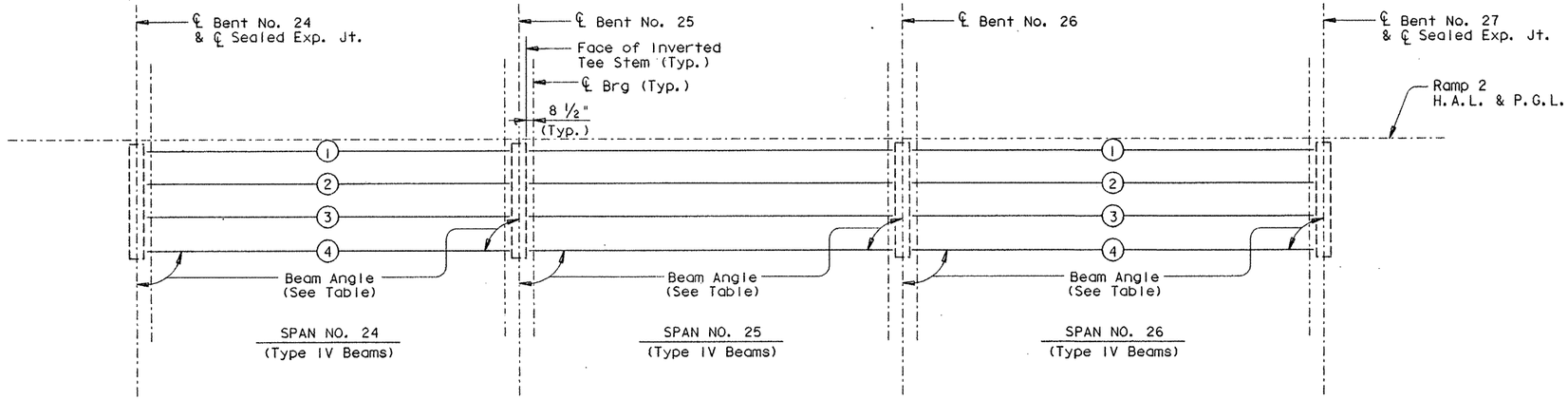

BEAM LAYOUT

BENT NO.24 (S 8 28 2.74 W)
DISTANCE BETWEEN STATION LINE AND BEAM 1 3.000 R

		BEAM SPAC. (C.L. BENT)	BEAM ANGLE D	M	S
SPAN24	BEAM 1	0.000	90	0	0
	BEAM 2	8.667	90	0	0
	BEAM 3	8.667	90	0	0
	BEAM 4	8.667	90	0	0
	TOTAL	26.000			

BENT NO.25 (S 8 28 2.74 W)
DISTANCE BETWEEN STATION LINE AND BEAM 1 3.000 R

		BEAM SPAC. (C.L. BENT)	BEAM ANGLE D	M	S
SPAN24	BEAM 1	0.000	90	0	0
	BEAM 2	8.667	90	0	0
	BEAM 3	8.667	90	0	0
	BEAM 4	8.667	90	0	0
	TOTAL	26.000			
SPAN25	BEAM 1	0.000	90	0	0
	BEAM 2	8.667	90	0	0
	BEAM 3	8.667	90	0	0
	BEAM 4	8.667	90	0	0
	TOTAL	26.000			

BENT NO.26 (S 8 28 2.74 W)
DISTANCE BETWEEN STATION LINE AND BEAM 1 3.000 R

		BEAM SPAC. (C.L. BENT)	BEAM ANGLE D	M	S
SPAN25	BEAM 1	0.000	90	0	0
	BEAM 2	8.667	90	0	0
	BEAM 3	8.667	90	0	0
	BEAM 4	8.667	90	0	0
	TOTAL	26.000			
SPAN26	BEAM 1	0.000	90	0	0
	BEAM 2	8.667	90	0	0
	BEAM 3	8.667	90	0	0
	BEAM 4	8.667	90	0	0
	TOTAL	26.000			

BENT NO.27 (S 8 28 2.74 W)
DISTANCE BETWEEN STATION LINE AND BEAM 1 3.000 R

		BEAM SPAC. (C.L. BENT)	BEAM ANGLE D	M	S
SPAN26	BEAM 1	0.000	90	0	0
	BEAM 2	8.667	90	0	0
	BEAM 3	8.667	90	0	0
	BEAM 4	8.667	90	0	0
	TOTAL	26.000			

BEAM REPORT, SPAN24

	HORIZONTAL DISTANCE C-C BENT	C-C BRG.	TRUE DISTANCE BOT. BM. FLG.
BEAM 1	100.000	94.833	95.934
BEAM 2	100.000	94.833	95.934
BEAM 3	100.000	94.833	95.934
BEAM 4	100.000	94.833	95.934

BEAM REPORT, SPAN25

	HORIZONTAL DISTANCE C-C BENT	C-C BRG.	TRUE DISTANCE BOT. BM. FLG.
BEAM 1	100.000	94.833	95.947
BEAM 2	100.000	94.833	95.947
BEAM 3	100.000	94.833	95.947
BEAM 4	100.000	94.833	95.947

BEAM REPORT, SPAN26

	HORIZONTAL DISTANCE C-C BENT	C-C BRG.	TRUE DISTANCE BOT. BM. FLG.
BEAM 1	110.000	104.833	105.971
BEAM 2	110.000	104.833	105.971
BEAM 3	110.000	104.833	105.971
BEAM 4	110.000	104.833	105.971

HS 20 LOADING

STATE OF TEXAS
MARK J. BLOSCHOCK
52996
REGISTERED
PROFESSIONAL ENGINEER
9-24-91

STATE DEPARTMENT OF HIGHWAYS AND PUBLIC TRANSPORTATION

BEAM LAYOUT
UNIT NO. 9, RAMP 2

US 83/281 INTERCHANGE

045350A • ZFA2 • [355100]4379BLY01.DGN	PREPARED BY AND FOR USE OF TEXAS SDH&PT						
ORIGINAL DRAWING DATE • JANUARY 1991	STATE DISTRICT	FEDERAL REGION	FEDERAL AID PROJECT •				SHEET
DN.• LMW REVISIONS	21	6	NH92( )M				3/2
CK.• KBA	COUNTY			CONTROL	SECTION	JOB	HIGHWAY
DW.• PSR	HIDALGO			0039	17	097	US 83/281
CK.• KBA							

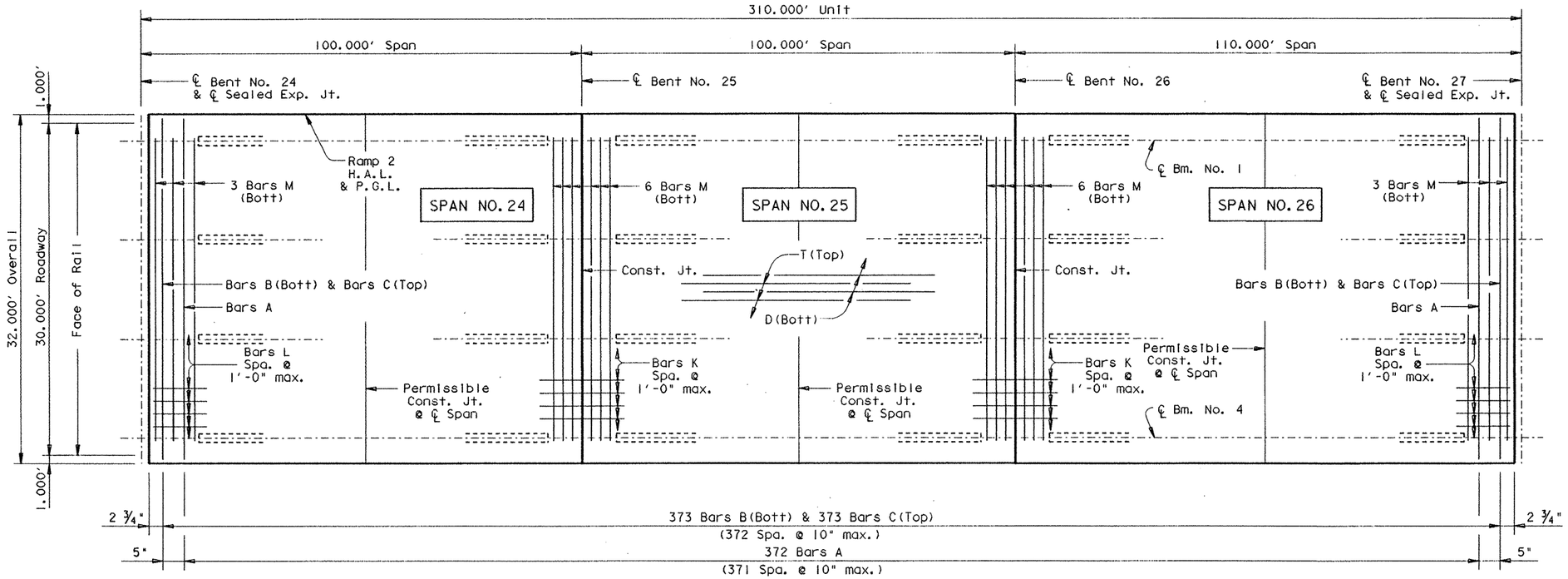

PLAN

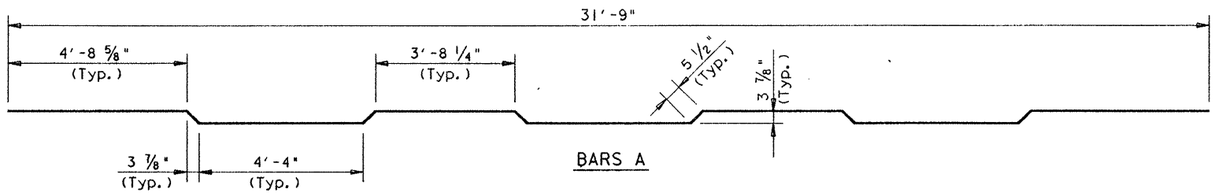

BARS A

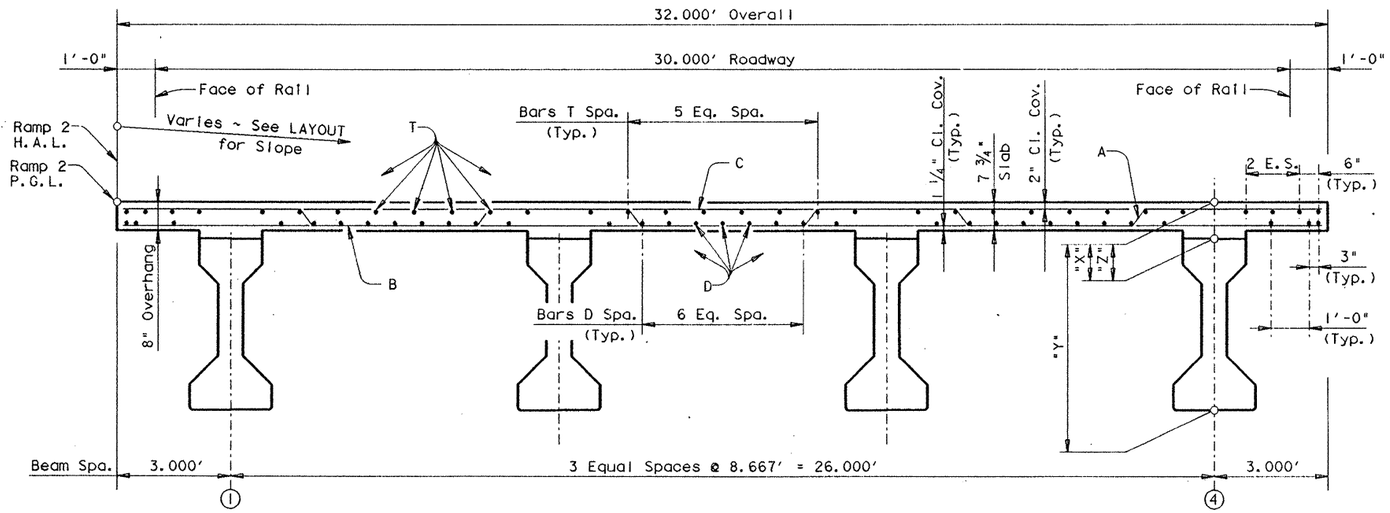

TRANSVERSE SECTION

Span	"A"	"B"
#24 &#25	0.069'	0.098'
#26	0.104'	0.146'

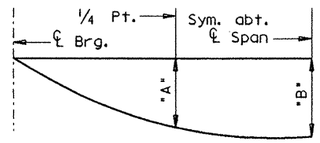

NOTE: Deflections shown are due to cast-in-place concrete only.

(E_c = 5 X 10^6 psi)

DEAD LOAD DEFLECTION DIAGRAM

TABLE OF ESTIMATED QUANTITIES

Bar	No.	Size	Length	Weight
A	372	# 5	32'- 7"	12642
B	373	# 4	31'- 9"	7911
C	373	# 5	31'- 9"	12352
D	33	# 5	316'- 9" ▲	10902
K	62	# 4	6'- 4"	262
L	62	# 4	3'- 0"	124
M	18	# 5	29'- 9"	559
T	32	# 4	315'- 6" ◩	6744

Reinforcing Steel	Lb	# 51496
Prestr. Conc. Bm. ~ Ty. IV	LF	⋕ 1191.41

Span	Reinf. Conc. Slab ~ SF	Class "S" Conc. ~ CY	
		# Diaf.	# Slab
# 24	3200		78.4
# 25	3200		78.4
# 26	3520		86.7
Total	9920	#	243.5

For contractor's information only.

▲ Length shown includes 5 ~ 1'-5 " min. laps.

◩ Length shown includes 5 ~ 1'-2 " min. laps.

⋕ Length shown is bottom flange length with adjustments made for beam slope.

TABLE OF SECTION DEPTHS

Span	"X" at ℄ Brg.	"Y" at ℄ Brg.	"Z" at ℄ Span *
#24 &#25	8 3/4"	5'-2 3/4"	8 1/8"
#26	9 1/4"	5'-3 1/4"	8 1/4"

* Theoretical dimension

GENERAL NOTES:

Designed according to A.A.S.H.T.O. 1989 Standard Specifications.

Design fc = 1200 p.s.i.

See GpC (SPL) sheet for details not shown.

For Drain Locations see Bridge Layout. For Drain Details see Bridge Drain Details Sheet.

HS 20 LOADING

STATE DEPARTMENT OF HIGHWAYS AND PUBLIC TRANSPORTATION

UNIT NO. 9, RAMP 2

310.00' PRESTRESSED CONCRETE BEAM UNIT (100.00' - 100.00' - 110.00') US 83/281 INTERCHANGE

STATE OF TEXAS
MARK J. BLOSCHOCK
52996
REGISTERED PROFESSIONAL ENGINEER

9-24-91

D45350A: ZFA2: (3551001)4377PPB02.DGN

PREPARED BY AND FOR USE OF TEXAS SDH&PT

ORIGINAL DRAWING DATE: JUNE 1990	REVISIONS	STATE DISTRICT	FEDERAL REGION	FEDERAL AID PROJECT	SHEET
DN.: LMW		21	6	NH92( )M	313
CK.: KBA		COUNTY	CONTROL	SECTION	JOB	HIGHWAY
DN.: PSR		HIDALGO	0039	17	097	US 83/281
CK.: LMW						

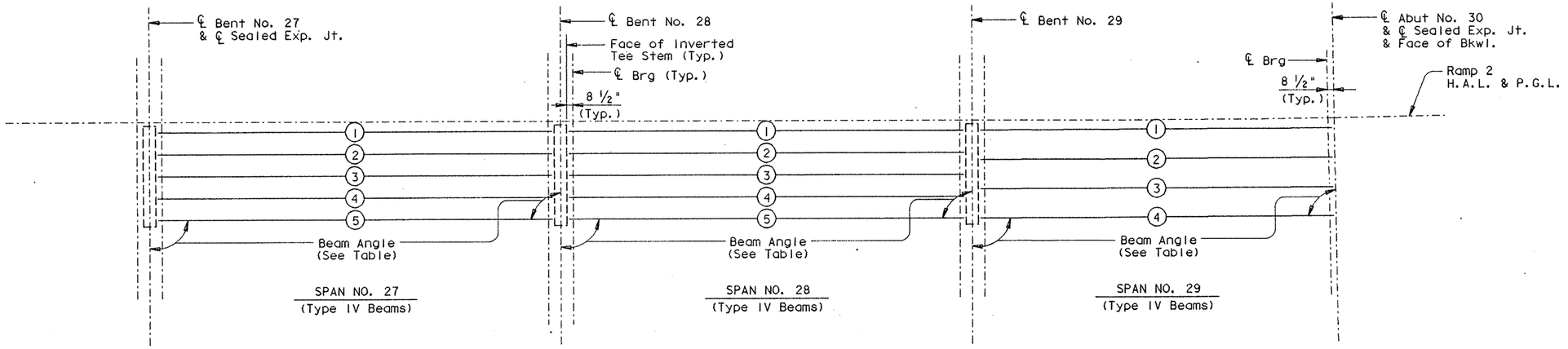

BEAM LAYOUT

BENT REPORT

BENT NO. 27 (S 8 28 2.74 W)
DISTANCE BETWEEN STATION LINE AND BEAM 1 3.000 R

		BEAM SPAC. (C.L. BENT)	BEAM ANGLE D	M	S
SPAN27	BEAM 1	0.000	90	0	0
	BEAM 2	6.500	90	0	0
	BEAM 3	6.500	90	0	0
	BEAM 4	6.500	90	0	0
	BEAM 5	6.500	90	0	0
	TOTAL	26.000			

BENT NO. 28 (S 8 28 2.74 W)
DISTANCE BETWEEN STATION LINE AND BEAM 1 3.000 R

		BEAM SPAC. (C.L. BENT)	BEAM ANGLE D	M	S
SPAN27	BEAM 1	0.000	90	0	0
	BEAM 2	6.500	90	0	0
	BEAM 3	6.500	90	0	0
	BEAM 4	6.500	90	0	0
	BEAM 5	6.500	90	0	0
	TOTAL	26.000			
SPAN28	BEAM 1	0.000	90	0	0
	BEAM 2	6.500	90	0	0
	BEAM 3	6.500	90	0	0
	BEAM 4	6.500	90	0	0
	BEAM 5	6.500	90	0	0
	TOTAL	26.000			

BENT REPORT

BENT NO. 29 (S 8 28 2.74 W)
DISTANCE BETWEEN STATION LINE AND BEAM 1 3.000 R

		BEAM SPAC. (C.L. BENT)	BEAM ANGLE D	M	S
SPAN28	BEAM 1	0.000	90	0	0
	BEAM 2	6.500	90	0	0
	BEAM 3	6.500	90	0	0
	BEAM 4	6.500	90	0	0
	BEAM 5	6.500	90	0	0
	TOTAL	26.000			
SPAN29	BEAM 1	0.000	89	45	27
	BEAM 2	8.667	89	45	26
	BEAM 3	8.667	89	45	24
	BEAM 4	8.667	89	45	23
	TOTAL	26.000			

ABUT NO. 30 (S 7 30 4.36 W)
DISTANCE BETWEEN STATION LINE AND BEAM 1 3.000 R

		BEAM SPAC. (C.L. BENT)	BEAM ANGLE D	M	S
SPAN29	BEAM 1	0.000	89	16	35
	BEAM 2	8.667	89	16	36
	BEAM 3	8.667	89	16	37
	BEAM 4	8.667	89	16	38
	TOTAL	26.000			

BEAM REPORT

BEAM REPORT, SPAN27

	HORIZONTAL DISTANCE C-C BENT	C-C BRG.	TRUE DISTANCE BOT. BM. FLG.
BEAM 1	125.000	119.833	121.007
BEAM 2	125.000	119.833	121.007
BEAM 3	125.000	119.833	121.007
BEAM 4	125.000	119.833	121.006
BEAM 5	125.000	119.833	121.006

BEAM REPORT, SPAN28

	HORIZONTAL DISTANCE C-C BENT	C-C BRG.	TRUE DISTANCE BOT. BM. FLG.
BEAM 1	125.000	119.833	121.009
BEAM 2	125.000	119.833	121.002
BEAM 3	125.000	119.833	120.996
BEAM 4	125.000	119.833	120.989
BEAM 5	125.000	119.833	120.983

BEAM REPORT, SPAN29

	HORIZONTAL DISTANCE C-C BENT	C-C BRG.	TRUE DISTANCE BOT. BM. FLG.
BEAM 1	110.049	106.757	107.922
BEAM 2	110.195	106.903	108.059
BEAM 3	110.341	107.050	108.196
BEAM 4	110.487	107.196	108.334

HS 20 LOADING

STATE OF TEXAS
MARK J. BLOSCHOCK
52996
REGISTERED
PROFESSIONAL ENGINEER
9-24-91

STATE DEPARTMENT OF HIGHWAYS
AND PUBLIC TRANSPORTATION

BEAM LAYOUT
UNIT NO. 10, RAMP 2

US 83/281 INTERCHANGE

D45350A: ZFA2: (3551003)4379BLY01.DGN	PREPARED BY AND FOR USE OF TEXAS SDH&PT				
ORIGINAL DRAWING DATE: JANUARY 1991	STATE DISTRICT	FEDERAL REGION	FEDERAL AID PROJECT		SHEET
DN.: LMW	21	6	NH 92( )M		314
CK.: KBA	COUNTY		CONTROL	SECTION	JOB	HIGHWAY
DN.: PSR	HIDALGO		0039	17	097	US 83/281
CK.: KBA						

REVISIONS

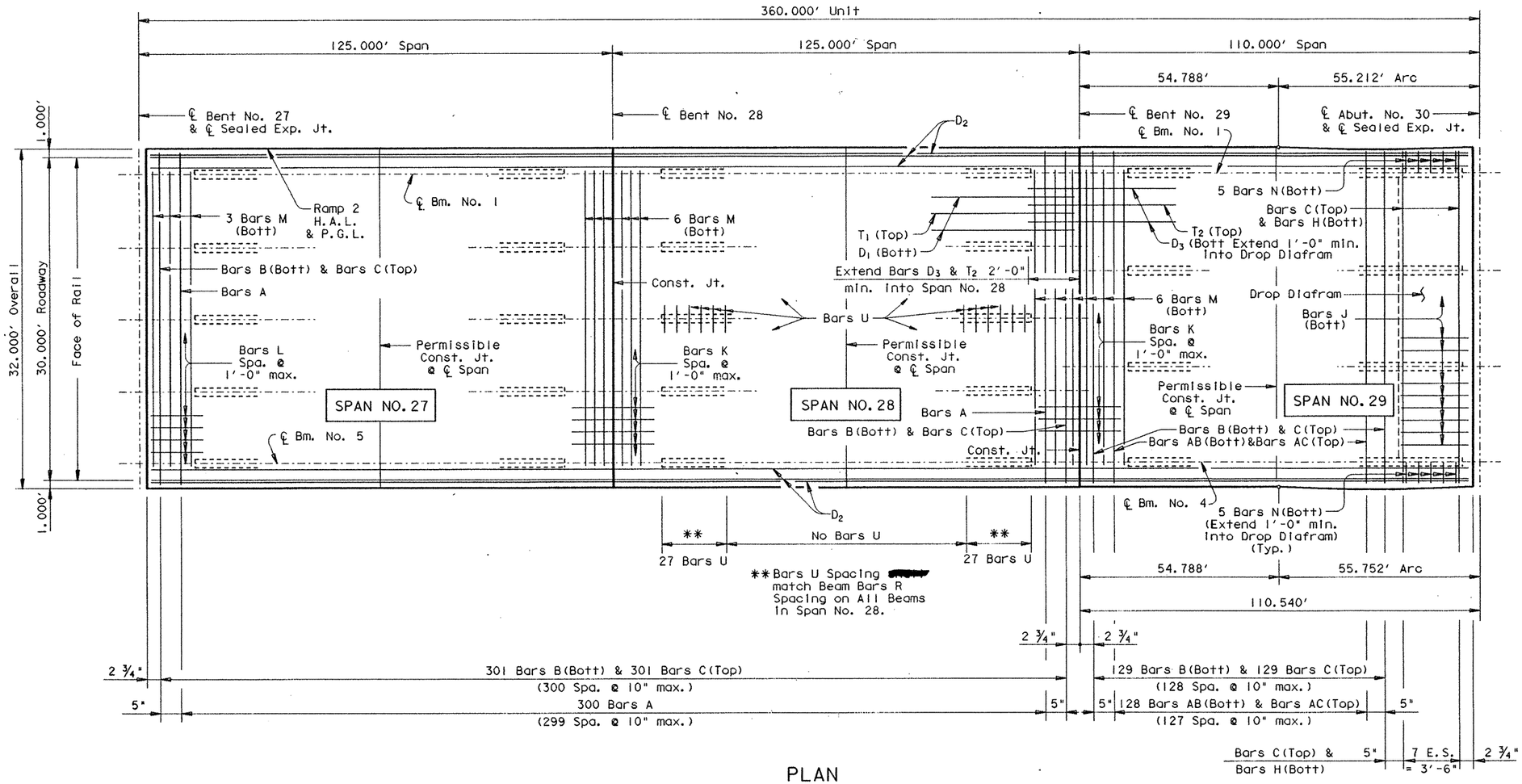

PLAN

TABLE OF ESTIMATED QUANTITIES

Bar	No.	Size	Length	Weight
A	300	# 5	32'-10"	10274
AB	128	# 5	26'-0"	3471
AC	128	# 5	31'-9"	4239
B	430	# 4	31'-9"	9120
C	438	# 5	31'-9"	14504
D_1	28	# 5	255'-4" ▲	7457
D_2	6	# 5	366'-9" ◆	2295
D_3	27	# 5	110'-5" ◆	3109
H	8	# 5	27'-5"	229
J	24	# 5	3'-6"	88
K	62	# 4	6'-4"	262
L	31	# 4	3'-0"	62
M	15	# 5	29'-9"	465
N	10	# 5	3'-4"	35
T_1	36	# 4	254'-4" ◩	6116
T_2	34	# 4	113'-0" ◆	2566
U	270	# 4	3'-3"	586
Reinforcing Steel			Lb	# 64878
Prestr. Conc. Bm. ~ Ty. IV			LF	# 1642.52

Span	Reinf. Conc. Slab ~ SF	Class "S" Conc. ~ CY # Diaf.	# Slab
# 27	4000	——	99.4
# 28	4000	——	101.5
# 29	3520	1.0	87.0
Total	11520	# 288.9	

For contractor's information only.

▲ Length shown includes 4 ~ 1'-5 " min. laps.

◩ Length shown includes 4 ~ 1'-2 " min. laps.

◆ Length shown includes 5 ~ 1'-5 " min. laps.

◆ Length shown includes 1 ~ 1'-5 " min. lap.

◆ Length shown includes 1 ~ 1'-2 " min. lap.

Length shown is bottom flange length with adjustments made for beam slope.

TABLE OF SECTION DEPTHS

Span	Beams	"X" at ℄ Brg.	"Y" at ℄ Brg.	"Z" at ℄ Span *
#27	ALL	9 1/4"	5'-3 1/4"	8 1/2"
#28	1, 2 & 3	10 3/4"	5'-4 3/4"	8 1/4"
	4 & 5	11 1/2"	5'-5 1/2"	8 1/4"
#29	ALL	9 1/4"	5'-3 1/4"	8 3/8"

* Theoretical dimension

Span	"A"	"B"
#27&#28	0.133'	0.187'
#29	0.114'	0.160'

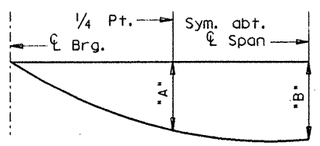

NOTE: Deflections shown are due to cast-in-place concrete only.

(E_c = 5 X 10^6 psi)

DEAD LOAD DEFLECTION DIAGRAM

GENERAL NOTES:

Designed according to A.A.S.H.T.O. 1989 Standard Specifications.

Design fc = 1200 p.s.i.

See GpC (SPL) sheet for details not shown.

See GpA-2 (MOD) sheet for Beam Blockout details not shown.

For Drain Locations see Bridge Layout. For Drain Details see Bridge Drain Details Sheet.

HS 20 LOADING

Sheet 1 of 2

STATE OF TEXAS
MARK J. BLOSCHOCK
52996
REGISTERED PROFESSIONAL ENGINEER
9-24-91

STATE DEPARTMENT OF HIGHWAYS AND PUBLIC TRANSPORTATION

UNIT NO. 10, RAMP 2

360.00' PRESTRESSED CONCRETE BEAM UNIT (125.00' - 125.00' - 110.00')

US 83/281 INTERCHANGE

D45350A: ZFA2: E355100J4377PPB03.DGN	PREPARED BY AND FOR USE OF TEXAS SDH&PT						
ORIGINAL DRAWING DATE: JUNE 1990	STATE DISTRICT	FEDERAL REGION	FEDERAL AID PROJECT			SHEET	
DR.: LMW REVISIONS	21	6	NH92( )M			3/5	
CK.: KBA	COUNTY		CONTROL	SECTION	JOB	HIGHWAY	
DW.: PSR	HIDALGO		0039	17	097	US 83/ 281	
CK.: LMW							

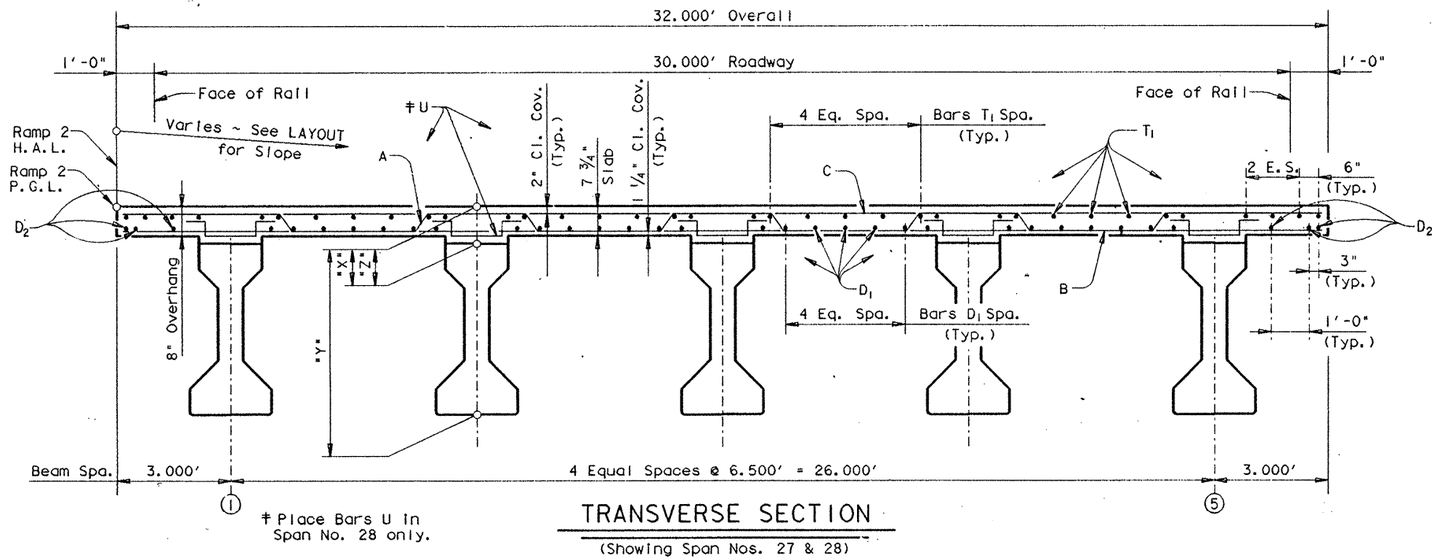

‡ Place Bars U In Span No. 28 only.

TRANSVERSE SECTION

(Showing Span Nos. 27 & 28)

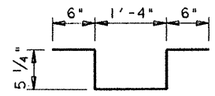

BARS U

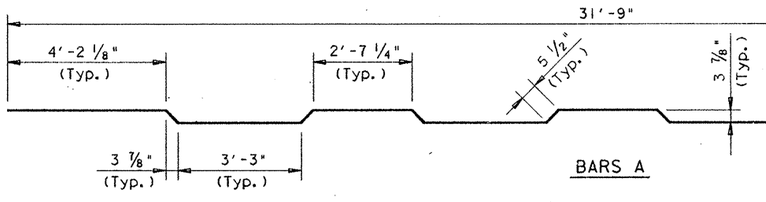

BARS A

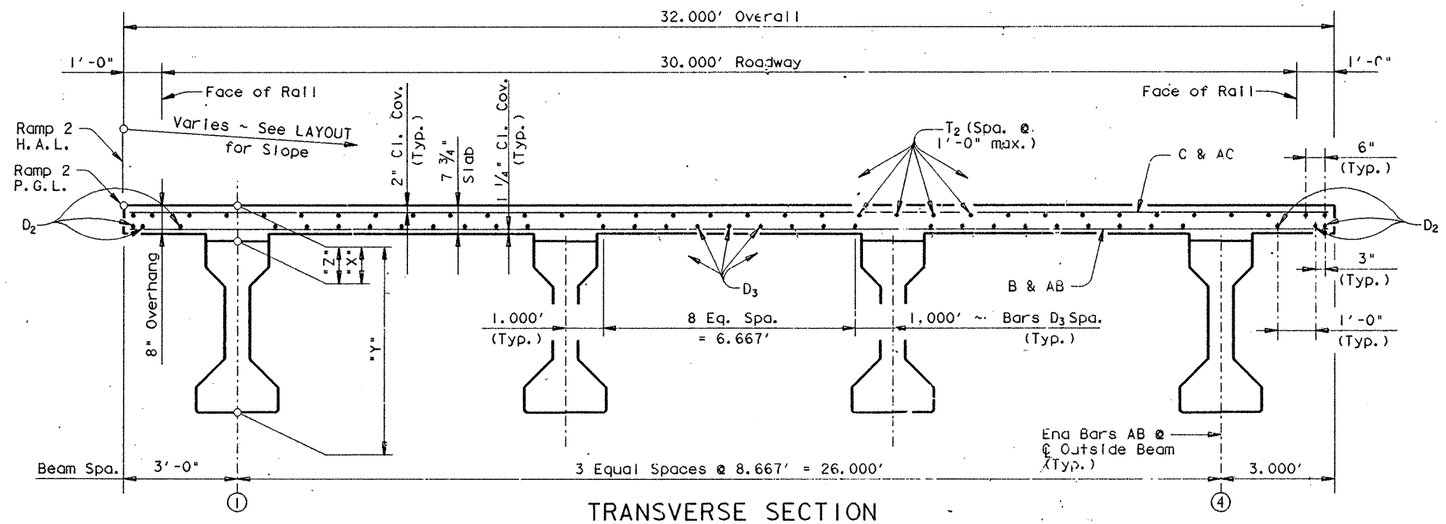

TRANSVERSE SECTION

(Showing Span No. 29)

HS 20 LOADING

Sheet 2 of 2

STATE DEPARTMENT OF HIGHWAYS AND PUBLIC TRANSPORTATION

UNIT NO. 10, RAMP 2

360.00' PRESTRESSED CONCRETE BEAM UNIT (125.00' - 125.00' - 110.00') US 83/281 INTERCHANGE

STATE OF TEXAS
MARK J. BLOSCHOCK
52996
REGISTERED PROFESSIONAL ENGINEER
9-24-91

D45350A: ZFA2: (3551001)4377PPB03.DGN	PREPARED BY AND FOR USE OF TEXAS SDH&PT						
ORIGINAL DRAWING DATE: JUNE 1990	STATE DISTRICT	FEDERAL REGION	FEDERAL AID PROJECT				SHEET
DR.: LMW REVISIONS	21	6	NH92( )M				3/6
CK.: KBA	COUNTY			CONTROL	SECTION	JOB	HIGHWAY
DR.: PSR	HIDALGO			0039	17	097	US 83/ 281
CK.: LMW							

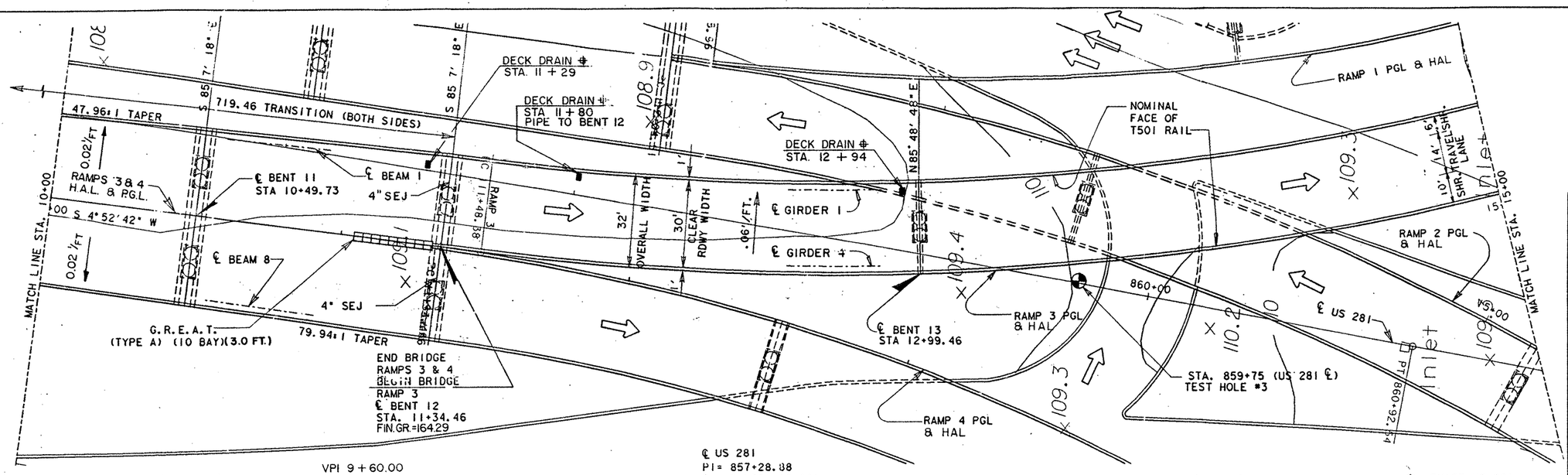

⊕ FOR DRAIN DETAILS SEE BRIDGE DRAIN DETAILS SHEET.

VPI 9+60.00
Elev. = 165.00
VC = 600.00
E = −3.0054
G in = +3.9041 %
Gout = −0.1031 %

℄ US 281
PI = 857+28.38
Δ = 3°38' 16.08"
D = 0°30' 00"
R = 11459.16'
L = 727.56'
T = 363.90'

RAMP 3 SUPERELEVATION

STA. 10+48.38 TO STA. 11+98.38=150' TRANSITION
STA. 11+98.38 TO STA. 25+38.55=0.06'/FT.
STA. 25+38.55 TO STA. 26+88.55=150' TRANSITION
TYPE 3 TRANSITION

TEST HOLE #3
STA. 859+75
ELEV. 108.9

11 (6.0')	9 (6.0')	BRWN CLY, HARD, MOIST
9 (6.0')	11 (6.0')	
12 (6.0')	12 (6.0')	BRN CLY, W/ TRACES OF CHK SUBS
13 (6.0')	14 (6.0')	
13 (6.0')	14 (6.0')	REDDISH-BROWN CLAY, MOIST, COMPACT
31 (6.0')	36 (6.0')	LT. BRWN CLY, MOIST, COMPACT
23 (6.0')	26 (6.0')	
39 (6.0')	54 (6.0')	BROWN CLAY W/ TRACES GREEN & WHITE CHALK
28 (6.0')	32 (6.0')	
48 (6.0')	52 (5.3")	SAND & CLAY SOFT, MOIST
50 (2.3")	50 (1.8")	
50 (1.5")	50 (0.8")	
50 (1.9")	50 (1.3")	LOOSE SAND, VERY MOIST
32 (6.0')	58 (5.3")	

END BRIDGE RAMPS 3 & 4
BEGIN BRIDGE RAMP 3
℄ BENT 12
STA. 11+34.46
FIN GR = 164.29

DRILLED SHAFTS ARE DESIGNED WITH SIDE FRICTION AND POINT BEARING

OVERALL LENGTH OF BRIDGE (RAMPS 3 & 4)= 1134.46'
TY T501 RAIL (1145.6' LT. & 1145.6' RT.

OVERALL LENGTH OF BRIDGE (RAMP 3) =1672.41'
TY T501 RAIL 1624.15' LT. & 1672.41' RT.

UNIT 4 - 169.46' PRESTRESSED CONC BEAM UNIT (84.73'-84.73')

UNIT 5 - 702.41' CURVED STEEL GIRDER UNIT (165'-225'-165'-147.41')

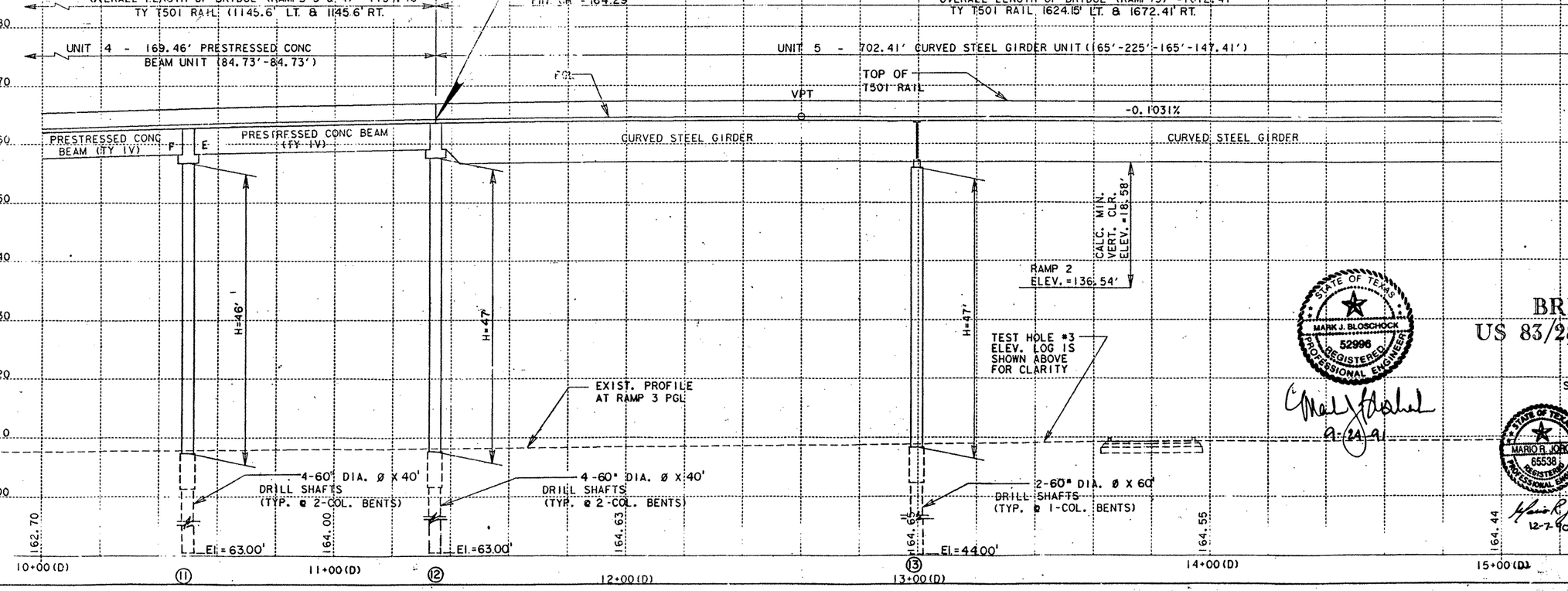

STATE OF TEXAS
MARK F. McCLELLAND
60710
REGISTERED
PROFESSIONAL ENGINEER
Mark McClelland
8/29/91

STATE OF TEXAS
MARK J. BLOSCHOCK
52998
REGISTERED
PROFESSIONAL ENGINEER
8-29-91

STATE OF TEXAS
MARIO R. JORGE
65538
REGISTERED
PROFESSIONAL ENGINEER
12-2-90

BRIDGE LAYOUT
US 83/281 INTERCHANGE
RAMP 3

STA. 10+00 TO 15+00
SHEET 16 OF 23 SHEETS

SCALE:
PLAN 1" = 20' HORIZ.
PROFILE 1" = 10' VERT.

FED. RD. DIV. NO.	FEDERAL AID PROJECT NO.		SHEET NO.
6	NH 92 ( )M		3/7
STATE	DIST.	COUNTY	
TEXAS	21	HIDALGO	
CONT.	SECT.	JOB	HIGHWAY NO.
39	17	97	83/281

E. FIL. NEWINT2.DGN NEWINT.DGN RAMPDOC.DGN
VIEW 12 RD3 41 I-28 RI.FI

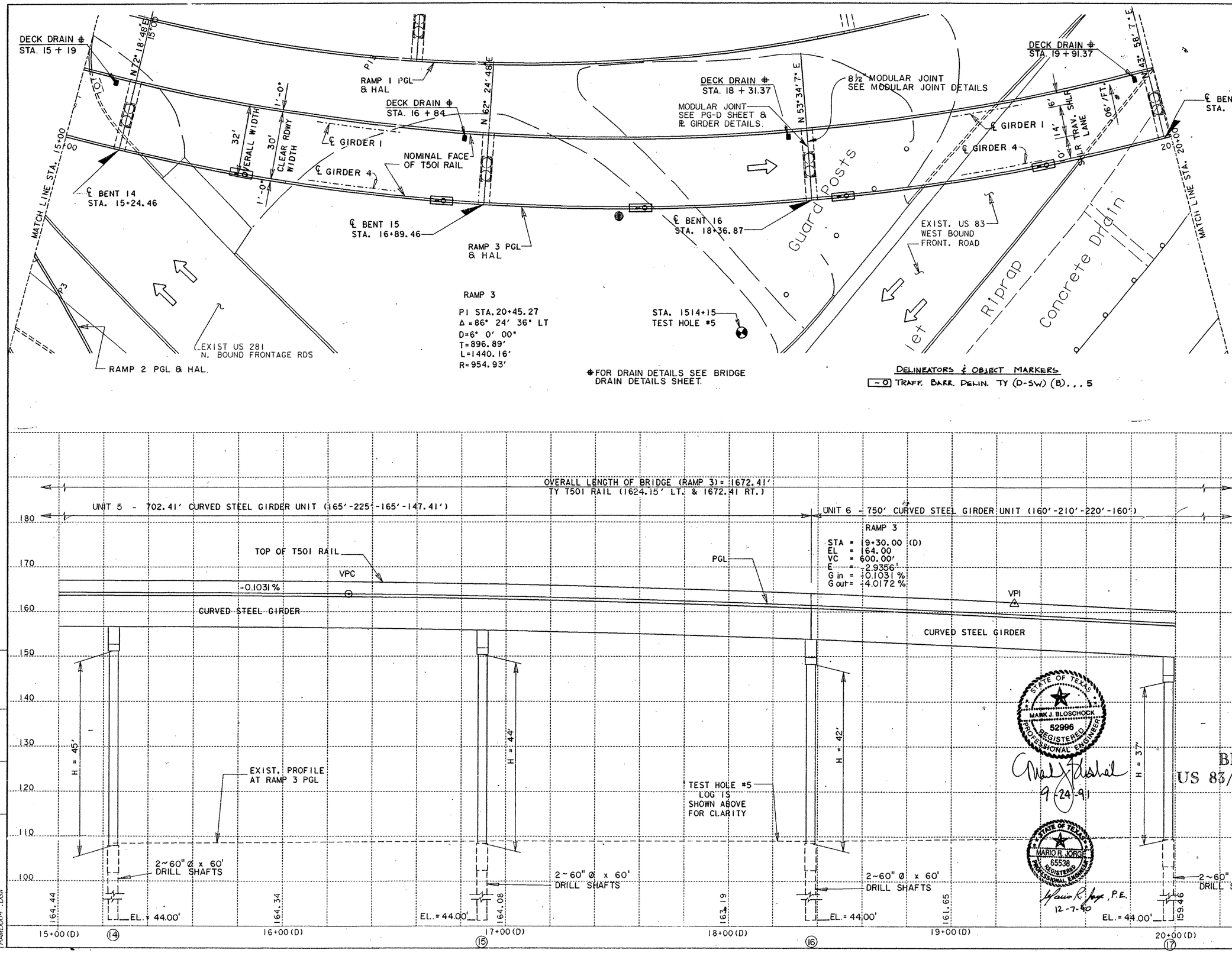

TEST HOLE #5
STA. 1514+15
ELEV. = 109.0'

		BLACK DIRT
10(6.0")	10(6.0")	BROWN, CL COMPACT, MOIST
12(6.0")	7(6.0")	BROWN, CL W/ TRACE & CHALK & CALIC
7(6.0")	9(6.0")	BROWN CLAY, COMACT, MOIST, TRACES OF RED BROWN CLAY
14(6.0")	17(6.0")	
9(6.0")	10(6.0")	
30(6.0")	30(6.0")	TAN/BROWN CLAY W/ TRACES OF WHITE CHALK
25(6.0")	27(6.0")	
30(6.0")	33(6.0")	BROWN CLAY, COMPACT MOIST
50(6.0")	50(4.6")	
33(6.0")	21(6.0")	
50(5.8")	50(4.9")	SAND & CLAY, SLIGHTLY, COMP. MOIST
50(2.1")	50(1.1")	
50(2.1")	50(1.9")	SAND, LOOSE, MOIST
50(1.4")	50(0.9")	SAND, COMPACT, MOIST

STATE OF TEXAS
MARK P. McCLELLAND
60710
REGISTERED PROFESSIONAL ENGINEER
8/29/91

STATE OF TEXAS
MARK J. BLOSCHOCK
52996
REGISTERED PROFESSIONAL ENGINEER
9-24-91

STATE OF TEXAS
MARIO R. JORGE
65538
REGISTERED PROFESSIONAL ENGINEER
12-7-90

BRIDGE LAYOUT
US 83/281 INTERCHANGE
RAMP 3

STA. 15+00 TO 20+00
SHEET 17 OF 23 SHEETS

SCALE:
PLAN 1" = 20' HORIZ.
PROFILE 1" = 10' VERT.

FED. RD. D.V. NO.	FEDERAL AID PROJECT NO.		SHEET NO.
6	NH 92 ( ) M		318
STATE	DIST.	COUNTY	
TEXAS	21	HIDALGO	
CONT.	SECT.	JOB	HIGHWAY NO.
39	17	97	83/281

FILE NAME	REFERENCE FILE	NAMED VIEW	LEVELS	PRF FILE
[325116] RAMD004.DGN	NEWINT2.DGN NEWINT.DGN	REF2 REF1	1-62 1-28, 30-41	RD4.PRF

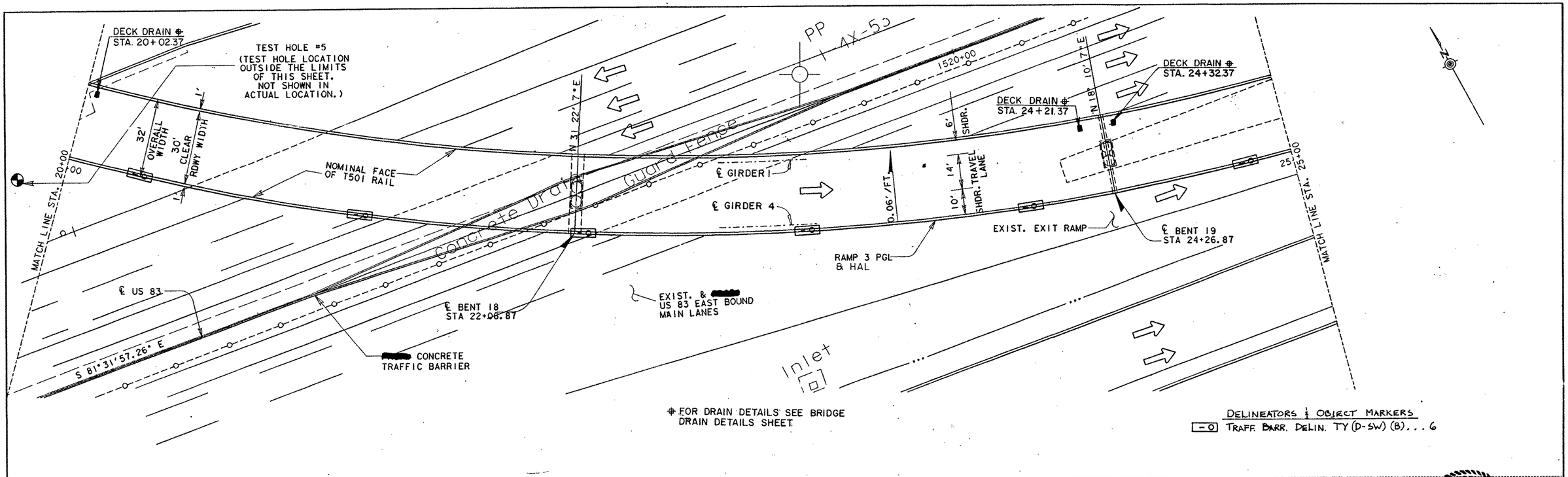

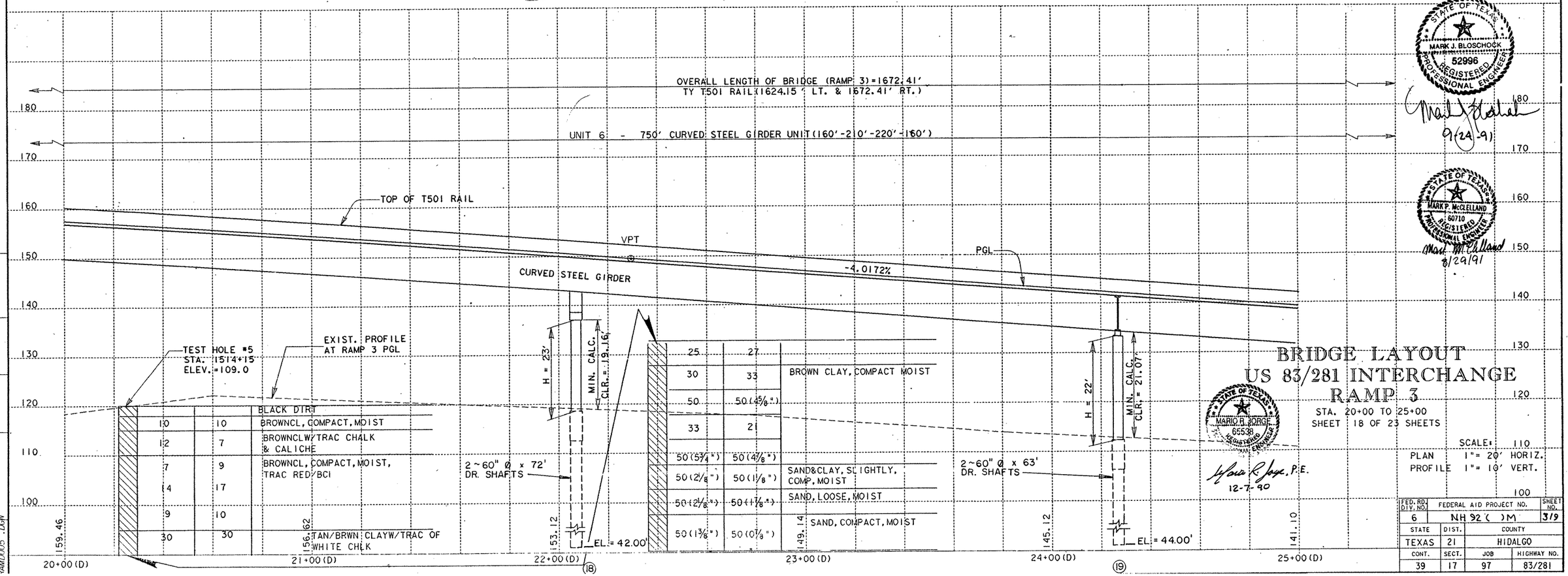

FILE NAME	REFERENCE FILE	NAMED VIEW	LEVELS	PRF FILE
[325116] RAM0005.DGN	NEWINT2.DGN	REF2	1-62	RD5.PRF
	NEWINT.DGN	REF1	1-28, 30-41	

STATE OF TEXAS
MARK J. BLOSCHOCK
52996
REGISTERED PROFESSIONAL ENGINEER
9/24/91

STATE OF TEXAS
MARK P. McCLELLAND
60710
REGISTERED PROFESSIONAL ENGINEER
8/29/91

STATE OF TEXAS
MARIO R. JORGE
65538
REGISTERED PROFESSIONAL ENGINEER
Mario R. Jorge, P.E.
12-7-90

BRIDGE LAYOUT
US 83/281 INTERCHANGE
RAMP 3

STA. 20+00 TO 25+00
SHEET 18 OF 23 SHEETS

SCALE:
PLAN 1" = 20' HORIZ.
PROFILE 1" = 10' VERT.

FED. RD. DIV. NO.	FEDERAL AID PROJECT NO.			SHEET NO.
6	NH 92 ( )M			319
STATE	DIST.	COUNTY		
TEXAS	21	HIDALGO		
CONT.	SECT.	JOB	HIGHWAY NO.	
39	17	97	83/281	

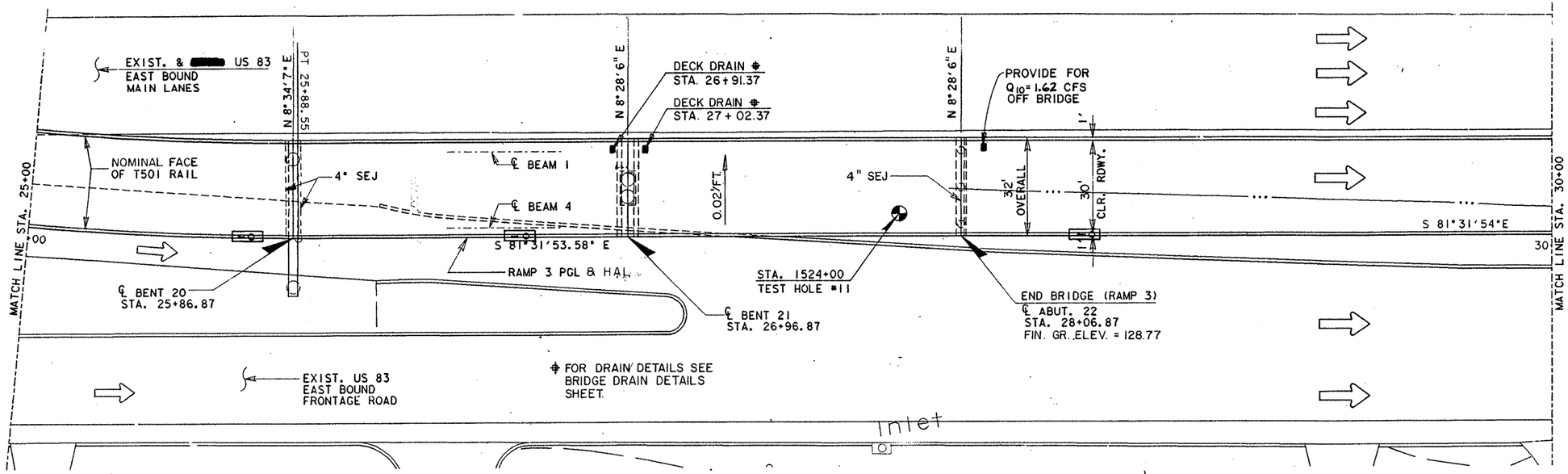

HOLE NO 11
STATION 1524+00
LOCATION 30 FT RT 109.0

	9 (6.0')	8 (6.0')	CLAY, COMPACT, MOIST
	10 (6.0')	9 (6.0')	
	11 (6.0')	12 (6.0')	
	13 (6.0')	13 (6.0')	
	14 (6.0')	17 (6.0')	CLAY W/TRAC OF CHK, CMPT, MOI, RED-BRN
	41 (6.0')	50 (6.0')	
	26 (6.0')	35 (6.0')	
	32 (6.0')	40 (6.0')	CLAY, COMPACT, MOIST, BROWN
	41 (6.0')	42 (6.0')	
	27 (6.0')	29 (6.0')	
	39 (6.0')	39 (6.0')	
	50 (6.0')	50 (2.0')	
	50 (1.4')	50 (0.6')	WATER-BEARING SAND, SLIGHTLY CMPT
	50 (2.1')	50 (1.6')	

RAMP 3 SUPERELEVATION

STA. 10+48.38 TO STA. 11+98.38=150' TRANSITION
STA. 11+98.38 TO STA. 25+38.55=0.06'/FT.
STA. 25+38.55 TO STA. 26+88.55=150' TRANSITION
TYPE 3 TRANSITION

DELINEATORS & OBJECT MARKERS

TRAFF. BARR. DELIN. TY (D-SW) (B) ... 3

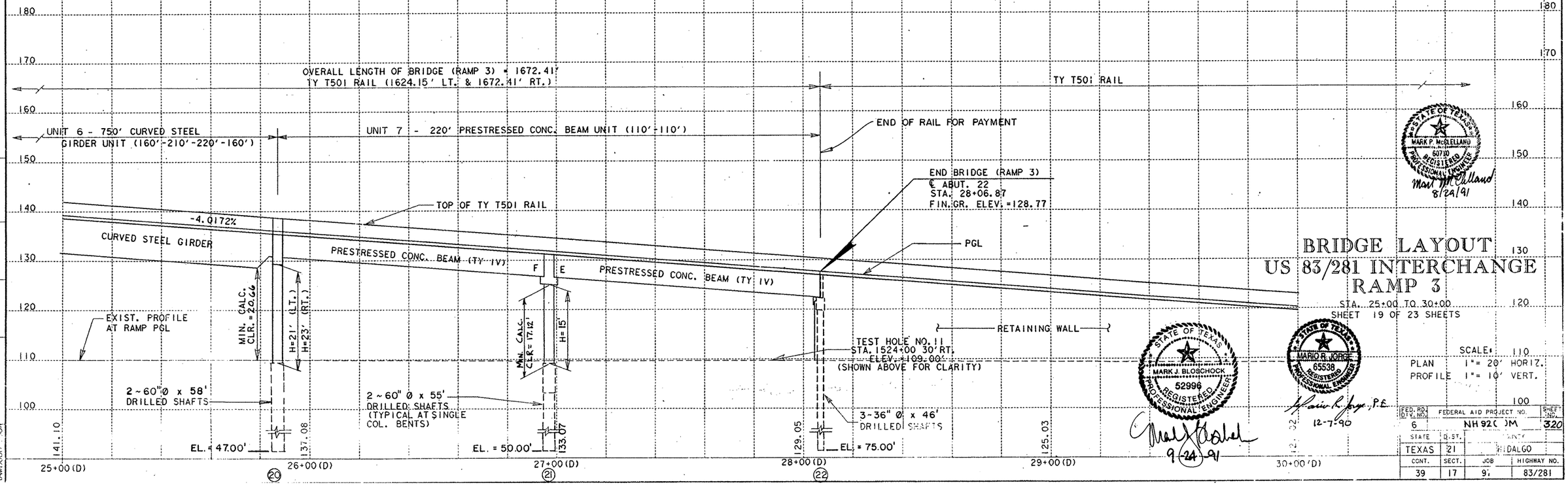

BRIDGE LAYOUT
US 83/281 INTERCHANGE
RAMP 3

STA. 25+00 TO 30+00
SHEET 19 OF 23 SHEETS

SCALE:
PLAN 1"= 20' HORIZ.
PROFILE 1"= 10' VERT.

STATE OF TEXAS
MARK P. McCLELLAND
60710
REGISTERED
PROFESSIONAL ENGINEER
Mark P. McClelland
8/28/91

STATE OF TEXAS
MARK J. BLOSCHOCK
52996
REGISTERED
PROFESSIONAL ENGINEER
9-24-91

STATE OF TEXAS
MARIO R. JORGE
65538
REGISTERED
PROFESSIONAL ENGINEER
Mario R. Jorge, P.E.
12-7-90

FED. RD. DIV. NO.	FEDERAL AID PROJECT NO.		SHEET NO.
6	NH 92( )M		320
STATE	D.ST.	COUNTY	
TEXAS	21	HIDALGO	
CONT.	SECT.	JOB	HIGHWAY NO.
39	17	9(	83/281

FILE NAME	REFERENCE FILE	NAMED VIEW	LEVELS	PRF FILE
I325I163	NEWINT2.DGN	REF2	I-62	RDS.PRF
RAMP000R.NGR	NEWINT.DGN	REF1	I-28, 30-41	

SUMMARY OF ESTIMATED QUANTITIES

DESCRIPTION / ITEM	*STRUCTURAL EXCAVATION	† Slurry Displacement Drilled Shafts 36" ø	60" ø	CLASS "C" CONCRETE ABUTMENT	BENT ‡	REINF. CONC. SLAB	PRESTR. CONC. BEAM TYPE IV	STRUCTURAL STEEL H.S.	H.Y.C.	SEALED EXPANSION JOINT (4")	Item 471 Frame & Grate (Br. Drain)	CONCRETE SURFACE TREATMENT	RAIL TY T-501	MODULAR JOINT
	C.Y.	L.F.	L.F.	C.Y.	C.Y.	S.F.	L.F.	L.B.	L.B.	L.F.	Ea.	S.Y.	L.F.	L.F.
1 ~ ABUTMENT		138		15.3										
9 ~ INTERIOR BENTS	356		~~1096~~ 1212		740.5	86		43000	50			8	5.3	
1 ~ 702.41' PLATE GIRDER UNIT						22108		963700	94100			2239	1381.7	32
1 ~ 750.00' PLATE GIRDER UNIT						23555		1069100	100100	30		2385	1472.2	
1 ~ 220.00' PRESTR. CONC. BEAM UNIT						6997	857.84			60		709	437.3	
TOTAL	356	138	~~1096~~ 1212	15.3	740.5	52746	857.84	2075800	194250	90	11	5341	3296.5	32

DESCRIPTION / ITEM	SLIDING ELASTOMERIC BEARINGS SE3	SE6	1S1	ELASTOMERIC BEARINGS 1F7	1F9	1E12
	EA.	EA.	EA.	EA.	EA.	EA.
1 ~ ABUTMENT						
9 ~ INTERIOR BENTS						
1 ~ 702.41' PLATE GIRDER UNIT	4	4		4		4
1 ~ 750.00' PLATE GIRDER UNIT	4	4	4		4	
1 ~ 220.00' PRESTR. CONC. BEAM UNIT						
TOTAL	8	8	4	4	4	4

*For Contractor's information only.

‡Quantities for Bent No. 12 are included on E.Q. Sheet for Ramps 3 & 4.

BEARING SEAT ELEVATIONS

	BEAM 1	BEAM 2	BEAM 3	BEAM 4
BENT 12 (FWD)	157.572	157.977	158.382	158.766
BENT 13	Top of Column @ ℄ Structure: 154.454			
BENT 14	155.427	155.926	156.425	156.945
BENT 15	155.134	155.654	156.153	156.652
BENT 16 (BK)	154.087	154.607	155.127	155.625
(FWD)	154.059	154.579	155.100	155.599
BENT 17	150.687	151.186	151.685	152.205
BENT 18	143.827	144.347	144.867	145.387
BENT 19	Top of Column @ ℄ Structure: 133.844			
BENT 20 (BK)	130.544	130.997	131.451	131.884
(FWD)	130.531	130.974	131.416	131.859
	Top of Column: 129.510 Left & 131.694 Right			
BENT 21 (BK)	127.196	127.369	127.542	127.716
(FWD)	126.988	127.162	127.335	127.508
ABUT 22 (BK)	122.702	122.875	123.048	123.222

HS 20 LOADING

STATE OF TEXAS
MARK J. BLOSCHOCK
52996
REGISTERED PROFESSIONAL ENGINEER

3-13-92

REV. 3-30-92

STATE DEPARTMENT OF HIGHWAYS AND PUBLIC TRANSPORTATION

ESTIMATED QUANTITIES AND BEARING SEAT ELEVATIONS

US 83/281 INTERCHANGE
UNITS 5-7, RAMP 3

D45350A: ZFA2: [355100]4379TAB02.DGN | PREPARED BY AND FOR USE OF TEXAS SDH&PT

ORIGINAL DRAWING DATE: FEBRUARY 1991	REVISIONS	STATE DISTRICT	FEDERAL REGION	FEDERAL AID PROJECT	SHEET
DN.: GAF		21	6		321
CK.: MLR		COUNTY	CONTROL	SECTION	JOB	HIGHWAY
DW.: TKW/PSR		HIDALGO	0039	17	097	US 83/281
CK.: GAF						

TABLE OF ESTIMATED QUANTITIES

Bar	No.	Size	Length	Weight
A	6	# 11	29'- 8"	946
H	12	# 5	29'- 8"	371
S	26	# 4	10'- 6"	182
U1	4	# 6	7'-10"	47
U2	12	# 5	2'- 7"	32
V	31	# 5	13'-10"	447

Reinforcing Steel	Lb	‡ 2025
Class "C" Concrete	CY	15.3

‡ For contractor's information only.

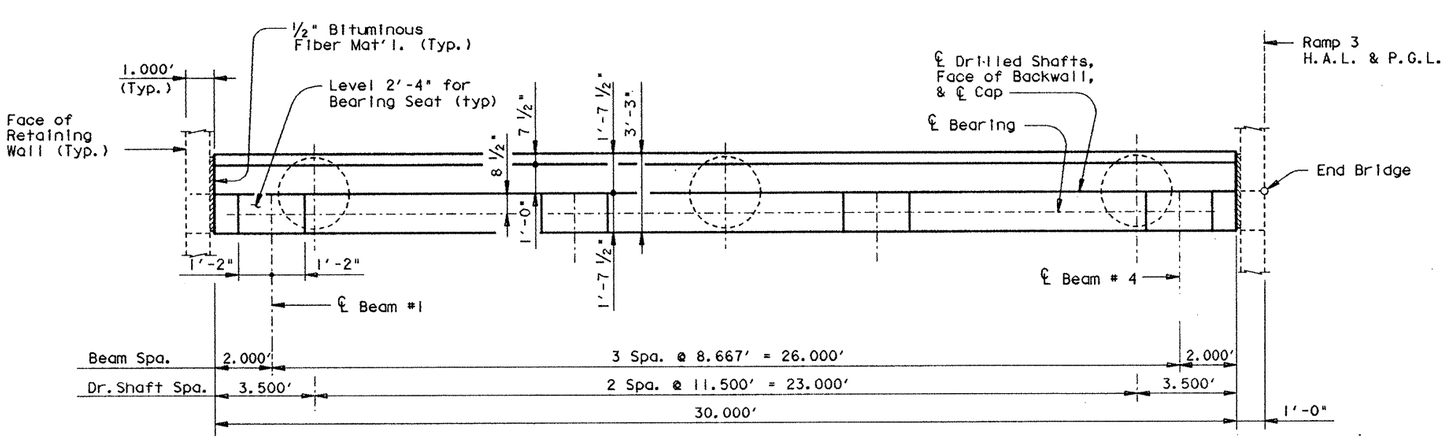

PLAN

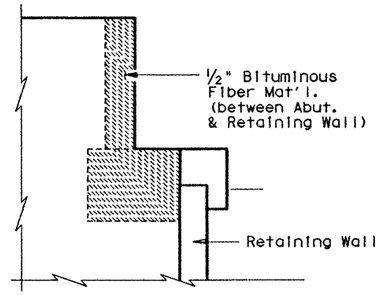

ELEVATION B-B

(SHOWING RETAINING WALL AT ABUTMENT)

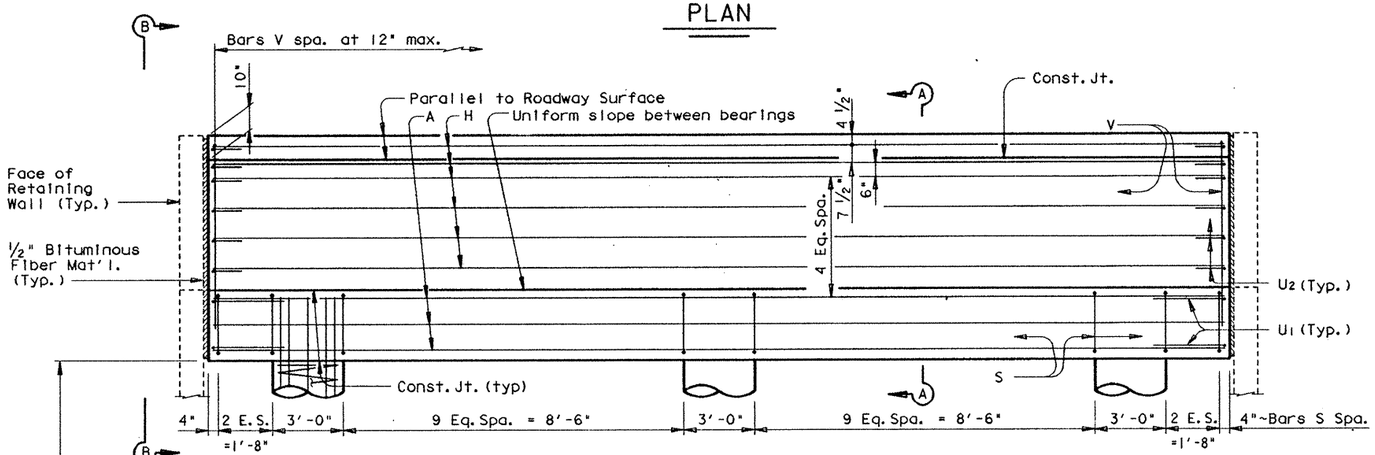

ELEVATION

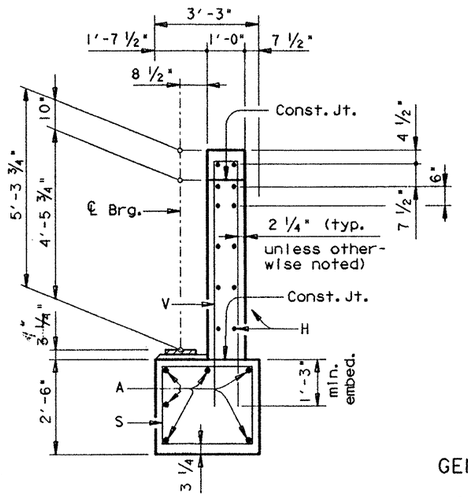

SECTION A-A

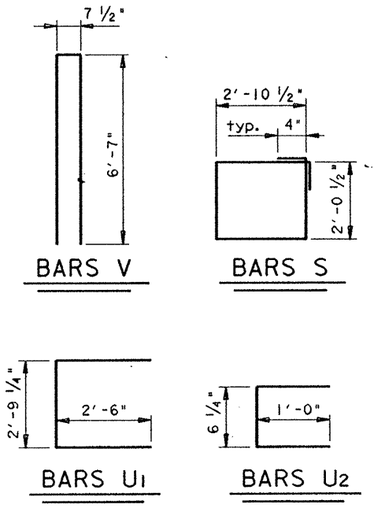

GENERAL NOTES:

Designed according to A.A.S.H.T.O. 1989 Standard Specifications.

Calculated Foundation Loads ~
Cap Drilled Shafts = 100 Tons/Drilled Shaft

For Modified Bearing Seat Details see Gp C (SPL) Sheet.

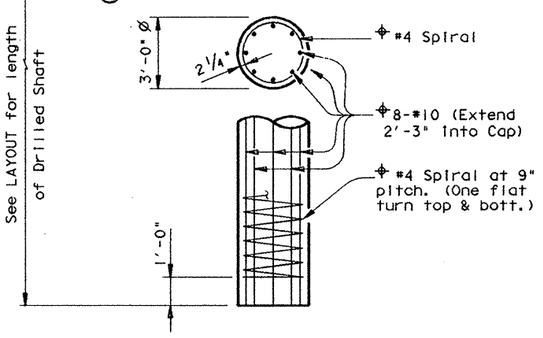

Included in price bid for Drilled Shaft.

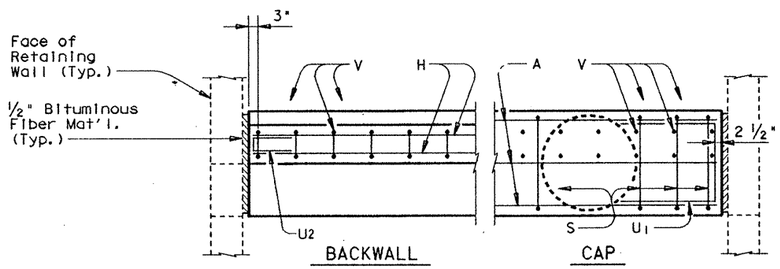

CORNER DETAILS

HS 20 LOADING

STATE OF TEXAS
MARK J. BLOSCHOCK
52996
REGISTERED PROFESSIONAL ENGINEER

9-25-91

STATE DEPARTMENT OF HIGHWAYS AND PUBLIC TRANSPORTATION

ABUTMENT NO. 22 RAMP 3

US 83/281 INTERCHANGE

D45350A:: ZFA1: [355163]4378RWA01.DGN

PREPARED BY AND FOR USE OF TEXAS SDH&PT

ORIGINAL DRAWING DATE: July 1990	STATE DISTRICT	FEDERAL REGION	FEDERAL AID PROJECT	SHEET
DN.: LMW	21	6	NH 92( )M	322
CK.: KBA	COUNTY		CONTROL	SECTION	JOB	HIGHWAY
DN.: TKW	Hidalgo		0039	17	097	US 83/281
CK.: LMW						

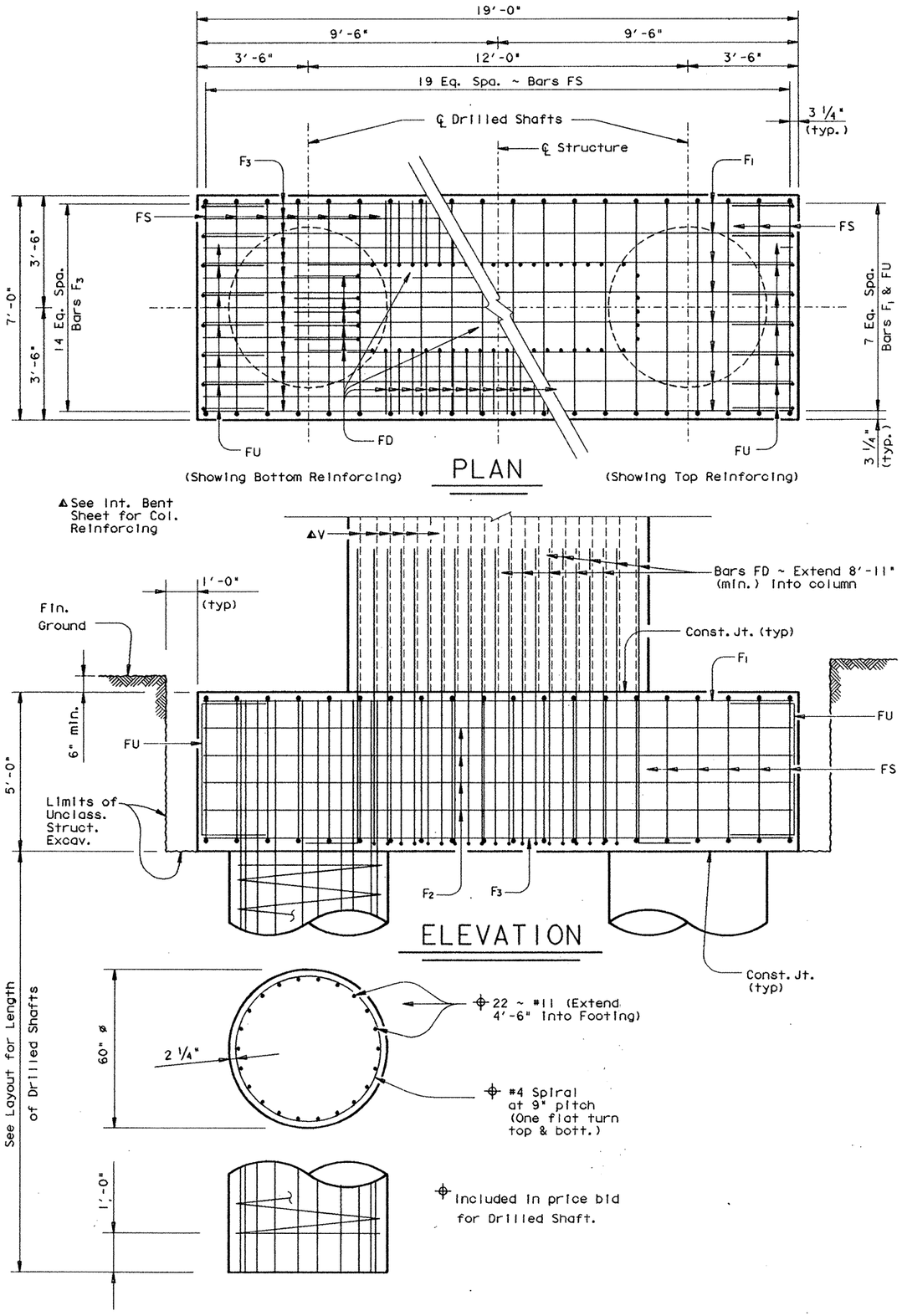

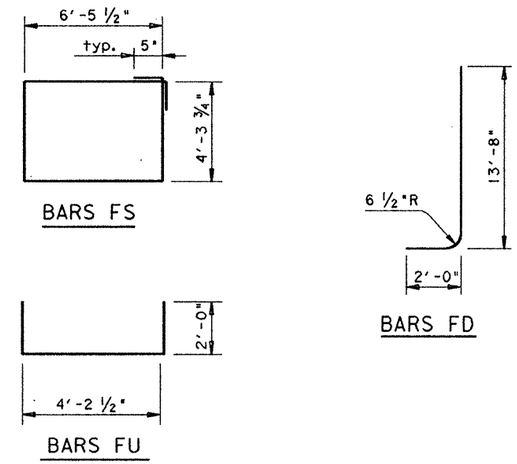

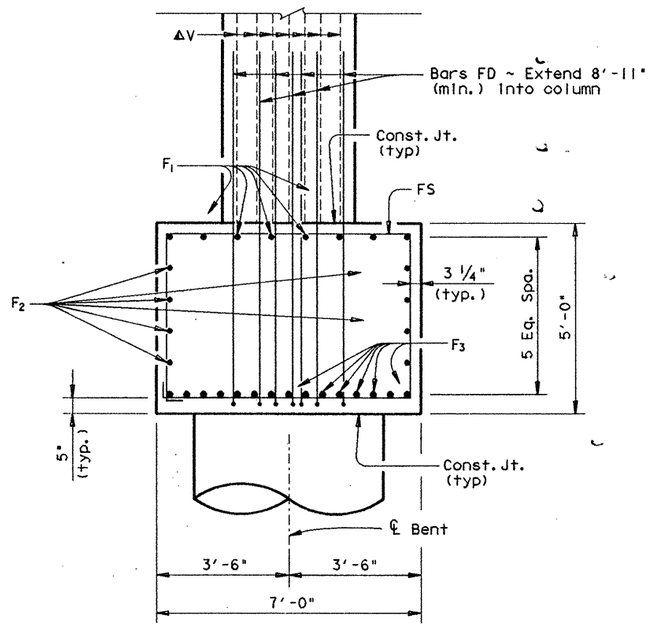

FOOTING SECTION

‡TABLE OF FOOTING QUANTITIES

Bar	No.	Size	Length	Weight
F_1	8	# 8	18'- 6"	395
F_2	8	# 5	18'- 6"	154
F_3	15	# 11	18'- 6"	1474
FD	48	# 11	15'- 6"	3953
FS	20	# 5	22'- 5"	468
FU	16	# 5	8'- 3"	139

Reinforcing Steel	Lb	‡ 6583
Class "C" Concrete	CY	24.6

‡ For Contractor's Information only.

‡ Quantities shown are for one footing only.

All Footing Reinforcing Steel [redacted] Grade 60.

HS 20 LOADING

STATE DEPARTMENT OF HIGHWAYS AND PUBLIC TRANSPORTATION

FOOTING DETAILS BENT NOS. 13-19 RAMP 3

US 83/281 INTERCHANGE

STATE OF TEXAS
MARK J. BLOSCHOCK
52996
REGISTERED PROFESSIONAL ENGINEER

9-25-91

D45350A1 : ZFA2 : [355100]4378MISO1.DGN	PREPARED BY AND FOR USE OF TEXAS SDH&PT					
ORIGINAL DRAWING DATE: NOVEMBER 1990	STATE DISTRICT	FEDERAL REGION	FEDERAL AID PROJECT			SHEET
DN.: GAF/MRL	21	6	NH 92( ) M			323
CK.: MRL/GAF	COUNTY		CONTROL	SECTION	JOB	HIGHWAY
DW.: PSR	HIDALGO		0039	17	097	US 83/281
CK.: GAF/MRL						

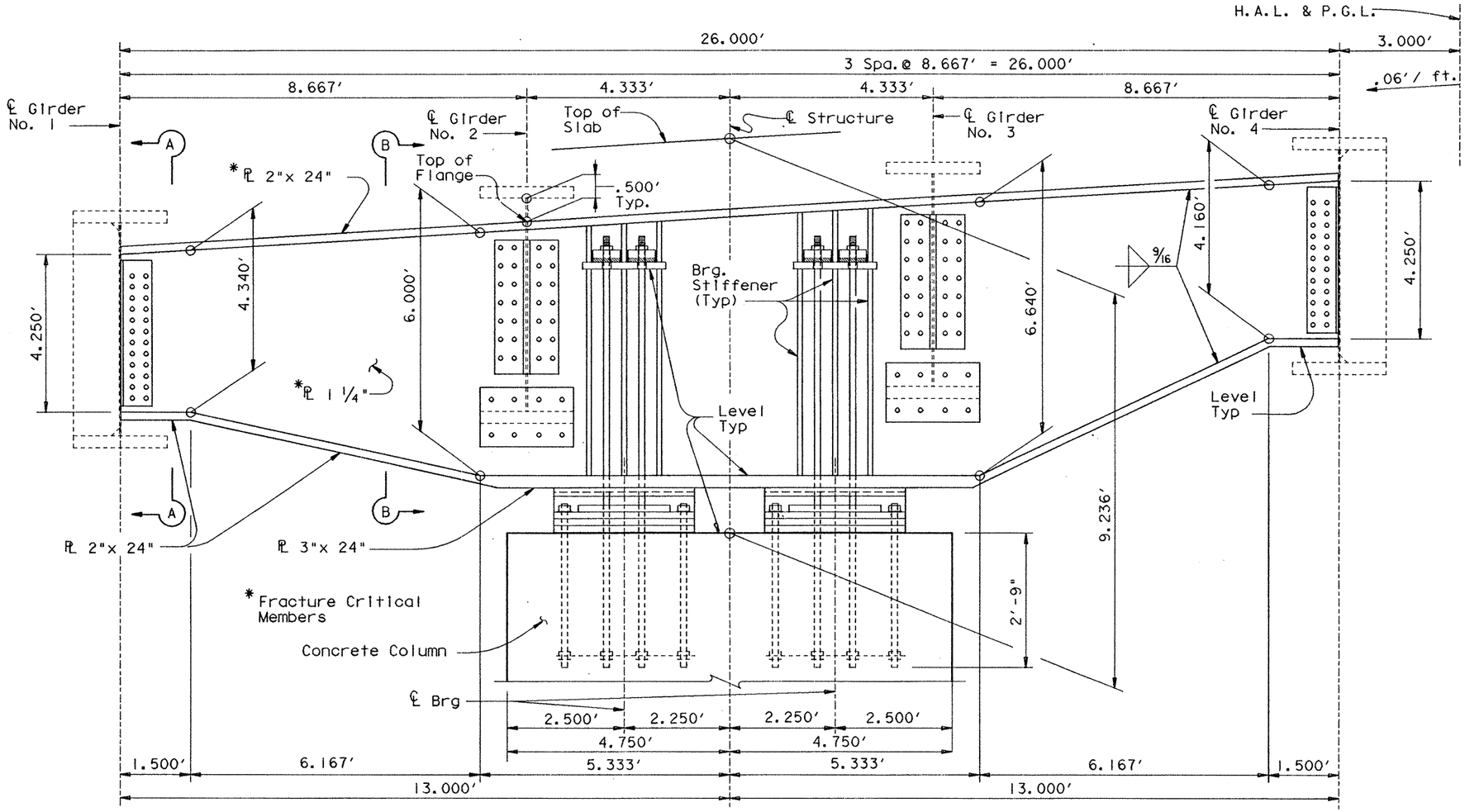

ELEVATION

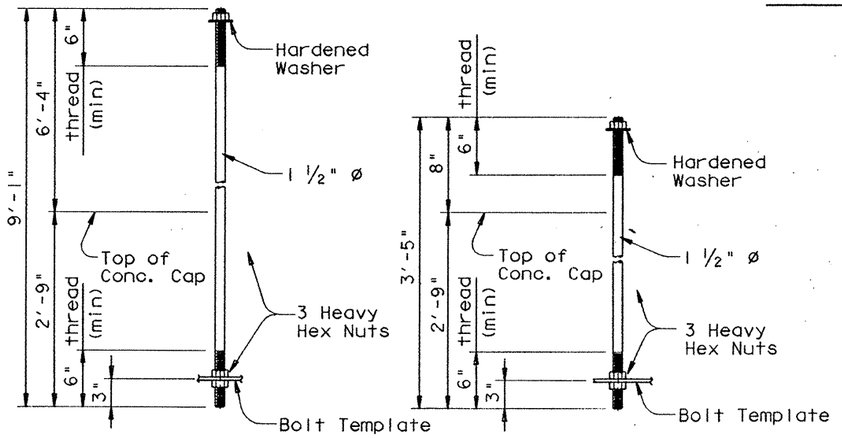

HOLD-DOWN BOLT DETAIL

ANCHOR BOLT DETAIL

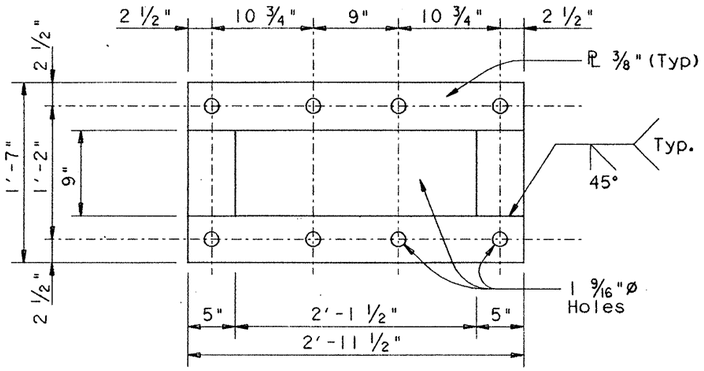

BOLT TEMPLATE

GENERAL NOTES:

(For Steel)

Designed in accordance with A.A.S.H.T.O. 1989 Standard Specifications.

Material for Steel Cap and all connections [redacted] conform to the item "Steel Structures" A572.
Flange splices [redacted] made by full penetration grove welds in accordance with the item "Steel Structures".
The web and top flange are fracture critical and [redacted] conform to Fracture control Plan.

All bolts used in Girder to Cap connections [redacted] 1" ø A325 bolts.
Anchor Bolts and Hold Down Bolts [redacted] galvanized and conform to the item "Metal For Structures A.S.T.M. A 193-B7 Anchor Bolts".
Nuts [redacted] heavy hex nuts and conform to ASTM A 194 2H.

The steel bent cap [redacted] erected with the web set vertical and all anchor and hold-down bolts uniformly tightened. Adjustment of girders for proper splice alignment can be made by loosening nuts on one side of the cap while tightening nuts on the other side by an equal amount. After the slab and rail [redacted] placed and dead load deflection has occured, all hold-down bolts [redacted] loosened and uniformly retightened to snug tight plus 1/4 turn condition.

Estimated weight of "Structural Steel (HS)" for one steel cap and it's connections = 38,900 Lbs.
Quanity included in total weight for 702.41' Plate Girder Unit and 750.00' Plate Girder Unit.

HS 20 LOADING Sheet 1 of 4

STATE DEPARTMENT OF HIGHWAYS AND PUBLIC TRANSPORTATION

INTERIOR BENT NOS. 13 & 19 RAMP 3

US 83/281 INTERCHANGE

STATE OF TEXAS
MARK J. BLOSCHOCK
52996
REGISTERED PROFESSIONAL ENGINEER

9-25-91

D45350A • ZFA2 • (355121)4377INS04.DGN | PREPARED BY AND FOR USE OF TEXAS SDH&PT

ORIGINAL DRAWING DATE	JANUARY 1990	STATE DISTRICT	FEDERAL REGION	FEDERAL AID PROJECT	SHEET
DN.- MRL	REVISIONS	21	6	NH 92( )M	324
CK.- GAF		COUNTY		CONTROL SECTION JOB	HIGHWAY
DR.- MWM		HIDALGO		0039 17 097	US 83/281
CK.- MRL					

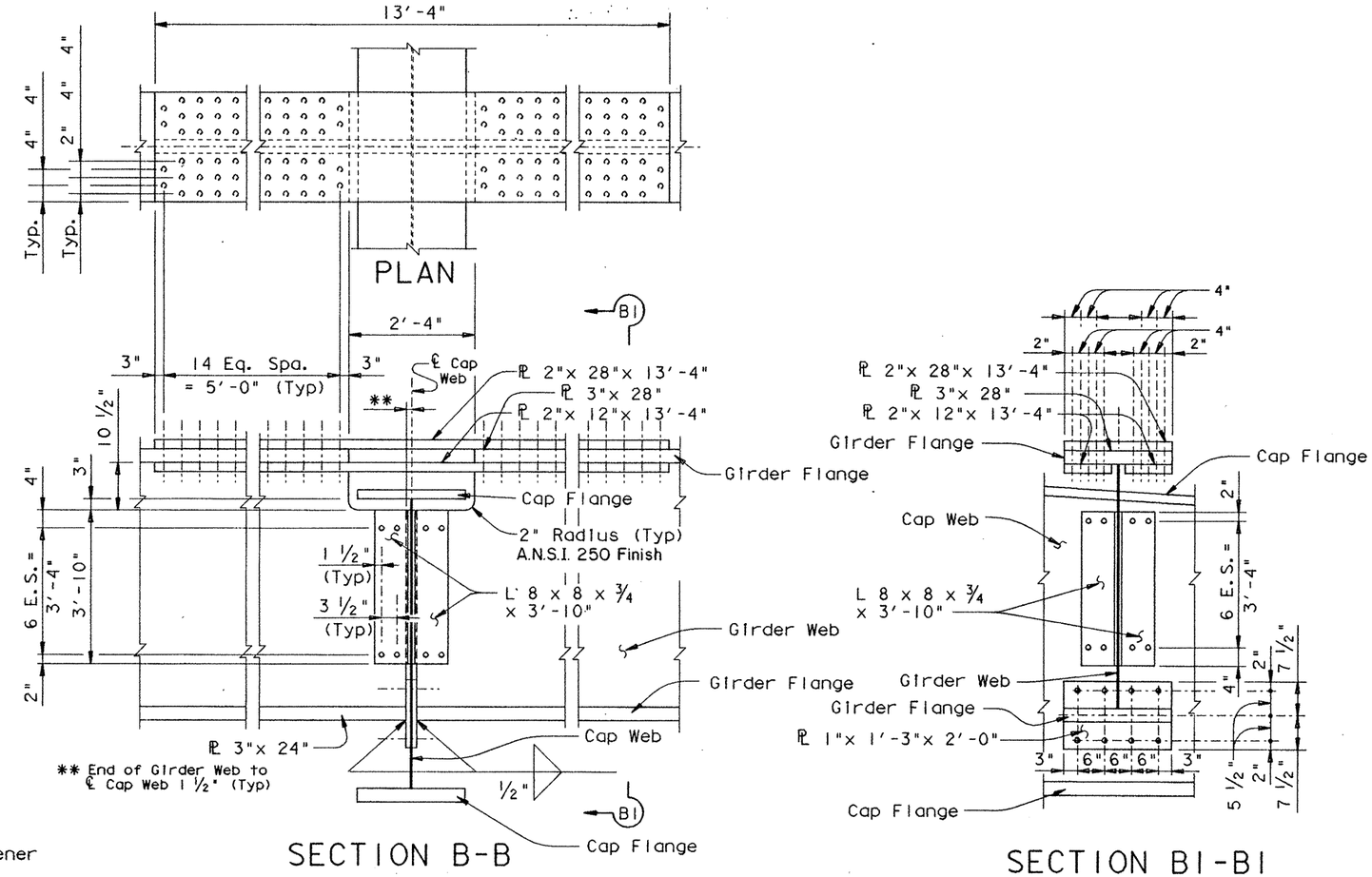

GIRDER NO 2 & 3

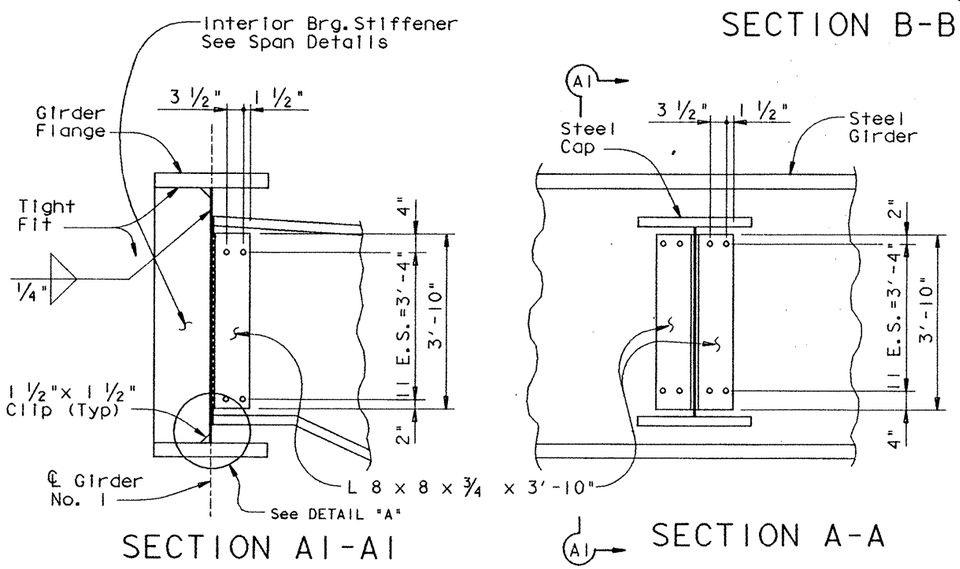

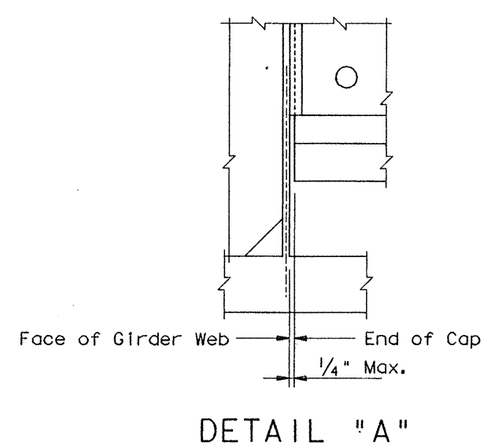

GIRDER NO 1 & 4

HS 20 LOADING Sheet 2 of 4

STATE DEPARTMENT OF HIGHWAYS AND PUBLIC TRANSPORTATION

INTERIOR BENT NOS. 13 & 19 RAMP 3

US 83/281 INTERCHANGE

STATE OF TEXAS
MARK J. BLOSCHOCK
52996
REGISTERED PROFESSIONAL ENGINEER

9-25-91

REV. 3-30 -92

D45350A1 ZFA2 [355121]4377INS04.DGN	PREPARED BY AND FOR USE OF TEXAS SDH&PT					
ORIGINAL DRAWING DATE: JANUARY 1990	STATE DISTRICT	FEDERAL REGION	FEDERAL AID PROJECT			SHEET
DN.: MRL / CK.: GAF / DW.: MMM / CK.: MRL	21	6	NH 92( )M			325
REVISIONS	COUNTY		CONTROL	SECTION	JOB	HIGHWAY
	HIDALGO		0039	17	097	US 83/281

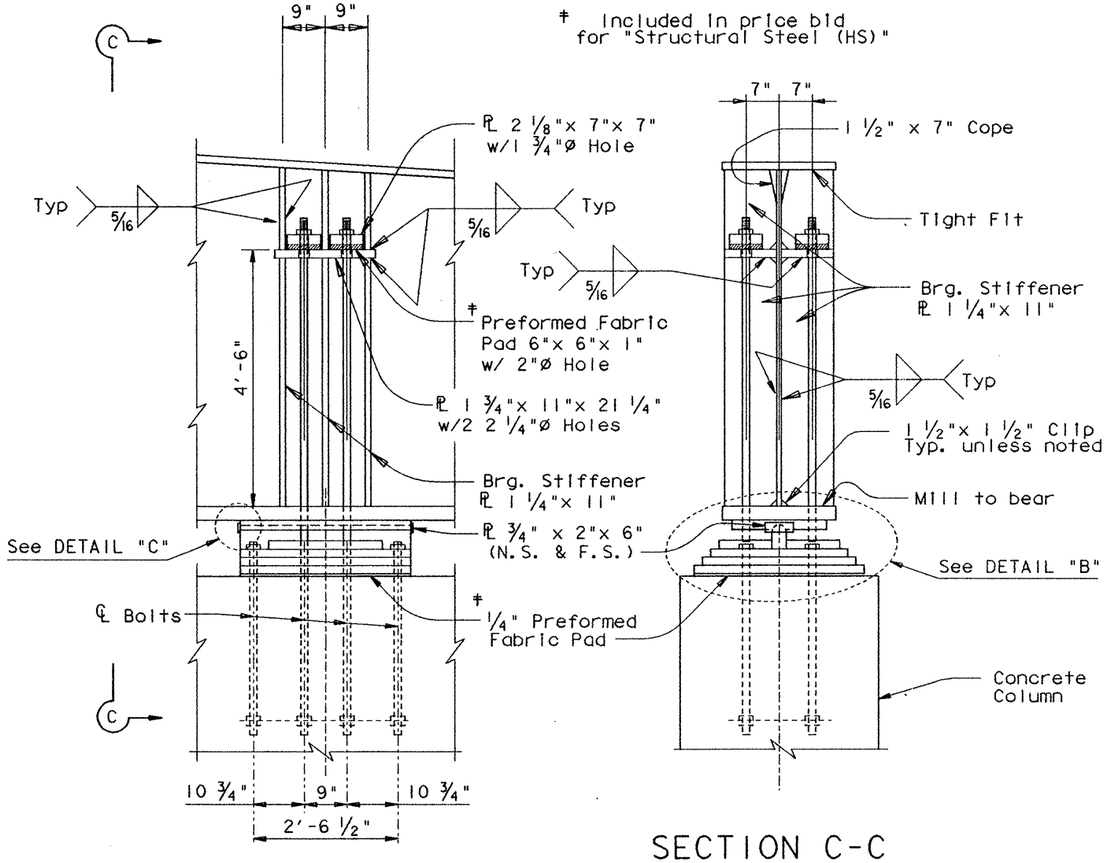

SECTION C-C

BEARING DETAILS

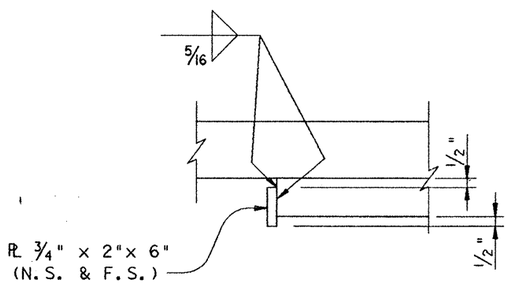

DETAIL "C"

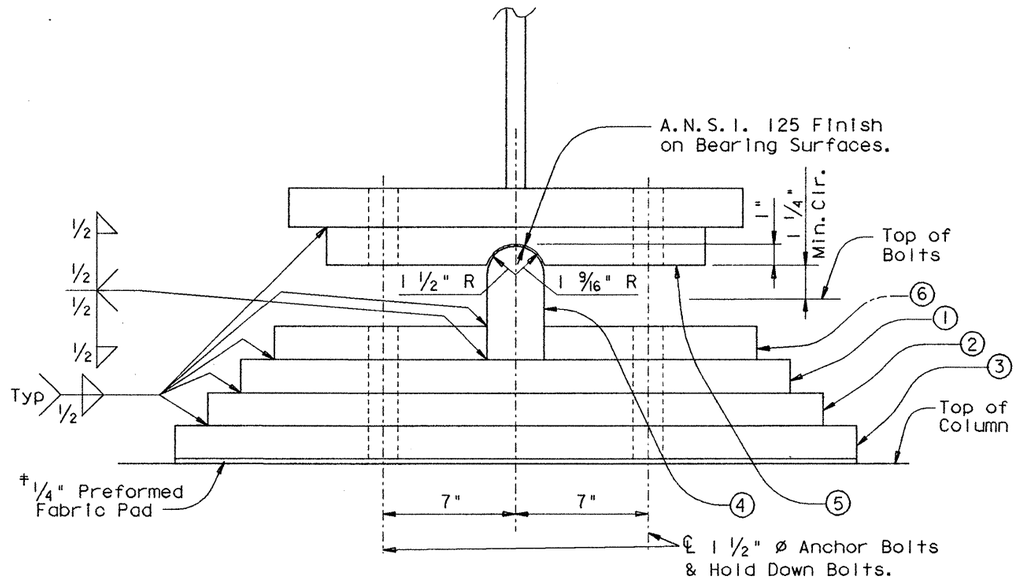

DETAIL "B"

1. PL 1 3/4"x 29"x 3'-0" with 1 3/4" Ø holes for Anchor Bolts & Hold-down Bolts.
2. PL 1 3/4"x 32 1/2"x 3'-0" with 1 3/4" Ø holes for Anchor Bolts & Hold-down Bolts.
3. PL 1 3/4"x 36"x 3'-0" with 1 3/4" Ø holes for Anchor Bolts & Hold-down Bolts.
4. PL 3"x 5"x 3'-0" R=1 1/2"
5. PL 2"x 20"x 3'-0" R=1 9/16" with 1 3/4" Ø holes for Hold-down Bolts.
6. 2 ~ PL 1"x 11 1/4"x 1'-6" with 1 3/4" Ø holes for Hold-down Bolts.

HS 20 LOADING Sheet 3 of 4

STATE OF TEXAS
MARK J. BLOSCHOCK
52996
REGISTERED PROFESSIONAL ENGINEER

9-25-91

STATE DEPARTMENT OF HIGHWAYS AND PUBLIC TRANSPORTATION

INTERIOR BENT NOS. 13 & 19 RAMP 3

US 83/281 INTERCHANGE

D45350A:\ZFA2:[355121]43771NS04.DGN	PREPARED BY AND FOR USE OF TEXAS SDH&PT					
ORIGINAL DRAWING DATE: JANUARY 1990	STATE DISTRICT	FEDERAL REGION	FEDERAL AID PROJECT			SHEET
DN.: MRL	21	6	NH 92( )M			326
CK.: GAF	COUNTY		CONTROL	SECTION	JOB	HIGHWAY
DN.: MMM	HIDALGO		0039	17	097	US 83/281
CK.: MRL						

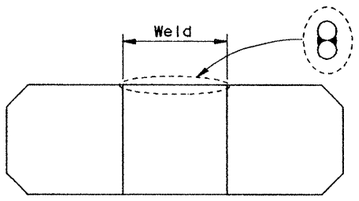

BARS Z_1 WELD DETAIL

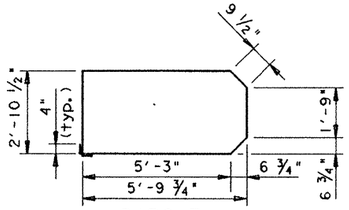

BARS Z_1

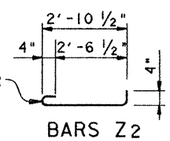

BARS Z2

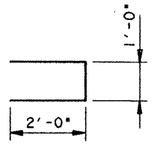

BARS Z3

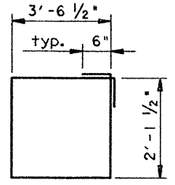

BARS S

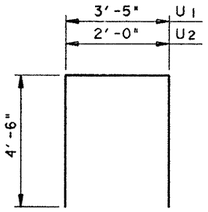

BARS U

TABLE OF CONSTANT QUANTITIES				
Bar	No	Sz.	Length	Weight
S	14	#6	12'- 4"	259
U_1	2	#6	12'- 5"	37
U_2	16	#6	11'- 0"	264
REINF STEEL (COL)			Lb ‡	560

‡ For Contractors Info. Only.

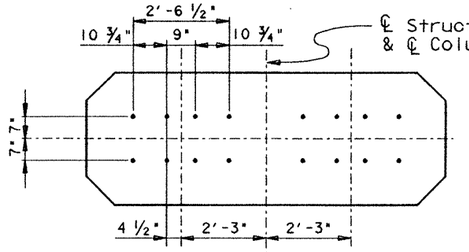

ANCHOR BOLT PLAN

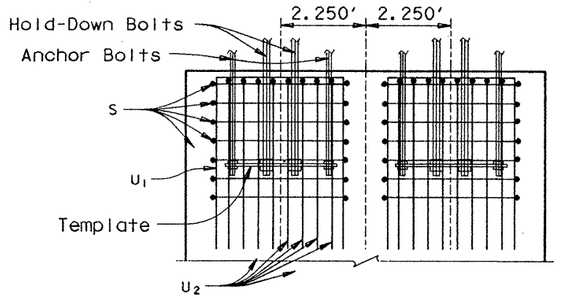

ANCHOR BOLT DETAIL

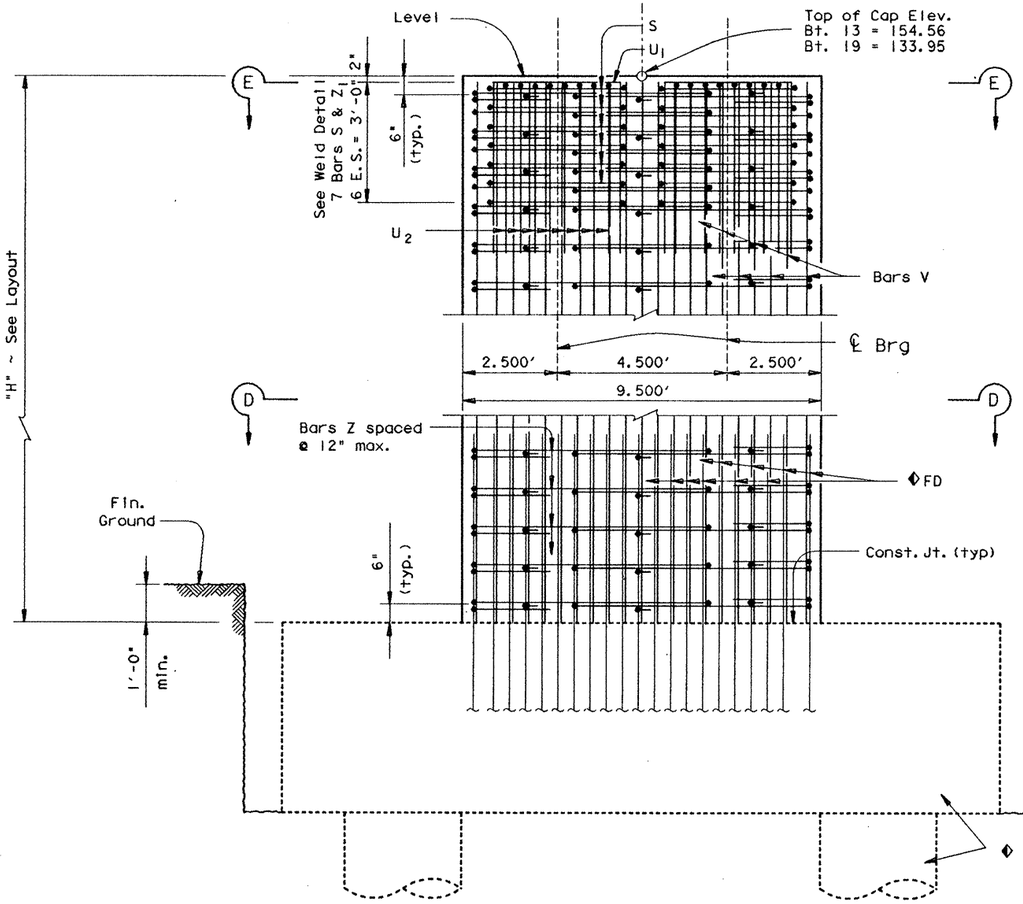

ELEVATION

◆ See Footing Details Sheet for Footing Quantities and Details not shown.

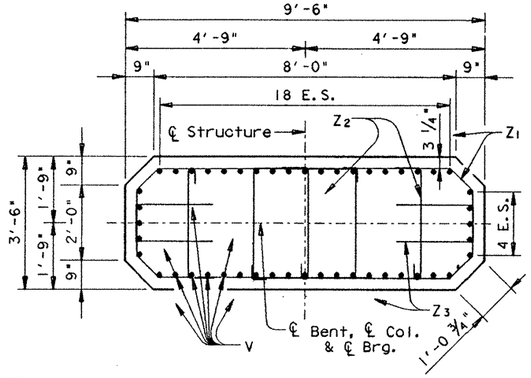

SECTION D-D

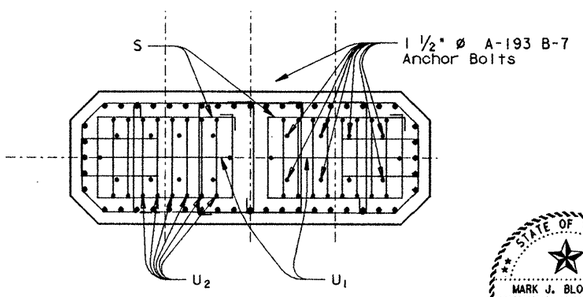

SECTION E-E

See Section D-D for details not shown

TABLE OF VARIABLE QUANTITIES										TOTAL EST. QUANTITIES	
H	CL. "C" CONC.	BARS Z_1 #4 x 17'-5"		BARS Z_2 #4 x 3'-8"		BARS Z_3 #4 x 5'-0"		BARS V 48 ~ # 11		REINF. STEEL ‡	CL. "C" CONC.
FT.	C.Y.	NO.	WT.	NO.	WT.	NO.	WT.	LGTH.	WT.	LB.	C.Y.
20	23.8	46	535	60	147	40	134	19'-9 "	5037	12996	48.4
21	25.0	48	558	63	154	42	140	20'-9 "	5292	13287	49.6
22	26.2	50	582	66	162	44	147	21'-9 "	5547	13581	50.8
23	27.4	52	605	69	169	46	154	22'-9 "	5802	13873	52.0
24	28.6	54	628	72	176	48	160	23'-9 "	6057	14164	53.2
45	53.5	96	1117	135	331	90	301	44'-9 "	11412	20304	78.1
46	54.7	98	1140	138	338	92	307	45'-9 "	11667	20595	79.3
47	55.9	100	1163	141	345	94	314	46'-9 "	11922	20887	80.5
48	57.1	102	1187	144	353	96	321	47'-9 "	12177	21181	81.7
49	58.3	104	1210	147	360	98	327	48'-9 "	12432	21472	82.9

▲ Includes Footing Quantities

◪ Quantities shown are for one bent only.

GENERAL NOTES:
(For Concrete)

Designed according to A.A.S.H.T.O. 1989 Standard and current Interim Specifications.

Calculated Drilled Shaft Loads =
760 TONS/DR SHAFT Bent 13
755 TONS/DR SHAFT Bent 19

All reinforcing steel shall be Grade 60.

See "Form Liner Details" sheet for asthetic treatment of columns.

STATE OF TEXAS
MARK J. BLOSCHOCK
52996
REGISTERED PROFESSIONAL ENGINEER
9-25-91

HS 20 LOADING Sheet 4 of 4

STATE DEPARTMENT OF HIGHWAYS AND PUBLIC TRANSPORTATION

INTERIOR BENT NOS. 13 & 19 RAMP 3

US 83/281 INTERCHANGE

D45350A: ZFA2: [355121]43771NS04.DGN | PREPARED BY AND FOR USE OF TEXAS SDH&PT

ORIGINAL DRAWING DATE: JANUARY 1990		STATE DISTRICT	FEDERAL REGION	FEDERAL AID PROJECT	SHEET
DR.: MRL	REVISIONS	21	6	NH 92( )M	327
CK.: GAF		COUNTY	CONTROL	SECTION	JOB	HIGHWAY
DR.: MMM		HIDALGO	0039	17	097	US 83/281
CK.: MRL						

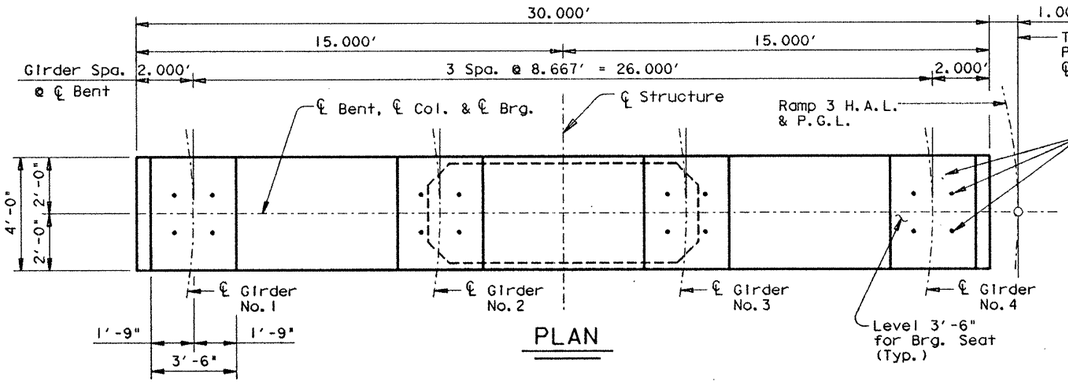

PLAN

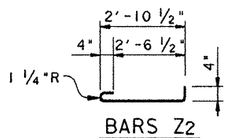

BARS Z2

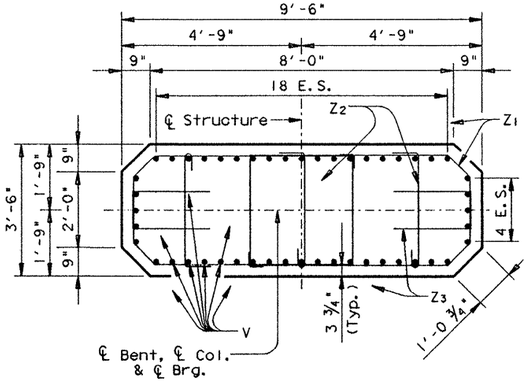

SECTION B-B

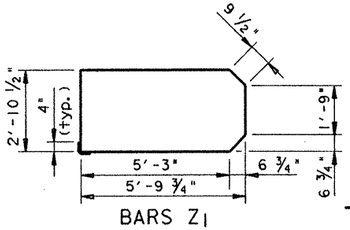

BARS Z1

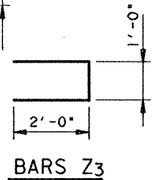

BARS Z3

TABLE OF CONSTANT QUANTITIES				
Bar	No	Sz.	Length	Weight
A	18	#11	29'- 8"	2837
B	5	#11	30'- 4"	806
DS_1	2	#5	15'-11"	33
DS_{2-19}	36	#5	13'- 5"	504
J	11	#5	5'- 8"	65
S_1	11	#5	19'- 4"	223
S_{2-19}	36	#5	16'-10"Av	632
T_1	10	#6	29'- 8"	446
T_{2-6}	10	#6	20'-11"Av	314
Reinf. Steel (Cap)			Lb ⌗	5860
Cl. "C" Conc. (Cap)			CY	23.2

⌗ For Contractors Info. Only.

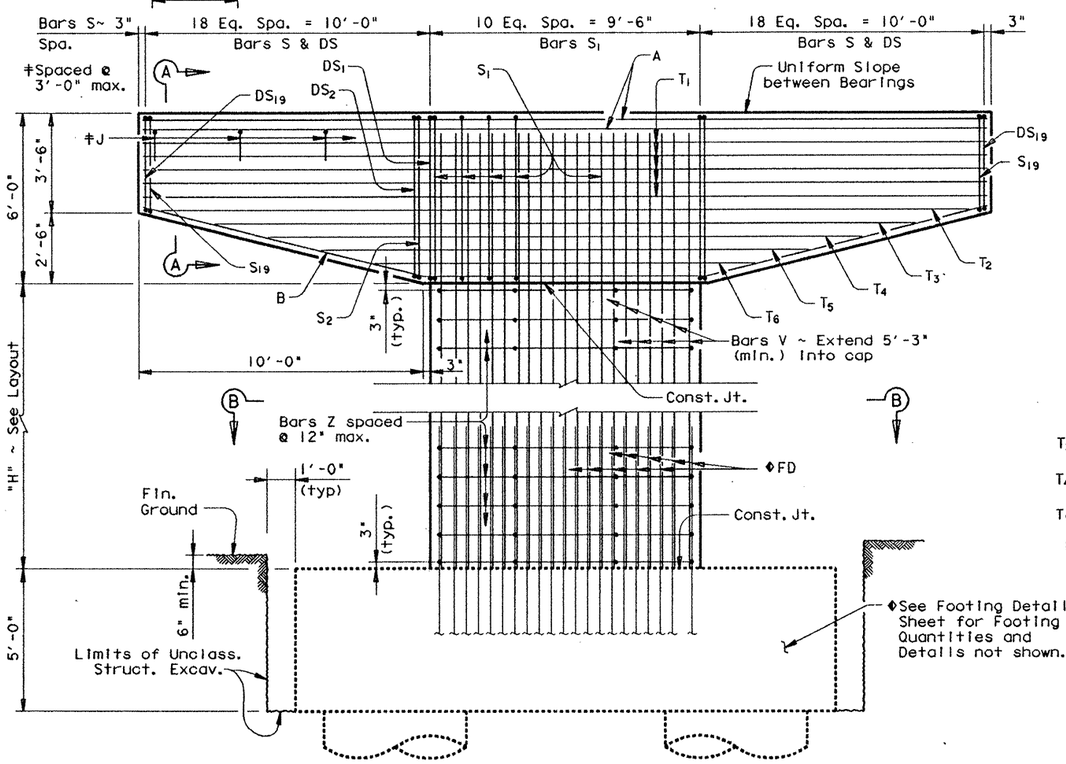

ELEVATION

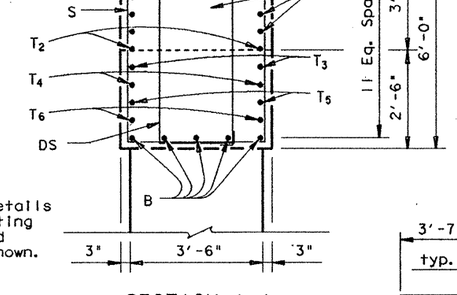

SECTION A-A

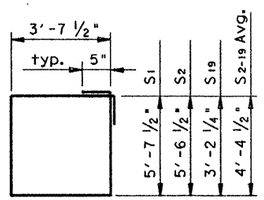

BARS S

TABLE OF VARIABLE QUANTITIES										▲TOTAL EST. ◩ QUANTITIES	
H	CL. "C" CONC.	BARS Z_1 #4 x 17'-5"		BARS Z_2 #4 x 3'-8"		BARS Z_3 #4 x 5'-0"		BARS V 48 ~ # 11		REINF. STEEL ⌗	CL. "C" CONC.
FT.	C.Y.	NO.	WT.	NO.	WT.	NO.	WT.	LGTH.	WT.	LB.	C.Y.
21	25.0	44	512	66	162	44	147	26'- 3"	6694	19958	72.8
22	26.2	46	535	69	169	46	154	27'- 3"	6949	20250	74.0
23	27.4	48	558	72	176	48	160	28'- 3"	7204	20541	75.2
24	28.6	50	582	75	184	50	167	29'- 3"	7459	20835	76.4
25	29.7	52	605	78	191	52	174	30'- 3"	7714	21127	77.5
35	41.6	72	838	108	265	72	240	40'- 3"	10265	24051	89.4
36	42.8	74	861	111	272	74	247	41'- 3"	10520	24343	90.6
37	44.0	76	884	114	279	76	254	42'- 3"	10775	24635	91.8
38	45.2	78	907	117	287	78	261	43'- 3"	11030	24928	93.0
39	46.4	80	931	120	294	80	267	44'- 3"	11285	25220	94.2
40	47.6	82	954	123	301	82	274	45'- 3"	11540	25512	95.4
41	48.8	84	977	126	309	84	281	46'- 3"	11795	25805	96.6
42	50.0	86	1001	129	316	86	287	47'- 3"	12050	26097	97.8
43	51.2	88	1024	132	323	88	294	48'- 3"	12305	26389	99.0
44	52.4	90	1047	135	331	90	301	49'- 3"	12560	26682	100.2
45	53.5	92	1070	138	338	92	307	50'- 3"	12815	26973	101.3
46	54.7	94	1094	141	345	94	314	51'- 3"	13070	27266	102.5
47	55.9	96	1117	144	353	96	321	52'- 3"	13325	27559	103.7

▲ Includes Footing Quantities
◩ Quantities Shown are for one Bent only.

GENERAL NOTES:

Designed in accordance with A.A.S.H.T.O. 1989 Specifications.

Calculated Drilled Shaft Loads Bent 14 = 750 T/Dr. Shaft.

Calculated Drilled Shaft Loads Bent 18 = 815 T/Dr. Shaft.

All Cap & Column Steel [redacted] Grade 60.

See "Form Liner Details" Sheet for aesthetic treatment of Columns and Caps.

HS 20 LOADING

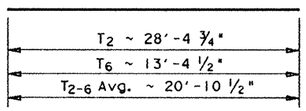

BARS T2-T6

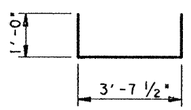

BARS J

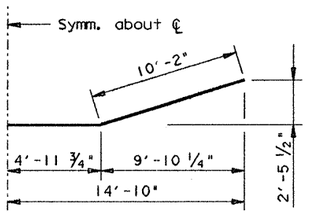

BARS B

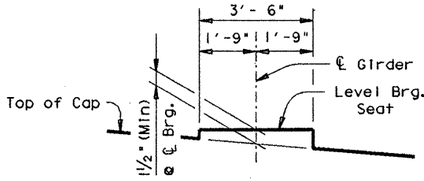

BEARING SEAT DETAIL

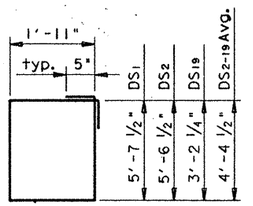

BARS DS

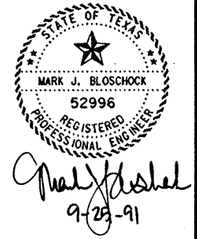

STATE DEPARTMENT OF HIGHWAYS AND PUBLIC TRANSPORTATION

INTERIOR BENT NOS. 14 & 18 RAMP 3

US 83/281 INTERCHANGE

D45350A: ZFA2: E355100143781SC03.DGN	PREPARED BY AND FOR USE OF TEXAS SDH&PT					
ORIGINAL DRAWING DATE: NOVEMBER 1990	STATE DISTRICT	FEDERAL REGION	FEDERAL AID PROJECT #			SHEET
REVISIONS	21	6	NH 92 ( ) M			328
DN.: GAF/MRL	COUNTY		CONTROL	SECTION	JOB	HIGHWAY
CK.: MRL/GAF	HIDALGO		0039	17	097	US 83/281
DW.: PSR						
CK.: GAF/MRL						

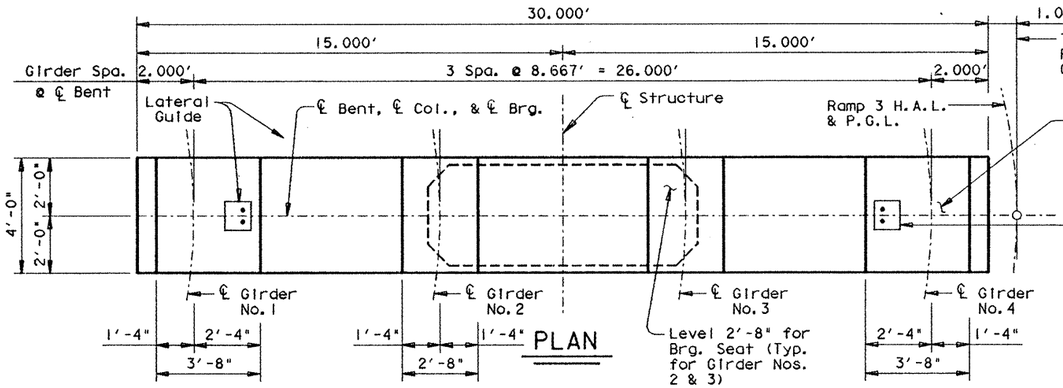

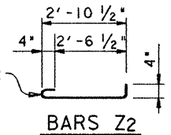

BARS Z2

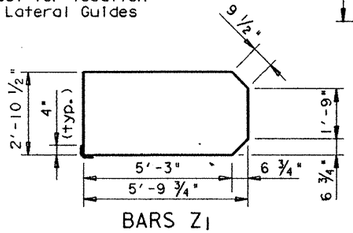

BARS Z1

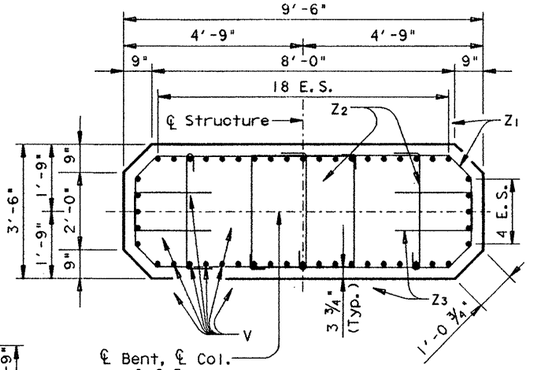

SECTION B-B

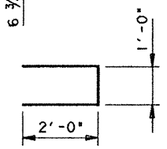

BARS Z3

TABLE OF CONSTANT QUANTITIES				
Bar	No	Sz.	Length	Weight
A	18	#11	29'- 8"	2837
B	5	#11	30'- 4"	806
DS_1	2	#5	15'-11"	33
$DS_{2\text{-}19}$	36	#5	13'- 5"	504
J	11	#5	5'- 8"	65
S_1	11	#5	19'- 4"	223
$S_{2\text{-}19}$	36	#5	16'-10"Av	632
T_1	10	#6	29'- 8"	446
$T_{2\text{-}6}$	10	#6	20'-11"Av	314
Reinf. Steel (Cap)			Lb ‡	5860
Cl. "C" Conc. (Cap)			CY	23.2

‡ For Contractors Info. Only.

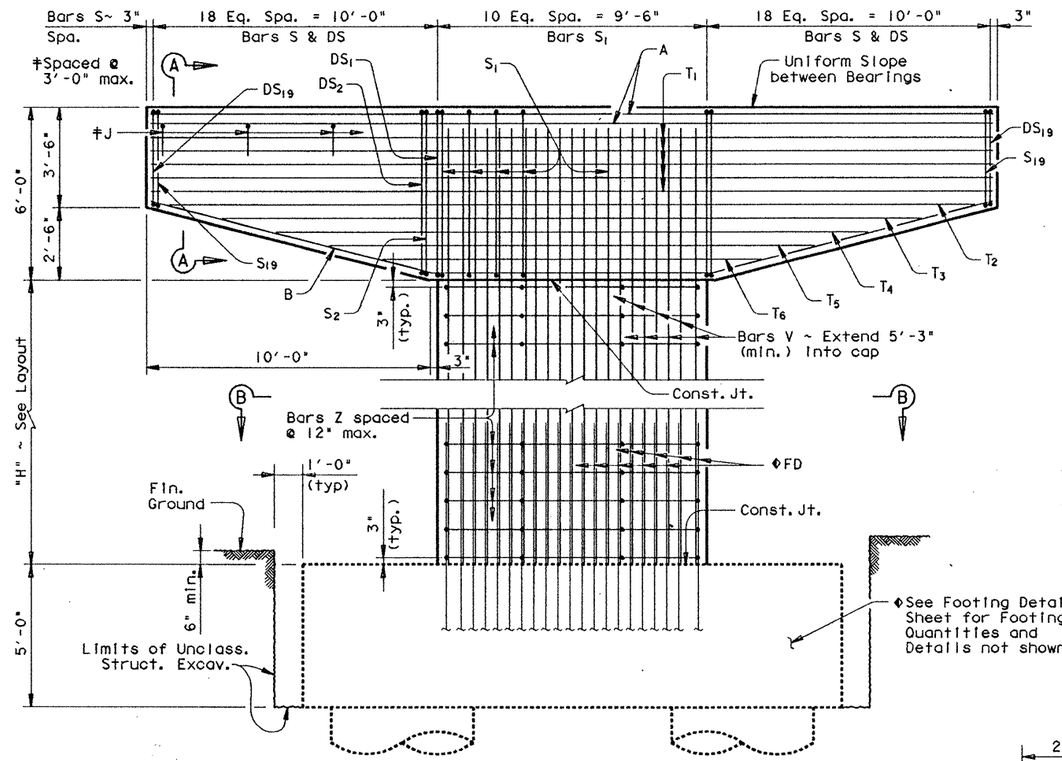

ELEVATION

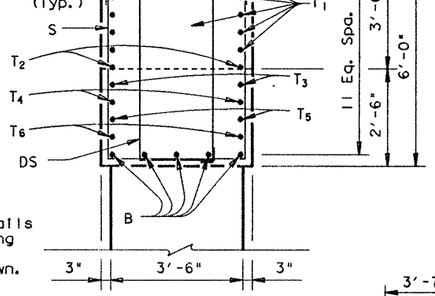

SECTION A-A

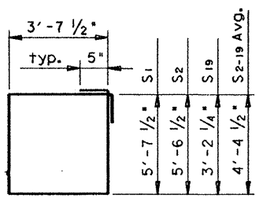

BARS S

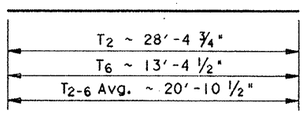

BARS T2-T6

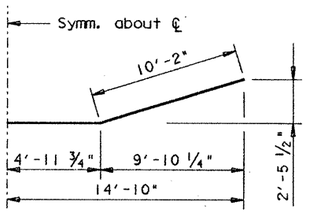

BARS B

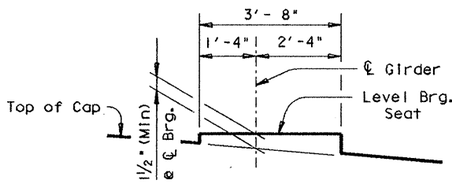

BEARING SEAT DETAIL
(Showing Grider No. 1)

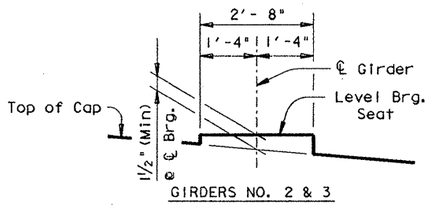

BEARING SEAT DETAIL

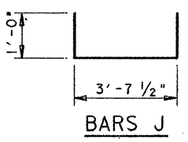

BARS J

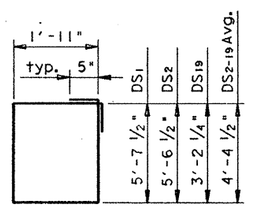

BARS DS

TABLE OF VARIABLE QUANTITIES										▲TOTAL EST. QUANTITIES	
H	CL. "C" CONC.	BARS Z_1 #4 x 17'-5"		BARS Z_2 #4 x 3'-8"		BARS Z_3 #4 x 5'-0"		BARS V 48 ~ # 11		REINF. STEEL ‡	CL. "C" CONC.
FT.	C.Y.	NO.	WT.	NO.	WT.	NO.	WT.	LGTH.	WT.	LB.	C.Y.
35	41.6	72	838	108	265	72	240	40'- 3"	10265	24051	89.4
36	42.8	74	861	111	272	74	247	41'- 3"	10520	24343	90.6
37	44.0	76	884	114	279	76	254	42'- 3"	10775	24635	91.8
38	45.2	78	907	117	287	78	261	43'- 3"	11030	24928	93.0
39	46.4	80	931	120	294	80	267	44'- 3"	11285	25220	94.2
40	47.6	82	954	123	301	82	274	45'- 3"	11540	25512	95.4
41	48.8	84	977	126	309	84	281	46'- 3"	11795	25805	96.6
42	50.0	86	1001	129	316	86	287	47'- 3"	12050	26097	97.8
43	51.2	88	1024	132	323	88	294	48'- 3"	12305	26389	99.0
44	52.4	90	1047	135	331	90	301	49'- 3"	12560	26682	100.2
45	53.5	92	1070	138	338	92	307	50'- 3"	12815	26973	101.3
46	54.7	94	1094	141	345	94	314	51'- 3"	13070	27266	102.5
47	55.9	96	1117	144	353	96	321	52'- 3"	13325	27559	103.7

▲ Includes Footing Quantities

GENERAL NOTES:

Designed in accordance with A.A.S.H.T.O. 1989 Specifications.

Calculated Drilled Shaft Loads = 815 T/Dr. Shaft.

All Cap & Column Steel [redacted] Grade 60.

See "Form Liner Details" Sheet for aesthetic treatment of Columns and Caps.

HS 20 LOADING

STATE DEPARTMENT OF HIGHWAYS AND PUBLIC TRANSPORTATION

INTERIOR BENT NO. 15 RAMP 3

US 83/281 INTERCHANGE

STATE OF TEXAS
MARK J. BLOSCHOCK
52996
REGISTERED PROFESSIONAL ENGINEER
9-25-91

D45350A1+ZFA2+[3551001437815C01.DGN	PREPARED BY AND FOR USE OF TEXAS SDH&PT				
ORIGINAL DRAWING DATE: NOVEMBER 1990	STATE DISTRICT	FEDERAL REGION	FEDERAL AID PROJECT		SHEET
DR.:- GAF/MRL	21	6			329
CK.:- MRL/GAF	COUNTY		CONTROL	SECTION	JOB	HIGHWAY
DW.:- PSR	HIDALGO		0039	17	097	US 83/281
CK.:- GAF/MRL						
REVISIONS						

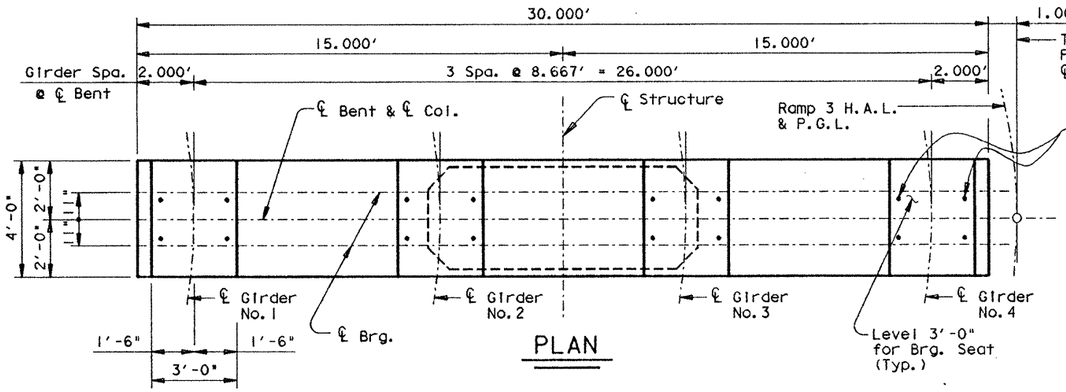

PLAN

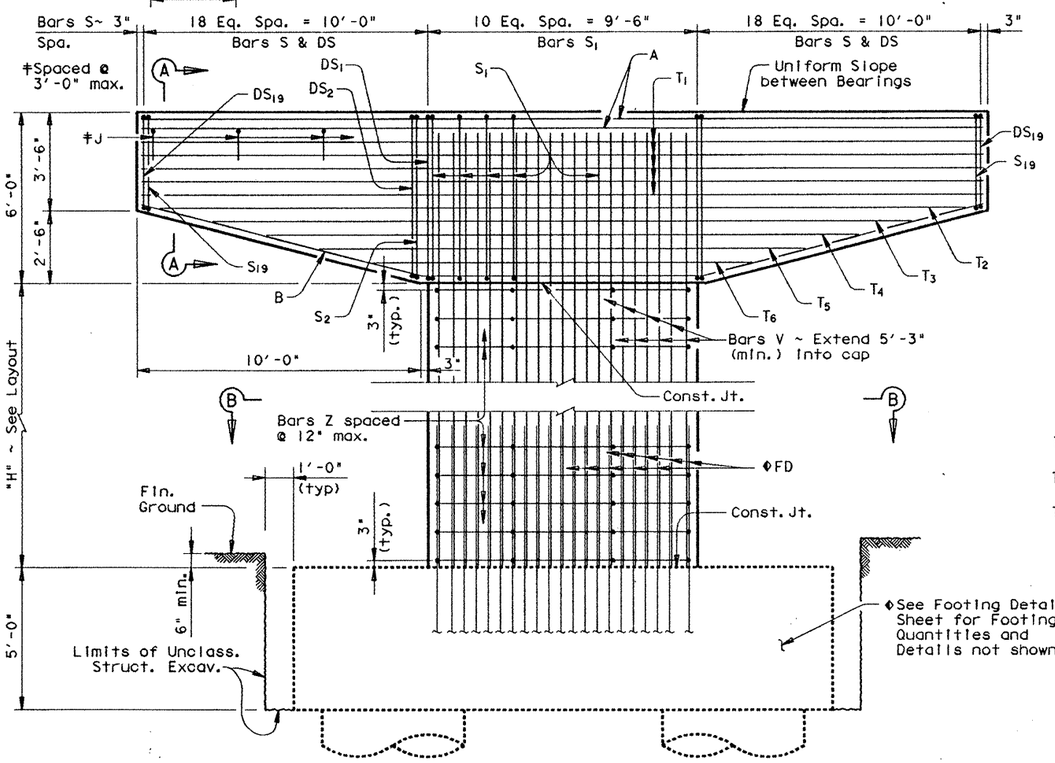

ELEVATION

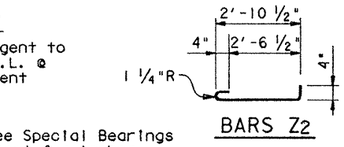

BARS Z2

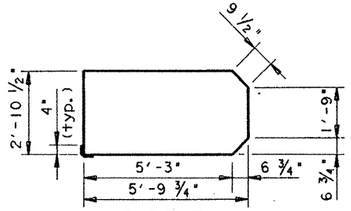

BARS Z1

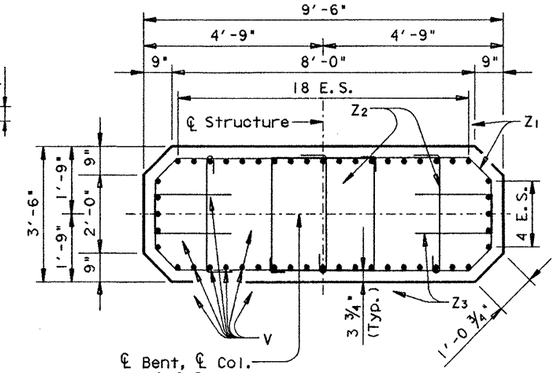

SECTION B-B

TABLE OF CONSTANT QUANTITIES				
Bar	No	Sz.	Length	Weight
A	18	#11	29'- 8"	2837
B	5	#11	30'- 4"	806
DS1	2	#5	15'-11"	33
DS2-19	36	#5	13'- 5"	504
J	11	#5	5'- 8"	65
S1	11	#5	19'- 4"	223
S2-19	36	#5	16'-10"Av	632
T1	10	#6	29'- 8"	446
T2-6	10	#6	20'-11"Av	314
Reinf. Steel (Cap)			Lb	‡ 5860
Cl. "C" Conc. (Cap)			CY	23.2

‡ For Contractors Info. Only.

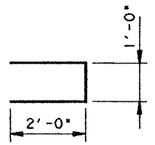

BARS Z3

TABLE OF VARIABLE QUANTITIES										▲TOTAL EST. QUANTITIES	
H	CL. "C" CONC.	BARS Z1 #4 × 17'-5"		BARS Z2 #4 × 3'-8"		BARS Z3 #4 × 5'-0"		BARS V 48 ~ # 11		REINF. STEEL ‡	CL. "C" CONC.
FT.	C.Y.	NO.	WT.	NO.	WT.	NO.	WT.	LGTH.	WT.	LB.	C.Y.
40	47.6	82	954	123	301	82	274	45'- 3"	11540	25512	95.4
41	48.8	84	977	126	309	84	281	46'- 3"	11795	25805	96.6
42	50.0	86	1001	129	316	86	287	47'- 3"	12050	26097	97.8
43	51.2	88	1024	132	323	88	294	48'- 3"	12305	26389	99.0
44	52.4	90	1047	135	331	90	301	49'- 3"	12560	26682	100.2

▲ Includes Footing Quantities

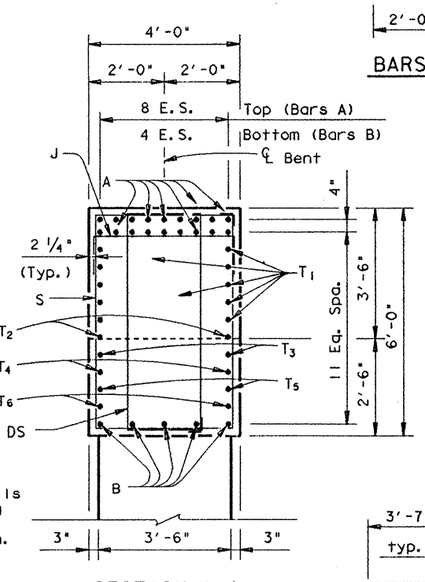

SECTION A-A

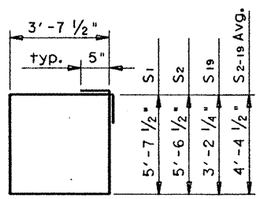

BARS S

GENERAL NOTES:

Designed in accordance with A.A.S.H.T.O. 1989 Specifications.

Calculated Drilled Shaft Loads = 815 T/Dr. Shaft.

All Cap & Column Steel [redacted] Grade 60.

See "Form Liner Details" Sheet for aesthetic treatment of Columns and Caps.

HS 20 LOADING

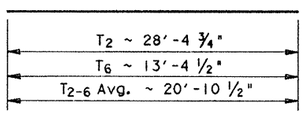

BARS T2-T6

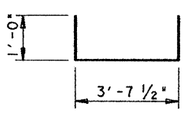

BARS J

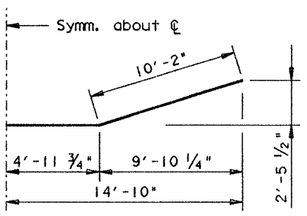

BARS B

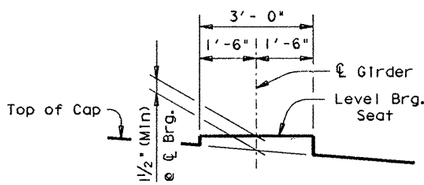

BEARING SEAT DETAIL

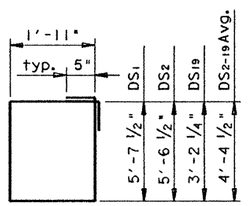

BARS DS

STATE OF TEXAS
MARK J. BLOSCHOCK
52996
REGISTERED PROFESSIONAL ENGINEER

Mark J. Bloschock
9-25-91

STATE DEPARTMENT OF HIGHWAYS AND PUBLIC TRANSPORTATION

INTERIOR BENT NO. 16 RAMP 3

US 83/281 INTERCHANGE

D45350A1 • ZFA2 • (355)0043781SC02.DGN	PREPARED BY AND FOR USE OF TEXAS SDH&PT				
ORIGINAL DRAWING DATE: NOVEMBER 1990	STATE DISTRICT	FEDERAL REGION	FEDERAL AID PROJECT •		SHEET
DN.: GAF/MRL CK.: MRL/GAF DN.: PSR CK.: GAF/MRL REVISIONS	21	6	NH 92(7)M		330
	COUNTY	CONTROL	SECTION	JOB	HIGHWAY
	HIDALGO	0039	17	097	US 83/281

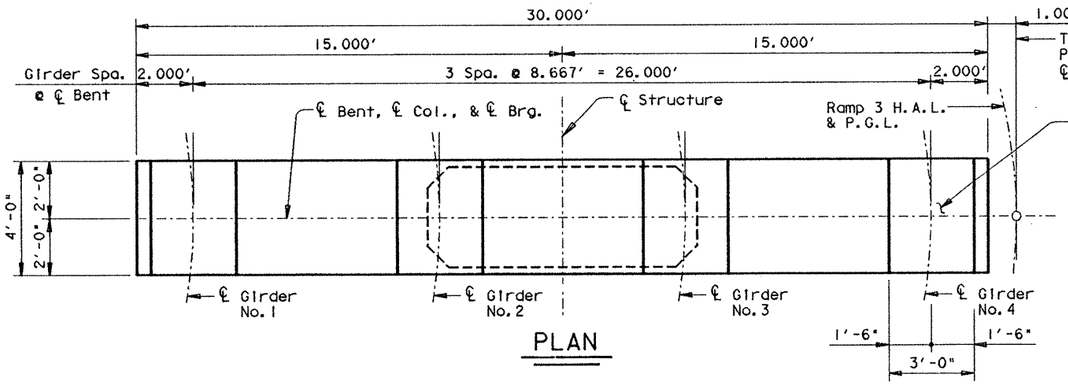

PLAN

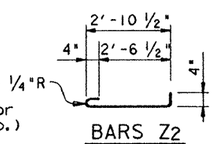

BARS Z2

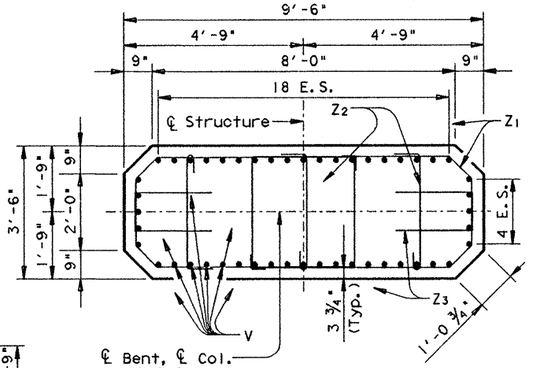

SECTION B-B

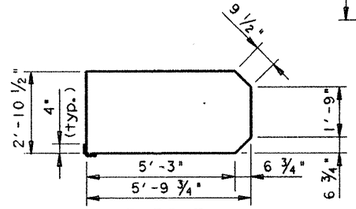

BARS Z1

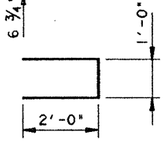

BARS Z3

TABLE OF CONSTANT QUANTITIES				
Bar	No	Sz.	Length	Weight
A	18	#11	29'- 8"	2837
B	5	#11	30'- 4"	806
DS1	2	#5	15'-11"	33
DS2-19	36	#5	13'- 5"	504
J	11	#5	5'- 8"	65
S1	11	#5	19'- 4"	223
S2-19	36	#5	16'-10"Av	632
T1	10	#6	29'- 8"	446
T2-6	10	#6	20'-11"Av	314
Reinf. Steel (Cap)			Lb ⌗	5860
Cl. "C" Conc. (Cap)			CY	23.2

⌗ For Contractors Info. Only.

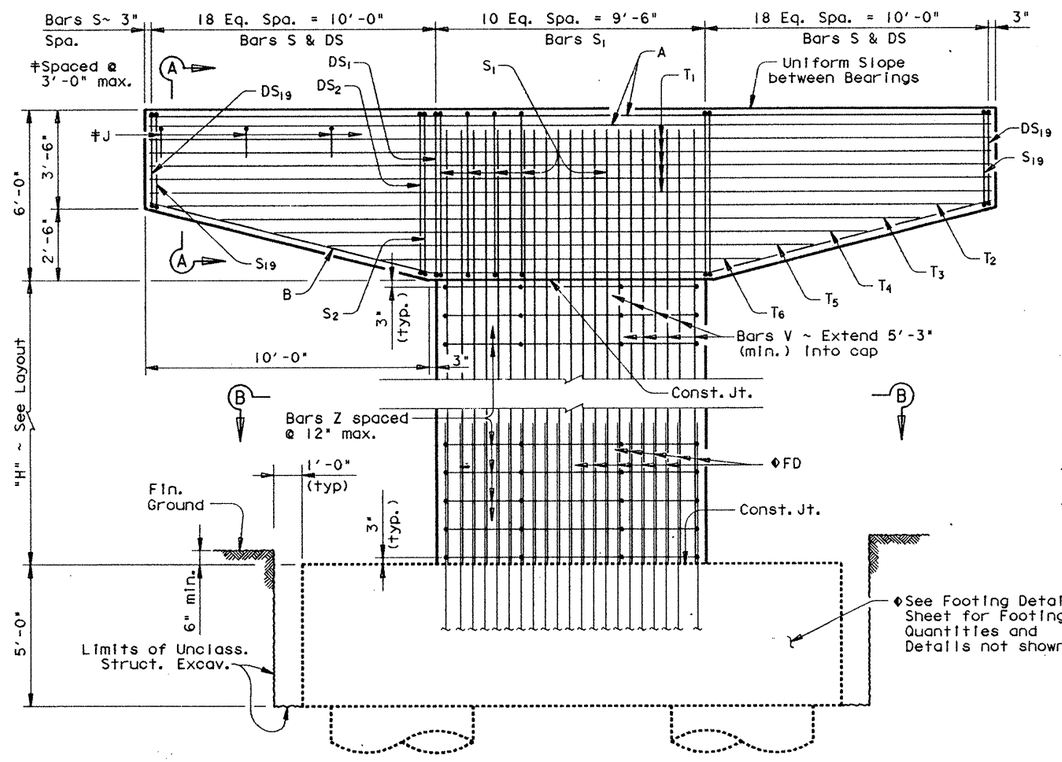

ELEVATION

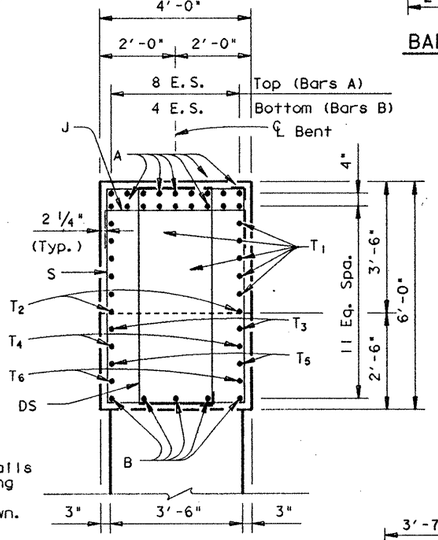

SECTION A-A

TABLE OF VARIABLE QUANTITIES										▲TOTAL EST. QUANTITIES	
H	CL. "C" CONC.	BARS Z1 #4 x 17'-5"		BARS Z2 #4 x 3'-8"		BARS Z3 #4 x 5'-0"		BARS V 48 ~ # 11		REINF. STEEL ⌗	CL. "C" CONC.
FT.	C.Y.	NO.	WT.	NO.	WT.	NO.	WT.	LGTH.	WT.	LB.	C.Y.
35	41.6	72	838	108	265	72	240	40'- 3"	10265	24051	89.4
36	42.8	74	861	111	272	74	247	41'- 3"	10520	24343	90.6
37	44.0	76	884	114	279	76	254	42'- 3"	10775	24635	91.8
38	45.2	78	907	117	287	78	261	43'- 3"	11030	24928	93.0
39	46.4	80	931	120	294	80	267	44'- 3"	11285	25220	94.2
40	47.6	82	954	123	301	82	274	45'- 3"	11540	25512	95.4
41	48.8	84	977	126	309	84	281	46'- 3"	11795	25805	96.6
42	50.0	86	1001	129	316	86	287	47'- 3"	12050	26097	97.8
43	51.2	88	1024	132	323	88	294	48'- 3"	12305	26389	99.0
44	52.4	90	1047	135	331	90	301	49'- 3"	12560	26682	100.2
45	53.5	92	1070	138	338	92	307	50'- 3"	12815	26973	101.3
46	54.7	94	1094	141	345	94	314	51'- 3"	13070	27266	102.5
47	55.9	96	1117	144	353	96	321	52'- 3"	13325	27559	103.7

▲ Includes Footing Quantities

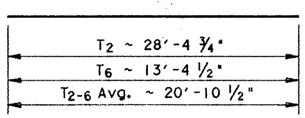

BARS T2-T6

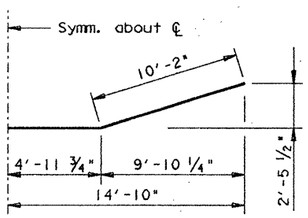

BARS B

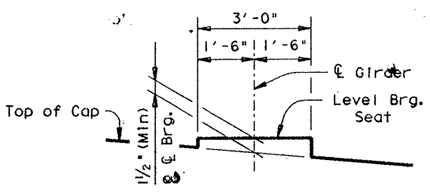

BEARING SEAT DETAIL

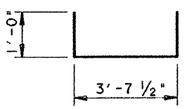

BARS J

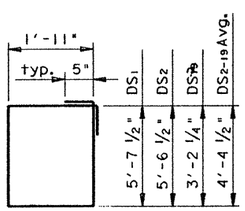

BARS DS

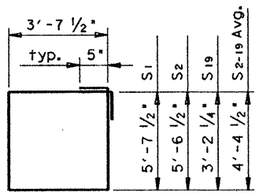

BARS S

GENERAL NOTES:

Designed in accordance with A.A.S.H.T.O. 1989 Specifications.

Calculated Drilled Shaft Loads = 815 T/Dr. Shaft.

All Cap & Column Steel [redacted] Grade 60.

See Special Bearings Sheet for Bearing Details not shown.

See "Form Liner Details" Sheet for aesthetic treatment of Columns and Caps.

HS 20 LOADING

STATE OF TEXAS
MARK J. BLOSCHOCK
52996
REGISTERED PROFESSIONAL ENGINEER

9-24-91

STATE DEPARTMENT OF HIGHWAYS AND PUBLIC TRANSPORTATION

INTERIOR BENT NO. 17 RAMP 3

US 83/281 INTERCHANGE

D45350A • ZFA2 • (3551001437815C01.DGN	PREPARED BY AND FOR USE OF TEXAS SDH&PT					
ORIGINAL DRAWING DATE: NOVEMBER 1990	STATE DISTRICT	FEDERAL REGION	FEDERAL AID PROJECT •			SHEET
DR.: GAF/MRL	21	6	NH 92 ( ) M			331
CK.: MRL/GAF	COUNTY		CONTROL	SECTION	JOB	HIGHWAY
DR.: PSR	HIDALGO		0039	17	097	US 83/281
CK.: GAF/MRL						

REVISIONS

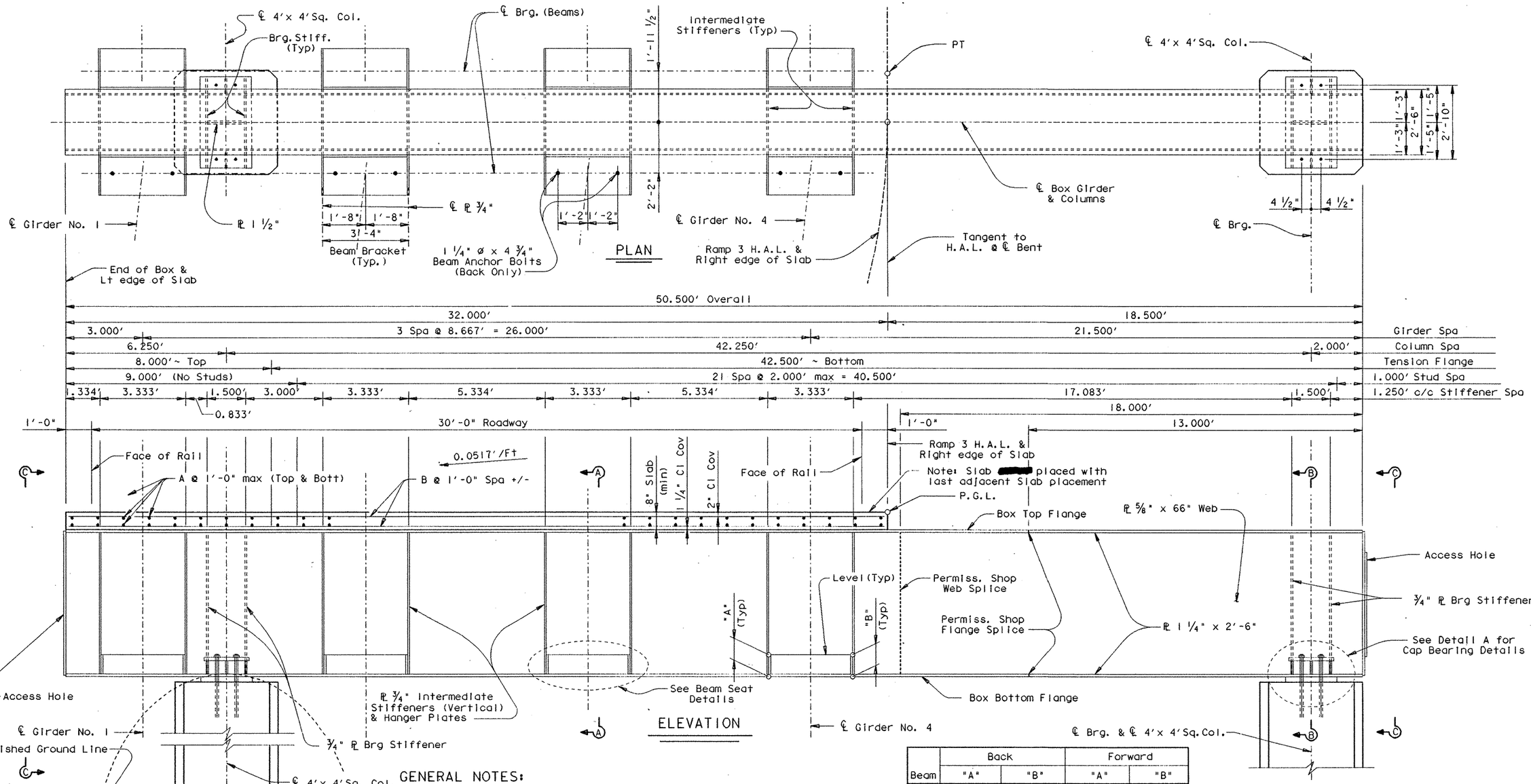

GENERAL NOTES:

Designed according to A.A.S.H.T.O. 1989 Standard Specifications.

Anchor Bolts [redacted] High Strength and shall conform to the Item Metal for Structures. Nuts [redacted] snug tight plus one half turn after all beam and slab load is applied. Burr threads or tack weld nut after erection to prevent loosening.

The Contractor [redacted] place all Prestressed beams in Span 20 and Steel girders in Span 19 before the slab is placed on either span. The Contractor [redacted] also give adequate consideration to beam erection methods and sequences in order to insure the stability of the box girder during construction.

All inside surfaces of Box Cap [redacted] painted, with a Protection System II paint.

All flange and web splices [redacted] made by full penetration grove welds in accordance with the specifications.

After the hanger plates and the beam seat shelf plates [redacted] welded and bolted into their final positions, each beam seat assembly [redacted] trimed to fit in order to provide no less than 1/16" clearance and no more than 1/8" clearance between the beam seat assembly and the hanger or shelf plates. After the beam seat assembly is in it's final position the hold-down plate [redacted] bolted into position, the nuts [redacted] snug tight plus one half turn. Burr threads or tack weld nut.

All Column steel [redacted] Grade 60.

Calculated Foundation Load = 260 Tons/Drilled Shaft

Beam	Back "A"	Back "B"	Forward "A"	Forward "B"
1	0.972'	0.803'	0.997'	0.828'
2	0.977'	0.808'	0.992'	0.823'
3	0.982'	0.813'	0.987'	0.818'
4	0.966'	0.797'	0.982'	0.813'

All Flanges, Webs, and Beam Hangers are Fracture Critical and [redacted] conform to Fracture Control Plan.

All steel [redacted] H.S. unless otherwise noted.

STATE OF TEXAS
MARK J. BLOSCHOCK
52996
REGISTERED PROFESSIONAL ENGINEER

3-23-92

REV. 3-30-92

HS 20 LOADING SHEET 1 OF 4

STATE DEPARTMENT OF HIGHWAYS AND PUBLIC TRANSPORTATION

INTERIOR BENT NO. 20 RAMP 3

US 83/281 INTERCHANGE

D45350A1:ZFA2:[355121]43781NS01.DGN

PREPARED BY AND FOR USE OF TEXAS SDH&PT

ORIGINAL DRAWING DATE: OCT 1990

DN.: GAF
CK.: MRL
DW.: MMM
CK.: GAF

REVISIONS
3/92 - GAF, Access doors both ends.

STATE DISTRICT	FEDERAL REGION	FEDERAL AID PROJECT	SHEET
21	6	NH92( )M	332

COUNTY	CONTROL	SECTION	JOB	HIGHWAY
HIDALGO	0039	17	097	US 83/281

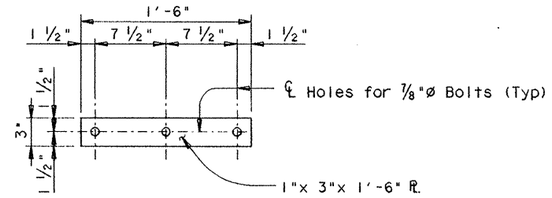

HOLD-DOWN PLATE

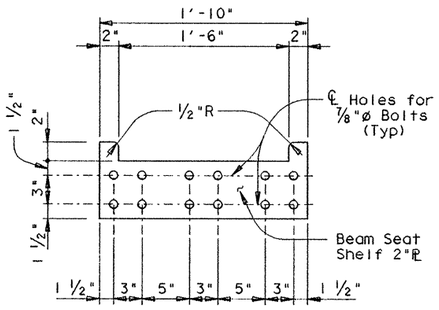

BEAM-SEAT SHELF PLATE

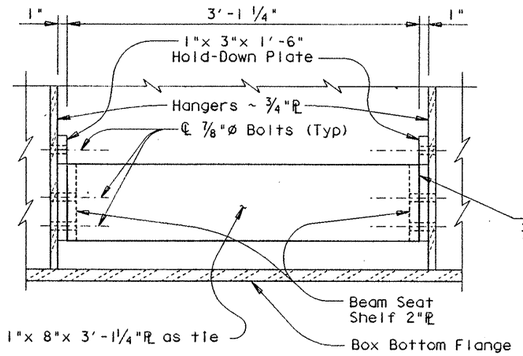

ELEV. OF BEAM-SEAT

(Showing tie Plate)

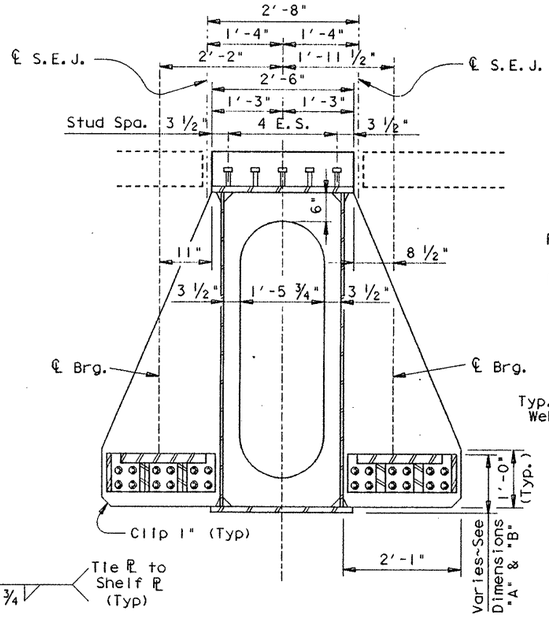

5 ~ 7/8" ø x 4" Studs with heads. Studs [redacted] Electric arc end-welded to the Top Flange with complete fusion. Total Estimated Weight of Stud Connectors = 88 Lbs. and is included in the quantity shown for Structural Steel (H.Y.C.)

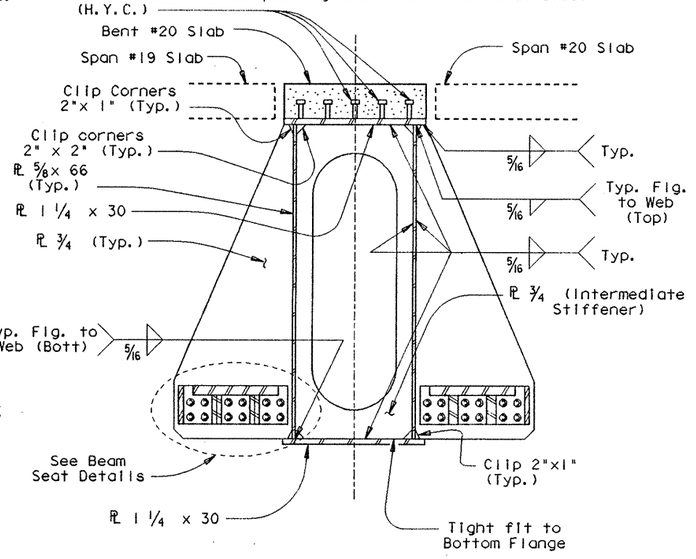

SEC. A-A

NOTE: Weld bottom flange to web. Then weld top flange to web.

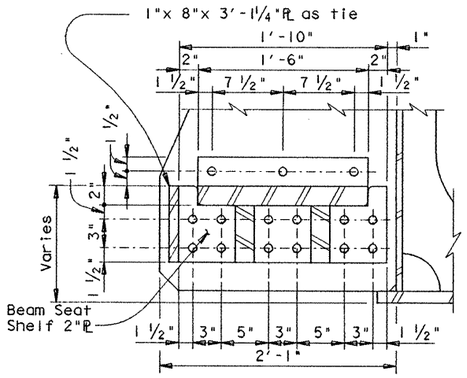

SEC. OF BEAM-SEAT

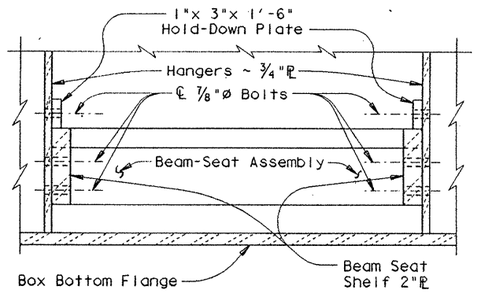

ELEV. OF BEAM-SEAT

(Showing Beam-Seat Assembly)

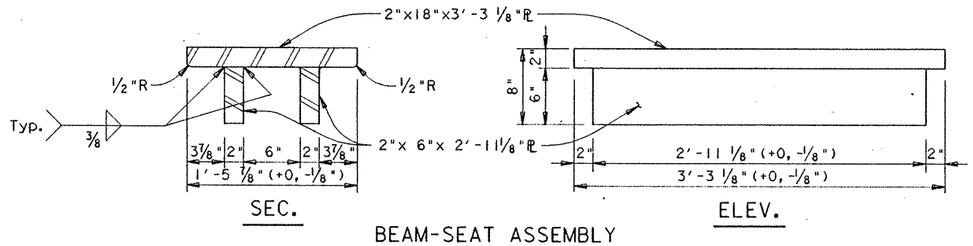

SEC. ELEV.

BEAM-SEAT ASSEMBLY

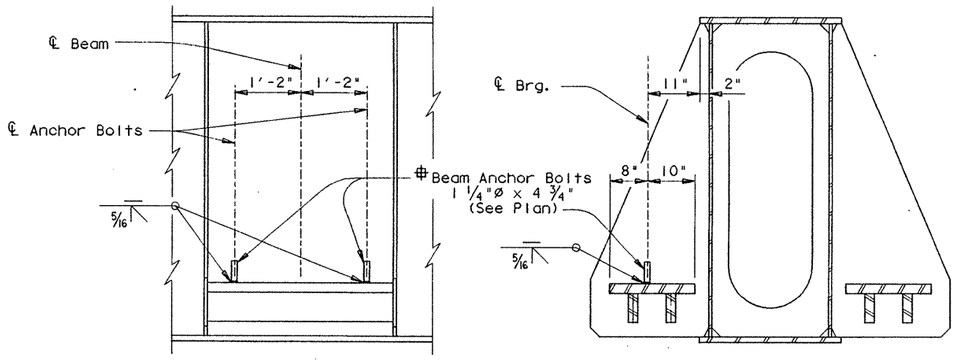

ELEV. SEC.

Beam Anchor Bolts are subsidiary to the the Item Sliding Elastomeric Bearings

BEAM ANCHOR BOLTS

HS 20 LOADING SHEET 2 OF 4

STATE DEPARTMENT OF HIGHWAYS AND PUBLIC TRANSPORTATION

INTERIOR BENT NO. 20 RAMP 3

US 83/281 INTERCHANGE

STATE OF TEXAS
MARK J. BLOSCHOCK
52996
REGISTERED PROFESSIONAL ENGINEER
3-23-92

045200A+ZFA2+[3551211437811NS01.DGN	PREPARED BY AND FOR USE OF TEXAS SDH&PT					
ORIGINAL DRAWING DATE: NOV 1990	STATE DISTRICT	FEDERAL REGION	FEDERAL AID PROJECT #			SHEET
Dn.: GAF	21	6	NH92( )M			333
Ck.: MRL	COUNTY		CONTROL	SECTION	JOB	HIGHWAY
Dn.: MMM	HIDALGO		0039	17	097	US 83/281
Ck.: GAF						

REVISIONS
3/92 - GAF, Weld and clip details.

REV. 3-30 -92

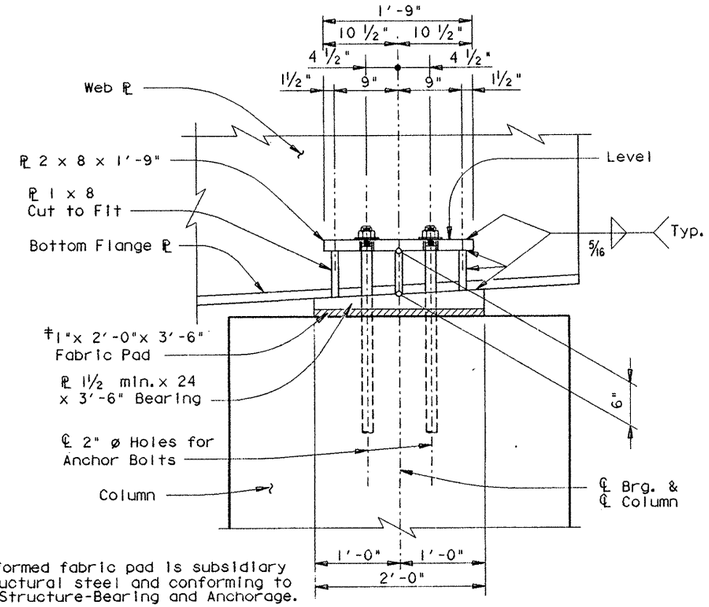

‡ Preformed fabric pad is subsidiary to structural steel and conforming to steel Structure-Bearing and Anchorage.

DETAIL A

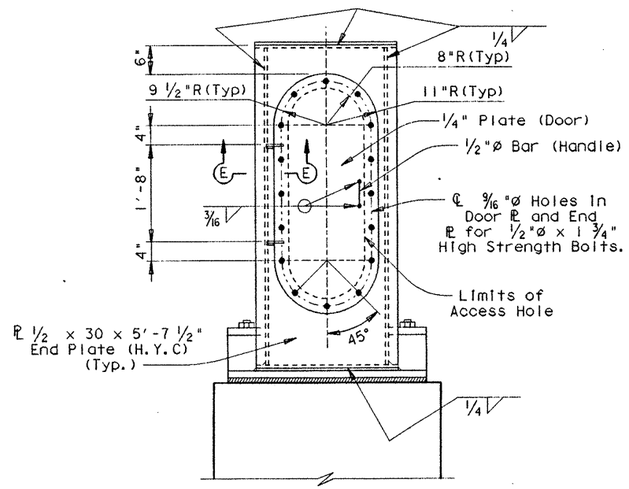

Note: Silicone bead [redacted] uniformly applied around edge of door plate before securing.

SEC. C-C

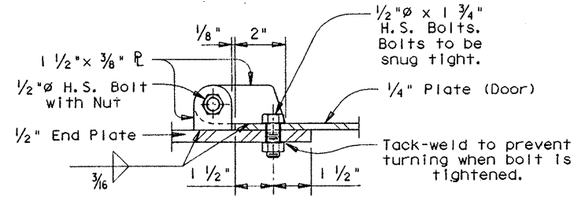

SEC. E-E

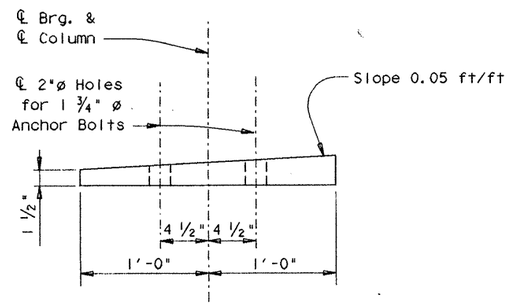

BEARING PLATE DETAIL

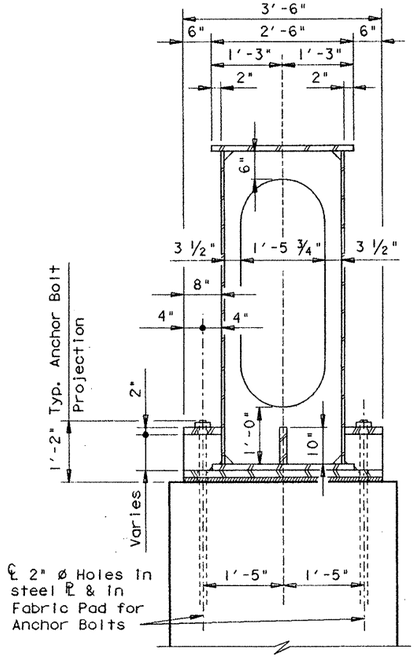

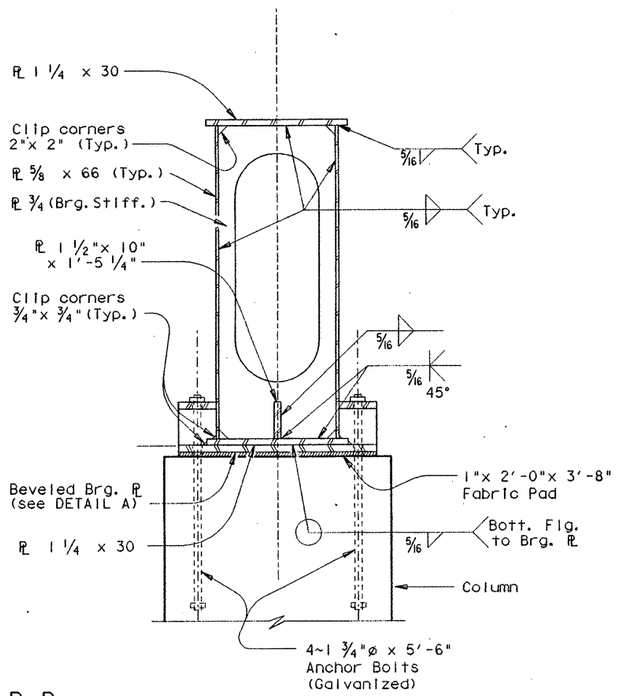

SEC. B-B

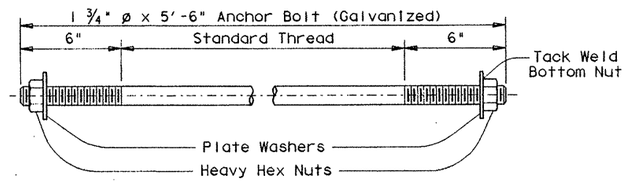

ANCHOR BOLT DETAIL

Total estimated weight of Anchor Bolts, Washers, and Heavy Hex Nuts = 48 lbs. and is included in the quantity shown for Structural Steel (H.S.).

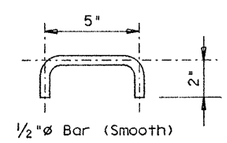

HANDLE DETAIL

STATE OF TEXAS
MARK J. BLOSCHOCK
52996
REGISTERED PROFESSIONAL ENGINEER

3-23-92

REV. 3-30-92

HS 20 LOADING SHEET 3 OF 4

STATE DEPARTMENT OF HIGHWAYS AND PUBLIC TRANSPORTATION

INTERIOR BENT NO. 20 RAMP 3

US 83/281 INTERCHANGE

D45200A::ZFA2:[355121]4378INS01.DGN	PREPARED BY AND FOR USE OF TEXAS SDH&PT					
ORIGINAL DRAWING DATE: NOV 1990	STATE DISTRICT	FEDERAL REGION	FEDERAL AID PROJECT			SHEET
DN.: GAF	21	6	NH92( )M			334
CK.: MRL	REVISIONS 3/92 - GAF, Access doors.					
DW.: MMM	COUNTY		CONTROL	SECTION	JOB	HIGHWAY
CK.: GAF	HIDALGO		0039	17	097	US 83/281

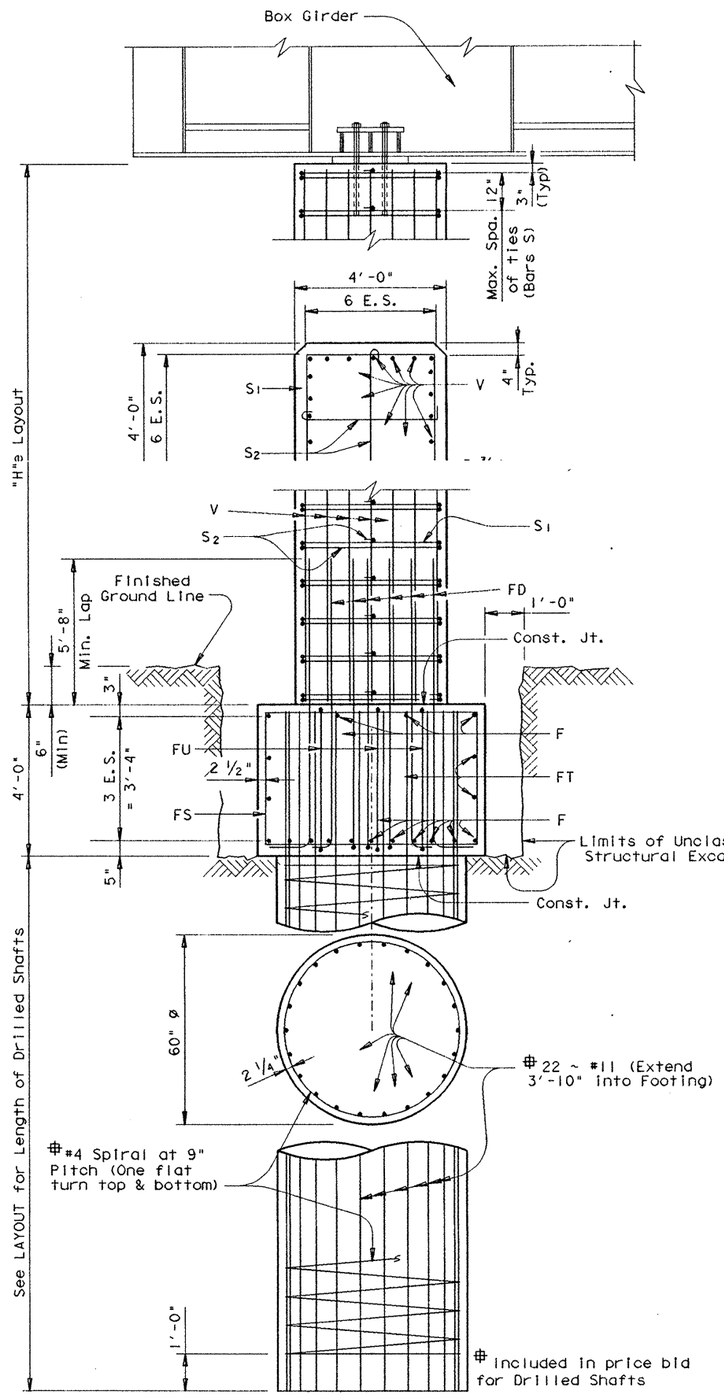

COLUMNS AND FOUNDATION DETAILS

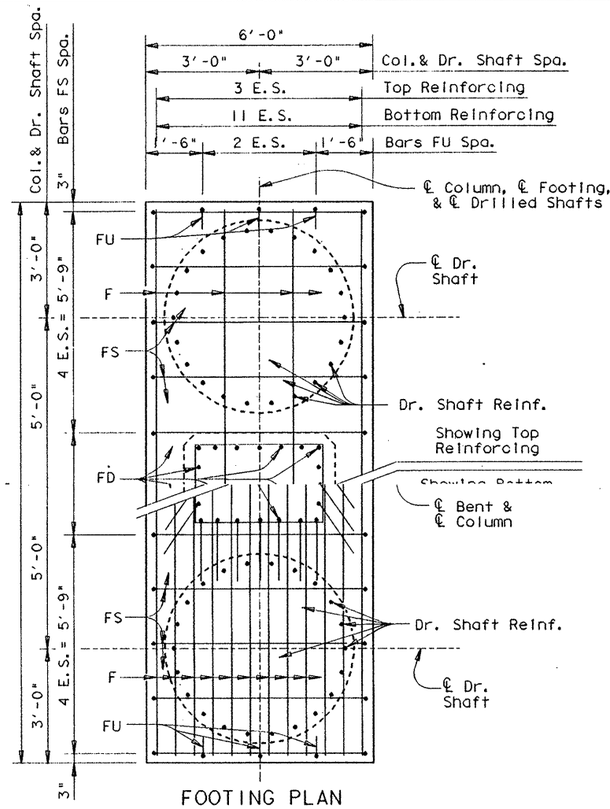

FOOTING PLAN

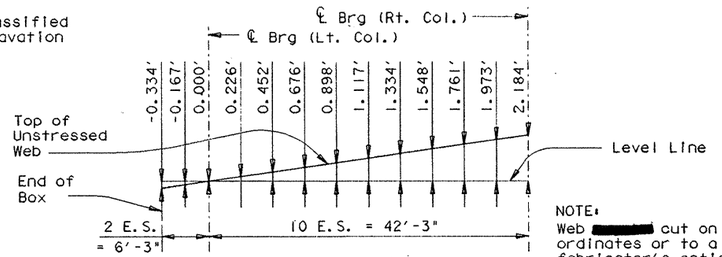

WEB CUTTING DIAGRAM

NOTE:
Web [redacted] cut on straight lines between ordinates or to a smooth curve at the fabricator's option. Values listed include all dead load deflections and cross-slope corrections.

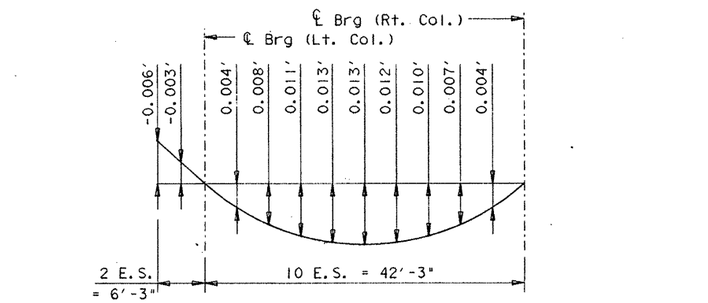

DEAD LOAD DEFLECTION DIAGRAM

Deflections shown are due to cast-in-place concrete only.

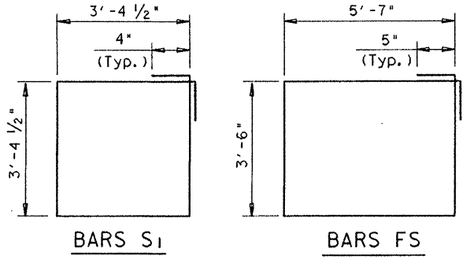

TABLE OF CONSTANT QUANTITIES

Bar	No.	Size	Length	Weight
A	66	# 5	2'- 2"	149
B	8	# 5	31'- 9"	265
F	32	# 11	15'- 8"	2664
FD	48	# 9	11'- 0"	1496
FS	20	# 5	19'- 0"	396
FT	8	# 9	15'- 8"	426
FU	12	# 4	4'- 8"	37

Reinforcing Steel	Lb	# 5732
Class "C" Conc (Ftg)	CY	28.4
Reinf. Conc. Slab	SF	86
Structural Steel H.S.	Lb	43000
Structural Steel H.Y.C	Lb	88

All Column & Footing reinforcing steel [redacted] Grade 60.

TABLE OF VARIABLE QUANTITIES

"H"	Class "C" Conc. (Cols.)	Bars S1 #4 ~ 14'-2"		Bars S2 #4 ~ 4'-2"		Bars V 48 ~ # 9		Reinf. Steel #	Class "C" Conc.
Ft	CY	No.	Weight	No.	Weight	Length	Weight	Lb	CY
19	22.2	40	379	80	223	18'-10"	3074	9408	50.6
20	23.4	42	397	84	234	19'-10"	3237	9600	51.8
21	24.5	44	416	88	245	20'-10"	3400	9793	52.9
22	25.7	46	435	92	256	21'-10"	3563	9986	54.1
23	26.9	48	454	96	267	22'-10"	3726	10179	55.3
24	28.0	50	473	100	278	23'-10"	3890	10373	56.4
25	29.2	52	492	104	289	24'-10"	4053	10566	57.6

TOTAL ESTIMATED QUANTITIES

For contractor's information only.

HS 20 LOADING SHEET 4 OF 4

STATE DEPARTMENT OF HIGHWAYS AND PUBLIC TRANSPORTATION

INTERIOR BENT NO. 20 RAMP 3

US 83/281 INTERCHANGE

STATE OF TEXAS
MARK J. BLOSCHOCK
52996
REGISTERED PROFESSIONAL ENGINEER
3-23-92

REV 3-30-92

045200A1 ZFA2 E355121437811NS01.DGN	PREPARED BY AND FOR USE OF TEXAS SDH&PT					
ORIGINAL DRAWING DATE: NOV 1990	STATE DISTRICT	FEDERAL REGION	FEDERAL AID PROJECT #			SHEET
DN.: GAF CK.: MRL DN.: MMM CK.: GAF REVISIONS	21	6	NH92( )M			335
	COUNTY		CONTROL	SECTION	JOB	HIGHWAY
	HIDALGO		0039	17	097	US 83 /281

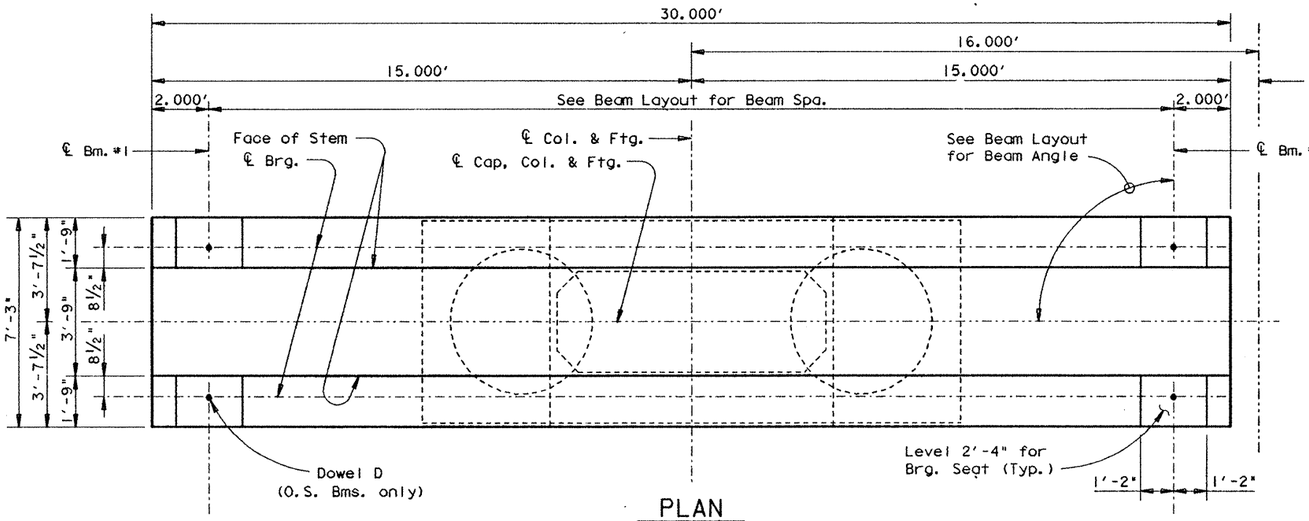

PLAN

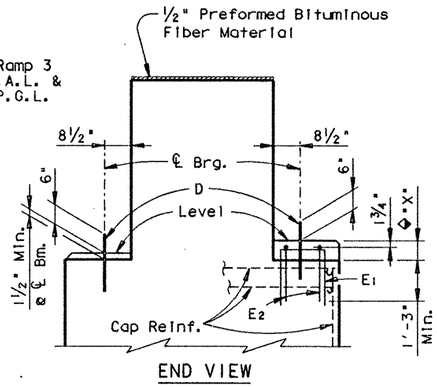

END VIEW

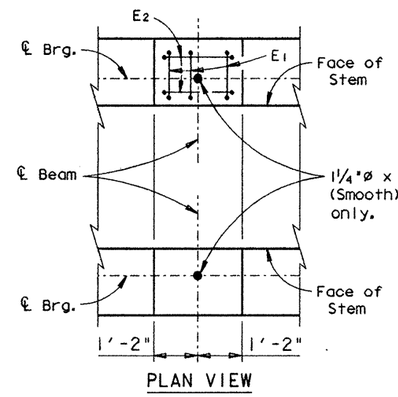

PLAN VIEW

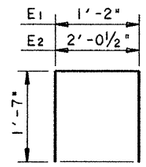

BARS E

BEARING SEAT DETAILS

◆ Reinforced Pedestals [redacted] required where "X" is greater than 2½" and [redacted] considered subsidiary to the Bid Item "Class C Concrete (Bent). Compare bearing seat elevations to determine value of "X".

NOTE: For Bearing Seat surface finish see GpC(SPL) sheet.

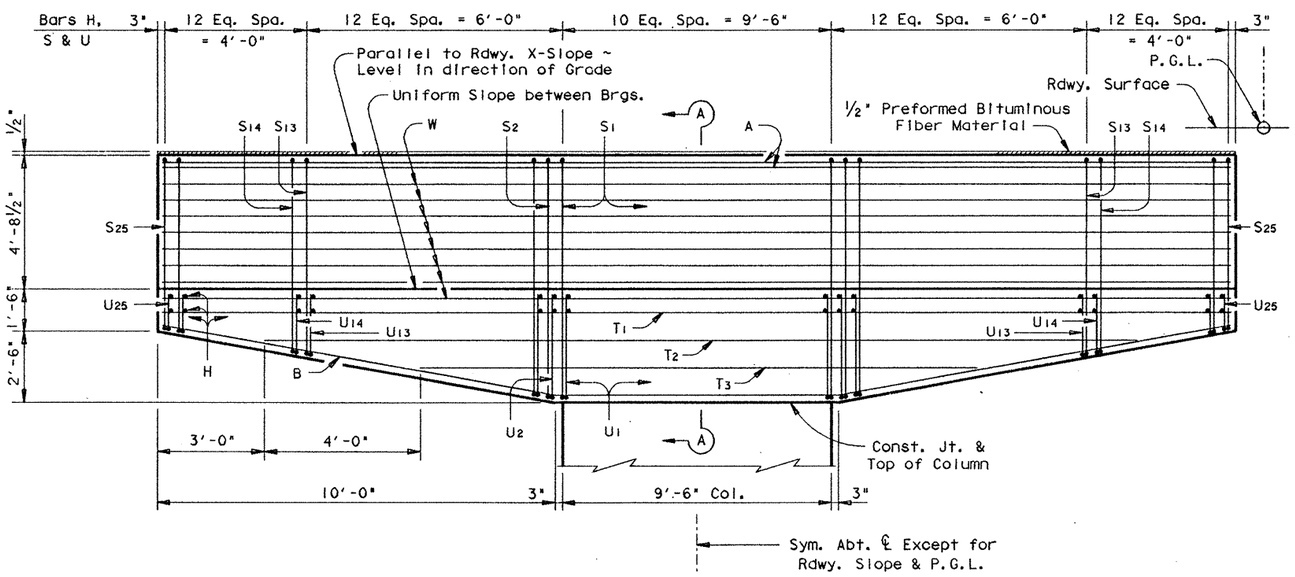

CAP ELEVATION

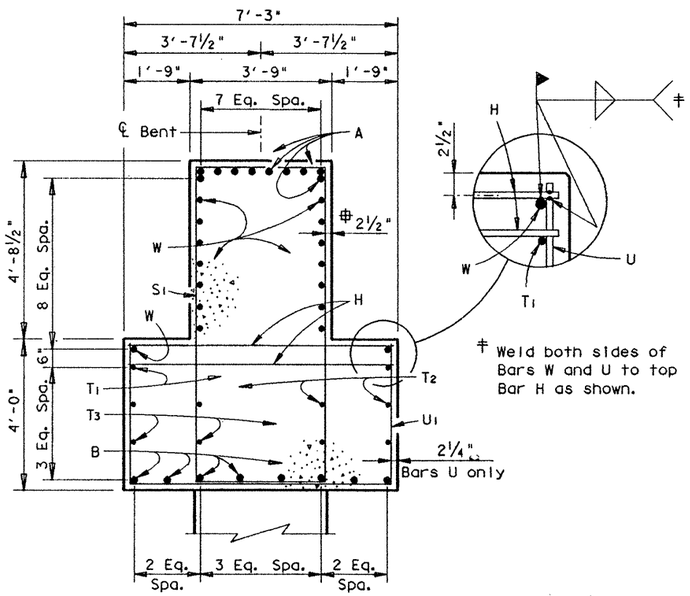

SECTION A-A

‡ Weld both sides of Bars W and U to top Bar H as shown.

Typical except as noted

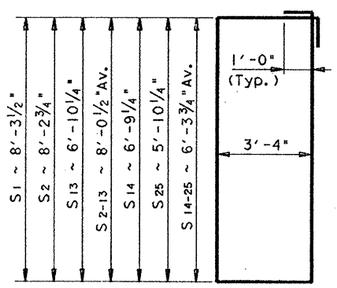

BARS S

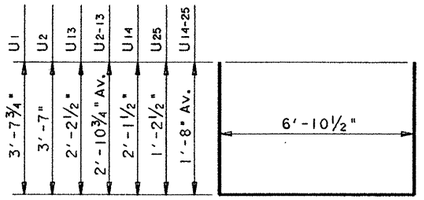

BARS U

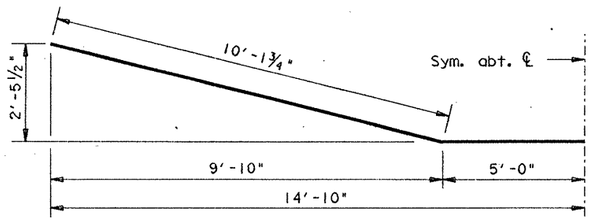

BARS B

STATE OF TEXAS
MARK J. BLOSCHOCK
52996
REGISTERED PROFESSIONAL ENGINEER
9-25-91

HS 20 LOADING — SHEET 1 OF 2

STATE DEPARTMENT OF HIGHWAYS AND PUBLIC TRANSPORTATION

INTERIOR BENT NO. 21 RAMP 3

US 83/281 INTERCHANGE

D45350A1 : ZFA2 : [355100]4377INV03.DGN | PREPARED BY AND FOR USE OF TEXAS SDH&PT

ORIGINAL DRAWING DATE: NOVEMBER 1990	REVISIONS	STATE DISTRICT	FEDERAL REGION	FEDERAL AID PROJECT	SHEET
DR.:- JCC		21	6	NH 92( )M	336
CK.:- MAS		COUNTY		CONTROL	SECTION	JOB	HIGHWAY
DW.:- DRG/PSR		HIDALGO		0039	17	097	US 83/281
CK.:- JCC							

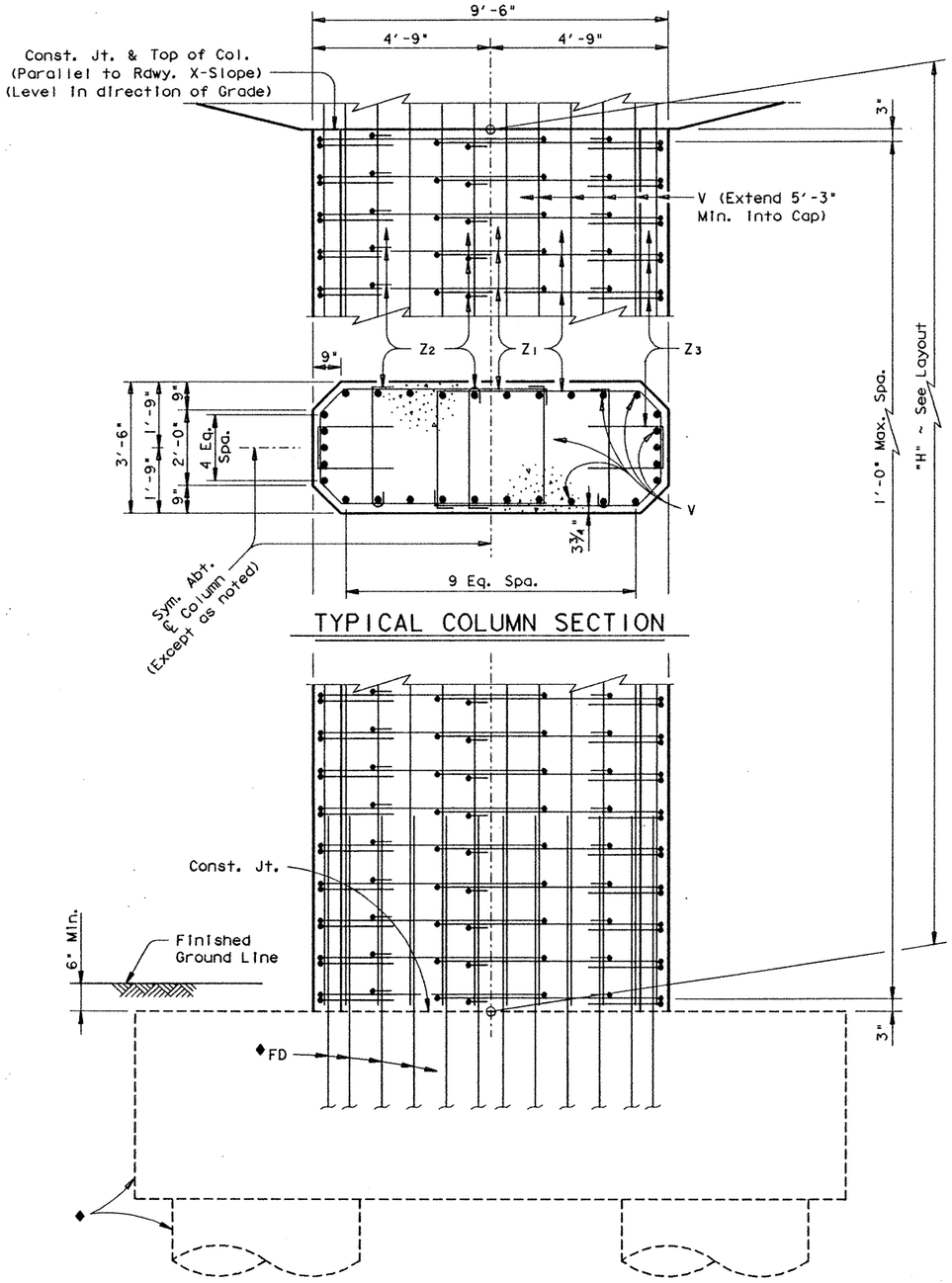

♦See Footing Details sheet for foundation details and quantities not shown.

COLUMN ELEVATION

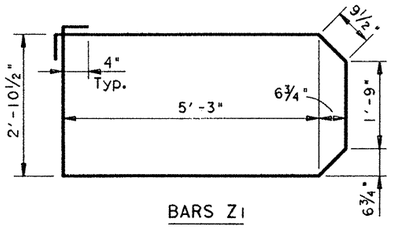

BARS Z1

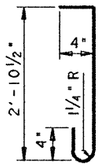

BARS Z2

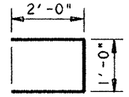

BARS Z3

GENERAL NOTES:

Designed according to A.A.S.H.T.O. 1989 Standard and Current Interim Specifications.

Calculated Foundation Load = 465 Tons/Dr. Shaft

See "Form Liner Details" Sheet for aesthetic treatment of Columns and Cap.

See Inverted Tee Bent Special Cap Details Sheet for details not shown.

TABLE OF CONSTANT QUANTITIES

Bar	No.	Size	Length	Weight
A	10	# 11	29'- 8"	1576
B	8	# 11	30'- 4"	1289
D	4	1¼"Ø	1'- 6"	25
H	118	# 6	6'-11"	1226
S1	11	# 6	25'- 3"	417
S2-13	24	# 6	23'- 9"Av	856
S14-25	24	# 6	21'- 4"Av	769
T1	2	# 6	29'- 8"	89
T2	4	# 6	24'- 0"	144
T3	4	# 6	16'- 0"	96
U1	11	# 5	14'- 2"	163
U2-13	24	# 5	12'- 8"Av	317
U14-25	24	# 5	10'- 3"Av	257
W	16	# 9	29'- 8"	1614
Reinforcing Steel			Lb	⌗ 8838
Class "C" Concrete (Cap)			CY	45.3

TABLE OF VARIABLE QUANTITIES

"H"	Class "C" Conc. (Col.)	Bars Z1 17'-5" ~ #4		Bars Z2 3'-8" ~ #4		Bars Z3 5'-0" ~ #4		Bars V 30 ~ # 11		⌗ Reinf. Steel	Class "C" Conc.
Ft	CY	No.	Weight	No.	Weight	No.	Weight	Length	Weight	Lb	CY
13	15.5	28	326	42	103	28	94	18'- 3"	2909	17371	85.4
14	16.7	30	349	45	110	30	100	19'- 3"	3068	17566	86.6
15	17.9	32	372	48	118	32	107	20'- 3"	3228	17764	87.8
16	19.0	34	396	51	125	34	114	21'- 3"	3387	17961	88.9
17	20.2	36	419	54	132	36	120	22'- 3"	3546	18156	90.1

TOTAL ESTIMATED QUANTITIES

▬ Includes Footing Quantities.

⌗ For contractor's information only.

All cap & column reinforcing steel ▬ Grade 60.

HS 20 LOADING

SHEET 2 OF 2

STATE DEPARTMENT OF HIGHWAYS AND PUBLIC TRANSPORTATION

INTERIOR BENT NO. 21 RAMP 3

US 83/281 INTERCHANGE

STATE OF TEXAS
MARK J. BLOSCHOCK
52996
REGISTERED PROFESSIONAL ENGINEER
9-25-91

REV. 3-30 -92

D45350A1:ZFA2:(355100)4377INV03.DGN	PREPARED BY AND FOR USE OF TEXAS SDH&PT					
ORIGINAL DRAWING DATE: NOVEMBER 1990	STATE DISTRICT	FEDERAL REGION	FEDERAL AID PROJECT			SHEET
DR.:- MRL	REVISIONS	21	6	NH 92(), etc.		337
CK.:- GAF		COUNTY		CONTROL	SECTION	JOB	HIGHWAY
DW.:- DRG/PSR		HIDALGO		0039	17	097	US 83/281
CK.:- JCC							

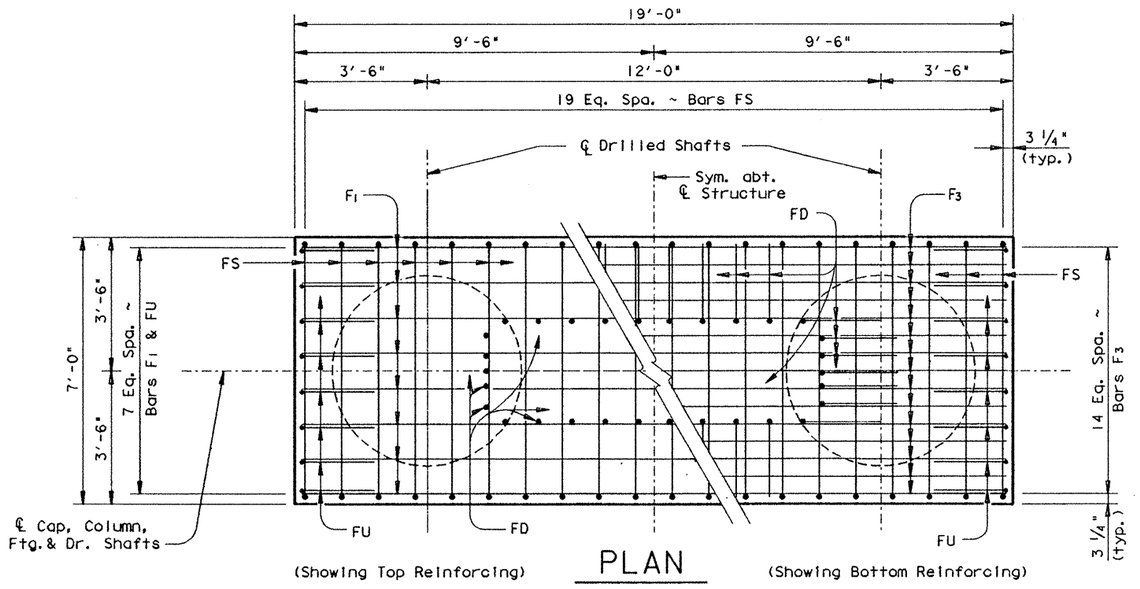

(Showing Top Reinforcing) PLAN (Showing Bottom Reinforcing)

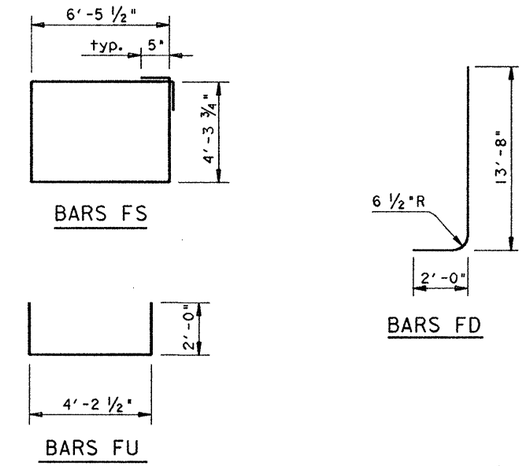

‡TABLE OF FOOTING QUANTITIES

Bar	No.	Size	Length	Weight
F1	8	# 8	18'- 6"	395
F2	8	# 5	18'- 6"	154
F3	15	# 11	18'- 6"	1474
FD	30	# 11	15'- 6"	2471
FS	20	# 5	22'- 5"	468
FU	16	# 5	8'- 3"	139

Reinforcing Steel	Lb	‡ 5101
Class "C" Concrete	CY	24.6

‡ For Contractor's information only.

‡ Quantities shown are for one footing only.

All footing reinforcing [redacted] Grade 60.

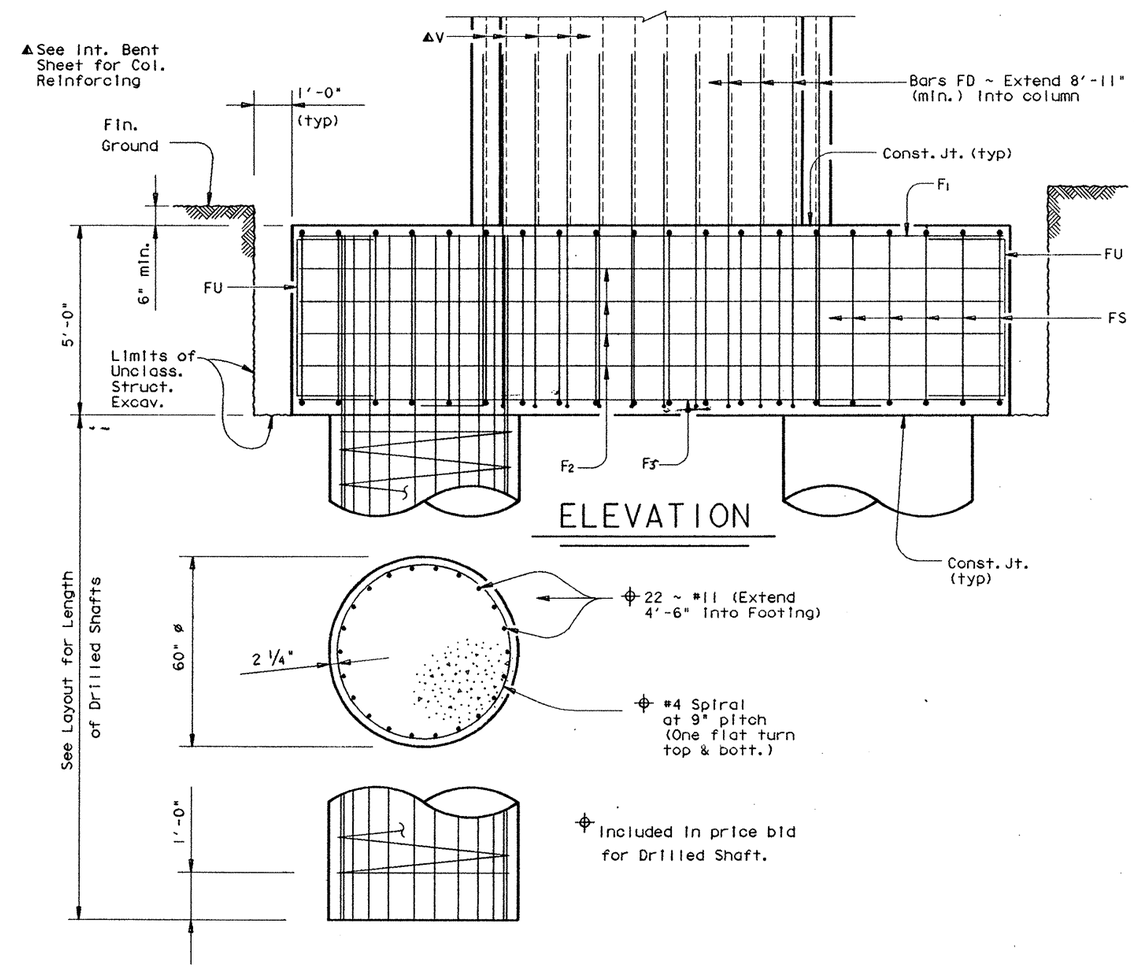

ELEVATION

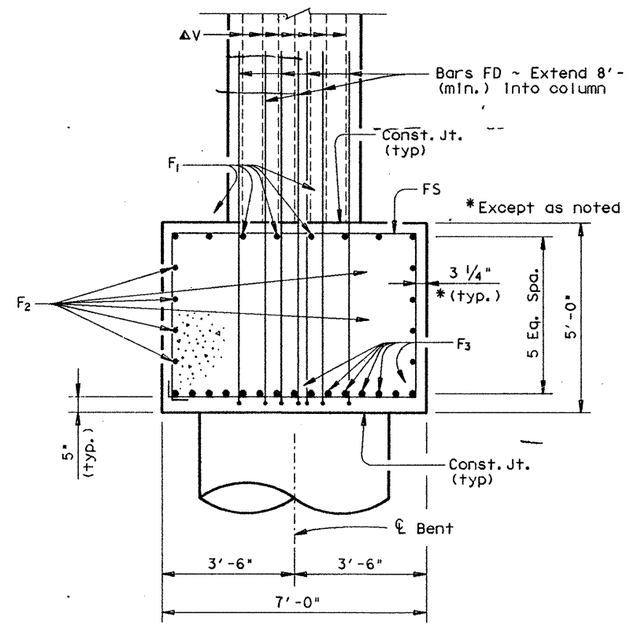

FOOTING SECTION

HS 20 LOADING

STATE DEPARTMENT OF HIGHWAYS AND PUBLIC TRANSPORTATION

FOOTING DETAILS BENT NO. 21 RAMP 3

US 83/281 INTERCHANGE

STATE OF TEXAS
MARK J. BLOSCHOCK
52996
REGISTERED PROFESSIONAL ENGINEER

9-25-91

D45350A: ZFA2: [355100]4377MIS03.DGN	PREPARED BY AND FOR USE OF TEXAS SDH&PT					
ORIGINAL DRAWING DATE: JANUARY 1991	STATE DISTRICT	FEDERAL REGION	FEDERAL AID PROJECT			SHEET
DN.: GAF/MRL	21	6	NH 92 ( ) MF			338
CK.: MRL/GAF	COUNTY		CONTROL	SECTION	JOB	HIGHWAY
DW.: DRG/PSR	HIDALGO		0039	17	097	US 83/281
CK.: JCC						

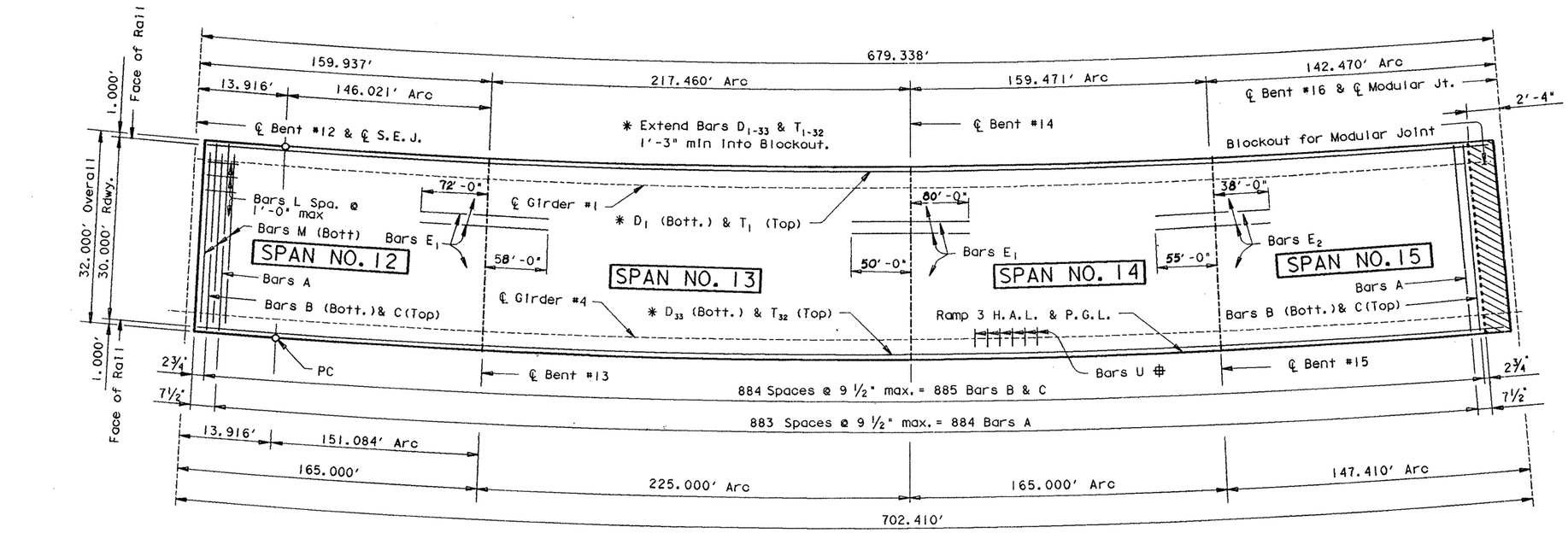

PLAN

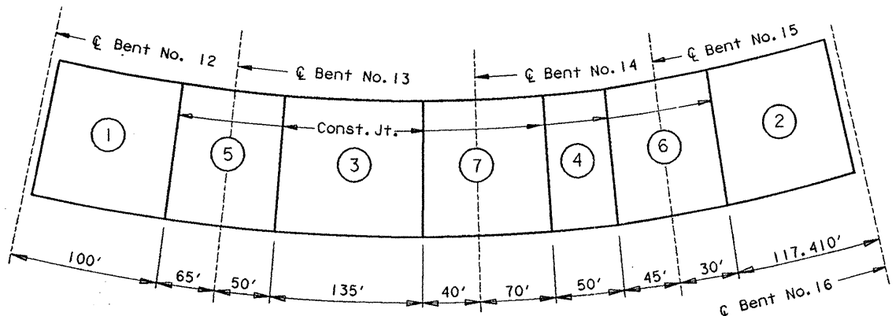

CONCRETE PLACING SEQUENCE

At Contractors option, continuous placement [redacted] used. For continuous placement, the minimum rate of concrete placing and finishing [redacted] not [redacted] less than 30 linear feet of bridge deck per hour.

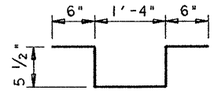

BARS U

NOTE:
Bars U [redacted] spaced at 2'-0" along the entire length of each Girder except, there [redacted] no Bars U at locations where the Girder top flange exceeds 2 ¼" in thickness nor [redacted] there [redacted] bars U in the Blockout For Modular Joint. (See Girder Elevations)

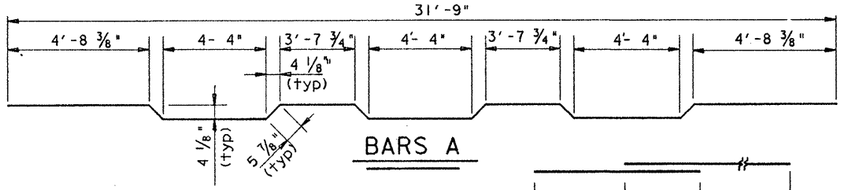

BARS A

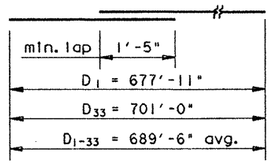

BARS D

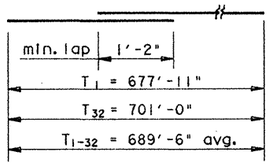

BARS T

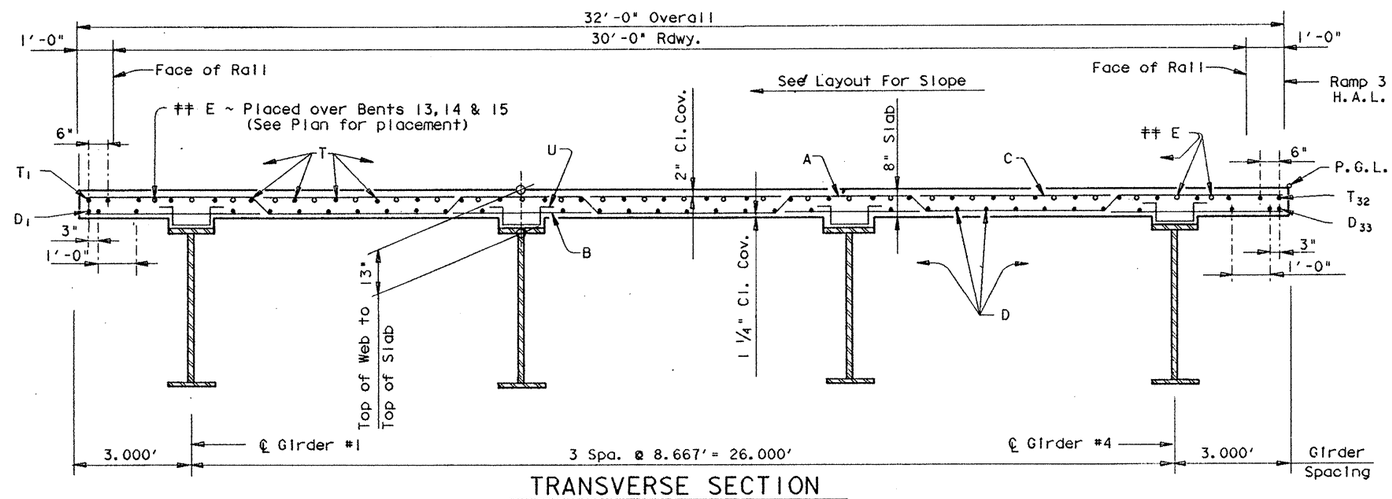

TRANSVERSE SECTION

REV. 3-30-92

TABLE OF ESTIMATED QUANTITIES

Bar	No.	Size	Length	Weight
A	884	# 5	32'- 7"	30042
B	885	# 4	31'- 9"	18770
C	885	# 5	31'- 9"	29307
D_{1-33}	33	# 5	705'- 1 "Av◩	24268
E_1	54	# 6	135'- 3" △	10970
E_2	27	# 6	94'- 9" ◆	3842
L	31	# 4	3'- 0"	62
M	3	# 5	29'- 9"	93
U	1219	# 4	3'- 3"	2646
T_{1-32}	32	# 4	702'- 4 "Av◪	15013

Reinforcing Steel	Lb	‡ 138531
Str. Steel (HS)	Lb	‡ 963700
Str. Steel (HYC)	Lb	94100

Span	Reinf. Conc. Slab ~ SF	Class "S" Conc. ~ CY Slab ‡
# 12	5199	141.7
# 13	7079	193.0
# 14	5192	141.5
# 15	4638	126.5
Total	22108	602.7

‡ For Contractor's Information only.

◩ Length shown includes 11 ~ 1'-5" min. lap.
◪ Length shown includes 11 ~ 1'-2" min. lap.
△ Length shown includes 3 ~ 1'-9" min. lap.
◆ Length shown includes 1 ~ 1'-9" min. lap.
‡ Quantity shown includes 38900 lbs. for Steel Cap, Bent No. 13.

GENERAL NOTES:

Designed according to A.A.S.H.T.O. 1989 Standard Specifications.

Design fc = 1200 p.s.i.

The use of Precast Concrete Panels [redacted] not [redacted] permitted.

See Modular Joint Details sheet For Type B (MOD) diaf. and joint details not shown.

See Special Bearings Detail sheet for SE6 Bearings.

See GpC (SPL) sheet for details not shown.

HS 20 LOADING

Sheet 1 of 5

STATE DEPARTMENT OF HIGHWAYS AND PUBLIC TRANSPORTATION

UNIT NO. 5, RAMP 3

702.41' PLATE GIRDER UNIT
165.00'-225.00'-165.00'-147.41'

US 83/281 INTERCHANGE

STATE OF TEXAS
MARK J. BLOSCHOCK
52996
REGISTERED PROFESSIONAL ENGINEER
9-25-91

D45350A: ZFA1: [355163]4378SFC02.DGN

PREPARED BY AND FOR USE OF TEXAS SDH&PT

ORIGINAL DRAWING DATE:	REVISIONS	STATE DISTRICT	FEDERAL REGION	FEDERAL AID PROJECT	*	SHEET
DN.:- MLR		21	6	NH-92( )M		339
CK.:- GAF		COUNTY		CONTROL	SECTION	JOB	HIGHWAY
DW.:- TKW		HIDALGO		0039	17	097	83/281
CK.:- MLR							

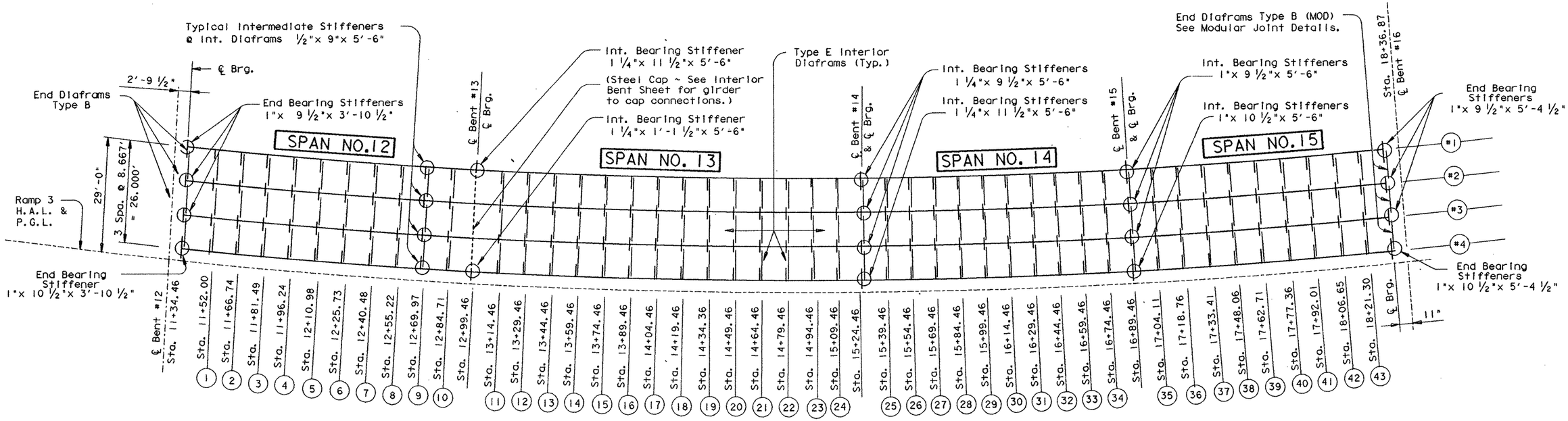

FRAMING PLAN

TABLE OF RADII	
Girder #1	925.930'
Girder #2	934.596'
Girder #3	943.263'
Girder #4	951.930'
P.G.L	954.930'

HS 20 LOADING

STATE OF TEXAS
MARK J. BLOSCHOCK
52996
REGISTERED PROFESSIONAL ENGINEER
9-25-91

STATE DEPARTMENT OF HIGHWAYS AND PUBLIC TRANSPORTATION

UNIT NO. 5, RAMP 3

702.41' PLATE GIRDER UNIT
165.00'-225.00'-165.00'-147.41'

US 83/281 INTERCHANGE

D45350A • ZFA1 • [355163]4378SFC02.DGN | PREPARED BY AND FOR USE OF TEXAS SDH&PT

ORIGINAL DRAWING DATE•

DN.• MLR
CK.• GAF
DW.• TKW
CK.• MLR

REVISIONS

STATE DISTRICT	FEDERAL REGION	FEDERAL AID PROJECT •	SHEET
21	6	NH 926)M	340

COUNTY	CONTROL	SECTION	JOB	HIGHWAY
HIDALGO	0039	17	097	83/281

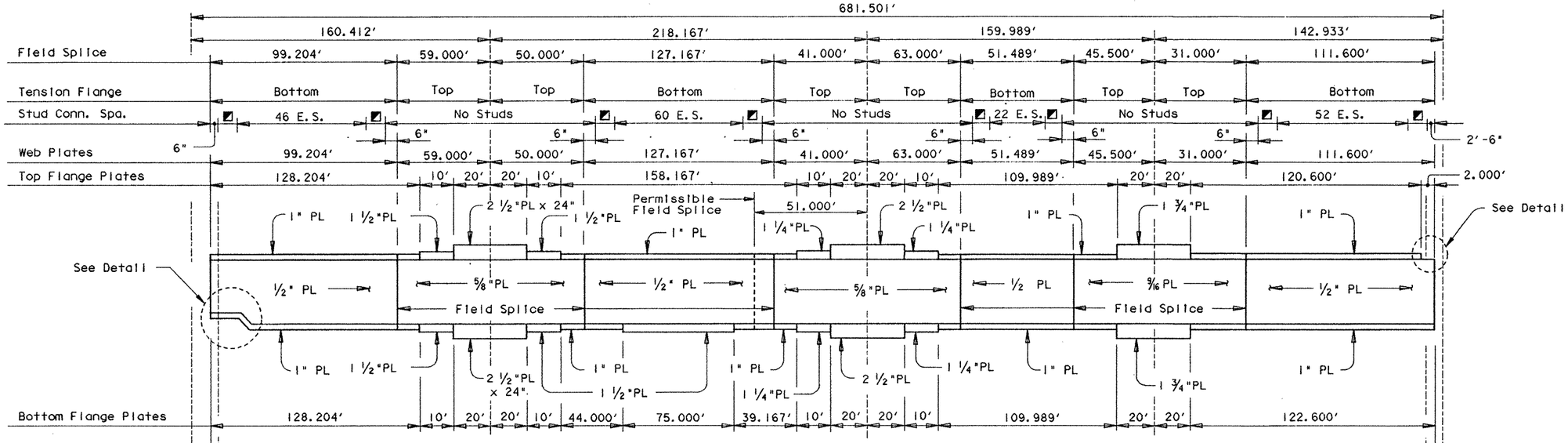

Girder 1 Elevation

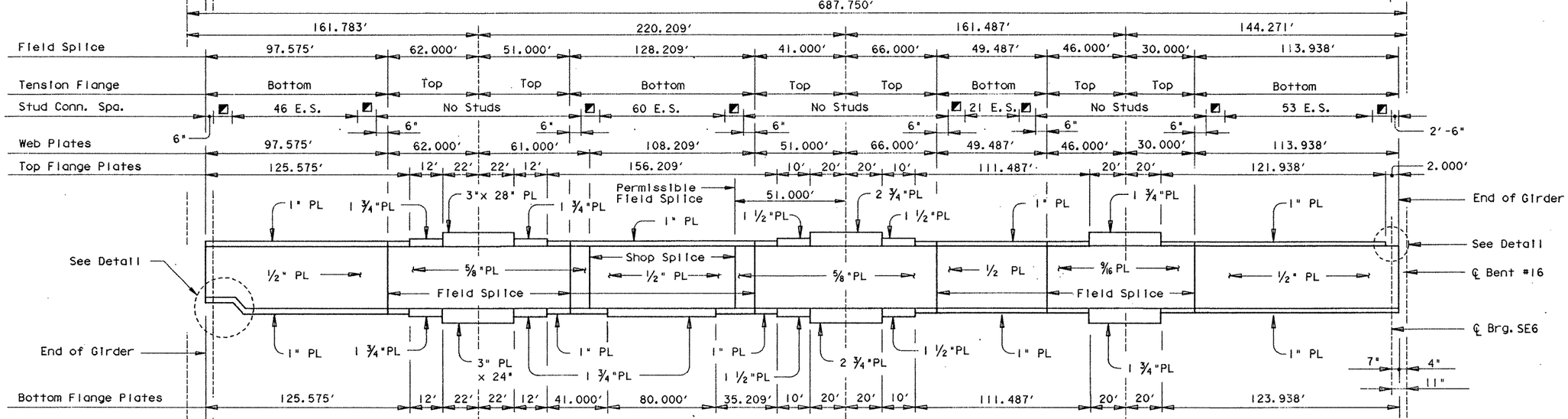

Girder 2 Elevation

All Web Plates are 66" high unless otherwise noted and are H.S. Steel.
All Flange Plates are H.S. Steel
All flange Plates are 20" Wide unless otherwise noted. See Girder 4 Elevation for Girder 4 flange widths.

■ 8 E.S. = 4'-0"

STATE OF TEXAS
MARK J. BLOSCHOCK
52996
REGISTERED PROFESSIONAL ENGINEER

9-25-91

HS 20 LOADING

Sheet 3 of 5

STATE DEPARTMENT OF HIGHWAYS AND PUBLIC TRANSPORTATION

UNIT NO. 5, RAMP 3

702.41' PLATE GIRDER UNIT
165.00'-225.00'-165.00'-147.41'

US 83/281 INTERCHANGE

D45350A:ZFA1:[355163]4378SFC03.DGN

PREPARED BY AND FOR USE OF TEXAS SDH&PT

ORIGINAL DRAWING DATE:	REVISIONS	STATE DISTRICT	FEDERAL REGION	FEDERAL AID PROJECT	SHEET
DN.:- MLR		21	6	NH 92 ( ) M	341
CK.:- GAF					
DW.:- TKW		COUNTY		CONTROL / SECTION / JOB	HIGHWAY
CK.:- MLR		HIDALGO		0039 / 17 / 097	83/281

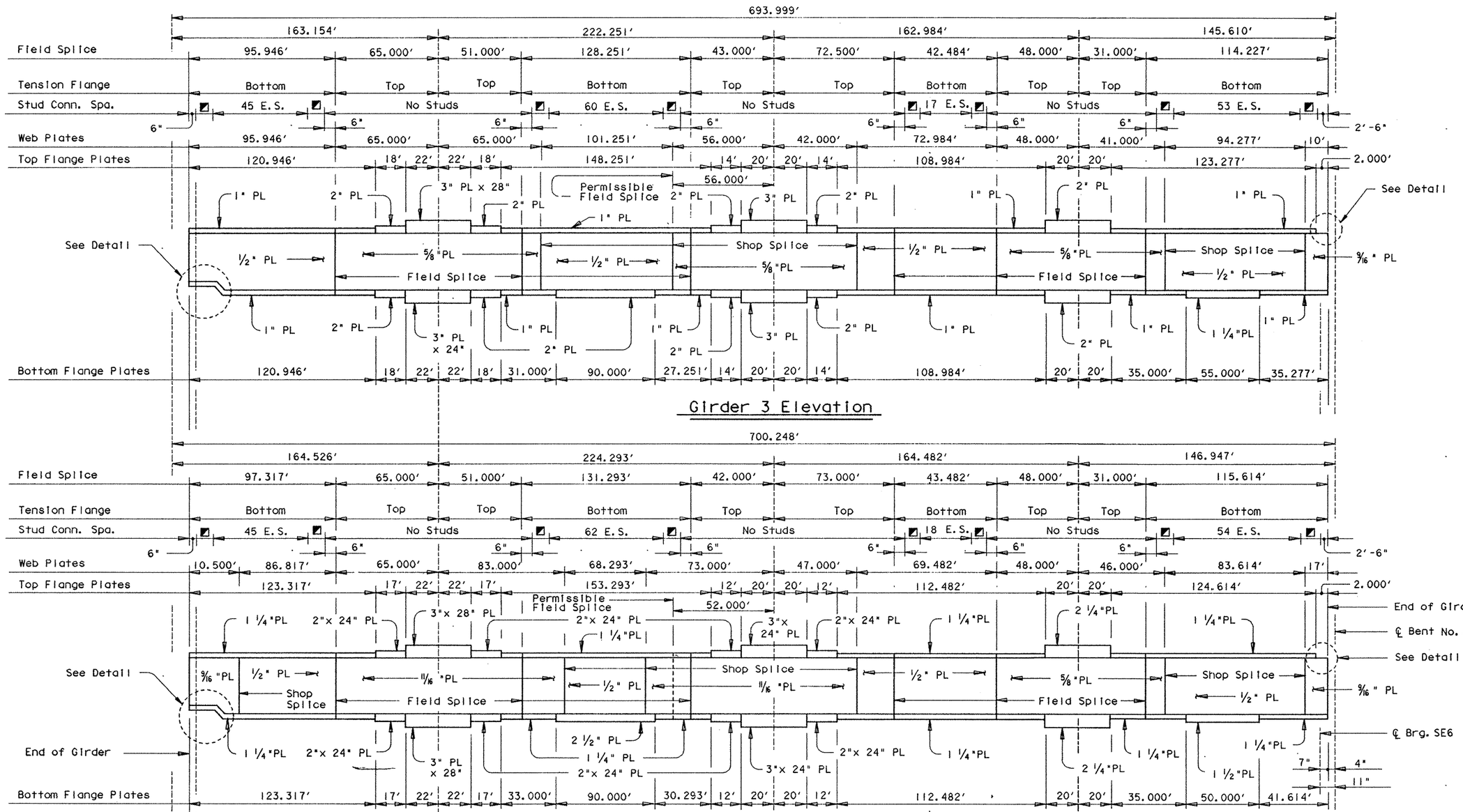

Girder 3 Elevation

Girder 4 Elevation

(Steel Cap ~ See Interior Bent Sheet for girder to cap connections.)

(For Girder 4, all flange plates are 22" wide unless otherwise noted.)

◩ 8 E.S. = 4'-0"

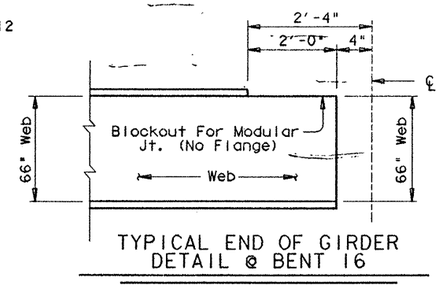

TYPICAL END OF GIRDER DETAIL @ BENT 16

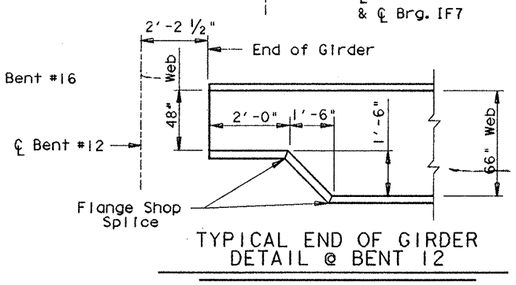

TYPICAL END OF GIRDER DETAIL @ BENT 12

HS 20 LOADING

Sheet 4 of 5

STATE DEPARTMENT OF HIGHWAYS AND PUBLIC TRANSPORTATION

UNIT NO. 5, RAMP 3

702.41' PLATE GIRDER UNIT

165.00'-225.00'-165.00'-147.41'

US 83/281 INTERCHANGE

STATE OF TEXAS
MARK J. BLOSCHOCK
52996
REGISTERED PROFESSIONAL ENGINEER
9-25-91

D45350A: ZFA1: (355163)4378SFC03.DGN

ORIGINAL DRAWING DATE:	REVISIONS
DN.: MLR	
CK.: GAF	
DW.: TKW	
CK.: MLR	

PREPARED BY AND FOR USE OF TEXAS SDH&PT

STATE DISTRICT	FEDERAL REGION	FEDERAL AID PROJECT	SHEET
21	6	NH92( )M	542

COUNTY	CONTROL	SECTION	JOB	HIGHWAY
HIDALGO	0039	17	097	83/281

WEB CUTTING TABLE

DIAFRAM		GIRDER 1 "Y"	GIRDER 2 "Y"	GIRDER 3 "Y"	GIRDER 4 "Y"
SPAN 12	℄ Brg.	1.986	1.870	1.756	1.641
	1	2.003	1.933	1.863	1.786
	2	2.034	1.997	1.959	1.908
	3	2.076	2.055	2.035	1.997
	4	2.121	2.103	2.084	2.053
	5	2.155	2.128	2.103	2.072
	6	2.150	2.116	2.085	2.056
	7	2.111	2.074	2.040	2.017
	8	2.054	2.017	1.986	1.969
	9	1.994	1.966	1.943	1.932
	10	1.953	1.939	1.926	1.920
SPAN 13	℄ Brg.	1.936	1.936	1.936	1.936
	11	1.951	1.969	1.984	1.989
	12	1.989	2.027	2.058	2.068
	13	2.051	2.108	2.157	2.170
	14	2.119	2.199	2.265	2.282
	15	2.181	2.281	2.362	2.381
	16	2.223	2.341	2.436	2.457
	17	2.239	2.367	2.471	2.494
	18	2.230	2.361	2.469	2.492
	19	2.195	2.322	2.427	2.450
	20	2.130	2.246	2.342	2.364
	21	2.045	2.144	2.227	2.248
	22	1.948	2.025	2.089	2.108
	23	1.849	1.901	1.946	1.960
	24	1.767	1.792	1.815	1.822
SPAN 14	℄ Brg.	1.704	1.704	1.704	1.705
	25	1.673	1.647	1.628	1.619
	26	1.662	1.617	1.576	1.559
	27	1.668	1.609	1.551	1.527
	28	1.679	1.613	1.545	1.515
	29	1.684	1.617	1.546	1.512
	30	1.675	1.612	1.543	1.510
	31	1.652	1.595	1.533	1.504
	32	1.611	1.564	1.512	1.491
	33	1.550	1.516	1.479	1.466
	34	1.483	1.464	1.445	1.440
SPAN 15	℄ Brg.	1.419	1.419	1.419	1.419
	35	1.368	1.387	1.404	1.407
	36	1.319	1.359	1.390	1.394
	37	1.263	1.319	1.363	1.365
	38	1.187	1.255	1.306	1.305
	39	1.080	1.153	1.207	1.205
	40	0.937	1.007	1.059	1.056
	41	0.754	0.815	0.860	0.857
	42	0.533	0.578	0.614	0.610
	43	0.280	0.304	0.323	0.320
	℄ Brg.	0.000	0.000	0.000	0.000

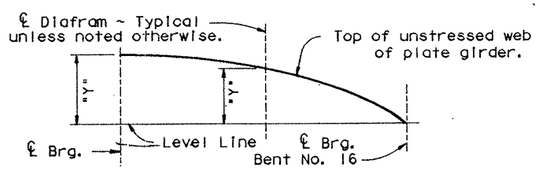

WEB CUTTING DIAGRAM

Note: Web cut [redacted] cut on straight lines between ordinates or to a smooth curve at the fabricator's option. Values listed include all dead load deflections and vertical curve corrections.

PLATE GIRDER FABRICATION NOTE:

Girder tension flanges and webs are classified as main members and [redacted] conform to Item 442.3(1).

Except at changes in section, shop or field flange and web splices in plate girders [redacted] located as desirable to optimize plate lengths and erection procedures, except that splices [redacted] not [redacted] allowed where a 40' or less unspliced length would suffice; neither [redacted] tension flange splices [redacted] allowed within .05S either side of interior bearings, within .10S either side of the centerlines of the interior span, nor within the range between .30S and .50S from the end bearings. (S=length c.c. Bearing of Span in which the splice is made).

Flange and Web Splices [redacted] made by full penetration groove welds in accordance with the Item "Steel Structures".

TABLE OF DEAD LOAD DEFLECTIONS

		GIRDER 1	GIRDER 2	GIRDER 3	GIRDER 4
SPAN 12	0	0.000'	0.000'	0.000'	0.000'
	1	0.062'	0.060'	0.059'	0.048'
	2	0.112'	0.107'	0.105'	0.085'
	3	0.142'	0.135'	0.129'	0.103'
	4	0.151'	0.138'	0.128'	0.101'
	5	0.137'	0.119'	0.103'	0.080'
	6	0.105'	0.082'	0.064'	0.045'
	7	0.064'	0.041'	0.022'	0.009'
	8	0.025'	0.007'	-0.007'	-0.014'
	9	0.004'	-0.007'	-0.015'	-0.018'
	10	0.000'	0.000'	0.000'	0.000'
SPAN 13	11	0.033'	0.049'	0.062'	0.062'
	12	0.103'	0.137'	0.163'	0.162'
	13	0.186'	0.241'	0.280'	0.275'
	14	0.249'	0.320'	0.371'	0.362'
	15	0.276'	0.356'	0.414'	0.403'
	16	0.261'	0.339'	0.398'	0.387'
	17	0.209'	0.275'	0.325'	0.318'
	18	0.129'	0.177'	0.212'	0.210'
	19	0.050'	0.074'	0.093'	0.094'
	20	0.000'	0.000'	0.000'	0.000'

		GIRDER 1	GIRDER 2	GIRDER 3	GIRDER 4
SPAN 14	21	-0.011'	-0.028'	-0.041'	-0.045'
	22	-0.005'	-0.035'	-0.061'	-0.069'
	23	0.013'	-0.026'	-0.063'	-0.074'
	24	0.032'	-0.011'	-0.053'	-0.068'
	25	0.043'	0.001'	-0.042'	-0.059'
	26	0.041'	0.003'	-0.036'	-0.052'
	27	0.029'	-0.003'	-0.037'	-0.048'
	28	0.012'	-0.012'	-0.037'	-0.043'
	29	0.000'	-0.015'	-0.028'	-0.029'
SPAN 15	30	0.000'	0.000'	0.000'	0.000'
	31	0.020'	0.032'	0.042'	0.041'
	32	0.049'	0.075'	0.094'	0.090'
	33	0.085'	0.122'	0.148'	0.139'
	34	0.116'	0.160'	0.191'	0.179'
	35	0.135'	0.183'	0.215'	0.201'
	36	0.139'	0.186'	0.216'	0.201'
	37	0.125'	0.166'	0.193'	0.179'
	38	0.095'	0.126'	0.145'	0.135'
	39	0.051'	0.068'	0.079'	0.073'
	40	0.000'	0.000'	0.000'	0.000'

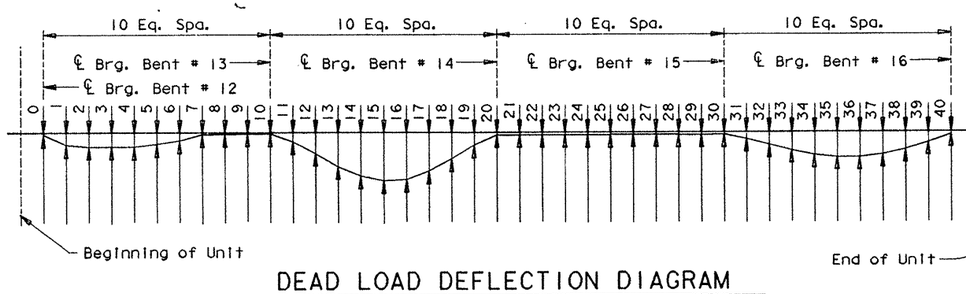

DEAD LOAD DEFLECTION DIAGRAM

Deflections shown are due to cast-in-place concrete slab only.

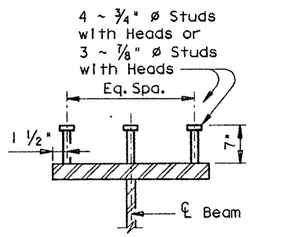

SHEAR CONNECTOR STUD DETAIL

Studs [redacted] Electric arc end-welded to the flanges with complete fusion.

STATE OF TEXAS
MARK J. BLOSCHOCK
52996
REGISTERED PROFESSIONAL ENGINEER
9-25-91

HS 20 LOADING

STATE DEPARTMENT OF HIGHWAYS AND PUBLIC TRANSPORTATION

UNIT NO. 5, RAMP 3

702.41' PLATE GIRDER UNIT
165.00'-225.00'-165.00'-147.41'

US 83/281 INTERCHANGE

D45350A: ZFAI: C3551631437BSFC02.DGN	PREPARED BY AND FOR USE OF TEXAS SDH&PT					
ORIGINAL DRAWING DATE:	STATE DISTRICT	FEDERAL REGION	FEDERAL AID PROJECT			SHEET
DN.: MLR	21	6	NH 92( )M			343
CK.: GAF	COUNTY		CONTROL	SECTION	JOB	HIGHWAY
DN.: TKW	HIDALGO		0039	17	097	83/281
CK.: MLR						

REVISIONS

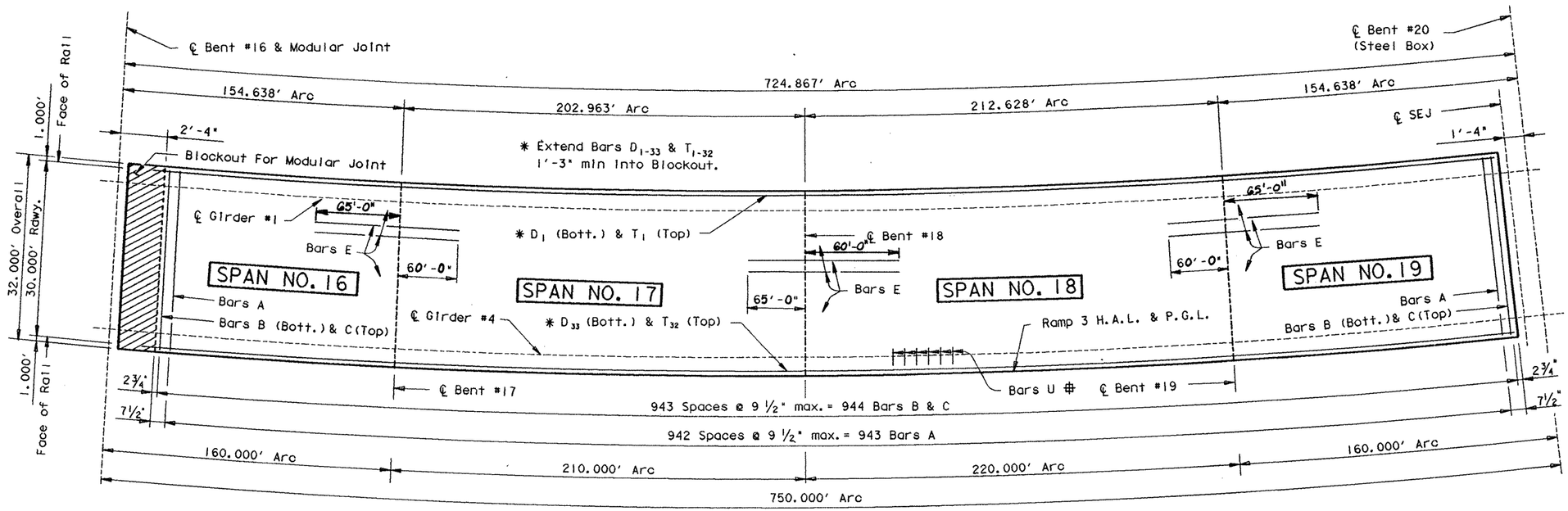

PLAN

NOTE:
Bars U [redacted] Spaced at 2'-0" along the entire length of each Girder except, there [redacted] no Bars U at locations where the Girder top Flange exceeds 2 ¼" in thickness nor [redacted] there be bars U in the Blockout For Modular Joint. (See Girder Elevations)

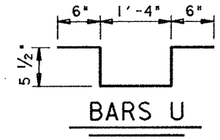

BARS U

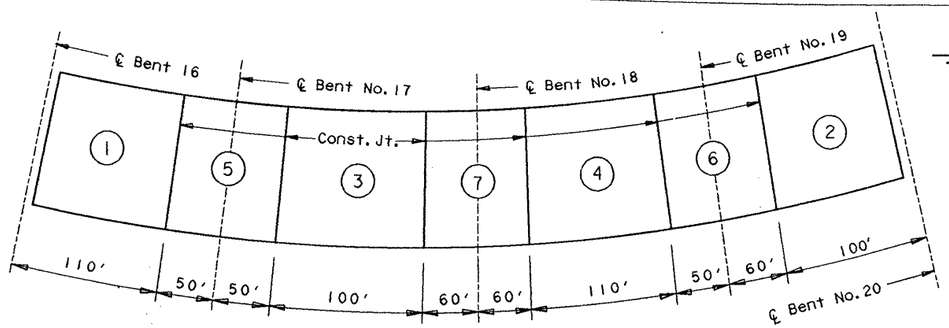

CONCRETE PLACING SEQUENCE

At Contractors option, Continuous placement [redacted] used. For Continuous placement, the minimum rate of Concrete placing and Finishing [redacted] not [redacted] less than 30 linear Feet of bridge deck per hour.

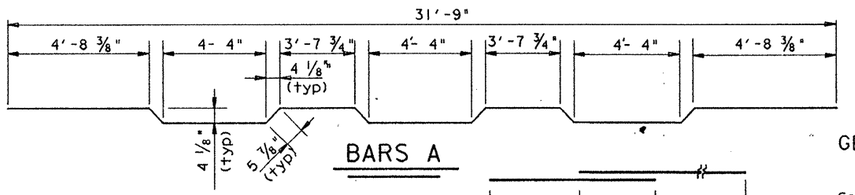

BARS A

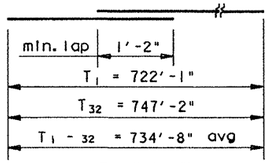

BARS T

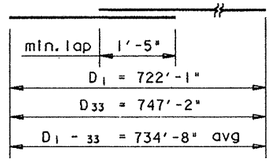

BARS D

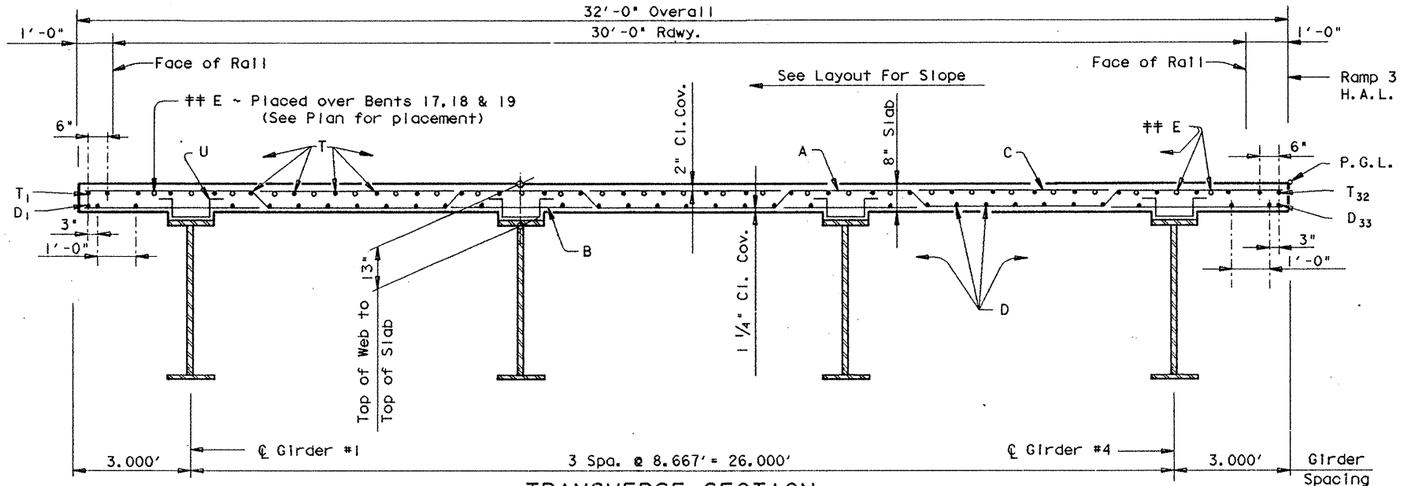

TRANSVERSE SECTION

REV. 3-30-92

GENERAL NOTES:

Designed according to A.A.S.H.T.O. 1989 Standard Specifications.

Design fc = 1200 p.s.i.

The use of Precast Concrete Panels [redacted] not [redacted] permitted.

See Modular Joint Details Sheet For Type B (MOD) diaf. and joint details not shown.

See Special Bearings detail Sheet for SEG, ISI & IF9 Bearings.

TABLE OF ESTIMATED QUANTITIES

Bar	No.	Size	Length	Weight
A	943	# 5	32'- 7"	32047
B	944	# 4	31'- 9"	20021
C	944	# 5	31'- 9"	31261
D_{1-33}	33	# 5	751'- 8" Av◩	25872
E	81	# 6	130'- 3" ▲	15846
T_{1-32}	32	# 4	748'- 8" Av▬	16004
U	1201	# 4	3'-3"	2607

Reinforcing Steel	Lb	‡ 143658
Str. Steel (HS) †	Lb	1069100
Str. Steel (HYC)	Lb	100100

Span	Reinf. Conc. Slab ~ SF	Class "S" Conc. ~ CY Slab ‡
# 16	5034	137.2
# 17	6607	180.1
# 18	6922	188.7
# 19	4992	137.2
Total	23555	642.6

‡ For contractor's information only.
◩ Length shown includes 12 ~ 1'-5" min. lap.
▬ Length shown includes 12 ~ 1'-2" min. lap.
▲ Length shown includes 3 ~ 1'-9" min. lap.
† Quantity includes 38900 lbs. for Steel Cap, Bent No. 19.

HS 20 LOADING Sheet 1 of 5

STATE DEPARTMENT OF HIGHWAYS AND PUBLIC TRANSPORTATION

UNIT NO. 6, RAMP 3

750.00' PLATE GIRDER UNIT (160.00'-210.00'-220.00'-160.00')

US 83/281 INTERCHANGE

STATE OF TEXAS
MARK J. BLOSCHOCK
52996
REGISTERED PROFESSIONAL ENGINEER
9-25-91

D45350A: ZFA1: (355163)4378SFC01.DGN	PREPARED BY AND FOR USE OF TEXAS SDH&PT				
ORIGINAL DRAWING DATE:	STATE DISTRICT	FEDERAL REGION	FEDERAL AID PROJECT		SHEET
DR.: GAF	21	6	NH92C)M		344
CK.: GET	COUNTY		CONTROL	SECTION	JOB	HIGHWAY
DW.: TKW	HIDALGO		0039	XX	097	83/281
CK.: GAF						
REVISIONS						

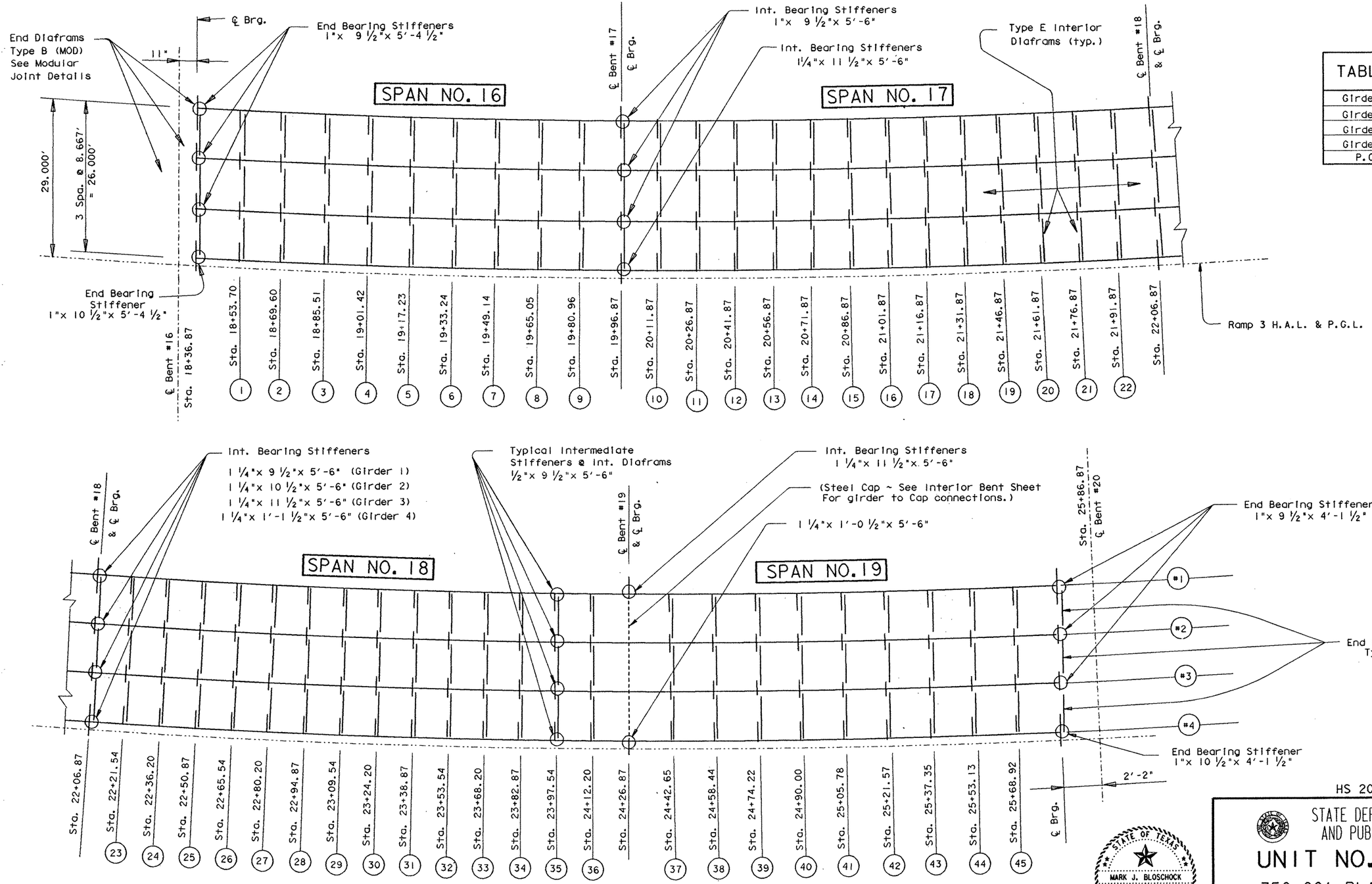

TABLE OF RADII	
Girder #1	925.930'
Girder #2	934.596'
Girder #3	943.263'
Girder #4	951.930'
P.G.L	954.930'

FRAMING PLAN

HS 20 LOADING

Sheet 2 of 5

STATE DEPARTMENT OF HIGHWAYS AND PUBLIC TRANSPORTATION

UNIT NO. 6, RAMP 3

750.00' PLATE GIRDER UNIT
(160.00'-210.00'-220.00'-160.00')

US 83/281 INTERCHANGE

STATE OF TEXAS
MARK J. BLOSCHOCK
52996
REGISTERED PROFESSIONAL ENGINEER

9-25-91

D45350A:\ZFA1:[355163]4378SFC01.DGN

PREPARED BY AND FOR USE OF TEXAS SDH&PT

ORIGINAL DRAWING DATE:	REVISIONS	STATE DISTRICT	FEDERAL REGION	FEDERAL AID PROJECT	SHEET
DN.: GAF		21	6	NH 92(JM	345
CK.: GET		COUNTY		CONTROL / SECTION / JOB	HIGHWAY
DW.: TKW		HIDALGO		0039 / 0 / 097	83/281
CK.: GAF					

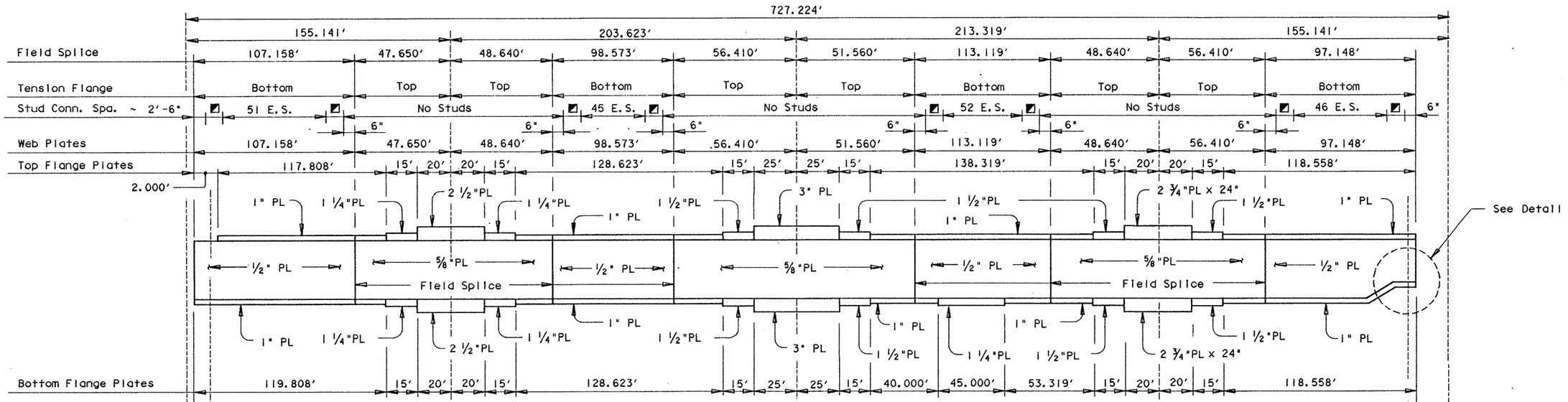

Girder 1 Elevation

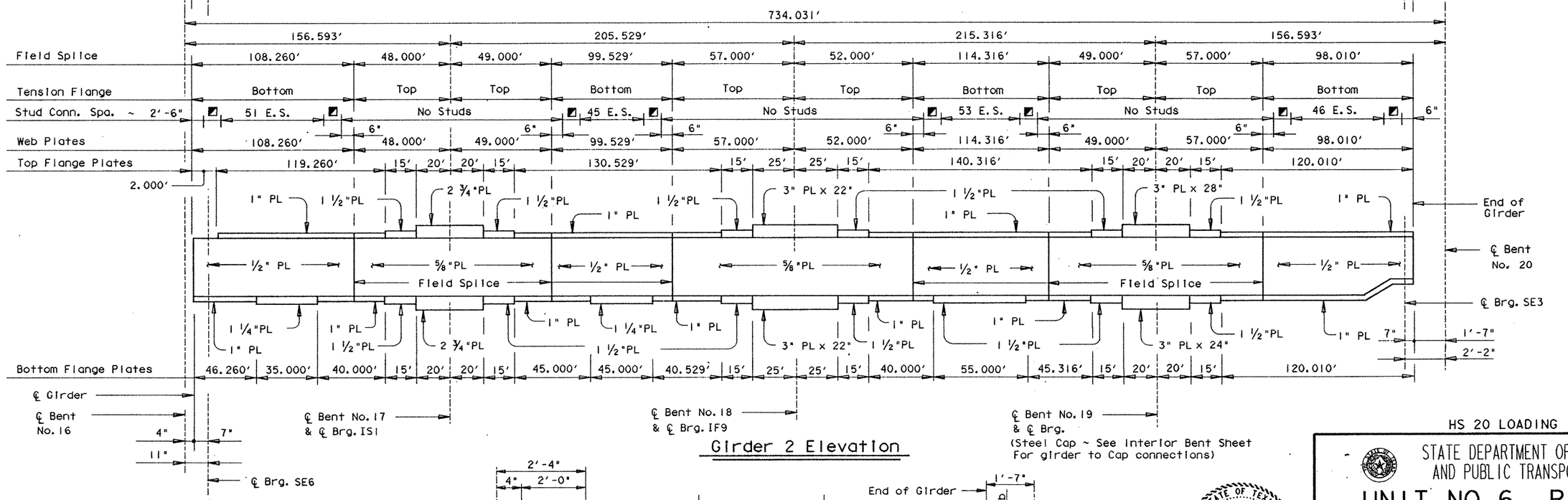

Girder 2 Elevation

8 E.S. = 4'-0"

All Web Plates are 66" high unless otherwise noted and are H.S. Steel.
All Flange Plates are H.S. Steel
All flange Plates are 20" Wide unless otherwise noted. See Girder Elevation for Girder 4 Flange widths.

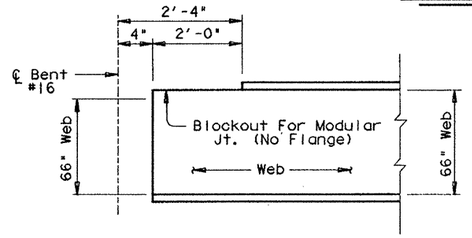

TYPICAL END OF GIRDER DETAIL @ BENT 16

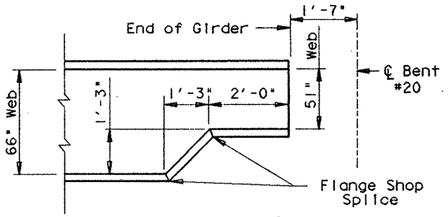

TYPICAL END OF GIRDER DETAIL @ BENT 20

STATE OF TEXAS
MARK J. BLOSCHOCK
52996
REGISTERED PROFESSIONAL ENGINEER
9-25-91

HS 20 LOADING

Sheet 3 of 5

STATE DEPARTMENT OF HIGHWAYS AND PUBLIC TRANSPORTATION

UNIT NO. 6, RAMP 3

750.00' PLATE GIRDER UNIT
(160.00'-210.00'-220.00'-160.00')

US 83/281 INTERCHANGE

D45350A ▸ ZFAI ▸ (355163143785FC01.DGN	PREPARED BY AND FOR USE OF TEXAS SDH&PT				
ORIGINAL DRAWING DATE:	STATE DISTRICT	FEDERAL REGION	FEDERAL AID PROJECT		SHEET
DR.:- GAF REVISIONS	21	6	NH 92( )M		346
CK.:- GET	COUNTY		CONTROL	SECTION	JOB	HIGHWAY
DW.:- TKW	HIDALGO		0039	85	097	83/281
CK.:- GAF						

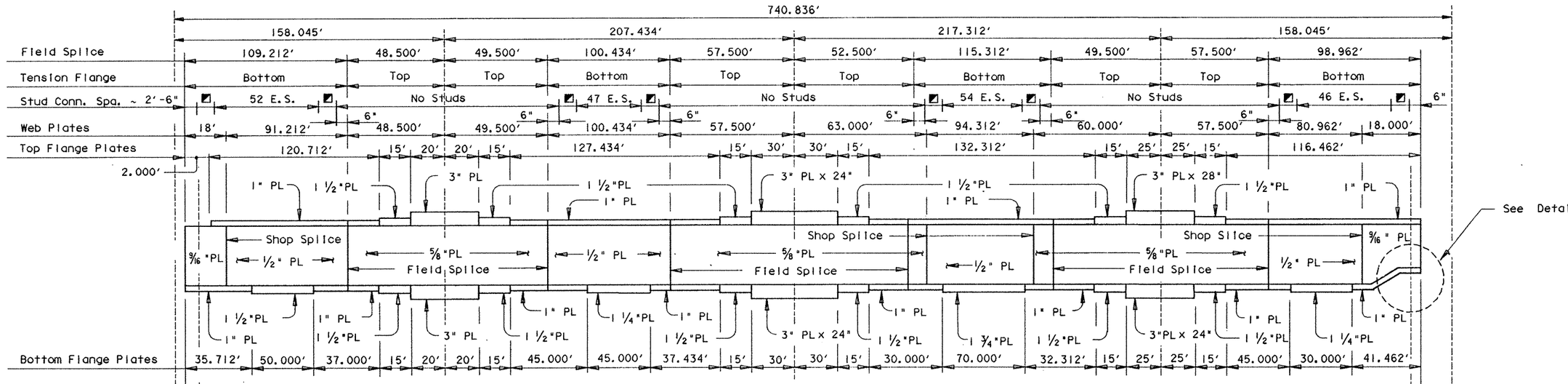

Girder 3 Elevation

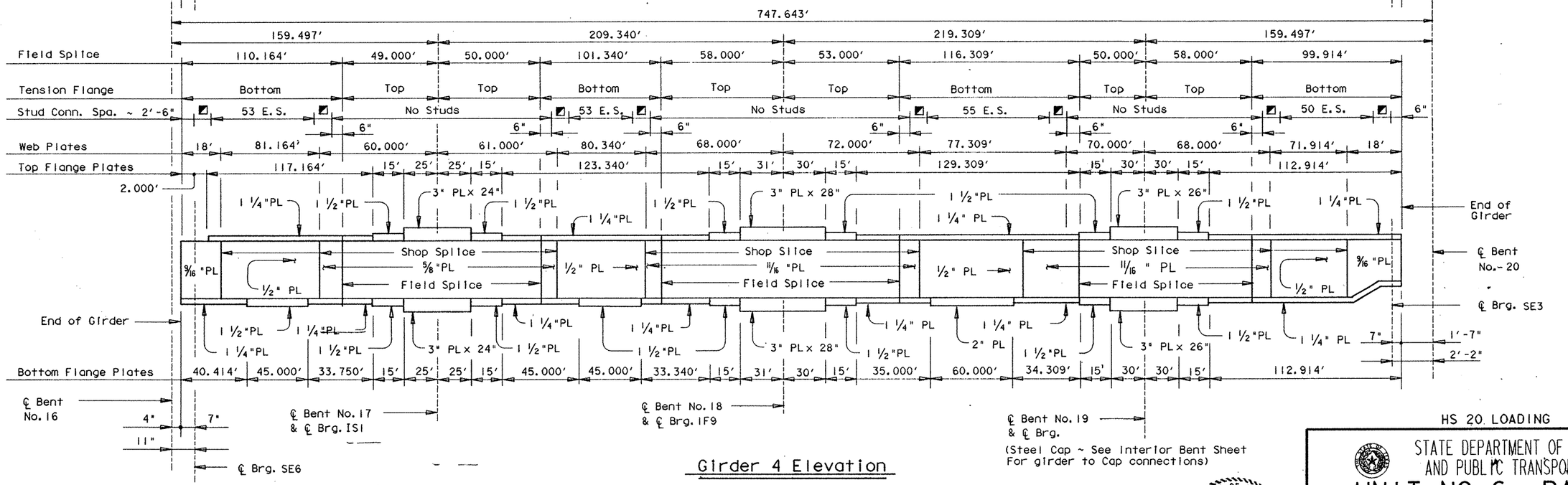

Girder 4 Elevation

8 E.S. = 4'-0"

(For Girder 4 all Flange Plates are 22" wide unless otherwise noted)

HS 20 LOADING

Sheet 4 of 5

STATE DEPARTMENT OF HIGHWAYS AND PUBLIC TRANSPORTATION

UNIT NO. 6, RAMP 3

750.00' PLATE GIRDER UNIT (160.00'-210.00'-220.00'-160.00')

US 83/281 INTERCHANGE

STATE OF TEXAS
MARK J. BLOSCHOCK
52996
REGISTERED PROFESSIONAL ENGINEER

9-25-91

D45350A: ZFA1: [355163]4378SFC01.DGN	PREPARED BY AND FOR USE OF TEXAS SDH&PT					
ORIGINAL DRAWING DATE:	STATE DISTRICT	FEDERAL REGION	FEDERAL AID PROJECT			SHEET
DN.: GAF	21	6	NH 92(	)M		347
CK.: GET	COUNTY		CONTROL	SECTION	JOB	HIGHWAY
DW.: TKW	HIDALGO		0039	09	09	83/281
CK.: GAF						

WEB CUTTING TABLE

DIAFRAM		GIRDER 1 "Y"	GIRDER 2 "Y"	GIRDER 3 "Y"	GIRDER 4 "Y"
SPAN 16	℄ Brg.	24.766	24.832	24.898	24.965
	1	24.608	24.687	24.767	24.830
	2	24.422	24.513	24.604	24.663
	3	24.194	24.292	24.389	24.450
	4	23.921	24.020	24.120	24.181
	5	23.601	23.698	23.798	23.858
	6	23.238	23.331	23.426	23.487
	7	22.843	22.928	23.017	23.081
	8	22.432	22.510	22.590	22.656
	9	22.021	22.094	22.167	22.234
SPAN 17	℄ Brg.	21.620	21.686	21.753	21.819
	10	21.259	21.321	21.381	21.445
	11	20.908	20.963	21.018	21.078
	12	20.559	20.611	20.665	20.717
	13	20.198	20.249	20.305	20.350
	14	19.813	19.863	19.920	19.959
	15	19.390	19.440	19.496	19.532
	16	18.931	18.978	19.034	19.068
	17	18.427	18.472	18.525	18.562
	18	17.886	17.930	17.979	18.019
	19	17.313	17.354	17.403	17.448
	20	16.719	16.761	16.813	16.863
	21	16.119	16.165	16.223	16.280
	22	15.526	15.581	15.644	15.705
	℄ Brg.	14.939	15.005	15.072	15.138

DIAFRAM		GIRDER 1 "Y"	GIRDER 2 "Y"	GIRDER 3 "Y"	GIRDER 4 "Y"
SPAN 18	23	14.385	14.462	14.533	14.603
	24	13.841	13.928	14.004	14.075
	25	13.312	13.405	13.490	13.563
	26	12.792	12.899	12.988	13.061
	27	12.269	12.384	12.479	12.552
	28	11.731	11.853	11.954	12.023
	29	11.167	11.293	11.398	11.465
	30	10.583	10.707	10.812	10.879
	31	9.973	10.093	10.195	10.262
	32	9.337	9.451	9.546	9.614
	33	8.686	8.788	8.878	8.947
	34	8.025	8.115	8.198	8.269
	35	7.370	7.451	7.529	7.600
	36	6.734	6.806	6.879	6.950
	℄ Brg.	6.119	6.185	6.251	6.318
SPAN 19	37	5.491	5.551	5.613	5.675
	38	4.888	4.945	5.003	5.060
	39	4.303	4.363	4.419	4.469
	40	3.721	3.787	3.845	3.889
	41	3.125	3.197	3.260	3.302
	42	2.505	2.582	2.649	2.691
	43	1.856	1.936	2.004	2.050
	44	1.202	1.271	1.336	1.380
	45	0.574	0.617	0.658	0.688
	℄ Brg.	0.000	0.000	0.000	0.000

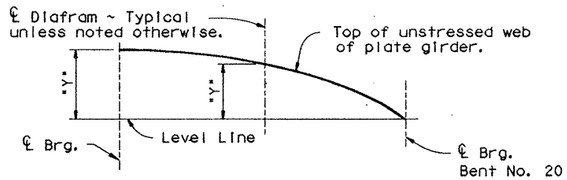

WEB CUTTING DIAGRAM

Note: Web cut [redacted] cut on straight lines between ordinates or to a smooth curve at the fabricator's option. Values listed include all dead load deflections and vertical curve corrections.

PLATE GIRDER FABRICATION NOTE:

Girder tension flanges and webs are classified as main members and [redacted] conform to Item 442.3(1).

Except at changes in section, shop or field flange and web splices in plate girders [redacted] located as desirable to optimize plate lengths and erection procedures, except that splices [redacted] not [redacted] allowed where a 40' or less unspliced length would suffice, neither [redacted] tension flange splices [redacted] allowed within .05S either side of interior bearings, within .10S either side of the centerlines of the interior span, nor within the range between .30S and .50S from the end bearings. (S=length c.c. Bearing of Span in which the splice is made).

Flange and Web Splices [redacted] made by full penetration groove welds in accordance with the Item "Steel Structures".

TABLE OF DEAD LOAD DEFLECTIONS

		GIRDER 1	GIRDER 2	GIRDER 3	GIRDER 4
SPAN 16	0	0.000'	0.000'	0.000'	0.000'
	1	0.058'	0.068'	0.075'	0.070
	2	0.105'	0.123'	0.138'	0.127'
	3	0.137'	0.158'	0.175'	0.164'
	4	0.146'	0.169'	0.188'	0.176'
	5	0.136'	0.157'	0.176'	0.164'
	6	0.108'	0.126'	0.142'	0.133'
	7	0.071'	0.082'	0.095'	0.089'
	8	0.033'	0.041'	0.047'	0.047'
	9	0.007'	0.012'	0.015'	0.016'
	10	0.000'	0.000'	0.000'	0.000'
SPAN 17	11	0.024'	0.018'	0.014'	0.011'
	12	0.078'	0.068'	0.061'	0.050'
	13	0.140'	0.128'	0.124'	0.102'
	14	0.187'	0.173'	0.170'	0.142'
	15	0.200'	0.185'	0.181'	0.151'
	16	0.178'	0.161'	0.155'	0.128'
	17	0.126'	0.109'	0.101'	0.081'
	18	0.063'	0.047'	0.042'	0.031'
	19	0.017'	0.007'	0.006'	0.000'
	20	0.000'	0.000'	0.000'	0.000'

		GIRDER 1	GIRDER 2	GIRDER 3	GIRDER 4
SPAN 18	20	0.000'	0.000'	0.000'	0.000'
	21	0.024'	0.035'	0.036'	0.038'
	22	0.080'	0.096'	0.103'	0.103'
	23	0.149'	0.176'	0.187'	0.182'
	24	0.205'	0.239'	0.253'	0.243'
	25	0.227'	0.263'	0.279'	0.266'
	26	0.212'	0.244'	0.258'	0.246'
	27	0.162'	0.185'	0.197'	0.188'
	28	0.091'	0.104'	0.111'	0.108'
	29	0.030'	0.034'	0.039'	0.040'
	30	0.000'	0.000'	0.000'	0.000'
SPAN 19	31	0.004'	0.000	0.000'	-0.003
	32	0.025'	0.020'	0.017'	0.010'
	33	0.058'	0.055'	0.050'	0.037'
	34	0.093'	0.094'	0.091'	0.073'
	35	0.120'	0.125'	0.125'	0.100'
	36	0.131'	0.140'	0.142'	0.119'
	37	0.124'	0.134'	0.137'	0.116'
	38	0.096'	0.106'	0.109'	0.092'
	39	0.054'	0.059'	0.060'	0.051'
	40	0.000'	0.000'	0.000'	0.000'

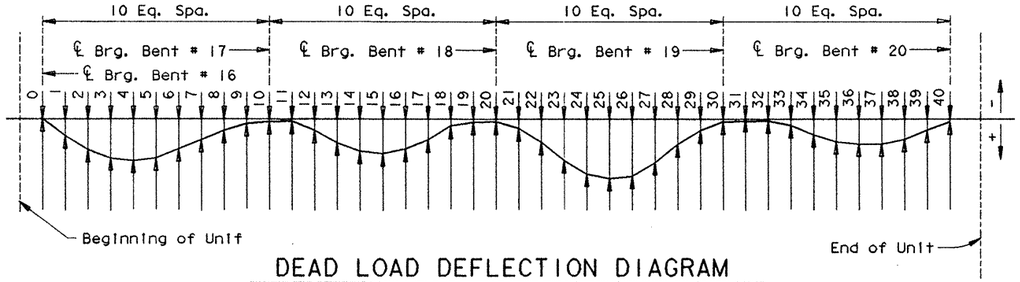

DEAD LOAD DEFLECTION DIAGRAM

Deflections shown are due to cast-in-place concrete slab only.

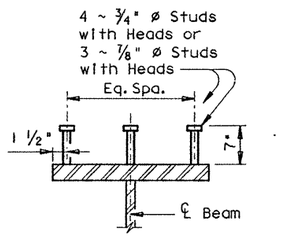

SHEAR CONNECTOR STUD DETAIL

Studs [redacted] Electric arc end-welded to the flanges with complete fusion.

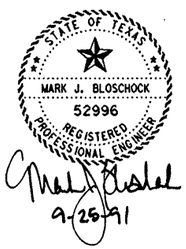

HS 20 LOADING

STATE DEPARTMENT OF HIGHWAYS AND PUBLIC TRANSPORTATION

UNIT NO. 6, RAMP 3

750.00' PLATE GIDER UNIT
(160.00'-210.00'-220.00'-160.00')

US 83/281 INTERCHANGE

D45350A: ZFAI: [3551631]4378SFC01.DGN | PREPARED BY AND FOR USE OF TEXAS SDH&PT

ORIGINAL DRAWING DATE:	REVISIONS	STATE DISTRICT	FEDERAL REGION	FEDERAL AID PROJECT	SHEET
DN.: GAF		21	6	NH92( )M	348
CK.: GET		COUNTY	CONTROL	SECTION	JOB	HIGHWAY
DW.: TKW		HIDALGO	0039	05	097	83/281
CK.: GAF						

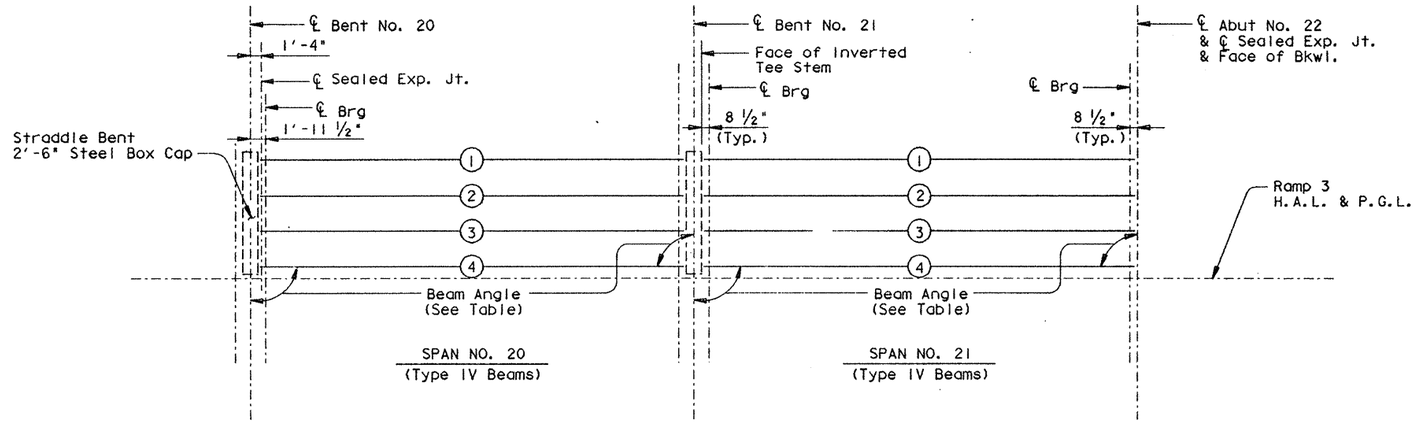

BEAM LAYOUT

BENT REPORT

BENT NO. 20 (N 8 34 7.37 E)
DISTANCE BETWEEN STATION LINE AND BEAM 1 29.000 L

		BEAM SPAC. (C.L. BENT)	BEAM ANGLE D M S
SPAN20	BEAM 1	0.000	89 54 2
	BEAM 2	8.667	89 54 2
	BEAM 3	8.667	89 54 2
	BEAM 4	8.667	89 54 2
	TOTAL	26.000	

BENT NO. 21 (N 8 28 6.42 E)
DISTANCE BETWEEN STATION LINE AND BEAM 1 29.000 L

		BEAM SPAC. (C.L. BENT)	BEAM ANGLE D M S
SPAN20	BEAM 1	0.000	89 59 57
	BEAM 2	8.667	89 59 57
	BEAM 3	8.667	89 59 57
	BEAM 4	8.667	89 59 57
	TOTAL	26.000	
SPAN21	BEAM 1	0.000	90 0 0
	BEAM 2	8.667	90 0 0
	BEAM 3	8.667	90 0 0
	BEAM 4	8.667	90 0 0
	TOTAL	26.000	

BENT NO. 22 (N 8 28 6.42 E)
DISTANCE BETWEEN STATION LINE AND BEAM 1 29.000 L

		BEAM SPAC. (C.L. BENT)	BEAM ANGLE D M S
SPAN21	BEAM 1	0.000	90 0 0
	BEAM 2	8.667	90 0 0
	BEAM 3	8.667	90 0 0
	BEAM 4	8.667	90 0 0
	TOTAL	26.000	

BEAM REPORT

BEAM REPORT, SPAN20

	HORIZONTAL DISTANCE C-C BENT	C-C BRG.	TRUE DISTANCE BOT. BM. FLG.
BEAM 1	109.949	105.408	106.544
BEAM 2	109.964	105.423	106.568
BEAM 3	109.980	105.438	106.593
BEAM 4	109.995	105.453	106.619

BEAM REPORT, SPAN21

	HORIZONTAL DISTANCE C-C BENT	C-C BRG.	TRUE DISTANCE BOT. BM. FLG.
BEAM 1	110.000	106.708	107.879
BEAM 2	110.000	106.708	107.879
BEAM 3	110.000	106.708	107.879
BEAM 4	110.000	106.708	107.879

STATE OF TEXAS
MARK J. BLOSCHOCK
52996
REGISTERED
PROFESSIONAL ENGINEER

9-25-91

HS 20 LOADING

STATE DEPARTMENT OF HIGHWAYS AND PUBLIC TRANSPORTATION

BEAM LAYOUT
UNIT NO. 7, RAMP 3

US 83/281 INTERCHANGE

D45350A1 : ZFA2: [355100]4379BLY04.DGN
PREPARED BY AND FOR USE OF TEXAS SDH&PT

ORIGINAL DRAWING DATE: JANUARY 1991		STATE DISTRICT	FEDERAL REGION	FEDERAL AID PROJECT	SHEET
DN.: LMW	REVISIONS	21	6	NH 92( )M	349
CK.: KAB		COUNTY		CONTROL / SECTION / JOB	HIGHWAY
DW.: PSR		HIDALGO		0039 / 17 / 097	US 83/281
CK.: CRW					

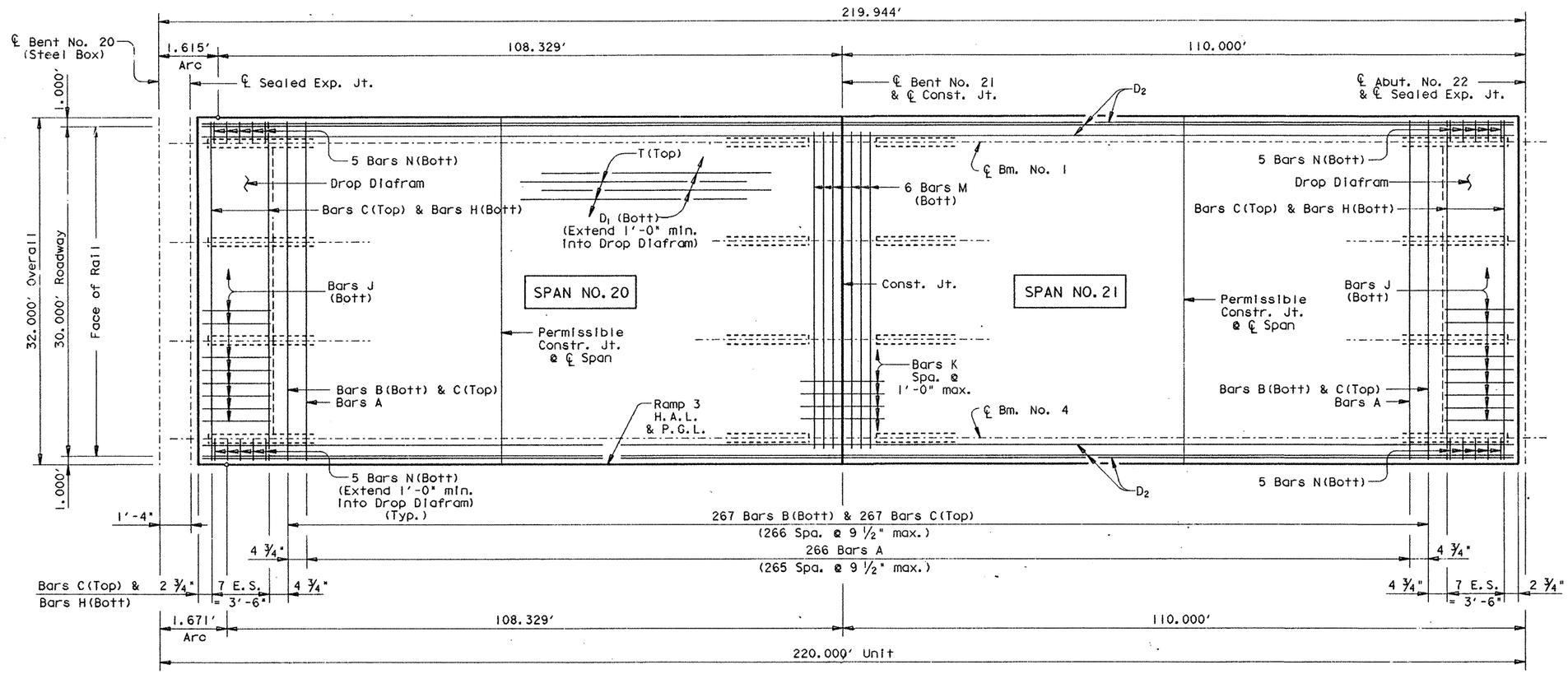

PLAN

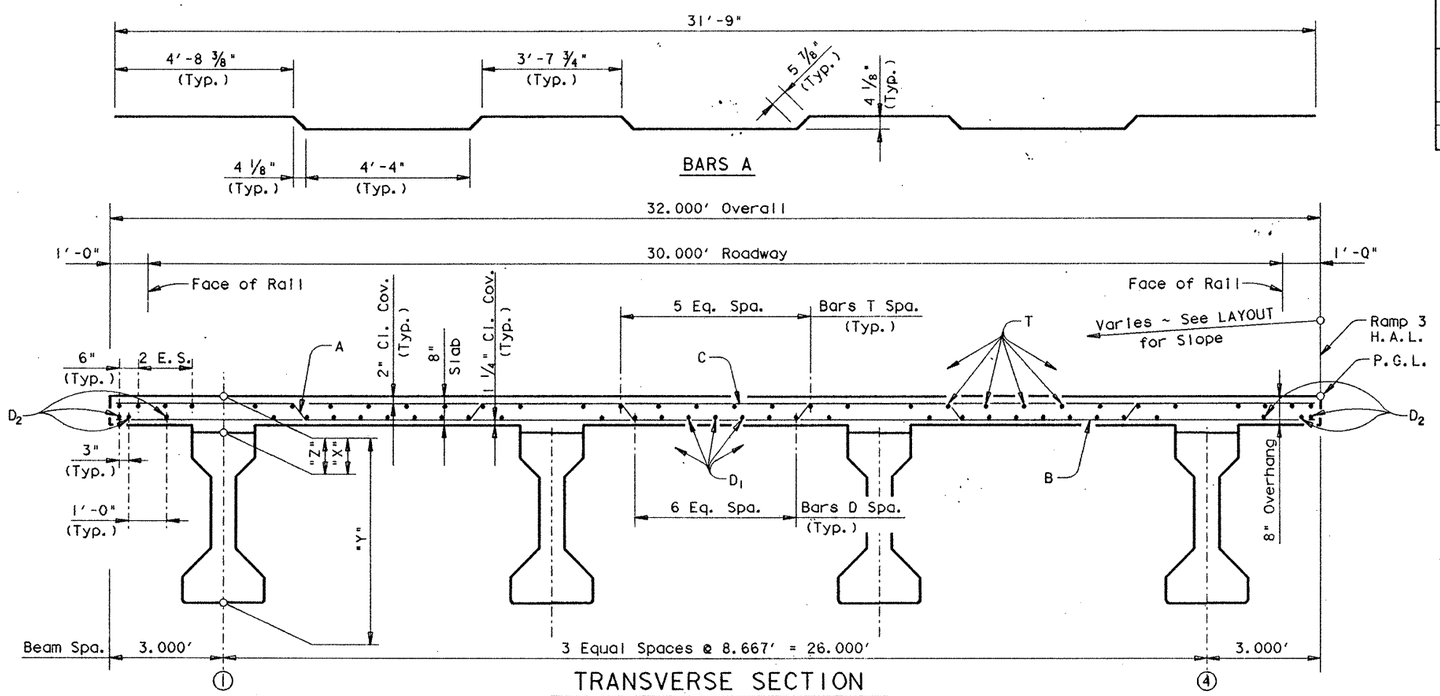

TRANSVERSE SECTION

TABLE OF SECTION DEPTHS

Span	"X" at ℄ Brg.	"Y" at ℄ Brg.	"Z" at ℄ Span *
ALL	9 3/4"	5'-3 3/4"	8 5/8"

* Theoretical dimension

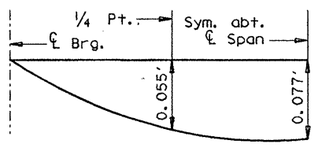

NOTE: Deflections shown are due to cast-in-place concrete only.

(E_c = 5 X 10^6 psi)

DEAD LOAD DEFLECTION DIAGRAM

STATE OF TEXAS
MARK J. BLOSCHOCK
52996
REGISTERED PROFESSIONAL ENGINEER
4-26-91

TABLE OF ESTIMATED QUANTITIES

Bar	No.	Size	Length	Weight
A	266	# 5	32'- 7"	9040
B	267	# 4	31'- 9"	5663
C	283	# 5	31'- 9"	9372
D_1	27	# 5	218'- 3" △	6146
D_2	6	# 5	222'- 8" △	1393
H	16	# 5	31'- 9"	529
J	48	# 5	3'- 6"	175
K	29	# 4	6'- 4"	123
M	6	# 5	27'- 5"	172
N	20	# 5	3'- 4"	70
T	32	# 4	221'-11" ◩	4744

Reinforcing Steel	Lb	⌗ 37427
Prestr. Conc. Bm. ~ Ty. IV	LF	⌗ 857.84

Span	Reinf. Conc. Slab ~ SF	Class "S" Conc. ~ CY ⌗ Diaf.	⌗ Slab
# 20	3477	1.1	89.2
# 21	3520	1.1	89.2
Total	6997	⌗ 180.6	

⌗ For contractor's information only.

△ Length shown includes 3 ~ 1'-5 " min. laps.

◩ Length shown includes 3 ~ 1'-2 " min. laps.

Length shown is bottom flange length with adjustments made for beam slope.

GENERAL NOTES:

Designed according to A.A.S.H.T.O. 1989 Standard Specifications.

Design fc = 1200 p.s.i.

See GpC (SPL) sheet for details not shown.

See GpA-2 (MOD) sheet for Beam Blockout details not shown.

For Drain Locations see Bridge Layout. For Drain Details see Bridge Drain Details Sheet.

HS 20 LOADING

STATE DEPARTMENT OF HIGHWAYS AND PUBLIC TRANSPORTATION

UNIT NO. 7, RAMP 3

220.00' PRESTRESSED CONCRETE BEAM UNIT (110.00' - 110.00')

US 83/281 INTERCHANGE

D4535OA1: ZFA2: [3551001]4378PPB02.DGN	PREPARED BY AND FOR USE OF TEXAS SDH&PT						
ORIGINAL DRAWING DATE: JUNE 1990	STATE DISTRICT	FEDERAL REGION	FEDERAL AID PROJECT				SHEET
DR.:- LMW	21	6	NH 92C) M				350
CK.:- GAF	COUNTY			CONTROL	SECTION	JOB	HIGHWAY
DR.:- PSR	HIDALGO			0039	17	097	US 83/281
CK.:- GAF	REVISIONS						

END BRIDGE
RAMPS 3 & 4
BEGIN BRIDGE
RAMP 4
℄ BENT 12
STA. 11+34.46

℄ GIRDER NO 1

US 281 ℄

℄ GIRDER NO 4

719.46' SLAB TRANSITION
(BOTH SIDES)
47.96:1 TAPER

MATCH LINE STA. 10+00

RAMPS
3 & 4 PGL
& HAL

℄ BEAM 1

4" SEJ

℄ BEAM 8

G.R.E.A.T. TY A
(10 BAY)(3.0 FT.)

79.94:1 TAPER

℄ BENT 11
STA. 10+49.73

N 05° 16' 19" E

2104500 E

S 85° 07' 18" E

US 281 ℄
CURVE DATA
PI STA. = 857+28.8832
D = 0° 30'
Δ = 3° 38' 16.08" RT.
L = 727.56'
T = 363.90'
R = 11459.15'

RAMP 3
PC = 11+49.58
PT = 12+34.46
3.81% 7.59 S

NOMINAL FACE OF
T501 RAIL

℄ GIRDER NO. 1

℄ GIRDER NO. 4

DECK DRAIN ⊕
STA. 11+59
PIPE TO BENT 12

℄ BENT 13
STA. 12+54.46

RAMP 4
PC = 11+34.46
3.81% 7.59 S

EXIST. US 281
SOUTH BOUND FRTG. RD.

⊕ FOR DRAIN DETAILS SEE BRIDGE
DRAIN DETAILS SHEET.

6" SHDR.

14' SHDR. LANE

10' SHDR.

.06'/FT.

S 75° 11' 17" E

TEST HOLE #3
STA. 860+00

RAMP 3 PGL
& HAL

32' OVERALL WIDTH

30' CLEAR RDWY WIDTH

1' SHDR.

RAMP 2 PGL
& HAL

RAMP 4 PGL
& HAL

℄ GIRDER NO. 1

℄ GIRDER NO. 4

S 60° 19' 17" E

MATCH LINE STA. 15+00

DECK DRAIN ⊕
STA. 14+39

℄ BENT 14
STA. 14+44.46

DELINEATORS & OBJECT MARKERS
TRAFF. BARR. DELIN. TY(D-SY)(B)... 4

RAMP 4 SUPERELEVATION

STA. 10+34.46 TO STA. 11+84.46=150' TRANSITION
STA. 11+84.46 TO STA. 22+54.32 E = 0.06'/FT.
STA. 22+54.32 TO STA. 24+04.32=150' TRANSITION
TYPE 3 TRANSITION

HOLE NO 003
STATION 860+00
GRD. ELEV. 108.9

11(6.0")	9 (6.0")	BRWN CLY, HARD, MOIST
9(6.0")	11(6.0")	
12(6.0")	12(6.0")	BRN CLY, W/ TRACES OF CHK SUBS
13(6.0")	14(6.0")	
13(6.0")	14(6.0")	REDDISH-BROWN CLAY, MOIST, COMPACT
31(6.0")	36(6.0")	LT. BRWN CLY, MOIST, COMPACT
23(6.0")	26(6.0")	
39(6.0")	54(6.0")	BROWN CLAY W/ TRACES GREEN & WHITE CHALK
28(6.0")	32(6.0")	
48(6.0")	52(5.3")	SAND & CLAY SOFT, MOIST
50(2.3")	50(1.8")	
50(1.5")	50(0.8")	LOOSE SAND, VERY MOIST
50(1.9")	50(1.3")	
32(6.0")	58(5.3")	

OVERALL LENGTH OF BRIDGE (RAMPS 3 & 4)= 1134.46'
TY T501 RAIL (1145.62 LT. & 1145.52 RT.)

OVERALL LENGTH OF BRIDGE (RAMPS 4)=1736.98'
TY T501 RAIL (1736.98' LT. & 1684.71 RT.

UNIT 4 169.46' PRESTRESSED CONC. BEAM UNIT (84.73'-84.73')

UNIT 5 - 430' CURVED STEEL GIRDER UNIT (120'-190'-120')

DRILLED SHAFTS ARE DESIGNED WITH SKIN FRICTION AND POINT BEARING.

PGL

TOP OF T501 RAIL

-0.1031%

PRESTRESSED CONC. BEAM (TY "IV")

CURVED STEEL GIRDER

H = 46'

H = 47'

H = 43'

MIN. CLR. = 43.28'

H = 44'

EXIST. PROFILE AT RAMP 4 PGL

4-60" Ø X 40' DRILLED SHAFTS

4-60" Ø X 40' DRILLED SHAFTS

2-60" Ø X 60' DRILLED SHAFTS

2-60" Ø x 59' DRILLED SHAFTS

EXIST. US 281 SOUTH BOUND FRONTAGE ROAD

EL. = 63.00

EL. = 63.00

EL. = 44.00

EL. = 44.00

162.70

164.00

164.63

164.65

164.55

164.44

10+00 (E)
10+00 (D)

11+00 (D)

12+00 (E)

13+00 (E)

14+00 (E)

15+00 (E)

(11) (12) (13) (14)

HOLE NO 003
STATION 860+00
GRD. ELEV. 108.9
LOG SHOWN ABOVE FOR CLARITY

STATE OF TEXAS
MARK J. BLOSCHOCK
52996
REGISTERED
PROFESSIONAL ENGINEER

9-25-91

STATE OF TEXAS
MARK P. McCLELLAND
60710
REGISTERED
PROFESSIONAL ENGINEER

8/29/91

STATE OF TEXAS
MARIO R. JORGE
65538
REGISTERED
PROFESSIONAL ENGINEER

12-7-90

BRIDGE LAYOUT
US 83/281 INTERCHANGE
RAMP 4

STA. 10+00 TO 15+00
SHEET 20 OF 23 SHEETS

SCALE:
PLAN 1"= 20' HORIZ.
PROFILE 1"= 10' VERT.

FED. RD. DIV. NO.	FEDERAL AID PROJECT NO.		SHEET NO.
6	NH 92 ( ) M		35C
STATE	DIST.	COUNTY	
TEXAS	21	HIDALGO	
CONT.	SECT.	JOB	HIGHWAY NO.
39	17	97	83/281

DATE REVISED: 5/02/90

FILE NAME	REFERENCE FILE	NAMED VIEW	LEVELS	PRF FILE
[325116]	NEWINT.DGN	REF1	1-28, 30-41	RE3 . PRF
RAMEO03 .DGN	NEWINT2.DGN	REF2	1-62	

F

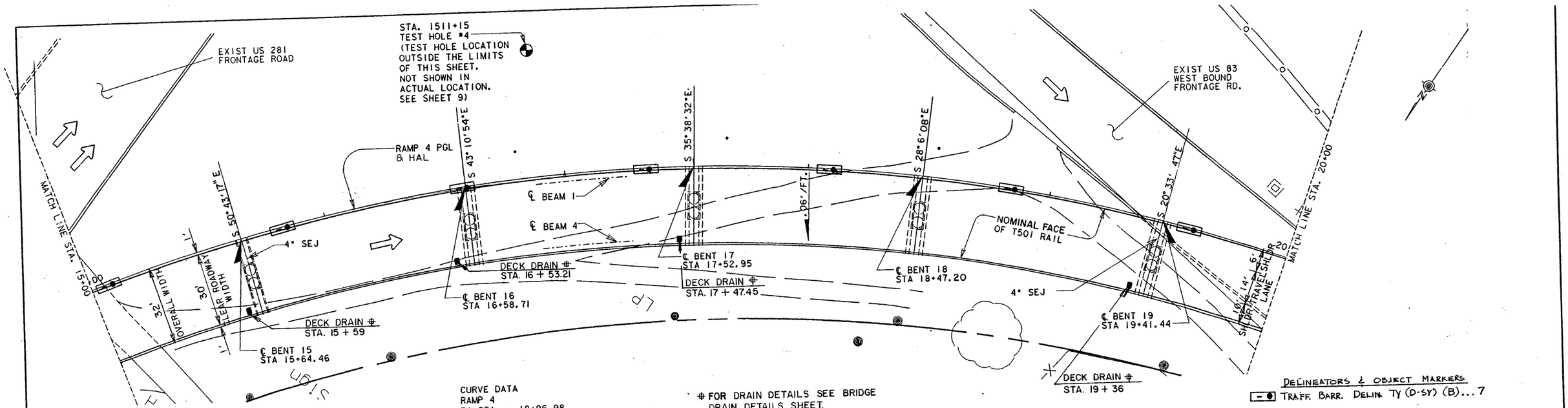

CURVE DATA
RAMP 4
PI STA. = 18+96.98
Δ = 93° 35' 20.74" RT.
D = 8° 0' 0"
R = 716.20'
L = 1169.86'
T = 762.53'

⊕ FOR DRAIN DETAILS SEE BRIDGE DRAIN DETAILS SHEET.

DELINEATORS & OBJECT MARKERS
TRAFF. BARR. DELIN. TY (D-SY) (B)... 7

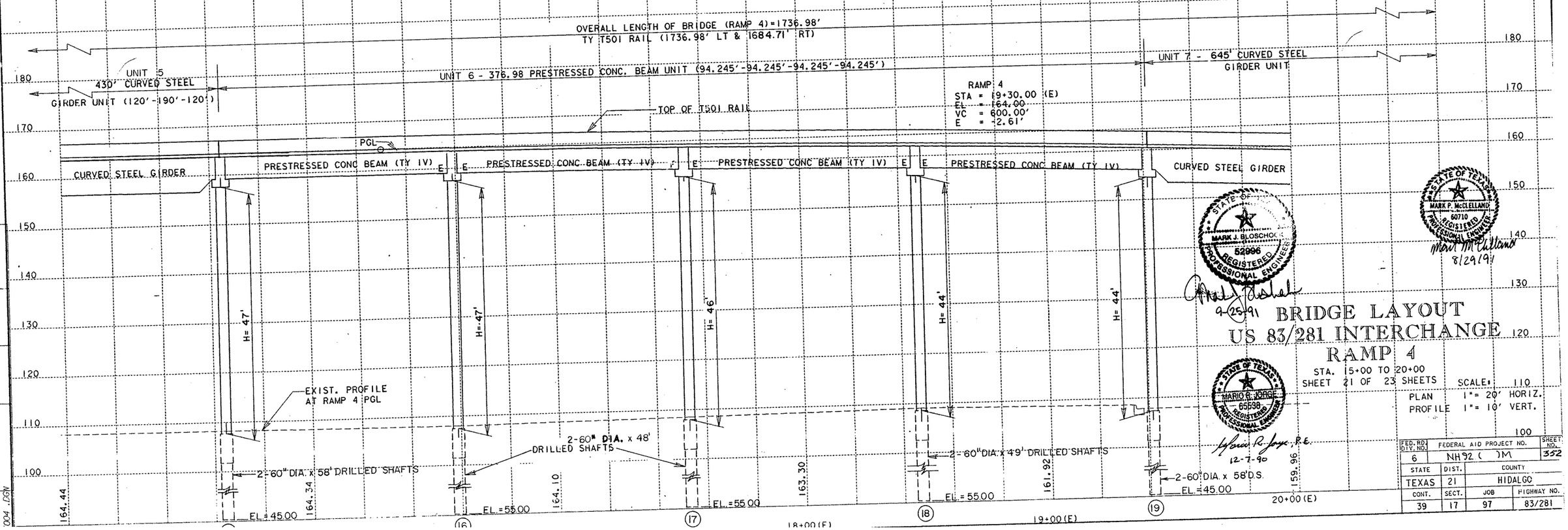

STATE OF TEXAS
MARK J. BLOSCHOCK
52996
REGISTERED
PROFESSIONAL ENGINEER
9-25-91

STATE OF TEXAS
MARK P. McCLELLAND
60710
REGISTERED
PROFESSIONAL ENGINEER
8/29/91

STATE OF TEXAS
MARIO G. JORGE
65598
REGISTERED
PROFESSIONAL ENGINEER
12-7-90

BRIDGE LAYOUT
US 83/281 INTERCHANGE
RAMP 4

STA. 15+00 TO 20+00
SHEET 21 OF 23 SHEETS

SCALE: PLAN 1"= 20' HORIZ.
PROFILE 1"= 10' VERT.

FED. RD. DIV. NO.	FEDERAL AID PROJECT NO.		SHEET NO.
6	NH92 ( )M		352
STATE	DIST.	COUNTY	
TEXAS	21	HIDALGO	
CONT.	SECT.	JOB	HIGHWAY NO.
39	17	97	83/281

NAME	REFERENCE FILE	NAMED VIEW	LEVELS	PRF FILE
5|63	NEWINT2.DGN	REF2	I-62	RE4 . PRF
004 .DGN	NEWINT.DGN	REF1	I-28, 30-41	

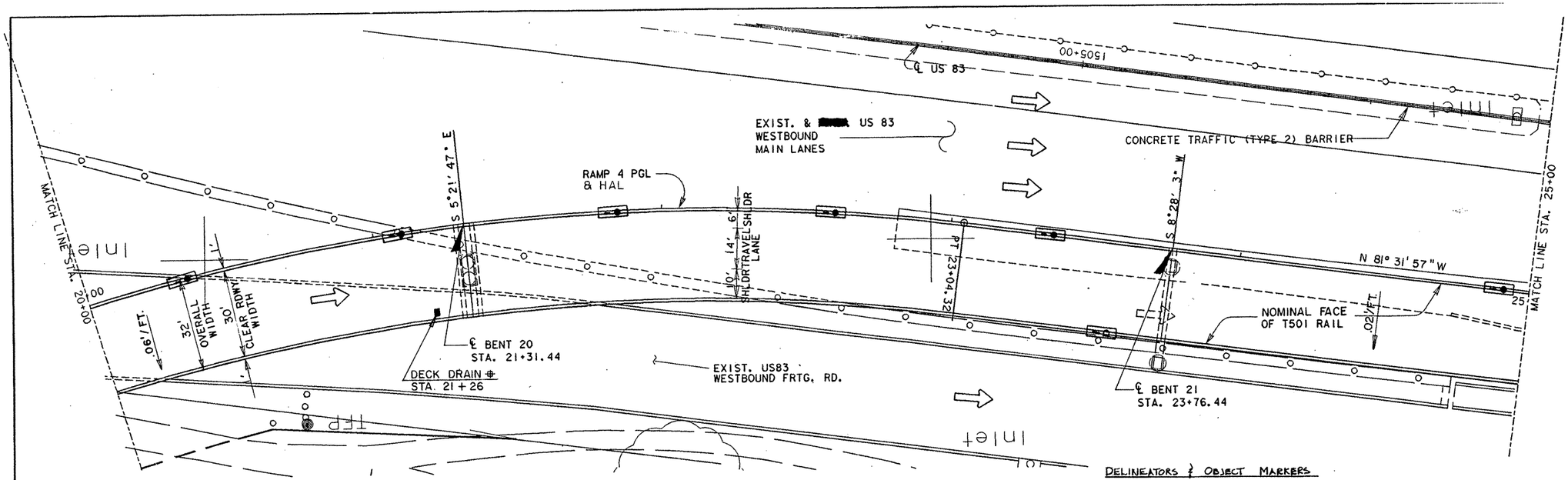

RAMP 4 SUPERELEVATION

STA. 10+34.46 TO STA. 11+84.46=150′ TRANSITION
STA. 11+84.46 TO STA. 22+54.32, E = 0.06/FT.
STA. 22+54.32 TO STA. 24+04.32=150′ TRANSITION
TYPE 3 TRANSITION

OVERALL LENGTH OF BRIDGE (RAMP 4) = 1736.98′
TY T501 RAIL (1736.98′ LT. & 1684.71′ RT)

UNIT 7 - 645′ CURVED STEEL GIRDER UNIT (190′-245′-210′)

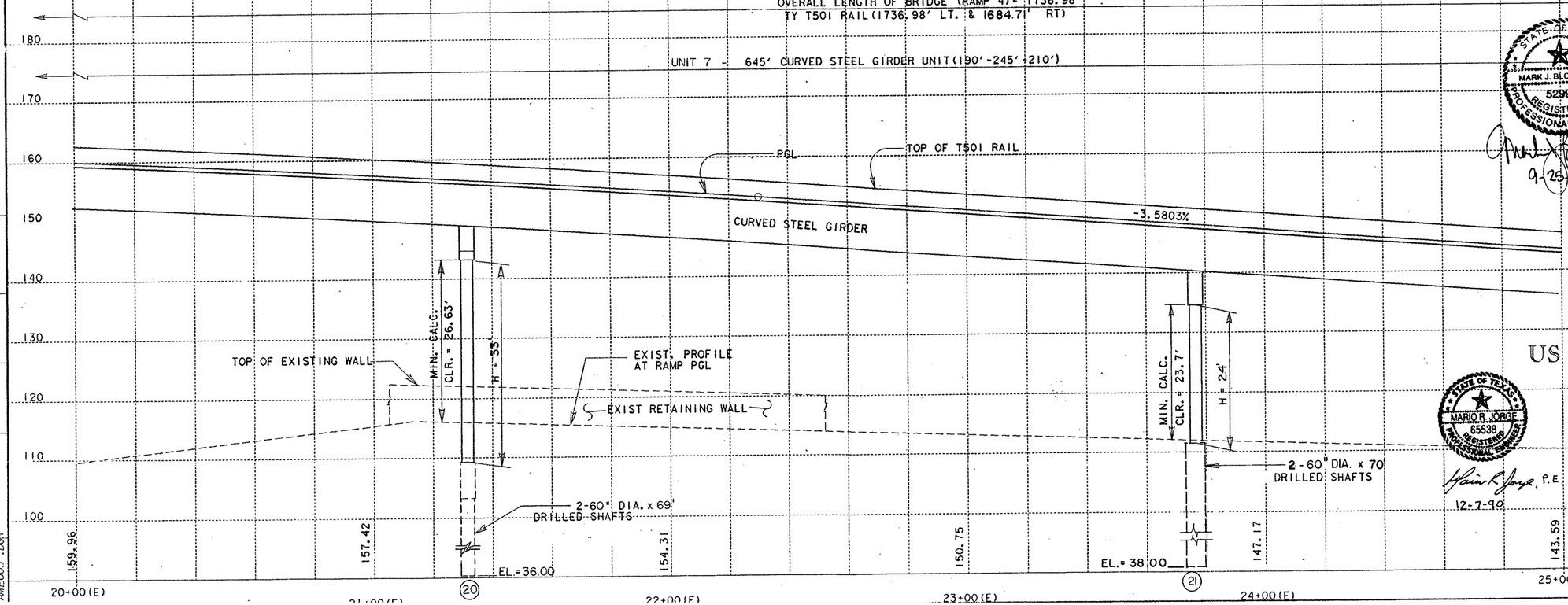

STATE OF TEXAS
MARK J. BLOSCHOCK
52996
REGISTERED
PROFESSIONAL ENGINEER
9-25-91

STATE OF TEXAS
MARK P. McCLELLAND
60710
REGISTERED
PROFESSIONAL ENGINEER
8/29/91

STATE OF TEXAS
MARIO R. JORGE
65538
REGISTERED
PROFESSIONAL ENGINEER
12-7-90

BRIDGE LAYOUT
US 83/281 INTERCHANGE
RAMP 4

STA. 20+00 TO 25+00
SHEET 22 OF 23 SHEETS

SCALE:
PLAN 1"= 20′ HORIZ.
PROFILE 1"= 10′ VERT.

FED. RD. DIV. NO.	FEDERAL AID PROJECT NO.		SHEET NO.
6	NH 92 ( )M		353
STATE	DIST.	COUNTY	
TEXAS	21	HIDALGO	
CONT.	SECT.	JOB	HIGHWAY NO.
39	17	97	83/281

FILE NAME	REFERENCE FILE	NAMED VIEW	LEVELS	PRF FILE
C325116J	NEWINT2.DGN	REF2	1-62	RE5 . PRF
AMEOOS .DGN	NEWINT.DGN	REF1	1-28, 30-41	

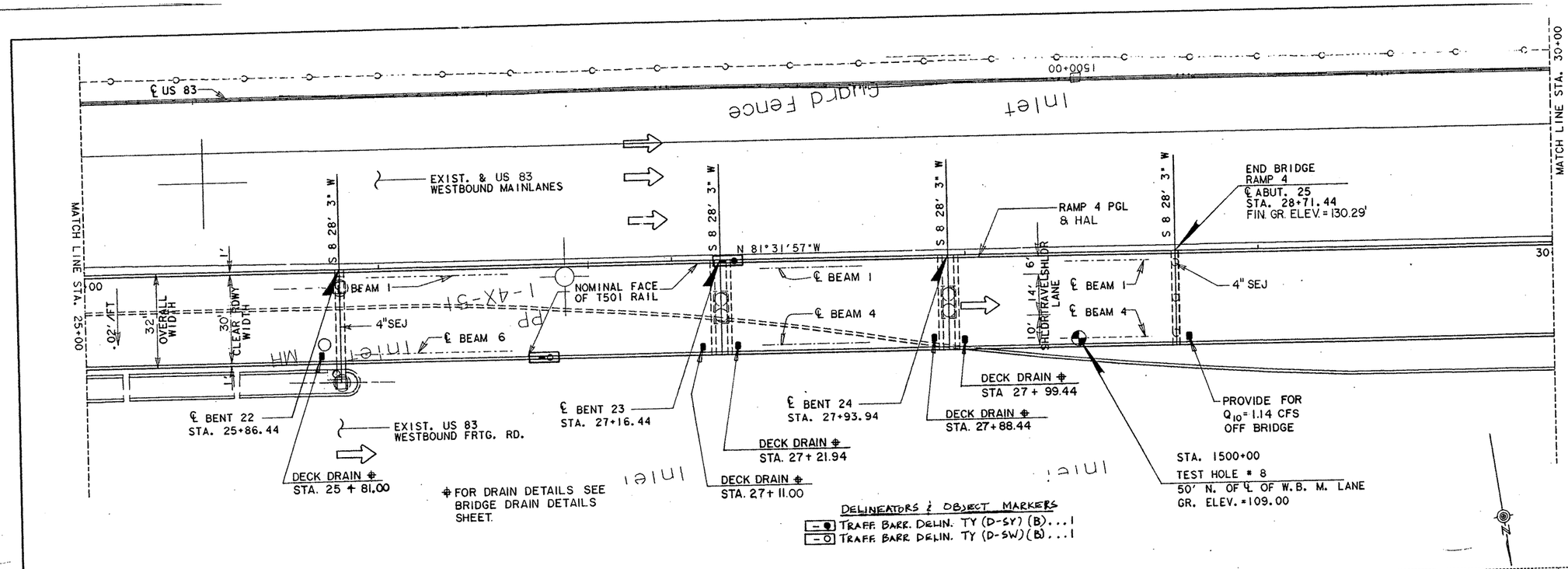

HOLE NO 8
STATION 1500+00
LOCATION FT LT
GRD. ELEV. 109.0'

		BRN DIRT LOOSE MOIST
36 (6.0")	33 (6.0")	
		BRN CLY, COMPACT, MOIST
14 (6.0")	12 (6.0")	
9 (6.0")	11 (6.0")	
14 (6.0")	16 (6.0")	
14 (6.0")	18 (6.0")	
30 (6.0")	35 (6.0")	
		BRN CLY, CMPT, MOI W/CHK
39 (6.0")	53 (6.0")	
38 (6.0")	36 (6.0")	
		BRN CLY, COMPACT, MOIST
50 (5.4")	50 (4.5")	
50 (4.8")	50 (4.1")	
34 (6.0")	53 (6.0")	
50 (4.9")	50 (3.3")	
50 (3.9")	50 (3.5")	
50 (3.4")	50 (2.5")	

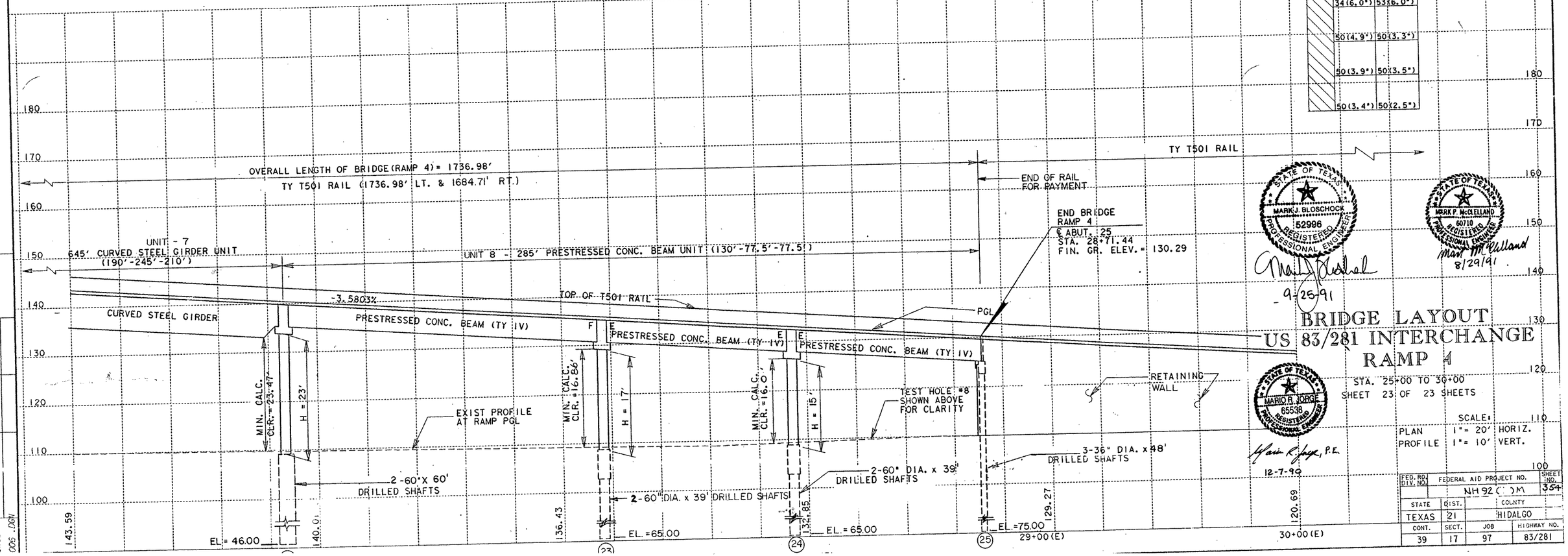

STATE OF TEXAS — MARK J. BLOSCHOCK — 52996 — REGISTERED PROFESSIONAL ENGINEER
9-25-91

STATE OF TEXAS — MARK P. McCLELLAND — 60710 — REGISTERED PROFESSIONAL ENGINEER
8/29/91

BRIDGE LAYOUT
US 83/281 INTERCHANGE
RAMP 4

STA. 25+00 TO 30+00
SHEET 23 OF 23 SHEETS

STATE OF TEXAS — MARIO R. JORGE — 65538 — REGISTERED PROFESSIONAL ENGINEER
12-7-90

SCALE:
PLAN 1" = 20' HORIZ.
PROFILE 1" = 10' VERT.

FED. RD. DIV. NO.	FEDERAL AID PROJECT NO.		SHEET NO.
	NH 92 ( ) M		354
STATE	DIST.	COUNTY	
TEXAS	21	HIDALGO	
CONT.	SECT.	JOB	HIGHWAY NO.
39	17	97	83/281

NAME	REFERENCE FILE	NAMED VIEW	LEVELS	PRF FILE
	NEWINT 2.DGN	REF2	1-62	REF. PRF
5161	NEWINT.DGN	REF1	1-28, 30-41	
005 .DGN				

SUMMARY OF ESTIMATED QUANTITIES

ITEM / DESCRIPTION	Slurry Displacement Drilled Shafts		CLASS "C" CONCRETE		REINFORCED CONCRETE SLAB	PRESTRESSED CONCRETE BEAMS	SEALED EXPANSION JOINT	RAILING	CONCRETE SURFACE TREATMENT	STRUCTURAL STEEL		ELASTOMERIC BEARINGS			SLIDING ELASTOMERIC BRGS.			Item 471 Frame & Grate (Br. Drain)
	36" ϕ	60" ϕ	ABUTMENT	BENT		TY. IV	4"	TY. T501		H.S.	H.Y.C.	IE12	IF7	IF10	SE3	SE7	SI	
	L.F.	L.F.	C.Y.	C.Y.	S.F.	L.F.	L.F.	L.F.	S.Y.	L.B.	L.B.	EA.	EA.	EA.	EA.	EA.	EA.	EA.
1 ~ ABUTMENT	144		15.3															
12 ~ INTERIOR BENTS		1314		1178.2						48689								
UNIT 5 ~ 430.00' PLATE GIRDER UNIT					13452		30	840.8	1362	479946	54232	4	4		8			
UNIT 6 ~ 376.98' PRESTR. CONC. BM UNIT					11796	1407.73	30	737.1	1195									
UNIT 7 ~ 645.00' PLATE GIRDER UNIT					20380		30	1273.8	2064	1101750	85286			4		8	4	
UNIT 8 ~ 285.00' PRESTR. CONC. BM UNIT					9120	1351.20	30	570	924									
TOTAL	144	1314	15.3	1178.2	54748	2758.93	120	3421.7	5545	1630385	139518	4	4	4	8	8	4	12

BEARING SEAT ELEVATIONS

		BEAM 1	BEAM 2	BEAM 3	BEAM 4	BEAM 5	BEAM 6
BENT 12	(FWD)	158.542	158.091	157.639	157.188		
BENT 13		157.756	157.277	156.778	156.279		
BENT 14		157.632	157.154	156.654	156.155		
BENT 15	(BK)	158.584	158.064	157.544	157.024		
	(FWD)	158.559	158.039	157.519	156.999		
BENT 16	(BK)	158.447	157.927	157.407	156.887		
	(FWD)	158.496	157.976	157.455	156.935		
BENT 17	(BK)	158.013	157.493	156.973	156.453		
	(FWD)	157.970	157.450	156.930	156.409		
BENT 18	(BK)	157.001	156.481	155.961	155.442		
	(FWD)	156.930	156.409	155.889	155.369		
BENT 19	(BK)	155.474	154.955	154.436	153.916		
	(FWD)	155.266	154.745	154.246	153.725		
BENT 20		148.616	148.117	147.618	147.118		
BENT 21		140.378	140.181	139.983	139.786		
BENT 22	(BK)	134.859	134.686	134.492	134.318		
	(FWD)	134.845	134.741	134.637	134.533	134.429	134.325
BENT 23	(BK)	130.376	130.272	130.168	130.064	129.960	129.856
	(FWD)	130.253	130.080	129.906	129.733		
BENT 24	(BK)	127.663	127.490	127.316	127.143		
	(FWD)	127.437	127.264	127.090	126.917		
BENT 25	(BK)	124.780	124.607	124.434	124.260		

HS 20 LOADING

STATE OF TEXAS
MARK J. BLOSCHOCK
52996
REGISTERED PROFESSIONAL ENGINEER
3-13-92

REV. 3-30 -92

STATE DEPARTMENT OF HIGHWAYS AND PUBLIC TRANSPORTATION

ESTIMATED QUANTITIES AND BEARING SEAT ELEVATIONS

US 83/281 INTERCHANGE
UNITS 5-8, RAMP 4

D45350A1 • ZFA2 • (355100)4379TAB02.DGN	PREPARED BY AND FOR USE OF TEXAS SDH&PT			
ORIGINAL DRAWING DATE: FEBRUARY 1991	STATE DISTRICT: 21	FEDERAL REGION: 6	FEDERAL AID PROJECT: •	SHEET: 355
DN.: KBA	CK.: LMW/MRL	DW.: PSR/MMM	CK.: LMW/MRL	REVISIONS

COUNTY	CONTROL	SECTION	JOB	HIGHWAY
HIDALGO	0039	17	097	US 83/281

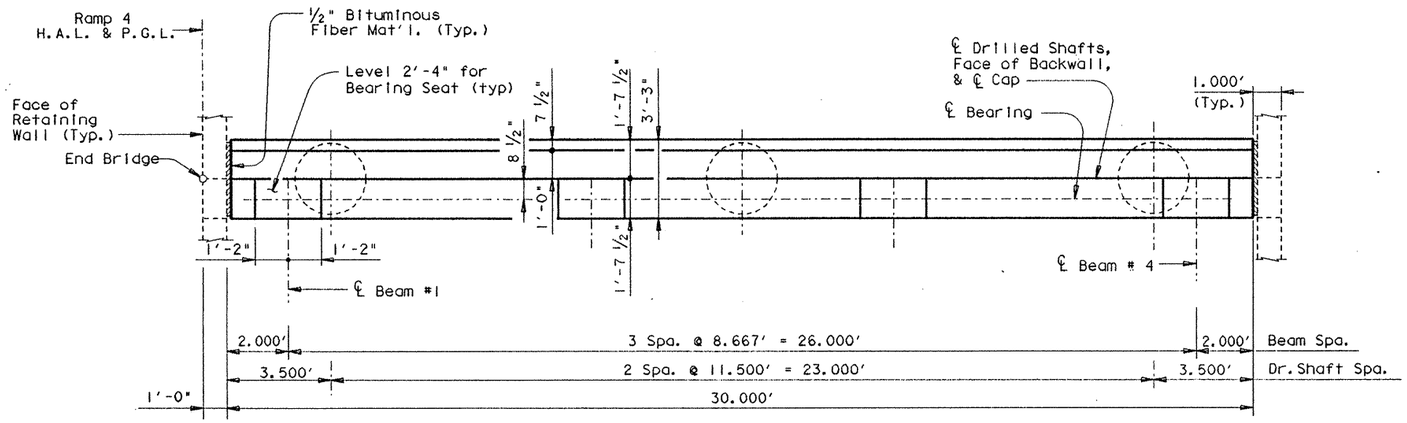

PLAN

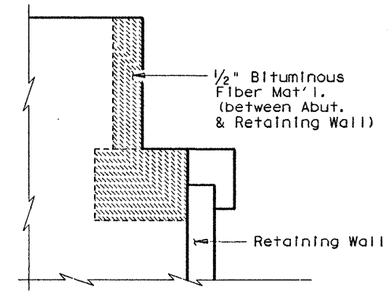

ELEVATION B-B

(SHOWING RETAINING WALL AT ABUTMENT)

TABLE OF ESTIMATED QUANTITIES

Bar	No.	Size	Length	Weight
A	6	# 11	29'- 8"	946
H	12	# 5	29'- 8"	371
S	26	# 4	10'- 6"	182
U1	4	# 6	7'-10"	47
U2	12	# 5	2'- 7"	32
V	31	# 5	13'-10"	447

Reinforcing Steel	Lb	⌗	2025
Class "C" Concrete	CY		15.3

⌗ For contractor's information only.

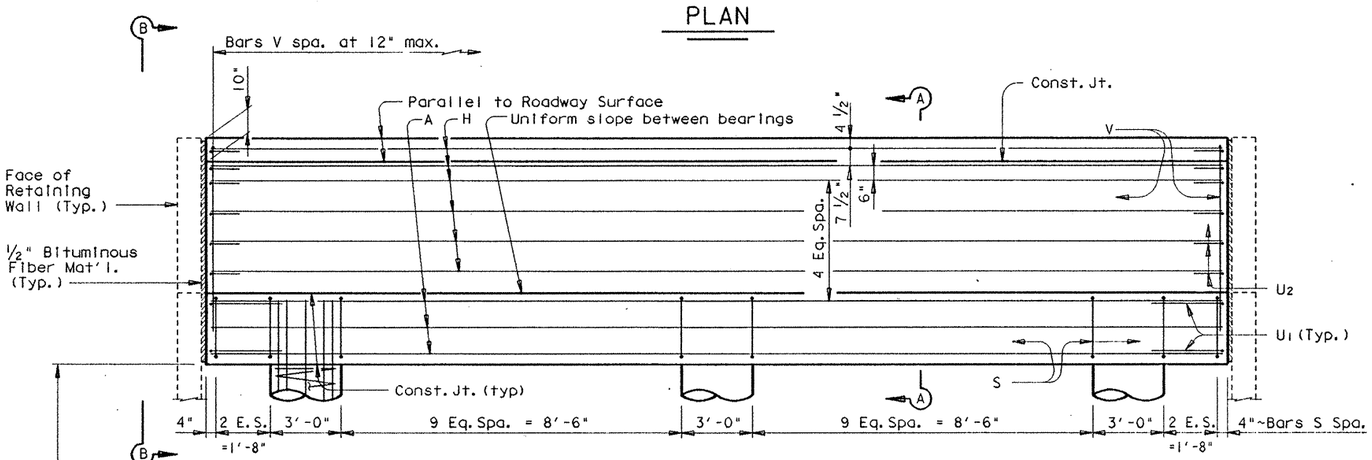

ELEVATION

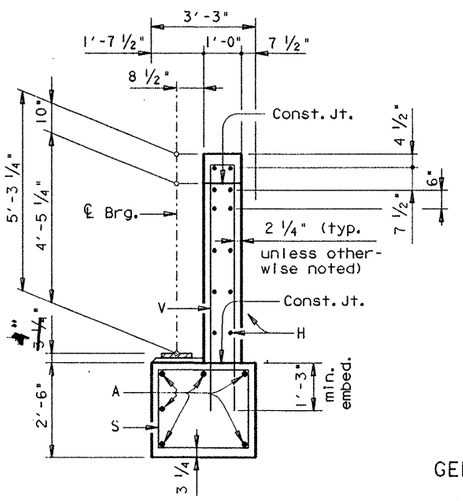

SECTION A-A

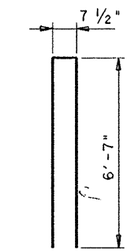

BARS V

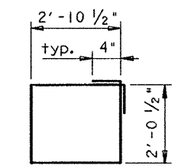

BARS S

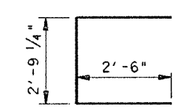

BARS U1

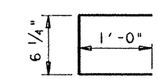

BARS U2

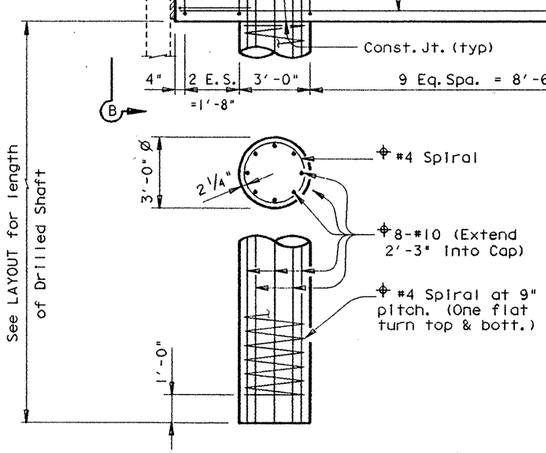

⌖ Included in price bid for Drilled Shaft.

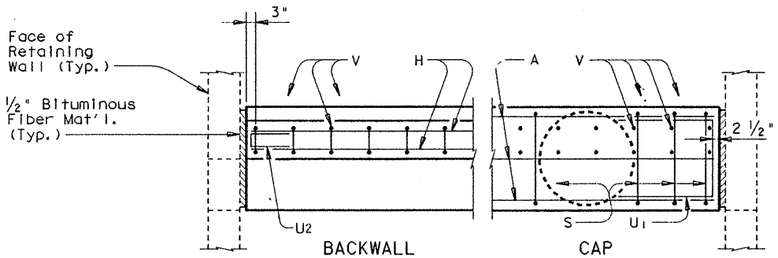

BACKWALL

CAP

CORNER DETAILS

GENERAL NOTES:

Designed according to A.A.S.H.T.O. 1989 Standard Specifications.

Calculated Foundation Loads ~
Cap Drilled Shafts = 100 Tons/Drilled Shaft

For Modified Bearing Seat Details see Gp C (SPL) Sheet.

HS 20 LOADING

STATE OF TEXAS
MARK J. BLOSCHOCK
52996
REGISTERED PROFESSIONAL ENGINEER

9-25-91

STATE DEPARTMENT OF HIGHWAYS AND PUBLIC TRANSPORTATION

ABUTMENT NO. 25
RAMP 4

US 83/281 INTERCHANGE

D45350A:: ZFA1: [355163]4379RWA01.DGN

ORIGINAL DRAWING DATE: July 1990

DN.: LMW
CK.: KBA
DW.: TKW
CK.: LMW

REVISIONS

PREPARED BY AND FOR USE OF TEXAS SDH&PT

STATE DISTRICT	FEDERAL REGION	FEDERAL AID PROJECT	SHEET
21	6	NH 92( )M	356

COUNTY	CONTROL	SECTION	JOB	HIGHWAY
Hidalgo	0039	17	097	US 83/281

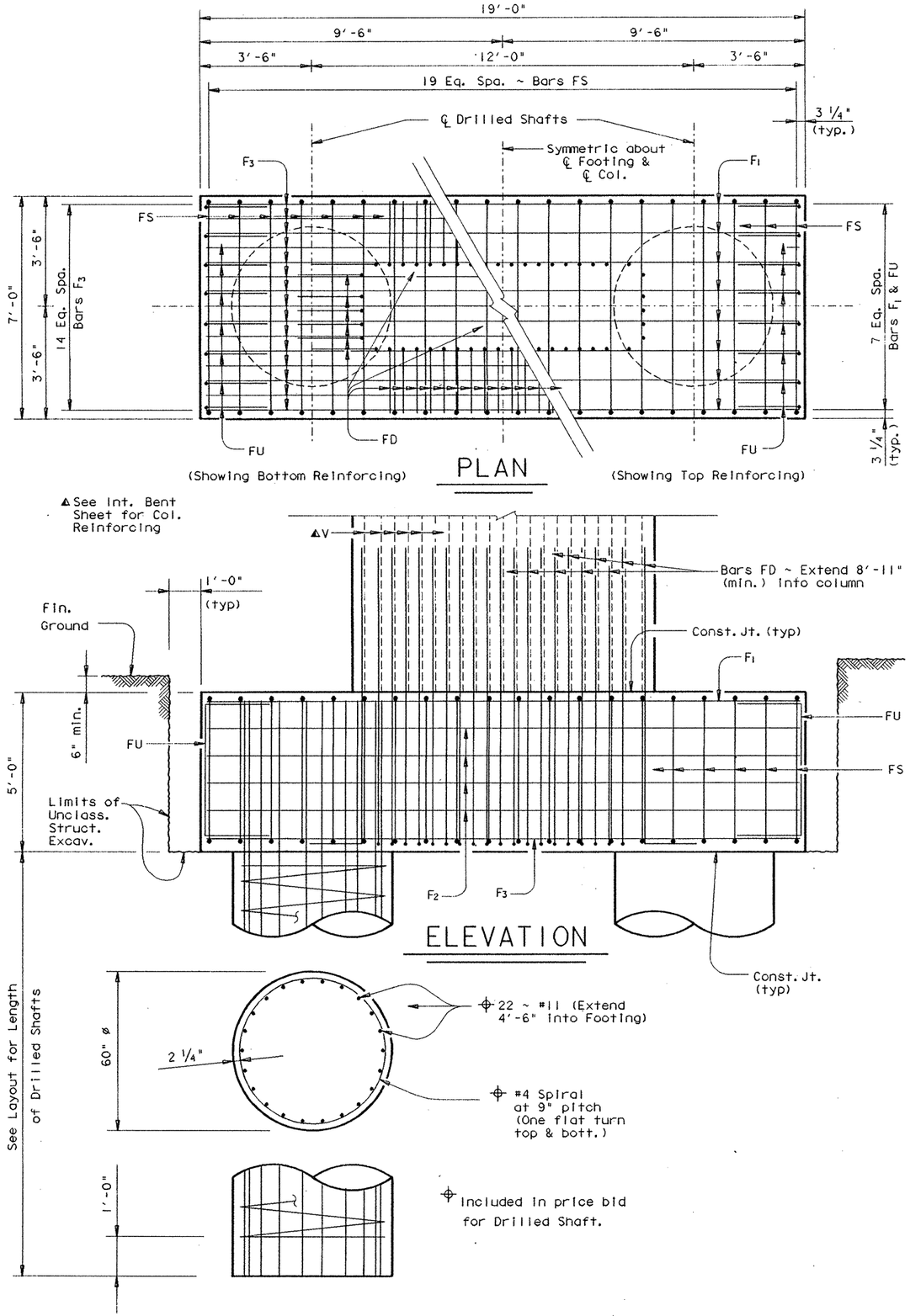

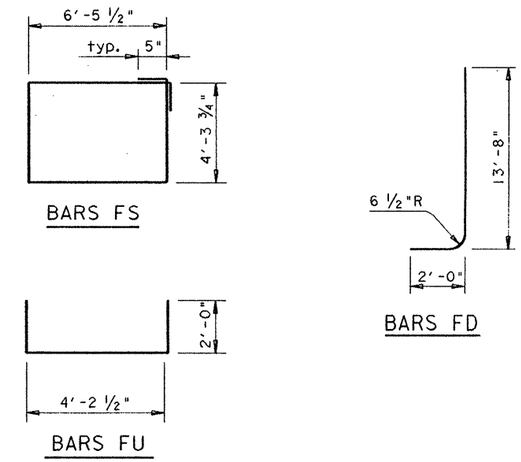

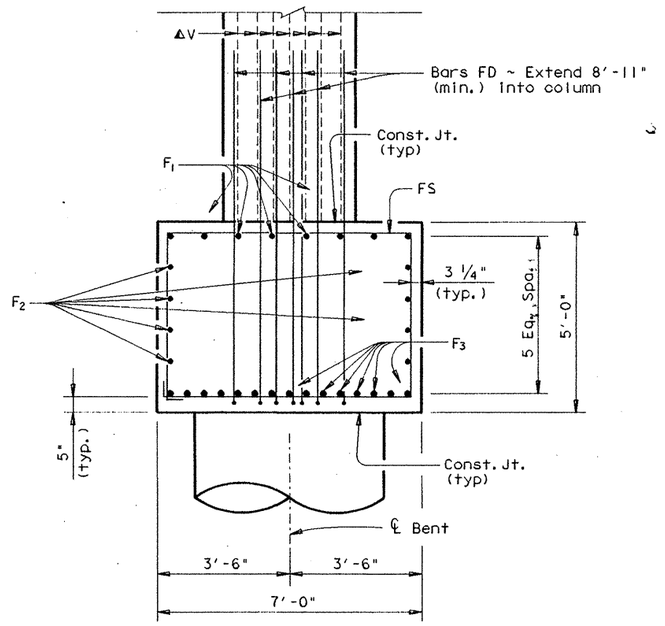

‡TABLE OF FOOTING QUANTITIES

Bar	No.	Size	Length	Weight
F_1	8	# 8	18'- 6"	395
F_2	8	# 5	18'- 6"	154
F_3	15	# 11	18'- 6"	1474
FD	48	# 11	15'- 6"	3953
FS	20	# 5	22'- 5"	468
FU	16	# 5	8'- 3"	139

Reinforcing Steel	Lb	⁜ 6583
Class "C" Concrete	CY	24.6

⁜ For Contractor's information only.

‡ Quantities shown are for one footing only.

All Footing Reinforcing Steel [redacted] Grade 60.

HS 20 LOADING

STATE DEPARTMENT OF HIGHWAYS AND PUBLIC TRANSPORTATION

FOOTING DETAILS BENT NOS. 13-15, & 19 RAMP 4

US 83/281 INTERCHANGE

STATE OF TEXAS
MARK J. BLOSCHOCK
52996
REGISTERED PROFESSIONAL ENGINEER

3-23-92

REV. 3-30 -92

D45350A1:ZFA2:[355100]4378MIS01.DGN PREPARED BY AND FOR USE OF TEXAS SDH&PT

ORIGINAL DRAWING DATE: NOVEMBER 1990		STATE DISTRICT	FEDERAL REGION	FEDERAL AID PROJECT	SHEET
DN.: GAF/MRL	REVISIONS	21	6	NH92( )M	357
CK.: MRL/GAF		COUNTY		CONTROL SECTION JOB	HIGHWAY
DW.: PSR		HIDALGO		0039 17 097	US 83/281
CK.: GAF/MRL					

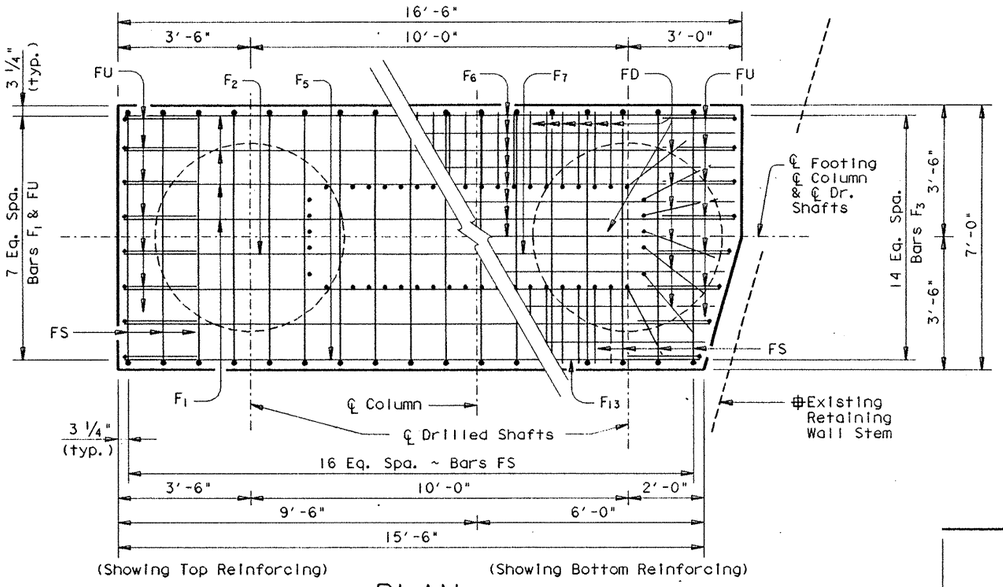

PLAN

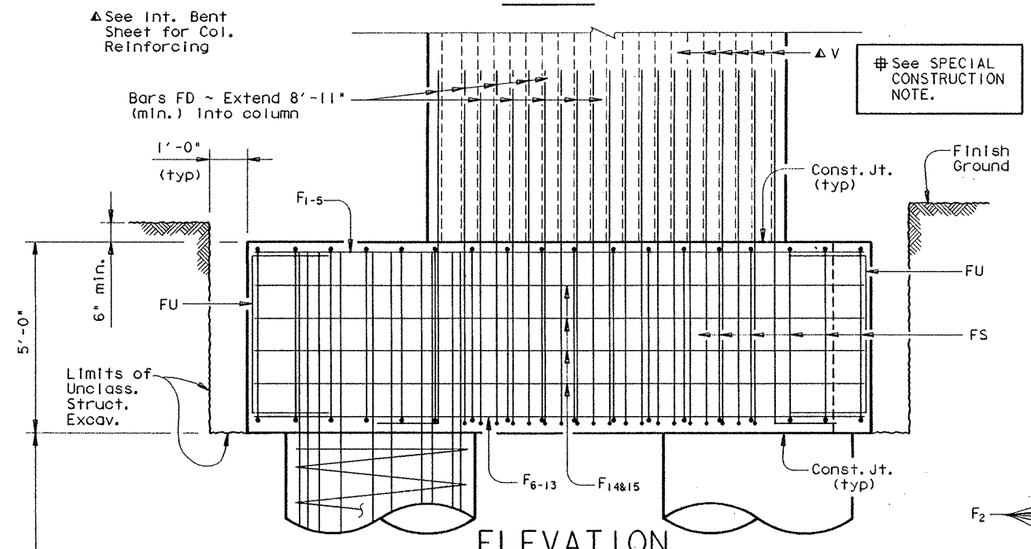

ELEVATION

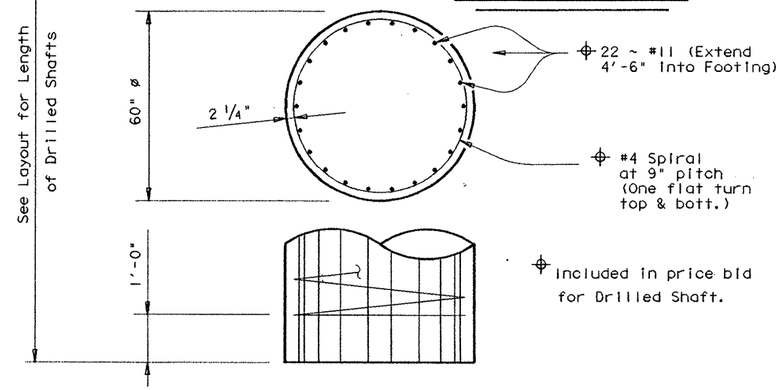

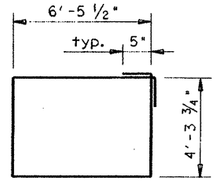

BARS FS

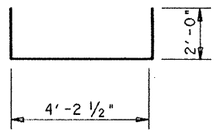

BARS FU

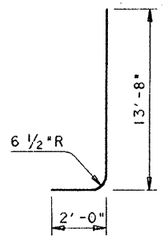

BARS FD

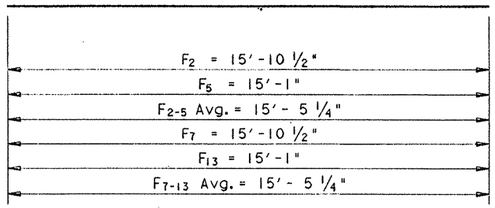

VARIABLE BARS F

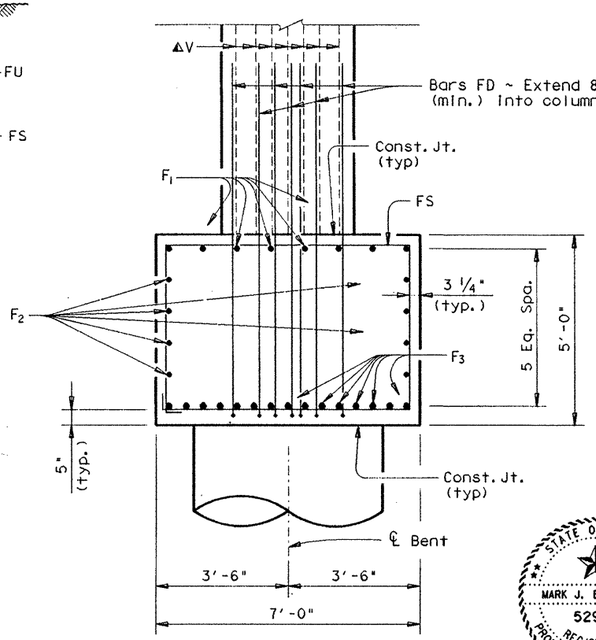

FOOTING SECTION

TABLE OF FOOTING QUANTITIES

Bar	No.	Size	Length	Weight
F_1	4	# 8	16'-0"	209
F_6	8	# 11	16'-0"	680
F_{2-5}	4	# 8	15'-6"Av	166
F_{7-13}	8	# 11	15'-6"Av	659
F_{14}	4	# 5	16'-0"Av	67
F_{15}	4	# 5	15'-0"Av	63
FD	48	# 11	15'-6"	3953
FS	17	# 5	22'-5"	397
FU	16	# 5	8'-3"	139
Reinforcing Steel			Lb	‡ 6333
Class "C" Concrete			CY	21.1

‡ For Contractor's information only.

All Footing Reinforcing Steel shall be Grade 60.

SPECIAL CONSTRUCTION NOTE:

This footing [redacted] conflict with a portion of an existing reinforced concrete retaining wall. In order to construct one drilled shaft and a portion of the footing, it [redacted] necessary to break out and remove a portion of the retaining wall footing.

Prior to construction, the Contractor [redacted] submit for the Engineer's approval his [redacted] methods and sequence of construction, including any shoring necessary to support the excavation.

The amount of retaining wall footing removed [redacted] the minimum necessary for construction of the drilled shaft and the footing. The broken out portion of the footing [redacted] not [redacted] replaced. Exposed steel [redacted] grouted over or protected in a manner satisfactory to the Engineer.

All costs associated with removing and repairing the retaining wall [redacted] considered subsidiary to the item "Concrete for Structures".

GENERAL NOTES:

Designed according to A.A.S.H.T.O. 1989 Standard and current Interim Specifications.

HS 20 LOADING

STATE DEPARTMENT OF HIGHWAYS AND PUBLIC TRANSPORTATION

FOOTING DETAILS BENT NO. 20 RAMP 4

US 83/281 INTERCHANGE

STATE OF TEXAS
MARK J. BLOSCHOCK
52996
REGISTERED PROFESSIONAL ENGINEER

3-23-92

REV. 3-30 -92

D45350A:: ZFA2: [3551001]4378MISO1.DGN		PREPARED BY AND FOR USE OF TEXAS SDH&PT					
ORIGINAL DRAWING DATE: NOVEMBER 1990	REVISIONS	STATE DISTRICT	FEDERAL REGION	FEDERAL AID PROJECT			SHEET
DN.: KLR		21	6	NH92( )M			357A
CK.: GAF		COUNTY		CONTROL	SECTION	JOB	HIGHWAY
DW.: PSR		HIDALGO		0039	17	097	US 83/281
CK.: KLR							

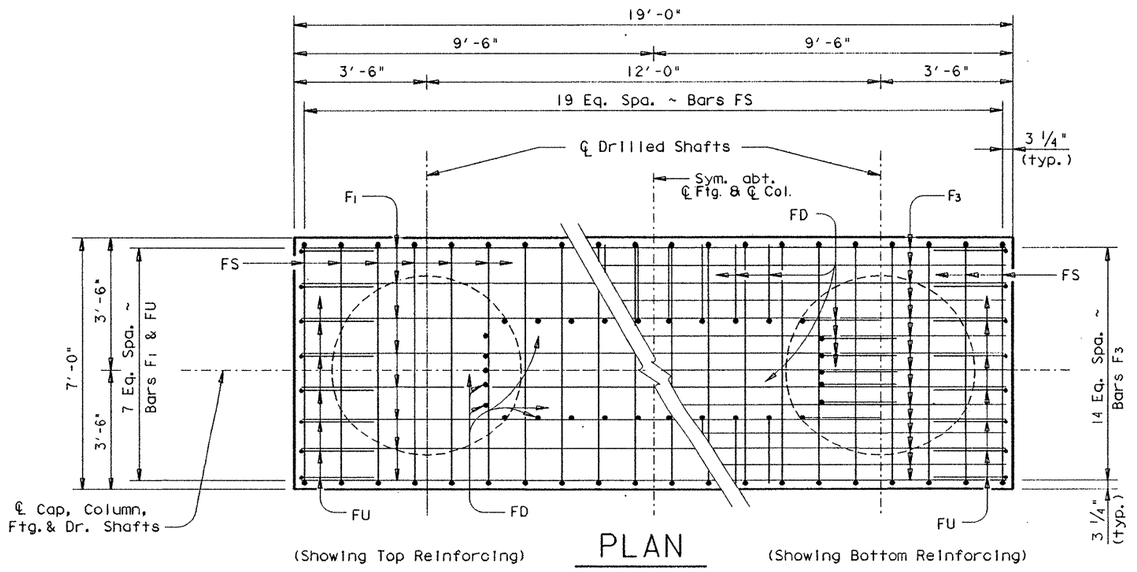

(Showing Top Reinforcing)

PLAN

(Showing Bottom Reinforcing)

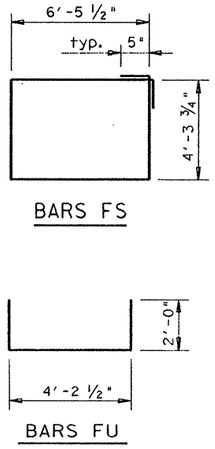

ǂTABLE OF FOOTING QUANTITIES

Bar	No.	Size	Length	Weight
F_1	8	# 8	18'- 6"	395
F_2	8	# 5	18'- 6"	154
F_3	15	# 11	18'- 6"	1474
FD	30	# 11	15'- 6"	2471
FS	20	# 5	22'- 5"	468
FU	16	# 5	8'- 3"	139

Reinforcing Steel	Lb	ǂ 5101
Class "C" Concrete	CY	24.6

ǂ For Contractor's information only.

ǂ Quantities shown are for one footing only.

All footing reinforcing [redacted] Grade 60.

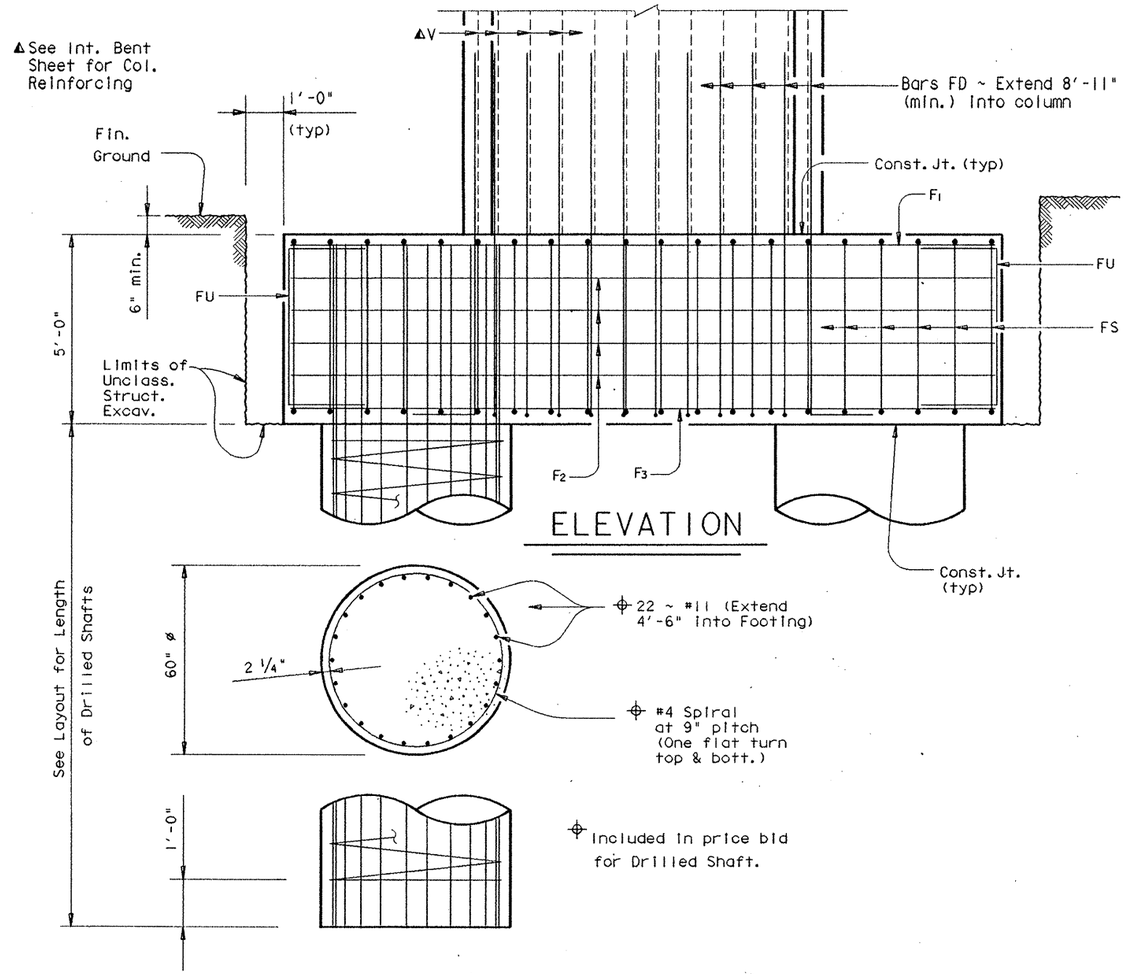

ELEVATION

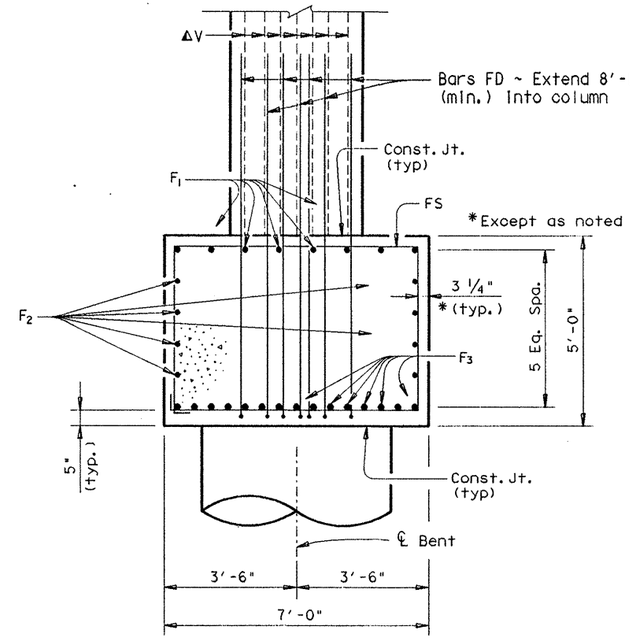

FOOTING SECTION

HS 20 LOADING

STATE DEPARTMENT OF HIGHWAYS AND PUBLIC TRANSPORTATION

FOOTING DETAILS BENT NOS. 16-18, 23 & 24 RAMP 4

US 83/281 INTERCHANGE

STATE OF TEXAS
MARK J. BLOSCHOCK
52996
REGISTERED PROFESSIONAL ENGINEER
9-25-91

D45350A1+ZFA2+E35510014377MISC03.DGN	PREPARED BY AND FOR USE OF TEXAS SDH&PT						
ORIGINAL DRAWING DATE: JANUARY 1991	STATE DISTRICT	FEDERAL REGION	FEDERAL AID PROJECT			SHEET
DR.: GAF/MRL	REVISIONS	21	6	NH92C	JM		358
CK.: MRL/GAF		COUNTY		CONTROL	SECTION	JOB	HIGHWAY
DW.: DRG/PSR		HIDALGO		0039	17	097	US 83/281
CK.: JCC							

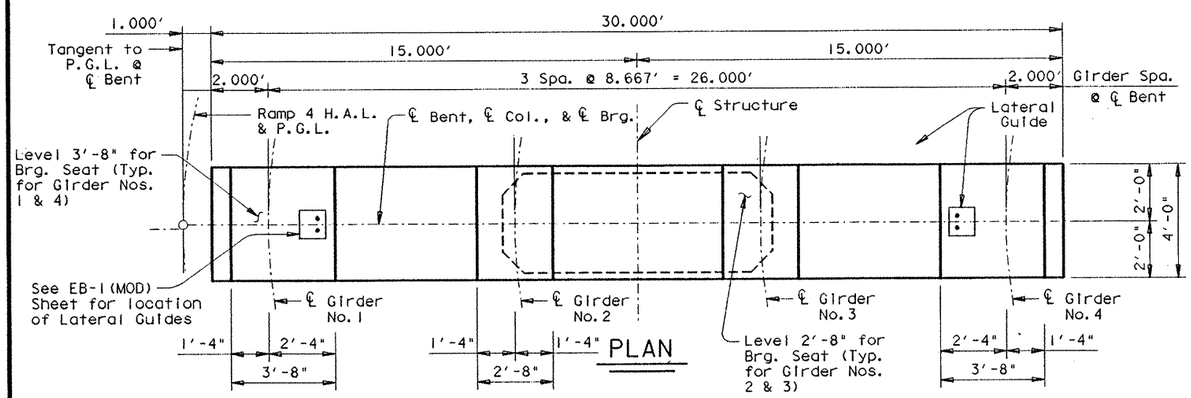

PLAN

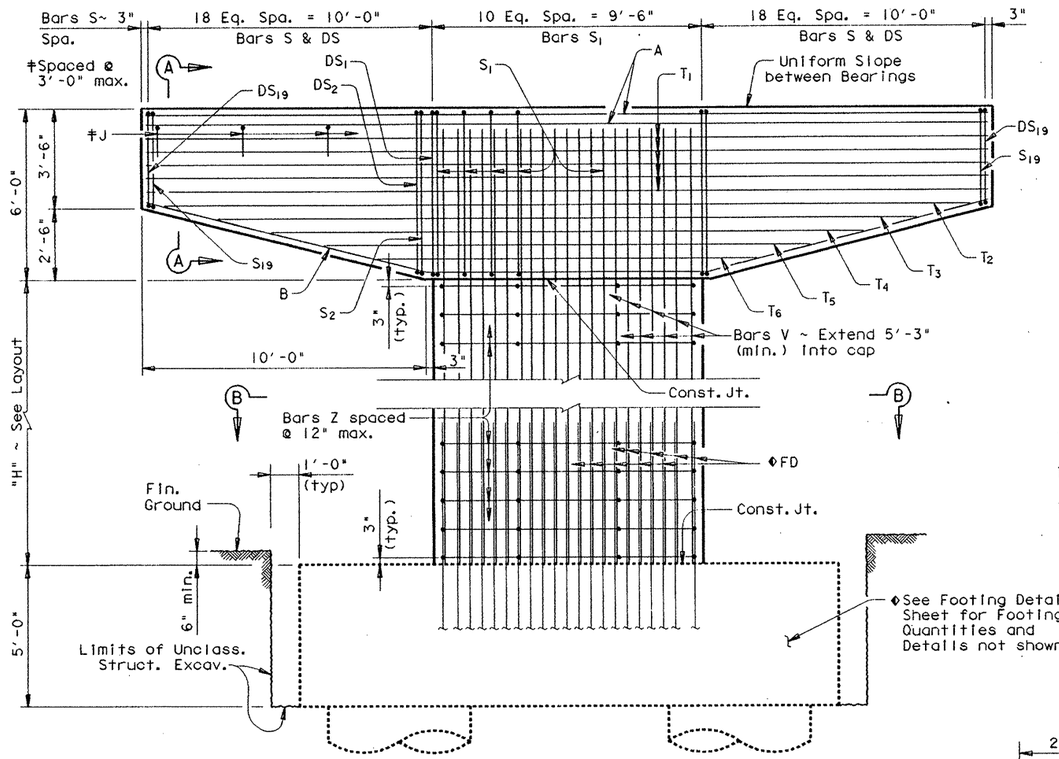

ELEVATION

BARS T2-T6

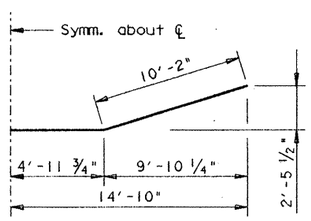

BARS B

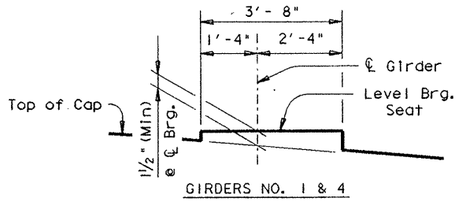

GIRDERS NO. 1 & 4

BEARING SEAT DETAIL

(Showing Grider No. 1)

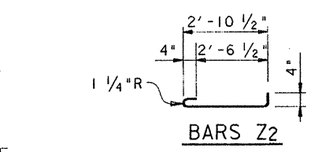

BARS Z2

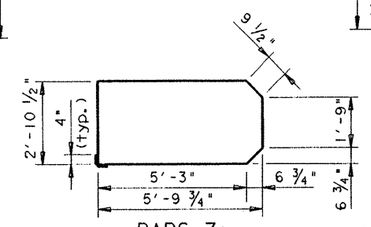

BARS Z1

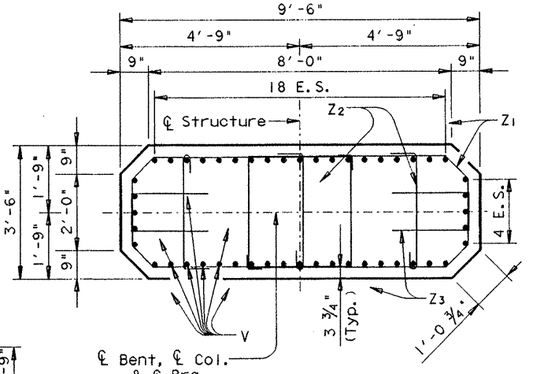

SECTION B-B

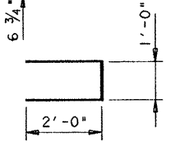

BARS Z3

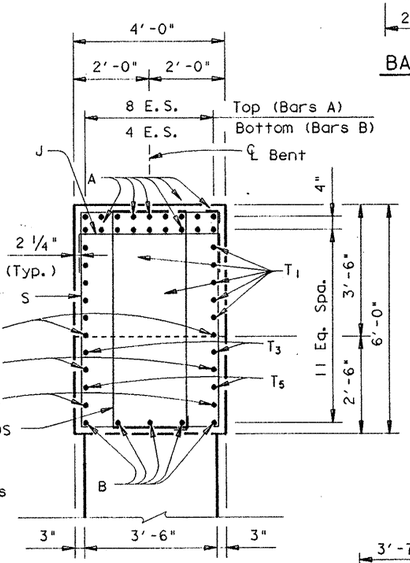

SECTION A-A

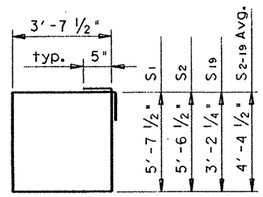

BARS S

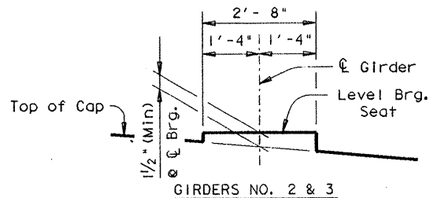

GIRDERS NO. 2 & 3

BEARING SEAT DETAIL

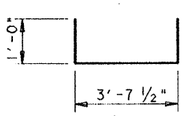

BARS J

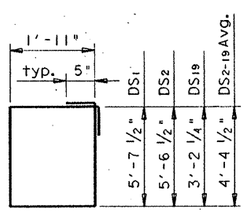

BARS DS

TABLE OF CONSTANT QUANTITIES				
Bar	No	Sz.	Length	Weight
A	18	#11	29'- 8"	2837
B	5	#11	30'- 4"	806
DS1	2	#5	15'-11"	33
DS2-19	36	#5	13'- 5"	504
J	11	#5	5'- 8"	65
S1	11	#5	19'- 4"	223
S2-19	36	#5	16'-10"Av	632
T1	10	#6	29'- 8"	446
T2-6	10	#6	20'-11"Av	314
Reinf. Steel (Cap)			Lb ‡	5860
Cl. "C" Conc. (Cap)			CY	23.2

‡ For Contractors Info. Only.

TABLE OF VARIABLE QUANTITIES

H	Cl. "C" Conc.	Bars Z1, #4 x 17'-5"		Bars Z2 #4 x 3'-8"		Bars Z3 #4 x 5'-0"		Bars V 48 ~ # 11		▲Total Est. Quantities Reinf. Steel ‡	▲Total Est. Quantities Cl. "C" Conc.
FT.	C.Y.	NO.	WT.	NO.	WT.	NO.	WT.	LGTH.	WT.	LB.	C.Y.
35	41.6	72	838	108	265	72	240	40'- 3"	10265	24051	89.4
36	42.8	74	861	111	272	74	247	41'- 3"	10520	24343	90.6
37	44.0	76	884	114	279	76	254	42'- 3"	10775	24635	91.8
38	45.2	78	907	117	287	78	261	43'- 3"	11030	24928	93.0
39	46.4	80	931	120	294	80	267	44'- 3"	11285	25220	94.2
40	47.6	82	954	123	301	82	274	45'- 3"	11540	25512	95.4
41	48.8	84	977	126	309	84	281	46'- 3"	11795	25805	96.6
42	50.0	86	1001	129	316	86	287	47'- 3"	12050	26097	97.8
43	51.2	88	1024	132	323	88	294	48'- 3"	12305	26389	99.0
44	52.4	90	1047	135	331	90	301	49'- 3"	12560	26682	100.2
45	53.5	92	1070	138	338	92	307	50'- 3"	12815	26973	101.3
46	54.7	94	1094	141	345	94	314	51'- 3"	13070	27266	102.5
47	55.9	96	1117	144	353	96	321	52'- 3"	13325	27559	103.7

▲ Includes Footing Quantities

GENERAL NOTES:

Designed in accordance with A.A.S.H.T.O. 1989 Specifications.

Calculated Drilled Shaft Loads = 815 T/Dr. Shaft.

See EB-1(MOD) sheet for Bearing Details not shown.

All Cap & Column Steel ~~shall be~~ Grade 60.

HS 20 LOADING

STATE DEPARTMENT OF HIGHWAYS AND PUBLIC TRANSPORTATION

INTERIOR BENT NO. 13 RAMP 4

US 83/281 INTERCHANGE

STATE OF TEXAS
MARK J. BLOSCHOCK
52996
REGISTERED PROFESSIONAL ENGINEER
9-25-91

D45350A ▪ ZFA2 ▪ [355100]43791SC02.DGN
ORIGINAL DRAWING DATE▪ FEBRUARY 1991
DW.▪ GAF/MRL
CK.▪ MRL/GAF
DW.▪ PSR
CK.▪ GAF/MRL
REVISIONS

PREPARED BY AND FOR USE OF TEXAS SDH&PT

STATE DISTRICT	FEDERAL REGION	FEDERAL AID PROJECT	SHEET
21	6	NH 92( )M	358

COUNTY	CONTROL	SECTION	JOB	HIGHWAY
HIDALGO	0039	17	097	US 83/281

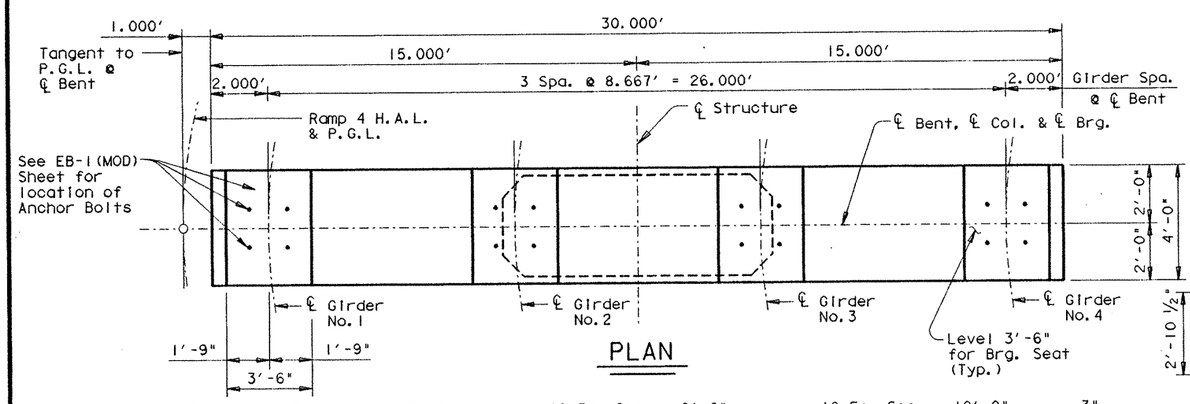

PLAN

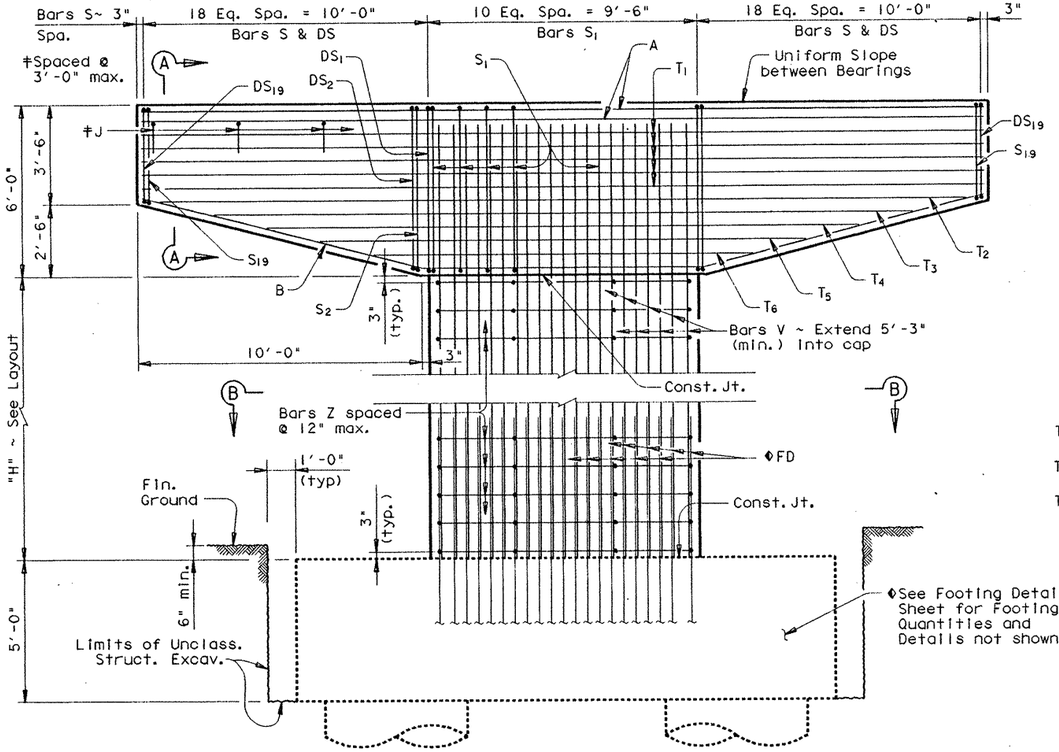

ELEVATION

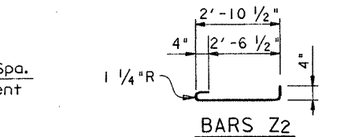

BARS Z2

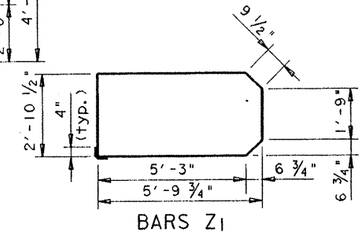

BARS Z1

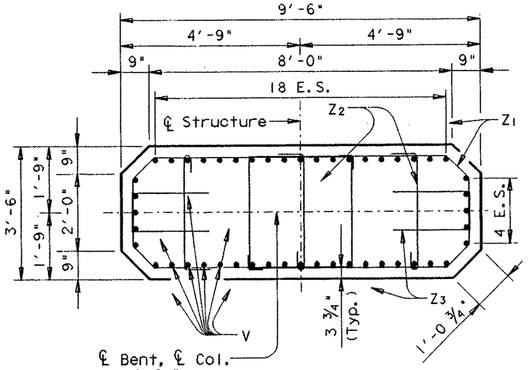

SECTION B-B

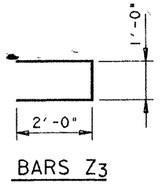

BARS Z3

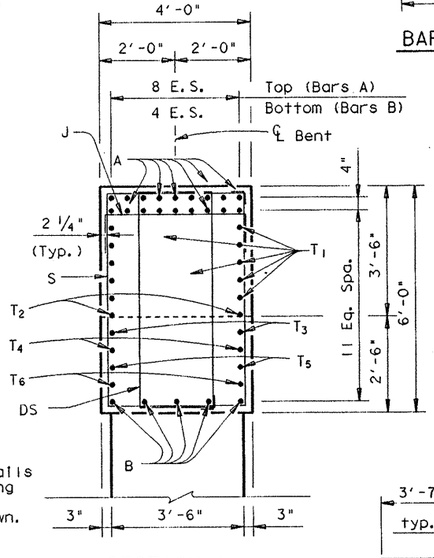

SECTION A-A

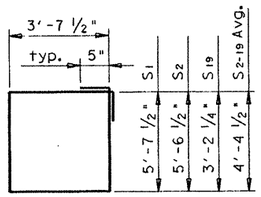

BARS S

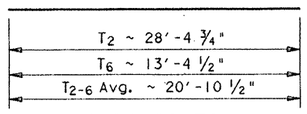

BARS T2-T6

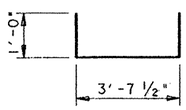

BARS J

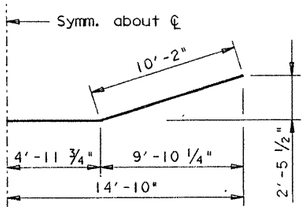

BARS B

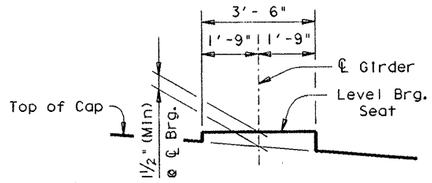

BEARING SEAT DETAIL

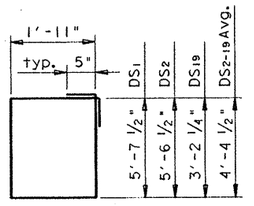

BARS DS

TABLE OF CONSTANT QUANTITIES				
Bar	No	Sz.	Length	Weight
A	18	#11	29'- 8"	2837
B	5	#11	30'- 4"	806
DS1	2	#5	15'-11"	33
DS2-19	36	#5	13'- 5"	504
J	11	#5	5'- 8"	65
S1	11	#5	19'- 4"	223
S2-19	36	#5	16'-10"Av	632
T1	10	#6	29'- 8"	446
T2-6	10	#6	20'-11"Av	314
Reinf. Steel (Cap)			Lb	‡ 5860
Cl. "C" Conc. (Cap)			CY	23.2

‡ For Contractors Info. Only.

TABLE OF VARIABLE QUANTITIES										▲TOTAL EST. QUANTITIES	
H	CL. "C" CONC.	BARS Z1 #4 x 17'-5"		BARS Z2 #4 x 3'-8"		BARS Z3 #4 x 5'-0"		BARS V 48 ~ # 11		REINF. STEEL ‡	CL. "C" CONC.
FT.	C.Y.	NO.	WT.	NO.	WT.	NO.	WT.	LGTH.	WT.	LB.	C.Y.
38	45.2	78	907	117	287	78	261	43'- 3"	11030	24928	93.0
39	46.4	80	931	120	294	80	267	44'- 3"	11285	25220	94.2
40	47.6	82	954	123	301	82	274	45'- 3"	11540	25512	95.4
41	48.8	84	977	126	309	84	281	46'- 3"	11795	25805	96.6
42	50.0	86	1001	129	316	86	287	47'- 3"	12050	26097	97.8
43	51.2	88	1024	132	323	88	294	48'- 3"	12305	26389	99.0
44	52.4	90	1047	135	331	90	301	49'- 3"	12560	26682	100.2
45	53.5	92	1070	138	338	92	307	50'- 3"	12815	26973	101.3
46	54.7	94	1094	141	345	94	314	51'- 3"	13070	27266	102.5
47	55.9	96	1117	144	353	96	321	52'- 3"	13325	27559	103.7
48	57.1	98	1140	147	360	98	327	53'- 3"	13580	27850	104.9

▲ Includes Footing Quantities

GENERAL NOTES:

Designed in accordance with A.A.S.H.T.O. 1989 Specifications.

Calculated Drilled Shaft Loads = 815 T/Dr. Shaft.

See EB-1(MOD) sheet for Bearing Details not shown.

All Cap & Column Steel [redacted] Grade 60.

HS 20 LOADING

STATE DEPARTMENT OF HIGHWAYS AND PUBLIC TRANSPORTATION

INTERIOR BENT NO. 14 RAMP 4

US 83/281 INTERCHANGE

MARK J. BLOSCHOCK 52996 REGISTERED PROFESSIONAL ENGINEER

9-25-91

D45350A♦ZFA2♦(355100743791SC01.DGN

ORIGINAL DRAWING DATE: FEBRUARY 1991

REVISIONS

DN.♦ GAF/MRL
CK.♦ MRL/CAF
DN.♦ PSR
CK.♦ GAF/MRL

PREPARED BY AND FOR USE OF TEXAS SDH&PT

STATE DISTRICT	FEDERAL REGION	FEDERAL AID PROJECT	♦	SHEET
21	6	NH 92( )M		360

COUNTY	CONTROL	SECTION	JOB	HIGHWAY
HIDALGO	0039	17	097	US 83 23

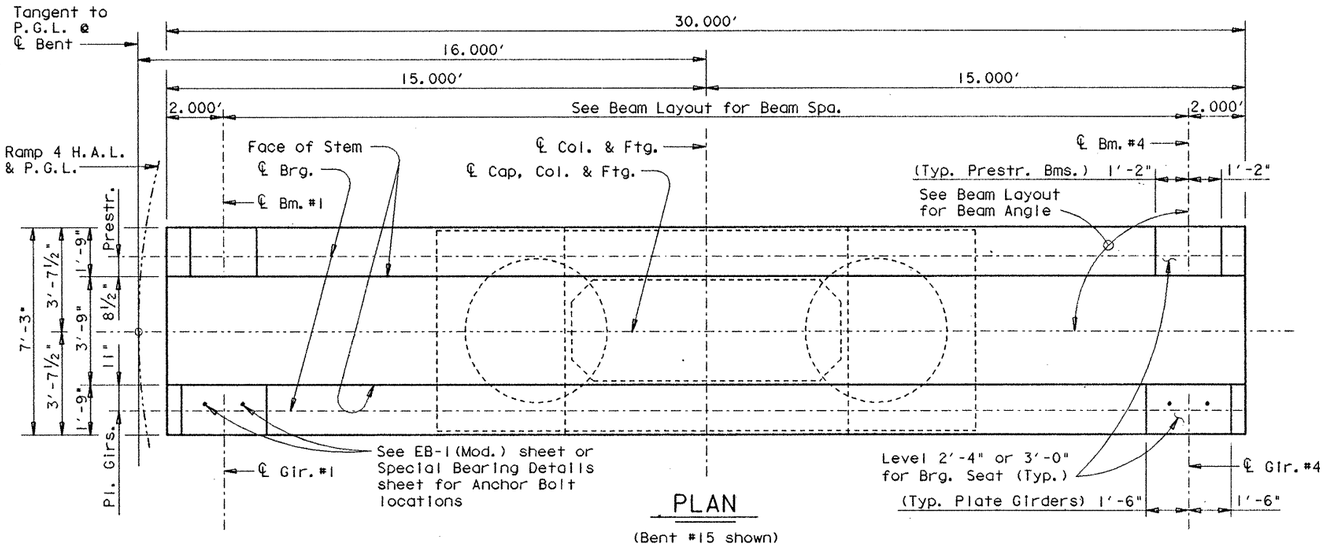

PLAN

(Bent #15 shown)

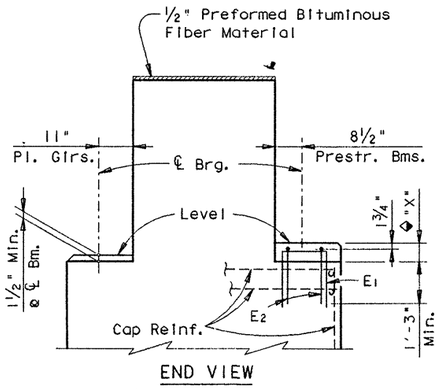

END VIEW

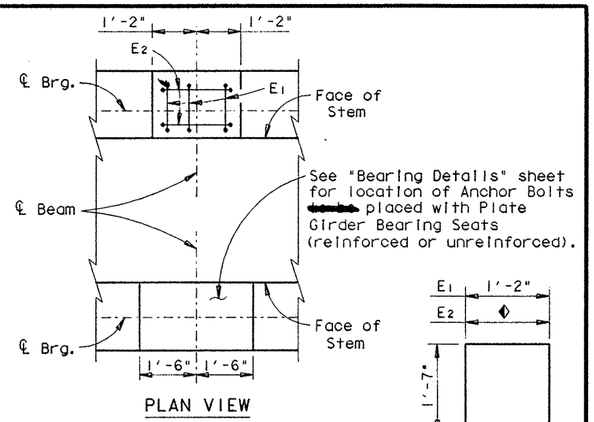

PLAN VIEW

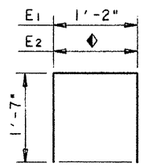

BARS E

BEARING SEAT DETAILS

◆ Reinforced Pedestals [redacted] required where "X" is greater than 2½" and [redacted] considered subsidiary to the Bid Item "Class C Concrete (Bent). Compare bearing seat elevations to determine value of "X".

◆ 2'-0½" ℄ Prestr. Bms.
2'-8½" ℄ Plate Girs.

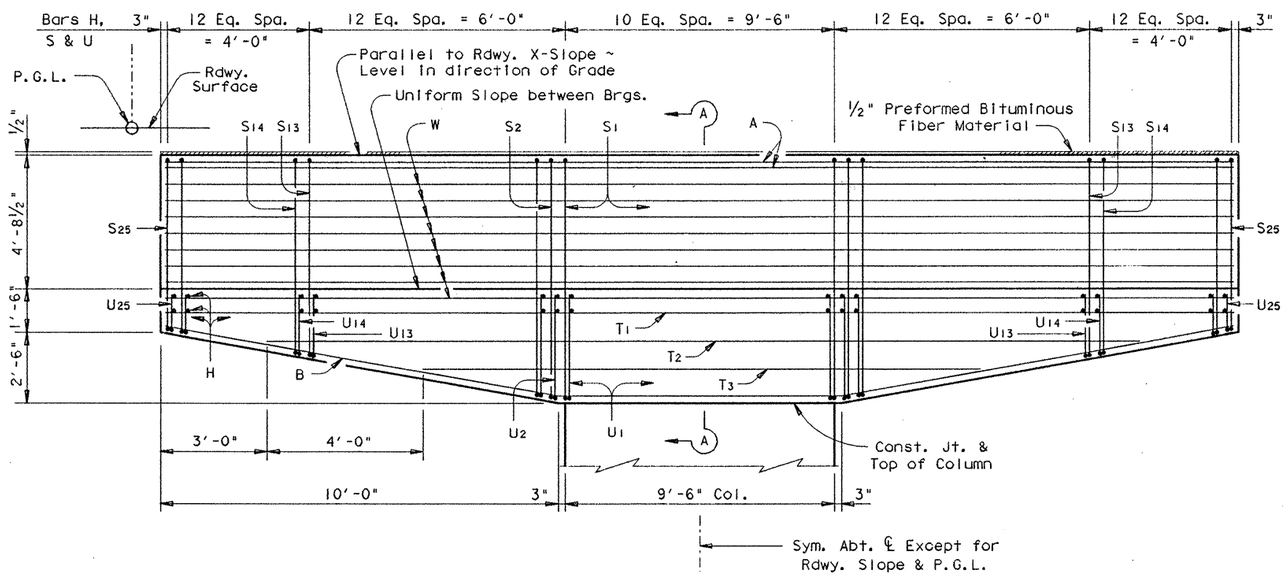

CAP ELEVATION

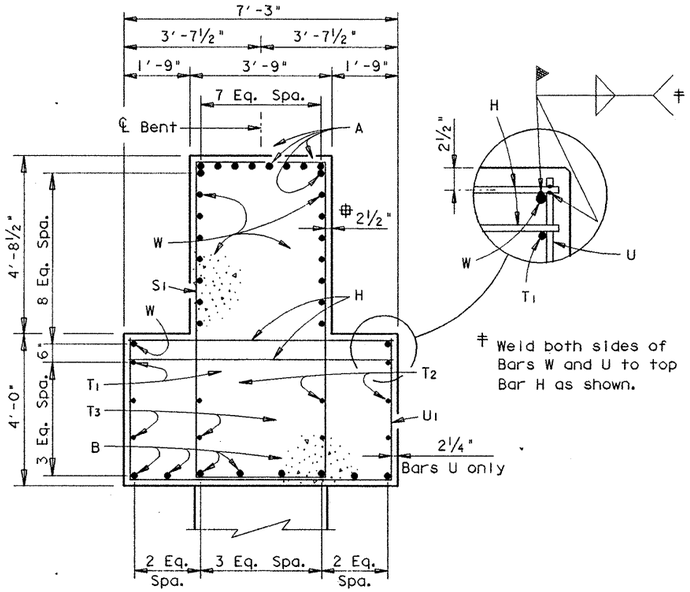

‡ Weld both sides of Bars W and U to top Bar H as shown.

SECTION A-A

Typical except as noted

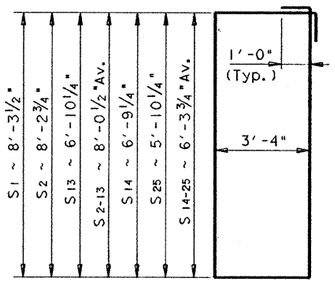

BARS S

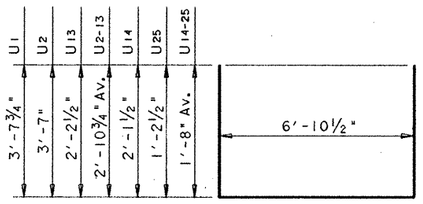

BARS U

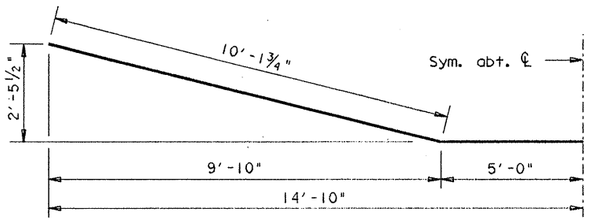

BARS B

HS 20 LOADING

SHEET 1 OF 2

STATE DEPARTMENT OF HIGHWAYS AND PUBLIC TRANSPORTATION

INTERIOR BENT NOS. 15 & 19 RAMP 4

US 83/281 INTERCHANGE

D45350A1 ▮ ZFA2 (355105)4377INV09.DGN	PREPARED BY AND FOR USE OF TEXAS SDH&PT					
ORIGINAL DRAWING DATE: NOVEMBER 1990	STATE DISTRICT	FEDERAL REGION	FEDERAL AID PROJECT			SHEET
DR.▮▪ JCC	21	6	NH 92( )M			361
CK.▮▪ MAS	COUNTY		CONTROL	SECTION	JOB	HIGHWAY
DR.▮▪ DRG	HIDALGO		0039	17	097	US 83/281
CK.▮▪ JCC						

REVISIONS

STATE OF TEXAS
MARK J. BLOSCHOCK
52906
REGISTERED
PROFESSIONAL ENGINEER

9-25-91

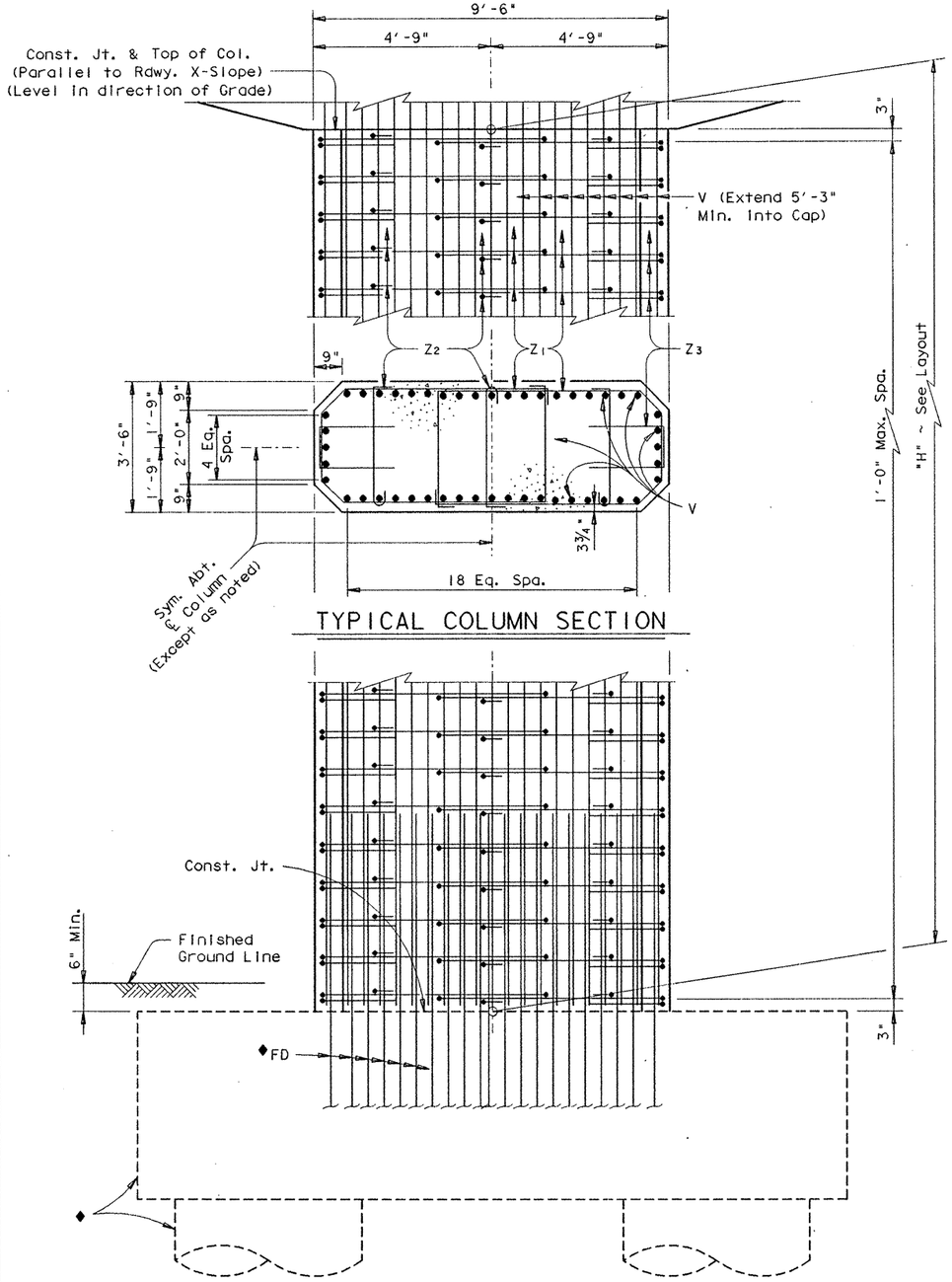

TYPICAL COLUMN SECTION

◆See Footing Details sheet for foundation details and quantities not shown.

COLUMN ELEVATION

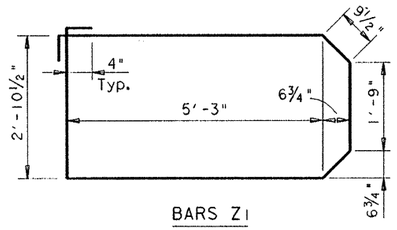

BARS Z1

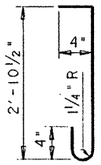

BARS Z2

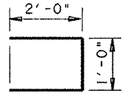

BARS Z3

▲ Quantities shown for one Bent only

⁜ For contractor's information only

All cap & column reinforcing steel ▬ Grade 60.

GENERAL NOTES:

Designed according to A.A.S.H.T.O. 1989 Standard and current interim Specifications.

Calculated Foundation Load = 625 Tons/Dr. Shaft

See "Form Liner Details" sheet for aesthetic treatment of columns and caps.

See Inverted Tee Bent Special Cap Details Sheet for details not shown.

▲ TABLE OF CONSTANT QUANTITIES

Bar	No.	Size	Length	Weight
A	10	# 11	29'- 8"	1576
B	8	# 11	30'- 4"	1289
H	118	# 6	6'-11"	1226
S1	11	# 6	25'- 3"	417
S2-13	24	# 6	23'- 9"Av	856
S14-25	24	# 6	21'- 4"Av	769
T1	2	# 6	29'- 8"	89
T2	4	# 6	24'- 0"	144
T3	4	# 6	16'- 0"	96
U1	11	# 5	14'- 2"	163
U2-13	24	# 5	12'- 8"Av	317
U14-25	24	# 5	10'- 3"Av	257
W	16	# 9	29'- 8"	1614

Reinforcing Steel	Lb	⁜ 8813
Class "C" Concrete (Cap)	CY	45.3

TABLE OF VARIABLE QUANTITIES

"H"	Class "C" Conc. (Col.)	Bars Z1 17'-5" ~ #4		Bars Z2 3'-8" ~ #4		Bars Z3 5'-0" ~ #4		Bars V 48 ~ # 11	
		No.	Weight	No.	Weight	No.	Weight	Length	Weight
Ft	CY								
42	50.0	86	1001	129	316	86	287	47'- 3"	12050
43	51.2	88	1024	132	324	88	294	48'- 3"	12305
44	52.4	90	1047	135	331	90	301	49'- 3"	12560
45	53.5	92	1071	138	338	92	307	50'- 3"	12815
46	54.7	94	1094	141	346	94	314	51'- 3"	13070
47	55.9	96	1117	144	353	96	321	52'- 3"	13325
48	57.1	98	1140	147	360	98	327	53'- 3"	13580
49	58.3	100	1164	150	368	100	334	54'- 3"	13835

▲▬ TOTAL ESTIMATED QUANTITIES

⁜ Reinf. Steel	Class "C" Conc.
Lb	CY
29050	119.9
29343	121.1
29635	122.3
29927	123.4
30220	124.6
30512	125.8
30803	127.0
31097	128.2

▬ Includes Footing Quantities

HS 20 LOADING

SHEET 2 OF 2

STATE OF TEXAS
MARK J. BLOSCHOCK
52996
REGISTERED
PROFESSIONAL ENGINEER

9-25-91

REV. 3-30 -92

STATE DEPARTMENT OF HIGHWAYS AND PUBLIC TRANSPORTATION

INTERIOR BENT NOS. 15 & 19 RAMP 4

US 83/281 INTERCHANGE

D45350A1 ▪ ZFA2 ▪ [355105]4377INV09.DGN	PREPARED BY AND FOR USE OF TEXAS SDH&PT				
ORIGINAL DRAWING DATE ▪ NOVEMBER 1990	STATE DISTRICT	FEDERAL REGION	FEDERAL AID PROJECT ▪		SHEET
DR. ▪ MRL	REVISIONS	21	6	NH 92( )M	362
CK. ▪ GAF		COUNTY		CONTROL	SECTION	JOB	HIGHWAY
DR. ▪ DRG		HIDALGO		0039	17	097	US 83/281
CK. ▪ JCC							

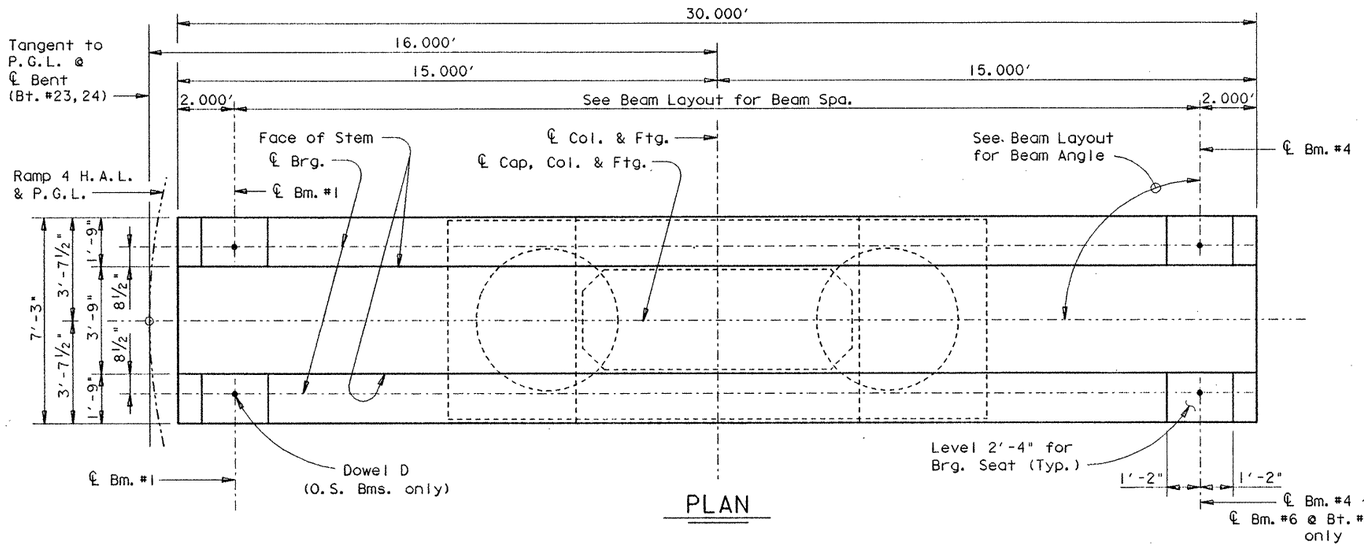

PLAN

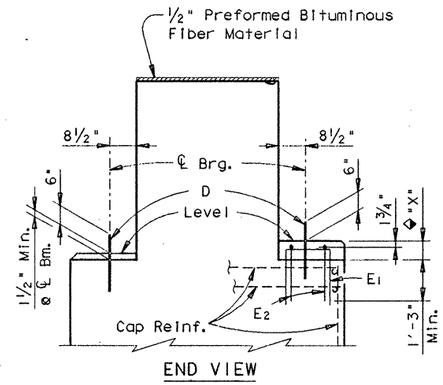

END VIEW

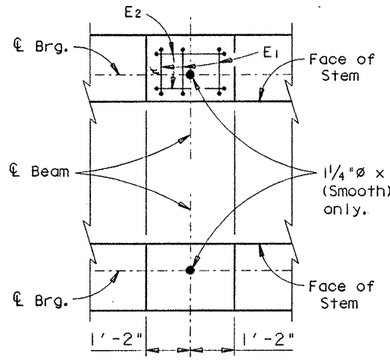

PLAN VIEW

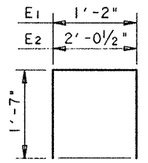

BARS E

BEARING SEAT DETAILS

◆ Reinforced Pedestals [redacted] required where "X" is greater than 2½" and [redacted] considered subsidiary to the Bid Item "Class C Concrete (Bent)". Compare bearing seat elevations to determine value of "X".

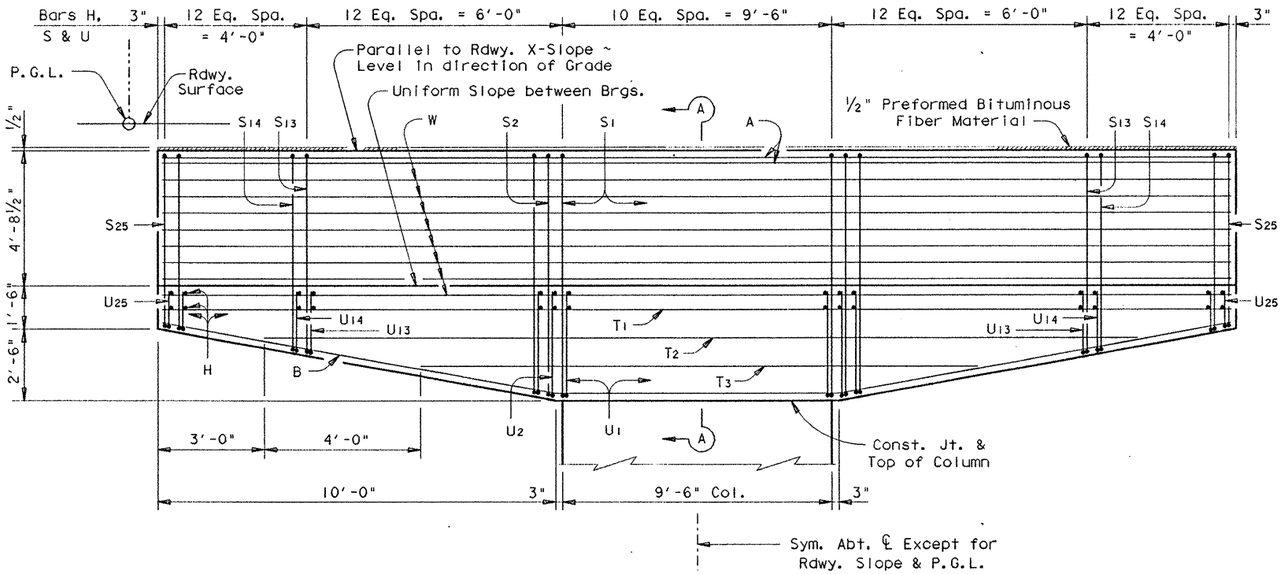

CAP ELEVATION

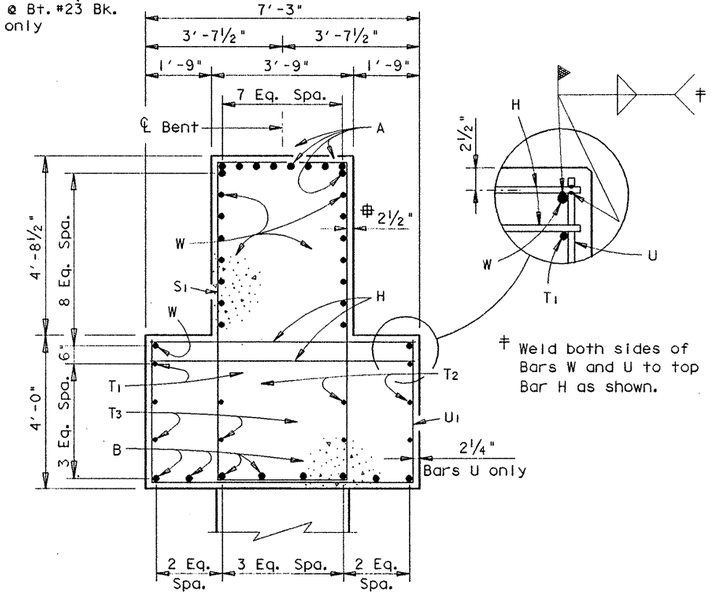

SECTION A-A

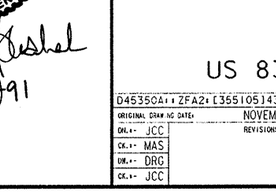

‡ Weld both sides of Bars W and U to top Bar H as shown.

Typical except as noted

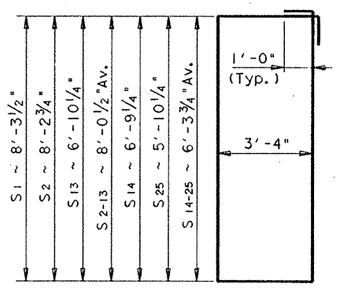

BARS S

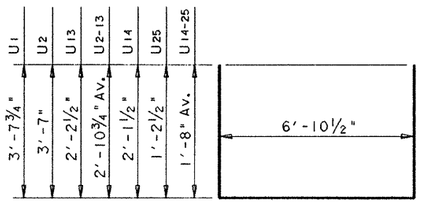

BARS U

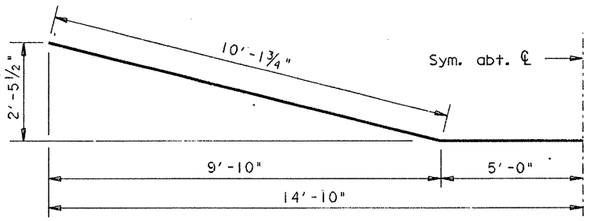

BARS B

STATE OF TEXAS
MARK J. BLOSCHOCK
52906
REGISTERED
PROFESSIONAL ENGINEER
9-25-91

HS 20 LOADING

SHEET 1 OF 2

STATE DEPARTMENT OF HIGHWAYS AND PUBLIC TRANSPORTATION

INTERIOR BENT NOS. 16-18, 23 & 24 RAMP 4

US 83/281 INTERCHANGE

D45350A1 ZFA2 (355105) 4377 INV06.DGN	PREPARED BY AND FOR USE OF TEXAS SDH&PT						
ORIGINAL DRAW ING DATE: NOVEMBER 1990	STATE DISTRICT	FEDERAL REGION	FEDERAL AID PROJECT				SHEET
DN.: JCC REVISIONS	21	6	NH 92( )M				363
CK.: MAS	COUNTY			CONTROL	SECTION	JOB	HIGHWAY
DW.: DRG	HIDALGO			0039	17	097	US 83/ 281
CK.: JCC							

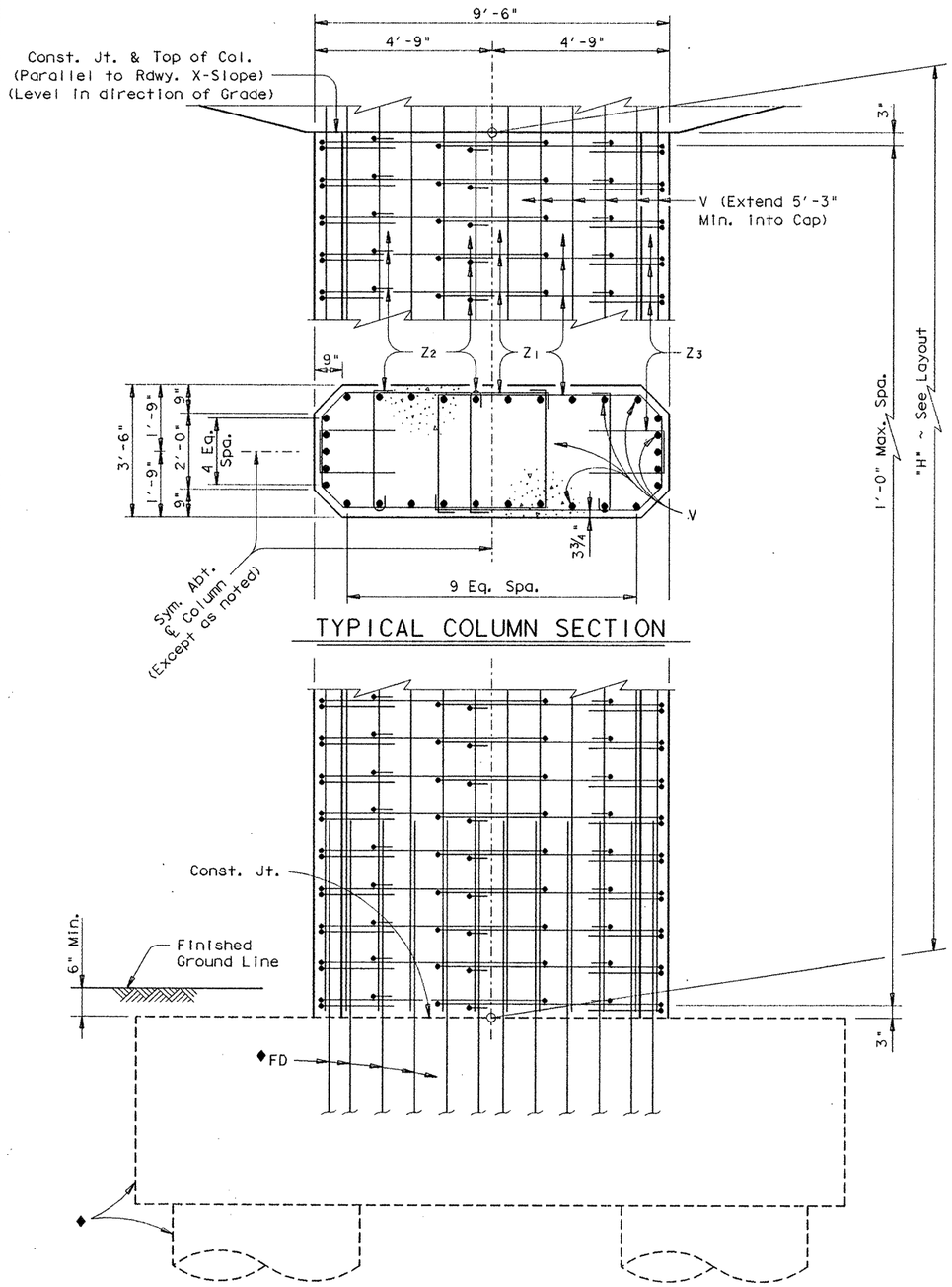

TYPICAL COLUMN SECTION

◆See Footing Details sheet for foundation details and quantities not shown.

COLUMN ELEVATION

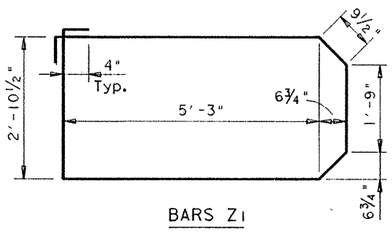

BARS Z1

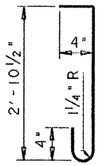

BARS Z2

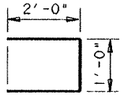

BARS Z3

▲ Quantities shown for one Bent only
For contractor's information only
All cap & column reinforcing steel ▬ Grade 60.

GENERAL NOTES:

Designed according to A.A.S.H.T.O. 1989 Standard and current interim Specifications.

Calculated Foundation Loads:

Bt. Nos. 16-18 = 490 Tons/Dr. Shaft
Bt. No. 23 = 345 Tons/Dr. Shaft
Bt. No. 24 = 305 Tons/Dr. Shaft

See "Form Liner Details" sheet for aesthetic treatment of columns and caps.

See Inverted Tee Bent Special Cap Details Sheet for details not shown.

▲ TABLE OF CONSTANT QUANTITIES

Bar	No.	Size	Length	Weight
A	10	# 11	29'- 8"	1576
B	8	# 11	30'- 4"	1289
D	4	1¼"Ø	1'- 6"	25
H	118	# 6	6'-11"	1226
S1	11	# 6	25'- 3"	417
S2-13	24	# 6	23'- 9"Av	856
S14-25	24	# 6	21'- 4"Av	769
T1	2	# 6	29'- 8"	89
T2	4	# 6	24'- 0"	144
T3	4	# 6	16'- 0"	96
U1	11	# 5	14'- 2"	163
U2-13	24	# 5	12'- 8"Av	317
U14-25	24	# 5	10'- 3"Av	257
W	16	# 9	29'- 8"	1614

Reinforcing Steel	Lb	# 8838
Class "C" Concrete (Cap)	CY	45.3

TABLE OF VARIABLE QUANTITIES

"H"	Class "C" Conc. (Col.)	Bars Z1 17'-5" ~ #4		Bars Z2 3'-8" ~ #4		Bars Z3 5'-0" ~ #4		Bars V 30 ~ # 11	
Ft	CY	No.	Weight	No.	Weight	No.	Weight	Length	Weight
13	15.5	28	326	42	103	28	94	18'- 3"	2909
14	16.7	30	349	45	110	30	100	19'- 3"	3068
15	17.8	32	372	48	118	32	107	20'- 3"	3228
16	19.0	34	396	51	125	34	114	21'- 3"	3387
17	20.2	36	419	54	132	36	120	22'- 3"	3546
18	21.4	38	442	57	140	38	127	23'- 3"	3706
19	22.6	40	465	60	147	40	134	24'- 3"	3865
43	51.2	88	1024	132	324	88	294	48'- 3"	7691
44	52.4	90	1047	135	331	90	301	49'- 3"	7850
45	53.5	92	1071	138	338	92	307	50'- 3"	8009
46	54.7	94	1094	141	346	94	314	51'- 3"	8169
47	55.9	96	1117	144	353	96	321	52'- 3"	8328
48	57.1	98	1140	147	360	98	327	53'- 3"	8488
49	58.3	100	1164	150	368	100	334	54'- 3"	8647

▲▬ TOTAL ESTIMATED QUANTITIES

#◩ Reinf. Steel	Class "C" Conc.
Lb	CY
17371	85.4
17566	86.6
17764	87.7
17961	88.9
18156	90.1
18354	91.3
18550	92.5
23272	121.1
23468	122.3
23664	123.4
23862	124.6
24058	125.8
24254	127.0
24452	128.2

▬ Includes Footing Quantities

HS 20 LOADING

SHEET 2 OF 2

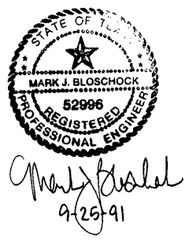

REV. 3-30-92

STATE DEPARTMENT OF HIGHWAYS AND PUBLIC TRANSPORTATION

INTERIOR BENT NOS. 16-18, 23 & 24 RAMP 4

US 83/281 INTERCHANGE

D45350A1 : ZFA2 : [3551051]4377INV06.DGN	PREPARED BY AND FOR USE OF TEXAS SDH&PT					
ORIGINAL DRAWING DATE: NOVEMBER 1990	STATE DISTRICT	FEDERAL REGION	FEDERAL AID PROJECT			SHEET
DR.: MRL	Rev.: DONS	21	6	NH 426	JM	564
CK.: GAF		COUNTY		CONTROL	SECTION	JOB	HIGHWAY
DN.: DRG		HIDALGO		0039	17	097	US 83/281
CK.: JCC							

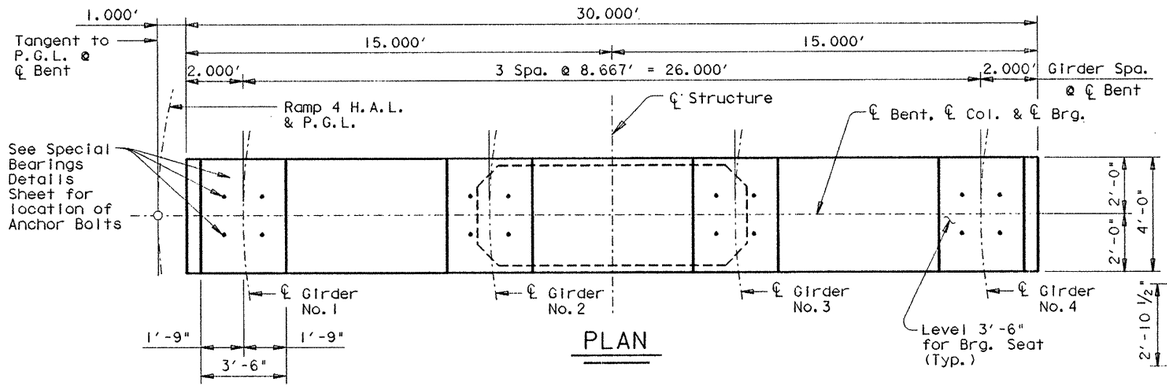

PLAN

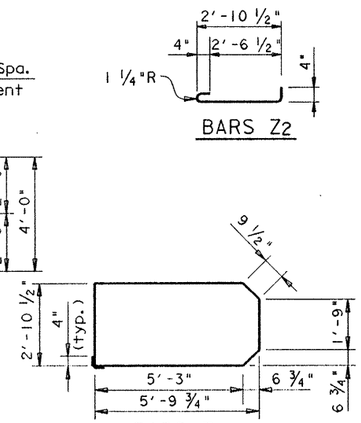

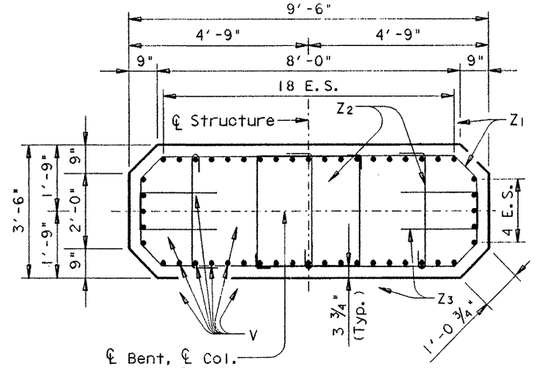

SECTION B-B

TABLE OF CONSTANT QUANTITIES				
Bar	No	Sz.	Length	Weight
A	20	#11	29'- 8"	3152
B	6	#11	30'- 4"	967
DS_1	2	#5	16'- 3"	34
DS_{2-23}	44	#5	13'- 9"Av	631
J	11	#5	5'- 8"	65
S_1	11	#5	19'- 4"	223
S_{2-23}	44	#5	16'-10"Av	773
T_1	10	#6	29'- 8"	446
T_{2-6}	10	#6	20'-11"Av	314

Reinf. Steel (Cap)	Lb	# 6605
Cl. "C" Conc. (Cap)	CY	23.2

For Contractors Info. Only.

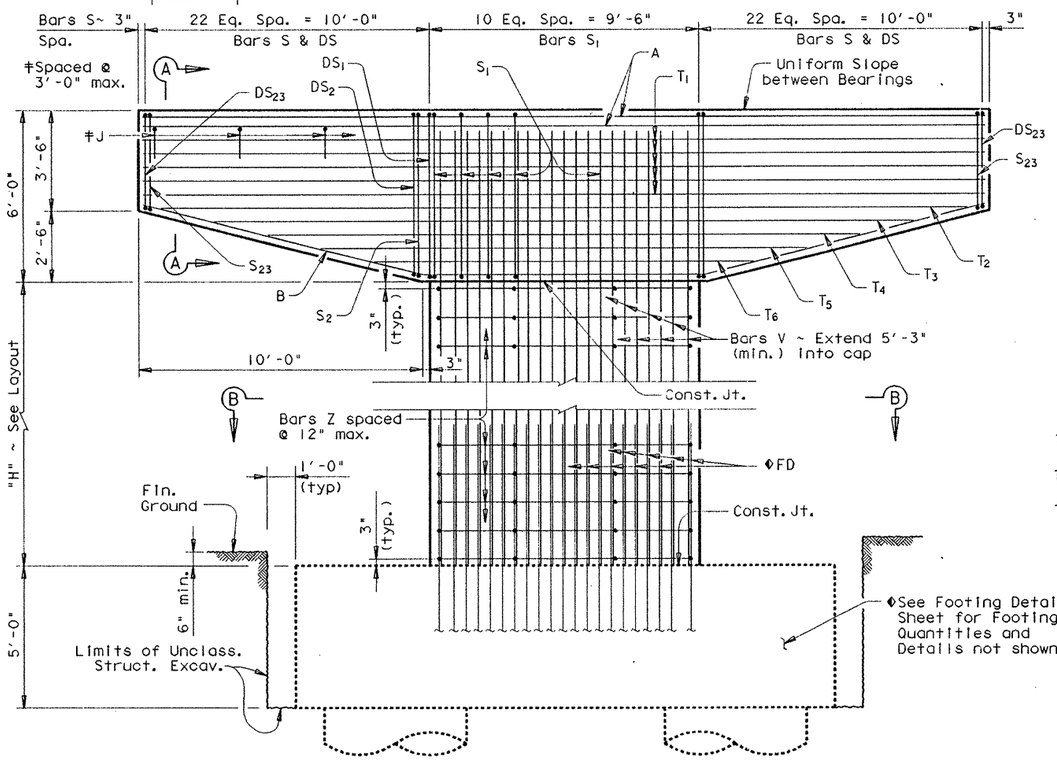

ELEVATION

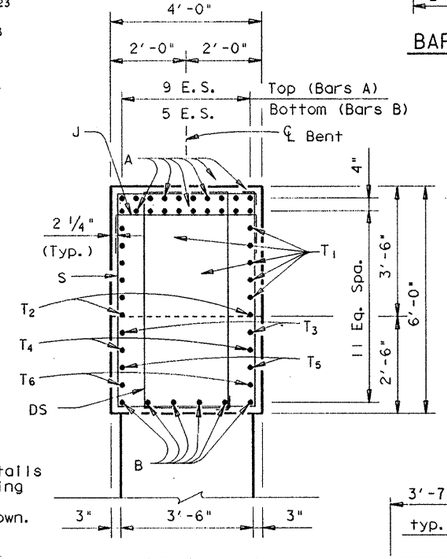

SECTION A-A

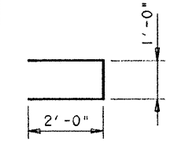

BARS Z3

TABLE OF VARIABLE QUANTITIES										▲TOTAL EST. QUANTITIES	
H	CL. "C" CONC.	BARS Z_1 #4 × 17'-5"		BARS Z_2 #4 × 3'-8"		BARS Z_3 #4 × 5'-0"		BARS V 48 ~ # 11		REINF. STEEL #	CL. "C" CONC.
FT.	C.Y.	NO.	WT.	NO.	WT.	NO.	WT.	LGTH.	WT.	LB.	C.Y.
28	33.3	58	675	87	213	58	194	33'- 3"	8480	22750	81.1
29	34.5	60	698	90	220	60	200	34'- 3"	8735	23041	82.3
30	35.7	62	721	93	228	62	207	35'- 3"	8990	23334	83.5
31	36.9	64	745	96	235	64	214	36'- 3"	9245	23627	84.7
32	38.1	66	768	99	242	66	220	37'- 3"	9500	23918	85.9
33	39.3	68	791	102	250	68	227	38'- 3"	9755	24211	87.1
34	40.5	70	814	105	257	70	234	39'- 3"	10010	24503	88.3
35	41.6	72	838	108	265	72	240	40'- 3"	10265	24796	89.4
36	42.8	74	861	111	272	74	247	41'- 3"	10520	25088	90.6
37	44.0	76	884	114	279	76	254	42'- 3"	10775	25380	91.8
38	45.2	78	907	117	287	78	261	43'- 3"	11030	25673	93.0

▲ Includes Footing Quantities

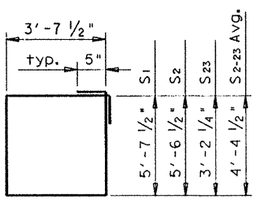

BARS S

GENERAL NOTES:

Designed in accordance with A.A.S.H.T.O. 1989 Specifications.

Calculated Drilled Shaft Loads = 815 T/Dr. Shaft.

All Cap & Column Steel [redacted] Grade 60.

HS 20 LOADING

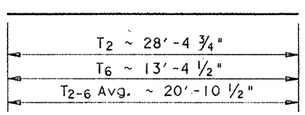

BARS T2-T6

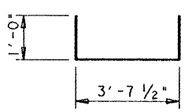

BARS J

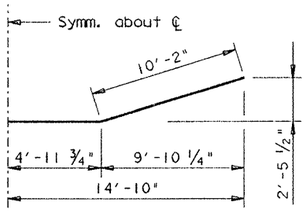

BARS B

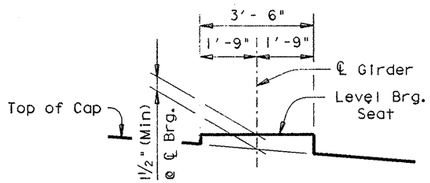

BEARING SEAT DETAIL

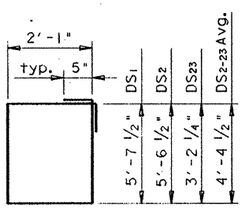

BARS DS

STATE OF TEXAS
MARK J. BLOSCHOCK
52996
REGISTERED PROFESSIONAL ENGINEER
9-25-91

STATE DEPARTMENT OF HIGHWAYS AND PUBLIC TRANSPORTATION

INTERIOR BENT NO. 20 RAMP 4

US 83/281 INTERCHANGE

D45350A‡ ‡ ZFA2‡ E355100143791SC01.DGN	PREPARED BY AND FOR USE OF TEXAS SDH&PT				
ORIGINAL DRAWING DATE: FEBRUARY 1991	STATE DISTRICT	FEDERAL REGION	FEDERAL AID PROJECT		SHEET
DN.: GAF/MRL	REVISIONS	21	6	NH 92(JM	365
CK.: MRL/GAF		COUNTY	CONTROL	SECTION	JOB	HIGHWAY
DN.: PSR		HIDALGO	0039	17	097	US 83/281
CK.: GAF/MRL						

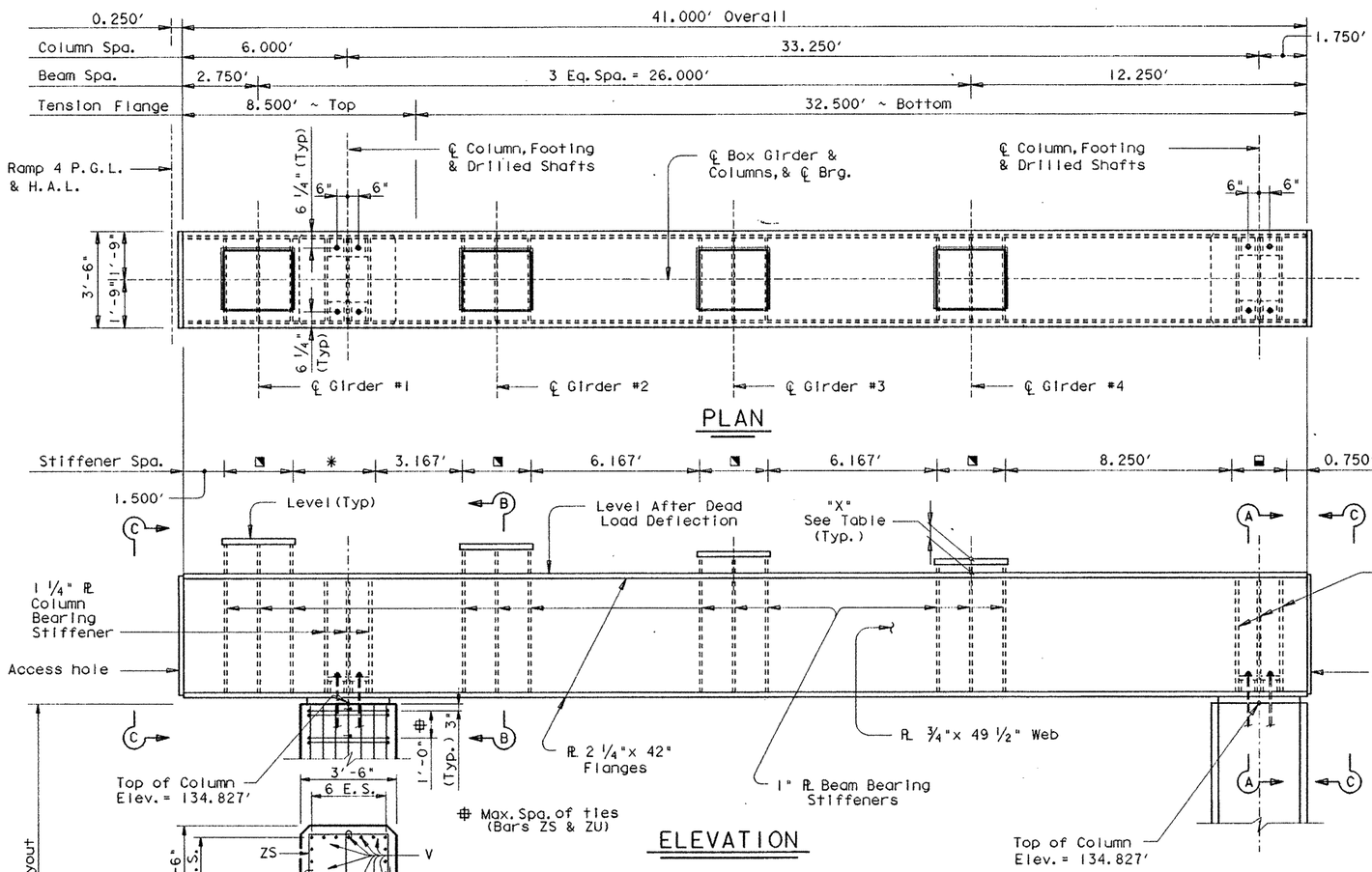

PLAN

ELEVATION

2 Spaces @ 1.250' = 2.500'
3 Spaces @ 1.000' = 3.000'
2 Spaces @ 1.000' = 2.000'

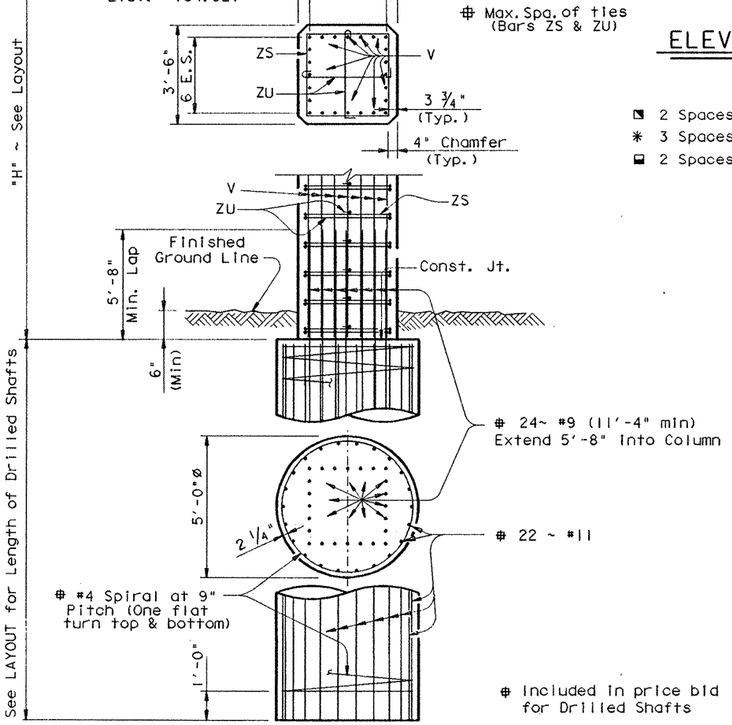

TABLE OF PEDESTAL HEIGHTS	
Girder	"X"
1	11 1/8"
2	8 3/4"
3	6 3/8"
4	4"

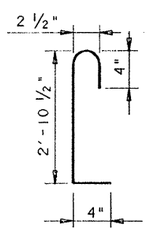

BARS ZU

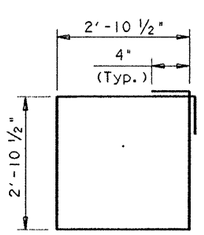

BARS ZS

TABLE OF VARIABLE QUANTITIES

"H"	Class "C" Conc. (Cols.)	Bars ZS #4 @ 12'-2"		Bars ZU #4 @ 3'-8"		Bars V 48 ~ # 9		TOTAL ESTIMATED QUANTITIES: Reinf. Steel ⁜	Class "C" Conc.
Ft	CY	No.	Weight	No.	Weight	Length	Weight	Lb	CY
21	18.7	44	358	88	216	20'-10"	3400	3974	18.7
22	19.6	46	374	92	225	21'-10"	3563	4162	19.6
23	20.5	48	390	96	235	22'-10"	3726	4351	20.5
24	21.4	50	406	100	245	23'-10"	3890	4541	21.4
25	22.3	52	423	104	255	24'-10"	4053	4731	22.3
26	23.2	54	439	108	265	25'-10"	4216	4920	23.2
27	24.1	56	455	112	274	26'-10'	4379	5108	24.1

⁜ For contractor's information only.

All Cap Steel [redacted] HS Steel.

All column reinforcing steel shall be Grade 60.

Str. Steel (HS)	Lb	48689

SPECIAL CONSTRUCTION NOTE:

In order to construct one drilled shaft, it [redacted] necessary to break out and remove a portion of the existing reinforced concrete retaining wall footing.

Prior to construction, the Contractor [redacted] submit for the Engineer's approval his proposed methods and sequence of construction, including any shoring necessary to support the excavation.

The amount of retaining wall footing removed [redacted] the minimum necessary for construction of the drilled shaft. The broken out portion of the footing [redacted] not [redacted] replaced. Exposed steel shall be grouted over or protected in a manner satisfactory to the Engineer.

All costs associated with removing and repairing the retaining wall [redacted] considered subsidiary to the item "Concrete for Structures".

GENERAL NOTES:

Designed according to A.A.S.H.T.O. 1989 Standard Specifications.

Anchor Bolts [redacted] High Strength and [redacted] conform to the Item "Metal for Structures". Nuts [redacted] snug tight plus one half turn after all beam and slab load is applied. Burr threads or tack weld nut after erection to prevent loosening.

The Contractor [redacted] also give adequate consideration to beam erection methods and sequences in order to insure the stability of the box girder during construction.

All inside surfaces of Box Cap [redacted] painted with Protection System II per Item 446.

All flanges & webs are fracture critical and [redacted] conform to the fracture control plan.

Calculated Foundation Load = 840 Tons/Drilled Shaft

HS 20 LOADING

Sheet 1 of 3

STATE OF TEXAS
MARK J. BLOSCHOCK
52996
REGISTERED PROFESSIONAL ENGINEER
3-23-92

REV. 3-30-92

STATE DEPARTMENT OF HIGHWAYS AND PUBLIC TRANSPORTATION

INTERIOR BENT NO. 21 RAMP 4

US 83/281 INTERCHANGE

D45350A ▪ ZFAI ▪ [3551631343790BT02.DGN]	PREPARED BY AND FOR USE OF TEXAS SDH&PT				
ORIGINAL DRAWING DATE▪	STATE DISTRICT	FEDERAL REGION	FEDERAL AID PROJECT		SHEET
DN.▪ KLR	21	6	NH92( )M		366
CK.▪ GAF	COUNTY		CONTROL	SECTION	JOB	HIGHWAY
DW.▪ TKW	HIDALGO		0039	17	097	83/281
CK.▪ KLR						

REVISIONS

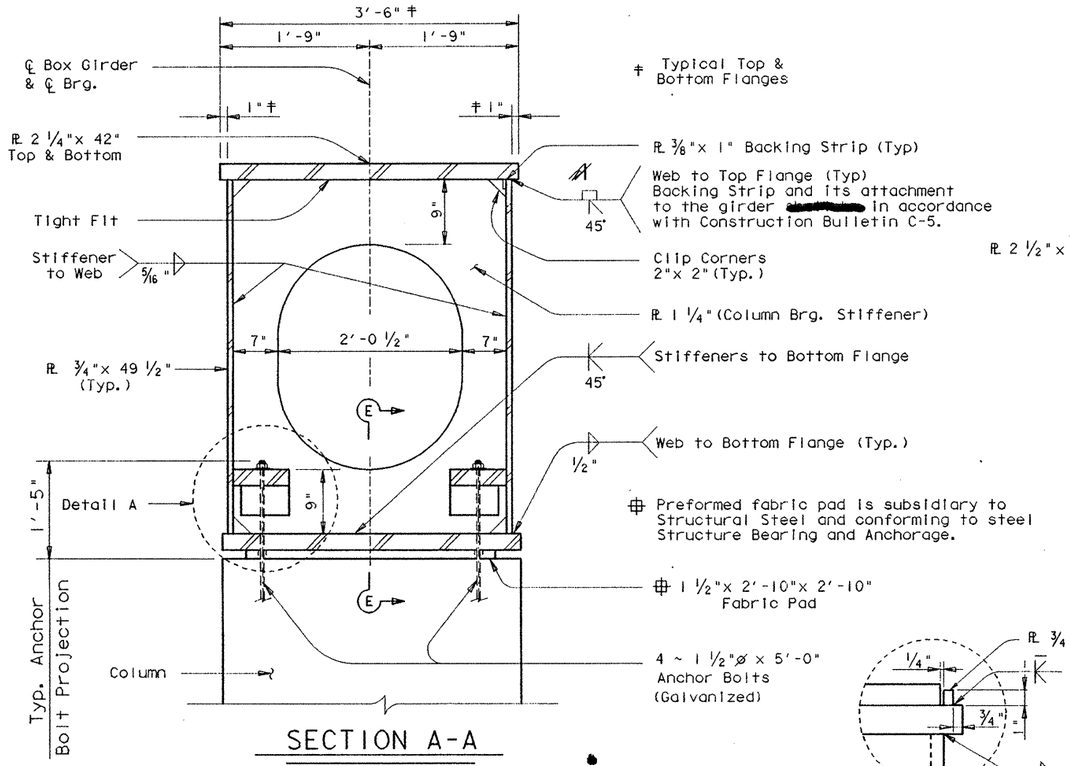

SECTION A-A

COLUMN BEARING STIFFENER

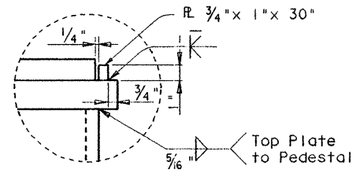

DETAIL D

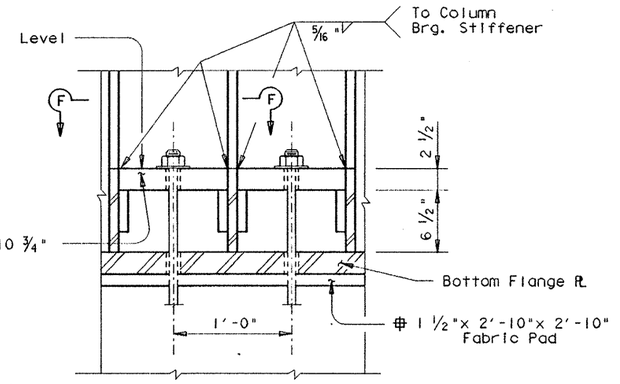

SECTION E-E

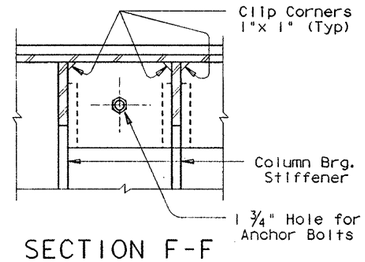

SECTION F-F

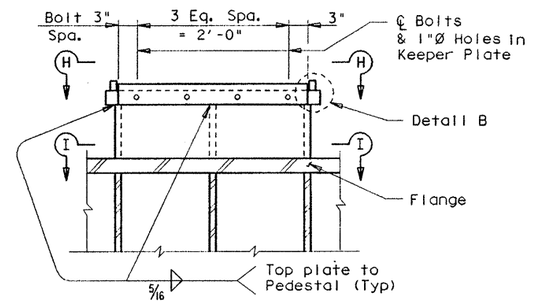

SECTION G-G

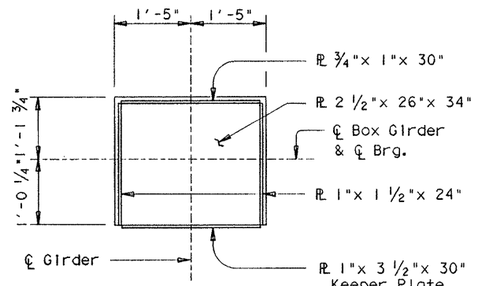

SECTION H-H

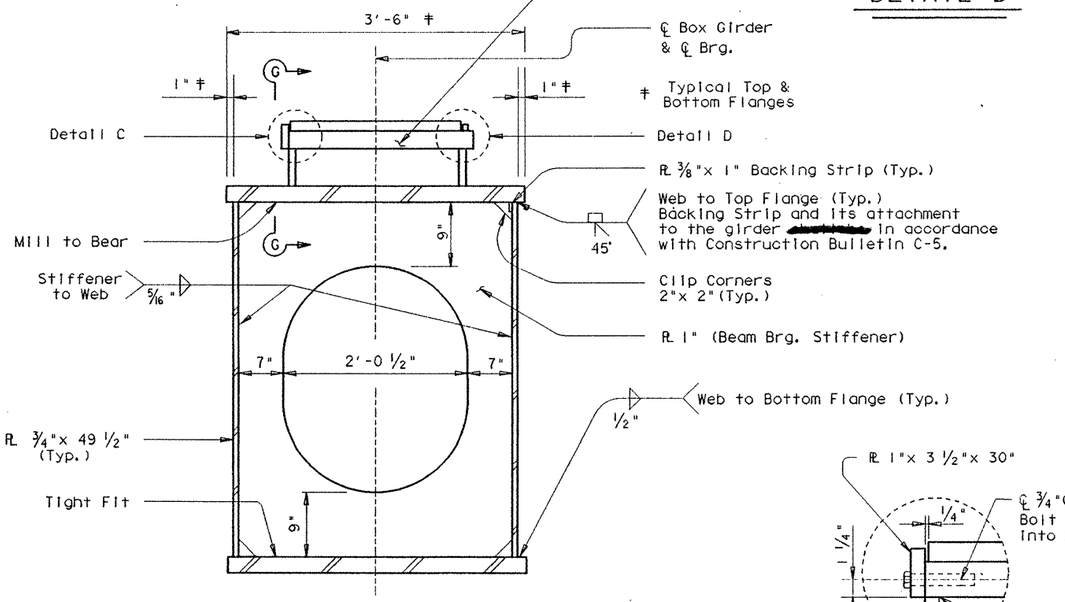

SECTION B-B

BEAM BEARING STIFFENER

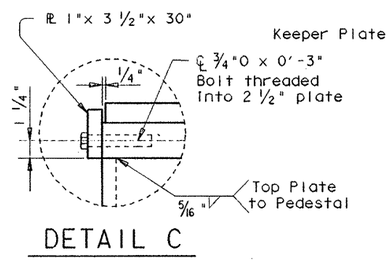

DETAIL C

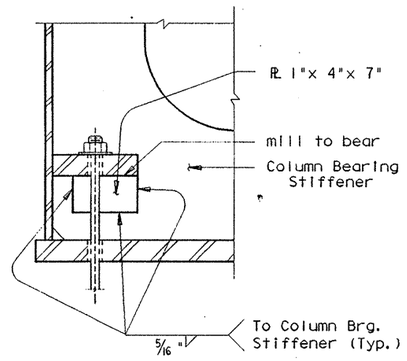

DETAIL A

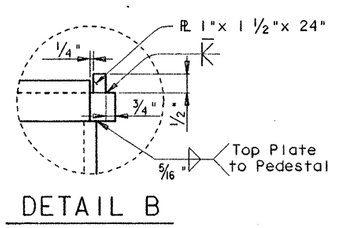

DETAIL B

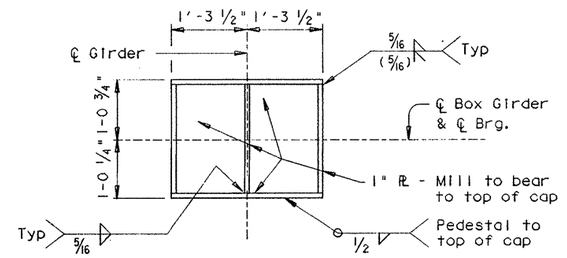

SECTION I-I

HS 20 LOADING

STATE OF TEXAS
MARK J. BLOSCHOCK
52996
REGISTERED PROFESSIONAL ENGINEER
3-23-92

REV. 3-30-92

STATE DEPARTMENT OF HIGHWAYS AND PUBLIC TRANSPORTATION

INTERIOR BENT NO. 21 RAMP 4

US 83/281 INTERCHANGE

D45350A1 : ZFA1 : [3551631143790BT02.DGN] | PREPARED BY AND FOR USE OF TEXAS SDH&PT

ORIGINAL DRAWING DATE:	REVISIONS	STATE DISTRICT	FEDERAL REGION	FEDERAL AID PROJECT	SHEET
DR.: KLR		21	6	NH92( )M	367
CK.: GAF		COUNTY		CONTROL	SECTION	JOB	HIGHWAY
DR.: TKW		HIDALGO		0039	17	097	83/281
CK.: KLR							

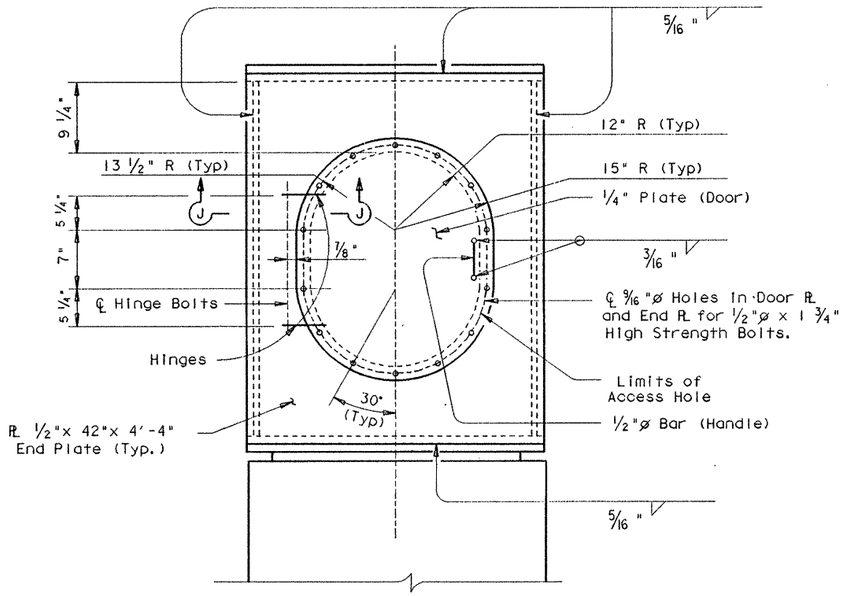

Note: Silicone bead ▬▬ uniformly applied around edge of door plate before securing.

SECTION C-C

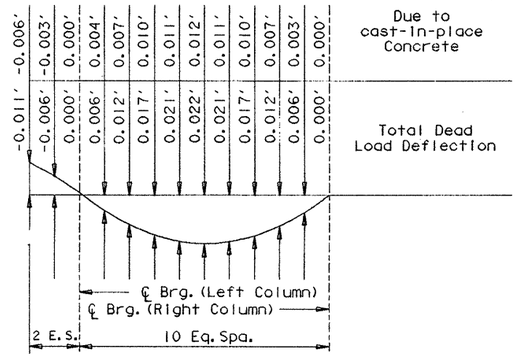

DEAD LOAD DEFLECTION DIAGRAM

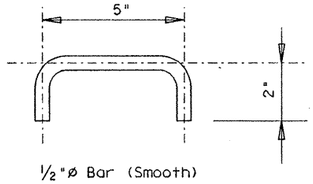

1/2 "ø Bar (Smooth)

HANDLE DETAIL

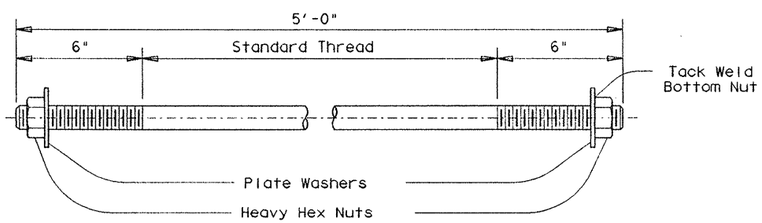

ANCHOR BOLT DETAIL

Total estimated weight of Anchor Bolt, Washers, and Heavy Hex Nuts = 32 lbs. and is included in the quantity shown for Structural Steel (H.S.).

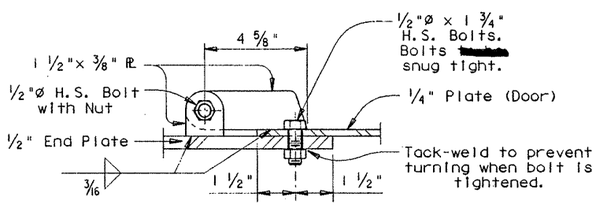

SECTION J-J

Hinge Detail

HS 20 LOADING

STATE OF TEXAS
MARK J. BLOSCHOCK
52996
REGISTERED PROFESSIONAL ENGINEER
3-23-92

REV. 3-30-92

STATE DEPARTMENT OF HIGHWAYS AND PUBLIC TRANSPORTATION

INTERIOR BENT NO. 21 RAMP 4

US 83/281 INTERCHANGE

D45350A: ZFA1: [355163]43790BT02.DGN	PREPARED BY AND FOR USE OF TEXAS SDH&PT						
ORIGINAL DRAWING DATE:	STATE DISTRICT	FEDERAL REGION	FEDERAL AID PROJECT				SHEET
DR.: KLR REVISIONS	21	6	NH92( )M				368
CK.: GAF	COUNTY			CONTROL	SECTION	JOB	HIGHWAY
DR.: TKW	HIDALGO			0039	17	097	83/281
CK.: KLR							

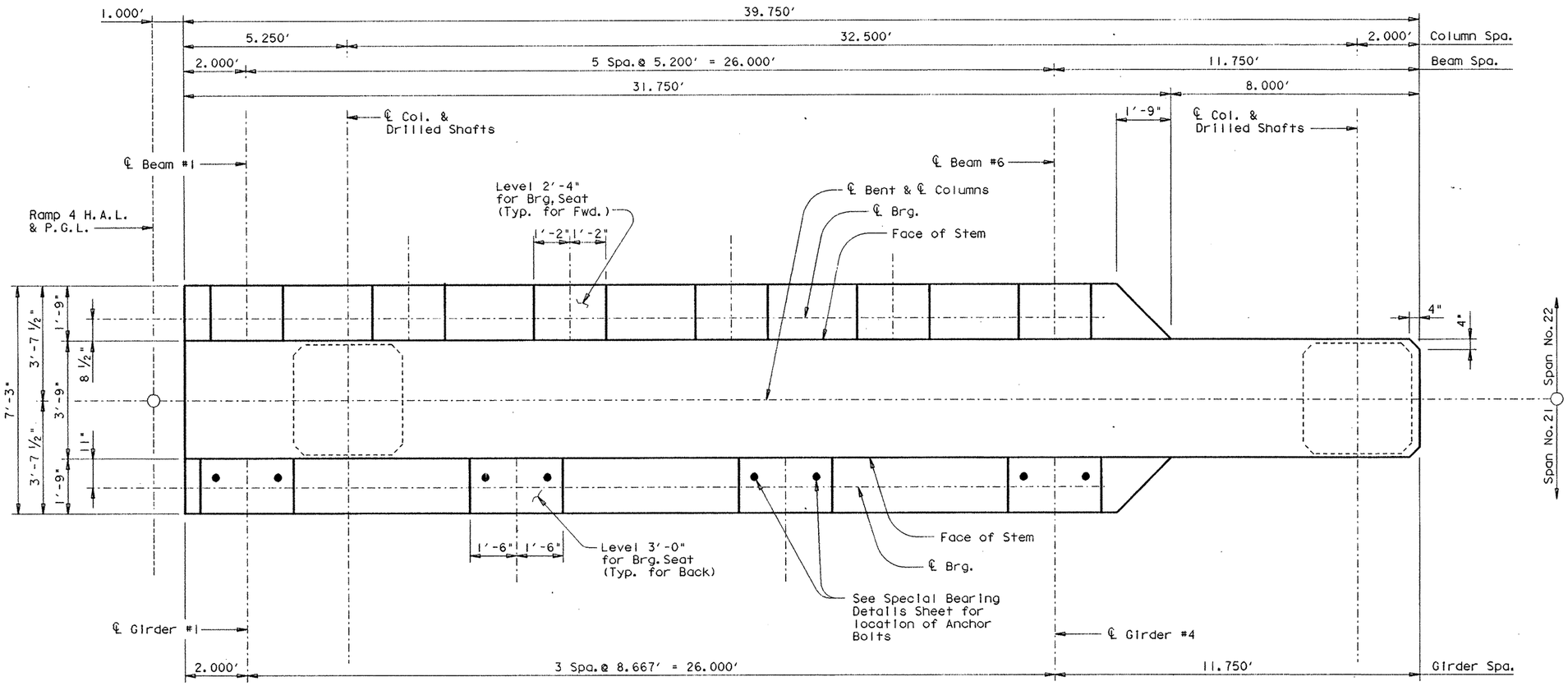

CAP PLAN

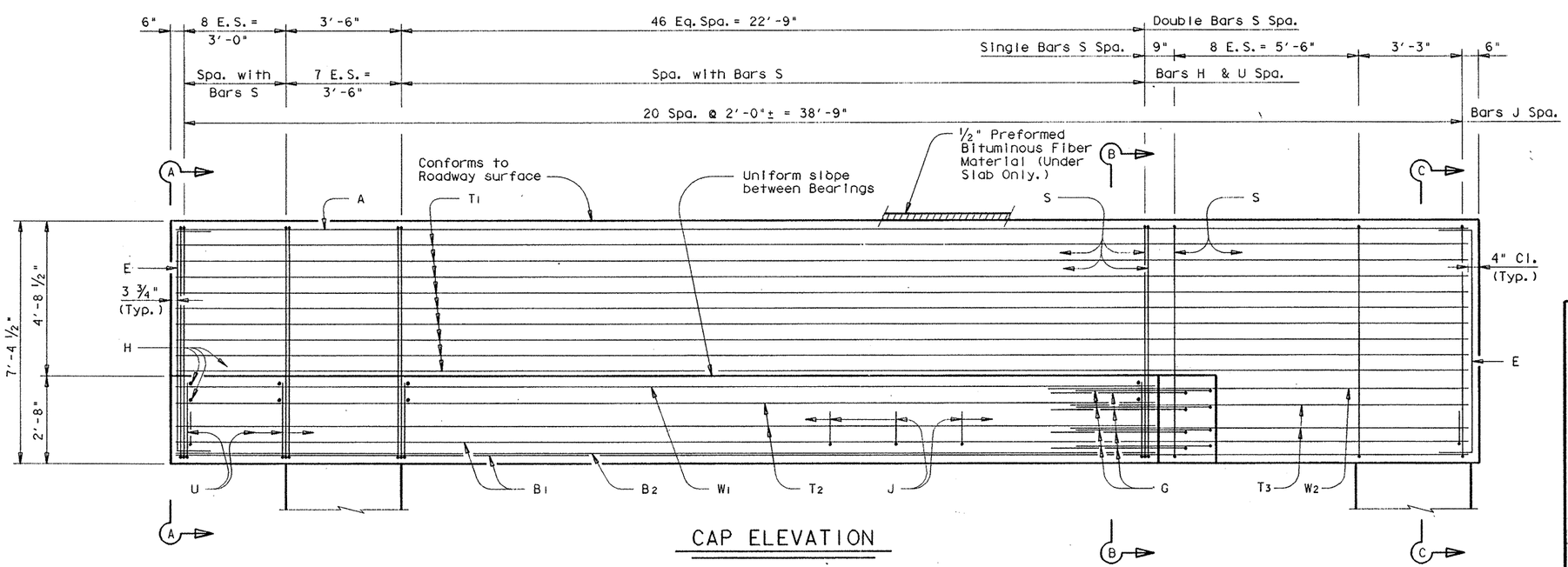

CAP ELEVATION

HS 20 LOADING

SHEET 1 OF 3

STATE DEPARTMENT OF HIGHWAYS AND PUBLIC TRANSPORTATION

INTERIOR BENT NO. 22 RAMP 4

US 83/281 INTERCHANGE

STATE OF TEXAS
MARK J. BLOSCHOCK
52996
REGISTERED PROFESSIONAL ENGINEER
9-24-91

D45350A: ZFA2: [3551001437908T01.DGN	PREPARED BY AND FOR USE OF TEXAS SDH&PT						
ORIGINAL DRAWING DATE: FEBRUARY 1991		STATE DISTRICT	FEDERAL REG-ON	FEDERAL AID PROJECT			SHEET
DN.: GAF	REVISIONS	21	6	NH92( )M			369
CK.: MRL		COUNTY		CONTROL	SECT:ON	JOB	HIGHWAY
DW.: JRP/PSR		HIDALGO		0039	17	097	
CK.: GAF							

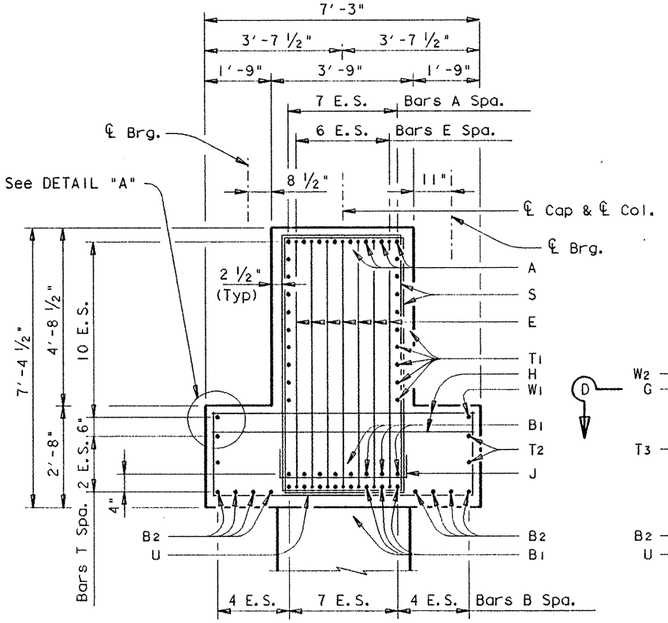

SECTION A-A

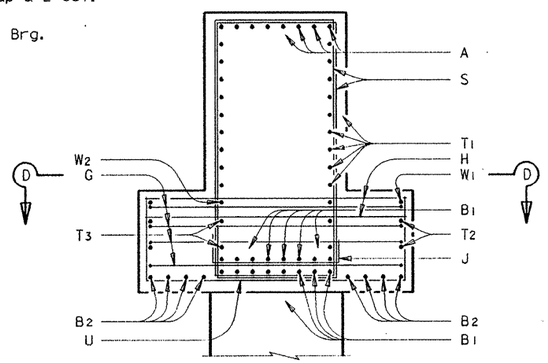

SECTION B-B

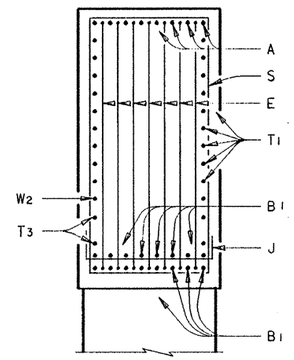

SECTION C-C

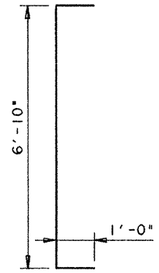

BARS E

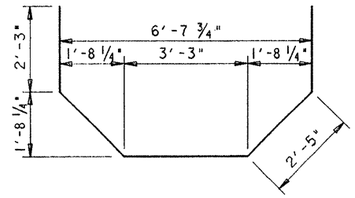

BARS G

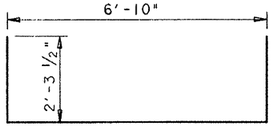

BARS U

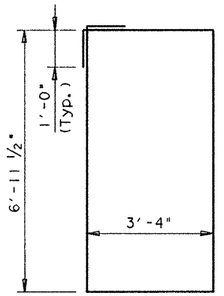

BARS S

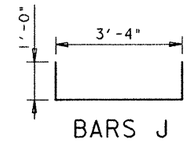

BARS J

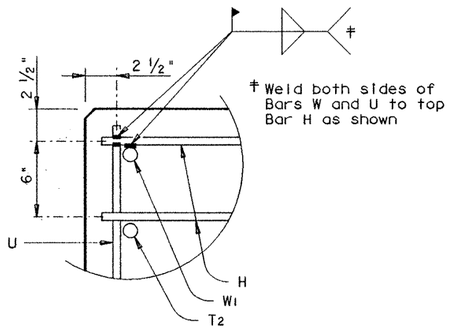

DETAIL "A"

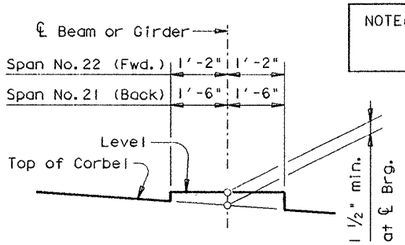

BEARING SEAT DETAIL

NOTE: See Bearing Seat Surface Finish on GpC(SPL) Sheet.

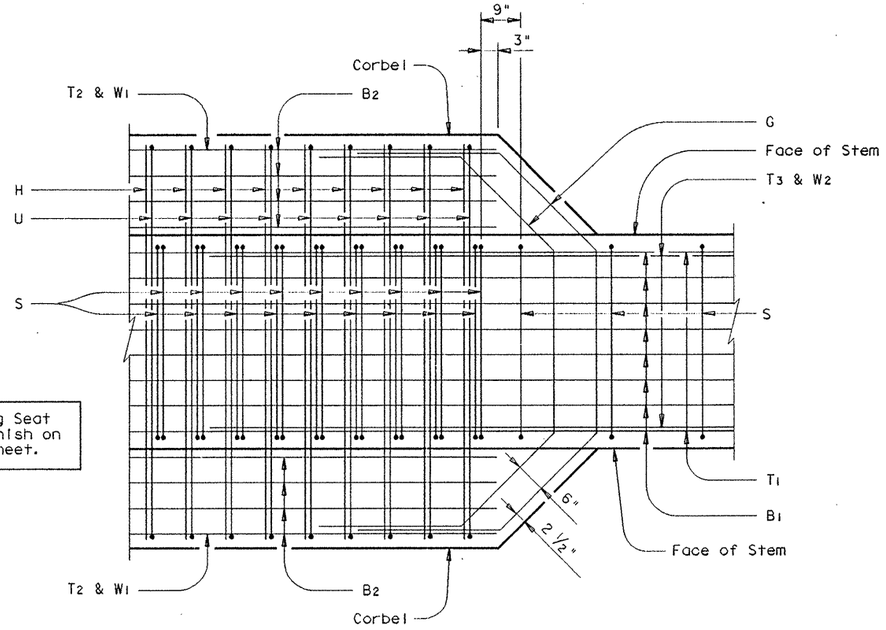

SECTION D-D

STATE OF TEXAS
MARK J. BLOSCHOCK
52996
REGISTERED PROFESSIONAL ENGINEER
9-25-91

HS 20 LOADING

SHEET 2 OF 3

STATE DEPARTMENT OF HIGHWAYS AND PUBLIC TRANSPORTATION

INTERIOR BENT NO. 22 RAMP 4

US 83/281 INTERCHANGE

D45350A1 : ZFA2 : [3551001]43790BT01.DGN	PREPARED BY AND FOR USE OF TEXAS SDH&PT						
ORIGINAL DRAWING DATE: FEBRUARY 1991	STATE DISTRICT	FEDERAL REGION	FEDERAL AID PROJECT				SHEET
DN.: GAF REVISIONS	21	6	NH92( )M				370
CK.: MRL	COUNTY			CONTROL	SECTION	JOB	HIGHWAY
DW.: JRP/PSR	HIDALGO			0039	17	097	
CK.: GAF							

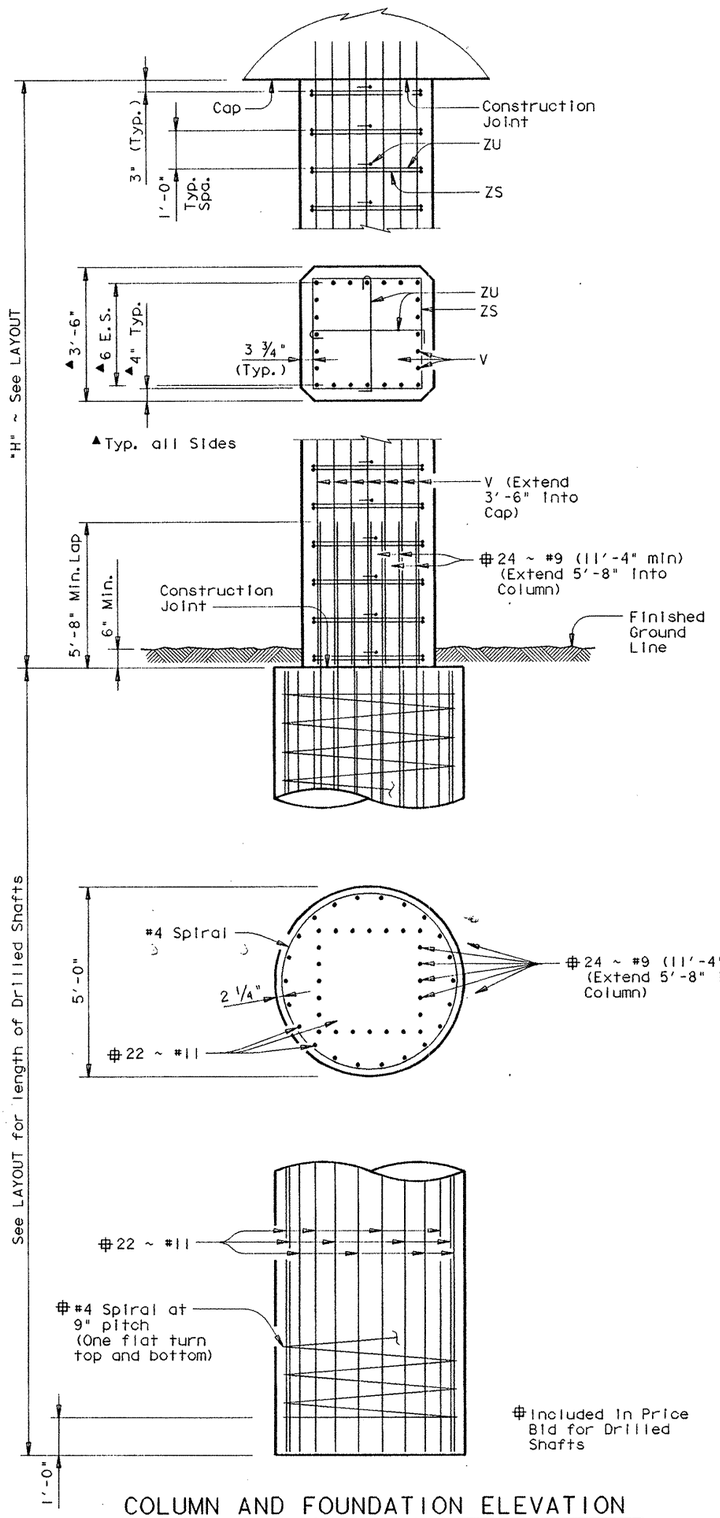

COLUMN AND FOUNDATION ELEVATION

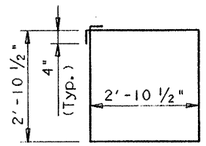

BARS ZS

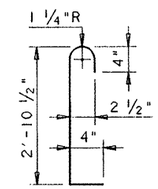

BARS ZU

TABLE OF CONSTANT QUANTITIES

Bar	No.	Size	Length	Weight
A	8	# 11	39'- 1"	1661
B1	16	# 11	39'- 1"	3322
B2	8	# 11	29'- 8"	1261
E	14	# 5	8'-11"	130
G	8	# 9	12'- 7"	342
H	124	# 6	6'-11"	1288
J	21	# 6	5'- 4"	168
S	122	# 6	22'- 7"	4138
T1	18	# 8	39'- 1"	1878
T2	4	# 8	29'- 8"	317
T3	4	# 8	12'- 3"	131
U	62	# 5	11'- 5"	738
W1	2	# 9	29'- 8"	202
W2	2	# 9	12'-11"	88

Reinforcing Steel	Lb	# 15664
Class "C" Conc. (Cap)	CY	51.5

TABLE OF VARIABLE QUANTITIES

"H"	Class "C" Conc. (Cols.)	Bars ZS # 4 ~ 12'-2"		Bars ZU # 4 ~ 3'-8"		Bars V 48 ~ # 9		TOTAL ESTIMATED QUANTITIES Reinf. Steel #	Class "C" Conc.
Ft	CY	No.	Weight	No.	Weight	Length	Weight	Lb	CY
21	18.7	44	358	88	216	24'- 6"	3998	20236	70.4
22	19.6	46	374	92	225	25'- 6"	4162	20425	71.1
23	20.5	48	390	96	235	26'- 6"	4325	20614	72.0
24	21.4	50	406	100	245	27'- 6"	4488	20803	72.9
25	22.3	52	423	104	255	28'- 6"	4651	20993	73.8

For contractor's information only.
All cap & column reinforcing steel [redacted] Grade 60.

GENERAL NOTES:

Designed according to A.A.S.H.T.O. 1989 Standard Specifications.

Calculated Foundation Load = 570 Tons/Drilled Shaft
See Inverted Tee Bent Special Cap Details Sheet for details not shown.

HS 20 LOADING

STATE DEPARTMENT OF HIGHWAYS AND PUBLIC TRANSPORTATION

INTERIOR BENT NO. 22 RAMP 4

US 83/281 INTERCHANGE

STATE OF TEXAS
MARK J. BLOSCHOCK
52996
REGISTERED PROFESSIONAL ENGINEER
9-25-91

REV. 3-30-92

D45350A: ZFA2: [355100]43790BT01.DGN	PREPARED BY AND FOR USE OF TEXAS SDH&PT					
ORIGINAL DRAWING DATE: FEBRUARY 1991	STATE DISTRICT	FEDERAL REGION	FEDERAL AID PROJECT			SHEET
DN.: GAF	21	6	NH 92( )M			371
CK.: MRL	COUNTY		CONTROL	SECTION	JOB	HIGHWAY
DW.: JRP/PSR	HIDALGO		0039	17	097	
CK.: GAF						

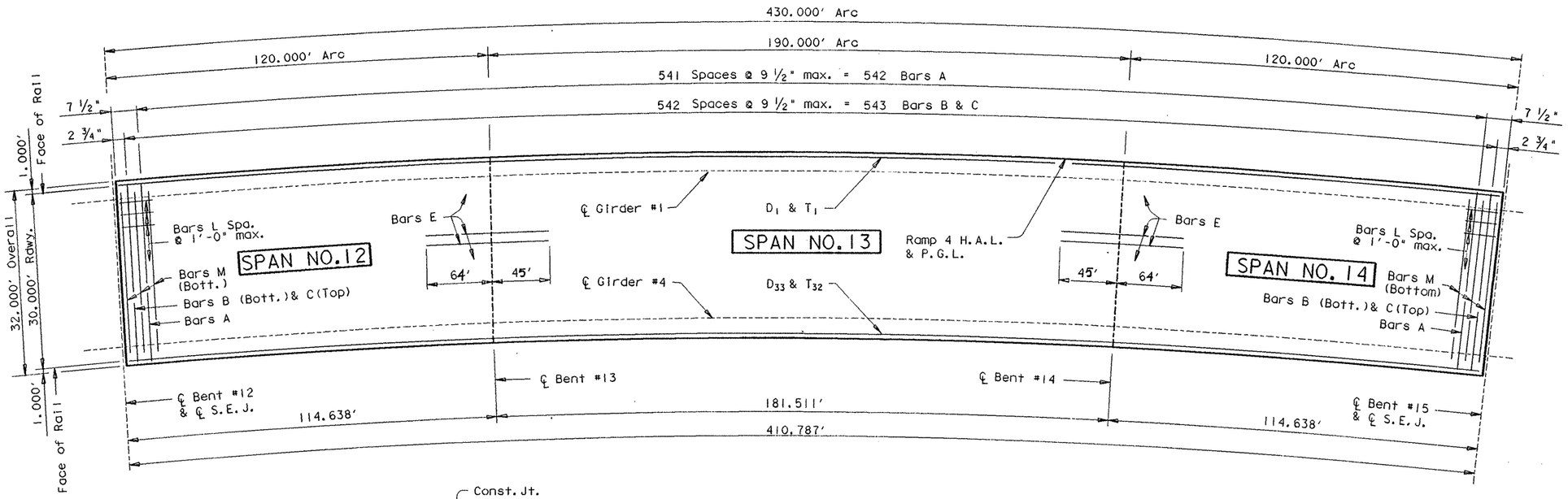

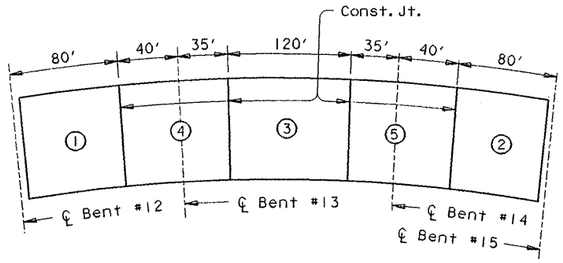

CONCRETE PLACING SEQUENCE

At Contractors option, Continuous placement [redacted] used. For Continuous placement, the minimum rate of Concrete placing and Finishing [redacted] not [redacted] less than 30 linear feet of bridge deck per hour.

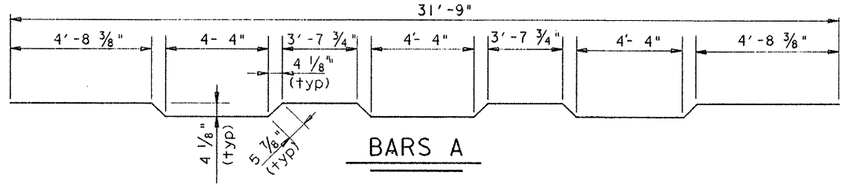

BARS A

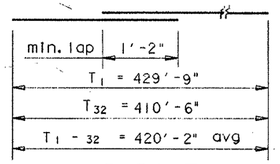

BARS T

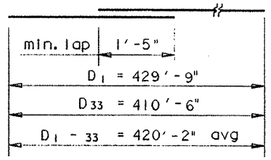

BARS D

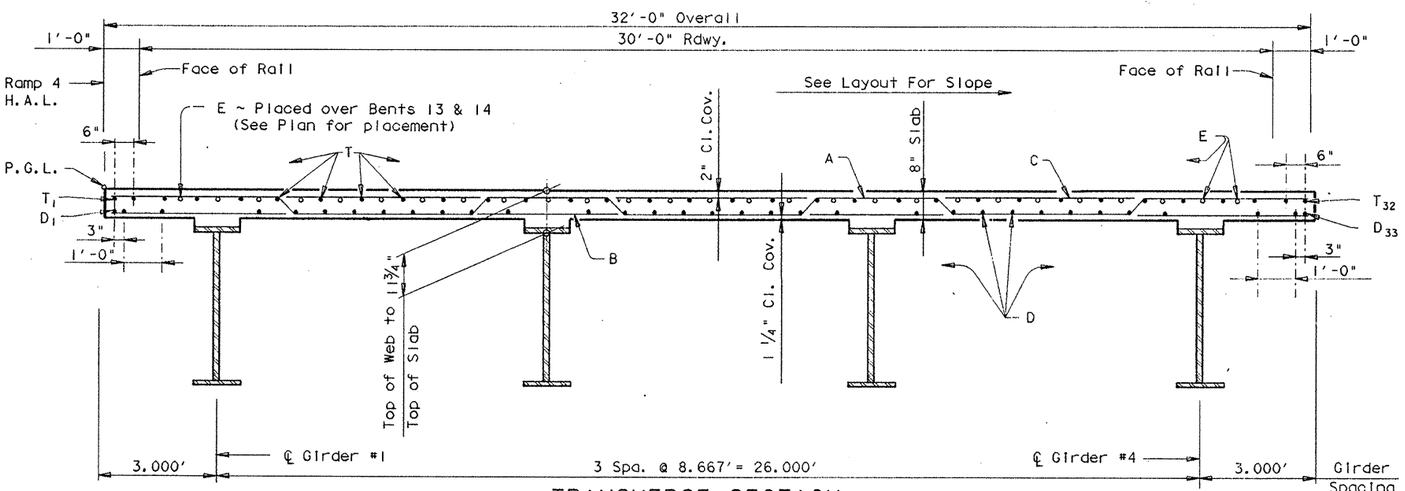

TRANSVERSE SECTION

REV. 3-30-92

TABLE OF ESTIMATED QUANTITIES

Bar	No.	Size	Length	Weight
A	542	# 5	32'- 7"	18418
B	543	# 4	31'- 9"	11516
C	543	# 5	31'- 9"	17982
D_{1-33}	33	# 5	430'-1 "Av◩	14803
E	54	# 6	110'-9 " ◭	8983
L	62	# 4	3'- 0"	124
M	6	# 5	29'- 9"	186
T_{1-32}	32	# 4	428'-4 "Av⬓	9156

Reinforcing Steel	Lb	⁜80858
Str. Steel (HS) *	Lb	479946
Str. Steel (HYC) **	Lb	54232

Span	Reinf. Conc. Slab ~ SF	Class "S" Conc. ~ CY ⁜ Slab
# 12	3754	93.1
# 13	5944	147.5
# 14	3754	93.1
Total	13452	333.7

⁜ For contractor's information only.
◩ Length shown includes 7 ~ 1'-5" min. lap.
⬓ Length shown includes 7 ~ 1'-2" min. lap.
◭ Length shown includes 1 ~ 1'-9" min. lap.
* Girder Flanges & Webs
** Diaframs, Stiffeners and Stud Connectors

GENERAL NOTES:

Designed according to A.A.S.H.T.O. 1989 Standard Specifications.

Design fc = 1200 p.s.i.

The use of Precast Concrete Panels [redacted] not [redacted] permitted.

See GpC (SPL) sheet for details not shown.

See Bearing Details EB-1(MOD) sheet for SE3, IF7 & IE12 Bearings.

For drain location see BRIDGE LAYOUT. For drain details see BRIDGE DRAIN DETAILS sheet.

HS 20 LOADING

Sheet 1 of 5

STATE OF TEXAS
MARK J. BLOSCHOCK
52996
REGISTERED PROFESSIONAL ENGINEER
9-25-91

STATE DEPARTMENT OF HIGHWAYS AND PUBLIC TRANSPORTATION

UNIT NO. 5, RAMP 4

430.00' PLATE GIRDER UNIT (120.00'-190.00'-120.00')

US 83/281 INTERCHANGE

D45350A:*:ZFA1:(355163?4379SFC01.DGN | PREPARED BY AND FOR USE OF TEXAS SDHPT

ORIGINAL DRAWING DATE:	REVISIONS	STATE DISTRICT	FEDERAL REGION	FEDERAL AID PROJECT	•	SHEET
DN.:* MRL		21	6	NH92( )M		372
CK.:* KLR		COUNTY		CONTROL	SECTION	JOB	HIGHWAY
DW.:* TKW		HIDALGO		0039	17	097	83/281
CK.:* MRL							

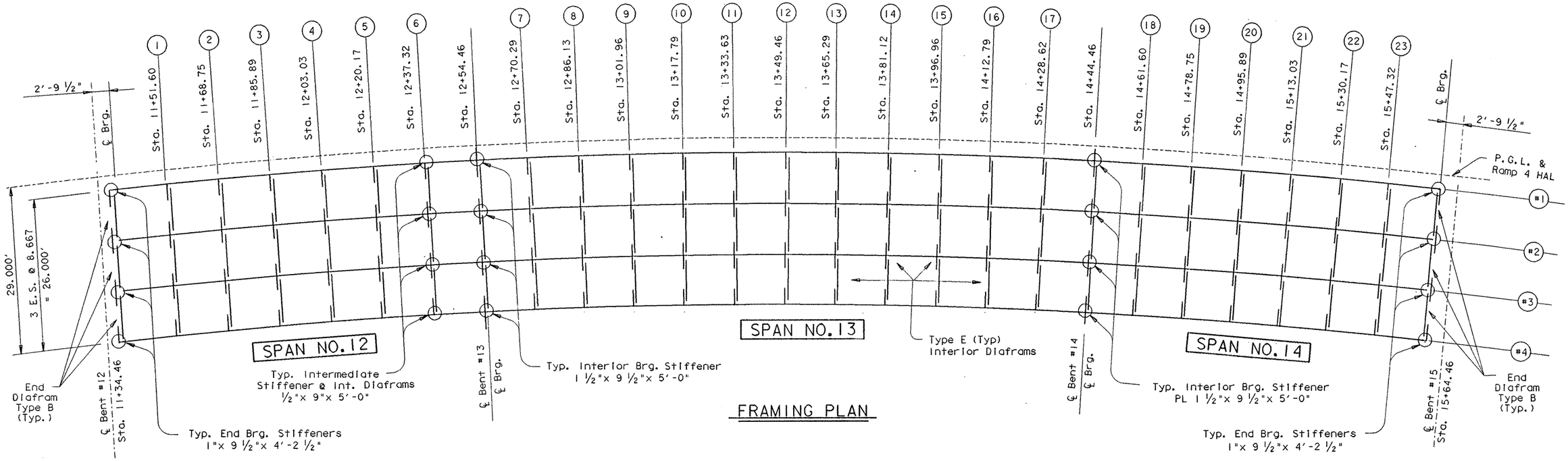

FRAMING PLAN

TABLE OF RADII	
P.G.L.	716.200'
Girder #1	713.200'
Girder #2	704.530'
Girder #3	695.870'
Girder #4	687.200'

HS 20 LOADING

Sheet 2 of 5

STATE OF TEXAS
MARK J. BLOSCHOCK
52996
REGISTERED PROFESSIONAL ENGINEER

9-25-91

STATE DEPARTMENT OF HIGHWAYS AND PUBLIC TRANSPORTATION

UNIT NO. 5, RAMP 4

430.00' PLATE GIRDER UNIT
(120.00'-190.00'-120.00')

US 83/281 INTERCHANGE

D45350A::ZFA1:[355163]4379SFC01.DGN

PREPARED BY AND FOR USE OF TEXAS SDH&PT

ORIGINAL DRAWING DATE:	REVISIONS	STATE DISTRICT	FEDERAL REGION	FEDERAL AID PROJECT	SHEET
DN.:- MRL		21	6	NH 92( )M	373
CK.:- KLR		COUNTY		CONTROL / SECTION / JOB	HIGHWAY
DW.:- TKW		HIDALGO		0039 / 17 / 097	83/281
CK.:- MRL					

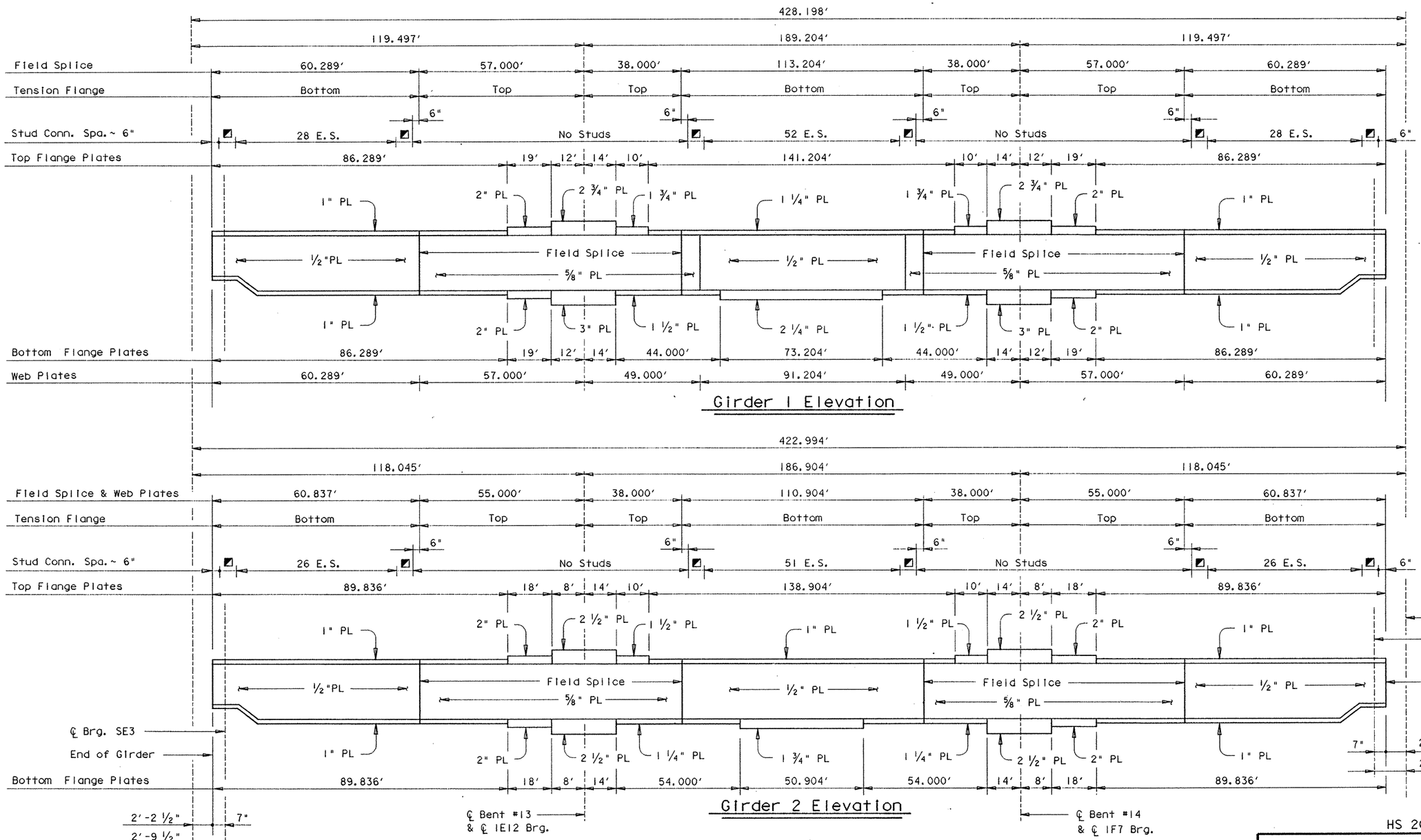

Girder 1 Elevation

Girder 2 Elevation

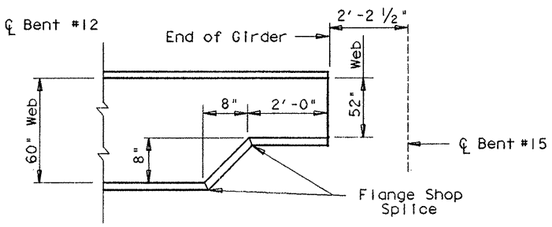

TYPICAL END OF GIRDER

All Web Plates are 60" high unless otherwise noted and are H.S. Steel.
All Flange Plates are H.S. Steel (GR50)
All Flange Plates are 20" Wide unless otherwise noted.

■ 8 E.S. = 4'-0"

STATE OF TEXAS
MARK J. BLOSCHOCK
52996
REGISTERED PROFESSIONAL ENGINEER
9-26-91

HS 20 LOADING

Sheet 3 of 5

STATE DEPARTMENT OF HIGHWAYS AND PUBLIC TRANSPORTATION

UNIT NO. 5, RAMP 4

430.00' PLATE GIRDER UNIT
(120.00'-190.00'-120.00')

US 83/281 INTERCHANGE

D45350A: : ZFA1: (3551634379SFC01.DGN | PREPARED BY AND FOR USE OF TEXAS SDHPT
ORIGINAL DRAWING DATE:
DN.: MRL
CK.: KLR
DW.: TKW
CK.: MRL
REVISIONS

STATE DISTRICT	FEDERAL REGION	FEDERAL AID PROJECT	SHEET
21	6	NH 92( )M	374

COUNTY	CONTROL	SECTION	JOB	HIGHWAY
HIDALGO	0039	17	097	83/281

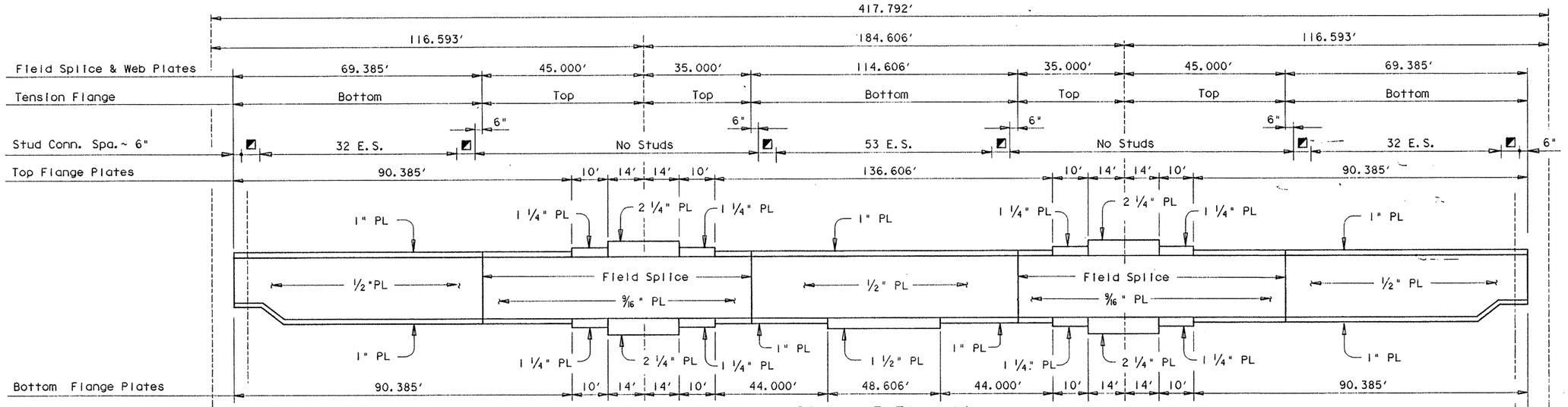

Girder 3 Elevation

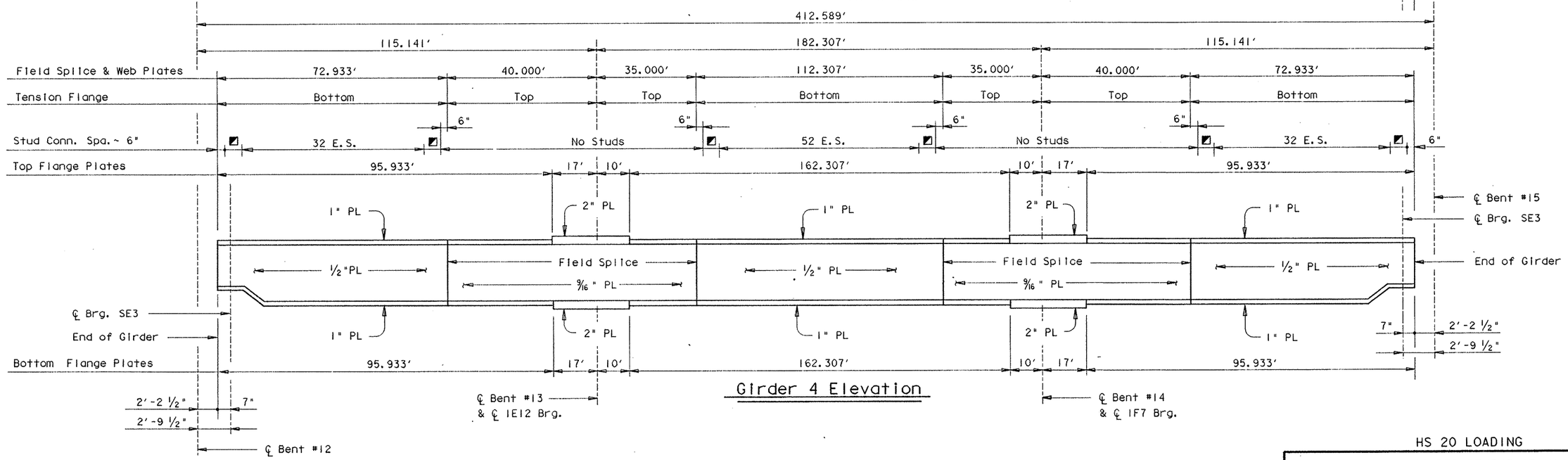

Girder 4 Elevation

All Web Plates are 60" high unless otherwise noted and are H.S. Steel.
All Flange Plates are H.S. Steel (GR50)
All Flange Plates are 20" Wide unless otherwise noted.

8 E.S. = 4'-0"

STATE OF TEXAS
MARK J. BLOSCHOCK
52996
REGISTERED PROFESSIONAL ENGINEER

9-26-91

HS 20 LOADING

Sheet 4 of 5

STATE DEPARTMENT OF HIGHWAYS AND PUBLIC TRANSPORTATION

UNIT NO. 5, RAMP 4

430.00' PLATE GIRDER UNIT
(120.00'-190.00'-120.00')

US 83/281 INTERCHANGE

D4535GA1 ZFA1 [355163]4379SFC01.DGN

PREPARED BY AND FOR USE OF TEXAS SDH&PT

ORIGINAL DRAWING DATE	REVISIONS	STATE DISTRICT	FEDERAL REGION	FEDERAL AID PROJECT	SHEET
DN.- MRL		21	6	NH 92( )M	375
CK.- KLR					
DW.- TKW		COUNTY	CONTROL	SECTION	JOB	HIGHWAY
CK.- MRL		HIDALGO	0039	17	097	83/281

WEB CUTTING TABLE

	DIAFRAM	GIRDER 1 "Y"	2 "Y"	3 "Y"	4 "Y"
SPAN 12	℄ Brg.	-0.042	0.027	0.096	0.164
	1	0.053'	0.092	0.131	0.175
	2	0.141	0.162	0.184	0.212
	3	0.196	0.216	0.238	0.268
	4	0.222	0.246	0.272	0.308
	5	0.237	0.258	0.281	0.316
	6	0.264	0.275	0.287	0.311
SPAN 13	℄ Brg	0.316	0.316	0.316	0.316
	7	0.391	0.381	0.366	0.341
	8	0.497	0.478	0.439	0.393
	9	0.612	0.585	0.524	0.455
	10	0.705	0.673	0.591	0.503
	11	0.762	0.726	0.631	0.531
	12	0.774	0.735	0.636	0.532
	13	0.729	0.690	0.598	0.498
	14	0.640	0.605	0.527	0.438
	15	0.514	0.485	0.426	0.356
	16	0.367	0.345	0.309	0.262
	17	0.230	0.217	0.203	0.178
SPAN 14	℄ Brg	0.121	0.121	0.121	0.121
	18	0.048	0.064	0.073	0.098
	19	0.018	0.045	0.066	0.100
	20	0.024	0.053	0.077	0.112
	21	0.038	0.064	0.083	0.112
	22	0.041	0.058	0.071	0.090
	23	0.025	0.033	0.038	0.048
	℄ Brg	0.000	0.000	0.000	0.000

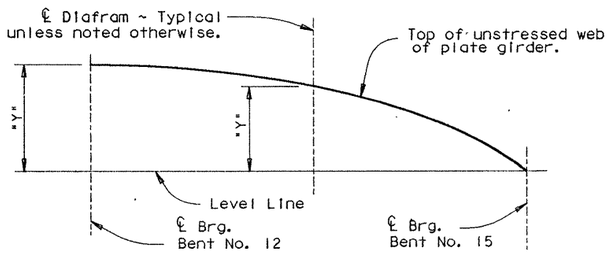

WEB CUTTING DIAGRAM

Note: Web [redacted] cut on straight lines between ordinates or to a smooth curve at the fabricator's option. Values listed include all dead load deflection's and vertical curve corrections.

TABLE OF DEAD LOAD DEFLECTIONS

		GIRDER 1	2	3	4
SPAN 12	0	0.000	0.000	0.000	0.000
	1	0.008	0.012	0.014	0.020
	2	0.013	0.018	0.025	0.036
	3	0.010	0.019	0.029	0.045
	4	0.002	0.012	0.027	0.046
	5	-0.013	0.002	0.018	0.041
	6	-0.027	-0.014	0.003	0.028
	7	-0.038	-0.026	-0.011	0.014
	8	-0.037	-0.030	-0.018	0.001
	9	-0.025	-0.022	-0.016	-0.004
SPAN 13	10	0.000	0.000	0.000	0.000
	11	0.069	0.066	0.054	0.035
	12	0.165	0.162	0.132	0.096
	13	0.258	0.257	0.211	0.158
	14	0.325	0.322	0.264	0.200
	15	0.349	0.345	0.284	0.216
	16	0.325	0.321	0.265	0.200
	17	0.259	0.254	0.211	0.157
	18	0.165	0.161	0.132	0.096
	19	0.069	0.065	0.054	-0.035
SPAN 14	20	0.000	0.000	0.000	0.000
	21	-0.025	-0.022	-0.016	-0.004
	22	-0.037	-0.030	-0.018	0.001
	23	-0.038	-0.026	-0.011	0.014
	24	-0.027	-0.014	0.003	0.028
	25	-0.013	0.002	0.018	0.041
	26	0.002	0.012	0.027	0.046
	27	0.010	0.019	0.029	0.045
	28	0.013	0.018	0.025	0.036
	29	0.008	0.012	0.014	0.020
	30	0.000	0.000	0.000	0.000

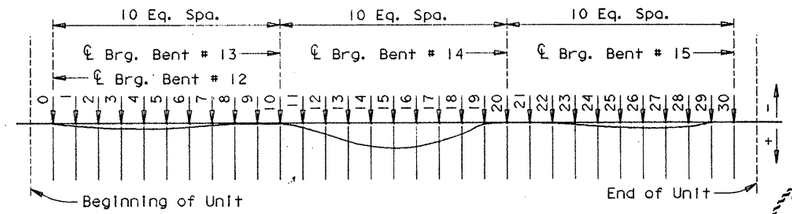

DEAD LOAD DEFLECTION DIAGRAM

Deflections shown are due to cast-in-place concrete slab only.

PLATE GIRDER FABRICATION NOTE:

Girder tension flanges and webs are classified as main members and [redacted] conform to Item 442.3(1).

Except at changes in section, shop or field flange and web splices in plate girders [redacted] located as desirable to optimize plate lengths and erection procedures, except that splices [redacted] not [redacted] allowed where a 40' or less unspliced length would suffice; neither [redacted] tension flange splices [redacted] allowed within .05S either side of interior bearings, within .10S either side of the centerlines of the interior span, nor within the range between .30S and .50S from the end bearings. (S=length c.c. Bearing of Span in which the splice is made).

Flange and Web Splices [redacted] made by full penetration groove welds in accordance with the Item "Steel Structures".

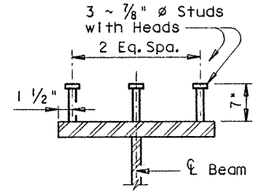

SHEAR CONNECTOR STUD DETAIL

Studs shall be Electric arc end-welded to the flanges with complete fusion.

STATE OF TEXAS
MARK J. BLOSCHOCK
52996
REGISTERED PROFESSIONAL ENGINEER
4-26-91

HS 20 LOADING

STATE DEPARTMENT OF HIGHWAYS AND PUBLIC TRANSPORTATION

UNIT NO. 5, RAMP 4

430.00' PLATE GIRDER UNIT
(120.00'-190.00'-120.00')

US 83/281 INTERCHANGE

D45350A: ZFA1: C3516314379SFC01.DGN | PREPARED BY AND FOR USE OF TEXAS SDH&PT

ORIGINAL DRAWING DATE:	REVISIONS	STATE DISTRICT	FEDERAL REGION	FEDERAL A.D PROJECT	SHEET
DN.: MRL		21	6	NH92C)M	376
CK.: KLR		COUNTY	CONTROL	SECTION	JOB	HIGHWAY
DR.: TKW		HIDALGO	0039	17	097	83/281
CK.: MRL						

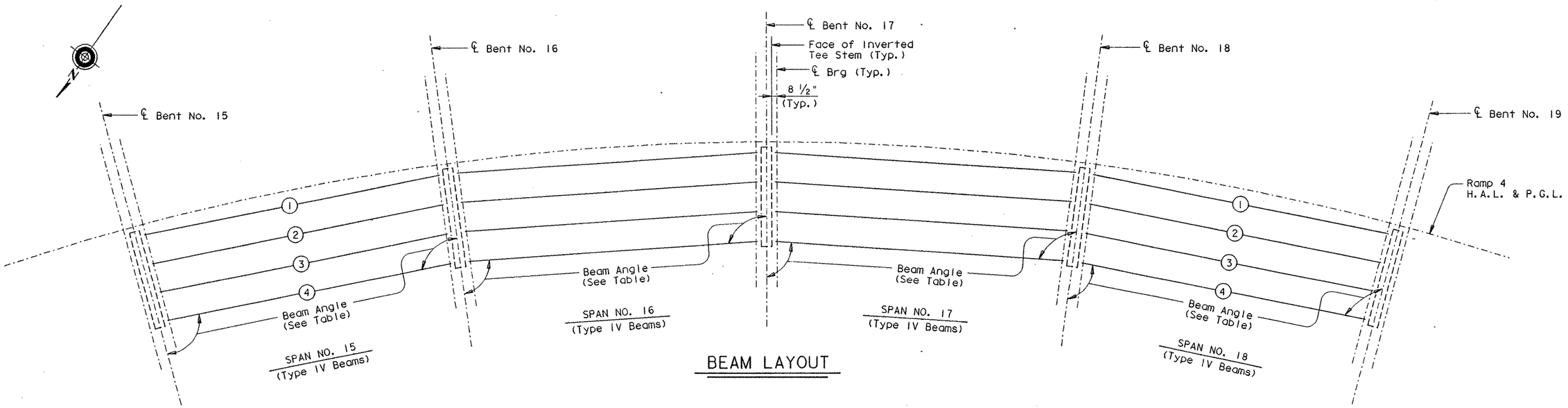

BEAM LAYOUT

BENT REPORT

BENT NO.15 (S 50 43 17.46 E)
DISTANCE BETWEEN STATION LINE AND BEAM 1 3.000 R

		BEAM SPAC. (C.L. BENT)	BEAM ANGLE D M S
SPAN15	BEAM 1	0.000	86 13 48
	BEAM 2	8.667	86 13 48
	BEAM 3	8.667	86 13 48
	BEAM 4	8.667	86 13 48
	TOTAL	26.000	

BENT NO.16 (S 43 10 53.46 E)
DISTANCE BETWEEN STATION LINE AND BEAM 1 3.000 R

		BEAM SPAC. (C.L. BENT)	BEAM ANGLE D M S
SPAN15	BEAM 1	0.000	86 13 48
	BEAM 2	8.667	86 13 48
	BEAM 3	8.667	86 13 48
	BEAM 4	8.667	86 13 48
	TOTAL	26.000	
SPAN16	BEAM 1	0.000	86 13 49
	BEAM 2	8.667	86 13 49
	BEAM 3	8.667	86 13 49
	BEAM 4	8.667	86 13 49
	TOTAL	26.000	

BENT NO.17 (S 35 38 32.34 E)
DISTANCE BETWEEN STATION LINE AND BEAM 1 3.000 R

		BEAM SPAC. (C.L. BENT)	BEAM ANGLE D M S
SPAN16	BEAM 1	0.000	86 13 49
	BEAM 2	8.667	86 13 49
	BEAM 3	8.667	86 13 49
	BEAM 4	8.667	86 13 49
	TOTAL	26.000	

BENT REPORT

BENT NO.17 (S 35 38 32.34 E)
DISTANCE BETWEEN STATION LINE AND BEAM 1 3.000 R

		BEAM SPAC. (C.L. BENT)	BEAM ANGLE D M S
SPAN17	BEAM 1	0.000	86 13 48
	BEAM 2	8.667	86 13 48
	BEAM 3	8.667	86 13 48
	BEAM 4	8.667	86 13 48
	TOTAL	26.000	

BENT NO.18 (S 28 6 8.34 E)
DISTANCE BETWEEN STATION LINE AND BEAM 1 3.000 R

		BEAM SPAC. (C.L. BENT)	BEAM ANGLE D M S
SPAN17	BEAM 1	0.000	86 13 48
	BEAM 2	8.667	86 13 48
	BEAM 3	8.667	86 13 48
	BEAM 4	8.667	86 13 48
	TOTAL	26.000	
SPAN18	BEAM 1	0.000	86 13 49
	BEAM 2	8.667	86 13 49
	BEAM 3	8.667	86 13 49
	BEAM 4	8.667	86 13 49
	TOTAL	26.000	

BENT NO.19 (S 20 33 47.22 E)
DISTANCE BETWEEN STATION LINE AND BEAM 1 3.000 R

		BEAM SPAC. (C.L. BENT)	BEAM ANGLE D M S
SPAN18	BEAM 1	0.000	86 13 49
	BEAM 2	8.667	86 13 49
	BEAM 3	8.667	86 13 49
	BEAM 4	8.667	86 13 49
	TOTAL	26.000	

BEAM REPORT

BEAM REPORT, SPAN15

	HORIZONTAL DISTANCE C-C BENT	C-C BRG.	TRUE DISTANCE BOT. BM. FLG.
BEAM 1	93.787	88.610	89.693
BEAM 2	92.648	87.470	88.553
BEAM 3	91.508	86.330	87.414
BEAM 4	90.368	85.191	86.274

BEAM REPORT, SPAN16

	HORIZONTAL DISTANCE C-C BENT	C-C BRG.	TRUE DISTANCE BOT. BM. FLG.
BEAM 1	93.778	88.600	89.684
BEAM 2	92.638	87.460	88.545
BEAM 3	91.498	86.321	87.405
BEAM 4	90.359	85.181	86.266

BEAM REPORT, SPAN17

	HORIZONTAL DISTANCE C-C BENT	C-C BRG.	TRUE DISTANCE BOT. BM. FLG.
BEAM 1	93.787	88.610	89.698
BEAM 2	92.648	87.470	88.559
BEAM 3	91.508	86.330	87.419
BEAM 4	90.368	85.191	86.279

BEAM REPORT, SPAN18

	HORIZONTAL DISTANCE C-C BENT	C-C BRG.	TRUE DISTANCE BOT. BM. FLG.
BEAM 1	93.778	88.600	89.695
BEAM 2	92.638	87.460	88.556
BEAM 3	91.498	86.321	87.416
BEAM 4	90.359	85.181	86.277

HS 20 LOADING

STATE OF TEXAS
MARK J. BLOSCHOCK
52996
REGISTERED PROFESSIONAL ENGINEER

10-29-91

STATE DEPARTMENT OF HIGHWAYS AND PUBLIC TRANSPORTATION

BEAM LAYOUT
UNIT NO. 6, RAMP 4

US 83/281 INTERCHANGE

D45350A1 : ZFA2 : [3551001]4379BLY02.DGN | PREPARED BY AND FOR USE OF TEXAS SDH&PT

ORIGINAL DRAWING DATE: JANUARY 1991	STATE DISTRICT	FEDERAL REGION	FEDERAL AID PROJECT		SHEET
DN.: LMW					
CK.: KBA	REVISIONS	21	6	NH 92( )M	376A
DW.: PSR		COUNTY	CONTROL	SECTION	JOB	HIGHWAY
CK.: LMW		HIDALGO	0039	17	097	US 83/281

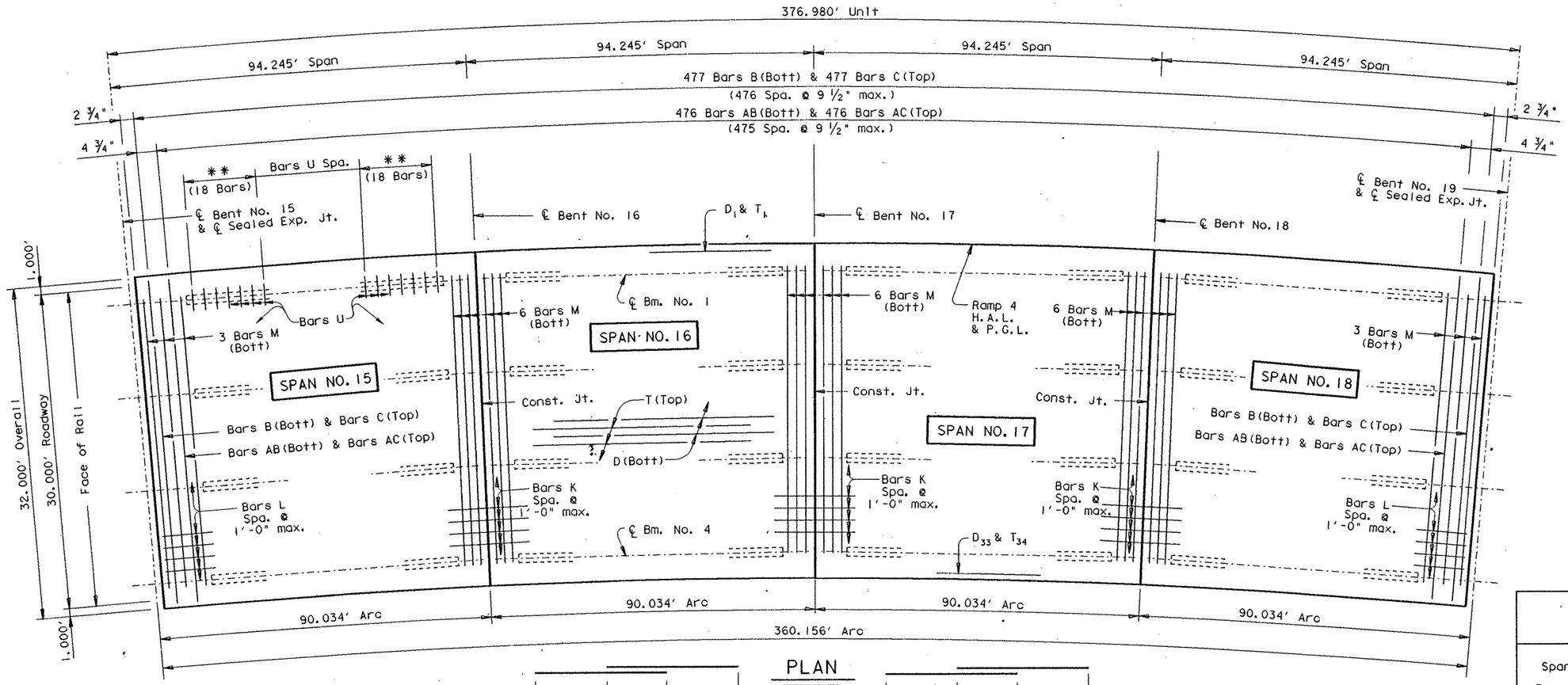

PLAN

** Bars U Spacing [redacted] match Beam Bars R Spacing on all Beams in Span No. 15.

min. lap	1'-2"
T_1 = 376'-8"	
T_{34} = 359'-10"	
T_{1-34} = 368'-3" avg.	

BARS T

min. lap	1'-5"
D_1 = 376'-8"	
D_{33} = 359'-10"	
D_{1-33} = 368'-3" avg.	

BARS D

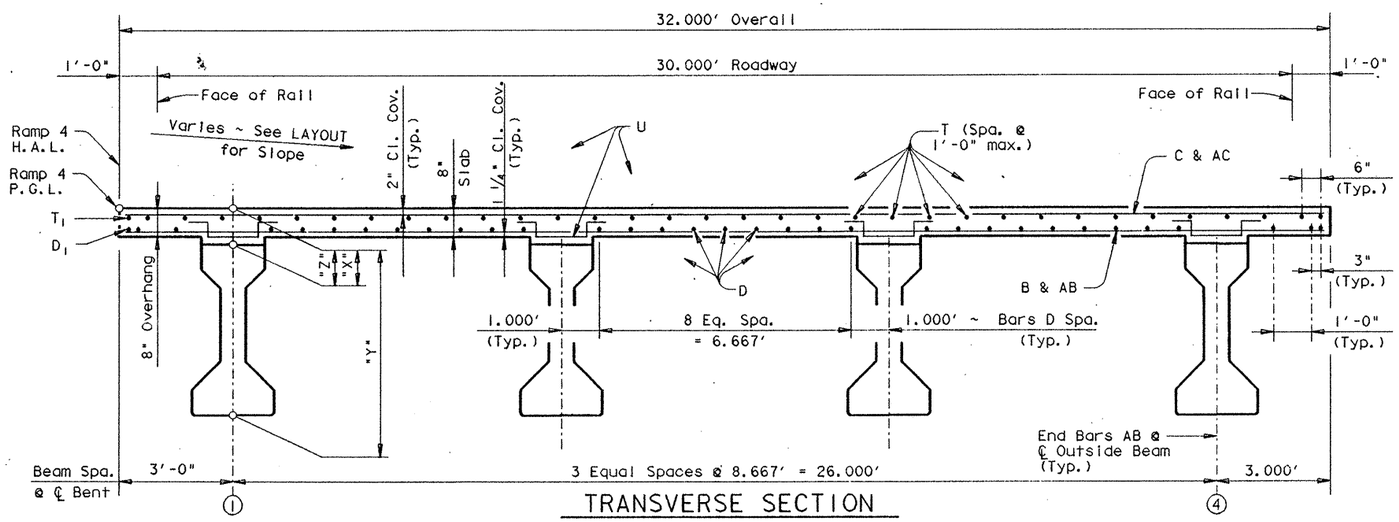

TRANSVERSE SECTION

Span	Beam	"A"	"B"
ALL	ALL	0.055'	0.077'

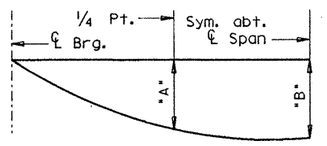

NOTE: Deflections shown are due to cast-in-place concrete only.

(E_c = 5 X 10^6 psi)

DEAD LOAD DEFLECTION DIAGRAM

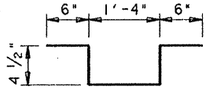

BARS U

TABLE OF ESTIMATED QUANTITIES

Bar	No.	Size	Length	Weight
AB	476	# 5	26'- 0"	12908
AC	476	# 5	31'- 9"	15763
B	477	# 4	31'- 9"	10117
C	477	# 5	31'- 9"	15796
D_{1-33}	33	# 5	376'- 9" avg ▲	12967
K	93	# 4	6'- 4"	393
L	62	# 4	3'- 0"	124
M	24	# 5	29'- 9"	745
T_{1-34}	34	# 4	375'- 3" avg ◩	8523
U	144	# 4	3'- 1"	297

Reinforcing Steel	Lb	⌗ 77633
Prestr. Conc. Bm. ~ Ty. IV	LF	⌗ 1407.73

Span	Reinf. Conc. Slab ~ SF	Class "S" Conc. ~ CY	
		⌗ Diaf.	⌗ Slab
# 15	2949	——	76.2
# 16	2949	——	75.8
# 17	2949	——	75.8
# 18	2949	——	75.8
Total	11796	⌗	303.6

⌗ For contractor's information only.

▲ Length shown includes 6 ~ 1'-5 " min. laps.

◩ Length shown includes 6 ~ 1'-2 " min. laps.

⌗ Length shown is bottom flange length with adjustments made for beam slope.

TABLE OF SECTION DEPTHS

Span	"X" at ℄ Brg.	"Y" at ℄ Brg.	"Z" at ℄ Span *
#15	11"	5'-5"	8 1/4"
#16-#18	10 1/4"	5'-4 1/4"	8 1/4"

* Theoretical dimension

GENERAL NOTES:

Designed according to A.A.S.H.T.O. 1989 Standard Specifications.

Design fc = 1200 p.s.i.

See GpC (SPL) sheet for details not shown.

For Drain Locations see Bridge Layout. For Drain Details see Bridge Drain Details Sheet.

HS 20 LOADING

STATE DEPARTMENT OF HIGHWAYS AND PUBLIC TRANSPORTATION

UNIT NO. 6, RAMP 4

376.98' PRESTRESSED CONCRETE BEAM UNIT

(94.245'-94.245'-94.245'-94.245)

US 83/281 INTERCHANGE

D45350A ▪ ZFA ▪ [3551631]4379PPB02.DGN	PREPARED BY AND FOR USE OF TEXAS SDH&PT					
ORIGINAL DRAWING DATE: AUGUST 1990	STATE DISTRICT	FEDERAL REGION	FEDERAL AID PROJECT			SHEET
REVISIONS	21	6	NH 92C)M			377
DR.:- LMW	COUNTY		CONTROL	SECTION	JOB	HIGHWAY
CK.:- KBE	HIDALGO		0039	17	097	US 83/281
DR.:- TKW PSR						
CK.:- LMW						

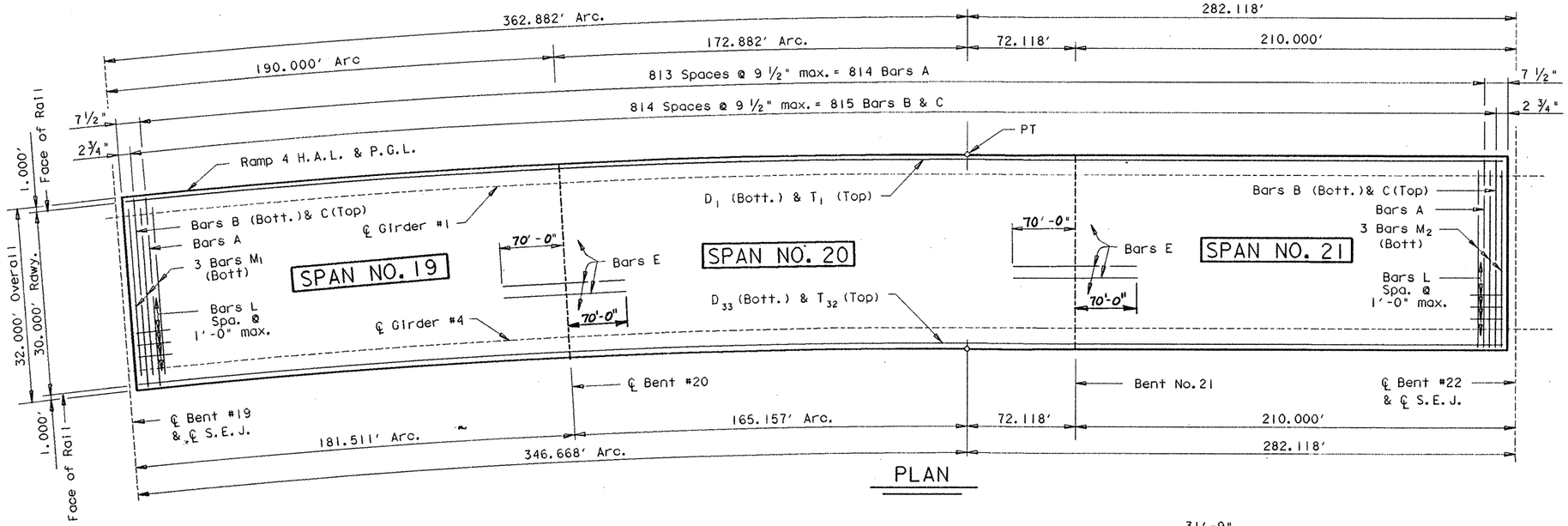

PLAN

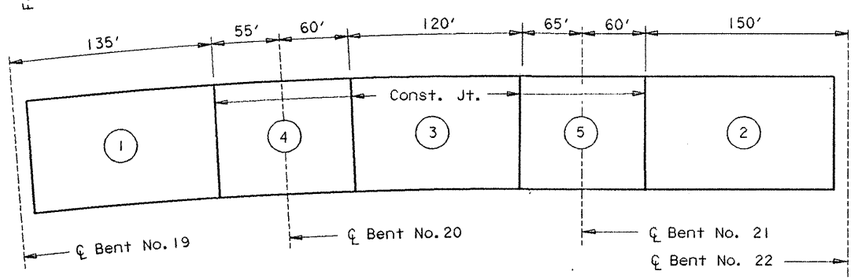

CONCRETE PLACING SEQUENCE

At Contractors option, Continuous placement [redacted] used. For Continuous placement, the minimum rate of Concrete placing and Finishing [redacted] not [redacted] less than 30 linear feet of bridge deck per hour.

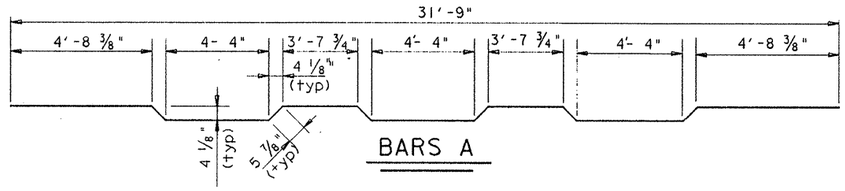

BARS A

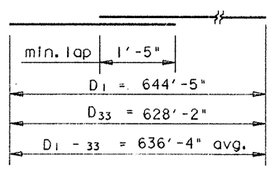

BARS D

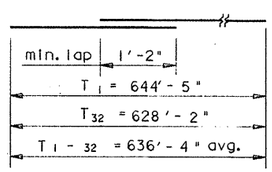

BARS T

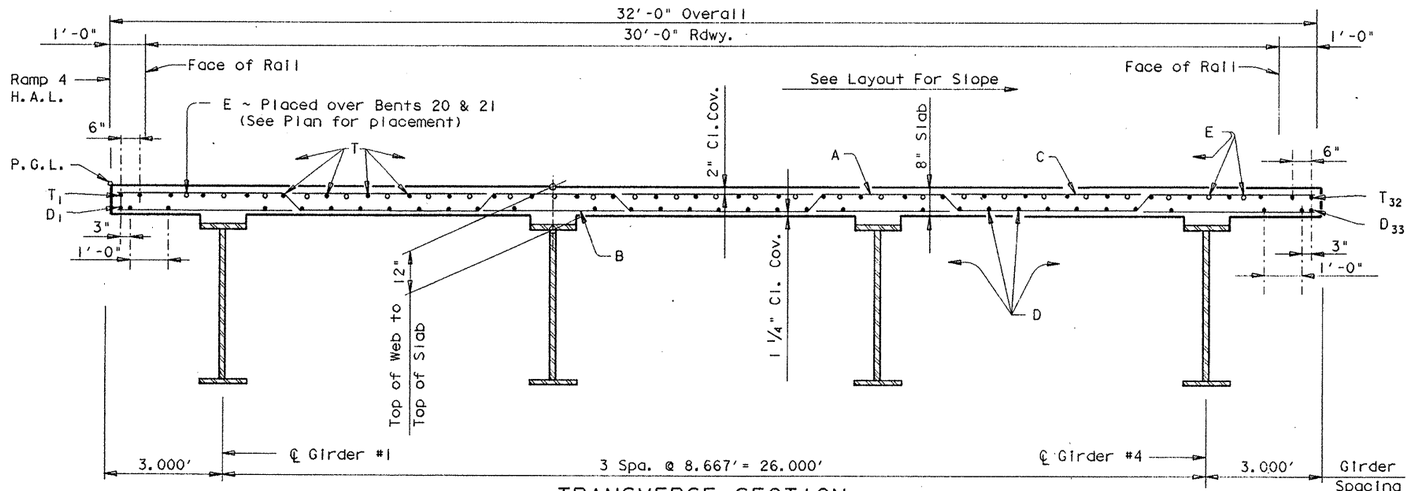

TRANSVERSE SECTION

REV. 3-30-92

TABLE OF ESTIMATED QUANTITIES

Bar	No.	Size	Length	Weight
A	814	# 5	32'- 7"	27663
B	815	# 4	31'- 9"	17285
C	815	# 5	31'- 9"	26989
D_{1-33}	33	# 5	650'-6 "Av ◩	22390
E	54	# 6	143'- 6" ▲	11639
L	63	# 4	3'-0"	126
M_1	3	# 5	29'- 9"	93
M_2	3	# 5	30'- 9"	96
T_{1-32}	32	# 4	648'-0 "Av ◪	13852

Reinforcing Steel	Lb	⁜120133
Str. Steel (HS) *	Lb	1101750
Str. Steel (HYC) **	Lb	85286

Span	Reinf. Conc. Slab ~ SF	Class "S" Conc. ~ CY ⁜ Slab
# 19	5944	152.6
# 20	7716	200.0
# 21	6720	174.4
Total	20380	527.0

⁜ For contractor's information only.
◩ Length shown includes 10 ~ 1'-5" min. lap.
◪ Length shown includes 10 ~ 1'-2" min. lap.
▲ Length shown includes 2 ~ 1'-9" min. lap.
* Girder flanges & webs
** Diaframs, stiffeners and stud connectors

GENERAL NOTES:

Designed according to A.A.S.H.T.O. 1989 Standard and current Interim Specifications.

Design fc = 1200 p.s.i.

The use of Precast Concrete Panels [redacted] not [redacted] permitted.

See SPECIAL BEARINGS detail sheet for SE7, IF10 and ISI bearings.

See Gp C (SPL) sheet for detail not shown.

For drain location see BRIDGE LAYOUT. For drain details see BRIDGE DRAIN DETAILS sheet.

HS 20 LOADING

Sheet 1 of 5

STATE OF TEXAS
MARK J. BLOSCHOCK
52996
REGISTERED PROFESSIONAL ENGINEER
9-26-91

STATE DEPARTMENT OF HIGHWAYS AND PUBLIC TRANSPORTATION

UNIT NO. 7, RAMP 4

645.00' PLATE GIRDER UNIT

190.00'-245.00'-210.00'

US 83/281 INTERCHANGE

D45350A1 ZFA1 [355163]4379SFC04.DGN

ORIGINAL DRAWING DATE:

DR.: KLR
CK.: MRL
DR.: TKW
CK.: KLR

REVISIONS

PREPARED BY AND FOR USE OF TEXAS SDH&PT

STATE DISTRICT	FEDERAL REGION	FEDERAL AID PROJECT	*	SHEET
21	6	NH 92( )M		378

COUNTY	CONTROL	SECTION	JOB	HIGHWAY
HIDALGO	0039	17	097	83/281

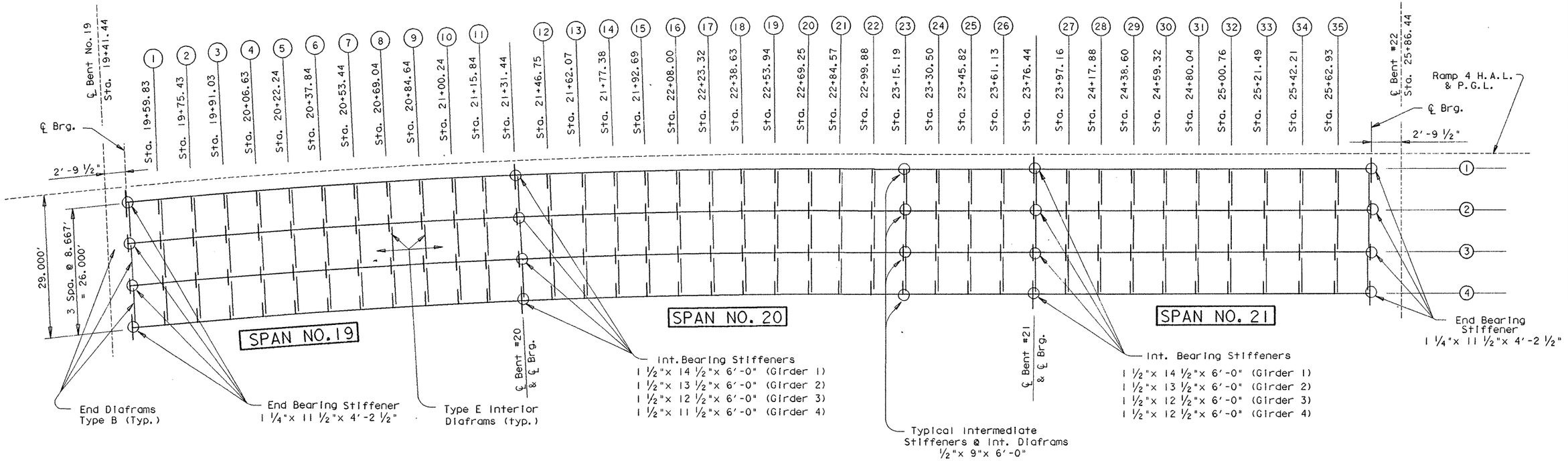

FRAMING PLAN

TABLE OF RADII	
P.G.L.	716.20'
Girder #1	713.20
Girder #2	704.53
Girder #3	695.87
Girder #4	687.20

HS 20 LOADING

Sheet 2 of 5

STATE OF TEXAS
MARK J. BLOSCHOCK
52996
REGISTERED PROFESSIONAL ENGINEER

9-26-91

STATE DEPARTMENT OF HIGHWAYS AND PUBLIC TRANSPORTATION

UNIT NO. 7, RAMP 4

645.00' PLATE GIRDER UNIT
190.00'-245.00'-165.00'

US 83/281 INTERCHANGE

D45350A:: ZFA1: [355163]4379SFC04.DGN
PREPARED BY AND FOR USE OF TEXAS SDH&PT

ORIGINAL DRAWING DATE:	REVISIONS	STATE DISTRICT	FEDERAL REGION	FEDERAL AID PROJECT	SHEET
DN.: KLR		21	6	NH 92( )M	379
CK.: MRL		COUNTY		CONTROL / SECTION / JOB	
DN.: TKW		HIDALGO		0039 / 17 / 097	83/281
CK.: KLR					

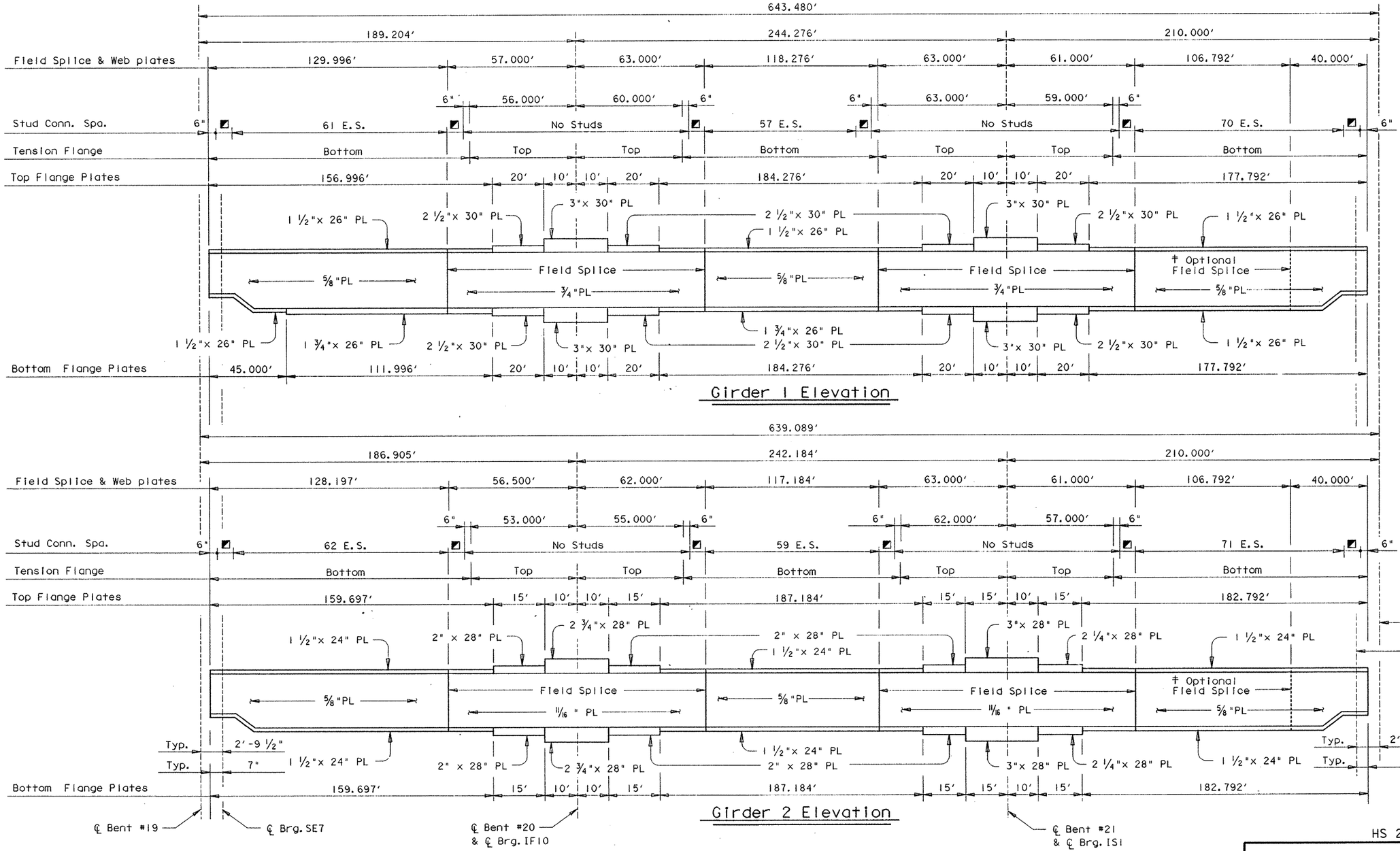

Girder 1 Elevation

Girder 2 Elevation

HS 20 LOADING

Sheet 3 of 5

◪ 8 E.S. = 4'-0"

‡ An optional field splice is provided to facilitate handling and hauling and [redacted] made prior to lifting the girder to its final position.

All Web Plates are 72" high unless otherwise noted.
All Web Plates are H.S. Steel
All Flange Plates are H.S. Steel (GR50)

STATE OF TEXAS
MARK J. BLOSCHOCK
52996
REGISTERED PROFESSIONAL ENGINEER

9-26-91

STATE DEPARTMENT OF HIGHWAYS AND PUBLIC TRANSPORTATION

UNIT NO. 7, RAMP 4

645.00' PLATE GIRDER UNIT
190.00'-245.00'-210.00'

US 83/281 INTERCHANGE

D45350A: ZFA1: [355163]4379SFC05.DGN	PREPARED BY AND FOR USE OF TEXAS SD&PT					
ORIGINAL DRAWING DATE:	STATE DISTRICT	FEDERAL REGION	FEDERAL AID PROJECT			SHEET
DN.: KLR	21	6	NH92( )M			380
CK.: MRL	COUNTY		CONTROL	SECTION	JOB	HIGHWAY
DW.: TKW	HIDALGO		0039	17	097	83/281
CK.: KLR						

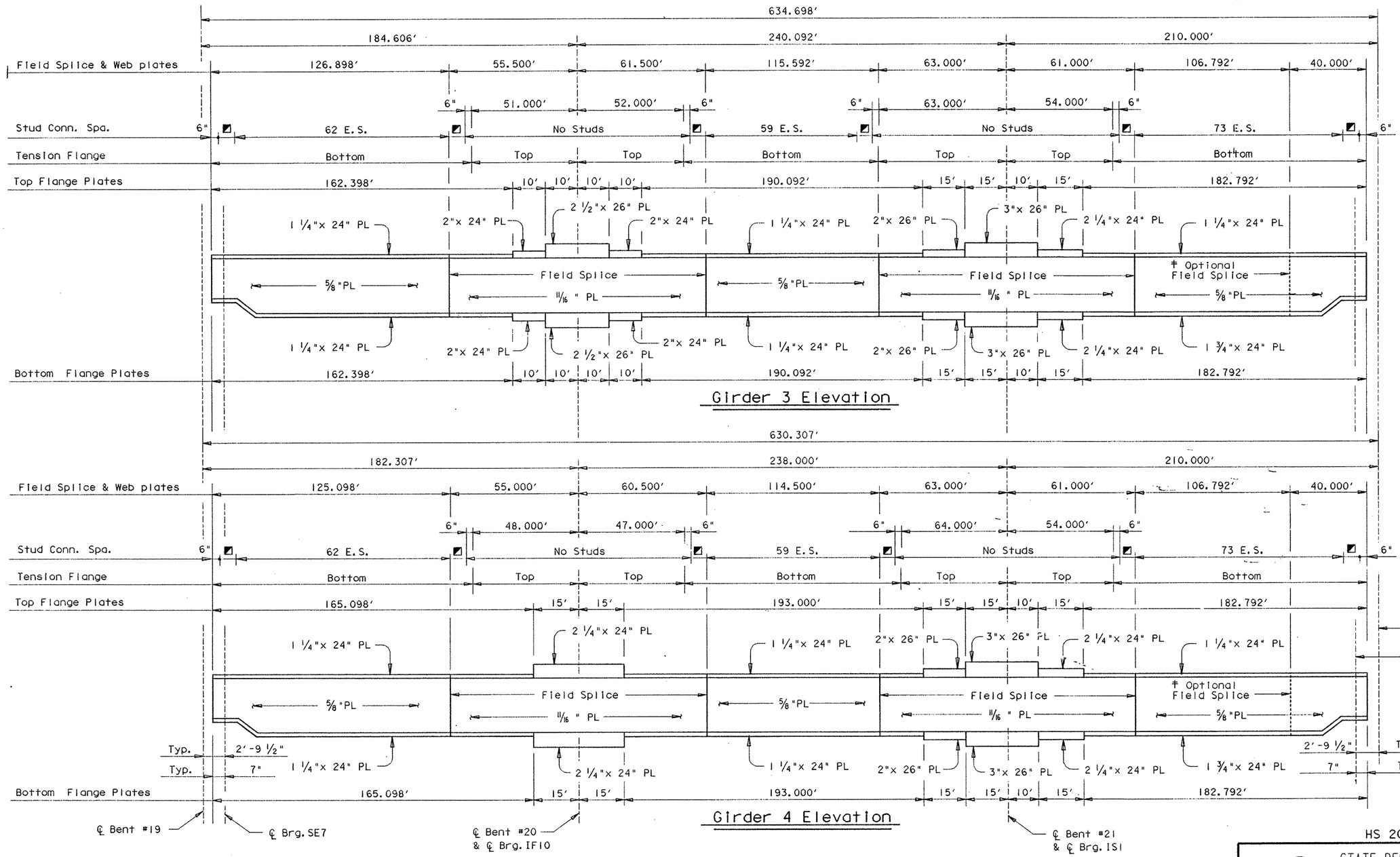

Girder 3 Elevation

Girder 4 Elevation

HS 20 LOADING

Sheet 4 of 5

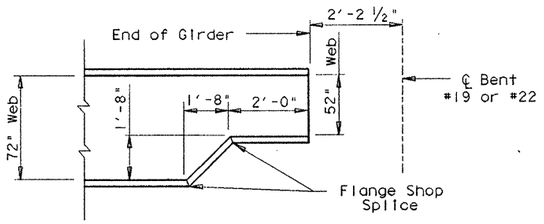

TYPICAL END OF GIRDER DETAIL

◪ 8 E.S. = 4'-0"

‡ An optional field splice is provided to facilitate handling and hauling and [redacted] made prior to lifting the girder to its final position.

All Web Plates are 72" high unless otherwise noted.
All Web Plates are H.S. Steel
All Flange Plates are H.S. Steel (GR50)

STATE OF TEXAS
MARK J. BLOSCHOCK
52996
REGISTERED PROFESSIONAL ENGINEER

9-26-91

STATE DEPARTMENT OF HIGHWAYS AND PUBLIC TRANSPORTATION

UNIT NO. 7, RAMP 4

645.00' PLATE GIRDER UNIT
190.00'-245.00'-210.00'

US 83/281 INTERCHANGE

D45350A1 : ZFA1 : [35516]3 4379SFC05.DGN	PREPARED BY AND FOR USE OF TEXAS SDH&PT					
ORIGINAL DRAWING DATE:	STATE DISTRICT	FEDERAL REGION	FEDERAL AID PROJECT			SHEET
DN.: KLR	21	6	NH 92 ( ) M			381
CK.: MRL	COUNTY		CONTROL	SECTION	JOB	HIGHWAY
DW.: TKW	HIDALGO		0039	17	097	83/281
CK.: KLR						

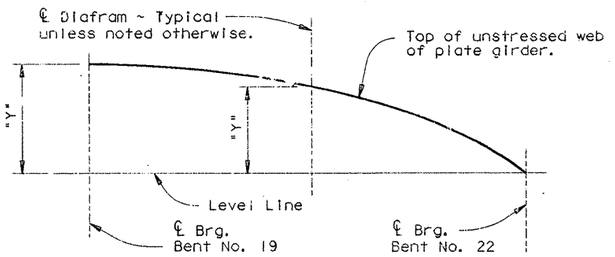

WEB CUTTING DIAGRAM

Note: Web [illegible] cut on straight lines between ordinates or to a smooth curve at the fabricator's option. Values listed include all dead load deflection's and vertical curve corrections.

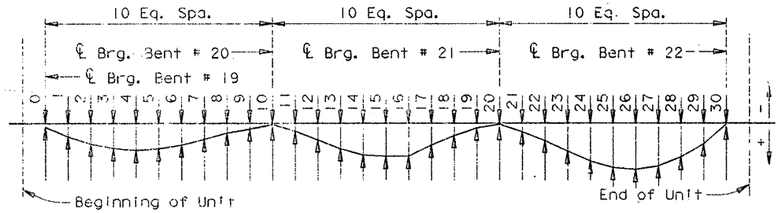

DEAD LOAD DEFLECTION DIAGRAM

Deflections shown are due to cast-in-place concrete slab only.

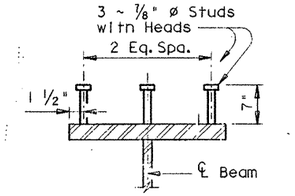

SHEAR CONNECTOR STUD DETAIL

Studs [illegible] Electric arc erd-welded to the flanges with complete fusion.

WEB CUTTING TABLE

DIAFRAM		GIRDER 1 "Y"	2 "Y"	3 "Y"	4 "Y"
SPAN 19	℄ Brg.	20.407	20.159	19.712	19.364
	1	20.229	19.870	19.508	19.135
	2	20.022	19.651	19.277	18.882
	3	19.774	19.397	19.012	18.600
	4	19.472	19.093	18.702	18.281
	5	19.119	18.741	18.350	17.928
	6	18.717	18.342	17.955	17.541
	7	18.266	17.898	17.518	17.118
	8	17.782	17.420	17.050	16.666
	9	17.276	16.921	16.559	16.192
	10	16.768	16.416	16.059	15.707
	11	16.270	15.921	15.570	15.222
	℄ Brg	15.789	15.442	15.096	14.749
SPAN 20	12	15.340	14.996	14.651	14.303
	13	14.908	14.567	14.222	13.869
	14	14.487	14.150	13.800	13.435
	15	14.068	13.729	13.371	12.992
	16	13.631	13.290	12.923	12.526
	17	13.165	12.820	12.443	12.032
	18	12.664	12.313	11.929	11.506
	19	12.130	11.777	11.387	10.959
	20	11.564	11.216	10.832	10.413
	21	10.972	10.645	10.285	9.894
	22	10.362	10.072	9.752	9.411
	23	9.742	9.505	9.240	8.966
	24	9.128	8.955	8.762	8.569
	25	8.531	8.420	8.297	8.179
	26	7.958	7.896	7.830	7.768
	℄ Brg	7.410	7.386	7.363	7.338
SPAN 21	27	6.722	6.726	6.738	6.742
	28	6.079	6.102	6.130	6.138
	29	5.469	5.500	5.546	5.555
	30	4.853	4.904	4.946	4.957
	31	4.198	4.255	4.298	4.307
	32	3.484	3.540	3.580	3.589
	33	2.700	2.750	2.782	2.789
	34	1.849	1.885	1.909	1.914
	35	0.941	0.960	0.973	0.975
	℄ Brg	0.000	0.000	0.000	0.000

TABLE OF DEAD LOAD DEFLECTIONS

		GIRDER 1	2	3	4
SPAN 19	0	0.000′	0.000′	0.000′	0.000′
	1	0.094′	0.086′	0.077′	0.057′
	2	0.170′	0.158′	0.141′	0.105′
	3	0.219′	0.204′	0.183′	0.138′
	4	0.235′	0.220′	0.198′	0.151′
	5	0.218′	0.207′	0.186′	0.143′
	6	0.175′	0.167′	0.151′	0.119′
	7	0.117′	0.111′	0.100′	0.081′
	8	0.057′	0.054′	0.047′	0.040′
	9	0.016′	0.015′	0.010′	0.009′
	10	0.000′	0.000′	0.000′	0.000′
SPAN 20	11	0.023′	0.028′	0.032′	0.033′
	12	0.090′	0.101′	0.105′	0.093′
	13	0.172′	0.184′	0.185′	0.156′
	14	0.234′	0.246′	0.241′	0.196′
	15	0.255′	0.264′	0.254′	0.202′
	16	0.266′	0.233′	0.222′	0.173′
	17	0.158′	0.163′	0.153′	0.116′
	18	0.076′	0.077′	0.070′	0.050′
	19	0.014′	0.013′	0.009′	0.003′
	20	0.000′	0.000′	0.000′	0.000′
SPAN 21	21	0.030′	0.032′	0.038′	0.039′
	22	0.090′	0.103′	0.114′	0.119′
	23	0.170′	0.194′	0.209′	0.215′
	24	0.246′	0.278′	0.296′	0.302′
	25	0.299′	0.335′	0.354′	0.361′
	26	0.315′	0.351′	0.370′	0.375′
	27	0.290′	0.322′	0.337′	0.342′
	28	0.223′	0.246′	0.258′	0.261′
	29	0.122′	0.135′	0.140′	0.142′
	30	0.000′	0.000′	0.000′	0.000′

PLATE GIRDER FABRICATION NOTE:

Girder tension flanges and webs are classified as main members and [illegible] conform to Item 442.3(1).

Except at changes in section, shop or field flange and web splices in plate girders [illegible] located as desirable to optimize plate lengths and erection procedures, except that splices [illegible] not be allowed where a 40′ or less unspliced length would suffice; neither [illegible] tension flange splices be allowed within .05S either side of interior bearings, within .10S either side of the centerlines of the interior span, nor within the range between .30S and .50S from the end bearings. (S=length c.c. Bearing at Span in which the splice is made).

Flange and Web Splices [illegible] made by full penetration groove welds in accordance with the Item "Steel Structures".

STATE OF TEXAS
MARK J. BLOSCHOCK
52996
REGISTERED PROFESSIONAL ENGINEER

Mark J. Bloschock
9-26-91

HS 20 LOADING

STATE DEPARTMENT OF HIGHWAYS AND PUBLIC TRANSPORTATION

UNIT NO. 7, RAMP 4

645.00′ PLATE GIRDER UNIT
190.00′-245.00′-210.00′

US 83/281 INTERCHANGE

D45350A1 ZFA1 E355(63)4279SFC04.DGN	PREPARED BY AND FOR USE OF TEXAS SDH&PT				
ORIGINAL DRAWING DATED:	STATE DISTRICT	FEDERAL REGION	FEDERAL AID PROJECT		SHEET
DR.- KLR	21	6	NH 92( )M		382
CK.- MRL	COUNTY		CONTROL	SECTION	JOB	HIGHWAY
DR.- TSW	HIDALGO		0039	17	097	83/281
CK.- KLR						

REVISIONS

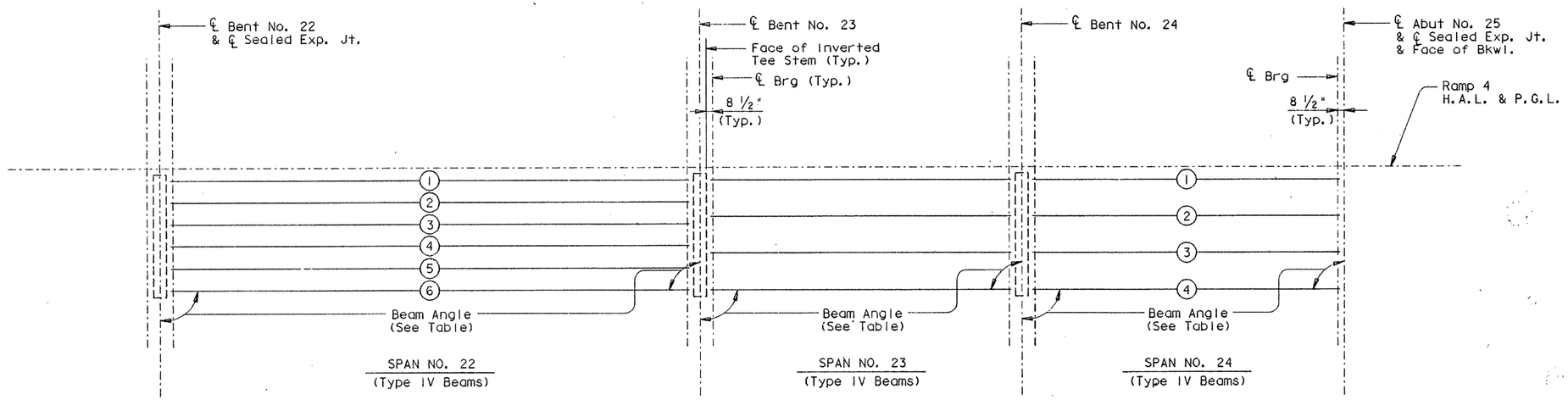

BEAM LAYOUT

BENT REPORT

BENT NO.22 (S 8 28 2.74 W)
DISTANCE BETWEEN STATION LINE AND BEAM 1 3.000 R

		BEAM SPAC. (C.L. BENT)	BEAM ANGLE D	M	S
SPAN22	BEAM 1	0.000	90	0	0
	BEAM 2	5.200	90	0	0
	BEAM 3	5.200	90	0	0
	BEAM 4	5.200	90	0	0
	BEAM 5	5.200	90	0	0
	BEAM 6	5.200	90	0	0
	TOTAL	26.000			

BENT NO.23 (S 8 28 2.74 W)
DISTANCE BETWEEN STATION LINE AND BEAM 1 3.000 R

		BEAM SPAC. (C.L. BENT)	BEAM ANGLE D	M	S
SPAN22	BEAM 1	0.000	90	0	0
	BEAM 2	5.200	90	0	0
	BEAM 3	5.200	90	0	0
	BEAM 4	5.200	90	0	0
	BEAM 5	5.200	90	0	0
	BEAM 6	5.200	90	0	0
	TOTAL	26.000			
SPAN23	BEAM 1	0.000	90	0	0
	BEAM 2	8.667	90	0	0
	BEAM 3	8.667	90	0	0
	BEAM 4	8.667	90	0	0
	TOTAL	26.000			

BENT REPORT

BENT NO.24 (S 8 28 2.74 W)
DISTANCE BETWEEN STATION LINE AND BEAM 1 3.000 R

		BEAM SPAC. (C.L. BENT)	BEAM ANGLE D	M	S
SPAN23	BEAM 1	0.000	90	0	0
	BEAM 2	8.667	90	0	0
	BEAM 3	8.667	90	0	0
	BEAM 4	8.667	90	0	0
	TOTAL	26.000			
SPAN24	BEAM 1	0.000	90	0	0
	BEAM 2	8.667	90	0	0
	BEAM 3	8.667	90	0	0
	BEAM 4	8.667	90	0	0
	TOTAL	26.000			

ABUT NO.25 (S 8 28 2.74 W)
DISTANCE BETWEEN STATION LINE AND BEAM 1 3.000 R

		BEAM SPAC. (C.L. BENT)	BEAM ANGLE D	M	S
SPAN24	BEAM 1	0.000	90	0	0
	BEAM 2	8.667	90	0	0
	BEAM 3	8.667	90	0	0
	BEAM 4	8.667	90	0	0
	TOTAL	26.000			

BEAM REPORT

BEAM REPORT, SPAN22

	HORIZONTAL DISTANCE C-C BENT	C-C BRG.	TRUE DISTANCE BOT. BM. FLG.
BEAM 1	130.000	124.833	125.997
BEAM 2	130.000	124.833	125.997
BEAM 3	130.000	124.833	125.997
BEAM 4	130.000	124.833	125.997
BEAM 5	130.000	124.833	125.997
BEAM 6	130.000	124.833	125.997

BEAM REPORT, SPAN23

	HORIZONTAL DISTANCE C-C BENT	C-C BRG.	TRUE DISTANCE BOT. BM. FLG.
BEAM 1	77.500	72.333	73.464
BEAM 2	77.500	72.333	73.464
BEAM 3	77.500	72.333	73.464
BEAM 4	77.500	72.333	73.464

BEAM REPORT, SPAN24

	HORIZONTAL DISTANCE C-C BENT	C-C BRG.	TRUE DISTANCE BOT. BM. FLG.
BEAM 1	77.500	74.208	75.340
BEAM 2	77.500	74.208	75.340
BEAM 3	77.500	74.208	75.340
BEAM 4	77.500	74.208	75.340

HS 20 LOADING

STATE OF TEXAS
MARK J. BLOSCHOCK
52996
REGISTERED
PROFESSIONAL ENGINEER

10-29-91

STATE DEPARTMENT OF HIGHWAYS
AND PUBLIC TRANSPORTATION

BEAM LAYOUT
UNIT NO. 8, RAMP 4

US 83/281 INTERCHANGE

D45350A: * ZFA2: E355100I4379BLY02.DGN | PREPARED BY AND FOR USE OF TEXAS SDH&PT

ORIGINAL DRAWING DATE: JANUARY 1991	STATE DISTRICT	FEDERAL REGION	FEDERAL AID PROJECT	SHEET
DN.: LMW	21	6	NH92( )M	383
CK.: KBA	COUNTY	CONTROL	SECTION	JOB	HIGHWAY
DW.: PSR	HIDALGO	0039	17	097	US 83/ 281
CK.: LMW	REVISIONS				

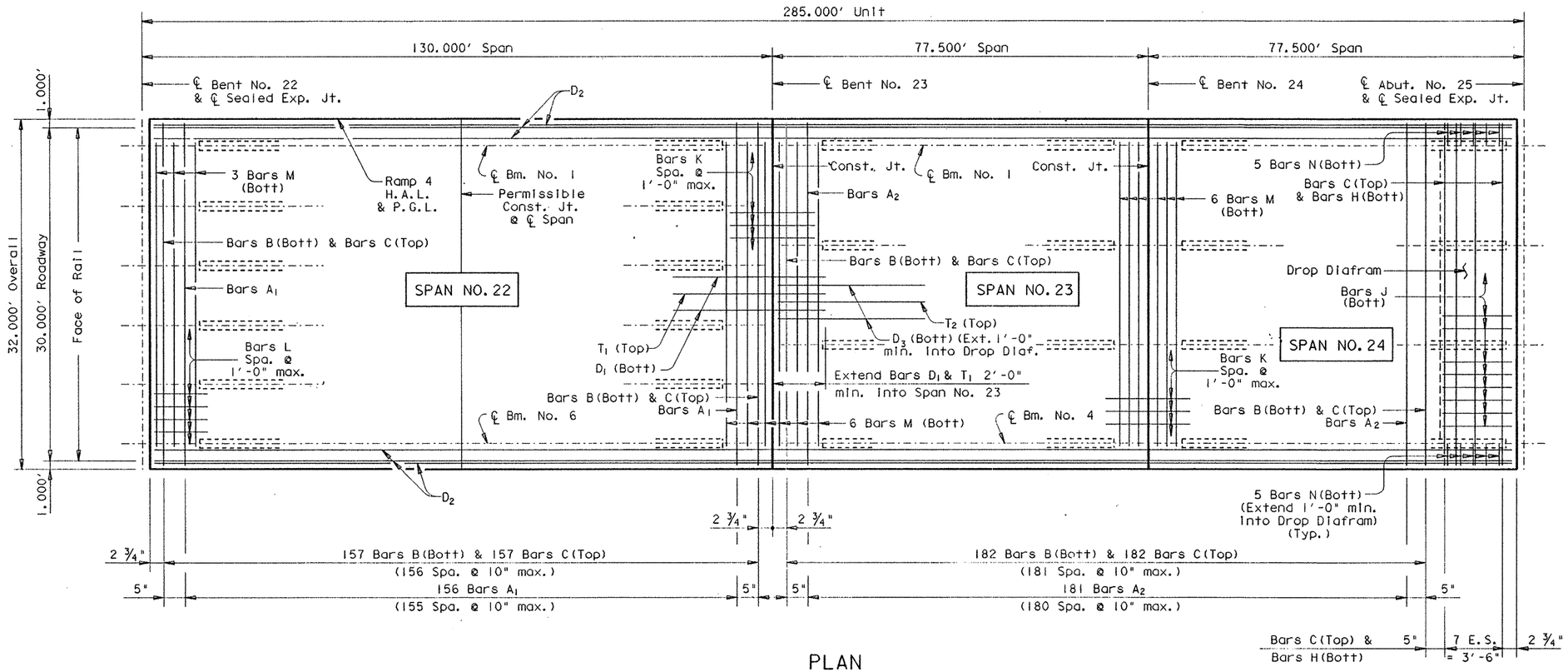

PLAN

TABLE OF ESTIMATED QUANTITIES

Bar	No.	Size	Length	Weight
A_1	156	# 5	33'- 1"	5383
A_2	181	# 5	32'- 7"	6151
B	339	# 4	31'- 9"	7190
C	347	# 5	31'- 9"	11491
D_1	35	# 5	134'- 8" ▲	4916
D_2	6	# 5	290'- 5" ◆	1817
D_3	27	# 5	154'- 8" ▲	4356
H	8	# 5	27'- 5"	229
J	24	# 5	3'- 6"	88
K	62	# 4	6'- 4"	262
L	31	# 4	3'- 0"	62
M	15	# 5	29'- 9"	465
N	10	# 5	3'- 4"	35
T_1	43	# 4	134'- 2" ◩	3854
T_2	32	# 4	157'- 3" ◩	3363

Reinforcing Steel	Lb	⌗ 49662
Prestr. Conc. Bm. ~ Ty. IV	LF	⊕1351.20

Span	Reinf. Conc. Slab ~ SF	Class "S" Conc. ~ CY ⌗ Diaf.	⌗ Slab
# 22	4160	——	103.7
# 23	2480	——	61.1
# 24	2480	1.0	61.3
Total	9120	⌗ 227.1	

⌗ For contractor's information only.

▲ Length shown includes 2 ~ 1'-5 " min. laps.

◩ Length shown includes 2 ~ 1'-2 " min. laps.

◆ Length shown includes 4 ~ 1'-5 " min. laps.

⊕ Length shown is bottom flange length with adjustments made for beam slope.

TABLE OF SECTION DEPTHS

Span	"X" at ℄ Brg.	"Y" at ℄ Brg.	"Z" at ℄ Span ✳
#22	9 1/2"	5'-3 1/2"	8"
#23	8 3/4"	5'-2 3/4"	8"
#24	9 1/4"	5'-3 1/4"	8 1/4"

✳ Theoretical dimension

Span	"A"	"B"
#22	0.126'	0.176'
#23	0.024'	0.033'
#24	0.026'	0.037'

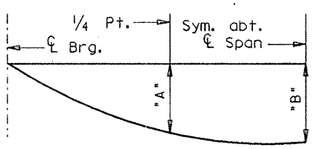

NOTE: Deflections shown are due to cast-in-place concrete only.

(E_c = 5 X 10^6 psi)

DEAD LOAD DEFLECTION DIAGRAM

GENERAL NOTES:

Designed according to A.A.S.H.T.O. 1989 Standard Specifications.

Design fc = 1200 p.s.i.

See GpC (SPL) sheet for details not shown.

See GpA-2 (MOD) sheet for Beam Blockout details not shown.

For Drain Locations see Bridge Layout. For Drain Details see Bridge Drain Details Sheet.

HS 20 LOADING

Sheet 1 of 2

STATE OF TEXAS
MARK J. BLOSCHOCK
52996
REGISTERED PROFESSIONAL ENGINEER
9-26-91

STATE DEPARTMENT OF HIGHWAYS AND PUBLIC TRANSPORTATION

UNIT NO. 8, RAMP 4

285.00' PRESTRESSED CONCRETE BEAM UNIT (130.00' - 77.50' - 77.50') US 83/281 INTERCHANGE

D45350A:: ZFA2: E355100J4379PPB04.DGN	PREPARED BY AND FOR USE OF TEXAS SDH&PT						
ORIGINAL DRAWING DATE: FEBRUARY 1991	STATE DISTRICT	FEDERAL REGION	FEDERAL AID PROJECT				SHEET
DN.: LMW	REVISIONS	21	6	NH92( )M			384
CK.: KBA		COUNTY		CONTROL	SECTION	JOB	HIGHWAY
DW.: PSR		HIDALGO		0039	17	097	US 83/281
CK.: LMW							

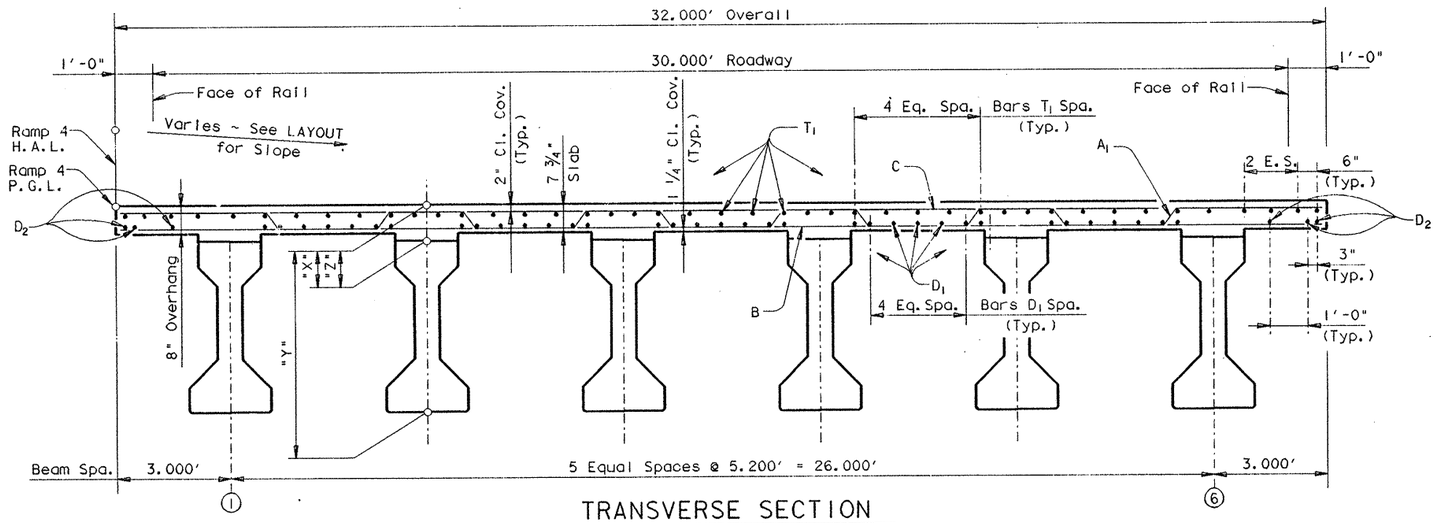

TRANSVERSE SECTION

(Showing Span No. 22)

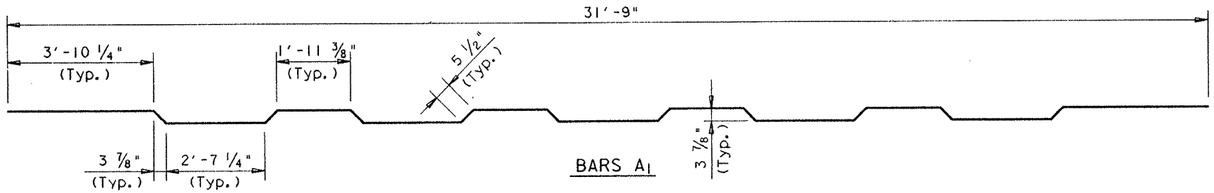

BARS A1

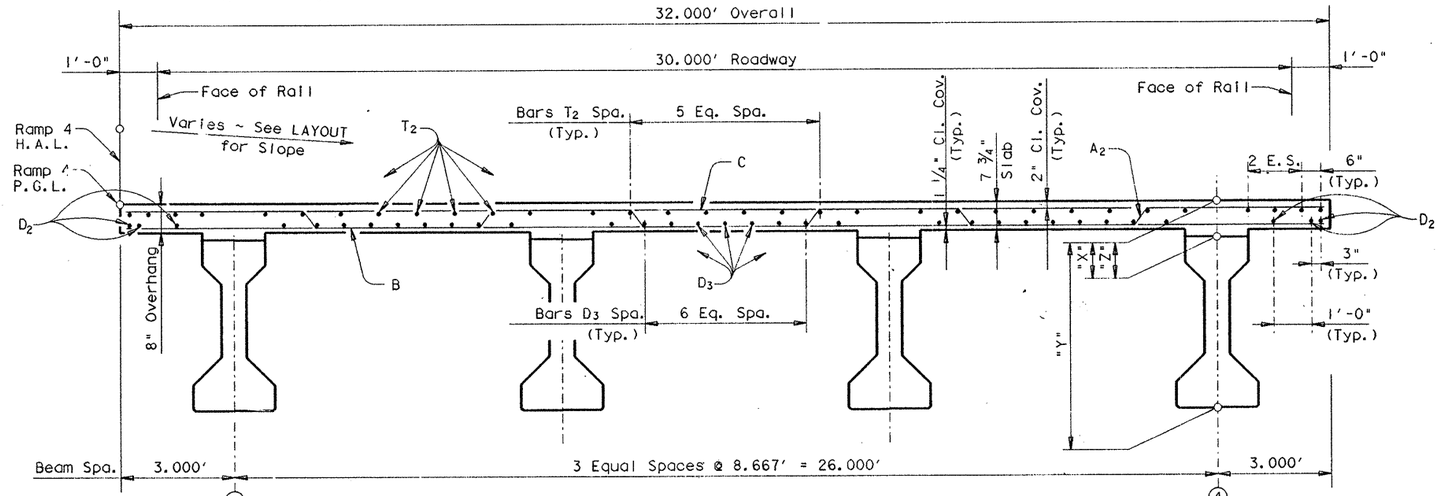

TRANSVERSE SECTION

(Showing Span Nos. 23 & 24)

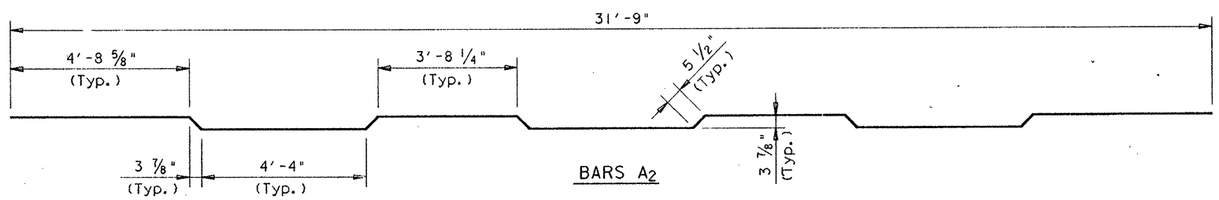

BARS A2

HS 20 LOADING

Sheet 2 of 2

STATE DEPARTMENT OF HIGHWAYS AND PUBLIC TRANSPORTATION

UNIT NO. 8, RAMP 4

285.00' PRESTRESSED CONCRETE BEAM UNIT (130.00' - 77.50' - 77.50') US 83/281 INTERCHANGE

STATE OF TEXAS
MARK J. BLOSCHOCK
52996
REGISTERED PROFESSIONAL ENGINEER

9-26-91.

D45350A1 ZFA2 [355100]4379PPB04.DGN

PREPARED BY AND FOR USE OF TEXAS SDH&PT

ORIGINAL DRAWING DATE: FEBRUARY 1991

DN.: LMW
CK.: KBA
DW.: PSR
CK.: LMW

STATE DISTRICT	FEDERAL REGION	FEDERAL AID PROJECT	SHEET
21	6	NH92( )M	384A

COUNTY	CONTROL	SECTION	JOB	HIGHWAY
HIDALGO	0039	[illegible]	097	US 83/281

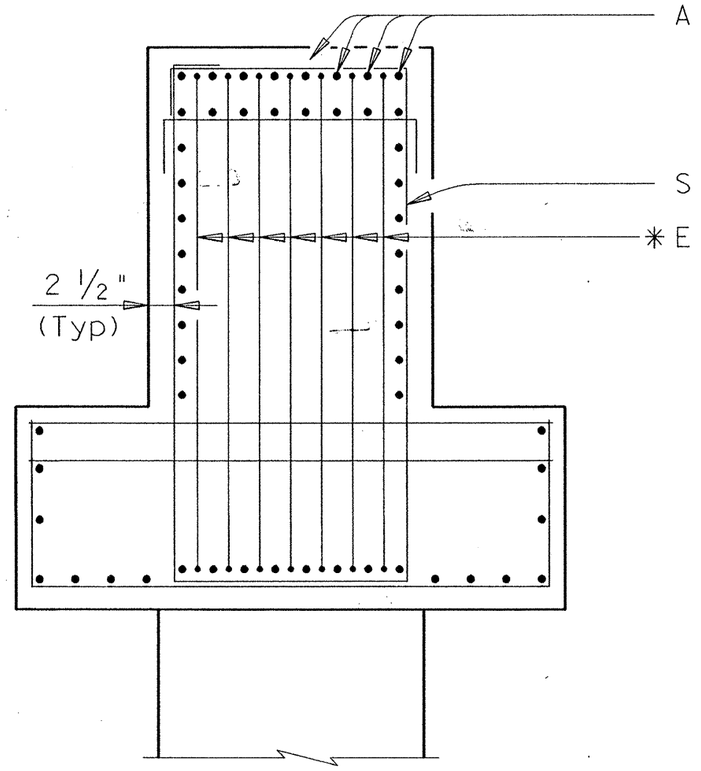

CAP END DETAIL

(See Bent Details for Dimensions)

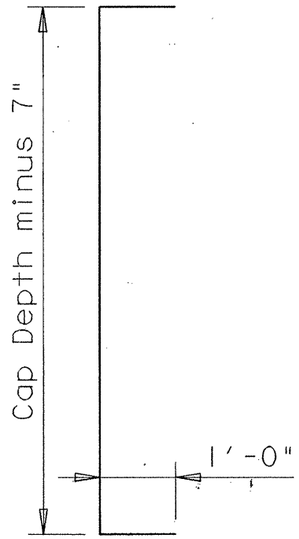

* BARS E ~ #6

* Note:

Bars E [redacted] added between each Bar A as shown.

⁜ BARS E

BENT NUMBERS	Ramp 1 & 2	Ramp 3 & 4	Ramp 1	Ramp 2	Ramp 3	Ramp 4
	2-6	2-5	18,22,25	20	21	15,19
	7	6	19-21, 26	21-27, 29		[illegible]-18, 23, 24
	8	7				
	9	9				
	10	10				
	11	11				
	12	12				

⁜ Bars "E" [redacted] added to both end faces of the listed Bents.

HS 20 LOADING

STATE DEPARTMENT OF HIGHWAYS AND PUBLIC TRANSPORTATION

INVERTED TEE BENT SPECIAL CAP DETAILS

US 83/281 INTERCHANGE

STATE OF TEXAS
MARK J. BLOSCHOCK
52996
REGISTERED PROFESSIONAL ENGINEER

3-5-92

REV. 3-30-92

D45350A: ZFA2: [355100]4379MIS01.DGN
ORIGINAL DRAWING DATE: MARCH 1992
DN.: LMW
CK.: JCC
DW.: PSR
CK.: LMW
REVISIONS

PREPARED BY AND FOR USE OF TEXAS SDH&PT

STATE DISTRICT	FEDERAL REGION	FEDERAL AID PROJECT	SHEET
21	6	NH92( )M	384B

COUNTY	CONTROL	SECTION	JOB	HIGHWAY
HIDALGO	0039	17	097	US 83/281

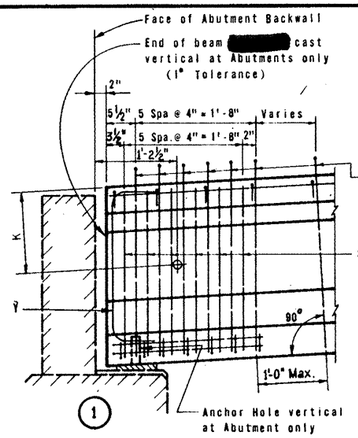

1 ELEV. OF BM. AT ABUTMENT

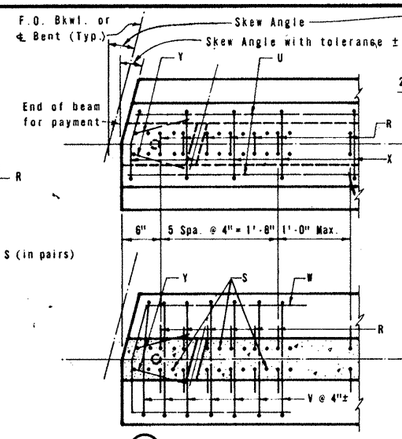

2 PLAN - 15° SKEW

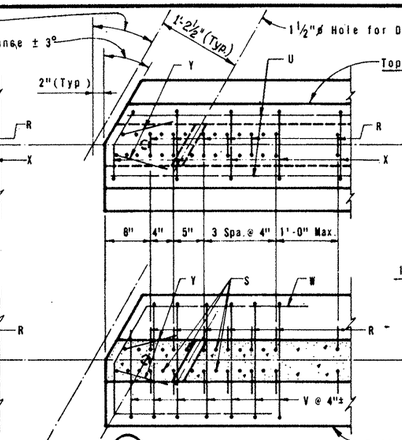

3 PLAN - 30° SKEW

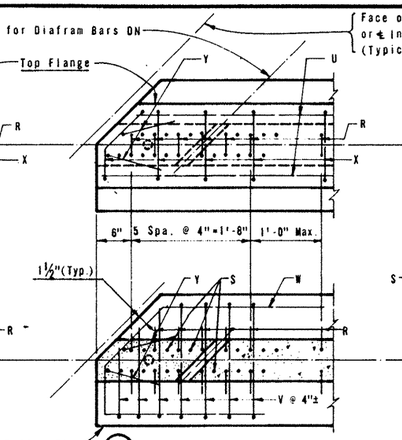

4 PLAN - 45° SKEW

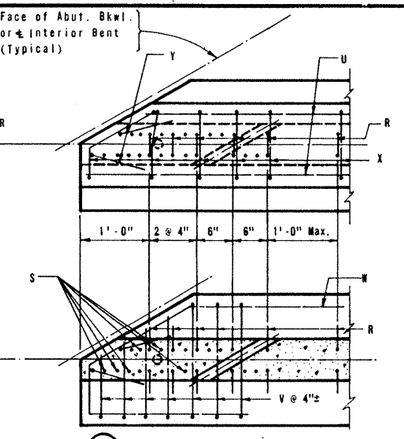

5 PLAN - 60° SKEW

NOTE:
Reinforcing patterns shown above are [redacted] used as guides in determining the reinforcement for the actual beam type and skew angle used. In general, the distances between consecutive Bars R and or S [redacted] 2". This spacing [redacted] varied in order to avoid diafram holes, however, a minimum cross sectional area equivalent to that of Bars R and S in square beam end [redacted] provided.

DETAILS OF SKEWED BEAM ENDS

NOTE:
It is permissible for bars or strands to come in contact with materials used in forming anchor and diafram holes.

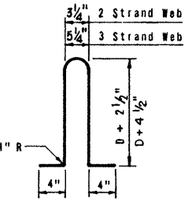

BARS R ~ #3

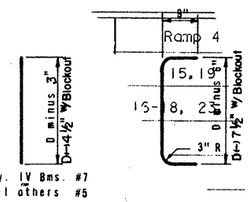

BARS S

BARS Y ~ #6

Splices permitted (40' Min. C-C Splices)
No portion of bar less than 10'
1'-10" Min. Lap

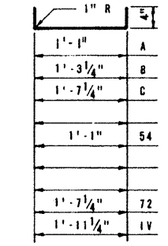

BARS V ~ #3

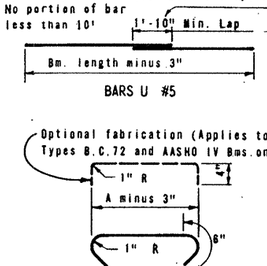

BARS U #5

Optional fabrication (Applies to Types B,C,72 and AASHO IV Bms. only)

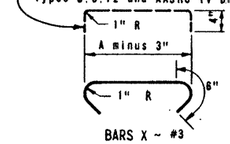

BARS X ~ #3

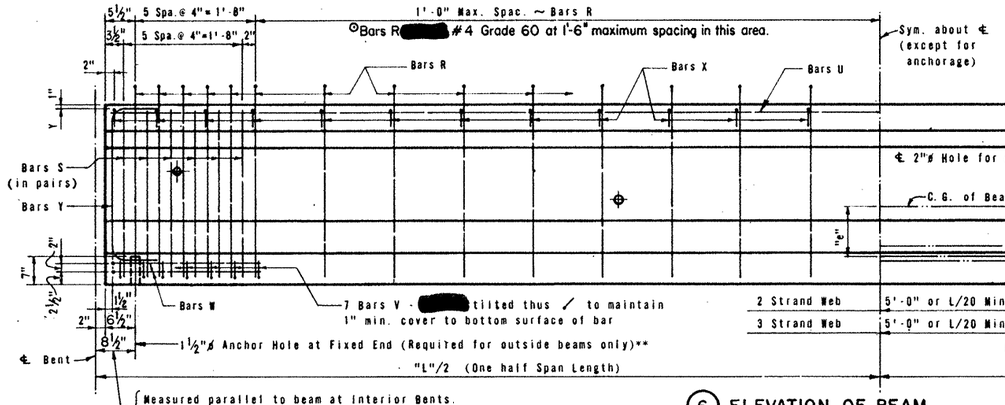

6 ELEVATION OF BEAM

NOTE:
See span details for location of interior diaframs. In general, diaframs [redacted] located at midpoints for spans 50' and less; at ⅓ points for spans over 50' thru 90'; at ¼ points for spans over 90'.
For skewed spans, location of diaframs may vary from beam to beam.

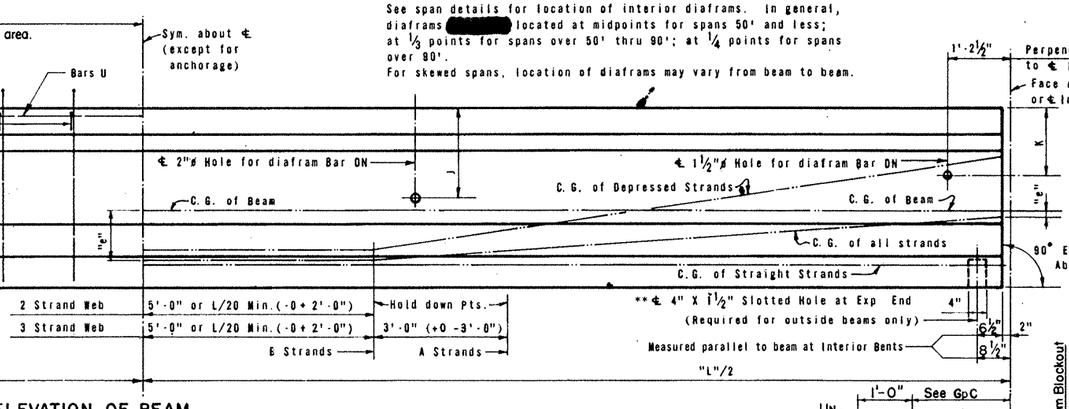

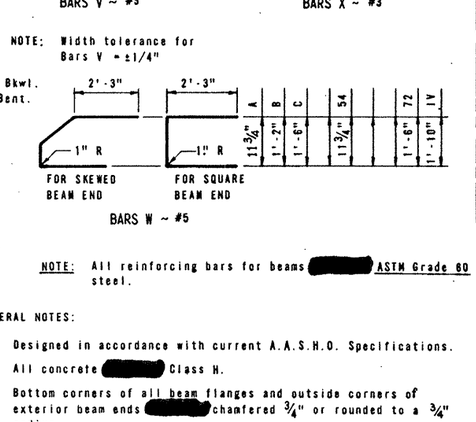

BARS W ~ #5

NOTE: Width tolerance for Bars V = ±1/4"

NOTE: All reinforcing bars for beams [redacted] ASTM Grade 60 steel.

GENERAL NOTES:

Designed in accordance with current A.A.S.H.O. Specifications.

All concrete [redacted] Class H.

Bottom corners of all beam flanges and outside corners of exterior beam ends [redacted] chamfered ¾" or rounded to a ¾" radius.

The use of diafram holes for lifting purposes [redacted] not [redacted] permitted.

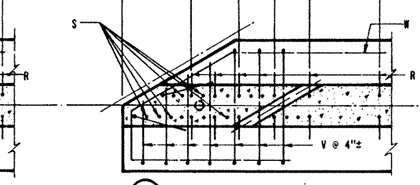

BLOCKOUT DETAIL (SEE Gp C)

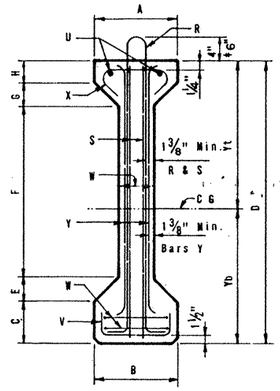

7 TYPES 54 & 72 BMS.

* If Prestressed Concrete Panels are used.

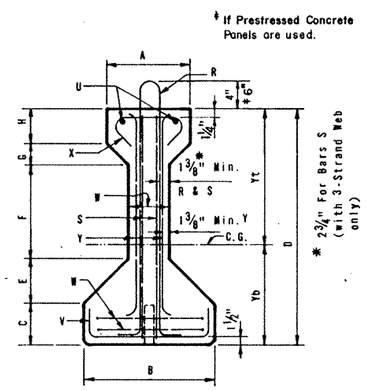

8 TYPES A, B, C, & A.A.S.H.O. IV BMS.

** NOTE: Anchorage holes [redacted] tapered (4¾"x1⅜" Exp End) (1⅜" Fixed End) at base. If holes are formed with sheet metal, forms [redacted] left in place. Holes at fixed end may extend full depth of beam. Plug top or fill with asphalt mastic. At the option of the Fabricator, inside beams [redacted] furnished with anchor holes.

BEAM DIMENSIONS AND SECTION PROPERTIES

BEAM TYPE	A IN.	B IN.	C IN.	D IN.	E IN.	F IN.	G IN.	H IN.	J IN.	K IN.	W IN.	Yt IN.	Yb IN.	AREA IN.²	I IN.⁴	WT. P.L.F. LB.
A	12	16	5	28	5	11	3	4	13	15	6	15.39	12.61	275.4	22.658	287
B	12	18	6	34	5¾	14	2¾	5½	17	15	6½	19.07	14.93	360.3	43.177	375
C	14	22	7	40	7½	16	3½	6	21	15	7	22.91	17.09	494.9	82.602	516
54	16	16	8	54	5	32	5	4	35	15	6	28.47	25.53	493.4	164.022	514
72	22	22	11	72	7½	40½	7½	5½	47	15	7	38.27	33.73	863.4	532.060	899
IV	20	26	8	54	9	23	6	8	33	18	8	29.25	24.75	788.4	260.403	821

Tolerance for Dimensions J & K = (+½"; -1")
(Same tolerance to be applied to all holes for a given diafram Bar ON)

STATE OF TEXAS
Mark J. Bloschock
52996
REGISTERED PROFESSIONAL ENGINEER
9-26-91

TEXAS HIGHWAY DEPARTMENT
BRIDGE DIVISION
US 83/281 DIRECT CONN.

PRESTRESSED CONCRETE BEAMS

BEAM DETAILS

MOD LMW 2-91 - Referenced Bm. blockout to GpC

GpA-2 (MOD)

ORIGINAL DRAWING DATE: JUNE 1985
REVISIONS
Rev. 11-85(Bars S)D+4½" w/Blockout
Rev. 2-86
Rev. 6-87(Remove 48,60,66 Bms.)

DR.:- RNS
CK.:- HJB

STATE DISTRICT	FEDERAL REGION	FEDERAL AID PROJECT	SHEET
21	6	[redacted]	385

COUNTY	CONTROL	SECTION	JOB	HIGHWAY
HIDALGO	039	17	097	0583 [redacted]

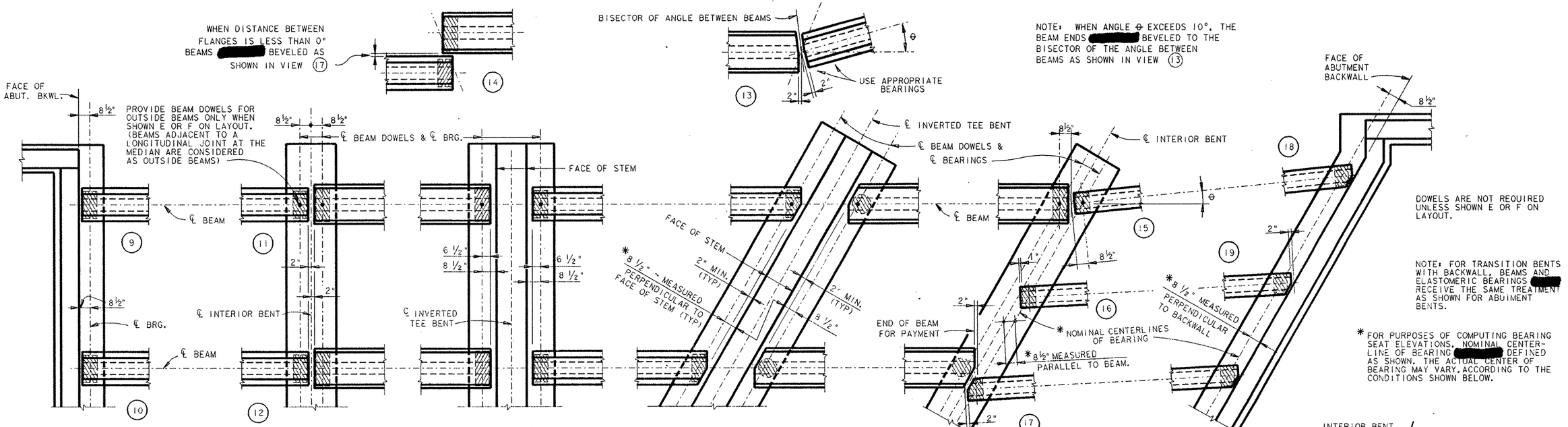

DETAILS OF BEAM ENDS

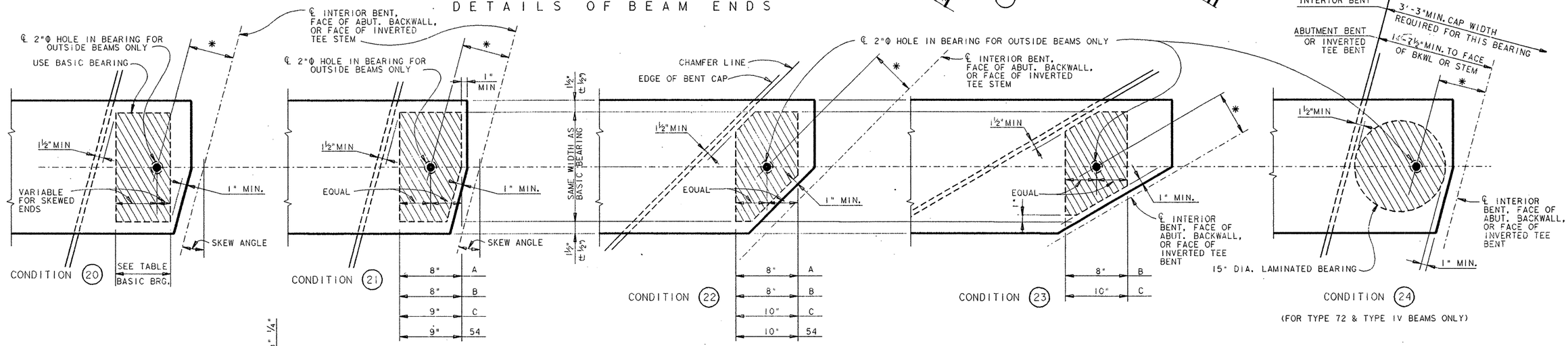

NOTE: BASIC BEARINGS ARE [redacted] USED FOR SQUARE BEAM ENDS AND FOR MODERATELY SKEWED BEAM ENDS AS COVERED IN CONDITION (20). HOLES IN BEARINGS FOR SQUARE BEAMS [redacted] CENTERED IN PAD.

DETAILS OF ELASTOMERIC BEARINGS

BASIC BEARINGS		
BM. TYPE	SIZE, THICKNESS "T" & DESCRIPTION	
A	8" X 14" X 2½"	LAMINATED
B	8" X 16" X 2½"	LAMINATED
C	9" X 19" X 2½"	LAMINATED
54	9" X 14" X 2½"	LAMINATED
72	9" X 20" X 2½"	LAMINATED
IV	9" X 22" X 2½"	LAMINATED

BEARINGS FOR BEVELED BEAM ENDS					
BM. TYPE	CONDITION (20)	CONDITION (21)	CONDITION (22)	CONDITION (23)	CONDITION (24)
A	0° THRU 20°	20° THRU 30°	OVER 30°	N/A	N/A
B	0° THRU 15°	15° THRU 30°	30° THRU 55°	OVER 55°	N/A
C	0° THRU 10°	10° THRU 20°	20° THRU 50°	OVER 50°	N/A
54	0° THRU 10°	10° THRU 25°	OVER 25°	N/A	N/A
72	0° THRU 10°	N/A	N/A	N/A	OVER 10°
IV	0° THRU 8°	N/A	N/A	N/A	OVER 8°

SKEW ANGLE OF BEAM END

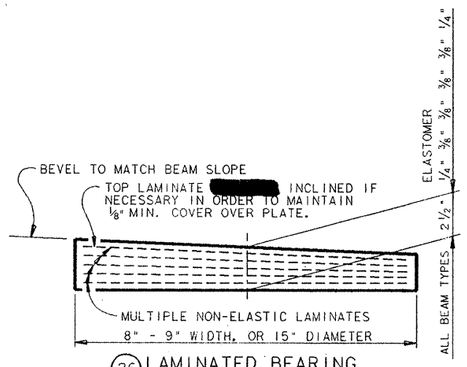

(26) LAMINATED BEARING (50 DUROMETER)

GENERAL NOTES:

BEAMS [redacted] SEATED ON ELASTOMERIC BEARINGS OF THE DIMENSIONS SHOWN.

BEARINGS [redacted] FURNISHED WITH THEIR THICKNESS VARYING IN ONE DIRECTION DEPENDING ON THE SLOPE OF THE ERECTED BEAM.

CONSTANT THICKNESS BEARINGS [redacted] USED FOR MODERATE BEAM SLOPES IF THE VARIATION IS WITHIN THE ALLOWABLE DIMENSIONAL TOLERANCES GIVEN IN THE SPECIFICATIONS.

COST OF FURNISHING AND INSTALLING ELASTOMERIC BEARINGS [redacted] INCLUDED IN UNIT PRICE BID FOR "PRESTRESSED CONCRETE BEAMS".

REV. 3-30-92

HS 20 LOADING

STATE DEPARTMENT OF HIGHWAYS AND PUBLIC TRANSPORTATION

PRESTRESSED CONCRETE BEAMS

BEAM ENDS AND BEARINGS

GpB-3

D45350A: ZFA2: (355100)331OM0D02.DGN

PREPARED BY AND FOR USE OF TEXAS SDH&PT

ORIGINAL DRAWING DATE: JUNE 1991	REVISIONS	STATE DISTRICT	FEDERAL REGION	FEDERAL AID PROJECT	SHEET
DN.: THD		21	6	NH92( )M	386
CK.: THD		COUNTY	CONTROL	SECTION	JOB	HIGHWAY
DW.: AS / DRG		HIDALGO	0039	17	097	US83, 281
CK.: RLR / JCC						

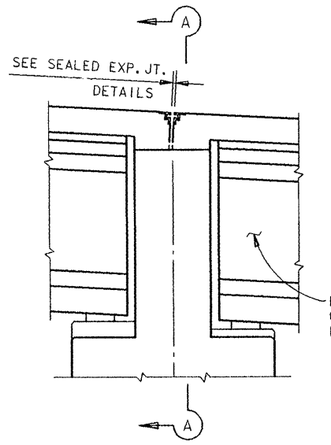

END ELEVATION OF INVERTED TEE BENT

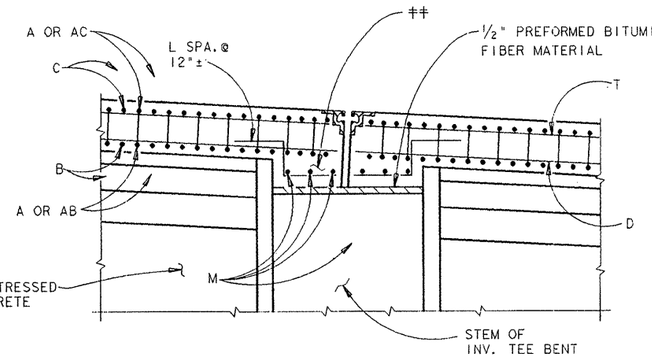

SEC. THRU. INVERTED TEE BENT STEM
(SHOWING SLAB DETAILS)

++ THICKENED SLAB SECTION [redacted] USED AT ALL SECTIONS WHERE SLAB IS PRESENT ABOVE STEM OF INVERTED TEE BENT.

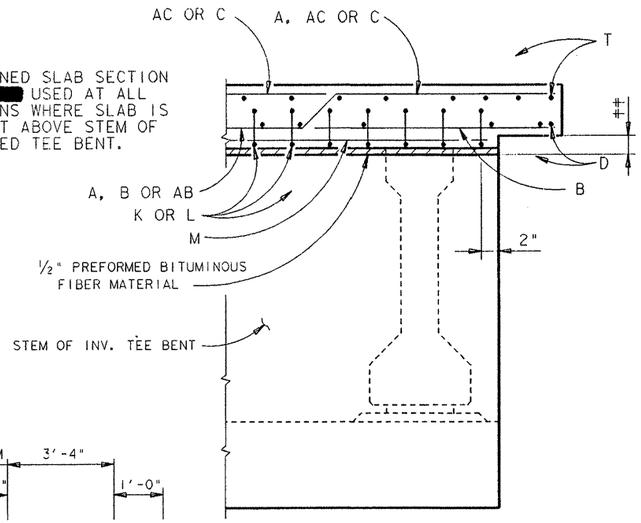

SECTION A-A
(SHOWING SLAB DETAILS)

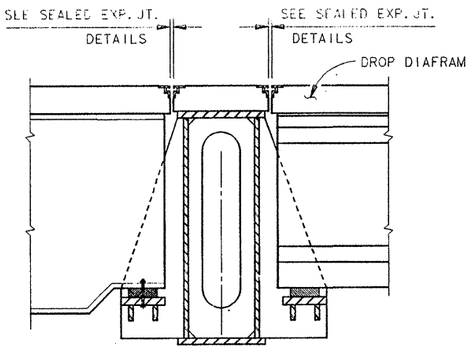

SEC. THRU. END DIAFRAMS
AT BOX GIRDER BENT
(WITH SEALED EXP. JT.)

DETAILS OF INVERTED TEE BENT

(WITH SEALED EXP. JT.)

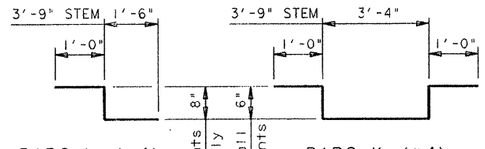

BARS L (#4) BARS K (#4)

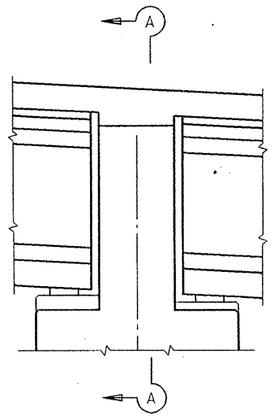

END ELEVATION OF INVERTED TEE BENT

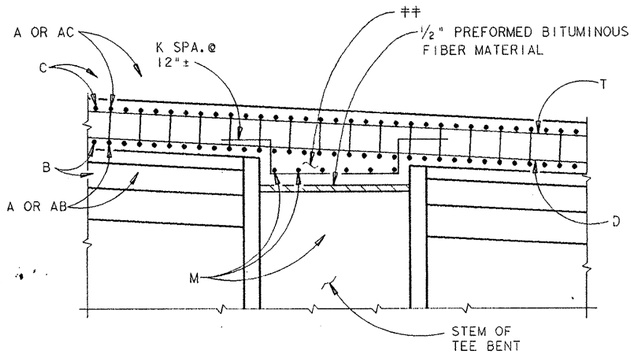

SEC. THRU. INVERTED TEE BENT STEM
(SHOWING SLAB DETAILS)

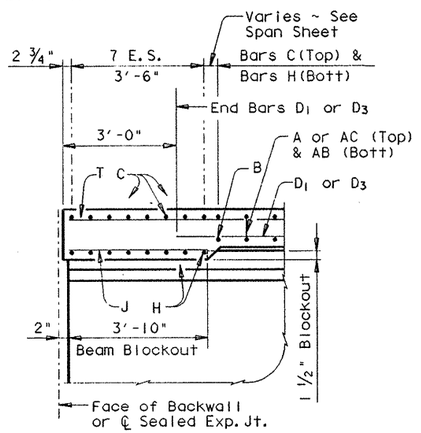

TYP. LONGITUDINAL SECTION

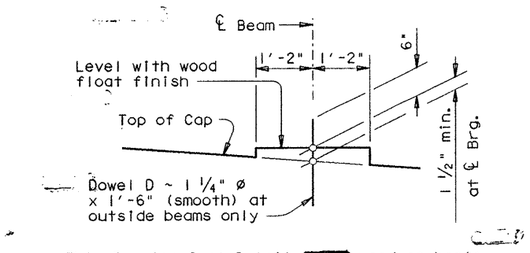

This Bearing Seat Detail [redacted] used on bents other than those at ends of Prestr. Conc. Beam Units.

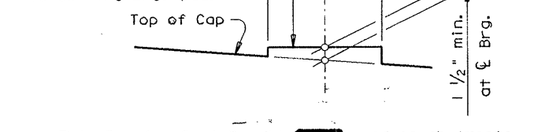

This Bearing Seat Detail [redacted] used on abutments or bents at the ends of Prestr. Conc. Beam Units.

BEARING SEAT DETAILS

DETAILS OF INVERTED TEE BENT

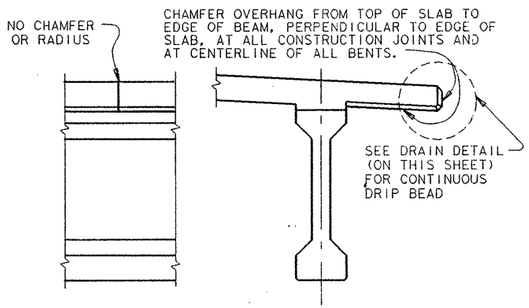

CONSTRUCTION JOINT DETAIL
TO BE LOCATED AS SHOWN ON THE SPAN DETAILS.

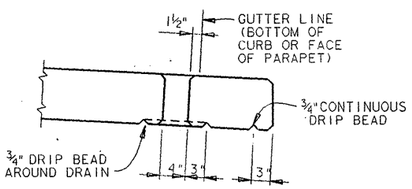

4"X 6" FORMED DRAIN. BEND REINFORCING STEEL TO CLEAR DRAIN 1". DRAINS IF ANY [redacted] LOCATED AS DIRECTED BY THE ENGINEER. NO DRAINS [redacted] PLACED OVER RAILROAD TRACKS OR ROADWAYS.

DRAIN DETAILS

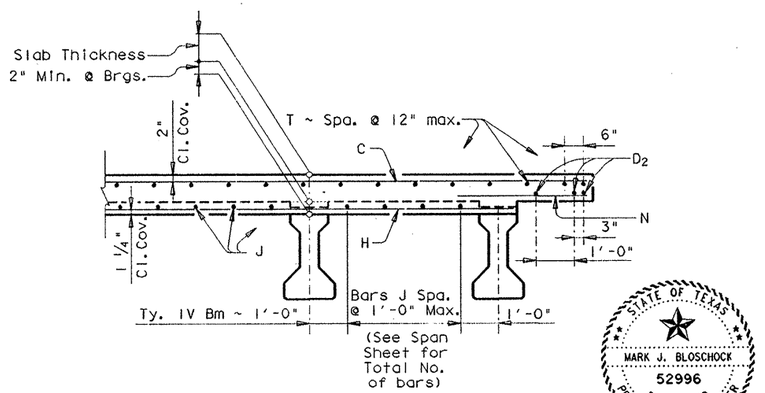

TYP. TRANSVERSE SECTION

DROP DIAFRAM DETAILS

STATE OF TEXAS
MARK J. BLOSCHOCK
52996
REGISTERED PROFESSIONAL ENGINEER
9-24-91

GENERAL NOTES:

DESIGNED IN ACCORDANCE WITH CURRENT A.A.S.H.T.O. SPECIFICATIONS.

ALL CAST-IN-PLACE CONCRETE [redacted] CLASS S UNLESS OTHERWISE SHOWN ON SPAN DETAILS.

HS 20 LOADING

STATE DEPARTMENT OF HIGHWAYS AND PUBLIC TRANSPORTATION

PRESTRESSED CONCRETE BEAM SPAN DETAILS

US 83/281 DIRECT CONN.

CONSTRUCTION DETAILS

Gp C (SPL)

D45350A; _FA2; [3551001]4379M0D04.DGN	PREPARED BY AND FOR USE OF TEXAS SDH&PT						
ORIGIN; DRAWING DATE: FEBRUARY 1991	STATE DISTRICT: 21	FEDERAL REGION: 6	FEDERAL AID PROJECT: NH92(JM)				SHEET: 387
DN.; LMW	REVISIONS						
CK.; GAF							
DW.; PSR	COUNTY		CONTROL	SECTION	JOB	HIGHWAY	
CK.; LMW	HIDALGO		0039	17	097	US 83/281	

DESIGNED BEAMS (DEPRESSED STRANDS)

STRUCTURE	SPAN	BEAM NO.	♦ BEAM TYPE	NON-STD. STRAND PATTERN	PRESTRESSING STRANDS TOTAL NO.	SIZE	STRGTH.	"e" ℄ (In.)	"e" END (In.)	DEPRESSED NO.	DEPRESSED TO (In.)	CONCRETE RELEASE STRGTH. f'ci (psi)	CONCRETE MINIMUM 28 DAY COMP. STRGTH. f'c (psi)	OPTIONAL DESIGN DN. LOAD COMP. STRESS (TOP ℄) fct (psi)	OPTIONAL DESIGN DN. LOAD TENSILE STRESS (BOTT. ℄) fcb (psi)	OPTIONAL DESIGN REQUIRED MINIMUM ULTIMATE MOMENT CAPACITY (Ft. Kips)
RAMPS 1& 2	1	ALL	IV		28	½"Ø	270K	21.32	16.18	6	30.0	4000	5000	2346	-2717	4844
UNITS 1-4	2	ALL	IV		40	½"Ø	270K	20.35	11.55	8	52.0	4481	5305	3111	-3476	5990
	3-5	ALL	IV		44	½"Ø	270K	20.02	12.02	8	52.0	5017	5944	3415	-3784	6456
	6	ALL	IV		38	½"Ø	270K	20.54	11.28	8	52.0	4233	5599	3218	-3471	5897
	7	ALL	IV		42	½"Ø	270K	20.18	11.80	8	52.0	4756	5830	3350	-3675	6229
	8	ALL	IV		38	½"Ø	270K	20.54	11.28	8	52.0	4233	5599	3218	-3471	5897
	9	ALL	IV		42	½"Ø	270K	20.18	11.80	8	52.0	4756	5830	3350	-3675	6229
	10	ALL	IV		48	½"Ø	270K	19.67	10.92	10	52.0	5250	7143	3950	-4128	6690
	11	ALL	IV		52	½"Ø	270K	19.29	11.21	10	52.0	5717	7148	3956	-4253	7073
RAMP 1	18-21	ALL	IV		38	½"Ø	270K	20.54	11.28	8	52.0	4233	5599	3218	-3471	5897
UNITS 7, 8	25	ALL	IV		46	½"Ø	270K	19.88	12.23	8	52.0	5278	6088	3493	-3900	6669
& 10	26	ALL	IV		48	½"Ø	270K	19.67	10.92	10	52.0	5209	6343	3605	-4013	6839
RAMP 2	20-23	ALL	IV		46	½"Ø	270K	19.88	12.23	8	52.0	5278	6088	3493	-3900	6669
UNITS 7-10	24&25	ALL	IV		36	½"Ø	270K	20.75	13.08	6	52.0	4300	5000	2852	-3243	5667
	26	ALL	IV		46	½"Ø	270K	19.88	12.23	8	52.0	5278	6088	3493	-3900	6669
	27&28	ALL	IV		48	½"Ø	270K	19.67	10.92	10	52.0	5250	7143	3950	-4128	6690
	29	ALL	IV		48	½"Ø	270K	19.67	10.92	10	52.0	5209	6343	3605	-4013	6839
RAMPS 3&4	1	ALL	IV		28	½"Ø	270K	21.32	16.18	6	30.0	4000	5000	2346	-2717	4844
UNITS 1-4	2	ALL	IV		40	½"Ø	270K	20.35	11.55	8	52.0	4481	5305	3111	-3476	5990
	3&4	ALL	IV		44	½"Ø	270K	20.02	12.02	8	52.0	5017	5944	3415	-3784	6456
	5	ALL	IV		38	½"Ø	270K	20.54	11.28	8	52.0	4233	5599	3218	-3471	5897
	6	ALL	IV		42	½"Ø	270K	20.18	11.80	8	52.0	4756	5830	3350	-3675	6229
	7	ALL	IV		38	½"Ø	270K	20.54	11.28	8	52.0	4233	5599	3218	-3471	5897
	8	ALL	IV		42	½"Ø	270K	20.18	11.80	8	52.0	4756	5830	3350	-3675	6229
	9	ALL	IV		44	½"Ø	270K	20.02	12.02	8	52.0	5017	5944	3415	-3784	6456
	10&11	ALL	IV		22	½"Ø	270K	21.84	17.84	4	26.0	4000	5000	1979	-2270	4069
RAMP 3	20	ALL	IV		46	½"Ø	270K	19.88	12.23	8	52.0	5278	6088	3493	-3900	6669
UNIT 7	21	ALL	IV		48	½"Ø	270K	19.67	10.92	10	52.0	5209	6343	3605	-4013	6839
RAMP 4	15-18	1	IV		32	½"Ø	270K	21.00	13.88	6	44.0	4000	5000	2529	-2908	5144
UNITS 6 & 8	15-18	2-3	IV		30	½"Ø	270K	21.15	15.55	6	34.0	4000	5000	2468	-2843	5043
	15-18	4	IV		28	½"Ø	270K	21.32	16.18	6	30.0	4000	5000	2346	-2717	4844
	22	ALL	IV		46	½"Ø	270K	19.88	12.23	8	52.0	5342	7169	3965	-4034	6195
	23	ALL	IV		20	½"Ø	270K	21.95	18.35	4	22.0	4000	5000	1704	-2036	3751
	24	ALL	IV		22	½"Ø	270K	21.84	17.84	4	26.0	4000	5000	1979	-2270	4069

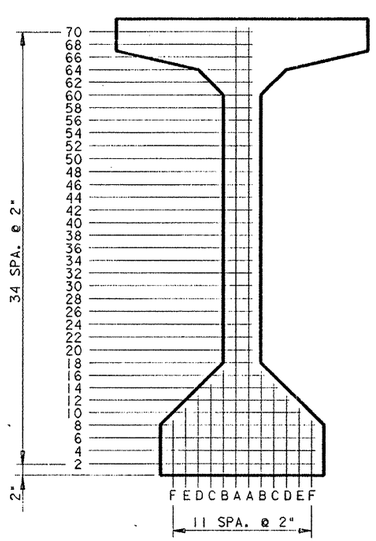

TYPE VI (MOD) BM.

♦ VIM DENOTES TYPE VI (MOD) BEAM.

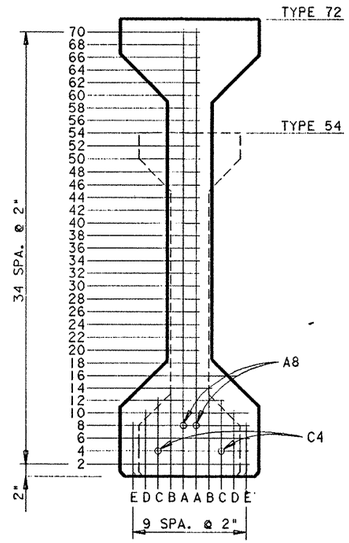

TYPES 54 & 72 BMS.

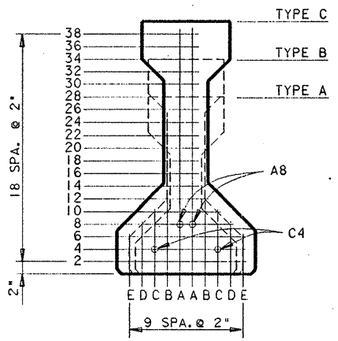

TYPES A, B, & C BMS.

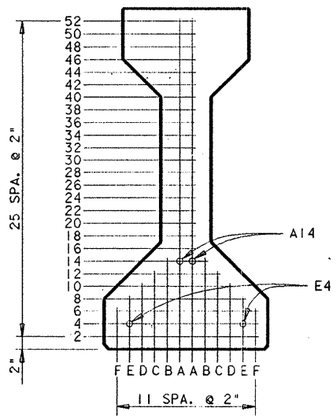

AASHTO TYPE IV BM.

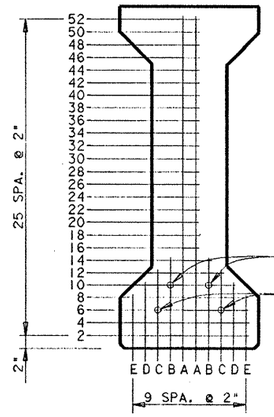

TYPE 54 (MOD) BM.

♦ 54M DENOTES TYPE 54 (MOD) BEAM.

NON-STANDARD STRAND PATTERNS

PATTERN	STRAND ARRANGEMENT AT ℄ OF BEAM

GENERAL NOTES:

Designed in accordance with current A.A.S.H.T.O. Specifications.

All concrete [redacted] Class H.

When shown on this sheet, the Fabricator has the option of furnishing either the designed depressed strand beam or an approved optional beam design using stress relieved or low relaxation strands. Optional designs for beams 120 foot or longer [redacted] have a calculated residual camber equal to or greater than that of the designed beam.

Prestress losses for the designed beams have been calculated according to the current A.A.S.H.T.O. Standard and Interim Specifications for a relative humidity of 75 %. Optional designs [redacted] likewise conform.

Certain beams with depressed strands are subject to cracking in the end of the beam. When such cracks occur, all subsequent beams of the same type and strand pattern [redacted] have strands wrapped in the following manner:

1. Alternate rows of depressed strands [redacted] wrapped for 2 feet from each end of the beam.
2. One half of the straight strands, as nearly as possible, [redacted] wrapped for 4 feet from each end of the beam.
3. The wrapping pattern [redacted] symmetrical about the vertical axis of the beam for both depressed and straight strands.
4. Strands [redacted] wrapped so that the centers of gravity of the depressed strands and the straight strands will remain within 1 inch of their original location.
5. Strands [redacted] tightly wrapped with plastic tubing. Both ends and the seam of the tube [redacted] sealed with waterproof tape.
6. Revised shop drawings [redacted] not [redacted] required.

For depressed strand designed beams, strands [redacted] located as low as possible on the 2" grid system shown hereon unless a non-standard strand pattern is indicated. Fill row "2", then row "4", then row "6", etc., beginning each row in the "A" position and working outward until the required number of strands is reached. All strands in the "A" position [redacted] depressed, maintaining the 2" spacing so that the upper two strands are in the position shown in the table at the beam ends.

Initial pretension for 1/2" 270 K strands = 28.9 K for stress relieved strands or 31.0 K for low relaxation strands.

Design shown based on initial pretension of 31.0 K.

STATE OF TEXAS
MARK J. BLOSCHOCK
52996
REGISTERED
PROFESSIONAL ENGINEER

9-24-91

STATE DEPARTMENT OF HIGHWAYS AND PUBLIC TRANSPORTATION

PRESTRESSED CONCRETE BEAMS

(NON-STANDARD SPANS)

US 83/281 DIRECT CONN.

Gp-NS-LR

D45200A: ZFAI=(355110)4379MOD05.DGN	PREPARED BY AND FOR USE OF TEXAS SDH&PT								
ORIGINAL DRAWN: DATE: FEBRUARY 1991	STATE DISTRICT	FEDERAL REGION	FEDERAL AID PROJECT					SHEET
DR.: LMW REVISIONS	21	6	NH92( )M					388
CK.: KBA Original prepared Oct 1989	COUNTY			CONTROL	SECTION	JOB	HIGHWAY	
DR.: PSR	HIDALGO			0039	17	097	US 83/281	
CK.: LMW								

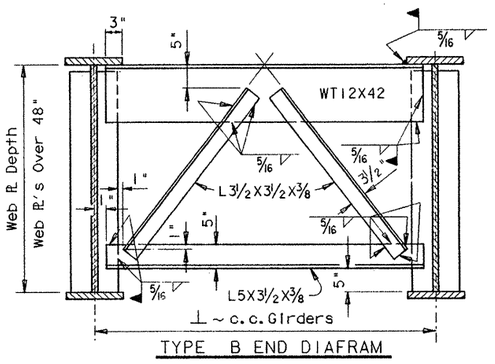

TYPE B END DIAFRAM

TABLE A	
Plate Thickness	Weld size
To 1/2" Inclusive	3/16
Over 1/2" to 3/4"	1/4
Over 3/4" to 1 1/2"	5/16
Over 1 1/2" to 2 1/4"	3/8
Over 2 1/4" to 6"	1/2
Over 6"	5/8

Weld size determined by the thicker of the two parts joined except that the weld size need not exceed the thickness of the thinner part.

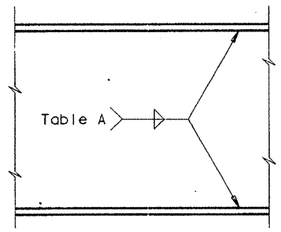

If the submerged arc process is used, either the fillet welds shown or full penetration groove welds [redacted] used between flange and web at the fabricator's option.

See girder details for size and location of stiffeners, location of diaframs and tension flanges.

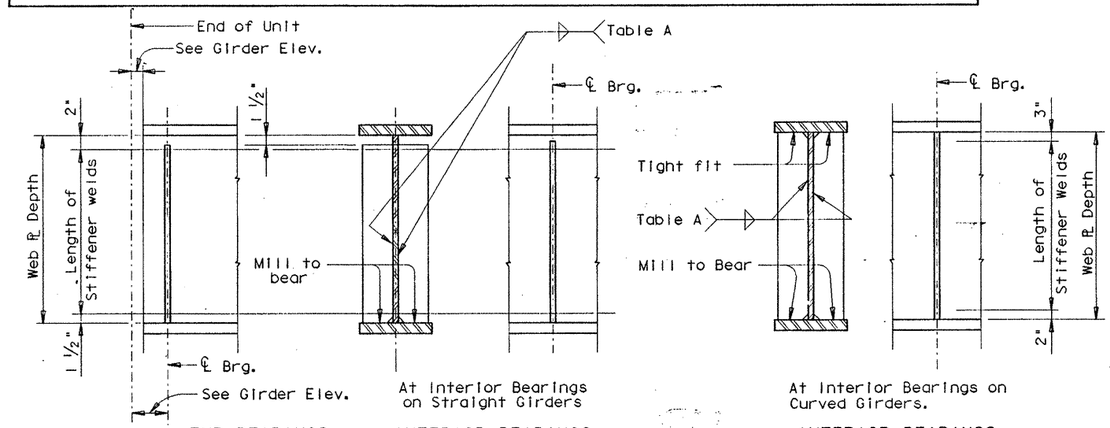

END BEARINGS

At Interior Bearings on Straight Girders

INTERIOR BEARINGS

At Interior Bearings on Curved Girders.

INTERIOR BEARINGS

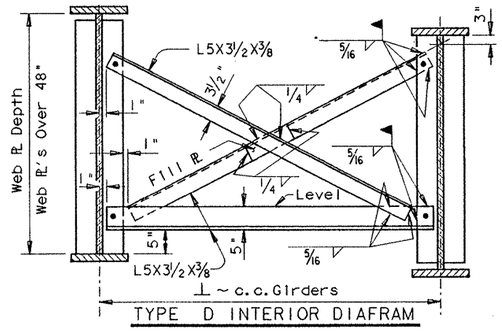

TYPE D INTERIOR DIAFRAM

FLANGE TO WEB WELDING

End diaframs are parallel to skew of the joint. Cut flanges of W and WT members parallel to girders. Cut webs vertical. Interior diaframs are perpendicular or radial to girders. Cut vertical legs square, except for curved girders cut vertical.

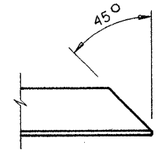

Clip outstanding leg of all angles on diaframs.

BEARING STIFFENERS

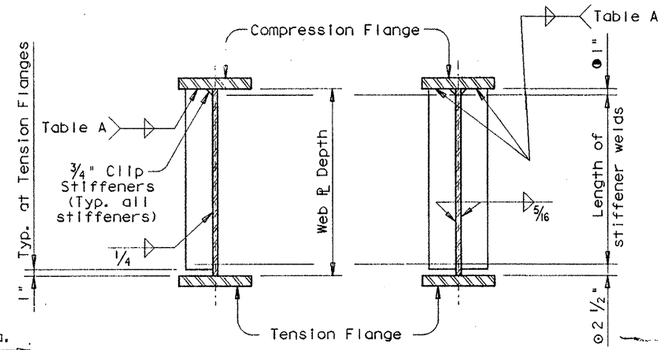

At and between Diaframs on straight girders. Between Diaframs on curved girders.

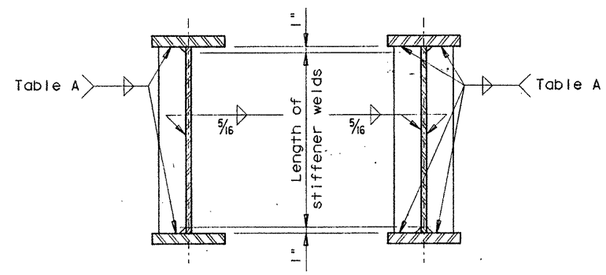

At Diaframs on Curved Girders

INTERMEDIATE STIFFENERS

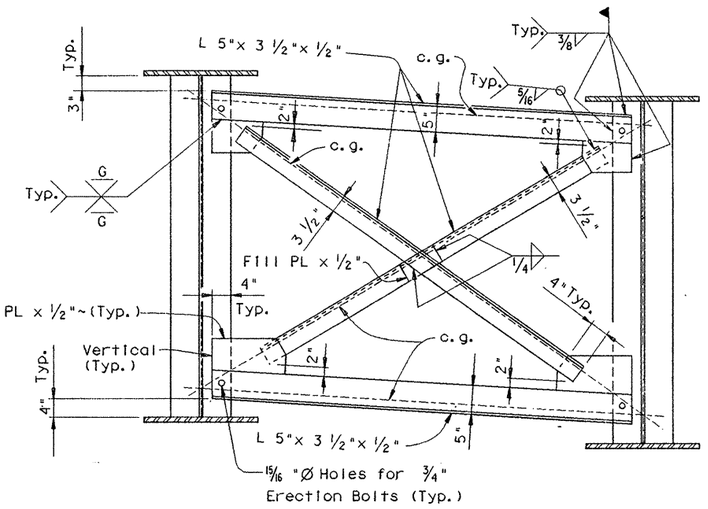

TYPE E INTERIOR DIAFRAM

For Curved Girders

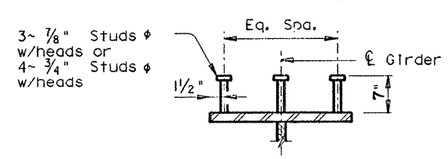

STUD CONNECTOR DETAILS

Studs [redacted] Electric arc end-welded to the flanges with complete fusion.

Unless otherwise shown on the Girder Elevation, stud connectors [redacted] spaced as follows:

For HS 20 Loading, stud connectors [redacted] spaced on all girders at 4'-0" centers throughout the length of the girder.

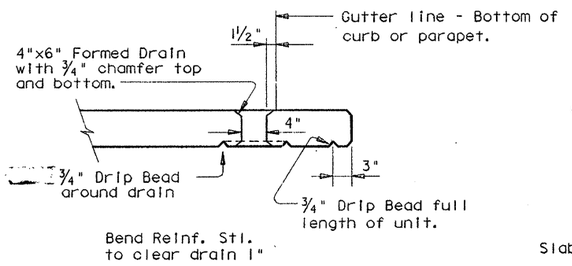

Bend Reinf. Stl. to clear drain 1"

EDGE OF SLAB DETAILS

Drains are [redacted] located as directed by the Engineer.

Drains [redacted] not [redacted] placed over roadways or RR tracks.

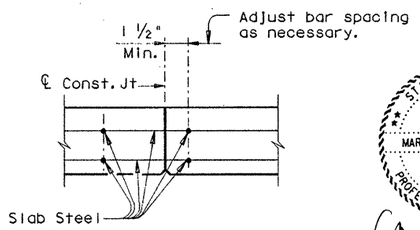

CONST. JT. DETAIL

Chamfer all construction joints or open joints from top of slab to outside of beam or Armor ℄.

STATE OF TEXAS
MARK J. BLOSCHOCK
52996
REGISTERED PROFESSIONAL ENGINEER

9-24-91

Notes:

[redacted]

These details are intended for use with straight or curved plate girder units with girders spaced at ten feet or less.

For type B(MOD) Diaframs See Modular Joint Details Sheet.

HS 20 LOADING

STATE DEPARTMENT OF HIGHWAYS AND PUBLIC TRANSPORTATION

PLATE GIRDER DETAILS

PG-D(MOD)

D45350A1=ZFA1=(355163)4379MOD01.DGN	PREPARED BY AND FOR USE OF TEXAS SDH&PT						
ORIGINAL DRAWING DATE: MARCH 1984	STATE DISTRICT	FEDERAL REGION	FEDERAL AID PROJECT				SHEET
DN.: RLR/GAF	REVISIONS	21	6	NH92C JM			389
CK.: JJP/LMW	MOD 3-91-Type E diafram & interior Brg. Stiffeners for Curved Girders.	COUNTY		CONTROL	SECTION	JOB	HIGHWAY
DW.: PSR/TKW		HIDALGO		0039	17	097	US 83/ 281
CK.: JJP/GAF							

REV. 3-30-92

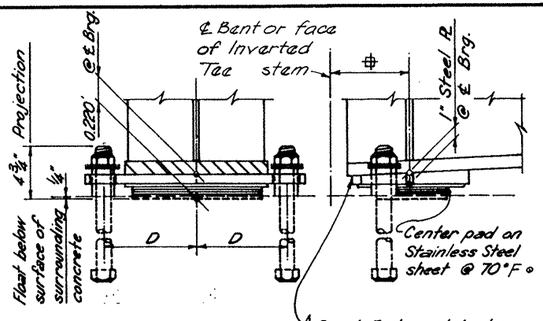

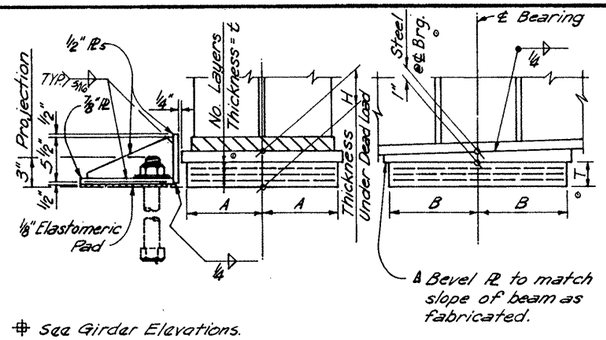

⌖ See Girder Elevations.

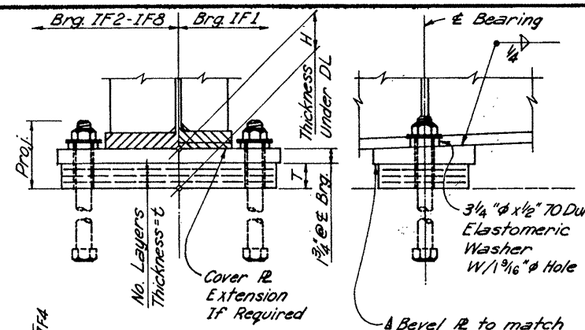

Bent Designer Notes:

When noted SE1A, SE2A etc. bearings [redacted] the same as SE1, SE2 etc. except omit anchor bolts & make top Pl rectangular 13" x 2c. [redacted] used on girders or beams more than 40' from the mid-point between O.S. girders measured along ℄ Bent.

When noted IF1A, IF2A etc. Bearings [redacted] provided as shown for IF1, IF2 etc. except anchor bolts [redacted] replaced with dowels thus:

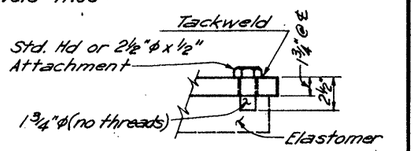

[redacted] used on girders (or beams) more than 50' from the mid-point between O.S. girders measured along ℄ Bent.

Beveled Steel Plate Tolerances:

For Beveled Steel Pls the permissible variation from the plan thickness [redacted] as follows:

1. Overall Vertical Dimension ~ +/- 1/16"
2. Variation from a Plane Parallel to the Theoretical Top Surface ~ 1/16" Total

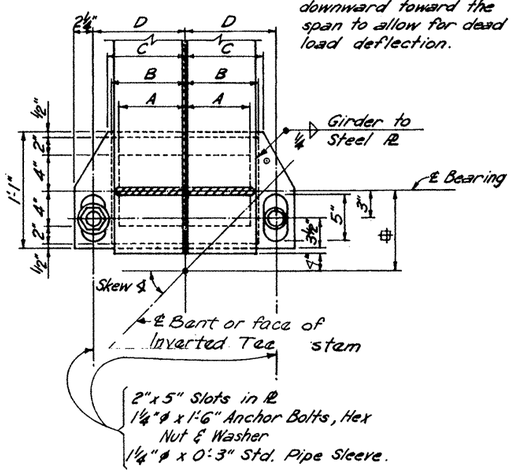

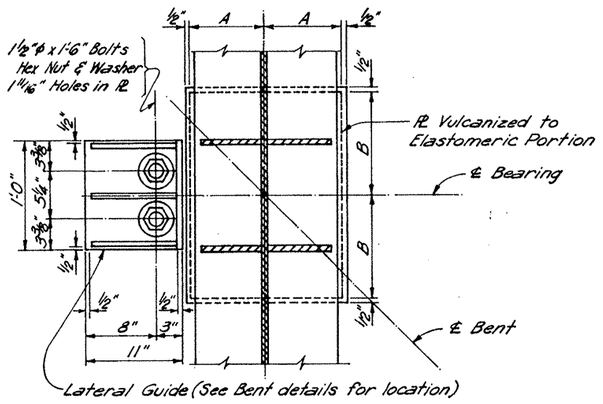

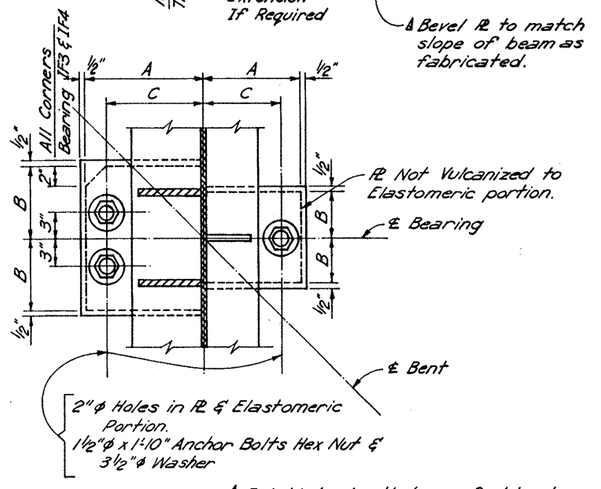

Bearing	A	B	C	D	Max. Total Reaction	Max. Expanding Length	Max. Flange Width
SE1	5½"	6½"	7"	8"	88K	425'	12"
SE2	7½"	8½"	9"	10"	120K	425'	16"
SE3	11½"	12½"	13"	14"	184K	425'	24"
SE4	8½"	9½"	10"	11"	136K	425'	18"
SE5	9½"	10½"	11"	12"	152K	425'	20"

Bearing	A	B	T	Number Layers	t	H	Max. DL Reaction	Max. Total Reaction	Max. Flange Width	Max. Expanding Length
IE1	6½"	8½"	2 3/16"	3	.583"	.250"	110K	177K	12"	107'
IE2	6½"	8½"	4 3/16"	6	.625"	.430"	110K	177K	12"	214'
IE3	8½"	8½"	2 3/16"	3	.583"	.250"	145K	231K	16"	107'
IE4	8½"	8½"	4 3/16"	5	.750"	.420"	145K	231K	16"	214'
IE5	8½"	11½"	2 13/16"	3	.750"	.290"	196K	313K	16"	134'
IE6	8½"	11½"	4 13/16"	5	.850"	.460"	196K	313K	16"	240'
IE7	12½"	10½"	4¼"	5	.738"	.420"	262K	420K	24"	210'
IE8	9½"	9½"	2 13/16"	3	.750"	.290"	180K	288K	18"	134'
IE9	10½"	8½"	2 11/16"	3	.750"	.290"	180K	288K	20"	134'
IE10	9½"	9½"	4 5/16"	5	.750"	.420"	180K	288K	18"	214'
IE11	13½"	11½"	3½"	4	.750"	.360"	310K	496K	26"	175'
IE12	13½"	11½"	5 5/16"	6	.835"	.530"	310K	496K	26"	280'
IE12 (MOD)	15½"	12½"	5 5/16"	6	.833"	.530"	387K	620K	30"	280'

Bearing	A	B	C	T	Number Layers	t	H	Max. DL Reaction	Max. Total Reaction	Max. Flange Width	Proj.
IF1	11"	5"	8½"	2½"	3	.583"	.340"	110K	176K	12"	7"
IF2	13"	6"	10½"	3"	3	.750"	.380"	156K	250K	16"	7½"
IF3	13"	8"	10½"	3"	3	.750"	.380"	208K	333K	16"	7½"
IF4	14"	6"	11½"	3"	3	.750"	.300"	168K	269K	18"	7½"
IF5	17"	7½"	14½"	4"	4	.797"	.460"	255K	408K	24"	8½"
IF6	15"	6"	12½"	4"	4	.797"	.460"	180K	288K	20"	8½"
IF7	17"	9"	14½"	4"	4	.797"	.460"	306K	490K	24"	8½"
IF8	18"	9"	15½"	4"	4	.797"	.460"	324K	518K	26"	8½"

Δ Establish edge thickness of plates to nearest 1/16" based on slopes indicated. Specification tolerance [redacted] allowed from shop plan dimensions.

GENERAL NOTES:

Bearings [redacted] measured by the unit of each "Elastomeric Bearing" of the type indicated, complete in place.

Payment for bearings [redacted] made at the unit price bid for each type of "Elastomeric Bearing" which price [redacted] full compensation for furnishing and installing each complete bearing including anchor bolts, top plate, sliding surfaces, elastomeric components, lateral guides, sleeves, and washers.

Anchor Bolts, nuts, washers and pipe sleeves (if used) [redacted] galvanized.

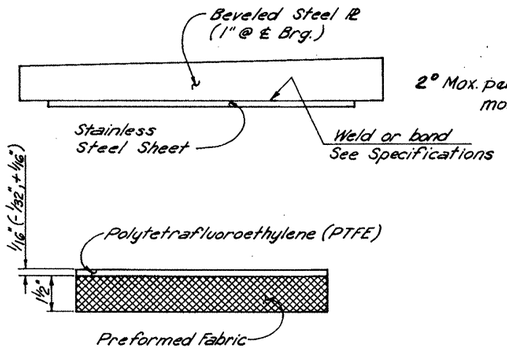

END EXPANSION BEARINGS

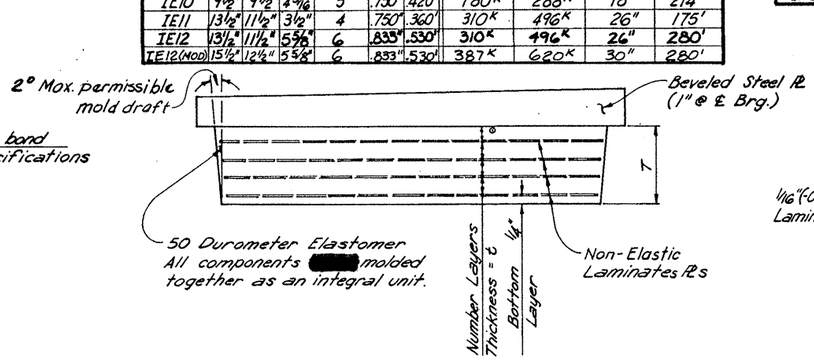

INTERIOR EXPANSION BEARINGS

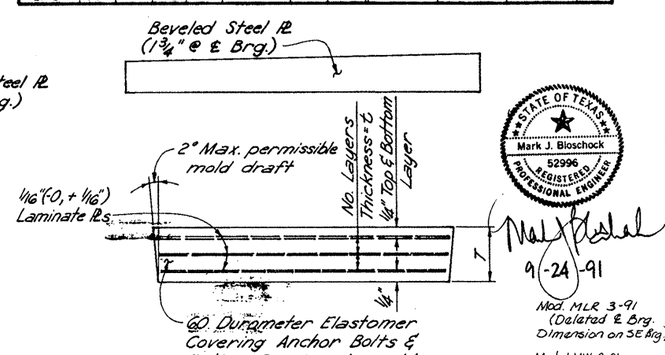

INTERIOR FIXED BEARINGS

STATE OF TEXAS
Mark J. Bloschock
52996
REGISTERED PROFESSIONAL ENGINEER

9-24-91

Mod. MLR 3-91 (Deleted ℄ Brg. Dimension on SE Brg.)
Mod LMW 3-91 (Added IE12 Brg.)
Rev. 4-88 (Add Bevel Sll. Pl. Note.
Rev. 4-88 (Del. IE12 Br.)

TEXAS HIGHWAY DEPARTMENT
BRIDGE DIVISION

BEARING DETAILS

PLATE GIRDER & I-BEAM UNITS

EB-1 (MOD)

ORIGINAL DRAWING DATE: MARCH 1983	STATE DISTRICT	FEDERAL REGION	FEDERAL AID PROJECT #	SHEET
DN.:-RLR REVISIONS	21	6	NH 92( )M	39Q
CK.:- © Rev. 11-85	COUNTY	CONTROL	SECTION	JOB	HIGHWAY
DW.:-BJB Jan. 86 - Galv. Anchor Bolts	HIDALGO	039	17	097	US 83
CK.:-RLR & WRP Rev. 11-86 (Bent Dim. Note)					

RIDGWAY'S PENCRON

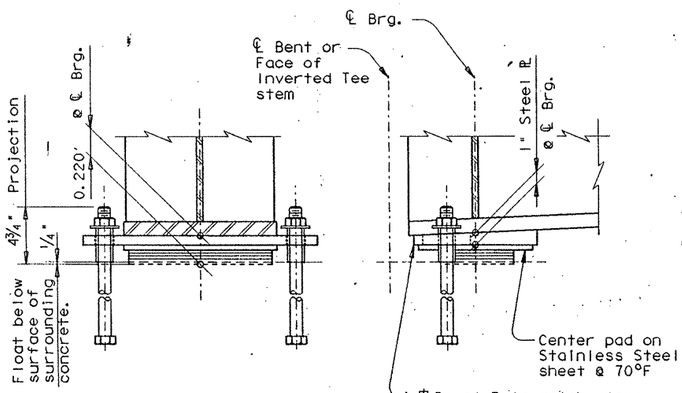

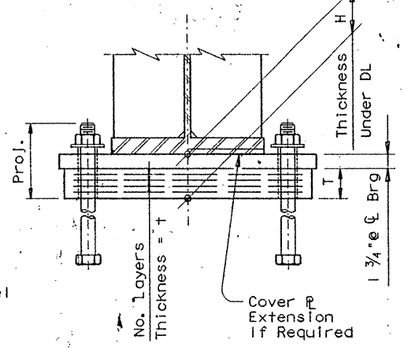

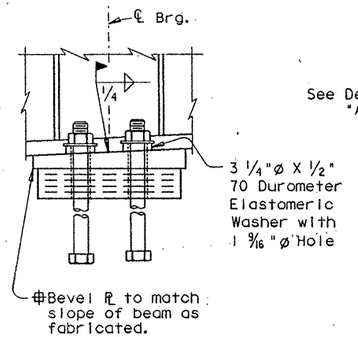

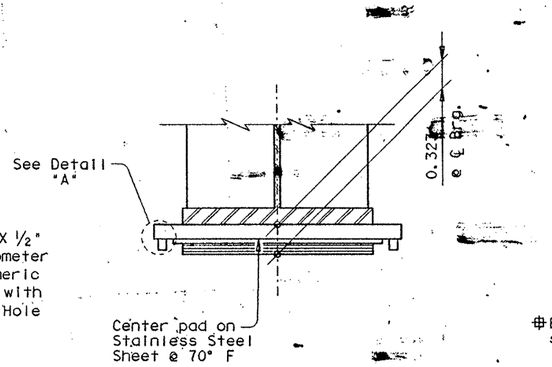

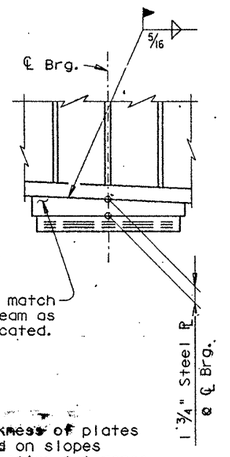

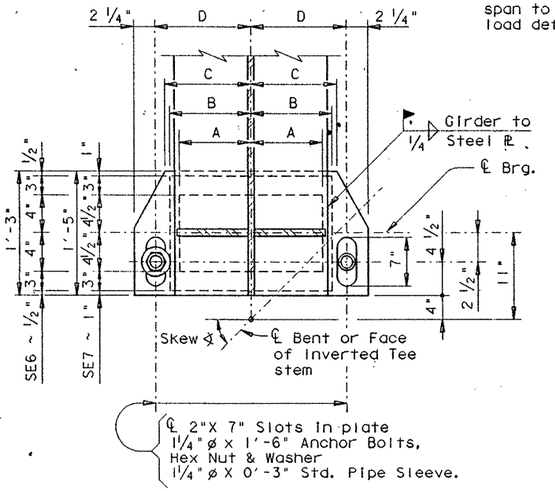

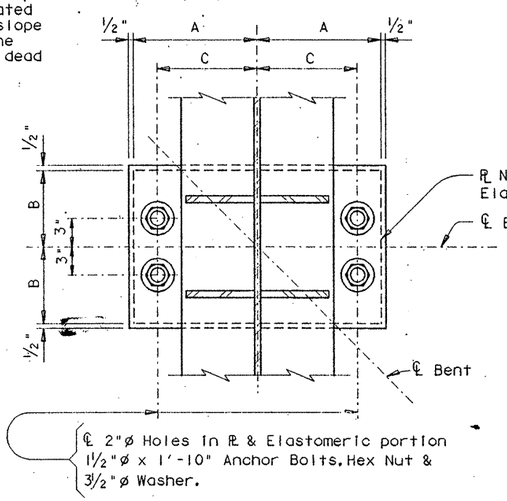

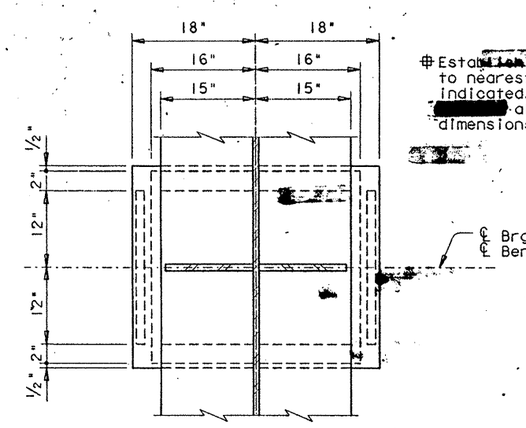

⊕Establish edge thickness of plates to nearest 1/16" based on slopes indicated. Specification tolerance [redacted] allowed from shop plan dimensions.

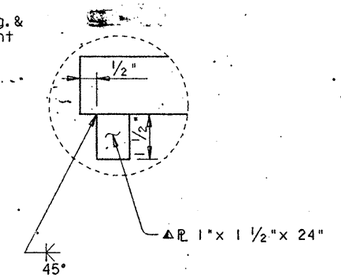

▲ Center Plate about ℄ Brg.

DETAIL "A"

BEARING	A	B	C	D	MAX. TOTAL REACTION	MAX. EXPANDING LENGTH	MAX. FLANGE WIDTH
SE6	11 ½"	12 ½"	13"	14"	184K	489'	24"
SE7	13"	14"	14"	15"	232K	489'	26"

BEARING	A	B	C	T	NUMBER LAYERS	t	H	MAX. DL REACTION	MAX. TOTAL REACTION	MAX. FLANGE WIDTH	PROJ.
IF9	19"	9"	15 ½"	4"	4	.797"	.460'	340K	545K	28"	8 ½"
IF10	18"	11"	15 ½"	4"	4	.797"	.460'	396K	634K	26"	8 ½"

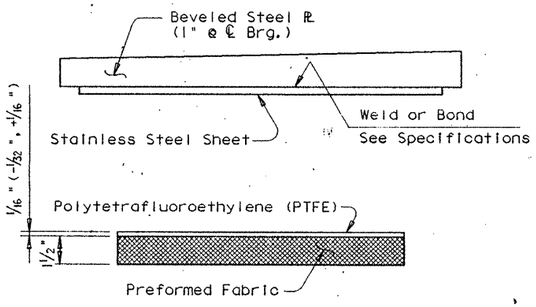

END EXPANSION BEARINGS

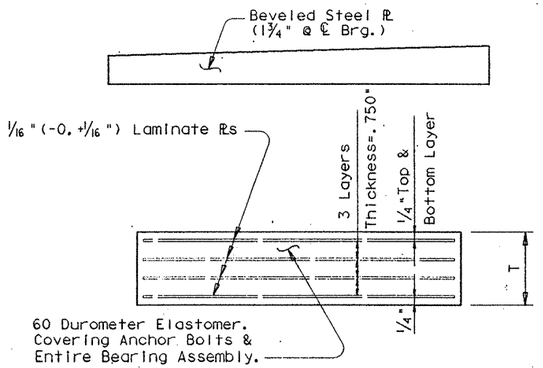

INTERIOR FIXED BEARINGS

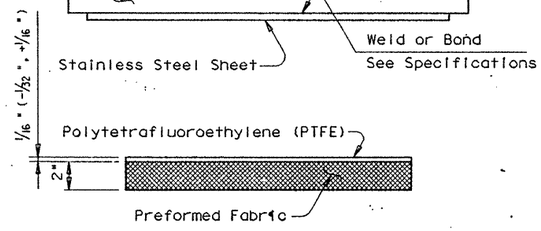

INTERIOR EXPANSION BEARING - IS1

GENERAL NOTES:

Bearings [redacted] measured by the unit of each "Elastomeric Bearing" of the type indicated, complete in place.

Payment for bearings [redacted] made at the unit price bid for each type of "Elastomeric Bearing" which price [redacted] full compensation for furnishing and installing each complete bearing including anchor bolts, top plate, sliding surfaces, elastomeric components, lateral guides, sleeves, and washers.

Anchor Bolts, nuts, washers, and pipe sleeves (if used). [redacted] galvanized.

STATE OF TEXAS
MARK J. BLOSCHOCK
52996
REGISTERED PROFESSIONAL ENGINEER
9-24-91

HS 20 LOADING

STATE DEPARTMENT OF HIGHWAYS AND PUBLIC TRANSPORTATION

SPECIAL BEARING DETAILS

US 83/281 INTERCHANGE

D45350A1 • ZFA2 • [3551001]4379M1S02.DGN	PREPARED BY AND FOR USE OF TEXAS SDH&PT					
ORIGINAL DRAWING DATE: MARCH 1991	STATE DISTRICT	FEDERAL REGION	FEDERAL AID PROJECT			SHEET
DR.: KLR REVISIONS		6	NH92( )M			391
CK.: GAF	COUNTY			CONTROL	SECTION	JOB	HIGHWAY
DR.: PSR	HIDALGO			0039	17	097	US 83/281
CK.: GAF							

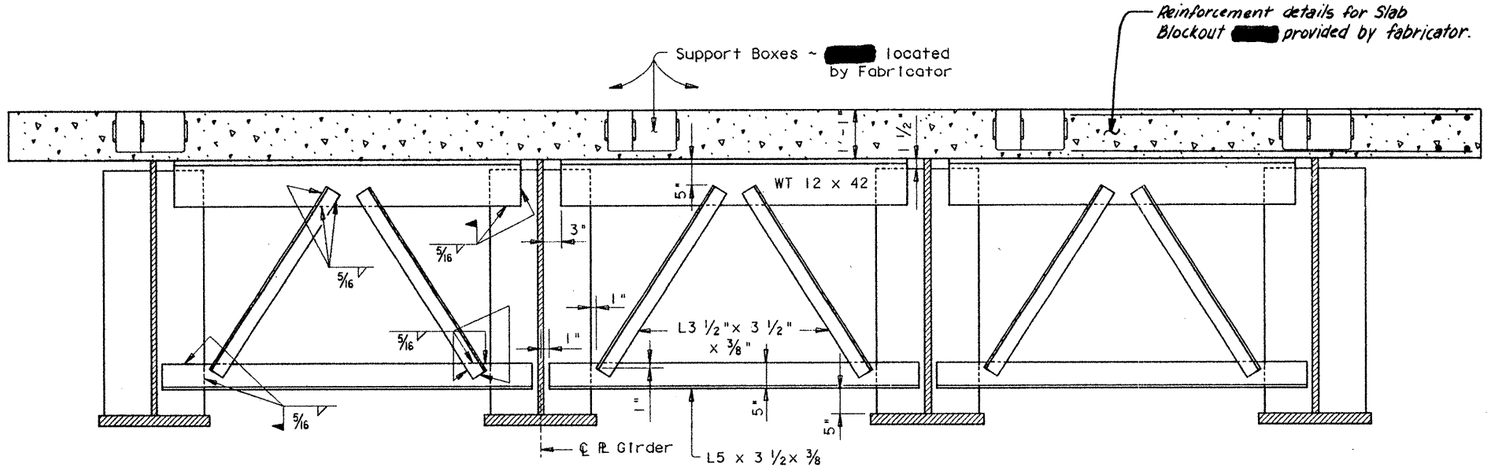

ELEVATION

Type B (MOD) End Diafram

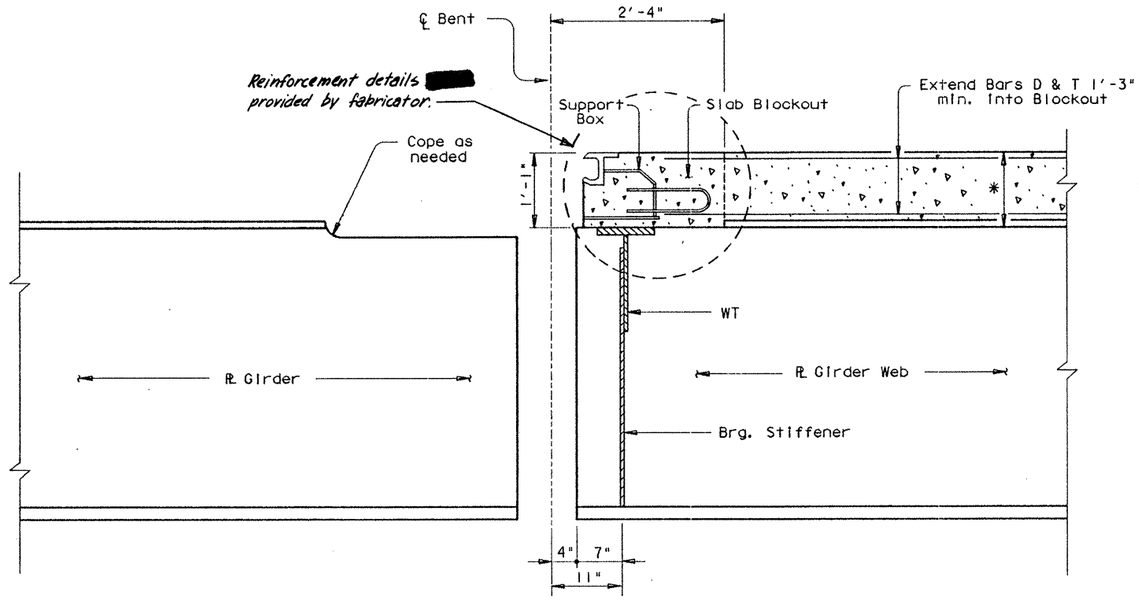

SECTION

* See Span Details

Notes:

The fabricator [redacted] provide for adequate anchorage of the Modular Joint system. In addition, the fabricator [redacted] provide adequate reinforcement of the Blockout including necessary overhang reinforcement. This [redacted] included in the shop drawings submitted by the contractor for the Engineer's approval.

Any additional reinforcing that [redacted] required [redacted] considered as subsidiary to the Item Reinforced Concrete Slab and as such there [redacted] no direct payment for the additional reinforcing steel.

The blockout dimensions [redacted] adjusted as necessary to provide sufficient size for the placement of the expansion joint system. This may require adjustments to the Structural Steel and Reinforcing Steel fabrication.

The contractor [redacted] submit shop drawings and installation procedures for the Modular Expansion Joint at the same time as the required shop drawings for the plate girders.

All Modular Expansion Joints [redacted] supplied [redacted] able to resist a total movement of 8 1/2" and [redacted] conform to the Modular Expansion Joint Specification.

Special consideration [redacted] given to the large joint opening in the Traffic Rail. On the Face of Rail, this opening [redacted] covered with steel plates or a similar system. These cover plates must extend over the entire height of the rail. The traffic rail joint [redacted] addressed on the Modular Joint shop drawings.
No direct payment [redacted] made for the modification to the rail. Costs [redacted] subsidiary to the Item Modular Joint.

The contractor [redacted] supply one of the following joints or an approved equal:

D.S. Brown D-241 Modular Joint
Watson-Bowwman Acme D-900 Modular Joint

HS 20 LOADING

STATE OF TEXAS
MARK J. BLOSCHOCK
52996
REGISTERED PROFESSIONAL ENGINEER

9-24-91

STATE DEPARTMENT OF HIGHWAYS AND PUBLIC TRANSPORTATION

MODULAR JOINT DETAILS

U.S. 83/281 INTERCHANGE

D45350A:: ZFA1: [355163]4379M1S01.DGN	PREPARED BY AND FOR USE OF TEXAS SDH&PT					
ORIGINAL DRAWING DATE:	STATE DISTRICT	FEDERAL REGION	FEDERAL AID PROJECT			SHEET
DN.: GAF	21	6	NH92( )M			392
CK.: GET	COUNTY		CONTROL	SECTION	JOB	HIGHWAY
DN.: TKW	HIDALGO		0039	8/9	097	83/281
CK.: GAF						

REV. 3-30-92

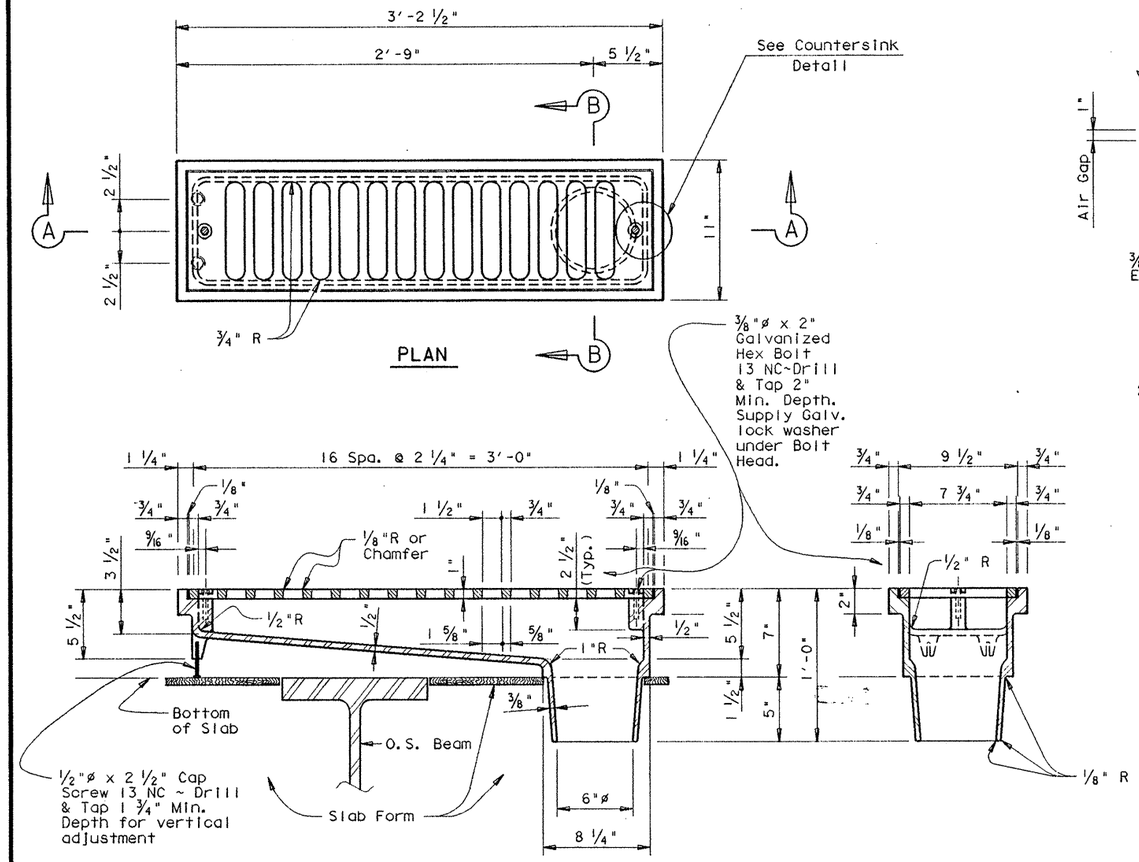

PLAN

SECTION A-A

SECTION B-B

GRATE-INLET CASTING DETAILS

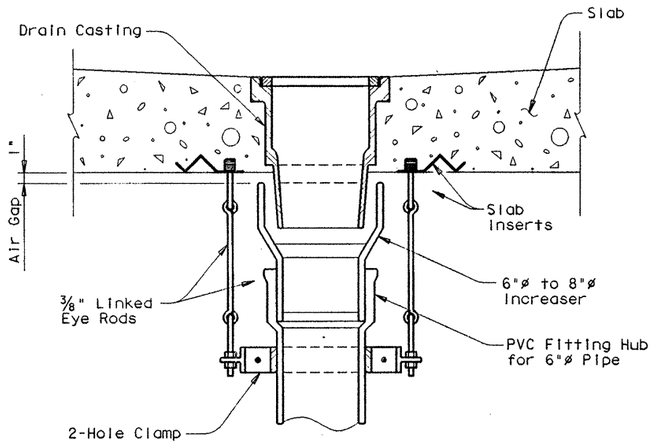

HOOK-UP TO INLET

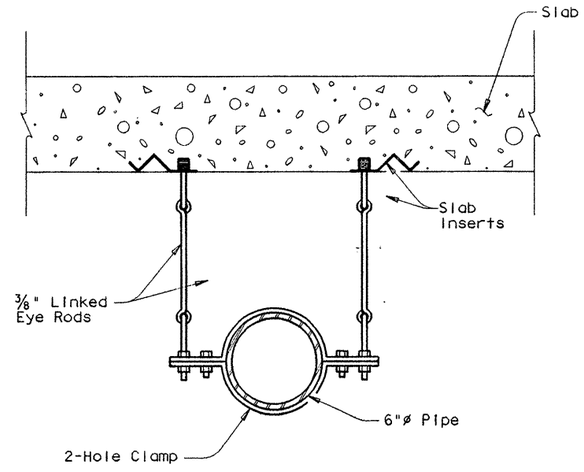

HORIZONTAL PIPE SUPPORT

(4'-0" Maximum Spacing)

GENERAL NOTES:

All cast steel [redacted] conform to Item 471 and A.S.T.M. A27 Gr. 65-35. All drafts 3°. All fillets 1/4" radius unless otherwise shown.

After fabrication, steel castings [redacted] checked for fit and uniform bearing between contact surfaces of grate and frame. After all irregularities have been removed the castings [redacted] galvanized.

When placing concrete, care [redacted] taken to prevent honeycomb or air pockets around or beneath the casting.

Slab form [redacted] adequately braced to support the dead weight of the casting. Slab reinforcing bars or tendons [redacted] deflected to clear casting by 1". Where bending is not possible reinforcing bars [redacted] stopped or cut to clear casting.

All metalic hardware and fasteners installed with the items "Frame and Grate" and "P.V.C. Pipe" [redacted] gavanized after fabrication.

All galvanizing [redacted] in accordance with Item 442.

All pipe and fittings [redacted] P.V.C. conforming to Item 481. Minimum wall thickness: .180" ~ 6"ø; .240" ~ 8"ø. Fittings [redacted] used as directed by the Engineer.

All pipe [redacted] securely fastened to the bents and supported by the superstructure by devices as detailed.

All attachment devices [redacted] considered subsidiary to the bid item "Frame and Grate".

Payment [redacted] by each Frame & Grate (Bridge Drain).

The P.V.C. Pipe and fittings [redacted] subsidiary to "Frame & Grate".

Additional slab reinforcing [redacted] subsidiary to "Reinforced Concrete Slab".

For long pipe runs, pipe grade [redacted] match roadway grade.

Pipe supports [redacted] able to accomodate anticipated longitudinal movements of pipe and bridge slab.

See Bridge Layout for location of drains.

Deviations from Bridge Drain Details contained herein [redacted] not [redacted] permitted without prior approval from the Engineer.

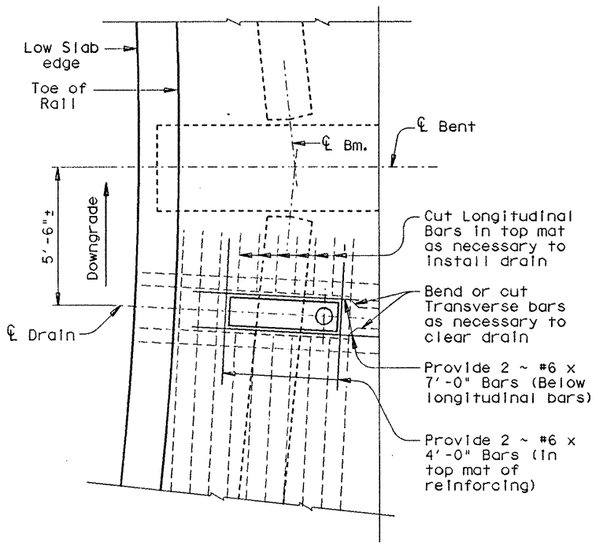

SPANS W/RADIAL OR NORMAL REINFORCING

TYPICAL PLAN

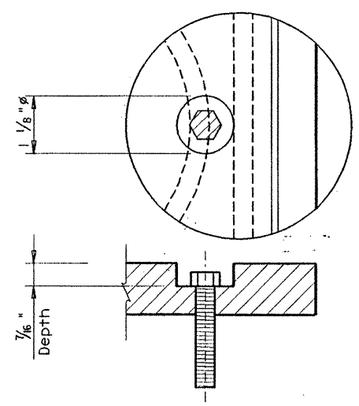

COUNTER SINK DETAIL

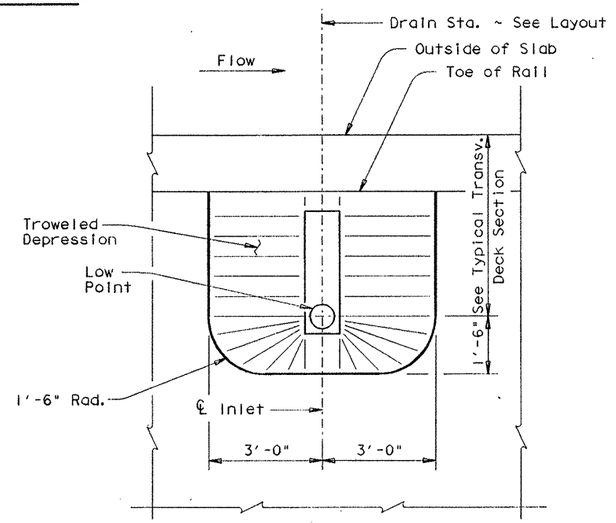

DRAIN PLAN

STATE OF TEXAS
MARK J. BLOSCHOCK
52996
REGISTERED PROFESSIONAL ENGINEER

10-29-91

HS 20 LOADING

Sheet 1 of 5

STATE DEPARTMENT OF HIGHWAYS AND PUBLIC TRANSPORTATION

BRIDGE DRAIN DETAILS

D45350A: ZFA2: [355100]4379MOD02.DGN	PREPARED BY AND FOR USE OF TEXAS SDH&PT					
ORIGINAL DRAWING DATE: MAY 1991	STATE DISTRICT	FEDERAL REGION	FEDERAL AID PROJECT			SHEET
DN.: LMW	21	6	NH92( ) M			393
CK.: KBA	COUNTY		CONTROL	SECTION	JOB	HIGHWAY
DW.: PSR	HIDALGO		0039	17	097	US 83/281
CK.: LMW						

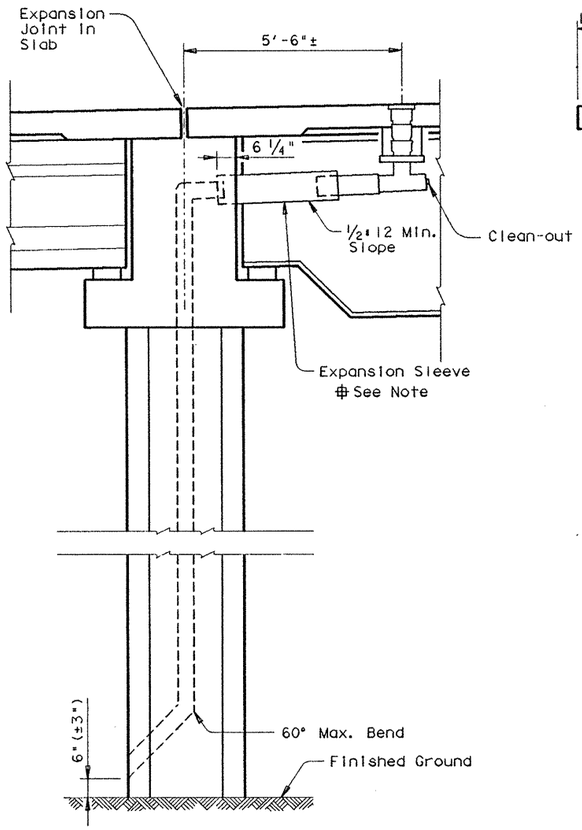

TYP. LONGITUDINAL DECK SECTION

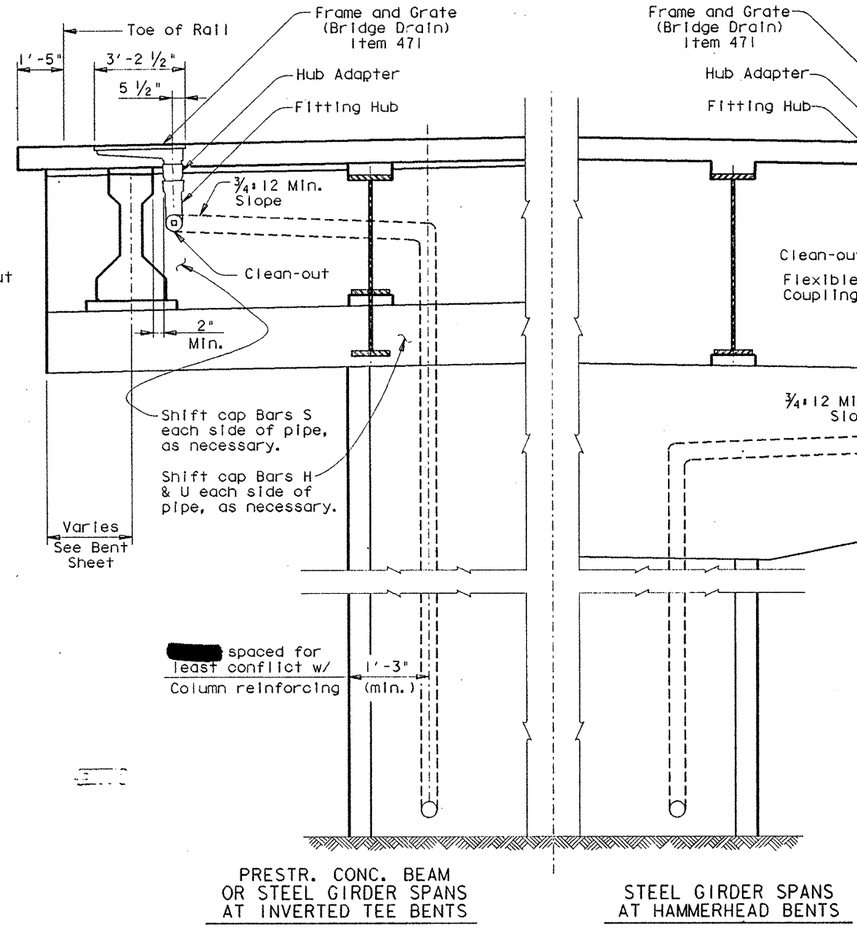

TYP. TRANSVERSE DECK SECTION

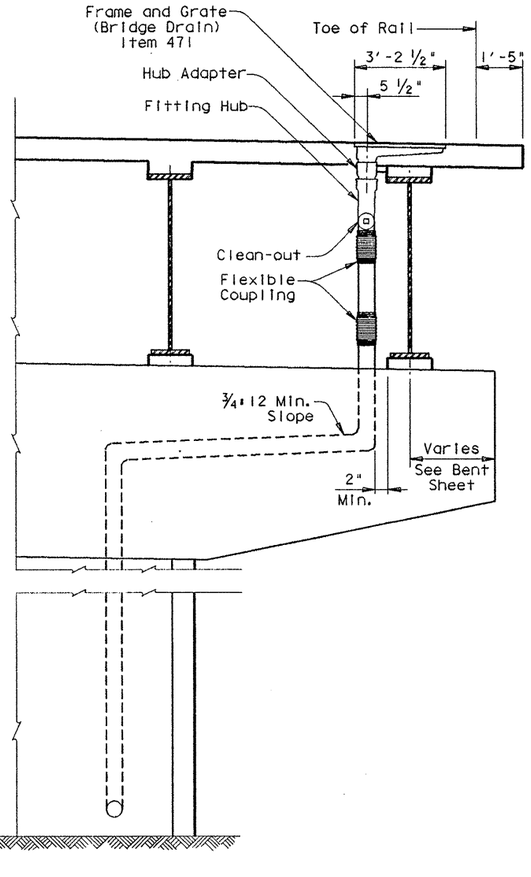

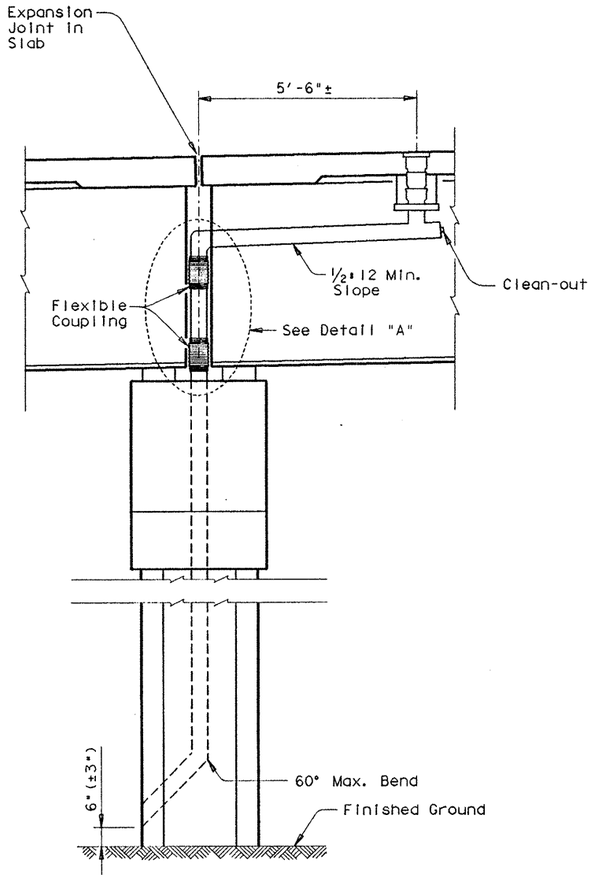

TYP. LONGITUDINAL DECK SECTION

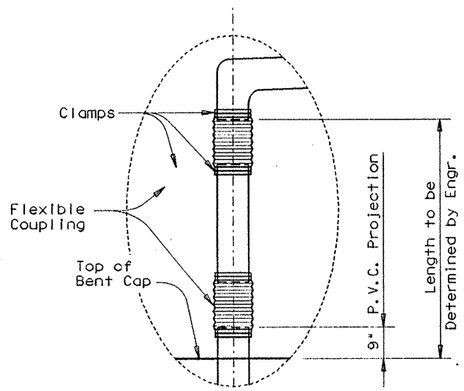

DETAIL "A"

Note: Expansion sleeve provided [redacted] match 1/2 total joint movement in slab at Bent as follows:
No Expansion Joint in slab - no Expansion sleeve required.
4" Sealed Expansion Joint in slab - Expansion Sleeve with Min. 2" movement required.
8 1/2" Modular Joint in slab - Expansion Sleeve with Min. 4 1/4" movement required.
See LAYOUT for joint size at Bents.

STATE OF TEXAS
MARK J. BLOSCHOCK
52996
REGISTERED PROFESSIONAL ENGINEER

10-29-91

HS 20 LOADING

Sheet 2 of 5

STATE DEPARTMENT OF HIGHWAYS AND PUBLIC TRANSPORTATION

BRIDGE DRAIN DETAILS

D45350A: ZFA2: [355100]4379MOD02.DGN	PREPARED BY AND FOR USE OF TEXAS SDH&PT					
ORIGINAL DRAWING DATE: MAY 1991	STATE DISTRICT	FEDERAL REGION	FEDERAL AID PROJECT			SHEET
DN.: LMW	21	6	NH92	JM		394
CK.: KBA	COUNTY		CONTROL	SECTION	JOB	HIGHWAY
DW.: PSR	HIDALGO		0039	17	097	US 83
CK.: LMW						28

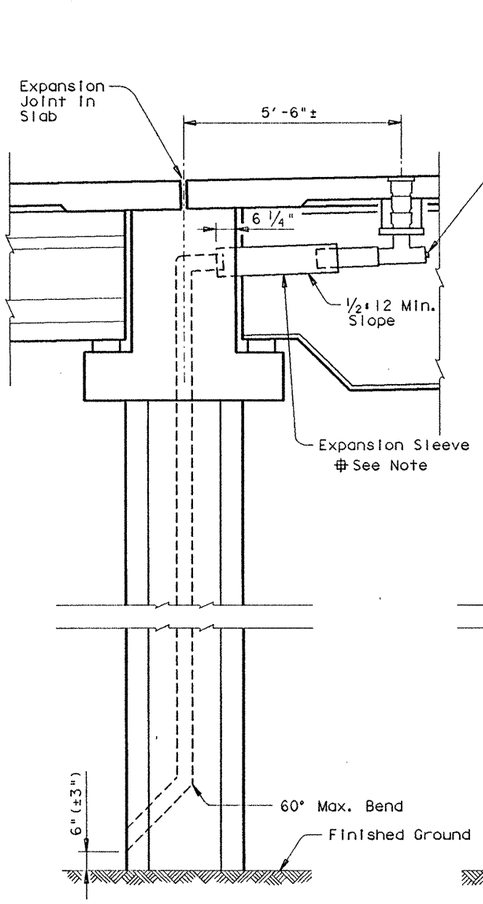

TYP. LONGITUDINAL DECK SECTION

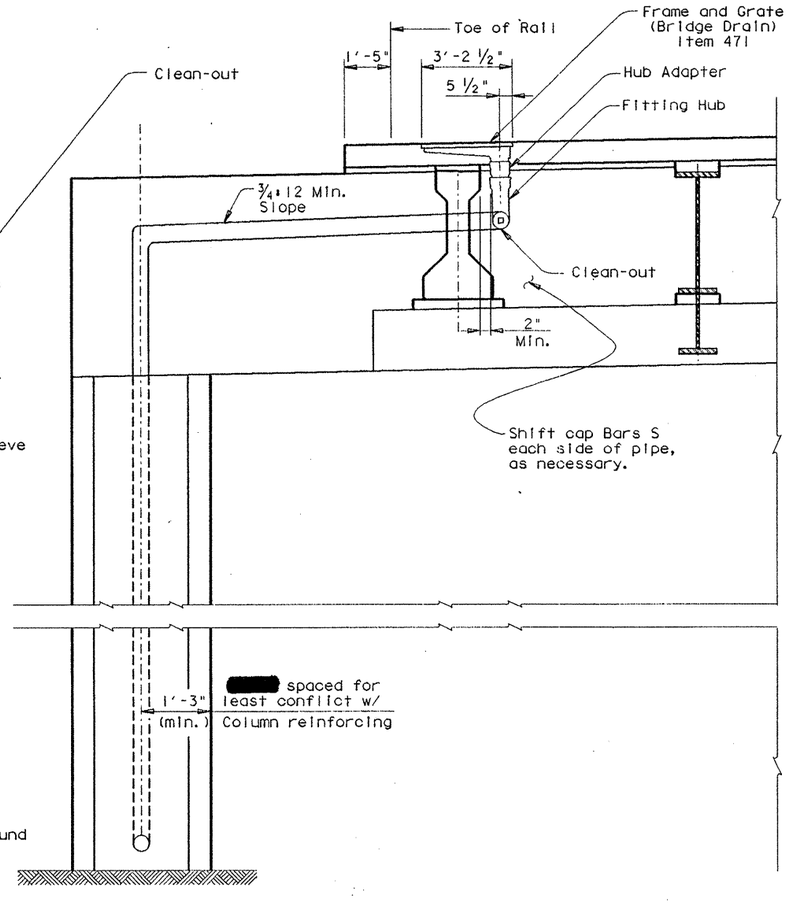

PRESTR. CONC. BEAM OR STEEL GIRDER SPANS AT INVERTED TEE STRADDLE BENTS

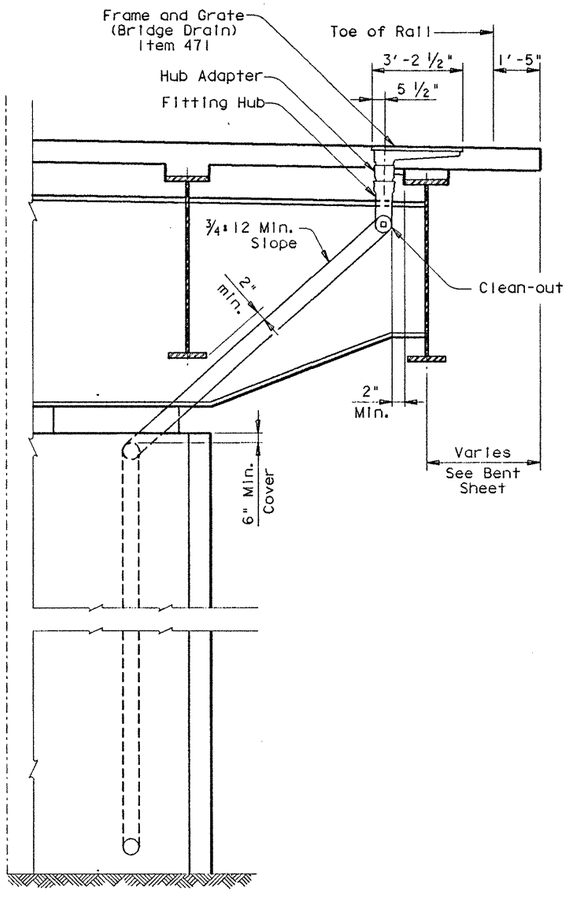

STEEL GIRDER SPANS AT STEEL THRU BENTS

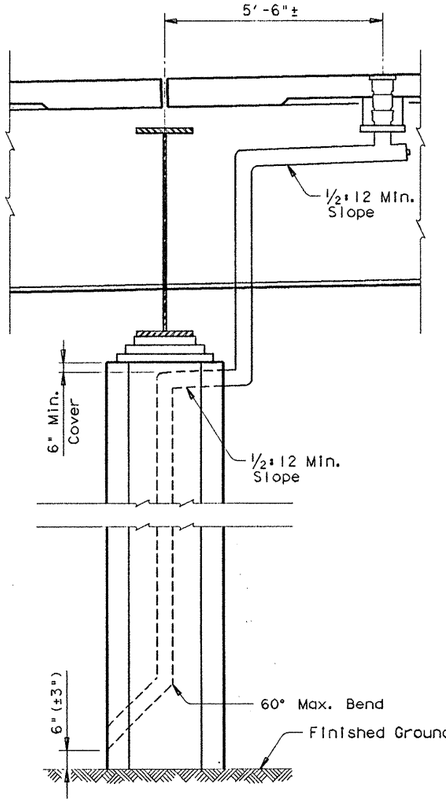

TYP. LONGITUDINAL DECK SECTION

TYP. TRANSVERSE DECK SECTION

Note: Expansion sleeve provided [redacted] match 1/2 total joint movement in slab at Bent as follows:
No Expansion Joint in slab - no Expansion sleeve required.
4" Sealed Expansion Joint in slab - Expansion Sleeve with Min. 2" movement required.
8 1/2" Modular Joint in slab - Expansion Sleeve with Min. 4 1/4" movement required.
See LAYOUT for joint size at Bents.

STATE OF TEXAS
MARK J. BLOSCHOCK
52996
REGISTERED PROFESSIONAL ENGINEER
10-29-91

HS 20 LOADING

STATE DEPARTMENT OF HIGHWAYS AND PUBLIC TRANSPORTATION

BRIDGE DRAIN DETAILS

D45350A1 • ZFA2 • [3551001]4379MOD02.DGN	PREPARED BY AND FOR USE OF TEXAS SDH&PT							
ORIGINAL DRAWING DATE: MAY 1991	STATE DISTRICT	FEDERAL REGION	FEDERAL AID PROJECT •				SHEET	
DR. • LMW	REVISIONS	21	6	NH92( )M				395
CK. • KBA		COUNTY		CONTROL	SECTION	JOB	HIGHWAY	
DR. • PSR		HIDALGO		0039	17	097	US 83/281	
CK. • LMW								

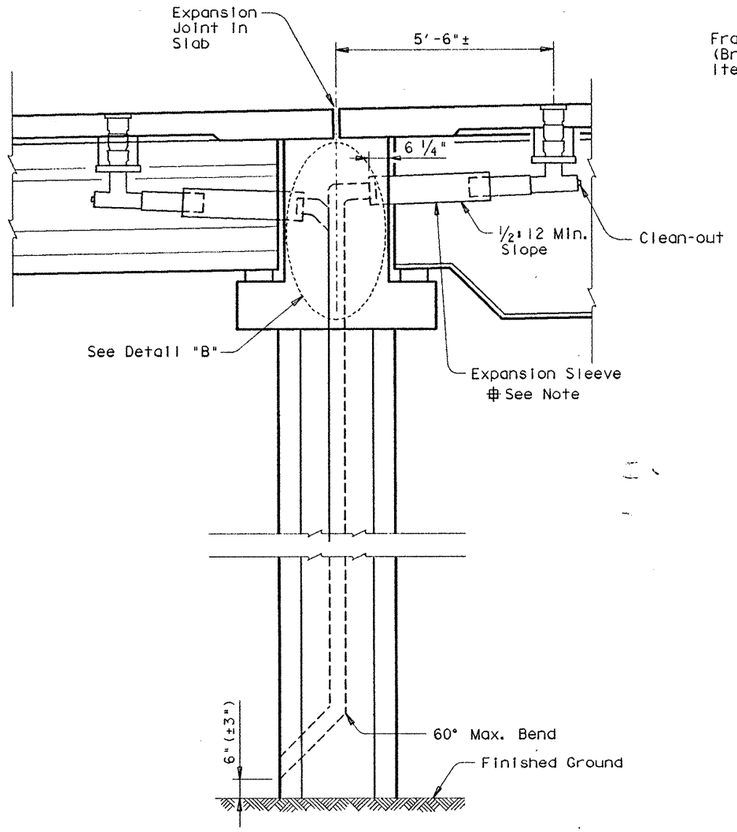

TYP. LONGITUDINAL DECK SECTION

(Showing typical two drain connection at interior bent.)

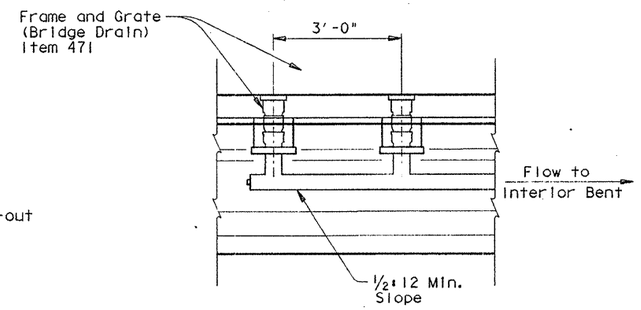

DOUBLE INLET DRAIN SECTION

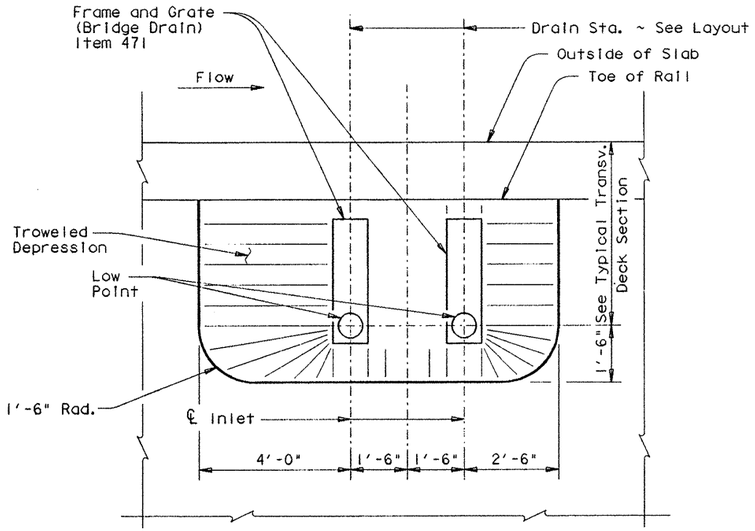

DOUBLE INLET DRAIN PLAN

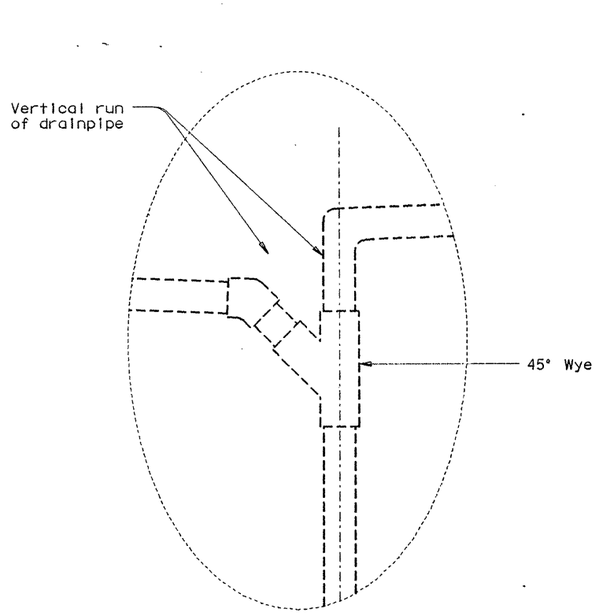

DETAIL "B"

This detail [redacted] used where two drains are required at one bent. Connection of two drains to one drainpipe with 45° Wye [redacted] accomplished in vertical run of pipe only, as shown. Detail scheme is typical, regardless of superstructure/ substructure configuration.

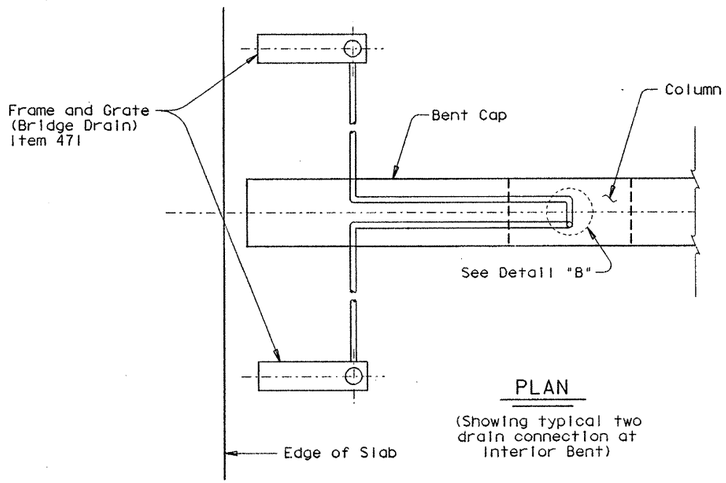

PLAN

(Showing typical two drain connection at Interior Bent)

Note: Expansion sleeve provided [redacted] match 1/2 total joint movement in slab at Bent as follows:

No Expansion Joint in slab - no Expansion sleeve required.
4" Sealed Expansion Joint in slab - Expansion Sleeve with Min. 2" movement required.
8 1/2" Modular Joint in slab - Expansion Sleeve with Min. 4 1/4" movement required.
See LAYOUT for Joint size at Bents.

STATE OF TEXAS
MARK J. BLOSCHOCK
52996
REGISTERED PROFESSIONAL ENGINEER

10-29-91

HS 20 LOADING

STATE DEPARTMENT OF HIGHWAYS AND PUBLIC TRANSPORTATION

BRIDGE DRAIN DETAILS

DOUBLE INLET

D45350A1-ZFA2-(355100)4379MOD02.DGN	PREPARED BY AND FOR USE OF TEXAS SDH&PT						
ORIGINAL DRAWING DATE: MAY 1991	REVISIONS	STATE DISTRICT	FEDERAL REGION	FEDERAL AID PROJECT			SHEET
DN.: LMW		21	6	NH92( )M			396
CK.: KBA		COUNTY		CONTROL	SECTION	JOB	HIGHWAY
DW.: PSR		HIDALGO		0039	17	097	US 83/281
CK.: LMW							

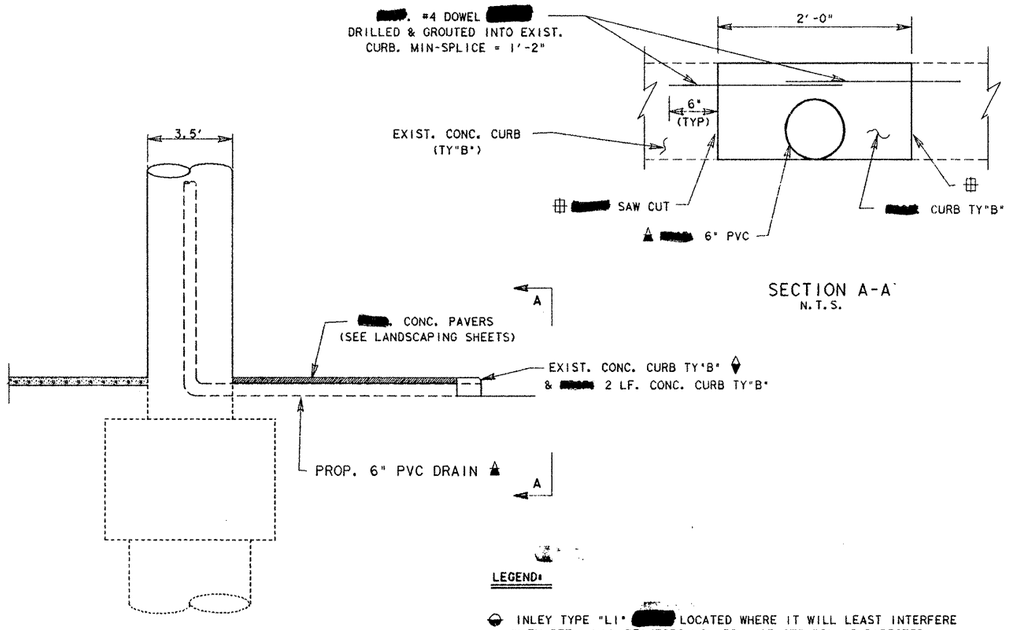

SECTION A-A
N.T.S.

TYIPICAL DRAIN SECTION
@ RAMP 1 & 2 BENT # 2 & 3
RAMP 3 & 4 BENT # 2 & 3

LEGEND:

◒ INLEY TYPE "LI" [redacted] LOCATED WHERE IT WILL LEAST INTERFERE WITH [redacted] RET. -WALL REINFORCING MESH (OR STRAPS) AS DIRECTED BY THE ENGINEER.

▲ PVC PIPE [redacted] SUBSIDIARY TO THE VARIOUS BID ITEMS.

♦ REMOVAL OF CONC. CURB FOR PVC PLACEMENT [redacted] NOT [redacted] PAID FOR DIRECTLY, BUT [redacted] SUBSIDIARY TO THE VARIOUS BID ITEMS.

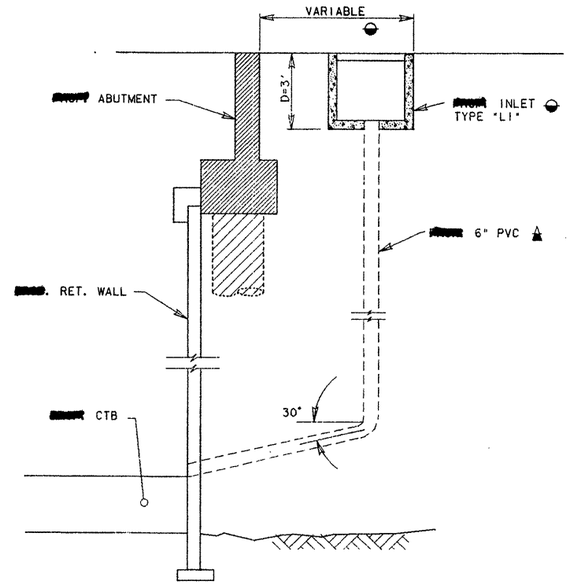

TYPICAL INLET "LI" INSTALLATION AT END OF BRIDGE (4 LOCATIONS)

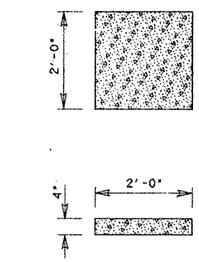

TYPICAL RIP-RAP DRAIN
(CONC. CLASS B) (4 IN)
[redacted] USED @ COLUMN DRAINS
APPROX. 53 LOCATIONS (.05 CY/DRAIN)

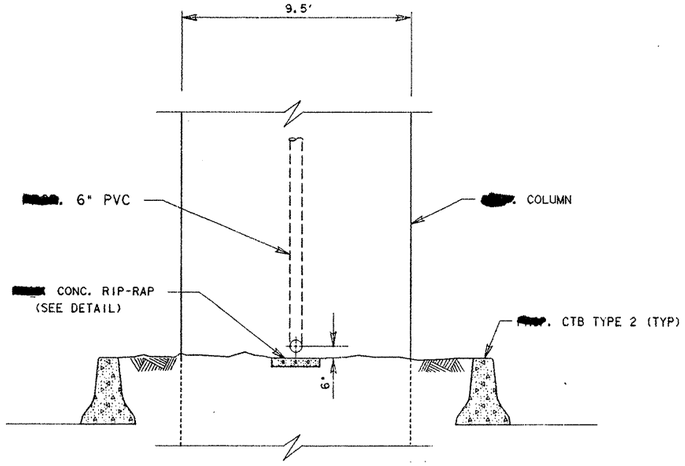

TYPICAL TRAVERSE DRAIN SECTION
[redacted] USED @ RAMP #1, BENT 25
#2, BENTS 28 & 29
#3, BENT 19
#4, BENT 24

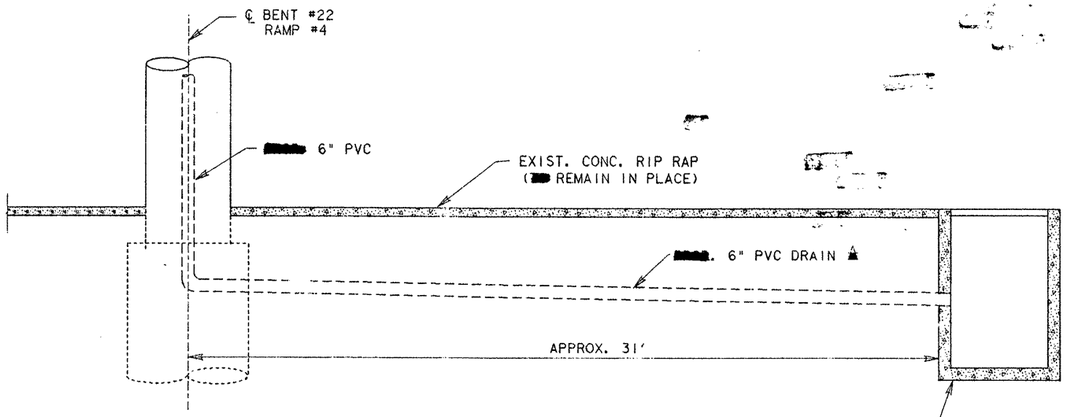

TYPICAL DRAIN
@ RAMP #4, BENT #22
CONNECTION TO [redacted] INLET

BRIDGE DRAIN DETAILS

SHEET 4 OF 4 SHEETS

STATE OF TEXAS
MARIO R. JORGE
65538
REGISTERED
PROFESSIONAL
Mario R. Jorge, P.E.
10-31-91

FED. RD. DIV. NO.	FEDERAL AID PROJECT NO.		SHEET NO.
6	F 308(47)		396A
STATE	STATE DIST. NO.	COUNTY	
TEXAS	21	HIDALDO	
CONT.	SECT.	JOB	HIGHWAY NO.
0039	17	097	US [illegible]28

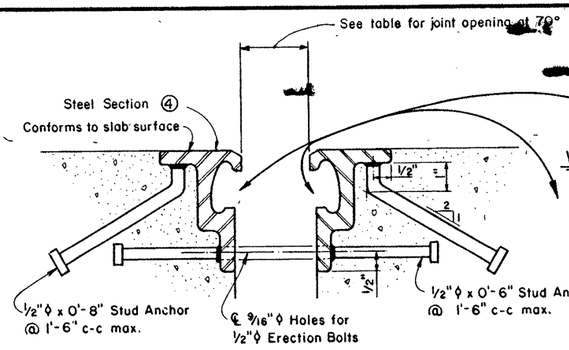

SECTION THRU
WATSON BOWMAN & ACME CORP.
STRUCTURAL ACCESSORIES INC.
D S BROWN COMPANY
BRG INDUSTRIES INC.

WATSON BOWMAN & ACME CORP.

STRUCTURAL ACCESSORIES INC.

NEOPRENE SEALS

BRG INDUSTRIES INC.

D S BROWN COMPANY

NOTE: Steel sections [redacted] shipped in convenient lenghts (20'-0" max., 10'-0" min.) One shop splice [redacted] permitted in each shipping length provided no piece is less than 2'-0" in length and sufficient studs are added to limit the stud to shop splice distance to 6" maximum.

Shop and field splices [redacted] made by butt welding with areas in contact with preformed joint sealer [redacted] ground smooth.

Corresponding sections [redacted] match marked and bolted together for shipment.

All steel parts are not [redacted] painted or primed unless designated elsewhere on the plans.

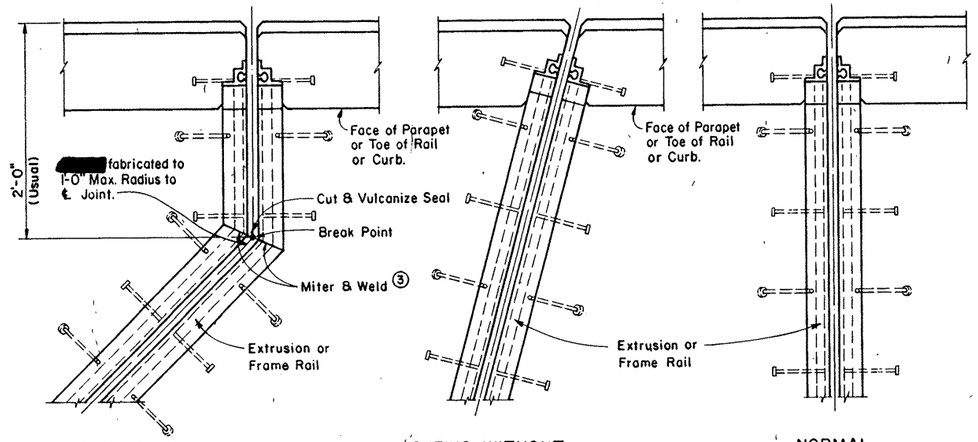

SKEWS WITH SLAB BREAK | SKEWS WITHOUT SLAB BREAK | NORMAL

PLANS—END CONDITIONS

MANUFACTURER	STEEL SECTION ④	NEOPRENE STRIP SEAL			
		3" JOINT		4" JOINT	
		Seal Type	Joint Opening	Seal Type	Joint Opening
Watson Bowman & Acme Corp.	Type M Extrusion	S 300	1.75	S 400	1.75
Structural Accessories Inc.	Type SCII Extrusion	40 SS	[redacted]	50 SS	1.75
D S Brown	Frame Rail SSCM	300 L	1.75	400 L	1.75
BRG Industries Inc.	Type W *	BS 300	1.75	BS 400	1.75

④ Shape of extrusion shown is typical. Variations depending on manufacturer are permissible.

* Type W [redacted] 2.75 inch by 3.25 inch and 3/8 inch minimum thickness.

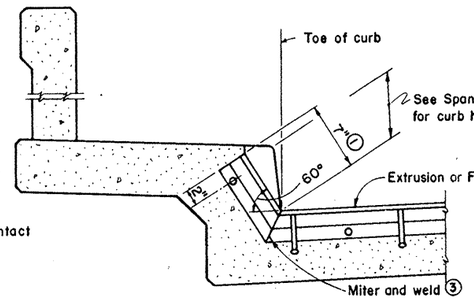

③ Remove all burrs which [redacted] in contact with seal prior to making splice.

① Reduce if curb height is less than 6".

SECTION THRU SIDEWALK
(LOW SIDE)

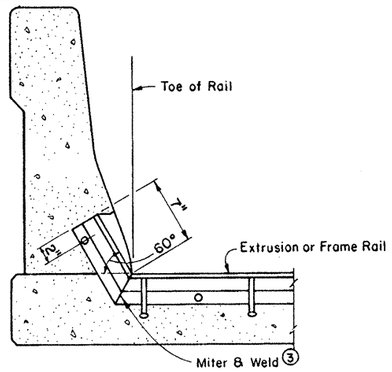

SECTION THRU BARRIER RAIL
(LOW SIDE)

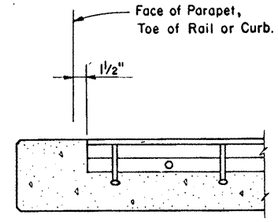

SECTION THRU SLAB
(HIGH SIDE)

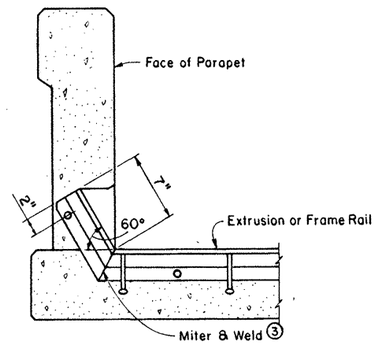

SECTION THRU OTHER PARAPET RAILS
(LOW SIDE)

Rev. 8-89 (Ship lgth., paint)
Rev. 11-88 (Seal-DS Brown)
Rev. 8-88 (Paint)

GENERAL NOTES:

Sealed [redacted] provided in the size and at all locations shown [redacted] plans.

Shop fabrication [redacted] required at all inter[redacted] of cross slope and at break points.

[redacted]

At splices, a continuous ground smooth weld [redacted] provided except on all surfaces in locking contact with seal which [redacted] have no burrs.

Corresponding sections of Sealed Exp. Jts. [redacted] temporarily shop assembled, checked for fit, and match marked for shipment.

Erection holes, if [redacted] punched so as to line up when Sealed Exp. Jts. are in their final position. Erection bolts, if used, [redacted] cut off flush with extrusion promptly after the concrete in the latter of the two placements has taken initial set.

Stud anchors [redacted] electric arc end-welded with complete fusion.

The neoprene seal [redacted] continuous and included in the price bid for Sealed Exp. Jt.

The Contractor [redacted] arrange for securing the Sealed Exp. Jt. in position, and placing to the proper grade and alignment by welding braces to adjacent slab steel, to prestressed beam stirrups, or to anchors cast in concrete diaframs. Cost of temporary bracing is to be included in the price bid for Sealed Exp. Jt.

STATE DEPARTMENT OF HIGHWAYS AND PUBLIC TRANSPORTATION

SEALED EXPANSION JOINT DETAILS

WITHOUT OVERLAY

SEJ-S(I)

ORIGINAL DRAWING DATE MARCH 1983		STATE DISTRICT	FEDERAL REGION	FEDERAL AID PROJECT ℄	SHEET
DN: -	REVISIONS	21	6	NH 92C)M	397
CK: -	Rev. 8-84 Rev. 1-87 (SCII)				
	Rev. 10-85 Rev. 1-6-88 (Stud Spa.)	COUNTY	CONTROL	SECTION	JOB	HIGHWAY
DW: DRG	Rev. 11-85 Rev. 3-88 (Add BRG					
CK: JCW	Rev. 10-86 Industries Inc.)	HIDALGO	039	17	097	US 83

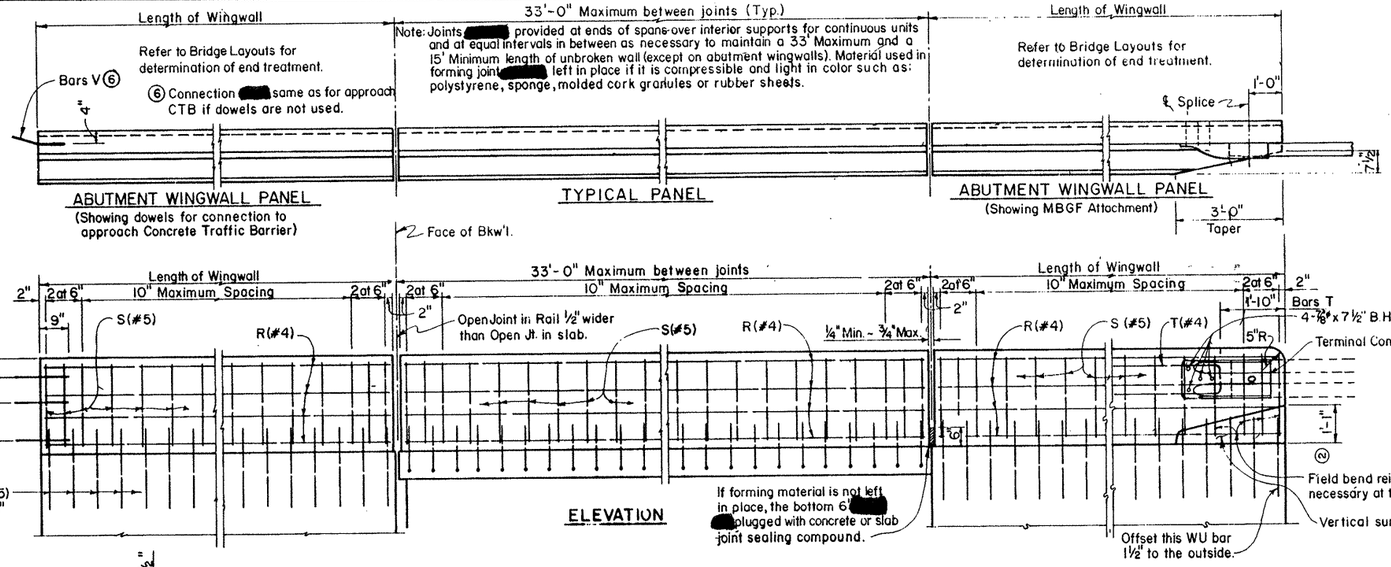

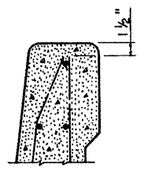
Bars S [redacted] constructed as two separate bars at the contractor's option.

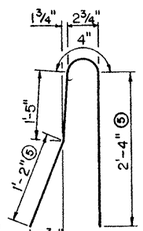
BARS S (#5)

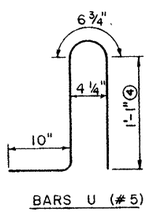
BARS U (#5)

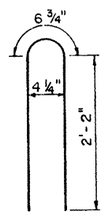
BARS WU (#5)

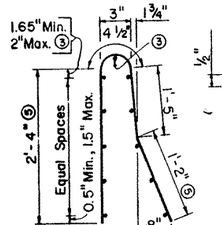

WELDED WIRE FABRIC (OPTIONAL)

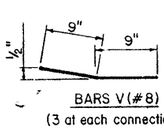
BARS V(#8) ⑥ (3 at each connection)

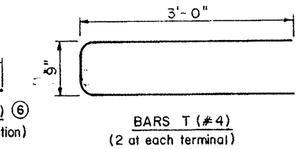
BARS T (#4) (2 at each terminal)

DESCRIPTION	LONGITUDINAL WIRES	VERTICAL WIRES
1. Minimum (Cumulative Total) Wire Area	0.933 Sq. In.	0.248 Sq. In. Per. Ft.
2. Minimum	No. of Wires 6	Spacing 4"
Maximum	11 ③	12"
3. Maximum Wire Size Differential	The smaller wire [redacted] have an area of 40% or more of the larger wire.	

③ Longitudinal wires [redacted] within upper bend if vertical wires are D8.7 or smaller, in which case the 2" dimension to the next lower bars [redacted] increased to 4" max.

④ Increase to slab thickness plus 5½" for slabs over 10". Dimension given is permissible without increase for slabs 9" or less. Increase by nominal concrete overlay thickness if over 2".

⑤ Dimension given is permissible for structures with up to 2" of overlay.

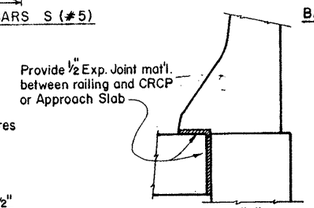

DETAIL "A"

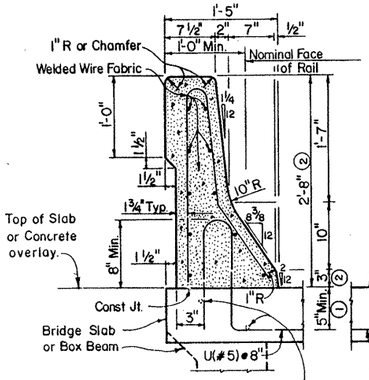

TYPICAL SECTION (Showing W W F)

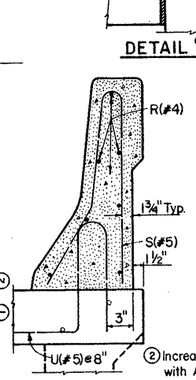

TYPICAL SECTION (Showing conventional reinf.)

② Increase 2" for structures with A C P overlay.

① 4" for prestressed boxes and 4¼" for C G C Spans.

As an aid in supporting reinforcement, additional longitudinal bars [redacted] used in the slab with the approval of the Engineer. Such bars [redacted] furnished at the Contractors expense.

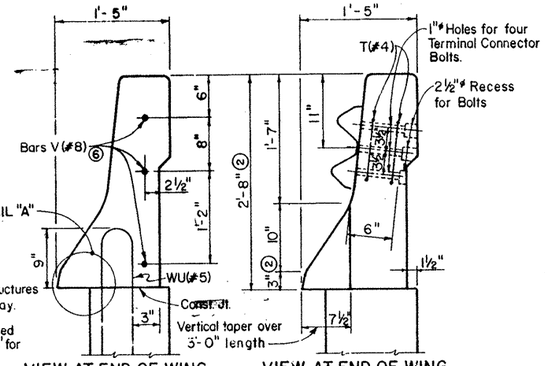

VIEW AT END OF WING (Showing C T B Connection and typical WU Bar placement)

VIEW AT END OF WING (Showing MBGF Connection)

NOTE: Holes and recesses [redacted] formed or cored. Percussion drilling is not permitted.

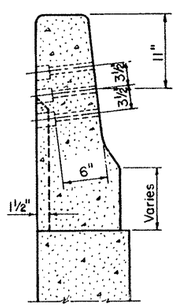

SEC. A-A

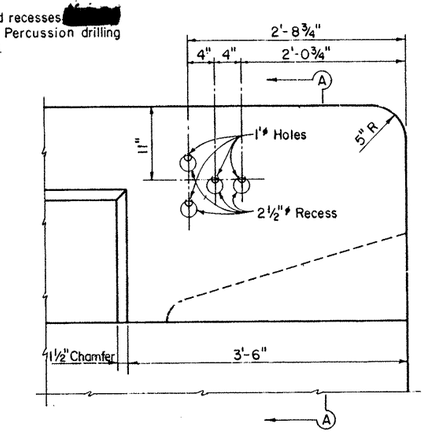

OPTIONAL END TREATMENT

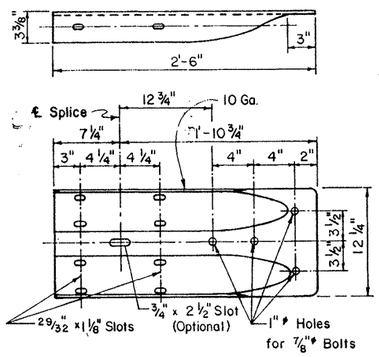

TERMINAL CONNECTOR

Terminal Connector [redacted] receive the same protective coating as the attached Metal Beam Guard Fence.

GENERAL NOTES:

Designed according to AASHTO 1977 Standard and current Interim Specifications.

All parts of the railing including concrete parapet wall, reinforcing, terminal connector, bolts, nuts and washers are included in the price bid per linear foot of rail.

All steel components except reinforcing [redacted] galvanized unless otherwise shown in plans.

All concrete for railing wall [redacted] Class "C".

Dimensions relating to reinforcing steel are to centers of bars.

Metal Beam Guard Fence or Concrete Traffic Barrier is usually attached to the abutment wingwall panel. See plan sheet for details and length for payment. The splice between the approach guard fence and the terminal connector [redacted] with the normal eight bolts. The dowel connection to the approach traffic barrier [redacted] routed the same as other barrier joints.

Shop drawings [redacted] required for this rail.

This railing [redacted] constructed with slip-forms with equipment approved by the Engineer. Sensor control for both line and grade [redacted] provided. When slip-forming is used, the concrete may be cured with membrane curing compound.

The back of railing [redacted] vertical unless otherwise shown in plans.

Welded wire fabric [redacted] used as an option to conventional reinforcement and [redacted] made in accordance with A S T M A497.

Welded Wire Fabric Detail shown is for D8.4 longitudinal wires and D8.3 vertical wires. Combinations of Reinforcing Steel and Welded Wire Fabric or configurations of Welded Wire Fabric other than shown [redacted] permitted when the conditions in the table are satisfied and the dimension from end of section to first welded vertical wire does not exceed 3".

Additional reinforcing [redacted] tack welded to the upper two thirds of the reinforcing cage to provide bracing when slip-forming is used. Additional anchorage devices [redacted] added when welding is necessary in the lower one third of the cage. Do not weld to U or S bars in the lower one third of the cage.

P L F weight of railing (with no overlay increase) is 326 plf.

STATE DEPARTMENT OF HIGHWAYS AND PUBLIC TRANSPORTATION

TRAFFIC RAIL

TYPE T501

ORIGINAL DRAWING DATE: JUNE 1985		STATE DISTRICT	FEDERAL REGION	FEDERAL AID PROJECT		SHEET
DW.:-THD	REVISIONS	21	6	NH 92 ( )M		398
CK.:-THD	Rev. 10-85 (Added Det. "A")	COUNTY		CONTROL	SECTION	JOB	HIGHWAY
DW.:-EDS	Rev. 4-86 (Det. "A")	HIDALGO		039	17	097	CC-617
CK.:-JJP	5-87 (Conc. Overlay)						661

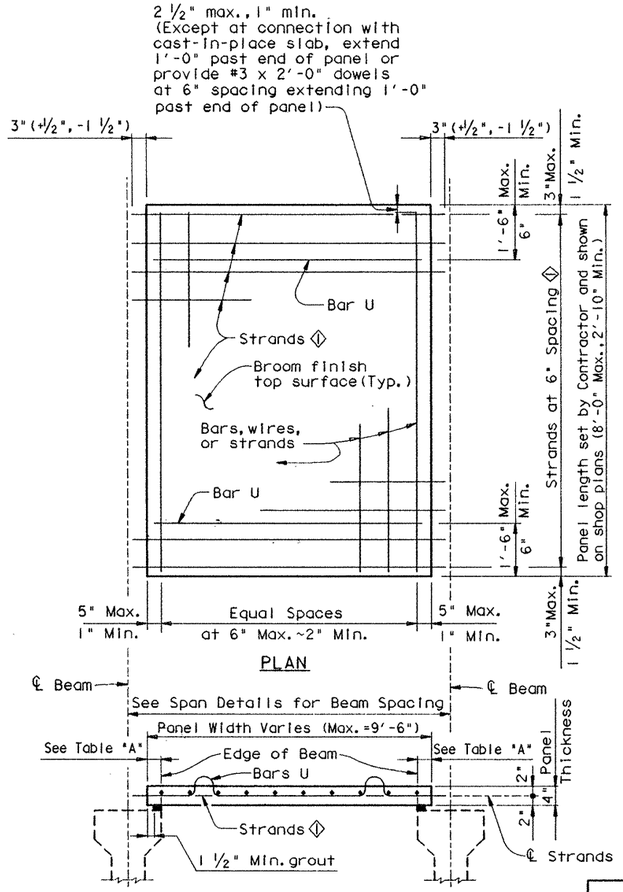

TYPICAL SECTION

◊ Reinforcing steel #4 (Gr.60) at 6" spacing [redacted] substituted for strands in panels 5'-0" in width or less and [redacted] required in panels 3'-6" in width or less.

TABLE "A"			
Beam Type	Normal (In.)	Min. (In.)	Max. (In.)
A	3	2 ½	3 ½
B	3	2 ½	3 ½
C	3 ½	2 ½	4
54	4	3	5
IV	5 ½	3 ½	7
72	5 ½	3 ½	8

Normal dimensions [redacted] used on spans with parallel beams. Maximum and Minimum dimensions [redacted] apply to spans with flared beams.

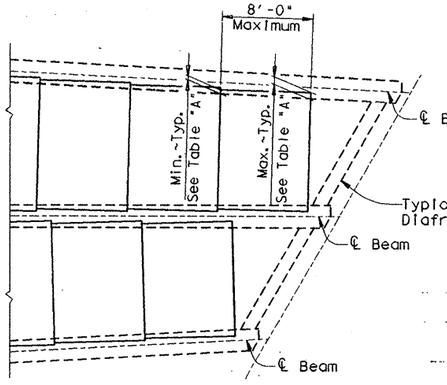

FLARED BEAM SPANS

PART PLAN

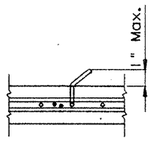

For Panels used with Epoxy Coated slab reinforcing, the loops of Bars U [redacted] field bent as shown. Bars U may be field bent to clear slab reinforcing.

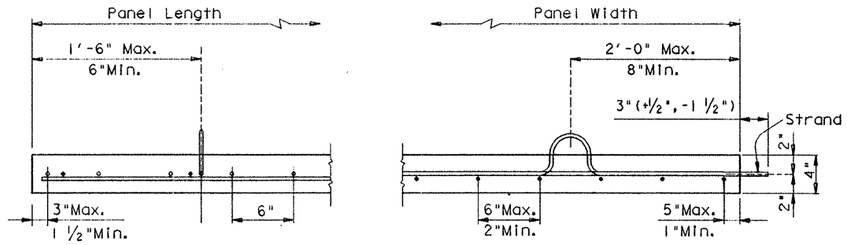

Reinforcing steel [redacted] deformed reinforcing bars, welded wire fabric or welded deformed bar mats. Minimum area of reinforcing perpendicular to strands [redacted] 0.22 sq. inches per foot. Prestressing strands [redacted] also [redacted] used, spaced at 6" for ½" strands and 4½" for ⅜" strands. Individual bars or wires [redacted] no larger than #3. Reinforcing parallel to strands [redacted] as required to ensure proper handling of the fabric or bar mat. A reasonable amount of form oil [redacted] permitted on welded fabric or bar mats.

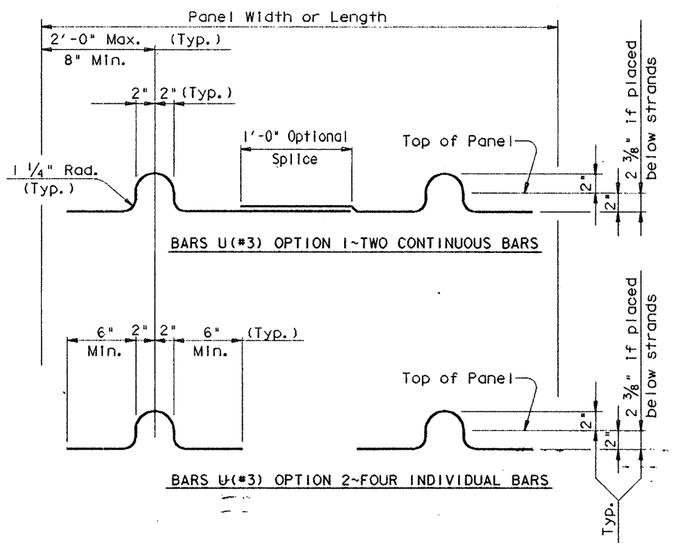

GENERAL NOTES:

Designed for HS20 Loading in accordance with AASHTO 1989 Standard and Interim Specifications.

See Cast-in-Place Slab Details for possible restrictions of the use of Prestressed Concrete Panels.

All concrete for panels [redacted] Class H. Release strength f'ci=4000 psi. Minimum 28 day strength f'c=5000 psi.

Prestressing strands [redacted] ⅜"Ø (270k) with an initial tension of 16.1 kips per strand. Larger strands [redacted] used with the same spacing and initial tension.

Suitable holes or anchorage devices for lifting panels [redacted] cast in the panels provided they are shown on the shop plans and approved by the Engineer.

Erected panels [redacted] bear uniformly on blocking strips of fiberboard placed along the outer edge of each beam. A ¼" gap [redacted] left at 3'-0" intervals to permit escape of trapped air in the cast-in-place concrete. If additional blocking is needed special grading details for supporting the panels and extra reinforcing between beam and slab [redacted] required. The cost of this additional blocking [redacted] considered subsidiary to deck construction.

Care [redacted] taken to ensure proper cleaning of construction debris and consolidation of concrete mortar under the edges of the panels. It is also important that the fiberboard strips be placed at the edges of beams so that adequate space is provided for the mortar to flow a minimum of 1 ½" under the panels as the slab concrete is placed. Roadway cross-slope reduces the opening required for proper entry of the mortar. Fiberboard blocking strips varying in thickness across the beam are therefore required. Tests have shown that careful vibration of deck concrete will allow the proper amount of mortar to flow through a ⅛" opening; however, a minimum opening of ¼" is desirable.

All reinforcing steel in the cast-in-place slab [redacted] Grade 60. See Table on Sheet 2 of 3 for size and spacing of reinforcement.

If the top and/or bottom layer of reinforcing steel is shown on the Cast-in-Place Slab Details [redacted] epoxy coated, then the OT, OC, & OM and/or OD, OB, & OE bars [redacted] epoxy coated.

Contractor Note: Details as shown on the PCP Standard sheet are [redacted] used in conjunction with the Cast-in-Place Slab Details and other applicable Standard sheets.

STATE DEPARTMENT OF HIGHWAYS AND PUBLIC TRANSPORTATION

PRESTRESSED CONCRETE PANELS

OPTIONAL DECK DETAILS FOR PRESTRESSED CONCRETE BEAM SPANS

PCP

PREPARED BY AND FOR USE OF TEXAS SDH&PT

ORIGINAL DRAWING DATE: MAR., 1992	STATE DISTRICT	FEDERAL REGION	FEDERAL AID PROJECT	SHEET
DN.: ARB	21	6	NH92( ) M	399
CK.: DWM	COUNTY	CONTROL	SECTION	JOB	HIGHWAY
DW.: JK	HIDALGO	0039	17	97	US83-281
CK.: ARB					

REVISIONS

REV. 3-30 -92

PRESTRESSED PANEL DETAILS

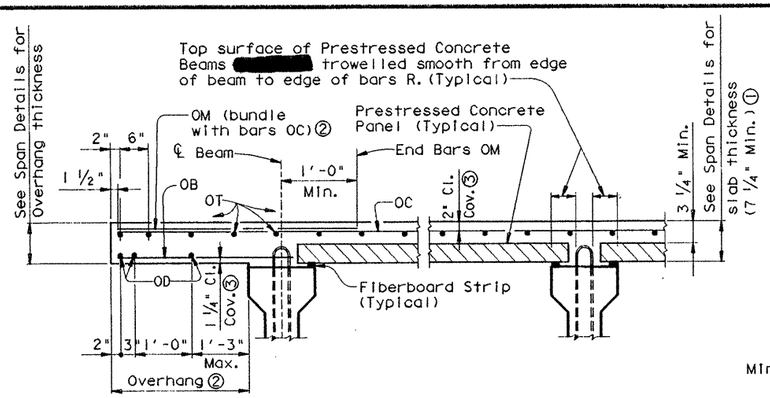

PART TRANSVERSE SECTION~TYPICAL

① The actual thickness constructed [redacted] exceed the slab thickness shown on Span Details but, at mid-span of beams the extra thickness [redacted] no more than 2". Bearing Seat Elevations or finished grade [redacted] adjusted.

② Bars OM required when slab overhang exceeds values shown in Table "B".

③ Clear cover [redacted] as indicated unless otherwise shown on Span Details. Bars OT [redacted] rest on top of prestressed concrete panels if necessary to maintain clear cover.

TABLE OF REINFORCING STEEL (Gr. 60)		
BAR	SIZE	MAX. SPA. (in.)
OA	#5	~
OB	#4	18
OC	#5	6
OD	#5	9
OE	#5	6
OM	#4	~
OT	#4	9

Max. Spa. as listed unless otherwise shown
Min. length of bars OA=5'-0"

TABLE "B"	
SLAB (in.)	OVERHANG (ft.)
7 ¼	3.250
7 ½	3.375
7 ¾	3.500
8	3.625

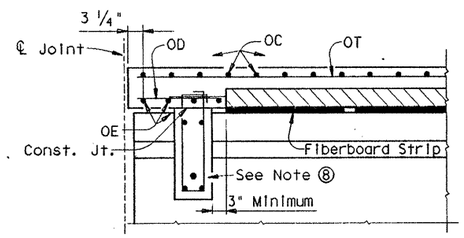

SECTION AT END DIAFRAM

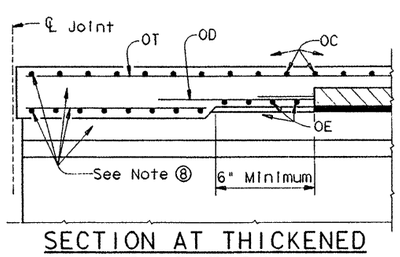

SECTION AT THICKENED SLAB ENDS

⑧ For size and spacing of reinforcing steel, see appropriate details elsewhere in plans.

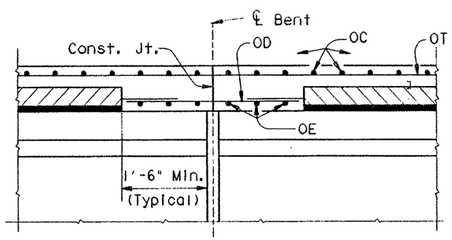

SECTION AT CONVENTIONAL INTERIOR BENT w/o DIAFRAM

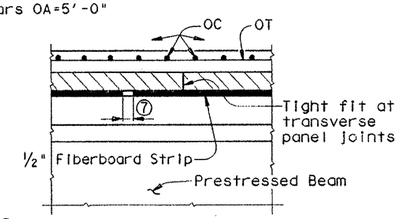

⑦ ¼" Open Joint in fiberboard at 3'-0" c/c ±. Place 6" long piece of fiberboard behind opening if necessary to reduce grout leakage.

SECTION AT TRANSVERSE PANEL JOINTS

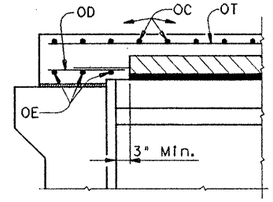

SECTION AT ABUTMENT WITH SLAB OVER BACKWALL

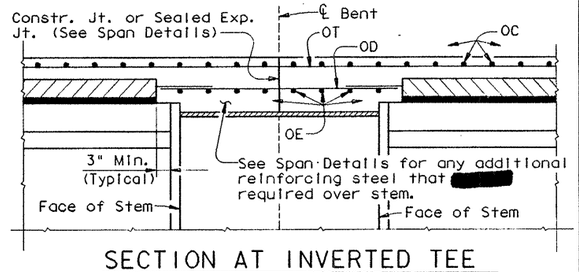

SECTION AT INVERTED TEE INTERIOR BENT

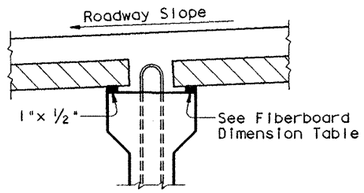

NORMAL GRADING DETAIL

Minimum fiberboard dimensions [redacted] as shown. Thicker strips [redacted] used on one or both sides of the beam to reduce cast-in-place concrete thickness, within tolerances. The thicker strips [redacted] 1"x¾", 1"x1", 1½" x 1¼" or 1½" x 1½". No more than 1½" total [redacted] used. The same thickness strip [redacted] used under any one panel edge and the maximum change in thickness between adjacent panels [redacted] ¼".

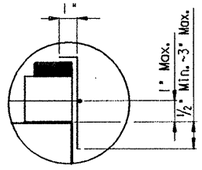

DETAIL "B"

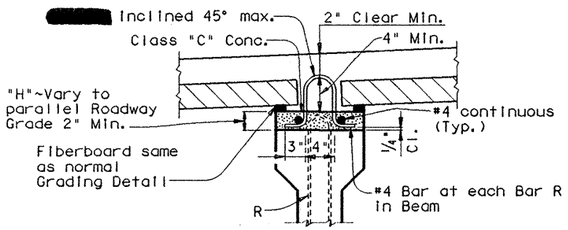

④ Concrete blocks used for special grading [redacted] any convenient plan dimension with a minimum of 2" x 4" and a maximum of 4" x 8". Heights [redacted] from 1 ⅛" to 5 ½".

⑤ Concrete blocks from 1 ⅛" high to 2" high [redacted] used without the additional R bar extensions or longitudinal No. 4 bars.

⑥ For blocks up to 3 ½" high, Use 1" x 4" 20 gage galvanized sheet metal angle and for blocks 3 ½" to 5 ½" high, use 1" x 6" 16 gage galvanized sheet metal angle. Tie sheet metal thru holes in angle at 12" centers with 14 gage minimum galvanized wire. Sheet metal angles are [redacted] overlapped at splices and left in place. Vent holes ⅜" in diameter are [redacted] placed in angles within the upper 1", spaced at 36" centers.

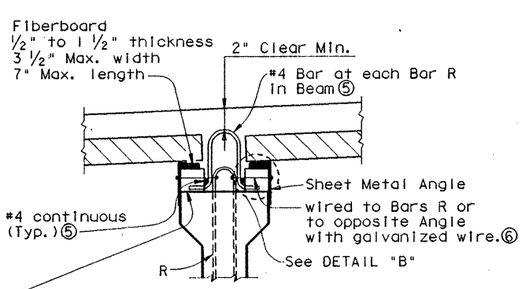

Place concrete blocks ④ at ¼ pts. of panel edges (±2" along beam). For panels 4 ft. and less the blocks [redacted] at panel corners and common to two panels. Blocks not [redacted] used with Types A and B beams.

SPECIAL GRADING DETAILS

For use where the distance between top of beam and finished grade [redacted] achieved within tolerances on cast-in-place slab thickness and thickness of fiber board strips. An alternate method [redacted] used provided it is approved by the Engineer.

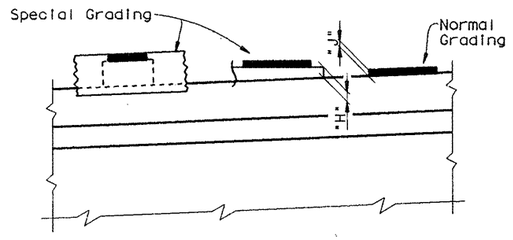

At grading method changes along the beam, the special grading "H" dimension [redacted] reduced 1¾" and the normal grading "J" dimension [redacted] increased to 2". Some cross-slope conditions [redacted] require further H and J adjustments as directed by the Engineer.

FIBERBOARD DIMENSIONS (INCHES)

BEAM	MAXIMUM ROADWAY SLOPE			
	.08'/ft.	.06'/ft.	.04'/ft.	.02'/ft.
A, B, C	1 x 1	1 x 1	1 x 1	1 x ½
54	1 ½ x 1 ½	1 x 1	1 x 1	1 x ½
IV, 72	1 ½ x 1 ½	1 ½ x 1 ½	1 x 1	1 x ½

REV. 3-30-92

1'-9" Min. lap (2'-7" Min. lap for epoxy coated reinforcing steel). See Span Details for possible special lap or splice requirements.

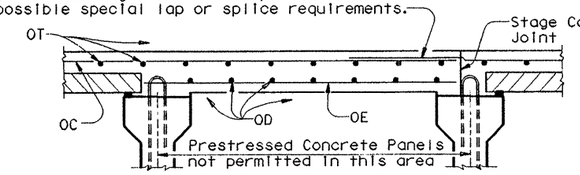

STAGE CONSTRUCTION

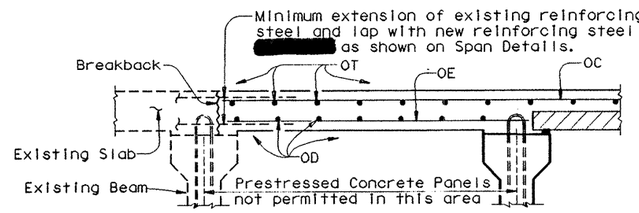

BRIDGE WIDENINGS

PART TRANSVERSE SECTIONS

Examples of potential situations where prestressed concrete panels [redacted] permitted. Refer to Cast-in-Place Slab Details for restrictions of their use.

STATE DEPARTMENT OF HIGHWAYS AND PUBLIC TRANSPORTATION

PRESTRESSED CONCRETE PANELS

OPTIONAL DECK DETAILS FOR PRESTRESSED CONCRETE BEAM SPANS

PCP

ORIGINAL DRAWING DATE: MAR., 1992		PREPARED BY AND FOR USE OF TEXAS SDHPT				
REVISIONS		STATE DISTRICT	FEDERAL REGION	FEDERAL AID PROJECT	•	SHEET
ON: ARB		21	6	NH92( )M		400
CK: DWM		COUNTY		CONTROL	SECTION	JOB	HIGHWAY
DW: JK		HIDALGO		0039	17	97	US83-
CK: ARB							

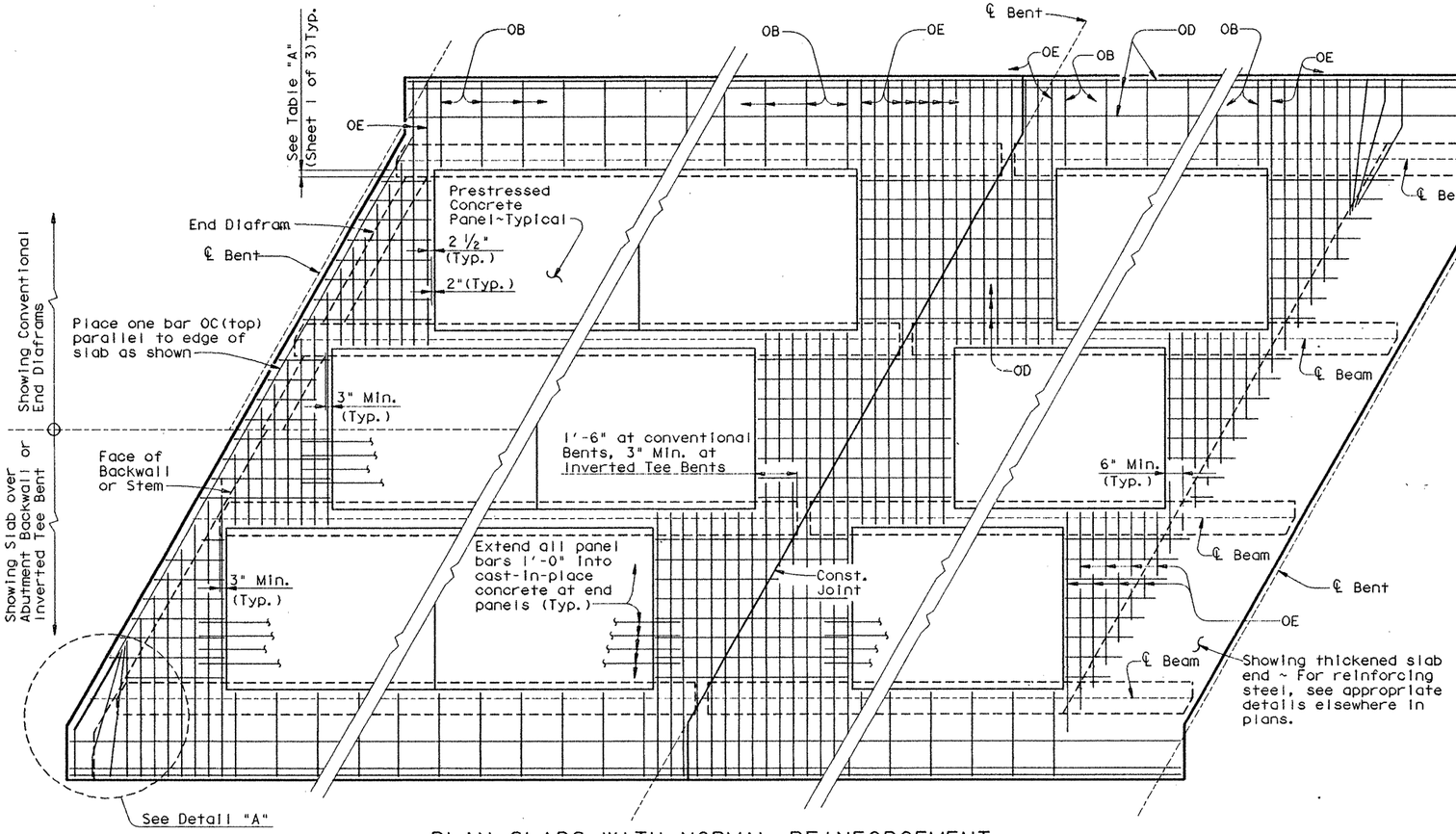

PLAN~SLABS WITH NORMAL REINFORCEMENT

(Showing bottom reinforcing steel~for top reinforcement see Typical Transverse Sections on Sheet 2 of 3 and Detail "A".)

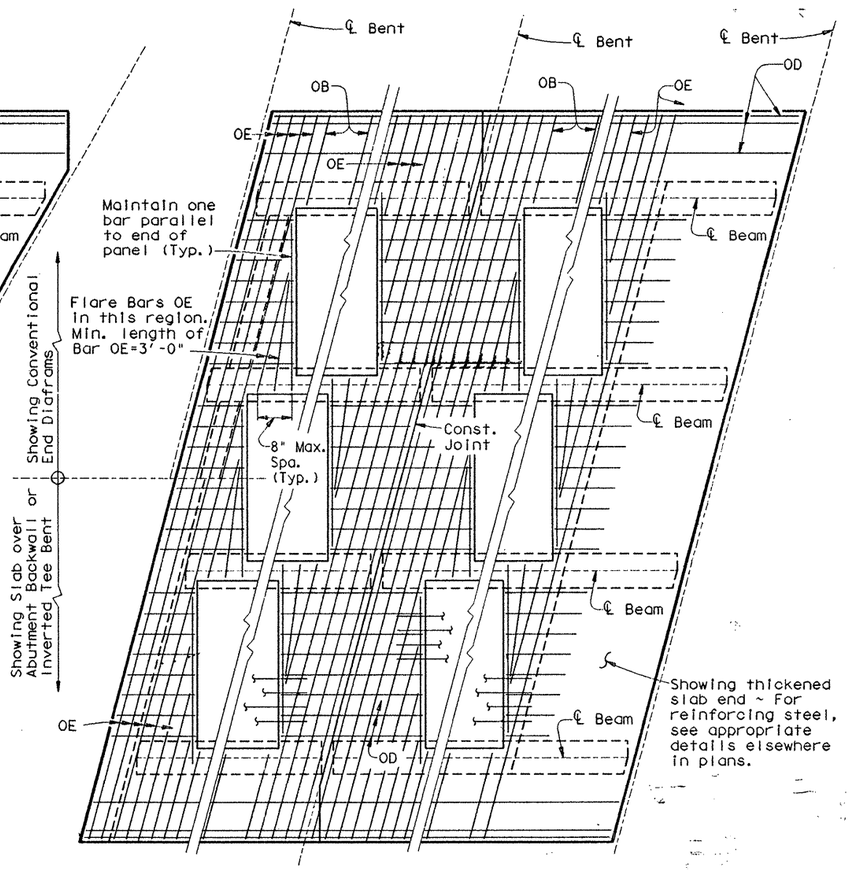

PLAN~SLABS WITH SKEWED REINFORCEMENT

(Showing bottom reinforcing steel~for top reinforcement see Typical Transverse Sections on Sheet 2 of 3.)

APPROXIMATE QUANTITIES FOR ONE SQUARE FOOT OF SLAB

(FOR CONTRACTOR'S INFORMATION ONLY)

Slab Thickness (In.)	Reinf. Steel (LB/SF)	Class S Concrete (CY/SF)
7 ¼	2.98	0.0100
7 ½	2.98	0.0108
7 ¾	2.98	0.0116
8	2.98	0.0123
8 ¼	2.98	0.0131

These approximate quantities are for a typical square foot of cast-in-place slab over the PCP. They do not include an allowance for slab overhangs, thickened ends or diaframs, or the portion between panels over the beams.

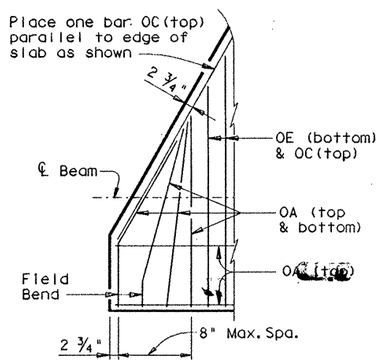

DETAIL "A"

Sheet 3 of 3

STATE DEPARTMENT OF HIGHWAYS AND PUBLIC TRANSPORTATION

PRESTRESSED CONCRETE PANELS

OPTIONAL DECK DETAILS FOR PRESTRESSED CONCRETE BEAM SPANS

PCP

ORIGINAL DRAWING DATE: MAR., 1992	REVISIONS
DR.:- ARB	
CK.:- DWM	
DR.:- JK	
CK.:- ARB	

PREPARED BY AND FOR USE OF TEXAS SDH&PT

STATE DISTRICT	FEDERAL REGION	FEDERAL AID PROJECT	SHEET
21	6	NH92( )M	400A

COUNTY	CONTROL	SECTION	JOB	HIGHWAY
HIDALGO	0039	17	97	US83-

REV. 3-30-72

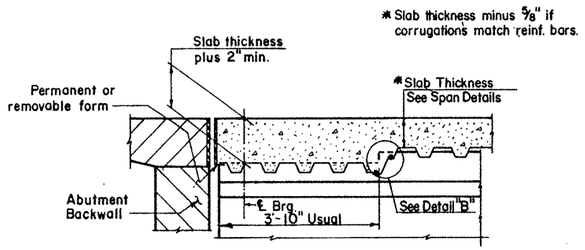

THICKENED SLAB END AT ABUTMENT OR INTERIOR BENT

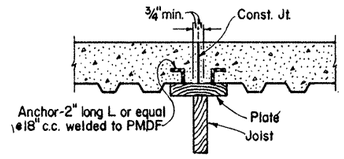

AT CONSTRUCTION JOINT

Note: In spans where PMD forms are used, timber forms [redacted] used at construction joints.
Adequate provision [redacted] made to support edge of metal form and to provide an [redacted] of metal form to slab concrete where joined to wood forms.

[redacted]

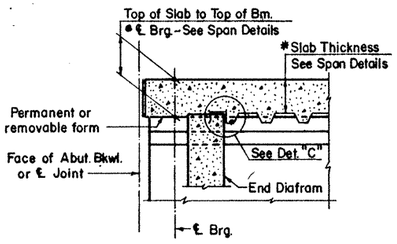

USUAL SLAB END AT ABUTMENT OR AT INTERIOR BENT

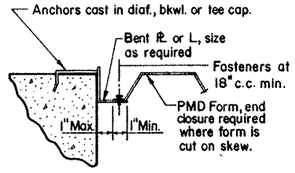

DETAIL "C"

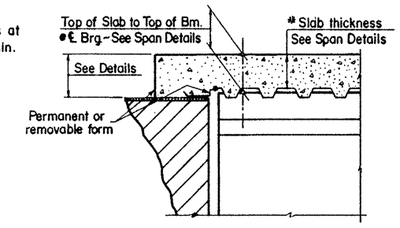

SLAB EXTENDED OVER ABUT. BKWL. OR INVERTED TEE CAP

DETAILS AT BEAM ENDS

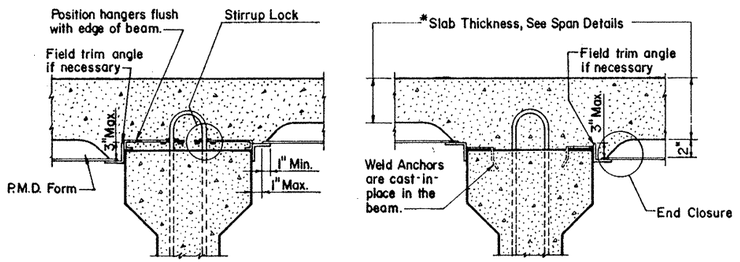

TYPICAL TRANSVERSE SECTIONS
(SHOWING VARIOUS METHODS OF ATTACHING FORMS TO BEAMS)

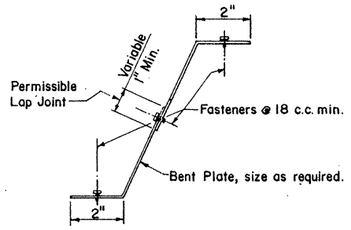

DETAIL "B"

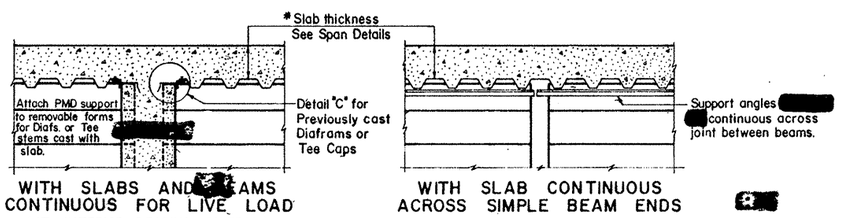

WITH SLABS AND [redacted] CONTINUOUS FOR LIVE LOAD
(AT INTERIOR BEARING DIAFRAM)

WITH SLAB CONTINUOUS ACROSS SIMPLE BEAM ENDS

[redacted]

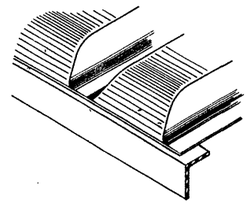

PRECLOSED

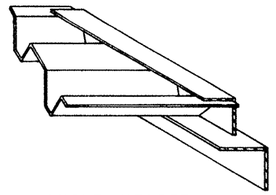

ANGLE HEADER
Note: This type [redacted] used for skewed ends only.

TYPES OF END CLOSURES

Place concrete in direction of lap. →

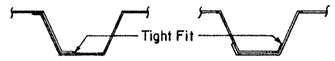

SIDE LAP DETAILS

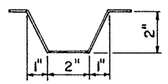

TYPICAL CORRUGATION

APPROXIMATE QUANTITIES FOR ONE SQUARE FOOT OF SLAB
(for Contractor's information only)

Slab Thickness inches	Reinf Steel Lb / SF	Class S Concrete CY/SF
7.25	4.81	0.0255
7.50	4.93	0.0262
7.75	5.06	0.0270
8.00	5.27	0.0278
8.25	5.67	0.0285

These approximate quantities are for a typical square foot of cast-in-place slab over the average PMDF with corrugations not matching bars. Truss bars are assumed in the slab. The quantities do not include an allowance for slab overhangs, thickened ends or diaframs, or possible haunch over beams.

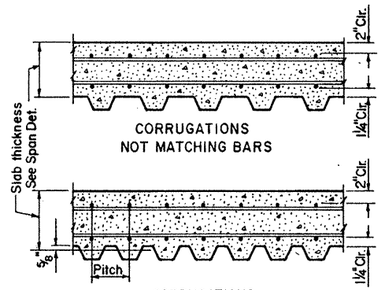

The Contractor has the option of furnishing either system if practical.

TYP. LONGITUDINAL SLAB SECTIONS

GENERAL NOTES:
Permanent Metal Deck Forms (P.M.D. Forms) [redacted] designed for the dead load of form, reinforcement and concrete plus 50 pounds per square foot for construction loads. The following allowable stresses [redacted] used in the design:

ASTM A446, Grade	Yield (psi)	Allowable Stress (psi)
A	33,000	23,900
B	37,000	26,800
C	40,000	2[redacted]
D	50,000	36,000
E	80,000	36,000
Weld Metal		[redacted]400

Maximum deflection under the weight of forms, reinforcement and concrete, or a minimum of 120 pounds per square foot [redacted] exceed 1/180 of the form span or 1/2 inch whichever is less. The design span for forms [redacted] clear distance between beam flanges measured parallel to the form flutes minus 2 inches. The minimum thickness of the form [redacted] 22 gage and that of the support angles [redacted] 14 gage. All forms [redacted] securely fastened to supports.
This Standard [redacted] used as a guide in the preparation of shop detail drawings.

[redacted]

STATE DEPARTMENT OF HIGHWAYS AND PUBLIC TRANSPORTATION

PERMANENT METAL DECK FORMS (CONCRETE)

PMDF (C)

ORIGINAL DRAWING DATE: MARCH 1986	REVISIONS	STATE DISTRICT	FEDERAL REGION	FEDERAL AID PROJECT ⊕			SHEET
DR.:-	Rev. 11-86 (Added sq. ft. quant's) Rev. 3-87	21	6	? NH 88(2)M			401
CK.:-		COUNTY		CONTROL	SECTION	JOB	HIGHWAY
DR.:- EDS		HIDALGO		039	17	097	US 83/ 281
CK.:- JSY							

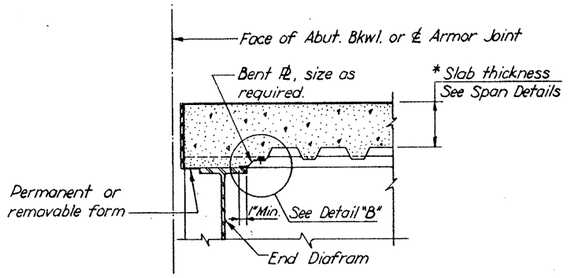

AT STANDARD SLAB ENDS

* Slab thickness minus ⅜" if corrugations match reinf. bars.

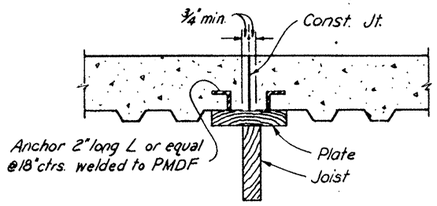

AT CONSTRUCTION JOINT

Note : In spans where PMD forms are used, timber forms [redacted] used at construction joints.
Adequate provision [redacted] made to support edge of metal form and to provide anchorage of metal form to slab concrete where joined to wood forms.

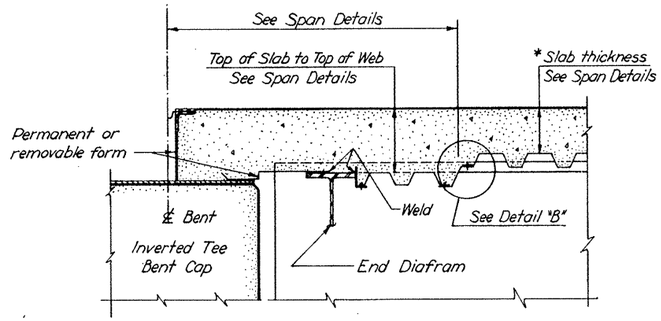

AT THICKENED SLAB ENDS

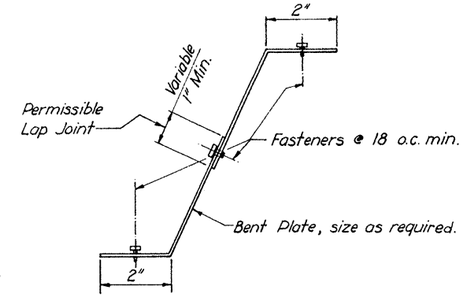

DETAIL "B"

DETAILS AT ENDS OF STEEL GIRDERS OR BEAMS

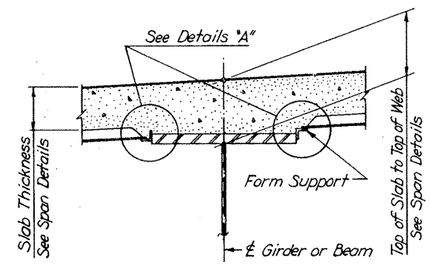

Note : Welding of form supports to flanges [redacted] permitted where indicated on Girder or Beam Elevation. Unless otherwise shown, the no weld areas for Intermediate Stiffeners [redacted] apply also to form supports.

TYP. SECTION THRU. STEEL GIRDER OR BEAM

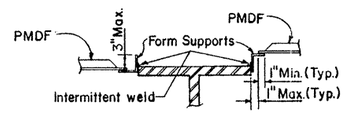

COMPRESSION FLANGES

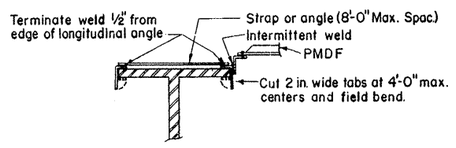

TENSION FLANGES

Other methods of providing wind holdown resistance for PMDF in tension flange zones [redacted] considered. At least one layer of sheet metal [redacted] provided between the flange and the weld joint.

DETAILS "A"

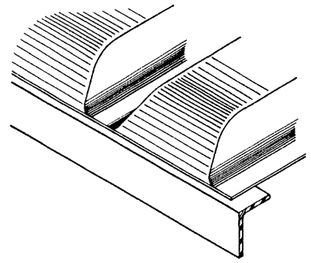

PRECLOSED

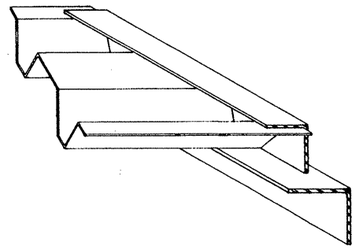

ANGLE HEADER

Note: This type to be used for skewed ends only

TYPES OF END CLOSURES

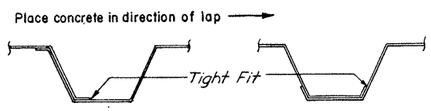

SIDE LAP DETAILS

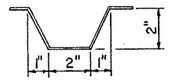

TYPICAL CORRUGATION

APPROXIMATE QUANTITIES FOR ONE SQUARE FOOT OF SLAB (for Contractor's information only)

Slab Thickness inches	Reinf Steel Lb/SF	Class S Concrete CY/SF
7.25	4.81	0.0255
7.50	4.93	0.0262
7.75	5.06	0.0270
8.00	5.27	0.0278
8.25	5.67	0.0285

These approximate quantities are for a typical square foot of cast-in-place slab over the average PMDF with corrugations not matching bars. Truss bars are assumed in the slab. The quantities do not include an allowance for slab overhangs, thickened ends or diaframs, or possible haunch over beams.

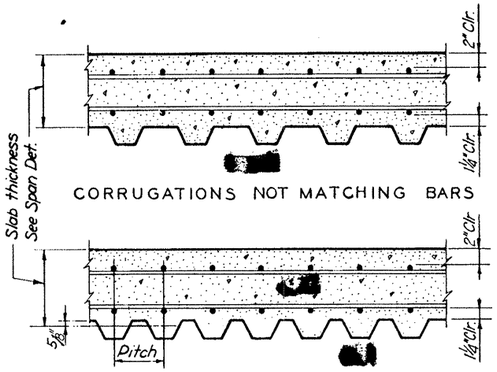

The Contractor has the optio[redacted] furnishing either system, if practical.

TYP. LONGITUDINAL [redacted] SECTIONS

GENERAL NOTES:

Permanent Metal Deck Forms (P.M.D. Forms) [redacted] designed for the dead load of form, reinforcement and concrete plus 50 pounds per square foot for construction loads. The following allowable stresses [redacted] used in the design :

ASTM A446, Grade	Yield (psi)	Allowable Stress (psi)
A	33,000	23,900
B	37,000	26,800
C	40,000	29,000
D	50,000	36,000
E	80,000	36,000
Weld Metal		12,400

Maximum deflection under the weight of forms, reinforcement and concrete, or a minimum of 120 pounds per square foot [redacted] exceed 1/180 of the form span or ½ inch whichever is less. The design span for forms [redacted] clear distance between beam flanges measured parallel to the form flutes minus 2 inches. The minimum thickness of the form [redacted] 22 gage and that of the support angles [redacted] 14 gage. All forms [redacted] securely fastened to supports.

This Standard [redacted] used as a guide in the preparation of shop detail drawings.

STATE DEPARTMENT OF HIGHWAYS AND PUBLIC TRANSPORTATION

PERMANENT METAL DECK FORMS (STEEL BEAMS)

PMDF (S)

ORIGINAL DRAWING DATE: DEC. 1980		STATE DISTRICT	FEDERAL REGION	FEDERAL AID PROJECT		SHEET
DM.:- BRW	REVISIONS	21	6	NH 92(), M		4-02
CK.:- THD	Rev. 3-85	COUNTY		CONTROL	SECTION	JOB	HIGHWAY
DW.:- RNS	Rev. 3-86	HIDALGO		0039	17	097	[redacted]
CK.:- BRW	Rev. 11-86 (Added sq. ft. quant's)						

Place # 5 bar in plane of bottom slab reinforcement for conventional or PMD Forming. #5 bars to rest on Panels and bent down to beam reinforcement when Prestressed Panels are used.

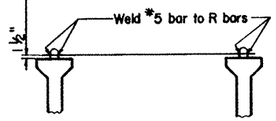

PERMANENT TOP BRACING

⑤

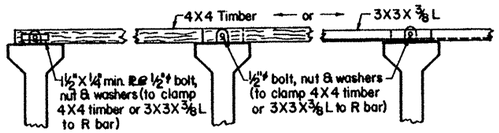

ELEVATION

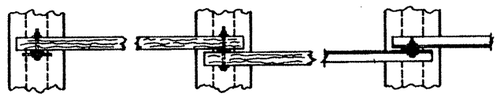

PLAN

TEMPORARY TOP BRACING

④

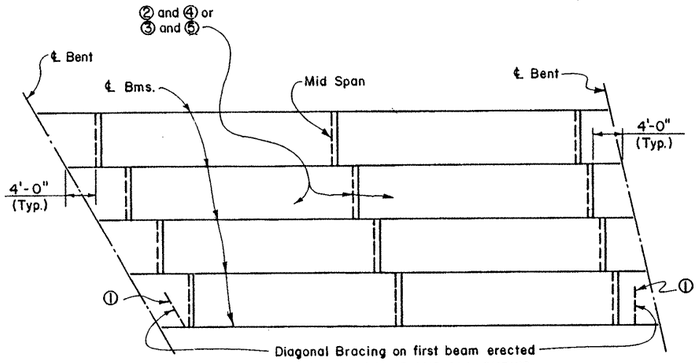

NORMAL SPANS AND ALL SKEWS

ERECTION BRACING

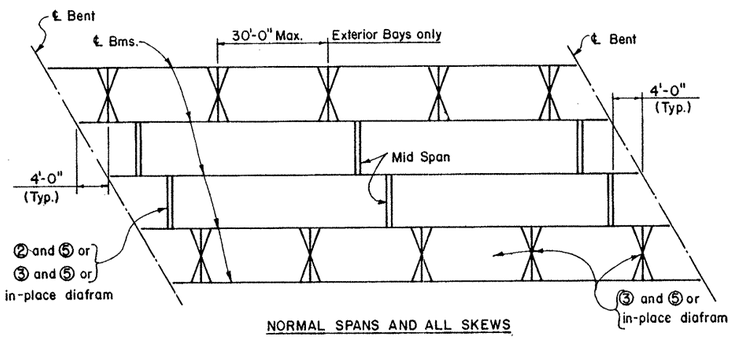

NORMAL SPANS AND ALL SKEWS

SLAB PLACEMENT BRACING

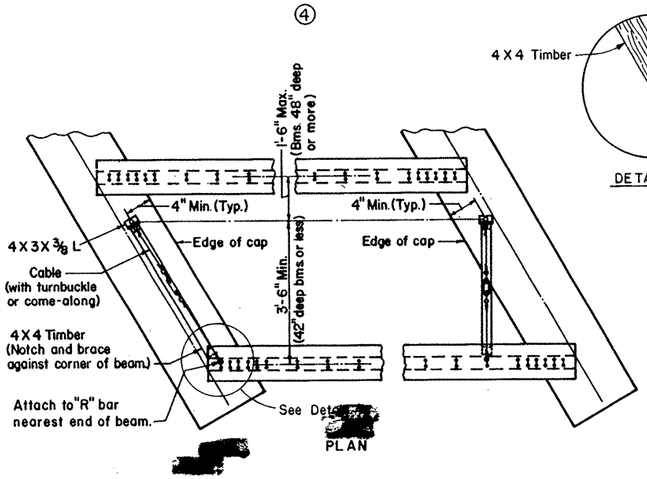

PLAN

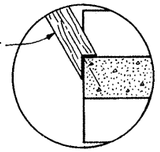

DETAIL A

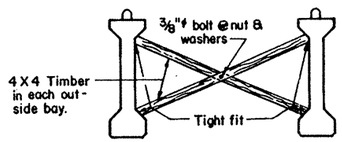

"X" BRACING

③

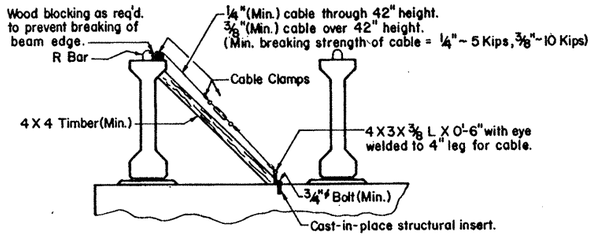

END VIEW

DIAGONAL BRACING DETAILS

(used on both ends of the first beam erected in the span.)

①

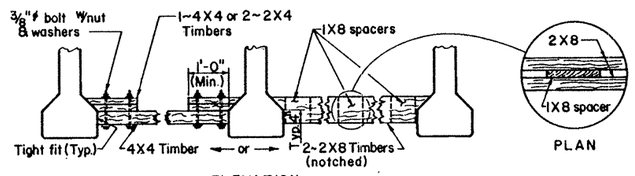

ELEVATION

PLAN

BOTTOM FLANGE BRACING DETAILS

②

GENERAL NOTES:

ERECTION BRACING:

Erection bracing details are considered minimum for fulfilling the requirements of Specification Item 425 (Article 425.5), and Special Provisions thereto, for bracing Types A,B,C, III, IV and V prestressed concrete beams erected in the span over a traveled way or railroad, and in those spans generally parallel to a traveled way or railroad and within a distance equal to the difference in elevation between the top of cap upon which the beams are being erected and the traveled way, or 30 feet, whichever is greater.

Required erection bracing placed immediately after erection of beam and remain in place until diafram bars DN are tightened or additional bracing as required for slab placement is in place.

SLAB PLACEMENT BRACING:

The details for slab placement bracing are considered minimum for fulfilling the requirements of Specification Item 420, Article 420.9(4) and special provisions thereto.

Required slab placement bracing remain in place until the slab concrete has attained a flexural strength of 500 p.s.i.

GENERAL:

Bracing details for closely spaced beams (as on ramps or railroad structures) are not included herein. The Contractor submit his proposed bracing details for such cases to the Engineer for approval prior to erection.

Systems equal to or better than those shown used provided details of such systems are submitted to and approved by the Engineer prior to erection.

Use of these systems and/or details does not relieve the Contractor of the responsibility for the adequacy of the bracing and the safety of the structure.

Removal of bracing for short periods of time to align permissible.

Bottom flange bracing at beam ends omitted beams are fixed with dowel bars or when erection is on steel caps or floor beams containing bearing seats which restrict lateral movement.

All turn-buckles, come-alongs and other connections capable of developing the full strength of the cable shown hereon.

Indicates Diagonal Bracing ①

Indicates Bottom Bracing ② with Temporary Top Bracing ④ or "X" Bracing ③ with Permanent Top Bracing ⑤.

Indicates Permanent Top Bracing ⑤

Indicates Bottom Bracing ② or "X" Bracing ③, either one with Permanent Top Bracing ⑤ or an in-place diafram only.

Indicates "X" Bracing ③ & Permanent Top Bracing ⑤ or an in-place diafram only.

STATE DEPARTMENT OF HIGHWAYS AND PUBLIC TRANSPORTATION

PRESTRESSED CONCRETE BEAMS

TYPES A,B,C, III, IV & V

MINIMUM ERECTION AND BRACING REQUIREMENTS

PCB-MEBR(1)

ORIGINAL DRAWING DATE: DEC 1980	STATE DISTRICT	FEDERAL REGION	FEDERAL AID PROJECT #	SHEET
DN.:-THD REVISIONS	21	6	NH 92(1)M	403
CK.:-THD	COUNTY	CONTROL	SECTION	JOB	HIGHWAY
DW.:-EDS	HIDALGO	039	17	097	US 83
CK.:-THD					

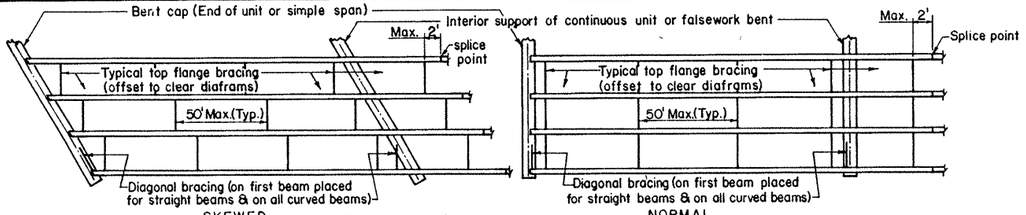

TYPICAL BRACING PLANS

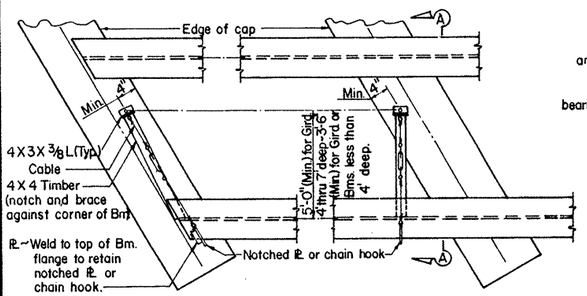

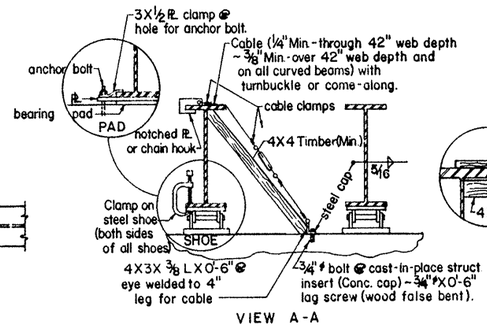

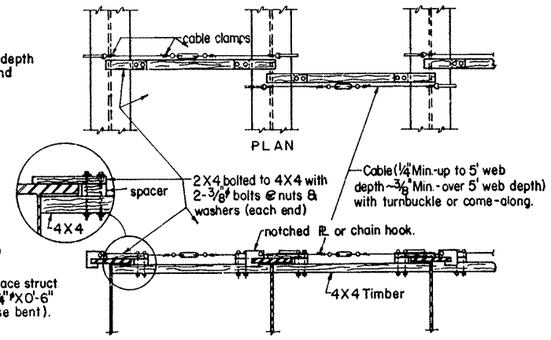

DIAGONAL BRACING DETAILS

([redacted] used at all bents on the first beam erected in the stage for straight beams and on all curved beams when erected in single beam lines).

TOP FLANGE BRACING DETAILS

Min. breaking strength of cables = ¼" ~ 5 Kips , 3/8" ~ 10 Kips

BEAM BRACING DETAILS

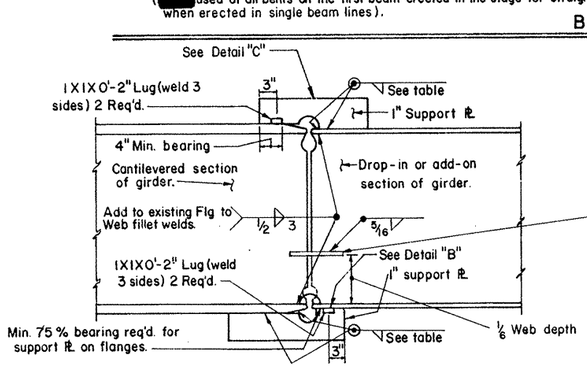

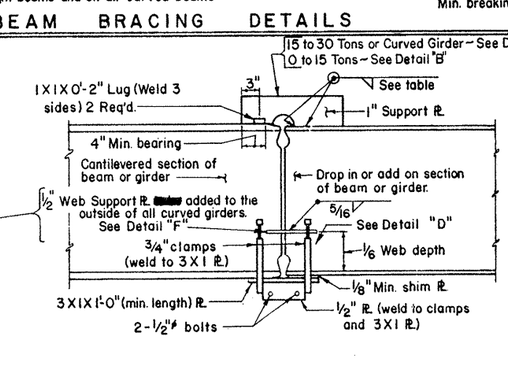

ELEVATIONS OF TYPICAL SPLICE SUPPORTS

NOTE: All top and bottom flange support plates [redacted] in place before the beam or girder is erected; web plates and lugs [redacted] attached immediately after erection. Care [redacted] exercised in removing the support plates and lugs. Flange and web [redacted] ground smooth after their removal.

⊙ Weights indicated are total weight of drop-in section. Special design [redacted] required when weight of drop-in section exceedes 50 Tons or supported reaction of add-on section exceeds 25 Tons.

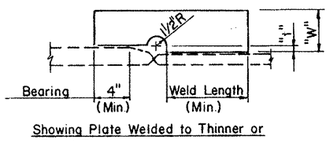

Showing Plate Welded to Thinner or Equal Flange

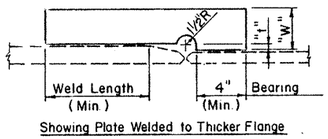

Showing Plate Welded to Thicker Flange

SUPPORT PLATE DETAILS

"t" inches	℄ to 15^T or 2 ℄s ~ 15^T to 30^T					3 ℄s ~ 30^T to 50^T				
	"W"	Req'd. Weld Length				"W"	Req'd. Weld Length			
		5/16" Weld	3/8" Weld	7/16" Weld			5/16" Weld	3/8" Weld	7/16" Weld	½" Weld
0 to ½	6"	10"	10"	10"		7"	15"	13"	12"	10"
½ to 1½	8"	12"	11"	10"		9½"	18"	16"	14"	12"

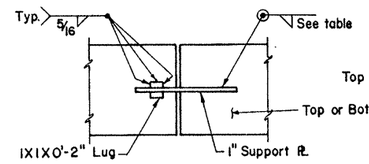

PLAN
DETAIL "B"

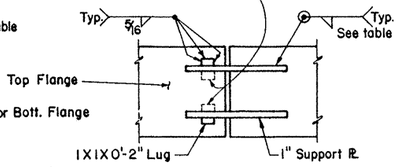

PLAN
DETAIL "C"

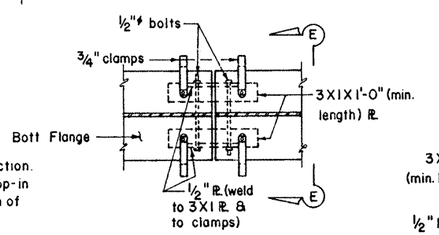

PLAN
DETAIL "D"

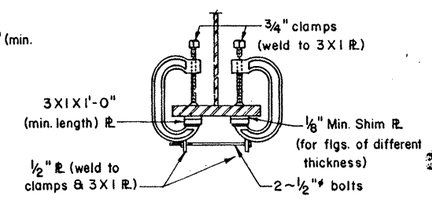

SECTION E-E

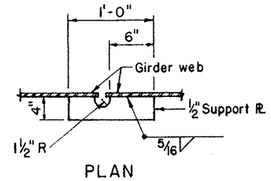

PLAN
DETAIL "F"

Web support plates [redacted] used for single line erection of curved girders.

GENERAL NOTES:

Complete erection and falsework plans as required by the item "Steel Structures" [redacted] required, and [redacted] approved by the Engineer prior to erection. These suggested details are considered minimum for fulfilling the requirements of specification Item 441, (Article 441.28) and special provisions thereto for all plate girders up to 7ft. depth regardless of where erected. They are also considered minimum for bracing I-beams erected in the span over a traveled way or railroad, and in those spans generally parallel to a traveled way or railroad and within a distance equal to the difference in elevation between the top of cap upon which the beams are being erected and the traveled way, or 30 feet, whichever is greater.

Bracing and splice point support systems equal to or better than those shown [redacted] used provided details of such systems are submitted to and approved by the Engineer prior to erection.

The Contractor [redacted] submit to the Engineer for approval prior to erection, details of erection, bracing and splice joint supports for conditions not covered hereon.

Use of these systems and or details [redacted] not relieve the Contractor of the responsibility of the adequacy of the bracing and safety of the structure.

STRAIGHT BEAMS AND GIRDERS

The suggested bracing details and erection requirements are considered minimum for all plate girders 7 foot or less in depth (haunch depth governs) and spaced 10 feet or less c.c. of girder. The splice-point support systems shown are considered minimum for I-beams and plate girders for the maximum weights shown.

Diagonal bracing [redacted] located at caps and falsebents when using single beam line erection. Top flange bracing [redacted] located near the ends of beam or girder segments and spaced not to exceed 50 feet. Erection bracing [redacted] removed until permanent lateral bracing (when required) and all diaframs in any segment are bolted in place (bolts fully tightened).

Welding of splice point support plates [redacted] by a certified welder, using E70I8 or higher strength Low Hydrogen Electrodes, and inspected and approved by the Engineer prior to erection. Support plates [redacted] removed until a minimum of 50 percent of the flange thickness of both flanges is welded, except that over a traveled way or railroad a minimum of 90 percent of the flange thickness of both flanges [redacted] welded prior to removal.

All turn-buckles, come-a-longs and other connections [redacted] capable of developing the full strength of the minimum size cable required.

Bracing details for plate girders over 7 feet in depth (haunch depth governs), girders spaced more than 10 feet c.c., closely spaced members (as on ramps or railroad structures), members bearing on a single column, and girders framed with floor beams are not shown.

CURVED BEAMS AND GIRDERS

Minimum requirements for straight beams and girders [redacted] apply except as noted.

Web support plates and a minimum of 2 support plates on the top flange [redacted] required to prevent rotation. Clamps [redacted] permitted as supports, but [redacted] used for alignment purposes.

All girder sections with a radius of curvature less than $.208L^2$ for channel diafram systems and $.104L^2$ for "X" braced diafram systems [redacted] supported at three points during erection and welding of splices. "L" is the distance between supports of the beam or girder section. Support plate connections at the joints [redacted] supplemented by the use of a falsebent or a support system near the center of the curved section. For continuous units the falsebents or support system [redacted] removed until the beams or girders are extended over three or more permanent bents, all splices welded and all diaframs bolted or welded in place on that section. In lieu of erection with three point support, other methods, such as [redacted] girder assembly erection, [redacted] used if shown adequate by the contractor's calculations and approved by the Engineer.

Beam and girder sections with a radius of curvature greater than that shown [redacted] may be erected without falsework providing high strength bolts (ASTM A-325) are used as erection bolts.

[redacted]

STATE DEPARTMENT OF HIGHWAYS AND PUBLIC TRANSPORTATION

STRUCTURAL STEEL

MINIMUM ERECTION AND BRACING REQUIREMENTS

PREPARED BY THE [redacted] USE OF TEXAS [redacted]

SS-MEBR

ORIGINAL DRAWING DATE: DEC. 1980		STATE DISTRICT	FEDERAL REGION	FEDERAL AID PROJECT ⊙		SHEET
DW.:-THD	REVISIONS	21	6	NH 92( )M		404
CK.:-LEC		COUNTY		CONTROL	SECTION	JOB	HIGHWAY
DW.:-EDS		HIDALGO		039	17	097	US 83 281
CK.:-LEC							

PRESTRESSED CONCRETE UNITS

W12-3 CLEARANCE SIGN

BEAM	"Y"	"Z"
TY. A	2 9/16"	3 5/8"
TY. B	2 1/4"	3 3/16"
TY. C	2 1/4"	3 3/16"
TY. 54	2 1/4"	3 3/16"
TY. 72	2 1/4"	3 3/16"
TY. IV	6 1/8"	8 13/16"
BOX BEAM		
20	1 15/16"	2 3/4"
28	2 9/16"	3 5/8"
34	2 9/16"	3 5/8"
40	2 9/16"	3 5/8"

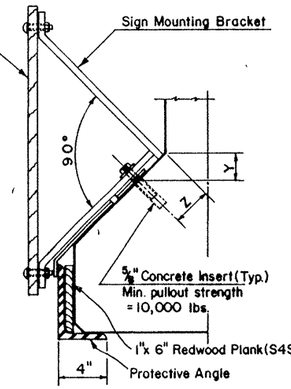

C BEAM, 54, 72
& TY. IV BEAMS &
34" & 40" BOX BEAMS

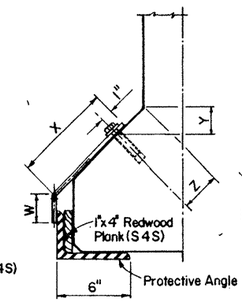

TY. B BEAM

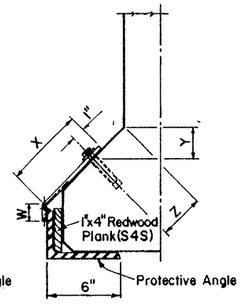

TY. A BEAM &
20" & 28" BOX BEAMS

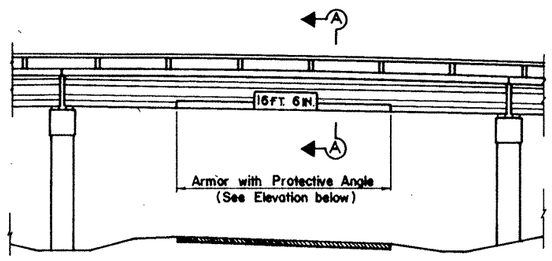

TYPICAL BRIDGE ELEVATION

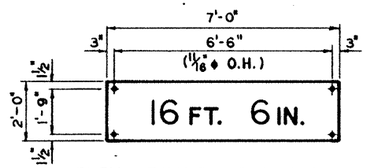

ELEV. OF W12-3 CLEARANCE SIGN

CONCRETE SLAB OR GIRDER UNITS

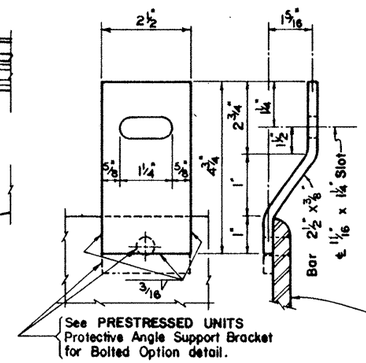

PROTECTIVE ANGLE SUPPORT BRACKET

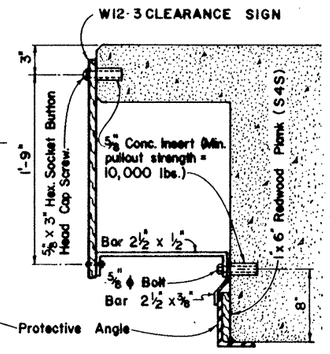

SEC. A-A

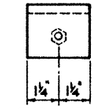

END VIEW

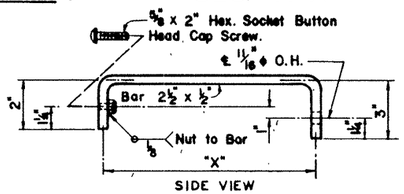

SIDE VIEW

OVERHANG	9 1/4"	1'-3 1/4"	1'-9 1/4"
X	8 3/8"	1'-2 3/8"	1'-8 3/8"

CLEARANCE SIGN MOUNTING BRACKET (2 PER SIGN)

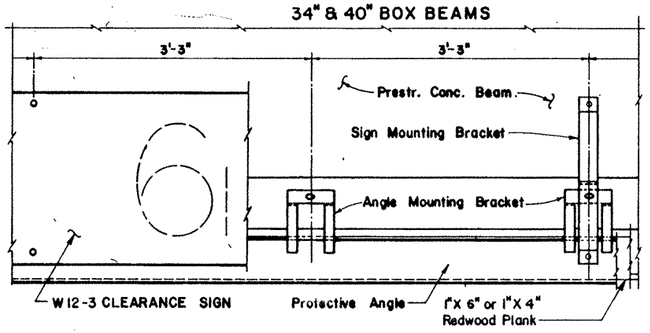

ELEVATION OF PROTECTIVE ANGLE

{ L 6" X 4" X 1/2" thick or thicker ‡
{ L 6" X 6" X 1/2" thick or thicker ‡

‡ X, W & V Dimensions may need adjusting for thicker angles.

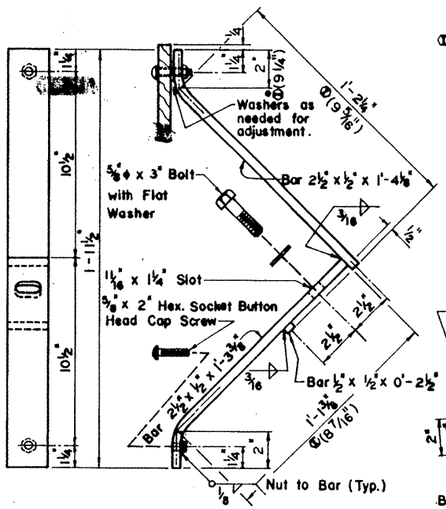

TYPICAL INSTALLATION OF CLEARANCE SIGN & PROTECTIVE ANGLE

① For 20 and 28 Boxes and Type A Beams only.

* See Prestr. Conc. Beam Details above.

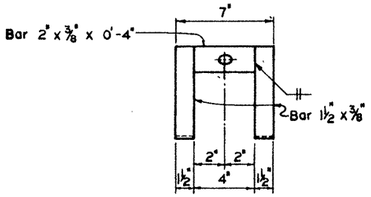

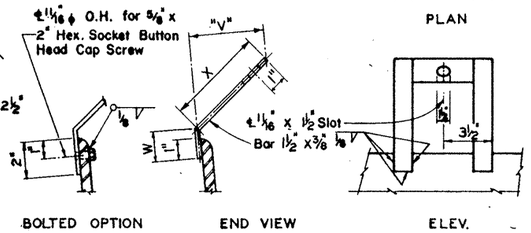

BOLTED OPTION END VIEW ELEV.

BEAM	"X"	"W"	"V"
TY. A	6 5/16"	1 5/16"	4 7/16"
TY. B	7 13/16"	2 5/16"	5 1/2"
TY. C	10 5/16"	1 5/16"	7 5/16"
TY. 54	6 3/4"	2 5/16"	4 3/4"
TY. 72	10 5/16"	5 5/16"	7 5/16"
TY. IV	6 13/16"	2 5/16"	4 13/16"
BOX BEAM	"X"	"W"	"V"
20	5 3/4"	1 5/16"	4 1/16"
28	6 5/16"	1 5/16"	4 7/16"
34	6 5/16"	5 5/16"	4 7/16"
40	6 5/16"	11 5/16"	4 7/16"

STEEL GIRDER & I-BEAM UNITS

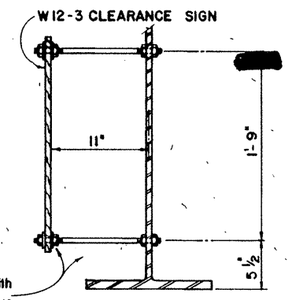

CLEARANCE SIGN MOUNTING BOLTS

CLEARANCE SIGN MOUNTING BRACKET
(2 REQUIRED PER SIGN)

PROTECTIVE ANGLE SUPPORT BRACKET

Notch out Redwood Plank to accommodate bolt and nut and add 1" to "W" dimensions when BOLTED OPTION is used.

GENERAL NOTES:

Designed according to A A S H T O 1973 Standard and current Interim Specifications.

Protective Angles and Support Brackets [redacted] Structural steel conforming to A.S.T.M. Designation A36, A441, A572 or A588 and [redacted] shipped in convenient lengths (11'-0" Min.).

Redwood Planks [redacted] beveled to clear inside radius of Protective Angle and [redacted] full length of angle. Joints in plank [redacted] coincide with joints in angle.

Either clearance signs, protective angles or both together [redacted] installed using these details. For clearance signs these details are appropriate for [redacted] angles up to 30°. For protective angles these details are appropriate for any skew.

Plans [redacted] the complete assembly consisting of protective angle and mounting brackets, sign and sign mounting [redacted], or [redacted] require only portions of this assembly, all as noted on the Structure Layout sheet.

STATE DEPARTMENT OF HIGHWAYS AND PUBLIC TRANSPORTATION

BRIDGE PROTECTIVE ASSEMBLY

PREPARED BY AND FOR THE USE OF TEXAS SDH &PT

BPA

ORIGINAL DRAWING DATE: DEC. 1980		STATE DISTRICT	FEDERAL REGION	FEDERAL AID PROJECT		SHEET
DN.: THD	REVISIONS	21	6	NH 92(7)M		405
CK.: THD	Rev. 5-14-81 Rev. 5-14-86	COUNTY		CONTROL	SECTION	JOB	HIGHWAY
DW.: AS	Rev. 4-30-84 (Support Bracket)	HIDALGO		039	17	097	US 83 SH 281
CK.: VTB	Rev. 10-1-84 (Support Bracket)						

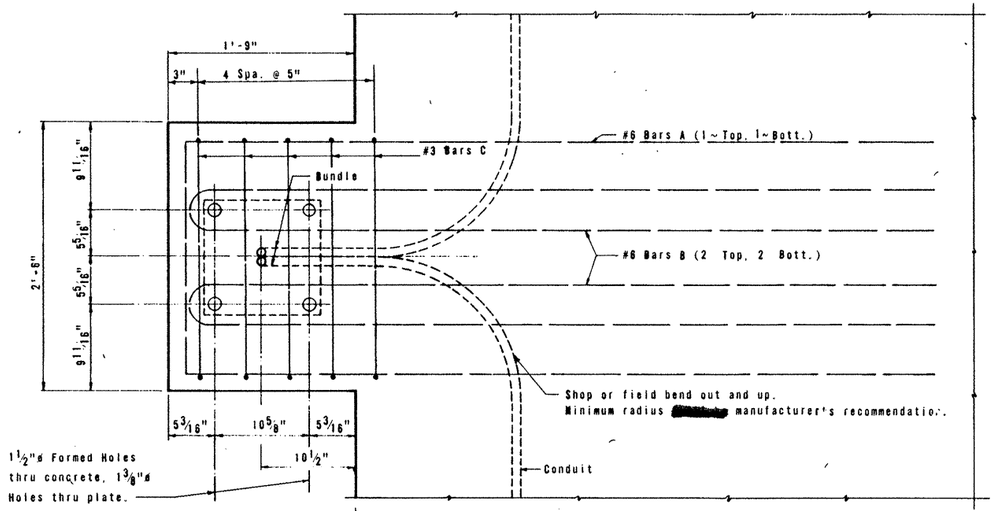

PLAN

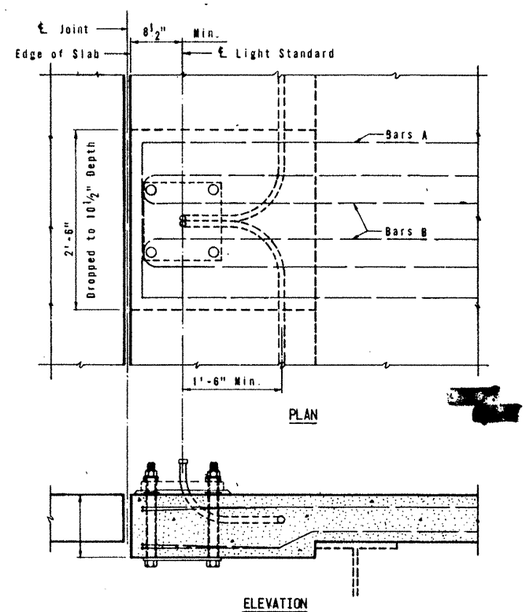

ESTIMATED QUANTITIES ~ ONE BRACKET

	ITEM	UNIT	OUTSIDE	MEDIAN
①	CONCRETE	C.Y.	0.2	0.1
	REINFORCING STEEL	LB.	146	134
②	STRUCTURAL STEEL	LB.	45	45
③	CONDUIT	L.F.	4	4

① Variation due to Slab thickness is insignificant.
② Anchor Bolts and Plate.
③ Additional to main run

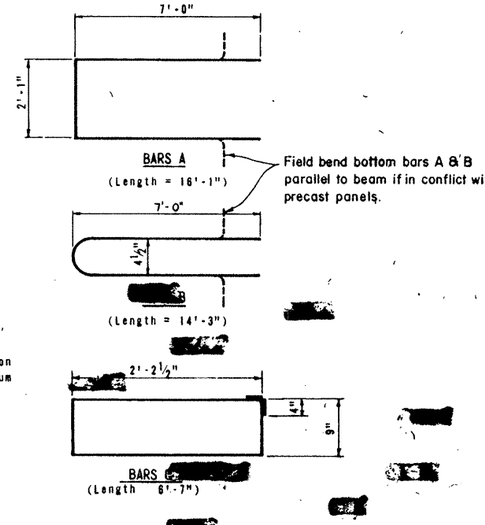

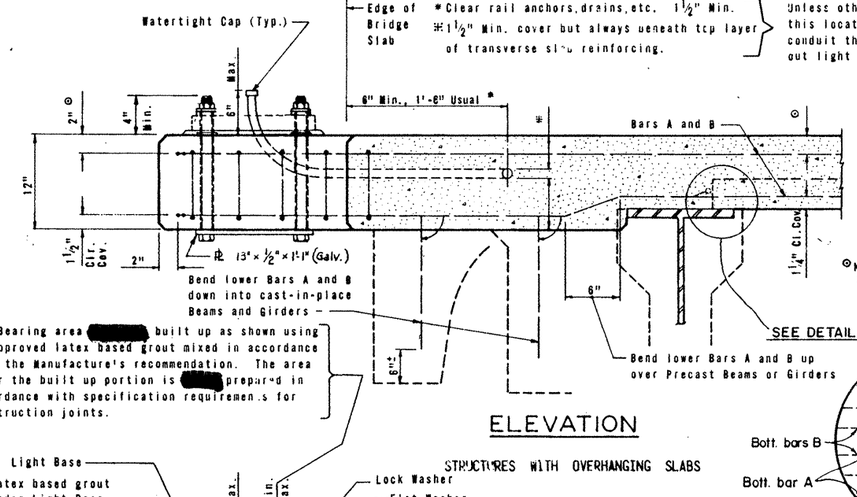

ELEVATION

STRUCTURES WITH OVERHANGING SLABS

* Clear rail anchors, drains, etc. 1 1/2" Min.
# 1 1/2" Min. cover but always beneath top layer of transverse slab reinforcing.

Unless otherwise specified, this location applies also to conduit through bridges without light standard brackets.

Edge of Bridge Slab

⊙ Note Bars A & B 2" Min. clear cover. Place beneath top slab reinforcing only if necessary to provide this min. cover.

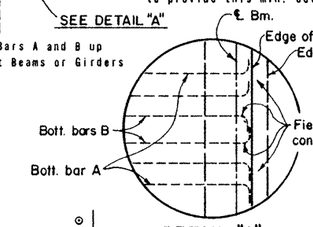

DETAIL "A"

The Bearing area [redacted] built up as shown using an approved latex based grout mixed in accordance with the Manufacture's recommendation. The area under the built up portion is [redacted] prepared in accordance with specification requirements for construction joints.

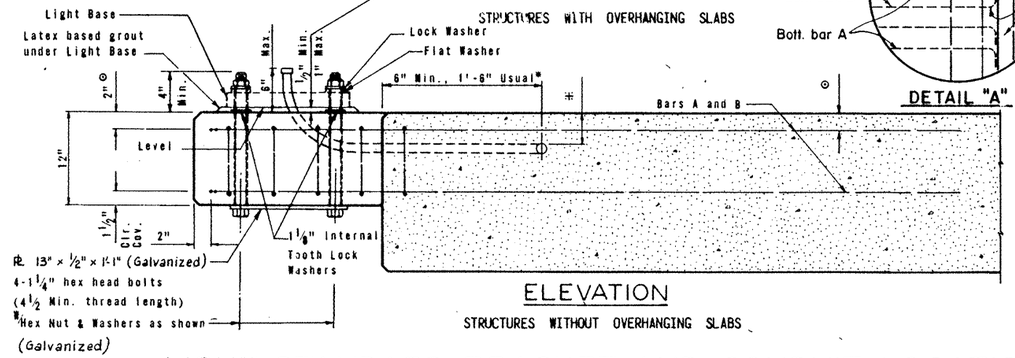

ELEVATION

STRUCTURES WITHOUT OVERHANGING SLABS

LIGHT STANDARD BRACKET AND CONDUIT LOCATION

DETAILS FOR MOUNTING LIGHT STANDARD IN MEDIAN

(Same as [redacted] mounting except as shown)

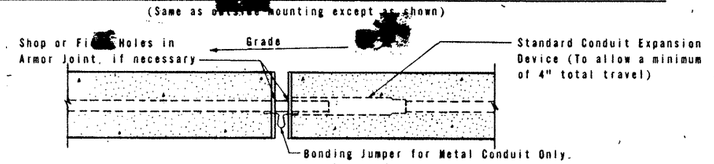

CONDUIT EXPANSION JOINT

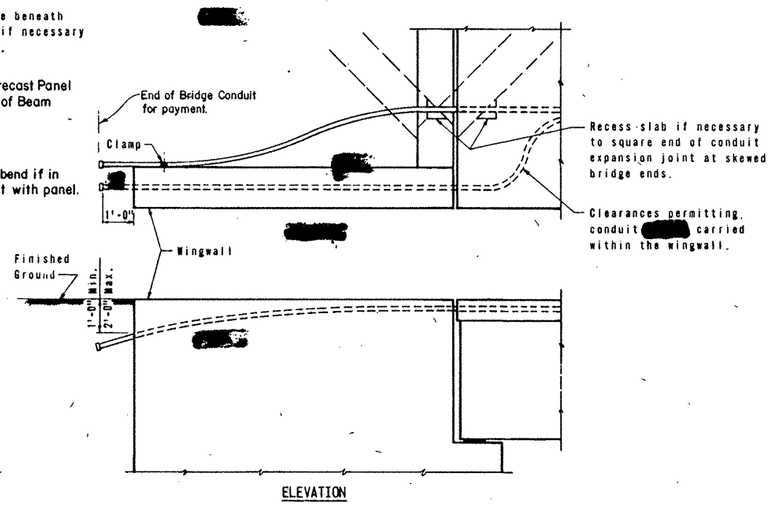

TREATMENT AT BRIDGE ENDS

GENERAL NOTES:

Designed for [redacted] MPH wind, 50' standard, 15' arm, 250# luminaire [redacted] 5% overstress.

Concrete for brackets [redacted] of the same type as, placed monolithically with and paid for at the unit price bid for the bridge slab.

The type and size of conduit and the number and location of brackets [redacted] as shown elsewhere in the plans. Brackets found to conflict with other components of the bridge [redacted] relocated to clear.

Unless otherwise specified, light standards are [redacted] furnished and paid for under future contract.

STATE DEPARTMENT OF HIGHWAYS AND PUBLIC TRANSPORTATION

BRIDGE LIGHTING DETAILS

PREPARED BY AND FOR THE USE OF TEXAS SDHPT.

BL

ORIGINAL DRAWING DATE: DEC 1980		STATE DISTRICT	FEDERAL REGION	FEDERAL AID PROJECT	SHEET
DN.:-LEC	REVISIONS	21	6	NH 9A(2)M	[redacted]
CK.:-BRW	Rev. 3-85(Bars A&B for panels)	COUNTY		CONTROL SECTION JOB	HIGHWAY
DW.:-RLR		HIDALGO		039 17 097	US 281
CK.:-LEC					STH

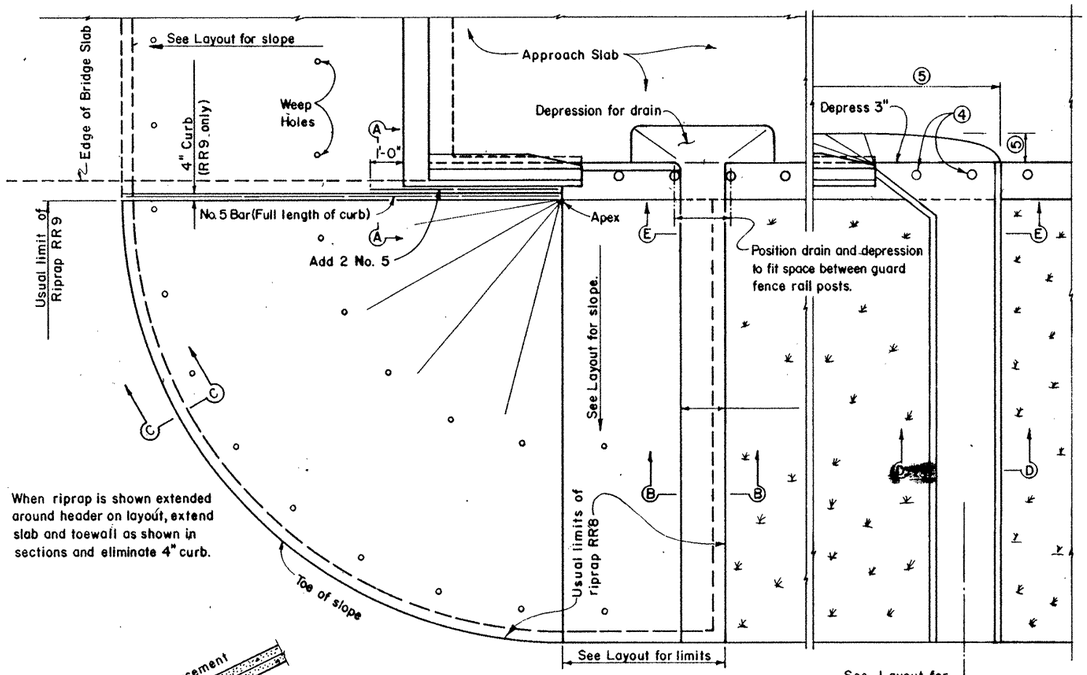

PLAN

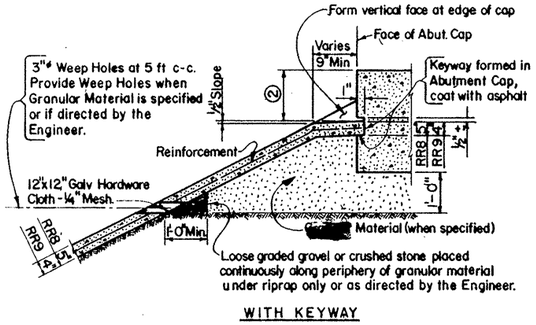

WITH KEYWAY

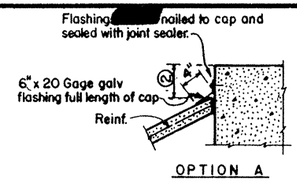

OPTION A

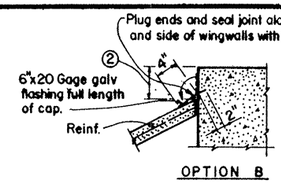

OPTION B

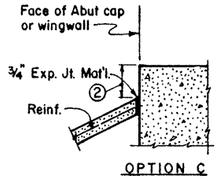

OPTION C

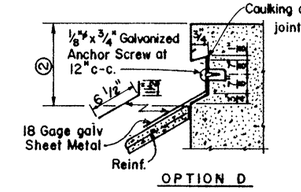

OPTION D

The sealing option of the joint between the face of cap and riprap as designated by the Engineer.
Options A or C used at wingwalls in all cases.

SECTIONS THRU RIPRAP AT CAP

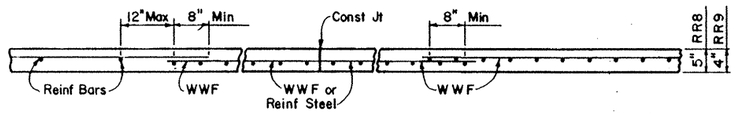

Reinforcing bars No. 3 at 18 in. spac c-c.
Welded wire fabric W2.9 x W2.9.
Combinations of WWF and reinforcing bars used if both are permitted. Lap splices a minimum of 8 inches, measured from the transverse wire of WWF.

SECTION THRU REINFORCING AND CONST JOINT

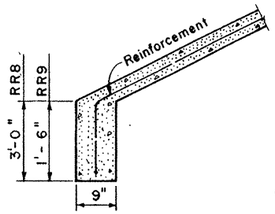

SEC. C-C

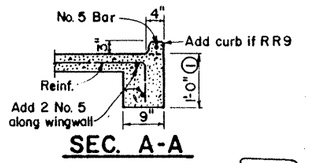

SEC. A-A

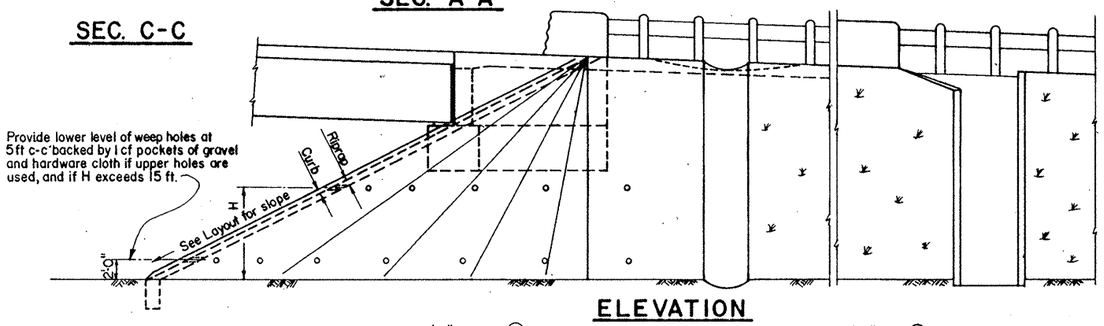

ELEVATION

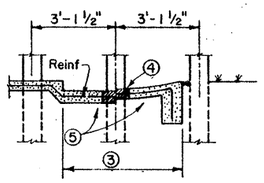

SEC E-E

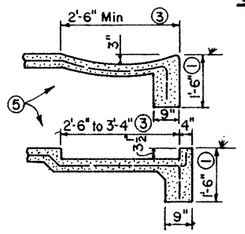

SEC B-B
(With Drain)

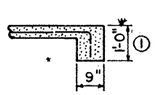

SEC B-B
(No Drain)

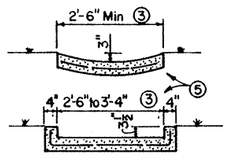

SEC D-D
(Shoulder Drain)

① Wall extension reduced or modified if approved by the Engineer.

② Dimension varies as directed by the Engineer. Should be 9" Min for stringer type bridges and 1'-6" for slab type bridges.

③ Wider or other drain configurations used if shown elsewhere in plans or if directed by the Engineer.

④ A 12 in. diameter leave out provided in the riprap at the guard fence location. Backfill with 4 in. of ACP if directed by the Engineer.

⑤ Limits and configuration of drains and depressions as shown elsewhere in plans or as directed by the Engineer.

GENERAL NOTES:

Concrete Class B unless noted elsewhere in plans.

Reinforcing other than that shown used by substituting reinforcement of equal greater unit cross-sectional area. The maximum reinforcement spacing 18 inches.

Construction joints or grooved joints extending the full slant slope height at intervals of approximately 20 otherwise directed by the Engineer.

Porus Concrete Filter Blanket and Gravel Backfill placed if shown elsewhere in the plans or if directed by the Engineer.

Hardware cloth, loose graded stone behind weep holes, flashing, or other sealing material paid for directly but subsidiary to the bid item, Riprap.

Unless specified elsewhere in the plans only reinforcing bars, the riprap reinforcing composed of reinforcing bars, welded wire fabric, or any suitable combination of both types.

RR8 is used on stream crossings.
RR9 is used on other embankments.

STATE DEPARTMENT OF HIGHWAYS AND PUBLIC TRANSPORTATION

CONCRETE RIPRAP

FOR EMBANKMENT SLOPES UNDER BRIDGE ENDS

RR8 & RR9

ORIGINAL DRAWING DATE: FEB 1987	STATE DISTRICT	PERSONS REQUIRED	FEDERAL AID PROJECT ⊕	SHEET
DR.:- JJP	21	6	NH 92(7)M	407
CK.:- THD	COUNTY	CONTROL	SECTION	JOB	HIGHWAY
DR.:- EDS	HIDALGO	039	17	097	US 257
CK.:- JJP					

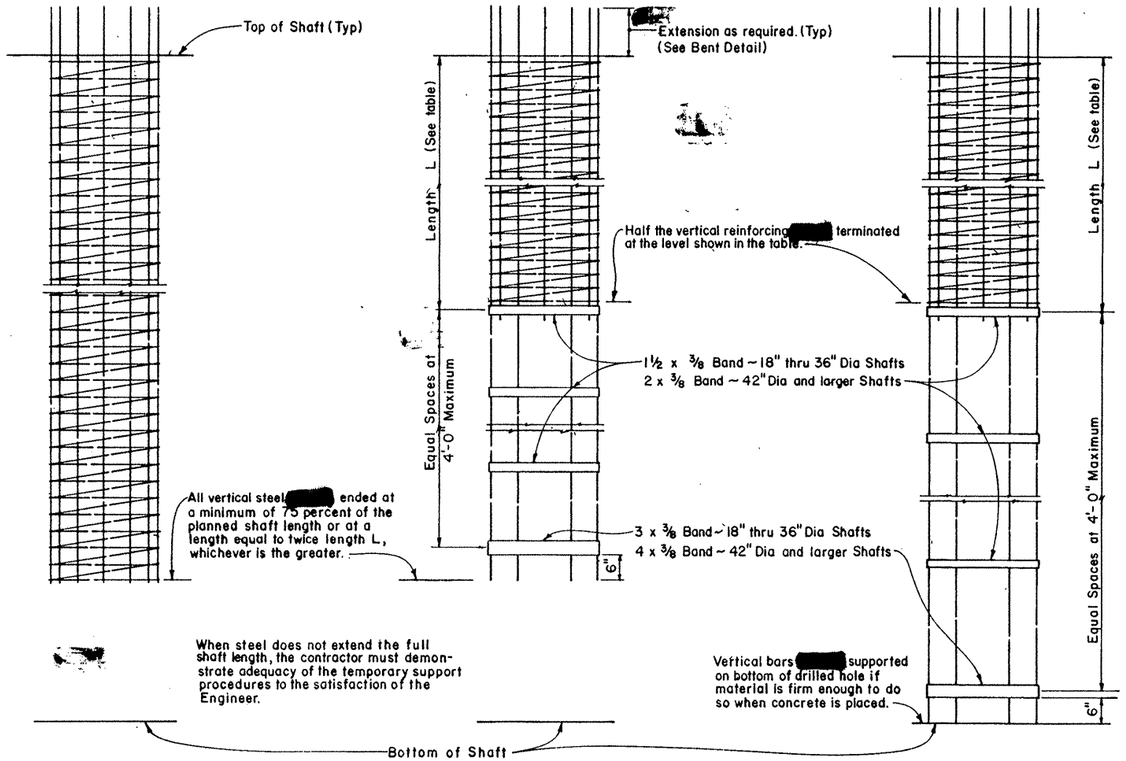

ELEVATIONS

LENGTH L

Drilled Shaft diameter (inches)	Length L (feet)
18 and 24	24
30 and 36	30
42 and larger	10 shaft diameters

The length L is measured from top of shaft, natural ground, or finished ground, whichever results in the longer length of full reinforcement.

GENERAL NOTES:

At the Contractor's option, any or all drilled shafts [redacted] constructed using these details in lieu of the drilled shaft details shown elsewhere in the plans.

These details [redacted] applied to single column bents supported by a single shaft, or to overhead sign bridge towers supported by a single shaft, or to high mast illumination pole foundations. Drilled shafts in or immediately adjacent to stream channels and any others specifically noted elsewhere in the plans [redacted] have full reinforcement and be excluded from application of these details.

All welded bands and reinforcing steel, including that projecting the required amount from the top of the shaft, [redacted] paid for directly but [redacted] subsidiary to the bid items, Drilled Shaft Foundations or Slurry Displacement Drilled Shafts.

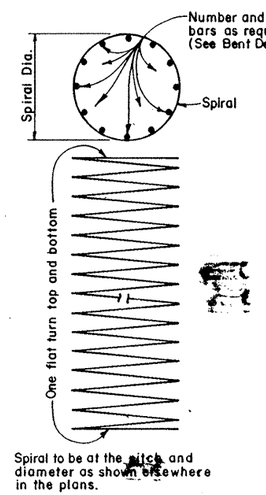

SPIRAL DETAIL

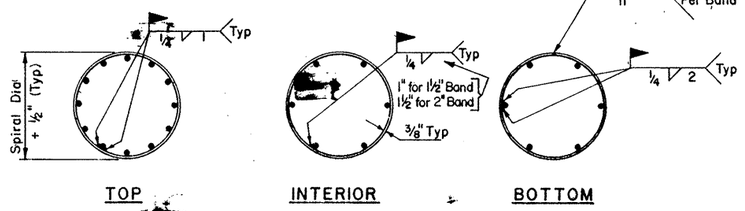

BAND DETAILS

STATE DEPARTMENT OF HIGHWAYS AND PUBLIC TRANSPORTATION

OPTIONAL DRILLED SHAFT REINFORCING

ODSR

ORIGINAL DRAWING DATE: FEB 1987	STATE DISTRICT	FEDERAL REGION	FEDERAL AID PROJECT #	SHEET
DR.- THD				
CK.- GHQ	21	6	NH 92(5)TM	
DR.- EDS	COUNTY	CONTROL	SECTION	JOB
CK.- JJP	HIDALGO	039	17	097

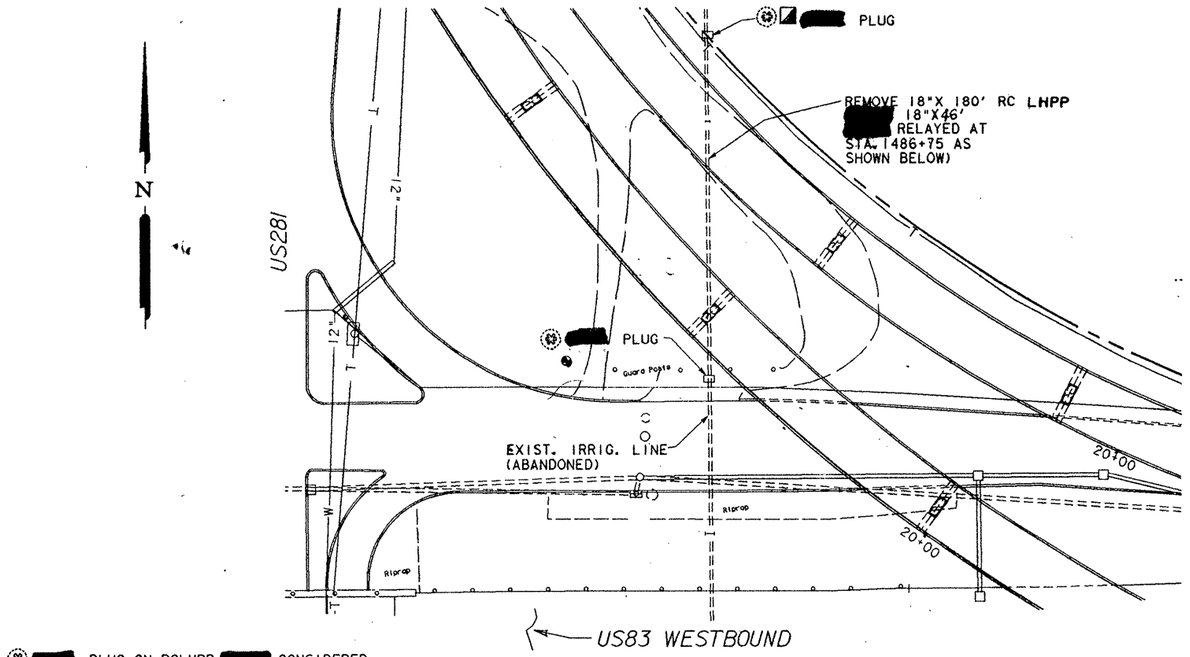

[redacted] PLUG ON RCLHPP [redacted] CONSIDERED SUBSIDIARY TO THE VARIOUS BID ITEMS.

PROP. PLUG AT SOUTH R.O.W. LINE

℄ STA. 1515+25

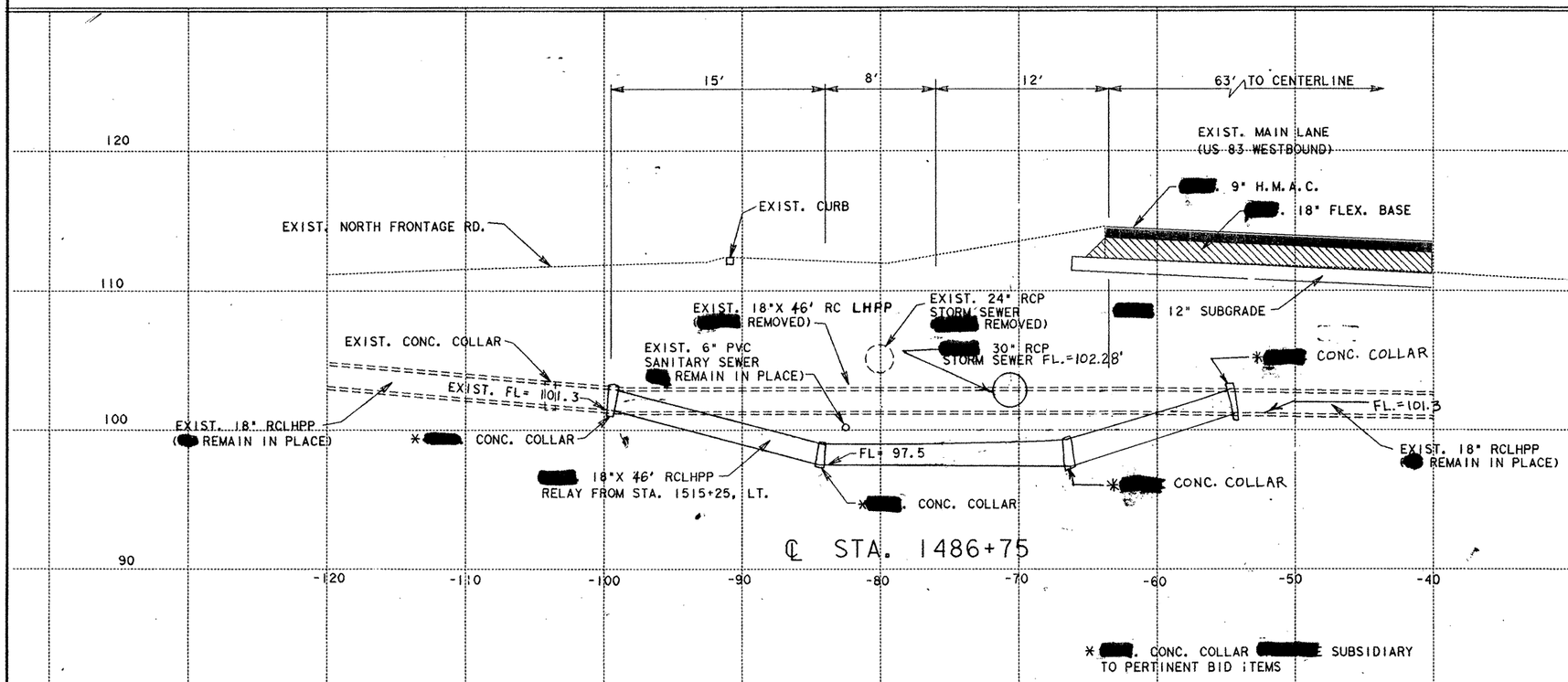

℄ STA. 1486+75

[redacted]. CONC. COLLAR [redacted] SUBSIDIARY TO PERTINENT BID ITEMS

ITEM	DESCRIPTION	QUANTITY	UNIT
401	CUT & RESTORE PAV.	22	SY
⊕	EXCAVATION (STR)	40	CY
	RELAY R.C.LOW HD. PRSSR. PIPE (18")	46'	LF
530	CONC. CURB TY"A"	20	LF

⊕ FOR CONTRACTOR'S INFORMATION ONLY (NON-PAY)

IRRIGATION STRUCTURE DETAILS

SHEET 10F 1SHEET

SCALE 1"= 20'

FED. RD. DIV. NO.	FEDERAL AID PROJECT NO.	SHEET NO.
6	NH 92. ( )M	408

STATE	STATE DIST. NO.	COUNTY
TEXAS	21	HIDALGO

CONT.	SECT.	JOB	HIGHWAY NO.
39	17	9[redacted]	US83/US281

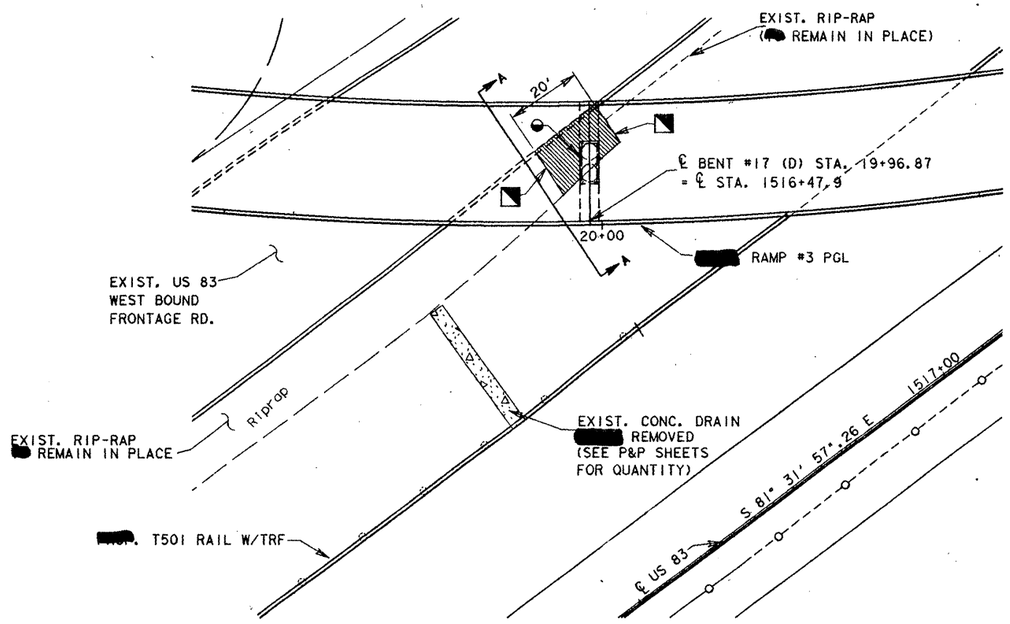

EXIST. RIP-RAP (27.8 SY) REMOVED & REPLACED WITH CONC. CL. "B" RIP-RAP (3.4 CY) AFTER COLUMN CONSTRUCTION.

SAW-CUT EXISTING RIP-RAP IN ORDER TO PROVIDE A SMOOTH FACE. CLEAN & BEND EXISTING REINFORCEMENT TO PROVIDE A MIN. 9" LAP WITH PROPOSED STEEL.

1/2" EXPANSION JOINT MATERIAL.

N

ITEM	QTY.	UNIT	DESCRIPTION
100	20	LF	REMOVE CONC. CURB & GUTTER(TY"A")
100	27.8	SY	REMOVE OLD CONC. (4" RIP-RAP)
432	3.4	CY	RIP-RAP (CONC.) CL. "B" 4 IN.
530	20	LF	CONC. CURB & GUTTER (TY"A")

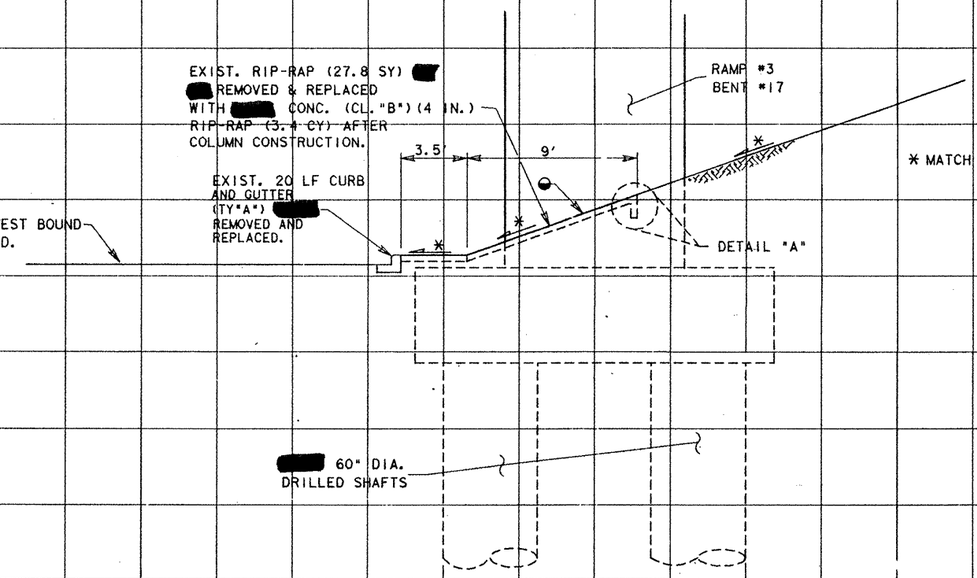

* MATCH EXISTING SLOPES

℄ STA. 1516+48
SECTION A-A

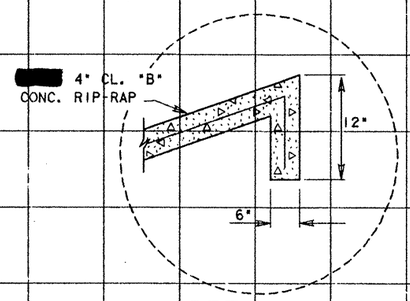

DETAIL "A"

MARIO R. ORTIZ
65530
REGISTERED
PROFESSIONAL
ENGINEER
STATE OF TEXAS
Mario R. Ortiz, P.E.
10-31-94

MISCELLANEOUS RIP-RAP DETAILS

FED. RD. DIV. NO.	FEDERAL AID PROJECT NO.		SHEET NO.
6	NH92 ( )M		409
STATE	STATE DIST. NO.	COUNTY	
TEXAS	21	HIDALGO	
CONT.	SECT.	JOB	HIGHWAY NO.
39	17	9930	US 83

PLOT SIZE: V80- XRIP.PRF VFR- FXRIP FILE: FXRIP.DGN

TABLE OF DRIVEWAYS
U.S. 83 EXPWY FROM SUGAR RD TO I RD

STATION	EXIST.& PROP. WIDTH	EXIST.& PROP. RADIUS	ACP DRWY AREAS ITEM 5084 (SY)	
	(FT)	(FT)	P-1	PB-1
1478+77 RT	30X14		47	
1479+22 LT	35X14		54	
1481+43 LT	35X14		54	
1483+75 RT	45X14		70	
1487+35 LT	64X14	2-60	272	
1490+80 LT	64X14	2-30	143	
1491+27 RT	46X14		72	
1493+30 RT	28X14		44	
1493+70 LT	22X14		34	
1493+87 RT	42X14		65	
1496+00 RT	30X14		47	
1496+70 RT	32X14		50	
1497+92 RT	18X14		28	
1498+60 RT	26X14		40	
1500+62 LT	35X14		54	
1501+10 RT	18X14		28	
1501+88 LT	30X14		47	
1502+28 RT	18X14		28	
1502+93 RT	22X14		34	
1503+45 RT	20X14		31	
1503+92 RT	16X14		25	
1504+75 RT	12X14		19	
1505+00 RT	16X14		25	
1509+40 LT	22X14		34	
1510+68 RT	18X14		28	
1511+35 RT	30X14		47	
1514+15 RT	35X14		54	
1515+10 RT	38X14		59	
1515+25 LT	48X14		75	
1515+97 RT	20X14		31	
1518+65 RT	14X14		22	
1521+18 RT	20X14		31	
1525+43 RT	22X14		34	
1526+17 LT	20X14		31	
1526+23 RT	22X15	2-15	48	
1526+82 LT	44X14		68	
1529+72 RT	58X14		90	
1531+87 RT	40X14		62	
1532+73 LT	30X14		47	
1532+93 RT	20X14		31	
1533+72 LT	28X14		44	
1534+25 LT	32X14		50	
1536+10 LT	27X14		42	
1537+15 RT	24X14		37	
1537+98 RT	24X14		37	
1539+05 RT	26X14		40	
1539+72 LT	33X14		51	
1539+87 RT	26X14		40	
1540+56 LT	44X14		68	
1542+00 LT	33X14		51	
1550+35 RT	27X14		42	
1551+40 RT	40X14		62	
1551+85 LT	21X14		33	
1555+05 RT	35X14		54	
1555+65 RT	35X14		54	
1556+23 RT	17X14		26	
SUB-TOTAL			2834	

TABLE OF DRIVEWAYS
U.S. 281 EXPWY FROM SIOUX RD TO U.S.83 EXPWY

STATION	EXIST.& PROP. WIDTH	EXIST.& PROP. RADIUS	ACP DRWY AREAS ITEM 5084 (SY)	
	(FT)	(FT)	P-1	PB-1
823+87 RT	73X14		113	
825+00 LT	22X14		34	
827+26 RT	92X14		142	
829+18 LT	45X14		70	
829+38 RT	31X14		48	
829+84 LT	31X14		48	
831+65 LT	23X14		36	
832+75 RT	20X14		31	
832+80 LT	42X14		65	
833+80 LT	44X14		68	
834+30 LT	19X14		30	
835+52 RT	20X14		31	
835+73 LT	22X14		34	
836+45 LT	65X14		101	
837+25 LT	32X14		50	
837+85 LT	22X14		34	
839+25 RT	20X14		31	
839+43 LT	24X14		37	
840+30 LT	20X14		31	
842+00 RT	24X14		37	
842+10 LT	20X14		31	
843+22 RT	32X14		55	
843+95 LT	65X14		101	
844+75 LT	20X14		31	
846+08 LT	26X14		40	
849+15 LT	42X14		65	
849+52 RT	24X14		37	
849+70 LT	24X14		37	
850+17 LT	20X14		31	
850+50 RT	26X14		40	
850+63 LT	24X14		37	
851+12 LT	24X14		37	
852+08 LT	25X14		39	
852+45 LT	24X14		37	
852+73 RT	20X14		31	
853+63 LT	18X14		28	
855+70 RT	24X14		37	
856+15 LT	44X14		68	
857+05 LT	46X14		72	
857+70 RT	30X14		47	
858+20 RT	20X14		31	
858+30 LT	44X14		68	
859+90 LT	24X14		37	
860+25 RT	28X47		146	
861+10 RT	18X96		192	
861+80 LT	46X14		72	
SUB-TOTAL			2518	
GRANDTOTAL			5352	

TABLE OF TURNOUTS
U.S. 83 EXPWY FROM SUGAR RD TO I RD

STATION	DESCRIPTION	EXIST.& PROP. WIDTH	EXIST.& PROP. RADIUS	ACP TURNOUT AREAS ITEM 5084 (SY)	
		(FT)	(FT)	TY PBS	TY P
1492+88 RT	DAHLIA ST.	27	2-20		79
1499+55 RT	CANNA ST.	37	2-20		101
1505+97 RT	ASTER ST.	25	2-15		53
1517+32 RT	ATHOL ST.	27	2-15		56
1519+90 RT	ASH ST.	27	2-15		56
1522+52 RT	BIRCH ST.	27	2-15		56
1546+50 RT	HUISACHE ST.	37	2-30		166
1552+38 RT	JUNIPER ST.	24	2-30		123
SUB-TOTAL					690

TABLE OF TURNOUTS
U.S. 281 EXPWY FROM SIOUX RD TO U.S.83 EXPWY

STATION	DESCRIPTION	EXIST.& PROP. WIDTH	EXIST.& PROP. RADIUS	ACP TURNOUT AREAS ITEM 5084 (SY)	
		(FT)	(FT)	TY PBS	TY P
828+10 LT	SAENZ AVE.	25	2-30		126
830+60 LT	RENDON AVE.	25	2-30		126
835+20 LT	GARCIA AVE.	22	2-30		116
838+40 LT	DIAZ AVE.	27	2-30		133
847+65 LT	F.M. 495	81	2-50		569
847+65 RT	F.M. 495	81	2-50		569
854+30 LT	BUTER ST.	27X66	2-35&45		275
860+70 LT	WARREN ST.	34X83	2-20&40		362
SUB-TOTAL:					2276
TOTAL					2966

ITEM 3741
AREAS TO BE MILLED ON U.S. 281 EXPWY. FRONTAGE RD. AND MAINLANES

STATION TO STATION	LF.	0-1½" SY.
822+11 - 846+75 (RT)	2464	1643
846+75 (50' RAD.) (RT)	78.5	52
848+55 (50' RAD.) (RT)	78.5	52
848+55 - 862+25 (RT)	1370	913
823+80 - 846+75 (LT)	2295	1530
846+75 (50' RAD.) (LT)	78.5	52
848+55 (50' RAD.) (LT)	78.5	52
848+55 - 853+64 (LT)	509	339
853+64 (50' RAD.) (LT)	78.5	52
854+82 (50' RAD.) (LT)	78.5	52
854+82 - 860+00 (LT)	518	345
860+00 (40' RAD.) (LT)	63	42
867+35 (50' RAD.) (LT)	78.5	52
867+35 - 868+65 (LT)	130	87
SOUTH END OF (SIOUX RD.) BRIDGE		
822+68.74 - 823+68.74 (LT)	100'	422
822+68.74 - 823+68.74 (RT)	100'	422
SUB-TOTAL:		6107

ITEM 3741
AREAS TO BE MILLED ON U.S. 83'S FRONTAGE ROADS

STATION TO STATION/SHT. NO.	LF.	0-1½" SY.	1½" SY.
1471+88 - 1511+20 (RT)	3,932	2,621	
1511+20 (RT) (100' RAD.)	157	105	
1514+18 (RT) (100' RAD.)	157	105	
1514+18 - 1566+50 (RT)	5,232	3,488	
1566+50 (RT) (50' RAD.)	78	52	
1508+50 - 1511+60 (RT)	310	207	
1512+10 @ TURNAROUND			647
1512+78 UNDER BRIDGE		1,000	1,205
1513+45 @ TURNAROUND			630
1514+00 - 1517+06 (LT)	306	204	
1472+10 - 1510+80 (LT)	3,870	2,580	
1510+80 (LT) (150' RAD.)	236	157	
1514+90 (LT) (150' RAD.)	236	157	
1514+90 - 1566+46 (LT)	5,156	3,437	
1566+46 (LT) (60' RAD.)	94	62	
SHEET NO. 45			412
SHEET NO. 112		73	207
SUB-TOTAL:		14,228	3,101
TOTAL: US 281 & US 83		20,335	3,101

MARIO R. JORGE 65530 REGISTERED PROFESSIONAL ENGINEER

Mario R. Jorge, P.E. 6-24-91

DRIVEWAYS, TURNOUTS & MILLING DETAILS

SHEET 1 OF 2 SHEETS

FED. ROAD DIV. NO.	STATE	FEDERAL AID PROJECT NO.			SHEET NO.
6	TEXAS	NH 92 ( )M			410
STATE DIST. NO.	COUNTY	CONT. NO.	SEC. NO.	JOB NO.	HIGHWAY NO.
21	HIDALGO	39	17	97	US 281

AD-76-0

D21I325,110 FILE: EXDNT LEVELS: PLOT @ 1"=100' PRF: E, DNT

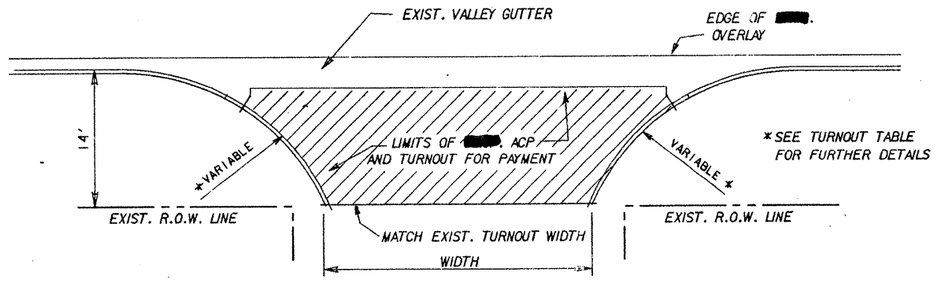

LAYOUT

PLAN AND TYPES OF PUBLIC TURNOUTS

TY"P" - EXIST. PAVED TURNOUT [redacted] SURFACED W/ 171 #/SY

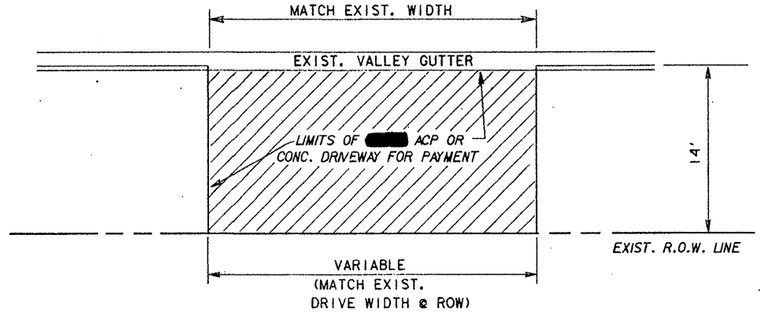

PLAN OF PRIVATE AND COMMERCIAL DRIVES

(W/DRIVE WIDTH EQUAL TO OR GREATER THAN 24')

TY P-1 EXIST PAVED DRIVEWAY [redacted] OVERLAYED W/100#/SY

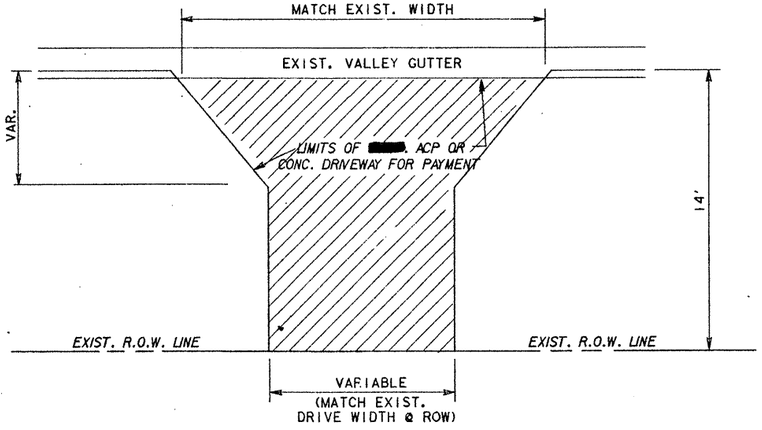

PLAN OF PRIVATE AND COMMERCIAL DRIVES

(W/DRIVE WIDTH LESS THAN 24')

TY"P-1" EXIST. PAVED DRIVEWAY [redacted] OVERLAYED W/100#/SY

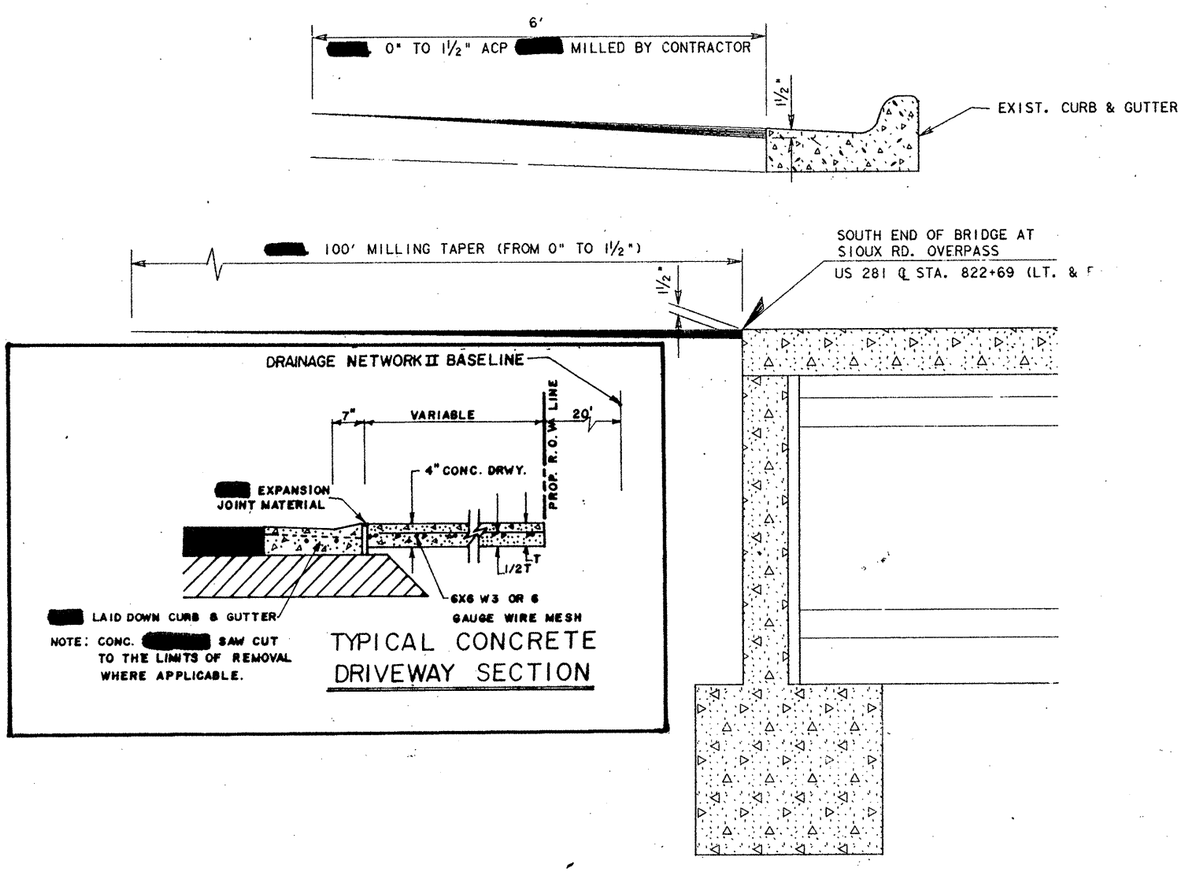

TYPICAL CONCRETE DRIVEWAY SECTION

MILLING DETAILS

NOTES:

ALL ENTRANCES CONSTRUCTED ON THIS PROJECT ARE SUBJECT TO CONCURRENCE WITH EXISTING GOVERNING REGULATIONS AS SET OUT BY THE STATE HIGHWAY COMMISSION.

SURFACE [redacted] EXTENDED BEYOND R.O.W. LINE AS REQUIRED TO MEET EXISTING GRADE IN A SATISFACTORY MANNER.

AVERAGE DIMENSIONS SHOWN ON TABLE OF DRIVEWAYS AND TURNOUT ARE FOR ESTIMATING PURPOSES ONLY.

DRIVEWAYS ARE SHOWN AT APPROXIMATE LOCATION ON PLANS. EXACT LOCATIONS, DIMENSIONS AND TYPE [redacted] ESTABLISHED DURING CONSTRUCTION BY THE ENGINEER AS REQUIRED.

[redacted] WIDTH OF DRIVEWAYS AND TURNOUTS TO MATCH EXIST. WIDTH AT R.O.W. LINE.

STATE OF TEXAS
MARIO R. JORGE
65538
REGISTERED
PROFESSIONAL ENGINEER

10-31-97

DRIVEWAY, TURNOUT & MILLING DETAILS

SHEET 2 OF 2 SHEETS

FED. ROAD DIV. NO.	STATE	FEDERAL AID PROJECT				SHEET NO.
6	TEXAS	NH 92 ( )M				411
STATE DIST. NO.	COUNTY		CONT. NO.	SEC. NO.	JOB NO.	HIGHWAY NO.
21	HIDALGO		39	17	97	US 83

FILE: EXDNT2.DGN VER: EXDNT2.IRARM VRD: VEXDNT2.R2F

LEGEND:

- SERVICE POLE, (TY A) 240/480 VOLT 3 WIRE
- HIGH MAST. POLE, ASYMMETRIC
- GROUND BOX, TY A (122311) WITH APRON
- ① CONDUIT, RUN NUMBER (WITH 2- NO. 8 XHHW & 1- NO. 8 BARE UNLESS OTHERWISE SHOWN.)

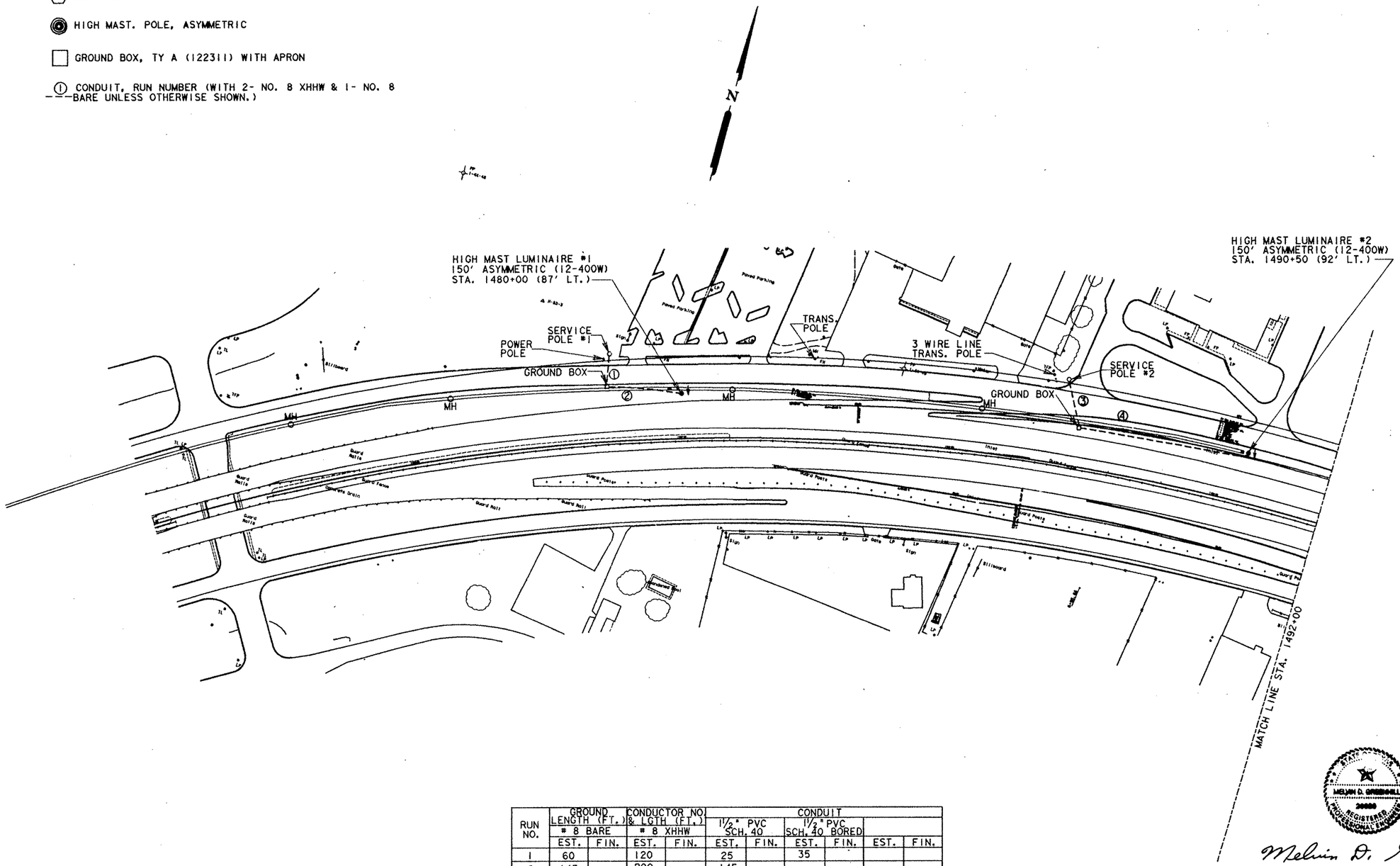

RUN NO.	GROUND LENGTH (FT.) # 8 BARE		CONDUCTOR NO. & LGTH (FT.) # 8 XHHW		CONDUIT 1½" PVC SCH. 40		CONDUIT 1½" PVC SCH. 40 BORED			
	EST.	FIN.	EST.	FIN.	EST.	FIN.	EST.	FIN.	EST.	FIN.
1	60		120		25		35			
2	145		290		145					
3	95		190		15		80			
4	320		640		320					
TOTAL	620		1240		505		115			

Melvin D. Greenhill
March 3, 1992

SCALE: 1"=100'

ILLUMINATION LAYOUT

SHEET 1 OF 5

FED. RD. DIV. NO.	STATE AID PROJECT NO.		SHEET NO.
6	NH 92 ( ) M		412
STATE	DIST.	COUNTY	
TEXAS	21	HIDALGO	
CONT.	SECT.	JOB	HIGHWAY NO.
39	17	97	US 83

FILE NAME	REFERENCE FILE	NAMED VIEW	LEVELS	PRF FILE
[325116] ILUM83001.DGN	NEWINT.DGN	REF1		ILUM831.PRF
	NEWINT2.DGN	REF2		

ZEA2: [325116]ILUM83001.DGN ILUL 1RAPM

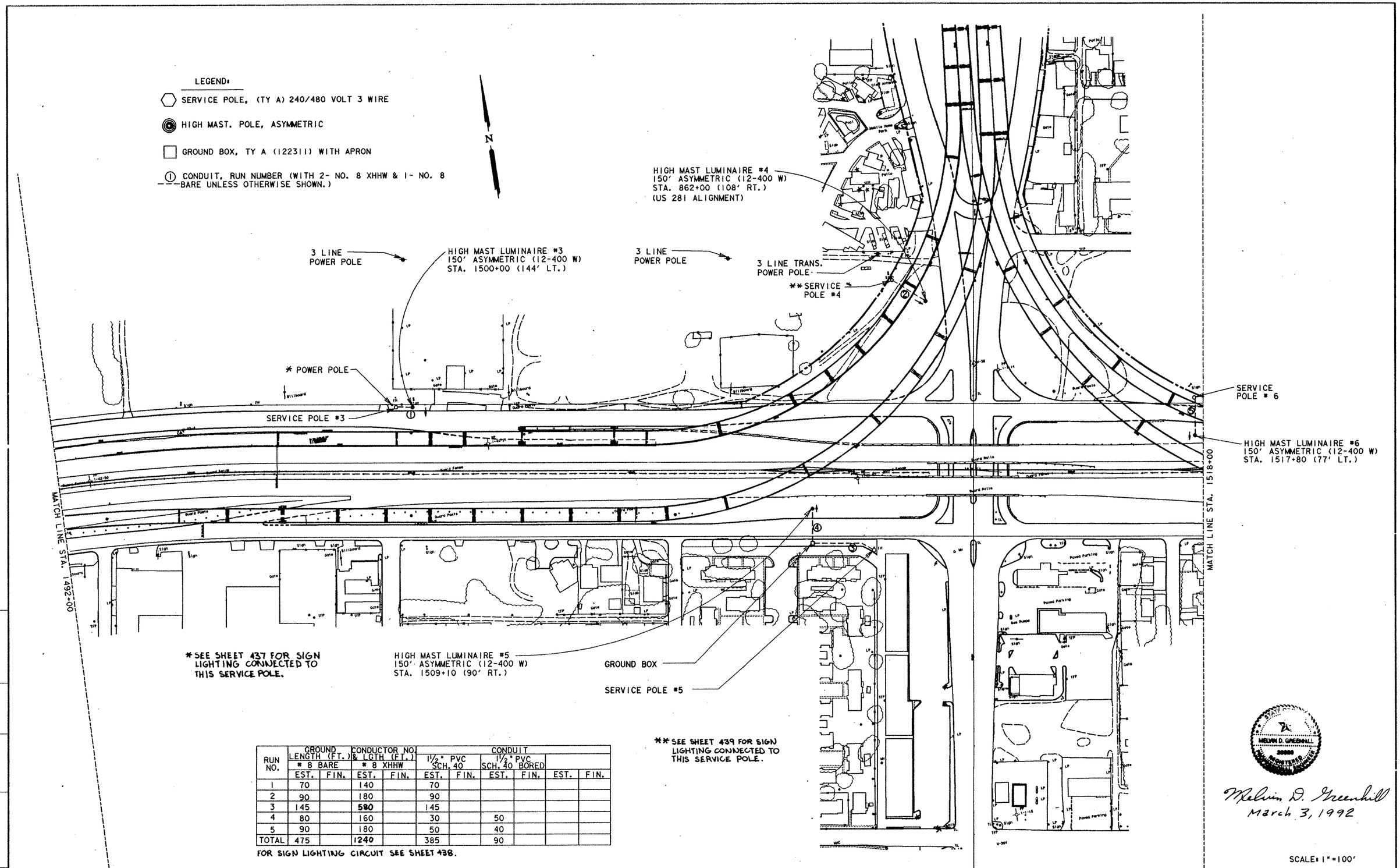

RUN NO.	GROUND LENGTH (FT.) # 8 BARE		CONDUCTOR NO. & LGTH (FT.) # 8 XHHW		CONDUIT 1½" PVC SCH. 40		CONDUIT 1½" PVC SCH. 40 BORED			
	EST.	FIN.	EST.	FIN.	EST.	FIN.	EST.	FIN.	EST.	FIN.
1	70		140		70					
2	90		180		90					
3	145		580		145					
4	80		160		30		50			
5	90		180		50		40			
TOTAL	475		1240		385		90			

FOR SIGN LIGHTING CIRCUIT SEE SHEET 438.

ILLUMINATION LAYOUT

SHEET 2 OF 5

MELVIN D. GREENHILL
30000
REGISTERED PROFESSIONAL ENGINEER

Melvin D. Greenhill
March 3, 1992

SCALE: 1"=100'

FED. RD. DIV. NO.	STATE AID PROJECT NO.		SHEET NO.
6	NH 92( )M		4/3
STATE	DIST.	COUNTY	
TEXAS	21	HIDALGO	
CONT.	SECT.	JOB	HIGHWAY NO.
39	17	97	US 83

FILE NAME	REFERENCE FILE	NAMED VIEW	LEVELS	PRF FILE
[325116] ILUM83002.DGN	NEWINT.DGN	REF1		ILUM832.PRF
	NEWINT2.DGN	REF2		

ZFA2: [325116] ILUM83002.DGN ILU2.IPARM

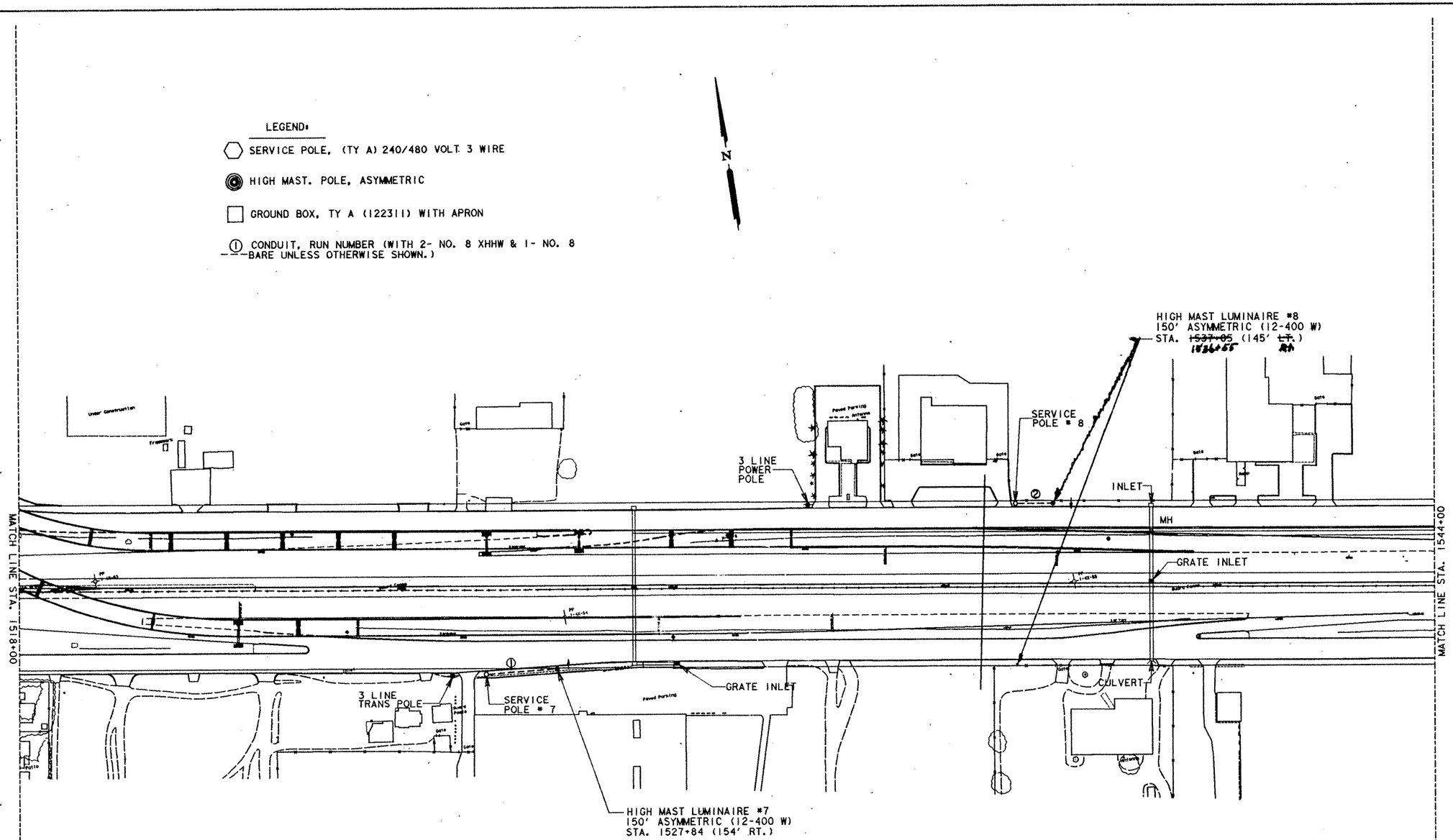

RUN NO.	GROUND LENGTH (FT.) # 8 BARE		CONDUCTOR NO. & LGTH (FT.) # 8 XHHW		CONDUIT 1½" PVC SCH. 40		CONDUIT 1½" PVC SCH. 40 BORED			
	EST.	FIN.	EST.	FIN.	EST.	FIN.	EST.	FIN.	EST.	FIN.
1	130		260		130					
2	80		160		80					
TOTAL	210		420		210					

STATE OF TEXAS
MELVIN D. GREENHILL
REGISTERED PROFESSIONAL ENGINEER

Melvin D. Greenhill
March 3, 1992

ILLUMINATION LAYOUT

SHEET 3 OF 5

SCALE: 1"=100'

FED. RD. DIV. NO.	STATE AID PROJECT NO.		SHEET NO.
6	NH 92(...)M		414
STATE	DIST.	COUNTY	
TEXAS	21	HIDALGO	
CONT.	SECT.	JOB	HIGHWAY NO.
39	17	97	US 83

FILE NAME	REFERENCE FILE	NAMED VIEW	LEVELS	PRF FILE
[325116] ILUM83003.DGN	NEWINT.DGN	REF1		ILUM833.PRF
	NEWINT2.DGN	REF2		

ZFA2: [325116]ILUM83003.DGN ILU3.IPARM

LEGEND:

- SERVICE POLE, (TY A) 240/480 VOLT 3 WIRE
- HIGH MAST. POLE, ASYMMETRIC
- GROUND BOX, TY A (122311) WITH APRON
- CONDUIT, RUN NUMBER (WITH 2- NO. 8 XHHW & 1- NO. 8 BARE UNLESS OTHERWISE SHOWN.

N

LIGHTING SUMMARY

ITEM	DESC. CODE	DESCRIPTION	UNIT	EST. QUANTITY	FINAL QUANTITY
0613	003	HIGH MAST. ILL POLES (150' FT.)	EA.	11	
0614	010	HIGH MAST. ILL ASSEM. (12 400W) (ASYM)	EA.	11	
0618	046	CONDT. (PVC) (SCH 40) (1½ IN.)	LF.	1395	
0618		CONDT. (PVC) (SCH 40) (1½ IN.) BORED	LF.	335	
0620	001	ELEC. CONDR (NO. 8 BAR)	LF.	1730	
0620	031	ELEC. CONDR. (NO. 8) (TY XHHW)	LF.	3960	
* 0624	022	GROUND BOX (RPM) (TY A) (122311) APRON	EA.	5	
0628	001	SERV POLE TYPE A	EA.	11	
0417	010	SLURRY DISPL. DRILL SHAFT	LF.	342	
		(60 IN.) (HI-MAST)			

* QUANTITY SHOWN IS IN ADDITION TO GROUND BOXES REQUIRED AT DRILL SHAFT LOCATIONS.

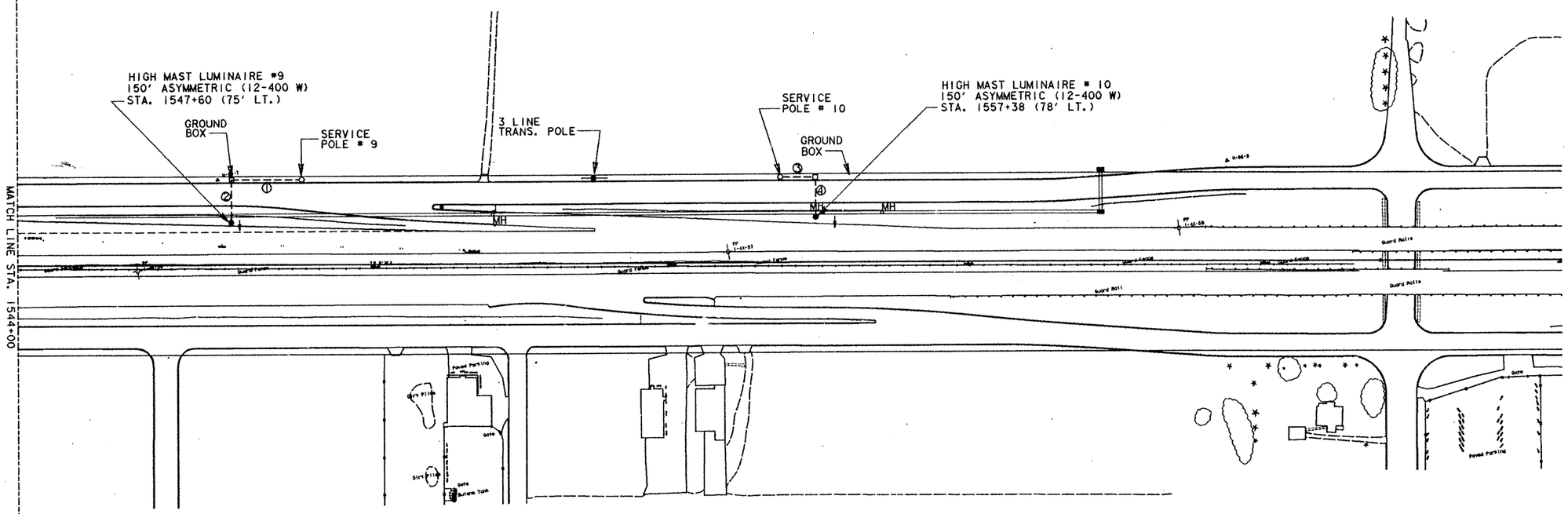

RUN NO.	GROUND LENGTH (FT.) # 8 BARE		CONDUCTOR NO & LGTH (FT.) # 8 XHHW		CONDUIT 1½" PVC SCH. 40		CONDUIT 1½" PVC SCH. 40 BORED			
	EST.	FIN.	EST.	FIN.	EST.	FIN.	EST.	FIN.	EST.	FIN.
1	50		100		50					
2	70		140		30		40			
3	40		160		40					
4	65		260		25		40			
TOTAL	225		660		145		80			

FOR SIGN LIGHTING CIRCUIT SEE SHEET 443.

STATE OF TEXAS
MELVIN D. GREENHILL

Melvin D. Greenhill
March 3, 1992

SCALE: 1" = 100'

ILLUMINATION LAYOUT

SHEET 4 OF 5

FED. RD. DIV. NO.	STATE AID PROJECT NO.		SHEET NO.
6	NH 92( ) M		415
STATE	DIST.	COUNTY	
TEXAS	21	HIDALGO	
CONT.	SECT.	JOB	HIGHWAY NO.
39	17	97	US 83

FILE NAME	REFERENCE FILE	NAMED VIEW	LEVELS	PRF FILE
[325116] ILUM83004.DGN	NEWINT.DGN	REF1		ILUM834.PRF
	NEWINT2.DGN	REF2		

ZFA2: [325116]ILUM83004.DGN ILU4.IPARM

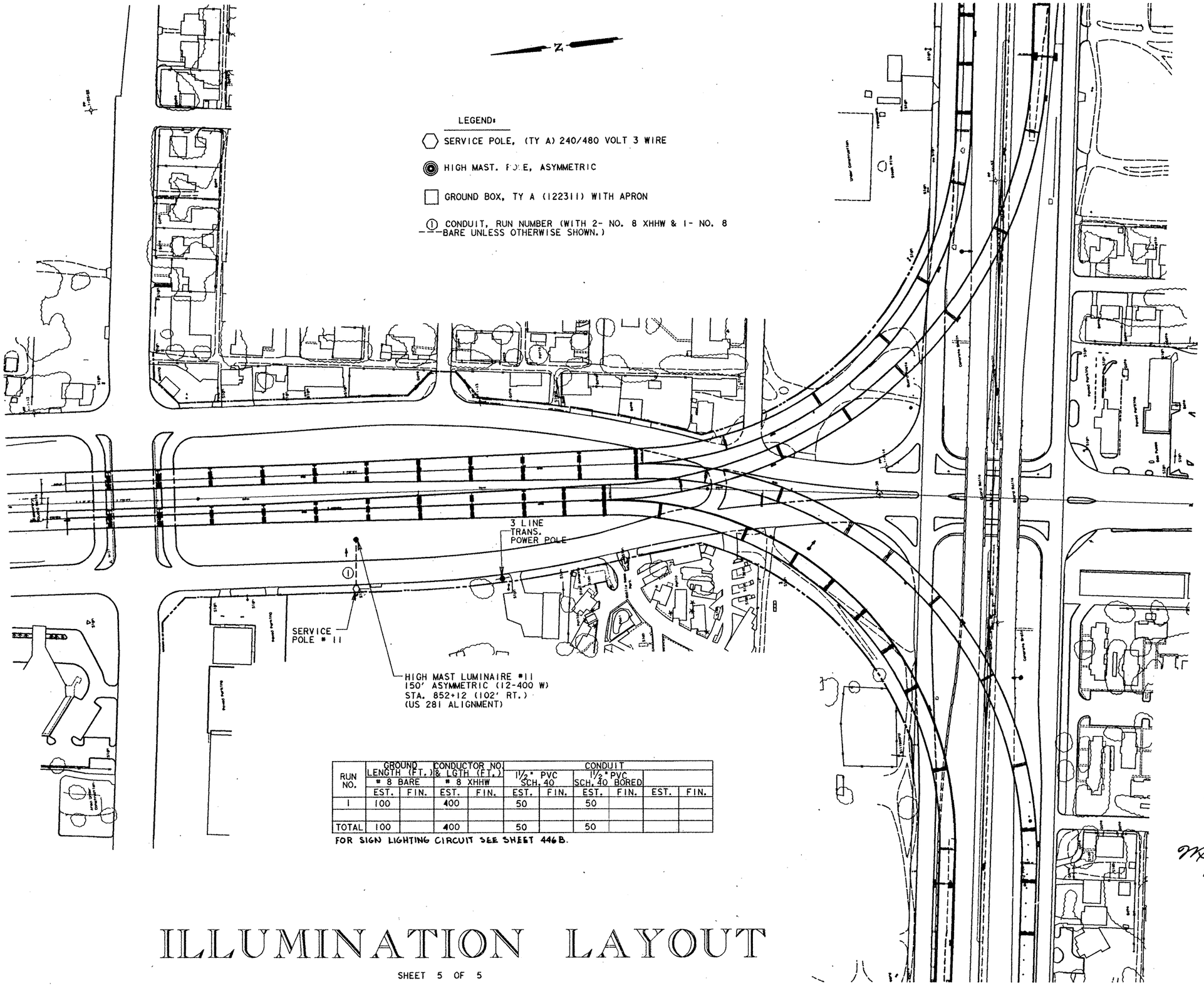

RUN NO.	GROUND LENGTH (FT.) # 8 BARE		CONDUCTOR NO. & LGTH (FT.) # 8 XHHW		CONDUIT 1½" PVC SCH. 40		CONDUIT 1½" PVC SCH. 40 BORED			
	EST.	FIN.	EST.	FIN.	EST.	FIN.	EST.	FIN.	EST.	FIN.
1	100		400		50		50			
TOTAL	100		400		50		50			

FOR SIGN LIGHTING CIRCUIT SEE SHEET 446B.

Melvin D. Greenhill
March 3, 1992

SCALE: 1" = 100'

FED. RD. DIV. NO.	STATE AID PROJECT NO.		SHEET NO.
6	NH 92( )M		416
STATE	DIST.	COUNTY	
TEXAS	21	HIDALGO	
CONT.	SECT.	JOB	HIGHWAY NO.
39	17	97	US 83

ILLUMINATION LAYOUT

SHEET 5 OF 5

FILE NAME	REFERENCE FILE	NAMED VIEW	LEVELS	PRF FILE
[325116] ILU281001.DGN	NEWINT.DGN	REF1		ILU281.PRF
	NEWINT2.DGN	REF2		

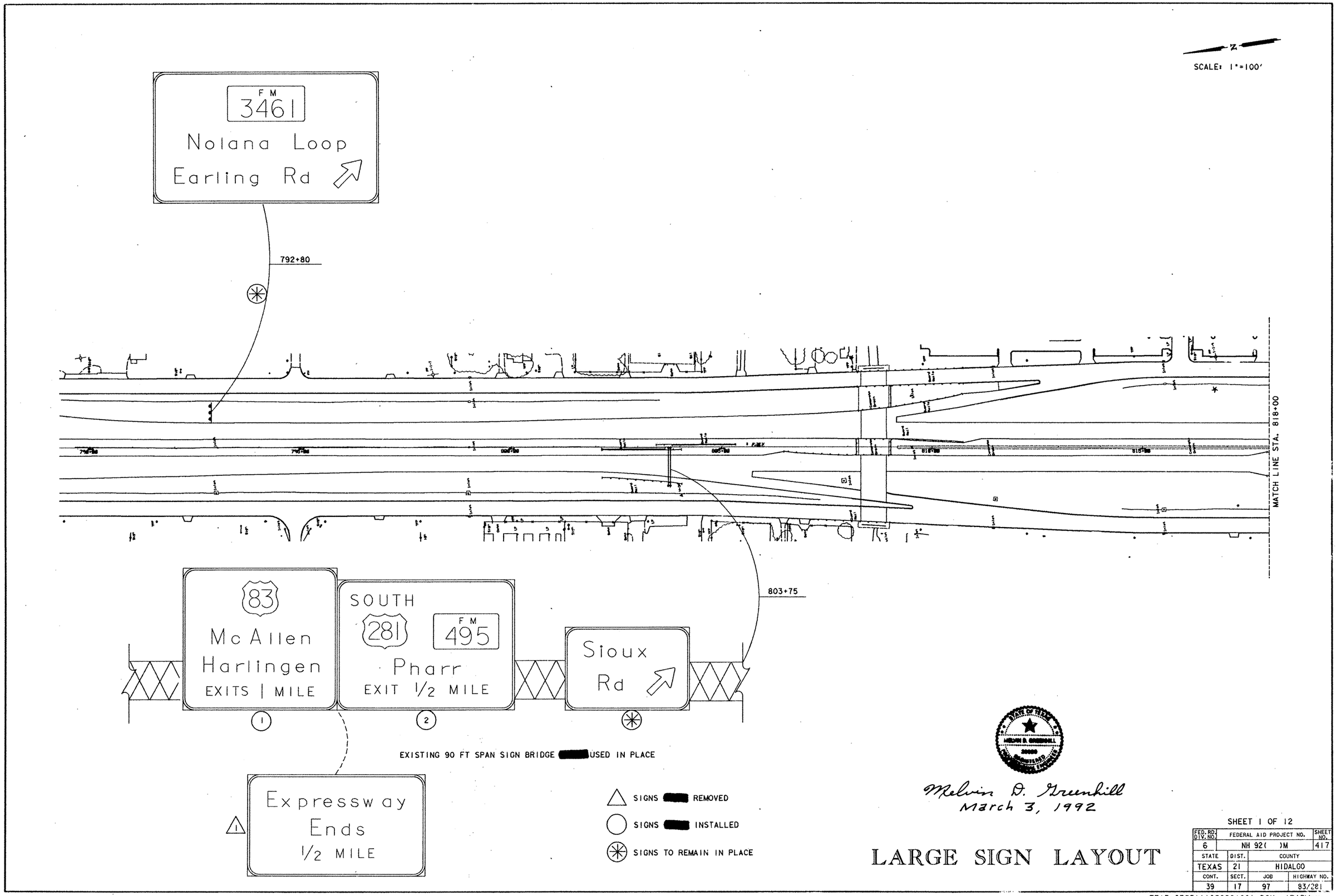

LARGE SIGN LAYOUT

SHEET 1 OF 12

FED. RD. DIV. NO.	FEDERAL AID PROJECT NO.		SHEET NO.
6	NH 92( )M		417
STATE	DIST.	COUNTY	
TEXAS	21	HIDALGO	
CONT.	SECT.	JOB	HIGHWAY NO.
39	17	97	83/281

SCALE: 1"=100'

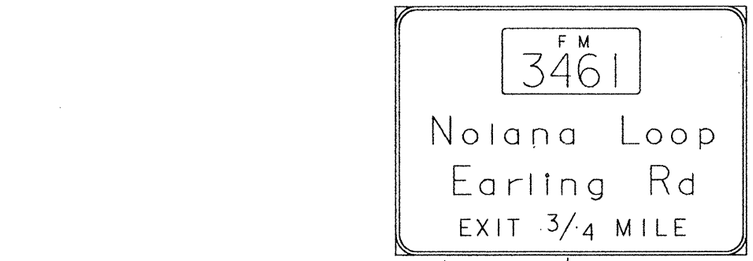

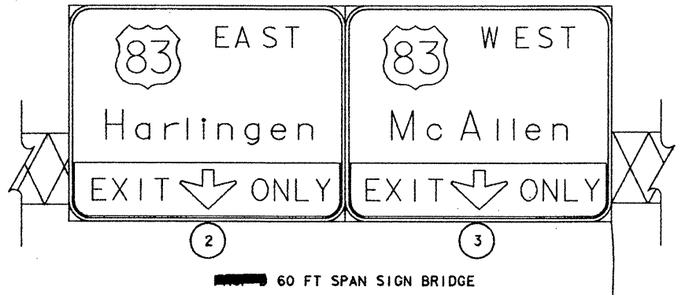

826+00

840+00

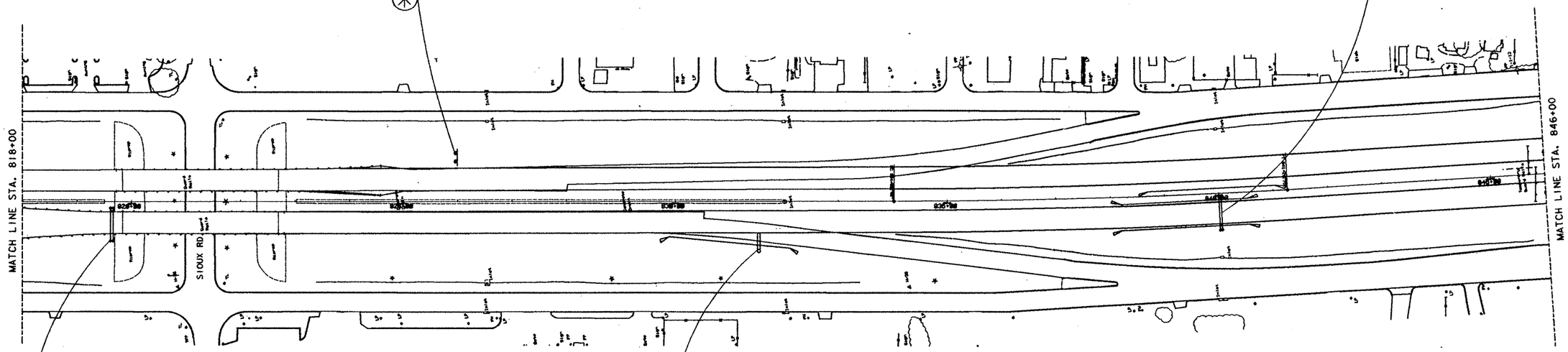

819+65

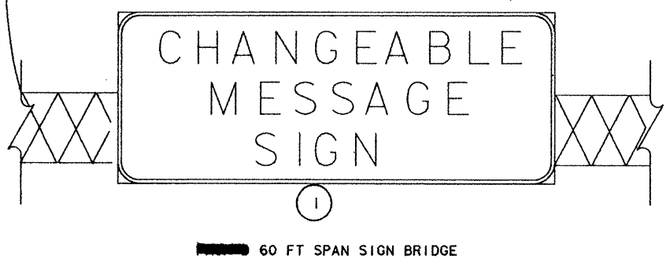

831+50

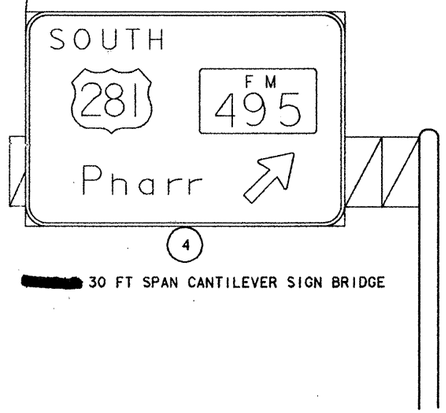

SIGNS ■ INSTALLED

SIGNS ■ REMAIN IN PLACE

STATE OF TEXAS
MELVIN D. GREENHILL
1992

Melvin D. Greenhill
March 3, 1992

LARGE SIGN LAYOUT

SHEET 2 OF 12

FED. RD. DIV. NO.	FEDERAL AID PROJECT NO.		SHEET NO.
	NH 92( )M		418
STATE	DIST.	COUNTY	
TEXAS	21	HIDALGO	
CONT.	SECT.	JOB	HIGHWAY NO.
39	17	97	33/281

SCALE: 1"=100'

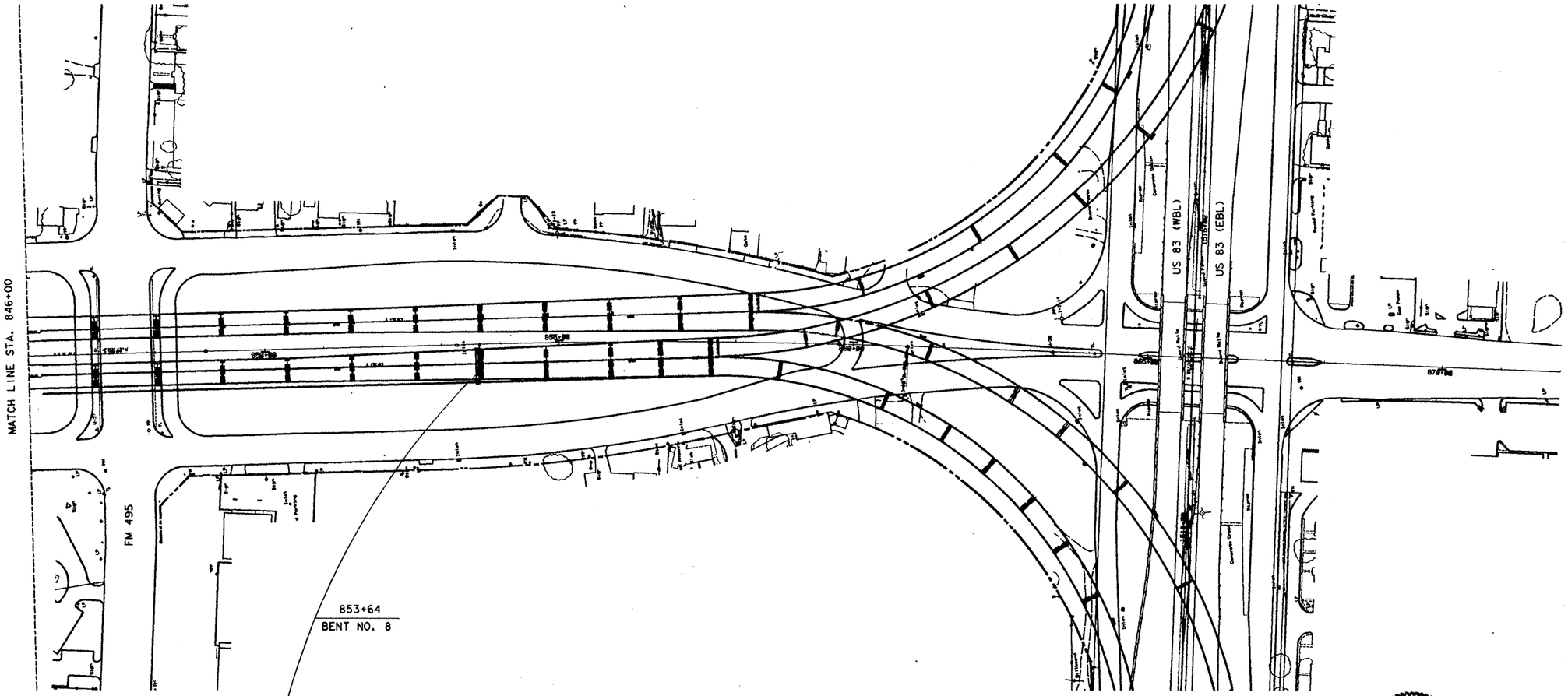

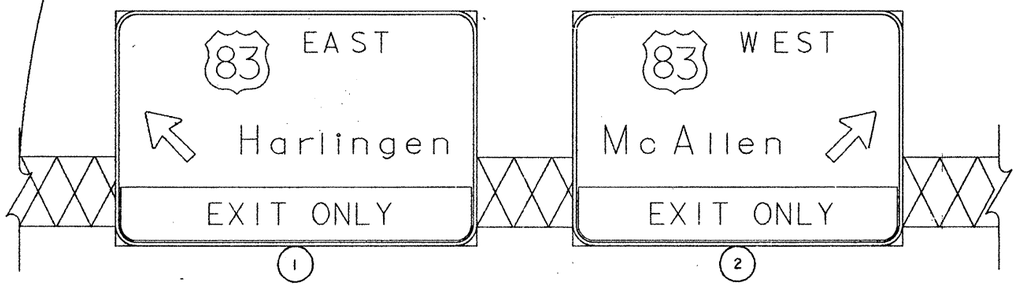

SIGNS INSTALLED

'D 56'-6" SPAN SIGN BRIDGE

STATE OF TEXAS
MELVIN D. GREENHILL
30000
REGISTERED
PROFESSIONAL ENGINEER

Melvin D. Greenhill
March 3, 1992

SHEET 3 OF 12

LARGE SIGN LAYOUT

FED. RD. DIV. NO.	FEDERAL AID PROJECT NO.		SHEET NO.
6	NH 92( )M		419
STATE	DIST.	COUNTY	
TEXAS	21	HIDALGO	
CONT.	SECT.	JOB	HIGHWAY NO.
39	17	97	83/281

SCALE: 1"=100'

'D 30 FT SPAN CANTILEVER SIGN BRIDGE

'D 40 FT SPAN CANTILEVER SIGN BRIDGE

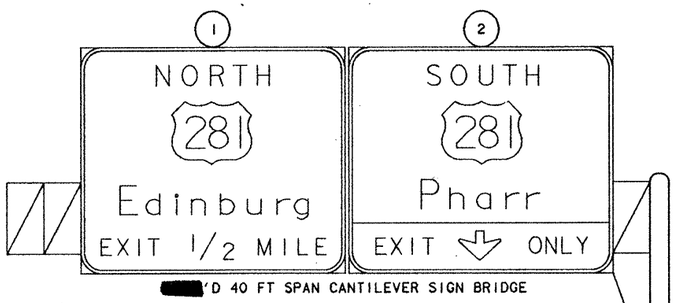

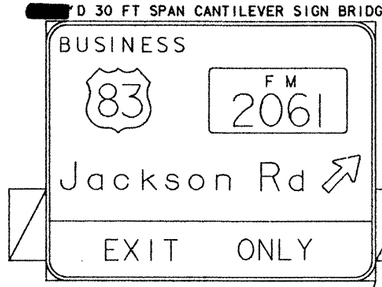

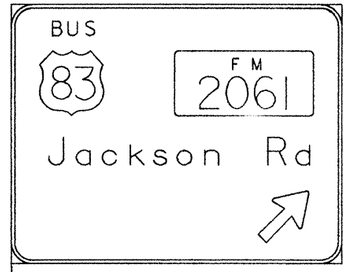

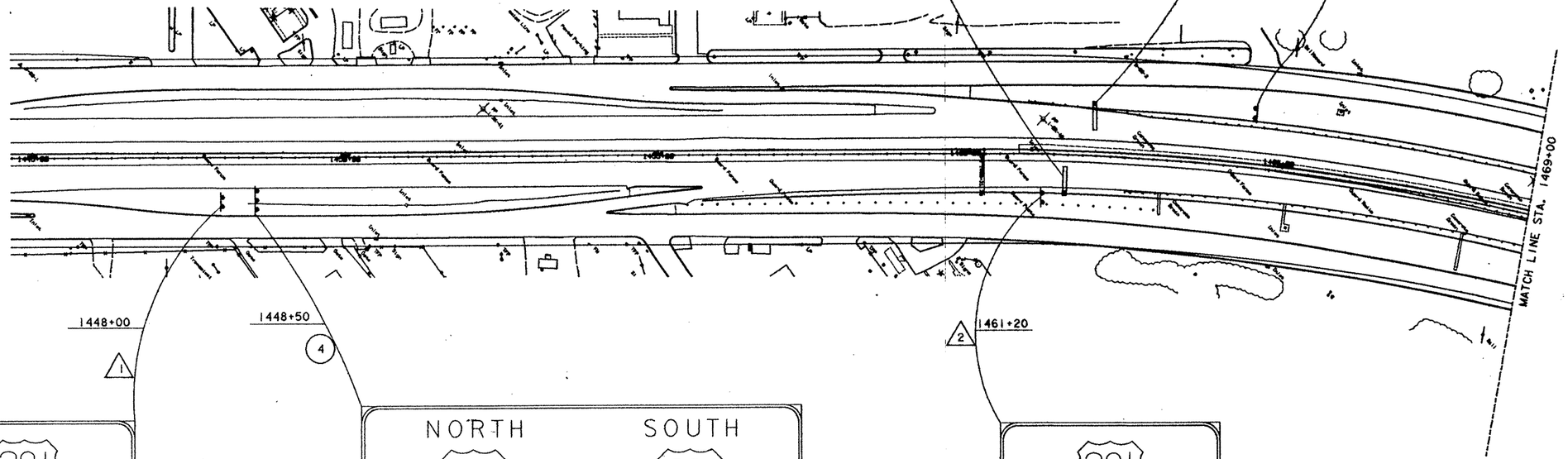

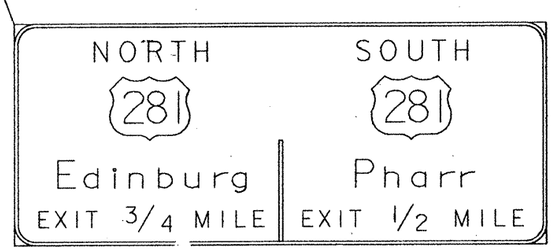

△ SIGNS ■ REMOVED

○ SIGNS ■ INSTALLED

✳ SIGNS ■ REMAIN IN PLACE

Melvin D. Greenhill
March 3, 1992

LARGE SIGN LAYOUT

SHEET 4 OF 12

FED. RD. DIV. NO.	FEDERAL AID PROJECT NO.		SHEET NO.
6	NH 92( )M		420
STATE	DIST.	COUNTY	
TEXAS	21	HIDALGO	
CONT.	SECT.	JOB	HIGHWAY NO.
39	17	97	83/281

30 FT SPAN CANTILEVER SIGN BRIDGE

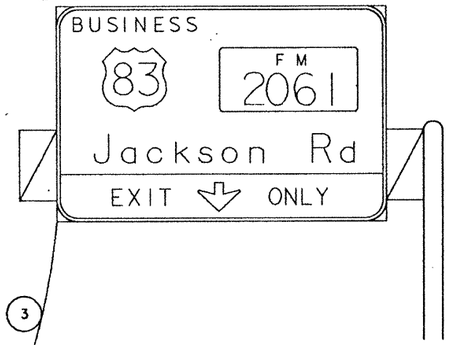

3

1474+00

SCALE: 1"=100'

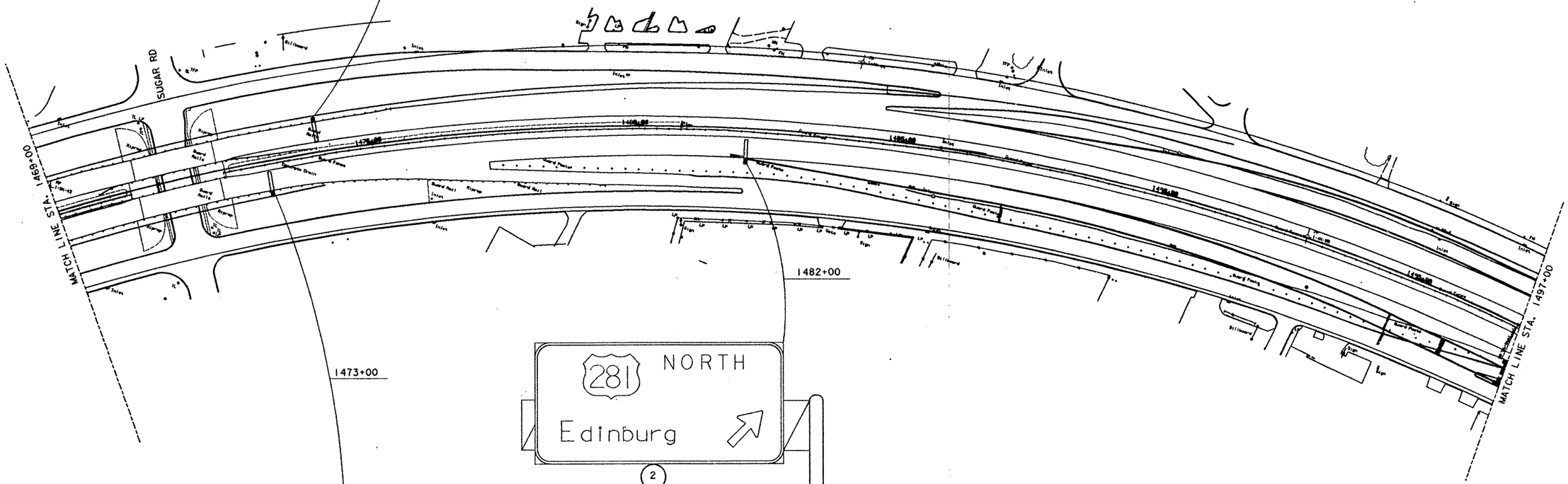

281 SOUTH
Pharr
EXIT ONLY

1

30 FT SPAN CANTILEVER SIGN BRIDGE

281 NORTH
Edinburg

2

30 FT SPAN CANTILEVER SIGN BRIDGE

SIGNS INSTALLED

STATE OF TEXAS
MELVIN D. GREENHILL
30080
REGISTERED
PROFESSIONAL ENGINEER

Melvin D. Greenhill
March 3, 1992

SHEET 5 OF 12

LARGE SIGN LAYOUT

FED. RD. DIV. NO.	FEDERAL AID PROJECT NO.		SHEET NO.
6	NH 92( )M		421
STATE	DIST.	COUNTY	
TEXAS	21	HIDALGO	
CONT.	SECT.	JOB	HIGHWAY NO.
39	17	97	83/281

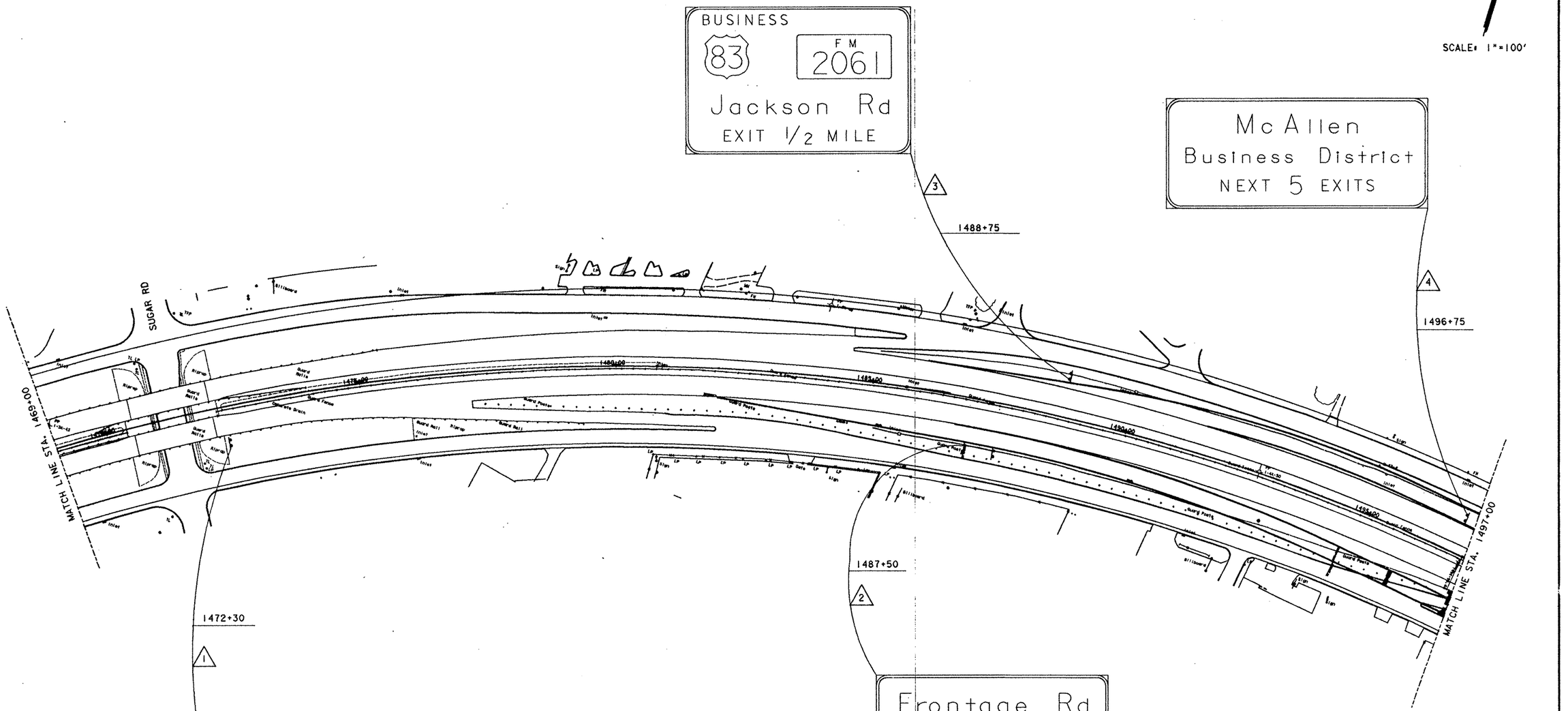

△ SIGNS ■ REMOVED (ITEM 6057)

STATE OF TEXAS
MELVIN D. GREENHILL
20020
REGISTERED PROFESSIONAL ENGINEER

Melvin D. Greenhill
March 3, 1992

LARGE SIGN LAYOUT

SHEET 6 OF 12

FED. RD. DIV. NO.	FEDERAL AID PROJECT NO.		SHEET NO.
6	NH 92( )M		422
STATE	DIST.	COUNTY	
TEXAS	21	HIDALGO	
CONT.	SECT.	JOB	HIGHWAY NO.
39	17	97	83/281

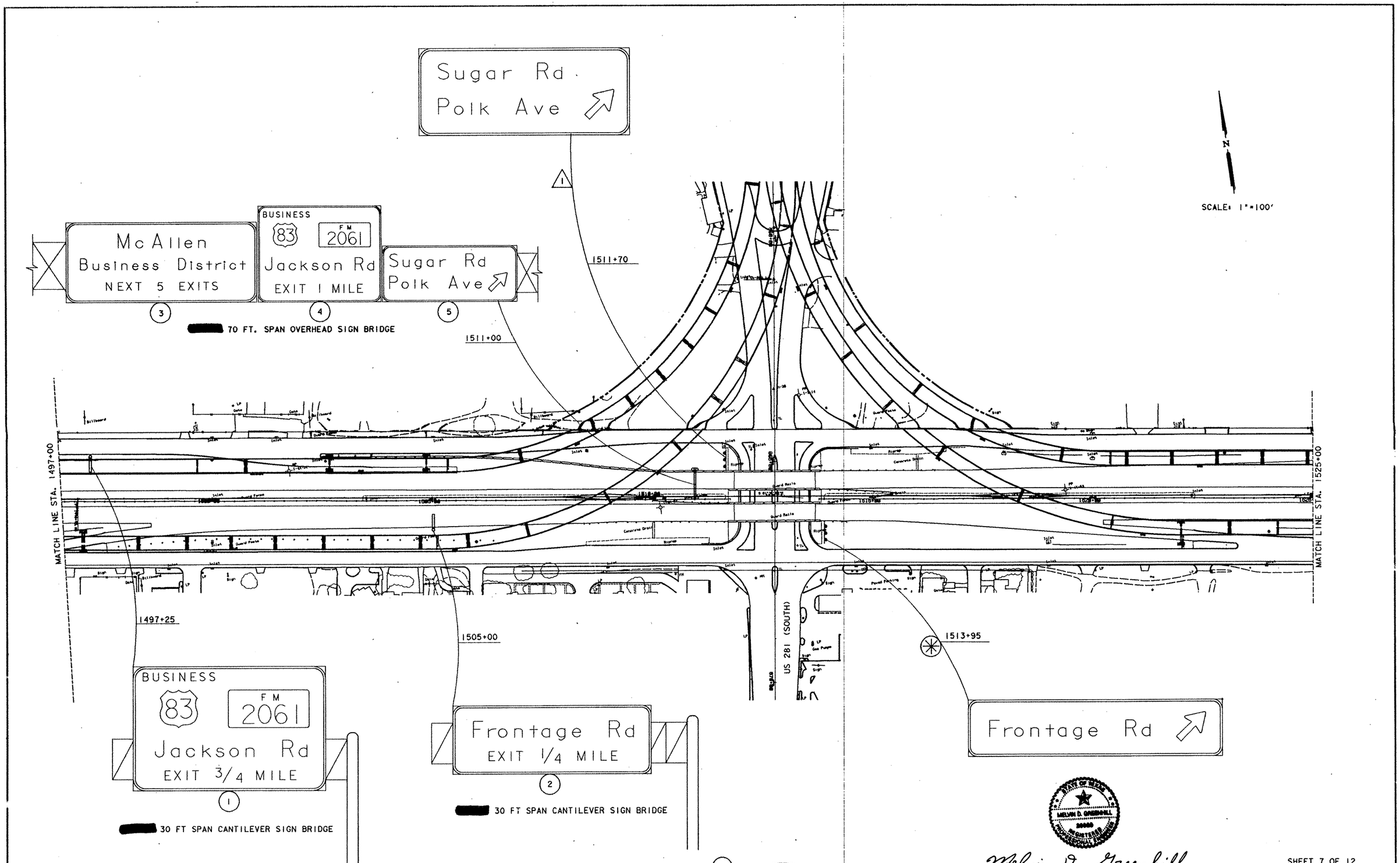

Melvin D. Greenhill
March 3, 1992

LARGE SIGN LAYOUT

SHEET 7 OF 12

FED. RD. DIV. NO.	FEDERAL AID PROJECT NO.		SHEET NO.
6	NH 92( )M		423
STATE	DIST.	COUNTY	
TEXAS	21	HIDALGO	
CONT.	SECT.	JOB	HIGHWAY NO.
39	17	97	83/281

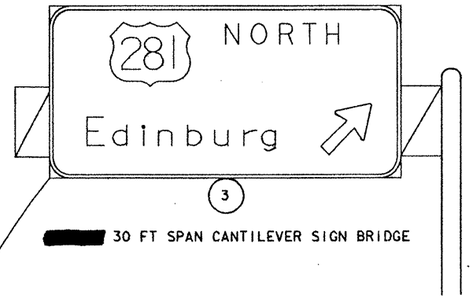

30 FT SPAN CANTILEVER SIGN BRIDGE

N

SCALE: 1"-100'

MATCH LINE STA. 1525+00

MATCH LINE STA. 1553+00

1543+50

1530+50

1538+00

1551+50

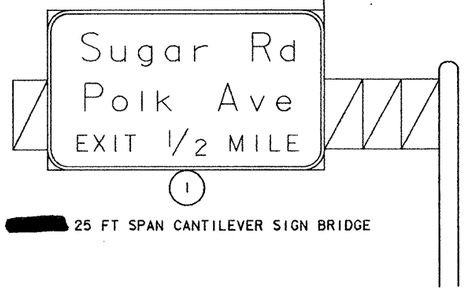

25 FT SPAN CANTILEVER SIGN BRIDGE

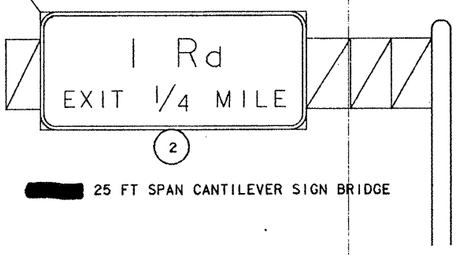

25 FT SPAN CANTILEVER SIGN BRIDGE

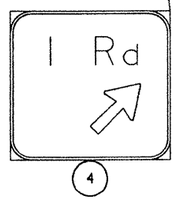

○ SIGNS ▬ INSTALLED

Melvin D. Greenhill
March 3, 1992

LARGE SIGN LAYOUT

SHEET 8 OF 12

FED. RD. DIV. NO.	FEDERAL AID PROJECT NO.		SHEET NO.
6	NH 92( )M		424
STATE	DIST.	COUNTY	
TEXAS	21	HIDALGO	
CONT.	SECT.	JOB	HIGHWAY NO.
39	17	97	83/2a

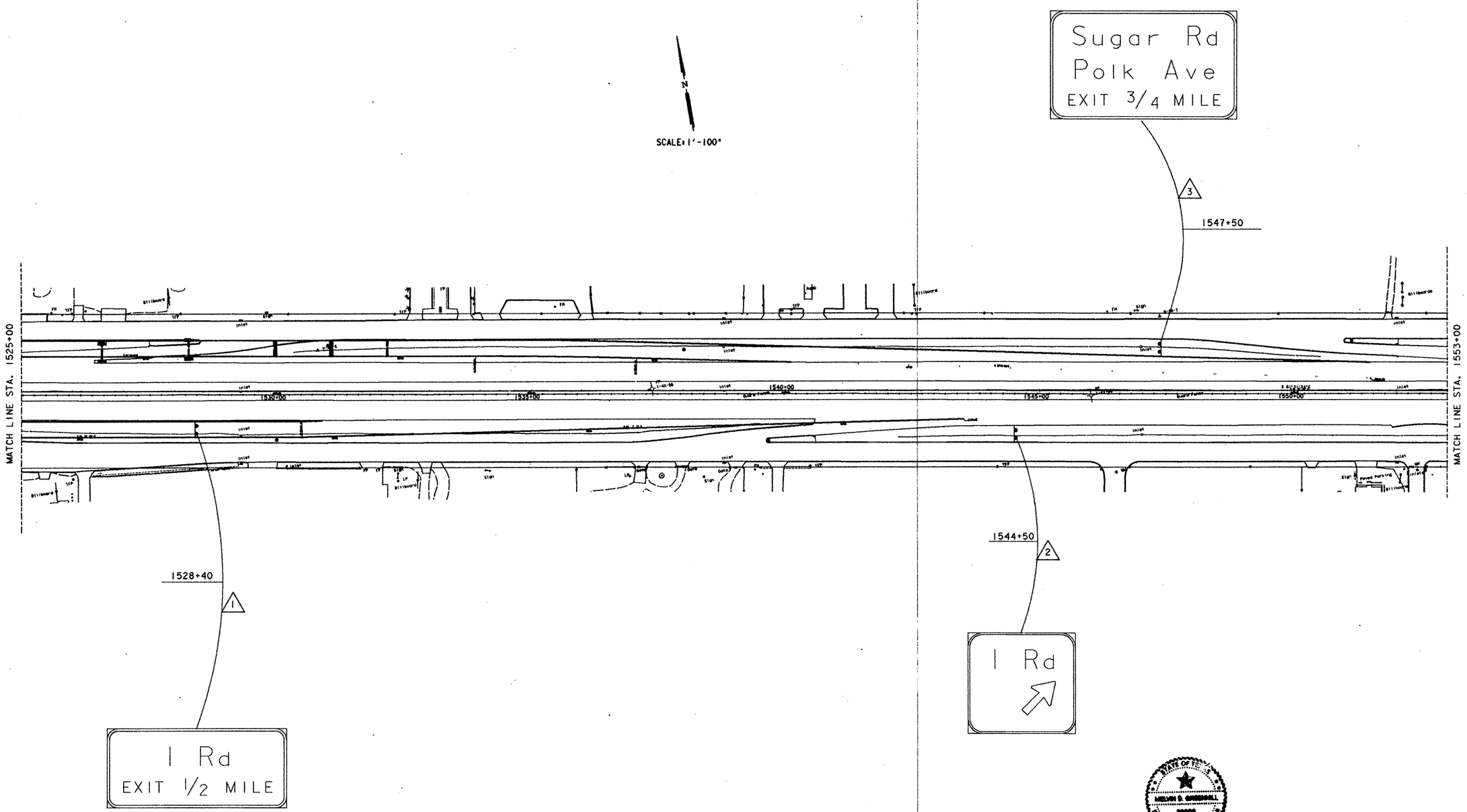

△ SIGNS [redacted] REMOVED

Melvin D. Greenhill
March 3, 1992

LARGE SIGN LAYOUT

SHEET 9 OF 12

FED. RD. DIV. NO.	FEDERAL AID PROJECT NO.		SHEET NO.
6	NH 92( )M		425
STATE	DIST.	COUNTY	
TEXAS	21	HIDALGO	
CONT.	SECT.	JOB	HIGHWAY NO.
39	17	97	83/281

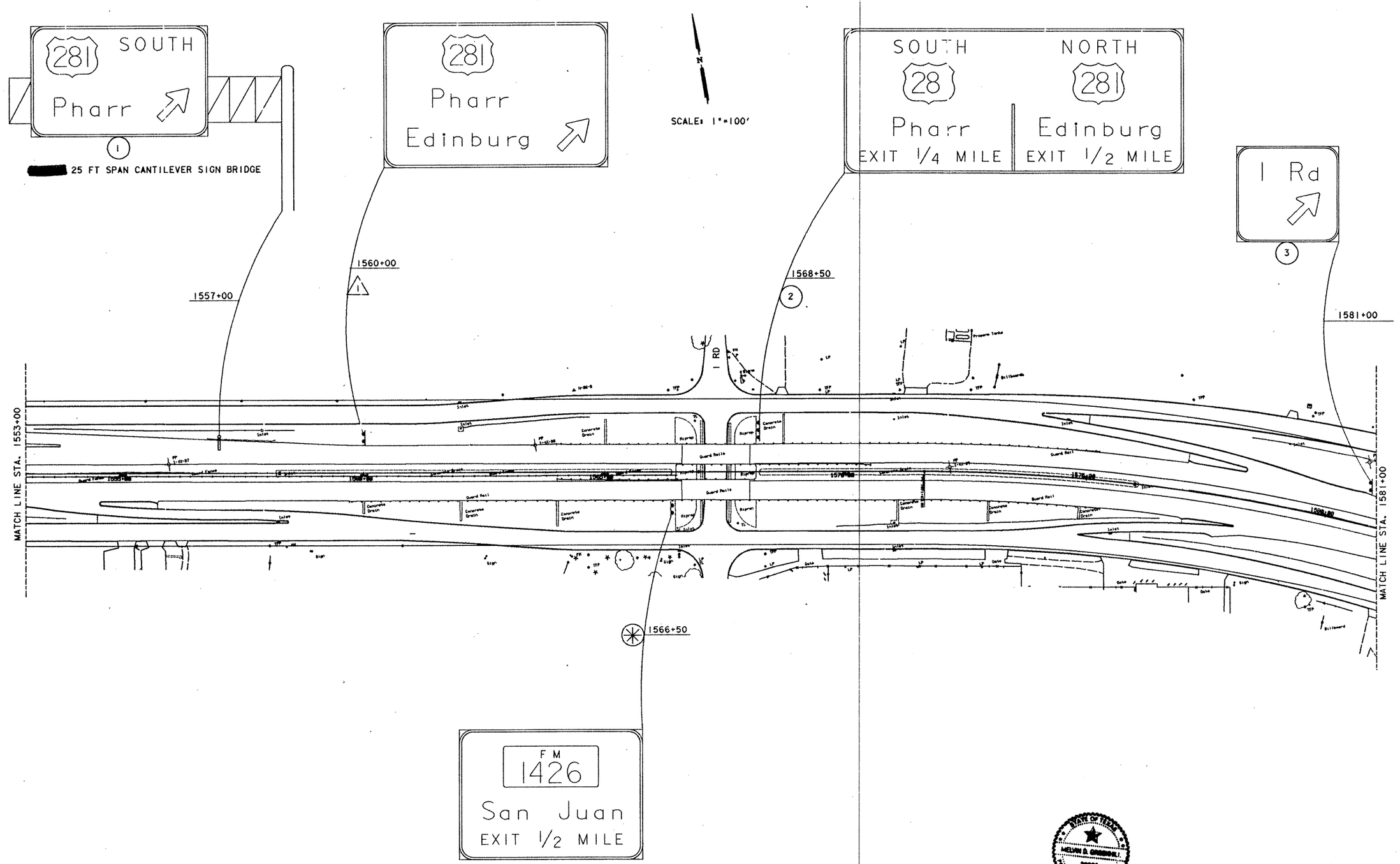

△ EXISTING SIGN [redacted] REMOVED

○ SIGNS [redacted] INSTALLED

⊛ SIGNS [redacted] REMAIN IN PLACE

STATE OF TEXAS
MELVIN D. GREENHILL
29920
REGISTERED
PROFESSIONAL ENGINEER

Melvin D. Greenhill
March 3, 1992

LARGE SIGN LAYOUT

SHEET 10 OF 12

FED. RD. DIV. NO.	FEDERAL AID PROJECT NO.		SHEET NO.
6	NH 92( )M		426
STATE	DIST.	COUNTY	
TEXAS	21	HIDALGO	
CONT.	SECT.	JOB	HIGHWAY NO.
39	17	97	83/281

7EA3:F325111JSIG83005.DGN IPARM=SIG5

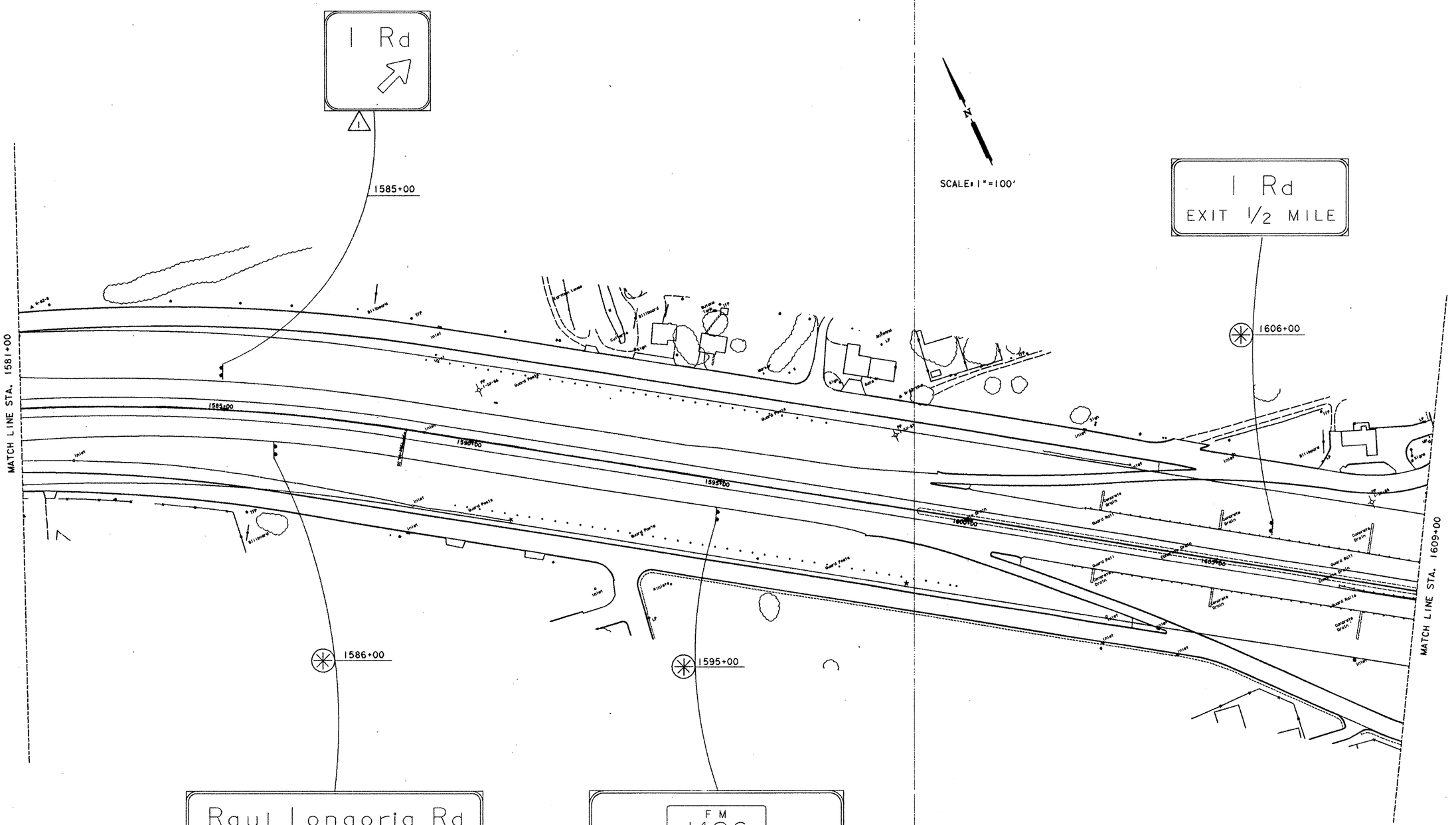

△ SIGNS ■ REMOVED

✳ SIGNS TO REMAIN IN PLACE

STATE OF TEXAS
MELVIN D. GREENHILL
58430
REGISTERED
PROFESSIONAL ENGINEER

Melvin D. Greenhill
March 3, 1992

LARGE SIGN LAYOUT

SHEET 11 OF 12

FED. RD. DIV. NO.	FEDERAL AID PROJECT NO.		SHEET NO.
6	NH 92( )M		427
STATE	DIST.	COUNTY	
TEXAS	21	HIDALGO	
CONT.	SECT.	JOB	HIGHWAY NO.
39	17	97	83/281

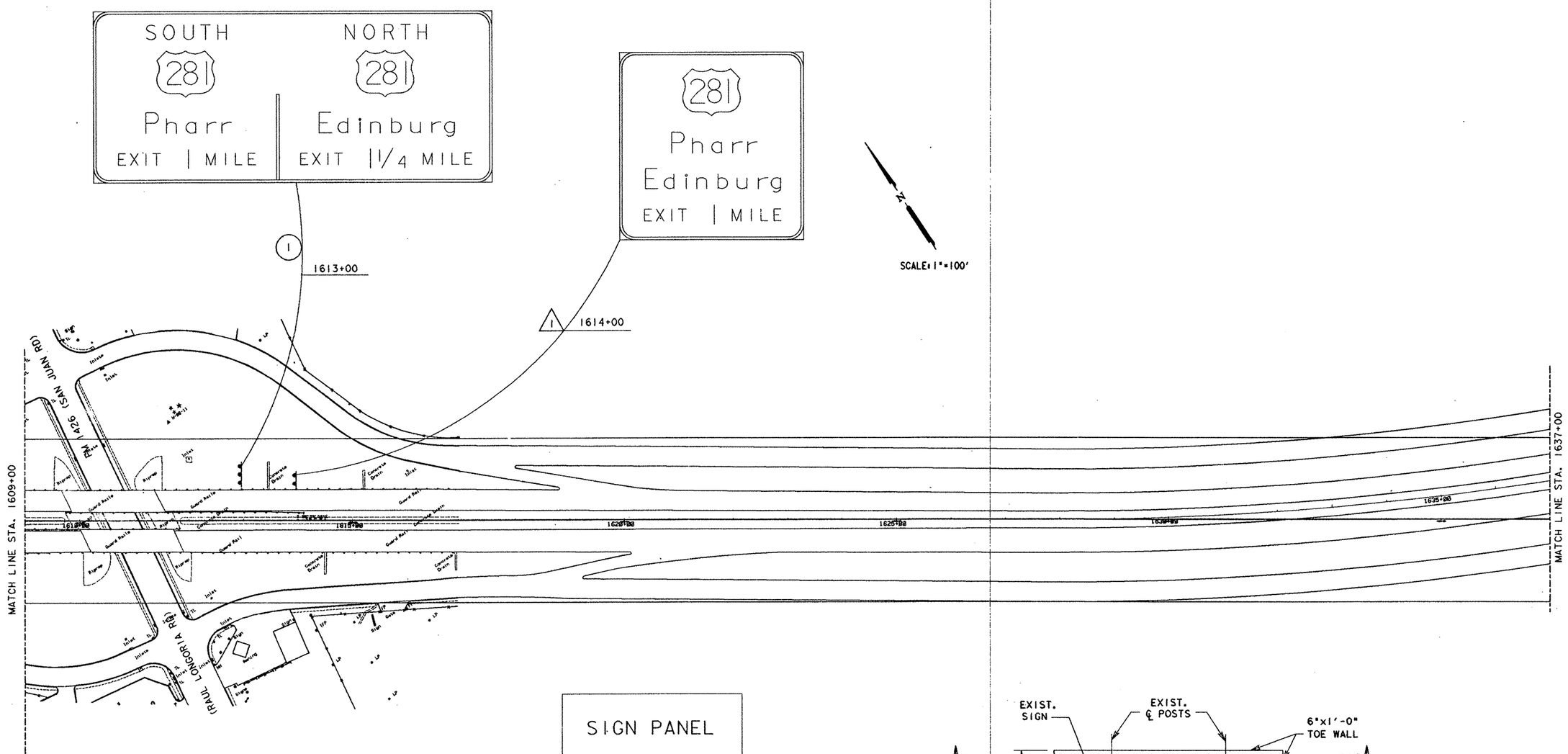

CONCRETE RIPRAP FOR
SIGN MULTIPLE POST GROUND MOUNTS

△ SIGNS [redacted] REMOVED

○ SIGNS [redacted] INSTALLED

NOTE:
CONCRETE FOR RIPRAP [redacted] CLASS "B" AND [redacted] REINFORCED AS SPECIFIED IN GENERAL NOTES FOR ITEM 432 "RIPRAP".

STATE OF TEXAS
MELVIN D. GREENHILL
20030
REGISTERED
PROFESSIONAL ENGINEER

Melvin D. Greenhill
March 3, 1992

LARGE SIGN LAYOUT

SHEET 12 OF 12

FED. RD. DIV. NO.	FEDERAL AID PROJECT NO.		SHEET NO.
6	NH 92( )M		428
STATE	DIST.	COUNTY	
TEXAS	21	HIDALGO	
CONT.	SECT.	JOB	HIGHWAY NO.
39	17	97	83/281

ZFA3:[325111]SIG83007.DGN 1PARM:S

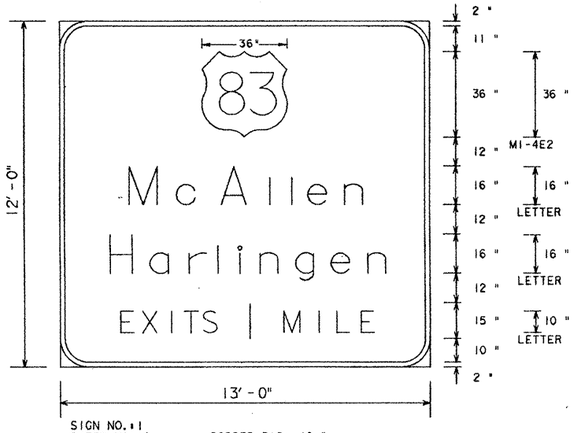

SIGN NO.: 1
SHEET NO.: 1
STA NO. : 803+75
C & S : 003917
MOUNT : OSB
BORDER RAD: 12 "
SCALE : 0.375" = 1'-0"
BACKGROUND: GREEN

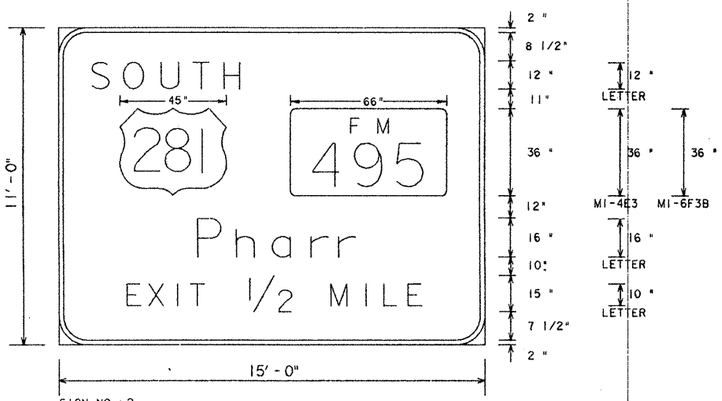

SIGN NO.: 2
SHEET NO.: 1
STA NO. : 803+75
C & S : 003917
MOUNT : OSB
BORDER RAD: 12 "
SCALE : 0.375" = 1'-0"
BACKGROUND: GREEN

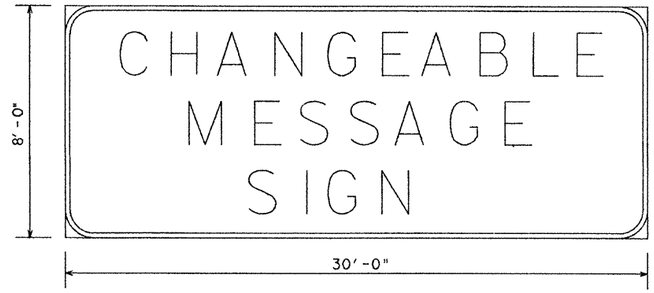

SIGN NO.: 1
SHEET NO.: 2
STA NO. : 819+65
C & S : 003917
MOUNT : OSB

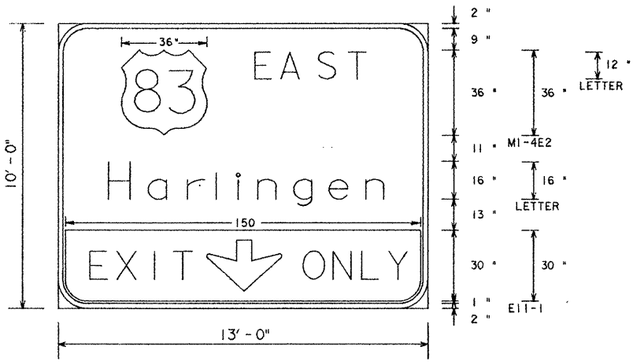

SIGN NO.: 2
SHEET NO.: 2
STA NO. : 840+00
C & S : 003917
MOUNT : OSB
BORDER RAD: 12 "
SCALE : 0.375" = 1'-0"
BACKGROUND: GREEN

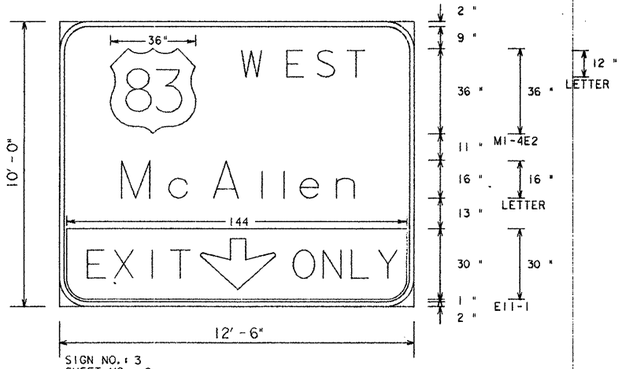

SIGN NO.: 3
SHEET NO.: 2
STA NO. : 840+00
C & S : 003917
MOUNT : OSB
BORDER RAD: 12 "
SCALE : 0.375" = 1'-0"
BACKGROUND: GREEN

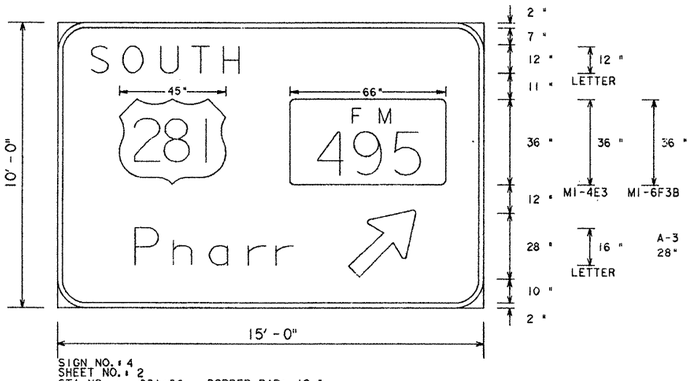

SIGN NO.: 4
SHEET NO.: 2
STA NO. : 831+50
C & S : 003917
MOUNT : COSS
BORDER RAD: 12 "
SCALE : 0.375" = 1'-0"
BACKGROUND: GREEN

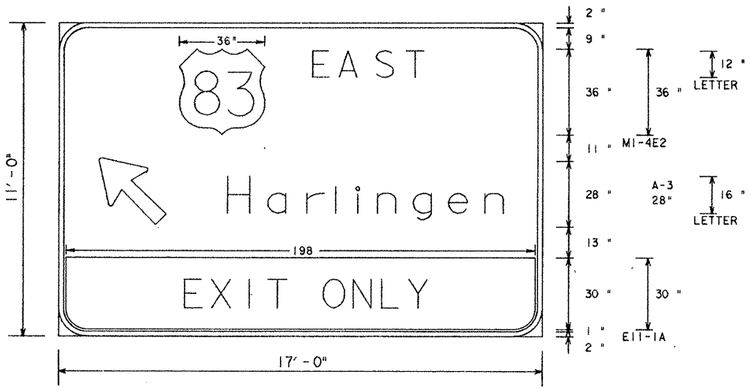

SIGN NO.: 1
SHEET NO.: 3
STA NO. : 853+64
C & S : 003917
MOUNT : OSB
BORDER RAD: 12 "
SCALE : 0.375" = 1'-0"
BACKGROUND: GREEN

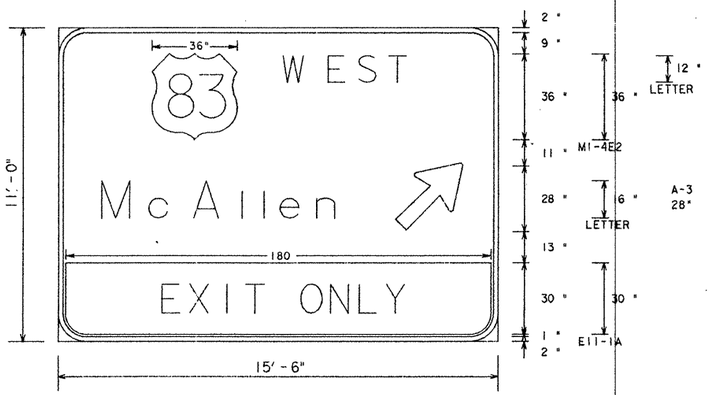

SIGN NO.: 2
SHEET NO.: 3
STA NO. : 853+64
C & S : 003917
MOUNT : OSB
BORDER RAD: 12 "
SCALE : 0.375" = 1'-0"
BACKGROUND: GREEN

STATE OF TEXAS
MELVIN D. GREENHILL
20680
REGISTERED
PROFESSIONAL ENGINEER

Melvin D. Greenhill
March 3, 1992

SHEET 1 OF 4

LARGE SIGN DETAILS

FED. RD. DIV. NO.	FEDERAL AID PROJECT NO.		SHEET NO.
6	NH 92 ( ) M		429
STATE	STATE DIST. NO.	COUNTY	
TEXAS	21	HIDALGO	
CONT.	SECT.	JOB	HIGHWAY NO.
0039	17	097	83^81

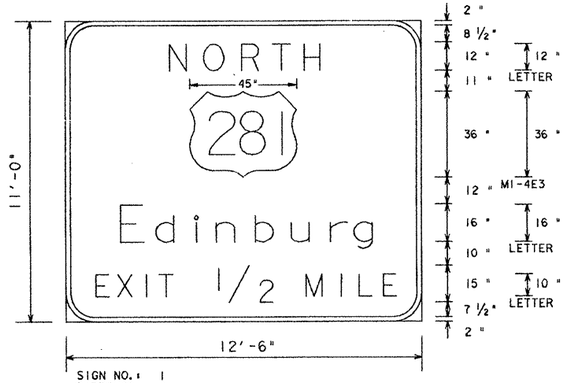

SIGN NO.: 1
SHEET NO.: 4
STA NO. : 1461+50
C & S : 003917
MOUNT : COSS
BORDER RAD: 12"
SCALE : 0.375" = 1'-0"
BACKGROUND: GREEN

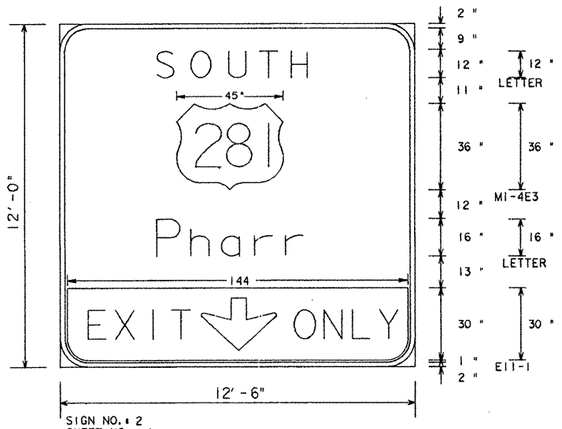

SIGN NO.: 2
SHEET NO.: 4
STA NO. : 1461+50
C & S : 003917
MOUNT : COSS
BORDER RAD: 12"
SCALE : 0.375" = 1'-0"
BACKGROUND: GREEN

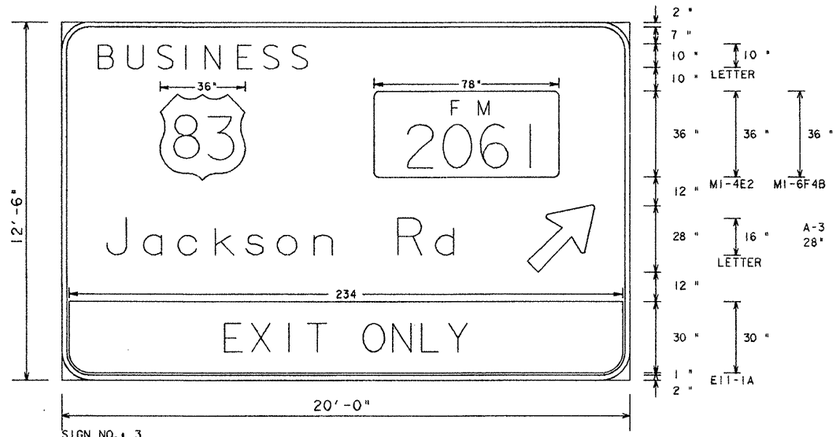

SIGN NO.: 3
SHEET NO.: 4
STA NO. : 1462+00
C & S : 003917
MOUNT : COSS
BORDER RAD: 12"
SCALE : 0.375" = 1'-0"
BACKGROUND: GREEN

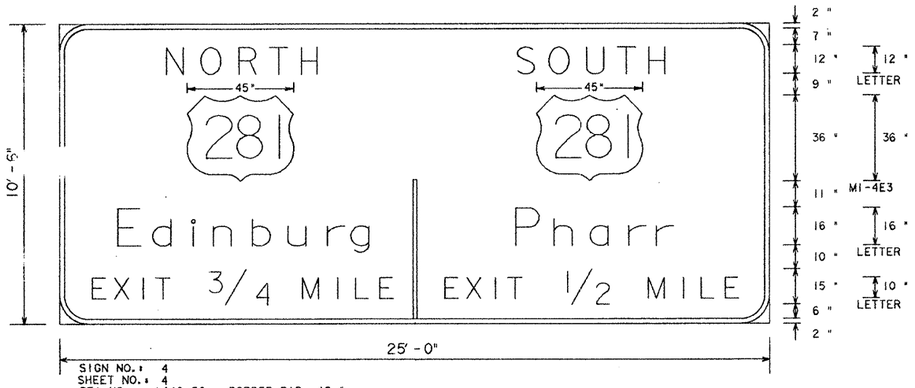

SIGN NO.: 4
SHEET NO.: 4
STA NO. : 1448+50
C & S : 003917
MOUNT : GROUND
BORDER RAD: 12"
SCALE : 0.375" = 1'-0"
BACKGROUND: GREEN

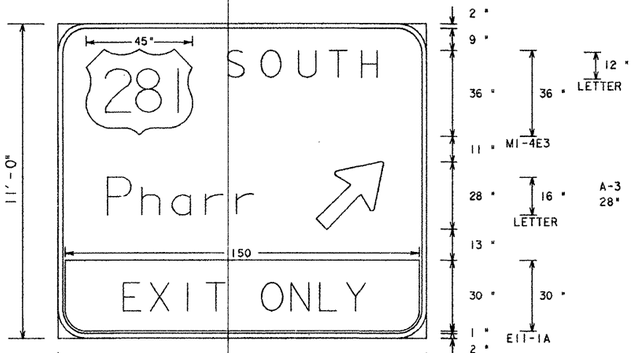

SIGN NO.: 1
SHEET NO.: 5
STA NO. : 1473+00
C & S : 003917
MOUNT : COSS
BORDER RAD: 12"
SCALE : 0.375" = 1'-0"
BACKGROUND: GREEN

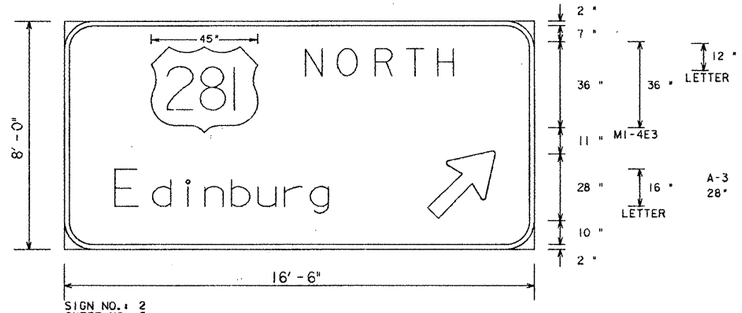

SIGN NO.: 2
SHEET NO.: 5
STA NO. : 1482+00
SIGN NO.: 3
SHEET NO.: 8
STA NO. : 1543+50
C & S : 003917
MOUNT : COSS
BORDER RAD: 12"
SCALE : 0.375" = 1'-0"
BACKGROUND: GREEN

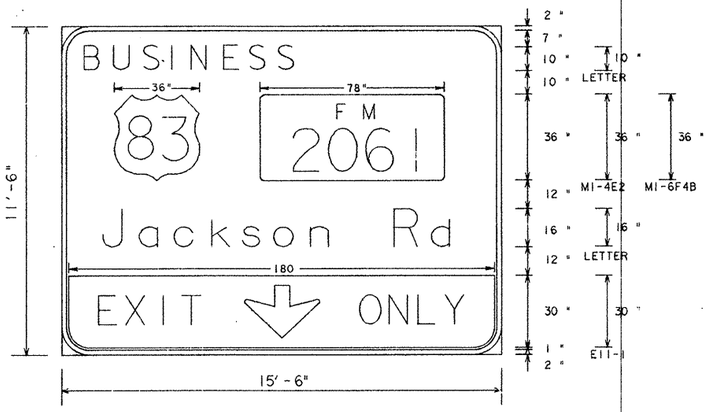

SIGN NO.: 3
SHEET NO.: 5
STA NO. : 1474+00
C & S : 003917
MOUNT : COSS
BORDER RAD: 12"
SCALE : 0.375" = 1'-0"
BACKGROUND: GREEN

Melvin D. Greenhill
March 3, 1992

LARGE SIGN DETAILS

SHEET 2 OF 4

FED. RD. DIV. NO.	FEDERAL AID PROJECT NO.		SHEET NO.
6	NH 92( )M		430
STATE	STATE DIST. NO.	COUNTY	
TEXAS	21	HIDALGO	
CONT.	SECT.	JOB	HIGHWAY NO.
0039	17	097	83/281

Z:A3:F325111DSIGNDET.DGN IPARM=I

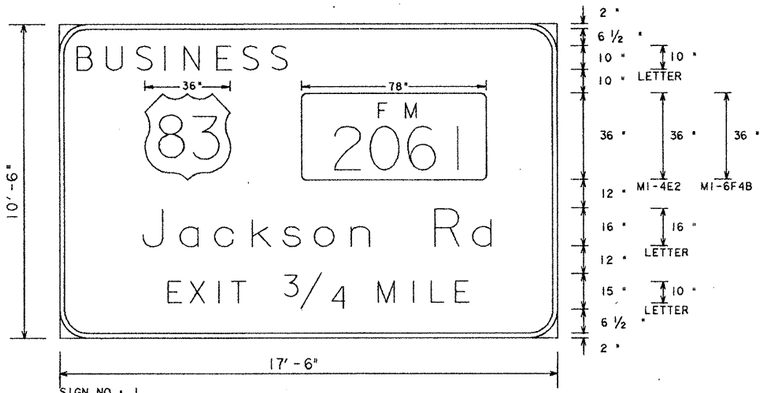

SIGN NO.: 1
SHEET NO.: 7
STA NO. : 1497+25 BORDER RAD: 12 "
C & S : 003917 SCALE : 0.375" = 1'-0"
MOUNT : OSB BACKGROUND: GREEN

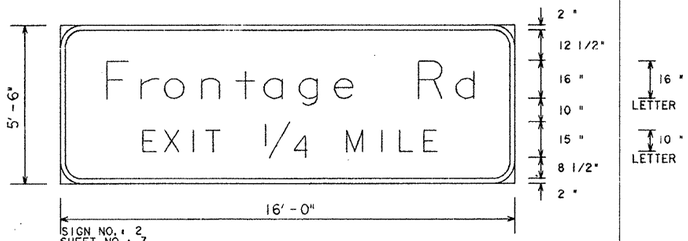

SIGN NO.: 2
SHEET NO.: 7
STA NO. : 1505+00 BORDER RAD: 9 "
C & S : 003917 SCALE : 0.375" = 1'-0"
MOUNT : COSS BACKGROUND: GREEN

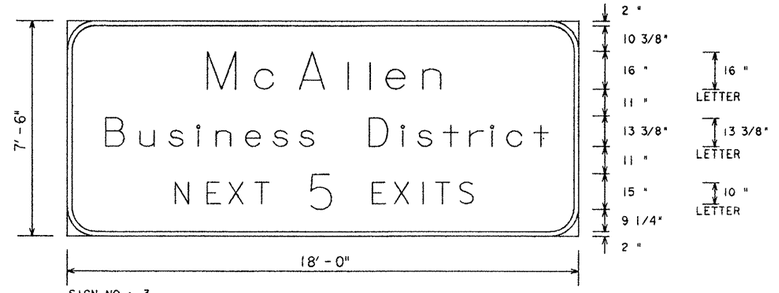

SIGN NO.: 3
SHEET NO.: 7
STA NO. : 1511+00 BORDER RAD: 12 "
C & S : 003917 SCALE : 0.375" = 1'-0"
MOUNT : OSB BACKGROUND: GREEN

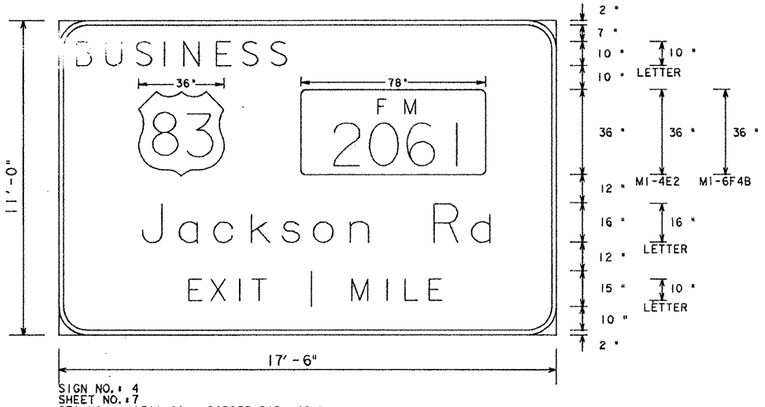

SIGN NO.: 4
SHEET NO.: 7
STA NO. : 1511+00 BORDER RAD: 12 "
C & S : 003917 SCALE : 0.375" = 1'-0"
MOUNT : OSB BACKGROUND: GREEN

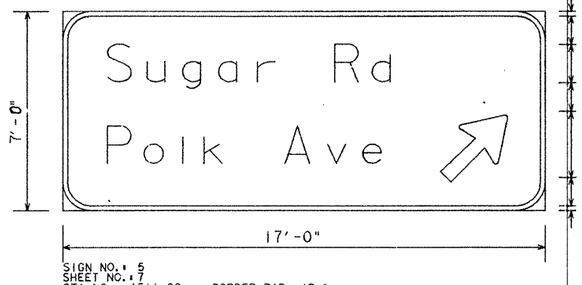

SIGN NO.: 5
SHEET NO.: 7
STA NO. : 1511+00 BORDER RAD: 12 "
C & S : 003917 SCALE : 0.375" = 1'-0"
MOUNT : OSB BACKGROUND: GREEN

A-3
28"

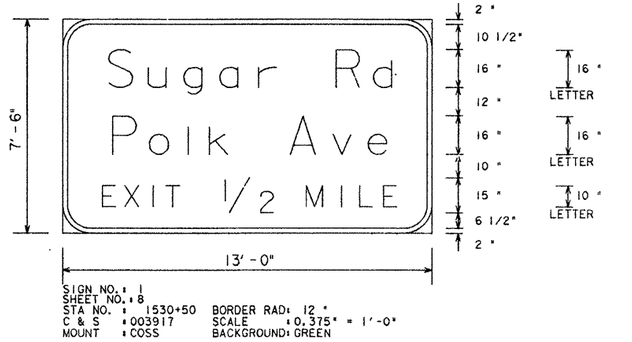

SIGN NO.: 1
SHEET NO.: 8
STA NO. : 1530+50 BORDER RAD: 12 "
C & S : 003917 SCALE : 0.375" = 1'-0"
MOUNT : COSS BACKGROUND: GREEN

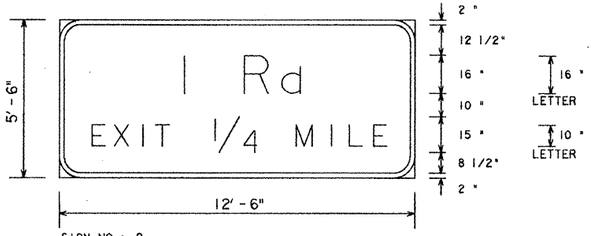

SIGN NO.: 2
SHEET NO.: 8
STA NO. : 1538+00 BORDER RAD: 9 "
C & S : 003917 SCALE : 0.375" = 1'-0"
MOUNT : COSS BACKGROUND: GREEN

STATE OF TEXAS
MELVIN D. GREENHILL
20920
REGISTERED PROFESSIONAL ENGINEER

Melvin D. Greenhill
March 3, 1992

LARGE SIGN DETAILS

SHEET 3 OF 4

FED. RD. DIV. NO.	FEDERAL AID PROJECT NO.		SHEET NO.
6	NH 92( )M		431
STATE	STATE DIST. NO.	COUNTY	
TEXAS	21	HIDALGO	
CONT.	SECT.	JOB	HIGHWAY NO.
0039	17	097	83/281

TEAM="E325 LLJS LONDET, DGN, LRARM=DET

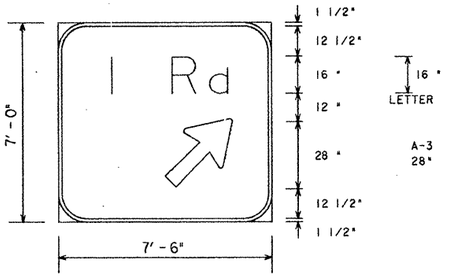

SIGN NO.: 4
SHEET NO.: 8
STA NO.: 1551+50
SIGN NO.: 3
SHEET NO.: 10
STA NO.: 1581+00
C & S: 003917
MOUNT: GROUND

BORDER RAD: 12"
SCALE: 0.375" = 1'-0"
BACKGROUND: GREEN

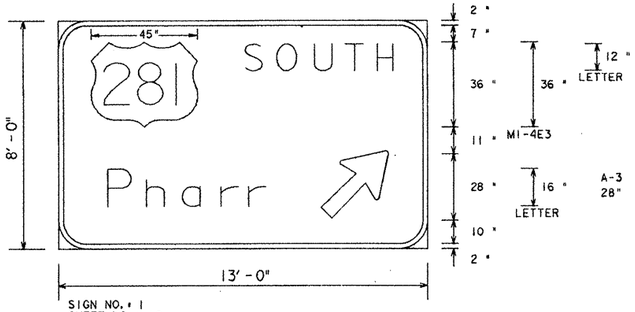

SIGN NO.: 1
SHEET NO.: 10
STA NO.: 1557+00
C & S: 003917
MOUNT: COSS

BORDER RAD: 12"
SCALE: 0.375" = 1'-0"
BACKGROUND: GREEN

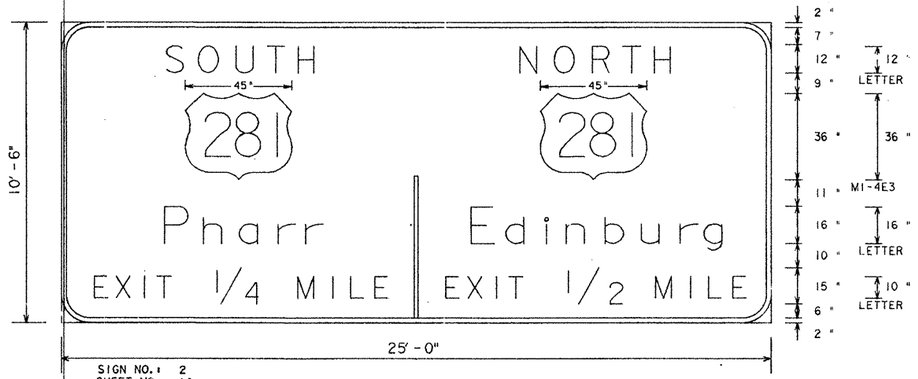

SIGN NO.: 2
SHEET NO.: 10
STA NO.: 1568+50
C & S: 003917
MOUNT: GROUND

BORDER RAD: 12"
SCALE: 0.375" = 1'-0"
BACKGROUND: GREEN

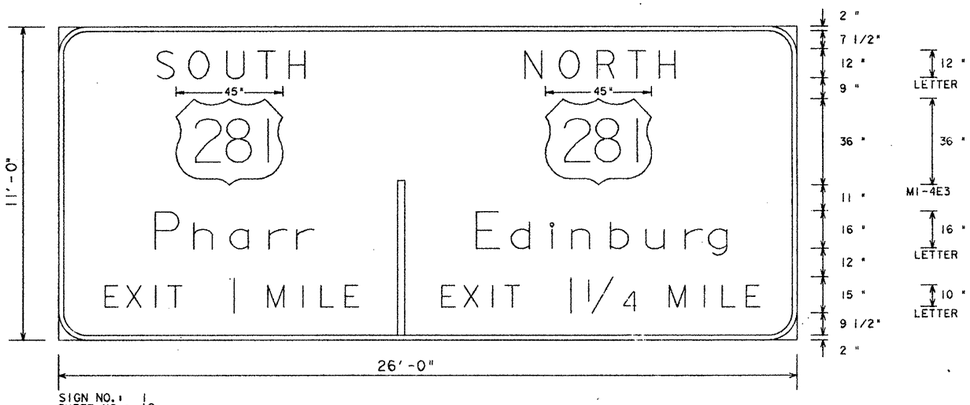

SIGN NO.: 1
SHEET NO.: 12
STA NO.: 1613+00
C & S: 003917
MOUNT: GROUND

BORDER RAD: 12"
SCALE: 0.375" = 1'-0"
BACKGROUND: GREEN

STATE OF TEXAS
MELVIN D. GREENHILL
REGISTERED
PROFESSIONAL ENGINEER

Melvin D. Greenhill
March 3, 1992

LARGE SIGN DETAILS

SHEET 4 OF 4

FED. RD. DIV. NO.	FEDERAL AID PROJECT NO.		SHEET NO.
6	NH 92( )M		431A
STATE	STATE DIST. NO.	COUNTY	
TEXAS	21	HIDALGO	
CONT.	SECT.	JOB	HIGHWAY NO.
0039	17	097	83/281

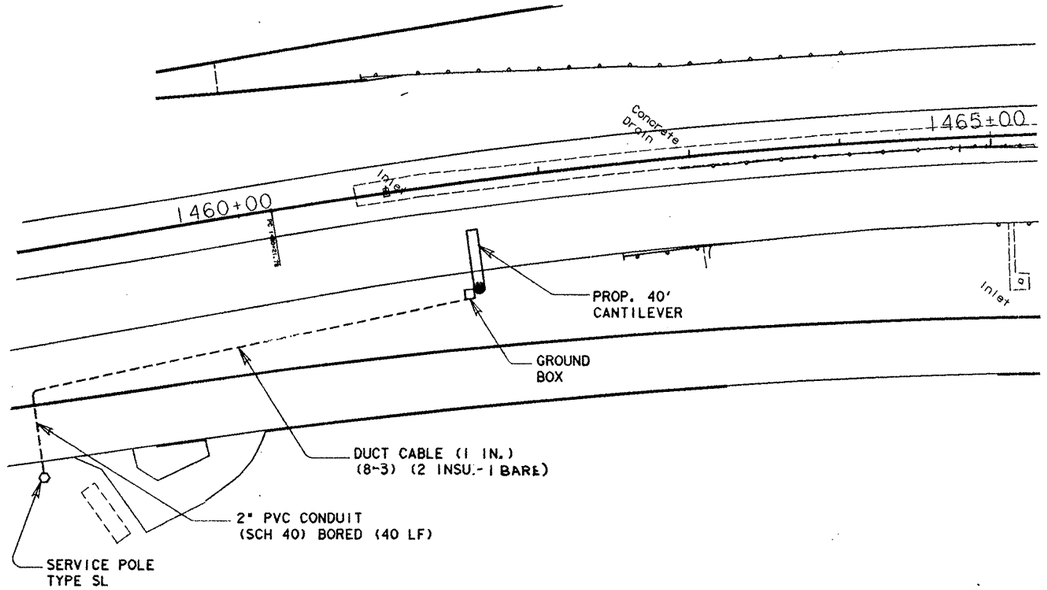

PLAN VIEW

STA. 1461+50 (RT.)

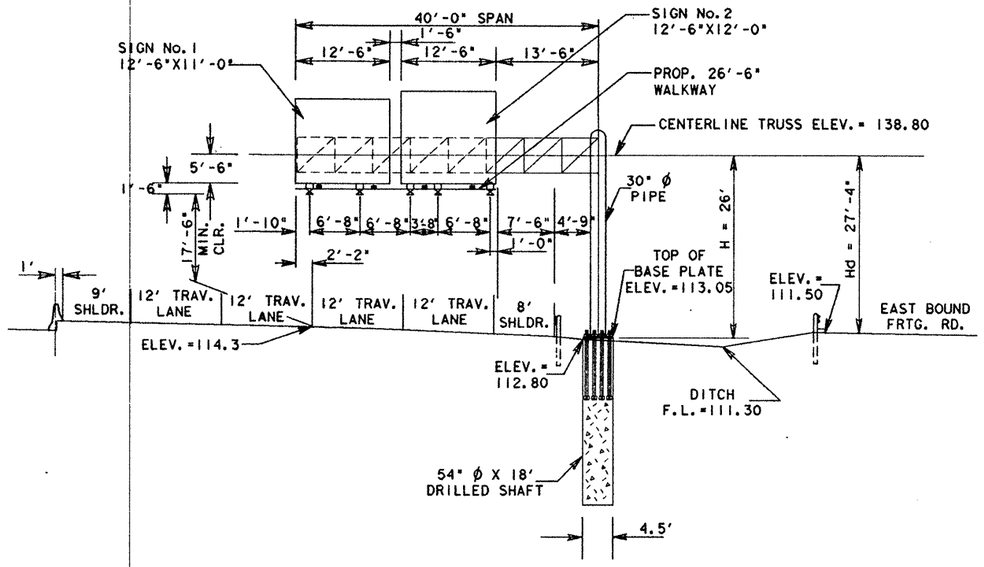

SIGNS NO. 1 & 2

STA. 1461+50 (RT.)

SUMMARY OF QUANTITIES

ITEM	DESCRIPTION	UNIT	QUANTITY EST.	QUANTITY FIN.
417	SLURRY DISP. DRILL SHAFT (54 IN. SIGN MTS)	LF	18	
622	DUCT CABLE (1 IN.) (8-3) (2 INSU-1 BARE)	LF	370	
618	CONDUIT (PVC) (SCH 40) 2" BORED	LF	40	
624	GROUND BOX (RPM) (TY A) (122311) APRON	EA	1	
628	SERVICE POLE TY SL	EA	1	
650	OVERHEAD SIGN SUPPORT (CANT.) (40' SPAN) (17'-6" HT)	EA	1	
652	HIGHWAY SIGN LIGHTING FIXTURE (MV) (100 WATT)	EA	4	
654	SIGN WALKWAY	LF	26.5	

NOTE: SEE SUMMARY OF LARGE SIGNS SHEETS FOR QUANTITIES ON ITEMS 636 AND 642.

DESIGN PARAMETERS:

CANTILEVER SPAN = 40'
DESIGN HEIGHT, Hd=27'-4"
COLUMN HEIGHT, H= 26'
AVG. PEN. VALUE = 12 BLOWS/FT.
WIND ZONE 1 = 100 MPH (HIDALGO COUNTY)
BELOW ICE ZONE
FOR DESIGN
USE STANDARDS: COSS-Z1, COSSD, COSSF, AND COSS-FD

NOTE:
INSTALL NEW SIGN, LIGHTS, WALKWAY AND SUPPORT BRACKETS AS SHOWN. INSTALL NEW CONDUIT, CONDUCTOR, FITTINGS, ETC. NECESSARY FOR A COMPLETE SYSTEM IN PLACE AND OPERATIONAL.

LEGEND

- [redacted] LIGHT FIXTURES
- - - - CONDUIT RUN W/ CONDUCTORS
- □ - GROUND BOX
- ○ - SERVICE POLE

NOTE:
SEE STANDARD SL (MV) FOR MERCURY VAPOR LAMP SPACING.

STATE OF TEXAS
MELVIN D. GREENHILL
REGISTERED

Melvin D. Greenhill
March 3, 1992

CANTILEVER OVERHEAD SIGNS

SHEET 1 OF 17 SHEETS

FED. RD. DIV. NO.	FEDERAL AID PROJECT NO.		SHEET NO.
6	NH 92( )M		432
STATE	STATE DIST. NO.	COUNTY	
TEXAS	21	HIDALGO	
CONT.	SECT.	JOB	HIGHWAY NO.
39	17	39	US83/281

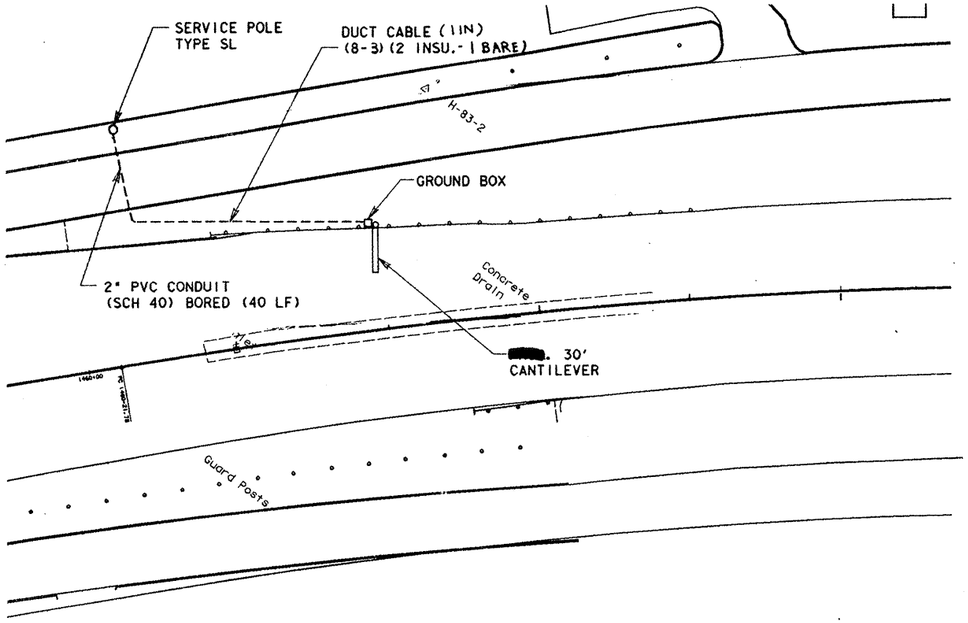

PLAN VIEW

STA. 1462+00 (LT)

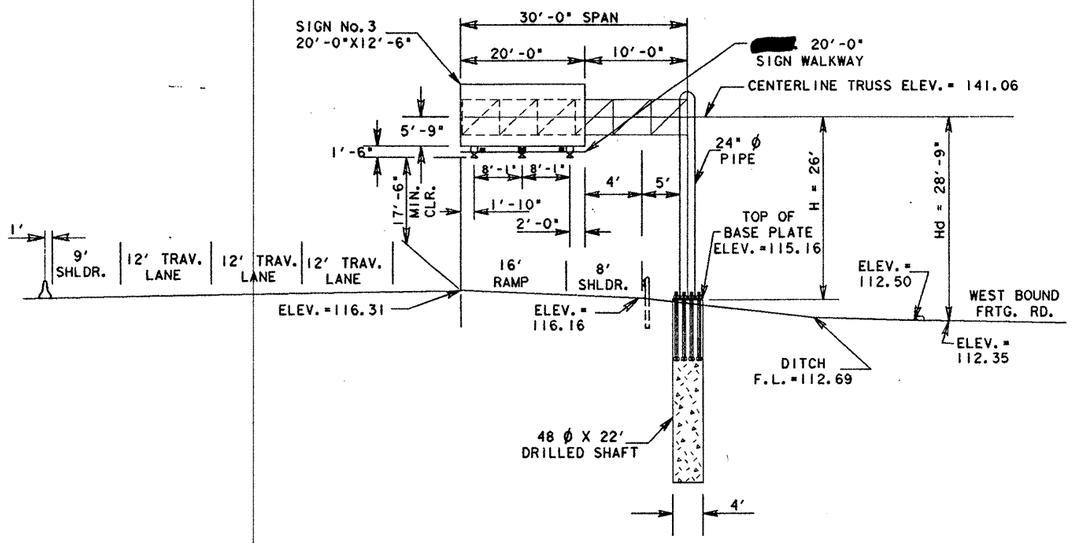

SIGN NO. 3

STA. 1462+00 (LT.)

SUMMARY OF QUANTITIES

ITEM	DESCRIPTION	UNIT	QUANTITY	
			EST.	FIN.
417	SLURRY DISP. DRILL SHAFT (48 IN. SIGN MTS)	LF	22	
622	DUCT CABLE (1 IN) (8-3) (2 INSU- 1 BARE)	LF	205	
618	CONDUIT (PVC) (SCH 40) 2" BORED	LF	40	
624	GROUND BOX (RPM) (TY A) (122311) APRON	EA	1	
		LF		
628	SERVICE POLE TY SL	EA	1	
650	OVERHEAD SIGN SUPPORT (CANT.) (30' SPAN) (17'-6" HT)	EA	1	
652	HIGHWAY SIGN LIGHTING FIXTURE (MV) (100 WATT)	EA	3	
654	SIGN WALKWAY	LF	20.0	

NOTE: SEE SUMMARY OF LARGE SIGNS SHEETS FOR QUANTITIES ON ITEMS 636 AND 642.

DESIGN PARAMETERS:

CANTILEVER SPAN = 30'
DESIGN HEIGHT, Hd = 28'-9"
COLUMN HEIGHT, H = 26'
AVG. PEN. VALUE = 12 BLOWS/FT.
WIND ZONE I = 100 MPH (HIDALGO COUNTY)
BELOW ICE ZONE
FOR DESIGN
USE STANDARDS: COSS-ZI, COSSD, COSSF, AND COSS-FD

NOTE:
INSTALL NEW SIGN, LIGHTS, WALKWAY AND SUPPORT BRACKETS AS SHOWN. INSTALL NEW CONDUIT, CONDUCTOR, FITTINGS, ETC. NECESSARY FOR A COMPLETE SYSTEM IN PLACE AND OPERATIONAL.

NOTE:
SEE STANDARD SL(MV) FOR MERCURY VAPOR LAMP SPACING.

LEGEND

- LIGHT FIXTURES
- CONDUIT RUN W/ CONDUCTORS
- GROUND BOX
- SERVICE POLE

STATE OF TEXAS
MELVIN D. GREENHILL
80930
REGISTERED
PROFESSIONAL ENGINEER

Melvin D. Greenhill
March 3, 1992

CANTILEVER OVERHEAD SIGNS

SHEET 2 OF 17 SHEETS

FED. RD. DIV. NO.	FEDERAL AID PROJECT NO.		SHEET NO.
6	NH 92( )M		433
STATE	STATE DIST. NO.	COUNTY	
TEXAS	21	HIDALGO	
CONT.	SECT.	JOB	HIGHWAY NO.
39	17	99	US83/28

7542: 5326 L670VERHDS DGN: IRARM-SAN(

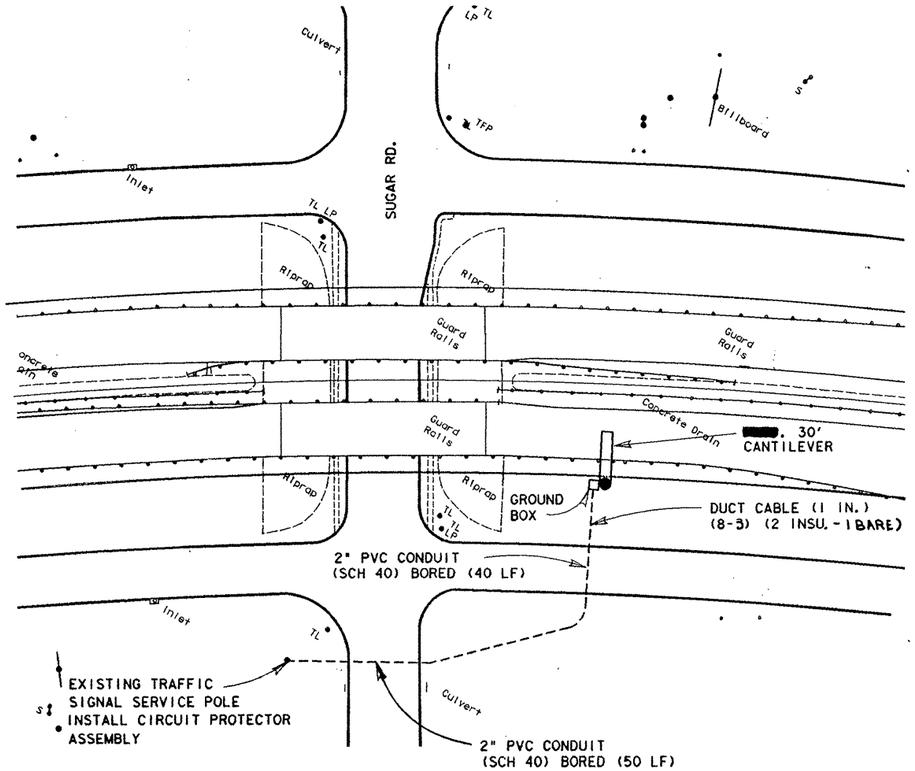

PLAN VIEW

SIGN NO. 3
STA. 1473+00 (RT.)

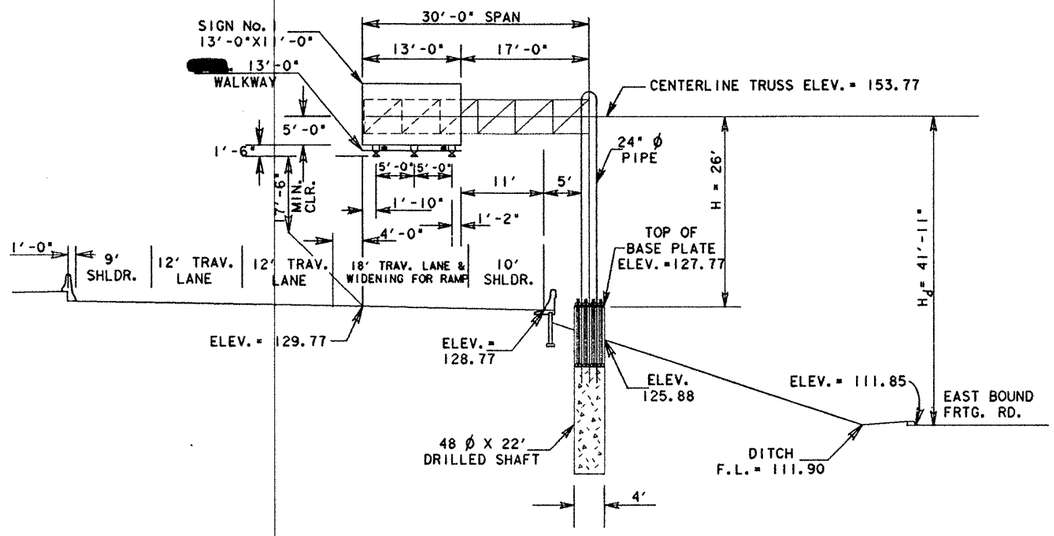

SIGN NO. 1

STA. 1473+00 (RT.)

SUMMARY OF QUANTITIES

ITEM	DESCRIPTION	UNIT	QUANTITY	
			EST.	FIN.
417	SLURRY DISP. DRILL SHAFT (48 IN. SIGN MTS)	LF	22	
618	CONDUIT (PVC) (SCH 40) 2" (BORED)	LF	90	
622	DUCT CABLE (1 IN) (8-3) (2 INSU-1 BARE)	LF	340	
624	GROUND BOX (RPM) (TY A) (12231) APRON	EA	1	
626	CIRCUIT PROT ASSEMBLY TY SL	EA	1	
650	OVERHEAD SIGN SUPPORT (CANT.) (30' SPAN) (17'-6" HT)	EA	1	
652	HIGHWAY SIGN LIGHTING FIXTURE (MV) (100 WATT)	EA	2	
654	SIGN WALKWAY	LF	13	

NOTE: SEE SUMMARY OF LARGE SIGNS SHEETS FOR QUANTITIES ON ITEMS 636 AND 642.

DESIGN PARAMETERS:

CANTILEVER SPAN = 30'
DESIGN HEIGHT, Hd = 41'-11"
COLUMN HEIGHT, H = 26'
AVG. PEN. VALUE = 14 BLOWS/FT.
WIND ZONE I = 100 MPH (HIDALGO COUNTY)
BELOW ICE ZONE
FOR DESIGN
USE STANDARDS: HCOSS-21, COSSD, COSSF, AND COSS

NOTE:
INSTALL NEW SIGN, LIGHTS, WALKWAY AND SUPPORT BRACKETS AS SHOWN. INSTALL NEW CONDUIT, CONDUCTOR, FITTINGS, ETC. NECESSARY FOR A COMPLETE SYSTEM IN PLACE AND OPERATIONAL.

NOTE:
SEE STANDARD SL (MV) FOR MERCURY VAPOR LAMP SPACING.

LEGEND

- LIGHT FIXTURES
- CONDUIT RUN W/ CONDUCTORS
- GROUND BOX
- SERVICE POLE

STATE OF TEXAS
MELVIN D. GREENHILL
20488
REGISTERED PROFESSIONAL ENGINEER

Melvin D. Greenhill
March 3, 1992

CANTILEVER OVERHEAD SIGNS

SHEET 3 OF 17 SHEETS

FED. RD. DIV. NO.	FEDERAL AID PROJECT NO.		SHEET NO.
6	NH 92( )M		434
STATE	STATE DIST. NO.	COUNTY	
TEXAS	21	HIDALGO	
CONT.	SECT.	JOB	HWAY NO
39	17	93	283/28

7EA3:[325LIO]OVERHEAD_SGN_1PARM=SAME

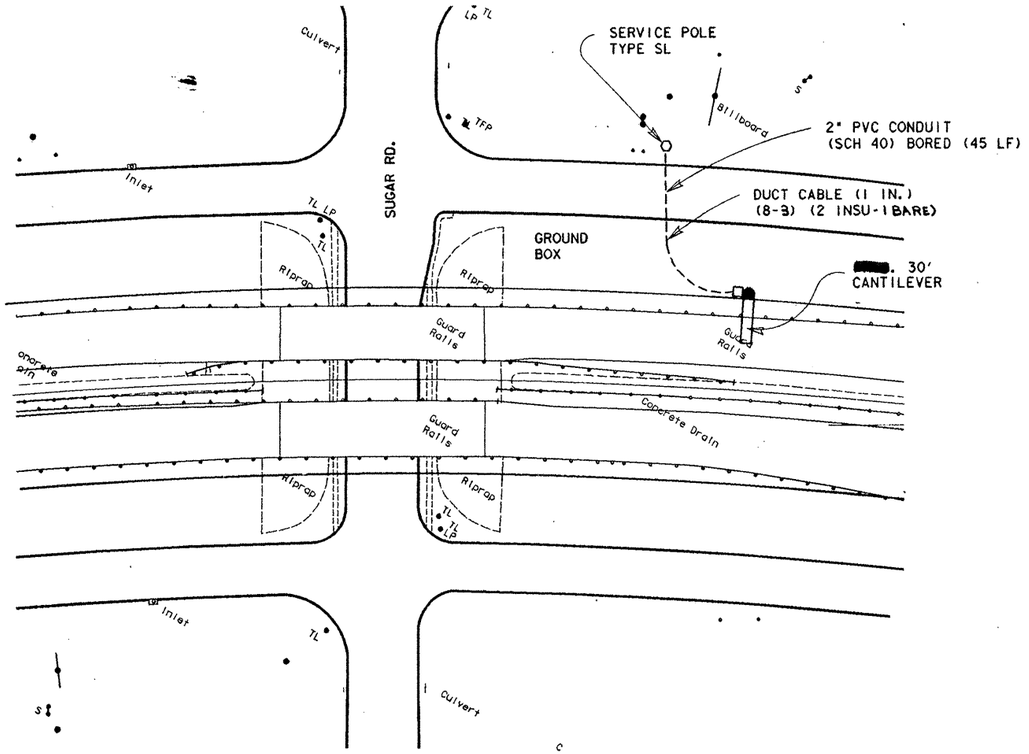

PLAN VIEW

SIGN NO. 3
STA. 1474+00 (LT.)

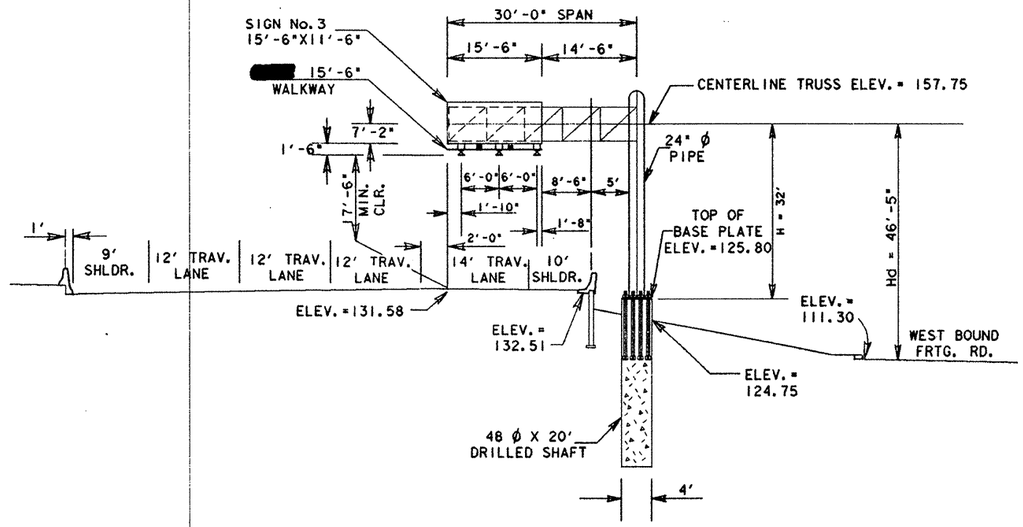

SIGN NO. 3

STA. 1474+00 (LT.)

SUMMARY OF QUANTITIES

ITEM	DESCRIPTION	UNIT	QUANTITY	
			EST.	FIN.
417	SLURRY DISP. DRILL SHAFT (48 IN. SIGN MTS)	LF	20	
618	CONDUIT (PVC) (SCH 40) 2"(BORED)	LF	45	
622	DUCT CABLE (1 IN) (8-3) (2 INSU-1 BARE)	LF	150	
624	GROUND BOX (RPM) (TY A) (122311) APRON	EA	1	
628	SERVICE POLE TY SL	EA	1	
650	OVERHEAD SIGN SUPPORT (CANT.) (30' SPAN) (17'-6" HT)	EA	1	
652	HIGHWAY SIGN LIGHTING FIXTURE (MV) (100 WATT)	EA	2	
654	SIGN WALKWAY	LF	15.5	

NOTE: SEE SUMMARY OF LARGE SIGNS SHEETS FOR QUANTITIES ON ITEMS 636 AND 642.

DESIGN PARAMETERS:

CANTILEVER SPAN = 30'
DESIGN HEIGHT, Hd= 46'-5"
COLUMN HEIGHT, H= 32'
AVG. PEN. VALUE = 14 BLOWS/FT.
WIND ZONE 1 = 100 MPH (HIDALGO COUNTY)
BELOW ICE ZONE
FOR DESIGN
USE STANDARDS: HCOSS-21, COSSD, COSSF, AND COSS

NOTE:
INSTALL NEW SIGN, LIGHTS, WALKWAY AND SUPPORT BRACKETS AS SHOWN. INSTALL NEW CONDUIT, CONDUCTOR, FITTINGS, ETC. NECESSARY FOR A COMPLETE SYSTEM IN PLACE AND OPERATIONAL.

NOTE:
SEE STANDARD SL (MV) FOR MERCURY VAPOR LAMP SPACING.

LEGEND

- [redacted] - LIGHT FIXTURES
- - - - CONDUIT RUN W/ CONDUCTORS
- □ - GROUND BOX
- ○ - SERVICE POLE

ELVIN D. GREENHILL
3080
REGISTERED
PROFESSIONAL ENGINEER

Melvin D. Greenhill
March 3, 1992

CANTILEVER OVERHEAD SIGNS

SHEET 4 OF 17 SHEETS

FED. RD. DIV. NO.	FEDERAL AID PROJECT NO.		SHEET NO.
6	NH 92( )M		435
STATE	STATE DIST. NO.	COUNTY	
TEXAS	21	HIDALGO	
CONT.	SECT.	JOB	HIGHWAY NO.
39	17	93	US83/28

7543-5305-HIO10VERHEADLSGN-1DARW-SAME

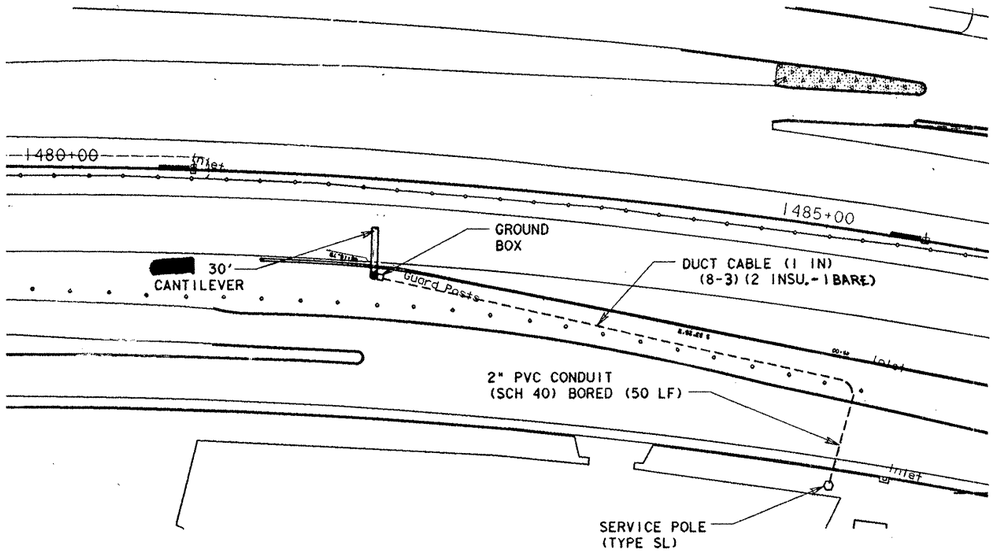

PLAN VIEW

SIGN NO. 2
STA. 1482+00 (RT.)

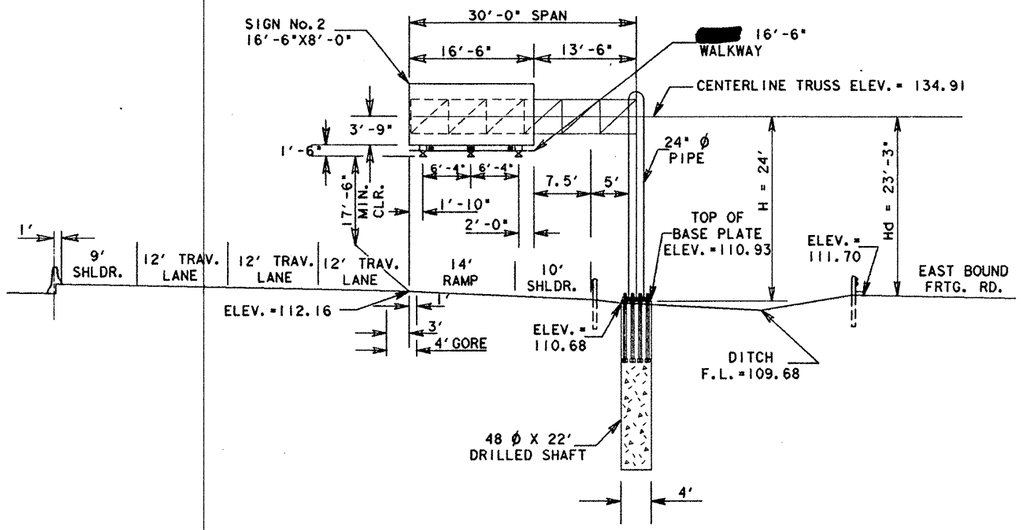

SIGN NO. 2

STA. 1482+00 (RT.)

SUMMARY OF QUANTITIES

ITEM	DESCRIPTION	UNIT	QUANTITY EST.	QUANTITY FIN.
417	SLURRY DISP. DRILL SHAFT (48 IN. SIGN MTS)	LF	22	
618	CONDUIT (PVC) (SCH 40) 2" (BORED)	LF	50	
622	DUCT CABLE (1 IN) (8-3) (2 INSUL.-1 BARE	LF	400	
624	GROUND BOX (RPM) (TY A) (122311) APRON	EA	1	
628	SERVICE POLE TY SL	EA	1	
650	OVERHEAD SIGN SUPPORT (CANT.) (30' SPAN) (17'-6" HT)	EA	1	
652	HIGHWAY SIGN LIGHTING FIXTURE (MV) (100 WATT)	EA	3	
654	SIGN WALKWAY	LF	16.5	

NOTE: SEE SUMMARY OF LARGE SIGNS SHEETS FOR QUANTITIES ON ITEMS 636 AND 642.

DESIGN PARAMETERS:

CANTILEVER SPAN = 30'
DESIGN HEIGHT, Hd = 23'-3"
COLUMN HEIGHT, H = 24'
AVG. PEN. VALUE = 12 BLOWS/FT.
WIND ZONE 1 = 100 MPH (HIDALGO COUNTY)
BELOW ICE ZONE
FOR DESIGN
USE STANDARDS: COSS-ZI, COSSD, COSSF, AND COSS-FD

NOTE:
INSTALL NEW SIGN, LIGHTS, WALKWAY AND SUPPORT BRACKETS AS SHOWN. INSTALL NEW CONDUIT, CONDUCTOR, FITTINGS, ETC. NECESSARY FOR A COMPLETE SYSTEM IN PLACE AND OPERATIONAL.

NOTE:
SEE STANDARD SL (MV) FOR MERCURY VAPOR LAMP SPACING.

LEGEND

- LIGHT FIXTURES
- CONDUIT RUN W/ CONDUCTORS
- GROUND BOX
- SERVICE POLE

STATE OF TEXAS
MELVIN D. GREENHILL
30030
REGISTERED PROFESSIONAL ENGINEER

Melvin D. Greenhill
March 3, 1992

CANTILEVER OVERHEAD SIGNS

SHEET 5 OF 17 SHEETS

FED. RD. DIV. NO.	FEDERAL AID PROJECT NO.		SHEET NO.
6	NH 92( )M		436
STATE	STATE DIST. NO.	COUNTY	
TEXAS	21	HIDALGO	
CONT.	SECT.	JOB	HIGHWAY NO.
39	17	99	US 33/281

7EA2: [325116]FIXTURES DGN 1RAPM-5 /5

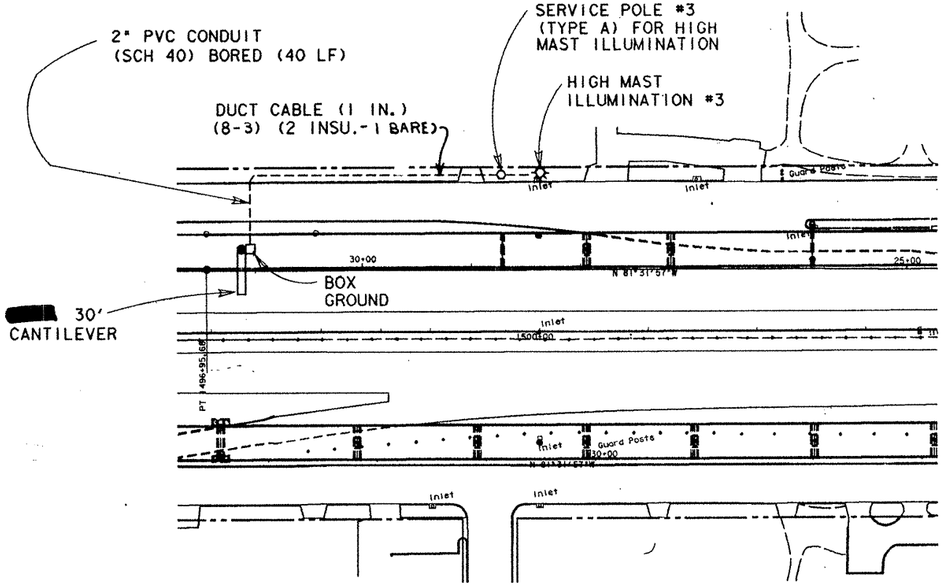

PLAN VIEW

SIGN NO. 1
STA. 1497+25 (LT.)

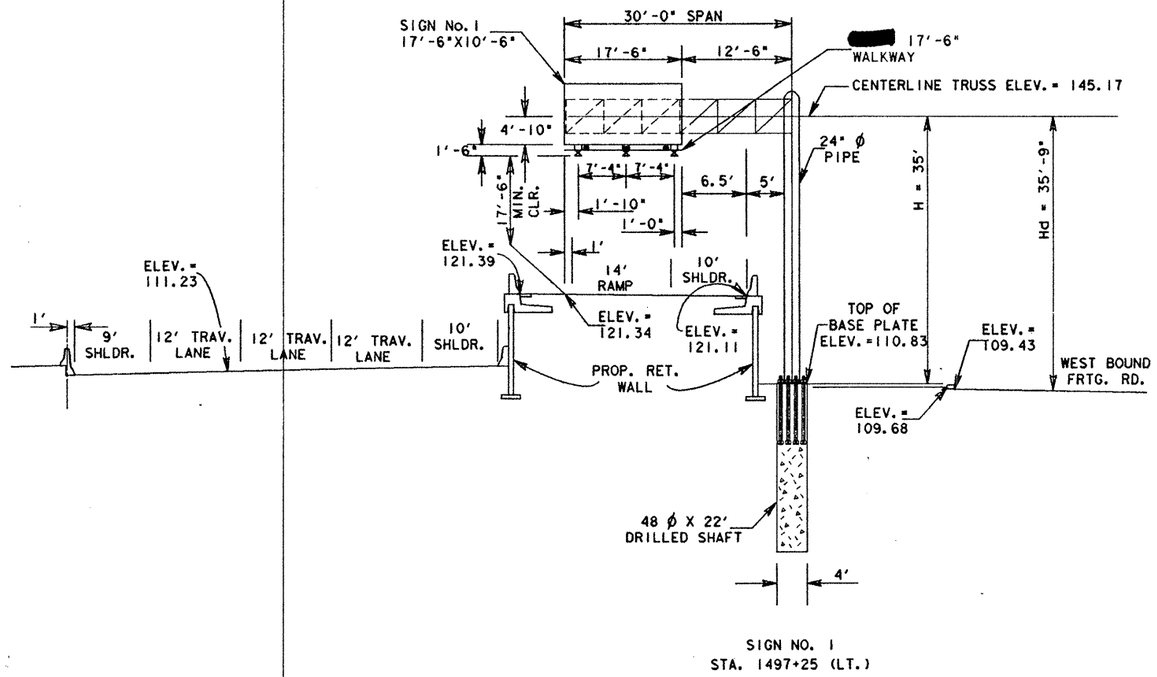

SIGN NO. 1
STA. 1497+25 (LT.)

SIGNS NO. 1

STA. 1497+25 (LT.)

SUMMARY OF QUANTITIES

ITEM	DESCRIPTION	UNIT	QUANTITY EST.	QUANTITY FIN.
417	SLURRY DISP. DRILL SHAFT (48 IN. SIGN MTS)	LF	22	
618	CONDUIT (PVC) (SCH 40) 2" (BORED)	LF	40	
622	DUCT CABLE (1 IN) (8-3) (2 INSU.-1 BARE)	LF	190	
624	GROUND BOX (RPM) (TY A) (122311) APRON	EA	1	
650	OVERHEAD SIGN SUPPORT (CANT.) (30' SPAN) (17'-6" HT)	EA	1	
652	HIGHWAY SIGN LIGHTING FIXTURE (MV) (100 WATT)	EA	3	
654	SIGN WALKWAY	LF	17.5	

NOTE: SEE SUMMARY OF LARGE SIGNS SHEETS FOR QUANTITIES ON ITEMS 636 AND 642.

DESIGN PARAMETERS:

CANTILEVER SPAN = 30'
DESIGN HEIGHT, Hd = 35'-9"
COLUMN HEIGHT, H = 35'
AVG. PEN. VALUE = 18 BLOWS/FT.
WIND ZONE 1 = 100 MPH (HIDALGO COUNTY)
BELOW ICE ZONE
FOR DESIGN
USE STANDARDS: HCOSS-21, COSSD, COSSF, AND COSS-FD

NOTE:
INSTALL NEW SIGN, LIGHTS, WALKWAY AND SUPPORT BRACKETS AS SHOWN. INSTALL NEW CONDUIT, CONDUCTORS, FITTINGS, ETC. NECESSARY FOR A COMPLETE SYSTEM IN PLACE AND OPERATIONAL.

NOTE:
SEE STANDARD SL(MV) FOR MERCURY VAPOR LAMP SPACING.

LEGEND

- LIGHT FIXTURES
- CONDUIT RUN W/ CONDUCTORS
- GROUND BOX
- SERVICE POLE

STATE OF TEXAS
MELVIN D. GREENHILL
38438
REGISTERED
PROFESSIONAL ENGINEER

Melvin D. Greenhill
March 3, 1992

CANTILEVER OVERHEAD SIGNS

SHEET 6 OF 17 SHEETS

FED. RD. DIV. NO.	FEDERAL AID PROJECT NO.		SHEET NO.
6	F 308 (47)		437
STATE	STATE DIST. NO.	COUNTY	
TEXAS	21	HIDALGO	
CONT.	SECT.	JOB	HIGHWAY NO.
39	17	93	US83/2

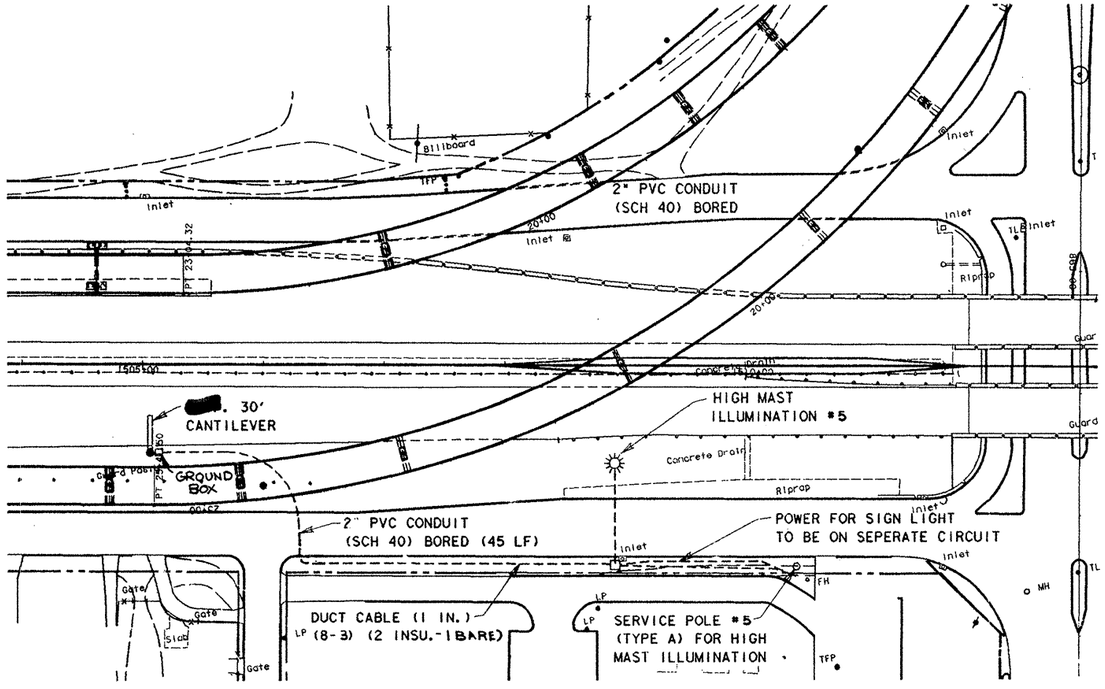

PLAN VIEW

SIGN NO. 2
STA. 1505+00 (RT.)

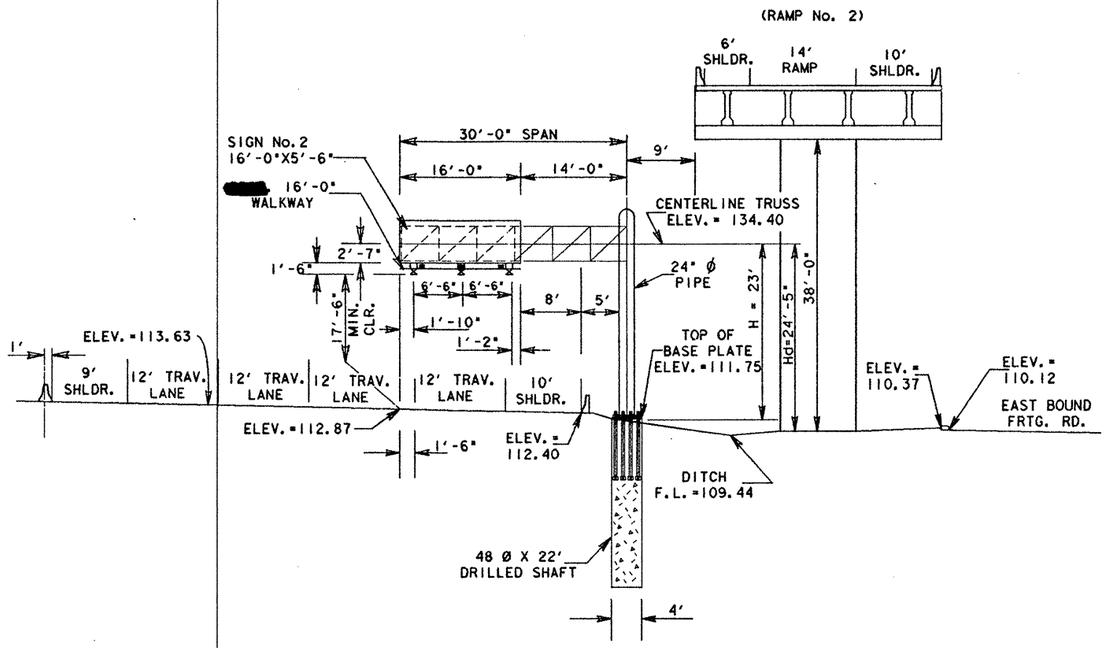

SIGN NO. 2

STA. 1505+00 (RT.)

SUMMARY OF QUANTITIES				
ITEM	DESCRIPTION	UNIT	QUANTITY	
			EST.	FIN.
417	SLURRY DISP. DRILL SHAFT (48 IN. SIGN MTS)	LF	22	
618	CONDUIT (PVC) (SCH 40) 2" (BORED)	LF	45	
622	DUCT CABLE (1 IN.) (8-3) (2-INSUL.-1 BARE)	LF	620	
624	GROUND BOX (RPM) (TY A) (122311) APRON	EA	1	
650	OVERHEAD SIGN SUPPORT (CANT.) (30' SPAN) (17'-6" HT)	EA	1	
652	HIGHWAY SIGN LIGHTING FIXTURE (MV) (100 WATT)	EA	3	
654	SIGN WALKWAY	LF	16	

NOTE: SEE SUMMARY OF LARGE SIGNS SHEETS FOR QUANTITIES ON ITEMS 636 AND 642.

DESIGN PARAMETERS:

CANTILEVER SPAN = 30'
DESIGN HEIGHT, Hd = 24'-5"
COLUMN HEIGHT, H = 23'
AVG. PEN. VALUE = 12 BLOWS/FT.
WIND ZONE I = 100 MPH (HIDALGO COUNTY)
BELOW ICE ZONE
FOR DESIGN
USE STANDARDS: COSS-ZI, COSSD, COSSF, AND COSS-FD

NOTE:
INSTALL NEW SIGN, LIGHTS, WALKWAY AND SUPPORT BRACKETS AS SHOWN. INSTALL NEW CONDUIT, CONDUCTOR, FITTINGS, ETC. NECESSARY FOR A COMPLETE SYSTEM IN PLACE AND OPERATIONAL.

SEE STANDARD SL(MV) FOR MERCURY VAPOR LAMP SPACING.

LEGEND

- LIGHT FIXTURES
- CONDUIT RUN W/ CONDUCTORS
- GROUND BOX
- SERVICE POLE

STATE OF TEXAS
MELVIN D. GREENHILL
20630
REGISTERED
PROFESSIONAL ENGINEER

Melvin D. Greenhill
March 3, 1992

CANTILEVER OVERHEAD SIGNS

SHEET 7 OF 17 SHEETS

FED. RD. DIV. NO.	FEDERAL AID PROJECT NO.		SHEET NO.
6	NH 92( )M		438
STATE	STATE DIST. NO.	COUNTY	
TEXAS	21	HIDALGO	
CONT.	SECT	JOB	HIGHWAY NO.
39	17	93	US83/281

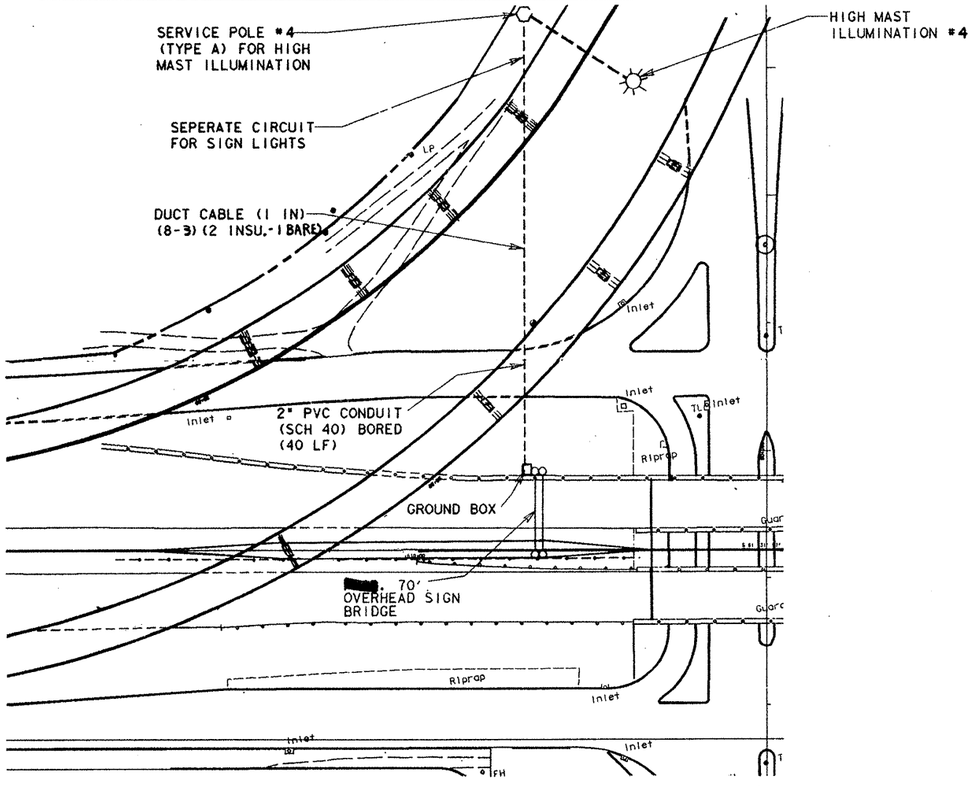

PLAN VIEW
STA. 1511+00

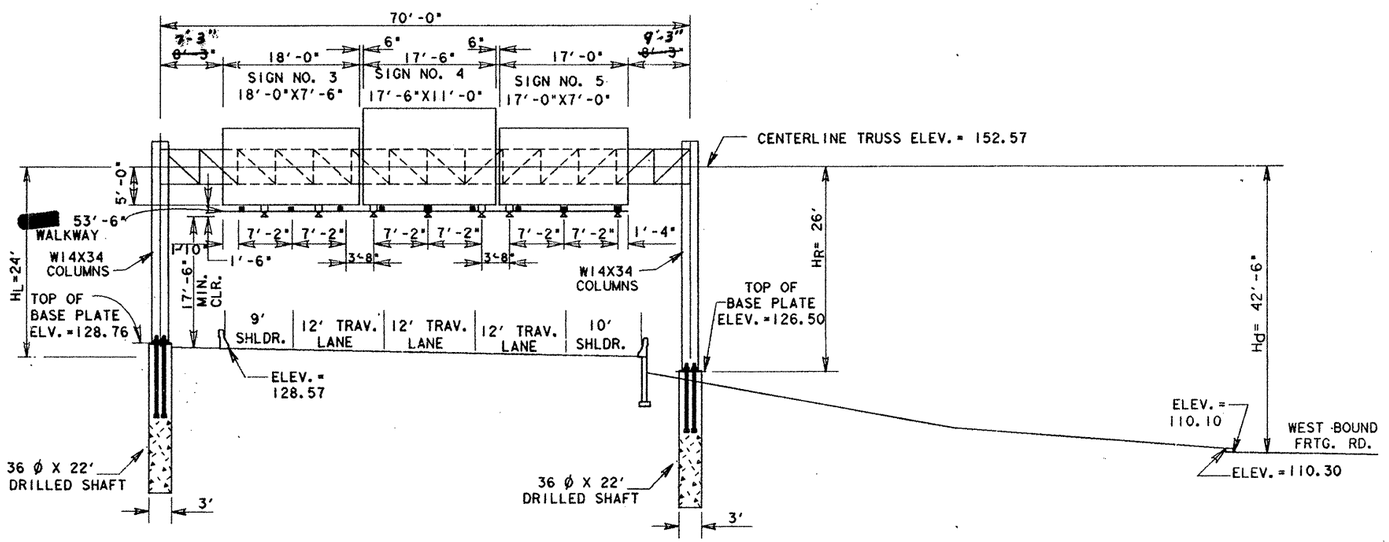

SIGNS NO. 3, 4, & 5
STA. 1511+00 (LT.)

DESIGN PARAMETERS:

SIMPLE SPAN = 70'-0"
DESIGN HEIGHT, Hd = 42'-6"
COLUMN HEIGHT, H = 26'
AVG. PEN. VALUE = 12 BLOWS/FT
WIND ZONE I = 100 MPH (HIDALGO COUNTY)
BELOW ICE ZONE
FOR DESIGN
USE STANDARDS: HOSB-ZI, OSBT
OSBC & OSB-FD

LEGEND

- [redacted] LIGHT FIXTURES
- CONDUIT RUN W/CONDUCTORS
- GROUND BOX
- SERVICE POLE

NOTE: SEE STANDARD SL(MV) FOR MERCURY VAPOR LAMP SPACING.

NOTE: INSTALL NEW SIGN, LIGHT, WALKWAY AND SUPPORT BRACKETS AS SHOWN. INSTALL NEW CONDUIT, CONDUCTOR, FITTINGS, ETC. NECESSARY FOR A COMPLETE SYSTEM IN PLACE AND OPERATIONAL.

SUMMARY OF QUANTITIES

ITEM	DESCRIPTION	UNIT	QUANTITY EST.	QUANTITY FIN.
417	SLURRY DISP. DRILL SHAFT (36 IN. SIGN MTS)	LF	88	
618	CONDUIT (PVC) (SCH 40) 2" (BORED)	LF	40	
622	DUCT CABLE (1 IN) (8-3) (2 INSU.-1 BARE)	LF	620	
624	GROUND BOX RPM (TY A) (12211) APRON	EA	1	
650	OVERHEAD SIGN SUPPORT (BRIDGE) (70' SPAN) (17'-6" HT)	EA	1	
652	HIGHWAY SIGN LIGHTING FIXTURE (MV) (100 WATT)	EA	9	
654	SIGN WALKWAY	LF	53.5	

NOTE: SEE SUMMARY OF LARGE SIGNS SHEETS FOR QUANTITIES ON ITEMS 636 AND 642.

STATE OF TEXAS
MELVIN D. GREENHILL
REGISTERED PROFESSIONAL ENGINEER

Melvin D. Greenhill
March 3, 1992

OVERHEAD SIGN BRIDGE

SHEET 8 OF 17 SHEETS

FED. RD. DIV. NO.	FEDERAL AID PROJECT NO.		SHEET NO.
6	NH 92( )M		439
STATE	STATE DIST. NO.	COUNTY	
TEXAS	21	HIDALGO	
CONT.	SECT.	JOB	HIGHWAY NO.
39	17	39	US83 [illegible]81

ZFA2: [325116]OVERFIX8 DGN IPARM: SAM

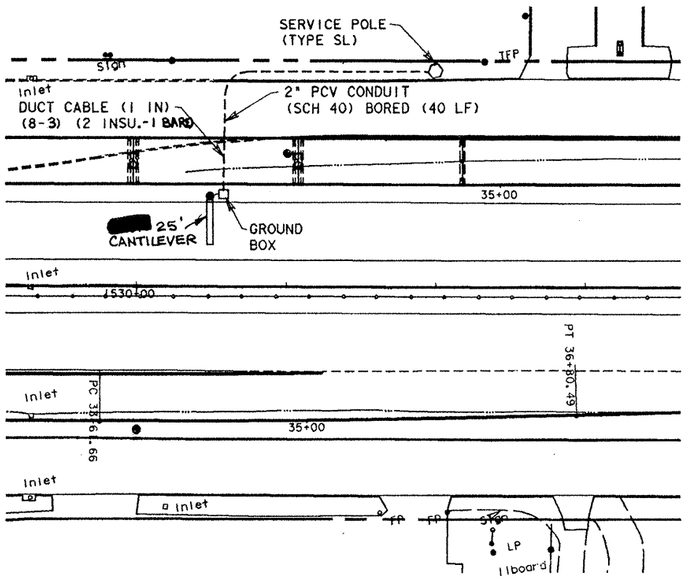

PLAN VIEW

SIGN NO. 1
STA. 1530+50 (LT.)

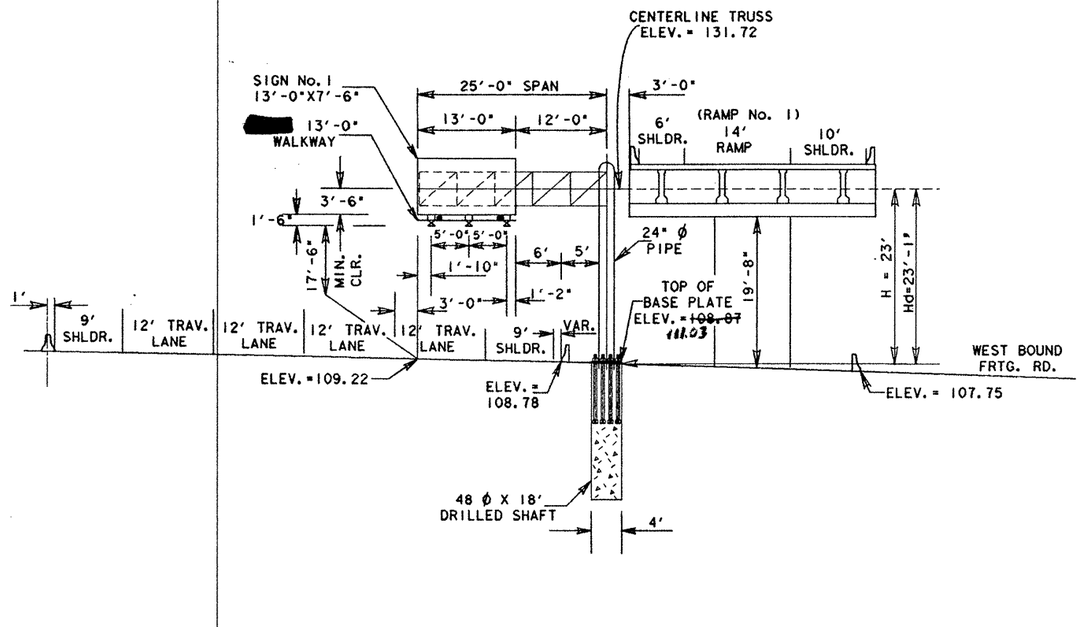

SIGN NO. 1

STA. 1530+50 (LT.)

SUMMARY OF QUANTITIES

ITEM	DESCRIPTION	UNIT	QUANTITY	
			EST.	FIN.
417	SLURRY DISP. DRILL SHAFT (48 IN. SIGN MTS)	LF	18	
618	CONDUIT (PVC) (SCH 40) 2" (BORED)	LF	40	
622	DUCT CABLE (1 IN.) (8-3) (2 INSU.-1 BARE)	LF	225	
624	GROUND BOX (RPM) (TY A) (122311) APRON	EA	1	
628	SERVICE POLE TY SL	EA	1	
650	OVERHEAD SIGN SUPPORT (CANT.) (25' SPAN) (17'-6" HT)	EA	1	
652	HIGHWAY SIGN LIGHTING FIXTURE (MV) (100 WATT)	EA	2	
654	SIGN WALKWAY	LF	13	

NOTE: SEE SUMMARY OF LARGE SIGNS SHEETS FOR QUANTITIES ON ITEMS 636 AND 642.

DESIGN PARAMETERS:

CANTILEVER SPAN = 25'
DESIGN HEIGHT, Hd=23'-1"
COLUMN HEIGHT, H= 23'
AVG. PEN. VALUE = 12 BLOWS/FT.
WIND ZONE 1 = 100 MPH (HIDALGO COUNTY)
BELOW ICE ZONE
FOR DESIGN
USE STANDARDS: COSS-Z1, COSSD, COSSF, AND COSS-FD

NOTE:
INSTALL NEW SIGN, LIGHTS, WALKWAY AND SUPPORT BRACKETS AS SHOWN. INSTALL NEW CONDUIT, CONDUCTOR, FITTINGS, ETC. NECESSARY FOR A COMPLETE SYSTEM IN PLACE AND OPERATIONAL.

SEE STANDARD SL (MV) FOR MERCURY VAPOR LAMP SPACING.

LEGEND

- LIGHT FIXTURES
- CONDUIT RUN W/ CONDUCTORS
- GROUND BOX
- SERVICE POLE

STATE OF TEXAS
MELVIN D. GREENHILL
29020
REGISTERED
PROFESSIONAL ENGINEER

Melvin D. Greenhill
March 3, 1992

CANTILEVER OVERHEAD SIGNS

SHEET 9 OF 17 SHEETS

FED. RD. DIV. NO.	FEDERAL AID PROJECT NO.		SHEET NO.
6	NH 92( )M		440
STATE	STATE DIST. NO.	COUNTY	
TEXAS	21	HIDALGO	
CONT.	SECT.	JOB	HIGHWAY NO.
39	17	93	US83/281

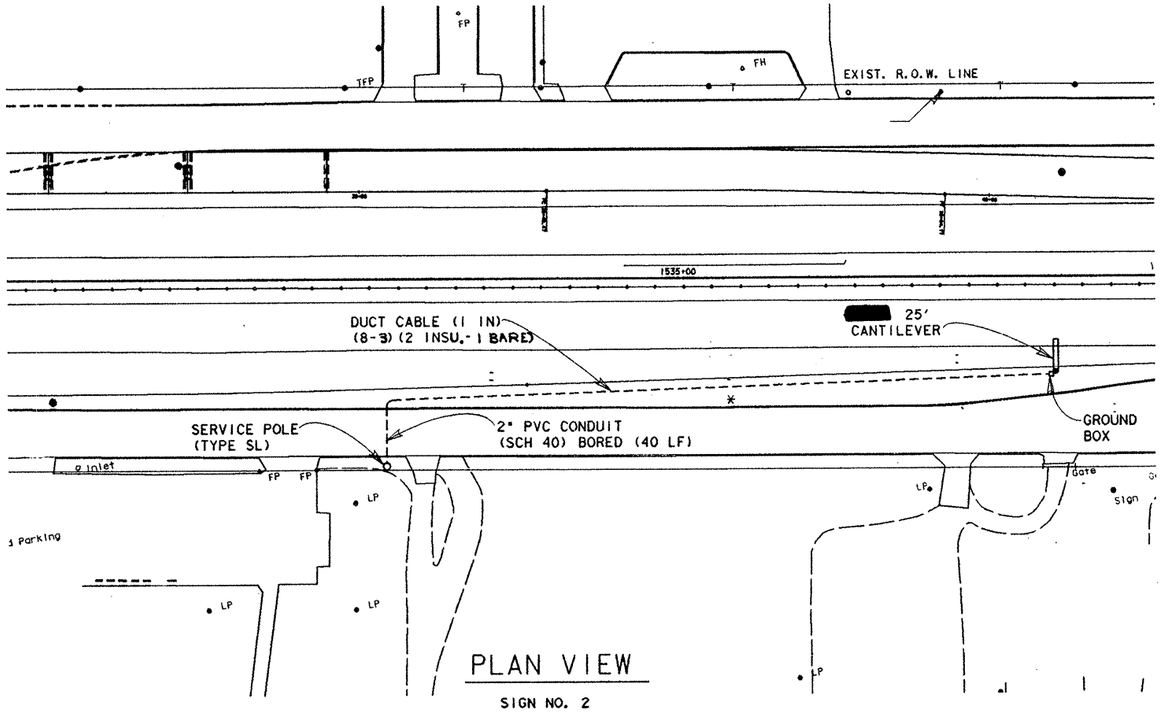

PLAN VIEW

SIGN NO. 2
STA. 1538+00 (RT.)

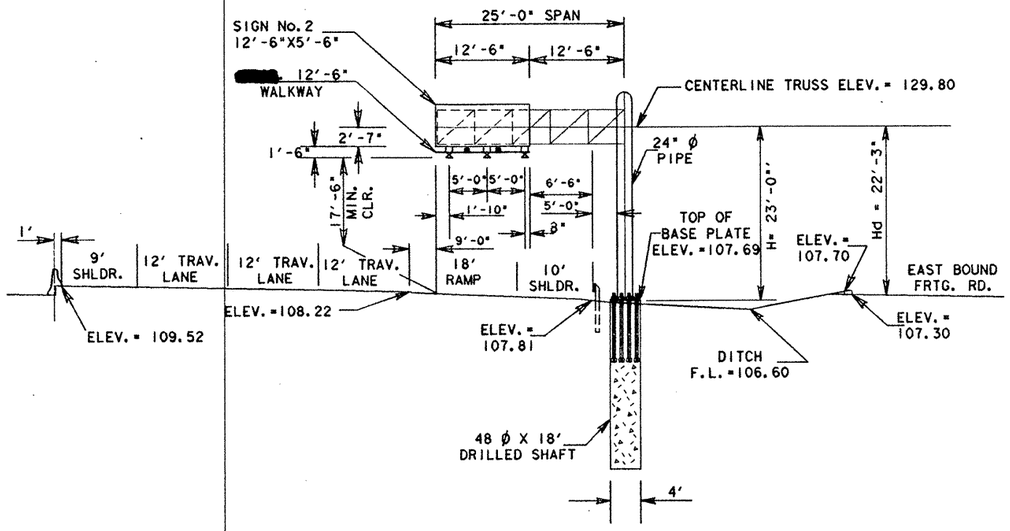

SIGN NO. 2

STA. 1538+00 (RT.)

SUMMARY OF QUANTITIES

ITEM	DESCRIPTION	UNIT	QUANTITY	
			EST.	FIN.
417	SLURRY DISP. DRILL SHAFT (48 IN. SIGN MTS)	LF	18	
618	CONDUIT (PVC) (SCH 40) 2" (BORED)	LF	40	
622	(DUCT CABLE) (1 IN) (8-3) (2 INSU.- 1 BARE)	LF	600	
624	GROUND BOX (RPM) (TY A) (122311) APRON	EA	1	
628	SERVICE POLE TY SL	EA	1	
650	OVERHEAD SIGN SUPPORT (CANT.) (25' SPAN) (17'-6" HT)	EA	1	
652	HIGHWAY SIGN LIGHTING FIXTURE (MV) (100 WATT)	EA	2	
654	SIGN WALKWAY	LF	12.5	

NOTE: SEE SUMMARY OF LARGE SIGNS SHEETS FOR QUANTITIES ON ITEMS 636 AND 642.

DESIGN PARAMETERS:

CANTILEVER SPAN = 25'
DESIGN HEIGHT, Hd = 22'-3"
COLUMN HEIGHT, H = 23'
AVG. PEN. VALUE = 12 BLOWS/FT.
WIND ZONE 1 = 100 MPH (HIDALGO COUNTY)
BELOW ICE ZONE
FOR DESIGN
USE STANDARDS: COSS-Z1, COSSD, COSSF,
AND COSS-FD

NOTE:
INSTALL NEW SIGN, LIGHTS, WALKWAY AND SUPPORT BRACKETS AS SHOWN. INSTALL NEW CONDUIT, CONDUCTOR, FITTINGS, ETC. NECESSARY FOR A COMPLETE SYSTEM IN PLACE AND OPERATIONAL.

NOTE:
SEE STANDARD SL(MV) FOR MERCURY VAPOR LAMP SPACING.

LEGEND

- [redacted] - LIGHT FIXTURES
- - - - CONDUIT RUN W/ CONDUCTORS
- □ - GROUND BOX
- ○ - SERVICE POLE

STATE OF TEXAS
MELVIN D. GREENHILL
20060
REGISTERED
PROFESSIONAL ENGINEER

Melvin D. Greenhill
March 3, 1992

CANTILEVER OVERHEAD SIGNS

SHEET 10 OF 17 SHEETS

FED. RD. DIV. NO.	FEDERAL AID PROJECT NO.		SHEET NO.
6	NH 92( )M		44
STATE	STATE DIST. NO.	COUNTY	
TEXAS	21	HIDALGO	
CONT.	SECT.	JOB	HIGHWAY NO.
39	[illegible]	[illegible]	US83/281

7FA2:[325]167FIXTURES5.DGN [PARM=FIX]

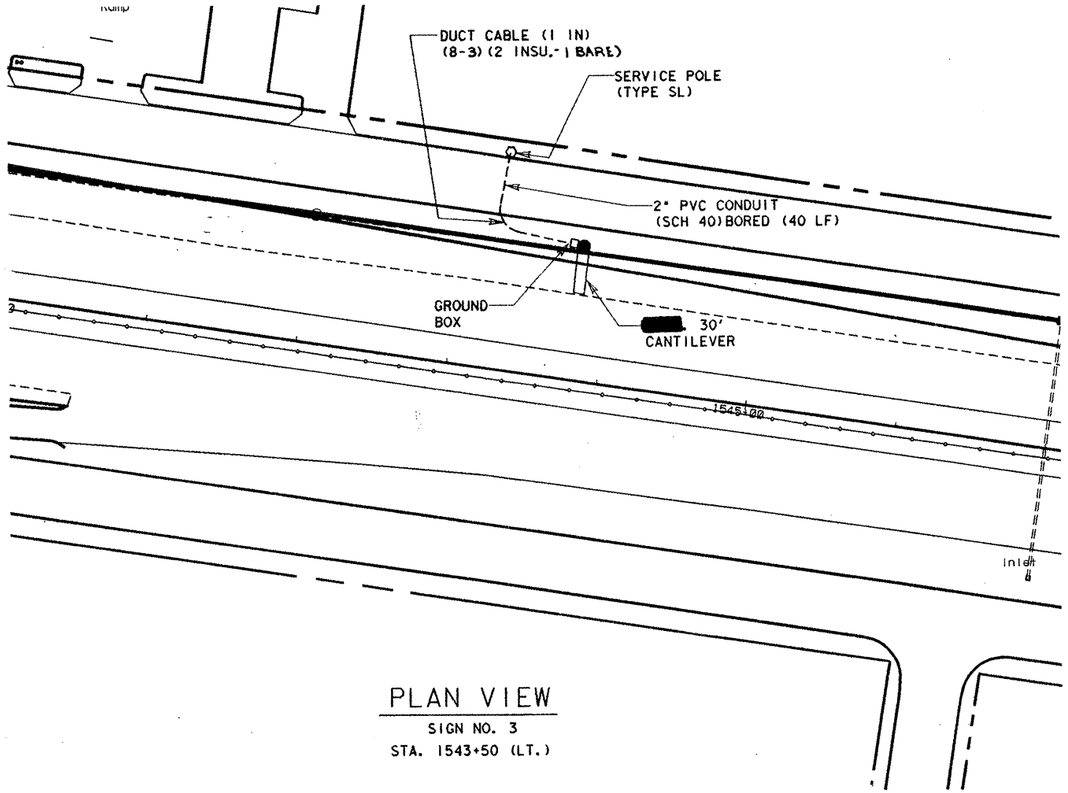

PLAN VIEW

SIGN NO. 3
STA. 1543+50 (LT.)

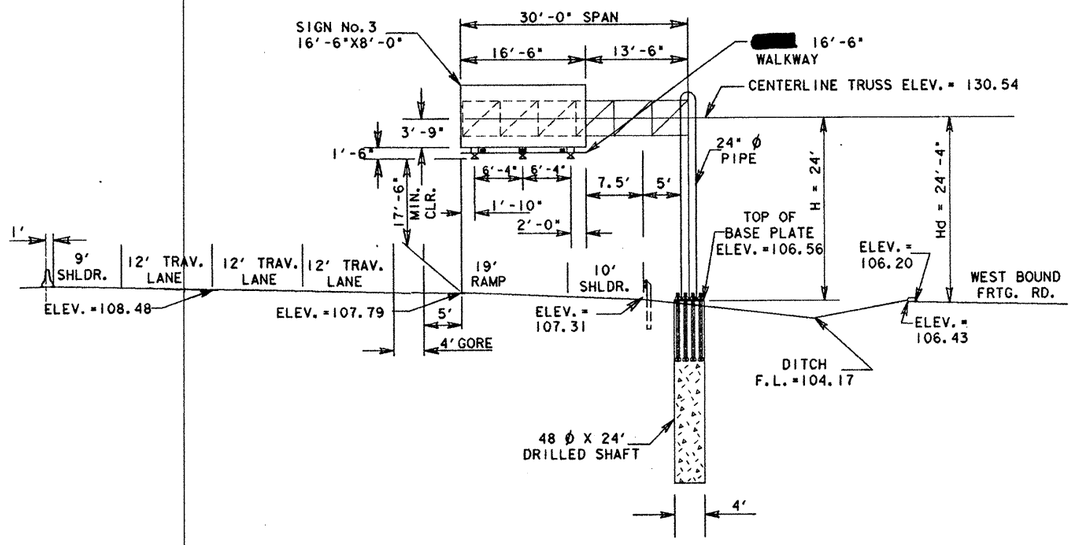

SIGN NO. 3

STA. 1543+50 (LT.)

SUMMARY OF QUANTITIES

ITEM	DESCRIPTION	UNIT	QUANTITY	
			EST.	FIN.
417	SLURRY DISP. DRILL SHAFT (48 IN. SIGN MTS)	LF	24	
618	CONDUIT (PVC) (SCH 40) 2" BORED	LF	40	
622	DUCT CABLE (1 IN) (8-3) (2-INSU.-1 BARE)	LF	140	
624	GROUND BOX (RPM) (TY A) (122311) APRON	EA	1	
628	SERVICE POLE TY SL	EA	1	
650	OVERHEAD SIGN SUPPORT (CANT.) (30' SPAN) (17'-6" HT)	EA	1	
652	HIGHWAY SIGN LIGHTING FIXTURE (MV) (100 WATT)	EA	3	
654	SIGN WALKWAY	LF	16.5	

NOTE: SEE SUMMARY OF LARGE SIGNS SHEETS FOR QUANTITIES ON ITEMS 636 AND 642.

DESIGN PARAMETERS:

CANTILEVER SPAN = 30'
DESIGN HEIGHT, Hd = 24'-4"
COLUMN HEIGHT, H = 24'
AVG. PEN. VALUE = 12 BLOWS/FT.
WIND ZONE 1 = 100 MPH (HIDALGO COUNTY)
BELOW ICE ZONE
FOR DESIGN
USE STANDARDS: COSS-Z1, COSSD, COSSF, AND COSS-FD

NOTE:
INSTALL NEW SIGN, LIGHTS, WALKWAY AND SUPPORT BRACKETS AS SHOWN. INSTALL NEW CONDUIT, CONDUCTOR, FITTINGS, ETC. NECESSARY FOR A COMPLETE SYSTEM IN PLACE AND OPERATIONAL.

NOTE:
SEE STANDARD SL(MV) FOR MERCURY VAPOR LAMP SPACING.

LEGEND

- [redacted] LIGHT FIXTURES
- ---- CONDUIT RUN W/ CONDUCTORS
- □ GROUND BOX
- ○ SERVICE POLE

STATE OF TEXAS
MELVIN D. GREENHILL
3080

Melvin D. Greenhill
March 3, 1992

CANTILEVER OVERHEAD SIGNS

SHEET 11 OF 17 SHEETS

FED. RD. DIV. NO.	FEDERAL AID PROJECT NO.		SHEET NO.
6	NH 92( )M		442
STATE	STATE DIST. NO.	COUNTY	
TEXAS	21	HIDALGO	
CONT.	SECT.	JOB	HIGHWAY NO.
39	17	93	US83/281

7FA2: [325116]FIXTURES6.DGN [PARM=FIXED]

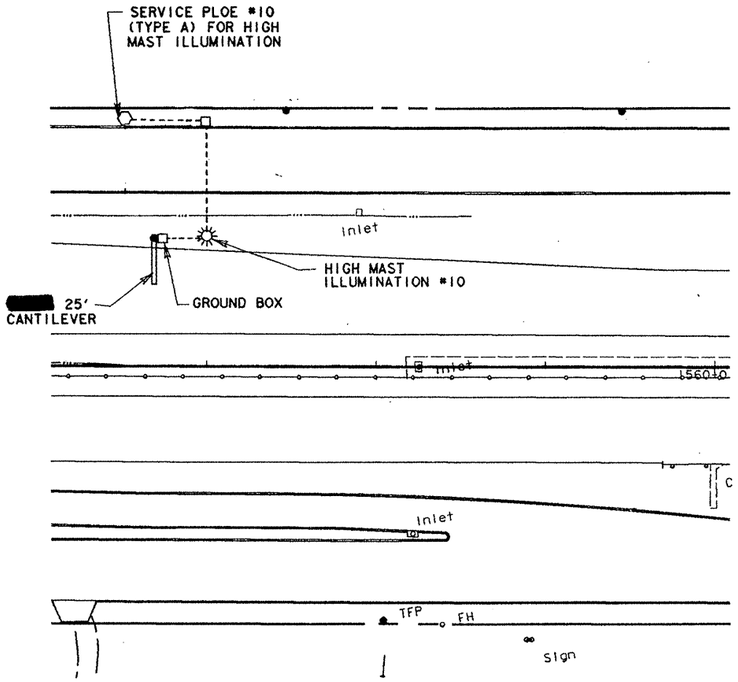

PLAN VIEW

SIGN NO. 1
STA. 1557+00 (LT)

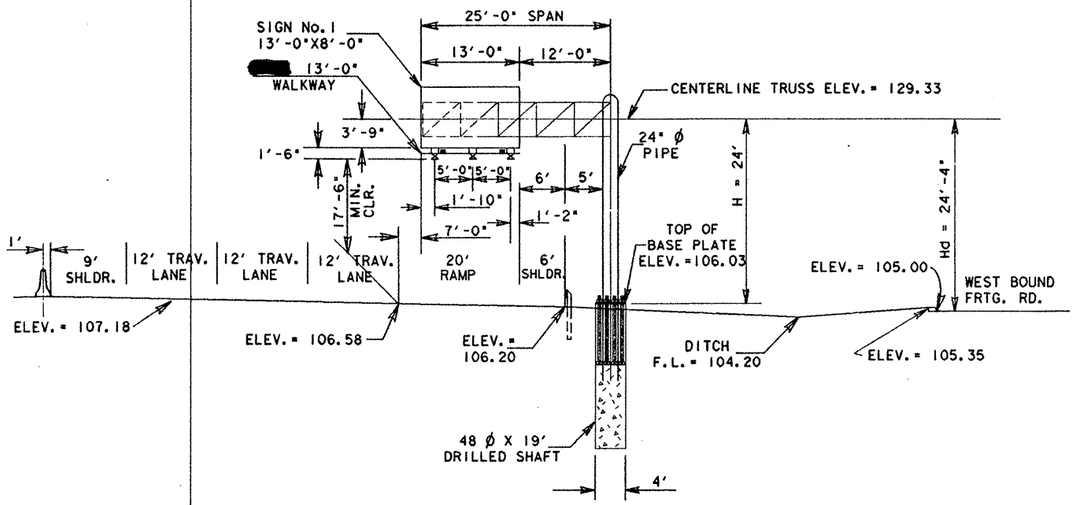

SIGN NO. 1
STA. 1557+00 (LT.)

DESIGN PARAMETERS:

CANTILEVER SPAN = 25'
DESIGN HEIGHT, Hd = 24'-4"
COLUMN HEIGHT, H = 24'
AVG. PEN. VALUE = 12 BLOWS/FT.
WIND ZONE I = 100 MPH (HIDALGO COUNTY)
BELOW ICE ZONE
FOR DESIGN
USE STANDARDS: COSS-ZI, COSSD, COSSF,
AND COSS-FD

NOTE:
INSTALL NEW SIGN, LIGHTS, WALKWAY AND SUPPORT BRACKETS AS SHOWN. INSTALL NEW CONDUIT, CONDUCTOR, FITTINGS, ETC. NECESSARY FOR A COMPLETE SYSTEM IN PLACE AND OPERATIONAL.

SEE STANDARD SL(MV) FOR MERCURY VAPOR LAMP SPACING.

LEGEND

- LIGHT FIXTURES
- CONDUIT RUN W/ CONDUCTORS
- GROUND BOX
- SERVICE POLE

SUMMARY OF QUANTITIES

ITEM	DESCRIPTION	UNIT	QUANTITY EST.	QUANTITY FIN.
417	SLURRY DISP. DRILL SHAFT (48 IN. SIGN MTS)	LF	19	
618	CONDUIT (PVC) (SCH 40) 2"	LF	40	
624	GROUND BOX (RPM) (TY A) (122311) APRON	EA	1	
650	OVERHEAD SIGN SUPPORT (CANT.) (25' SPAN) (17'-6" HT)	EA	1	
652	HIGHWAY SIGN LIGHTING FIXTURE (MV) (100 WATT)	EA	2	
654	SIGN WALKWAY	LF	13	
620	ELEC. CONDUCTOR (NO. 8 BAR)	LF	40	
620	ELEC. CONDUCTOR (NO. 8 XHHW)	LF	40	

NOTE: SEE SUMMARY OF LARGE SIGNS SHEETS FOR QUANTITIES ON ITEMS 636 AND 642.

Melvin D. Greenhill
March 3, 1992

CANTILEVER OVERHEAD SIGNS

SHEET 12 OF 17 SHEETS

FED. RD. DIV. NO.	FEDERAL AID PROJECT NO.		SHEET NO.
6	NH 92( )M		443
STATE	STATE DIST. NO.	COUNTY	
TEXAS	21	HIDALGO	
CONT.	SECT.	JOB	HIGHWAY NO.
39	17	99	US83/281

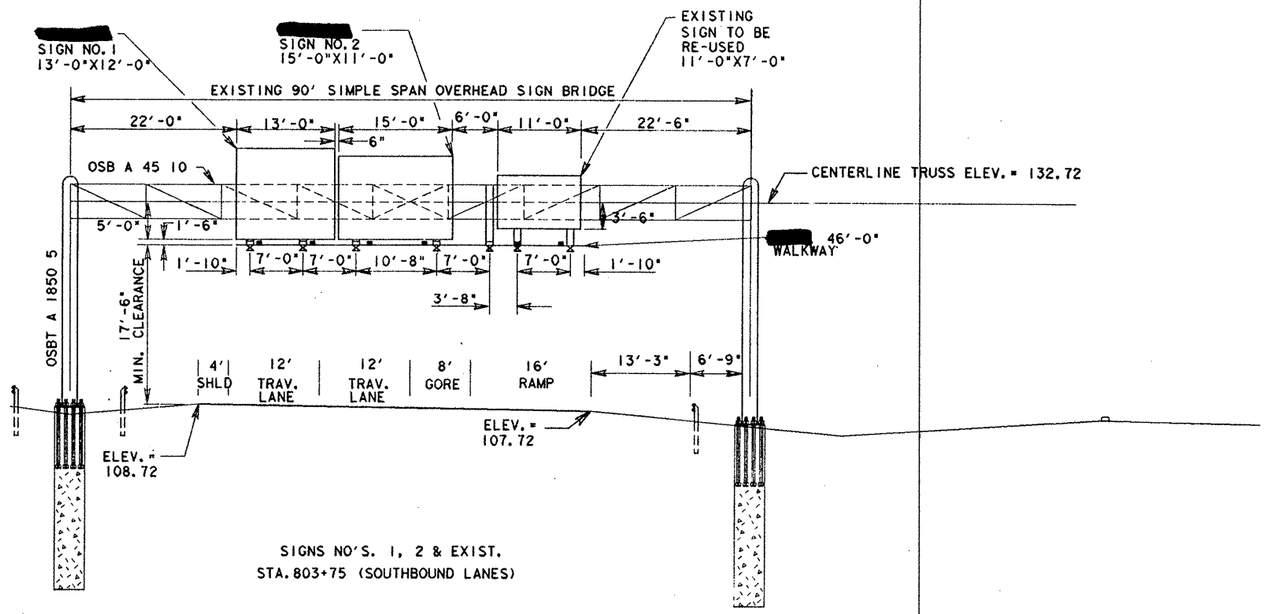

SIGNS NO'S. 1, 2 & EXIST.
STA. 803+75 (SOUTHBOUND LANES)

LEGEND

- [redacted] FIGHT FIXTURES

NOTE: SEE STANDARD SL(MV) FOR MERCUARY VAPOR LAMP SPACING.

NOTE: INSTALL NEW AND EXISTING SIGNS, LIGHTS, WALKWAY, AND SUPPORT BRACKETS AS SHOWN, INSTALL NEW CONDUIT, CONNECTOR, FITTINGS, ETC. NECESSARY TO COMPLETE THE PROPOSED IMPROVEMENTS. THE REMOVAL OF THE EXISTING WALKWAY [redacted] PAID FOR DIRECTLY BUT [redacted] CONSIDERED SUBSIDIARY TO THE VARIOUS BID ITEMS OF THE PROJECT.

SUMMARY OF QUANTITIES

ITEM	DESCRIPTION	UNIT	QUANTITY	
			EST.	FIN.
652	HIGHWAY SIGN LIGHTING FIXTURE (MV) (100 WATT)	EA	6	
654	SIGN WALKWAY	LF	46	

NOTE: SEE SUMMARY OF LARGE SIGNS SHEETS FOR QUANTITIES ON ITEMS 636 AND 642.

MELVIN D. GREENHILL 29020 REGISTERED ENGINEER

Melvin D. Greenhill 3-3-92

OVERHEAD SIGN BRIDGE

SHEET 13 OF 17 SHEETS

FED. RD. DIV. NO.	FEDERAL AID PROJECT NO.		SHEET NO.
6	NH 92 ( )M		444
STATE	STATE DIST. NO.	COUNTY	
TEXAS	21	HIDALGO	
CONT.	SECT.	JOB	HIGHWAY NO.
39	17	93	US83/281

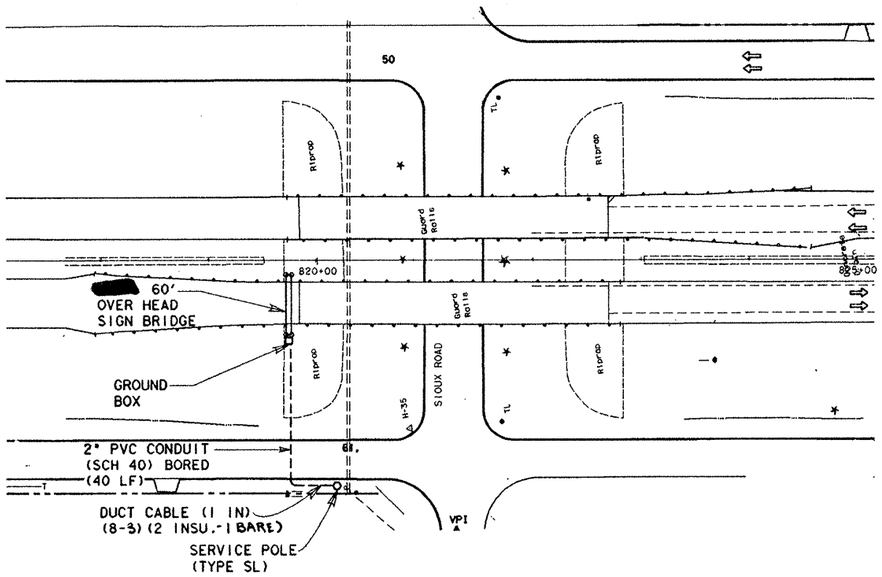

PLAN VIEW

CHANGEABLE MESSAGE SIGN
STA. 819+65 (RT.)

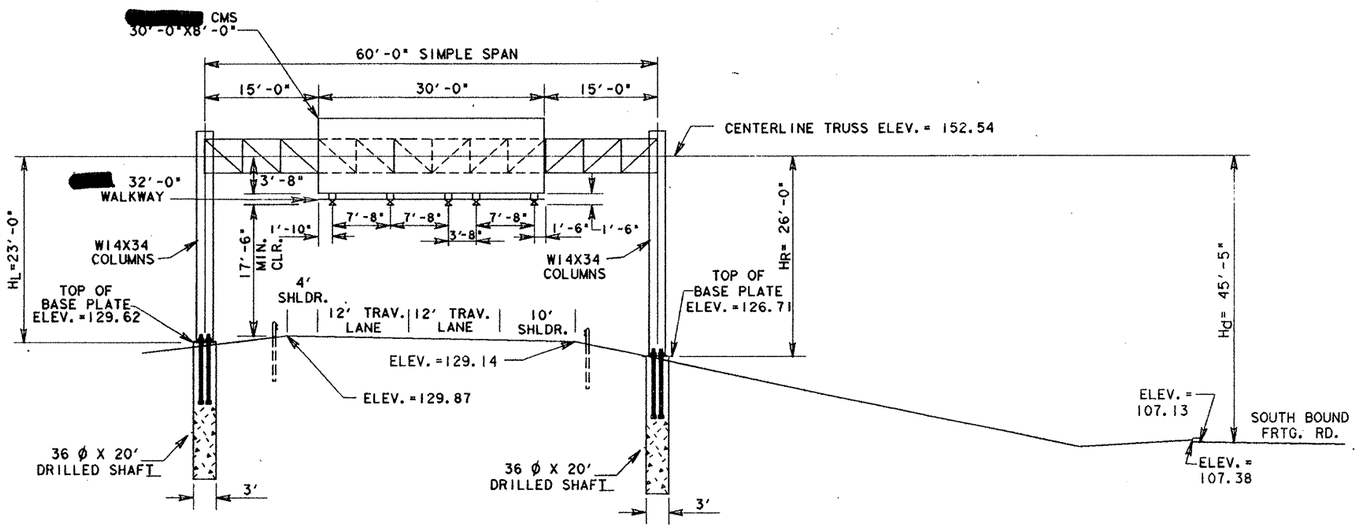

CHANGEABLE MESSAGE SIGN

STA. 819+65 (RT.)

DESIGN PARAMETERS:

SIMPLE SPAN = 60'-0"
DESIGN HEIGHT, Hd = 45'-5"
COLUMN HEIGHT, H = 26'-0"
AVG. PEN. VALUE = 12 BLOWS/FT
WIND ZONE I = 100 MPH (HIDALGO COUNTY)
BELOW ICE ZONE
FOR DESIGN
USE STANDARDS: HOSB-ZI, OSBT
OSBC & OSB-FD

LEGEND

---- - CONDUIT RUN W/CONDUCTORS
□ - GROUND BOX
○ - SERVICE POLE

NOTE: INSTALL NEW SIGN, LIGHT, WALKWAY AND SUPPORT BRACKETS AS SHOWN. INSTALL NEW CONDUIT, CONDUCTOR, FITTINGS, ETC. NECESSARY FOR A COMPLETE SYSTEM IN PLACE AND OPERATIONAL.

NOTE: SEE STANDARD SL(MV) FOR MERCURY VAPOR LAMP SPACING.

SUMMARY OF QUANTITIES

ITEM	DESCRIPTION	UNIT	QUANTITY EST.	QUANTITY FIN.
417	SLURRY DISP. DRILL SHAFT (36 IN. SIGN MTS)	LF	80	
622	DUCT CABLE (1 IN) (8-3) (2 INSU.-1 BARE)	LF	185	
618	CONDUIT (PVC) (SCH 40) 2" (BORED)	LF	40	
624	GROUND BOX (RPM) (TY A) (12231) APRON	EA	1	
628	SERVICE POLE TY SL	EA	1	
650	OVERHEAD SIGN SUPPORT (BRIDGE) (60' SPAN) (17'-6" HT)	EA	1	
654	SIGN WALKWAY	LF	32	

NOTE: SEE SUMMARY OF LARGE SIGNS SHEETS FOR QUANTITIES ON ITEMS 636 AND 642.

STATE OF TEXAS
MELVIN D. GREENHILL
REGISTERED PROFESSIONAL ENGINEER

Melvin D. Greenhill
March 3, 1992

OVERHEAD SIGN BRIDGE

SHEET 14 OF 17 SHEETS

FED. RD. DIV. NO.	FEDERAL AID PROJECT NO.		SHEET NO.
6	NH 92( )M		445
STATE	STATE DIST. NO.	COUNTY	
TEXAS	21	HIDALGO	
CONT.	SECT.	JOB	HIGHWAY NO.
39	17	99	US83 81

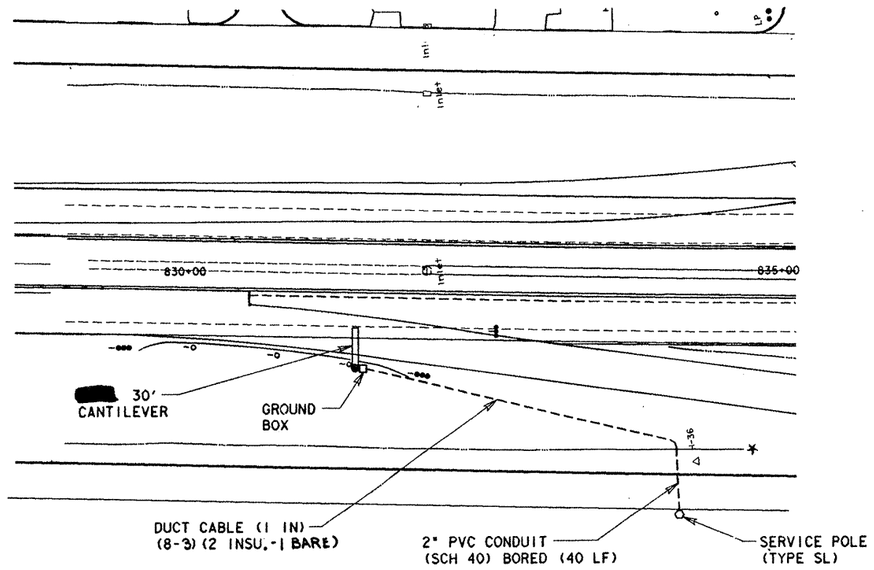

PLAN VIEW

SIGN NO. 4
STA. 831+50 (RT.)

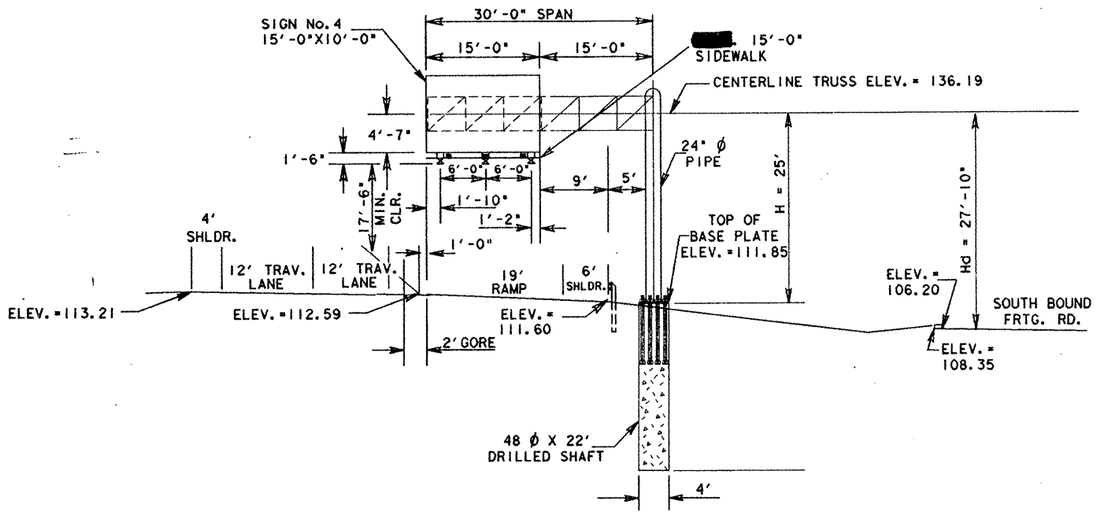

SIGN NO. 4

STA. 831+50 (RT.)

DESIGN PARAMETERS:
CANTILEVER SPAN = 30'
DESIGN HEIGHT, Hd=27'-10"
COLUMN HEIGHT, H=25'
AVG. PEN. VALUE = 12 BLOWS/FT.
WIND ZONE 1 = 100 MPH (HIDALGO COUNTY)
BELOW ICE ZONE
FOR DESIGN
USE STANDARDS: COSS-Z1, COSSD, COSSF
AND COSS-FD

NOTE:
INSTALL NEW SIGN, LIGHTS, WALKWAY AND SUPPORT BRACKETS AS SHOWN. INSTALL NEW CONDUIT, CONDUCTOR, FITTINGS, ETC. NECESSARY FOR A COMPLETE SYSTEM IN PLACE AND OPERATIONAL.

LEGEND

- LIGHT FIXTURES
- -CONDUIT RUN W/CONDUCTORS
- -GROUND BOX
- -SERVICE POLE

NOTE:
SEE STANDARD SL(MV) FOR MERCURY VAPOR LAMP SPACING.

SUMMARY OF QUANTITIES

ITEM	DESCRIPTION	UNIT	QUANTITY EST.	QUANTITY FIN.
417	SLURRY DISP. DRILL SHAFT (48 IN. SIGN MTS)	LF	22	
622	DUCT CABLE (1 IN)(8-3)(2 INSU.-1 BARE)	LF	350	
618	CONDUIT (PVC)(SCH 40) 2" BORED	LF	40	
624	GROUND BOX (RPM)(TY A)(122311) APRON	EA	1	
628	SERVICE POLE TY SL	EA	1	
650	OVERHEAD SIGN SUPPORT (CANT.)(30' SPAN)(17'-6" HT)	EA	1	
652	HIGHWAY SIGN LIGHTING FIXTURE (MV)(100 WATT)	EA	3	
654	SIGN WALKWAY	LF	15	

NOTE: SEE SUMMARY OF LARGE SIGNS SHEETS FOR QUANTITIES ON ITEMS 636 AND 642.

STATE OF TEXAS
MELVIN D. GREENHILL
20030
REGISTERED PROFESSIONAL ENGINEER

Melvin D. Greenhill
March 3, 1992

CANTILEVER OVERHEAD SIGNS

SHEET 15 OF 17 SHEETS

FED. RD. DIV. NO.	FEDERAL AID PROJECT NO.		SHEET NO.
6	NH 92 ( )M		446
STATE	STATE DIST. NO.	COUNTY	
TEXAS	21	HIDALGO	
CONT.	SECT.	JOB	HIGHWAY NO.
39	17	93	US83/281

ZEA2: [325116]FIXTURES7.DGN

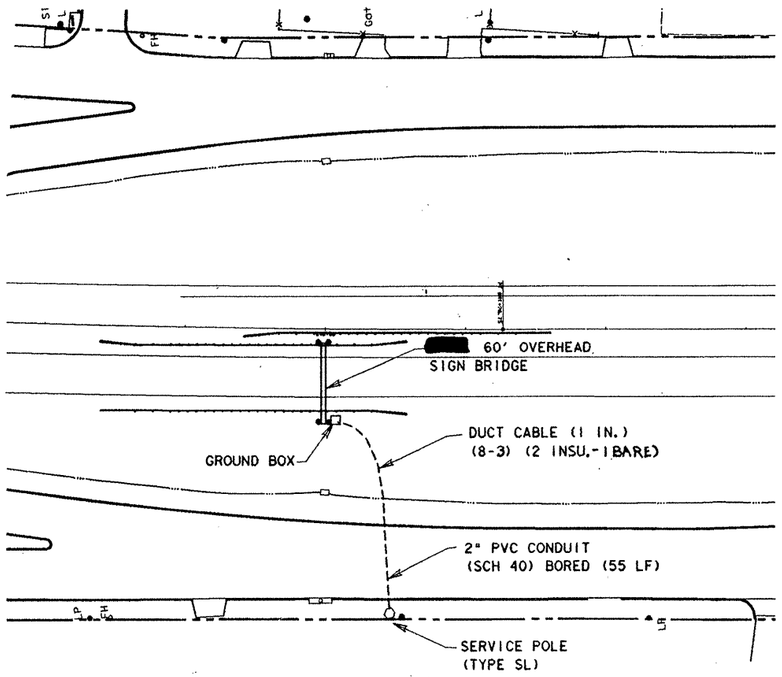

PLAN VIEW

SIGNS NO. 2 & 3
STA. 840+00 (RT)

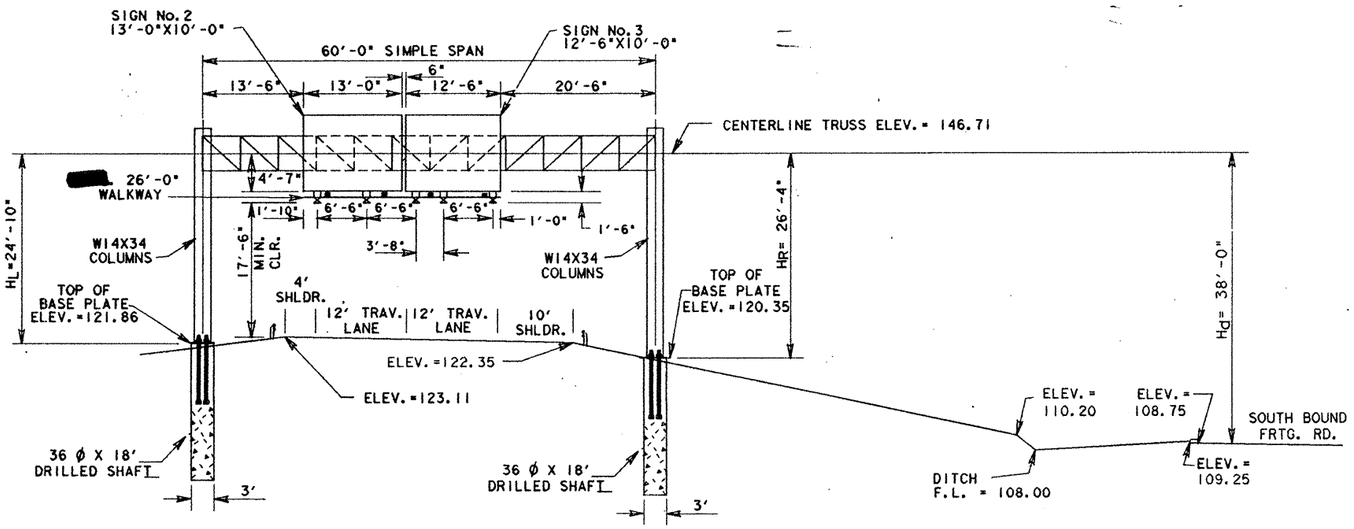

SIGNS NO. 2 & 3

STA. 840+00 (RT.)
FOR DESIGN: USE HOSB-Z1, OSBT, OSBC, OSB-FD

DESIGN PARAMETERS:

SIMPLE SPAN = 60'-0"
DESIGN HEIGHT, Hd = 38'-0"
COLUMN HEIGHT, H = 26'-4"
AVG. PEN. VALUE = 12 BLOWS/FT
WIND ZONE 1 = 100 MPH (HIDALGO COUNTY)
BELOW ICE ZONE
FOR DESIGN
USE STANDARDS: HOSB-Z1, OSBT
OSBC & OSB-FD

LEGEND

- LIGHT FIXTURES
- CONDUIT RUN W/CONDUCTORS
- GROUND BOX
- SERVICE POLE

NOTE: INSTALL NEW SIGN, LIGHT, WALKWAY AND SUPPORT BRACKETS AS SHOWN. INSTALL NEW CONDUIT, CONDUCTOR, FITTINGS, ETC. NECESSARY FOR A COMPLETE SYSTEM IN PLACE AND OPERATIONAL.

NOTE: SEE STANDARD SL(MV) FOR MERCUARY VAPOR LAMP SPACING.

SUMMARY OF QUANTITIES

ITEM	DESCRIPTION	UNIT	QUANTITY EST.	QUANTITY FIN.
417	SLURRY DISP. DRILL SHAFT (36 IN. SIGN MTS)	LF	72	
622	DUCT CABLE (1 IN.) (8-3) (2 INSU.-1 BARE)	LF	150	
618	CONDUIT (PVC) (SCH 40) 2" BORED	LF	55	
624	GROUND BOX (RPM) (TY A) (122311) APRON	EA	1	
628	SERVICE POLE TY SL	EA	1	
650	OVERHEAD SIGN SUPPORT (BRIDGE) (60' SPAN) (17'-6" HT)	EA	1	
652	HIGHWAY SIGN LIGHTING FIXTURE (MV) (100 WATT)	EA	4	
654	SIGN WALKWAY	LF	26	

NOTE: SEE SUMMARY OF LARGE SIGNS SHEETS FOR QUANTITIES ON ITEMS 636 AND 642.

STATE OF TEXAS
MELVIN D. GREENHILL
38030
REGISTERED
PROFESSIONAL ENGINEER

Melvin D. Greenhill
March 3, 1992

OVERHEAD SIGN BRIDGE

SHEET 16 OF 17 SHEETS

FED. RD. DIV. NO.	FEDERAL AID PROJECT NO.		SHEET NO.
6	NH 92( )M		446 A
STATE	STATE DIST. NO.	COUNTY	
TEXAS	21	HIDALGO	
CONT.	SECT.	JOB	HIGHWAY NO.
39	17	99	US 83/281

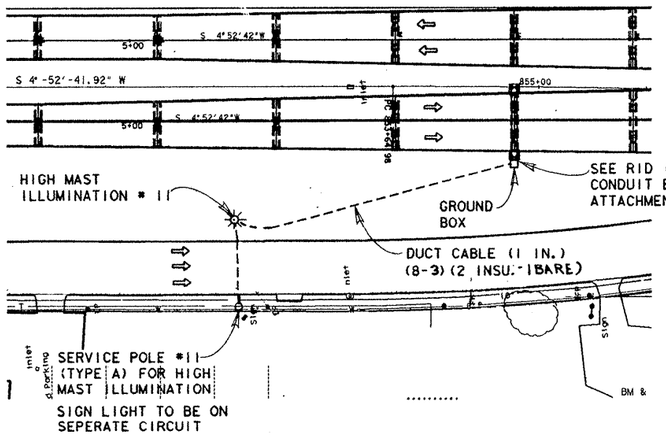

PLAN VIEW

STA 853+64 (RT.)

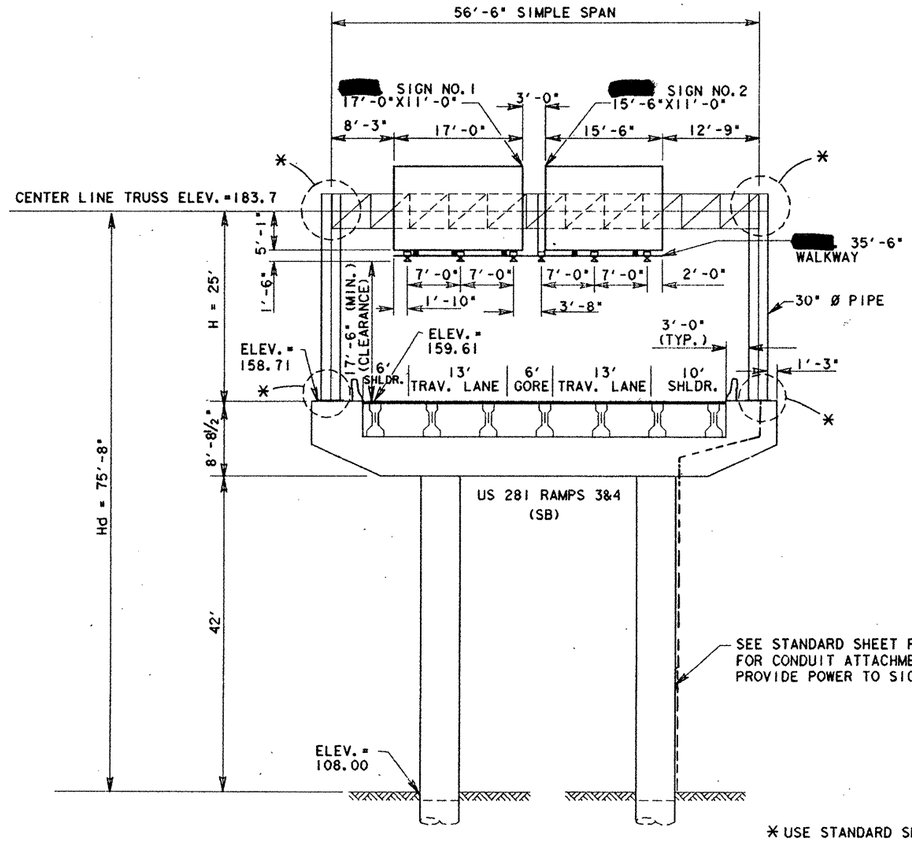

STA. 853+64 (RT.)
(RAMP. STA. 7+45) BENT NO. 8

DESIGN PARAMETERS:

SIMPLE SPAN = 55'-0"
DESIGN HEIGHT, Hd = 75'-0"
COLUMN HEIGHT, H = 25'-0"
AVG. PEN. VALUE = N/A
WIND ZONE I = 100 MPH (HIDALGO COUNTY)
BELOW ICE ZONE
FOR DESIGN
USE STANDARDS: HOSB-ZI (70 FT SPAN DESIGN)
HCOSS-ZI (35' SPAN AND 28' HEIGHT)
COSSD
COSSF

DESIGN ELEMENT	SPECIFICATIONS
TRUSS MEMBERS	
CHORD	$3\frac{1}{2}$X$3\frac{1}{2}$X5/16 (HS 50) (9 BOLT CONNECTION)
D.L. DIAG.	$2\frac{1}{2}$X$1\frac{1}{2}$X$\frac{5}{16}$ (2 BOLT CONNECTION)
W.L. DIAG.	3X3X$\frac{1}{4}$ (4 BOLT CONNECTION)
D.L. VERT.	$2\frac{1}{2}$X$1\frac{1}{2}$X$\frac{5}{16}$ (2 BOLT CONNECTION)
W.L. STRUT	2X2X3/16 (1 BOLT CONNECTION)
BOLTS	$\frac{5}{8}$" Ø H.S.
TRUSS W X D	4.5X4.5
TRUSS DEAD LOAD DEFLECTION	Δ=0.61"
TRUSS DEAD LOAD	60#/FT
TOWER PIPE	30" Ø
ANCHOR BOLTS	8-$2\frac{1}{4}$" Ø X 4'-3"
BOLT CIRCLE DIA.	36" DIA
BASE PLATE	41X$2\frac{1}{8}$

NOTE:
THE ITEMS IN THE TABLE ABOVE ARE SHOWN FOR CONTRACTOR'S INFORMATION ONLY.
REFER TO THE PERTINENT STANDARD SHEETS TO VERIFY EXACT MEMBERS.

LEGEND

- [redacted] FIGHT FIXTURES
- - - CONDUIT RUN W/CONDUCTORS
- □ - GROUND BOX
- O - SERVICE POLE

NOTE: SEE STANDARD SL(MV) FOR MERCUARY VAPOR LAMP SPACING.

NOTE: INSTALL NEW SIGNS, LIGHTS, WALKWAY, AND SUPPORT BRACKETS AS SHOWN. INSTALL NEW CONDUIT, CONDUCTOR, FITTINGS, ETC. NECESSARY FOR A COMPLETE SYSTEM IN PLACE AND OPERATIONAL.

SUMMARY OF QUANTITIES

ITEM	DESCRIPTION	UNIT	QUANTITY EST.	QUANTITY FIN.
622	DUCT CABLE (1 IN)(8-3)(2 INSU.-1 BARE)	LF	250	
		LF		
624	GROUND BOX (RPM)(TY A)(122311) APRON	EA	1	
650	OVERHEAD SIGN SUPPORT (BRIDGE)(56'-6" SPAN)(17'-6" HT)	EA	1	
652	HIGHWAY SIGN LIGHTING FIXTURE (MV)(100 WATT)	EA	5	
654	SIGN WALKWAY	LF	35.5'	
618	CONDUIT (RM) 1 IN	LF	65.	
620	ELEC (CONDUCTOR (NO. 8 BAR)	LF	65.	
620	ELEC. CONDUCTOR (NO. 8 XHHW)	LF	130.	

NOTE: SEE SUMMARY OF LARGE SIGNS SHEETS FOR QUANTITIES ON ITEMS 636 AND 642.

STATE OF TEXAS
MELVIN D. GREENHILL
26880
REGISTERED PROFESSIONAL ENGINEER

Melvin D. Greenhill
March 3, 1992

* USE STANDARD SHEET COSSD FOR END CONNECTION DETAILS AND STANDARD SHEET COSSF [redacted] USED FOR 30" Ø PIPE AND ANCHOR BOLT DETAILS.

OVERHEAD SIGN BRIDGE

SHEET 17 OF 17 SHEETS

FED. RD. DIV. NO.	FEDERAL AID PROJECT NO.		SHEET NO.
6	NH 92( )M		446B
STATE	STATE DIST. NO.	COUNTY	
TEXAS	21	HIDALGO	
CONT.	SECT.	JOB	HIGHWAY NO.
39	17	939	US83/28

SUMMARY OF LARGE SIGNS [redacted] REMOVED

PLAN SHEET NO.	SIGN NO.	SIGN TYPE	SIGN BACK-GROUND COLOR	SIGN TEXT	SIGN DIMENSIONS	REFLECT. SHEETTING TYPE	ITEM 6057 (EACH)	ITEM 6059 (EACH)	ITEM 6060 (EACH)	ITEM XXXX (EACH)	TYPE OF MOUNT	" X " DIMENSION ◒ FEET POST ①	POST ②	POST ③	(ITEM 648) GALVANIZED STRUCTURAL STEEL ◓ LINEAR FEET SIZE	POST ①	POST ②	POST ③	TOTAL WEIGHT LBS.	(ITEM 432) CONC. RIPRAP APRON CUBIC YARDS
1	1		GREEN	EXPRESSWAY (803+75) ENDS ½ MILE					1											
4	1		GREEN	US 281 (1448+00) PHARR EDINBURG EXIT ½ MILE			1													
	2		GREEN	US 281 (1461+20) PHARR EDINBURG EXIT ¼ MILE			1													
	3		GREEN	BUS (1464+50) US 83 FM 2061 JACKSON RD ⇗			1													
6	1		GREEN	US 281 (1472+30) PHARR EDINBURG ⇗			1													
	2		GREEN	FRONTAGE RD (1487+50) EXIT ½ MILE			1													
	3		GREEN	BUSINESS (1488+75) US 83 FM 2061 JACKSON RD EXIT ½ MILE			1													
	4		GREEN	MCALLEN (1496+75) BUSINESS DISTRICT NEXT 5 EXITS			1													
7	1		GREEN	SUGAR RD (1511+70) POLK AVE ⇗			1													
9	1		GREEN	I RD (1528+40) EXIT ½ MILE			1													
	2		GREEN	I RD (1544+50) ⇗			1													
	3		GREEN	SUGAR RD (1547+50) POLK AVE EXIT ¾ MILE			1													
10	1		GREEN	US 281 (1560+00) PHARR EDINBURG ⇗			1													
11	1		GREEN	I RD (1585+00) ⇗			1													
12	1		GREEN	US 281 PHARR EDINBURG EXIT 1 MILE			1													
PROJECT TOTAL							14		1											

DESCRIPTION OF ITEMS

ITEM 6057 - REMOVAL OF ENTIRE INSTALLATION.

ITEM 6060 - REMOVAL OF SIGN PANEL FROM OVERHEAD SIGN BRIDGE.

SEE SPECIAL SPECIFICATIONS FOR FURTHER DETAIL.

SUMMARY OF
LARGE SIGNS
[redacted] REMOVED
(ITEMS 6057 & 6060)

STATE OF TEXAS
MELVIN D. GREENHILL
29920
REGISTERED

Melvin D. Greenhill
March 3, 1992

FED. ROAD DIV. NO.	STATE	FEDERAL AID PROJECT NO.				SHEET NO.
6	TEXAS	NH 92( )M				446C
STATE DIST. NO.	COUNTY		CONT. NO.	SEC. NO.	JOB NO.	HIGHWAY NO.
21	HIDALGO		39	17	97	83/281

AD-76-0

SUMMARY OF LARGE SIGNS

PLAN SHEET NO.	SIGN NO.	SIGN TYPE	SIGN BACK-GROUND COLOR	SIGN TEXT	SIGN DIMENSION	REFLECTIVE SHEETING TYPE	GROUND MOUNT SUBSTRATE (ITEM 634) PLYWOOD TY A SQ. FT.	GROUND MOUNT SUBSTRATE (ITEM 636) ALUMINUM TY A SQ. FT.	OVERHEAD SUBSTRATE (ITEM 640) PLYWOOD TY O SQ. FT.	OVERHEAD SUBSTRATE (ITEM 642) ALUMINUM TY O SQ. FT.	TYPE OF MOUNT	"X" DIMENSION ◒ POST ①	"X" DIMENSION ◒ POST ②	"X" DIMENSION ◒ POST ③	GALVANIZED PIPE POSTS ⊛ LINEAR FEET 1½"ϕ	2"ϕ	2½"ϕ	3"ϕ	(ITEM 648) GALVANIZED STRUCTURAL STEEL ⊛ SIZE	LINEAR FEET POST ①	POST ②	POST ③	TOTAL WEIGHT LBS.	(ITEM 432) CONC. RIPRAP APRON CUBIC YARDS	(ITEM 416) DRILL SHAFT LINEAR FEET 12" Ø NON REINF.	24" Ø REINF.	NON-PART
				LARGE SIGNS TO BE INSTALLED																							
				CSJ: 0039-17-097																							
				ON US 281																							
1	1	M1-4E2	GREEN	US 83 (803+75)	13'-0"X12'-0"	A		7.15		156.00	OSB																
				MCALLEN																							
				HARLINGEN																							
				EXITS 1 MILE																							
	2	M1-4E3	GREEN	SOUTH (803+75)	15'-0"X11'-0"	A				165.00	OSB																
		M1-6F3B		US 281 FM 495				25.61																			
				PHARR																							
				EXIT ½ MILE																							
2	1			CHANGEABLE MESSAGE (819+65)							OSB																
				SIGN																							
	2	M1-4E2	GREEN	US 83 EAST (840+00)	13'-0"X10'-0"	A		7.15		130.00	OSB																
				HARLINGEN																							
		E11-1		EXIT ⇩ ONLY				32.50																			
	3	M1-4E2	GREEN	US 83 WEST (840+00)	12'-6"X10'-0"	A		7.15		125.00	OSB																
				MCALLEN																							
		E11-1		EXIT ⇩ ONLY				31.25																			
	4		GREEN	SOUTH (831+50)	15'-0"X10'-0"	A				150.00	COSS																
		M1-4E3		US 281 FM 495				25.61																			
		M1-6F3B		PHARR ⇗																							
3	1	M1-4E2	GREEN	US 83 EAST (853+64)	17'-0"X11'-0"	A		7.15		187.00	OSB																
				⇖ HARLINGEN																							
		E11-1A		EXIT ONLY				42.50																			
	2	M1-4E2	GREEN	US 83 WEST (853+64)	15'-6"X11'X0"	A		7.15		170.50	OSB																
				MCALLEN ⇗																							
		E11-1A		EXIT ONLY				42.50																			
				LARGE SIGNS TO BE INSTALLED																							
				CSJ 0039-17-097																							
				ON US 83																							
4	1		GREEN	NORTH (1461+50)	12'X6"X11'-0"	A				137.50	COSS																
		M1-4E3		US 281				9.11																			
				EDINBURG																							
				EXIT ½ MILE																							
	2		GREEN	SOUTH (1461+50)	12'-6"X12'-0"	A				150.00	COSS																
		M1-4E3		US 281				9.11																			
				PHARR																							
		E11-1		EXIT ⇩ ONLY				31.25																			
	3		GREEN	BUSINESS (1462+00)	20'-0"X12'-6"					250.00	COSS																
		M1-4E2		US 83 FM 2061				26.65																			
		M1-6F4B		JACKSON RD ⇗																							
		E11-1A		EXIT ONLY				50.00																			

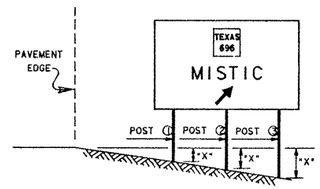

◒ THE "X" DIMENSION IS THE ELEVATION DIFFERENCE AT THE POST BETWEEN THE GROUND AND EDGE OF PAVEMENT OR TOP OF CURB.

GENERAL NOTES:

SIGNS SHOWN ON THIS SHEET ARE GENERALLY THOSE WITH REMOVABLE LEGEND TEXTS, ALTHOUGH SCREENED OR STICK-ON LEGEND SIGNS [redacted] ALSO [redacted] SHOWN (SEE SIGN TYPE).

LENGTHS OF THE POSTS FOR LARGE GROUND MOUNT SIGNS ARE APPROXIMATE. THE CONTRACTOR [redacted] VERIFY FIELD CONDITIONS TO DETERMINE THE REQUIRED LENGTHS OF THESE POSTS PRIOR TO ORDERING MATERIALS TO CONFORM WITH SPECIFIED SIGN MOUNTING HEIGHTS SHOWN IN THE PLANS.

⊛ CONTRACTOR [redacted] USE SCREENED LEGEND OR 6" TYPE D STICK-ON LETTERS.

REFLECTIVE SHEETING [redacted] DESIGNATED AS:
TYPE A= ENGINEER GRADE
TYPE B= SUPER ENGINEER GRADE
TYPE C= HIGH SPECIFIED INTENSITY

STATE OF TEXAS
MELVIN D. GREENHILL
29630
REGISTERED PROFESSIONAL ENGINEER

Melvin D. Greenhill
March 3, 1992

SUMMARY OF LARGE SIGNS

SIGNS [redacted] INSTALLED UNDER ITEM 416, 432, 634, 636, 640, 642 & 648

SHEET 1 OF 3

FED. ROAD DIV. NO.	STATE	FEDERAL AID PROJECT NO.				SHEET NO.
6	TEXAS	NH 92( )M				446D
STATE DIST. NO.	COUNTY		CONT. NO.	SEC. NO.	JOB NO.	HIGHWAY NO.
21	HIDALGO		39	17	97	83/281

SUMMARY OF LARGE SIGNS

PLAN SHEET NO.	SIGN NO.	SIGN TYPE	SIGN BACK-GROUND COLOR	SIGN TEXT	SIGN DIMENSION	REFLECTIVE SHEETING TYPE	GROUND MOUNT SUBSTRATE (ITEM 634) PLYWOOD TY A SQ. FT.	GROUND MOUNT SUBSTRATE (ITEM 636) ALUMINUM TY A SQ. FT.	OVERHEAD SUBSTRATE (ITEM 640) PLYWOOD TY O SQ. FT.	OVERHEAD SUBSTRATE (ITEM 642) ALUMINUM TY O SQ. FT.	TYPE OF MOUNT	"X" DIMENSION ◒ POST ①	"X" DIMENSION ◒ POST ②	"X" DIMENSION ◒ POST ③	GALVANIZED PIPE POSTS ⊕ LINEAR FEET 1½"ϕ	2"ϕ	2½"ϕ	3"ϕ	(ITEM 648) GALVANIZED STRUCTURAL STEEL ⊕ SIZE	LINEAR FEET POST ①	POST ②	POST ③	TOTAL WEIGHT LBS.	(ITEM 432) CONC. RIPRAP APRON CUBIC YARDS	(ITEM 416) DRILL SHAFT LINEAR FEET 12"ϕ NON-REINF	24"ϕ REINF.	NON-PART
4	4		GREEN	NORTH SOUTH (1448+50)	25'-0"X10'-6"	A	262.50				330	0.9	0.9	0.7					W6X15	18.4	18.4	18.2	878	3.2		16.5	
		MI-4E3		US 281 US 281				18.22																			
				EDINBURG PHARR																							
				EXIT ¾ MILE EXIT ½ MILE																							
5	1	MI-4E3	GREEN	US 281 SOUTH (1473+00)	13'-0"X11'-0"	A		9.11		143.00	COSS																
				PHARR ⇗																							
		E11-1A		EXIT ONLY				27.50																			
	2	MI-4E3	GREEN	US 281 NORTH (1482+00)	16'-6"X8'-0"	A		9.11		132.00	COSS																
				EDINBURG ⇗																							
	3		GREEN	BUSINESS (1474+00)	15'-6"X11'-6"	A				178.25	COSS																
		MI-4E2		US 83 FM 2061				26.65																			
		MI-6F4B		JACKSON RD																							
		E11-1		EXIT ⇩ ONLY				50.00																			
7	1		GREEN	BUSINESS (1497+25)	17'-6"X10'X6"	A				155.00	COSS																
		MI-4E2		US 83 FM 2061				26.25																			
		MI-6F4B		JACKSON RD																							
				EXIT ¾ MILE																							
	2		GREEN	FRONTAGE RD (1505+00)	16'-0"X5'-6"	A				88.00	COSS																
				EXIT ¼ MILE																							
	3		GREEN	MCALLEN (1511+00)	18'-0"X7'-6"	A				135.00	OSB																
				BUSINESS DISTRICT																							
				NEXT 5 EXITS																							
	4		GREEN	BUSINESS (1511+00)	17'-6"X11'-0"	A				155.00	OSB																
		MI-4E2		US 83 FM 2061				26.25																			
		MI-6F4B		JACKSON RD																							
				EXIT 1 MILE																							
	5		GREEN	SUGAR RD (1511+00)	17'-0"X7'-0"	A				119.00	OSB																
				POLK AVE ⇗																							
8	1		GREEN	SUGAR RD (1530+50)	13'-0"X7'-6"	A				97.50	COSS																
				POLK AVE																							
				EXIT ½ MILE																							
	2		GREEN	1 RD (1538+00)	12'-6"X5'-6"	A				68.75	COSS																
				EXIT ¼ MILE																							
	3	MI-4E3	GREEN	US 281 NORTH (1543+50)	16'-6"X8'-0"	A		9.11		132.00	COSS																
				EDINBURG ⇗																							
	4		GREEN	1 RD (1551+50)	7'-6"x7'-0"	A	52.50				320	1.8	2.2						S4X7.7	15.8	16.2		317	1.5	7.0		
				⇗																							
10	1	MI-4E3	GREEN	US 281 SOUTH (1557+00)	13'-0"x8'-0"	A		9.11		104.00	COSS																
				PHARR ⇗																							

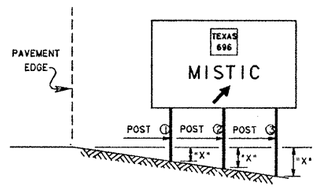

◒ THE "X" DIMENSION IS THE ELEVATION DIFFERENCE AT THE POST BETWEEN THE GROUND AND EDGE OF PAVEMENT OR TOP OF CURB.

GENERAL NOTES:

SIGNS SHOWN ON THIS SHEET ARE GENERALLY THOSE WITH REMOVABLE LEGEND TEXTS, ALTHOUGH SCREENED OR STICK-ON LEGEND SIGNS [redacted] ALSO [redacted] SHOWN (SEE SIGN TYPE).

LENGTHS OF THE POSTS FOR LARGE GROUND MOUNT SIGNS ARE APPROXIMATE. THE CONTRACTOR [redacted] VERIFY FIELD CONDITIONS TO DETERMINE THE REQUIRED LENGTHS OF THESE POSTS PRIOR TO ORDERING MATERIALS TO CONFORM WITH SPECIFIED SIGN MOUNTING HEIGHTS SHOWN IN THE PLANS.

⊕ CONTRACTOR [redacted] USE SCREENED LEGEND OR 6" TYPE D STICK-ON LETTERS.

REFLECTIVE SHEETING [redacted] DESIGNATED AS:
TYPE A= ENGINEER GRADE
TYPE B= SUPER ENGINEER GRADE
TYPE C= HIGH SPECIFIED INTENSITY

STATE OF TEXAS
MELVIN D. GREENHILL
20480
REGISTERED PROFESSIONAL ENGINEER

Melvin D. Greenhill
March 3, 1992

SUMMARY OF LARGE SIGNS

SIGNS [redacted] INSTALLED UNDER ITEM 416, 432, 634, 636, 642 & 648

FED. ROAD DIV. NO.	STATE	FEDERAL AID PROJECT NO.				SHEET NO.
6	TEXAS	NH 92( )M				446E
STATE DIST. NO.	COUNTY	CONT. NO.	SEC. NO.	JOB NO.	HIGHWAY NO.	
21	HIDALGO	39	17	97	83/28*	

SUMMARY OF LARGE SIGNS

PLAN SHEET NO.	SIGN NO.	SIGN TYPE	SIGN BACK-GROUND COLOR	SIGN TEXT	SIGN DIMENSION	REFLECTIVE SHEETING TYPE	GROUND MOUNT SUBSTRATE ITEM 634 PLYWOOD TY A SQ. FT.	GROUND MOUNT SUBSTRATE ITEM 636 ALUMINUM TY A SQ. FT.	OVERHEAD SUBSTRATE ITEM 640 PLYWOOD TY D SQ. FT.	OVERHEAD SUBSTRATE ITEM 642 ALUMINUM TY D SQ. FT.	TYPE OF MOUNT	"X" DIMENSION ◒ POST ①	"X" DIMENSION ◒ POST ②	"X" DIMENSION ◒ POST ③	GALVANIZED PIPE POSTS ⊛ LINEAR FEET 1½"φ	2"φ	2½"φ	3"φ	(ITEM 648) GALVANIZED STRUCTURAL STEEL ⊛ SIZE	LINEAR FEET POST ①	POST ②	POST ③	TOTAL WEIGHT LBS.	(ITEM 432) CONC. RIPRAP APRON CUBIC YARDS	(ITEM 416) DRILL SHAFT LINEAR FEET 12"φ NON-REINF	24"φ REINF.	NON-PART
10	2		GREEN	(1568+50)	25'-0"X10'-6"	A	262.50				330	2.1	5.5	8.6					W8X18	19.6	23.0	26.1	1302	3.2		19.5	
		M1-4E3		US 281 SOUTH US 281 NORTH				18.22																			
				PHARR EDINBURG																							
				EXIT ¼ MILE EXIT ½ MILE																							
	3		GREEN	I RD (1581+00)	7'-6"X7'-0"	A	52.50				320	1.5	2.0						S4X7.7	15.5	16.0		313	1.5	7.0		
12	1		GREEN	(1613+00)	26'-0"X11'-0"	A	286.00				330	2.1	5.0	8.1					W8X21	20.1	23.0	26.1	1587	3.3		21.0	
		M1-4E3		US 281 SOUTH US 281 NORTH				18.22																			
				PHARR EDINBURG																							
				EXIT 1 MILE EXIT 1 ¼ MILE																							
				PROJECT TOTAL			916.00	609.59		3128.5													4397	12.7	14.0	57.0	

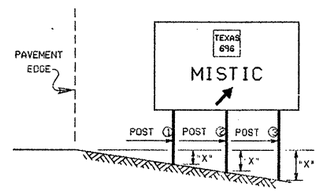

◒ THE "X" DIMENSION IS THE ELEVATION DIFFERENCE AT THE POST BETWEEN THE GROUND AND EDGE OF PAVEMENT OR TOP OF CURB.

GENERAL NOTES:

SIGNS SHOWN ON THIS SHEET ARE GENERALLY THOSE WITH REMOVABLE LEGEND TEXTS, ALTHOUGH SCREENED OR STICK-ON LEGEND SIGNS [redacted] ALSO [redacted] SHOWN (SEE SIGN TYPE).

LENGTHS OF THE POSTS FOR LARGE GROUND MOUNT SIGNS ARE APPROXIMATE. THE CONTRACTOR [redacted] VERIFY FIELD CONDITIONS TO DETERMINE THE REQUIRED LENGTHS OF THESE POSTS PRIOR TO ORDERING MATERIALS TO CONFORM WITH SPECIFIED SIGN MOUNTING HEIGHTS SHOWN IN THE PLANS.

⊛ CONTRACTOR [redacted] USE SCREENED LEGEND OR 6" TYPE D STICK-ON LETTERS.

REFLECTIVE SHEETING [redacted] DESIGNATED AS:
TYPE A= ENGINEER GRADE
TYPE B= SUPER ENGINEER GRADE
TYPE C= HIGH SPECIFIED INTENSITY

STATE OF TEXAS
MELVIN D. GREENHILL
20020
REGISTERED ENGINEER

Melvin D. Greenhill
March 3, 1992

SUMMARY OF LARGE SIGNS

SIGNS [redacted] INSTALLED UNDER ITEM 416, 432, 634, 636, 642 & 648

SHEET 3 OF 3 SHEETS

FED. ROAD DIV. NO.	STATE	FEDERAL AID PROJECT NO.				SHEET NO.
6	TEXAS	NH 92(			)M	446F
STATE DIST. NO.	COUNTY		CONT. NO.	SEC. NO.	JOB NO.	HIGHWAY NO.
21	HIDALGO		39	17	97	83/281

Z543 [325120] LRG DGN [PARM=LRG3]

SCALE: 1" = 100'

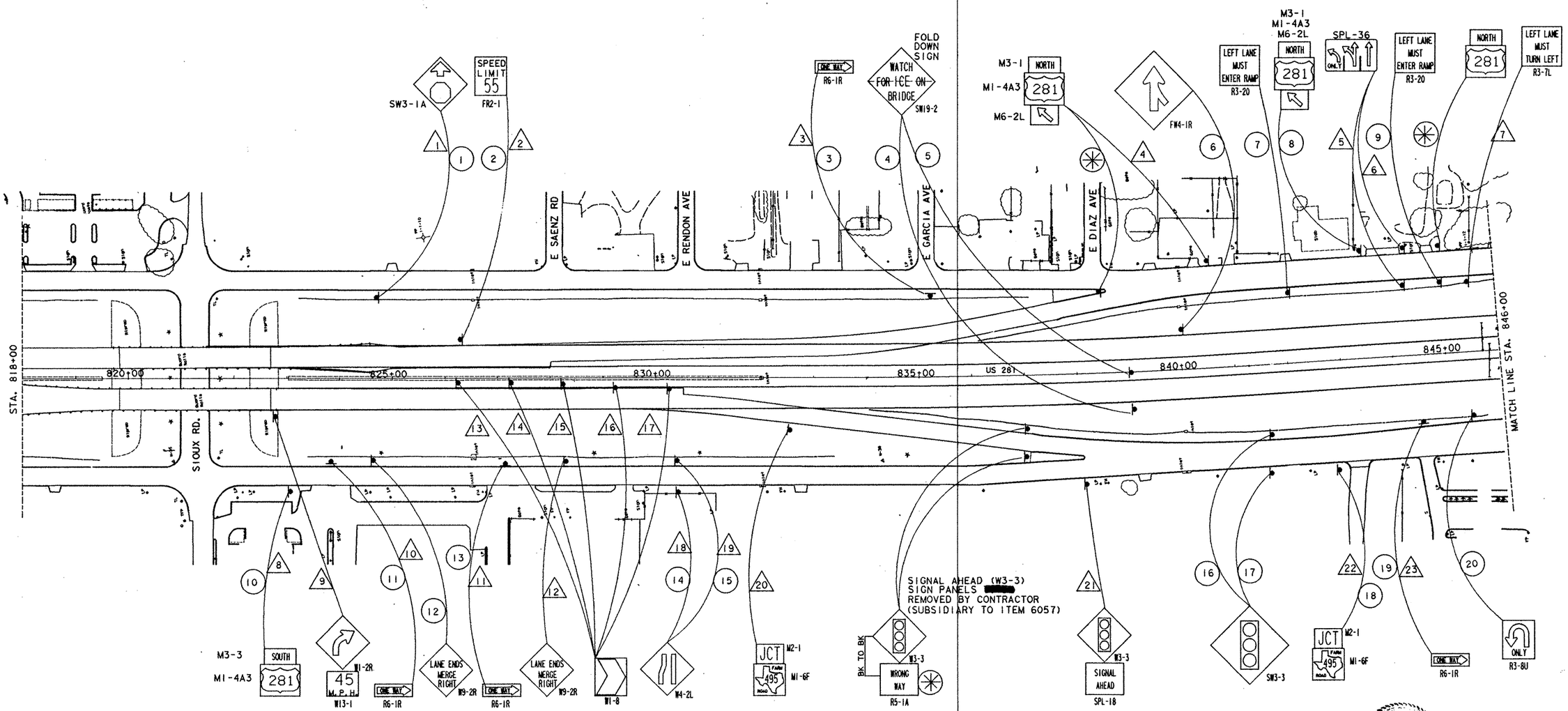

NOTE: EXISTING SIGNS SCHEDULED TO REMAIN IN PLACE [redacted] AFFECTED BY ROADWAY CONSTRUCTION AND ARE NOT SHOWN ON THE SIGN LAYOUT, WITH THE EXCEPTION OF ROUTE MARKERS AND "WATCH FOR ICE ON BRIDGE" SIGNS.

△ SIGNS [redacted] REMOVED (ITEM 6057)

○ SIGNS [redacted] INSTALLED (ITEM 6000)

✳ SIGNS [redacted] REMAIN IN PLACE

STATE OF TEXAS
MELVIN D. GREENHILL
58030
REGISTERED
PROFESSIONAL ENGINEER

Melvin D. Greenhill
March 3, 1992

SMALL SIGNS LAYOUT AND DETAILS

SHEET 1 OF 4

FED. RD. DIV. NO.	FEDERAL AID PROJECT NO.		SHEET NO.
6	NH 92( )M		447
STATE	DIST.	COUNTY	
TEXAS	21	HIDALGO	
CONT.	SECT.	JOB	HIGHWAY NO.
39	17	97	83/281

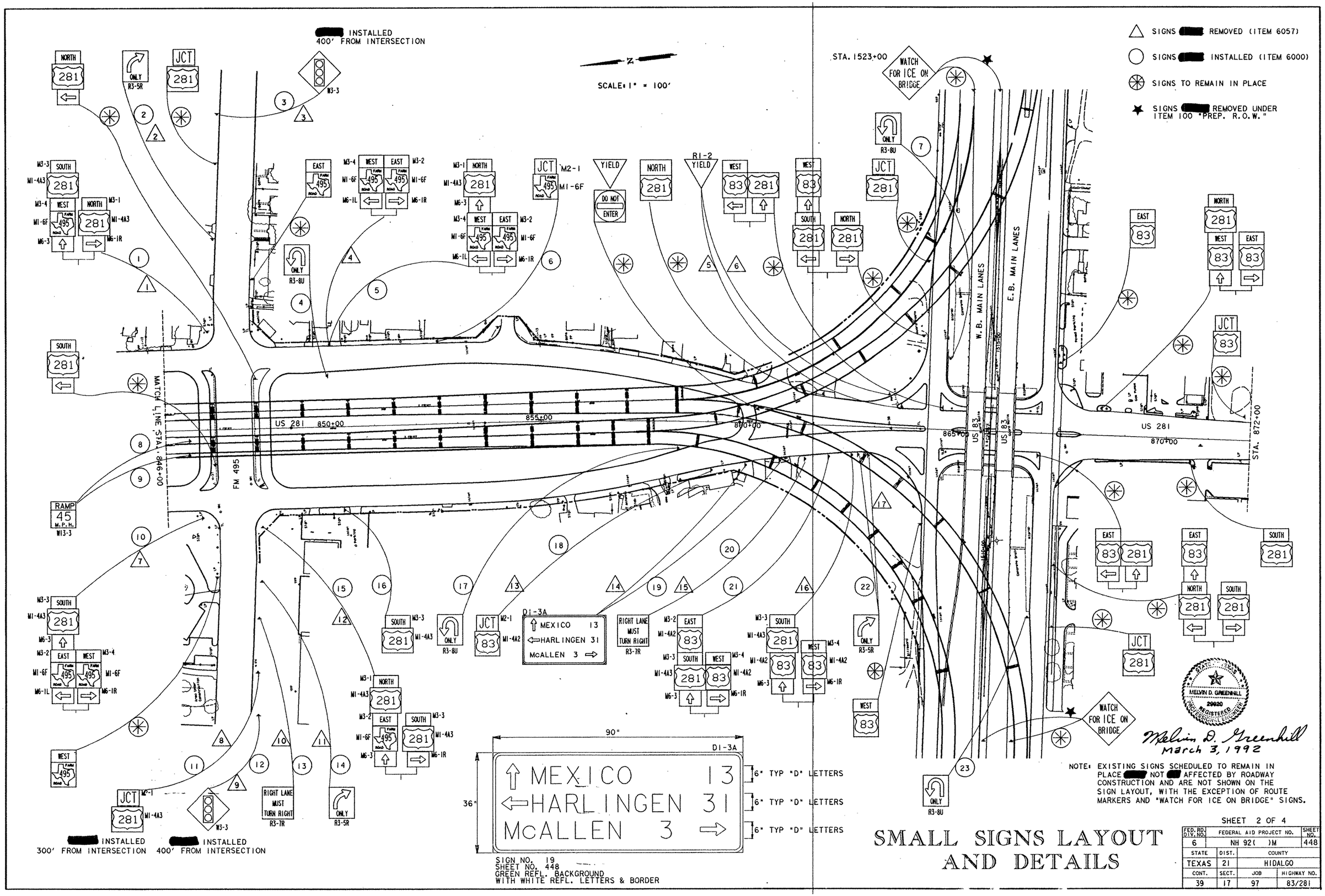

NOTE: EXISTING SIGNS SCHEDULED TO REMAIN IN PLACE [redacted] NOT [redacted] AFFECTED BY ROADWAY CONSTRUCTION AND ARE NOT SHOWN ON THE SIGN LAYOUT, WITH THE EXCEPTION OF ROUTE MARKERS AND "WATCH FOR ICE ON BRIDGE" SIGNS.

SMALL SIGNS LAYOUT AND DETAILS

SHEET 2 OF 4

FED. RD. DIV. NO.	FEDERAL AID PROJECT NO.		SHEET NO.
6	NH 92( )M		448
STATE	DIST.	COUNTY	
TEXAS	21	HIDALGO	
CONT.	SECT.	JOB	HIGHWAY NO.
39	17	97	83/281

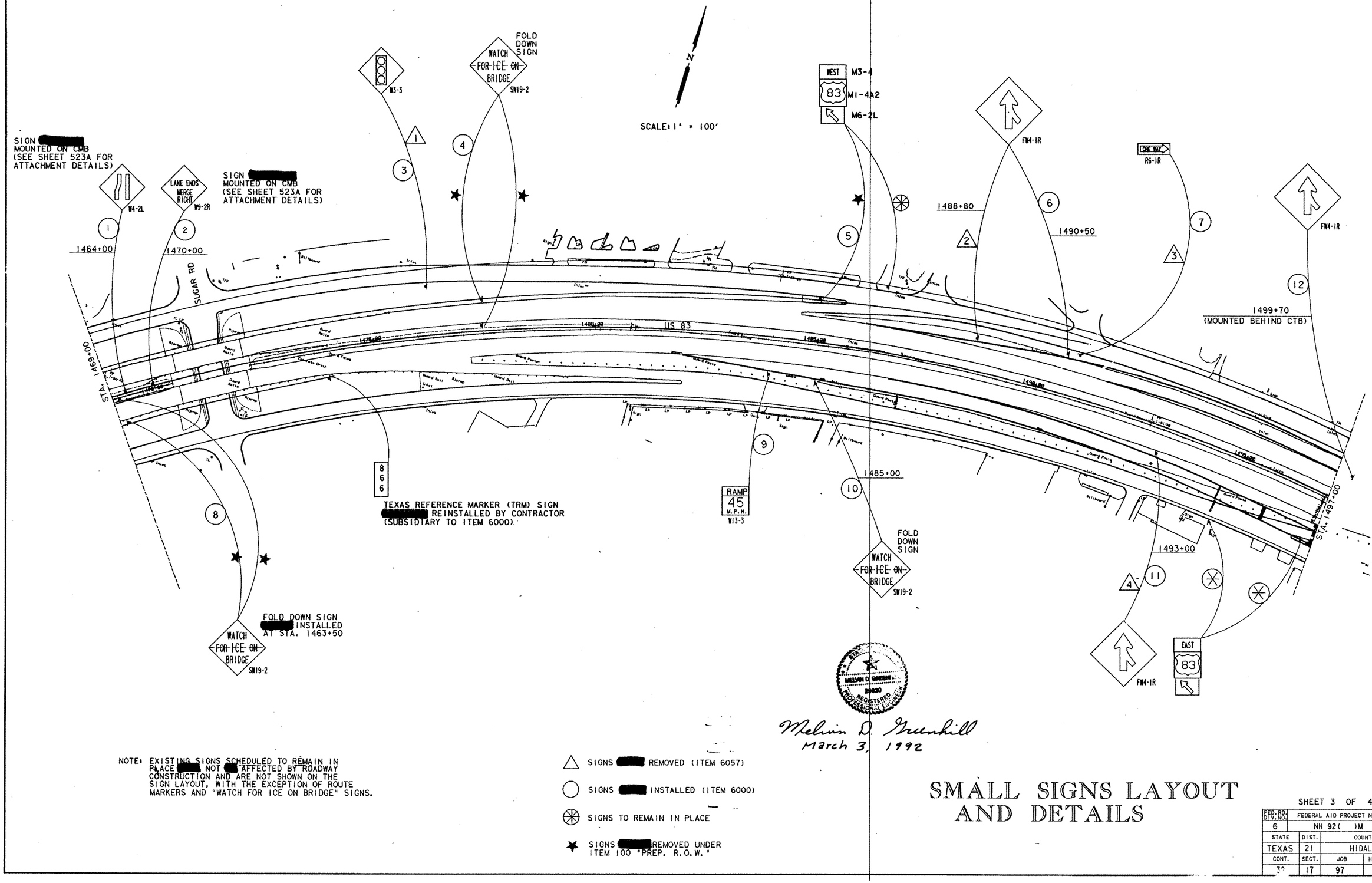

NOTE: EXISTING SIGNS SCHEDULED TO REMAIN IN PLACE [redacted] NOT [redacted] AFFECTED BY ROADWAY CONSTRUCTION AND ARE NOT SHOWN ON THE SIGN LAYOUT, WITH THE EXCEPTION OF ROUTE MARKERS AND "WATCH FOR ICE ON BRIDGE" SIGNS.

△ SIGNS [redacted] REMOVED (ITEM 6057)

○ SIGNS [redacted] INSTALLED (ITEM 6000)

⊛ SIGNS TO REMAIN IN PLACE

★ SIGNS [redacted] REMOVED UNDER ITEM 100 "PREP. R.O.W."

SMALL SIGNS LAYOUT AND DETAILS

FED. RD. DIV. NO.	FEDERAL AID PROJECT NO.		SHEET NO.
6	NH 92( )M		449
STATE	DIST.	COUNTY	
TEXAS	21	HIDALGO	
CONT.	SECT.	JOB	HIGHWAY NO.
30	17	97	83/281

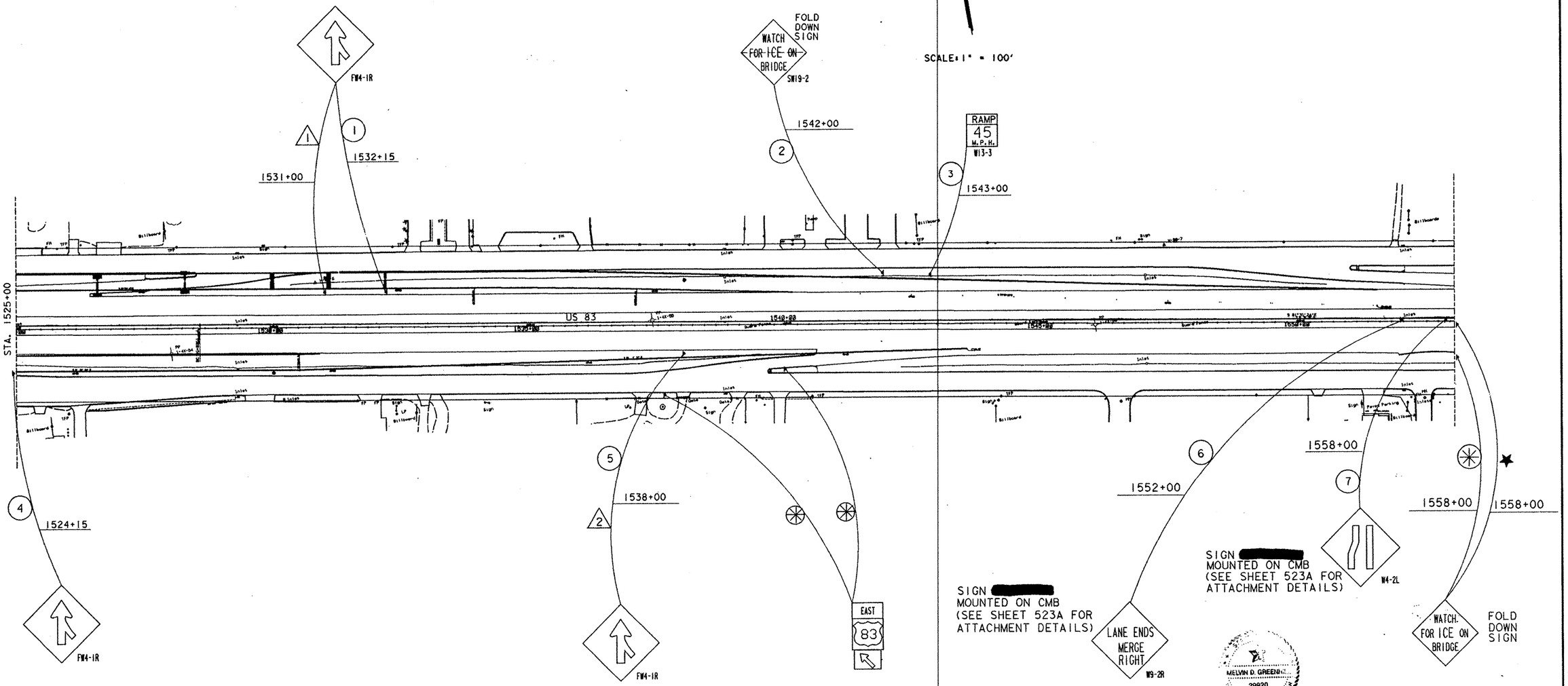

NOTE: EXISTING SIGNS SCHEDULED TO REMAIN IN PLACE [redacted] NOT [redacted] AFFECTED BY ROADWAY CONSTRUCTION AND ARE NOT SHOWN ON THE SIGN LAYOUT, WITH THE EXCEPTION OF ROUTE MARKERS AND "WATCH FOR ICE ON BRIDGE" SIGNS.

△ SIGNS [redacted] REMOVED (ITEM 6057)

○ SIGNS [redacted] INSTALLED (ITEM 6000)

⊛ SIGNS TO REMAIN IN PLACE

★ SIGNS [redacted] REMOVED UNDER ITEM 100 "PREP. R.O.W."

MELVIN D. GREENHILL 29920 REGISTERED PROFESSIONAL ENGINEER

Melvin D. Greenhill
March 3, 1992

SMALL SIGNS LAYOUT AND DETAILS

SHEET 4 OF 4

FED. RD. DIV. NO.	FEDERAL AID PROJECT NO.		SHEET NO.
6	NH 92( )M		450
STATE	DIST.	COUNTY	
TEXAS	21	HIDALGO	
CONT.	SECT.	JOB	HIGHWAY NO.
39	17	97	83/281

SUMMARY OF SMALL SIGNS (WITHOUT REMOVABLE COPY)

PLAN SHT. NO.	SIGN NO.	SIGN TYPE	SIGN TEXT	SIGN DIMENS. IN.	PLY-WOOD TYPE A	ALUM. TYPE A	TYPE OF MOUNT: FLANGED CHANNEL MOUNT TYPE I	FLANGED CHANNEL MOUNT TYPE II	FLANGED CHANNEL MOUNT TYPE III	A	A - 1	B	C	D - 1	D - 2	D - 3	D - 4	F	M P	M W	"X" DIMENSION POST ① FT.	"X" DIMENSION POST ② FT.	NON PART
			CSJ: 39-17-97																				
447	1	SW3-1A	SYM STOP AHEAD	48X48	X																		
	2	FR2-1	SPEED LIMIT 55	48X60	X																		
	3	R6-1R	ONE WAY W ARROW	36X12	X																		
	4	M3-1	NORTH	24X12	X																		
		M1-4A3	US 281	30X24																			
		M6-2L	45DEG ARROW LT	21X15																			
	5	SPL-36	LT TRN LN CONTROL	48X36	X																		
	6	SPL-36	LT TRN LN CONTROL	48X36	X																		
	7	R3-7L	LT LN MUST TRNLT	30X30	X																		
	8	M3-3	SOUTH	24X12	X																		
		M1-4A3	US 281	30X24																			
	9	W1-2R	RT CURVE ARROW	30X30	X																		
		W13-1	45 MPH	18X18																			
	10	R6-1R	ONE WAY W ARROW	36X12	X																		
	11	R6-1R	ONE WAY W ARROW	36X12	X																		
	12	W9-2R	LN ENDS MERGE RT	36X36	X																		
	13	W1-8	CHEVRON	18X24	X																		
	14	W1-8	CHEVRON	18X24	X																		
	15	W1-8	CHEVRON	18X24	X																		
	16	W1-8	CHEVRON	18X24	X																		
	17	W1-8	CHEVRON	18X24	X																		
	18	W4-2L	PVMT TRANS LEFT	36X36	X																		
	19	W4-2L	PVMT TRANS LEFT	36X36	X																		
	20	M2-1	JCT	21X15	X																		
		M1-6F	FARM ROAD 495	24X24																			
	21	W3-3	SYM SIGNAL AHEAD	36X36	X																		
		SPL-18	SIGNAL AHEAD	24X18																			
	22	M2-1	JCT	21X15	X																		
		M1-6F	FARM ROAD 495	24X24																			
	23	R6-1R	ONE WAY W ARROW	36X12	X																		
448	1	M3-3	SOUTH	24X12	X																		
		M1-4A3	US 281	30X24																			
		M3-4	WEST	24X12																			
		M1-6F	FARM ROAD 495	24X24																			
		M6-3	UP ARROW	21X15																			
		M3-1	NORTH	24X12																			
		M1-4A3	US 281	30X24																			
		M6-1R	HORIZONTAL ARROW	21X15																			
	2	R3-5R	RT TRN ONLY	30X36	X																		
	3	W3-3	SYM SIGNAL AHEAD	36X36	X																		
	4	M3-4	WEST	24X12	X																		
		M1-6F	FARM ROAD 495	24X24																			
		M6-1L	HORIZONTAL ARROW	21X15																			
		M3-2	EAST	24X12																			
		M1-6F	FARM ROAD 495	24X24																			
		M6-1R	HORIZONTAL ARROW	21X15																			
	5	R1-2	YIELD	36X36X36	X																		
	6	R1-2	YIELD	36X36X36	X																		
	7	M3-3	SOUTH	24X12	X																		
		M1-4A3	US 281	30X24																			
		M6-3	UP ARROW	21X15																			
		M3-2	EAST	24X12																			
		M1-6F	FARM ROAD 495	24X24																			
		M6-1L	HORIZONTAL ARROW	21X15																			
		M3-4	WEST	24X12																			
		M1-6F	FARM ROAD 495	24X24																			
		M6-1R	HORIZONTAL ARROW	21X15																			
	8	M2-1	JCT	21X15	X																		
		M1-4A3	US 281	30X24																			
	9	W3-3	SYM SIGNAL AHEAD	36X36	X																		
	10	R3-7R	RT LN MUST TRNRT	30X30	X																		
	11	R3-5R	RT TRN ONLY	30X36	X																		
	12	M3-1	NORTH	24X12	X																		
		M1-4A3	US 281	30X24																			
		M3-2	EAST	24X12																			
		M1-6F	FARM ROAD 495	24X24																			
		M6-3	UP ARROW	21X15																			
		M3-3	SOUTH	24X12																			
		M1-4A3	US 281	30X24																			
		M6-1R	HORIZONTAL ARROW	21X15																			
	13	M2-1	JCT	21X15	X																		
		M1-4A2	US 83	24X24																			
	14	D1-3A	⇧ MEXICO 13	90X36	X																		
			⇦ HARLINGEN 31																				
			MCALLEN 3 ⇨																				
	15	R3-7R	RT LN MUST TRNRT	30X30	X																		

SUMMARY OF SMALL SIGNS

SIGNS ■ ■ REMOVED UNDER ITEM 6057

SIGN TABULATIONS

(WITHOUT REMOVABLE COPY)

Phillip D. Greenhill
March 3, 1998

SHEET 1 OF 2

DIST. NO.	COUNTY	CONT. NO.	SEC. NO.	HIGHWAY NO.	SHEET NO.
21	HIDALGO	39	17	97	83/281

FED. ROAD DIV. NO. 6 | STATE TEXAS | FEDERAL AID PROJECT NO. NH 92( )M

SUMMARY OF SMALL SIGNS (WITHOUT REMOVABLE COPY)

PLAN SHT. NO.	SIGN NO.	SIGN TYPE	SIGN TEXT	SIGN DIMENS. IN.	PLY-WOOD TYPE A	ALUM. TYPE A	TYPE OF MOUNT: FLANGED CHANNEL MOUNT TYPE I	II	III	A	A - 1	B	C	D - 1	D - 2	D - 3	D - 4	F	M P	M W	"X" DIMENSION POST ① FT.	② FT.	NON PART
			CONTINUATION																				
448	16	M3-3	SOUTH	24X12	X																		
		M1-4A3	US 281	30X24																			
		M1-4A2	US 83	24X24																			
		M6-3	UP ARROW	21X15																			
		M3-4	WEST	24X12																			
		M1-4A2	US 83	24X24																			
		M6-1R	HORIZONTAL ARROW	21X15																			
	17	R3-5R	RT TRN ONLY	30X36	X																		
449	1	W3-3	SYM SIGNAL AHEAD	36X36	X																		
	2	FW4-1R	SYM MERGE RIGHT	48X48	X																		
	3	R6-1R	ONE WAY W ARROW	36X12	X																		
	4	FW4-1R	SYM MERGE RIGHT	48X48	X																		
450	1	FW4-1R	SYM MERGE RIGHT	48X48	X																		
	2	FW4-1R	SYM MERGE RIGHT	48X48	X																		
			TOTAL		46																		

(WITHOUT REMOVABLE COPY)

SIGN TABULATIONS

SUMMARY OF SMALL SIGNS

SIGNS [redacted] REMOVED UNDER ITEM 6057

STATE OF TEXAS
MELVIN D. GREENHILL
29850
REGISTERED PROFESSIONAL ENGINEER

Melvin D. Greenhill
March 3, 1992

SHEET 2 OF 2

FED. ROAD DIV. NO.	STATE	FEDERAL AID PROJECT NO.	SHEET NO.
6	TEXAS	NH 92(C)m	452

STATE DIST. NO.	COUNTY	CONT. NO.	SEC. NO.	JOB NO.	HIGHWAY NO.
21	HIDALGO	39	17	97	83/281

SUMMARY OF SMALL SIGNS (WITHOUT REMOVABLE COPY)

PLAN SHT. NO.	SIGN NO.	SIGN TYPE	SIGN TEXT	SIGN DIMENS. IN.	PLY-WOOD TYPE A	ALUM. TYPE A	TYPE OF MOUNT: FLANGED CHANNEL MOUNT TYPE I	TYPE II	TYPE III	A	A(SPL)	B	C	D-1	D-2	D-3	D-4	F	M P	M W	"X" DIMENSION POST ① FT.	POST ② FT.	NON PART
			CSJ: 39-17-97																				
447	1	SW3-1A	SYM STOP AHEAD	48X48	16.00													X					
	2	FR2-1	SPEED LIMIT 55	48X60	20.00													X					
	3	R6-1R	ONE WAY W ARROW	36X12	3.00					X													
	4	SW19-2	W FOR ICE ON BR	48X48	16.00													X					
	5	SW19-2	W FOR ICE ON BR	48X48	16.00													X					
	6	FW4-1R	SYM MERGE RIGHT	48X48	16.00													X					
	7	R3-20	LEFT LANE	48X48	16.00													X					
			MUST																				
			ENTER RAMP																				
	8	M3-1	NORTH	24X12		2.00				X													
		M1-4A3	US 281	30X24		5.00																	
		M6-2L	45DEG ARROW LT	21X15		2.19																	
	9	R3-20	LEFT LANE	48X48	16.00													X					
			MUST																				
			ENTER RAMP																				
	10	M3-3	SOUTH	24X12		2.00				X													
		M1-4A3	US 281	30X24		5.00																	
	11	R6-1R	ONE WAY W ARROW	36X12	3.00					X													
	12	W9-2R	LN ENDS MERGE RT	36X36	9.00					X													
	13	R6-1R	ONE WAY W ARROW	36X12	3.00					X													
	14	W4-2L	PVMT TRANS LEFT	36X36	9.00					X													
	15	W4-2L	PVMT TRANS LEFT	36X36	9.00					X													
	16	SW3-3	SYM SIGNAL AHEAD	48X48	16.00													X					
	17	SW3-3	SYM SIGNAL AHEAD	48X48	16.00													X					
	18	M2-1	JCT	21X15		2.19				X													
		M1-6F	FARM ROAD 495	24X24		4.00																	
	19	R6-1R	ONE WAY W ARROW	36X12	3.00					X													
	20	R3-8U	U TRN ONLY ARROW	24X30	5.00					X													
448	1	M3-3	SOUTH	24X12		2.00							X										
		M1-4A3	US 281	30X24		5.00																	
		M3-4	WEST	24X12		2.00																	
		M1-6F	FARM ROAD 495	24X24		4.00																	
		M6-3	UP ARROW	21X15		2.19																	
		M3-1	NORTH	24X12		2.00																	
		M1-4A3	US 281	30X24		5.00																	
		M6-1R	HORIZONTAL ARROW	21X15		2.19																	
	2	R3-5R	RT TRN ONLY	30X36	7.50					X													
	3	W3-3	SYM SIGNAL AHEAD	36X36	9.00					X													
	4	R3-8U	U TRN ONLY ARROW	24X30	5.00					X													
	5	M3-1	NORTH	24X12		2.00							X										
		M1-4A3	US 281	30X24		5.00																	
		M6-3	UP ARROW	21X15		2.19																	
		M3-4	WEST	24X12		2.00																	
		M1-6F	FARM ROAD 495	24X24		4.00																	
		M6-1L	HORIZONTAL ARROW	21X15		2.19																	
		M3-2	EAST	24X12		2.00																	
		M1-6F	FARM ROAD 495	24X24		4.00																	
		M6-1R	HORIZONTAL ARROW	21X15		2.19																	
	6	M2-1	JCT	21X15		2.19				X													
		M1-6F	FARM ROAD 495	24X24		4.00																	
	7	R3-8U	U TRN ONLY ARROW	24X30	5.00					X													
	8	W13-3	RAMP 45 MPH	48X60	20.00													X					
	9	W13-3	RAMP 45 MPH	48X60	20.00													X					
	10	M3-3	SOUTH	24X12		2.00							X										
		M1-4A3	US 281	30X24		5.00																	
		M6-3	UP ARROW	21X15		2.19																	
		M3-2	EAST	24X12		2.00																	
		M1-6F	FARM ROAD 495	24X24		4.00																	
		M6-1L	HORIZONTAL ARROW	21X15		2.19																	
		M3-4	WEST	24X12		2.00																	
		M1-6F	FARM ROAD 495	24X24		4.00																	
		M6-1R	HORIZONTAL ARROW	21X15		2.19																	
	11	M2-1	JCT	21X15		2.19				X													
		M1-4A3	US 281	30X24		5.00																	
	12	W3-3	SYM SIGNAL AHEAD	36X36	9.00					X													
	13	R3-7R	RT LN MUST TRNRT	30X30	6.25					X													
	14	R3-5R	RT TRN ONLY	30X36	7.50					X													
	15	M3-1	NORTH	24X12		2.00							X										
		M1-4A3	US 281	30X24		5.00																	
		M3-2	EAST	24X12		2.00																	
		M1-6F	FARM ROAD 495	24X24		4.00																	
		M6-3	UP ARROW	21X15		2.19																	
		M3-3	SOUTH	24X12		2.00																	
		M1-4A3	US 281	30X24		5.00																	
		M6-1R	HORIZONTAL ARROW	21X15		2.19																	

GENERAL NOTES:

ALL SIGNS [redacted] ERECTED ACCORDING TO THE LOCATIONS SHOWN ON THE SIGNING LAYOUT SHEETS EXCEPT THAT THE ENGINEER MAY SHIFT A SIGN IN ORDER TO SECURE A MORE DESIRABLE LOCATION. THE ENGINEER [redacted] DESIGNATE ALL SIGN LOCATIONS. AND NO CHANGES IN THOSE LOCATIONS [redacted] MADE WITHOUT PRIOR APPROVAL OF THE ENGINEER.

"X" DIMENSION IS THE ELEVATION DIFFERENCE BETWEEN THE GROUND LINE AND THE EDGE OF PAVEMENT OR TOP OF CURB.

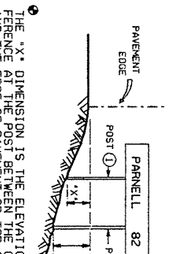

SUMMARY OF SMALL SIGNS

SIGNS [redacted] INSTALLED UNDER ITEM 6000

(WITHOUT REMOVABLE COPY)

SIGN TABULATIONS

Melvin D. Grunhill
March 3, 1992

STATE OF TEXAS
MELVIN D. GRUNHILL
20920
REGISTERED PROFESSIONAL ENGINEER

SHEET 1 OF 2

DIST. NO.	STATE	FEDERAL AID PROJECT NO.	SHEET NO.
21	TEXAS	NH 98(0)M	453

DIV. NO.	COUNTY	CONT. NO.	SEC. NO.	JOB NO.	HIGHWAY NO.
6	HIDALGO	39	17	97	83/28

SUMMARY OF SMALL SIGNS (WITHOUT REMOVABLE COPY)

PLAN SHT. NO.	SIGN NO.	SIGN TYPE	SIGN TEXT	SIGN DIMENS. IN.	PLY-WOOD TYPE A	ALUM. TYPE A	FLANGED CHANNEL MOUNT TYPE I	FLANGED CHANNEL MOUNT TYPE II	FLANGED CHANNEL MOUNT TYPE III	TYPE OF MOUNT A	A(SPL)	B	C	D-1	D-2	D-3	D-4	F	MP	MW	"X" DIMENSION POST ① FT.	"X" DIMENSION POST ② FT.	NON PART
			CONTINUATION																				
448	16	M3-3	SOUTH	24X12		2.00																	
		M1-4A3	US 281	30X24		5.00																	
	17	R3-8U	U TRN ONLY ARROW	24X30	5.00																		
	18	M2-1	JCT	21X15		2.19																	
		M1-4A2	US 83	24X24		4.00																	
	19	D1-3A	⇧MEXICO 13	90X36	22.50																		
			⇦HARLINGEN 31																				
			MCALLEN 3 ⇨																				
	20	R3-7R	RT LN MUST TRNRT	30X30	6.25																		
	21	M3-2	EAST	24X12		2.00																	
		M1-4A2	US 83	24X24		4.00																	
		M3-3	SOUTH	24X12		2.00																	
		M1-4A3	US 281	30X24		5.00																	
		M6-3	UP ARROW	21X15		2.19																	
		M3-4	WEST	24X12		2.00																	
		M1-4A2	US 83	24X24		4.00																	
		M6-1R	HORIZONTAL ARROW	21X15		2.19																	
	22	R3-5R	RT TRN ONLY	30X36	7.50																		
	23	R3-8U	U TRN ONLY ARROW	24X30	5.00																		
449	1	W4-2L	PVMT TRANS LEFT	36X36	9.00																		
	2	W9-2R	LN ENDS MERGE RT	36X36	9.00																		
	3	W3-3	SYM SIGNAL AHEAD	36X36	9.00																		
	4	SW19-2	W FOR ICE ON BR	48X48	16.00																		
	5	M3-4	WEST	24X12		2.00																	
		M1-4A2	US 83	24X24		4.00																	
		M6-2L	45DEG ARROW LT	21X15		2.19																	
	6	FW4-1R	SYM MERGE RIGHT	48X48	16.00																		
	7	R6-1R	ONE WAY W ARROW	36X12	3.00																		
	8	SW19-2	W FOR ICE ON BR	48X48	16.00																		
	9	W13-3	RAMP 45 MPH	48X60	20.00																		
	10	SW19-2	W FOR ICE ON BR	48X48	16.00																		
	11	FW4-1R	SYM MERGE RIGHT	48X48	16.00																		
	12	FW4-1R	SYM MERGE RIGHT	48X48	16.00																		
450	1	FW4-1R	SYM MERGE RIGHT	48X48	16.00																		
	2	SW19-2	W FOR ICE ON BR	48X48	16.00																		
	3	W13-3	RAMP 45 MPH	48X60	20.00																		
	4	FW4-1R	SYM MERGE RIGHT	48X48	16.00																		
	5	FW4-1R	SYM MERGE RIGHT	48X48	16.00																		
	6	W9-2R	LN ENDS MERGE RT	36X36	9.00																		
	7	W4-2L	PVMT TRANS LEFT	36X36	9.00																		
			TOTAL								29		5				1	23					

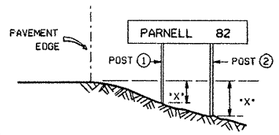

"X" DIMENSION IS THE ELEVATION DIFFERENCE AT THE POST BETWEEN THE GROUND AND THE EDGE OF PAVEMENT OR TOP OF CURB.

GENERAL NOTES :

ALL SIGNS [redacted] ERECTED ACCORDING TO THE LOCATIONS SHOWN ON THE SIGNING LAYOUT SHEETS EXCEPT THAT THE ENGINEER MAY SHIFT A SIGN IN ORDER TO SECURE A MORE DESIRABLE LOCATION. THE ENGINEER [redacted] DESIGNATE ALL SIGN LOCATIONS, AND NO CHANGES IN THOSE LOCATIONS [redacted] MADE WITHOUT PRIOR APPROVAL OF THE ENGINEER.

(WITHOUT REMOVABLE COPY)

SIGN TABULATIONS

SUMMARY OF SMALL SIGNS

SIGNS [redacted] INSTALLED UNDER ITEM 6000

STATE OF TEXAS
MELVIN D. GREENHILL
29920
REGISTERED PROFESSIONAL ENGINEER

Melvin D. Greenhill
March 3, 1992

SHEET 2 OF 2

FED. ROAD DIV. NO.	STATE	FEDERAL AID PROJECT NO.	SHEET NO.
6	TEXAS	NH 92( )M	454

STATE DIST. NO.	COUNTY	CONT. NO.	SEC. NO.	JOB NO.	HIGHWAY NO.
21	HIDALGO	39	17	97	83/281

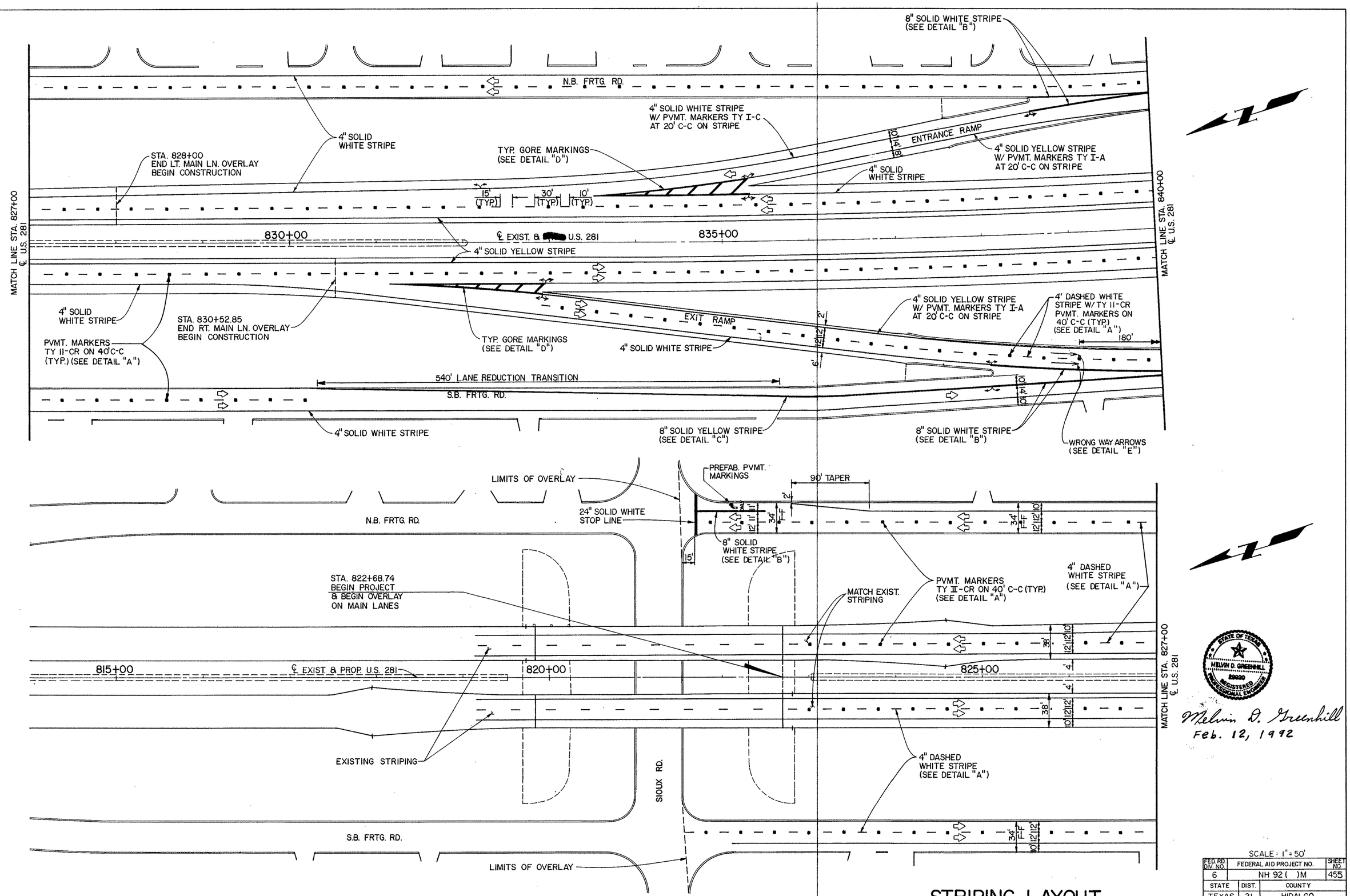

STATE OF TEXAS
MELVIN D. GREENHILL
59920
REGISTERED PROFESSIONAL ENGINEER

Melvin D. Greenhill
Feb. 12, 1992

STRIPING LAYOUT

SHEET 1 OF 8

SCALE: 1" = 50'

FED. RD. DIV. NO.	FEDERAL AID PROJECT NO.		SHEET NO.
6	NH 92( )M		455
STATE	DIST.	COUNTY	
TEXAS	21	HIDALGO	
CONT.	SECT.	JOB	HIGHWAY NO.
39	17	97	83/281

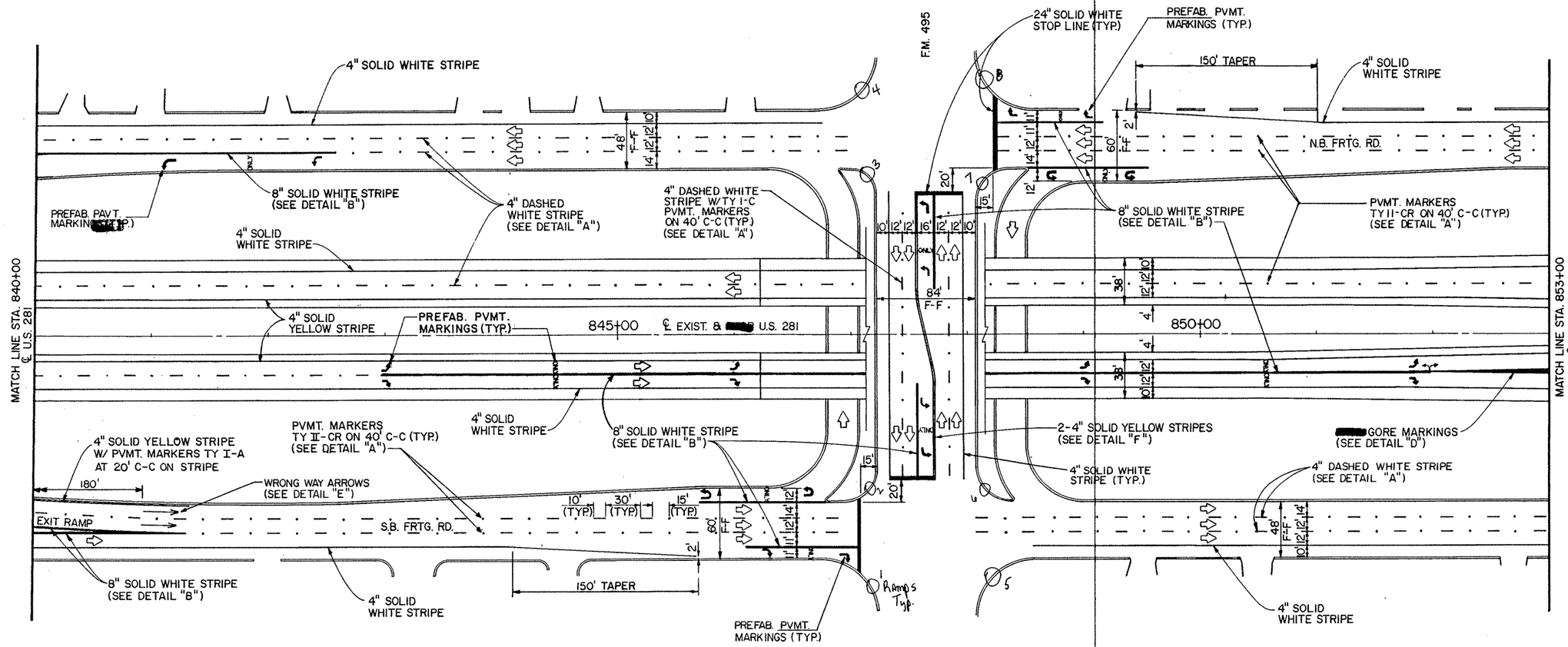

U.S. 83/281 Interchange Wheelchair Ramps

STA.	Approx.
①	847+25 - 200' Rt
②	847+25 - 110' Rt
③	847+25 - 110' Lt.
④	847+25 - 200' Lt.
⑤	848+00 - 200' Rt
⑥	848+00 - 110' Rt
⑦	848+00 - 110' Lt.
⑧	848+00 - 200' Lt
⑨	1512+00 - 170 Rt
⑩	1512+20 - 100 Rt.
⑪	1512+20 - 120 Lt.
⑫	1512+20 - 160 Lt.
⑬	1512+20 - 210 Lt
⑭	1512+00 - 215 Lt
⑮	1513+50 - 170 Rt
⑯	1513+30 - 100 Rt.
⑰	1513+30 - 120 Lt.
⑱	1513+30 - 160 Lt.
⑲	1513+30 - 210 Lt.
⑳	1513+50 - 215 Lt

See PC*20, SA #19

MELVIN D. GREENHILL 29030 REGISTERED PROFESSIONAL ENGINEER

Melvin D. Greenhill
Feb. 12, 1992

STRIPING LAYOUT

SHEET 2 OF 8

SCALE: 1" = 50'

FED.RD. DIV. NO.	FEDERAL AID PROJECT NO.		SHEET NO.
6	NH 92( )M		456
STATE	DIST.	COUNTY	
TEXAS	21	HIDALGO	
CONT.	SECT.	JOB	HIGHWAY NO.
39	17	97	83/281

PVMT. MARKERS TY II-CR ON 40' C-C (TYP.) (SEE DETAIL "A")

4" DASHED WHITE STRIPE (SEE DETAIL "A")

4" SOLID WHITE STRIPE

N.B. FRTG. RD.

GORE MARKINGS (SEE DETAIL "D")

4" SOLID WHITE STRIPE

US. 83/281 RAMP #1

PROP. U.S. 83/281 RAMP # 2

MATCH LINE STA. 853+00 ℄ U.S. 281

℄ EXIST. & U.S. 281

855+00

4" SOLID YELLOW STRIPE

US. 83/281 RAMP # 3

US. 83/281 RAMP # 4

MAJOR FORK GORE (SEE DETAIL "H")

4" SOLID WHITE STRIPE

10' (TYP.) 30' (TYP.) 15' (TYP.)

S.B. FRTG. RD.

8" SOLID WHITE STRIPE (SEE DETAIL "B")

PVMT. MARKERS TY II-CR ON 40' C-C (TYP.) (SEE DETAIL "A")

4" SOLID WHITE STRIPE

4" DASHED WHITE STRIPE (SEE DETAIL "A")

24" SOLID WHITE CROSSHATCHING ON 40' C-C (TYP.) (SEE DETAIL "J")

8" SOLID WHITE STRIPE W/ SINGLE TY-IC PVMT. MARKERS AT 40' C-C 2" FROM STRIPE

4" SOLID YELLOW STRIPE W/ PVMT. MARKERS TY I-A AT 40' C-C 2" FROM STRIPE

RAMP #1

RAMP #3

10' 14' 6' 6' 14' 10'

8" SOLID WHITE STRIPE (SEE DETAIL "B")

24" SOLID WHITE STOP LINE (TYP.)

24" SOLID WHITE CROSSWALK (TYP.)

24" SOLID YELLOW STRIPES ON 15' C-C

8" SOLID WHITE STRIPE (SEE DETAIL "B")

860+00

110' TAPER

2

8" SOLID WHITE STRIPE (SEE DETAIL "B")

8" SOLID WHITE STRIPE W/ SINGLE TY I-C PVMT. MARKERS AT 40' C-C 2" FROM STRIPE

4" SOLID YELLOW STRIPE W/ PVMT. MARKERS TY I-A AT 40' C-C 2" FROM STRIPE

24" SOLID WHITE CROSSHATCHING @ 40' C-C (TYPICAL) (SEE DETAIL "J")

RAMP #4

10' 14' 6' 6' 14' 10'

RAMP #2

℄ EXIST. & PROP. U.S. 83

1515+00

4" DOTTED WHITE STRIPES (2' STRIPES W/ 2' GAPS)

865+00

2-4" SOLID YELLOW STRIPES (SEE DETAIL "F")

1510+00

STATE OF TEXAS
MELVIN D. GREENHILL
25020
REGISTERED PROFESSIONAL ENGINEER

Melvin D. Greenhill
Feb. 12, 1992

STRIPING LAYOUT

SHEET 3 OF 8

SCALE: 1" = 50'

FED. RD. DIV. NO.	FEDERAL AID PROJECT NO.		SHEET NO.
6	NH 92( )M		457
STATE	DIST.	COUNTY	
TEXAS	21	HIDALGO	
CONT.	SECT.	JOB	HIGHWAY NO.
39	17	97	83/281

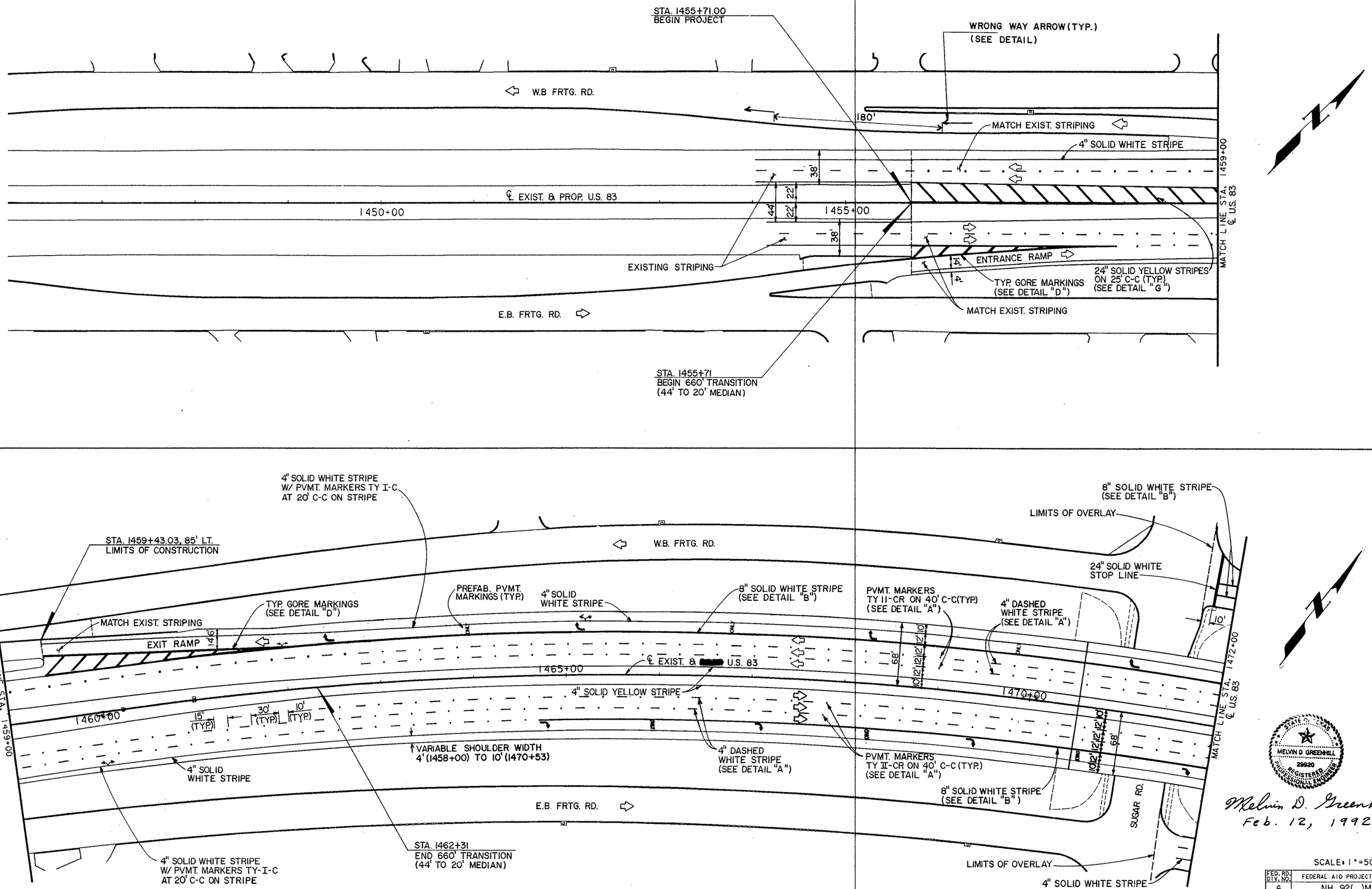

STRIPING LAYOUT

SHEET 4 OF 8

SCALE: 1"=50'

FED. RD. DIV. NO.	FEDERAL AID PROJECT NO.		SHEET NO.
6	NH 92( )M		458
STATE	DIST.	COUNTY	
TEXAS	21	HIDALGO	
CONT.	SECT.	JOB	HIGHWAY NO.
39	17	97	83/281

STATE OF TEXAS
MELVIN D GREENHILL
29920
REGISTERED PROFESSIONAL ENGINEER

Melvin D. Greenhill
Feb. 12, 1992

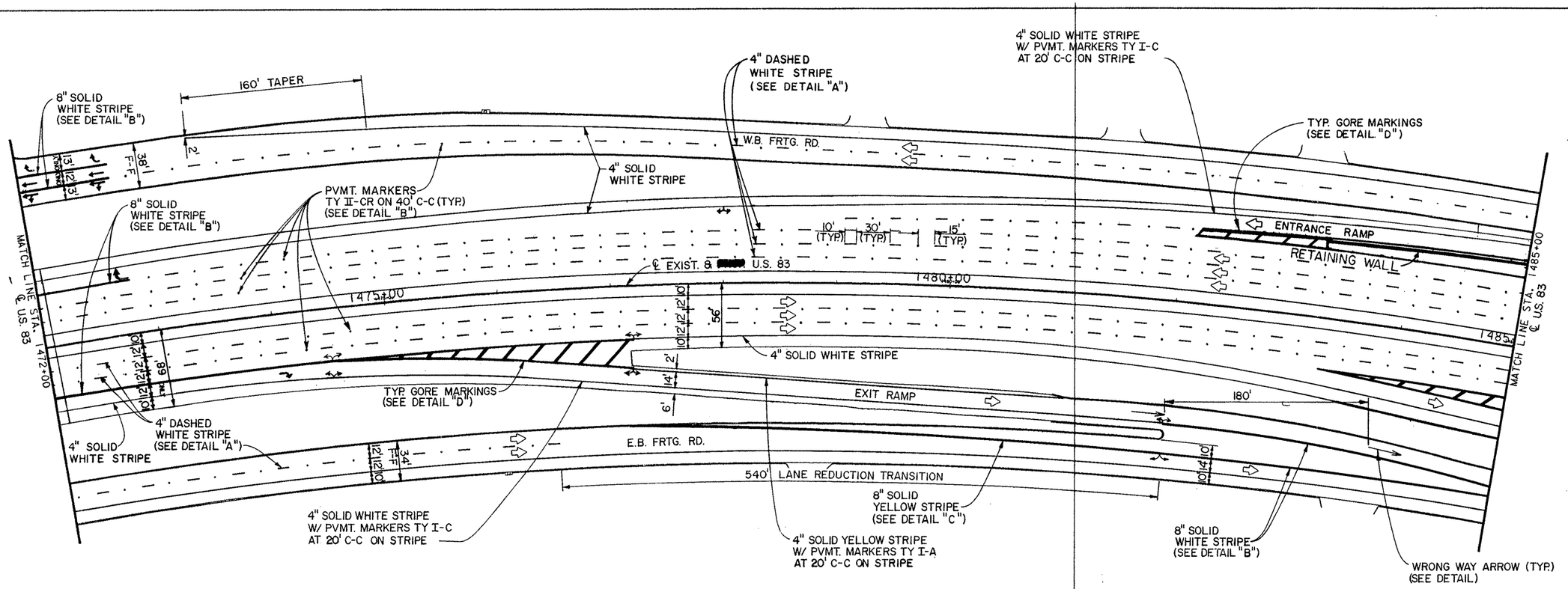

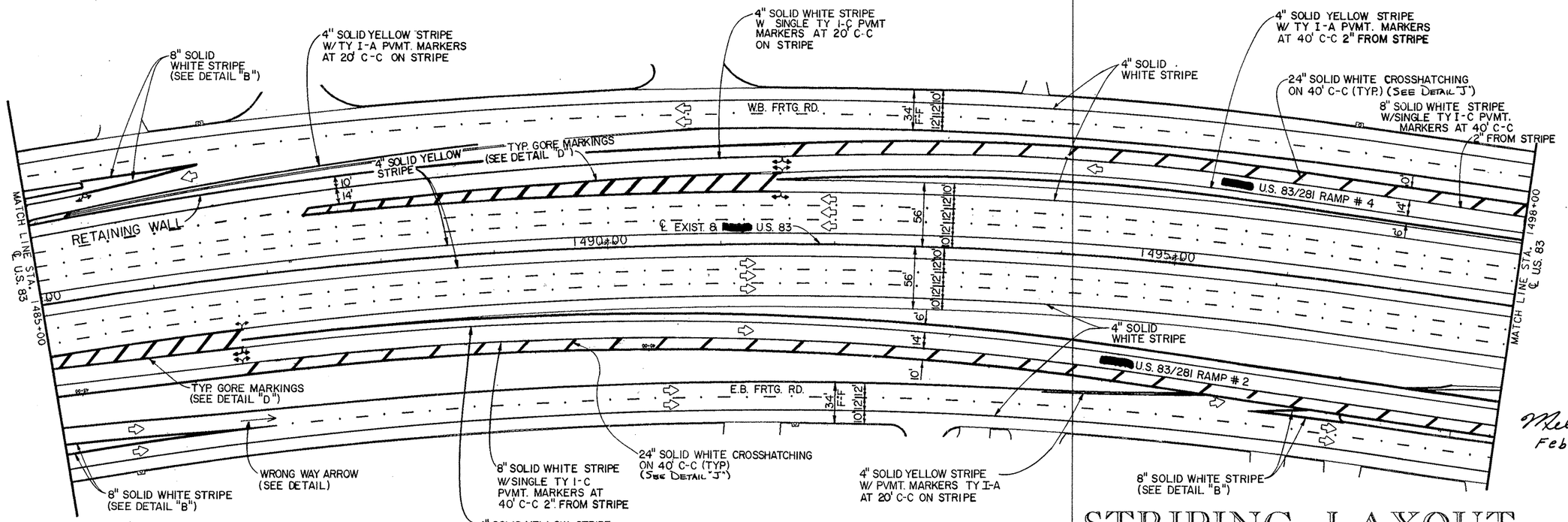

STATE OF TEXAS
MELVIN D. GREENHILL
20020
REGISTERED PROFESSIONAL ENGINEER

Melvin D. Greenhill
Feb. 12, 1992

SCALE: 1"=50'

STRIPING LAYOUT

SHEET 5 OF 8

FED. RD. DIV. NO.	FEDERAL AID PROJECT NO.		SHEET NO.
6	NH 92( )M		459
STATE	DIST.	COUNTY	
TEXAS	21	HIDALGO	
CONT.	SECT.	JOB	HIGHWAY NO.
39	17	97	83/281

[325106]L83003.DGN PRF: SAME

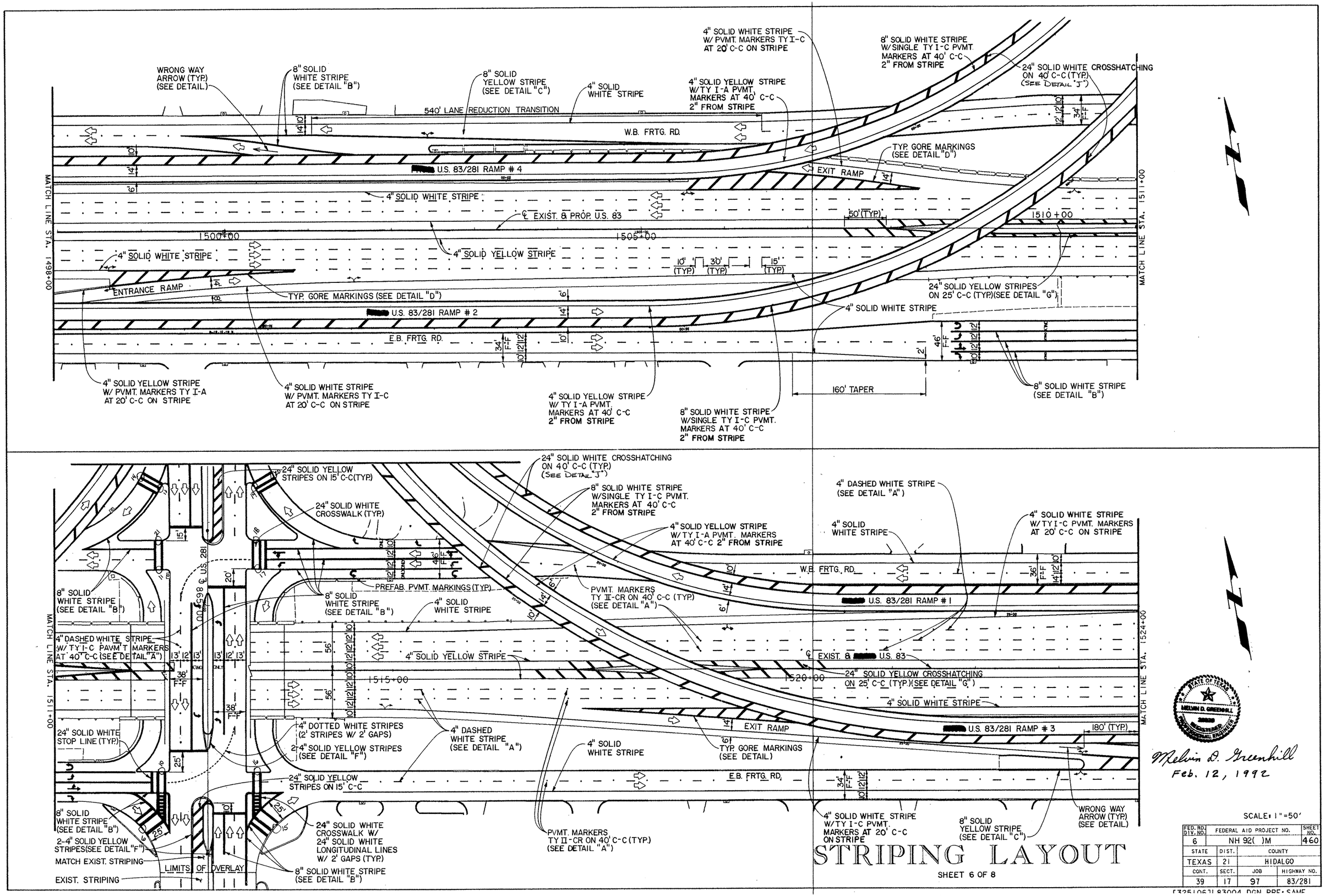

STRIPING LAYOUT

SHEET 6 OF 8

FED. RD. DIV. NO.	FEDERAL AID PROJECT NO.		SHEET NO.
6	NH 92( )M		460
STATE	DIST.	COUNTY	
TEXAS	21	HIDALGO	
CONT.	SECT.	JOB	HIGHWAY NO.
39	17	97	83/281

[325106] 83004 DGN PRE: SAME

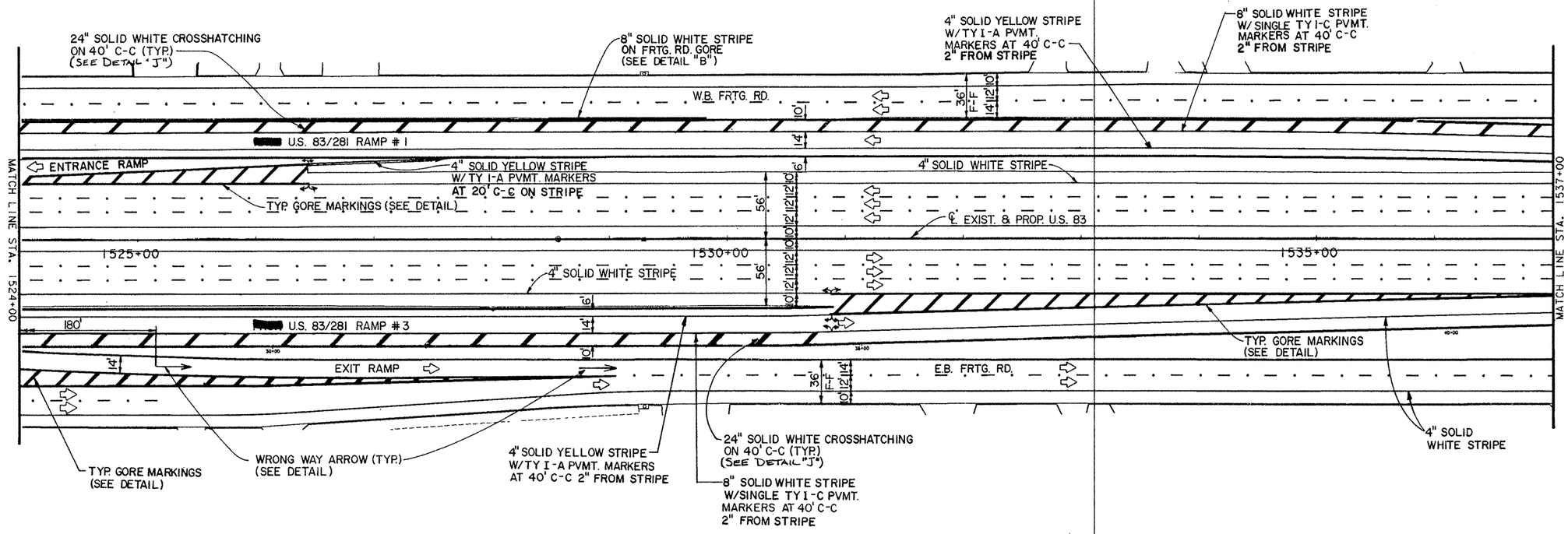

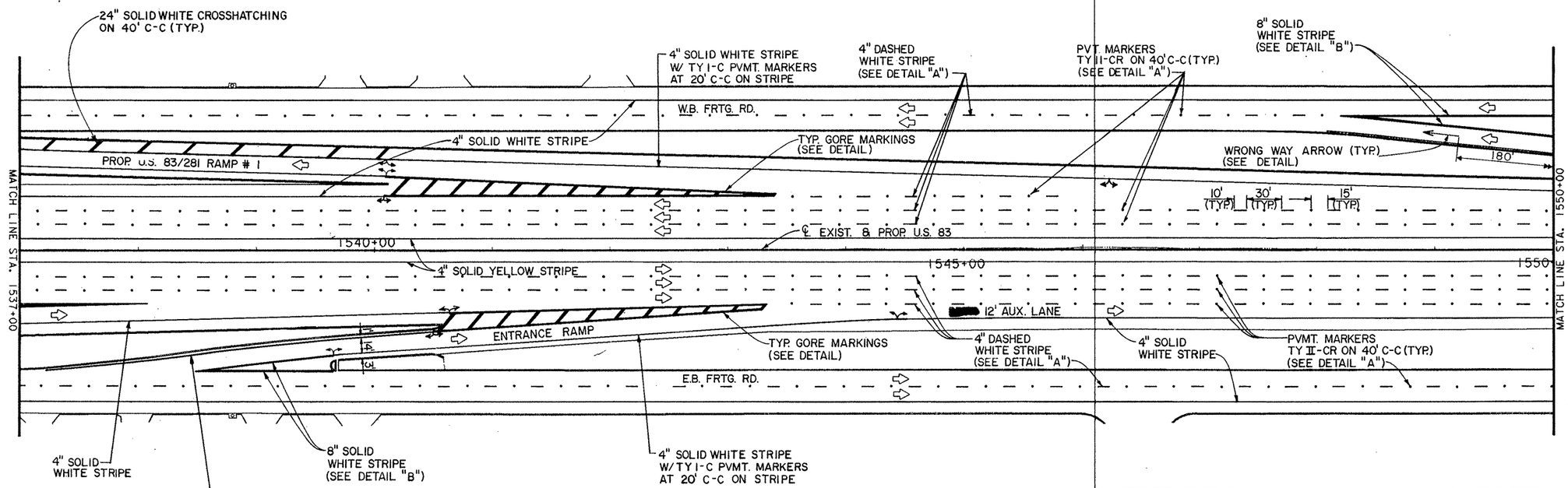

STRIPING LAYOUT

SHEET 7 OF 8

SCALE: 1" = 50'

FED. RD. DIV. NO.	FEDERAL AID PROJECT NO.		SHEET NO.
6	NH 92( )M		461
STATE	DIST.	COUNTY	
TEXAS	21	HIDALGO	
CONT.	SECT.	JOB	HIGHWAY NO.
39	17	97	83/281

STATE OF TEXAS
MELVIN D. GREENHILL
29020
REGISTERED PROFESSIONAL ENGINEER

Melvin D. Greenhill
Feb. 12, 1992

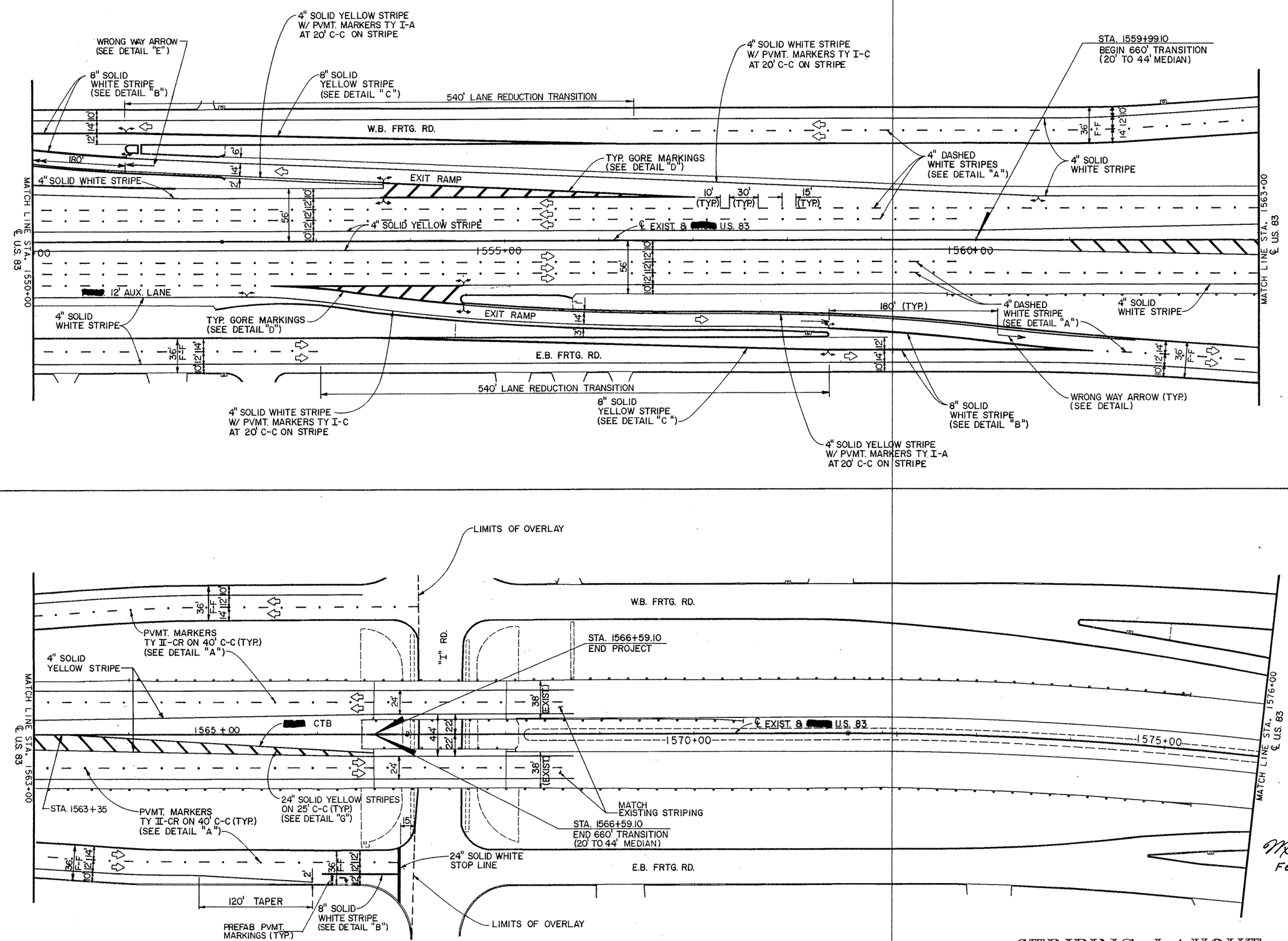

STRIPING LAYOUT

SHEET 8 OF 8

MELVIN D. GREENHILL 59920 REGISTERED PROFESSIONAL ENGINEER STATE OF TEXAS

Melvin D. Greenhill
Feb. 12, 1992

FED. RD. DIV. NO.	FEDERAL AID PROJECT NO.		SHEET NO.
6	NH 92( )M		462
STATE	DIST.	COUNTY	
TEXAS	21	HIDALGO	
CONT.	SECT.	JOB	HIGHWAY NO.
39	17	97	83/281

[325106]FILE: L83006. DGN PRF: SAME

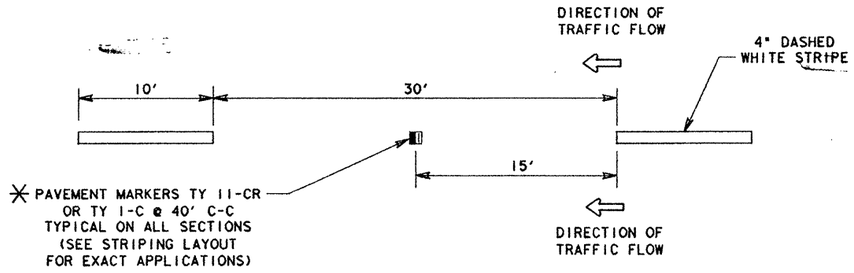

DETAIL "A"

* PAVEMENT MARKERS TY 11-CR & TY 1-C [redacted] INSTALLED WITH THE CLEAR REFLECTIVE FACE TOWARDS THE DIRECTION OF TRAFFIC.

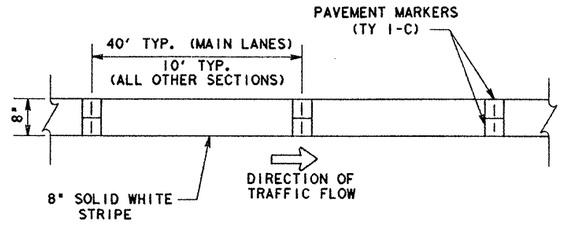

DETAIL "B"

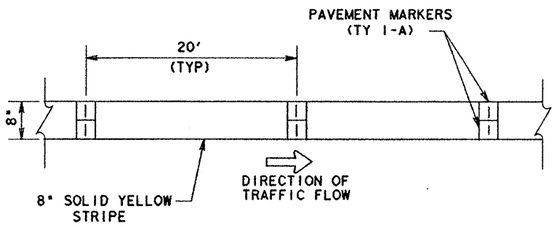

DETAIL "C"

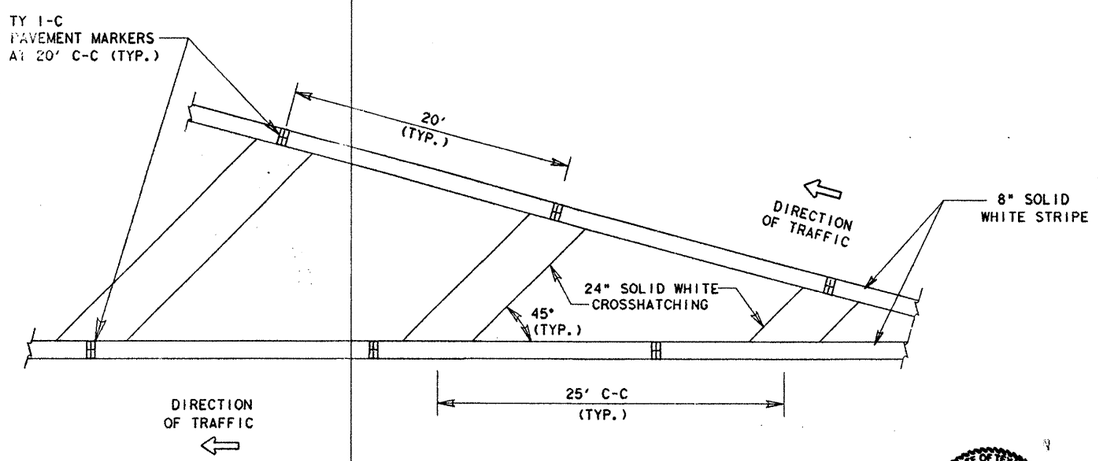

DETAIL "D" - GORE MARKINGS

STATE OF TEXAS
MELVIN D. GREENHILL
29920
REGISTERED
PROFESSIONAL ENGINEER

Melvin D. Greenhill
Feb. 12, 1992

SHEET 1 OF 3

PAVEMENT MARKING DETAILS

FED. ROAD DIV. NO.	STATE	FEDERAL AID PROJECT NO.			SHEET NO.
6	TEXAS	NH 92( )M			463
STATE DIST. NO.	COUNTY	CONT. NO.	SEC. NO.	JOB NO.	HIGHWAY NO.
21	HIDALGO	39	17	97	83/281

ZFA1:[325105]DET83281 DGN DETA 1PARM

ALL INDIVIDUAL UNIT MARKERS IN THE WRONG WAY ARROW [redacted] THE TYPE I-R REFLECTORIZED PAVEMENT MARKERS WITH THE RED REFLECTORIZED SURFACE FACING THE WRONG WAY TRAFFIC. (TYPE II-C-R SHALL NOT BE USED.)

REFLECTORIZED WRONG WAY ARROWS, NOT TO EXCEED TWO PER EXIT RAMP EXCEPT WHERE SHOWN ON THE PLANS, [redacted] PLACED ON ALL EXIT RAMPS LOCATED WITHIN THE LIMITS OF THE PROJECT.

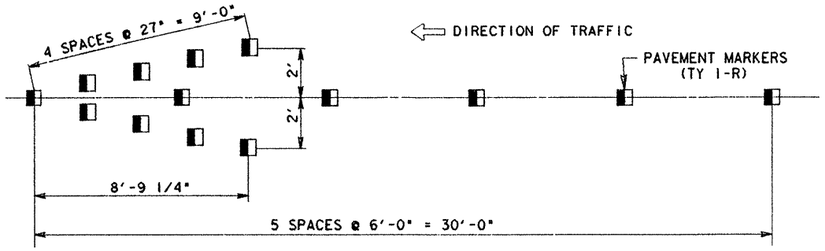

DETAIL "E" - WRONG WAY ARROW

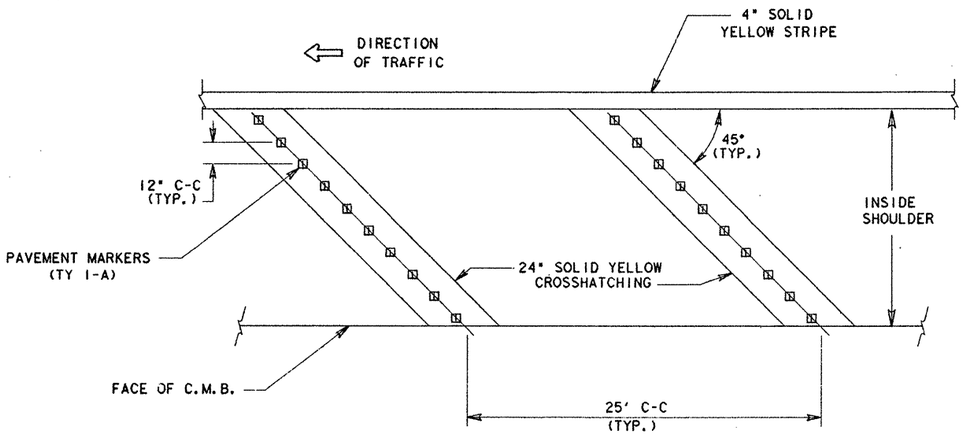

DETAIL "G"

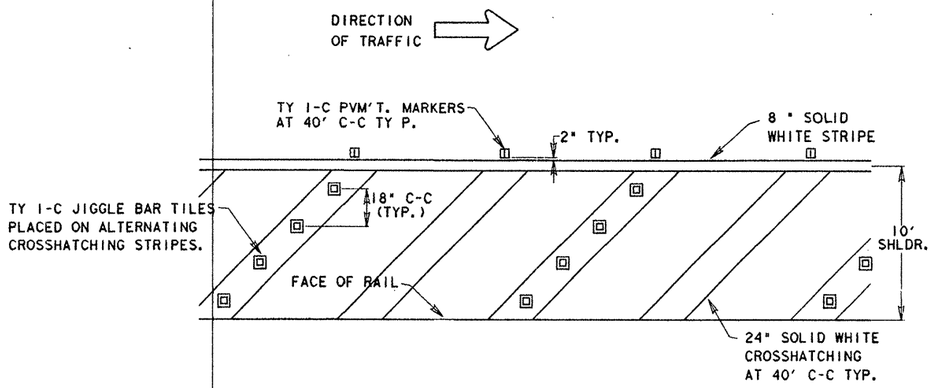

DETAIL "J" - DIRECT CONNECTOR CROSSHATCHING

N.T.S.

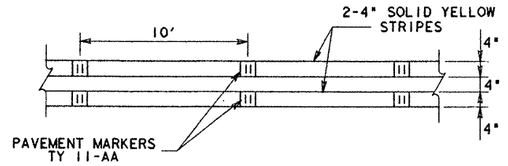

DETAIL "F"

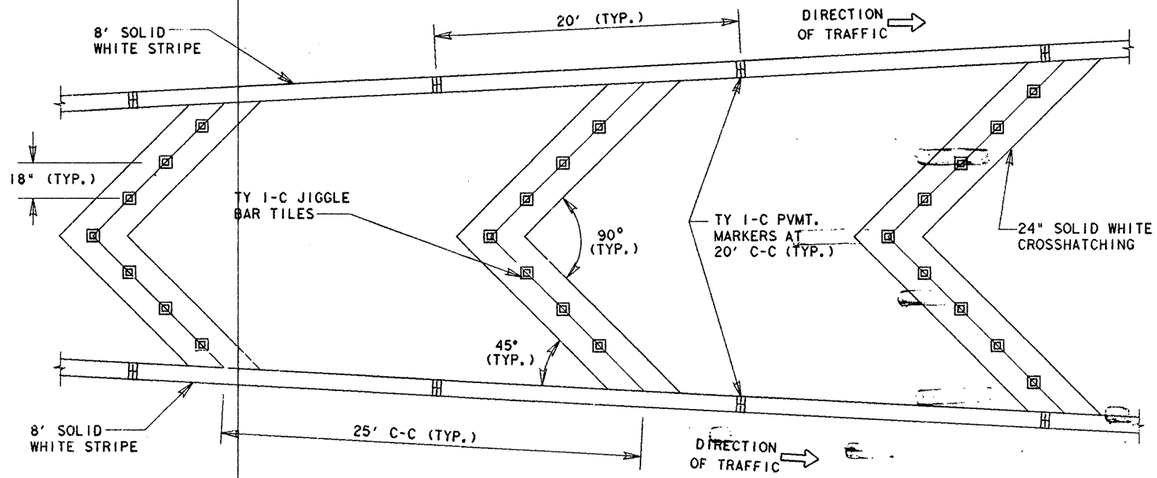

DETAIL "H" - MAJOR FORK GORE

STATE OF TEXAS
MELVIN D. GREENHILL
20280
REGISTERED PROFESSIONAL ENGINEER

Melvin D. Greenhill
March 3, 1992

PAVEMENT MARKING DETAILS

SHEET 2 OF 3

FED. ROAD DIV. NO.	STATE	FEDERAL AID PROJECT NO.				SHEET NO.
6	TEXAS	F 308(47)				464
STATE DIST. NO.	COUNTY		CONT. NO.	SEC. NO.	JOB NO.	HIGHWAY NO.
21	HIDALGO		39	17	97	83/281

ZFAI:[325105]DET83281.DGN DETB. IPARM

SUMMARY OF PREFABRICATED PAVEMENT MARKINGS (ITEM 6911)

TY B (WHITE)		
DESCRIPTION	UNIT	QUANTITY
WORD (ONLY)	EA.	33
ARROW (LEFT)	EA.	18
ARROW (RIGHT)	EA.	27
ARROW (STRAIGHT)	EA.	2
DOUBLE ARROW	EA.	6
TURNAROUND ARROW	EA.	8

SUMMARY OF REFLECTORIZED PAVEMENT MARKINGS (ITEM 6910)

STATION LIMITS	TY II - PAINT AND BEADS																	
	4" SOLID WHITE STRIPE		4" SOLID YELLOW STRIPE		4" DASHED WHITE STRIPE		4" DOTTED WHITE STRIPE		8" SOLID YELLOW STRIPE		8" SOLID WHITE STRIPE		24" SOLID WHITE STRIPE		24" SOLID YELLOW STRIPE	
	EST. LF	FIN. LF	EST. LF	FIN. LF	EST. LF	FIN. LF	EST. LF	FIN. LF	EST. LF	FIN. LF	EST. LF	FIN. LF	EST. LF	FIN. LF	EST. LF	FIN. LF
US 83 (1455+71 TO 1566+59)	42,396		25,801		15,130		110		1,880		18,235		3,060		1,280	
US 281 (822+69 TO 868+20)	15,642		9,817		4,600				790		6,575		1,045		167	
DIRECT CONNECTORS			11,170								11,170		3,920			
TOTALS	58,038		46,788		19,730		110		2,670		35,980		8,025		1,447	

SUMMARY OF RAISED PAVEMENT MARKERS (ITEM 6912)

STATION LIMITS	CL A (JIGGLE)		CL B (REFL.)									
	TY I-C (SGL REFL) QUANTITY EA		TY I-A (SGL REFL) QUANTITY EA		TY I-C (SGL REFL) QUANTITY EA		TY I-R (SGL REFL) QUANTITY EA		TY II-AA (DBL REFL.) QUANTITY EA		TY II-CR (DBL REFL.) QUANTITY EA	
	EST.	FIN.	EST.	FIN.	EST.	FIN.	EST.	FIN.	EST.	FIN.	EST.	FIN.
US 83 (1455+71 TO 1566+59)			1,275		2,782		196				1,513	
US 281 (822+69 TO 868+20)	100		147		926		56		143		434	
DIRECT CONNECTORS	1,848		280		280							
TOTALS	1,948		1,702		3,988		252		143		1,947	

NOTES

1. ALL PERMANENT STRIPING [redacted] DONE BY THE CONTRACTOR.
2. ALL PAVEMENT MARKERS, JIGGLE BAR TILES AND PREFABRICATED PAVEMENT MARKINGS [redacted] INSTALLED BY THE CONTRACTOR.
3. ALL TY I-A AND I-C PAVEMENT MARKERS AND JIGGLE BAR TILES [redacted] INSTALLED WITH THE REFLECTIVE LENS FACING TRAFFIC.
4. BEFORE APPLICATION OF PERMANENT STRIPING AND PAVEMENT MARKERS, THE PAVEMENT SURFACE AND STRUCTURE DECK SURFACE [redacted] FREE OF DELETERIOUS MATERIAL. IF THE SURFACE NEEDS [redacted] CLEANED, AS DETERMINED BY THE ENGINEER, THE CONTRACTOR [redacted] PREPARE THE SURFACE IN ACCORDANCE WITH ITEM 6914, "PAVEMENT SURFACE PREPARATION FOR MARKINGS AND MARKERS", EXCEPT FOR "MEASUREMENT" AND "PAYMENT". THE PREPARATION OF PAVEMENT SURFACE [redacted] SUBSIDIARY TO ITEMS 6910, 6911 AND 6912.

STATE OF TEXAS
MELVIN D. GREENHILL
29920
REGISTERED
PROFESSIONAL ENGINEER

Melvin D. Greenhill
March 3, 1992

SHEET 3 OF 3

PAVEMENT MARKING DETAILS

FED. ROAD DIV. NO.	STATE	FEDERAL AID PROJECT NO.				SHEET NO.
6	TEXAS	NH 92( )M				465
STATE DIST. NO.	COUNTY		CONT. NO.	SEC. NO.	JOB NO.	HIGHWAY NO.
21	HIDALGO		39	17	97	83/281

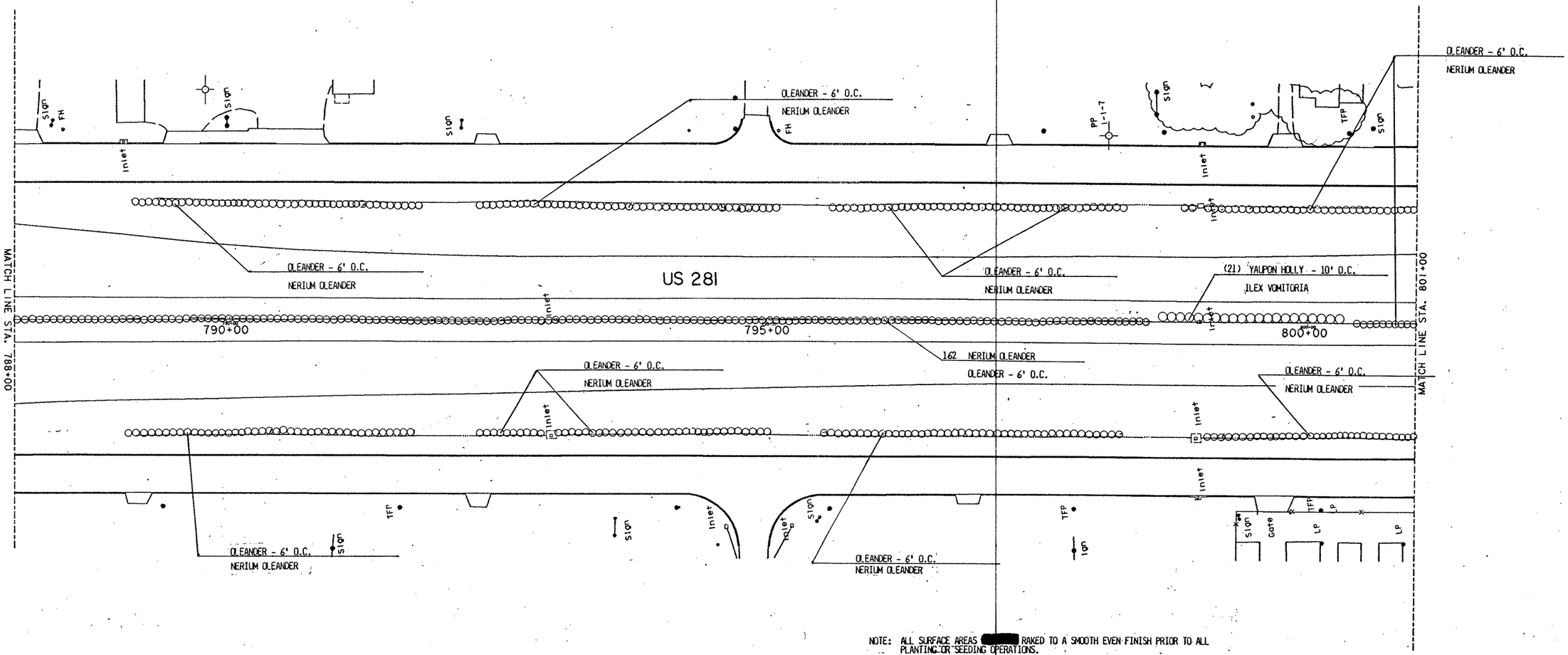

NOTE: ALL SURFACE AREAS [redacted] RAKED TO A SMOOTH EVEN FINISH PRIOR TO ALL PLANTING OR SEEDING OPERATIONS.

NOTE:

EXISTING PALM[redacted] NOT [redacted] DISTURBED

ESTIMATED SHEET TOTALS

COMMON NAME	SCIENTIFIC NAME	QUANTITY	SIZE	REMARKS
YUPON HOLLY	ILEX VOMITORIA	21	15 GALLON	CONTAINER GROWN/MULTI TRUNK
OLEANDER	NERIUM OLEANDER	484	5 GALLON	CONTAINER GROWN 'HARDY RED'

FC#10 - Construct "Conc Block Retaining Walls" with landscaped terrances.
1. US 281 Overpass (Sta 1508+00 to 1517+00.
2. Sugar Rd Overpass (Sta 1467+00 to 1475+00)

0' 10' 20' 40' 80' 150'

SCALE : 1" = 50'

LANDSCAPING

FED. RD. DIV. NO.	FEDERAL AID PROJECT NO.		SHEET NO.
6	NH 92 ( )M		466
STATE	DIST.	COUNTY	
TEXAS	21	HIDALGO	
CONT.	SECT.	JOB	HIGHWAY NO.
39	17	97	83/281

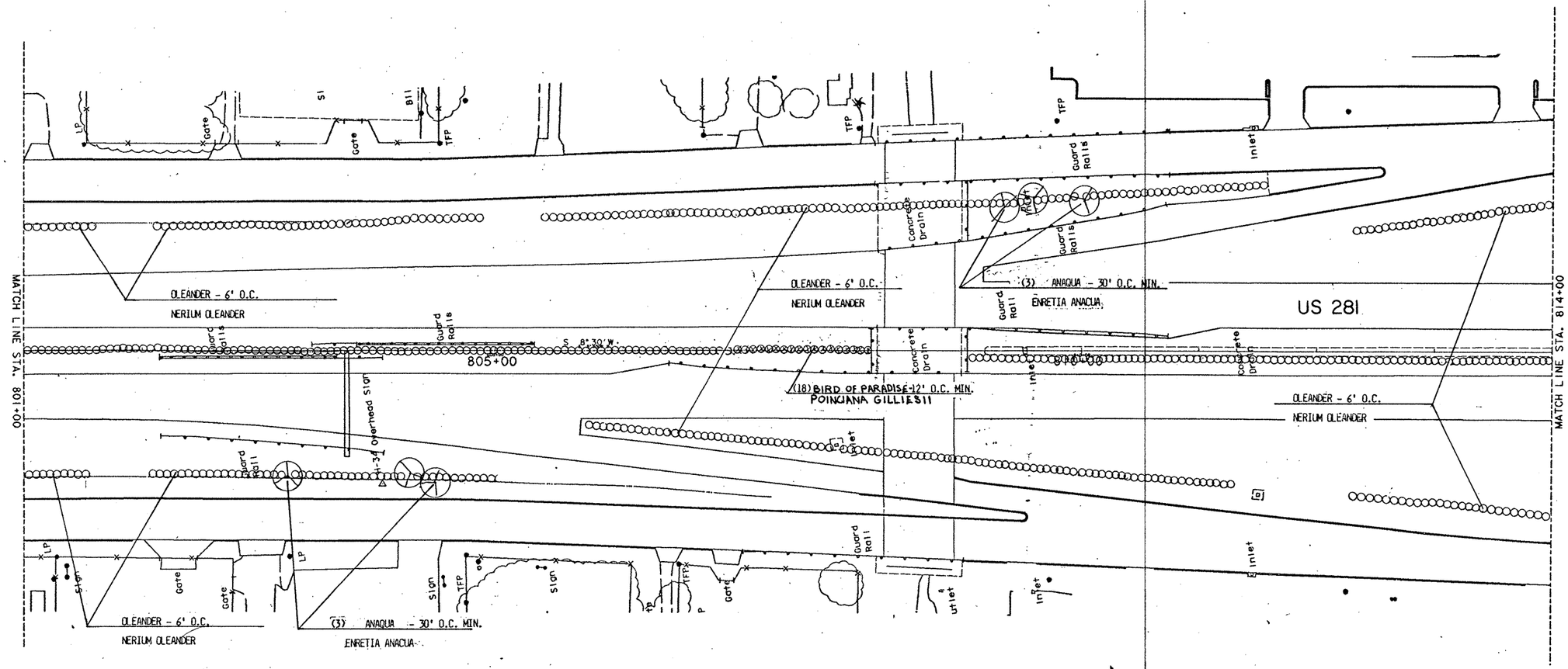

NOTE: ALL SURFACE AREAS [redacted] RAKED TO A SMOOTH EVEN FINISH PRIOR TO ALL PLANTING OR SEEDING OPERATIONS.

NOTE:

EXISTING PALMS [redacted] NOT [redacted] DISTURBED

ESTIMATED SHEET TOTALS

COMMON NAME	SCIENTIFIC NAME	QUANTITY	SIZE	REMARKS
ANAQUA	ENRETIA ANACUA	6	8'-10'	B&B
BIRD OF PARADISE	POINCIANA GILLIESII	18	4'-5'	B&B MULTI TRUNK
OLEANDER	NERIUM OLEANDER	514	5 GALLON	CONTAINER GROWN "HARDY RED"

0' 10' 20' 40' 80' 150'

SCALE : 1" = 50'

LANDSCAPING

FED. RD. DIV. NO.	FEDERAL AID PROJECT NO.		SHEET NO.
6	NH92( )M		467
STATE	DIST.	COUNTY	
TEXAS	21	HIDALGO	
CONT.	SECT.	JOB	HIGHWAY NO.
39	17	97	83/281

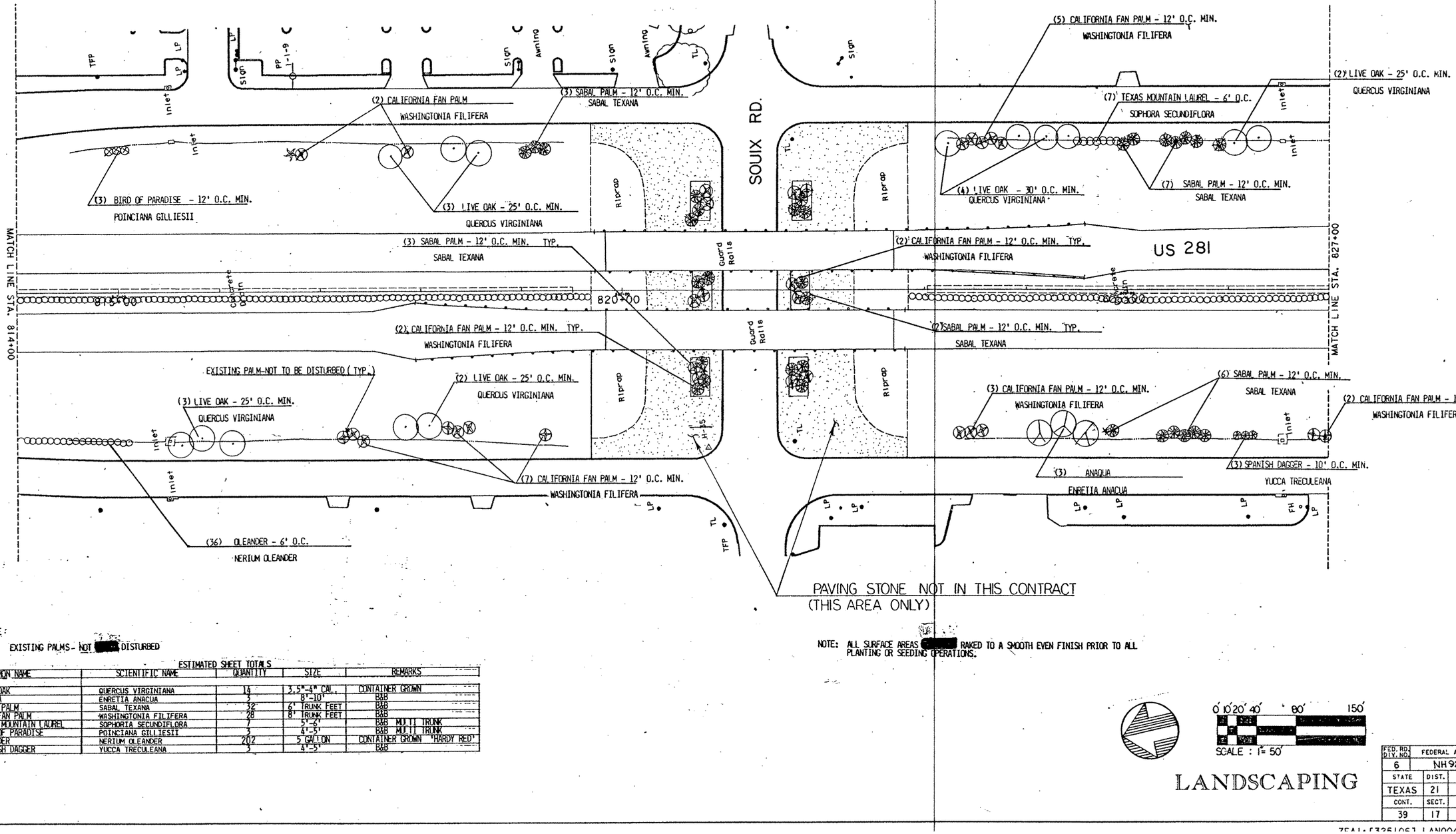

NOTE:

EXISTING PALMS - NOT [redacted] DISTURBED

ESTIMATED SHEET TOTALS

COMMON NAME	SCIENTIFIC NAME	QUANTITY	SIZE	REMARKS
LIVE OAK	QUERCUS VIRGINIANA	14	3.5"-4" CAL.	CONTAINER GROWN
ANAQUA	ENRETIA ANACUA	3	8'-10'	B&B
SABAL PALM	SABAL TEXANA	32	6' TRUNK FEET	B&B
CALF FAN PALM	WASHINGTONIA FILIFERA	28	8' TRUNK FEET	B&B
TEXAS MOUNTAIN LAUREL	SOPHORIA SECUNDIFLORA	7	5'-6'	B&B MULTI TRUNK
BIRD OF PARADISE	POINCIANA GILLIESII	3	4'-5'	B&B MULTI TRUNK
OLEANDER	NERIUM OLEANDER	202	5 GALLON	CONTAINER GROWN 'HARDY RED'
SPANISH DAGGER	YUCCA TRECULEANA	3	4'-5'	B&B

NOTE: ALL SURFACE AREAS [redacted] RAKED TO A SMOOTH EVEN FINISH PRIOR TO ALL PLANTING OR SEEDING OPERATIONS.

0' 10' 20' 40' 80' 150'

SCALE : 1" = 50'

LANDSCAPING

FED. RD. DIV. NO.	FEDERAL AID PROJECT NO.			SHEET NO.
6	NH92 (:)TM			468
STATE	DIST.	COUNTY		
TEXAS	21	HIDALGO		
CONT.	SECT.	JOB	HIGHWAY NO.	
39	17	97	83/281	

7EA1-F3261067 LAN004.DGN PRF=SAME

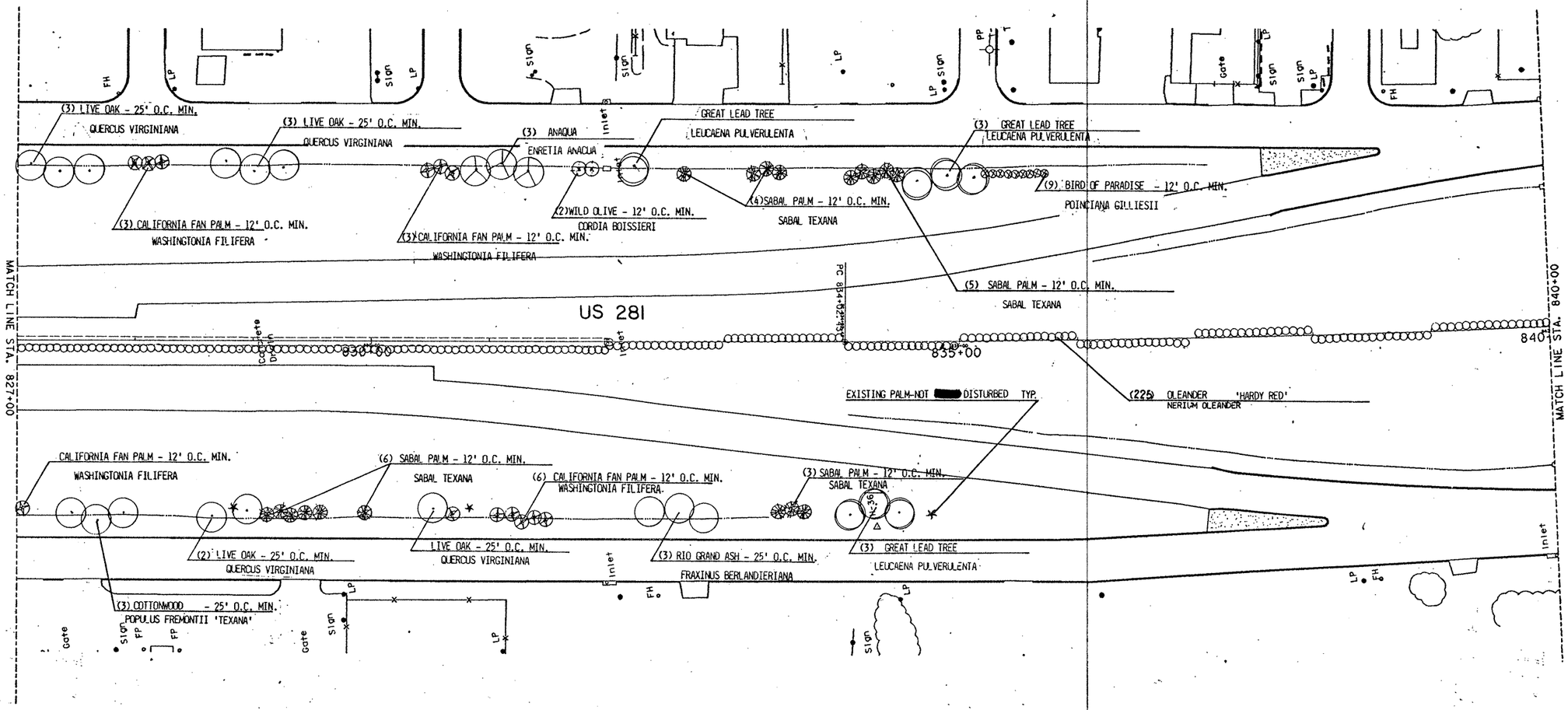

NOTE:

EXISTING PALMS = NOT [redacted] DISTURBED

ESTIMATED SHEET TOTALS

COMMON NAME	SCIENTIFIC NAME	QUANTITY	SIZE	REMARKS
LIVE OAK	QUERCUS VIRGINIANA	9	3.5"-4" CAL.	CONTAINER GROWN
ANAQUA	ENRETIA ANACUA	3	8'-10'	B&B
RIO GRANDE ASH	FRAXINUS BERLANDIERIA	3	2.5"-3" CAL.	B&B
WILD OLIVE	CORDIA BOISSIERI	2	5'-6'	B&B
GREAT LEAD TREE	LEUCAENA PULVERULENTA	7	10'-12'	B&B 'RETUSA'
COTTON WOOD	POPULUS FREMONTII	3	3.5"-4" CAL.	B&B 'TEXANA'
SABAL PALM	SABAL TEXANA	18	6' TRUNK FEET	B&B
CALF FAN PALM	WASHINGTONIA FILIFERA	13	8' TRUNK FEET	B&B
BIRD OF PARADISE	POINCIANA GILLIESII	9	4'-5'	B&B MULTI TRUNK
OLEANDER	NERIUM OLEANDER	225	5 GALLON	CONTAINER GROWN "HARDY RED"

LIMITS OF CEL FIB MULCH SEEDING (ITEM 164) [redacted] APPLIED ON SLOPES FROM STA. 837+00 TO STA. 840+00
SHEET QUANTITY EST. 5390.0 S.Y.

LIMITS OF TOP SOIL (ITEM 160) 4 INCHES TYPICAL DEPTH. APPLIED ON SLOPES FROM STA. 837+00 TO STA. 840+00
SHEET QUANTITY EST. 1796.0 C.Y.

NOTE: ALL SURFACE AREAS [redacted] RAKED TO A SMOOTH EVEN FINISH PRIOR TO ALL PLANTING OR SEEDING OPERATIONS.

0' 10' 20' 40' 80' 150'
SCALE : 1" = 50'

LANDSCAPING

FED. RD. DIV. NO.	FEDERAL AID PROJECT NO.		SHEET NO.
6	NH 82 ( )M		469
STATE	DIST.	COUNTY	
TEXAS	21	HIDALGO	
CONT.	SECT.	JOB	HIGHWAY NO.
39	17	97	83/281

ESTIMATED SHEET TOTALS

COMMON NAME	SCIENTIFIC NAME	QUANTITY	SIZE	REMARKS
BLOCK SOD	SEE GENERAL NOTES			
LIVE OAK	QUERCUS VIRGINIANA	22	3.5"-4" CAL.	CONTAINER GROWN
ANAQUA	ENRETIA ANACUA	4	8'-10'	B&B
RIO GRANDE ASH	FRAXINUS BERLANDIERIA	2	2.5"-3" CAL.	B&B
SABAL PALM	SABAL TEXANA	62	6' TRUNK FEET	B&B
CALF FAN PALM	WASHINGTONIA FILIFERA	41	8' TRUNK FEET	B&B
TEXAS MOUNTAIN LAUREL	SOPHORIA SECUNDIFLORA	0	5'-6'	CONTAINER GROWN
YUPON HOLLY	ILEX VOMITORIA	21	15 GALLON	CONTAINER GROWN/MULTI TRUNK
BIRD OF PARADISE	POINCIANA GILLIESII	8	4'-5'	B&B MULTI TRUNK
OLEANDER	NERIUM OLEANDER	171	5 GALLON	CONTAINER GROWN "HARDY RED"
ELAEGNUS	ELAEAGNUS MACROPHIIA	0	5 GALLON	CONTAINER GROWN/MULTI TRUNK
PHILODENDRON	PHILODENDRON SELLOUM	4,550	1 GALLON	CONTAINER GROWN

LIMITS OF BLACK SOD (ITEM 162) AS INDICATED IN AREA "A"
SHEET QUANTITY EST. 3,007.0 S.Y.
DISTRIBUTED TO A CHECKERBOARD PATTERN

LIMITS OF CEL FIB MULCH SEEDING (ITEM 164) [redacted]
APPLIED ON SLOPES FROM STA. 840+00 TO STA. 846+50
SHEET QUANTITY EST. 12,854.0 S.Y.

LIMITS OF TOP SOIL (ITEM 160) 4 INCHES TYPICAL DEPTH.
APPLIED ON SLOPES FROM STA. 840+00 TO STA. 853+00
SHEET QUANTITY EST. 4,480.0 C.Y.

PAVING STONE (See Pattern Below)

BIRD OF PARADISE
POINCIANA GILLIESII,

COLOR TEXTURIZED CONCRETE
SEE SHEET NO. 492

LIVE OAK - 25' O.C. MIN.
QUERCUS VIRGINIANA

RIO GRAND ASH - 25' O.C. MIN.
FRAXINUS BERLANDIERIANA

4550 PHILODENDRON
PHILODENDRON SELLOUM

YAUPON HOLLY
ILEX VOMITORIA

SABAL PALM -
SABAL TEXANA

OLEANDER - 6' O.C.
NERIUM OLEANDER

OLEANDER - 6' O.C.
NERIUM OLEANDER

ANAQUA
ENRETIA ANACUA

LIVE OAK - 25' O.C. MIN.
QUERCUS VIRGINIANA

PLANTING BED A

BLOCK SOD AREA A
CHECKERBOARD PATTERN

EXISTING PALM-NOT [redacted] DISTURBED (TYP.)

PAVER PATTERN (TYP)
DETAIL
SEE SHEET
502.

PAVING STONE

CALIFORNIA FAN PALM
WASHINGTONIA FILIFERA

NOTE: ALL SURFACE AREAS [redacted] RAKED TO A SMOOTH EVEN FINISH PRIOR TO ALL PLANTING OR SEEDING OPERATIONS.

SITE LOCATION	STONE TYPE	COLOR	PATTERN	PAVING STONE QTY. EST (SQ. YD)	STEEL EDGE QTY EST.
	UNI STONE *	RED	HERRINGBONE	750.8	860 FT.
		GRAY		31.1	
	HOLLANDSTONE I *	CHARCOAL	EDGER	258.9	
		GRAY		5.2	

0' 10' 20' 40' 80' 150'
SCALE : 1" = 50'

LANDSCAPING

FED. RD. DIV. NO.	FEDERAL AID PROJECT NO.		SHEET NO.
6	NH 92 ( )M		470
STATE	DIST.	COUNTY	
TEXAS	21	HIDALGO	
CONT.	SECT.	JOB	HIGHWAY NO.
39	17	97	83/281

ESTIMATED SHEET TOTALS

COMMON NAME	SCIENTIFIC NAME	QUANTITY	SIZE	REMARKS
CEDAR ELM	ULMUS CRASSIFOLIA	16	4" CAL.	B&B
LIVE OAK	QUERCUS VIRGINIANA	20	3.5"-4" CAL.	CONTAINER GROWN
ANAQUA	ENRETIA ANACUA	14	8'-10'	B&B
RIO GRANDE ASH	FRAXINUS BERLANDIERIA	14	2.5"-3" CAL.	B&B
WILD OLIVE	CORDIA BOISSIERI	54	5'-6'	B&B
GREAT LEAD TREE	LEUCAENA PULVERULENTA	13	10'-12'	B&B 'RETUSA'
SABAL PALM	SABAL TEXANA	77	6' TRUNK FEET	B&B
CALIF FAN PALM	WASHINGTONIA FILIFERA	178	8' TRUNK FEET	B&B
TEXAS MOUNTAIN LAUREL	SOPHORIA SECUNDIFLORA	0	5'-6'	CONTAINER GROWN
OLEANDER	NERIUM OLEANDER	279	5 GALLON	CONTAINER GROWN 'HARDY RED'
SPANISH DAGGER	YUCCA TRECULEANA	6	4'-5'	B&B
BIRD OF PARADISE	POINCIANA GILLIESII	15	4'-5'	B&B MULTI TRUNK
ELAEGNUS	ELAEAGNUS MACROPHIIA	0	5 GALLON	CONTAINER GROWN/MULTI TRUNK
PHILODENDRON	PHILODENDRON SELLOUM	5,434	1 GALLON	CONTAINER GROWN
BLOCK SOD	SEE GENERAL NOTES	—	—	—

LIMITS OF BLACK SOD (ITEM 162) AS INDICATED IN AREAS "A", "B", "C", "D"
SHEET QUANTITY EST. 10,538.0 S.Y.
DISTRIBUTED TO A CHECKERBOARD PATTERN

LIMITS OF TOP SOIL (ITEM 160) 6 INCHES TYPICAL DEPTH.
APPLIED FROM STA. 853+00 TO STA. 864+00
SHEET QUANTITY EST. 10,292.5 C.Y.

PAVING STONE
CONTINUED ON PAGE 494
SEE PATTERN BELOW

ROW LINE

PHILODENDRON
PHILODENDRON SELLOUM

SABAL PALM - 12' O.C. MIN.
SABAL TEXANA

NERIUM OLEANDER
OLEANDER - 6' O.C.

BLOCK SOD AREA — 'A'
CHECKERBOARD PATTERN

STEEL EDGE

MATCH LINE STA. 853+00

860+00

BLOCK SOD AREA — 'C'

WILD OLIVE - 12' O.C. MIN.
CORDIA BOISSIERI

US 281

BLOCK SOD AREA — 'D'

PLANTING BED 'A'

STEEL EDGE

5'
(TYP.)

PAVINGSTONE (TYP.)
SEE SHEET

PAVING STONE
CONTINUED ON PAGE 494

PAVING STONE (TYP.)
SEE PAGE

GREAT LEAD TREE
LEUCAENA PULVERULENTA

WILD OLIVE - 12' O.C. MIN.
CORDIA BOISSIERI

ANAQUA
ENRETIA ANACUA

LIVE OAK - 25' O.C. MIN.
QUERCUS VIRGINIANA

BLOCK SOD AREA — 'B'

BIRD OF PARADISE
POINCIANA GILLIESII

OLEANDER - 6' O.C.
NERIUM OLEANDER

CEDAR ELM - 30' O.C. MIN.
ULMUS CRASSIFOLIA

RIO GRAND ASH - 25' O.C. MIN.
FRAXINUS BERLANDIERIANA

CALIFORNIA FAN PALM - 12' O.C. MIN.
WASHINGTONIA FILIFERA

SPANISH DAGGER - 10' O.C. MIN.
YUCCA TRECULEANA

PATTERN
DETAIL

NOTE: ALL SURFACE AREAS [redacted] RAKED TO A SMOOTH EVEN FINISH PRIOR TO ALL PLANTING OR SEEDING OPERATIONS.

NOTE: "*" OR EQUAL

SITE LOCATION	STONE TYPE	COLOR	PATTERN	PAVING STONE QTY. EST. (SQ. YD)	STEEL EDGE QTY. EST.
U.S. 83 & U.S. 281	UNI STONE*	RED	HERRINGBONE	225.2	995 FT.
		GRAY		9.3	
	HOLLANDSTONE 1*	CHARCOAL GRAY	EDGER	77.6 1.5	

LANDSCAPING

0 10 20 40 80 150
SCALE : 1" = 50'

FED. RD. DIV. NO.	FEDERAL AID PROJECT NO.		SHEET NO.
6	NH 92 ( )M		471
STATE	DIST.	COUNTY	
TEXAS	21	HIDALGO	
CONT.	SECT.	JOB	HIGHWAY NO.
39	17	97	83/281

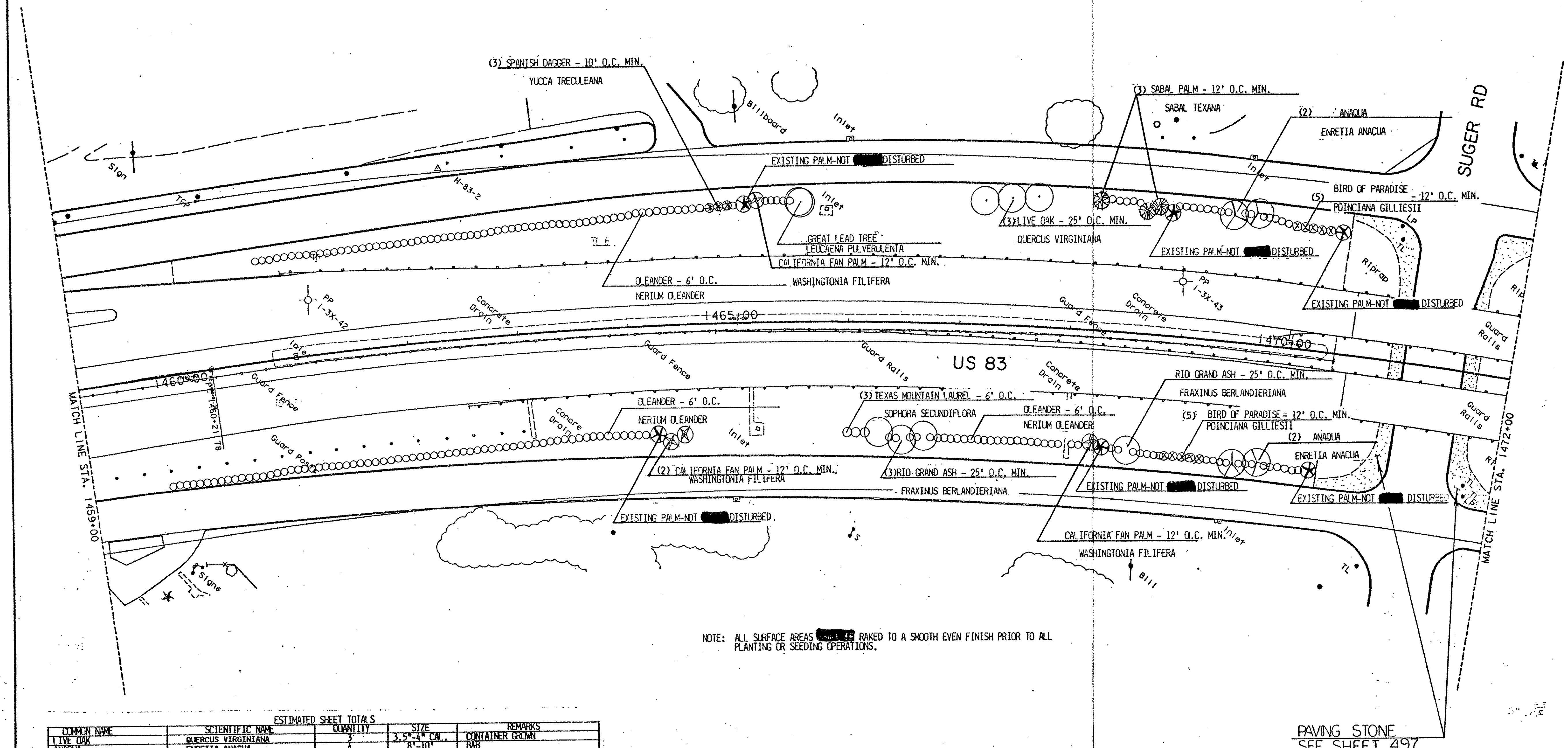

NOTE: ALL SURFACE AREAS [redacted] RAKED TO A SMOOTH EVEN FINISH PRIOR TO ALL PLANTING OR SEEDING OPERATIONS.

ESTIMATED SHEET TOTALS

COMMON NAME	SCIENTIFIC NAME	QUANTITY	SIZE	REMARKS
LIVE OAK	QUERCUS VIRGINIANA	3	3.5"-4" CAL.	CONTAINER GROWN
ANAQUA	ENRETIA ANACUA	4	8'-10'	B&B
RIO GRANDE ASH	FRAXINUS BERLANDIERIA	4	2.5"-3" CAL.	B&B
GREAT LEAD TREE	LEUCAENA PULVERULENTA	1	10'-12'	B&B 'RETUSA'
SABAL PALM	SABAL TEXANA	3	6' TRUNK FEET	B&B
CALF FAN PALM	WASHINGTONIA FILIFERA	4	8' TRUNK FEET	B&B
TEXAS MOUNTAIN LAUREL	SOPHORIA SECUNDIFLORA	3	5'-6'	CONTAINER GROWN
BIRD OF PARADISE	POINCIANA GILLIESII	10	4'-5'	B&B MULTI TRUNK
OLEANDER	NERIUM OLEANDER	203	5 GALLON	CONTAINER GROWN 'HARDY RED'
SPANISH DAGGER	YUCCA TRECULEANA	3	4'-5'	B&B

LIMITS OF CEL FIB MULCH SEEDING (ITEM 164) [redacted]
APPLIED ON SLOPES FROM STA. 1464+50 TO STA. 1470+50
SHEET QUANTITY EST. 8,778.0 S.Y.

LIMITS OF TOP SOIL (ITEM 160) 4 INCHES TYPICAL DEPTH.
APPLIED ON SLOPES FROM STA. 1464+50 TO STA. 1470+50
SHEET QUANTITY EST. 2,926.0 C.Y.

0' 10' 20' 40' 80' 150'
SCALE : 1"= 50'

LANDSCAPING

FED. RD. DIV. NO.	FEDERAL AID PROJECT NO.			SHEET NO.
6	NH 92( )M			472
STATE	DIST.	COUNTY		
TEXAS	21	HIDALGO		
CONT.	SECT.	JOB	HIGHWAY NO.	
39	17	97	83/281	

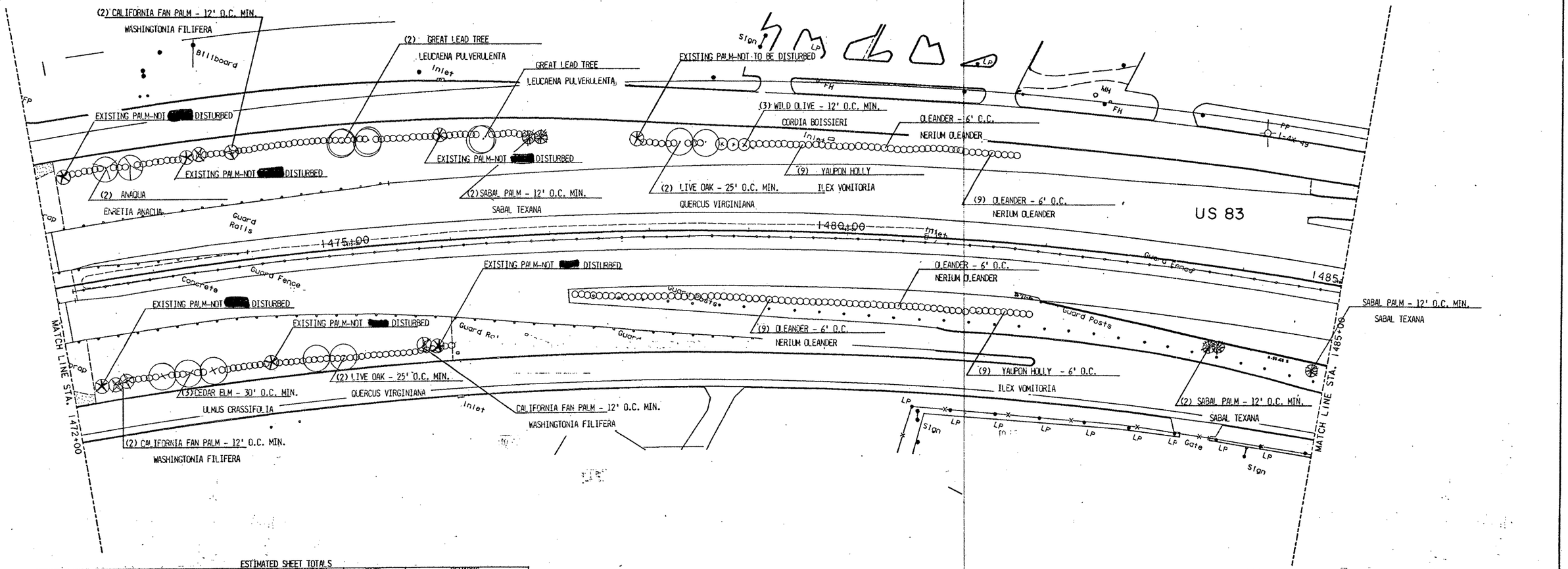

NOTE: ALL SURFACE AREAS [redacted] RAKED TO A SMOOTH EVEN FINISH PRIOR TO ALL PLANTING OR SEEDING OPERATIONS.

ESTIMATED SHEET TOTALS

COMMON NAME	SCIENTIFIC NAME	QUANTITY	SIZE	REMARKS
CEDAR ELM	ULMUS CRASSIFOLIA	3	4" CAL.	B&B
LIVE OAK	QUERCUS VIRGINIANA	4	3.5"-4" CAL.	CONTAINER GROWN
ANAQUA	ERETIA ANACUA	2	8'-10'	B&B
WILD OLIVE	CORDIA BOISSIERI	3	5'-6'	B&B
GREAT LEAD TREE	LEUCAENA PULVERULENTA	5	10'-12'	B&B 'RETUSA'
SABAL PALM	SABAL TEXANA	5	6' TRUNK FEET	B&B
CALF FAN PALM	WASHINGTONIA FILIFERA	5	8' TRUNK FEET	B&B
YUPON HOLLY	IXLEX VOMITORIA	18	5'-6'	CONTAINER GROWN/MULTI TRUNK
OLEANDER	NERIUM OLEANDER	245	5 GALLON	CONTAINER GROWN 'HARDY RED'

LIMITS OF CEL FIB MULCH SEEDING (ITEM 164) [redacted]
APPLIED ON SLOPES FROM STA. 1472+00 TO STA. 1480+00
SHEET QUANTITY EST. 6,927.0 S.Y.

LIMITS OF TOP SOIL (ITEM 160) 4 INCHES TYPICAL DEPTH.
APPLIED ON SLOPES FROM STA. 1472+00 TO STA. 1480+00
SHEET QUANTITY EST. 2,309.0 C.Y.

0' 10' 20' 40' 80' 150'
SCALE : 1"= 50'

LANDSCAPING

SCALE: 1"=50'

FED. RD. DIV. NO.	FEDERAL AID PROJECT NO.		SHEET NO.
6	NH 92( )M		473
STATE	DIST.	COUNTY	
TEXAS	21	HIDALGO	
CONT.	SECT.	JOB	HIGHWAY NO.
39	17	97	83/281

ESTIMATED SHEET TOTALS

COMMON NAME	SCIENTIFIC NAME	QUANTITY	SIZE	REMARKS
LIVE OAK	QUERCUS VIRGINIANA	2	3.5"-4" CAL.	CONTAINER GROWN
ANAQUA	ENRETIA ANACUA	3	8'-10'	B&B
WILD OLIVE	CORDIA BOISSIERI	2	5'-6'	B&B
GREAT LEAD TREE	LEUCAENA PULVERULENTA	1	10'-12'	B&B 'RETUSA'
SABAL PALM	SABAL TEXANA	4	6' TRUNK FEET	B&B
CALF FAN PALM	WASHINGTONIA FILIFERA	1	8' TRUNK FEET	B&B
TEXAS MOUNTAIN LAUREL	SOPHORIA SECUNDIFLORA	10	5'-6'	CONTAINER GROWN
YUPON HOLLY	ILEX VOMITORIA	7	15 GALLON	CONTAINER GROWN
BIRD OF PARADISE	POINCIANA GILLIESII	14	4'-5'	B&B MULTI TRUNK
TURKS CAPP	MALVAVISCUS DRUMMONDII	17	1 GALLON	CONTAINER GROWN
BOUGAINVILLEA	BOUGAINVILLEA GLABRA	15	5 GALLON	CONTAINER GROWN
NATAL PLUM	CARISSA GRANDIFLONIA	550	1 GALLON	B&B
SAGO PALM	CYCUS REVOLUTA	21	2'- 6'	B&B
SPANISH DAGGER	YUCCA TRECULEANA	4	4'- 5'	B&B
SPANISH DAGGER	YUCCA TRECULEANA	6	7'- 8'	B&B
ENGELMANS PRICKLY PEAR	OPUNTIA ENGELMANNIISD	47	B&B	7-10 HEADS RED & YELLOW
WASHED GRAVEL		64 CY	1" - 3"	RED TO GRAY IN COLOR

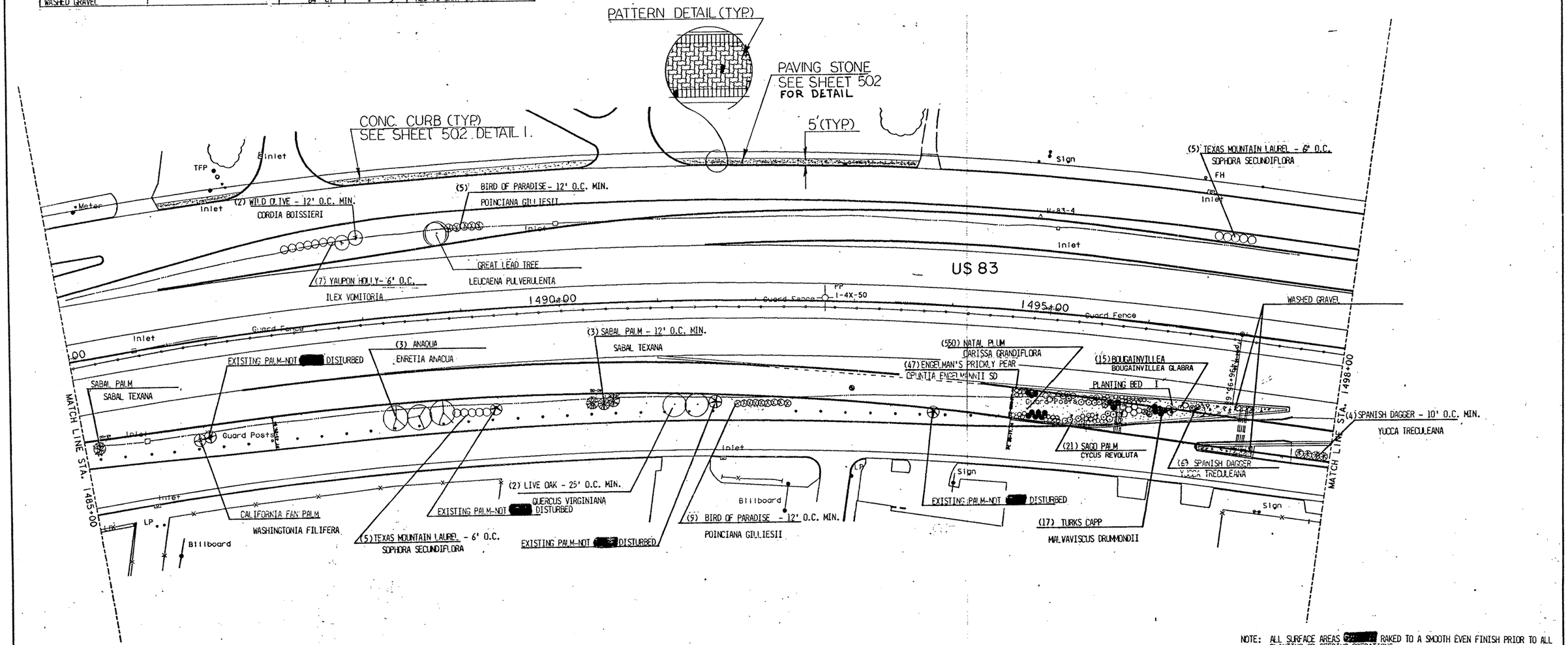

NOTE: ALL SURFACE AREAS [redacted] RAKED TO A SMOOTH EVEN FINISH PRIOR TO ALL PLANTING OR SEEDING OPERATIONS.

NOTES
"*" OR EQUAL

SITE LOCATION	STONE TYPE	COLOR	PATTERN	PAVING STONE QTY. EST (S.Q.YD)	WASHED GRAVEL QTY. EST.
US 83 STA. 1486+00 TO STA. 1494+00	UNI-STONE*	RED	HERRINGBONE	247.3	64 CUB. YDS.
		GRAY		10.3	
	HOLLANDSTONE*	CHARCOAL GRAY	EDGER	85.3	
				1.7	

0' 10' 20' 40' 80' 150'
SCALE : 1" = 50'

LANDSCAPING

SCALE: 1"=50'

FED. RD. DIV. NO.	FEDERAL AID PROJECT NO.		SHEET NO.
6	NH 92 ( )M		474
STATE	DIST.	COUNTY	
TEXAS	21	HIDALGO	
CONT.	SECT.	JOB	HIGHWAY NO.
39	17	97	83/281

ESTIMATED SHEET TOTALS

COMMON NAME	SCIENTIFIC NAME	QUANTITY	SIZE	REMARKS
CEDAR ELM	ULMUS CRASSIFOLIA	4	4" CAL	B&B
RIO GRANDE ASH	FRAXINUS BERLANDIERIA	2	2.5"-3" CAL.	B&B
GREAT LEAD TREE	LEUCAENA PULVERULENTA	1	10'-12'	B&B 'RETUSA'
SABAL PALM	SABAL TEXANA	6	6' TRUNK FEET	B&B
TEXAS MOUNTAIN LAUREL	SOPHORIA SECUNDIFLORA	18	5'-6'	CONTAINER GROWN
BIRD OF PARADISE	POINCIANA GILLIESII	10	4'-5'	B&B MULTI TRUNK
OLEANDER	NERIUM OLEANDER	45	5 GALLON	CONTAINER GROWN 'HARDY RED'
CENIZO	LEUCOPHYLLUM FRUTESCENS	3472	1 GALLON	CONTAINER GROWN
TURKS CAPP	MALVAVISCUS DRUMMONDII	18	1 GALLON	CONTAINER GROWN
BOUGAINVILLEA	BOUGAINVILLEA GLABRA	92	5 GALLON	CONTAINER GROWN
NATAL PALM	CARISSA GRANDIFLONIA	500	1 GALLON	B&B
SAGO PALM	CYCUS REVOLUTA	31	2'- 6'	B&B
SPANISH DAGGER	YUCCA TRECULEANA	7	4'- 5'	B&B
SPANISH DAGGER	YUCCA TRECULEANA	9	7'- 8'	B&B
ENGELMANS PRICKLY PEAR	OPUNTIA ENGELMANNIISO	88	B&B	7-10 HEADS RED & YELLOW
WASHED GRAVEL		85 CY	1" - 3"	RED TO GRAY IN COLOR

LIMITS OF TOP SOIL (ITEM 160) 4 INCHES TYPICAL DEPTH.
APPLIED ON SLOPES FROM STA. 1507+00 TO STA. 1511+00
SHEET QUANTITY EST. 1,463.0 C.Y.

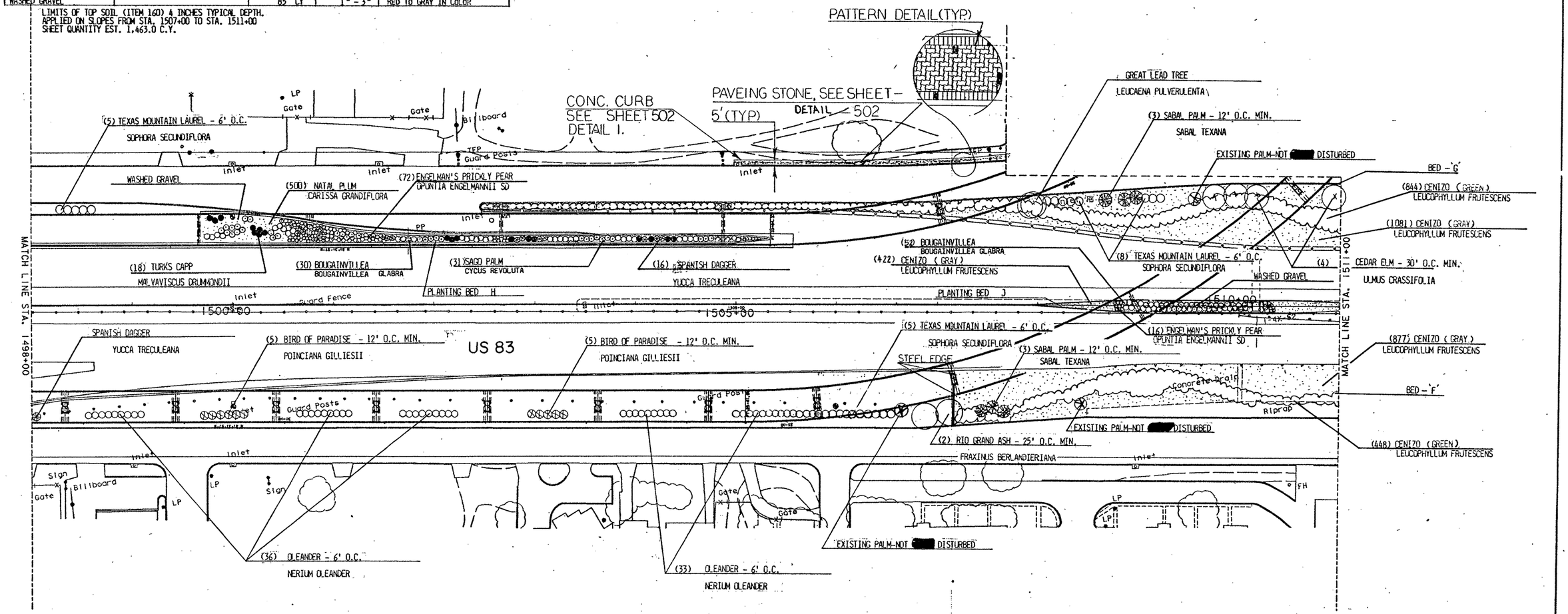

NOTE: ALL SURFACE AREAS [redacted] RAKED TO A SMOOTH EVEN FINISH PRIOR TO ALL PLANTING OR SEEDING OPERATIONS.

NOTES.
*OR EQUAL

SITE LOCATION	STONE TYPE	COLOR	PATTERN	PAVING STONE QTY. EST (S.Q.YD)	STEEL EDGE Q.T.Y. EST.	WASHED GRAVEL Q.T.Y. EST.
US 83 STA. 1505+00 TO STA. 1507+70	UNI-STONE*	RED	HERRINGBONE	77.9	40 FT.	85 CUB. YD'S.
		GRAY		8.7		
	HOLLANDSTONE I*	CHARCOAL	EDGER	26.9		
		GRAY		6.0		

NORTH

0' 10' 20' 40' 80' 150'
SCALE : 1" = 50'

SCALE: 1"=50'

LANDSCAPING

FED. RD. DIV. NO.	FEDERAL AID PROJECT NO.		SHEET NO.
6	NH 92( )M		475
STATE	DIST.	COUNTY	
TEXAS	21	HIDALGO	
CONT.	SECT.	JOB	HIGHWAY NO.
39	17	97	83/281

[325106] FILE: L83007.DGN PRF: SAME

ESTIMATED SHEET TOTALS

COMMON NAME	SCIENTIFIC NAME	QUANTITY	SIZE	REMARKS
CEDAR ELM	ULMUS CRASSIFOLIA	4	4" CAL	B&B
LIVE OAK	QUERCUS VIRGINIANA	5	3.5"-4" CAL.	CONTAINER GROWN
ANACUA	ERRETIA ANACUA	5	8'-10'	B&B
GREAT LEAD TREE	LEUCAENA PULVERULENTA	3	10'-12'	B&B 'RETUSA'
SABAL PALM	SABAL TEXANA	3	6' TRUNK FEET	B&B
CALF FAN PALM	WASHINGTONIA FILIFERA	6	8' TRUNK FEET	B&B
BIRD OF PARADISE	POINCIANA GILLIESII	5	4'-5'	B&B MULTI TRUNK
OLEANDER	NERIUM OLEANDER	27	5 GALLON	CONTAINER GROWN 'HARDY RED'
CENIZO	LEUCOPHYLLUM FRUTESCENS	6145	1 GALLON	CONTAINER GROWN
TURKS CAPP	MALVAVISCUS DRUMMONDII	28	1 GALLON	CONTAINER GROWN
BOUGAINVILLEA	BOUGAINVILLEA GLABRA	42	5 GALLON	CONTAINER GROWN
NATAL PLUM	CARISSA GRANDIFLONIA	301	1 GALLON	B&B
SAGO PALM	CYCUS REVOLUTA	27	2'- 6'	B&B
SPANISH DAGGER	YUCCA TRECULEANA	14	4'- 5'	B&B
SPANISH DAGGER	YUCCA TRECULEANA	10	7'- 8'	B&B
ENGELMANS PRICKLY PEAR	OPUNTIA ENGELMANNIISD	61	B&B	7-10 HEADS RED & YELLOW
WASHED GRAVEL		74 CY	1"-3"	RED TO GRAY IN COLOR

LIMITS OF TOP SOIL (ITEM 160) 4 INCHES TYPICAL DEPTH.
APPLIED ON SLOPES FROM STA. 1511+00 TO STA. 1522+00
SHEET QUANTITY EST. 2,472.0 C.Y.

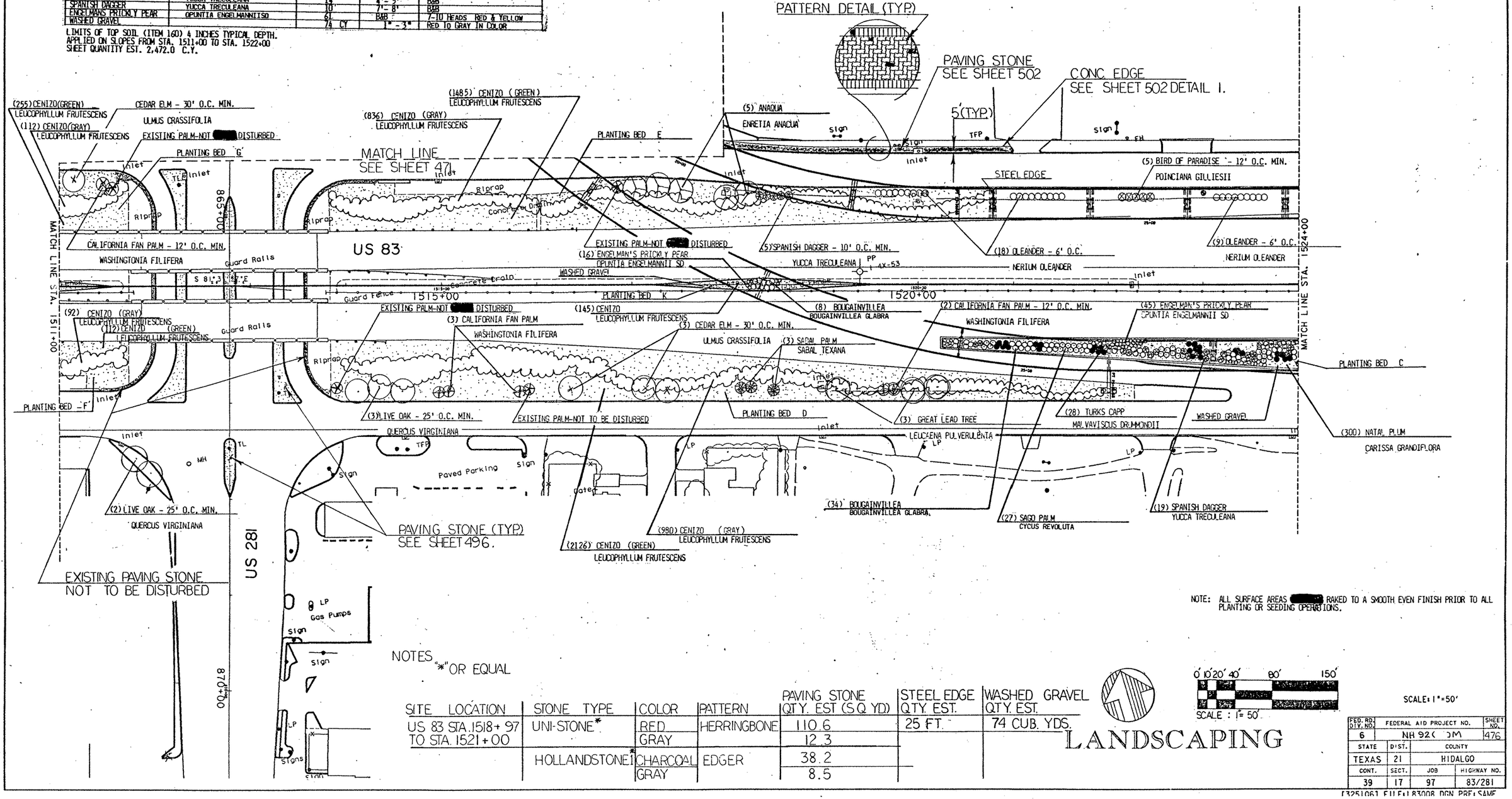

NOTE: ALL SURFACE AREAS [redacted] RAKED TO A SMOOTH EVEN FINISH PRIOR TO ALL PLANTING OR SEEDING OPERATIONS.

NOTES "*" OR EQUAL

SITE LOCATION	STONE TYPE	COLOR	PATTERN	PAVING STONE QTY. EST (SQ YD)	STEEL EDGE QTY. EST.	WASHED GRAVEL QTY. EST.
US 83 STA. 1518+97 TO STA. 1521+00	UNI-STONE*	RED	HERRINGBONE	110.6	25 FT.	74 CUB. YDS.
		GRAY		12.3		
	HOLLANDSTONE*	CHARCOAL	EDGER	38.2		
		GRAY		8.5		

LANDSCAPING

0 10 20 40 80 150
SCALE : 1" = 50'

SCALE: 1"=50'

FED. RD. DIV. NO.	FEDERAL AID PROJECT NO.		SHEET NO.
6	NH 92( )M		476
STATE	DIST.	COUNTY	
TEXAS	21	HIDALGO	
CONT.	SECT.	JOB	HIGHWAY NO.
39	17	97	83/281

[325106] FILE: L83008.DGN PREFSAME

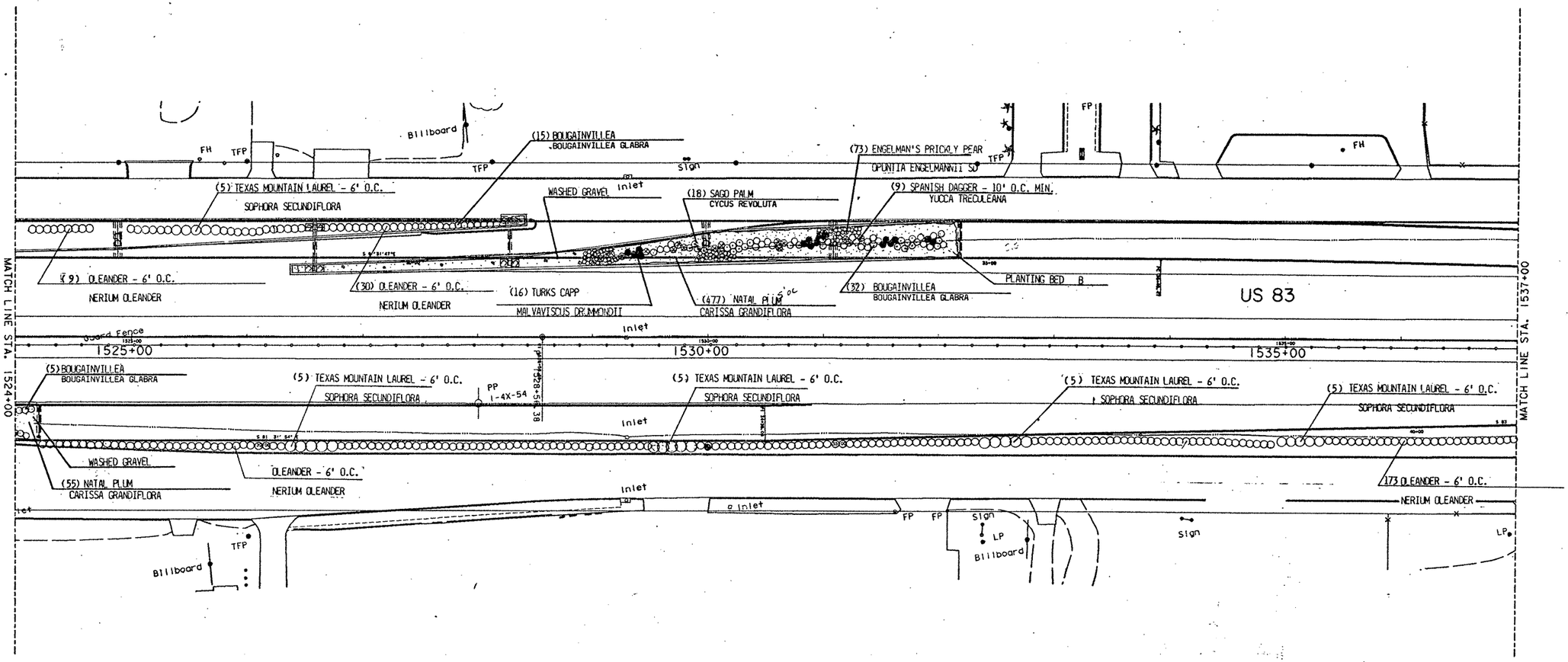

ESTIMATED SHEET TOTALS

COMMON NAME	SCIENTIFIC NAME	QUANTITY	SIZE	REMARKS
TURKS CAPP	MALVAISCUS DRUMMONDII	16	1 GALLON	CONTAINER GROWN
BOUGANVILLIA	BOUGAINVILLEA GLABRA	52	5 GALLON	CONTAINER GROWN
NATAL PLUM	CARISSA GRANDIFLONIA	532	1 GALLON	B&B
SAGO PALM	CYCUS REVOLUTA	18	2'- 6'	B&B
SPANISH DAGGER	YUCCA TRECULEANA	9	4'- 5'	B&B
SPANISH DAGGER	YUCCA TRECULEANA	5	7'- 8'	B&B
ENGELMANS PRICKLY PEAR	OPUNTIA ENGELMANNII	73	B&B	7-10 HEADS RED & YELLOW
WASHED GRAVEL		108 CY	1"- 3"	RED TO GRAY IN COLOR
TEXAS MOUNTAIN LAUREL	SOPHORIA SECUNDIFLORA	42	5'-6'	CONTAINER GROWN
OLEANDER	NERIUM OLEANDER	212	5 GALLON	CONTAINER GROWN 'HARDY RED'

WASHED GRAVEL
QTY. EST.
108 CUB. YDS.

NOTE: ALL SURFACE AREAS [redacted] RAKED TO A SMOOTH EVEN FINISH PRIOR TO ALL PLANTING OR SEEDING OPERATIONS.

0' 10' 20' 40' 80' 150'
SCALE : 1"= 50'

LANDSCAPING

SCALE: 1"=50'

FED. RD. DIV. NO.	FEDERAL AID PROJECT NO.		SHEET NO.
6	NH 92( )M		477
STATE	DIST.	COUNTY	
TEXAS	21	HIDALGO	
CONT.	SECT.	JOB	HIGHWAY NO.
39	17	97	83/281

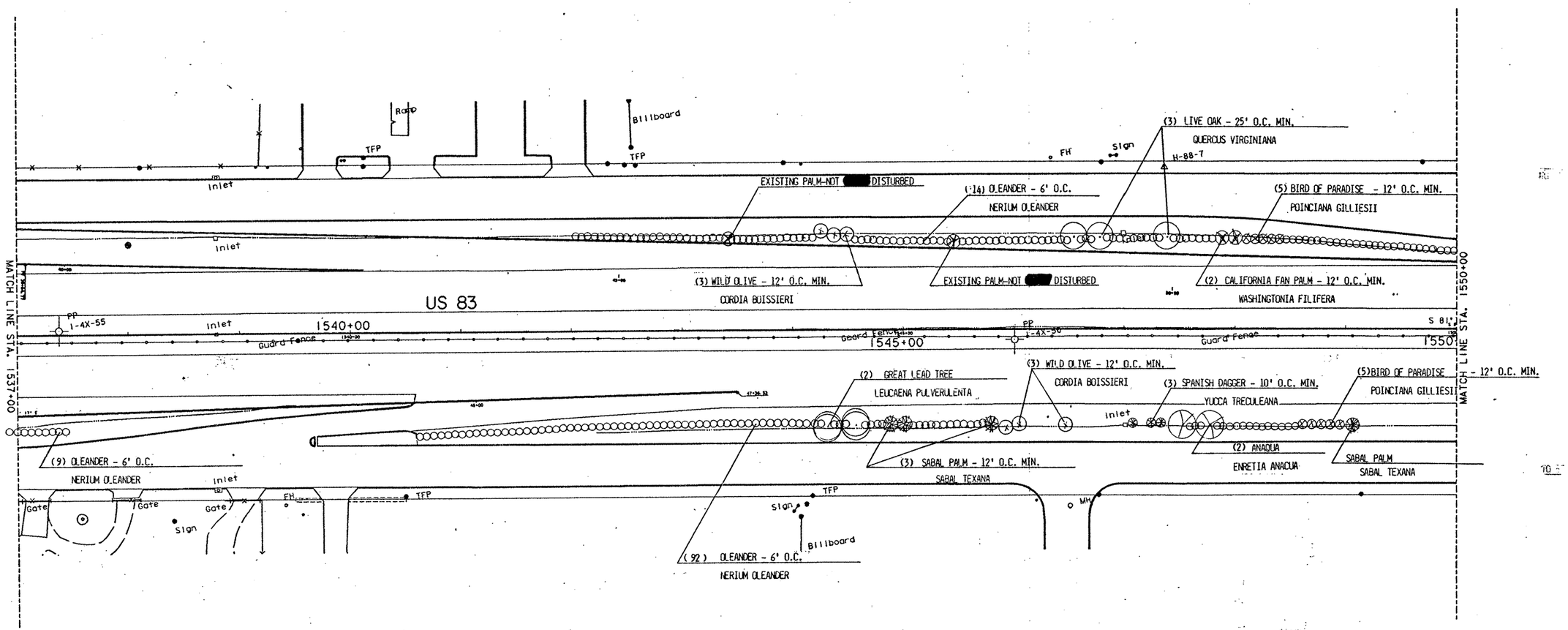

ESTIMATED SHEET TOTALS

COMMON NAME	SCIENTIFIC NAME	QUANTITY	SIZE	REMARKS
LIVE OAK	QUERCUS VIRGINIANA	3	3.5"-4" CAL.	CONTAINER GROWN
ANAQUA	ENRETIA ANACUA	2	8'-10'	B&B
WILD OLIVE	CORDIA BOISSIERI	6	5'-6'	B&B
GREAT LEAD TREE	LEUCAENA PULVERULENTA	2	10'-12'	B&B 'RETUSA'
SABAL PALM	SABAL TEXANA	4	6' TRUNK FEET	B&B
CDLF FAN PALM	WASHINGTONIA FILIFERA	2	8' TRUNK FEET	B&B
BIRD OF PARADISE	POINCIANA GILLIESII	10	4'-5'	B&B MULTI TRUNK
OLEANDER	NERIUM OLEANDER	215	5 GALLON	CONTAINER GROWN 'HARDY RED'
SPANISH DAGGER	YUCCA TRECULEANA	3	4'-5'	B&B

NOTE: ALL SURFACE AREAS [redacted] RAKED TO A SMOOTH EVEN FINISH PRIOR TO ALL PLANTING OR SEEDING OPERATIONS.

LANDSCAPING

0' 10' 20' 40' 80' 150'

SCALE : 1"= 50'

SCALE: 1"=50'

FED. RD. DIV. NO.	FEDERAL AID PROJECT NO.		SHEET NO.
6	NH 92 ( )M		478
STATE	DIST.	COUNTY	
TEXAS	21	HIDALGO	
CONT.	SECT.	JOB	HIGHWAY NO.
39	17	97	83/281

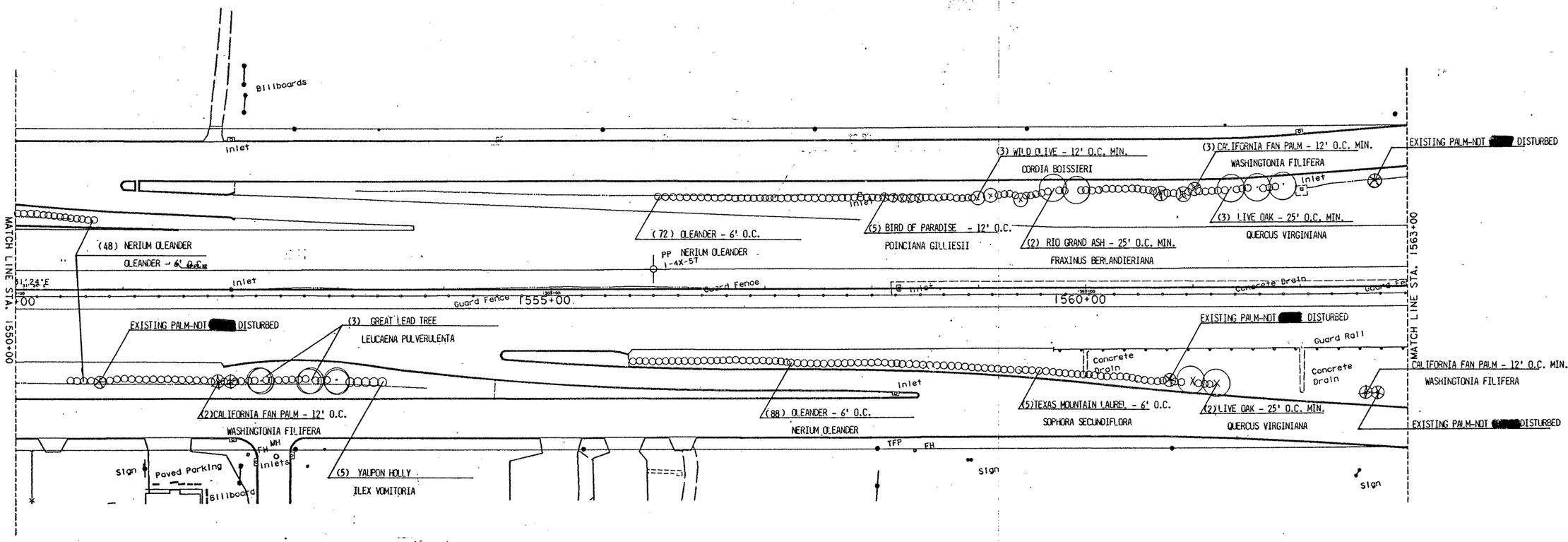

ESTIMATED SHEET TOTALS

COMMON NAME	SCIENTIFIC NAME	QUANTITY	SIZE	REMARKS
LIVE OAK	QUERCUS VIRGINIANA	5	3.5"-4" CAL.	CONTAINER GROWN
RIO GRANDE ASH	FRAXINUS BERLANDIERIA	2	2.5"-3" CAL.	B&B
WILD OLIVE	CORDIA BOISSIERI	3	5'-6'	B&B
GREAT LEAD TREE	LEUCAENA PULVERULENTA	3	10'-12'	B&B 'RETUSA'
CALF FAN PALM	WASHINGTONIA FILIFERA	6	8" TRUNK FEET	B&B
TEXAS MOUNTAIN LAUREL	SOPHORIA SECUNDIFLORA	5	5'-6'	CONTAINER GROWN
YUPON HOLLY	ILEX VOMITORIA	5	15 GALLON	CONTAINER GROWN
BIRD OF PARADISE	POINCIANA GILLIESII	5	4'-5'	B&B MULTI TRUNK
OLEANDER	NERIUM OLEANDER	218	5 GALLON	CONTAINER GROWN 'HARDY RED'

NOTE: ALL SURFACE AREAS RAKED TO A SMOOTH EVEN FINISH PRIOR TO ALL PLANTING OR SEEDING OPERATIONS.

0' 10' 20' 40' 80' 150'
SCALE : 1" = 50'

LANDSCAPING

FED. RD. DIV. NO.	FEDERAL AID PROJECT NO.		SHEET NO.
6	NH 92( )M		479
STATE	DIST.	COUNTY	
TEXAS	21	HIDALGO	
CONT.	SECT.	JOB	HIGHWAY NO.
39	17	97	83/281

[325106] FILE=L83011.DGN PRF=SAME

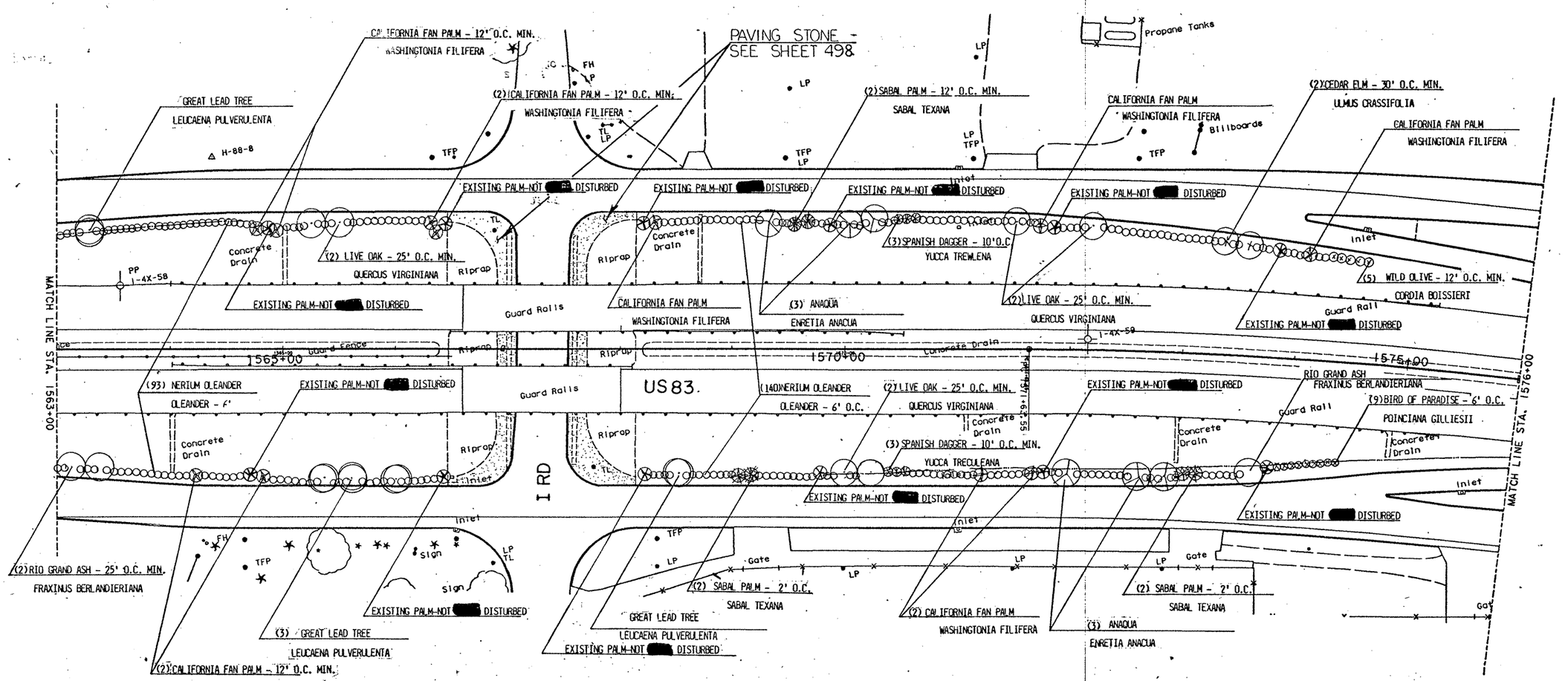

ESTIMATED SHEET TOTALS

COMMON NAME	SCIENTIFIC NAME	QUANTITY	SIZE	REMARKS
CEDAR ELM	ULMUS CRASSIFOLIA	2	4" CAL.	B&B
LIVE OAK	QUERCUS VIRGINIANA	6	3.5"-4" CAL.	CONTAINER GROWN
ANAQUA	ENRETIA ANACUA	6	8'-10'	B&B
RIO GRANDE ASH	FRAXINUS BERLANDIERIA	3	2.5"-3" CAL.	B&B
WILD OLIVE	CORDIA BOISSIERI	5	5'-6'	B&B
GREAT LEAD TREE	LEUCAENA PULVERULENTA	5	10'-12'	B&B 'RETUSA'
SABAL PALM	SABAL TEXANA	6	6' TRUNK FEET	B&B
CALF FAN PALM	WASHINGTONIA FILIFERA	10	8' TRUNK FEET	B&B
BIRD OF PARADISE	POINCIANA GILLIESII	9	4'-5'	B&B MUTI TRUNK
OLEANDER	NERIUM OLEANDER	133	5 GALLON	CONTAINER GROWN 'HARDY RED'
SPANISH DAGGER	YUCCA TRECULEANA	6	4'-5'	B&B

NOTE: ALL SURFACE AREAS [redacted] RAKED TO A SMOOTH EVEN FINISH PRIOR TO ALL PLANTING OR SEEDING OPERATIONS.

0' 10' 20' 40' 80' 150'

SCALE : 1" = 50'

LANDSCAPING

FED. RD. DIV. NO.	FEDERAL AID PROJECT NO.		SHEET NO.
6	NH 92( )M		480
STATE	DIST.	COUNTY	
TEXAS	21	HIDALGO	
CONT.	SECT.	JOB	HIGHWAY NO.
39	17	97	83/281

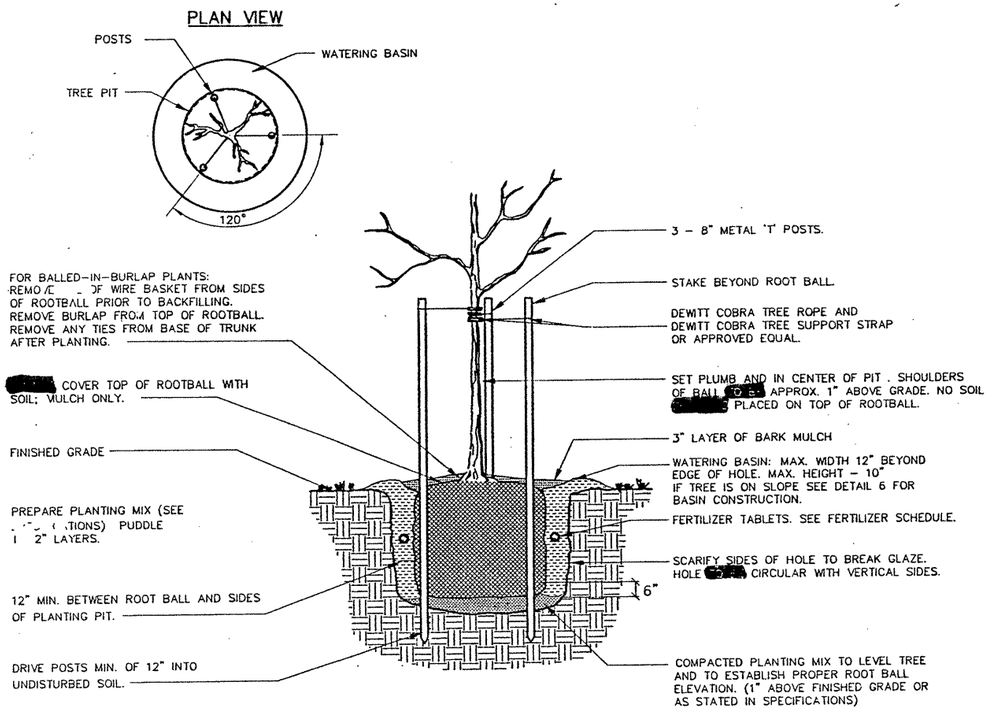

1 TREE PLANTING – B&B, BOX, CAN

N.T.S.

STAKING FOR SINGLE TRUNK TREES LESS THAN 3" CAL. FOR ALL OTHER SIZES, SEE APPLICABLE DETAILS.

RE: GENERAL NOTES AND SPECIFICATION DATA FOR PLANTING AND PRUNING DETAILS.

2 TREE STAKING

MULTI-TRUNKED TREES LESS THAN 3" CALIPER

N.T.S.

FERTILIZER SCHEDULE: PLANTING

TREES	SHRUBS AND PERENNIALS:
5-GALLON TREES 2 AGRIFORM* 21 GRAM TABLETS 15-GALLON TREES 3 AGRIFORM* 21 GRAM TABLETS 30-GALLON AND LARGER, 24" BOX AND LARGER, AND ALL B&B MATERAIL 1 AGRIFORM * 21 GRAM TABLET PER EACH ONE-HALF (1/2) INCH OF CALIPER	2-GALLON AND SMALLER 1 AGRIFORM*21 GRAM TABLET 3 TO 5-GALLON AND B&B MATERIAL WITH SPREADS TO THREE (3) FT. 2 AGRIFORM*21 GRAM TABLETS 15-GALLON AND B&B MATERIAL WITH SPREADS GREATER THAN THREE (3) FT. 3 AGRIFORM*21 GRAM TABLETS
SPACE TABLETS EVENLY AROUND ROOT BALL APPROX. 8" BELOW GRADE. PLACE NEXT TO BALL. (SEE 'TREE PLANTING' DETAIL)	SPACE TABLETS EVENLY AROUND ROOT BALL AND PLACE AT A DEPTH APPROX. 1/3 BALL DEPTH NEXT TO BALL. (SEE 'SHRUB PLANTING' DETAIL)
* OR APPROVED EQUAL	* OR APPROVED EQUAL.

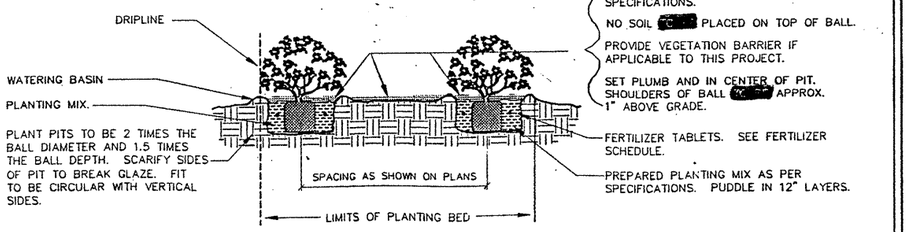

3 SHRUB PLANTING DETAIL

N.T.S.

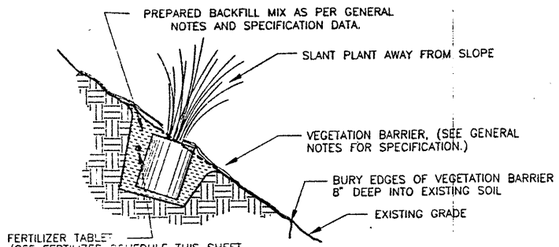

6 SHRUB PLANTING ON SLOPES

N.T.S.

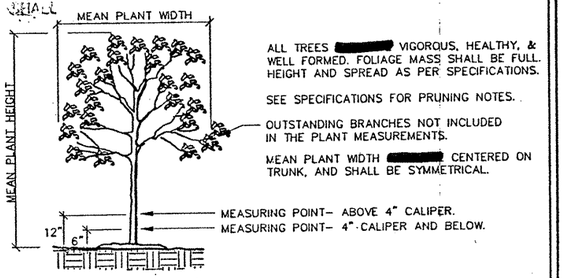

5 TREE MEASURING

N.T.S.

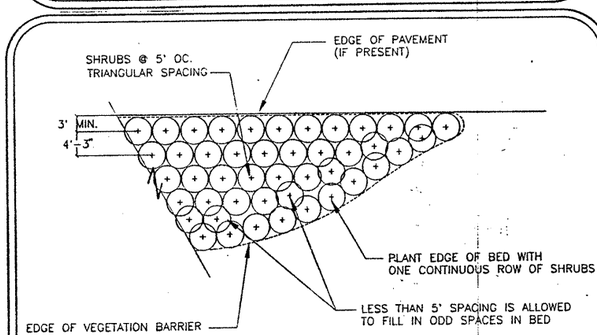

4 SHRUB SPACING IN MASS PLANTING BEDS

N.T.S.

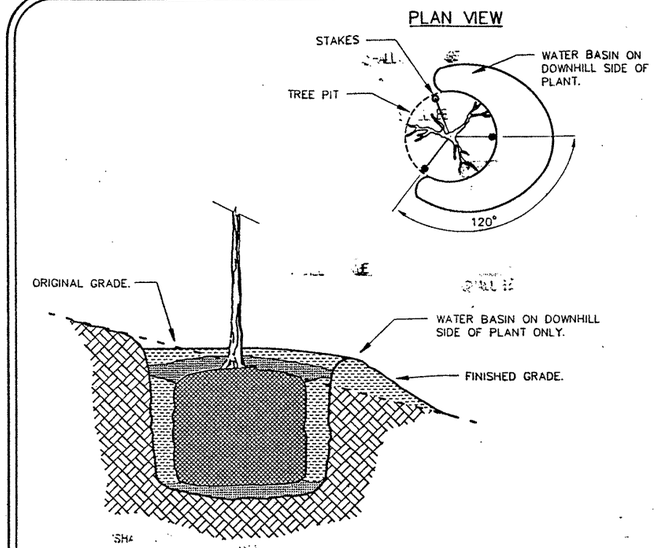

NOTE;

FOR PLANTING INSTRUCTIONS, STAKING, GUYING AND/OR BRACING, SEE APPLICABLE DETAILS AND SPECIFICATIONS.

7 PLANT PIT ON SLOPE

N.T.S.

THIS DETAIL APPLIES TO ALL TREES AND PALMS. (FOR SHRUBS SEE 'SLOPE PLANTING', IF APPLICABLE TO THIS PROJECT)

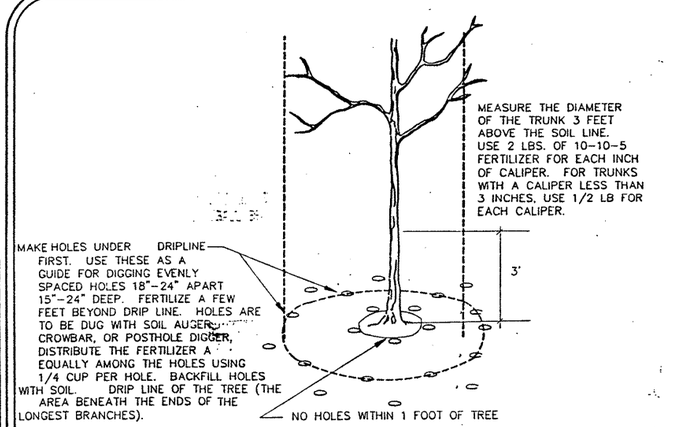

8 TREE FERTILIZATION

N.T.S.

LANDSCAPING

FED. RD. DIV. NO.	FEDERAL AID PROJECT NO.		SHEET NO.
6	NH 92( )M		481
STATE	STATE DIST. NO.	COUNTY	
TEXAS	21	HIDALGO	
CONT.	SECT.	JOB	HIGHWAY NO.
39	17	97	US 281/83

STSHGHT.DGN

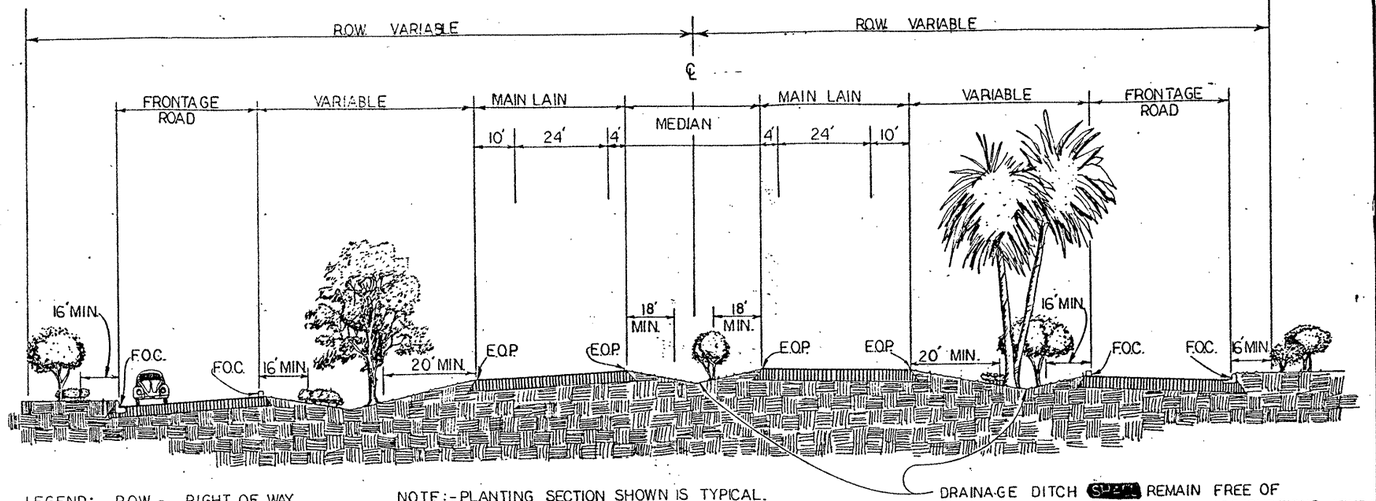

LEGEND: R.O.W. - RIGHT OF WAY
F.O.C. - FACE OF CURB
E.O.P. - EDGE OF PAVEMENT
N.T.S. - NOT TO SCALE

NOTE:-PLANTING SECTION SHOWN IS TYPICAL.
FIELD ADJUSTMENTS [redacted] NECESSARY WHERE AREAS ARE NON-CONFORMING.
-"MIN. DISTANCE" FOR TREES & SHRUBS THAT EXCEED 3" CALIPER

DRAINAGE DITCH [redacted] REMAIN FREE OF PLANTING MATERIAL OR OTHER OBSTRUCTIONS. (TYP.)

9 PLANTING SECTION FOR TREES
N.T.S.

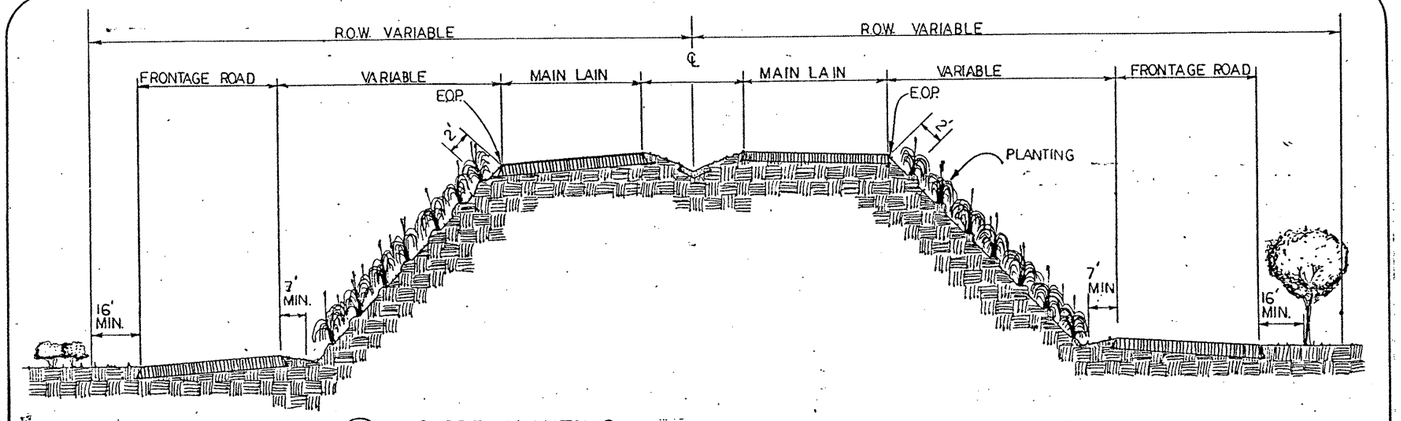

10 SLOPE PLANTING
N.T.S.

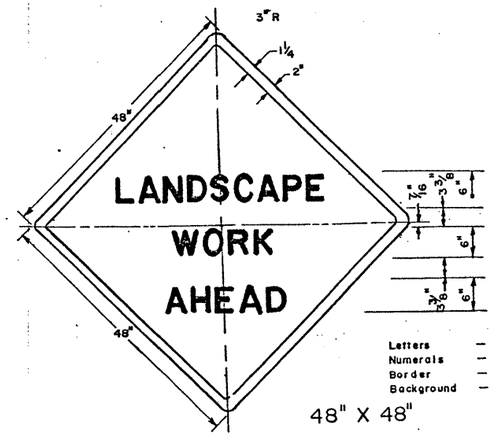

ADVANCE WARNING SIGNS. CW20-1D-SPL (LANDSCAPE) [redacted] ALWAYS [redacted] REQUIRED WITH PLACEMENT AS DIRECTED BY THE ENGINEER WHEN MAINTENANCE WORK IS IN PROGRESS. -SIGNS [redacted] REMOVED AT THE END OF EACH WORK DAY.

ADDITIONAL TRAFFIC CONTROL [redacted] REQUIRED AS DIRECTED BY THE ENGINEER TO SUIT ROADWAY AND WORKING CONDITIONS.

THE HIGH SPECIFIC INTENSITY SHEETING [redacted] NOT [redacted] REQUIRED FOR SIGNING ON THIS PROJECT AND LETTERING [redacted] STANDARD "C" SERIES AT A HEIGHT OF SIX INCHES (6").

Letters	– Black
Numerals	– Black
Border	– Black
Background	– Orange Reflective

48" X 48"

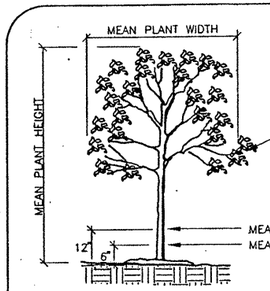

ALL TREES [redacted] VIGOROUS, HEALTHY, & WELL FORMED. FOLIAGE MASS [redacted] FULL. HEIGHT AND SPREAD AS PER THE GENERAL NOTES AND SPECIFICATION DATA.

SEE GENERAL NOTES AND SPECIFICATION DATA FOR PRUNING NOTES.

OUTSTANDING BRANCHES NOT INCLUDED IN THE PLANT MEASUREMENTS.

MEAN PLANT WIDTH [redacted] CENTERED ON TRUNK, AND [redacted] SYMMETRICAL.

MEASURING POINT– ABOVE 4" CALIPER.
MEASURING POINT– 4" CALIPER AND BELOW.

11 TREE MEASURING
N.T.S.

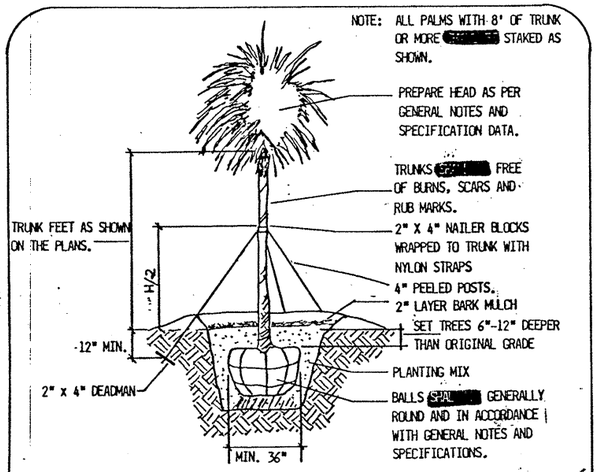

NOTE: ALL PALMS WITH 8' OF TRUNK OR MORE [redacted] STAKED AS SHOWN.

PREPARE HEAD AS PER GENERAL NOTES AND SPECIFICATION DATA.

TRUNKS [redacted] FREE OF BURNS, SCARS AND RUB MARKS.

2" X 4" NAILER BLOCKS WRAPPED TO TRUNK WITH NYLON STRAPS

4" PEELED POSTS.

2" LAYER BARK MULCH

SET TREES 6"-12" DEEPER THAN ORIGINAL GRADE

PLANTING MIX

BALLS [redacted] GENERALLY ROUND AND IN ACCORDANCE WITH GENERAL NOTES AND SPECIFICATIONS.

12 PALM PLANTING & STAKING
N.T.S.

LANDSCAPING

FED. RD. DIV. NO.	FEDERAL AID PROJECT NO.		SHEET NO.
6	NH 92 ( )M		482
STATE	STATE DIST. NO.	COUNTY	
TEXAS	21	HIDALGO	
CONT.	SECT.	JOB	HIGHWAY NO.
39	17	97	US 281/83

MATCH LINE

197750 N

2104750 E

S 4° 52' 42" W

5+00

850+00

US 281

FM 495

MH

TL

197750 N

2104500 E

MATCH LINE
STA. 851+75

LEGEND :		QTY.
□	- AUTOMATIC DRAIN VALVE	2
○	- HUNTER I-20 36V ON PVC RISERS SEE SHEET 490.	15
▷	- HUNTER I-20 ADV WITH CONC. DONUTS SEE SHEET 490.	13
⬡	- 2 CONTROL VALVES.	3

NOTE : ALL HEADS [redacted] FITTED WITH HEAD LOCKS SEE SHEET 490.

SCALE: 1"=20'

LANDSCAPING

FED. RD. DIV. NO.	FEDERAL AID PROJECT NO.		SHEET NO.
6	NH92( )M		483
STATE	STATE DIST. NO.	COUNTY	
TEXAS	21	HIDALGO	
CONT.	SECT.	JOB	HIGHWAY NO.
39	17	97	US281/US83

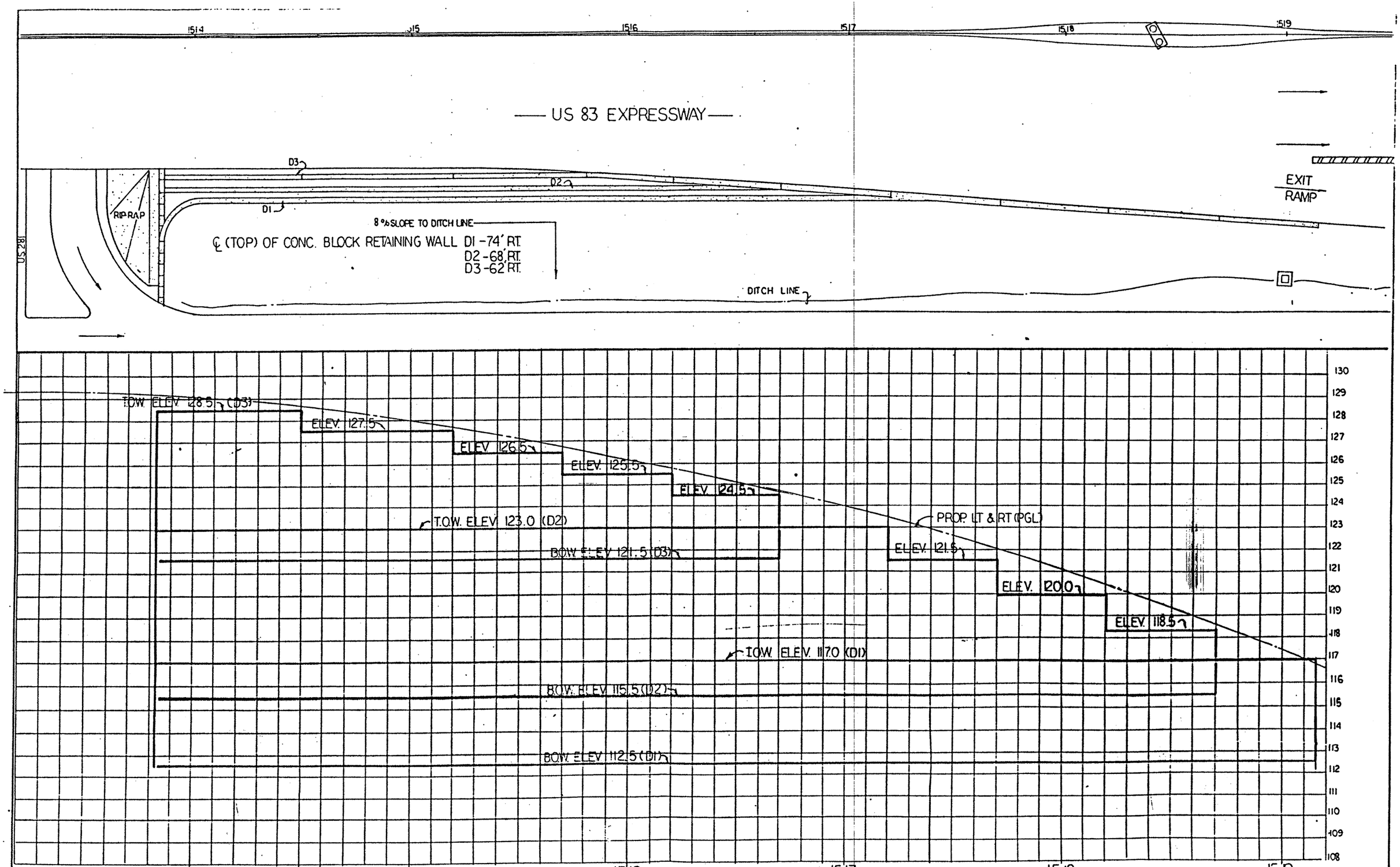

ESTIMATED SHEET TOTALS	QTY
CENIZO	365 EA.
IRRIGATION EMITTERS	365 EA.
RETAINING WALL	7315 SF.

LANDSCAPING

FED. RD. DIV. NO.	FEDERAL AID PROJECT NO.	SHEET NO.
6	NH 92(501)M	183 A
STATE	STATE DIST. NO. / COUNTY	
TEXAS	21 / HIDALGO	
CONT.	SECT.	JOB / HIGHWAY NO.

H	ΔH
4'	0'-4" TO 0'-8"
6'	0'-8" TO 1'-4"
8'	1'-0" TO 1'-4"
10	1'-0' TO 1'-4"
12	1'-0' TO 1'-6"

EARTH REINFORCEMENTS

THE MAXIMUM VERTICAL SPACING BETWEEN PRIMARY EARTH REINFORCEMENT LAYERS SHALL BE 40 INCHES. THE MINIMUM LENGTH OF PRIMARY EARTH REINFORCEMENTS SHALL BE 6 FT.

A LAYER OF INTERMEDIATE REINFORCEMENT SHALL BE PROVIDED BETWEEN PRIMARY REINFORCEMENT LAYERS WHEN THE SPACING BETWEEN PRIMARY LAYERS EXCEED TWICE THE HORIZONTAL DEPTH OF THE CONCRETE BLOCK UNIT. INTERMEDIATE REINFORCEMENT SHALL HAVE A MINIMUM LENGTH OF 4' AND SHALL PROVIDE LOCAL STABILITY FOR THE CONCRETE BLOCK UNIT.

EXTERNAL STABILITY CRITERIA

Factor of safety in sliding along the base of the structure shall be greater than or equal to 1.5.
Factor of safety in overturning shall be greater than or equal to 2.0.

DESIGN PARAMETERS

Structure shall be based on the following design parameters:
Random Backfill Unit Weight = 125 pcf
ϕ = 30° C = 0 ksf
Select Backfill Unit Weight = 125 pcf
ϕ = 34° C = 0 ksf
Stress in steel and concrete shall be in accordance with A.A.S.H.T.O. 1989 and current Interim Specifications.

NOTES:
Sections and (Typical) Elevation shown are for informational purposes. Specific block shape and dimensions and locations of earth reinforcements will vary depending on the components used.
The front face of the concrete block units shall have a "rockface" texture or equivalent.
Concrete block walls shall be battered at 1H:12V minimum to 4H:12V maximum. Batter shall be consistent throughout the project. Earthwork quantities shown for this project are based on a concrete block wall batter of 4H:12V. Earthwork quantities shall be adjusted accordingly if an alternate batter is selected.
All filter fabric splices shall have a minimum lap of one foot. Pipe Underdrain Type 10 shall be used. Pipe underdrains and filter fabric required shall be subsidiary to the Item Concrete Block Retaining Wall.

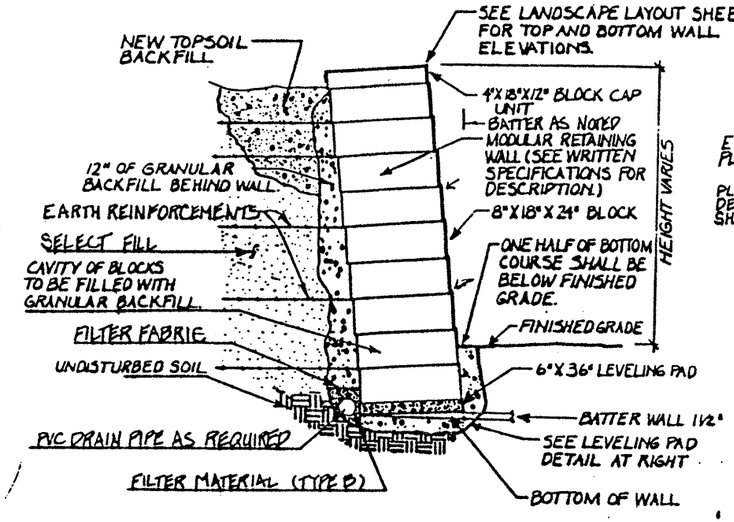

TYPICAL CROSS SECTION
(WITH EARTH REINFORCEMENTS)

FILL FOR UNITS SHALL BE FREE DRAIN SANDS OR GRAVEL. NO MORE THAN 10 PERCENT SHALL PASS THE NO 200 SEIVE WITH A MAX SIZE OF 34" GRADUATION APPROVED BY ENGINEER

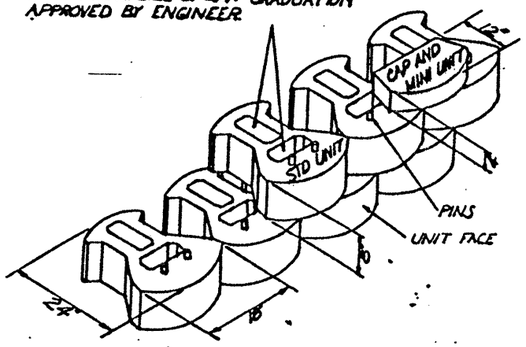

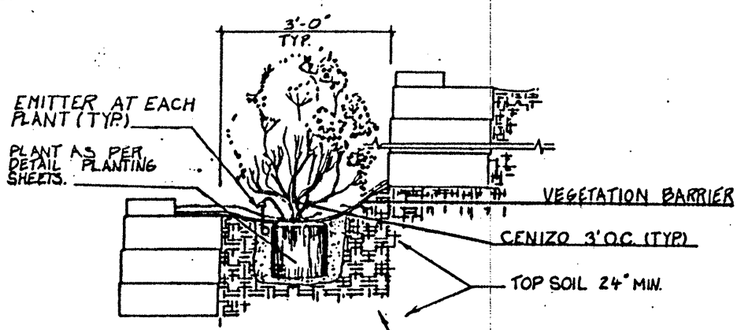

PLANTINING AND IRRIGATION DETAIL

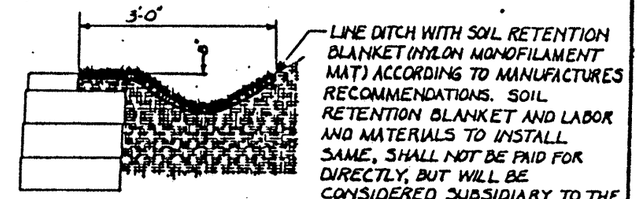

DRAIN DITCH DETAIL

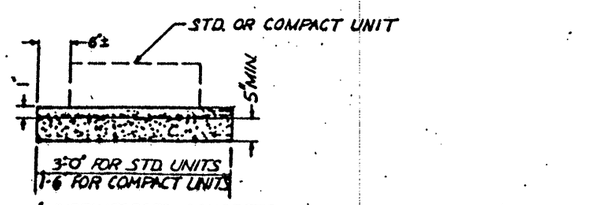

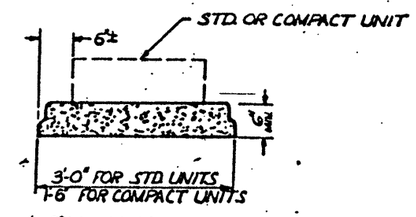

LEVELING PAD OPTIONS

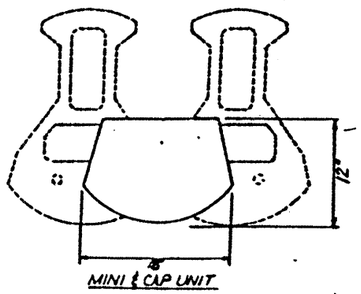

MINI & CAP UNIT

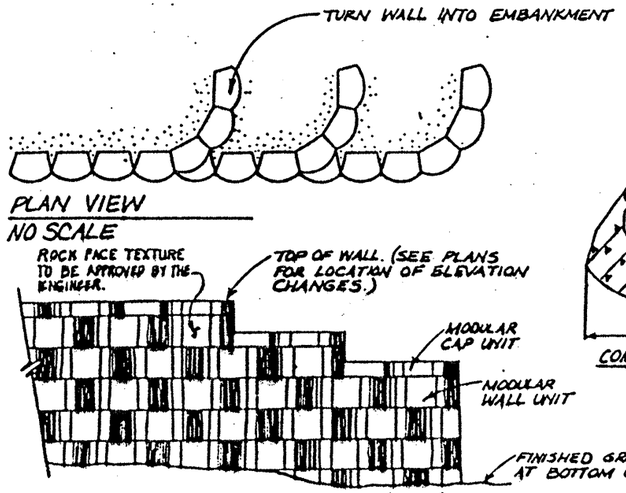

PLAN VIEW
NO SCALE

ELEVATION OF WALL SHOWING STEP-DOWN INTO GRADE

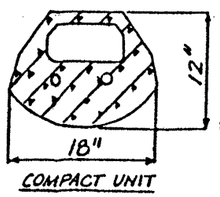

COMPACT UNIT

REMOVE THE EXTENDED TAIL PIECES AT GROVES TO RETURN THE BLOCK SHAPE TO ITS 30" SIDES WHEN BUILDING TIGHT CONVEX CURVS.

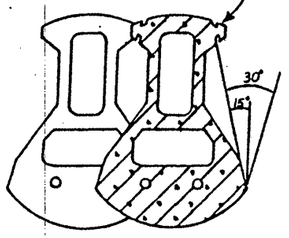

STANDARD UNIT

* NOTE: PRIOR TO CONSTRUCTION OF LANDSCAPE BARRIER WALL, THE CONTRACTOR SHALL SUBMIT MANUFACTURERS SPECS, CONSTRUCTION SEQUENCE AND FABRICATION DETAIL FOR APPROVAL BY THE ENGINEER. THE LANDSCAPE BARRIER WALL SHALL BE FABRICATED AND INSTALLED IN ACCORDANCE WITH ITEM 423 RETAINING WALL (LANDS. BARRIER WALL) WALL COLOR SHALL BE MESA - BEIGE, AND SHALL BE SUBMITTED FOR APPROVAL TO THE ENGINEER BEFORE MANUFACTURING AND INSTALLING.

CONT	SECT	JOB	HWY
0039	17	097	US83/281
FED. NO. STP-50	FEDERAL AID PROJECT NO.		SHEET NO.
6	NH 92(50)M		483B

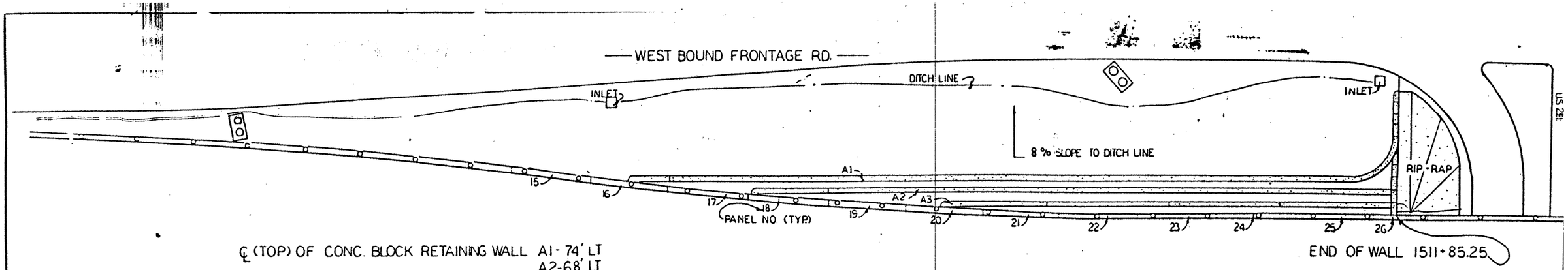

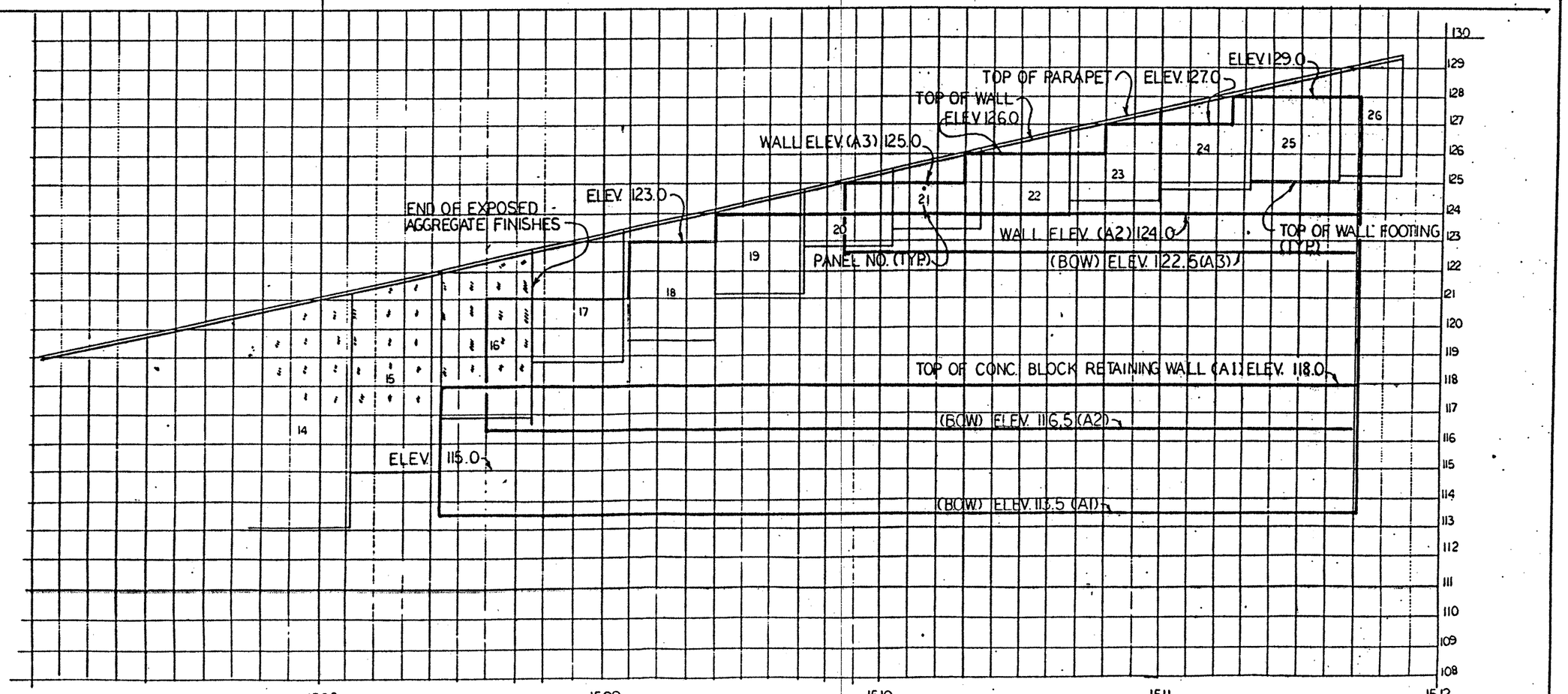

ESTIMATED SHEET TOTALS	QTY.
CENIZO	375 EA.
IRRIGATION EMITTERS	375 EA.
RETAINING WALL	4482 SF

LANDSCAPING

-26427 P TOTAL

FED. RD. DIV. NO.	FEDERAL AID PROJECT NO.		SHEET NO.
6	NH 92(501)M		403C
STATE	STATE DIST. NO.	COUNTY	
TEXAS	21	HIDALGO	
CONT.	SEC.	JOB	HIGHWAY NO.

CONTROLLER B

MATCH LINE

197750 N

2104750 E

US 281

S 4°52'42"W

5.00

FM 495

MH

TL

197750 N

2104500 E

MATCH LINE
STA. 851+75.

LEGEND : □ - AUTOMATIC DRAIN VALVE
○ - HUNTER I-20 36V ON PVC RISERS SEE SHEET 490.
◻ - HUNTER I-20 ADV WITH CONC. DONUTS SEE SHEET 490.
○ - 2 CONTROL VALVES.
NOTE : ALL HEADS SHALL BE FITTED WITH HEAD LOCKS SEE SHEET 490.

	QTY.
□	2
○	15
◻	13
○	3

CALL
VALLEY GARDEN CENTER INC.
701 E. Hwy. 83
McALLEN, TEXAS 78501
(512) 682-9411
for service

LANDSCAPING

FED. RD. DIST. NO.	FEDERAL AID PROJECT NO.	SHEET NO.
6	NH 92 ( )M	483D
STATE	STATE DIST. NO.	COUNTY
TEXAS	21	HIDALGO

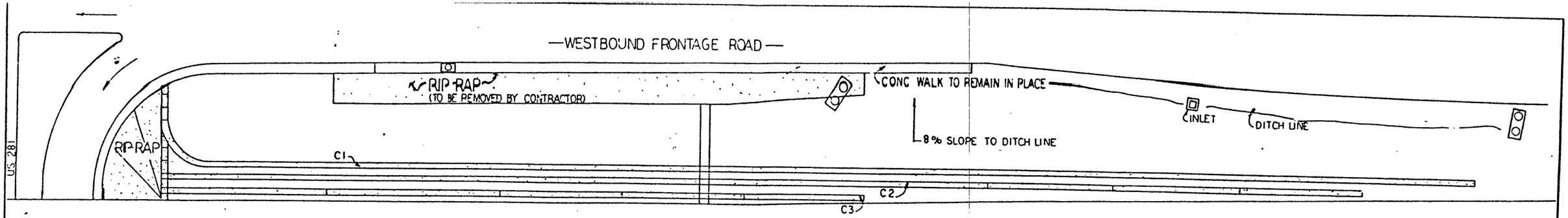

℄ (TOP) OF CONC. BLOCK RETAINING WALL C1 - 74' LT
C2 - 68' LT
C3 - 62' LT

—US 83 EXPRESSWAY—

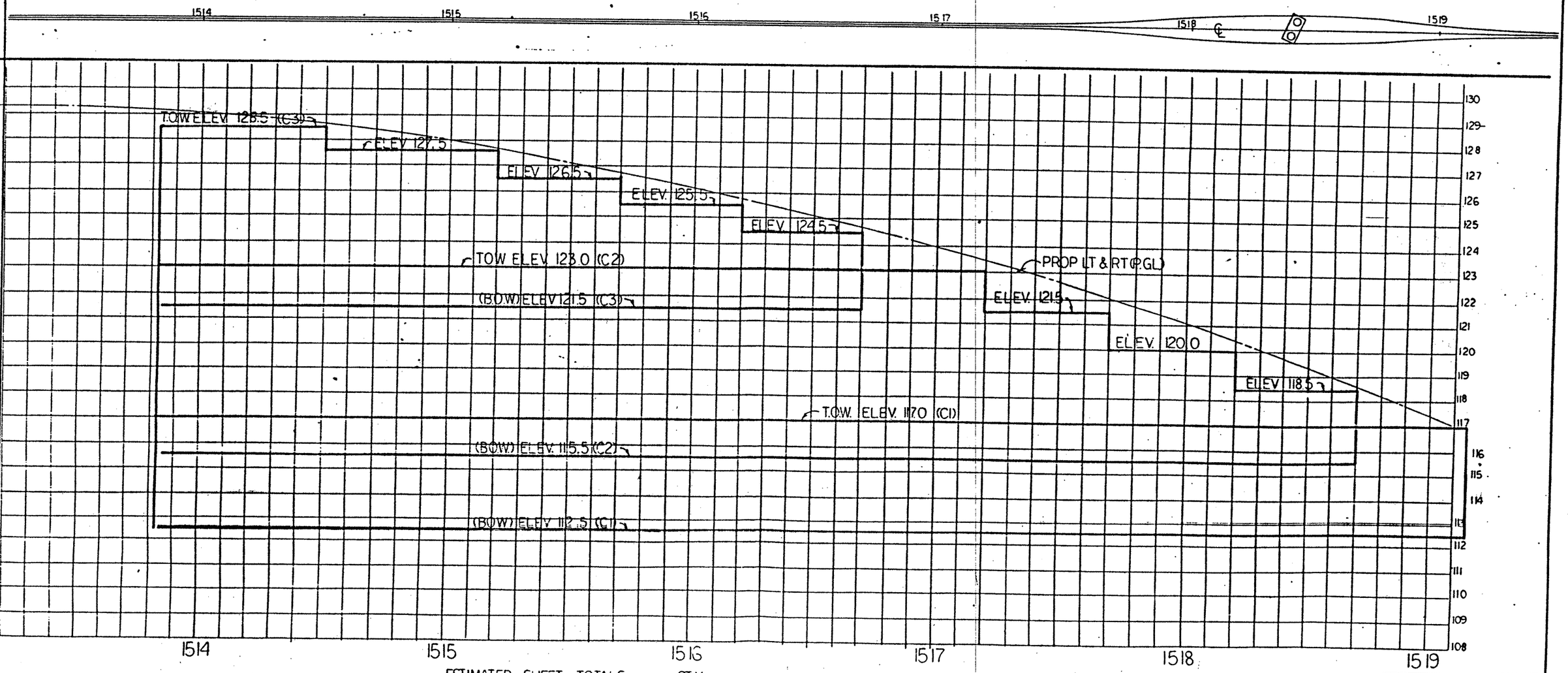

ESTIMATED SHEET TOTALS	QTY
CENZO	670 EA.
IRRIGATION EMITTERS	670 EA.
RETAINING WALL	7315 S.F.

LANDSCAPING

FED. ROAD DIV. NO.	FEDERAL AID PROJECT NO.	SHEET NO.
6	NH 92(50)M	483E
STATE	STATE DIST. NO. / COUNTY	
TEXAS	21 / HIDALGO	

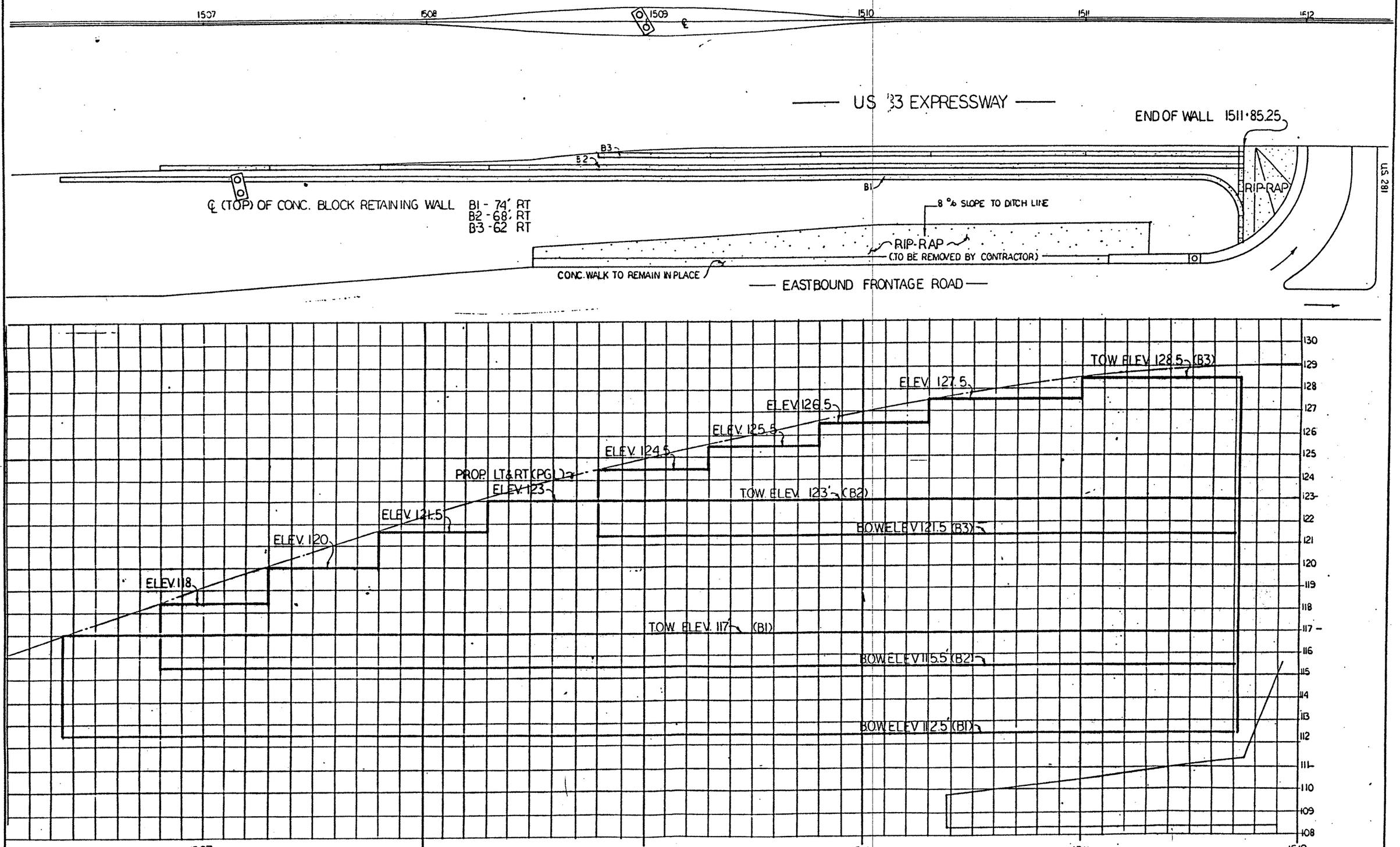

*NOTE:
IRRIGATION EMITTERS SHALL INCLUDE ALL ITEMS NECESSARY TO COMPLETE THE SYSTEM. (TYP.)

ESTIMATED SHEET TOTALS	QTY.
CENIZO	670 EA
IRRIGATION EMITTERS*	670 EA
RETAINING WALL	7315 SF

LANDSCAPING

FED. RD. DIV. NO.	FEDERAL AID PROJECT NO.	SHEET NO.
6	NH 92 (50) M	483F

STATE	STATE DIST. NO.	COUNTY
TEXAS	21	HIDALGO

CONT.	SECT.	JOB	HIGHWAY NO.
8038	12	69.7	US83/281

MATCH LINE
STA. 851+75

N

MATCH LINE

S 4° 52' 42" W

US 281

855+00

PC 853+64.96

10+00

PC 11+48.38

S 4° 52' 42" W

10+00

MATCH LINE

MATCH LINE
STA. 857+82

LEGEND:		QTY EST.
□	- AUTOMATIC DRAIN VALVE	4
○	- HUNTER-I 20 36V. ON PVC RISERS.	33
⌓	- HUNTER I 20 ADV WITH CONC. DONUTS SEE SHEET 490.	22
⬡	- 2" CONTROL VALVES.	9

NOTE: ALL HEADS [redacted] FITTED WITH HEAD LOCKS SEE GEN. NOTES.

STATE OF TEXAS
STEPHEN WALKER
4439
LICENSED IRRIGATOR

LANDSCAPING

SHEET 2 OF 4

FED. RD. DIV. NO.	FEDERAL AID PROJECT NO.		SHEET NO.
6	NH 92 ( )M		484
STATE	STATE DIST. NO.	COUNTY	
TEXAS	21	HIDALGO	
CONT.	SECT.	JOB	HIGHWAY NO.
39	17	97	US 83/281

CONTROLLER B

MATCH LINE
STA. 851+75

VALLEY GARDEN CENTER INC.
701 E. Hwy. 83
McALLEN, TEXAS 78501
(512) 682-9411
for service

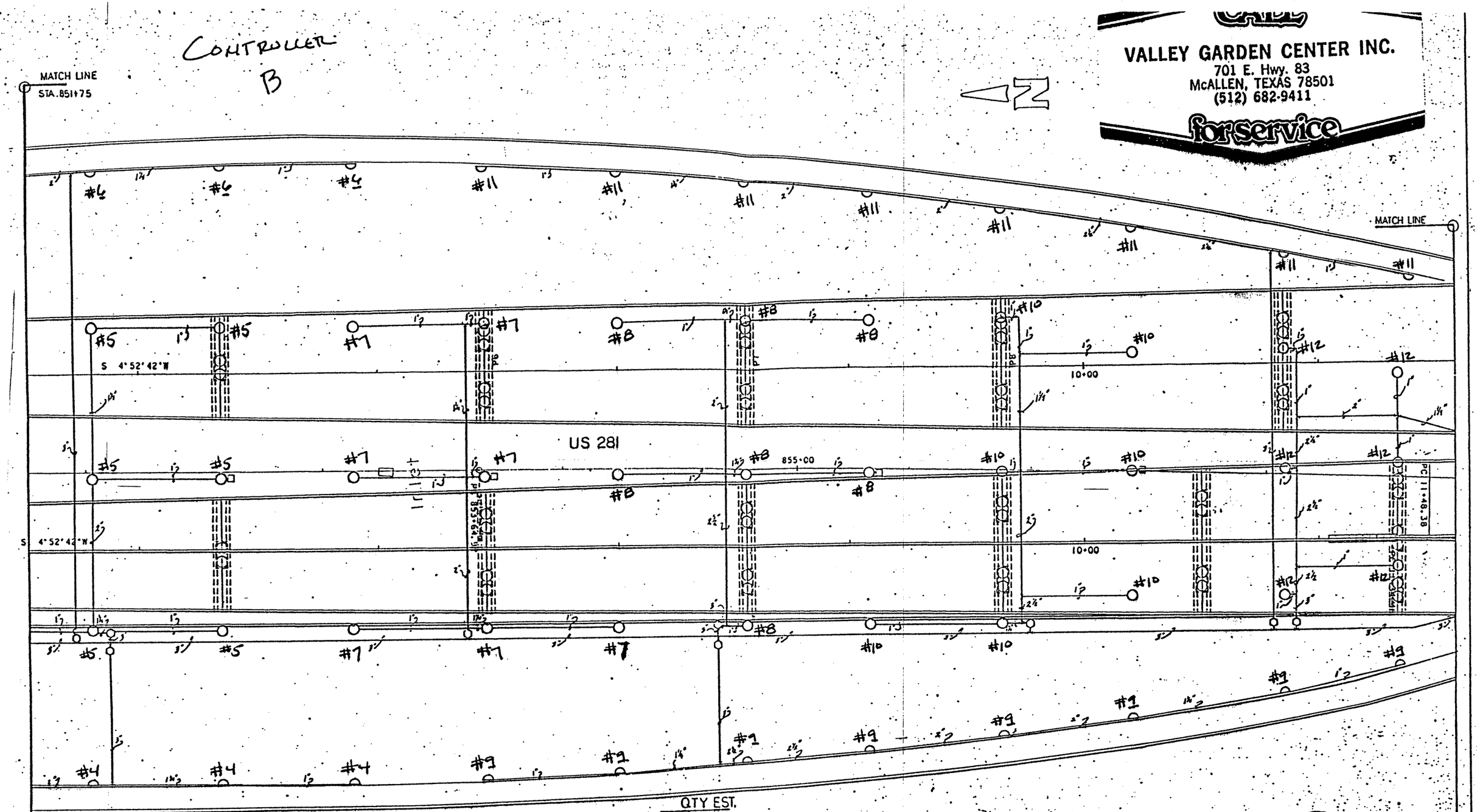

QTY EST.	
LEGEND: □ - AUTOMATIC DRAIN VALVE	4
○ - HUNTER I 20 36V. ON PVC RISERS.	33
⌓ - HUNTER I 20 ADV. WITH CONC. DONUTS SEE SHEET 490.	22
○ - 2" CONTROL VALVES.	9

NOTE: ALL HEADS SHALL BE FITTED WITH HEAD LOCKS SEE GEN. NOTES.

LANDSCAPING

SHEET 2 OF 4

FED. RD. DIV. NO.	FEDERAL AID PROJECT NO.		SHEET NO.
6	NH 92 ( )M		484A
STATE	STATE DIST. NO.	COUNTY	
TEXAS	21	HIDALGO	
CONT.	SECT.	JOB	HIGHWAY NO.
39	17	97	US 83/281

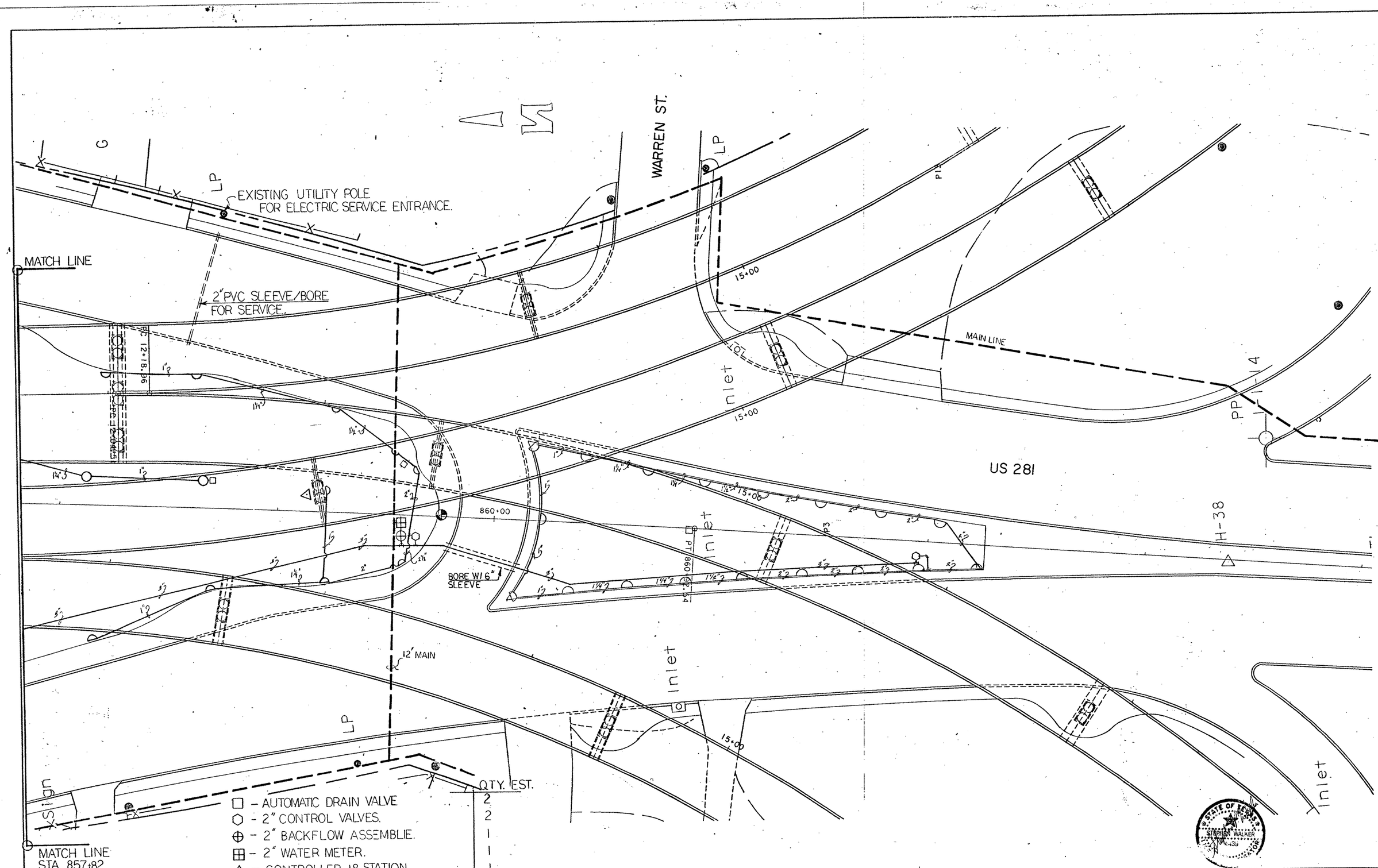

	QTY. EST.
□ – AUTOMATIC DRAIN VALVE	2
⬡ – 2" CONTROL VALVES.	2
⊕ – 2" BACKFLOW ASSEMBLIE.	1
⊞ – 2" WATER METER.	1
△ – CONTROLLER. 18 STATION	1
○ – HUNTER I-20 36V ON PVC RISERS.	2
⌓ – HUNTER I-20 ADV WITH CONC. DONUTS. SEE SHT. 490	27

NOTE: ALL HEADS [redacted] FITTED WITH HEAD LOCKS
SEE GEN. NOTES

LANDSCAPING

SHEET 3 OF 4

FED. RD. DIV. NO.	FEDERAL AID PROJECT NO.		SHEET NO.
6	NH 92 ( )M		485
STATE	STATE DIST. NO.	COUNTY	
TEXAS	21	HIDALGO	
CONT.	SECT.	JOB	HIGHWAY NO.
39	17	97	US 83/281

CONTROLLER B

CALL

VALLEY GARDEN CENTER INC.
701 E. Hwy. 83
McALLEN, TEXAS 78501
(512) 682-9411

for service

EXISTING UTILITY POLE FOR ELECTRIC SERVICE ENTRANCE.

MATCH LINE

2" PVC SLEEVE/BORE FOR SERVICE.

WARREN ST.

MAIN LINE

US 281

H-38

BORE W/ 6" SLEEVE

12" MAIN

Inlet

MATCH LINE STA. 857+82

	QTY. EST.
□ – AUTOMATIC DRAIN VALVE	2
○ – 2" CONTROL VALVES.	2
⊕ – 2" BACKFLOW ASSEMBLIE.	1
⊞ – 2" WATER METER.	1
△ – CONTROLLER. 18 STATION	1
○ – HUNTER I-20 36V ON PVC RISERS.	2
○ – HUNTER I-20 ADV WITH CONC. DONUTS. SEE SHT. 490	27

NOTE: ALL HEADS SHALL BE FITTED WITH HEAD LOCKS

SEE GEN. NOTES.

LANDSCAPING

SHEET 3 OF 4

FED. AID DIST. NO.	FEDERAL AID PROJECT NO.	SHEET NO.
6	NH 92 ( )M	485A
STATE	STATE DIST. NO.	COUNTY
TEXAS	21	HIDALGO
CONT.	SECT.	JOB	HIGHWAY NO.
39	17	97	US 83/281

LEGEND:	QTY, (SHEET TOTAL) EST.
◉ - HUNTER 120 W/CONC. DONUT	10
◓ - HUNTER 120 W/CONC. DONUT	22
○ - 2" ELECTRIC GLOBE VALVE	5
□ - 2" WATER METER	1
▽ - CONTROLLER 24 STATION	1
○ - BACKFLOW ASSEMBLIE	1

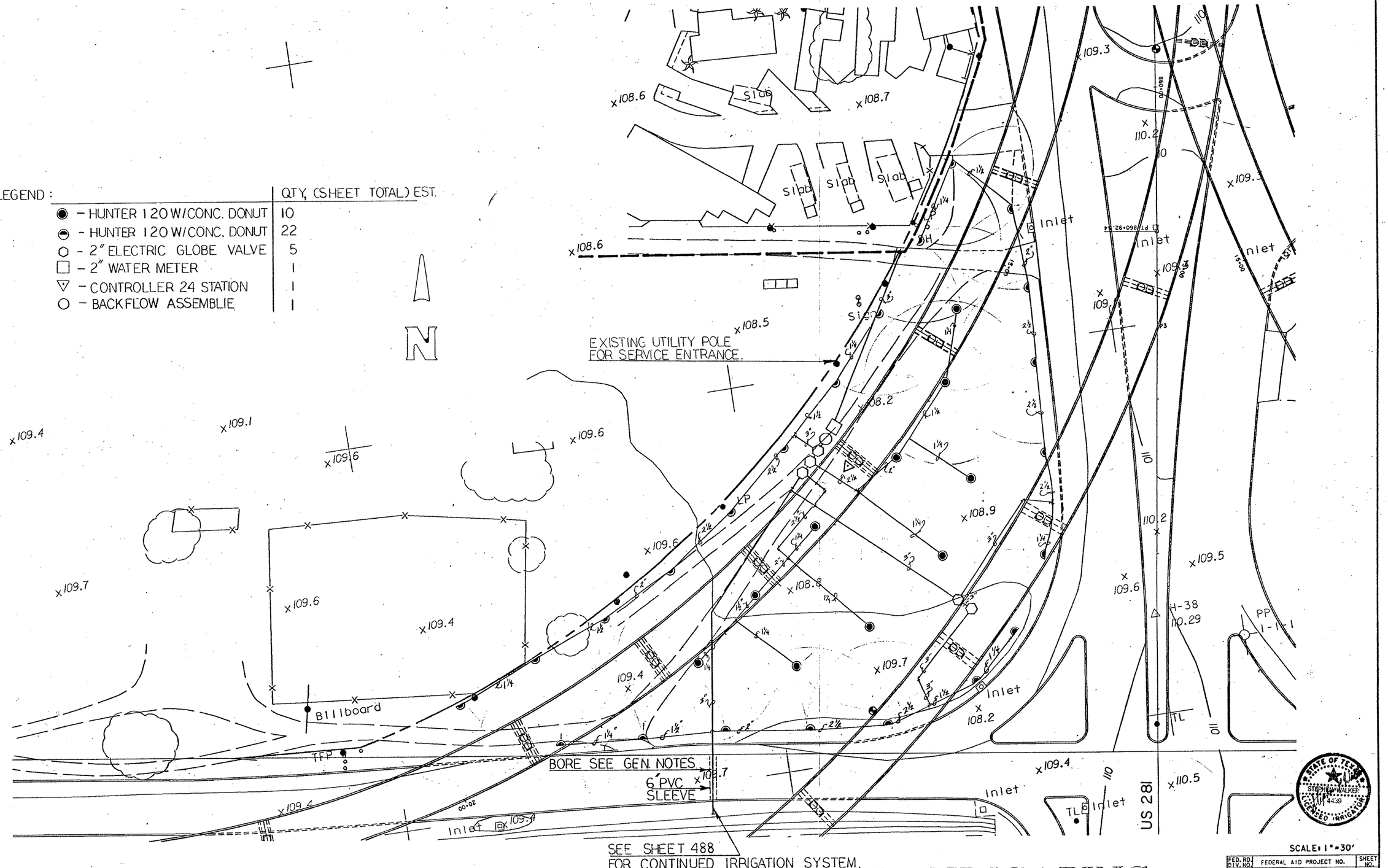

LANDSCAPING

SCALE: 1"=30'

FED. RD. DIV. NO.	FEDERAL AID PROJECT NO.		SHEET NO.
6	NH92( )M		486
STATE	STATE DIST. NO.	COUNTY	
TEXAS	21	HIDALGO	
CONT.	SECT.	JOB	HIGHWAY NO.
39	17	97	US281/US83

[325116]2STEV.DGN 1PARM: SAME

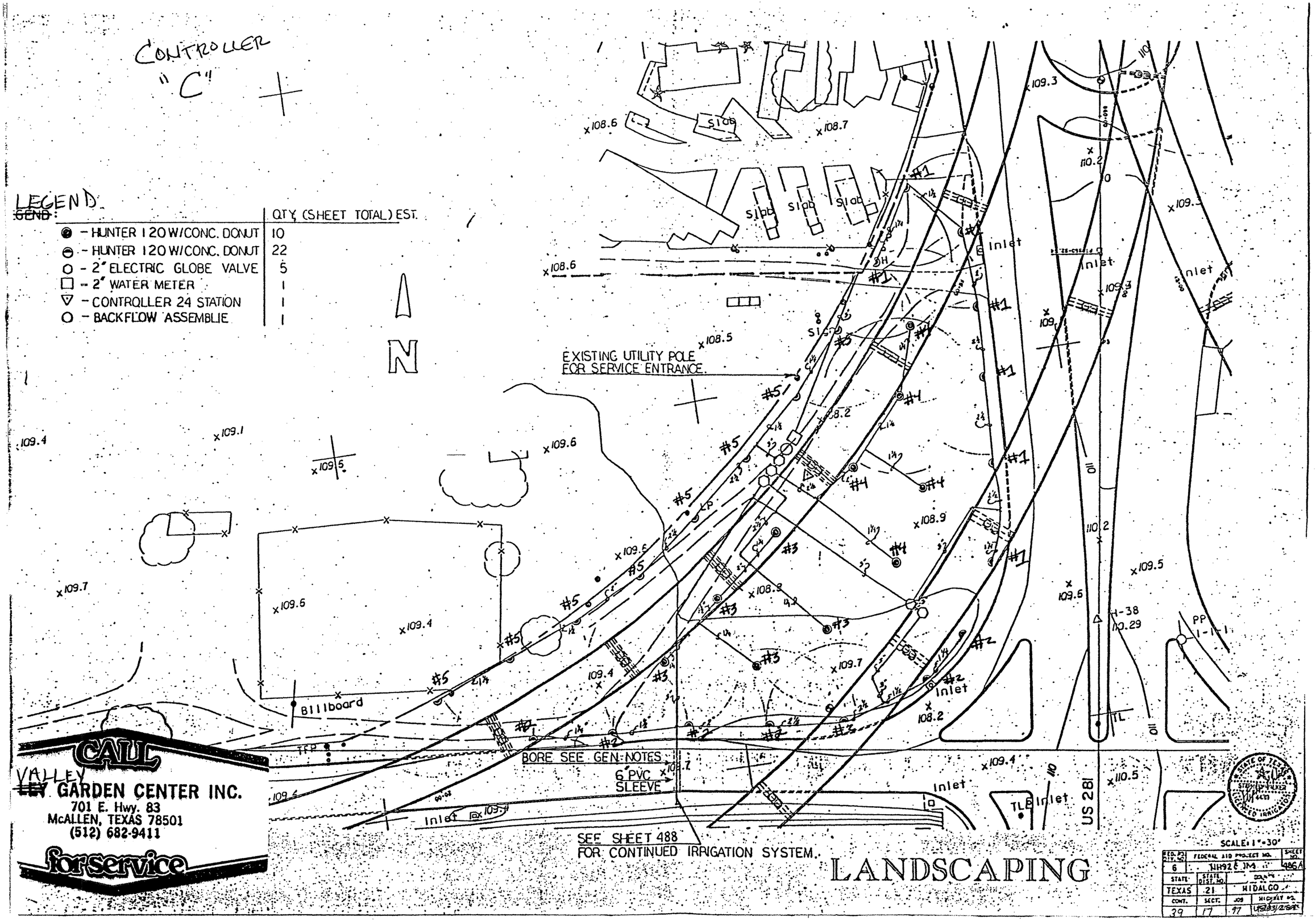
CONTROLLER "C"
LEGEND
~~GEND~~:
QTY (SHEET TOTAL) EST.
- HUNTER 120 W/CONC. DONUT 10
- HUNTER 120 W/CONC. DONUT 22
- 2" ELECTRIC GLOBE VALVE 5
- 2" WATER METER 1
- CONTROLLER 24 STATION 1
- BACKFLOW ASSEMBLIE 1
N
EXISTING UTILITY POLE FOR SERVICE ENTRANCE.
BORE SEE GEN. NOTES
6" PVC SLEEVE
SEE SHEET 488 FOR CONTINUED IRRIGATION SYSTEM.
Billboard
Slab
Inlet
US 281
CALL
VALLEY GARDEN CENTER INC.
701 E. Hwy. 83
McALLEN, TEXAS 78501
(512) 682-9411
for service
LANDSCAPING
SCALE: 1"=30'
FEDERAL AID PROJECT NO.
NH92 JM
SHEET NO.
486A
STATE
TEXAS
STATE DIST. NO.
21
HIDALGO
CONT.
SECT.
JOB
HIGHWAY NO.
39
17
97
US 281

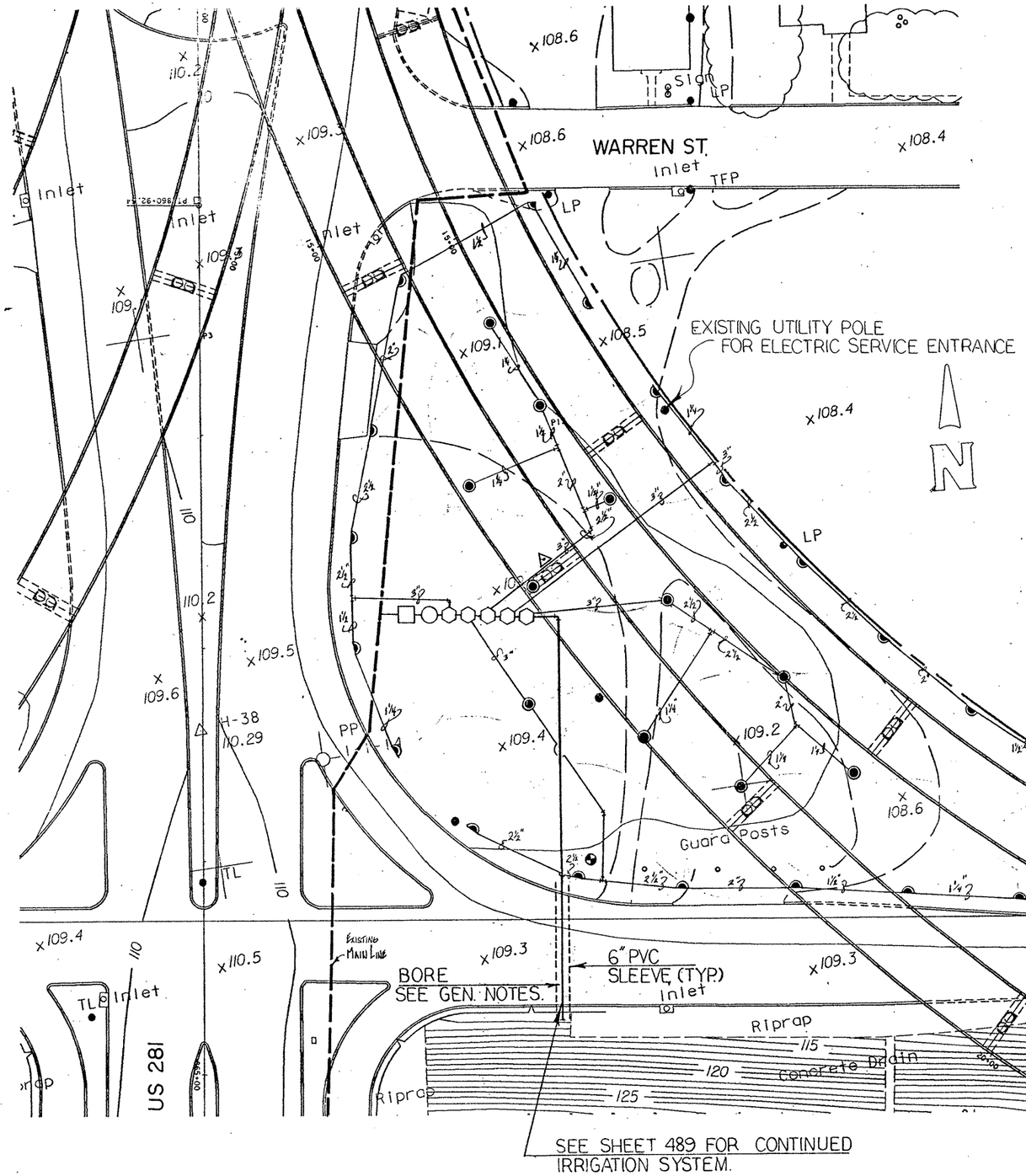

LEGEND:

	QTY, (SHEET TOTAL) EST.
◉ – HUNTER I-20 W/CONC. DONUT.	11
◓ – HUNTER I20 ADJ W/ CONC. DONUT.	20
⬡ – 2" ELECTRIC GLOBE VALVE.	5
□ – 2" WATER METER.	1
▽ – CONTROLLER. 24 STATION	1
○ – BACKFLOW ASSEMBLIE.	1

Under Constr

Stock Pile

Sign

Sign

LANDSCAPING

SCALE: 1"=30'

FED. RD. DIV. NO.	FEDERAL AID PROJECT NO.		SHEET NO.
6	NH 92( )M		487
STATE	STATE DIST. NO.	COUNTY	
TEXAS	21	HIDALGO	
CONT.	SECT.	JOB	HIGHWAY NO.
39	17	97	US281/US83

[325116]3STEV.DGN IPARM: SAME

CONTROLLER A
#1, 2, 3, 4, 5 ROTORYS GRASS

WARREN ST.

EXISTING UTILITY POLE FOR ELECTRIC SERVICE ENTRANCE

N

LEGEND:

	QTY, (SHEET TOTAL) EST.
⊙ – HUNTER I-20 W/CONC. DONUT.	11
⊙ – HUNTER I20 ADJ W/ CONC. DONUT.	20
○ – 2" ELECTRIC GLOBE VALVE.	5
□ – 2" WATER METER.	1
▽ – CONTROLLER. 24 STATION	1
○ – BACKFLOW ASSEMBLIE.	1

CALL

VALLEY GARDEN CENTER INC.
701 E. Hwy. 83
McALLEN, TEXAS 78501
(512) 682-9411

for service

BORE SEE GEN. NOTES.

6" PVC SLEEVE (TYP.)

Riprap

Concrete Apron

Guard Posts

Sign

US 281

SEE SHEET 489 FOR CONTINUED IRRIGATION SYSTEM.

LANDSCAPING

SCALE: 1"=30'

DIST. NO.	FEDERAL A-I PROJECT NO.		SHEET NO.
6	NH92( )M		487A
STATE	STATE DIST. NO.	COUNTY	
TEXAS	21	HIDALGO	
CONT.	SECT.	JOB	HIGHWAY NO.
39	17	97	US281/US83

[325116]3STEV.DGN [PARM: SAME

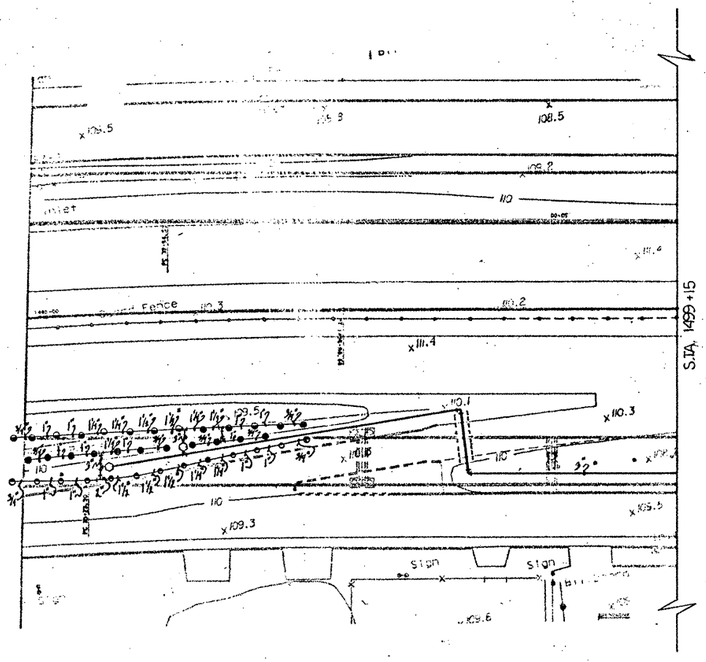

N

LEGEND.	QTY, (SHEET TOTAL.)
◉ HUNTER I-20 ADV. W/ CONC. DONUT.	62
⊖ PI5/220H WITH 37P.	45
● PI5/220F WITH 37P.	20
⬢ 310-5DLA STRIP WITH 37P.	60
⬡ 2" ELECTIRIC GLOBE VALVE.	13

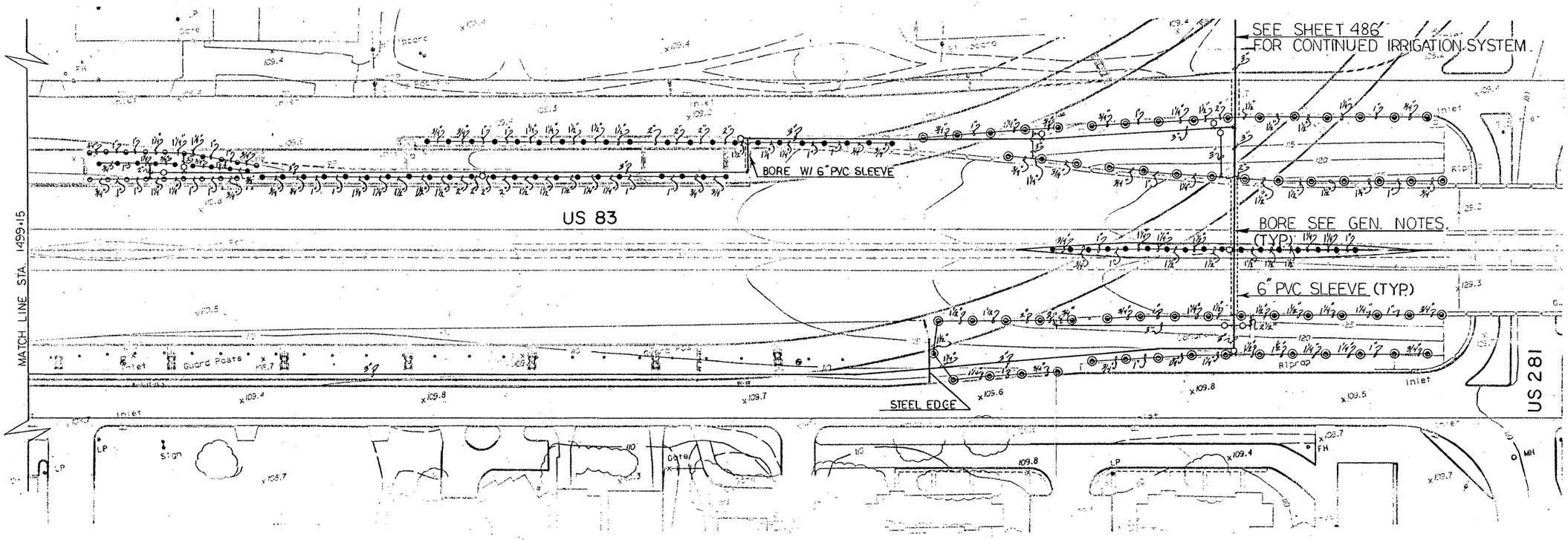

STATE OF TEXAS
STEPHEN WALKER
4439
LICENSED IRRIGATOR

IRRIGATION PLAN STA. 1494 – 1513

LANDSCAPING

FED. RD. DIV. NO.	FEDERAL AID PROJECT NO.		SHEET NO.
6	NH 92 ( )M		488
STATE	STATE DIST. NO.	COUNTY	
TEXAS	21	HIDALGO	
CONT.	SECT.	JOB	HIGHWAY NO.
39	17	97	US 83/281

CALL
VALLEY GARDEN CENTER INC.
701 E. Hwy. 83
McALLEN, TEXAS 78501
(512) 682-9411
for service

CONTROLLER "C"

VALVE #6 DRIP TOP PLANTER
#8 DRIP MIDDLE PLANTER
#9 DRIP BOTTOM PLANTER

#15 BUBBLERS (EAST)
#16 BUBBLERS (MIDDLE)
#17 BUBBLERS (WEST)
THE MIDDLE OF EXPRESSWAY 83

#18 DRIP TOP PLANTER
#20 DRIP MIDDLE PLANTER
#21 DRIP BOTTOM PLANTER

N

LEGEND		QTY. (SHEET TOTAL)
◎	HUNTER I-20 ADV. W/ CONC. DONUT	67
●	PI5/220H WITH 37P	45
●	PI5/220F WITH 37P	20
●	310-50LA STRIP WITH 37P	60
○	2" ELECTRIC GLOBE VALVE	13

RAMP #4
#22 SPRAYS (NORTH)
#23 SPRAYS SOUTH
RAMP #4
#13 SPRAYS (NORTH)
RAMP #3
#11 SPRAYS - FOR SAGE PURPLE
#10 SPRAYS - GRASS
#7 ROTORYS
SEE SHEET 488 FOR CONTINUED IRRIGATION SYSTEM
BORE W/ 6" PVC SLEEVE
#14 SPRAYS (SOUTH)
RAMP #3
#12 SPRAYS CENTER STRIPS
US 83
RAMP #3
BORE SEE GEN. NOTES (TYP)
6" PVC SLEEVE (TYP)
STEEL EDGE
US 281
#19 SPRAYS ALONG FRONTAGE RD

STATE OF TEXAS
STEPHEN WALKER
4439
REGISTERED IRRIGATOR

IRRIGATION PLAN STA. 1494 - 1513

LANDSCAPING

FED. RD. DIV. NO.	FEDERAL AID PROJECT NO.	SHEET NO.
6	NH 52 (3M)	488A
STATE	STATE DIST. NO.	COUNTY
TEXAS	21	HIDALGO

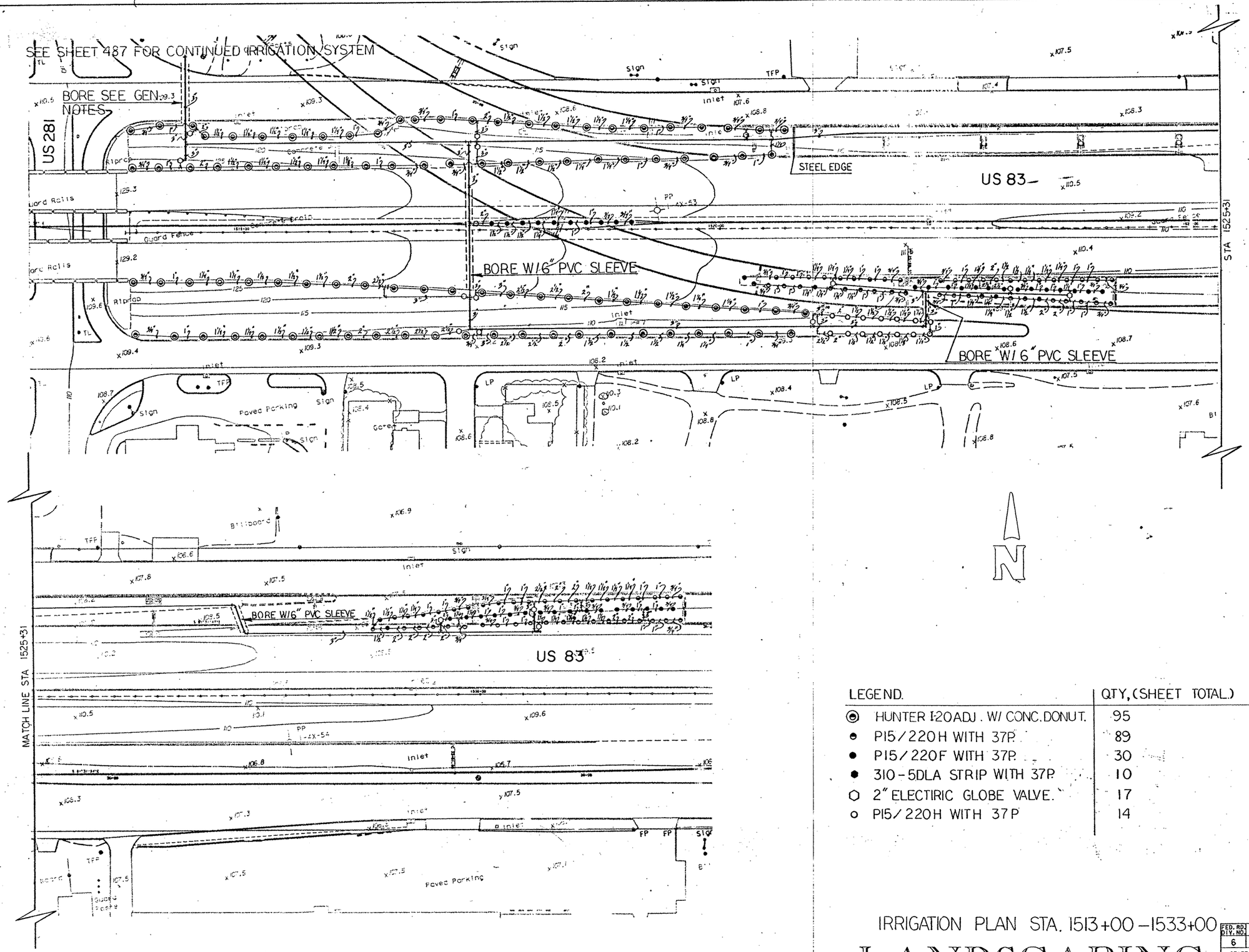

N

LEGEND.	QTY, (SHEET TOTAL.)
◉ HUNTER I-20 ADJ. W/ CONC. DONUT.	95
● P15/220H WITH 37P.	89
● P15/220F WITH 37P.	30
● 310-5DLA STRIP WITH 37P.	10
⬡ 2" ELECTIRIC GLOBE VALVE.	17
○ P15/220H WITH 37P	14

STEPHEN WALKER 4439 LICENSED IRRIGATOR STATE OF TEXAS

IRRIGATION PLAN STA. 1513+00 – 1533+00

LANDSCAPING

FED. RD. DIV. NO.	FEDERAL AID PROJECT NO.		SHEET NO.
6	NH 92( )M		489
STATE	STATE DIST. NO.	COUNTY	
TEXAS	21	HIDALGO	
CONT.	SECT.	JOB	HIGHWAY NO.
39	17	97	US 83/281

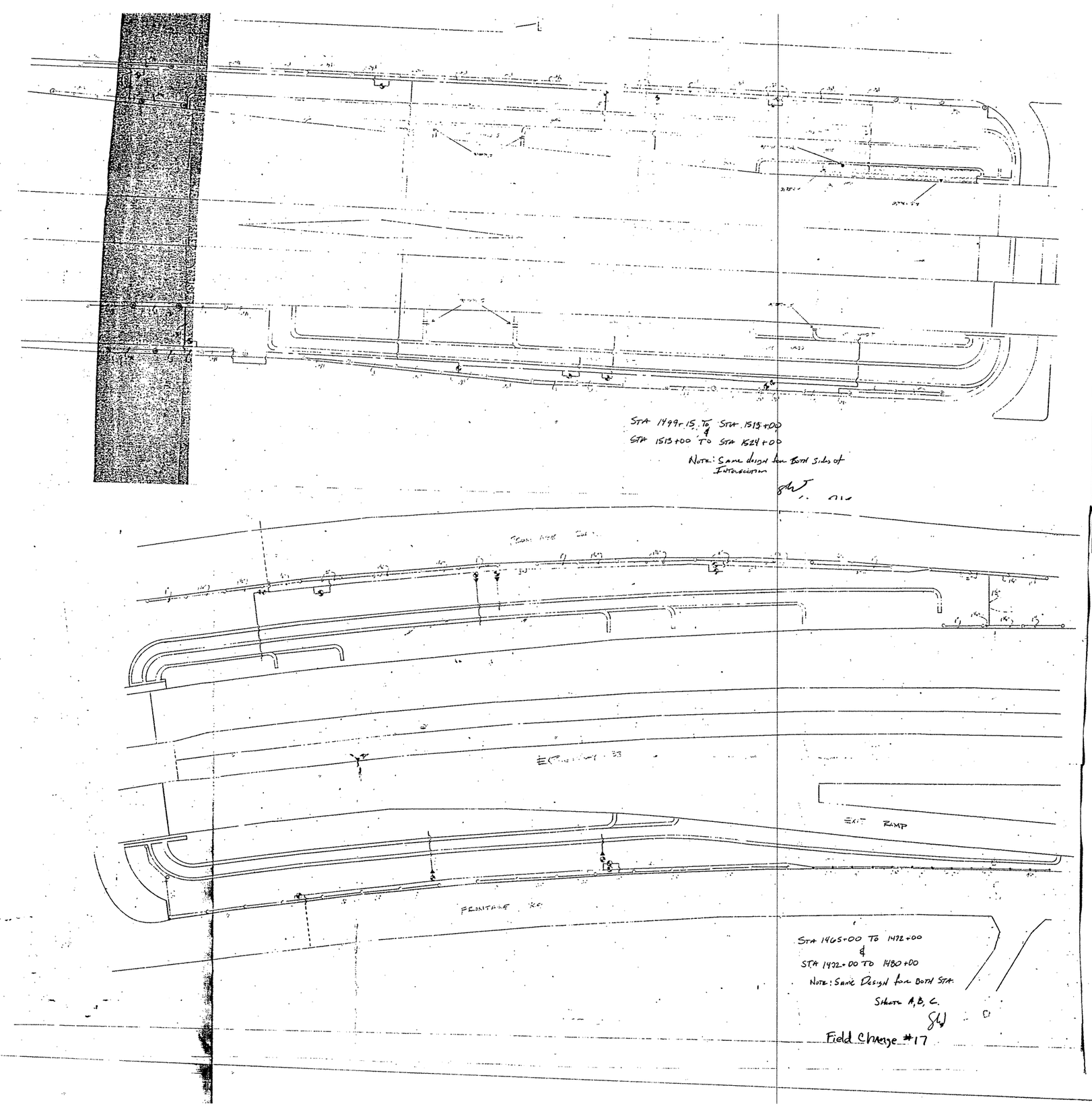

STA 1499+15 TO STA 1513+00
&
STA 1513+00 TO STA 1524+00
NOTE: Same design for Both Sides of Intersection

STA 1465+00 TO 1472+00
&
STA 1472+00 TO 1480+00
NOTE: Same Design for Both STA.
Sheets A, B, C.

Field Change #17

FED. RD. DIV. NO.	FEDERAL AID PROJECT NO.		SHT. NO.
6	NH92(50)M		188A
STATE	STATE DIST. NO.	COUNTY	
TEXAS	21	HIDALGO	
CONT	SECT	JOB	HIGHWAY NO.
39	17	97	US281/US83

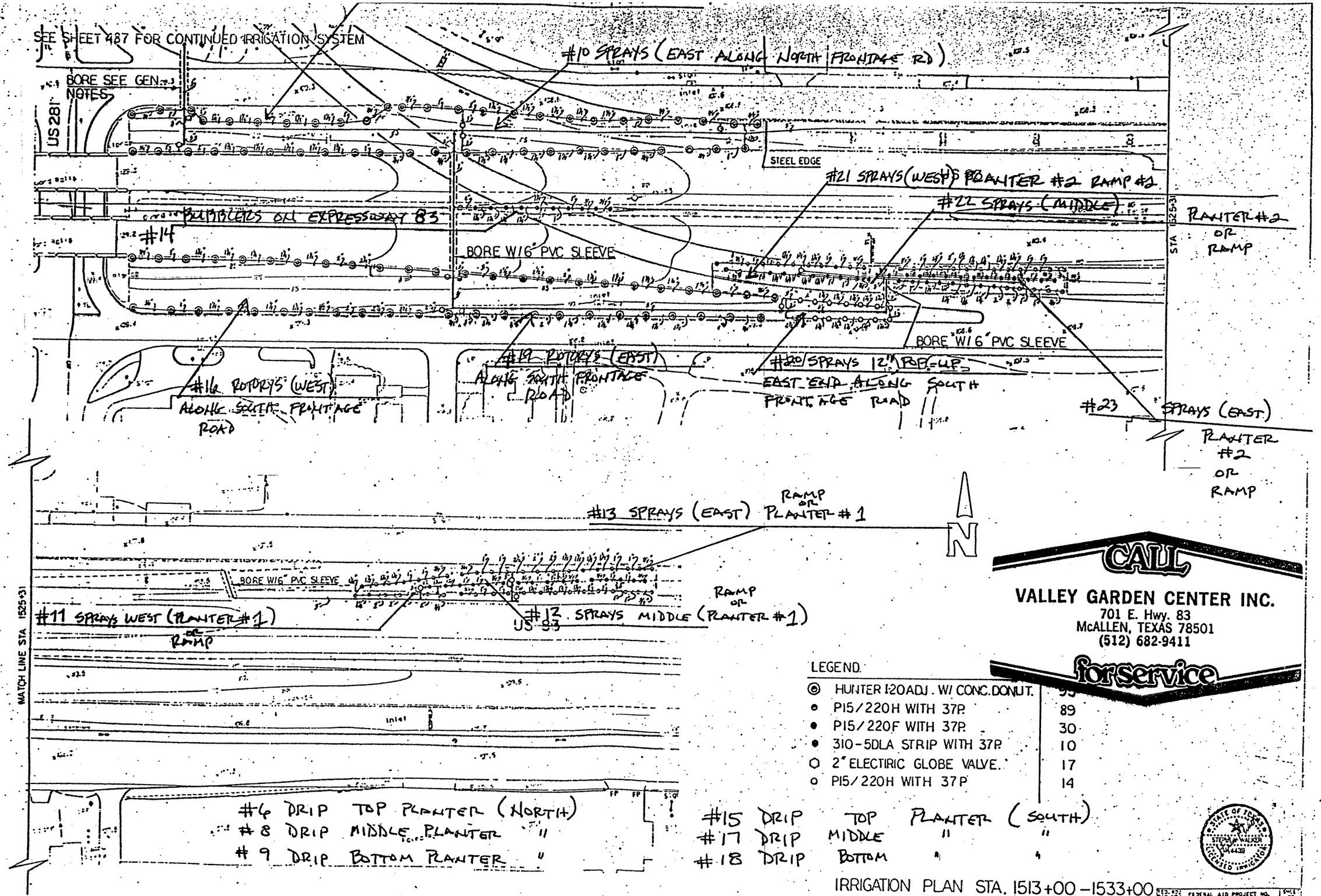

CALL

VALLEY GARDEN CENTER INC.
701 E. Hwy. 83
McALLEN, TEXAS 78501
(512) 682-9411

for service

LEGEND.

◎ HUNTER I-20 ADJ. W/ CONC. DONUT.	95
○ P15/220H WITH 37P.	89
● P15/220F WITH 37P.	30
● 310-5DLA STRIP WITH 37P.	10
○ 2" ELECTIRIC GLOBE VALVE.	17
○ P15/220H WITH 37P	14

STATE OF TEXAS STEPHEN WALKER 4439 LICENSED IRRIGATOR

IRRIGATION PLAN STA. 1513+00 – 1533+00

LANDSCAPING

FED. RD. DIV. NO.	FEDERAL AID PROJECT NO.	SHEET NO.
6	NH 92( )M	489
STATE	STATE DIST. NO.	COUNTY
TEXAS	21	HIDALGO
39	17 97	US 83 (281)

PROJECT US 83
PROJECT NO. H93202 PAGE 6 OF 6

TENSAR

1472+16 ND 1470+4250
RIGHT

SOIL	γ	φ	C
1	125	30	0
2	125	34	500
3	125	34	0
4	100	0	0
5	250	0	0
6	100	0	200
7	250	0	200

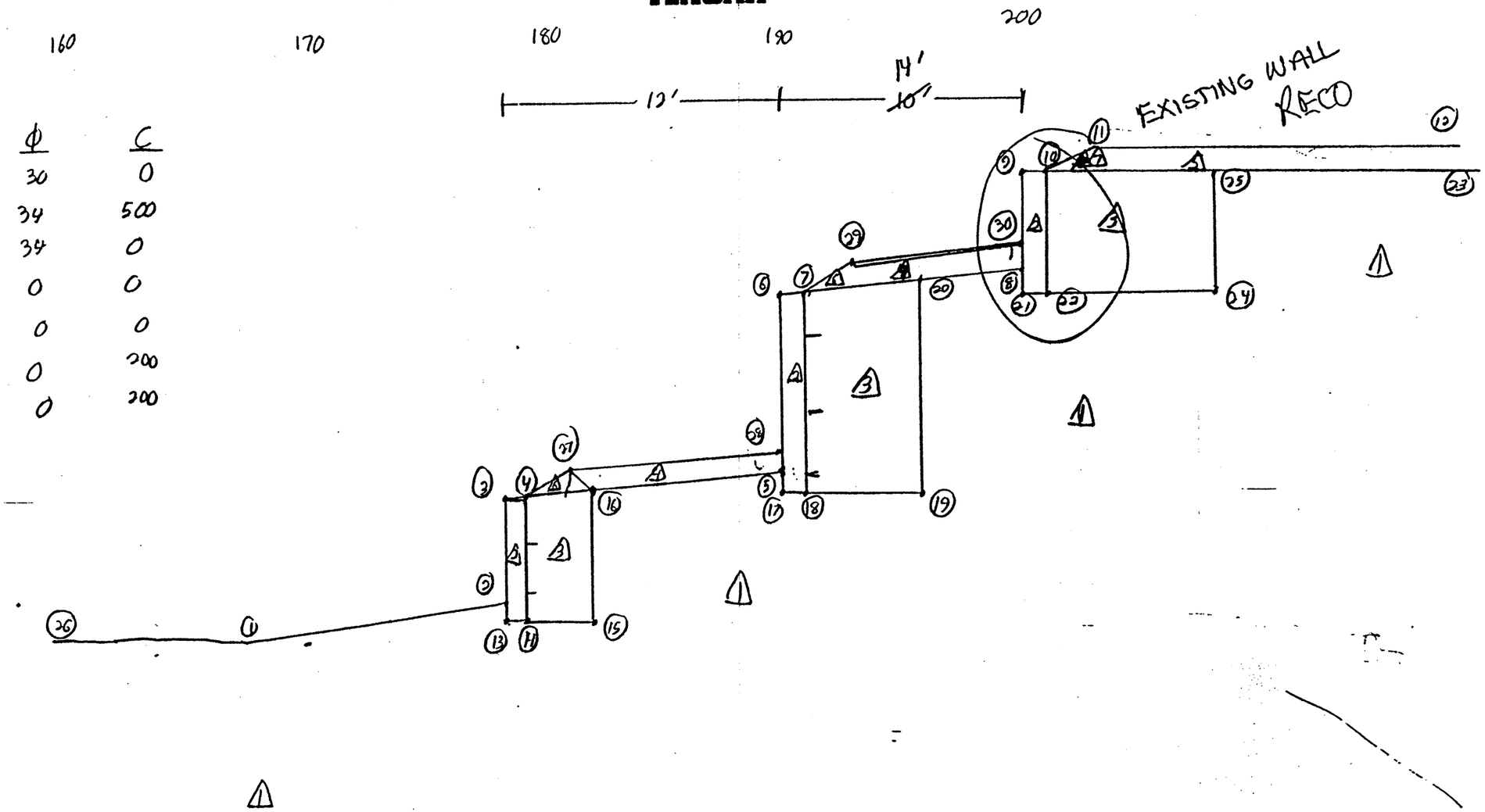

REVISIONS

BY ____ DATE ____ CHK ____
BY ____ DATE ____ CHK ____

BY JDE DATE 9/2/93
CHK BY TLR DATE 9/2/93

FED. RD. DIV. NO.	FEDERAL AID PROJECT NO.	SHEET NO.
6	NH92 ( )M	489C
STATE	STATE DIST. NO.	COUNTY
TEXAS	21	HIDALGO
CONT.	SECT.	JOB	HIGHWAY NO.
39	17	97	US 83/281

Tensar Earth Technologies, Inc.

AND RIGHT

SOIL	γ	ϕ	C
1	125	30	0
2	125	34	500
3	125	34	0
4	100	0	0
5	250	0	0
6	100	0	200
7	250	0	200

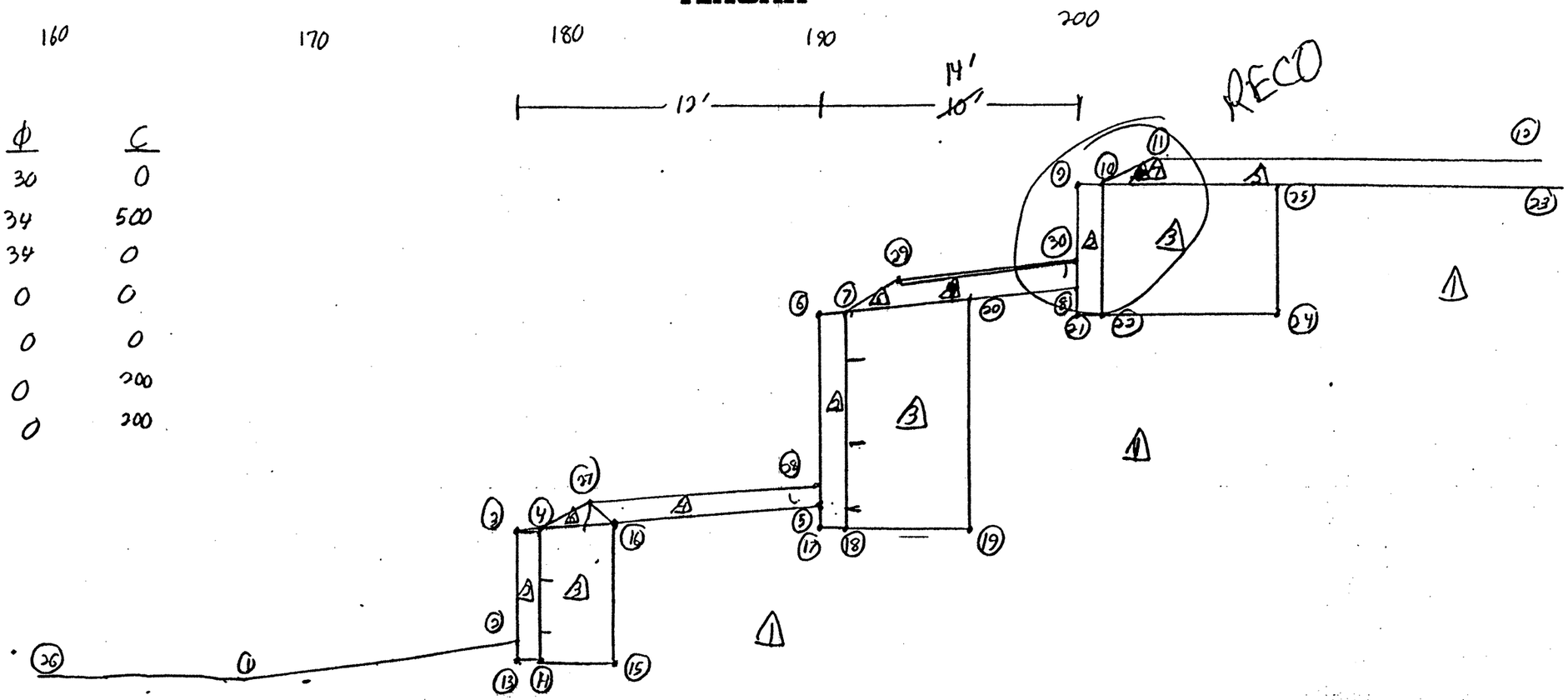

REVISIONS

BY _____ DATE _____ CHK _____

BY _____ DATE _____ CHK _____

BY J.E DATE 9/2/93

CHK BY TLR DATE 9/13/93

PROJECT US 83

PROJECT NO. H93202 PAGE 6 OF 6

FED.RD. DIV.NO.	FEDERAL AID PROJECT NO.		SHEET NO.
6	NH 92 ( )M		189 D
STATE	STATE DIST.NO.	COUNTY	
TEXAS	21	HIDALGO	
CONT.	SECT.	JOB	HIGHWAY NO.
39	19	94	US 83/281

Tensar Earth Technologies, Inc.

EXPRESSWAY 83

EXPRESSWAY 83

#3 #3 #3

#2

#2

#7 #7

#6

#6 #6

#1

#4

#5

FRONTAGE RD

FRONTAGE RD

SUGAR ROAD

S. SUGAR ROAD

SOUTH SIDE DRIP & SPRAY SYSTEM

FED. RD. DIV. NO.	FEDERAL AID PROJECT NO.		SHEET NO.
6	NH 92 ( )M		489E
STATE	STATE DIST. NO.	COUNTY	
TEXAS	21	KLEBERG	
CONT.	SECT.	JOB	HIGHWAY NO.
39	12	ETC.	US 83/281

LEFT

TENSAR

SOIL	γ	ϕ	C
1	125	30	0
2	125	34	500
3	125	34	0
4	100	0	0
5	250	0	0
6	100	0	200
7	250	0	200

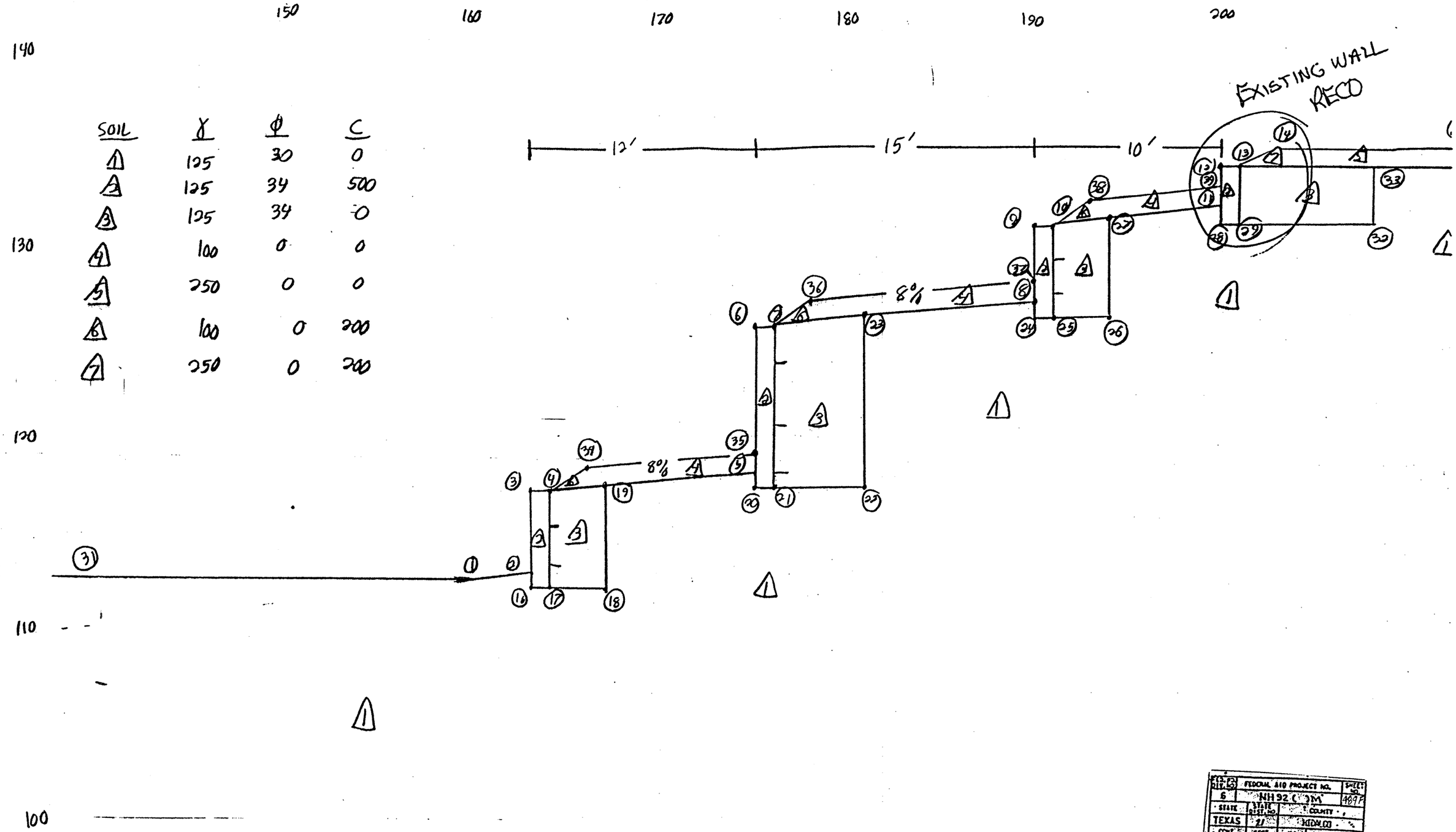

BY JDE DATE 9/2/93
CHK BY TLR DATE 9/2/93

REVISIONS

BY ____ DATE ____ CHK ____
BY ____ DATE ____ CHK ____

FED. RD. DIV. NO.	FEDERAL AID PROJECT NO.	SHEET NO.
6	NH 92 ( )M	489F
STATE	STATE DIST. NO.	COUNTY
TEXAS	21	HIDALGO
CONT.	SECT.	JOB	HIGHWAY NO.
39	17	97	US 83/281

Tensar Earth Technologies, Inc.

EXPRESSWAY 83

#6 #6 #4 #4 #4 #4 #3 #2 #5

EXPRESSWAY 83

#12 #12 #12 #11 #10 #10 #9 #7 #8

FRONTAGE ROAD

FRONTAGE ROAD

C

3" MAIN

SUGAR ROAD

N. SUGAR RD.

NORTH

NORTHSIDE

FED. AID PROJ. NO.	FEDERAL AID PROJECT NO.		SHEET NO.
6	NH92 ( )M		489G
STATE	STATE DIST. NO.	COUNTY	
TEXAS	21	MIDLAND	
CONT.	SECT.	JOB	HIGHWAY NO.
39	12	[illegible]	US 85/281

TYPICAL INSTALLATION OF MARK SERIES CONTROLLER & VALVES

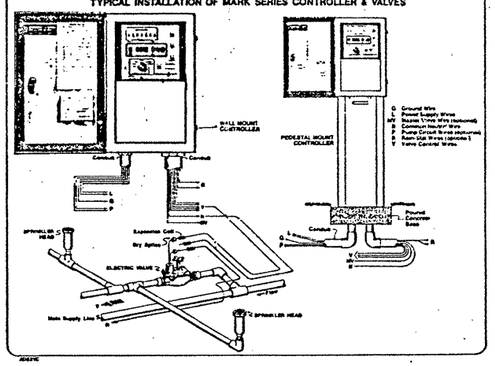

TYPICAL INSTALLATION OF MARK SERIES CONTROLLERS

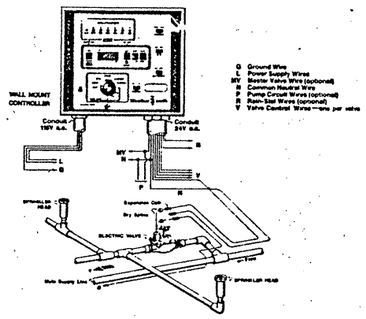

TYPICAL WIRE CONNECTION

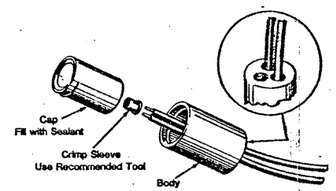

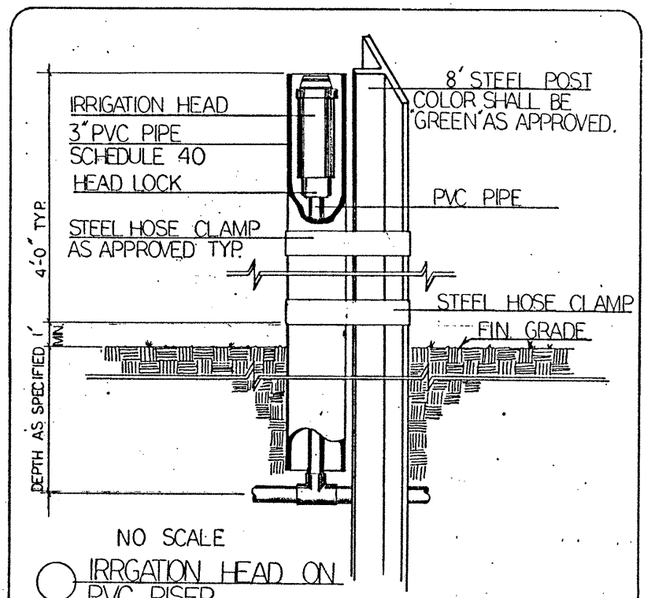

TYPICAL INSTALLATION OF SPRINKLER HEAD FLEXIBLE PIPE CONNECTION

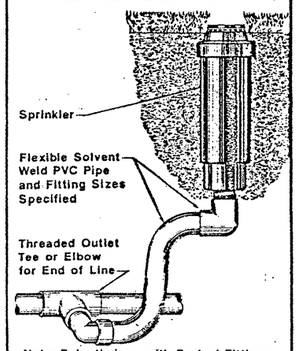

Note: Polyethylene with Barbed Fittings may be used in same application.

AD604

TYPICAL INSTALLATION OF SPRINKLER HEAD SWING JOINT

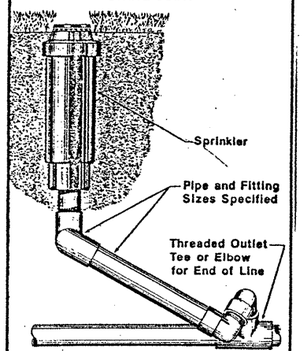

AD604

TYPICAL INSTALLATION OF #910 AUTOMATIC DRAIN VALVE

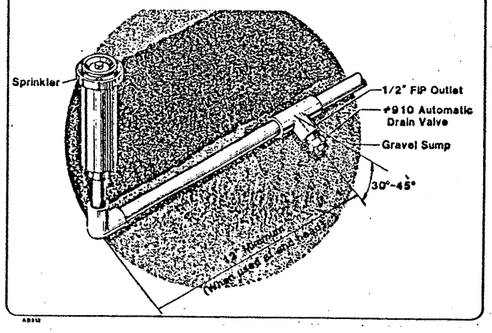

AD310

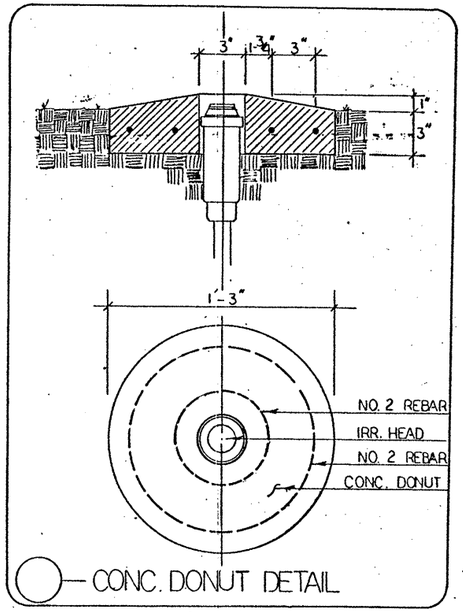

CONC. DONUT DETAIL

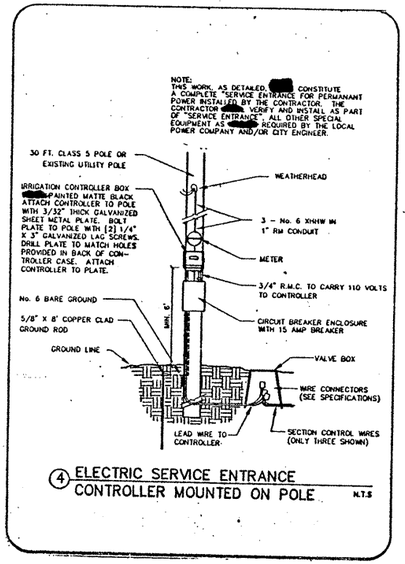

④ ELECTRIC SERVICE ENTRANCE CONTROLLER MOUNTED ON POLE N.T.S

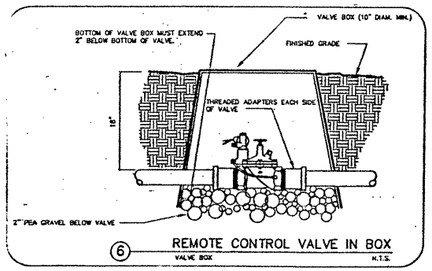

⑥ REMOTE CONTROL VALVE IN BOX
VALVE BOX N.T.S.

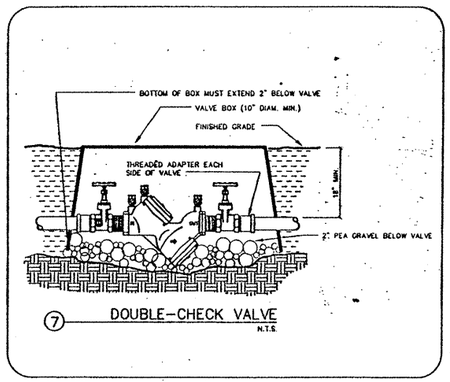

⑦ DOUBLE-CHECK VALVE
N.T.S.

STATE OF TEXAS
STEPHEN WALKER
4439
LICENSED IRRIGATOR

LANDSCAPING

FED. RD. DIV. NO.	FEDERAL AID PROJECT NO.		SHEET NO.
6	NH92( )M		490
STATE	STATE DIST. NO.	COUNTY	
TEXAS	21	HIDALGO	
CONT.	SECT.	JOB	HIGHWAY NO.
39	17	97	US 83/281

CROSS SECTION

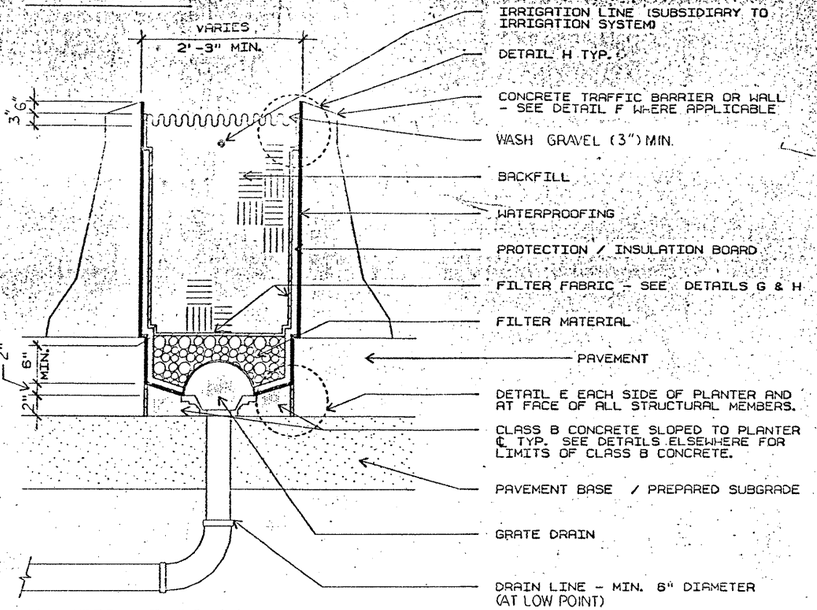

A PLANTER AT DRAIN

N. T. S.

CROSS SECTION

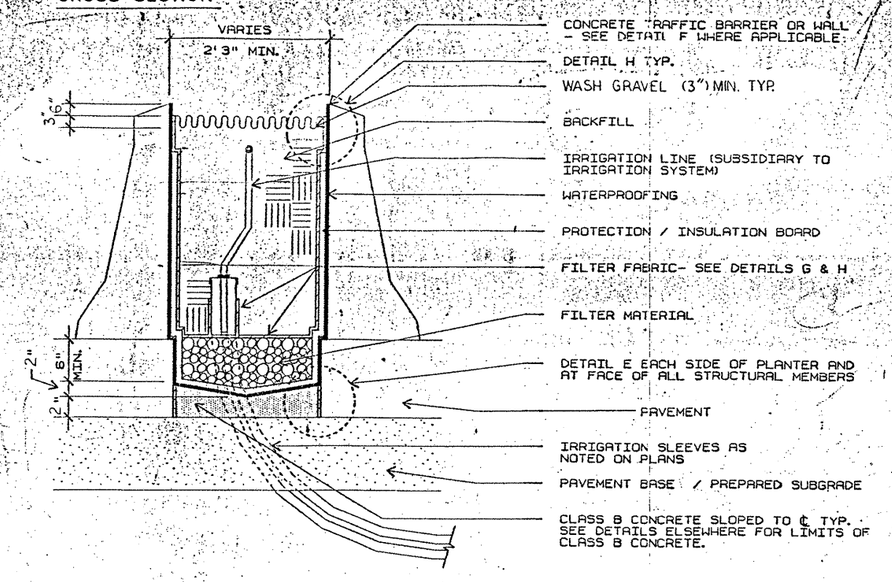

B PLANTER BETWEEN DRAINS

N. T. S.

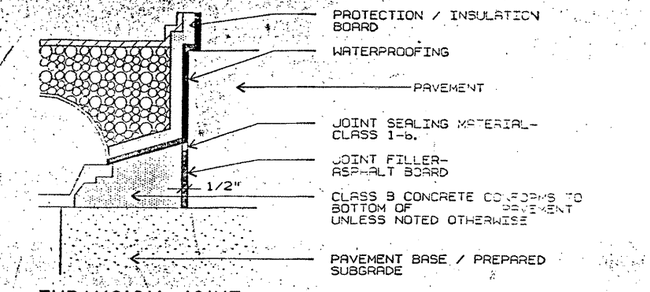

E EXPANSION JOINT

N. T. S.

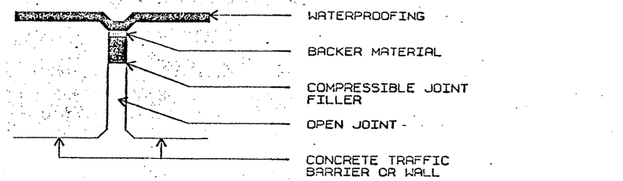

F OPEN JOINT TREATMENT

N. T. S.

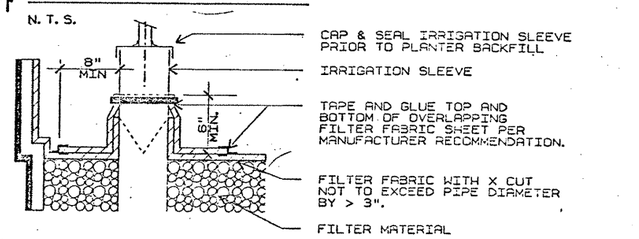

G FILTER FABRIC PENETRATIONS

N. T. S.

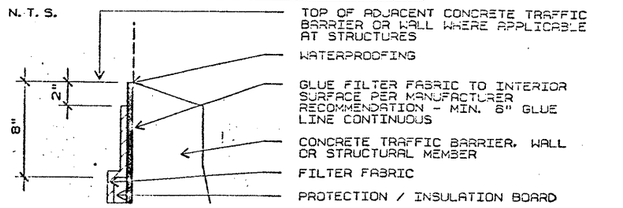

H SECTION AT BARRIER / STRUCTURES

N. T. S.

CROSS SECTION

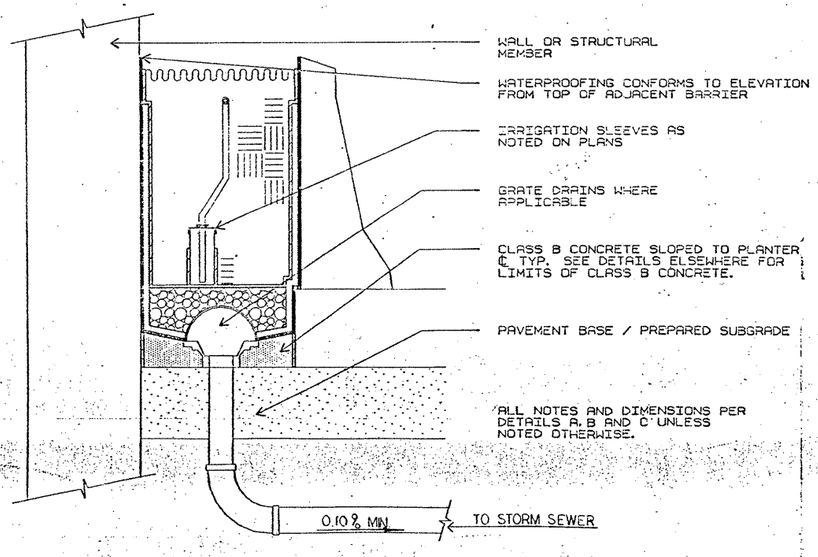

C PLANTER @ STRUCTURAL MEMBER

N. T. S.

LONGITUDINAL SECTION

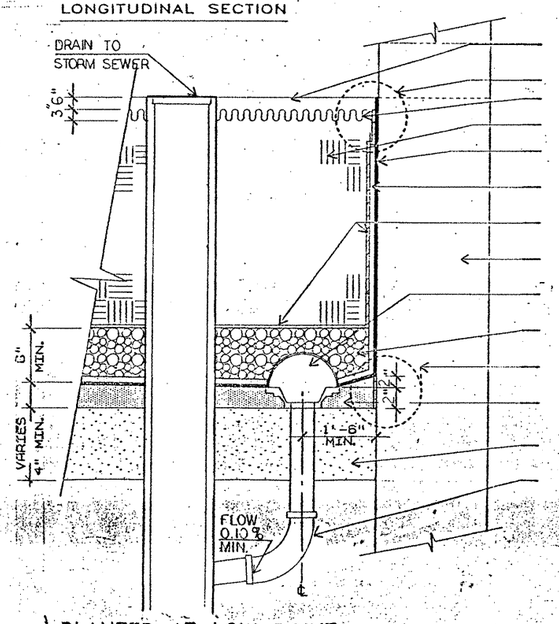

D PLANTER AT LOW POINT

N. T. S.

NOTE: FOR CONTRACTORS' INFORMATION:

QTY. EST. FOR CLASS B CONCRETE SLOPED TO ℄ OF PLANTER AND DRAIN LINE SYSTEM.

- CLASS 'B' CONC. - 383 C.YDS (ESTIMATE)
- DRAIN LINE SYSTEM - 330 L.F. (ESTIMATE)

SHEET 1 OF 1

NO.	DATE	REVISION	APPROVED

State Department of Highways and Public Transportation

MEDIAN PLANTER DETAILS

DN.:	FED. DIV.	STATE	PROJECT NO.				HIGHWAY
CK.:	6	TEXAS	NH 92( )M				US 83&281
DW.:	STATE DIST.	COUNTY	CONTROL	SECTION	JOB	SHEET	
CK.:	21	HIDALGO	34	17	97	491	

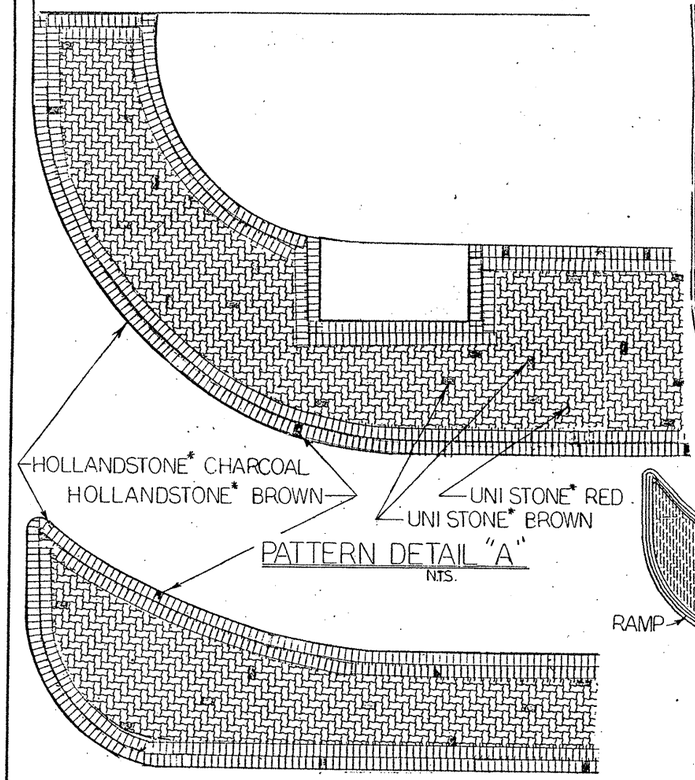

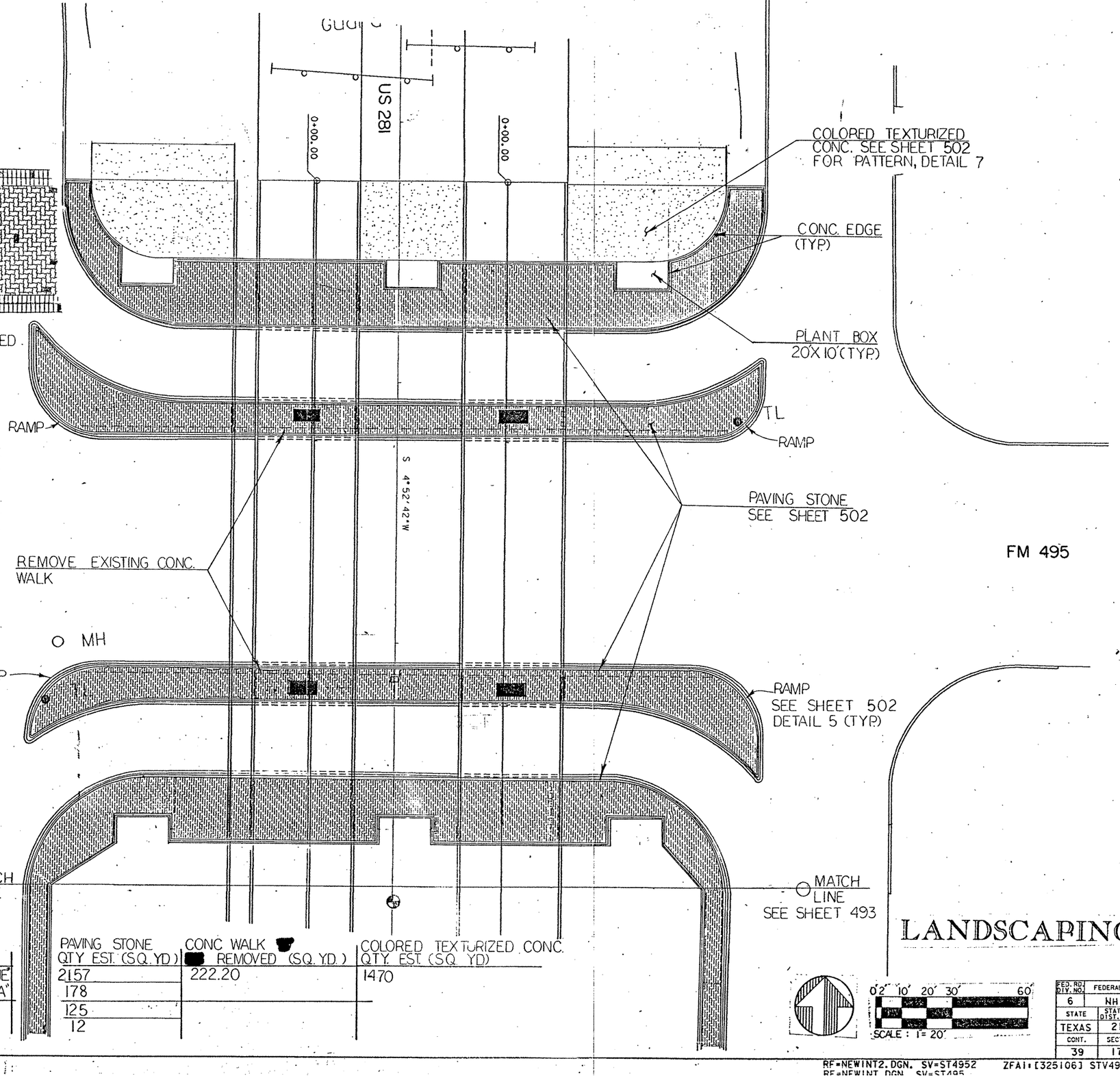

LANDSCAPING

SITE LOCATION	STONE TYPE	COLOR	PATTERN	PAVING STONE QTY. EST. (SQ. YD.)	CONC. WALK ■ REMOVED (SQ. YD.)	COLORED TEXTURIZED CONC. QTY. EST. (SQ. YD.)
US 281 & FM 495	UNI-STONE*	RED	HERRINGBONE	2157	222.20	1470
		GRAY	SEE DETAIL "A"	178		
	HOLLANDSTONE*	CHARCOAL	EDGER	125		
		GRAY		12		

FED. RD. DIV. NO.	FEDERAL AID PROJECT NO.		SHEET NO.
6	NH 92 ( )M		492
STATE	STATE DIST. NO.	COUNTY	
TEXAS	21	HIDALGO	
CONT.	SECT.	JOB	HIGHWAY NO.
39	17	97	US 83/281

RF=NEWINT2.DGN. SV=ST4952 ZFAI:[325106] STV495.DGN PRF=SAME
RF=NEWINT.DGN SV=ST495

MATCH LINE SEE SHEET 492.

MATCH LINE SEE SHEET 494

Inlet

FM 495

℄

S 4°52'42"W

5+00

US 281

850+00

BRIDGE COLLUM (TYP)

NOTE: WALK [redacted] HAVE A **BREAK** IN PATTERN THAT IS ON THE ℄ OF EACH COLLUM. SEE SHEET 502 DETAIL "8" FOR PATTERN & DEMENSIONING.

BREAK IN PAVING STONE PATTERN (TYP.)

CONC. CURB SEE SHEET 502 DETAIL "1"

APX. 10'-4" FROM BACK OF CURB TO FACE OF CONC. CURB.

MH

TL

NOTE "*" OR EQUAL

SITE LOCATION	STONE TYPE	COLOR	PATTERN	PAVING STONE QTY EST. (SQ. YD.)
U.S. 281 & U.S. 83	UNI-STONE *	RED BROWN GRAY	HERRINGBONE	460.8 218.9 7.0
	HOLLANDSTONE 1 *	CHARCOAL GRAY	EDGER	428.4 4.3

0' 2' 10' 20' 30' 60'

SCALE: 1" = 20'

LANDSCAPING

FED. RD. DIV. NO.	FEDERAL AID PROJECT NO.	SHEET NO.
6	NH 92( )M	1493
STATE	STATE DIST. NO.	COUNTY
TEXAS	21	HIDALGO
CONT.	SECT.	JOB / HIGHWAY NO.
39	17	97 US 83/281

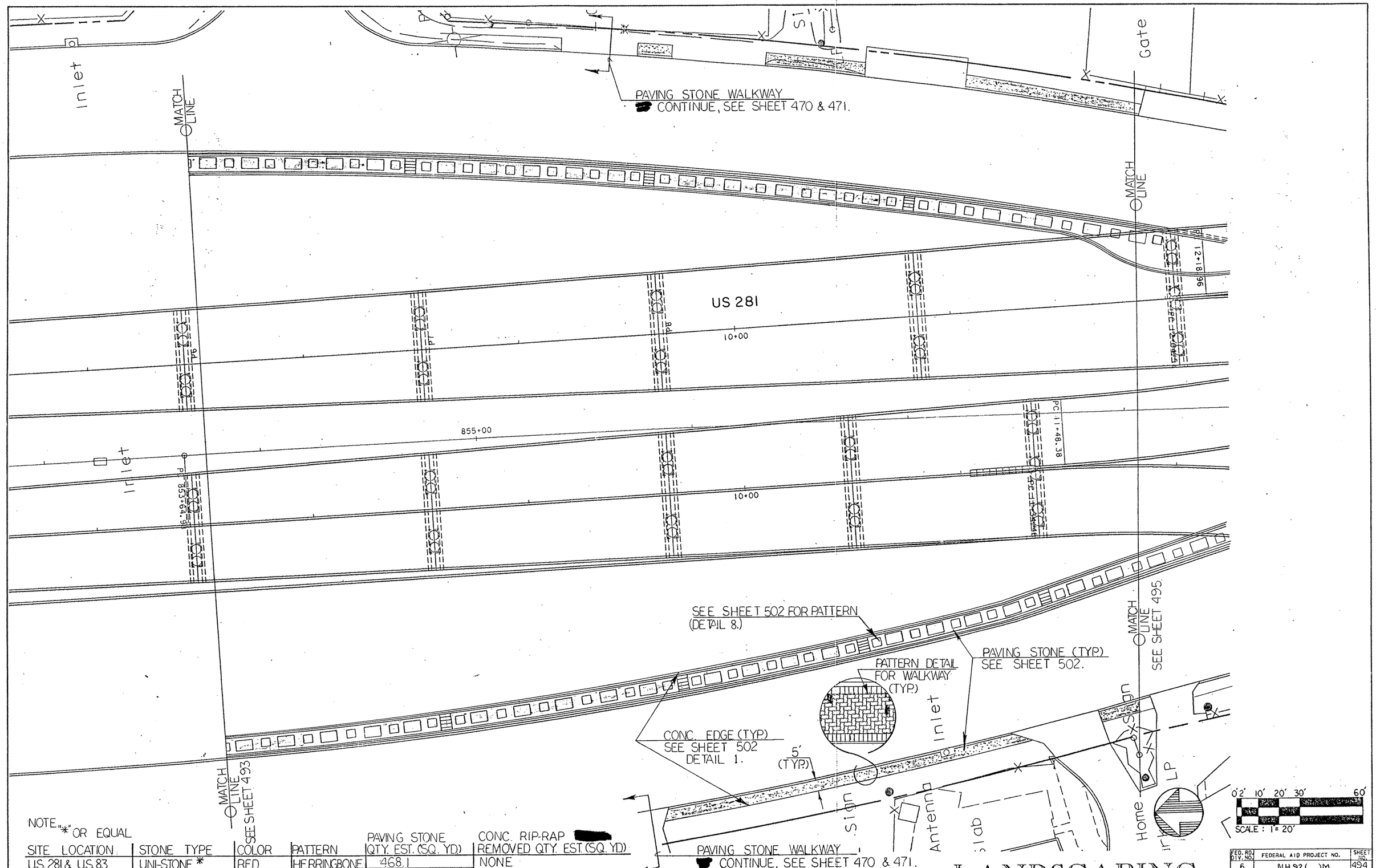

NOTE "*" OR EQUAL

SITE LOCATION	STONE TYPE	COLOR	PATTERN	PAVING STONE QTY. EST. (SQ. YD.)	CONC. RIP-RAP [redacted] REMOVED QTY. EST. (SQ. YD.)
U.S. 281 & U.S. 83	UNI-STONE *	RED	HERRINGBONE	468.1	NONE
		BROWN		323.3	
		GRAY		16.4	
	HOLLANDSTONE 1*	CHARCOAL	EDGER	362.2	
		GRAY		12.1	

LANDSCAPING

FED. RD. DIV. NO.	FEDERAL AID PROJECT NO.		SHEET NO.
6	NH92( )M		494
STATE	STATE DIST. NO.	COUNTY	
TEXAS	21	HIDALGO	
CONT.	SECT.	JOB	HIGHWAY NO.
39	17	97	US 83/281

ZEAL: [325106]STEV DGN PRE: SAME

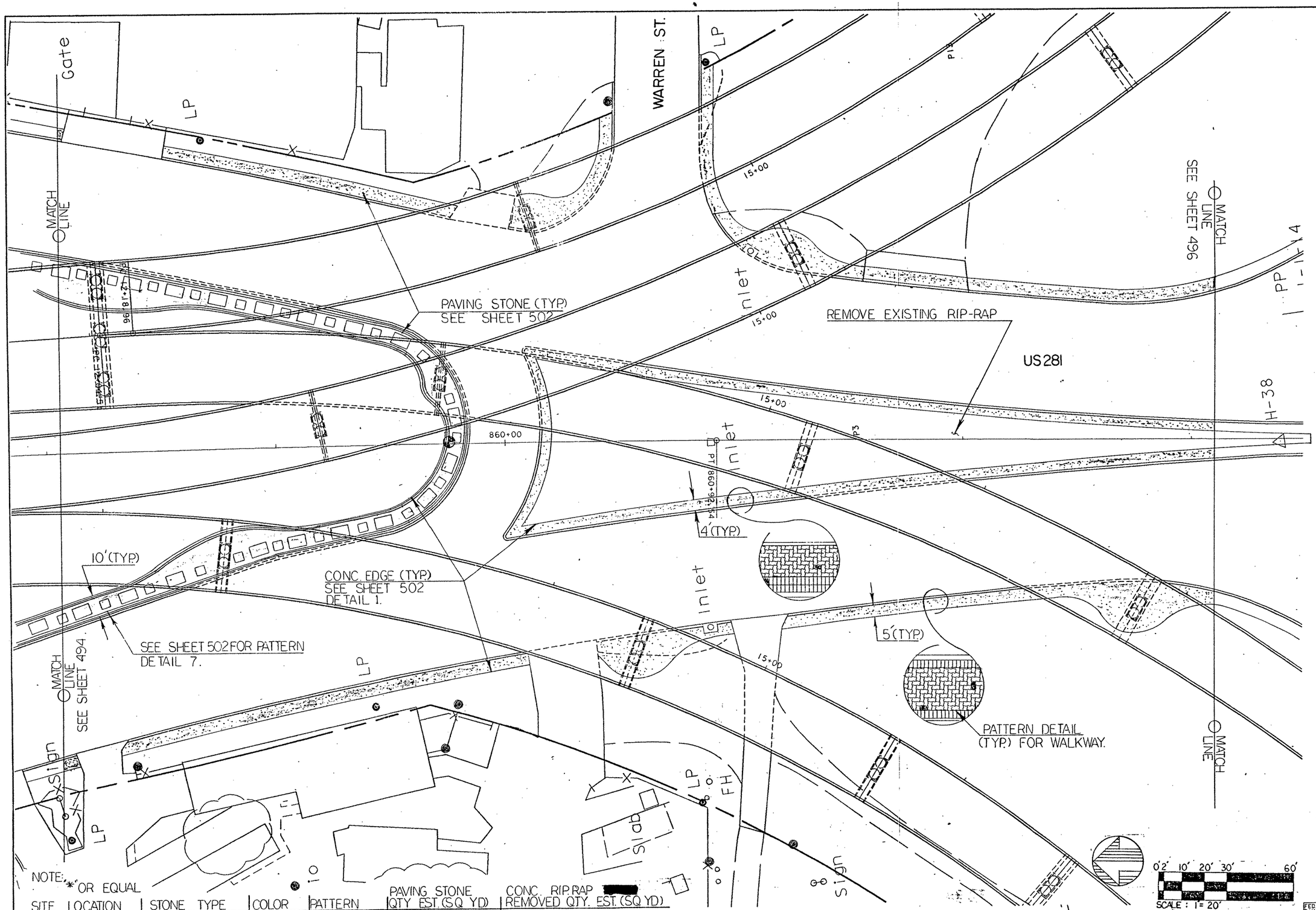

NOTE: * OR EQUAL

SITE LOCATION	STONE TYPE	COLOR	PATTERN	PAVING STONE QTY. EST. (SQ. YD)	CONC. RIP RAP REMOVED QTY. EST. (SQ. YD)
US 83 & US 281	UNI-STONE *	RED	HERRINGBONE	771.4	84.0
		BROWN		183.0	
		GRAY		82	
	HOLLANDSTONE 1*	CHARCOAL	EDGER	427.5	
		GRAY		5.8	

LANDSCAPING

FED. RD. DIV. NO.	FEDERAL AID PROJECT NO.		SHEET NO.
6	NH 92( )M		495
STATE	STATE DIST. NO.	COUNTY	
TEXAS	21	HIDALGO	
CONT.	SECT.	JOB	HIGHWAY NO.
39	17	97	US 83/281

ZFA1:[325106]STEV.DGN PRF:STEVA

RF=NEWINT2, DGN, SV=STINT2
BE=NEWINT, DGN, SV=STINT2

SEE SHEET 476

PATTERN DETAIL (TYP.)
WALKWAY

5'(TYP.)

MATCH LINE

PP 1-1

CONC. EDGE (TYP.)
SEE SHEET 502 DETAIL 1.

4'(TYP.)

4' MIN.

70' MIN.

SEE SHEET 495
FOR PATTERN DETAIL.

CURB
SEE SHEET 511
TYPE "A SPECIAL"
205 L.F.

PAVING STONE
PATTERN (TYP.)

Riprap

US 83

Guard Fence

Guard Rails

965+00

REMOVE EXISTING RIP-RAP
CONCRETE OR ASPHALT

CONC MEDIAN
USED IN PLACE

Inlet

CURB TYPE "A SPECIAL"
SEE SHEET 511. 235 L.F.

MATCH LINE

SEE SHEET 477

NOTES "*" OR EQUAL
REMOVAL OF CONCRETE OR ASPHALT CONSIDERED SUBSIDIARY TO ITEM 100

SITE LOCATION	STONE TYPE	COLOR	PATTERN	PAVING STONE QTY. EST. (SQ. YD)	RIP-RAP REMOVED QTY. EST. (SQ YD.)	TYPE "A SPECIAL" CURB
US 83 & US 281	UNI STONE.*	RED	HERRINGBONE	1695.2	1156	440 L.F.
		GRAY		17.3		
	HOLLANDSTONE I*	CHARCOAL	EDGER	128.7		
		GRAY		1.3		

Sign

PAVING STONE (TYP.)
SEE SHEET 502.

US 281

REMOVE EXISTING ASPHALT
CONCRETE OR ASPHALT

LANDSCAPING

0'2' 10' 20' 30' 60'
SCALE : 1" = 20'

FED. RD. DIV. NO.	FEDERAL AID PROJECT NO.		SHEET NO.
6	NH 82( )M		496
STATE	DIST.	COUNTY	
TEXAS	21	HIDALGO	
CONT.	SECT.	JOB	HIGHWAY NO.
39	17	97	83/281

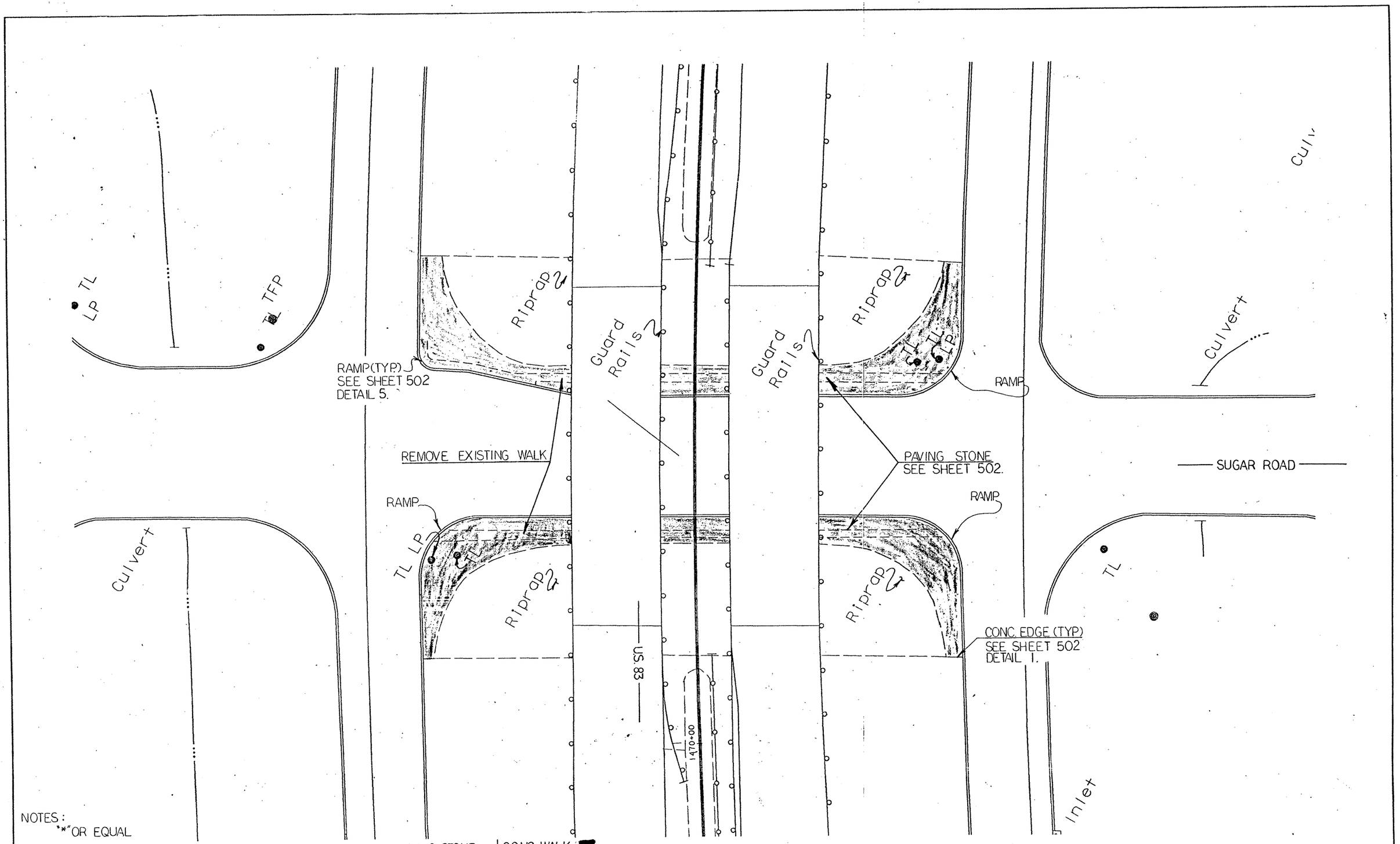

NOTES:
"*" OR EQUAL

SITE LOCATION	STONE TYPE	COLOR	PATTERN	PAVING STONE QTY. EST. (SQ.YD)	CONC. WALK [redacted] REMOVED (SQ.YD.)
US 83 & SUGAR RD	HOLLANDSTONE II*	ANTIQUE RED	HERRING - BONE	1018.0	208.80
	HOLLANDSTONE I*	CHARCOAL	EDGER	32.0	

0' 2' 10' 20' 30' 60'
SCALE: 1" = 20'

LANDSCAPING

FED. RD. DIV. NO.	FEDERAL AID PROJECT NO.		SHEET NO.
6	NH92( )M		497
STATE	STATE DIST. NO.	COUNTY	
TEXAS	21	HIDALGO	
CONT.	SECT.	JOB	HIGHWAY NO.
39	17	97	US 83/281

RF=NEWINT2.DGN, SV=STSGR2 ZEAL:[325106]STSGR.DGN PRF=SAME

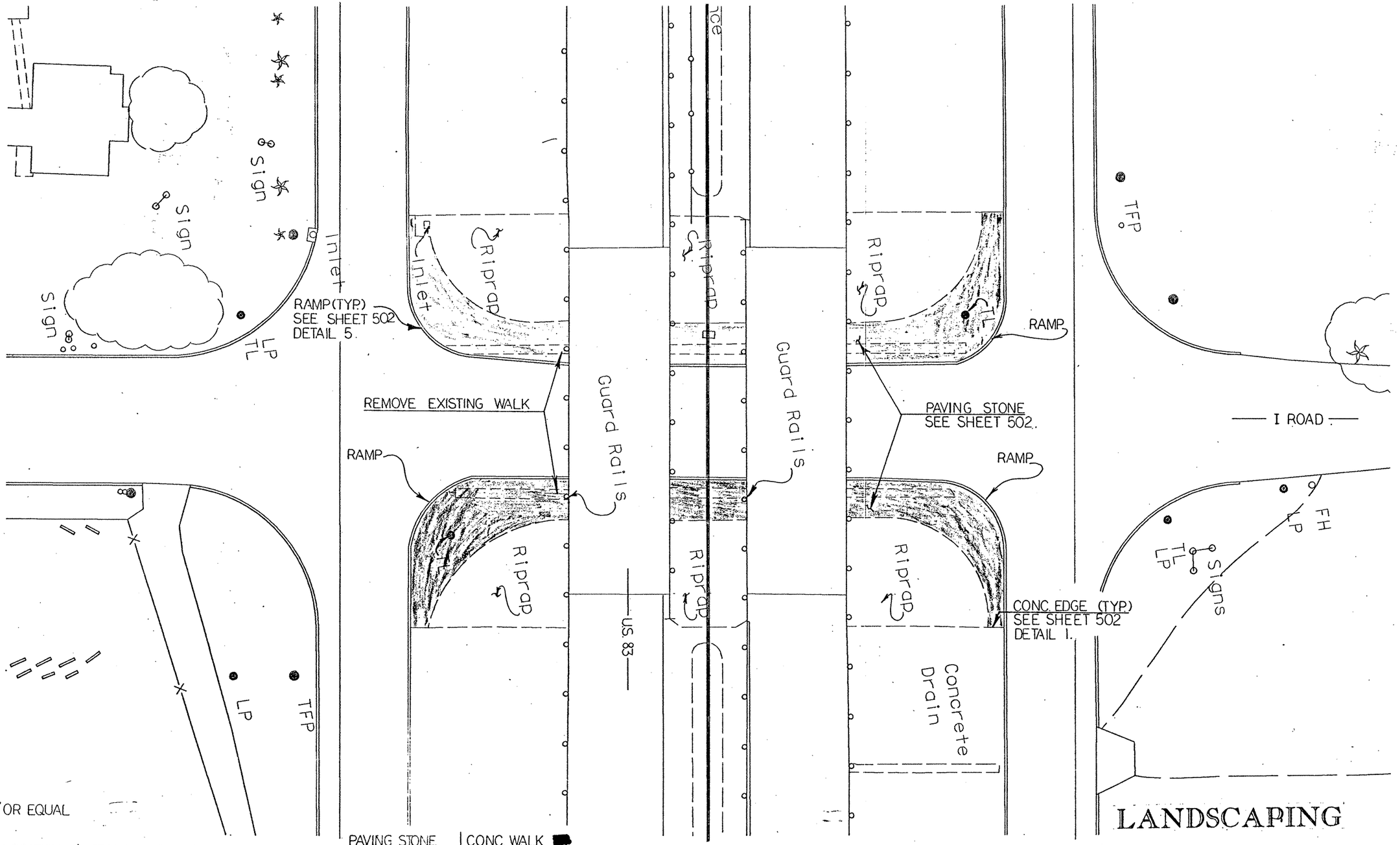

NOTES:
"*" OR EQUAL

SITE LOCATION	STONE TYPE	COLOR	PATTERN	PAVING STONE Q.T.Y. EST. (SQ.YD.)	CONC. WALK [redacted] REMOVED (SQ.YD.)
US 83 & I ROAD	CORSO I*	TERRA-COTTA	HERRING-BONE	1127.0	191.10
	CORSO I*	CHARCOAL	EDGER	31.0	

PAVING STONE

0' 2' 10' 20' 30' 60'
SCALE : 1" = 20'

FED. RD. DIV. NO.	FEDERAL AID PROJECT NO.		SHEET NO.
6	NH92( )M		498
STATE	STATE DIST. NO.	COUNTY	
TEXAS	21	HIDALGO	
CONT.	SECT.	JOB	HIGHWAY NO.
39	17	97	US 83/281

RF=NEWINT2.DGN, ST!RD2

ZFAI=[325106]ST!RD.DGN PRF=SAME

LEGEND:

★ — LARGE STAR.

• — STAR & MAP.

SEE SHEET-500
CONTRACTOR TO VERIFY LOCATIONS OF SPECIALTY FORMLINER TREATMENTS WITH THE ENGINEER.

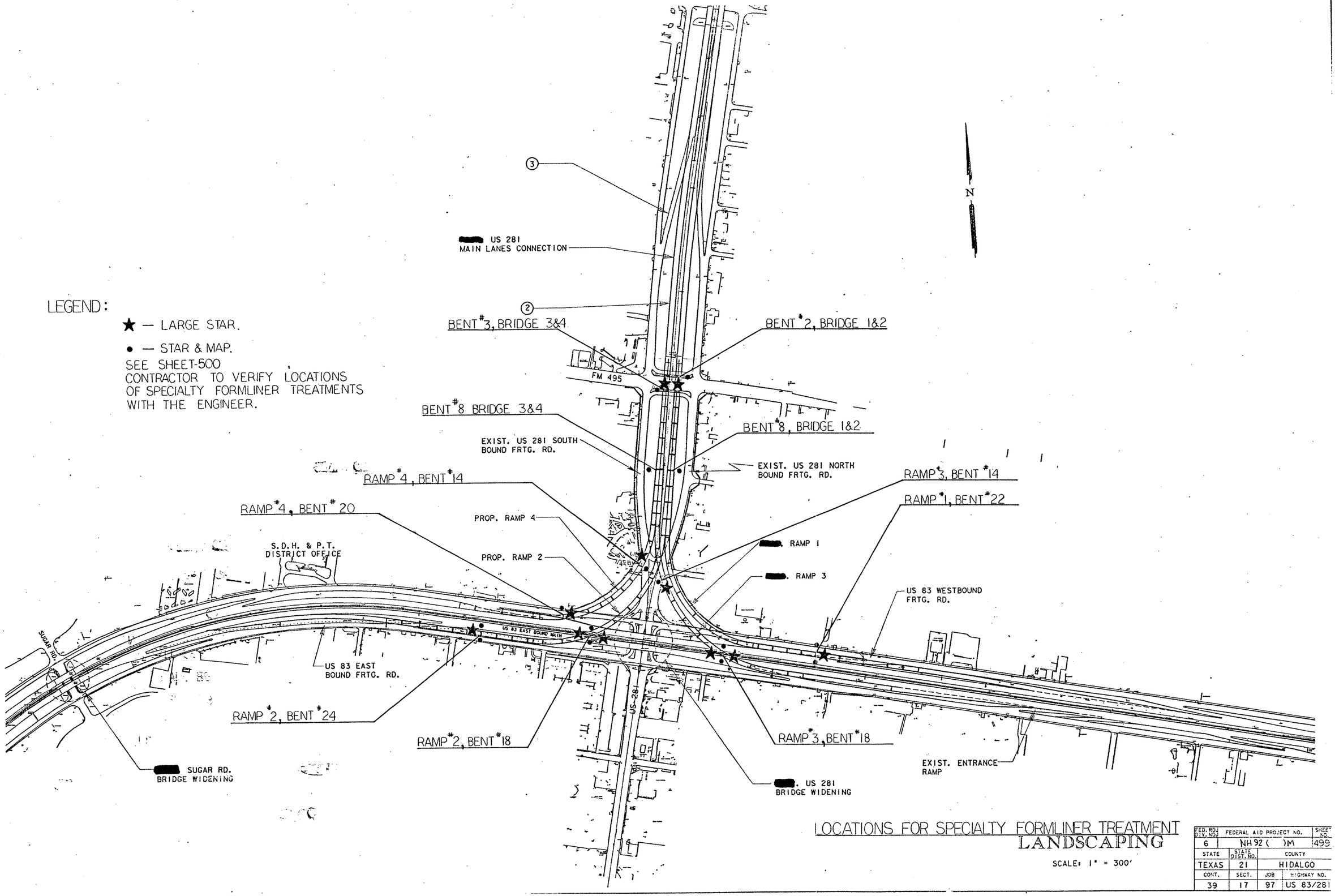

LOCATIONS FOR SPECIALTY FORMLINER TREATMENT LANDSCAPING

SCALE: 1" = 300'

FED. RD. DIV. NO.	FEDERAL AID PROJECT NO.		SHEET NO.
6	NH 92 ( )M		499
STATE	STATE DIST. NO.	COUNTY	
TEXAS	21	HIDALGO	
CONT.	SECT.	JOB	HIGHWAY NO.
39	17	97	US 83/281

TYPICAL FORM LINER APPLICATIONS

N.T.S.

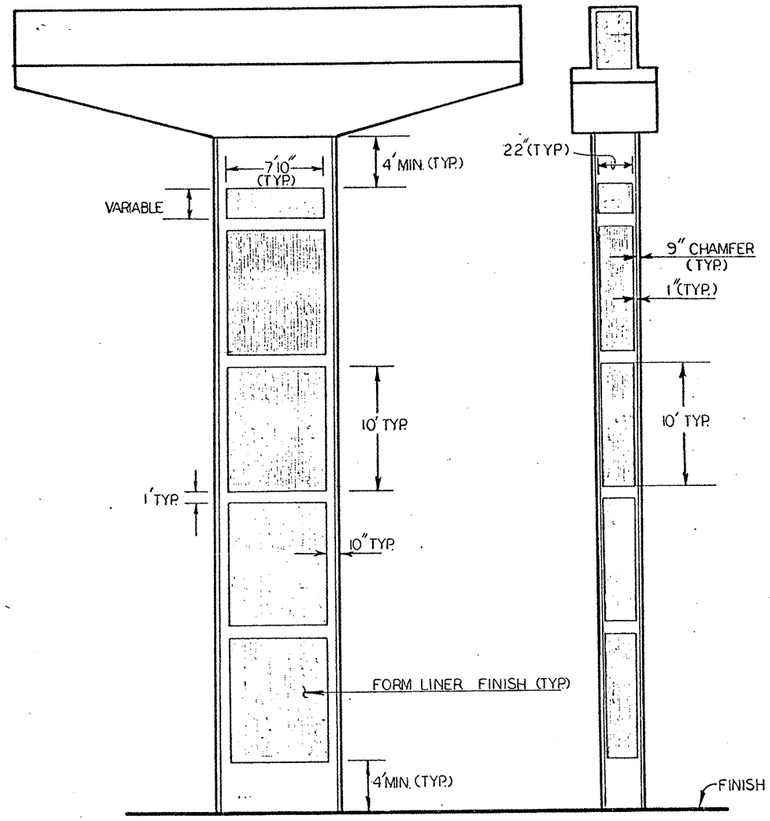

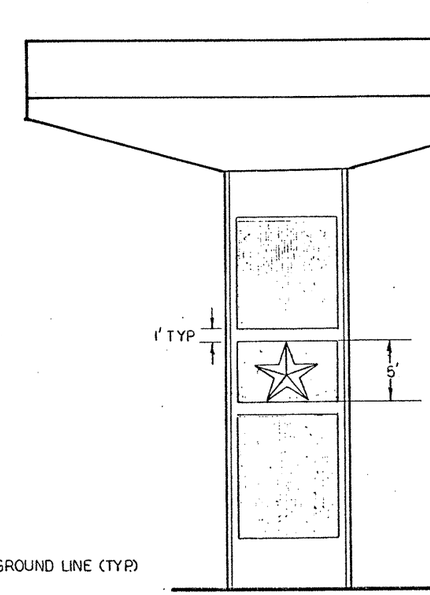

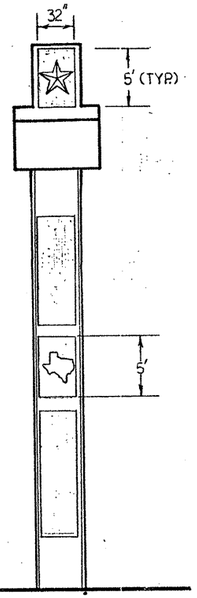

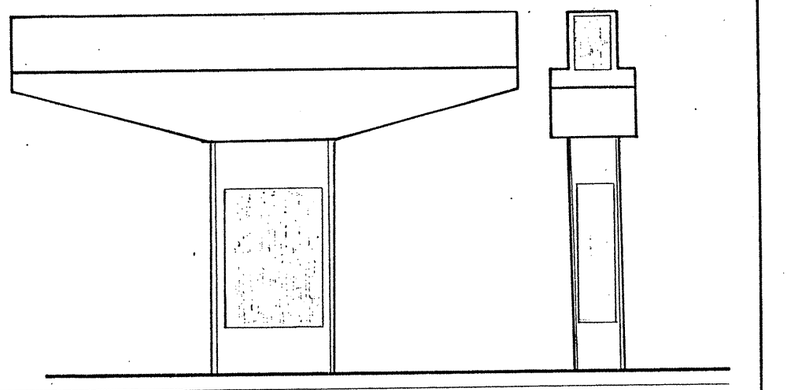

NOTE: TEXTURED CONCRETE SURFACE TREATMENT [redacted] FORMED USING L.M. SCOFIELD ARCHITECTURAL FORM LINERS. PATTERN T-1356-281 (FRACTURED DESIGN) AS MANUFACTURED BY L.M. SCOFIELD COMPANY. 820 E. 29 ST. HOUSTON TX. ZIP - 77009. OR EQUAL AS APPROVED.

- ALL FORM LINERS [redacted] APPROVED BY THE ENGINEER PRIOR TO ANY ORDERS PLACED.
- A SAMPLE PANEL [redacted] SUBMITTED OF ALL FINISHES FOR APPROVAL TO THE ENGINEER PRIOR TO USE,
- SAMPLE PANELS [redacted] SIZED AS APPROVED BY THE ENGINNER.
- SAMPLES [redacted] NOT [redacted] PAID FOR DIRECTLY, BUT [redacted] SUBSIDIARY TO THE VARIOUS BID ITEMS.
- STAR AND MAP [redacted] A SMOOTH FINISH (TYP.) SEE GEN. NOTES. COLOR OF STAR AND MAP [redacted] "BUFF TERRA COTTA".
- THE EXACT LOCATION OF EACH EMBLEM [redacted] APPROVED BY THE ENGINEER.
- PAYMENT FOR FORM LINER TREATMENT [redacted] [redacted] SUBSIDIARY TO THE ITEM CI. C CONCRETE (BENT).
- ADJUST STEEL AS NECESSARY TO MAINTAIN "2 INCH" CLEAR COVER ON ALL SURFACE AREAS THAT [redacted] RECEIVE FORM LINER TREATMENT.
- SEE GEN. NOTES FOR SAMPLE REQUIREMENTS.

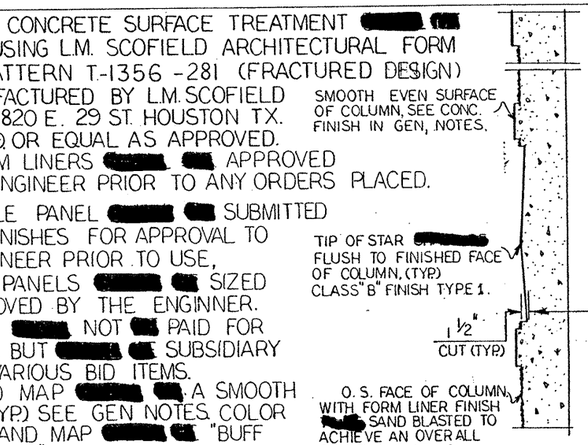

SECTION "A-A"

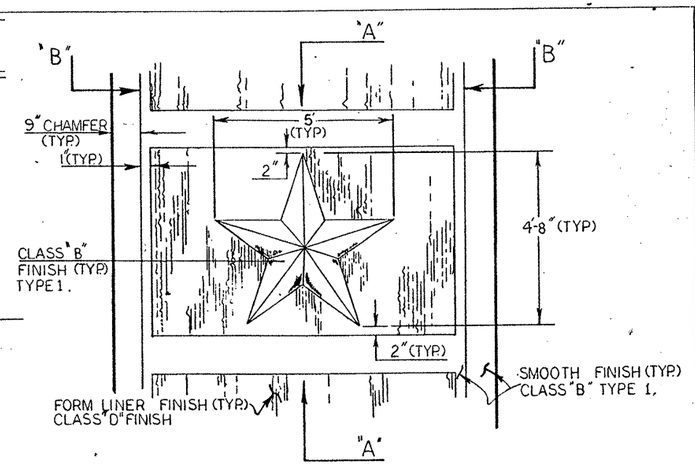

FORM LINER WITH LARGE STAR DETAIL AT FACE OF COLUMN. (LONE STAR).

N.T.S.

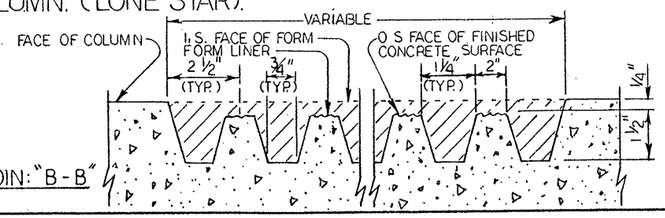

SECTOIN: "B-B"

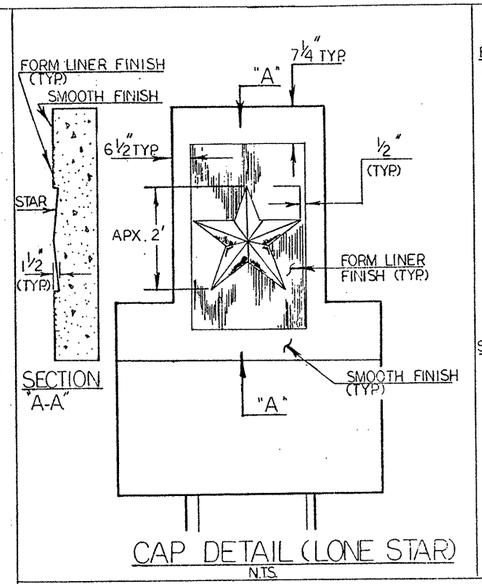

CAP DETAIL (LONE STAR)

N.T.S.

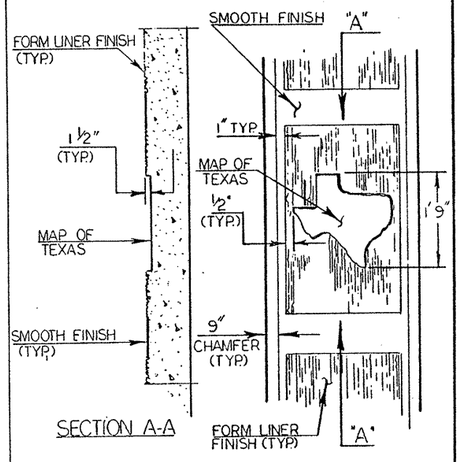

SIDE OF COLUMN DETAIL (MAP)

N.T.S.

FORM LINER DETAIL

DIV. PROJ. NO.	STATE	FEDERAL AID PROJECT NO.		SHEET
8	TEXAS	NH 92( )M		500
STATE PROJ. NO.	COUNTY	CONT. NO.	SECT. NO.	JOB NO.
	HIDALGO	39	17	97

US83/281

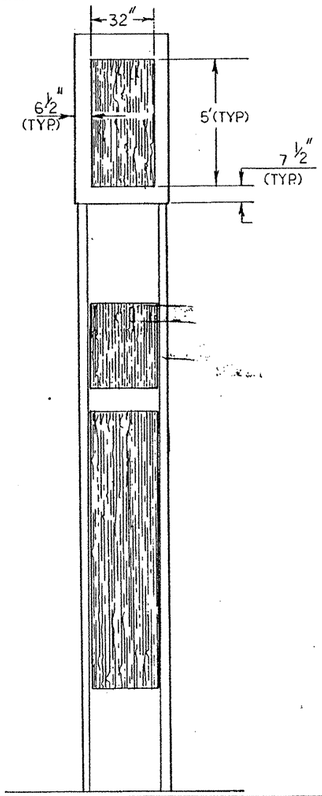

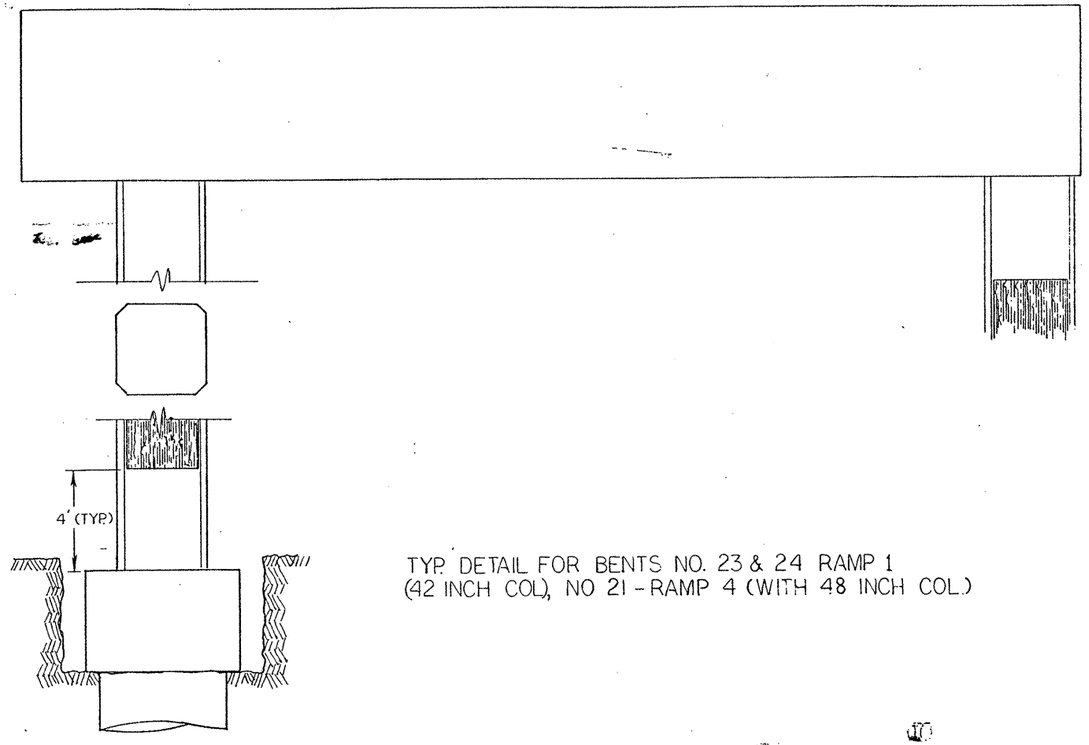

TYP. DETAIL FOR BENTS NO. 23 & 24 RAMP 1 (42 INCH COL), NO 21 - RAMP 4 (WITH 48 INCH COL.)

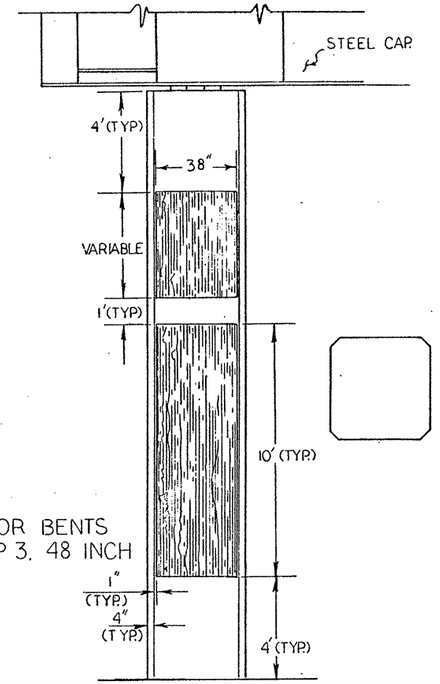

TYP. DETAIL FOR BENTS NO. 20 - RAMP 3. 48 INCH COL.

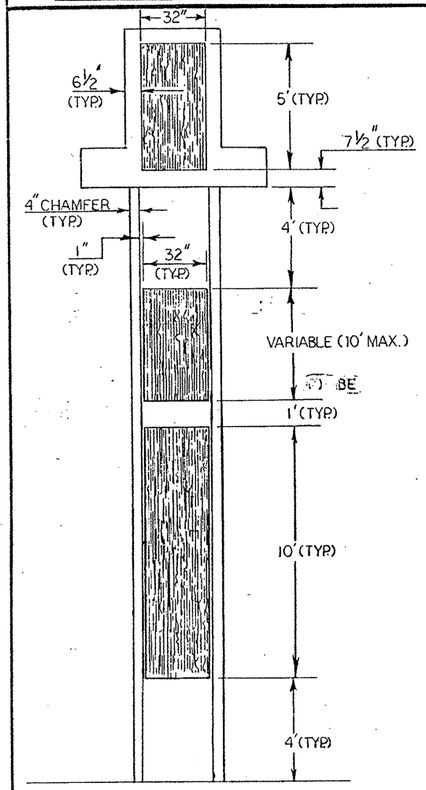

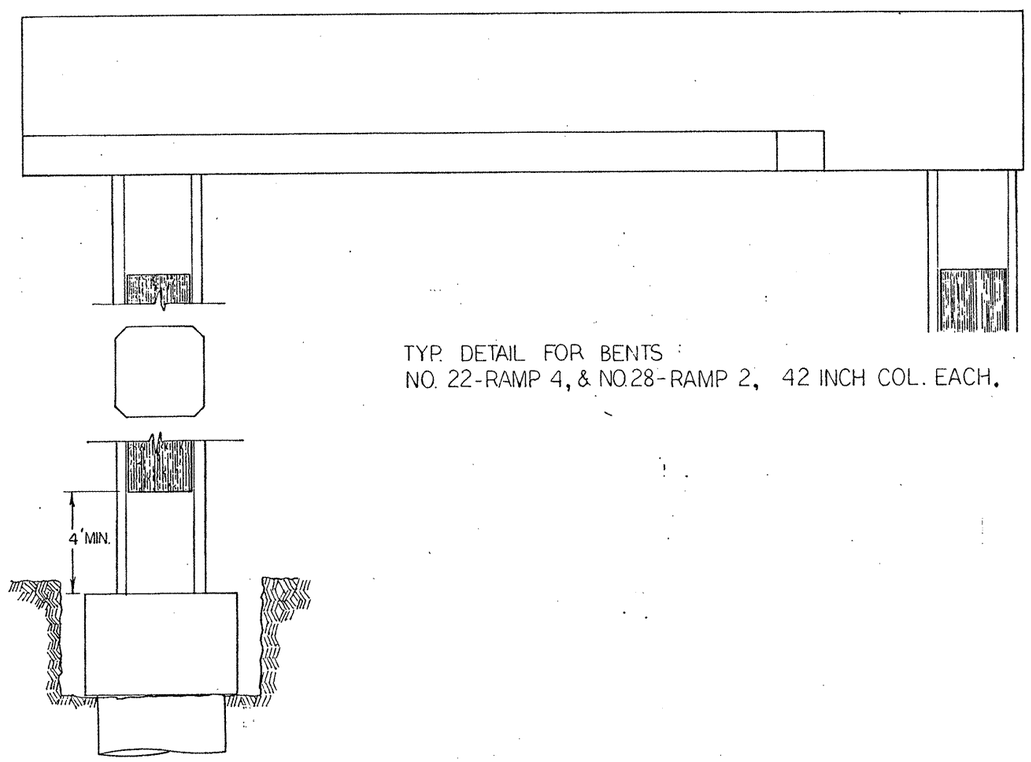

TYP. DETAIL FOR BENTS NO. 22 - RAMP 4, & NO. 28 - RAMP 2, 42 INCH COL. EACH.

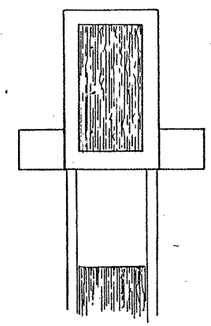

NOTE: FORM LINER AT 4 SIDES ON ALL COLUMNS

FORM LINER DETAIL AT STRADDLE BENTS
NO SCALE

LANDSCAPING

FED. RD. DIV. NO.	FEDERAL AID PROJECT NO.		SHEET NO.
6	NH 92( )M		501
STATE	STATE DIST. NO.	COUNTY	
TEXAS	21	HIDALGO	
CONT.	SECT.	JOB	HIGHWAY NO.
39	17	97	83/281

E32107151T2234.DGN

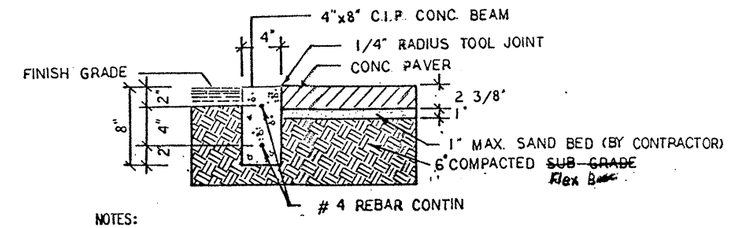

NOTES:

1. EDGE TREATMENT [redacted] AS STRAIGHT AS POSSIBLE TO COMPLIMENT THE ALIGNMENT OF PAVING STONES.
2. ALL EDGE TREATMENT [redacted] VERTICAL TO ALLOW CLOSE FIT OF PAVERS.
3. RELIEF TOOL FOR PAVER SIDE [redacted] AS SMALL AS POSSIBLE (1/4").
4. RELIEF TO ITEM #530. TEXAS S.D.H.P.T. STANDARD SPECIFICATIONS.

1 CONC EDGE & PAVER DETAIL
N.T.S. (X-SECTION)

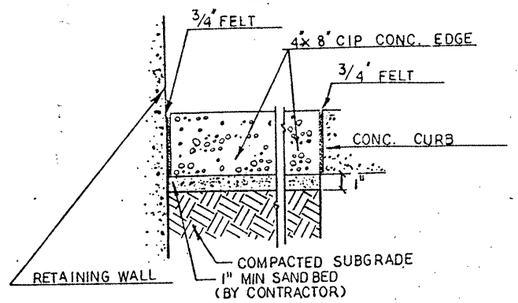

2 CONC EDGE EXP N JOINT
N.T.S. (LONGITUDINAL SECTION)

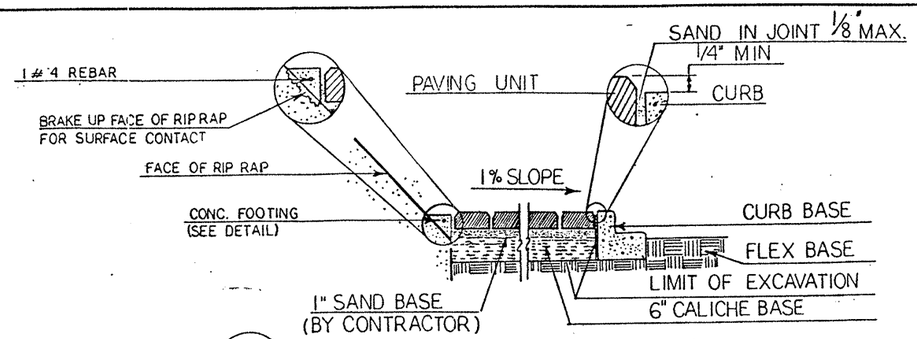

3 PAVING DETAIL AT RIP RAP
N.T.S.

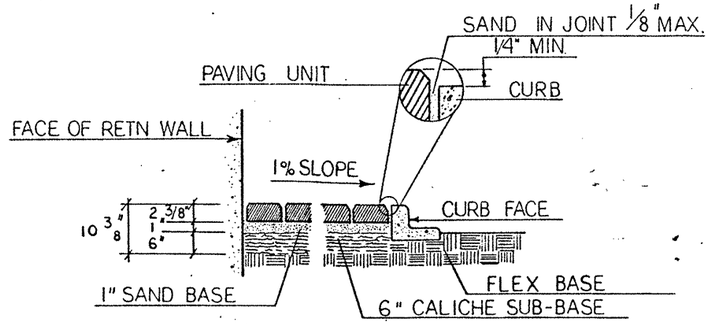

4 PAVING DETAIL AT VERTICAL COLUMN
N.T.S.

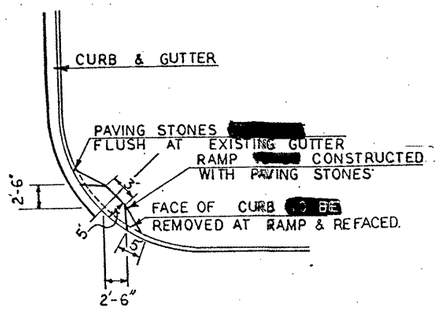

5 SIDEWALK RAMP DETAIL
NO SCALE

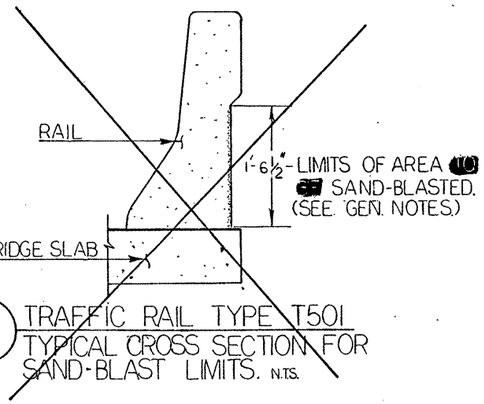

6 TRAFFIC RAIL TYPE T501
TYPICAL CROSS SECTION FOR SAND-BLAST LIMITS. N.T.S.

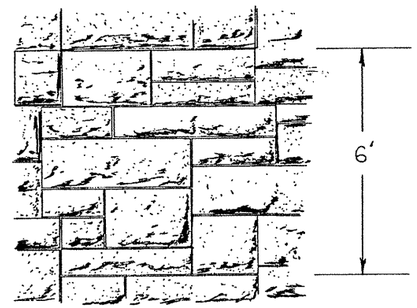

7 ASHLAR STONE FINISH
FOR COLORED TEXT. CONC. N.T.S.

8 PATTERN DETAIL
SCALE = 1/2" = 1' (APX)

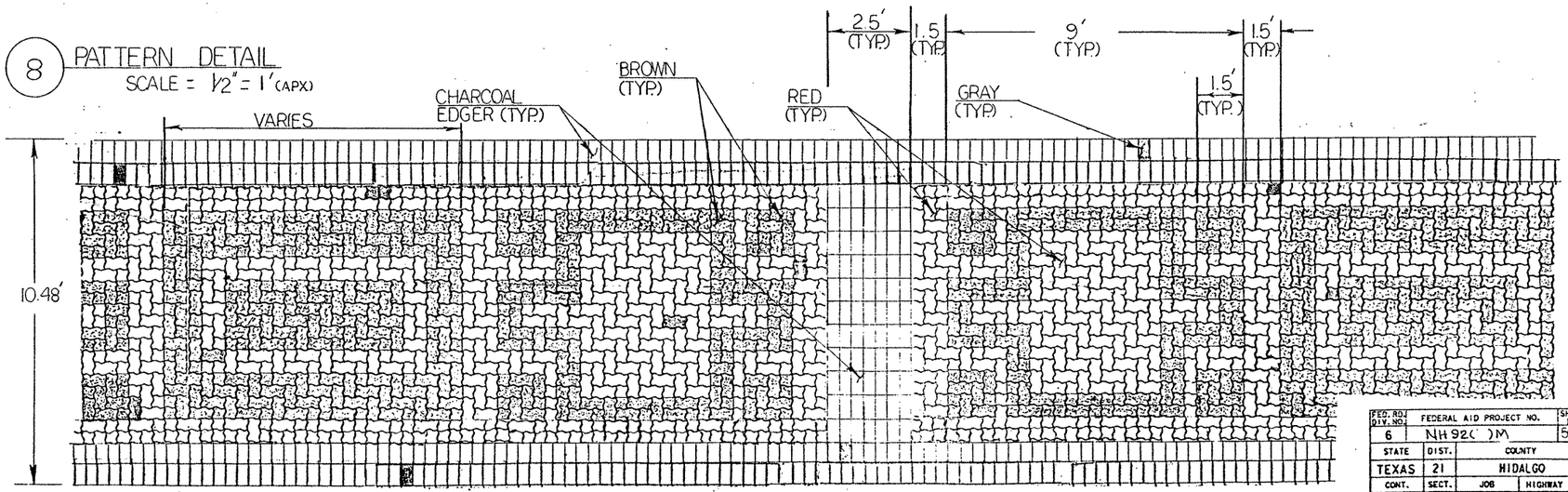

FED. RD. DIV. NO.	FEDERAL AID PROJECT NO.		SHEET NO.
6	NH 92( )M		502
STATE	DIST.	COUNTY	
TEXAS	21	HIDALGO	
CONT.	SECT.	JOB	HIGHWAY NO.
39	17	97	83/281

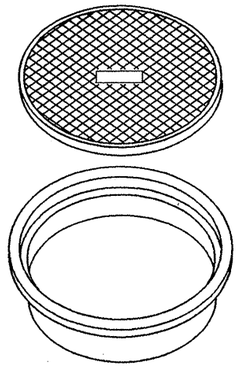

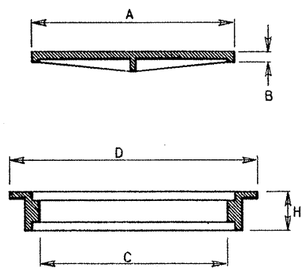

LID			RING				SET WT.
"A"	"B"	WEIGHT	"C"	"D"	"H"	WEIGHT	
25⅝"	1"	125 lbs. (min.)	24	32	5	185 lbs.	310 lbs.

RING & COVER DETAILS (FOR MANHOLE TY "M", "A", "B" & "M"(MOD)" TYPE II

NOTES: RINGS AND COVERS OF SLIGHTLY DIFFERENT DIMENSIONS BUT APPROXIMATELY THE SAME WEIGHT [redacted] SUBSTITUTED IF APPROVED BY THE ENGINEER.

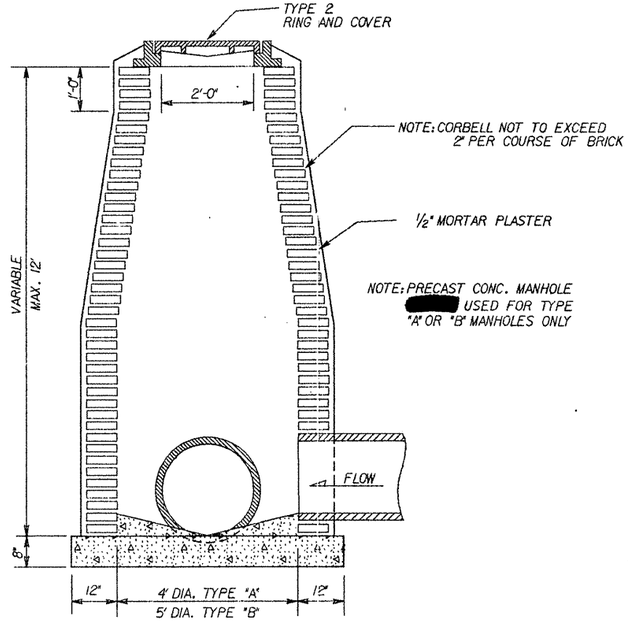

SECTION

BRICK OR PRECAST CONC. MANHOLE TY "A" OR TY "B"

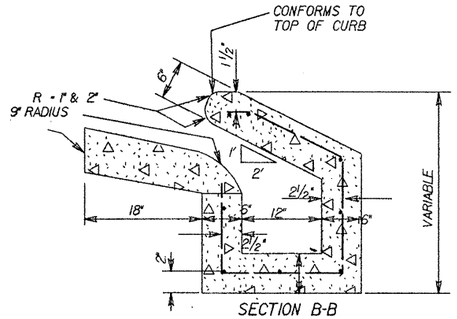

SECTION B-B

INLET EXTENSION

ALL STEEL [redacted] NO. 4 BARS ON 12" SPACING IN BOTH DIRECTIONS

NOTE: SLOPE BOTTOM OF INLET EXTENSION ½" PER FT. TOWARD INLET

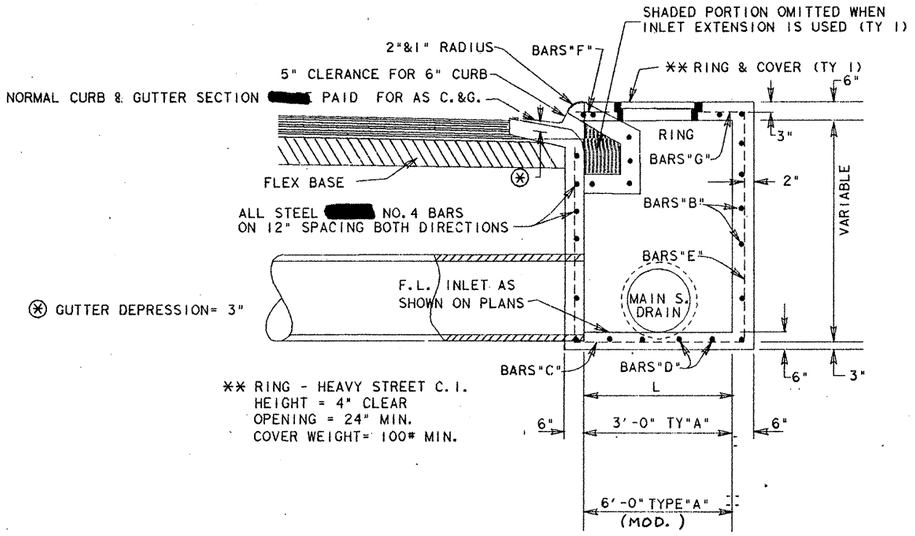

SECTION A-A

INLET TYPE "A", "A"MOD. & "A"SPL.

TO BE USED WITH CURB & GUTTER

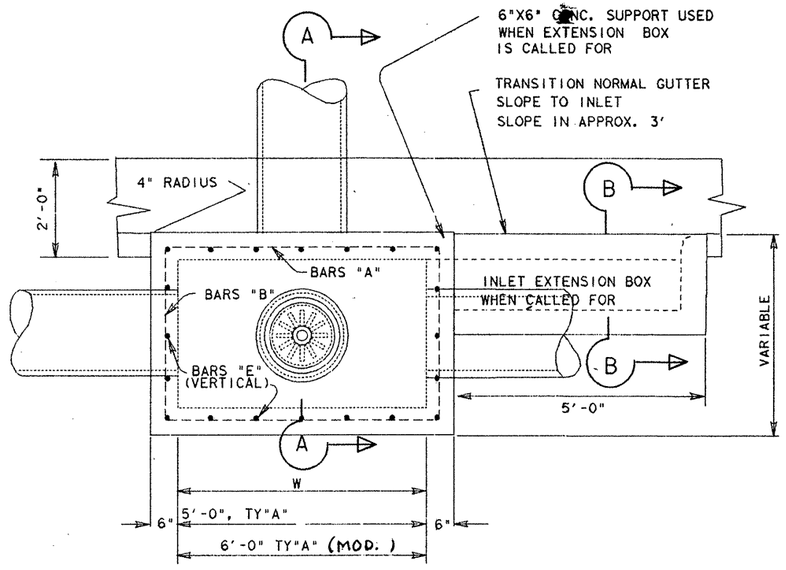

PLAN

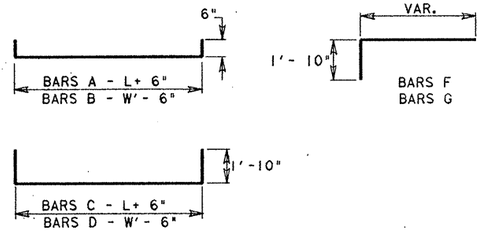

INLET & MANHOLE DETAILS

DISTRICT STANDARD

FED. RD. DIV. NO.	FEDERAL AID PROJECT NO.		SHEET NO.
6	NH 92( )M		503
STATE	STATE DIST. NO.	COUNTY	
TEXAS	21	HIDALGO	
CONT.	SECT.	JOB	HIGHWAY NO.
39	17	97	US83/281

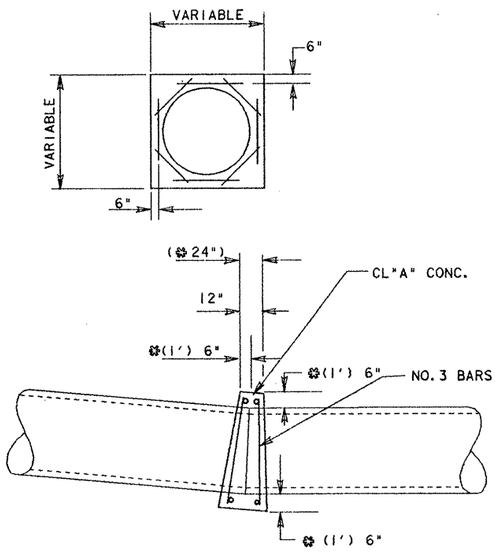

DETAIL FOR CONC. COLLARS ON STORM DRAIN

NOTE: PROP. CONC. COLLARS [redacted] NOT [redacted] PAID FOR DIRECTLY BUT [redacted] SUBSIDIARY TO BIDS ITEM INVOLVED

※ FOR 42" AND LARGER PIPE

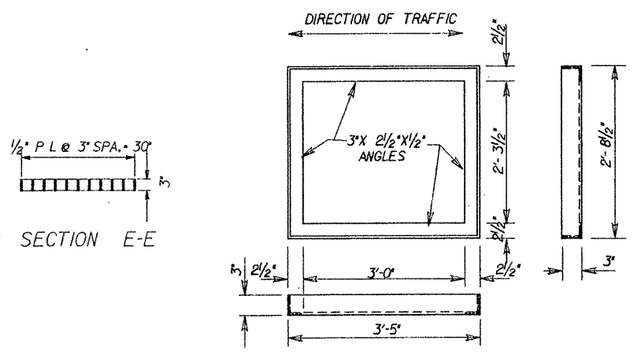

FRAME DETAIL

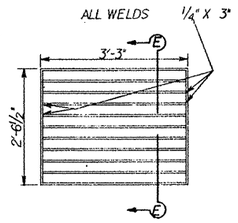

WELDED STEEL INLET GRATE

(Two Grates per Inlet)

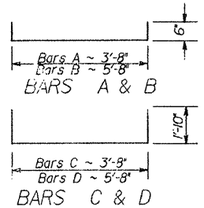

REINFORCING STEEL DETAILS

NOTE: All Steel [redacted] No. 4 Bars on 12" Spacing in both directions.

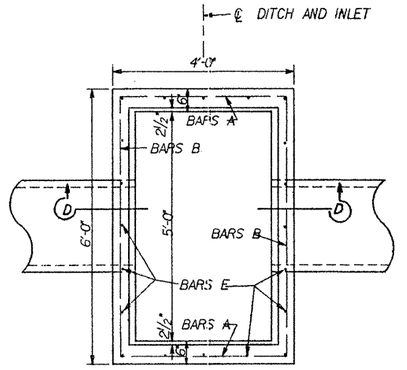

TOP VIEW OF INLET

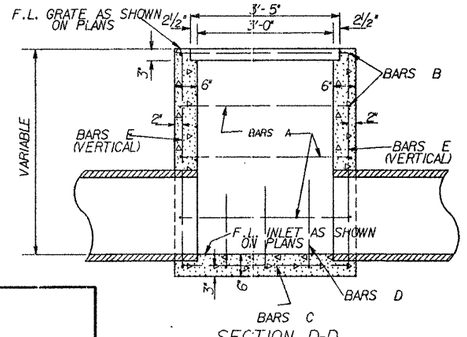

SECTION D-D INLET TY "CC"

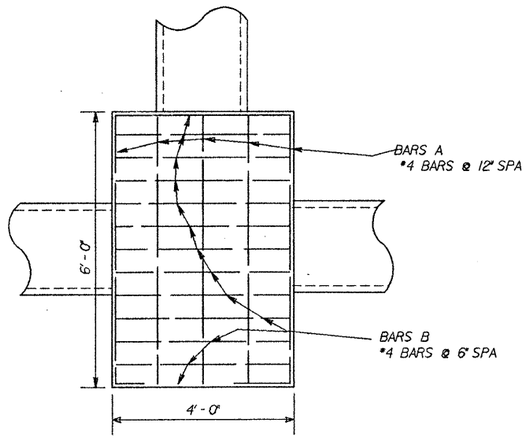

PLAN

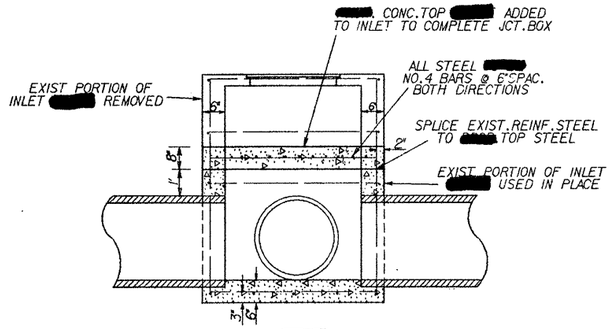

EXIST TY A OR TY CC INLET [redacted] CONVERTED TO JCT. BOX

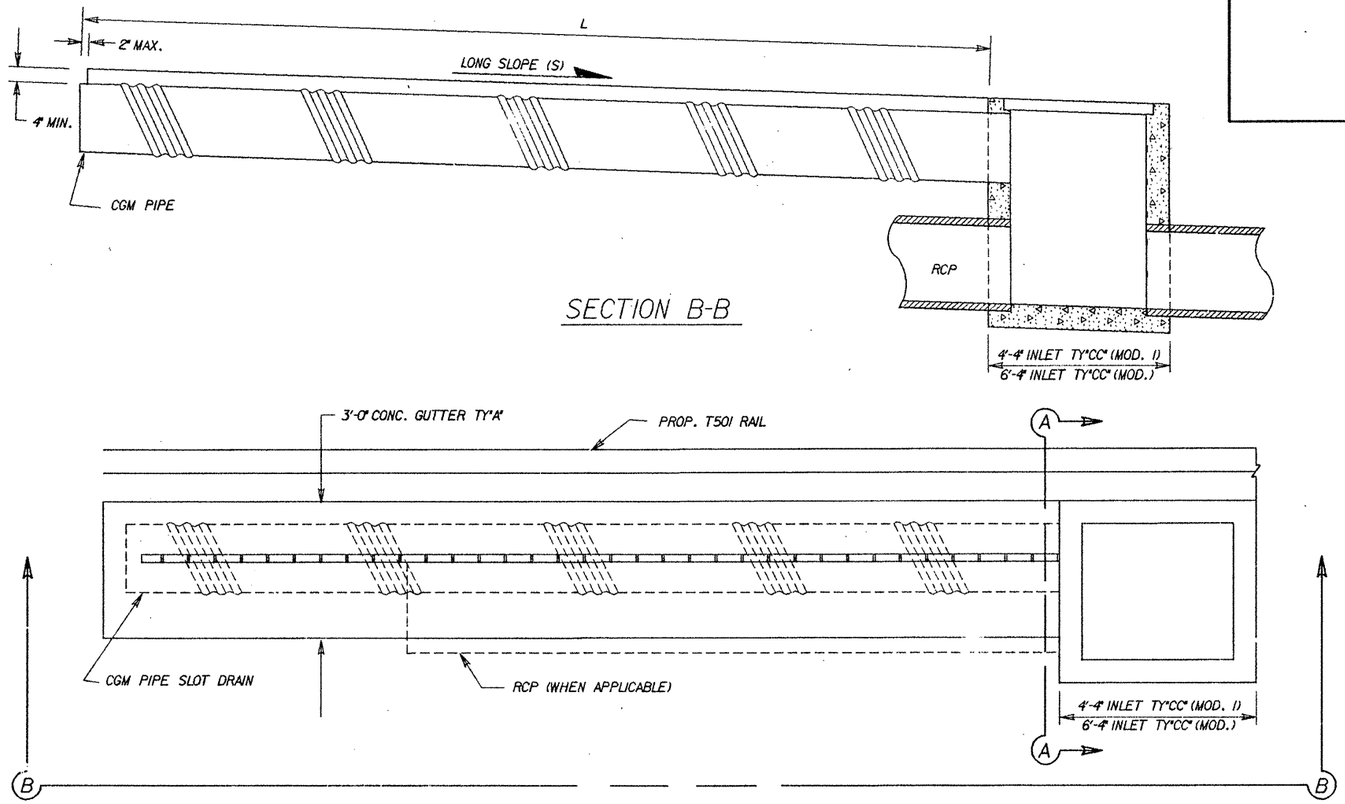

SECTION B-B

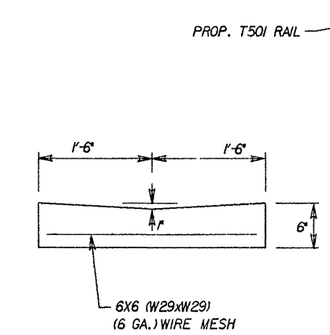

TY "A" GUTTER

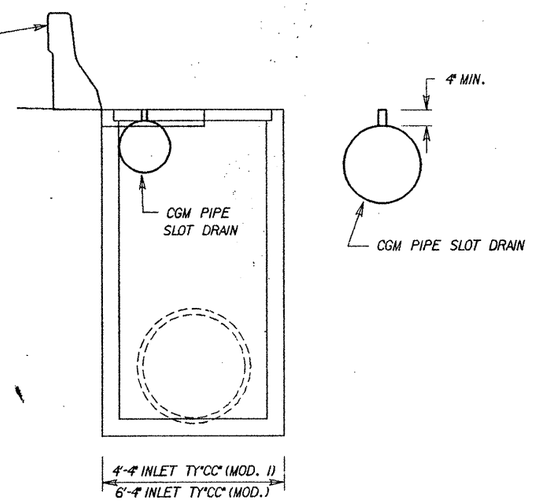

SECTION A-A

INLET & MANHOLE DETAILS

DISTRICT STANDARD

FED. RD. DIV. NO.	FEDERAL AID PROJECT NO.		SHEET NO.
6	NH 92 (-)M		504
STATE	STATE DIST. NO.	COUNTY	
TEXAS	21	HIDALGO	
CONT.	SECT.	JOB	HIGHWAY NO.
39	17	97	US83/281

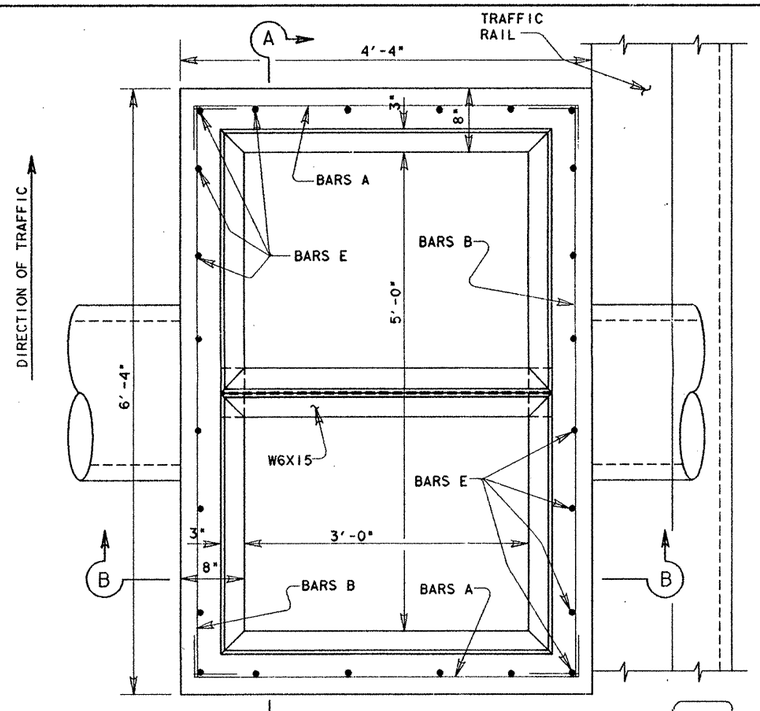

PLAN

INLET TY "CC" MOD.

NOTE:
INSTALLATION SHOWN IS FOR INLET TY "CC" MOD. 1. FOR INLET TY CC MOD. ROTATE INLET 90°

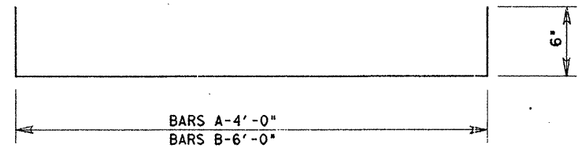

BARS A&B

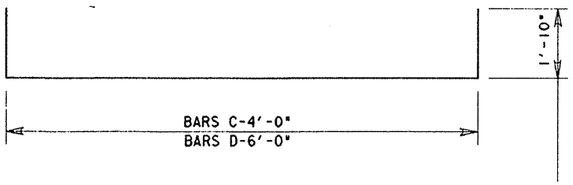

BARS C&D

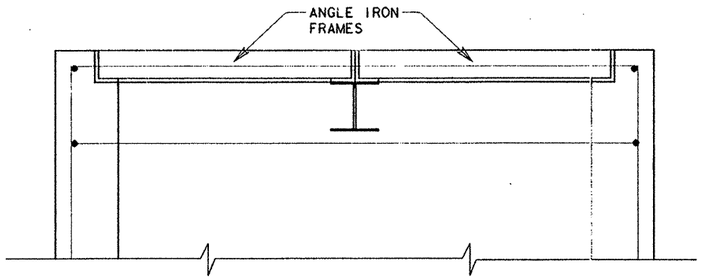

SEC. A-A

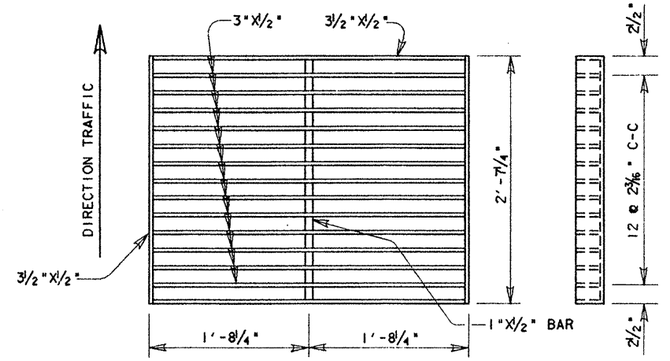

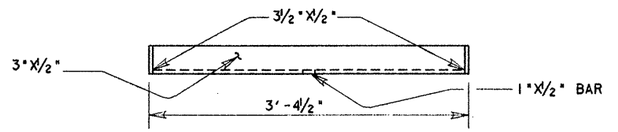

GRATE TY "CC" MOD. 1

WELDED STEEL INLET GRATE (TWO GRATES PER INLET)

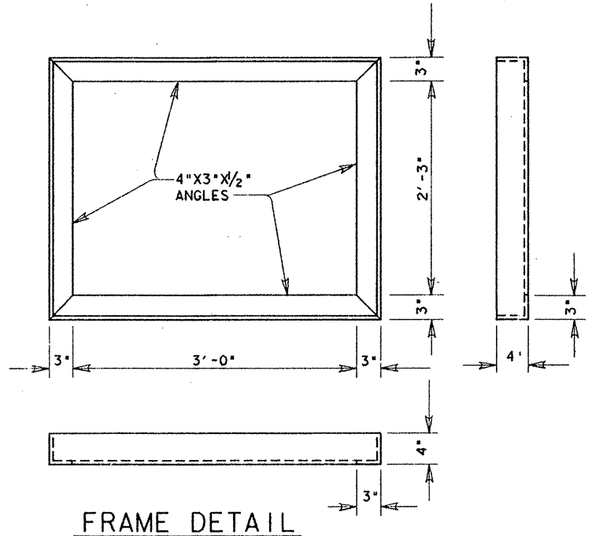

FRAME DETAIL

WELDED ANGLE IRON FRAME
(TWO FRAMES PER INLET)

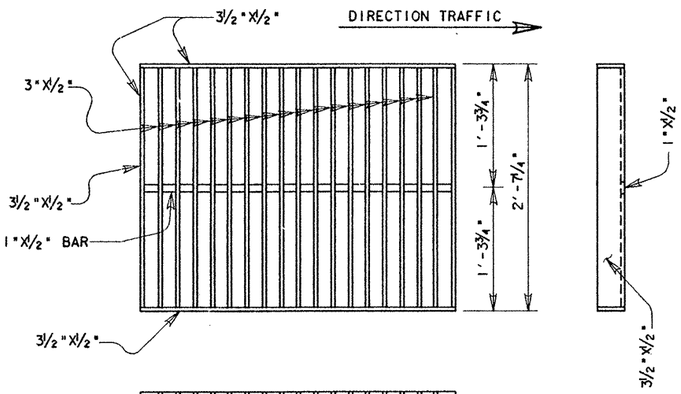

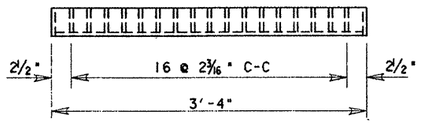

GRATE TY "CC" MOD.

WELDED STEEL INLET GRATE
(TWO GRATES PER INLET)

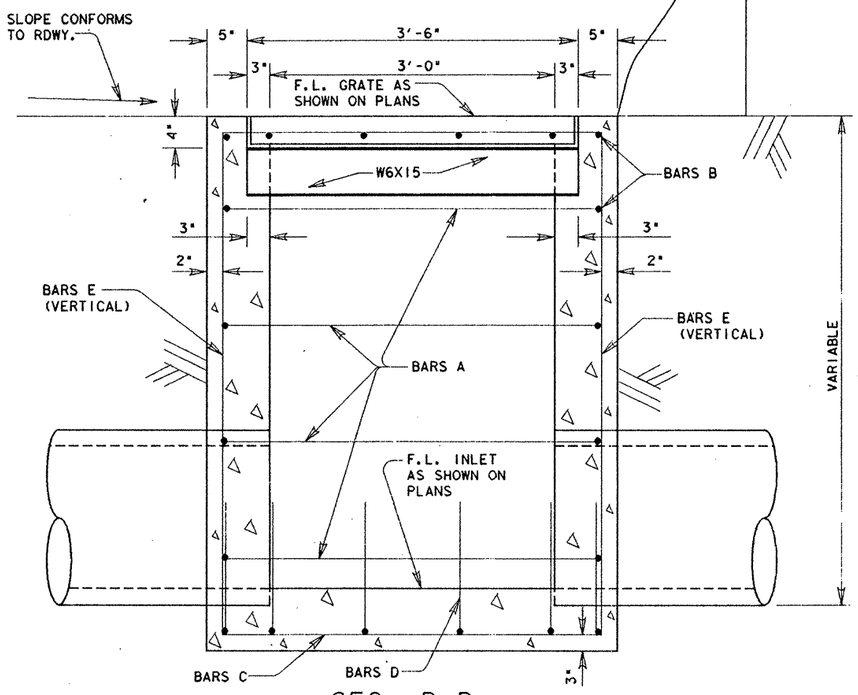

SEC. B-B

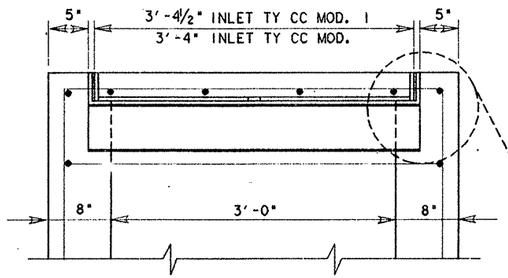

SEC. B-B

(DETAIL W/GRATE)

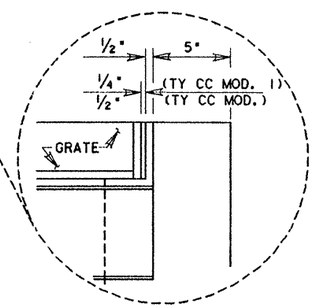

NOTE: ALL STEEL REINFORCING [redacted] NO. 4 BARS ON 12" SPACING IN BOTH DIRECTIONS
ALL STEEL [redacted] GR. 60.

DISTRICT STANDARD
SCALE: N. T. S.

FED. RD. DIV. NO.	FEDERAL AID PROJECT NO.		SHEET NO.
6	NH 92( )M		505
STATE	STATE DIST. NO.	COUNTY	
TEXAS	21	HIDALGO	
CONT.	SECT.	JOB	HIGHWAY NO.
39	17	97	US83

ZEAL: 5325107 11NM00 DGN: [BARS: SAME

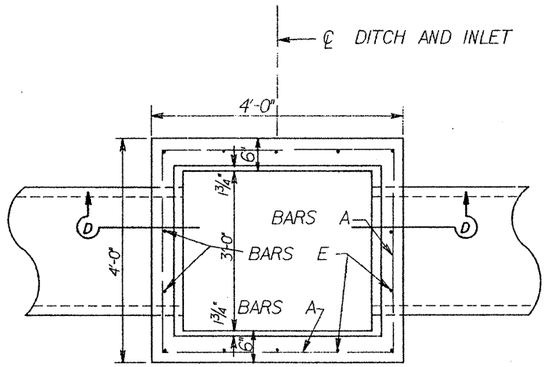

TOP VIEW OF INLET

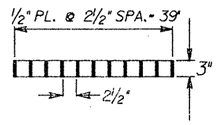

SECTION E-E

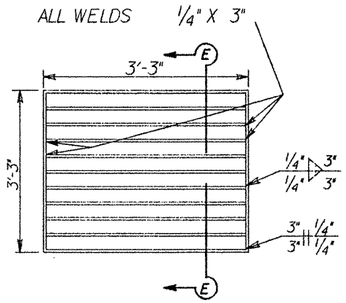

WELDED STEEL INLET GRATE TY "C"

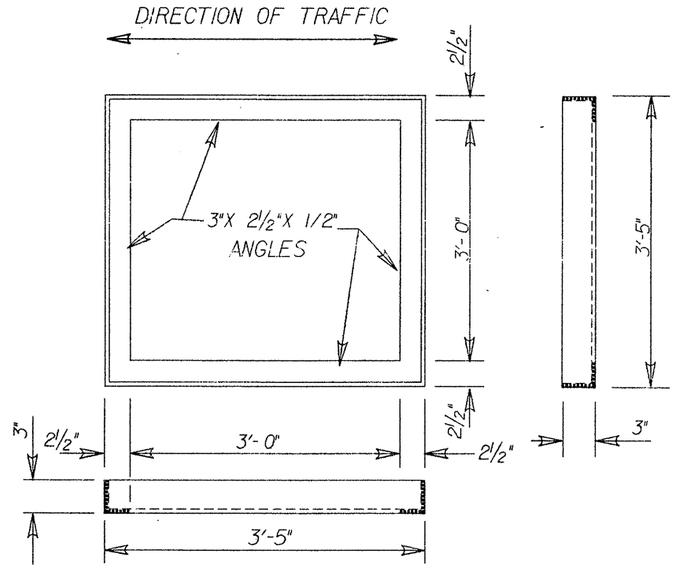

FRAME DETAIL

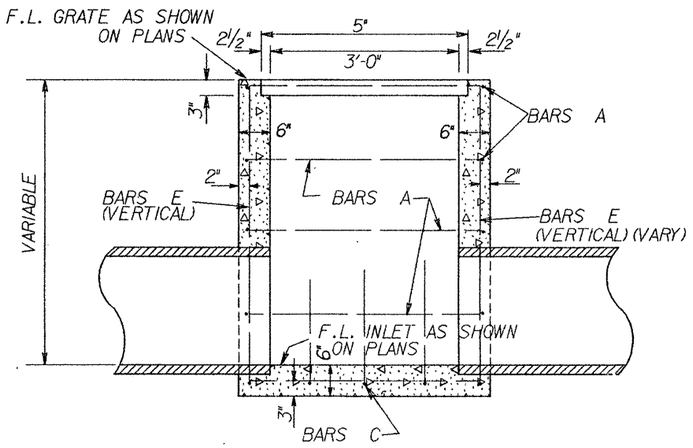

SECTION D-D
INLET TY "C"

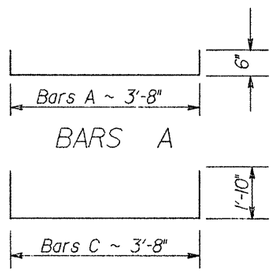

REINFORCING STEEL DETAILS

NOTE: All Steel [redacted] No. 4 Bars on 12" Spacing In both directions.

INLET & DETAILS

DISTRICT STANDARD

FED. RD. DIV. NO.	FEDERAL AID PROJECT. NO.		SHEET NO.
6	NH 92 ( )M		505A
STATE	STATE DIST. NO.	COUNTY	
TEXAS			
CONT.	SECT.	JOB	HIGHWAY NO.
39	17	97	US83/281

TABLE OF QUANTITIES "D" = 3'-0"

BARS A 12" ±		BARS B-1 12" ±		BARS B-2 12" ±		BARS C 12" ±		STEPS 12" ± (#6)	
NO.	LGTH	NO.	LGTH	NO.	LGTH	NO.	LGTH	NO.	LGTH
10	8'-10"	3	6'-6"	3	6'-10"	12	2-9½"	3	2'-10"
TOTAL STEEL									970.0 LBS.
TOTAL CONCRETE									1.48 C.Y.
ADD. STEEL P.L.F.									24.07 LBS.
ADD. CONC. P.L.F.									0.379 C.Y.

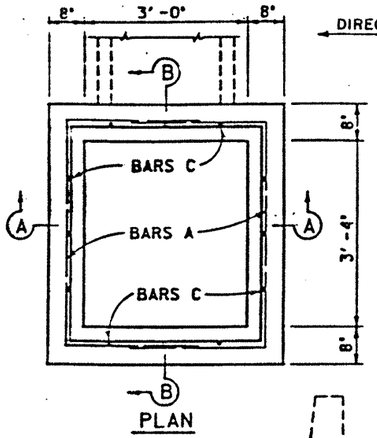

PLAN

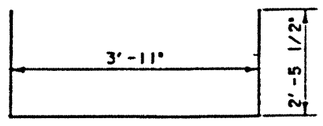

BARS A

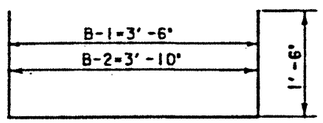

BARS B-1 & B-2

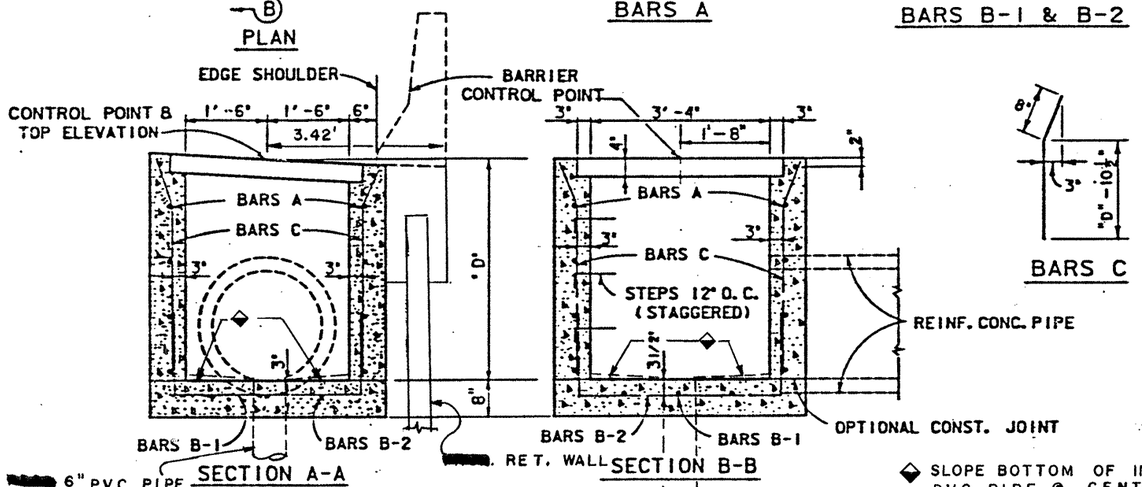

SECTION A-A

SECTION B-B

TYPE "L 1"

BARS C

◆ SLOPE BOTTOM OF INLET DOWN TO PVC PIPE @ CENTER IN ORDER TO PROVIDE SMOUTH DRAINAGE.

TABLE OF QUANTITIES "C" = 1'-6"

BARS A 12" ±			BARS C 12" ±		STEPS 12" ± (#6)	
NO.	LGTH		NO.	LGTH	NO.	LGTH
16	8'-10"		12	1'-3½"	1	12'-10"
TOTAL STEEL						50.00 LBS.
TOTAL CONCRETE						5.3 C.Y.
ADD. STEEL P.L.F.						24.6 LBS.
ADD. CONC. P.L.F.						0.379 C.Y.

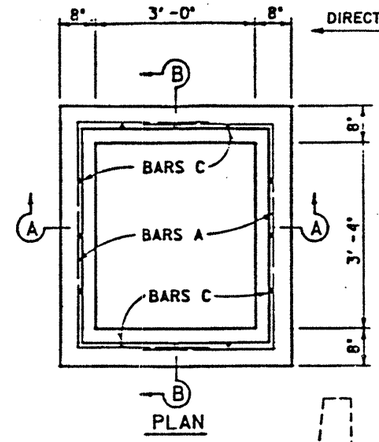

PLAN

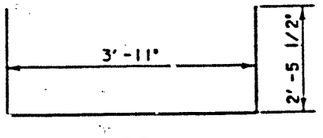

BARS A

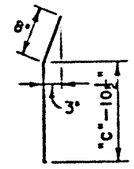

BARS C

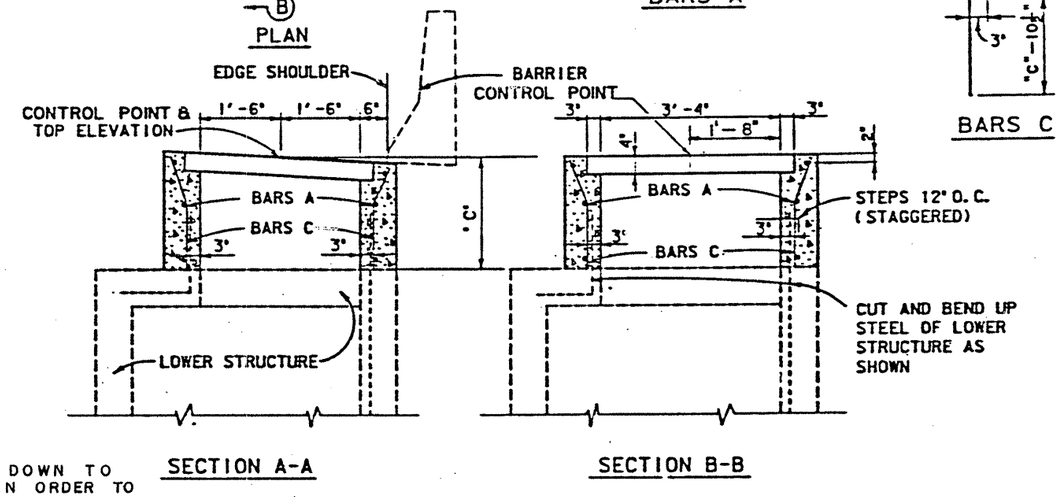

SECTION A-A

SECTION B-B

TYPE "L 2"

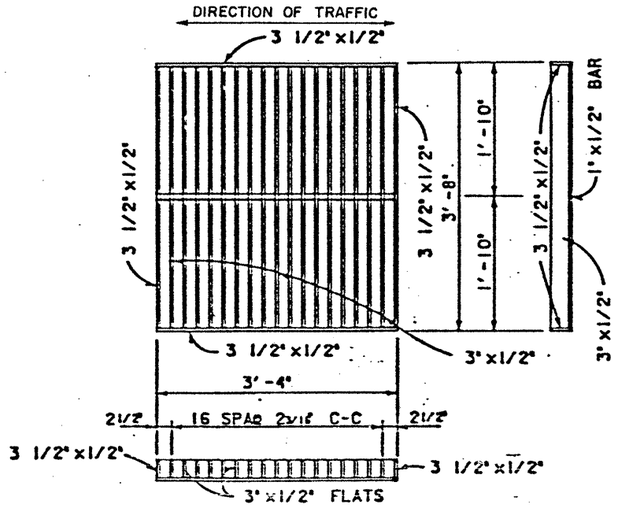

GRATE DETAIL

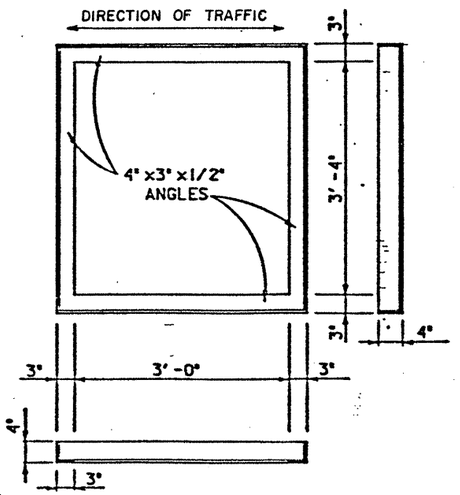

FRAME DETAIL

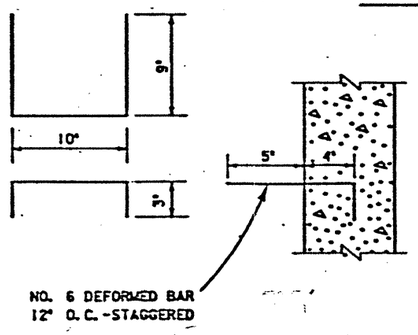

STEPS

GENERAL NOTES:

ALL CONCRETE [redacted] CLASS "A".

ALL REINFORCING STEEL [redacted] NUMBER FOUR (4) BARS. DIMENSIONS RELATING TO STEEL ARE TO CENTERS OF BARS. FIELD CUT AND BEND BARS AS REQUIRED TO ACCOMMODATE TIES TO LOWER STRUCTURE AND TO CLEAR PIPES.

LOCATION GIVEN IN PLANS IS TO CENTROID OF TOP STRUCTURE. OR, IF NO TOP STRUCTURE TO CENTROID OF BOTTOM STRUCTURE. BOTTOM STRUCTURE [redacted] POSITIONED AS REQUIRED TO ALIGN WITH TOP STRUCTURE, STORM DRAIN PIPES AND OTHER ADJACENT STRUCTURES.

REDUCE CONCRETE QUANTITIES IN TABLES FOR AREA OF EACH PIPE IN STRUCTURE.

GRATE AND FRAME [redacted] CONFORM TO ITEM 471

CONC. REDUCTION ONE PIPE

PIPE DIA.	C.Y. CONC.
18"	0.07
21"	0.10
24"	0.12
27"	0.15
30"	0.18
33"	0.22
36"	0.26

ORIGINAL DRAWING OCT. 1980

TYPES "L 1" AND "L 2" GRATED INLETS

MI-6

SHEET OF SHEETS

REVISED – JUN. 1982
REVISED – SEPT. 1988

DISTRICT	COUNTY	SHEET NO.	SHEETS NO.	PROJECT NO.
21	HIDALGO	39	171	97 US83

STATE: TEXAS

FEDERAL AID PROJECT NO.

DISTRICT NO. 21

COUNTY: HIDALGO

SHEET NO. 39

SHEETS NO. 171

PROJECT NO. 97 US83

DRAWN

CHECKED

TRACED

CHECKED

FILE NO. 506

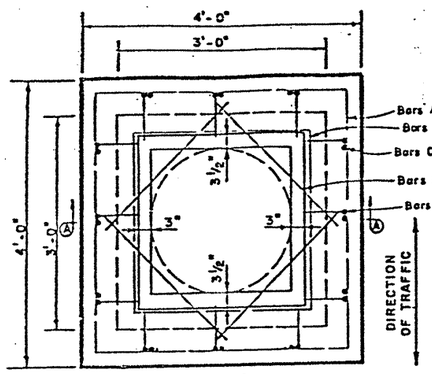

PLAN VIEW

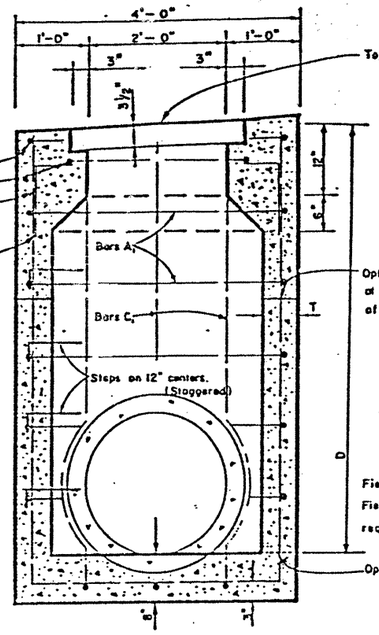

SECTION A-A

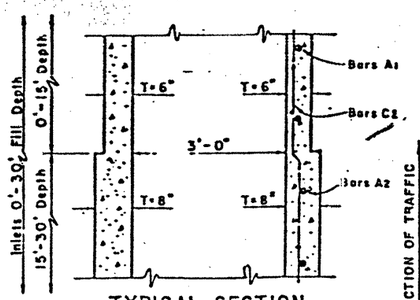

TYPICAL SECTION

Showing Transition Section From Wall Thickness Of 6" To 8" Type "N" And "P" Structures

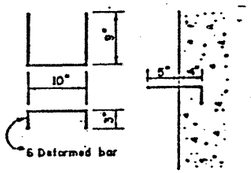

STEPS

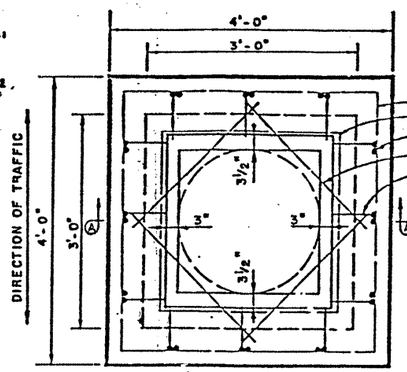

PLAN VIEW

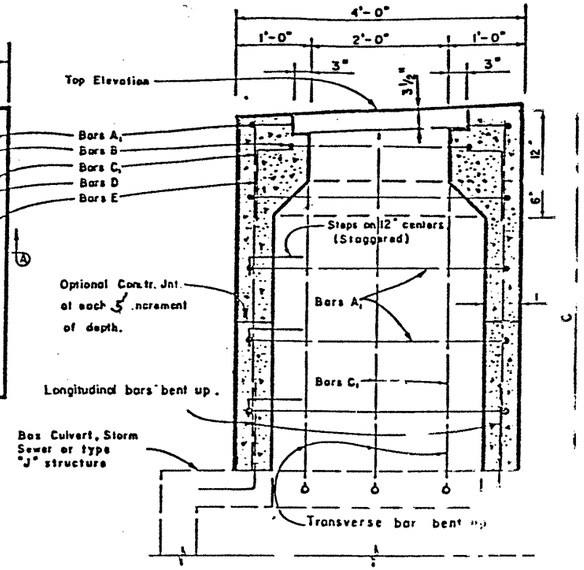

SECTION A-A

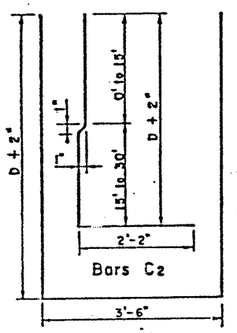

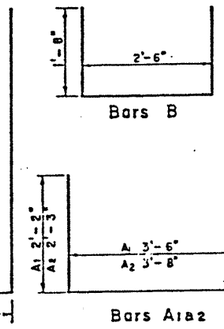

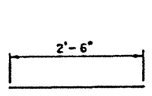

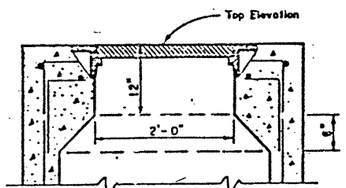

MANHOLE TOP DETAIL

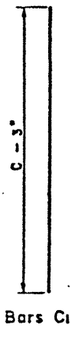

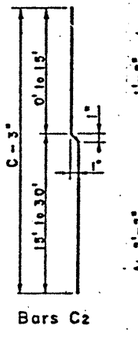

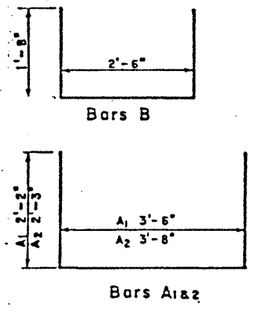

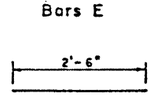

NOTE: Cut and bend up transverse or longitudinal bars adjacent to opening as shown.

TYPE "U" STRUCTURE

GRATED INLET AND MANHOLE QUANTITIES

BAR	SIZE	SPAC	D = 3'-0"		D = 4'-0"		D = 5'-0"		D = 6'-0"		D = 7'-0"		D = 10'-0"		D = 20'-0"		D = 30'-0"	
			NO	L G T H	WT.	NO.	L G T H	WT.	NO.	L G T H	WT.	NO	L G T H	WT.	NO	L G T H	WT.	NO	L G T H	WT.	NO	L G T H	WT.
A1	# 4	12"	6	17'-10"	31	8	17'-10"	42	10	17'-10"	52	12	17'-10"	63	14	17'-10"	73	20	17'-10"	105	30	17'-10"	157
A2	"	12"																			10	18'-2"	55
B	"	-	2	15'-10"	8	2	15'-10"	8	2	15'-10"	8	2	15'-10"	8	2	15'-10"	8	2	15'-10"	8	2	15'-10"	8
C1	"	12"	6	6'-9"	39	6	11'-9"	47	6	13'-9"	55	6	15'-9"	63	6	17'-9"	71	6	23'-9"	95			
C2	"	12"																12	22'-4"	179	12	32'-4"	259
D	"	-	4	12'-6"	7	4	12'-6"	7	4	12'-6"	7	4	12'-6"	7	4	12'-6"	7	4	12'-6"	7	4	12'-6"	7
E	"	-	12	11'-7"	13	12	11'-7"	13	12	11'-7"	13	12	11'-7"	13	12	11'-7"	13	12	11'-7"	13	12	11'-7"	13
Steps	#6	12"	1	2'-10"	4	2	2'-10"	9	3	2'-10"	13	4	2'-10"	17	5	2'-10"	21	8	2'-10"	34	18	2'-10"	77
																					28	12'-10"	119
TOTAL STEEL-LBS.			102			126			148			171			193			262			496		
CLASS "A" CONC.-CU. YDS.			1.44			1.70			1.96			2.22			2.48			3.25			6.37		

727
10.01

D = 3' to D = 15' — Lbs. Steel 102 + 22.75 Lb/LF; Cu. Yds. Conc. 1.44 + 0.259 CY/LF

D = 15' to D = 30' — Lbs. Steel 374 + 23.19 Lb/LF; Cu. Yds. Conc. 4.55 + .364 CY/LF

PIPE DIA.	CU. YDS. CONC. REDUCTION ONE PIPE	
	T = 6"	T = 8"
15"	0.04	0.05
18"	0.05	0.07
21"	0.08	0.10
24"	0.09	0.12
27"	0.11	0.15
30"	0.14	0.18
33"	0.17	0.22
36"	0.20	0.26

TYPE "V" STRUCTURE

GRATED INLET AND MANHOLE QUANTITIES

BAR	SIZE	SPAC	C = 1'-6"			C = 2'-0"			C = 3'-0"			C = 4'-0"			C = 5'-0"			C = 6'-0"			C = 7'-0"			C = 10'-0"			C = 20'-0"			C = 30'-0"		
			NO.	L G T H	WT.	NO.	L G T H	WT.	NO.	L G T H	WT.	NO.	L G T H	WT.	NO.	L G T H	WT.	NO.	L G T H	WT.	NO.	L G T H	WT.	NO.	L G T H	WT.	NO.	L G T H	WT.	NO	L G T H	WT.
A1	# 4	12"	4	17'-10"	21	4	17'-10"	21	6	17'-10"	31	8	17'-10"	42	10	17'-10"	52	12	17'-10"	63	14	17'-10"	73	20	17'-10"	105	30	17'-10"	157	30	17'-10"	157
A2	"	12"																														
B	"	-	2	15'-10"	8	2	15'-10"	8	2	15'-10"	8	2	15'-10"	8	2	15'-10"	8	2	15'-10"	8	2	15'-10"	8	2	15'-10"	8	2	15'-10"	8	2	15'-10"	8
C1	"	12"				12	1'-9"	14	12	2'-9"	22	12	3'-9"	30	12	4'-9"	38	12	5'-9"	46	12	6'-9"	54	12	9'-9"	78							
C2	"	12"																														
D	"	-	4	2'-6"	7	4	2'-6"	7	4	2'-6"	7	4	2'-6"	7	4	2'-6"	7	4	12'-6"	7	4	2'-6"	7	4	2'-6"	7	4	12'-6"	7	4	12'-6"	7
E	"	-	12	11'-7"	13	12	11'-7"	13	12	11'-7"	13	12	11'-7"	13	12	11'-7"	13	12	11'-7"	13	12	11'-7"	13	12	11'-7"	13	12	11'-7"	13	12	11'-7"	13
Steps	#6	12"							1	2'-10"	4	2	2'-10"	9	3	2'-10"	13	4	2'-10"	17	5	2'-10"	21	8	2'-10"	34	18	2'-10"	77	8	2'-10"	112
TOTAL STEEL-LBS.			49			63			85			109			131			154			176			245			475			705		
CLASS "A" CONC.-CU YDS			0.65			0.78			1.04			1.30			1.56			1.82			2.08			2.85			5.97			9.51	

C = 1'-6" to C = 15' — Lbs. Steel 60 + 22.75 Lb/LF; Cu. Yds. Conc. 0.65 + .259 CY/LF

C = 15' to C = 30' — Lbs. Steel 358 + 23.19 Lb/LF; Cu. Yds. Conc. 4.15 + .364 CY/LF

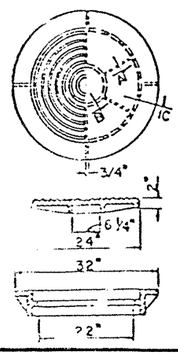

CAST IRON RING AND COVER

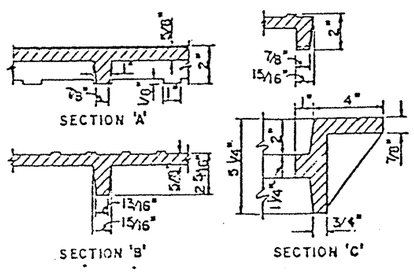

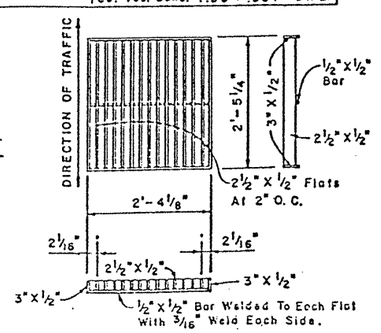

GRATE AND FRAME DETAILS

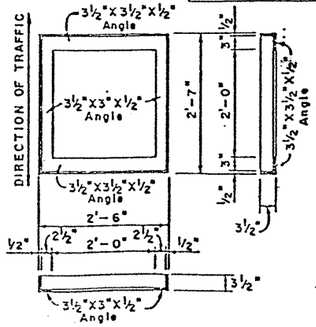

GENERAL NOTES:

All concrete [redacted] Class "A" concrete.

All dimensions relating to reinforcing steel are to centers of bars. Reinforcing steel [redacted] placed with the centers of outside layers of bars 3" from the concrete surface where the wall thickness, T, is 6" and [redacted] placed with the centers of outside layers of bars 4" from the concrete surface where the wall thickness, T, is 8" unless otherwise noted.

Grate, frame, ring and cover [redacted] conform to item 471.

Construct top to conform to slope of surface.

TYPES "U" & "V" GRATED INLET & MANHOLE DETAILS MI-11

DRAWN: March 1981 L.J.M.	CHECKED: J.B.C.	FED. ROAD DIV. NO. 6	STATE: TEXAS
REVISED: March 1985 "			FEDERAL PROJECT NO. F 308 (47)
			DISTRICT: 21
			COUNTY: HIDALGO
			SHEET NO. 39
			JOB NO. 17 97 1
			CONTROL NO. 0583

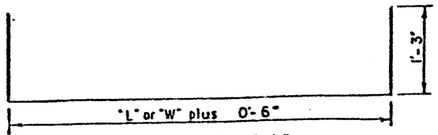

BARS A & BARS A2

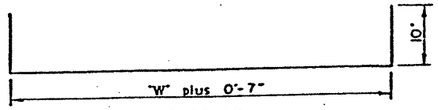

BARS D2

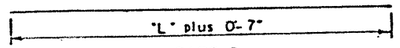

BARS D

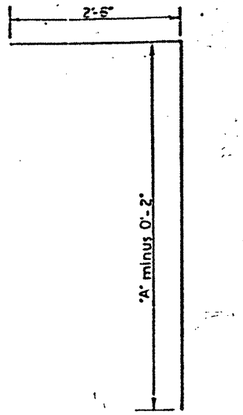

BARS C

PIPE DIA.	CONC. REDUCTION ONE PIPE C.Y.
15	0.05
18	0.07
21	0.10
24	0.12
27	0.15
30	0.18
33	0.22
36	0.26
39	0.30
42	0.35
45	0.40
48	0.45
54	0.57
60	0.70
66	0.84
72	1.00
78	1.16

TABLE OF QUANTITIES WITH NO DEDUCTIONS FOR PIPES OR INLET OPENINGS

MAX. PIPE DIA.	HEIGHT OF STR. "A"	LENGTH OF STR. "L"	WIDTH OF STR. "W"	STEPS #6 12" ± No	STEPS #6 12" ± Length	BILL OF #4 REINFORCING STEEL: Bars A 12" ± No	Bars A Length	Bars A2 12" ± No	Bars A2 Length	Bars B 12" ± No	Bars B Length	Bars B2 12" ± No	Bars B2 Length	Bars C 6" ± No	Bars C Length	Bars D 12" ± No	Bars D Length	Bars D2 12" ± No	Bars D2 Length	Bars E — No	Bars E Length	REINF. STEEL Lb.	CLASS "A" CONC. * C.Y.
42"	4'-9"	4'-4"	4'-4"	2	2'-10"	6	7'-4"	6	7'-4"	6	4'-10"	6	4'-10"	40	7'-1"	10	4'-11"	10	6'-7"	4	4'-10"	384	3.66
48"	5'-3"	4'-11"	"	3	"	"	7'-11"	7	"	"	5'-5"	7	"	42	7'-7"	"	5'-6"	"	"	"	"	430	4.21
54"	5'-9"	5'-6"	"	"	"	"	8'-6"	"	"	"	6'-0"	"	"	44	8'-1"	12	6'-1"	12	"	"	"	480	4.79
60"	6'-3"	6'-1"	"	4	"	"	9'-1"	8	"	"	6'-7"	8	"	46	8'-7"	"	6'-8"	"	"	"	"	528	5.40
66"	6'-9"	6'-8"	"	"	"	"	9'-8"	"	"	"	7'-2"	"	"	48	9'-1"	14	7'-3"	14	"	"	"	583	6.03
72"	7'-3"	7'-3"	"	5	"	"	10'-3"	9	"	"	7'-9"	9	"	50	9'-7"	"	7'-10"	"	"	"	"	640	6.70
78"	7'-9"	7'-10"	"	"	"	"	10'-10"	"	"	"	8'-4"	"	"	52	10'-1"	16	8'-5"	16	"	"	"	695	7.39
48"	5'-3"	4'-11"	4'-11"	3	2'-10"	7	7'-11"	7	7'-11"	7	5'-5"	7	5'-5"	44	7'-7"	10	5'-6"	10	7'-2"	4	4'-10"	458	4.53
54"	5'-9"	5'-6"	"	"	"	"	8'-6"	"	"	"	6'-0"	"	"	46	8'-1"	12	6'-1"	12	"	"	"	506	5.14
60"	6'-3"	6'-1"	"	4	"	"	9'-1"	8	"	"	6'-7"	8	"	48	8'-7"	"	6'-8"	"	"	"	"	561	5.78
66"	6'-9"	6'-8"	"	"	"	"	9'-8"	"	"	"	7'-2"	"	"	50	9'-1"	14	7'-3"	14	"	"	"	618	6.45
72"	7'-3"	7'-3"	"	5	"	"	10'-3"	9	"	"	7'-9"	9	"	52	9'-7"	"	7'-10"	"	"	"	"	672	7.15
78"	7'-9"	7'-10"	"	"	"	"	10'-10"	"	"	"	8'-4"	"	"	54	10'-1"	16	8'-5"	16	"	"	"	724	7.87
54"	5'-9"	5'-6"	5'-6"	3	2'-10"	7	8'-6"	7	8'-6"	7	6'-0"	7	6'-0"	48	8'-1"	12	6'-1"	12	7'-9"	4	4'-10"	532	5.50
60"	6'-3"	6'-1"	"	4	"	"	9'-1"	8	"	"	6'-7"	8	"	50	8'-7"	"	6'-8"	"	"	"	"	583	6.17
66"	6'-9"	6'-8"	"	"	"	"	9'-8"	"	"	"	7'-2"	"	"	52	9'-1"	14	7'-3"	14	"	"	"	642	6.87
72"	7'-3"	7'-3"	"	5	"	"	10'-3"	9	"	"	7'-9"	9	"	54	9'-7"	"	7'-10"	"	"	"	"	692	7.60
78"	7'-9"	7'-10"	"	"	"	"	10'-10"	"	"	"	8'-4"	"	"	56	10'-1"	16	8'-5"	16	"	"	"	762	8.36
60"	6'-3"	6'-1"	6'-1"	4	2'-10"	8	9'-1"	8	9'-1"	8	6'-7"	8	6'-7"	52	8'-7"	12	6'-8"	12	8'-4"	4	4'-10"	616	6.55
66"	6'-9"	6'-8"	"	"	"	"	9'-8"	"	"	"	7'-2"	"	"	54	9'-1"	14	7'-3"	14	"	"	"	677	7.29
72"	7'-3"	7'-3"	"	5	"	"	10'-3"	9	"	"	7'-9"	9	"	56	9'-7"	"	7'-10"	"	"	"	"	734	8.05
78"	7'-9"	7'-10"	"	"	"	"	10'-10"	"	"	"	8'-4"	"	"	58	10'-1"	16	8'-5"	16	"	"	"	801	8.84
66"	6'-9"	6'-8"	6'-8"	4	2'-10"	8	9'-8"	8	9'-8"	8	7'-2"	8	7'-2"	56	9'-1"	14	7'-3"	14	8'-11"	4	4'-10"	701	7.70
72"	7'-3"	7'-3"	"	5	"	"	10'-3"	9	"	"	7'-9"	9	"	58	9'-7"	"	7'-10"	"	"	"	"	760	8.50
78"	7'-9"	7'-10"	"	"	"	"	10'-10"	"	"	"	8'-4"	"	"	60	10'-1"	16	8'-5"	16	"	"	"	827	9.32
72"	7'-3"	7'-3"	7'-3"	5	2'-10"	9	10'-3"	9	10'-3"	9	7'-9"	9	7'-9"	60	9'-7"	14	7'-10"	14	9'-6"	4	4'-10"	798	8.95
78"	7'-3"	7'-10"	"	"	"	"	10'-10"	"	"	"	8'-4"	"	"	62	10'-1"	16	8'-5"	16	"	"	"	868	9.80
78"	7'-9"	7'-10"	7'-10"	5	2'-10"	9	10'-10"	9	10'-10"	9	8'-4"	9	8'-4"	64	10'-1"	16	8'-5"	16	10'-1"	4	4'-10"	893	10.09

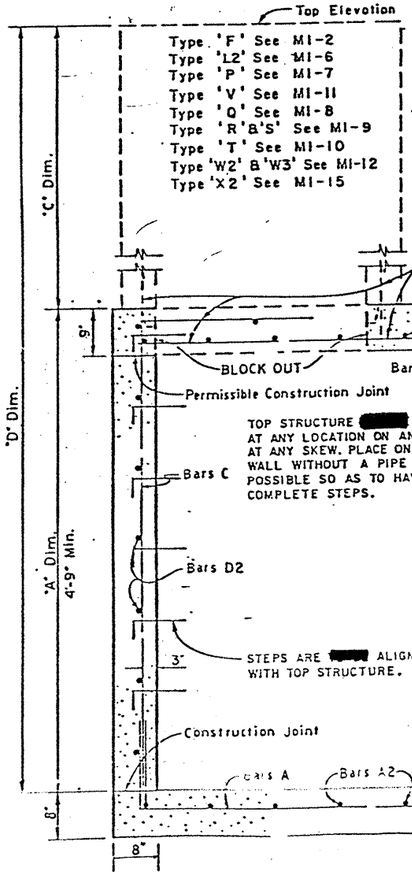

TYPICAL SECTION — LENGTH VIEW
WIDTH SIMILAR

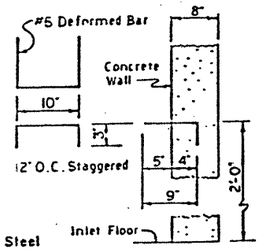

STEPS

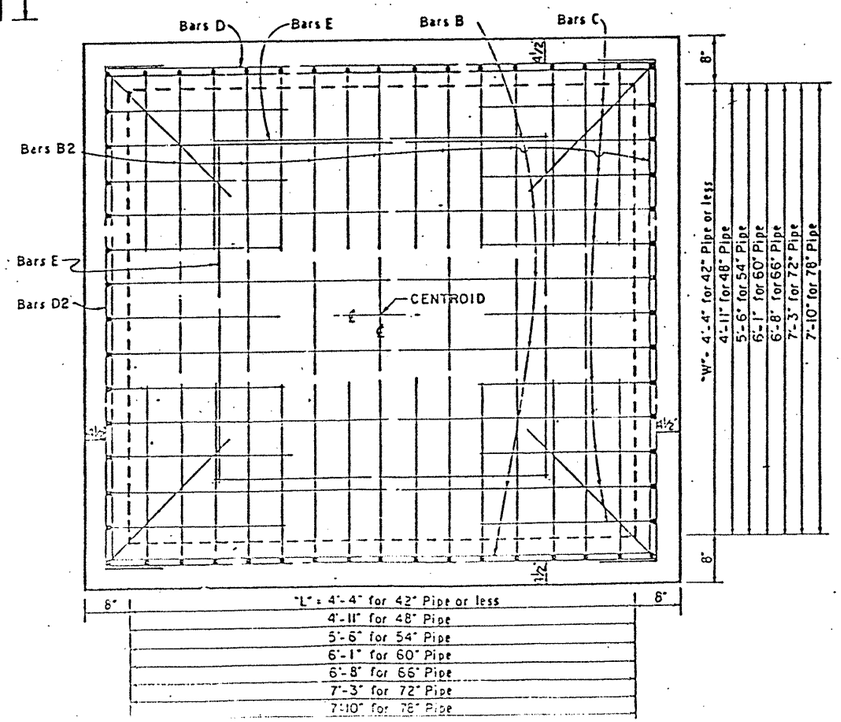

PLAN OF SLAB
(BOTTOM REINFORCEMENT SHOWN)

*NOTE:
FOR 36" DIAMETER INLET OPENING DEDUCT 0.20 C.Y. CONCRETE.
FOR 48" DIAMETER INLET OPENING DEDUCT 0.35 C.Y. CONCRETE.
FOR 3'x2' INLET OPENING DEDUCT 0.17 C.Y. CONCRETE.
FOR 3'x3' INLET OPENING DEDUCT 0.25 C.Y. CONCRETE.
FOR 3'-4'x3' INLET OPENING DEDUCT 0.28 C.Y. CONCRETE.

NOTE:
LOCATION GIVEN IN PLANS IS TO CENTROID OF TOP STRUCTURE. OR, IF NO TOP STRUCTURE TO CENTROID OF BOTTOM STRUCTURE. BOTTOM STRUCTURE [redacted] POSITIONED AS REQUIRED TO ALIGN WITH TOP STRUCTURE, STORM DRAIN PIPES AND OTHER ADJACENT STRUCTURES.

GENERAL NOTES:

ALL CONCRETE [redacted] CLASS "A".

DIMENSIONS RELATING TO REINFORCING STEEL ARE TO CENTERS OF BARS.

FIELD CUT AND BEND BARS AS REQUIRED TO ACCOMMODATE PIPES AND INLET EXTENSIONS.

CONSTRUCTION JOINT AT FLOWLINE [redacted] RAISED A MAXIMUM OF 6" AT THE OPTION OF THE CONTRACTOR. ADJUST LENGTH OF VERTICAL STEEL AS REQUIRED WITH A 20 DIAMETER LAP.

WHERE IT IS CONSIDERED NECESSARY, BARS CUT OUT TO PROVIDE OPENINGS FOR PIPE [redacted] BENT AND USED TO PROVIDE A BETTER TIE FOR EXTENSIONS AND PIPE AS DIRECTED BY THE ENGINEER IN CHARGE.

TYPE 'J' INLET STRUCTURE
MI-4(1)

DRAWN: 70 O.V.F. REV. JULY 1982 L.J.M. APR 1989 J.T.

121

39 17 97

508

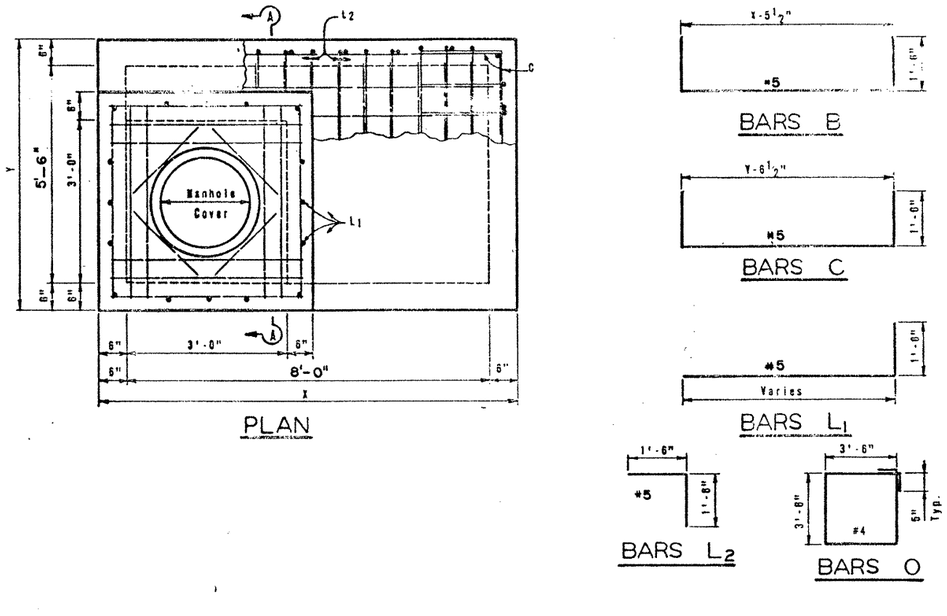

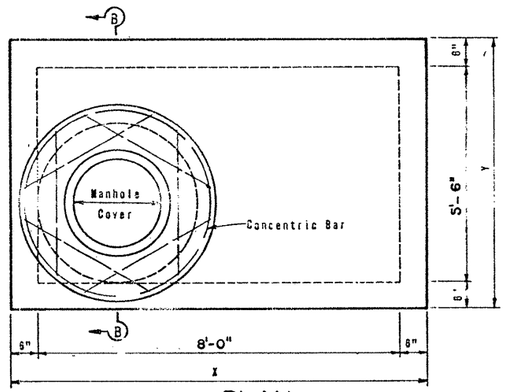

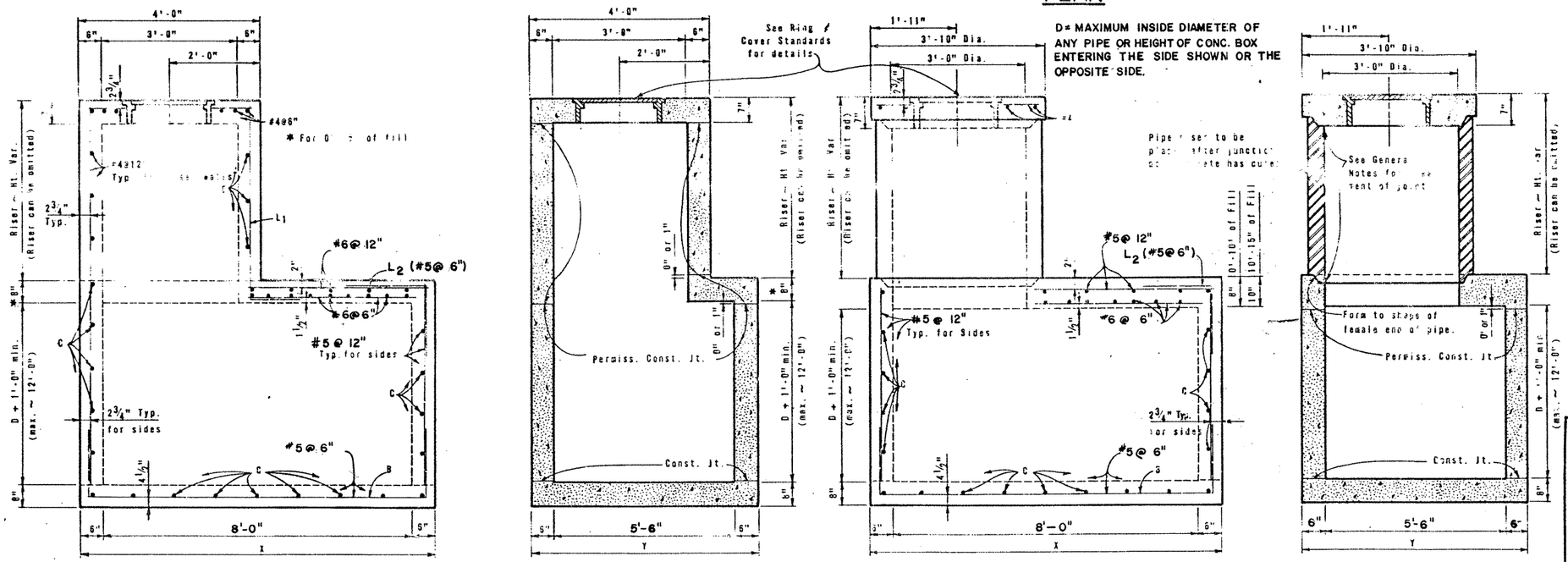

MANHOLE WITH CAST-IN-PLACE RISER

OPTIONAL MANHOLE WITH PIPE RISER

STATE OF TEXAS
RAUL PALMA
65656
REGISTERED PROFESSIONAL ENGINEER

3/3/92

GENERAL NOTES

Unless otherwise shown in the plans, payment [redacted] made for each Manhole of the Type M (MOD).

Exposed edges [redacted] chamfered 3/4".

Alternate design drawings bearing the seal of a registered professional engineer will be acceptable for precast construction of manholes.

Shop drawings [redacted] not [redacted] required.

The contractor [redacted] with the approval of the Engineer furnish manholes of equivalent structural design.

In areas of conflict between reinforcing steel, block-outs, pipes, anchor bolts or other reinforcing steel, the reinforcement [redacted] bent or adjusted to clear as directed by the Engineer.

The riser [redacted] constructed of reinforced concrete as shown or of Reinforced Concrete Pipe, Class III, in accordance with ASTM Designation C-76. If pipe is used, joints [redacted] conform to the Item "Reinforced Concrete Pipe Culverts". Precast Concrete Lift Off Cover may be substituted for "Ring and Cover".

Connecting pipes should enter within 10° of normal to inlet wall. If necessary, pipe elbow or curved approach alignment [redacted] used to stay within this limit.

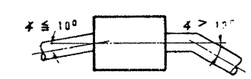

FOR RING & COVER SEE RING & COVER DETAILS FOR MANHOLE TYPE M (MOD).

STATE DEPARTMENT OF HIGHWAYS AND PUBLIC TRANSPORTATION

MANHOLE TYPE M(MOD)

(JUNCTION BOX WITH ACCESS)

STATE	FEDERAL DISTRICT	FEDERAL AID PROJECT				SHEET
21	6	NH 92 ( ) M				508A
COUNTY		CONTROL	SECTION	JOB	HIGHWAY	
HIDALGO		39	17	97	US83	

281

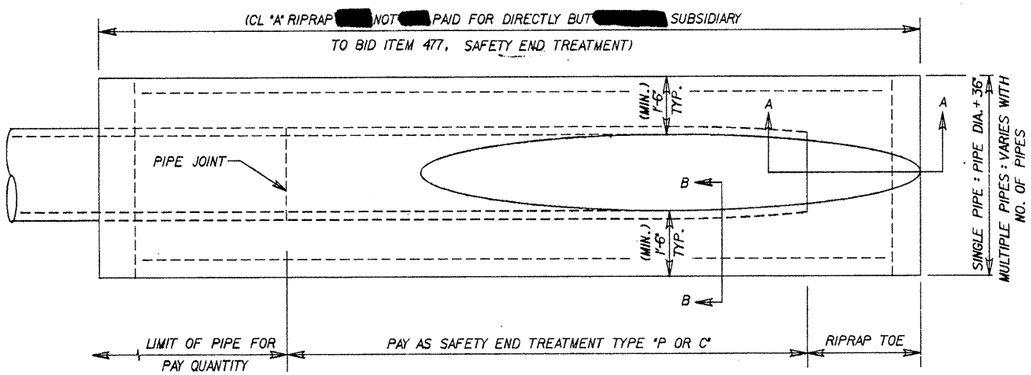

PLAN VIEW

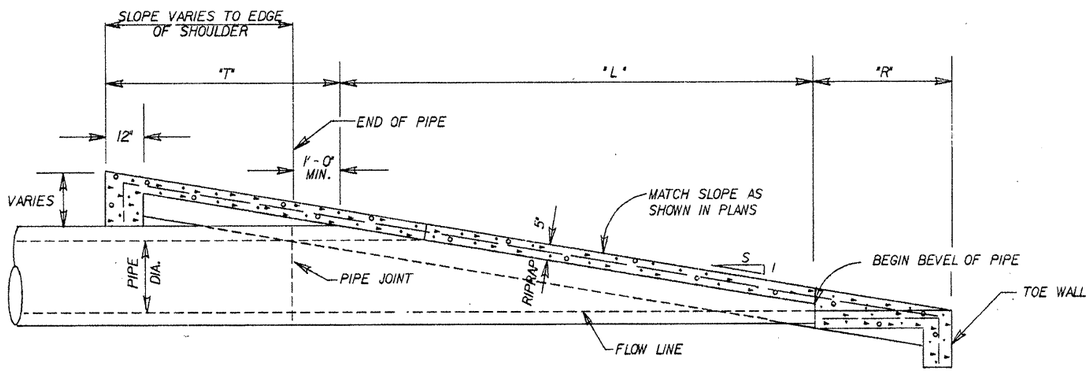

ELEVATION
SAFETY END TREATMENT
(TYPE "P OR C")

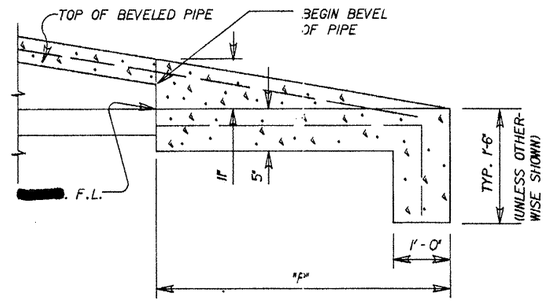

SEC. A-A

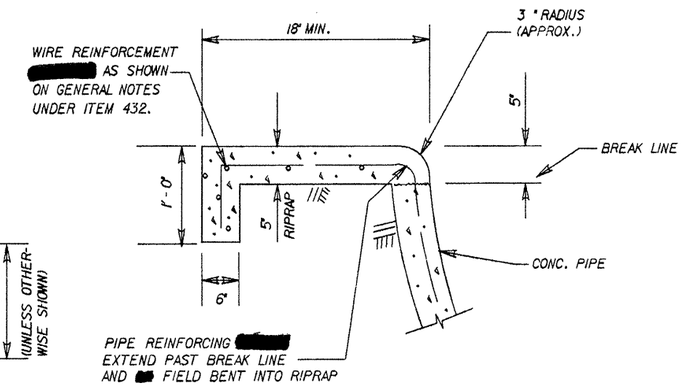

SEC. B-B

SAFETY END TREATMENT PIPE LENGTHS

PIPE DIA. (IN.)	"L"			
	3:1	4:1	5:1	6:1
12	2'-0"	2'-8"	3'-4"	4'-0"
15	2'-9"	3'-8"	4'-7"	5'-6"
18	3'-6"	4'-8"	5'-10"	7'-0"
24	5'-1½"	6'-10"	8'-6½"	10'-3"
30	6'-9"	9'-0"	11'-3"	13'-6"
36	8'-6"	11'-4"	14'-2"	17'-0"
42	10'-1½"	13'-6"	16'-10½"	20'-3"
48	11'-9"	15'-8"	19'-7"	23'-6"

RIPRAP TOE LENGTHS

SLOPE	"R"	"T"
3:1	2'-9"	1'-9"
4:1	3'-8"	2'-4"
5:1	4'-7"	2'-11"
6:1	5'-6"	3'-6"

ESTIMATED RIPRAP CL "A" VOLUME (CY)*

PIPE DIA. (IN.)				
	3:1	4:1	5:1	6:1
12	.88	1.11	1.34	1.57
15	.98	1.23	1.49	1.75
18	1.08	1.36	1.64	1.93
24	1.29	1.63	1.97	2.32
30	1.50	1.91	2.32	2.73
36	1.73	2.21	2.69	3.17
42	1.95	2.50	3.05	3.60
48	2.18	2.80	3.42	4.05

* FOR CONTRACTORS INFORMATION ONLY (SINGLE PIPE)

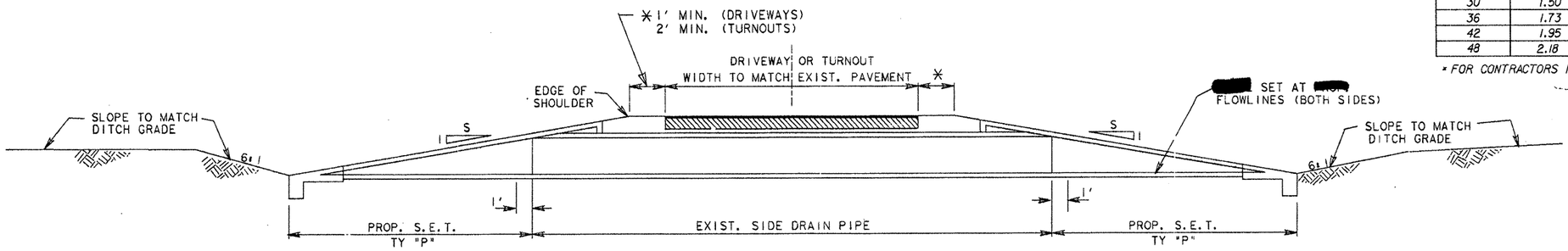

TYPICAL SIDEDRAIN SECTION

NOTE:

ALL EXCAVATION AND BACKFILL REQUIRED AT ALL PIPE SIDE DRAIN CONNECTIONS, ADJUSTMENTS AND/OR EXTENSIONS [illegible] NOT [illegible] PAID FOR DIRECTLY BUT [illegible] SUBSIDIARY TO THE BID ITEMS INVOLVED AND IN ACCORDANCE WITH ITEM 400 "STRUCTURAL EXCAVATION".

SAFETY END TREATMENT (TYPE "P OR C")
&
SIDE DRAIN DETAILS

SHEET 1 OF 1 SHEET

DISTRICT STANDARD

FED. RD. DIV. NO.	FED. AID PROJECT NO.		SHEET NO.
6	NH 92(50)M		5088
STATE	STATE DIST. NO.	COUNTY	
TEXAS	21	HIDALGO	
CONT.	SECT.	JOB	HIGHWAY NO.
39	17	97	83/28!

FILE: 7FA21325103333420SET1.DGN IPARM: TA

Note: Riser, either cast-in-place or concrete pipe, [redacted] located in any corner.

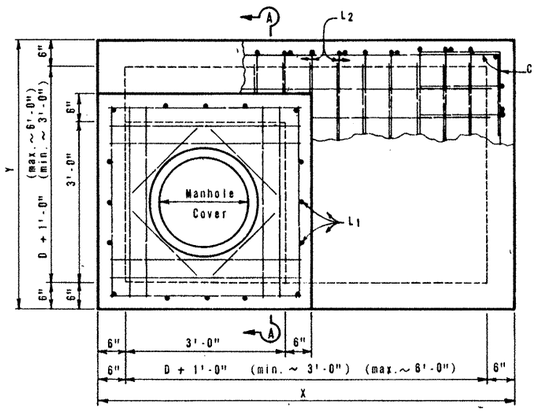

PLAN

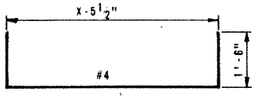

BARS B

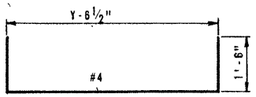

BARS C

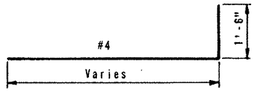

BARS L_1

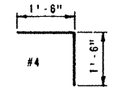

BARS L_2

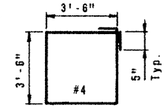

BARS O

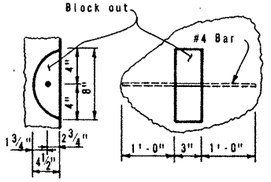

LIFTING CATCH

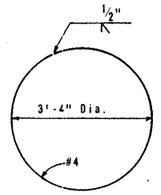

CONCENTRIC BAR

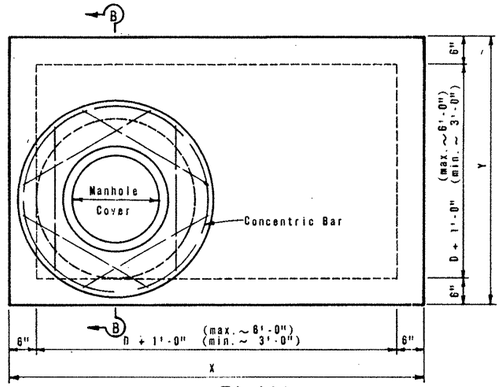

PLAN

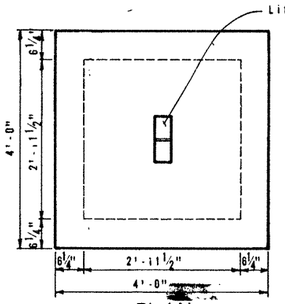

PLAN

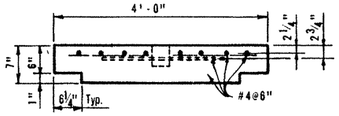

ELEVATION

CAST-IN-PLACE RISER COVER

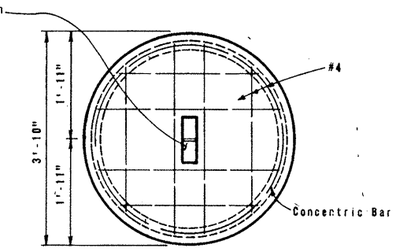

PLAN

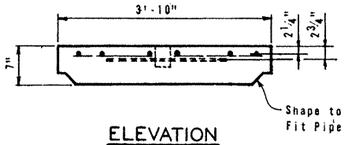

ELEVATION

CONCRETE PIPE RISER COVER

OPTIONAL PRECAST CONCRETE LIFT-OFF COVERS

GENERAL NOTES

Unless otherwise shown in the plans, payment [redacted] made for each Manhole of the Type M.

Exposed edges [redacted] chamfered 3/4".

Alternate design drawings bearing the seal of a registered professional engineer [redacted] acceptable for precast construction of manholes.

Shop drawings [redacted] not [redacted] required.

The contractor may with the approval of the Engineer furnish manholes of equivalent structural design.

In areas of conflict between reinforcing steel, block-outs, pipes, anchor bolts or other reinforcing steel, the reinforcement [redacted] bent or adjusted to clear as directed by the Engineer.

The riser [redacted] constructed of reinforced concrete as shown or of Reinforced Concrete Pipe, Class III, in accordance with ASTM Designation C-76. If pipe is used, joints [redacted] conform to the item "Reinforced Concrete Pipe Culverts". Precast Concrete Lift Off Cover [redacted] substituted for "Ring and Cover".

Connecting pipes [redacted] enter within 10° of normal to inlet wall. If necessary, pipe elbow or curved approach alignment [redacted] used to stay within this limit.

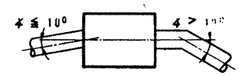

Pipes [redacted] enter any or all walls. The maximum size of pipe that [redacted] accomodated is 60". More than one pipe [redacted] enter a side, subject to the maximum box dimensions shown. The clear distance between adjacent pipes [redacted] 9" minimum.

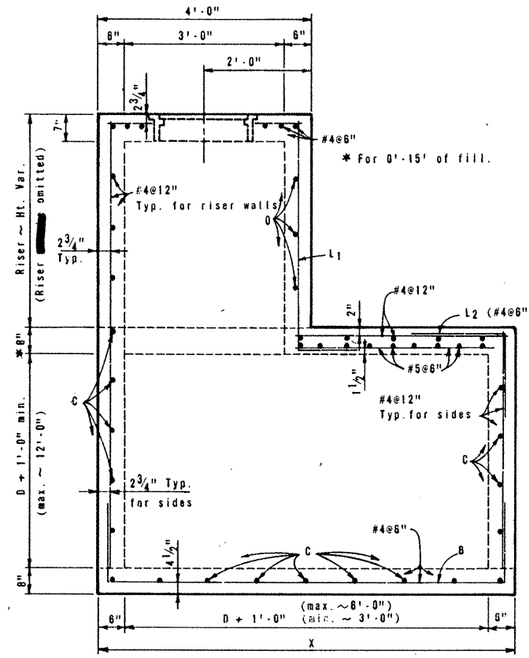

ELEVATION

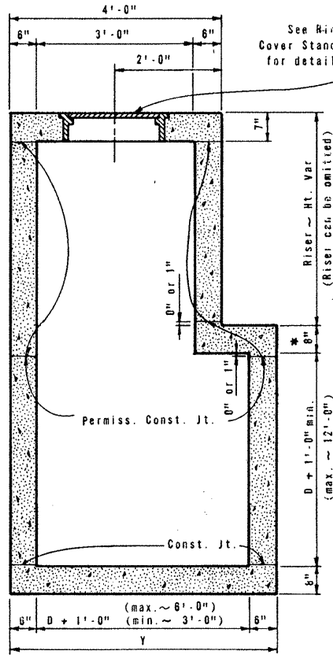

SECTION A-A

MANHOLE WITH CAST-IN-PLACE RISER

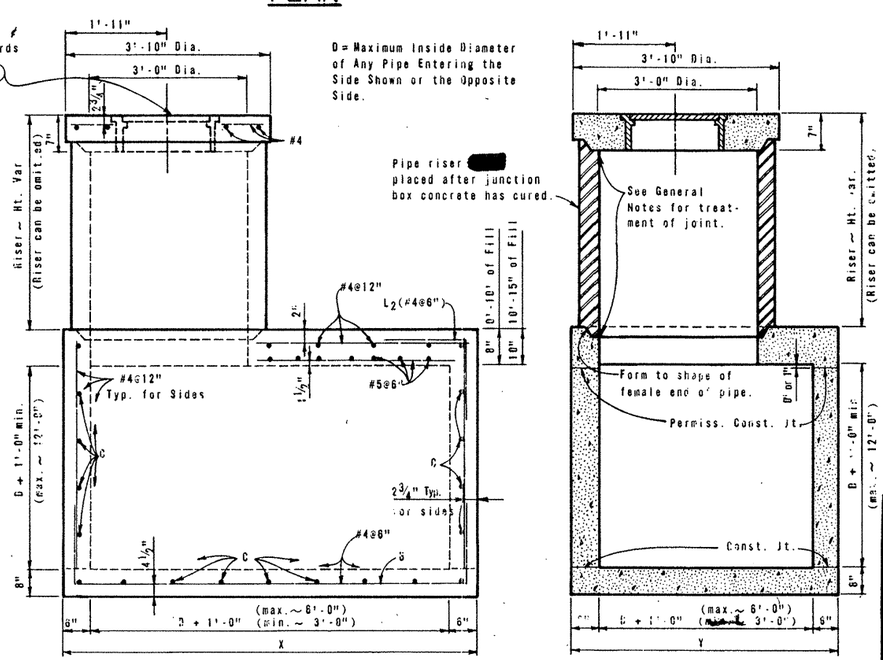

ELEVATION

SECTION B-B

OPTIONAL MANHOLE WITH PIPE RISER

STATE DEPARTMENT OF HIGHWAYS AND PUBLIC TRANSPORTATION

MANHOLE TYPE M

(JUNCTION BOX WITH ACCESS)

MH-M

ORIGINAL DRAWING DATE: DEC. 1977	STATE DISTRICT	FEDERAL REGION	FEDERAL AID PROJECT	SHEET
DN.: ADC	21	6	NH 92 ( )M	509
CK.: THD	COUNTY	CONTROL	SECTION	JOB	HIGHWAY
REVISIONS: Rev. 8-86 Gen. Notes	HIDALGO	39	17	97	11583
DW.: MGB					
CK.: THD					

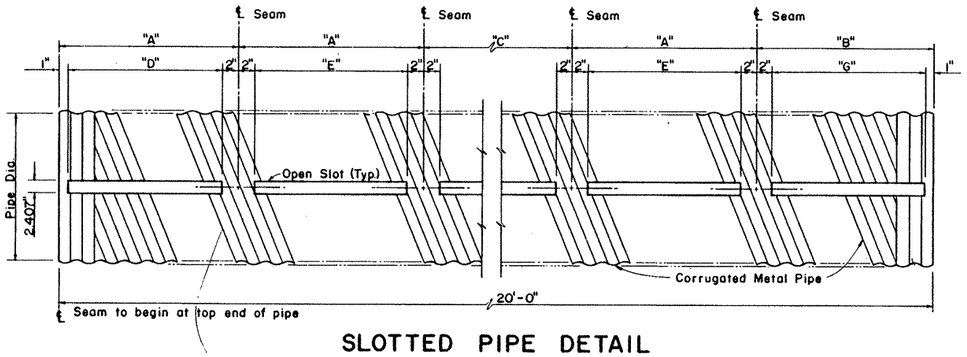

SLOTTED PIPE DETAIL

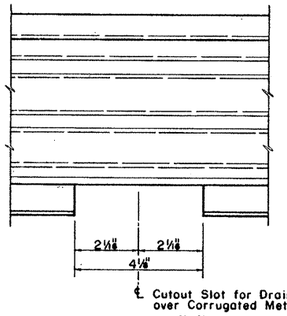

℄ Cutout Slot for Drain Guide Walls over Corrugated Metal Pipe seams (Typ.)

DETAIL "A"

DIMENSION SCHEDULE							
PIPE DIA.	"A"	"B"	"C"	"D"	"E"	*	"G"
12"	31½"	19⅛"	126"	28½"	27½"	8	16½"
15"	27½"	20"	137½"	24½"	23½"	9	17"
18"	[redacted]	3¾"	157½"	23¼"	22¼"	10	¾"
24"	25"	15"	150"	22"	21"	10	12"
30"	24¾"	17¼"	150"	21¾"	20¾"	10	14½"
36"	24⅝"	18⅜"	147¾"	21⅜"	20⅝"	10	15⅜"

*Total number of Locking Plates required for each pipe diameter.

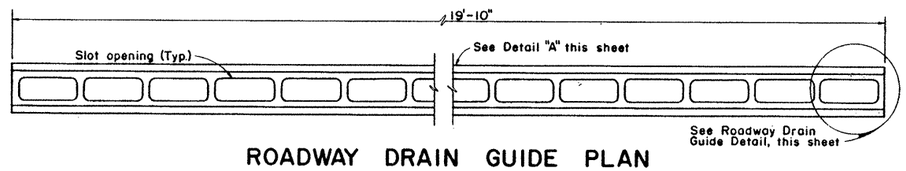

ROADWAY DRAIN GUIDE PLAN

NOTE: Overall length of Drain Guide Steel Walls is 19'-10" (Typ.)

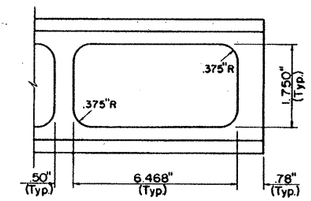

ROADWAY DRAIN GUIDE DETAIL

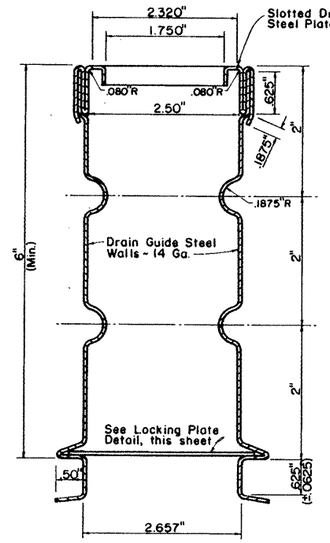

DRAIN GUIDE SECTION

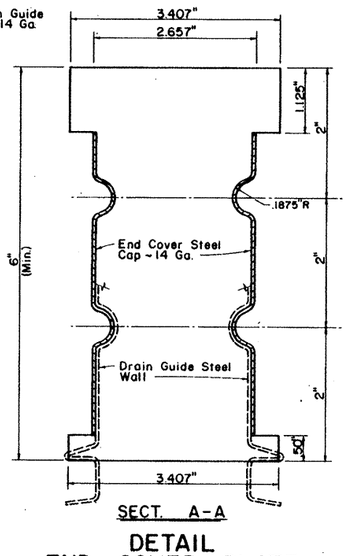

DETAIL END COVER PLATE

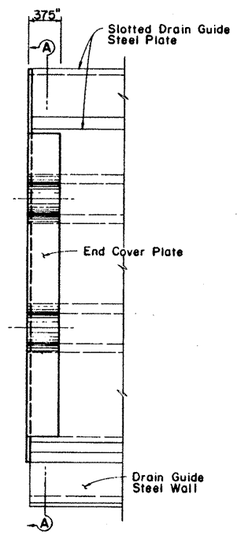

SIDE ELEVATION

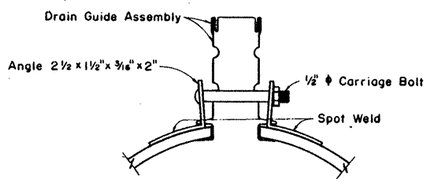

JOINT CONNECTION DETAIL

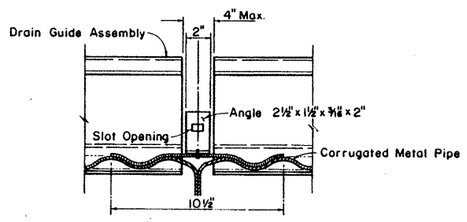

JOINT CONNECTION SECTION

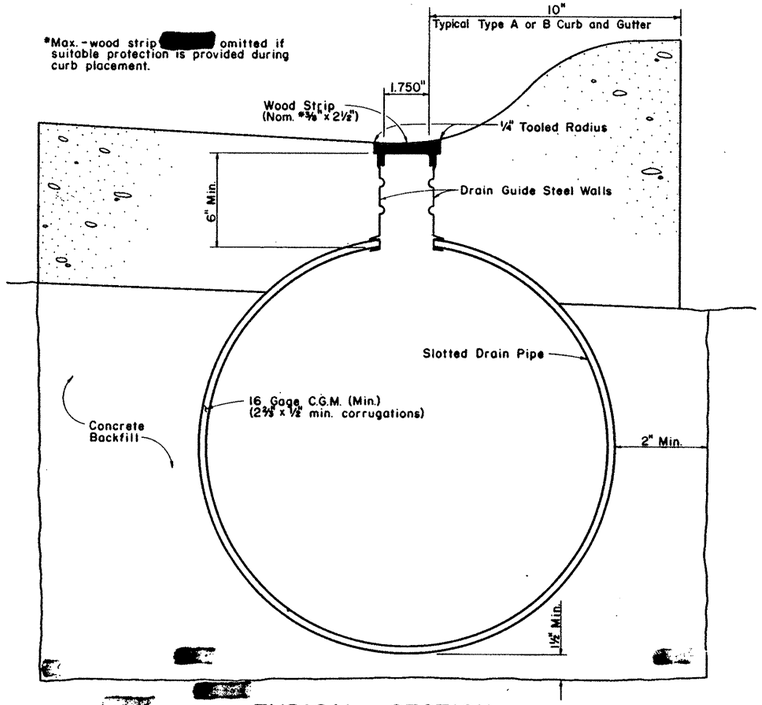

TYPICAL SECTION

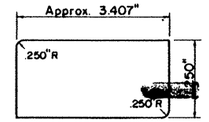

PLAN

SIDE ELEVATION

LOCKING PLATE DETAIL

NOTE: Locking Plate [redacted] installed at each end of Drain Guide and at each centerline location of seams on pipe.

NOTE:
For Typical Installations, Backfill Details, and General Notes, see Sheet 2 of 2.

SHEET 1 OF 2

STATE DEPARTMENT OF HIGHWAYS AND PUBLIC TRANSPORTATION

SLOTTED DRAIN

SD

ORIGINAL DRAWING DATE: MARCH 1983	STATE DISTRICT	FEDERAL REGION	FEDERAL AID PROJECT #	SHEET
DN.:- REVISIONS	21	6	NH 92 ( ) M	510
CK.:-	COUNTY	CONTROL	SECTION	JOB	HIGHWAY
DW.:-	HIDALGO	39	17	97	0583
CK.:-					

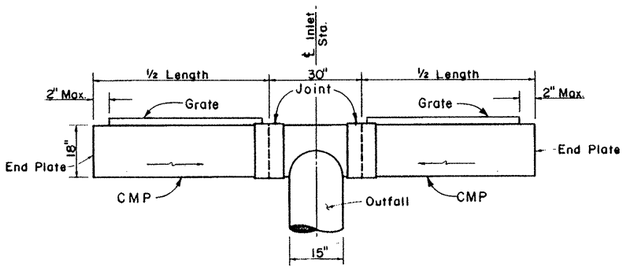

TYPE "T"

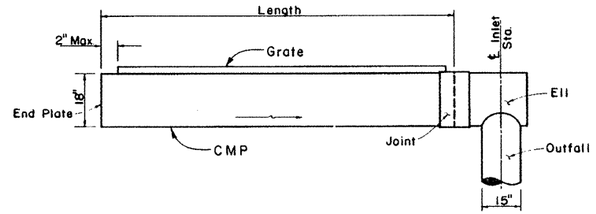

TYPE "L"

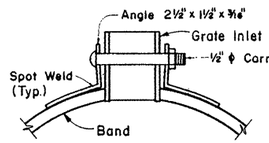

JOINT DETAIL

① DIMENSION SCHEDULE*				
PIPE DIA.	"A"	"B"	"C"	"D"
12"	14"	30¼"	27"	9½"
15"	20½"	28¼"	25"	17½"
18"	14"	26½"	24"	9½"
24"	18"	25½"	23½"	14½"
30"	19"	25¼"	22½"	14½"
36"	20"	25	22½"	17½"

*All dimensions ± ¼" Tolerance

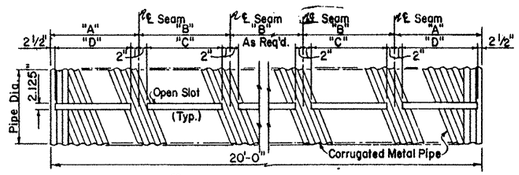

① SLOTTED PIPE DETAIL FOR LOCK SEAM PIPE
See Detail "A" this sheet

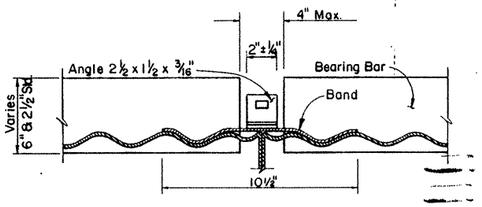

① JOINT SECTION

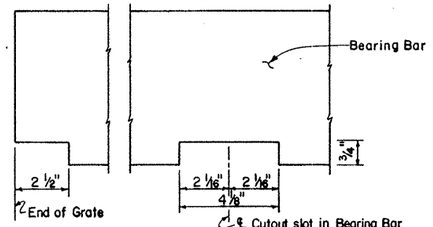

① DETAIL "A"

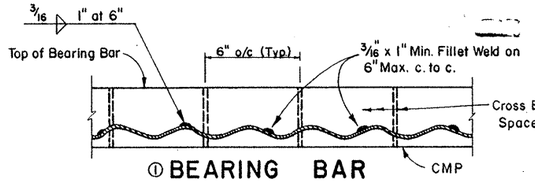

① BEARING BAR WELDING DETAIL

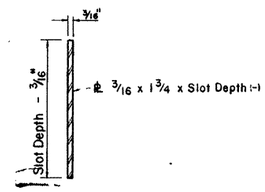

CROSS BAR SPACER

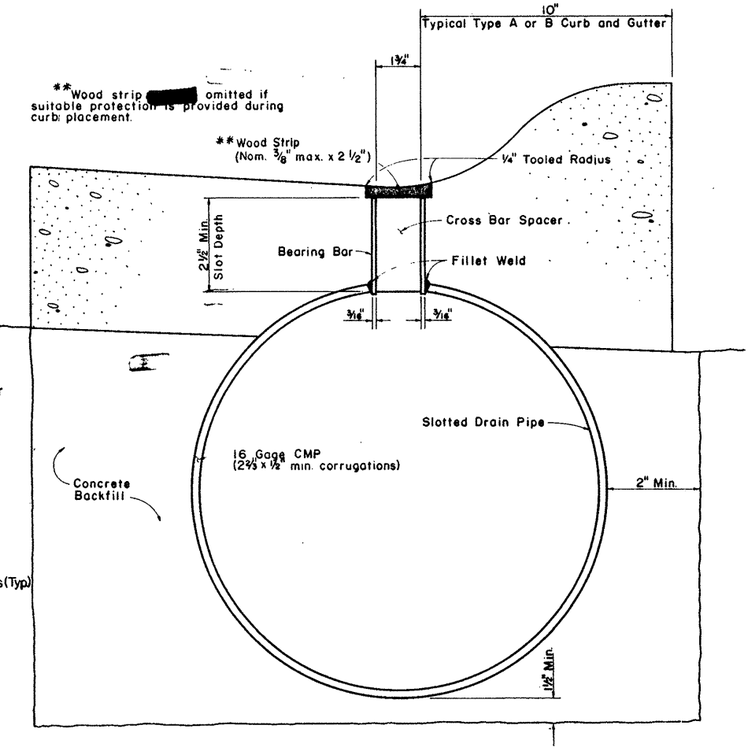

TYPICAL SECTION

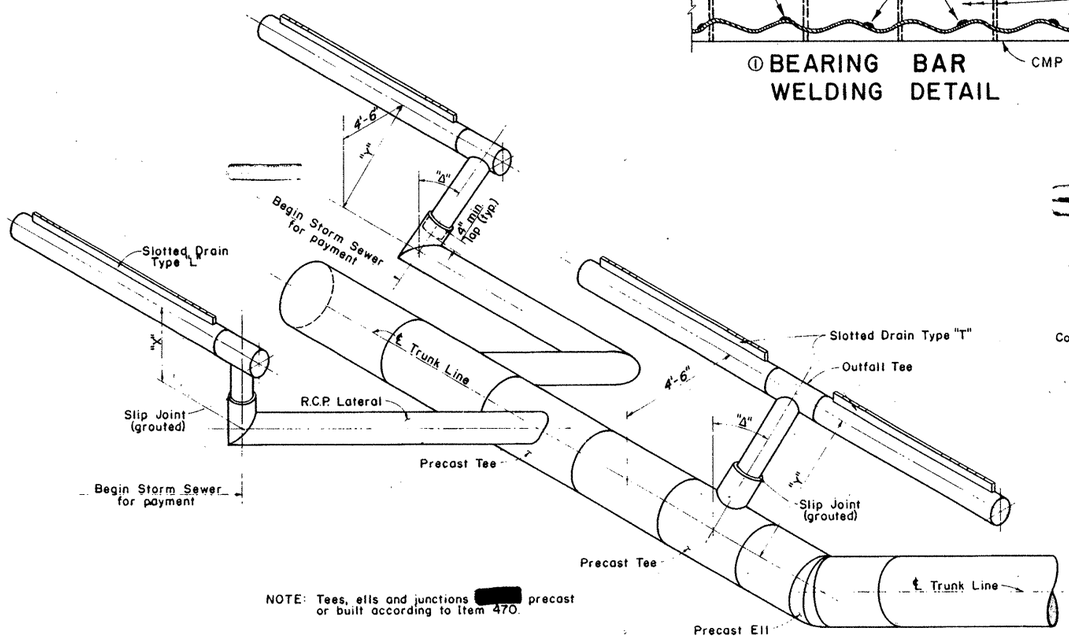

NOTE: Tees, ells and junctions [redacted] precast or built according to Item 470.

TYPICAL INSTALLATIONS

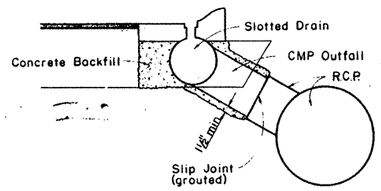

BACKFILL DETAIL

GENERAL NOTES:

Grate assemblies [redacted] conform to the provisions of ASTM Designation: A-36, and [redacted] galvanized in accordance with ASTM Designation: A-123.

All welded locations [redacted] painted with a good quality asphalt base aluminum paint. All welding [redacted] in accordance with Item 448, Structural Welding.

The Corrugated Galvanized Pipe [redacted] in accordance with Item 460, Corrugated Galvanized Pipe.

Trenches for slotted drains and outfall pipe [redacted] backfilled with 1½" minimum (or as shown otherwise) low strength concrete (minimum 2 sk. cement/cy.) as directed by the Engineer.

Outfall Connection slip joint [redacted] backed with a suitable compressible material to retain grout in place during curing.

Slotted Drain [redacted] furnished in 20 ft. lengths wherever practical to minimize the number of joints required.

The Contractor [redacted] furnish either of the designs as shown.

STATE DEPARTMENT OF HIGHWAYS AND PUBLIC TRANSPORTATION

SLOTTED DRAIN

SD

ORIGINAL DRAWING DATE: MARCH 1983		STATE DISTRICT	FEDERAL REGION	FEDERAL AID PROJECT #		SHEET
DM.:- CK.:- DW.:- CK.:-	REVISIONS Rev. 2-84 - ① Rev. 7-87	21	6	NH92 ( )M		510A
		COUNTY		CONTROL	SECTION	JOB	HIGHWAY
		HIDALGO		39	17	97	US83

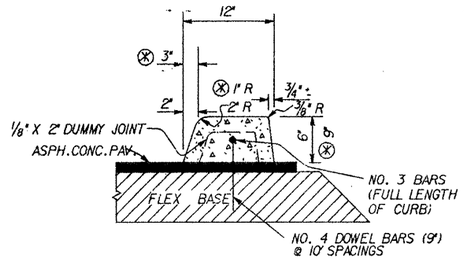

CONC CURB TYPE "A" & "B" ⊗

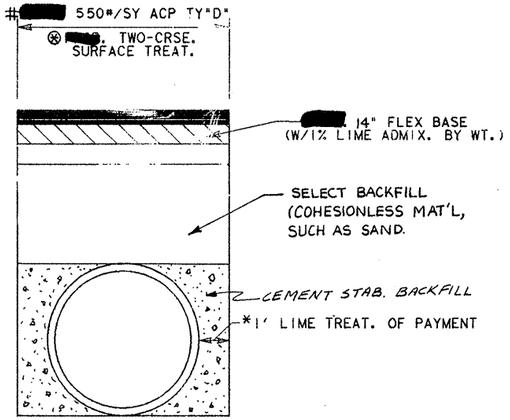

* 2 FT. PIPE GREATER THAN 42"

⊗ [redacted] USED FOR STORM SEWER THROUGH DIST. OFFICE

[redacted] USED ON US 83, FM 495 & FIR ST.

CUT & RESTORE PAV. DETAILS

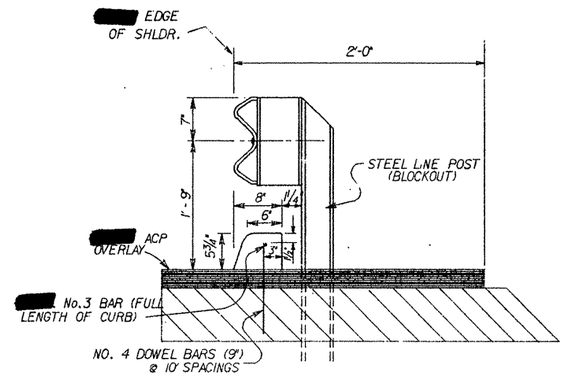

CONC. CURB TY "I" DETAILS

ALL HORIZONTAL DIMENSIONS AND RADII SHOWN ON PLANS, RELATING TO CURB & GUTTER, ARE TO A POINT 6" IN FROM BACK OF CURB.

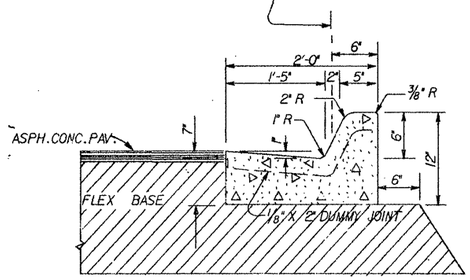

CONC. CURB & GUTTER - TY. "A"

NOTE: EXPANSION JOINTS

1/2" PREMOLDED EXPANSION JOINT MATERIAL [redacted] INSTALLED WHERE CONC. CURB & GUTTER ABUTS CONC. CURB, OR WHERE CONC. CURB & GUTTER OR CONC. CURB ABUT INLETS, BRIDGE WINGWALLS, BRIDGE ABUTMENTS AND/OR ANY OTHER LOCATIONS SPECIFIED BY THE ENGINEER. MAX. SPACING = 105'

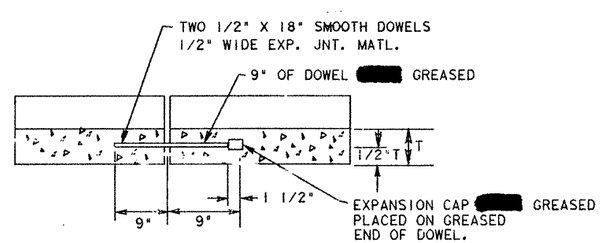

DETAIL EXPANSION JOINT

NOTE: LONGITUDINAL SECTION THRU CURB AND/OR C&G. REINFORCING STEEL (WHEN USED) [redacted] NOT CROSS EXPANSION JOINTS. STEEL [redacted] TERMINATED 3" ± 1" FROM FACE OF THE JOINT.

EXPANSION JOINTS 1/2" PREMOLDED EXPANSION JOINT MATERIAL [redacted] INSTALLED WHERE CONC. CURB & GUTTER ABUTS CONC. CURB OR WHERE CONC. CURB & GUTTER OR CONC. CURB ABUT INLETS, BRIDGE WINGWALLS, BRIDGE ABUTMENTS AND/OR ANY OTHER LOCATIONS SPECIFIED BY THE ENGINEER. MAX. SPACING = 105'

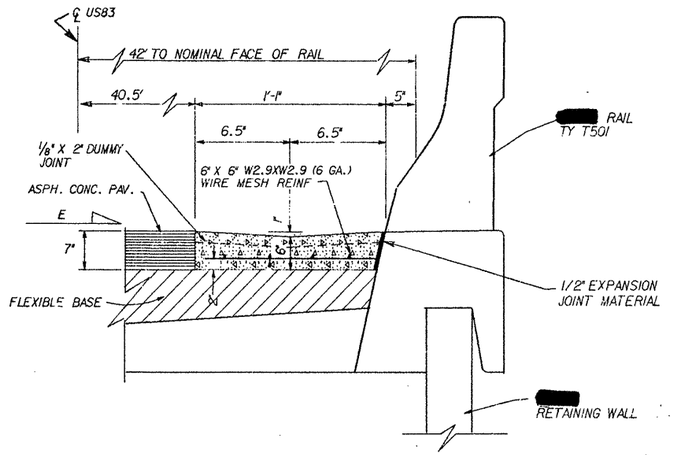

CONC. GUTTER TY"B"

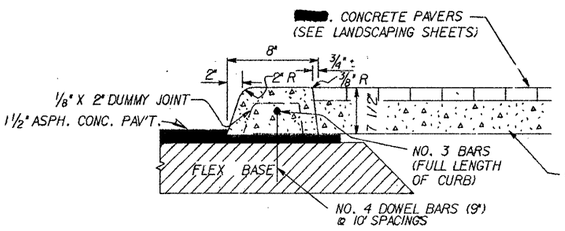

CONC CURB TYPE "A" MOD.

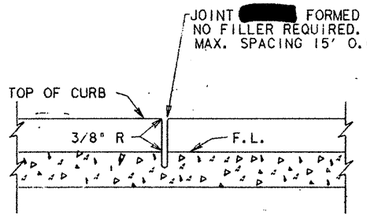

EXIST. CONC. [redacted] REMAIN IN PLACE

NOTE: DUMMY JOINTS [redacted] USED ON CURB & GUTTER, CONC. MEDIAN AND ALL TYPE OF VALLEY GUTTERS JOINTS [redacted] LOCATED BY THE ENGINEER.

DETAIL OF DUMMY JOINT

CONC. CURB, C&G, CONC. GUTTER AND MISC. DETAILS

SHEET 1 OF 2 SHEETS

DISTRICT STANDARD

FED. RD. DIV. NO.	FEDERAL AID PROJECT NO.		SHEET NO.
6	NHSZ( )M		511
STATE	STATE DIST. NO.	COUNTY	
TEXAS	21	HIDALGO	
CONT.	SECT.	JOB	HIGHWAY NO.
39	17	97	US 83/281

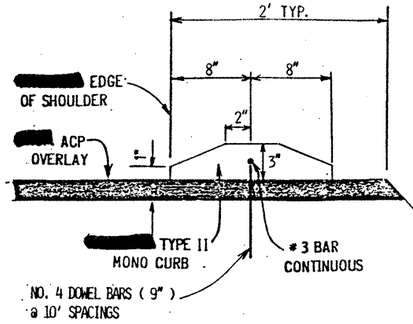

SECTION F-F

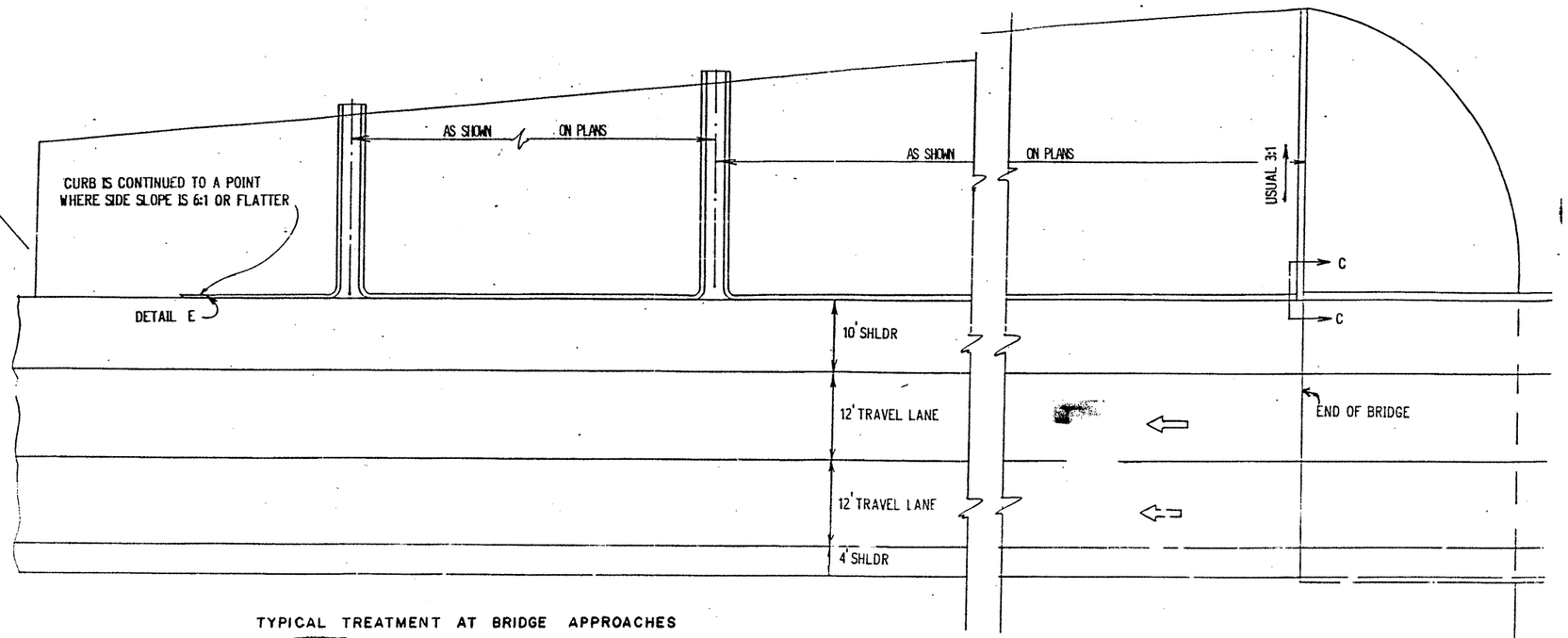

TYPICAL TREATMENT AT BRIDGE APPROACHES

[redacted] USED @

DIRECT CONNECTOR APPROACHES TO FM 495

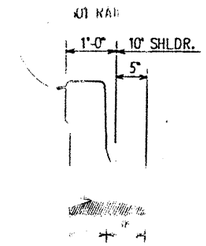

SECTION C-C

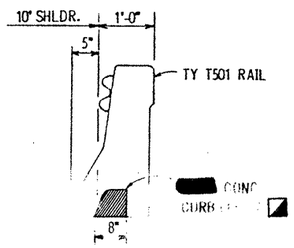

SECTION D-D

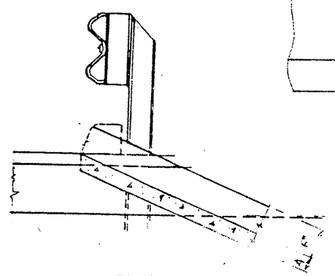

SECTION E-E

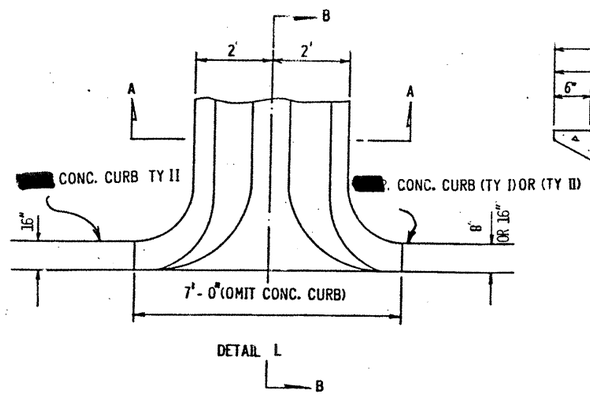

DETAIL L

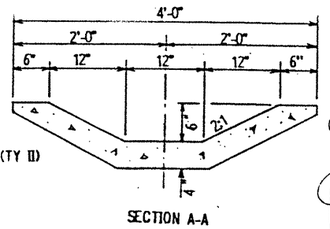

SECTION A-A

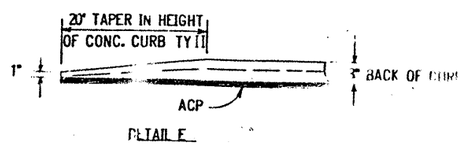

DETAIL E

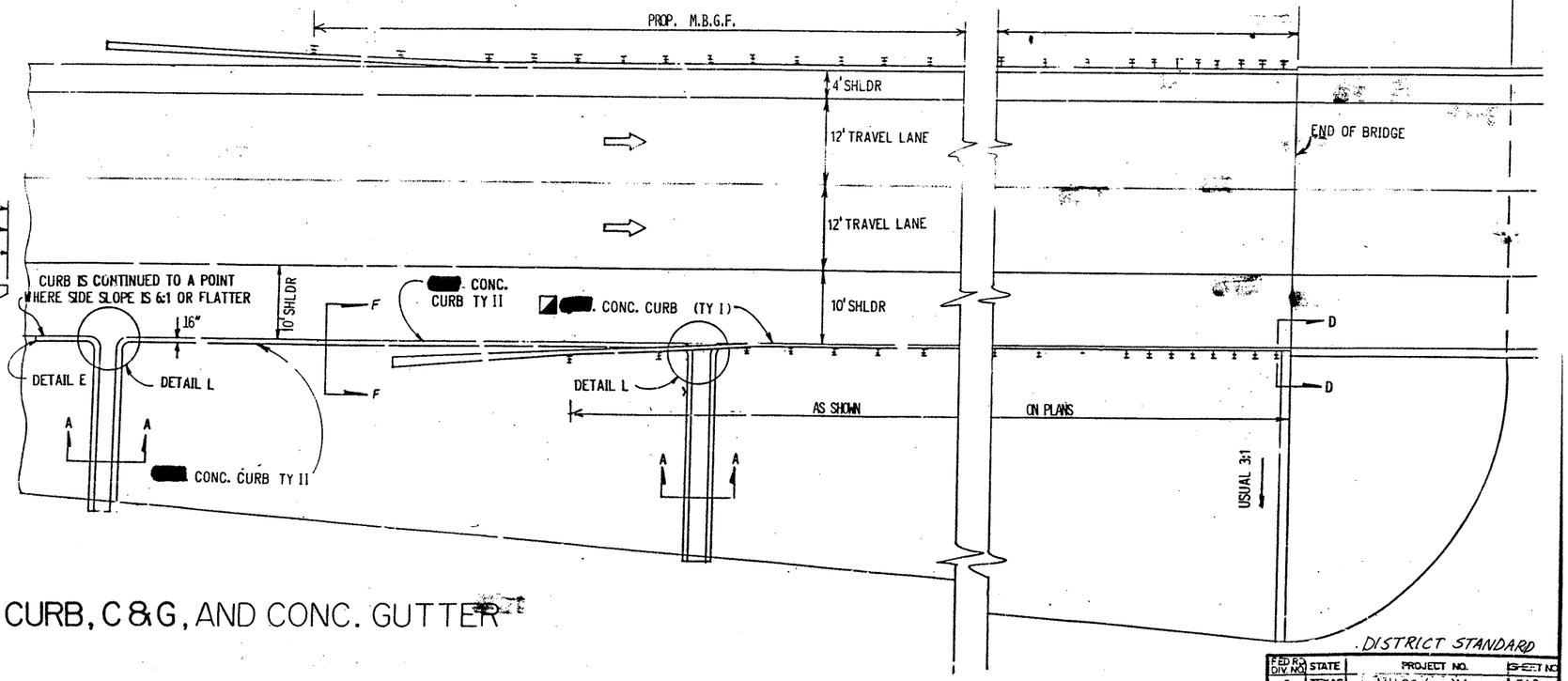

CONC. CURB, C&G, AND CONC. GUTTER

DISTRICT STANDARD

[redacted] SEE SHEET NO. 511 FOR DETAILS

FED RD DIV NO	STATE	PROJECT NO.				SHEET NO
6	TEXAS	NH 92 ( )M				512
STATE DIST NO	COUNTY	CONT	SECT	JOB	HIGHWAY NO	
21	HIDALGO	39	17	97	US 83	

BILL OF REINFORCING STEEL FOR L=8'

CULV. SIZE		TYPE SECT.	DIMENSIONS		MAX. FILL	TOTAL QUANTITIES FOR L=8'		QUANTITIES P.L.F. OF BARREL		BARS A TOP SLAB					BARS B BOTTOM SLAB					BARS C					#4 BARS D @18"± C. TO C.			#4 BARS F @ 18" MAX. LENGTH = L - 7"								LIFT. WEIGHT L = 8'
S	H		T	U		CONC C.Y.	REINF LBS.	CONC C.Y.	REINF LBS.	NO.	SIZE	SPA.	LG.	WT.	NO.	SIZE	SPA.	LG.	WT.	NO.	SIZE	SPA.	LG.	WT.	NO.	LG.	WT.	F_1	SPA.	F_2	SPA.	F_3	SPA.	TOTAL	WT.	LBS
3	2	1	6"	6"	22'	1.778	245	.2222	30.63	12	#4	8"	3'-6"	28						17	#4	5½"	13'-6"	153				3	14"	8	14"	2	15"	13	64	7,370
	3	1	6"	6"	22'	2.074	279	.2592	34.88	12	#4	8"	3'-6"	28						17	#4	5½"	15'-6"	176				3	14"	8	14"	4	14"	15	75	8,590
4	2	1	6"	6"	18'	2.074	373	.2592	46.63	11	#5	9"	4'-6"	52						15	#5	6½"	15'-6"	242				4	18"	10	18"	2	15"	16	79	8,660
	3	1	6"	6"	18'	2.370	437	.2963	54.63	12	#5	8½"	4'-6"	56						16	#5	6"	17'-6"	292				4	18"	10	18"	4	14"	18	89	9,900
	4	1	6"	6"	18'	2.667	470	.3333	58.75	12	#5	8½"	4'-6"	56						16	#5	6"	19'-6"	325				4	18"	10	18"	4	18"	18	89	11,130
5	2	2	6"	6"	14'	2.370	446	.2963	55.88	12	#5	8"	5'-6"	69	13	#5	7½"	5'-6"	75	11	#5	9"	17'-8"	203				8	17"	10	17"	2	15"	20	100	9,910
	3	2	6"	6"	14'	2.667	490	.3333	61.25	13	#5	7½"	5'-6"	75	14	#5	7"	5'-6"	80	11	#5	9½"	19'-8"	226				8	17"	10	17"	4	14"	22	109	11,140
	4	2	6"	6"	14'	2.963	501	.3704	62.63	14	#5	7"	5'-6"	80	15	#5	6½"	5'-6"	86	10	#5	10"	21'-8"	226				8	17"	10	17"	4	18"	22	109	12,350
	5	3	6"	7"	14'	3.556	623	.4445	77.88	12	#5	8"	5'-8"	71	14	#5	7"	5'-8"	83	10	#5	10½"	24'-8"	257	12	5'-6"	44	10	17"	12	17"	12	18"	34	168	14,830
6	3	2	6"	6"	12'	2.963	639	.3704	79.88	16	#5	6"	6'-6"	108	16	#5	6"	6'-6"	108	13	#5	7½"	21'-8"	294				10	15"	12	15"	4	14"	26	129	12,440
	4	2	6"	6"	12'	3.259	648	.4074	81.00	16	#5	6"	6'-6"	108	17	#5	5½"	6'-6"	115	12	#5	8"	23'-8"	296				10	15"	12	15"	4	18"	26	129	13,650
	5	3	6"	7"	12'	3.852	752	.4815	94.00	15	#5	6½"	6'-8"	104	16	#5	6"	6'-8"	111	12	#5	8½"	26'-0"	325	12	5'-6"	44	10	16"	12	16"	12	18"	34	168	16,120
	6	3	6"	7"	12'	4.198	821	.5248	102.63	11	#6	9½"	6'-8"	110	12	#6	8"	6'-8"	120	12	#5	8"	28'-0"	350	12	6'-6"	52	10	16"	12	16"	16	18"	38	189	17,570
7	3	2	6½"	6"	12'	3.457	875	.4321	109.38	14	#6	7"	7'-6"	158	14	#6	7"	7'-6"	158	12	#6	8"	23'-10"	430				10	18"	12	18"	4	14"	26	129	14,600
	4	2	6½"	6"	12'	3.753	941	.4691	117.63	14	#6	7"	7'-6"	158	15	#6	6½"	7'-6"	169	12	#6	8½"	25'-10"	466				12	18"	14	18"	4	18"	30	148	15,850
	5	3	6½"	7"	12'	4.350	1020	.5438	127.50	13	#6	7½"	7'-8"	150	11	#7	9½"	7'-8"	172	11	#6	9½"	28'-2"	465	12	5'-6"	44	12	17"	14	17"	12	18"	38	189	18,320
	6	3	6½"	7"	12'	4.695	1087	.5869	135.88	10	#7	10"	7'-8"	157	11	#7	9"	7'-8"	172	11	#6	9½"	30'-2"	498	12	6'-6"	52	12	17"	14	17"	16	16"	42	208	19,760
	7	3	6½"	7"	12'	5.041	1142	.6301	142.75	13	#6	7½"	7'-8"	150	15	#6	6½"	7'-8"	173	11	#6	9"	32'-2"	531	12	7'-6"	60	12	17"	14	17"	20	15"	46	228	21,200
8	4	2	6½"	6"	10'	4.074	1314	.5093	164.25	15	#7	6½"	8'-6"	261	16	#7	6"	8'-6"	278	15	#6	6½"	27'-10"	627				12	17"	14	17"	4	18"	30	148	17,400
	5	3	6½"	7"	10'	4.671	1310	.5838	163.75	12	#7	8"	8'-8"	213	13	#7	7½"	8'-8"	230	14	#6	7"	30'-2"	634	12	5'-6"	44	12	17"	14	17"	12	18"	38	189	19,820
	6	3	6½"	7"	10'	5.017	1397	.6271	174.63	12	#7	8"	8'-8"	213	14	#7	7"	8'-8"	248	14	#6	7"	32'-2"	676	12	6'-6"	52	12	17"	14	17"	16	16"	42	208	21,280
	7	3	6½"	7"	10'	5.362	1484	.6703	185.50	13	#7	7½"	8'-8"	230	14	#7	7"	8'-8"	248	14	#6	7"	34'-2"	718	12	7'-6"	60	12	17"	14	17"	20	15"	46	228	22,740
	8	3	6½"	8"	10'	6.157	1461	.7696	182.63	12	#7	8½"	8'-10"	217	13	#7	7½"	8'-10"	235	13	#6	7½"	36'-6"	713	12	8'-6"	68	12	18"	14	18"	20	18"	46	228	25,940
9	5	3	7"	7"	10'	5.242	1602	.6553	200.25	14	#7	7"	9'-8"	277	15	#7	6½"	9'-8"	296	16	#6	6"	32'-4"	777	12	5'-6"	44	14	17"	16	17"	12	18"	42	208	22,340
	6	3	7"	7"	10'	5.588	1717	.6985	214.63	15	#7	6½"	9'-8"	296	16	#7	6"	9'-8"	316	16	#6	6"	34'-4"	825	12	6'-6"	52	14	17"	16	17"	16	16"	46	228	23,820
	7	3	7"	7"	10'	5.934	1793	.7417	221.13	15	#7	6½"	9'-8"	296	16	#7	6"	9'-8"	316	16	#6	6"	36'-4"	873	12	7'-6"	60	14	17"	16	17"	20	15"	50	248	25,270
	8	3	7"	8"	10'	6.733	1846	.8416	230.75	14	#7	7"	9'-10"	281	15	#7	6½"	9'-10"	301	12	#7	8"	38'-8"	948	12	8'-6"	68	14	17"	16	17"	20	18"	50	248	28,540
	9	3	7"	8"	10'	7.128	1923	.8909	240.38	14	#7	7"	9'-10"	281	15	#7	6½"	9'-10"	301	12	#7	8"	40'-8"	997	12	9'-6"	76	14	17"	16	17"	24	17"	54	268	30,200
10	5	3	7"	7"	10'	5.588	2067	.6985	258.38	17	#7	5½"	10'-8"	371	17	#7	5½"	10'-8"	371	15	#7	6½"	34'-4"	1053	12	5'-6"	44	16	16"	18	16"	12	18"	46	228	24,060
	6	3	7"	7"	10'	5.934	2156	.7417	269.50	17	#7	5½"	10'-8"	371	17	#7	5½"	10'-8"	371	15	#7	6½"	36'-4"	1114	12	6'-6"	52	16	16"	18	16"	16	16"	50	248	25,520
	7	3	7"	7"	10'	6.279	2245	.7849	280.63	17	#7	5½"	10'-8"	371	17	#7	5½"	10'-8"	371	15	#7	6½"	38'-4"	1175	12	7'-6"	60	16	16"	18	16"	20	15"	54	268	26,980
	8	3	7"	8"	10'	7.078	2313	.8848	289.13	16	#7	6"	10'-10"	354	17	#7	5½"	10'-10"	376	15	#7	6½"	40'-8"	1247	12	8'-6"	68	16	16"	18	16"	20	18"	54	268	30,260
	9	3	7"	8"	10'	7.473	2401	.9342	300.13	16	#7	6"	10'-10"	354	17	#7	5½"	10'-10"	376	15	#7	6½"	42'-8"	1308	12	9'-6"	76	16	16"	18	16"	24	17"	58	287	31,920
	10	3	7"	8"	10'	7.868	2582	.9835	322.75	16	#7	6"	10'-10"	354	17	#7	5½"	10'-10"	376	16	#7	6"	44'-8"	1461	12	10'-6"	84	16	16"	18	16"	28	16"	62	307	33,650

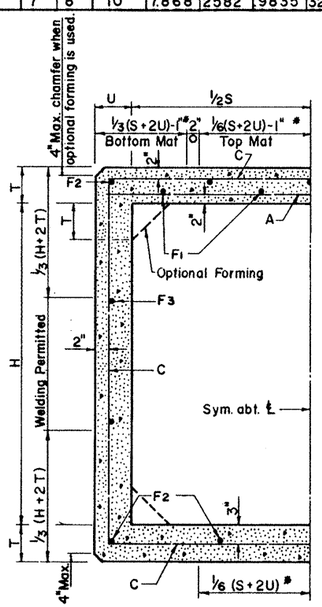

HALF SECTION
TYPE 1

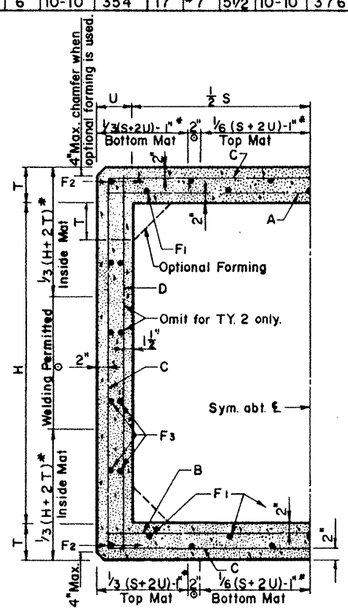

HALF SECTION
TYPES 2 & 3

* These dimensions shall be sufficiently different to allow a ¼" (± ⅛") nominal space between the sloping faces.

*Permissible tack welding on mats shown.
⊙Permissible tack welding both mats.

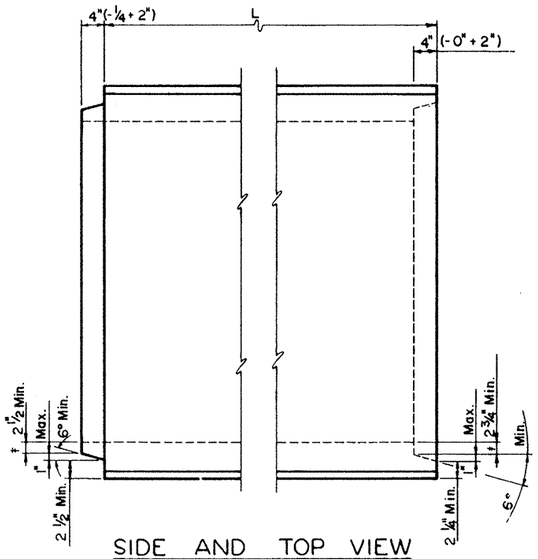

SIDE AND TOP VIEW

NOTE: Tongue and groove dimensional controls shown are intended to allow either a 4" long 1" slope joint, a 6" long 6° slope joint or any joint configuration within these limits. Dimensions shown as minimum [redacted] maintained around the perimeter of the box.

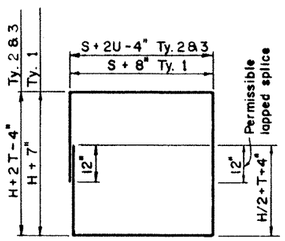

BARS C

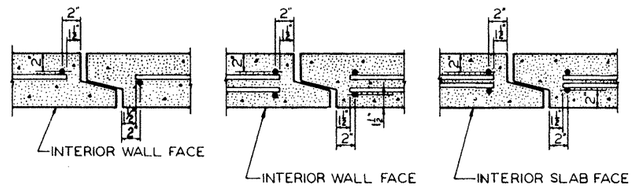

SINGLE MAT PLACEMENT

DOUBLE MAT PLACEMENT

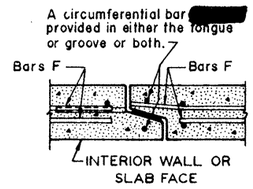

STEEL SUPPORT DETAIL

NOTE: As many Bars F as necessary [redacted] extended to end of box to support steel during manufacture. Bars [redacted] slightly bent to clear slope on groove lip as shown in detail. Alternatively the steel [redacted] supported by bar extensions welded to Bars F.

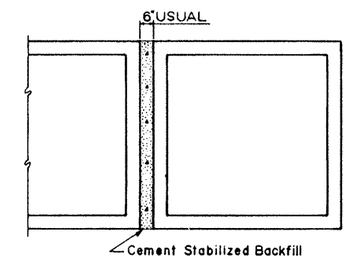

MULTIPLE UNIT PLACEMENT

GENERAL NOTES:

Cement Stabilized Backfill [redacted] considered subsidiary to the unit price bid for Concrete Box.

All welding [redacted] done by qualified welder.
Cross sectional area of gasket material [redacted] not less than 3.25 sq. in.
Additional splices in reinforcing steel not shown here [redacted] submitted to the Bridge Division for approval prior to fabrication.
Grade 60 Bars or Wire Fabric [redacted] used in place of Grade 40 Steel by supplying 82 % of the area of steel per linear foot shown in the Tables for Bars A, B, C and D.
Longitudinal steel [redacted] have at least as much area as Bars [redacted] spaced at 18" c.c. maximum.
These designs are adequate for HS 20 live loading and any fill from 2'-0" to the maximum shown in the tables.
In lieu of furnishing the designs shown on this detail the contractor [redacted] use designs from either Std. PC-4, PC-7 or ASTM C-789, Table 1. In either △ case, the substituted design must equal or exceed the maximum fill height for the same sized box in the table on this detail. For boxes reinforced with wire fabric the minimum cover [redacted] three times the wire diameter but not less than one inch. Placing of reinforcment [redacted] otherwise conform to specification "Reinforcing Steel".

TEXAS HIGHWAY DEPARTMENT
BRIDGE DIVISION

PRECAST CONCRETE BOX CULVERTS

PC-2

ORIGINAL DRAWING DATE MARCH 1983	REVISIONS	STATE DISTRICT	FEDERAL REGION	FEDERAL AID PROJECT			SHEET
DN.:-ADC	△	21	6	NH 92( )M			512A
CK.:-CCT	△ Rev. 1-86 (Gen. Notes)	COUNTY		CONTROL	SECTION	JOB	HIGHWAY
DW.:-EDS	Rev. 8-86 (Gen. Notes)	HIDALGO		39	17	97	11583
CK.:-CCT							

BILL OF REINFORCING STEEL FOR L=8'

CULV. SIZE S	H	TYPE SECT.	DIMENSIONS T	U	MAX. FILL	TOTAL QUANTITIES FOR L=8' CONC. C.Y.	TOTAL QUANTITIES FOR L=8' REINF LBS.	QUANTITIES P.L.F. OF BARREL CONC. C.Y.	QUANTITIES P.L.F. OF BARREL REINF LBS.	BARS A TOP SLAB NO.	SIZE	SPA.	LG.	WT.	BARS B BOTTOM SLAB NO.	SIZE	SPA.	LG.	WT.	BARS C NO.	SIZE	SPA.	LG.	WT.	#4 BARS D @18"± C. TO C. NO.	LG.	WT.	#4 BARS F @ 18" MAX. LENGTH L-7" F_1	SPA.	F_2	SPA.	F_3	SPA.	TOTAL	WT.	LIFT. WEIGHT L=8' LBS
3'	2	1	4"	4"	22'	1.185	243	.1481	30.38											15	#5	6½"	12'-4"	193												4,980
	3	1	4"	4"	22'	1.383	283	.1728	35.38											15	#5	6½"	14'-4"	224												5,810
4'	2	1	5"	5"	20'	1.790	349	.2238	43.63											13	#6	7½"	14'-10"	290												7,500
	3	1	5"	5"	20'	2.037	423	.2546	52.88											14	#6	7"	16'-10"	354												8,550
	4	1	5"	5"	20'	2.284	493	.2855	61.63											15	#6	6½"	18'-10"	424												9,600
5'	2	2	6"	6"	14'	2.518	446	.3148	55.75	12	#5	8"	5'-6"	69	13	#5	7½"	5'-6"	75	11	#5	9"	17'-8"	203							8	17"	10	17"	2	15"	20	99	10,510
	3	2	6"	6"	14'	2.815	469	.3519	58.63	13	#5	7½"	5'-6"	75	14	#5	7"	5'-6"	80	10	#5	10"	19'-8"	205							8	17"	10	17"	4	14"	22	109	11,720
	4	2	6"	6"	14'	3.111	478	.3889	59.75	14	#5	7"	5'-6"	80	15	#5	6½"	5'-6"	86	9	#5	11"	21'-8"	203							8	17"	10	17"	4	18"	22	109	12,930
	5	3	6"	6"	14'	3.407	575	.4259	71.88	13	#5	7½"	5'-6"	75	15	#5	6½"	5'-6"	86	9	#5	12"	23'-8"	222	12	5'-6"	44	8	17"	10	17"	12	17"	30	148	14,200
6'	3'	2	7"	7"	12'	3.714	572	.4643	71.50	13	#5	7½"	6'-8"	90	14	#5	7"	6'-8"	97	11	#5	9"	22'-4"	256				10	16"	12	16"	4	15"	26	129	15,440
	4'	2	7"	7"	12'	4.060	609	.5075	76.13	14	#5	7"	6'-8"	97	15	#5	6½"	6'-8"	104	11	#5	9½"	24'-4"	279				10	16"	12	16"	4	18"	26	129	16,860
	5'	3	7"	7"	12'	4.405	695	.5506	86.88	14	#5	7"	6'-8"	97	16	#5	6"	6'-8"	111	10	#5	10"	26'-4"	275	12	5'-6"	44	10	16"	12	16"	12	17"	34	168	18,320
	6'	3	7"	7"	12'	4.751	744	.5939	93.00	14	#5	7"	6'-8"	97	16	#5	6"	6'-8"	111	10	#5	10½"	28'-4"	296	12	6'-6"	52	10	16"	12	16"	16	16"	38	188	19,750
7'	3'	2	8"	8"	12'	4.742	698	.5928	87.25	14	#5	7"	7'-10"	114	15	#5	6½"	7'-10"	123	12	#5	8"	25'-0"	313				12	16"	14	16"	4	15"	30	148	19,690
	4'	2	8"	8"	12'	5.138	751	.6423	93.88	15	#5	6½"	7'-10"	123	16	#5	6"	7'-10"	131	12	#5	8"	27'-0"	338				12	16"	14	16"	6	15"	32	159	21,330
	5'	3	8"	8"	12'	5.533	835	.6916	104.38	16	#5	6"	7'-10"	131	17	#5	5½"	7'-10"	139	11	#5	9"	29'-0"	333	12	5'-6"	44	12	16"	14	16"	12	18"	38	188	22,980
	6'	3	8"	8"	12'	5.928	886	.7410	110.75	16	#5	6"	7'-10"	131	17	#5	5½"	7'-10"	139	11	#5	9"	31'-0"	356	12	6'-6"	52	12	16"	14	16"	16	17"	42	208	24,620
	7'	3	8"	8"	12'	6.323	937	.7904	117.13	16	#5	6"	7'-10"	131	17	#5	5½"	7'-10"	139	11	#5	9"	33'-0"	379	12	7'-6"	60	12	16"	14	16"	20	16"	46	228	26,260
8'	4'	2	8"	8"	10'	5.533	913	.6916	114.13	12	#6	8½"	8'-10"	159	13	#6	7½"	8'-10"	172	14	#5	7"	29'-0"	423				12	18"	14	18"	6	15"	32	159	23,040
	5'	3	8"	8"	10'	5.928	997	.7410	124.63	12	#6	8"	8'-10"	159	14	#6	7"	8'-10"	186	13	#5	7½"	31'-0"	420	12	5'-6"	44	12	18"	14	18"	12	18"	38	188	24,700
	6'	3	8"	8"	10'	6.323	1052	.7904	131.50	12	#6	8"	8'-10"	159	14	#6	7"	8'-10"	186	13	#5	7½"	33'-0"	447	12	6'-6"	52	12	18"	14	18"	16	17"	42	208	26,330
	7'	3	8"	8"	10'	6.719	1071	.8399	133.88	12	#6	8"	8'-10"	159	14	#6	7"	8'-10"	186	12	#5	8"	35'-0"	438	12	7'-6"	60	12	18"	14	18"	20	16"	46	228	27,960
	8'	3	8"	8"	10'	7.114	1104	.8893	138.00	12	#6	8"	8'-10"	159	14	#6	7"	8'-10"	186	12	#5	8"	37'-0"	463	12	8'-6"	68	12	18"	14	18"	20	18"	46	228	29,570
9'	5'	3	9"	9"	10'	7.222	1249	.9028	156.13	14	#6	7"	10'-0"	210	15	#6	6½"	10'-0"	225	16	#5	6"	33'-8"	562	12	5'-6"	44	14	18"	16	18"	12	18"	42	208	30,110
	6'	3	9"	9"	10'	7.665	1288	.9581	161.00	14	#6	7"	10'-0"	210	16	#6	6"	10'-0"	240	15	#5	6½"	35'-8"	558	12	6'-6"	52	14	18"	16	18"	16	17"	46	228	31,930
	7'	3	9"	9"	10'	8.111	1347	1.014	168.38	14	#6	7"	10'-0"	210	16	#6	6"	10'-0"	240	15	#5	6½"	37'-8"	589	12	7'-6"	60	14	18"	16	18"	20	16"	50	248	33,780
	8'	3	9"	9"	10'	8.555	1402	1.069	175.25	15	#6	6½"	10'-0"	225	16	#6	6"	10'-0"	240	15	#5	6½"	39'-8"	621	12	8'-6"	68	14	18"	16	18"	20	18"	50	248	35,620
	9'	3	9"	9"	10'	8.999	1446	1.125	180.75	14	#6	7"	10'-0"	210	16	#6	6"	10'-0"	240	15	#5	6½"	41'-8"	652	12	9'-6"	76	14	18"	16	18"	[redacted]	18"	54	268	37,440
10'	5'	3	10"	10"	10'	8.640	1461	1.080	182.63	11	#7	9"	11'-2"	251	12	#7	8½"	11'-2"	274	17	#5	5½"	36'-4"	644	12	5'-6"	44	16	17"	18	17"	16	15"	50	248	36,000
	6'	3	10"	10"	10'	9.133	1505	1.142	188.13	11	#7	9"	11'-2"	251	12	#7	8"	11'-2"	274	17	#5	5½"	38'-4"	680	12	6'-6"	52	16	17"	18	17"	16	18"	50	248	38,030
	7'	3	10"	10"	10'	9.627	1572	1.203	196.50	12	#7	8½"	11'-2"	274	13	#7	7½"	11'-2"	297	16	#5	6"	40'-4"	673	12	7'-6"	60	16	17"	18	17"	20	17"	54	268	40,070
	8'	3	10"	10"	10'	10.120	1632	1.265	204.00	12	#7	8½"	11'-2"	274	13	#7	7½"	11'-2"	297	16	#5	6"	42'-4"	706	12	8'-6"	68	16	17"	18	17"	24	16"	58	287	42,110
	9'	3	10"	10"	10'	10.614	1674	1.327	209.25	12	#7	8½"	11'-2"	274	13	#7	7½"	11'-2"	297	16	#5	6"	44'-4"	740	12	9'-6"	76	16	17"	18	17"	24	18"	58	287	44,140
	10'	3	10"	10"	10'	11.108	1735	1.389	216.88	12	#7	8½"	11'-2"	274	13	#7	7½"	11'-2"	297	16	#5	6"	46'-4"	773	12	10'-6"	84	16	17"	18	17"	28	17"	62	307	46,180

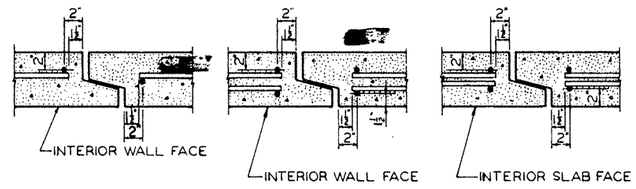

SINGLE MAT PLACEMENT

DOUBLE MAT PLACEMENT

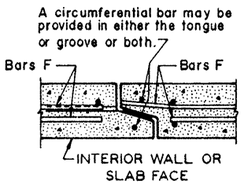

STEEL SUPPORT DETAIL

NOTE: As many Bars F as necessary [redacted] extended to end of box to support steel during manufacture. Bars [redacted] slightly bent to clear slope on groove lip as shown in detail. Alternatively the steel [redacted] supported by bar extensions welded to Bars F.

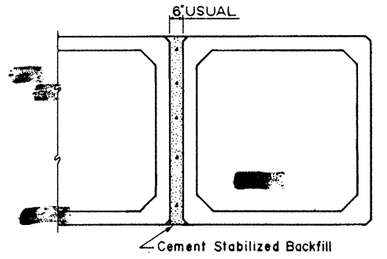

MULTIPLE UNIT PLACEMENT

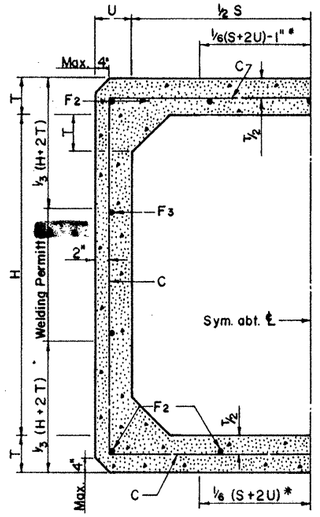

HALF SECTION TYPE 1

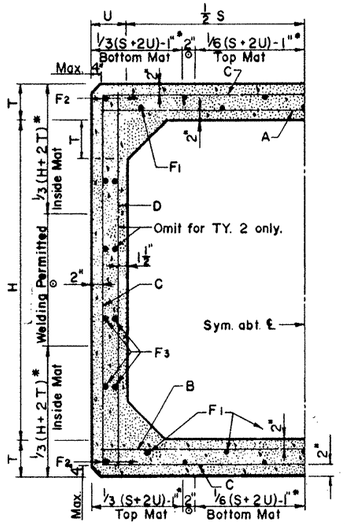

HALF SECTION TYPES 2 & 3

*Permissible tack welding on mats shown.
⊙Permissible tack welding both mats.

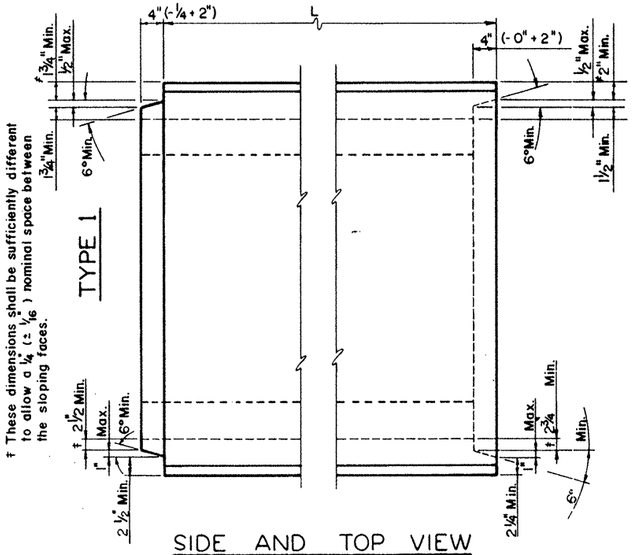

* These dimensions shall be sufficiently different to allow a ¼ (± 1/16) nominal space between the sloping faces.

SIDE AND TOP VIEW

NOTE: Tongue and groove dimensional controls shown are intended to allow either a 4" long 1" slope joint, a 6" long 6° slope joint or any joint configuration within these limits. Dimensions shown as minimums [redacted] maintained around the perimeter of the box.

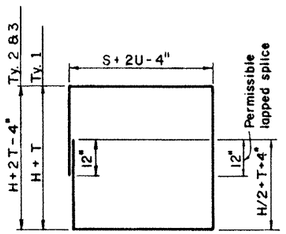

BARS C

GENERAL NOTES:

Cement Stabilized Backfill [redacted] subsidiary to the unit price bid for Concrete Box.

All welding to be done by qualified welder.

Additional splices in reinforcing steel not shown hereon, [redacted] submitted to the Bridge Division for approval prior to [redacted] ation.

Grade 60 Bars or Wire Fabric [redacted] used in place of Grade 40 Steel by supplying 82% of the area of steel per linear foot shown in the Tables for Bars A, B, C and D.

Longitudinal [redacted] have at least as much area as B[redacted] and [redacted] spaced at 18" c.c. maximum.

These designs are adequate for HS 20 live loading and any fill from 2'-0" to the maximum shown in the tables.

In lieu of furnishing the designs shown on this detail the contractor [redacted] use designs from either Std. PC-2, PC-7 or ASTM C-789, Table [redacted] either case, △ the substituted design must equal or exceed the maximum fill height for the same sized box in the table on this detail. For boxes reinforced with wire fabric the minimum cover [redacted] three times the wire diameter but not less [redacted] one inch. Placing of reinforcment [redacted] otherwise conform to the specification "Reinforcing Steel"

TEXAS HIGHWAY DEPARTMENT
BRIDGE DIVISION

PRECAST CONCRETE BOX [redacted] CULVERTS

PC-4

ORIGINAL DRAWING DATE MARCH 1983	REVISIONS	STATE DISTRICT	FEDERAL REGION	FEDERAL AID PROJECT	SHEET
DN.:-ADC	△Rev. 1-86 (Gen. Notes)	21	6	NH92( )M	5128
CK.:-CCT	△Rev. 8-86 (Gen. Notes)	COUNTY	CONTROL	SECTION	JOB	HIGHWAY
DW.:-EDS		HIDALGO	39	17	24	US83
CK.:-CCT						

CULVERT SIZE ft.		DIMENSIONS in.			TYPE SECT.	REINFORCING STEEL																EDGE BEAM REINF		LIFT⊗ WT. L = 12"	MAX FILL ft.
						BARS A		BARS B		BARS C		BARS D		BARS F		BARS G‡		BARS M		BARS N					
S	H	T_1	T_b	U		SIZE	SPA.	SIZE	SPA.	SIZE	SPA.	SIZE	SPA.	SIZE	SPA.	SIZE	SPA.	SIZE	SPA.	SIZE	SPA.	SIZE	NO.	TONS	
3	1	6	6	6	1	#5	6"	#5	12"	#4	18"	#4	15"	#4	18"	#4	6"	#4	18"			#5	3	2.7	15'
	1.5	"	"	"	1	"	"	"	"	"	"	"	"	"	"	"	"	"	15"			"	"	3.2	"
	2	"	"	"	2	"	"	"	"	"	15"	"	"	"	"	"	"	"	18"	#4	18"	"	"	2.7	"
	3	"	"	"	2	"	"	"	"	"	"	"	"	"	"	"	"	"	15"	"	15"	"	"	3.2	"
4	1	6	6	6	1	#5	5"	#5	10"	#4	18"	#4	15"	#4	18"	#4	6"	#4	18"			#5	4	3.2	12'
	2	"	"	"	1	"	"	"	"	"	"	"	12"	"	"	"	"	"	15"			"	"	4.1	"
	3	"	"	"	1	"	"	"	"	"	"	"	9"	"	"	"	"	"	"			"	"	5.0	"
	4	"	"	"	1	"	"	"	"	"	"	"	7"	"	"	"	"	"	12"			"	"	5.9	"
5	1	6½	6	6	1	#5	4"	#5	8"	#4	18"	#4	15"	#4	18"	#4	6"	#4	18"			#5	5	3.5	10'
	2	"	"	"	1	"	"	"	"	"	"	"	12"	"	"	"	"	"	15"			"	"	4.4	"
	3	"	"	"	1	"	"	"	"	"	"	"	9"	"	"	"	"	"	"			"	"	5.3	"
	4	"	"	"	1	"	"	"	"	"	"	"	7"	"	"	"	"	"	12"			"	"	6.2	"
	5	"	"	"	2	"	"	"	"	"	9"	#4	9"	"	"	"	"	"	15"	#4	15"	"	"	5.1	"
6	1	7	6½	6	1	#5	4"	#5	8"	#4	18"	#4	15"	#4	18"	#4	6"	#4	18"			#5	5	4.2	8'
	2	"	"	"	1	"	"	"	"	"	"	"	12"	"	"	"	"	"	15"			"	"	5.1	"
	3	"	"	"	1	"	"	"	"	"	"	#5	9	"	"	"	"	"	"			"	"	6.0	"
	4	"	"	"	1	"	"	"	"	"	"	"	7"	"	"	"	"	"	12"			"	"	6.9	"
	5	"	"	"	2	"	"	"	"	"	9"	#4	9"	"	"	"	"	"	15"	#4	15"	"	"	5.9	"
	6	"	"	"	2	"	"	"	"	#5	10"	#5	9"	"	"	"	"	"	"	"	"	"	"	6.3	"
7	1	7½	7	6	1	#5	4"	#5	6"	#4	18"	#4	15"	#4	18"	#4	6"	#4	18"			#5	5	5.0	8'
	2	"	"	"	1	"	"	"	"	"	"	"	12"	"	"	"	"	"	15"			"	"	5.9	"
	3	"	"	"	1	"	"	"	"	"	"	#5	9"	"	"	"	"	"	"			"	"	6.8	"
	4	"	"	"	1	"	"	"	"	"	"	"	7"	"	"	"	"	"	12"			"	"	7.7	"
	5	"	"	"	2	"	"	"	"	"	9"	#4	9"	"	"	"	"	"	15"	#4	15"	"	"	6.7	"
	6	"	"	"	2	"	"	"	"	#5	10"	#5	9"	"	"	"	"	"	"	"	"	"	"	7.1	"
	7	"	"	"	2	"	"	"	"	"	8"	"	6"	"	"	"	"	"	12"	"	12"	"	"	7.6	"
8	1	8	7½	6	1	#6	5"	#6	8"	#4	18"	#4	15"	#4	18"	#4	6"	#4	18"			#6	4	5.9	8'
	2	"	"	"	1	"	"	"	"	"	"	"	12"	"	"	"	"	"	15"			"	"	6.8	"
	3	"	"	"	1	"	"	"	"	"	"	#5	9"	"	"	"	"	"	"			"	"	7.7	"
	4	"	"	"	1	"	"	"	"	"	"	"	7"	"	"	"	"	"	12"			"	"	8.6	"
	5	"	"	"	2	"	"	"	"	"	9"	#4	9"	"	"	"	"	"	15"	#4	15"	"	"	7.6	"
	6	"	"	"	2	"	"	"	"	#5	10"	#5	9"	"	"	"	"	"	"	"	"	"	"	8.0	"
	7	"	"	"	2	"	"	"	"	"	8"	"	6"	"	"	"	"	"	12"	"	12"	"	"	8.5	"
	8	"	"	"	2	"	"	"	"	"	7"	"	5"	"	"	"	"	"	"	"	"	"	"	8.9	"
9	1	8	7½	6	1	#6	4"	#6	6"	#4	18"	#4	15"	#4	18"	#5	6"	#4	18"			#6	4	6.4	8'
	2	"	"	"	1	"	"	"	"	"	"	"	12"	"	"	"	"	"	15"			"	"	7.3	"
	3	"	"	"	1	"	"	"	"	"	"	#5	9"	"	"	"	"	"	"			"	"	8.2	"
	4	"	"	"	1	"	"	"	"	"	"	"	7"	"	"	"	"	"	12"			"	"	9.1	"
	5	"	"	"	2	"	"	"	"	"	9"	#4	9"	"	"	"	"	"	15"	#4	15"	"	"	8.2	"
	6	"	"	"	2	"	"	"	"	#5	10'	#5	9"	"	"	"	"	"	"	"	"	"	"	8.6	"
	7	"	"	"	2	"	"	"	"	"	8"	"	6"	"	"	"	"	"	12"	"	12'	"	"	9.0	"
	8	"	"	"	2	"	"	"	"	"	7"	"	5"	"	"	"	"	"	"	"	"	"	"	9.5	"
10	1	8½	8	6	1	#6	4"	#6	5"	#4	18"	#4	15"	#4	18"	#5	6"	#4	18"			#6	4	7.4	8'
	2	"	"	"	1	"	"	"	"	"	"	"	12"	"	"	"	"	"	15"			"	"	8.3	"
	3	"	"	"	1	"	"	"	"	"	"	#5	9"	"	"	"	"	"	"			"	"	9.2	"
	4	"	"	"	1	"	"	"	"	"	"	"	7"	"	"	"	"	"	12"			"	"	10.1	"
	5	"	"	"	2	"	"	"	"	"	9"	#4	9"	"	"	"	"	"	15"	#4	15"	"	"	9.2	"
	6	"	"	"	2	"	"	"	"	#5	10"	#5	9"	"	"	"	"	"	"	"	"	"	"	9.6	"
	7	"	"	"	2	"	"	"	"	"	8"	"	6"	"	"	"	"	"	12"	"	12"	"	"	10.0	"
	8	"	"	"	2	"	"	"	"	"	7"	"	5"	"	"	"	"	"	"	"	"	"	"	10.5	"

⊗ Lift weight is the maximum piece weight of the top and bottom sections.

‡ If the fill height is greater than 2'-0", the size and spacing of Bars G [redacted] reduced to that of Bars F.

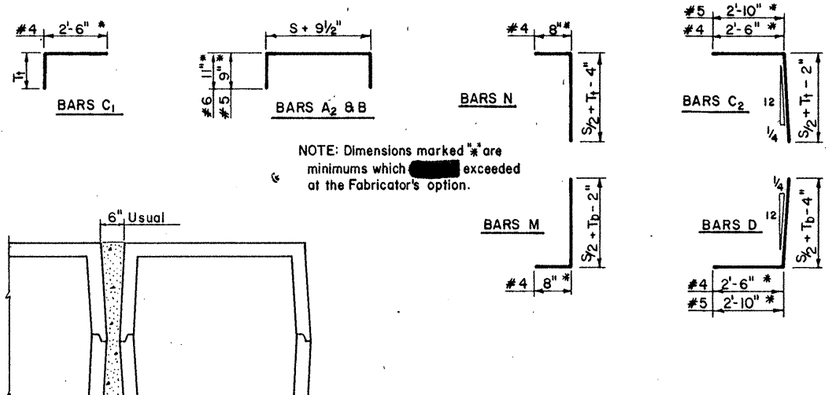

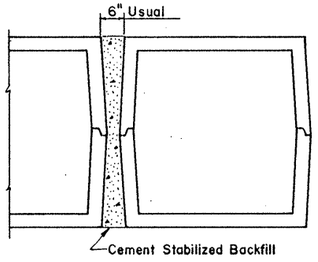

MULTIPLE UNIT PLACEMENT

NOTE: Edge beam reinforcement [redacted] combined with Bars A in a single layer, or placed in a separate layer as shown below. Bars [redacted] bundled as necessary to maintain required clear distances between bars.

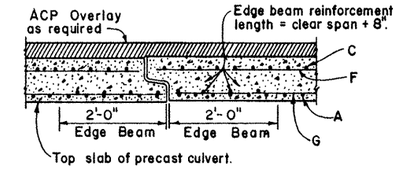

EDGE BEAM

GENERAL NOTES:

Design conforms to 1977 AASHTO Standard Specifications for Highway Bridges (Interim revisions included thru 1982) for HS 20 direct traffic loading and maximum fill height shown in the table. Precast culverts constructed according to this design [redacted] conform to Item 462 "Concrete Box Culverts."

The Contractor [redacted] furnish designs shown on this sheet in lieu of other precast culvert designs of the same nominal size, provided the maximum fill does not exceed that shown in the table.

Reinforcing steel: Grade 60 deformed bars. Concrete, f'_c = 4000psi

Joint Protection: Where fill measured from the top of the precast box culvert to the roadway surface is less than 2'-0", joints [redacted] protected by strengthening the top slab with an Edge Beam at each free edge.

Edge Beams [redacted] subsidiary to the unit price bid for Concrete Box.

⊕ NOTE:
Clear cover [redacted] 2" for the top steel in the top slab and [redacted] 1¼" for all other steel.
Placement tolerance is ± ¼".

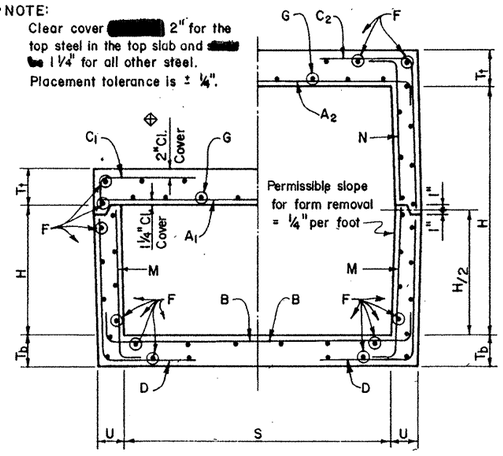

TYPE 1 TYPE 2

TYPICAL BOX HALF SECTIONS

These dimensions [redacted] sufficiently different to allow a ¼" (± 1/16") nominal space between the sloping faces.

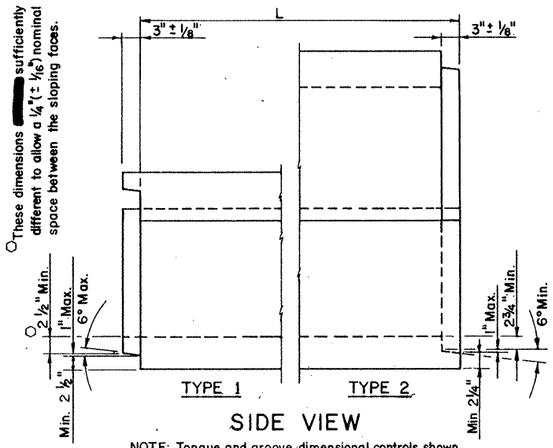

SIDE VIEW

NOTE: Tongue and groove dimensional controls shown are intended to allow either a 3" long 1" slope joint, a 3" long 6° slope joint or any joint configuration within these limits. Dimensions shown as minimums [redacted] maintained around the box and along the horizontal joint.

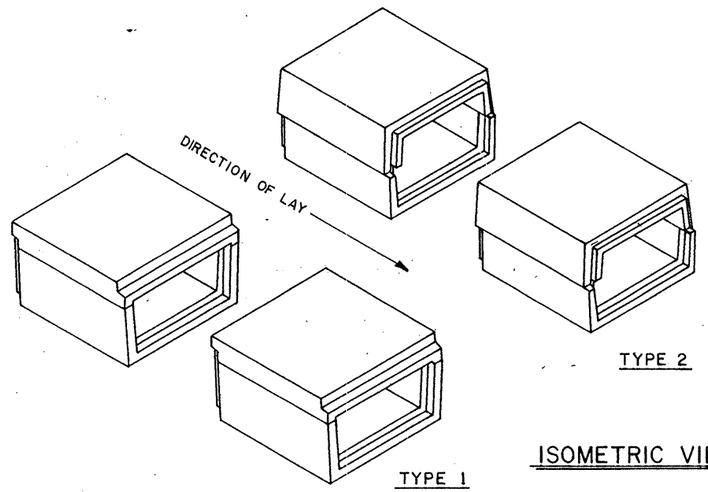

ISOMETRIC VIEW

Tack Welding: No tack welding of reinforcing bars [redacted] permitted except within 6 inches of an end. Bars F are exempt from this restriction, and [redacted] tack welded anywhere along their length.

Multiple Unit Placement: Cement Stabilized Backfill [redacted] considered subsidiary to the [redacted] price bid for Concrete Box.

Form Removal and Handling Procedures: Precast pieces [redacted] removed from the forms as soon as they have attained sufficient strength to allow handling without cracking. Damaged or cracked pieces [redacted] subject to rejection.

Marking: In addition to the marking req[redacted] of Item 462, each piece [redacted] bear the following markings:

Top and Bottom pieces without edge beams: TXPC7

Top pieces with edge beams: TXPC7 EB

Joint Seals: Horizontal and transverse joints [redacted] sealed in accordance with the Specifications.

STATE DEPARTMENT OF HIGHWAYS AND PUBLIC TRANSPORTATION

PRECAST CONCRETE BOX CULVERTS

PC-7

ORIGINAL DRAWING DATE: MARCH 1983	STATE SHEET NO.	FEDERAL REGION	FEDERAL AID PROJECT		SHEET
REVISIONS	21	6	NH 92( )M		512C
DN.:-LEH CK.:-MPM Rev. 2-84 DN.:-EDS CK.:-LEH	COUNTY		CONTROL	SECTION	JOB	HIGHWAY
	HIDALGO		39	17	97	US 83

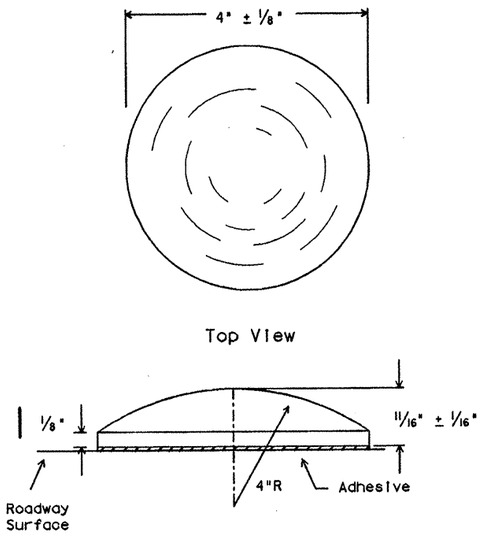

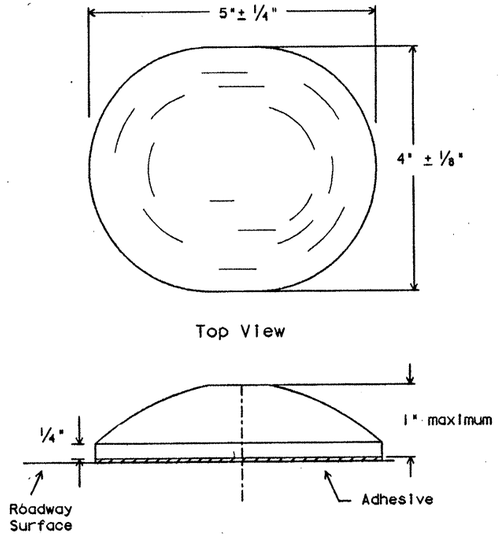

TRAFFIC BUTTONS
(NON-REFLECTORIZED)

NOTE: Minimum area of markers [redacted] not less than 12.5 square inches.
Either shape [redacted] used but the same shape [redacted] used through out the project.

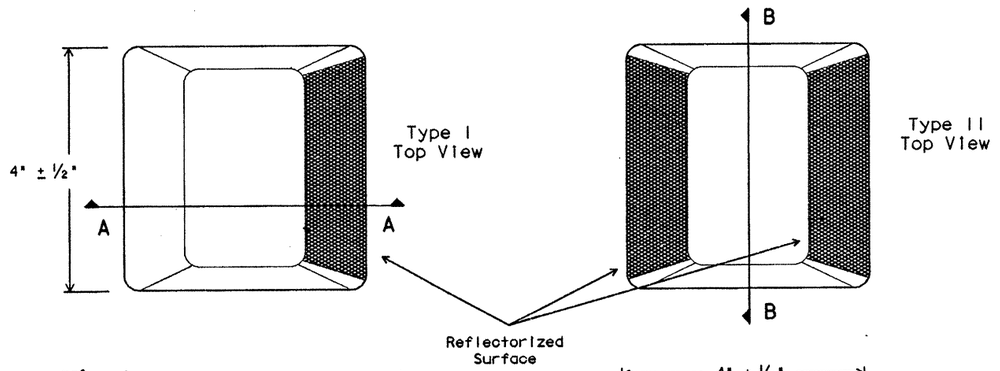

PAVEMENT MARKERS
(REFLECTORIZED)

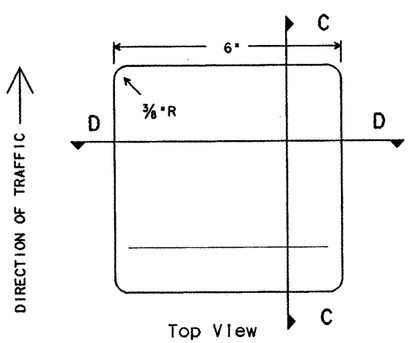

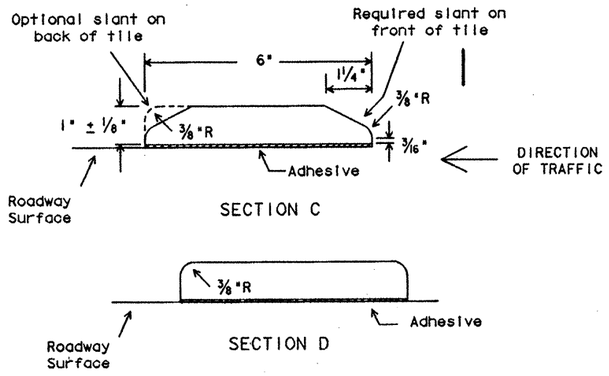

JIGGLE BAR TILES
(NON-REFLECTORIZED)

"Jiggle Bars" consist of a number of Jiggle Bar Tiles placed in a linear configuration.

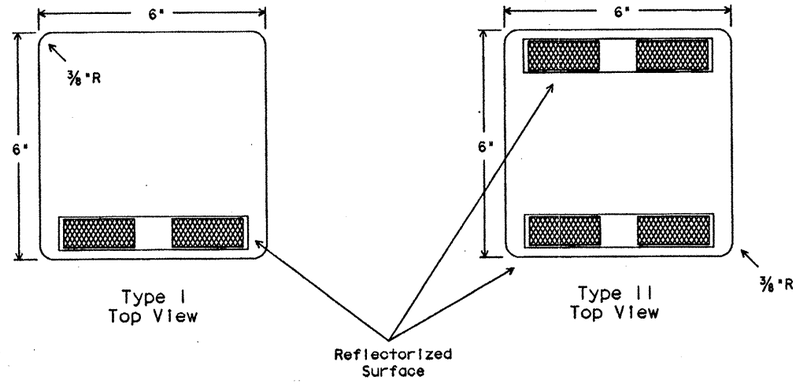

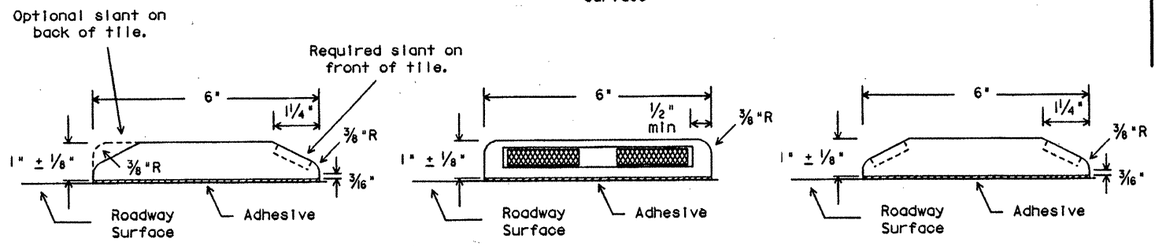

JIGGLE BAR TILES
(REFLECTORIZED)

SPECIFICATION REFERENCE TABLE	
MATERIALS AND TEST SPECIFICATIONS (D-9)	
JIGGLE BAR TILE	D-9-4100
PAVEMENT MARKERS (REFLECTORIZED)	D-9-4200
TRAFFIC BUTTONS	D-9-4300
BITUMINOUS ADHESIVE	D-9-6130

GENERAL NOTES:

RAISED PAVEMENT MARKERS (RPMs) [redacted] CONSIST OF TRAFFIC BUTTONS, PAVEMENT MARKERS AND/OR JIGGLE BAR TILES. PAVEMENT SURFACE [redacted] PREPARED AND CLEANED SUBJECT TO APPROVAL OF THE ENGINEER BEFORE ADHESIVE AND RPMs ARE PLACED.

JIGGLE BARS [redacted] ORIENTED PERPENDICULAR TO ROADWAY. JIGGLE BARS [redacted] ALSO [redacted] PLACED AT SUCH OTHER LOCATIONS AS SHOWN IN PLANS OR AS DIRECTED BY THE ENGINEER.

[redacted] MARKERS, BUTTONS AND JIGGLE BAR TILES SHOWN ARE FOR ILLUSTRATION PURPOSES ONLY AND NOT INTENDED TO SPECIFY ANY PARTICULAR PRODUCT. ALL PAVEMENT MARKERS PROVIDED [redacted] SAME MANUFACTURER.

ALL DIMENSIONS ARE ± 1/8" UNLESS OTHERWISE NOTED.

[redacted]

STANDARD PLANS
STATE DEPARTMENT OF HIGHWAYS AND PUBLIC TRANSPORTATION

INDIVIDUAL UNIT PAVEMENT MARKINGS REFLECTIVE PAVEMENT MARKERS, TRAFFIC BUTTONS & JIGGLE BAR TILE

IPM(1)-90

ORIGINAL DRAWING DATE: 1-81		STATE DISTRICT	FEDERAL REGION	FEDERAL AID PROJECT				SHEET
DN.: LR	REVISIONS	21	6	NH92(50)M				513
CK.:	2-82 7-86	COUNTY		CONTROL	SECTION	JOB	HIGHWAY	
DW.: DN	7-85 10-86	HIDALGO		39	17	97	US83/281	
CK.:	11-85 12-90							21A

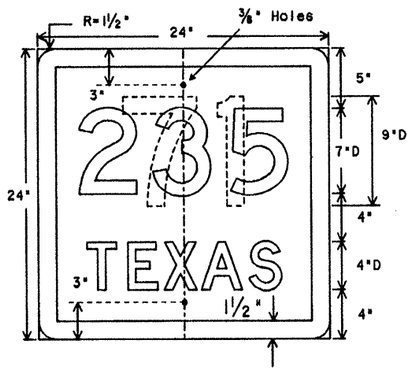

MI-6T
24" X 24"

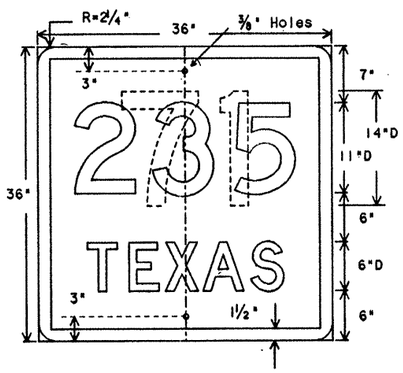

MI-6TX
36" X 36"

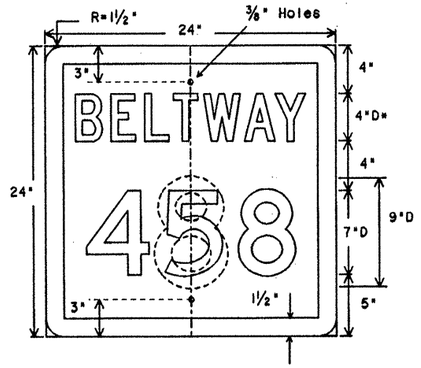

MI-6B
24" X 24"

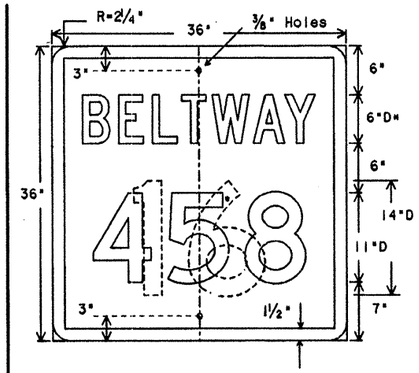

MI-6BX
36" X 36"

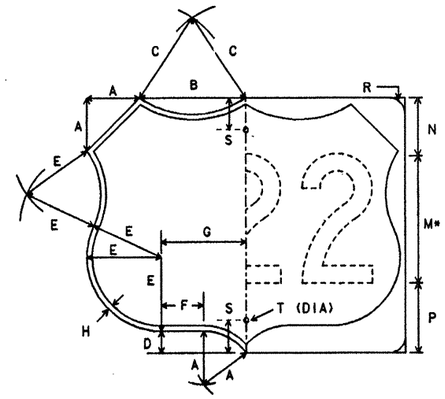

Numerals - Black
Border - Black
Background - White Reflective

		SIZE	A	B	C	D	E
MI-4A2	12" NUMERALS 2 DIGIT	24x24	5	7	5	2	7
MI-4A3	12" NUMERALS 3 DIGIT	30x24	5	10	9	2	7
MI-4B2	18" NUMERALS 2 DIGIT	36x36	7½	10½	7½	3	10½
MI-4B3	18" NUMERALS 3 DIGIT	45x36	7½	15	13½	3	10½

F	G	H	M*	N	P	R	S	T	AREA
1	5	½	12D	5½	6½	1½	3	⅜	3.18
4	8	½	12D	5½	6½	1½	3	⅜	4.05
1½	7½	¾	18D	8¼	9¾	2¼	3	⅜	7.15
6	12	¾	18D	8¼	9¾	2¼	3	⅜	9.11

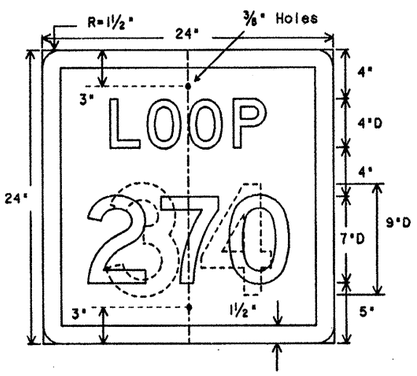

MI-6L
24" X 24"

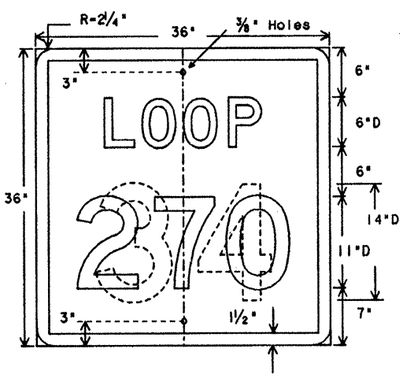

MI-6LX
36" X 36"

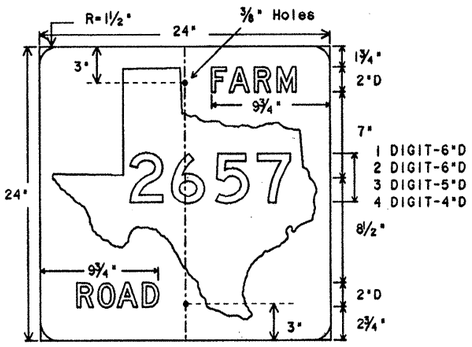

MI-6F
24" X 24"

Letters - White Reflective
Numerals - Black
Symbol - White Reflective
Background - Black

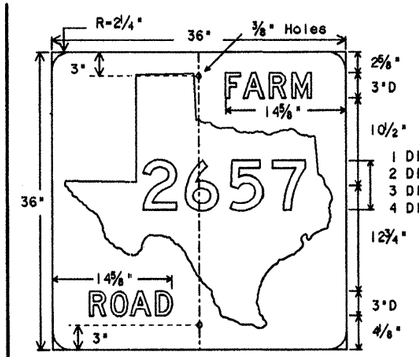

MI-6FX
36" X 36"

Letters - White Reflective
Numerals - Black
Symbol - White Reflective
Background - Black

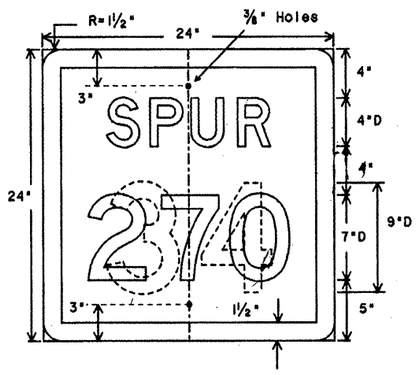

MI-6S
24" X 24"

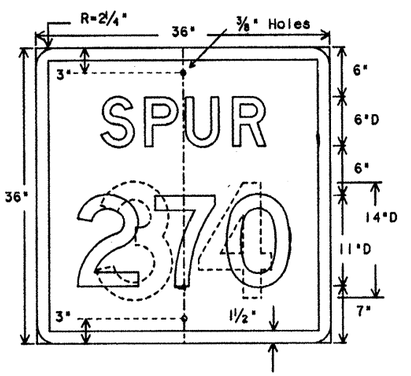

MI-6SX
36" X 36"

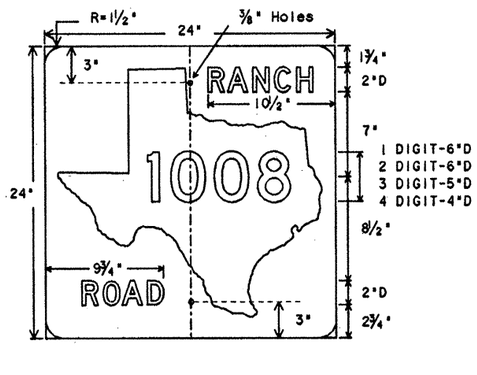

MI-6R
24" X 24"

Letters - White Reflective
Numerals - Black
Symbol - White Reflective
Background - Black

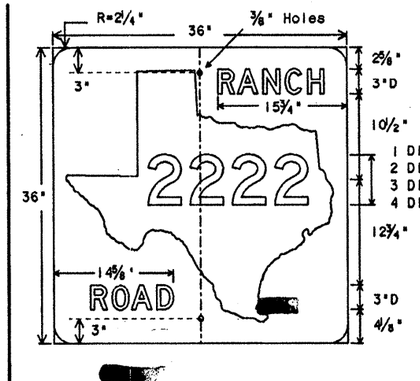

MI-6RX
36" X 36"

Letters - White Reflective
Numerals - Black
Symbol - White Reflective
Background - Black

SPECIFICATION REFERENCE TABLE
MATERIALS AND TEXT SPECIFICATIONS (D-9)
ALUMINUM SIGN BLANKS D-9-7110
REFLECTIVE SHEETING, TYPE A D-9-8300 (ENGINEER GRADE).

GENERAL NOTES:

ROUTE MARKERS ARE [redacted] USED AS CONFIRMING AND REASSURANCE ROUTE MARKERS AND AS COMPONENT PARTS OF A JUNCTION, ROUTE TURN, DIRECTIONAL, OR TRAILBLAZER ASSEMBLY.

THE ALPHABETS AND LATERAL SPACING BETWEEN LETTERS AND NUMERALS [redacted] CONFORM WITH THE TEXAS "MANUAL ON UNIFORM TRAFFIC CONTROL DEVICES FOR STREETS AND HIGHWAYS", LATEST EDITION, AND ANY APPROVED CHANGES THERETO. LATERAL SPACING OF TEXT [redacted] SUCH AS TO PROVIDE A BALANCED APPEARANCE.

LETTERS, SYMBOLS AND BORDERS (EXCEPT WHERE NOTED), [redacted] BLACK AND APPLIED TO REFLECTIVE SHEETING BY SCREENING. MI-6F, MI-6FX, MI-6R AND MI-6RX [redacted] APPLIED BY THE REVERSE SCREEN PROCESS. THE BACKGROUND [redacted] WHITE REFLECTIVE SHEETING CONFORMING WITH DEPARTMENT SPECIFICATION.

A PRINT OF THE TEXAS STATE OUTLINE [redacted] OBTAINED FROM THE DEPARTMENT [redacted] USED IN MAKING A STENCIL FOR MI-6F, MI-6FX, MI-6R AND MI-6RX ROUTE MARKERS.

SIGN BLANKS [redacted] ONE PIECE 0.080 INCH THICK SHEET ALUMINUM ALLOY CONFORMING WITH DEPARTMENT SPECIFICATION "ALUMINUM SIGNS (TYPE A)".

STATE DEPARTMENT OF HIGHWAYS AND PUBLIC TRANSPORTATION

U.S. & STATE ROUTE MARKERS FOR INDEPENDENT MOUNTING

M(1)

ORIGINAL DRAWING DATE: 7-72	REVISIONS	STATE DISTRICT	FEDERAL REGION	FEDERAL AID PROJECT	SHEET
DR.: DN	10-73 7-90	21	6	NH 92(50)M	514
CK.: LR	1-82	COUNTY	CONTROL	SECTION	JOB	HIGHWAY
DR.:	1-85	HIDALGO	39	17	97	US 83/281
CK.:						EA

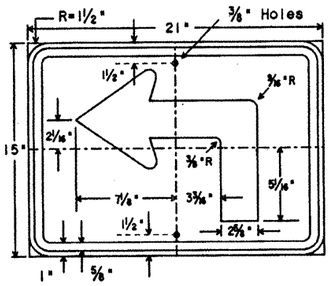

M5-1L
M5-1R
21" X 15"

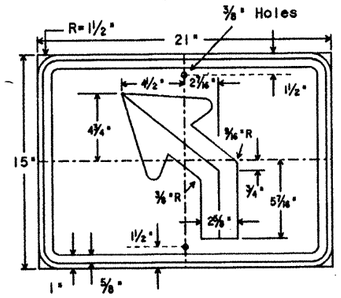

M5-2L
M5-2R
21" X 15"

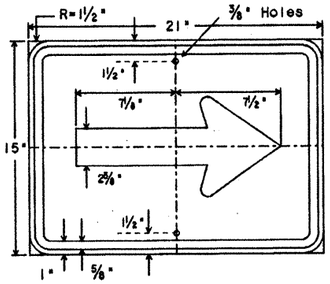

M6-1
21" X 15"

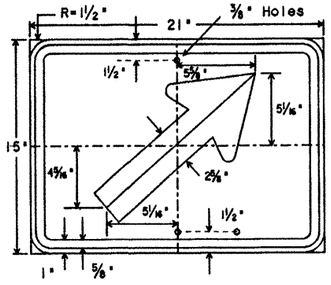

M6-2L
M6-2R
21" X 15"

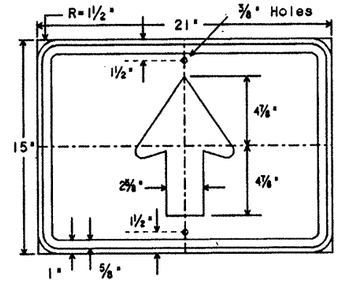

M6-3
21" X 15"

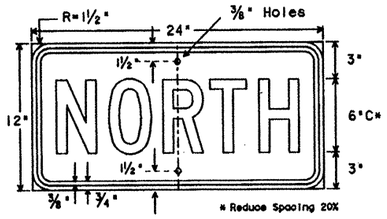

M3-1
24" X 12"

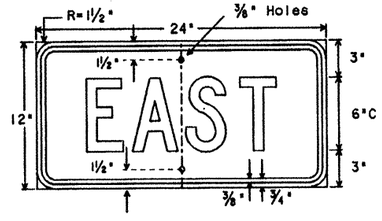

M3-2
24" X 12"

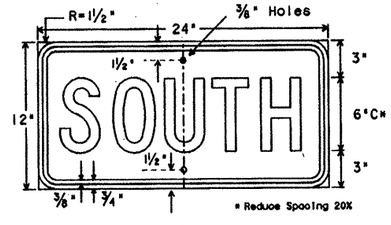

M3-3
24" X 12"

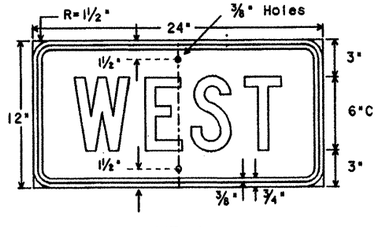

M3-1
24" X 12"

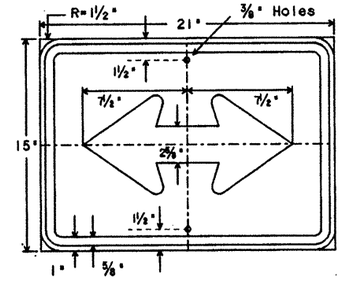

M6-4
21" X 15"

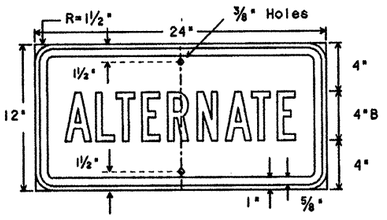

M4-1
24" X 12"

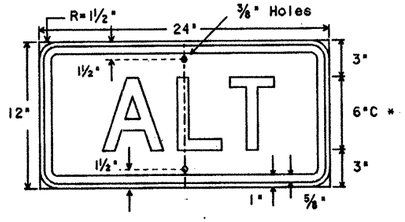

M4-1a
24" X 12"

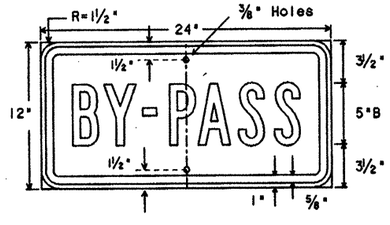

M4-2
24" X 12"

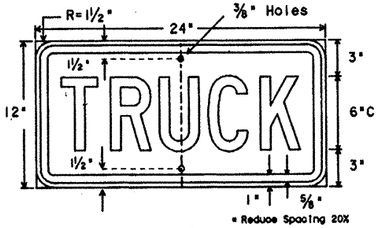

M4-4
24" X 12"

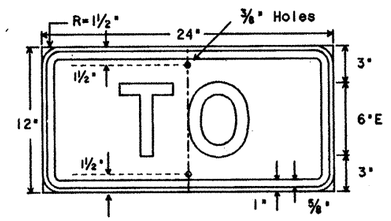

M4-5
24" X 12"

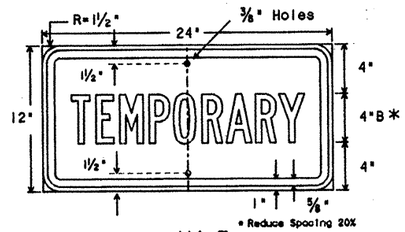

M4-7
24" X 12"

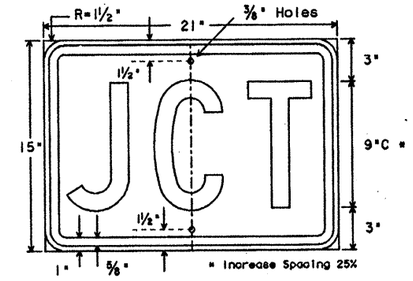

M2-1
21" X 15"

SPECIFICATION REFERENCE TABLE	
MATERIALS AND TEXT SPECIFICATIONS (D-9)	
ALUMINUM SIGN BLANKS	D-9-7110
REFLECTIVE SHEETING, TYPE A (ENGINEER GRADE)	D-9-8300

GENERAL NOTES:

THE ALPHABETS AND LATERAL SPACING BETWEEN LETTERS AND NUMERALS [redacted] CONFORM WITH THE TEXAS 'MANUAL ON UNIFORM TRAFFIC CONTROL DEVICES FOR STREETS AND HIGHWAYS', LATEST EDITION, AND ANY APPROVED CHANGES THERETO. LATERAL SPACING OF TEXT [redacted] SUCH AS TO PROVIDE A BALANCED APPEARANCE.

LETTERS, SYMBOLS AND BORDERS (EXCEPT WHERE NOTED), [redacted] BE BLACK AND APPLIED BY SCREENING TO WHITE REFLECTIVE SHEETING CONFORMING WITH DEPARTMENT SPECIFICATION.

SIGN BLANKS [redacted] ONE PIECE 0.080 INCH THICK SHEET ALUMINUM ALLOY CONFORMING WITH DEPARTMENT SPECIFICATION "ALUMINUM SIGNS (TYPE A)".

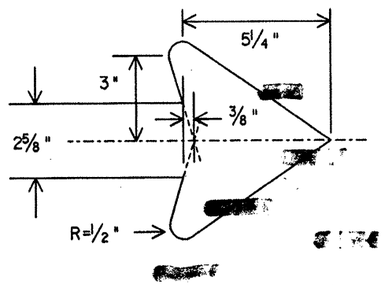

STATE DEPARTMENT OF HIGHWAYS AND PUBLIC TRANSPORTATION

ROUTE MARKER AUXILIARIES

M(3)

ORIGINAL DRAWING DATE: 7-90	STATE DISTRICT	FEDERAL REGION	FEDERAL AID PROJECT				SHEET
DN.:- DN	21	6	NH92(50)M				515
CK.:- LR	COUNTY		CONTROL	SECTION	JOB	HIGHWAY	
DR.:-	HIDALGO		39	17	97	US83/281	
CK.:-							5C

REVISIONS

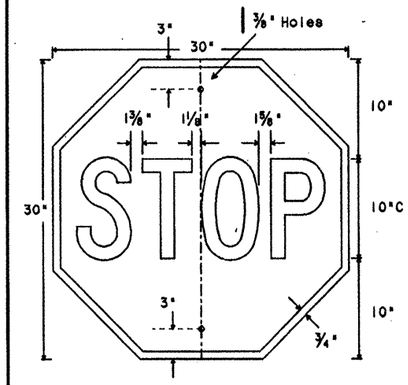

R1-1
30" X 30"

Letters - White Reflective
Border - White Reflective
Background - Red Reflective

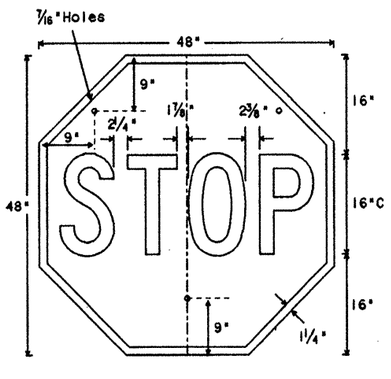

SR1-1
48" X 48"

Letters - White Reflective
Border - White Reflective
Background - Red Reflective

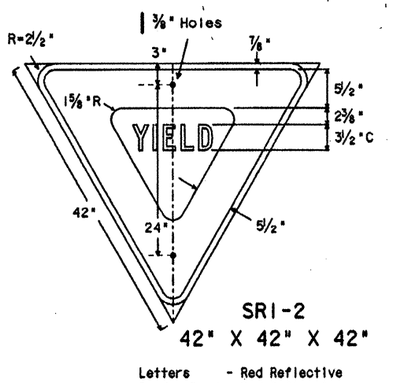

SR1-2
42" X 42" X 42"

Letters - Red Reflective
Border Band - Red Reflective
Background - White Reflective

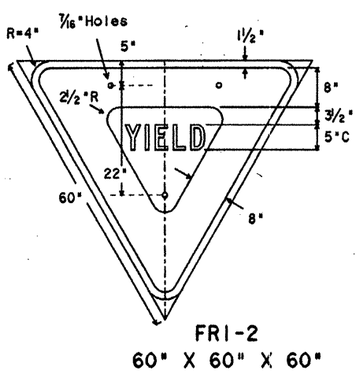

FR1-2
60" X 60" X 60"

Letters - Red Reflective
Border Band - Red Reflective
Background - White Reflective

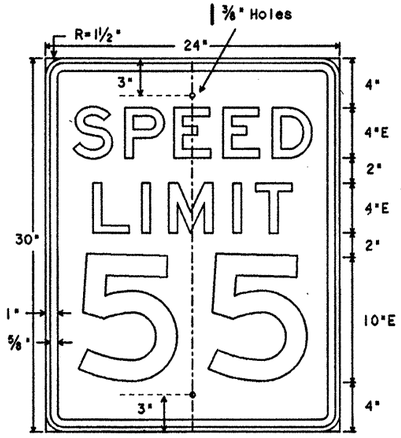

R2-1
24" X 30"

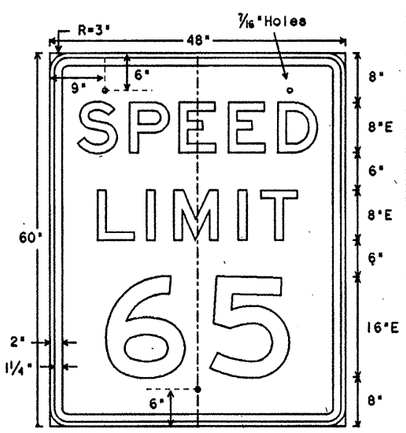

FR2-1
48" X 60"

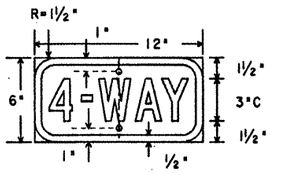

RI-3
12" X 6"

Letters - White Reflective
Border - White Reflective
Background - Red Reflective

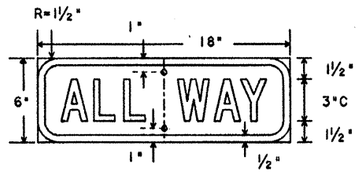

RI-4
18" X 6"

Letters - White Reflective
Border - White Reflective
Background - Red Reflective

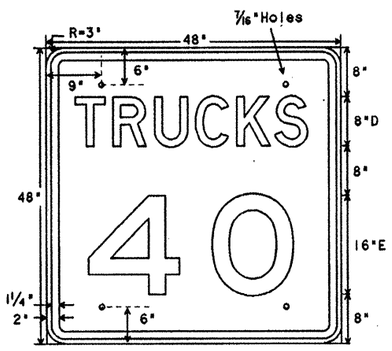

FR2-2
48" X 48"

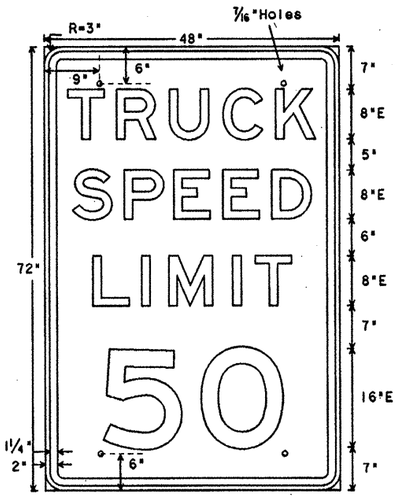

FR2-2a
48" X 72"

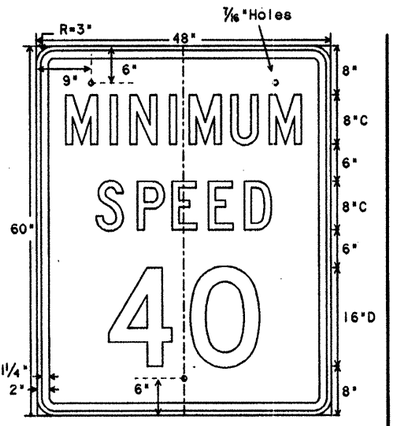

FR2-4
48" X 60"

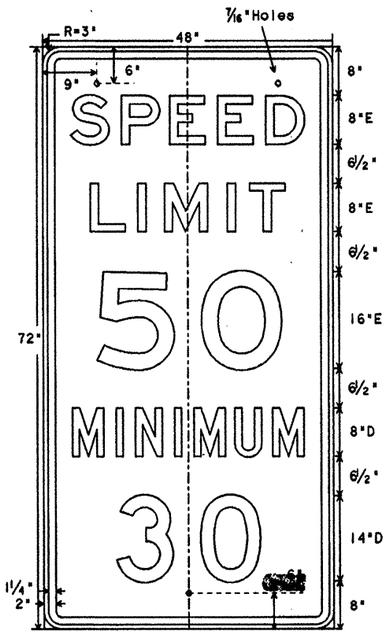

FR2-4a
48" X 96"

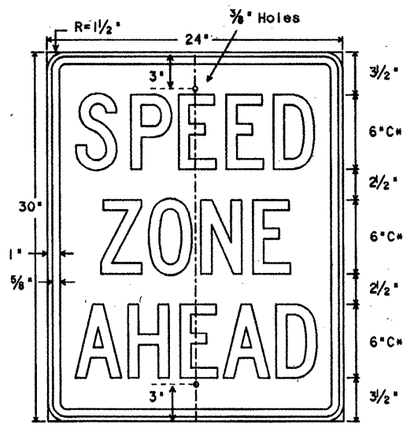

R2-5c
24" X 30"

* reduce spacing 40%

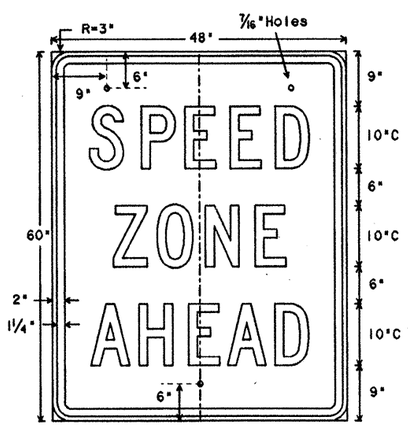

FR2-5c
48" X 60"

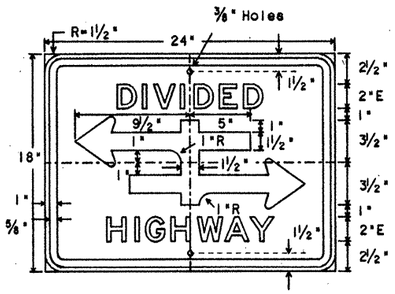

R6-3
24" X 18"

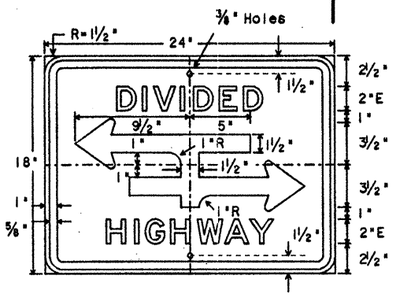

R6-3a
24" X 18"

SPECIFICATION REFERENCE TABLE
MATERIALS AND TEXT SPECIFICATIONS (D-9)
PLYWOOD SIGN BLANKS D-9-7100
REFLECTIVE SHEETING, TYPE C (FOR RED SERIES SIGNS ON THIS SHEET) (HIGH SPECIFIC INTENSITY) D-9-8300
REFLECTIVE SHEETING, TYPE A (FOR BLACK AND WHITE SIGNS ON THIS SHEET) (ENGINEER GRADE) D-9-8300

GENERAL NOTES:

THE ALPHABETS AND LATERAL SPACING BETWEEN LETTERS AND NUMERALS [redacted] CONFORM WITH THE TEXAS "MANUAL ON UNIFORM TRAFFIC CONTROL DEVICES FOR STREETS & HIGHWAYS", LATEST EDITION, AND ANY APPROVED CHANGES THERETO. LATERAL SPACING OF TEXT [redacted] SUCH AS TO PROVIDE A BALANCED APPEARANCE.

LETTERS, SYMBOLS AND BORDERS (EXCEPT WHERE NOTED), [redacted] BLACK AND APPLIED TO REFLECTIVE SHEETING BY SCREENING. RI-1, ERI-1, SRI-1, RI-3 AND RI-[redacted] APPLIED BY THE REVERSE SCREEN PROCESS. THE BACKGROUND [redacted] WHITE REFLECTIVE SHEETING CONFORMING WITH DEPARTMENT SPECIFICATION.

SIGN BLANKS [redacted] ONE PIECE 5/8 INCH THICK PLYWOOD ([redacted] CONFORMING WITH DEPARTMENT SPECIFICATION, UNLESS OTHERWISE NOTED ELSEWHERE IN THE PLANS.

STATE DEPARTMENT OF HIGHWAYS AND PUBLIC TRANSPORTATION

REGULATORY SIGNS

R(1)

ORIGINAL DRAWING DATE: 2-76	STATE DISTRICT	FEDERAL REGION	FEDERAL AID PROJECT			SHEET
DR.:- DN	21	6	NH 92(50)M			516
CK.:- LR	COUNTY		CONTROL	SECTION	JOB	HIGHWAY
DR.:-	HIDALGO		39	17	97	US83/281
CK.:-						

REVISIONS
1-85
7-90

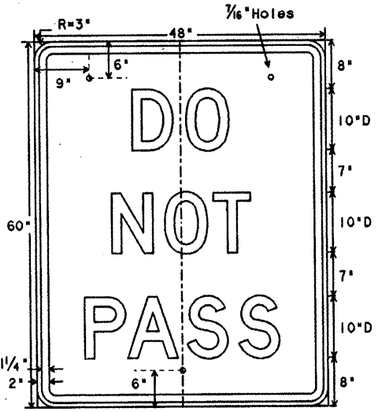

FR4-1
48" X 60"

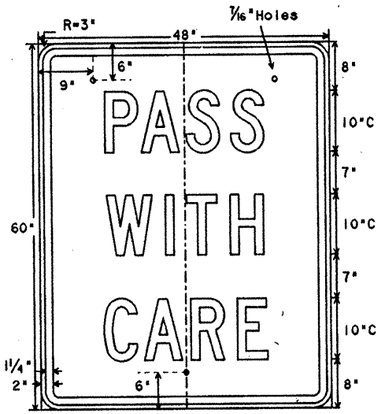

FR4-2
48" X 60"

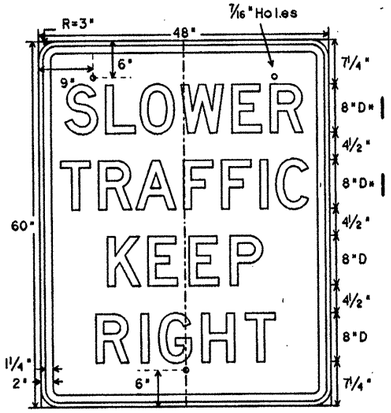

FR4-3
48" X 60"

* reduce spacing 25%

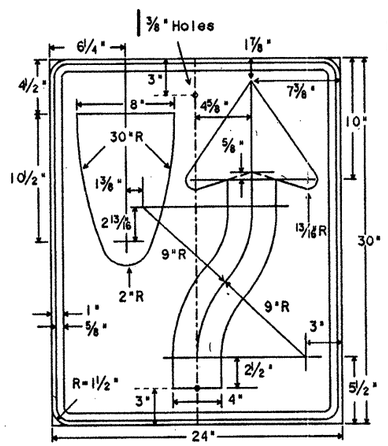

R4-7
24" X 30"

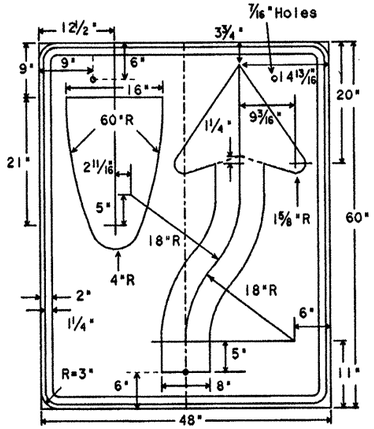

FR4-7
48" X 60"

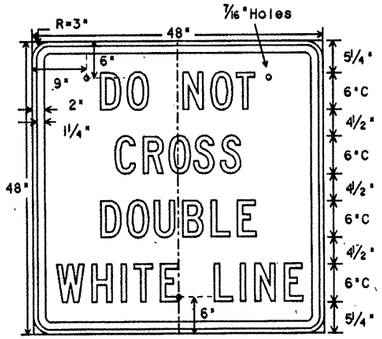

FR4-3B
48" X 48"

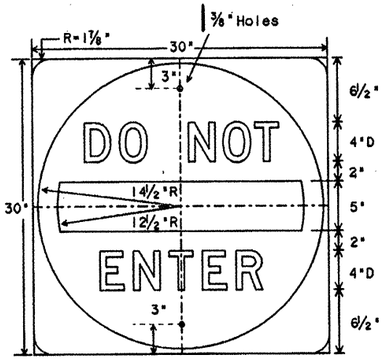

R5-1
30" X 30"

Letters - White Reflective
Bar - White Reflective
Background - Red Reflective

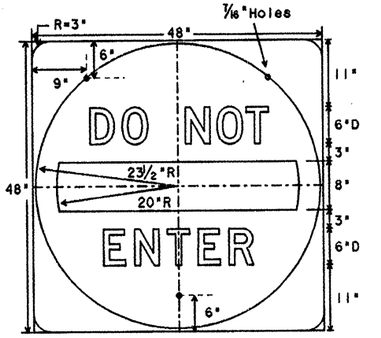

SR5-1
48" X 48"

Letters - White Reflective
Bar - White Reflective
Background - Red Reflective

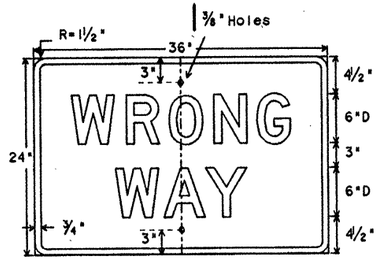

R5-1a
36" X 24"

Letters - White Reflective
Border - White Reflective
Background - Red Reflective

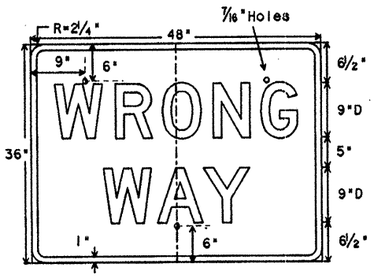

SR5-1a
48" X 36"

Letters - White Reflective
Border - White Reflective
Background - Red Reflective

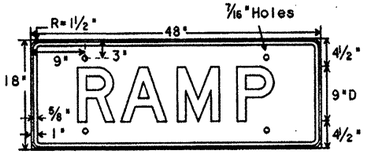

R5-1T
48" X 18"

Letters -Red Reflective
Border -Red Reflective
Background - White Reflective

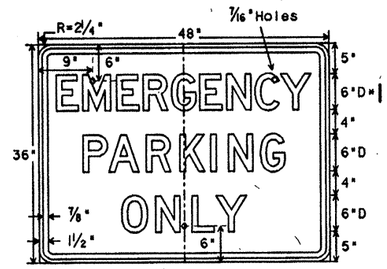

FR8-4
48" X 36"

* reduce spacing 50%

FR8-7

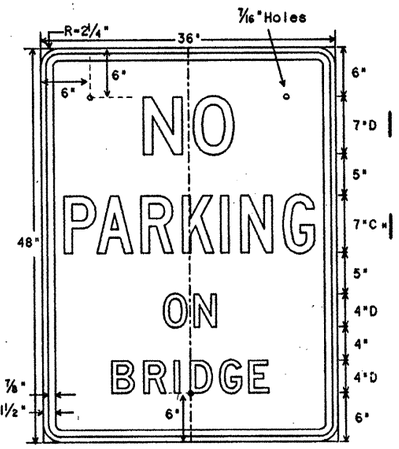

* reduce spacing 50%

ER8-1T
36" X 48"

Letters -Red Reflective
Border -Red Reflective
Background - White Reflective

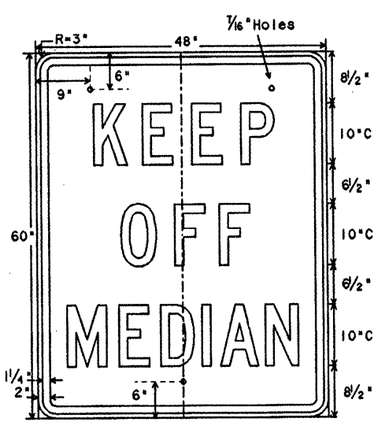

FR11-1
48" X 60"

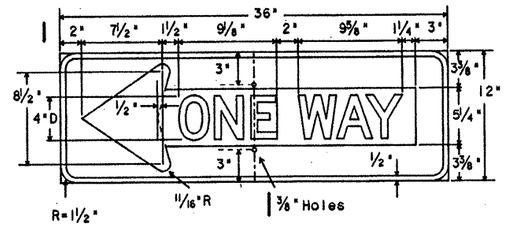

R6-1L
36" X 12"

Letters - Black
Symbol - White Reflective
Border - White Reflective
Background - Black

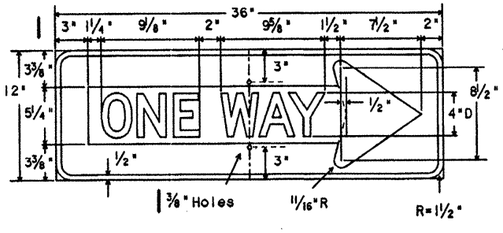

R6-1R
36" X 12"

Letters - Black
Symbol - White Reflective
Border - White Reflective
Background - Black

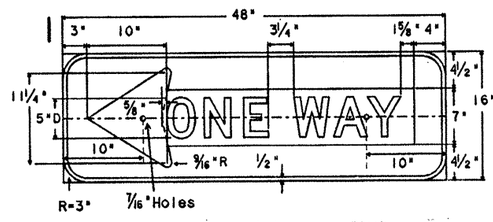

FR6-1L
48" X 16"

Letters - Black
Symbol - White Reflective
Border - White Reflective
Background - Black

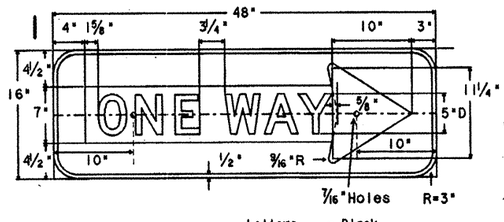

FR6-1R
48" X 16"

Letters - Black
Symbol - White Reflective
Border - White Reflective
Background - Black

SPECIFICATION REFERENCE TABLE
MATERIALS AND TEXT SPECIFICATIONS (D-9)

PLYWOOD SIGN BLANKS	D-9-7100
REFLECTIVE SHEETING, TYPE C (FOR RED SERIES SIGNS ON THIS SHEET) (HIGH SPECIFIC INTENSITY)	D-9-8300
REFLECTIVE SHEETING, TYPE A (FOR BLACK AND WHITE SIGNS ON THIS SHEET) (ENGINEER GRADE)	D-9-8300

GENERAL NOTES:

THE ALPHABETS AND LATERAL SPACING BETWEEN LETTERS AND NUMERALS [redacted] CONFORM WITH THE TEXAS "MANUAL ON UNIFORM TRAFFIC CONTROL DEVICES FOR STREETS AND HIGHWAYS", LATEST EDITION, AND ANY APPROVED CHANGES THERETO. LATERAL SPACING OF TEXT [redacted] SUCH AS TO PROVIDE A BALANCED APPEARANCE.

LETTERS, SYMBOLS AND BORDERS (EXCEPT WHERE NOTED), [redacted] BLACK AND APPLIED TO REFLECTIVE SHEETING BY SCREENING. R5-1, ER5-1, SR5-1, R5-1T, R5-1a AND SR5-1a [redacted] APPLIED BY THE REVERSE SCREEN PROCESS. THE BACKGOUND [redacted] WHITE REFLECTIVE SHEETING CONFORMING WITH DEPARTMENT SPECIFICATION.

SIGN BLANKS [redacted] ONE PIECE 5/8 INCH THICK PLYWOOD (TYPE A) CONFORMING WITH DEPARTMENT SPECIFICATION, UNLESS OTHERWISE NOTED ELSEWHERE IN THE PLANS.

STATE DEPARTMENT OF HIGHWAYS AND PUBLIC TRANSPORTATION

REGULATORY SIGNS

R(2)

ORIGINAL DRAWING DATE: 2-76	STATE DISTRICT	FEDERAL REGION	FEDERAL AID PROJECT		SHEET
REVISIONS	21	6	NH 92(50)M		517
DN: LR: 1-85 7-90	COUNTY		CONTROL	SECTION	JOB	HIGHWAY
	HIDALGO		39	17	97	US83/281

7B

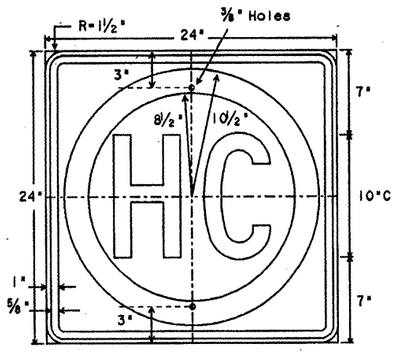

R14-2
24" X 24"

Letters - Black
Border - Black
Ring - Green Reflective
Background - White Reflective

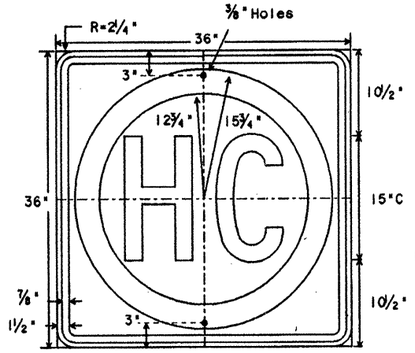

ER14-2
36" X 36"

Letters - Black
Border - Black
Ring - Green Reflective
Background - White Reflective

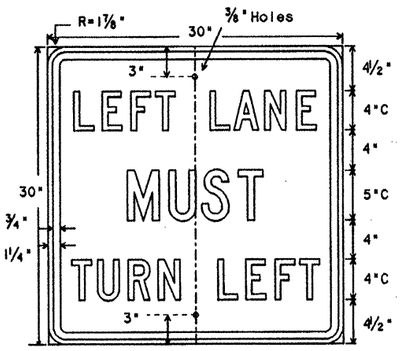

R3-7L
30" X 30"

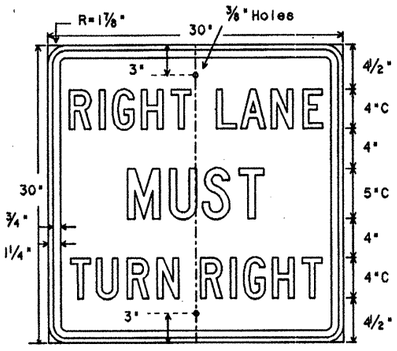

R3-7R
30" X 30"

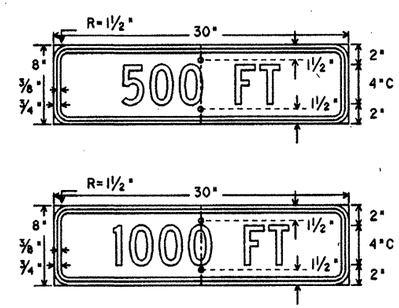

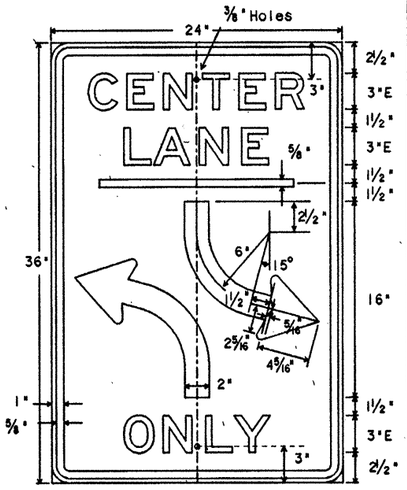

R3-9b
24" X 36"

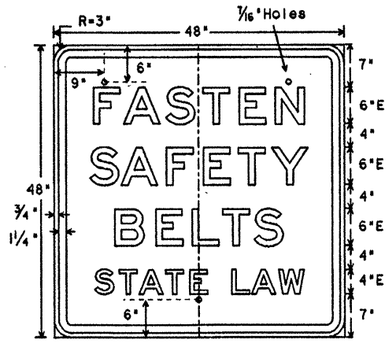

FR19-8
48" X 48"

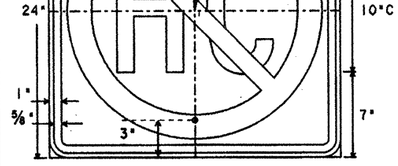

R14-3
24" X 24"

Letters - Black
Border - Black
Ring/Slash - Red Reflective
Background - White Reflective

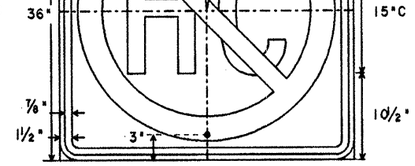

ER14-3
36" X 36"

Letters - Black
Border - Black
Ring/Slash - Red Reflective
Background - White Reflective

R3-20
48" X 48"

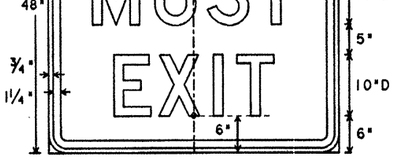

R3-21R
48" X 48"

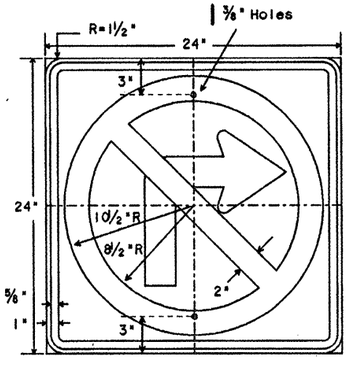

R3-1
24" X 24"

Letters - Black
Arrow - Black
Border - Black
Circle & Diagonal - Red Reflective
Background - White Reflective

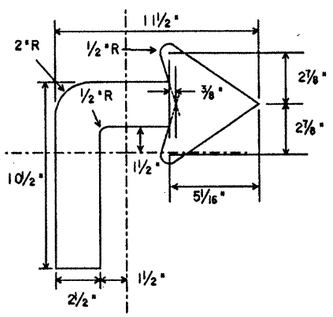

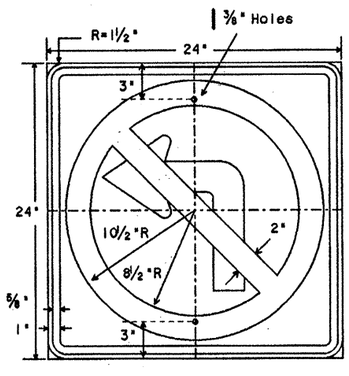

R3-2
24" X 24"

Letters - Black
Arrow - Black
Border - Black
Circle & Diagonal - Red Reflective
Background - White Reflective

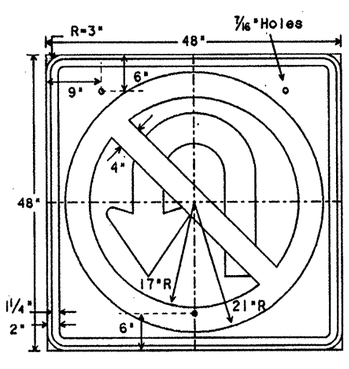

SR3-4
48" X 48"

Letters - Black
Arrow - Black
Border - Black
Circle & Diagonal - Red Reflective
Background - White Reflective

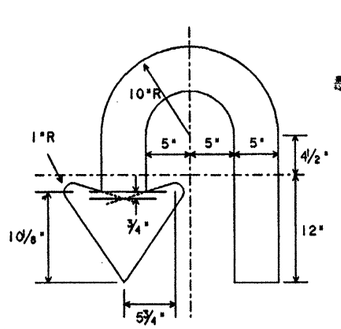

SPECIFICATION REFERENCE TABLE
MATERIALS AND TEXT SPECIFICATIONS (D-9)

PLYWOOD SIGN BLANKS	D-9-7100
REFLECTIVE SHEETING, TYPE A	D-9-8300 (ENGINEER GRADE)

GENERAL NOTES:

THE ALPHABETS AND LATERAL SPACING BETWEEN LETTERS AND NUMERALS [redacted] CONFORM WITH THE TEXAS "MANUAL ON UNIFORM TRAFFIC CONTROL DEVICES FOR STREETS & HIGHWAYS", LATEST EDITION, AND ANY APPROVED CHANGES THERETO. LATERAL SPACING OF TEXT [redacted] SUCH AS TO PROVIDE A BALANCED APPEARANCE.

LETTERS, SYMBOLS AND BORDERS (EXCEPT WHERE NOTED) [redacted] BLACK AND APPLIED BY SCREENING TO WHITE REFLECTIVE SHEETING CONFORMING WITH DEPARTMENT SPECIFICATION.

SIGN BLANKS [redacted] ONE PIECE [redacted] INCH THICK PLYWOOD (TYPE A) CONFORMING WITH DEPARTMENT SPECIFICATION, UNLESS OTHERWISE NOTED ELSEWHERE IN THE PLANS.

STATE DEPARTMENT OF HIGHWAYS AND PUBLIC TRANSPORTATION

REGULATORY SIGNS

R(3)

ORIGINAL DRAWING DATE: 7-90	STATE DISTRICT	FEDERAL REGION	FEDERAL AID PROJECT	SHEET
DN.:- DN	21	6	NH 92(50)M	518
CK.:- LR	COUNTY	CONTROL	SECTION	JOB	HIGHWAY
DW.:-	HIDALGO	39	17	97	US83/281
CK.:-					

REVISIONS

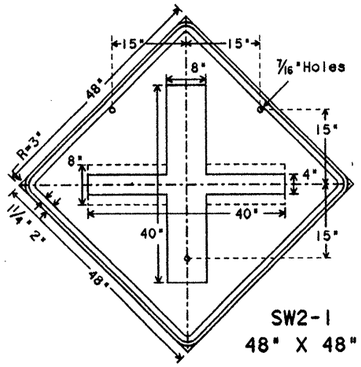

SW2-1
48" X 48"

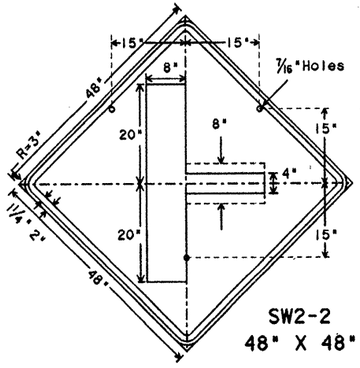

SW2-2
48" X 48"

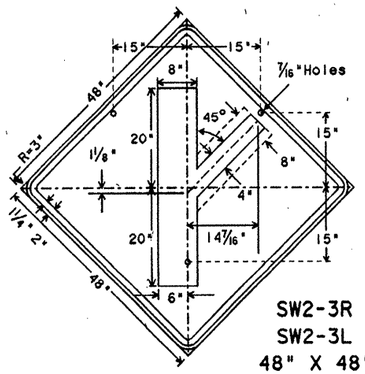

SW2-3R
SW2-3L
48" X 48"

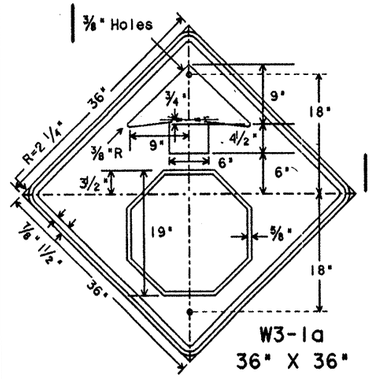

W3-1a
36" X 36"

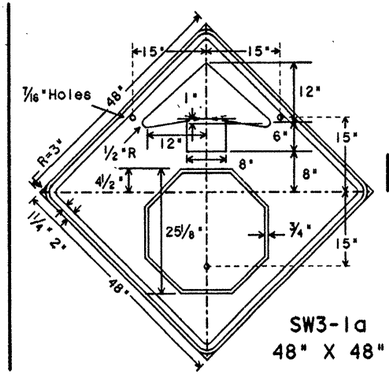

SW3-1a
48" X 48"

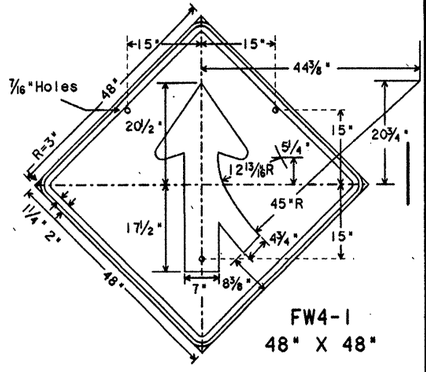

FW4-1
48" X 48"

Border and Arrow - Black
Symbol - White Border on
Red Background (Refl)
Background - Yellow Reflective

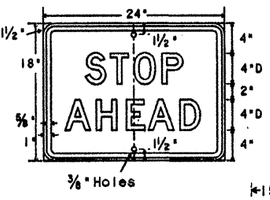

Border and Arrow - Black
Symbol - White Border on
Red Background (Refl)
Background - Yellow Reflective

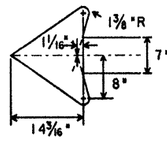

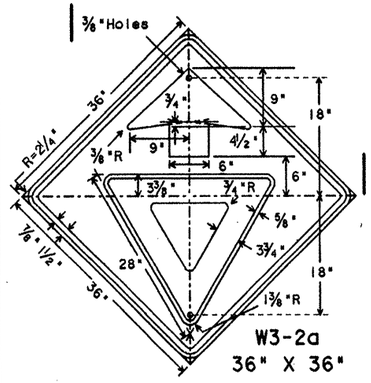

W3-2a
36" X 36"

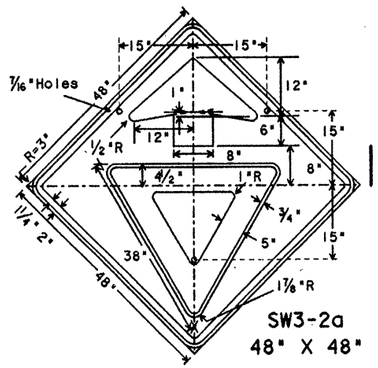

SW3-2a
48" X 48"

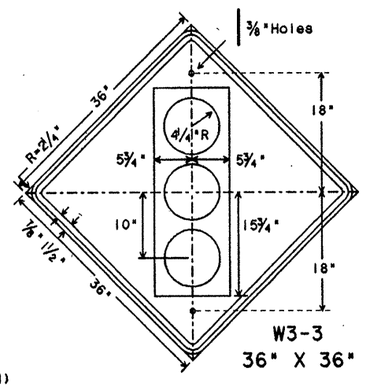

W3-3
36" X 36"

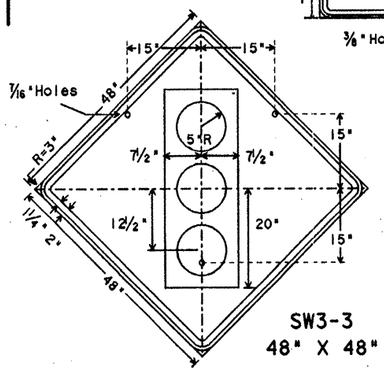

SW3-3
48" X 48"

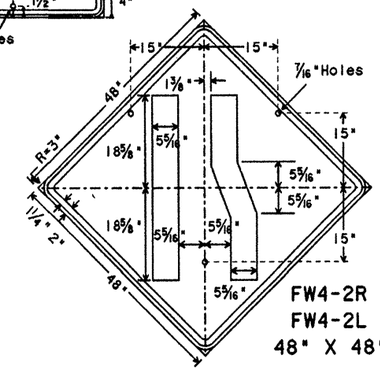

FW4-2R
FW4-2L
48" X 48"

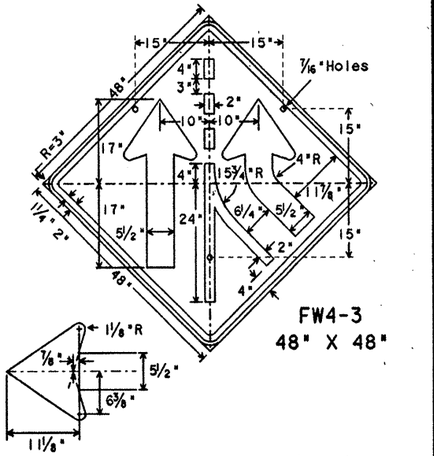

FW4-3
48" X 48"

Border and Arrow - Black
Symbol - Red Border Band on
White Background (Refl)
Background - Yellow Reflective

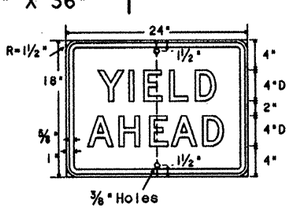

Border and Arrow - Black
Symbol - Red Border Band on
White Background (Refl)
Background - Yellow Reflective

Symbol and Border - Black
Top Circle - Red Reflective
Botton Circle - Green Reflective
Background - Yellow Reflective

Symbol and Border - Black
Top Circle - Red Reflective
Botton Circle - Green Reflective
Background - Yellow Reflective

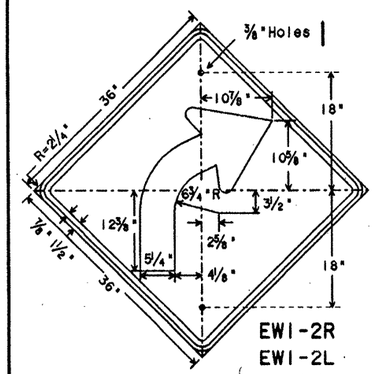

EW1-2R
EW1-2L
36" X 36"

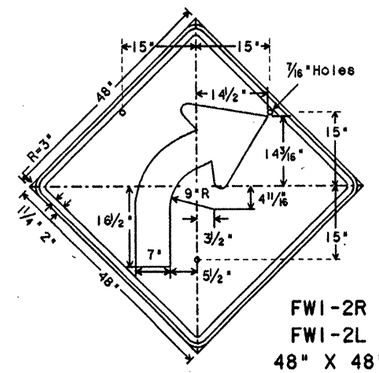

FW1-2R
FW1-2L
48" X 48"

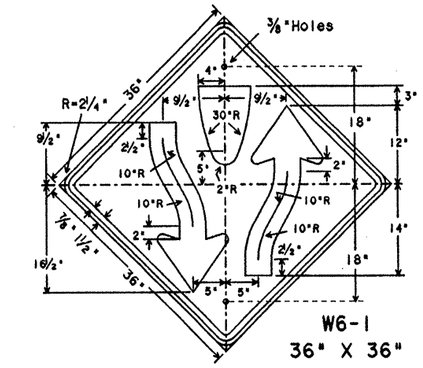

W6-1
36" X 36"

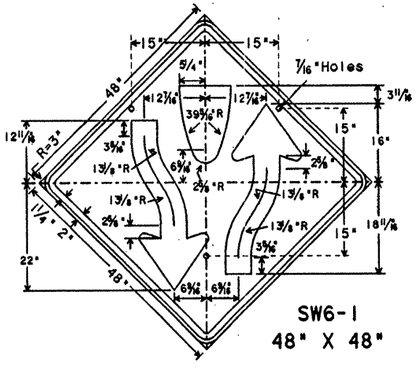

SW6-1
48" X 48"

SPECIFICATION REFERENCE TABLE	
MATERIALS AND TEXT SPECIFICATIONS (D-9)	
PLYWOOD SIGN BLANKS	D-9-7100
REFLECTIVE SHEETING, TYPE C	D-9-8300 (HIGH SPECIFIC INTENSITY)

GENERAL NOTES:

THE ALPHABETS AND LATERAL SPACING BETWEEN LETTERS AND NUMERALS [redacted] CONFORM WITH THE TEXAS "MANUAL ON UNIFORM TRAFFIC CONTROL DEVICES FOR STREETS AND HIGHWAYS", LATEST EDITION, AND ANY APPROVED CHANGES THERETO. LATERAL SPACING OF TEXT [redacted] SUCH AS TO PROVIDE A BALANCED APPEARANCE.

LETTERS, SYMBOLS AND BORDERS (EXCEPT WHERE NOTED) [redacted] BLACK AND APPLIED BY SCREENING TO YELLOW REFLECTIVE SHEETING CONFORMI[redacted]ITH DEPARTMENT SPECIFICATION.

SIGN BLANKS [redacted] ONE PIECE 5/8 INCH THICK PLYWOOD (TYPE A) CONFORMING WITH DEPARTMENT SPECIF[redacted], UNLESS OTHERWISE NOTED ELSEWHERE IN THE PLANS.

STATE DEPARTMENT OF HIGHWAYS
AND PUBLIC TRANSPORTATION

WARNING SIGNS

W(1)

ORIGINAL DRAWING DATE: 1-81		STATE DISTRICT	FEDERAL REGION	FEDERAL AID PROJECT				SHEET
DN: DN	REVISIONS	21	6	NH92(50)M				519
CK: LR	1-85	COUNTY		CONTROL	SECTION	JOB	HIGHWAY	
DN:	7-90	HIDALGO		39	17	97	US83/281	
CK:								

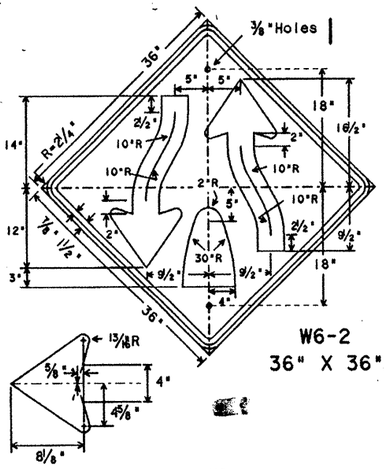

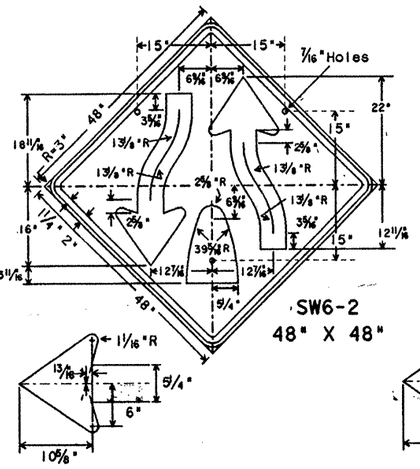

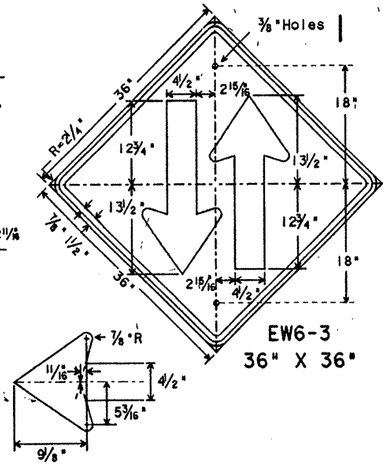

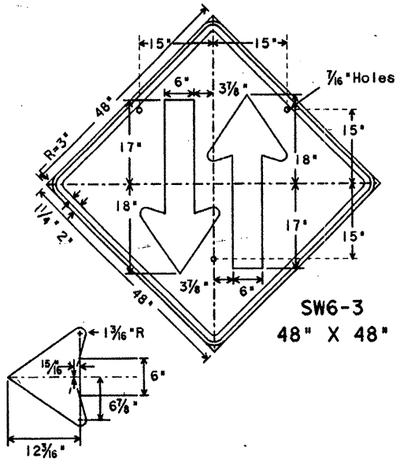

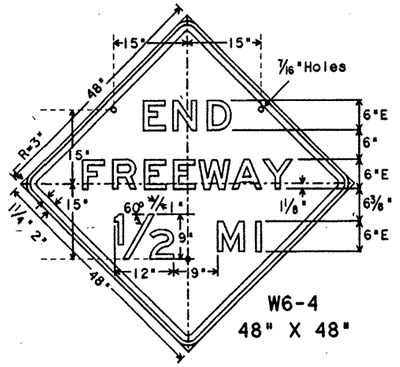

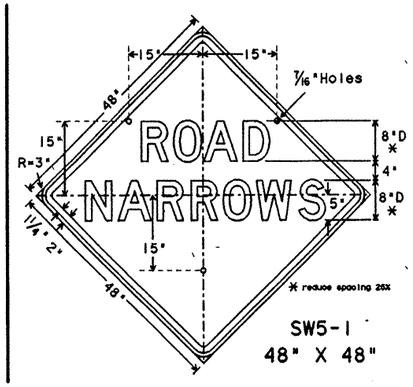

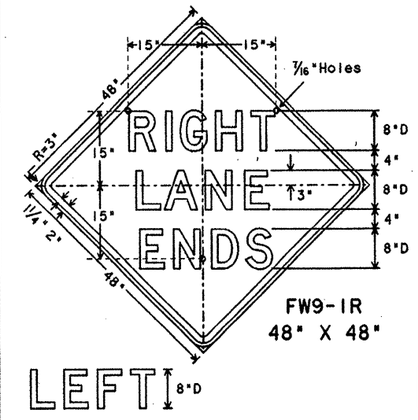

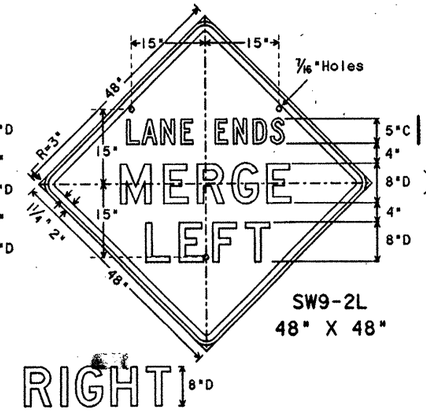

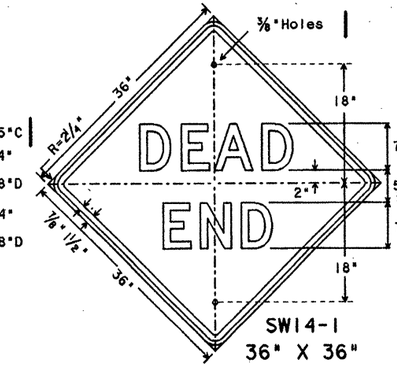

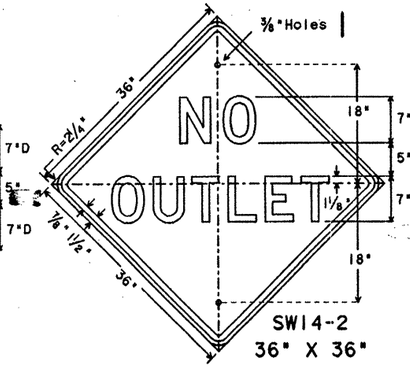

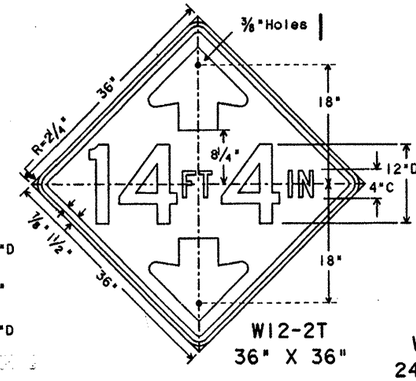

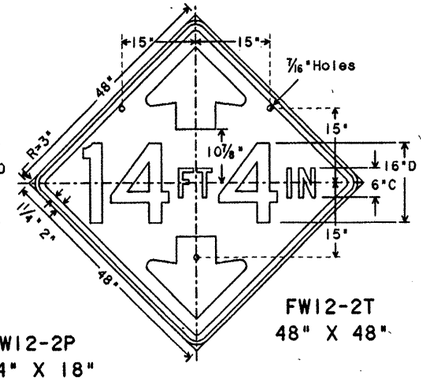

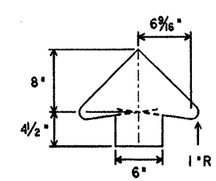

W12-2P
24" X 18"

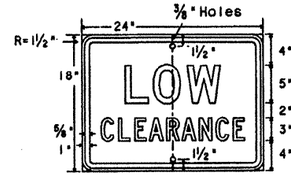

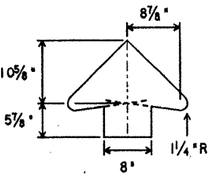

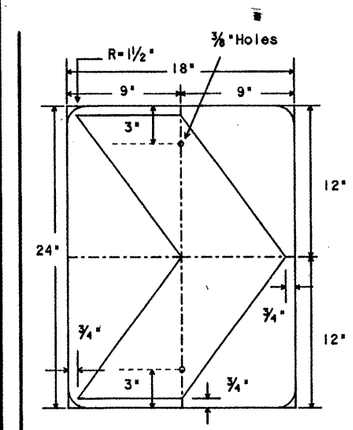

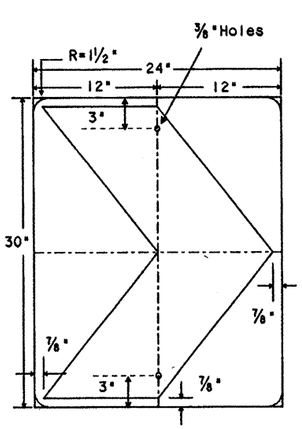

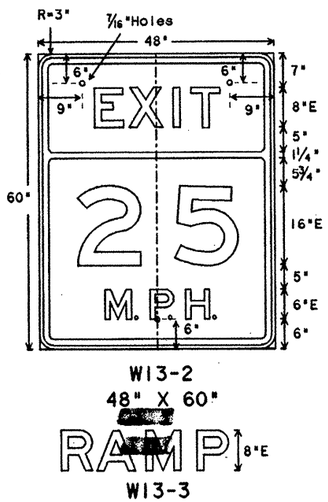

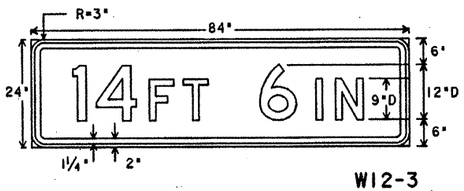

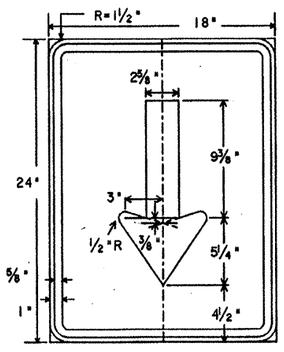

SPECIFICATION REFERENCE TABLE
MATERIALS AND TEXT SPECIFICATIONS (D-9)

PLYWOOD SIGN BLANKS	D-9-7100
REFLECTIVE SHEETING, TYPE C	D-9-8300 (HIGH SPECIFIC INTENSITY)

GENERAL NOTES:

THE ALPHABETS AND LATERAL SPACING BETWEEN LETTERS AND NUMERALS [redacted] CONFORM WITH THE TEXAS "MANUAL ON UNIFORM TRAFFIC CONTROL DEVICES FOR STREETS AND HIGHWAYS", LATEST EDITION, AND ANY APPROVED CHANGES THERETO. LATERAL SPACING OF TEXT [redacted] SUCH AS TO PROVIDE A BALANCED APPEARANCE.

LETTERS, SYMBOLS AND BORDERS (EXCEPT WHERE NOTED), [redacted] BLACK AND APPLIED BY SCREENING TO YELLOW REFLECTIVE SHEETING CONFORMING WITH DEPARTMENT SPECIFIATION.

SIGN BLANKS [redacted] ONE PIECE 5/8 INCH THICK PLYWOOD (TYPE A) CONFORMING WITH DEPARTMENT SPECIFICATION, UNLESS OTHERWISE NOTED ELSEWHERE IN THE PLANS.

STATE DEPARTMENT OF HIGHWAYS AND PUBLIC TRANSPORTATION

WARNING SIGNS

W(2)

ORIGINAL DRAWING DATE: 1-81	STATE DISTRICT	FEDERAL REGION	FEDERAL AID PROJECT	SHEET
REVISIONS	21	6	NH 92(50)M	520
DN: - DN	COUNTY	CONTROL	SECTION	JOB	HIGHWAY
CK: - LR 1-82					
DW: - 1-85	HIDALGO	39	17	97	US83/281
CK: - 7-90					98

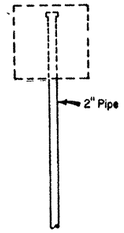

Type A

THIS TYPE PIPE MOUNT [illegible] USED FOR ANY SIGN OR COMBINATION OF SIGNS WHEN THE SIGN AREA DOES NOT EXCEED 10 SQUARE FEET EXCEPT FR6-1 AND W1-6 SIGNS (SEE TYPE D-1). THE AREA OF THE REGULATORY OR WARNING SIGN SUPPLEMENTARY PLAQUES [illegible] NOT [illegible] USED IN DETERMINING THE ABOVE SIGN AREA.

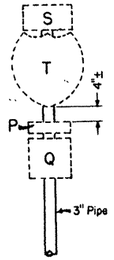

Type A-1

THIS TYPE PIPE MOUNT [illegible] USED FOR A 36" OR 45" INTERSTATE ROUTE MARKER WITH A 24" OR 30" ROUTE MARKER ON MAIN LANES OR AS A SPECIFIED OPTIONAL SUBSTITUTE FOR TYPE B.

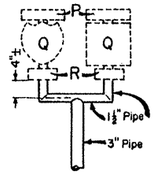

Type B

THIS TYPE PIPE MOUNT [illegible] USED WHEN 2 ROUTE MARKERS OF THE SAME TYPE OR 2 ROUTE MARKERS OF DIFFERENT TYPES ARE REQUIRED.

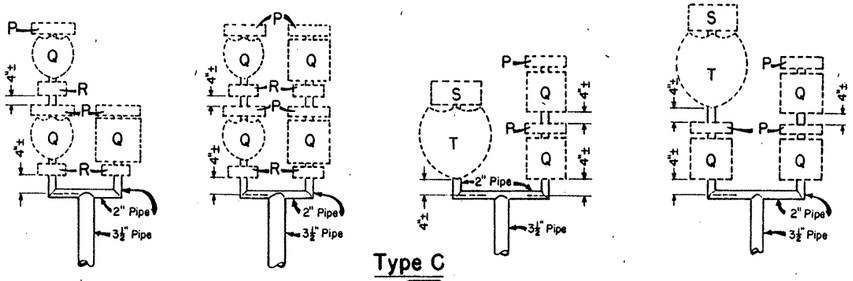

Type C

THIS TYPE PIPE MOUNT [illegible] USED:
1. WHEN 3 OR 4 ROUTE MARKERS ARE REQUIRED; OR
2. FOR A 36" OR 45" INTERSTATE ROUTE MARKER WITH 2 OR 3 24" AND/OR 30" ROUTE MARKERS.

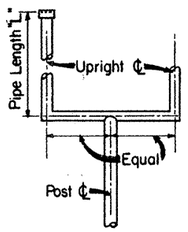

See table at right for values of "L"

DIMENSION "S"

DIMENSION "S" EQUALS THE DISTANCE FROM THE ℄ OF UPRIGHT TO THE ℄ OF CLEARANCE BETWEEN SIGN GROUP.

"S" = 1'-4½" for Q_1
"S" = 1'-7½" for Q_2

"S" = 1'-10½" for T_1
"S" = 2'-3" for T_2

P = 24" x 12" Cardinal Direction Marker
Q_1 = 24" x 24" Interstate, U.S. or State Route Marker
Q_2 = 30" x 24" Interstate or U.S. Route Marker
R = 21" x 15" Direction Arrow
S = 30" x 15" Cardinal Direction Marker
T_1 = 36" x 36" (2) digit Interstate Route Marker
T_2 = 45" x 36" (3) digit Interstate Route Marker

Marker Combinations	"L"
2P + 2Q + 2R + 7"	9'-1"
P + 2Q + 2R + 7"	8'-1"
2Q + 2P + 7"	6'-7"
Q + R + 3"	3'-6"
S + T + 3"	4'-6"
P + Q + R + 3"	4'-6"
P + Q + S + T + 7"	7'-10"

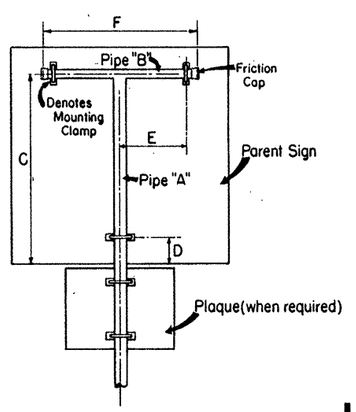

Type F Mount

GENERAL NOTES FOR SIGN SUPPORT TYPES A, B, C, D, & F.

1. PIPE COLLAR COUPLING [illegible] USED FOR ALL SIGNS SUPPORTED ON 2" AND 2-½" PIPE POSTS.
2. TRIANGULAR SLIP BASE [illegible] USED FOR SIGNS SUPPORTED ON 3" AND 3-½" PIPE POSTS.
3. MOUNTING CLAMP, VERTICAL CLEARANCE AND LATERAL CLEARANCE DETAILS ARE SHOWN ON SHEET SMD(I-2).
4. WELDED PIPE MOUNT, FRICTION CAP, PIPE COLLAR COUPLING, TRIANGULAR SLIP BASE AND FOUNDATION DETAILS ARE SHOWN ON SHEET SMD(I-3).

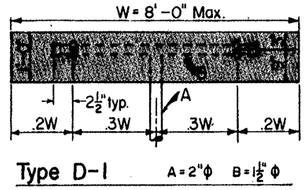

Type D-1

A = 2"ϕ B = 1½"ϕ

NOTE:

1. FOR FR6-1 SIGN, MOUNTING CLAMPS ARE SPACED 28" APART AND TOP OFFR6-1 SIGN IS 8" ABOVE CENTERLINE OF PIPE B.
2. FOR W 1-6 SIGN, MOUNTING CLAMPS ARE SPACED 30" APART.

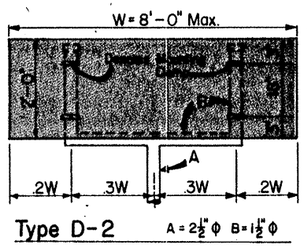

Type D-2

A = 2½"ϕ B = 1½"ϕ

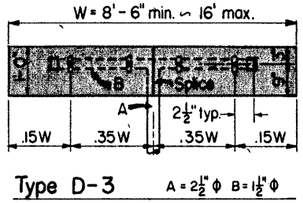

Type D-3

A = 2½"ϕ B = 1½"ϕ

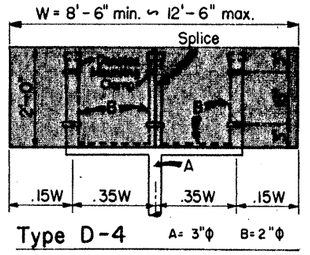

Type D-4

A = 3"ϕ B = 2"ϕ

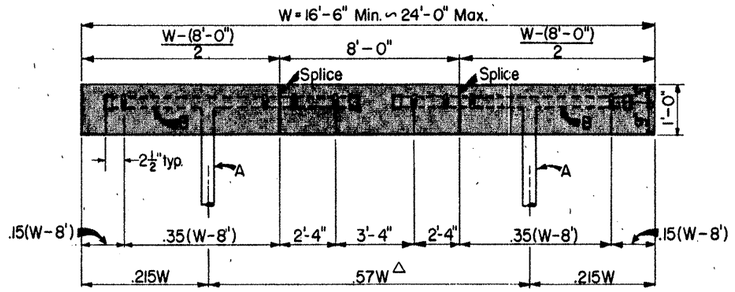

Type D-5

A = 2½"ϕ B = 1½"ϕ

△ POST SPACING [illegible] VARY ±5 % OF TOTAL SIGN WIDTH TO FIT FIELD CONDITIONS.

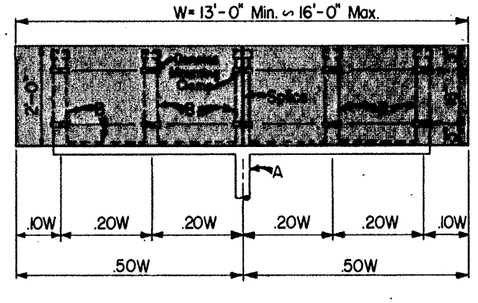

Type D-6

A = 3"ϕ B = 2"ϕ

NOTES: (FOR TYPES D-1 THROUGH D-6)

1. SPLICE PLATES REQUIRED AT SPLICE POINTS.
2. THE SIGN BLANKS [illegible] 5/8" THICK PLYWOOD (TYPE A) CONFORMING WITH THE SPECIFICATIONS. UNLESS OTHERWISE NOTED ELSEWHERE IN THE PLANS.

Type F Mount Dimensions

Type of Sign		Pipe "A"	Pipe "B"	C	D	E	F
Regulatory Signs	SRI-1	3"ϕ	2"ϕ	39"	9"	15"	35"
	FRI-2	3"ϕ	2"ϕ	43"	21"	11"	27"
	36"X48"	3"ϕ	2"ϕ	42"	6"	12"	29"
	48"X36"	3"ϕ	2"ϕ	30"	6"	15"	35"
	48"X48" ⚠1	3"ϕ	2"ϕ	42"	6"	15"	35"
	48"X60" ⚠1	3"ϕ	2"ϕ	54"	6"	15"	35"
Warning Signs	48"X48" ⚠1 [illegible]	[illegible]"ϕ	2"ϕ	47¾"	17¾"	15"	35"
	48"X60"	3"ϕ	2"ϕ	54"	6"	15"	35"
School Signs	SSI-I ⚠3	3"ϕ	2"ϕ	30"	6"	12"	30"
	SS2-I ⚠3	3"ϕ	2"ϕ	30"	6"	12"	30"

⚠1 INCLUDES PARENT SIGNS OF THIS SIZE WHICH HAVE SUPPLEMENTARY PLAQUE. WHEN R5-IT IS MOUNTED WITH SR5-I, THE SR5-I SHALL BE MOUNTED AS A 48"X48" REGULATORY SIGN WITH THE R5-I MOUNTED AS A PLAQUE.

⚠2 FR2-2, FR2-3, AND FR2-4 ARE [illegible] MOUNTED ONLY IN COMBINATION WITH FR2-1 ON A TYPE G MOUNT; ALSO FR2-2A IS [illegible] MOUNTED ON A TYPE G MOUNT (SEE STANDARD SHEET SMD(2)). ALSO WHEN SR5-IA IS MOUNTED WITH AN SR5-I, A TYPE G MOUNT [illegible] USED.

⚠3 TYPE F MOUNT FOR SCHOOL ADVANCE SIGN (48"X48") AND SCHOOL CROSSING SIGN (48"X48").

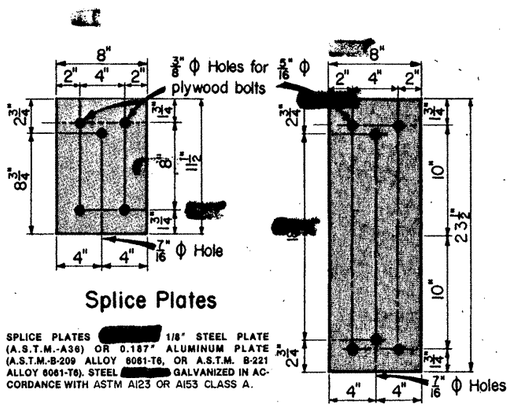

Splice Plates

SPLICE PLATES [illegible] 1/8" STEEL PLATE (A.S.T.M.-A36) OR 0.187" ALUMINUM PLATE (A.S.T.M.-B-209 ALLOY 6061-T6, OR A.S.T.M. B-221 ALLOY 6061-T6). STEEL [illegible] GALVANIZED IN ACCORDANCE WITH ASTM A123 OR A153 CLASS A.

STATE DEPARTMENT OF HIGHWAYS AND PUBLIC TRANSPORTATION

PIPE MOUNTING DETAILS FOR SMALL ROADSIDE SIGNS

SMD(I-1)

ORIGINAL DRAWING DATE: 4-78		STATE DISTRICT	FEDERAL REGION	FEDERAL AID PROJECT				SHEET
CH.1-	REVISIONS	21	6	NH 92(50)M				521
CH.2- 2-82		COUNTY		CONTROL	SECTION	JOB	HIGHWAY	
CH.3- 10-86		HIDALGO		39	17	97	US83/281	
CH.4-								12

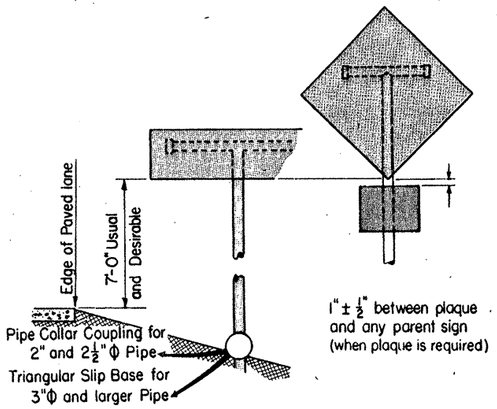

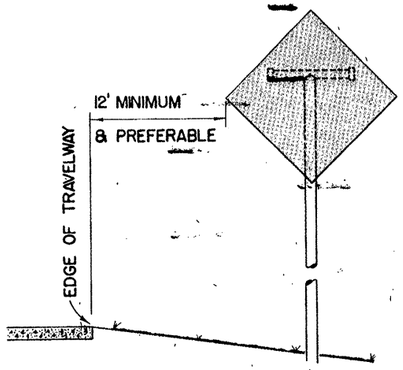

ROADWAY WITHOUT SHOULDER
RURAL CONVENTIONAL HIGHWAY

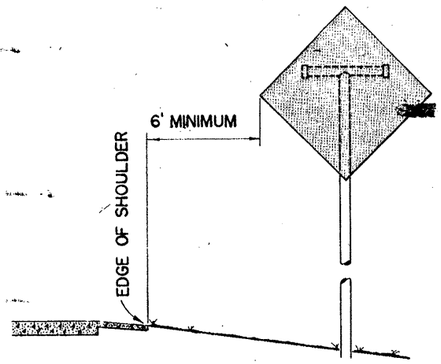

ROADWAY WITH SHOULDER
RURAL CONVENTIONAL HIGHWAY

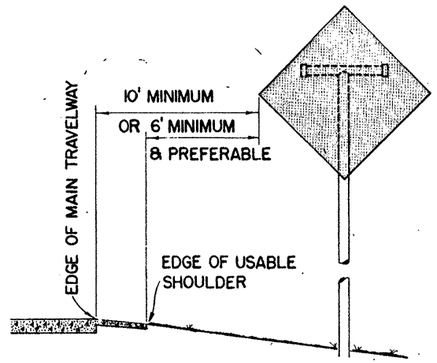

EXPRESSWAYS OR FREEWAYS
WITHOUT CURB OR WITH MOUNTABLE CURB

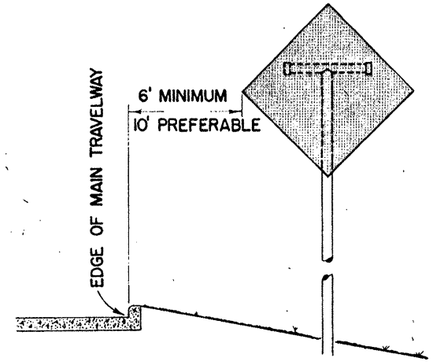

EXPRESSWAYS OR FREEWAYS
WITH UNMOUNTABLE CURB

LATERAL CLEARANCE OF SMALL SIGNS TO THE RIGHT OR LEFT SIDE OF ROADWAY

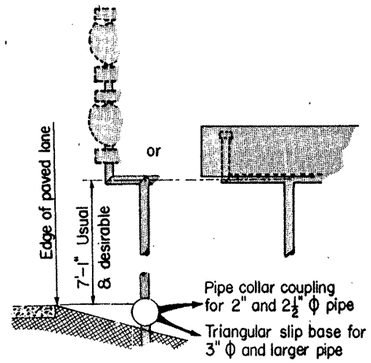

VERTICAL CLEARANCE OF SMALL SIGNS ALL TYPES OF ROADWAYS

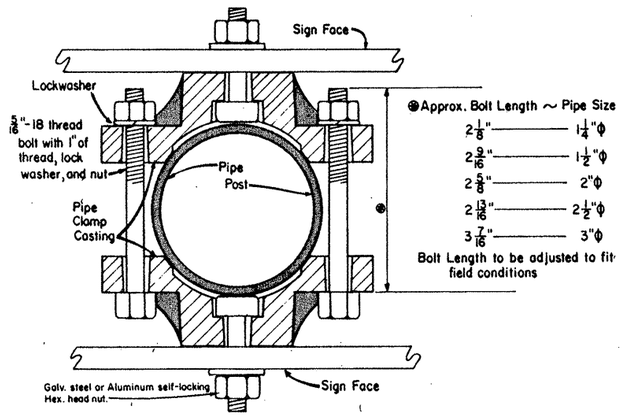

Typical Detail of
Back To Back Mounting Of Signs

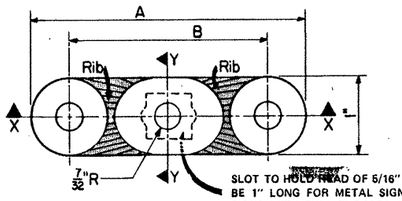

SLOT TO HOLD HEAD OF 5/16" SQ. HEAD BOLT. THE BOLT SHALL BE 1" LONG FOR METAL SIGNS AND 1¾" LONG FOR PLYWOOD SIGNS, WITH FULL THREADS, A MEDIUM WASHER, AND GALV. STEEL OR ALUMINUM SELF-LOCKING HEX HEAD NUT. THE BOLT HEAD MUST NOT TURN IN SLOT.

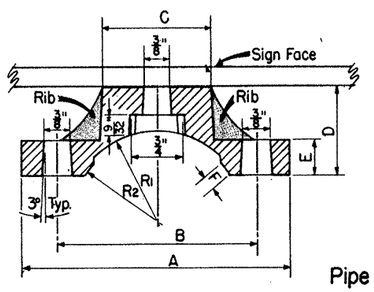

Section X-X

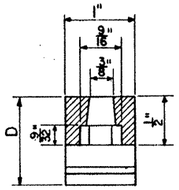

Section Y-Y

Pipe Clamp Casting

PIPE CLAMP CASTING [redacted] ALUMINUM ALLOY A444.0 OR 356.0-F.

ALL SIGN MOUNTING CLAMP PARTS NOT MADE FROM ALUMINUM [redacted] GALVANIZED STEEL IN CONFORMANCE WITH ASTM A153 OR STAINLESS STEEL.

MOUNTING CLAMP DETAILS

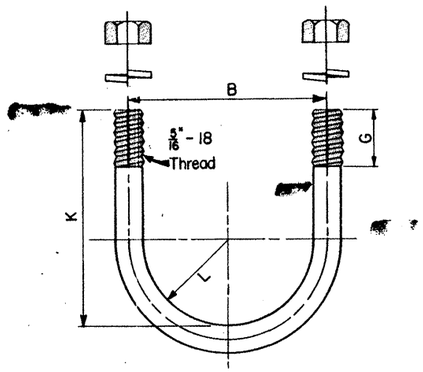

U-Bolt

U-BOLT [redacted] MADE IN ACCORDANCE WITH STANDARD MANUFACTURING PROCEDURE. 9/32" DIA. STOCK IS PERMISSIBLE. AMERICAN STANDARD REGULAR SEMI-FINISHED HEX. NUTS & SPRING LOCKWASHERS.

Dimensions for Mounting Clamp

Standard Pipe Size	A	B [redacted]	C	D	E	F	G	K	L	R1	R2
1¼"	3 5/64"	2 5/64"	¾"	15/16"	7/16"	3/16"	5/8"	2 9/64"	27/32"	57/64"	53/64"
1½"	3 9/32"	2 9/32"	1"	1 1/16"	7/16"	3/16"	5/8"	2 7/16"	63/64"	31/32"	15/16"
2"	3¾"	2¾"	1½"	1⅛"	½"	3/16"	1"	2 11/16"	1 7/32"	1¼"	1 3/16"
2½"	4¼"	3¼"	2"	1¼"	½"	¼"	1"	3 3/16"	1 15/32"	1½"	1 7/16"
3"	4⅞"	3⅞"	2½"	1⅜"	5/8"	¼"	1"	3 13/16"	1 25/32"	1 13/16"	1¾"

NOTES:
1. EXCEPT AS NOTED, ALL CLEARANCES APPLY TO BOTH RURAL AND URBAN LOCATIONS.
2. GENERALLY, WHERE PHYSICAL FEATURES OF THE ROADWAY [redacted] PERMIT, MAXIMUM LATERAL CLEARANCES ARE THE MORE DESIRABLE. FOR FRONTAGE ROADS, RAMPS AND OTHER CONNECTING ROADWAYS, LESSER CLEARANCES [redacted] USED, BUT GENERALLY NOT LESS THAN SIX FEET IS RECOMMENDED BETWEEN THE EDGE OF THE TRAVELWAY AND THE EDGE OF THE SIGN. AT INTERSECTIONS, SIGNS [redacted] POSITIONED IN THE MOST OPTIMUM LOCATION FOR VIEWING BY TRAFFIC.
3. WHERE NECESSARY, AN ALLOWABLE MINIMUM CLEARANCE OF TWO FEET [redacted] USED IN URBAN LOCATIONS ON CONVENTIONAL HIGHWAYS.
4. WHERE A SIGN IS [redacted] LOCATED BEHIND GUARDRAIL, THE ALLOWABLE MINIMUM CLEARANCE [redacted] USED, MEASURED FROM THE FACE OF THE GUARDRAIL TO THE NEAR EDGE OF THE SIGN.
5. LATERAL CLEARANCES OF SIGNS MOUNTED ON LEFT SIDE OF ROADWAY [redacted] THE SAME AS SHOWN ABOVE WHERE SPACE [redacted] PERMIT.

STATE DEPARTMENT OF HIGHWAYS AND PUBLIC TRANSPORTATION

PIPE MOUNTING DETAILS FOR SMALL ROADSIDE SIGNS

SMD(I-2)

DRAWING DATE: 4-78		STATE DISTRICT	FEDERAL REGION	FEDERAL AID PROJECT			SHEET
DN:- CK.:- DW.:- CK.:-	REVISIONS 2-82	21	6	NH 92(50) M			522
		COUNTY		CONTROL	SECTION	JOB	HIGHWAY
		HIDALGO		39	17	97	US 83 281
							13

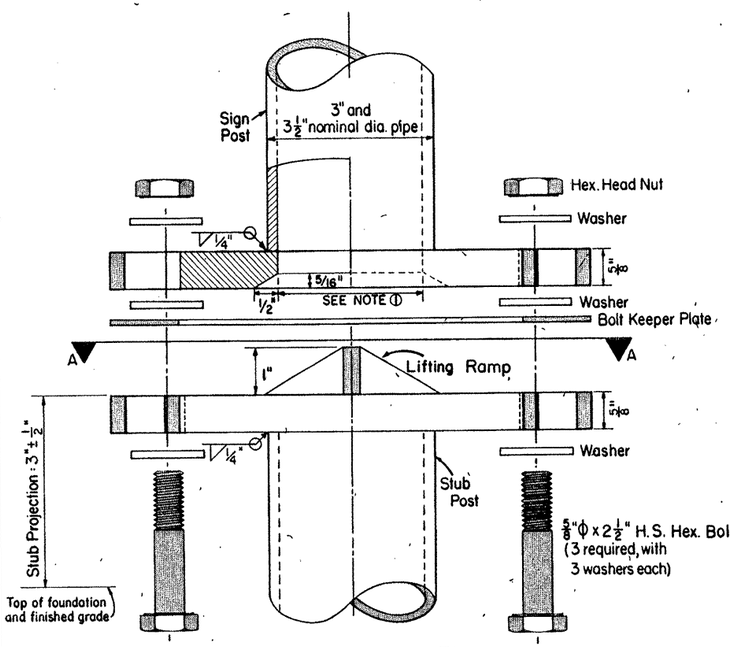

Sign Post & Stub Post Elevation

TRIANGULAR SLIP BASE

TRIANGULAR SLIP BASE NOTES:

① THE LIFTING DEVICE [redacted] CONSIST OF WELDED RAMPS OR A CONICAL SHAPE FORMED INTO THE CENTER OF THE BOTTOM BASE PLATE.

② THE TOP PLATE OF THE TRIANGULAR SLIP BASE [redacted] HAVE THE SAME EXTERIOR DIMENSIONS AS THE BOTTOM PLATE. THE LIFTING DEVICE [redacted] A PART OF THE BOTTOM PLATE ONLY. A HOLE EQUAL TO THE INSIDE DIAMETER OF THE SIGN POST [redacted] CUT THROUGH THE CENTER OF THE TOP PLATE WITH THE HOLE EDGE BEVELED AS DETAILED.

③ THE TOP AND BOTTOM BASE PLATES AND LIFTING DEVICE [redacted] CONFORM WITH THE REQUIREMENTS OF A.S.T.M. A36, A441 OR A672 GRADE 50.

④ ALL STRUCTURAL STEEL [redacted] GALVANIZED IN ACCORDANCE WITH ASTM A153. THE ENTIRE SUPPORT [redacted] GALVANIZED FROM THE TOP DOWN TO A MINIMUM DEPTH OF 6" INTO THE FOUNDATION. ALL NUTS, BOLTS AND WASHERS [redacted] GALVANIZED IN ACCORDANCE WITH THE ZINC SPECIFICATION OF ASTM B454.

⑤ ALL HIGH STRENGTH BOLTS [redacted] CONFORM TO ASTM-A325 (ASTM-A449 MAY BE SUBSTITUTED FOR ASTM-A325 PROVIDED PROPER BOLT HEAD, NUT AND/OR WASHER CLEARANCES ARE MAINTAINED). ALL HIGH STRENGTH NUTS [redacted] OF SUCH CAPACITY AS TO DEVELOP THE BOLT STRENGTH.

BOLTING PROCEDURE FOR ASSEMBLY OF BASE CONNECTION:

1. ASSEMBLE POST TO STUB WITH BOLTS AND WITH ONE FLAT WASHER ON EACH BOLT BETWEEN PLATES AS SHOWN.
2. SHIM AS REQUIRED TO PLUMB POST.
3. TIGHTEN ALL BOLTS THE MAXIMUM POSSIBLE WITH 12" TO 15" WRENCH TO BED WASHERS AND SHIMS AND TO CLEAN BOLT THREADS, THEN LOOSEN EACH BOLT IN TURN AND RETIGHTEN BOLTS IN A SYSTEMATIC ORDER TO THE PRESCRIBED TORQUE OF 450 INCH-POUNDS, DO NOT OVERTIGHTEN.
4. BURR THREADS AT JUNCTION WITH NUT USING A CENTER PUNCH TO PREVENT NUT LOOSENING.

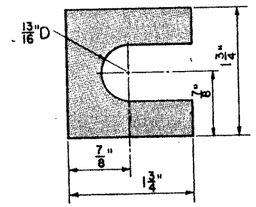

SHIM DETAIL

FURNISH 2" ± .012" ± THICK AND 2" ± .032" ± THICK SHIMS PER POST. SHIMS [redacted] FABRICATED FROM BRASS SHIM STOCK OR STRIP CONFORMING TO A.S.T.M. –B36.

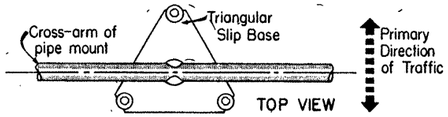

The cross-arm of the pipe mount [redacted] parallel to one side of the triangular slip base, and approximately perpendicular to the direction of traffic

ORIENTATION OF TRIANGULAR SLIP BASE

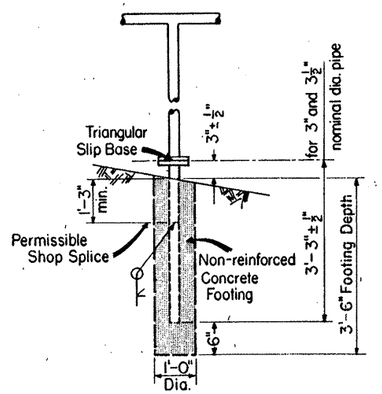

Triangular Slip Base Foundation Details

TRIANGULAR SLIP BASE [redacted] USED FOR SIGNS SUPPORTED ON 3" DIAMETER AND LARGER PIPE POSTS.

GENERAL NOTES:

DESIGN CONFORMS WITH A.A.S.H.T.O. SPECIFICATIONS FOR THE DESIGN AND CONSTRUCTION OF STRUCTURAL SUPPORTS FOR HIGHWAY SIGNS.

MATERIAL AND FABRICATION [redacted] CONFORM TO THE REQUIREMENTS OF THE SPECIFICATIONS.

WHERE SOLID ROCK IS ENCOUNTERED, FOOTING [redacted] PLAN DEPTH OR EXTEND TWO FEET MINIMUM INTO THE ROCK.

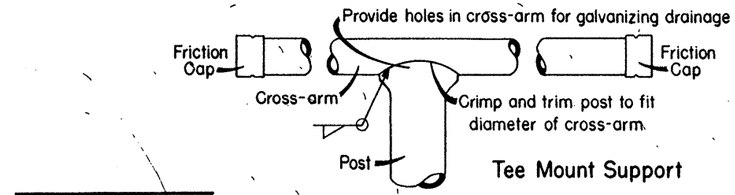

WELDED PIPE MOUNT DETAILS

NOTE: THE CONTRACTOR AT HIS OPTION [redacted] FURNISH STANDARD WEIGHT PIPE CONFORMING TO ASTM SPECIFICATION A-53B, A-501 OR ANY OTHER STANDARD WEIGHT STEEL PIPE, EITHER OF ELECTRIC RESISTANCE WELDED OR SEAMLESS TYPE, WITH A MINIMUM YIELD STRENGTH OF 35,000 PSI AND A MINIMUM ELONGATION OF 15 PERCENT IN 2 INCHES; AND [redacted] HAVE OUTSIDE DIAMETERS AND WALL THICKNESSES WHICH ARE EQUIVALENT TO OR BETTER THAN THOSE SPECIFIED HEREON.

ALL PIPES [redacted] WELDED [redacted] OF WELDABLE QUALITY.

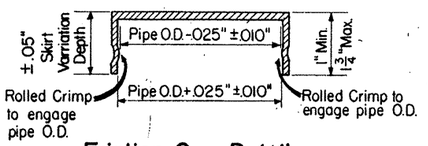

Friction Cap Details

NOTES:
FRICTION CAPS [redacted] MANUFACTURED FROM EITHER HOT ROLLED OR COLD ROLLED STEEL SHEETS. FOR ALL PIPE SIZES THE MINIMUM SHEET METAL THICKNESS [redacted] 24 GAUGE.
THE RIM EDGES [redacted] REASONABLY STRAIGHT AND SMOOTH. CAPS [redacted] SIZED AND FORMED IN SUCH A MANNER AS TO PRODUCE A DRIVE-ON FRICTION FIT AND HAVE NO TENDENCY TO ROCK WHEN SEATED ON THE PIPE. THE DEPTH [redacted] SUFFICIENT TO GIVE POSITIVE PROTECTION AGAINST ENTRANCE OF RAINWATER. THEY [redacted] FREE OF SHARP CREASES OR INDENTATIONS AND SHOW NO EVIDENCE OF METAL FRACTURE.
CAPS [redacted] HAVE AN ELECTRODEPOSITED COATING OF ZINC IN ACCORDANCE WITH THE REQUIREMENTS OF A.S.T.M. SPECIFICATION A164, TYPE GS.

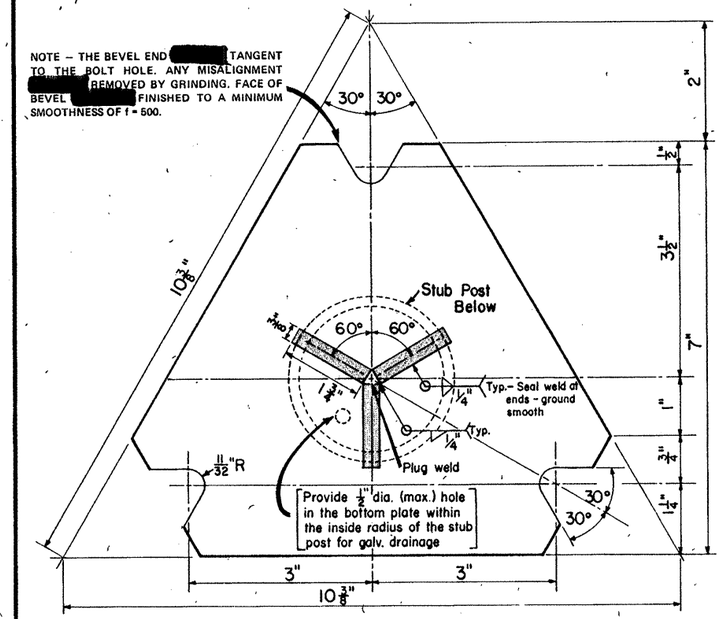

View A-A

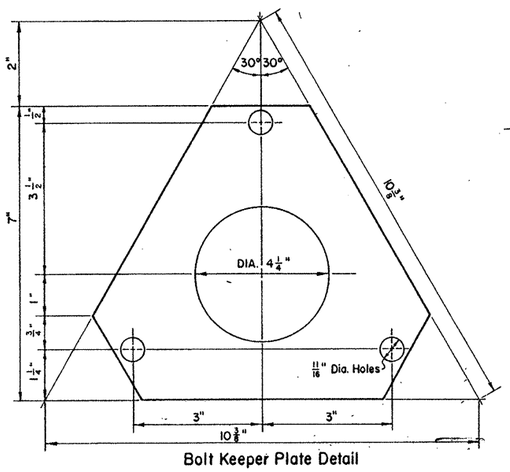

Bolt Keeper Plate Detail

Bolt Keeper Plate [redacted] 30 ga. galvanized sheet steel.

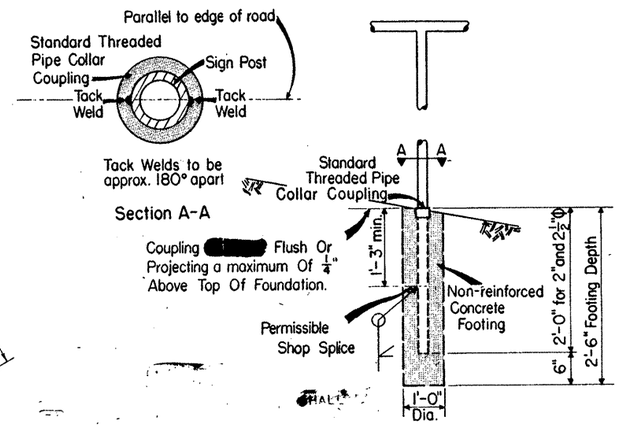

BREAKAWAY PIPE COLLAR COUPLING

PIPE COLLAR COUPLING [redacted] USED FOR ALL SIGNS SUPPORTED ON 2" and 2½" DIAMETER PIPE POSTS.

STATE DEPARTMENT OF HIGHWAYS AND PUBLIC TRANSPORTATION

PIPE MOUNTING DETAILS FOR SMALL ROADSIDE SIGNS

SMD(I-3)

DRAWING DATE: 4-78	STATE DISTRICT	FEDERAL REGION	FEDERAL AID PROJECT	SHEET
DN:- CK:- DW:- CK:- REVISIONS I-81 LIFTING RAMP I-82	21	6	NH 92(50)M	523
	COUNTY	CONTROL	SECTION	JOB	HIGHWAY
	HIDALGO	39	17	97	US83/281

14

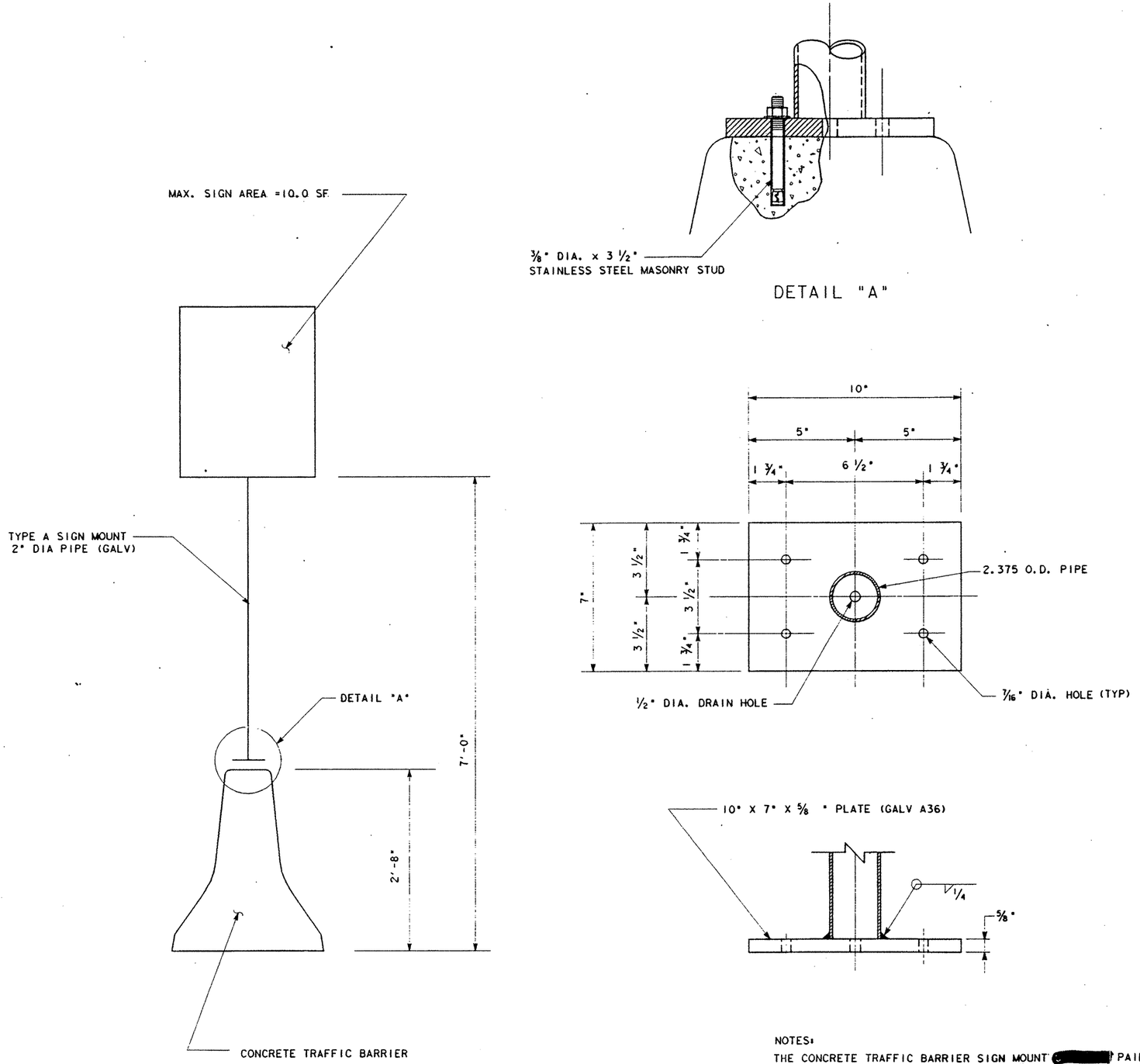

NOTES:

THE CONCRETE TRAFFIC BARRIER SIGN MOUNT [redacted] PAID FOR UNDER THE ITEM, "SMALL ROADSIDE TRAFFIC SIGNS (TYPE A)(SPL)".

THE MASONRY STUDS [redacted] NOT [redacted] PAID FOR DIRECTLY BUT [redacted] CONSIDERED INCIDENTAL TO THE ITEM, "SMALL ROADSIDE TRAFFIC SIGNS (TYPE A)(SPL)".

STATE OF TEXAS
MELVIN D. GREENHILL
29920
REGISTERED
PROFESSIONAL ENGINEER

Melvin D. Greenhill
March 3, 1992

STATE DEPARTMENT OF HIGHWAYS AND PUBLIC TRANSPORTATION

CONCRETE TRAFFIC BARRIER SIGN MOUNT

DISTRICT 21 SMD (CTB)

DN: TWC	DRAWING	DATE	FED. RD. DIV. RD.	STATE	FEDERAL AID PROJECT NO.				HIGHWAY NO.
CK DN:	ORIGINAL	JUNE 88	6	TEXAS	NH 92 ( ) M				83/281
DW: RMG			STATE DIST. NO.	COUNTY		CONTROL NO.	SECTION NO.	JOB NO.	SHEET NO.
CK DN:			12	HIDALGO		39	17	97	523A
TR:									
CK TR:									

OSA4:[260 300]SMDCTB DGN

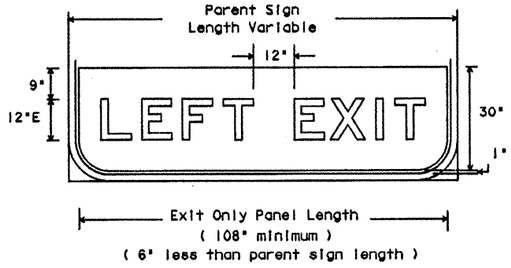

E11-2a

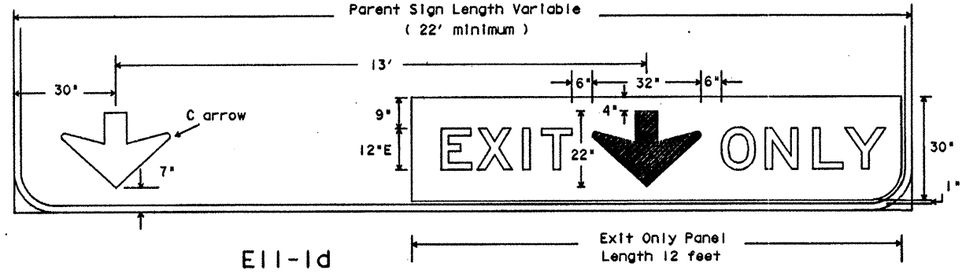

E11-1d

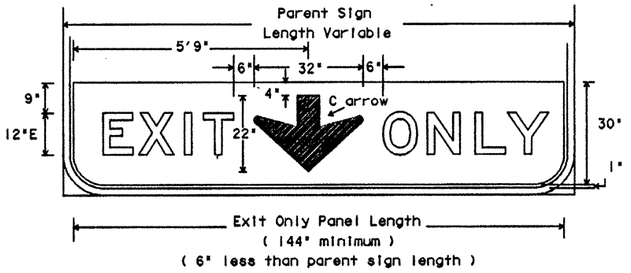

E11-1

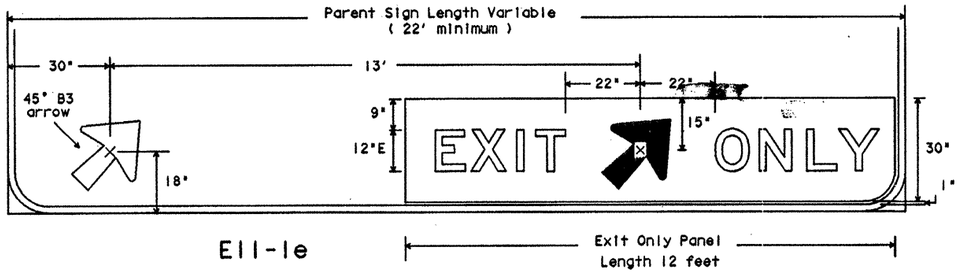

E11-1e

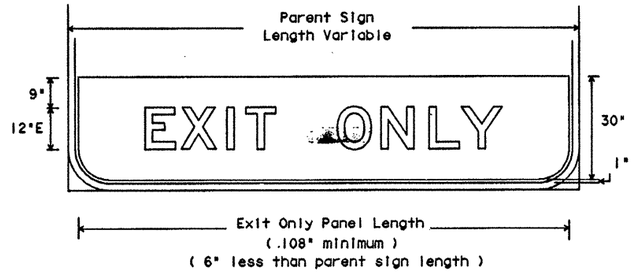

E11-1a

ATTACHMENT TO EXISTING SIGNS ONLY

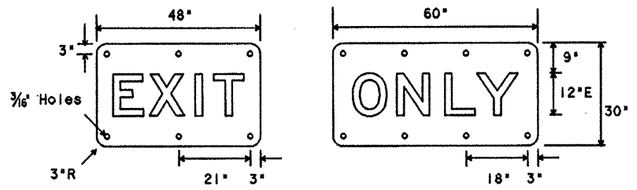

E11-1b

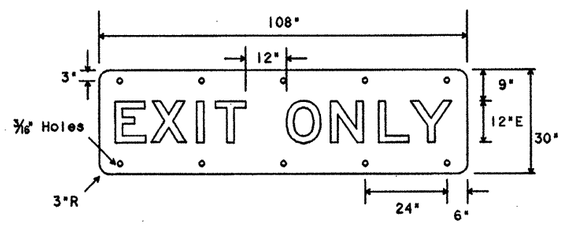

E11-1c

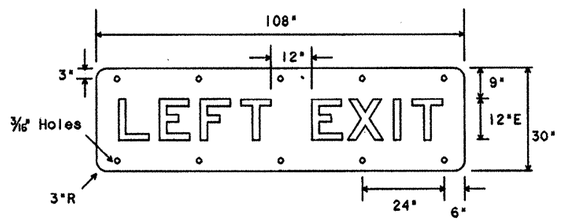

E11-2c

Attachment to Sequence Signs Only

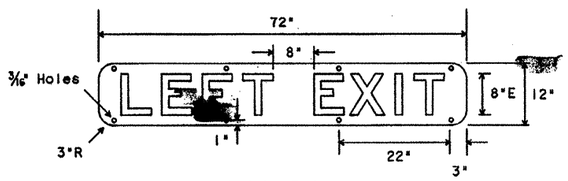

E11-2d

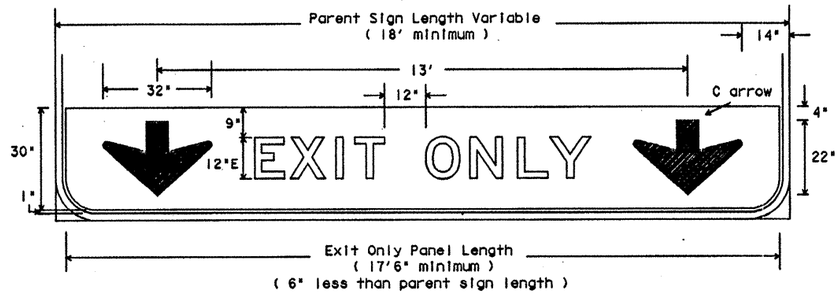

E11-1f

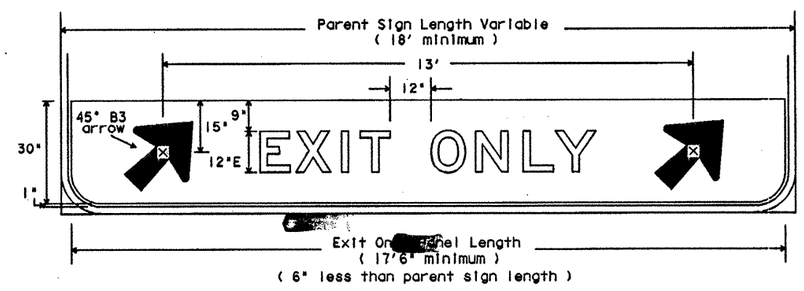

E11-1g

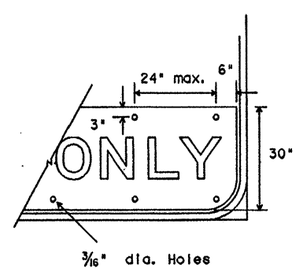

SPECIFICATION REFERENCE TABLE	
MATERIALS AND TEXT SPECIFICATIONS (D-9)	
ALUMINUM SIGN BLANKS	D-9-7110
REFLECTIVE SHEETING, TYPE A	D-9-8300 (ENGINEER GRADE)

GENERAL NOTES:

THE ALPHABETS AND LATERAL SPACING BETWEEN LETTERS AND NUMERALS [redacted] CONFORM[redacted] THE TEXAS "MANUAL ON UNIFORM TRAFFIC CONTROL DEVICES FOR STREETS AND HIGHWAYS", LATEST EDITION, AND ANY APPROVED CHANG[redacted]TO. LATERAL SPACING OF TEXT [redacted] SUCH AS TO PROVIDE A BALANCED APPEARANCE.

LEGEND FOR PANELS [redacted] BLACK AND APPLIED BY SCREENING TO YELLOW REFLECTIVE SHEETING CONFORMING WITH DEPARTMENT SPECIFICATION. SEE STANDARD SHEET IM(2) FOR ARROW DIMENSION DETAILS.

PANEL BLANKS [redacted] ONE PIECE 0.080 INCH THICK SHEET ALUMINUM ALLOY CONFORMING WITH DEPARTMENT SPECIFICATION "ALUMINUM SIGNS (TYPE A)".

PANELS [redacted] ATTACHED TO THE GUIDE SIGN AS DETAILED ON STANDARD SHEET IM(2).

STATE DEPARTMENT OF HIGHWAYS AND PUBLIC TRANSPORTATION

EXIT ONLY AND LEFT EXIT PANELS

IE(4)

ORIGINAL DRAWING DATE: 1-87	REVISIONS	STATE DISTRICT	FEDERAL REGION	FEDERAL AID PROJECT	SHEET
DN: DN	7-90	21	6	NH92(50)M	524
CK: LR/MT		COUNTY	CONTROL	SECTION	JOB	HIGHWAY
DW:		HIDALGO	39	17	97	US83/281
CK:						

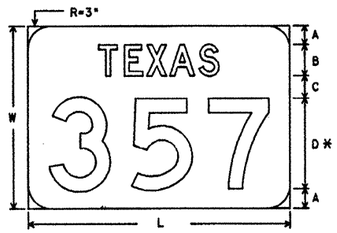

Sign Type	Digits	W
MI-6T4A	4	24
MI-6T4B	4	36
MI-6T4C	4	48
MI-6T3A	3	24
MI-6T3B	3	36
MI-6T3C	3	48
MI-6T2A	2	24
MI-6T2B	2	36
MI-6T2C	2	48
MI-6T1A	1	24
MI-6T1B	1	36
MI-6T1C	1	48

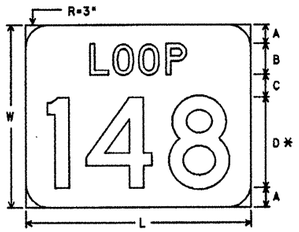

Sign Type	Digits	W
MI-6L4A	4	24
MI-6L4B	4	36
MI-6L4C	4	48
MI-6L3A	3	24
MI-6L3B	3	36
MI-6L3C	3	48
MI-6L2A	2	24
MI-6L2B	2	36
MI-6L2C	2	48
MI-6L1A	1	24
MI-6L1B	1	36
MI-6L1C	1	48

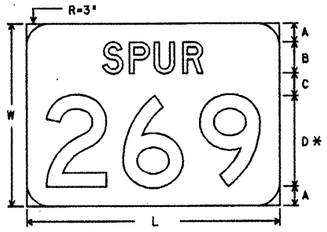

Sign Type	Digits	W
MI-6S4A	4	24
MI-6S4B	4	36
MI-6S4C	4	48
MI-6S3A	3	24
MI-6S3B	3	36
MI-6S3C	3	48
MI-6S2A	2	24
MI-6S2B	2	36
MI-6S2C	2	48
MI-6S1A	1	24
MI-6S1B	1	36
MI-6S1C	1	48

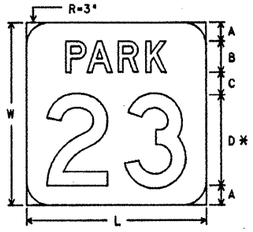

Sign Type	Digits	W
MI-6P4A	4	24
MI-6P4B	4	36
MI-6P4C	4	48
MI-6P3A	3	24
MI-6P3B	3	36
MI-6P3C	3	48
MI-6P2A	2	24
MI-6P2B	2	36
MI-6P2C	2	48
MI-6P1A	1	24
MI-6P1B	1	36
MI-6P1C	1	48

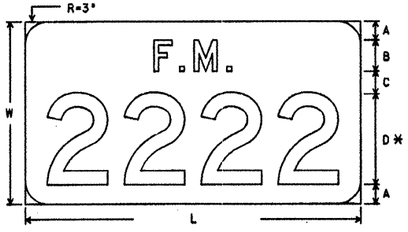

Sign Type	Digits	W
MI-6F4A	4	24
MI-6F4B	4	36
MI-6F4C	4	48
MI-6F3A	3	24
MI-6F3B	3	36
MI-6F3C	3	48
MI-6F2A	2	24
MI-6F2B	2	36
MI-6F2C	2	48
MI-6F1A	1	24
MI-6F1B	1	36
MI-6F1C	1	48

Vertical Spacing for State Route Markers

W	A	B	C	D
24	2½	4	3	12
36	4	6	4	18
48	5	8	6	24

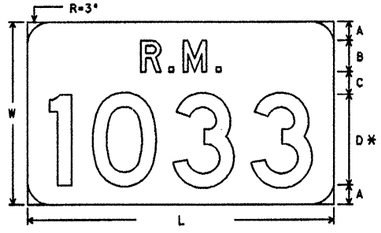

Sign Type	Digits	W
MI-6R4A	4	24
MI-6R4B	4	36
MI-6R4C	4	48
MI-6R3A	3	24
MI-6R3B	3	36
MI-6R3C	3	48
MI-6R2A	2	24
MI-6R2B	2	36
MI-6R2C	2	48
MI-6R1A	1	24
MI-6R1B	1	36
MI-6R1C	1	48

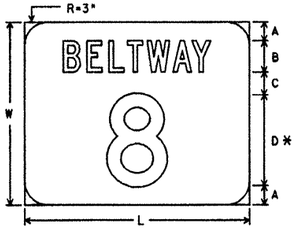

Sign Type	Digits	W
MI-6B4A	4	24
MI-6B4B	4	36
MI-6B4C	4	48
MI-6B3A	3	24
MI-6B3B	3	36
MI-6B3C	3	48
MI-6B2A	2	24
MI-6B2B	2	36
MI-6B2C	2	48
MI-6B1A	1	24
MI-6B1B	1	36
MI-6B1C	1	48

MI-6 STATE ROUTE MARKERS FOR GUIDE SIGN USE

Letters - Black
Numerals - Black
Background - White Reflective

* IN A FEW CASES NUMERALS [redacted] ACCOMMODATED WITNIN THE SPACE ABAILABLE. FOR THESE CASES, THE STANDARD SERIES D [redacted] REDUCED TO SERIES C, OR AS A SECOND CHOICE REDUCED TO THE NEXT SMALLER HEIGHT COMMONLY AVAILABLE.

L: VARIABLE WITH THE NUMBER OF DIGITS; HOWEVER, TOTAL MARKER LENGTH [redacted] ADJUSTED TO NEAREST 1" MULTIPLE.

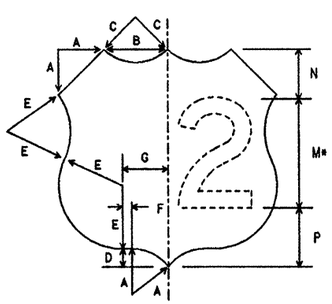

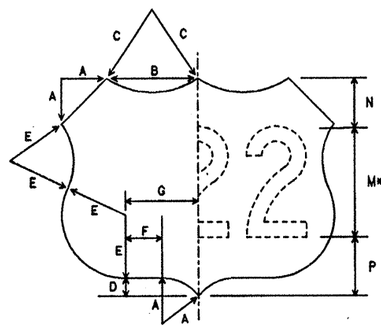

Numerals - Black
Background - White Reflective

		SIZE	A	B	C	D	E	F	G	M*	N	P	AREA
MI-4D2	12" NUMERALS 2 DIGIT	24x24	5	7	5	2	7	1	5	12D	5½	6½	3.18
MI-4D3	12" NUMERALS 3 DIGIT	30x24	5	10	9	2	7	4	8	12D	5½	6½	4.05
MI-4E2	18" NUMERALS 2 DIGIT	36x36	7½	10½	7½	3	10½	1½	7½	18D	8¼	9¾	7.15
MI-4E3	18" NUMERALS 3 DIGIT	45x36	7½	15	13½	3	10½	6	12	18D	8¼	9¾	9.11
MI-4F2	24" NUMERALS 2 DIGIT	48x48	10	14	10	4	14	2	10	24D	11	13	12.70
MI-4F3	24" NUMERALS 3 DIGIT	60x48	10	20	18	4	14	8	16	24D	11	13	16.20

ALL LENGTHS SHOWN ARE IN INCHES, ALL AREAS ARE IN SQUARE FEET.

NOTES:

1. DIMENSIONS FOR THE U.S. ROUTE MARKER OUTLINES ARE SCALE DIMENSIONS AND [redacted] ADJUSTED SLIGHTLY WHERE NECESSARY FOR CLOSURE OF THE OUTLINES.
2. * IN A FEW CASES NUMERALS [redacted] ACCOMMODATED WITHIN THE SPACE AVAILABLE. FOR THESE CASES, THE STANDARD SERIES D [redacted] REDUCED TO SERIES C, OR AS A SECOND CHOICE REDUCE TO THE NEXT SMALLER HEIGHT COMMONLY AVAILABLE.

U.S. ROUTE MARKERS FOR GUIDE SIGN USE

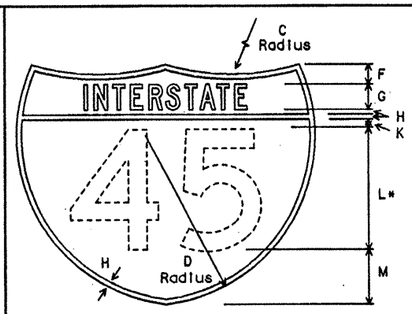

MI-1C2
45" X 36"

MI-1D2
60" X 48"

Letters - White Reflective
Numerals - White Reflective
Border - White Reflective
Background (Upper Portion) - Red Reflective
Background (Lower Portion) - Blue Reflective

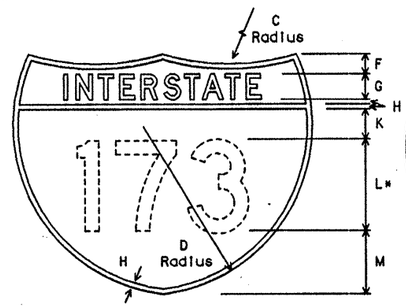

MI-1C3
48" X 48"

MI-1D3
60" X 48"

Letters - White Reflective
Numerals - White Reflective
Border - White Reflective
Background (Upper Portion) - Red Reflective
Background (Lower Portion) - Blue Reflective

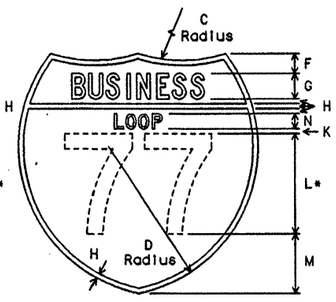

MI-2C2
36" X 36"

MI-2D2
48" X 48"

Letters - White Reflective
Numerals - White Reflective
Border - White Reflective
Background - Green Reflective

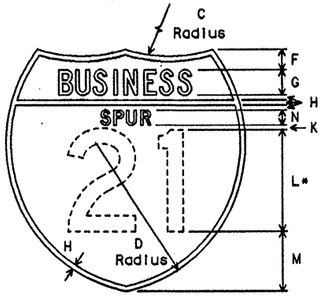

MI-3C2
36" X 36"

MI-3D2
48" X 48"

Letters - White Reflective
Numerals - White Reflective
Border - White Reflective
Background - Green Reflective

			SIZE	C	D	F	G	H	K	L*	M	N	AREA
INTERSTATE	MI-1C2	18" NUMERALS 2 DIGIT	45x36	36	25½	3	3¾C	¾	1½	18D	8¼	-	9.41
	MI-1D2	24" NUMERALS 2 DIGIT	60x48	48	34	4	5D	1	2	24D	11	-	16.74
	MI-1C3	18" NUMERALS 3 DIGIT	48x48	30	30	4	5C	1	4	18D	15	-	12.76
	MI-1D3	20" NUMERALS 3 DIGIT	60x48	48	34	4	5D	1	2½	20D	14½	-	16.74
BUSINESS SPUR LOOP	MI-2C2	15" NUMERALS 2 DIGIT	36x36	22½	22½	3	3¾C	¾	¾	15D	9	2¼D	7.18
	MI-2D2	20" NUMERALS 2 DIGIT	48x48	30	30	4	5C	1	1	20D	12	3D	12.76
	MI-3C2	15" NUMERALS 2 DIGIT	36x36	22½	22½	3	3¾C	¾	¾	15D	9	2¼D	7.18
	MI-3D2	20" NUMERALS 2 DIGIT	48x48	30	30	4	5C	1	1	20D	12	3D	12.76

ALL LENGTHS SHOWN ARE IN INCHES, ALL AREAS ARE IN SQUARE FEET.

* IN A FEW CASES NUMERALS [redacted] ACCOMMODATED WITNIN THE SPACE ABAILABLE. FOR THESE CASES, THE STANDARD SERIES D [redacted] REDUCED TO SERIES C, OR AS A SECOND CHOICE REDUCED TO THE NEXT SMALLER HEIGHT COMMONLY AVAILABLE.

INTERSTATE ROUTE MARKERS FOR GUIDE SIGN USE

SPECIFICATION REFERENCE TABLE
MATERIALS AND TEXT SPECIFICATIONS (D-9)
ALUMINUM SIGN BLANKS D-9-7110
REFLECTIVE SHEETING, TYPE A (ENGINEER GRADE)
(FOR U.S. AND STATE ROUTE MARKERS) D-9-8300
REFLECTIVE SHEETING, TYPE C (HIGH SPECIFIC INTENSITY)
(FOR INTERSTATE ROUTE MARKERS) D-9-8300

GENERAL NOTES:

THE ALPHABETS AND LATERAL SPACING BETWEEN LETTERS AND NUMERALS SHALL CONFORM WITH THE TEXAS "MANUAL ON UNIFORM TRAFFIC CONTROL DEVICES FOR STREETS AND HIGHWAYS", LATEST EDITION, AND ANY APPROVED CHANGES THERETO. LATERAL SPACING OF TEXT [redacted] SUCH AS TO PROVIDE A BALANCED APPEARANCE.

LETTERS AND NUMERALS FOR U.S. AND STATE [redacted] MARKERS [redacted] BLACK AND APPLIED BY SCREENING TO WHITE REFLECTIVE SHEETING CONFORMING TO DEPARTMENT SPECIFICATION.

INTERSTATE ROUTE MARKERS [redacted] HAVE COLORED TRANSPARENT INK APPLIED BY THE REVERSE SCREEN PROCESS TO WHITE REFLECTIVE SHEETING CONFORMING TO DEPARTMENT SPECIFICATION.

SIGN BLANKS [redacted] ONE PIECE 0.063 INCH THICK SHEET ALUMINUM ALLOY CONFORMING WITH DEPARTMENT SPECIFICATION "ALUMINUM SIGNS (TYPE A)".

SIGNS [redacted] ATTACHED TO THE GUIDE SIGN AS DETAILED ON STANDARD SHEET IM(2).

STATE DEPARTMENT OF HIGHWAYS AND PUBLIC TRANSPORTATION

INTERSTATE, U.S. & STATE ROUTE MARKERS
FOR ATTACHMENT TO GUIDE SIGNS

IM(1)

ORIGINAL DRAWING DATE: 7-72		STATE DISTRICT	FEDERAL REGION	FEDERAL AID PROJECT		SHEET
DN:	REVISIONS	21	6	NH 92(50)M		525
CK: LR	I-85 7-90	COUNTY		CONTROL	SECTION	JOB	HIGHWAY
DN:		HIDALGO		39	17	97	US83/281
CK:							

TYPICAL ATTACHMENT OF ROUTE MARKERS AND "EXIT ONLY" PANELS TO GUIDE SIGNS

SCREW ATTACHMENT

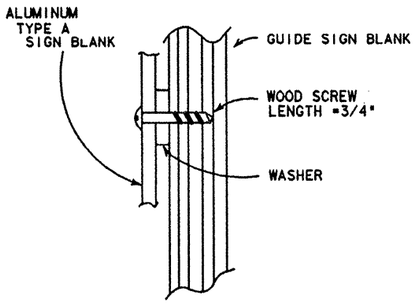

PLYWOOD GUIDE SIGN
(5/8" PLYWOOD)

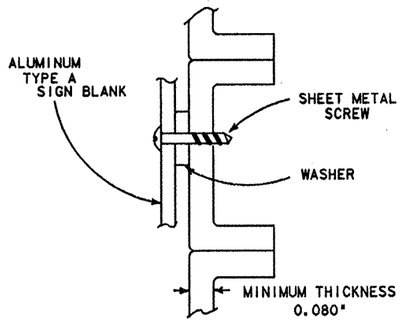

ALUMINUM GUIDE SIGNS
(EXTRUDED ALUMINUM PANELS)

NUT/BOLT ATTACHMENT

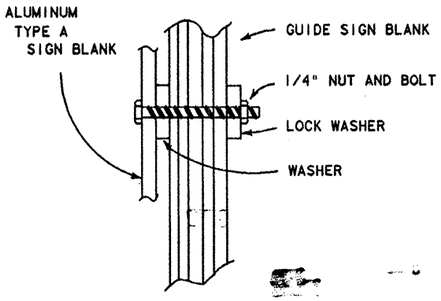

PLYWOOD GUIDE SIGN
(5/8" PLYWOOD)

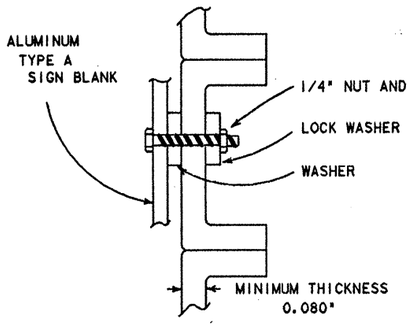

ALUMINUM GUIDE SIGNS
(EXTRUDED ALUMINUM PANELS)

SIGN BLANK PUNCHING DETAILS FOR ROUTE MARKERS WHEN ATTACHED TO GUIDE SIGN

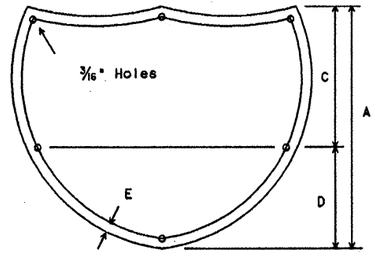

INTERSTATE ROUTE MARKERS

A	C	D	E
36	21	15	1 1/2
48	28	20	1 3/4

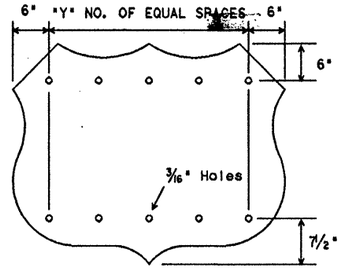

U.S. ROUTE MARKERS

Sign Type	"Y"
MI-4D2	2
MI-4D3	3
MI-4E2	3
MI-4E3	4
MI-4F2	4
MI-4F3	5

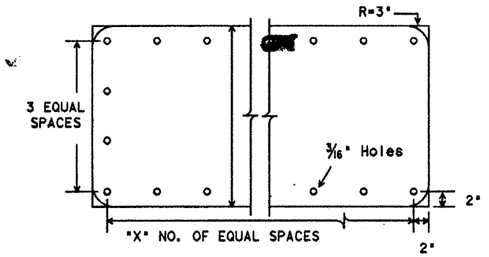

STATE ROUTE MARKERS

No. of Digits	W	X
4	24	4
4	36	5
4	48	6
3	24	3
3	36	4
3	48	5

ARROW DIMENSION DETAILS

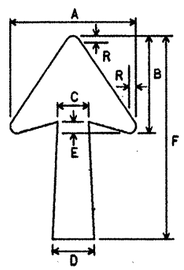

Type A or Type B

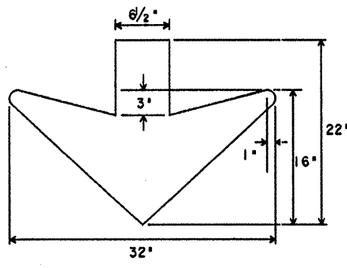

Type C

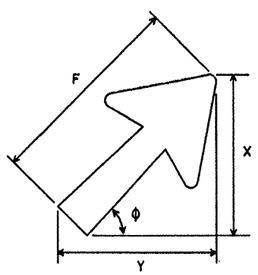

CODE	LETTER SIZE	ARROW DIMENSIONS IN INCHES A	B	C	D*	E	F*	R	ϕ = 30° X	ϕ = 30° Y	ϕ = 45° X	ϕ = 45° Y	ϕ = 60° X	ϕ = 60° Y
A-1	8" Caps	15 1/8	11 9/16	3 3/4	5	1 5/16	24 1/4	13/16	15 5/8	22 1/4	19 1/8	19 1/8	22 3/8	15 5/8
A-2	13 1/3" U.C., 10-12" Caps	18 1/4	14	4 1/2	6	1 1/2	29 1/4	3/4	18 1/2	27	23	23	27	19
A-3	16" U.C.	22 1/4	17	5 3/8	7 1/8	1 3/4	35 5/8	1	22 5/8	32 3/4	28	28	32 3/4	22 3/4
B-1	8-10" Caps	14 1/4	9 13/16	3 3/8	4 1/2	1 5/16	17 1/4	3/4	12 1/2	16 1/4	14	14	16 1/8	12 1/2
B-2	13 1/3" U.C., 12" Caps	17 1/2	11 3/4	4 3/8	5 5/8	1 1/2	20 1/4	7/8	15 1/2	19 1/8	16 5/8	16 5/8	19	15 1/2
B-3	16" U.C.	21 7/8	14 1/4	5	6 3/4	1 3/4	25	1	19 1/8	23 1/2	20 3/8	20 3/8	23 1/2	19 1/4

WHERE A REMOVABLE REFLECTORIZED ARROW IS REQUIRED ON A GUIDE SIGN WHICH HAS A DEPTH OF 2'-0" AND WHICH IS USUALLY ERECTED ON RAMPS AND CROSSROADS AT INTERCHANGES, THE ARROW [redacted] A TYPE B-1.

* RECOMMENDED DIMENSIONS. TAPER [redacted] HELD CONSTANT FOR LONGER OR SHORTER SHAFT LENGTHS.

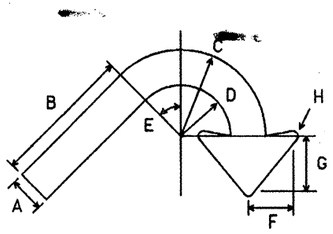

E3 and E3a

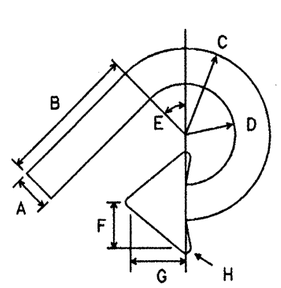

E4 and E4a

CODE	USED ON SIGN NO.	A	B	C	D	E	F	G	H
E-3 & E-4	E5-3 and E5-4	5	20	12	7	45o	6 1/2	8	3/4
E-3a & E-4a	E5-3a and E5-4a	3 1/2	14	8 1/2	5	45o	4 1/2	5 1/2	1/2

SPECIFICATION REFERENCE TABLE
MATERIALS AND TEXT SPECIFICATIONS (D-9)

ALUMINUM SIGN BLANKS	D-9-7110
SIGN HARDWARE	D-9-7120
REFLECTORIZED REMOVABLE LEGEND	D-9-8400

GENERAL NOTES:

1. ROUTE MARKERS ATTACHED TO GUIDE SIGNS [redacted] TYPE A ALUMINUM, AS REQUIRED BY THE PLANS. SKETCHES SHOWN ARE EXAMPLES ONLY.
2. SCREWS OR BOLTS, NUTS AND WASHERS [redacted] EITHER STAINLESS STEEL OR ALUMINUM.
3. THE SCREWS FOR PLYWOOD SIGNS [redacted] PROTRUDE THROUGH THE BACK OF THE SIGN. ALL HOLES REQUIRED IN THE PUNCHING DETAIL OF THE BLANKS [redacted] HAVE SCREWS OR NUTS AND BOLTS.
4. SCREWS AND WASHERS [redacted] USED UNLESS OTHERWISE NOTED IN THE PLANS.

STATE DEPARTMENT OF HIGHWAYS AND PUBLIC TRANSPORTATION

ARROW AND ROUTE MARKER ATTACHMENT DETAILS FOR GUIDE SIGNS

IM(2)

ORIGINAL DRAWING DATE: 7-90		STATE DISTRICT	FEDERAL REGION	FEDERAL AID PROJECT		SHEET
DN.:- DN	REVISIONS	21	6	NH92(50)M		526
CK.:- LR		COUNTY	CONTROL	SECTION	JOB	HIGHWAY
DR.:-		HIDALGO	39	17	97	US83/281
CK.:-						75

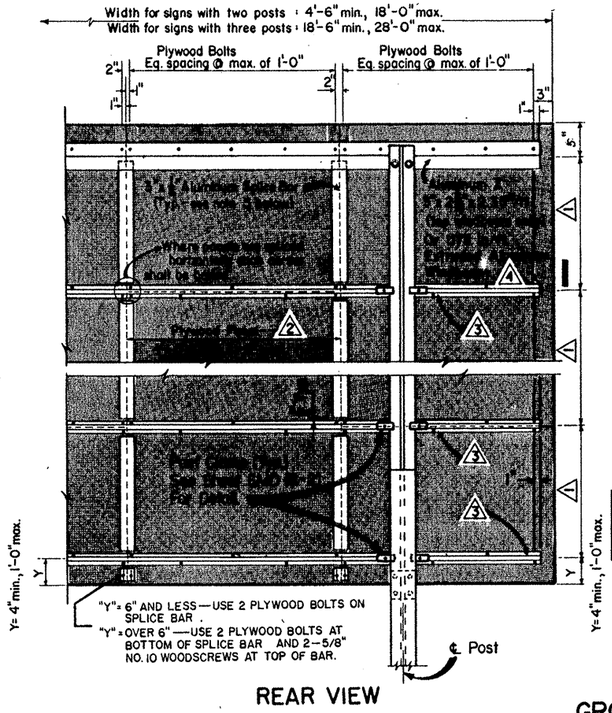

REAR VIEW

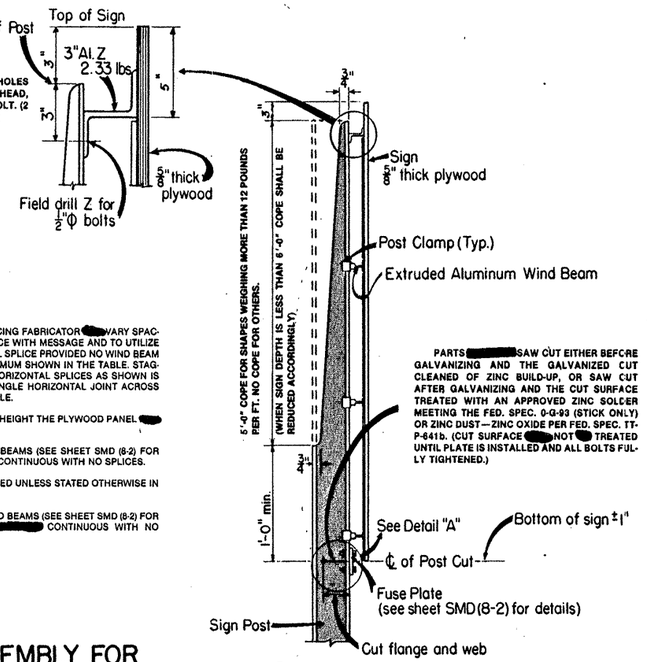

SIDE VIEW

TYPICAL ASSEMBLY FOR GROUND MOUNTED GUIDE SIGNS

1. APPROXIMATELY EQUAL SPACING FABRICATOR MAY VARY SPACING FOR LEAST INTERFERENCE WITH MESSAGE AND TO UTILIZE WIND BEAM FOR HORIZONTAL SPLICE PROVIDED NO WIND BEAM SPACING EXCEEDS THE MAXIMUM SHOWN IN THE TABLE. STAGGERED ARRANGEMENT OF HORIZONTAL SPLICES AS SHOWN IS PREFERRED. HOWEVER, A SINGLE HORIZONTAL JOINT ACROSS THE SIGN FACE IS PERMISSIBLE.
2. FOR SIGNS 4'-0" OR LESS IN HEIGHT THE PLYWOOD PANEL SHALL NOT EXCEED 4'-0" IN WIDTH.
3. EXTRUDED ALUMINUM WIND BEAMS (SEE SHEET SMD (8-2) FOR DETAIL). WIND BEAMS SHALL BE CONTINUOUS WITH NO SPLICES.
4. ALUMINUM Z SHALL BE PROVIDED UNLESS STATED OTHERWISE IN THE PLANS.

IF EXTRUDED ALUMINUM WIND BEAMS (SEE SHEET SMD (8-2) FOR DETAIL) ARE USED, THEY SHALL BE CONTINUOUS WITH NO SPLICES.

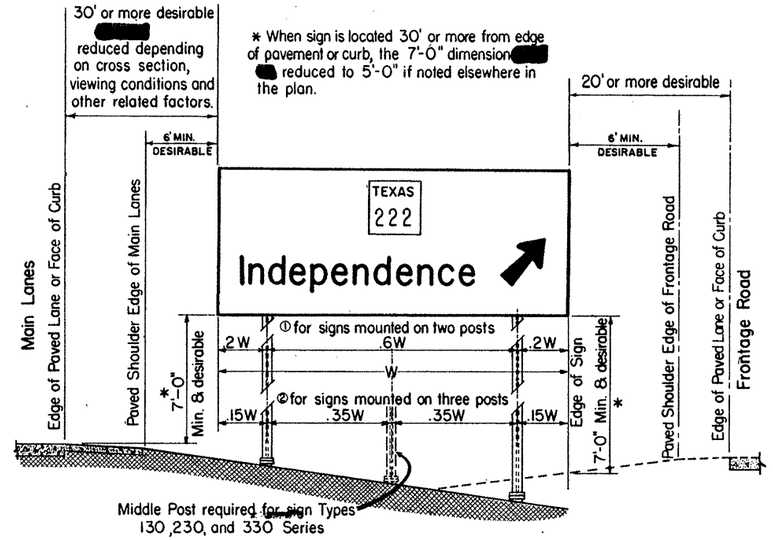

TYPICAL SIGN INSTALLATION AND LOCATION

LATERAL CLEARANCE NOTES:
LATERAL CLEARANCES OF SIGNS MOUNTED ON MEDIAN SIDE OF MAIN LANES ARE THE SAME AS SHOWN ABOVE WHERE SPACE WILL PERMIT.

WHERE A SIGN IS LOCATED BEHIND GUARDRAIL, AN ALLOWABLE MINIMUM CLEARANCE OF TWO FEET SHALL BE USED, MEASURED FROM THE FACE OF THE GUARDRAIL TO THE NEAR EDGE OF THE SIGN.

POST SPACING NOTES:
1. POST SPACINGS MAY BE VARIED A MAXIMUM OF PLUS 10% TO MINUS 10% OF TOTAL SIGN WIDTH TO FIT FIELD CONDITIONS.
2. POST SPACINGS MAY BE VARIED A MAXIMUM OF PLUS 5% OF TOTAL SIGN WIDTH TO FIT FIELD CONDITIONS.

NOTE:
1. A TOLERANCE OF PLUS OR MINUS 1/4 INCH WILL BE PERMITTED IN THE PLAN DIMENSIONS FOR FABRICATION OF EACH SINGLE INCREMENT SIGN PANEL WHEN NECESSARY FOR SQUARING. A TOLERANCE OF PLUS OR MINUS 1/4 INCH IS PERMITTED FOR EACH INCREMENT OF A MULTI-INCREMENT SIGN PANEL WHERE NECESSARY TO SECURE SQUARE, TIGHT-FITTING JOINTS.
2. PLYWOOD BOLTS 5/16"x1 1/2" FLAT HEAD ELEVATOR TYPE STEEL BOLT WITH 3/4" MINIMUM THREAD LENGTH. THE HEAD SHALL HAVE A MINIMUM DIAMETER OF 3/4" AND SHALL HAVE A MINIMUM OF TWO FINS ON THE UNDERSIDE. EACH BOLT SHALL BE PROVIDED WITH ONE 5/16" STEEL HEX NUT, ONE 5/16" STEEL FLAT WASHER, AND ONE 5/16" STEEL LOCK WASHER. BOLTS, NUTS, AND WASHERS SHALL BE GALVANIZED AS PER ZINC SPECIFICATION OF ASTM B454.
3. SPLICE BARS SHALL BE SECURED WITH 5/8" LONG x NO. 10 ROUND HEAD, CADMIUM PLATED, BRASS WOOD SCREWS SPACED AT 6" MAXIMUM ALONG DOUBLE ROW SPACING WITH THE EXCEPTION AT EXTREME ENDS OF SPLICE BARS, ALONG OUTSIDE EDGE OF SIGN, WHERE PLYWOOD BOLTS SHALL BE USED AS SHOWN. A MAXIMUM OF ONE HORIZONTAL JOINT PER VERTICAL SECTION WILL BE PERMITTED USING A 1/8" GAP BETWEEN PANELS.
4. SPLICES SHALL BE KEPT TO A MINIMUM. PANELS 4'x8' OR LARGER SHALL BE USED TO THE MAXIMUM EXTENT POSSIBLE IN THE FABRICATION OF ANY SIGN. SIGNS OR SIGN SECTIONS WHICH CANNOT BE FABRICATED FROM AT LEAST A 4'x8' PANEL SHALL BE OF ONE PIECE CONSTRUCTION.

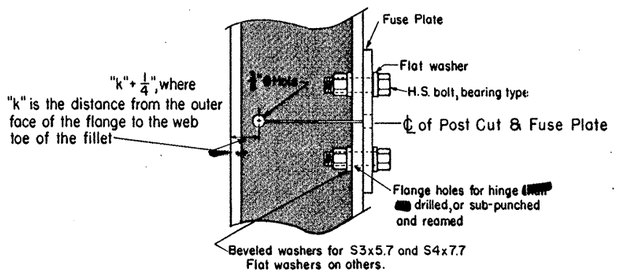

DETAIL "A"-HINGE

WIND BEAM TABLES

NOTE: WIND BEAM SPACINGS FOR SIGN WIDTHS OTHER THAN EVEN FEET, SELECT FROM NEXT LONGER EVEN FEET.

ZONE 1 (Types 100)

	Two Posts (120)							Three Posts (130)								
Sign Width (W)	4' thru 12'	13'	14'	15'	16'	17'	18'	19'	20'	21'	22'	23'	24'	25'	26'	27'	28'
Max. Wind Beam Spacing ⚠	4'-0"	3'-8"	3'-4"	3'-0"	2'-8"	2'-4"	2'-0"	4'-0"	3'-9"	3'-6"	3'-3"	3'-0"	2'-9"	2'-6"	2'-3"	2'-0"

ZONE 2 (Types 200)

	Two Posts (220)			Three Posts (230)				
Sign Width (W)	4' thru 16'	17'	18'	19' thru 24'	25'	26'	27'	28'
Max. Wind Beam Spacing ⚠	4'-0"	3'-9"	3'-6"	4'-0"	3'-9"	3'-6"	3'-3"	3'-0"

ZONE 3 (Types 300)

	Two Posts (320)	Three Posts (330)
Sign Width (W)	4' thru 18'	19' thru 28'
Max. Wind Beam Spacing ⚠	4'-0"	4'-0"

SIGN TYPE 130
- 1 — No. of Posts
- 3 — Series No. (Zero Denotes Plywood)
- 0 — Wind Design Zone

CODE

GENERAL NOTES:

DESIGN CONFORMS WITH A.A.S.H.T.O. SPECIFICATIONS FOR THE DESIGN AND CONSTRUCTION OF STRUCTURAL SUPPORTS FOR HIGHWAY SIGNS.
MATERIALS AND FABRICATION CONFORM TO THE REQUIREMENTS OF THE DEPARTMENT'S MATERIAL SPECIFICATIONS.
STRUCTURAL STEEL CONFORM TO THE ITEM, "HIGH-STRENGTH STRUCTURAL STEEL FOR SIGN, SIGNAL, AND LUMINAIRE SUPPORT STRUCTURES."

STATE DEPARTMENT OF HIGHWAYS AND PUBLIC TRANSPORTATION

STRUCTURAL MOUNTING DETAILS FOR LARGE GUIDE SIGNS

SMD (8-1)

ORIGINAL DRAWING DATE: 2-82	STATE DISTRICT	FEDERAL REGION	FEDERAL AID PROJECT	SHEET
REVISIONS: DN.- 7-83, CK.- 7-85, DN.- 5-87, CK.-	21	6	NH92(50)M	527
	COUNTY	CONTROL	SECTION	JOB	HIGHWAY
	HIDALGO	39	17	97	US83/281
					16

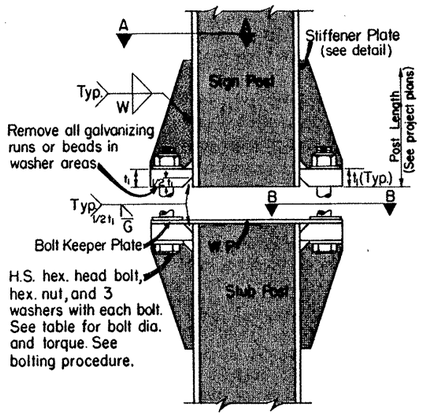

ELEVATION

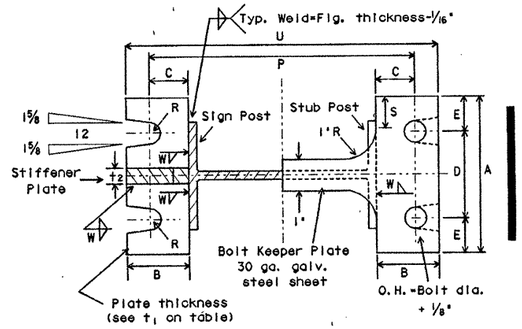

SECTION A-A SECTION B-B

(See Table for Dimensions)

SIGN POST AND STUB POST

(For W Shapes)

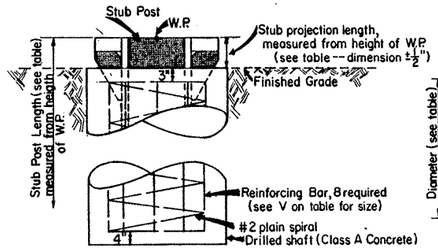

ELEVATION PLAN

FOUNDATION DETAIL

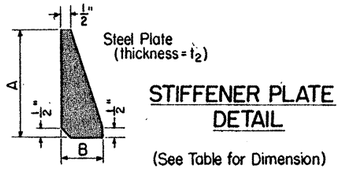

STIFFENER PLATE DETAIL

(See Table for Dimension)

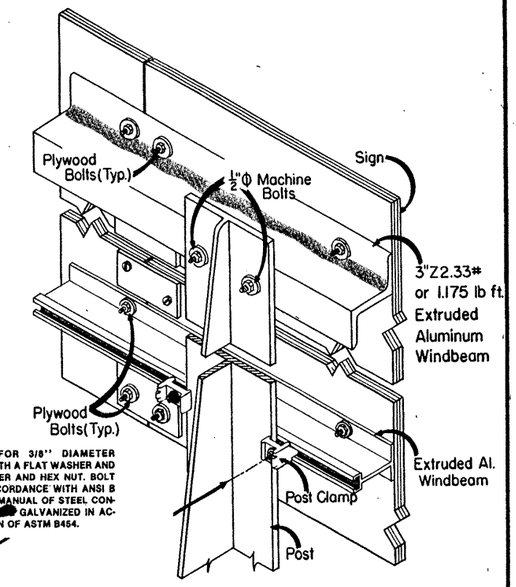

SIGN COMPONENTS IN ASSEMBLY

BOLTING PROCEDURE FOR ASSEMBLY OF BASE CONNECTION:

1. ASSEMBLE POST TO STUB WITH BOLTS AND WITH ONE FLAT WASHER ON EACH BOLT BETWEEN PLATES.
2. SHIM AS REQUIRED TO PLUMB POST.
3. TIGHTEN ALL BOLTS THE MAXIMUM POSSIBLE WITH 12" TO 18" WRENCH TO BED WASHERS AND SHIMS AND TO CLEAN BOLT THREADS THEN LOOSEN EACH BOLT IN TURN AND RETIGHTEN IN A SYSTEMATIC ORDER TO THE PRESCRIBED TORQUE. (SEE TABLE)
4. BURR THREADS AT JUNCTION WITH NUT USING A CENTER PUNCH TO PREVENT NUT LOOSENING.

Dimensions: Post Size	Base Connection Data Table: Bolt Size & Torque	A	B	C	D	E	t_1	t_2	W	R	Fuse Plate Data Table: F (in.)	G (in.)	J (in.)	K (in.)	M (in.)	d_1 (in.)	d_2 (in.)	t_3 (in.)	Bolt Dia. (in.)	Wt. (ea.) (lbs.)	Bolt Length (in.)	Bolt Keeper Data: P	S	U	Foundation Data: Stub Length	Stub Projection	Dr. Shaft Diameter	Bar V Size
W6 × 9											4¼	2	4	2¼	1	⅝	¾	¼	½	1.01	1½	8¾"	1"	9¾"	2'-0"	3"		#5
W6 × 12	⅝"Φ × 2¾"	5"	2"	1¼"	2¾"	1½"	¾"	½"	¼"	1½2"												8½"		10"	2'-0"	3"		#5
W6 × 15	Torque = 450"#										5	2½	6	3½	1½	1⅛	1¼	⅜	⅝	2.51	2¼	8½"		10"	2'-6"	3"		#6
W8 × 18											5	2½	5¼	2¾	1¼	1⅛	1⅛	⅜	⅝	2.26	2¼	10⅝"		12¼"	2'-6"	3"	24"	#7
W8 × 21											5½	2½	5¼	2¾	1¼	1⅜	1	½	¾	3.35	2¼	11"		12¾"	3'-0"	2½"		#8
W10 × 22	¾"Φ × 3½"	6"	2¼"	1¾"	3½"	1¼"	1"	¾"	⅝"	1½2"												12⅛"		14⅜"	3'-0"	2½"		#9
W10 × 26	Torque = 750"#										6	3	5¾	2¾	1⅜	1⅜	1⅛	½	¾	4.03	2¼	13⅛"	1½"	14⅞"	3'-0"	2½"		#10
W12 × 26											6	3	6½	3½	1⅜	1⅜	1⅝	½	¾	4.47	2¼	15"		16¼"	3'-0"	2½"		#11
S3 × 5.7	½"Φ × 2½" Torque = 200"#	See Detail Below									3¾	1½	2⅝	1½	⅝	⅝	⅜	¼	½	0.60	1½	See Detail Below			3'-3½"	3½"	12"	Non-reinforced
S4 × 7.7																												

FOUNDATION DESIGN [redacted] THE SAME AS THAT SHOWN FOR LARGE REGULATORY SIGN ON SHEET SMD(2).

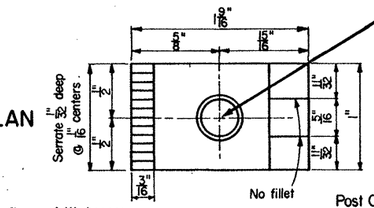

NOTE: CENTERLINE OF HOLE FOR 3/8" DIAMETER SQUAREHEAD BOLT x 2 1/4" LONG WITH A FLAT WASHER AND SELF-LOCKING NUT, OR LOCK WASHER AND HEX NUT. BOLT HEAD DIMENSIONS SHALL BE IN ACCORDANCE WITH ANSI B 18.2.1 AS REFERRED TO IN THE AISC MANUAL OF STEEL CONSTRUCTION. BOLT ASSEMBLY [redacted] GALVANIZED IN ACCORDANCE WITH ZINC SPECIFICATION OF ASTM B454.

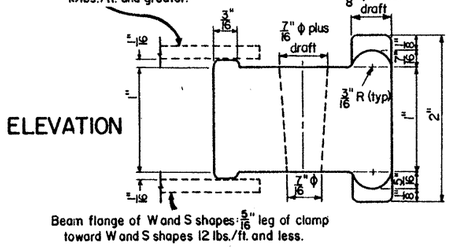

ELEVATION

Post Clamp to be Cast Aluminum (.173 lbs. each)

POST CLAMP DETAIL

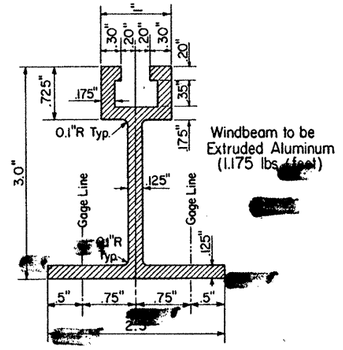

WINDBEAM CROSS SECTION

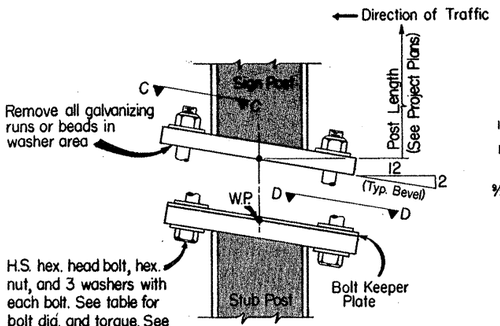

ELEVATION

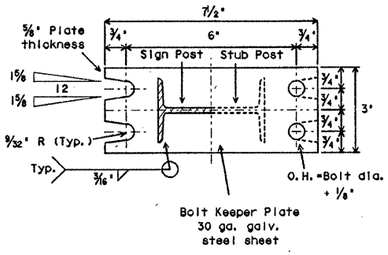

SECTION C-C SECTION D-D

SIGN POST AND STUB POST

(For S4x7.7 and S3x5.7

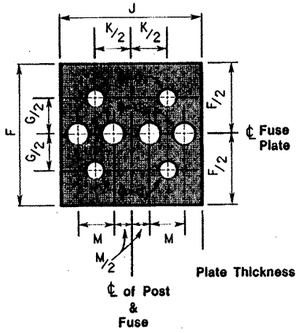

FUSE PLATE DETAIL

USE H.S. HEX HEAD BOLTS, HEX HEAD NUT AND BEVEL OR FLAT WASHER (WHERE REQ'D) UNDER NUT. ALL HOLES [redacted] DRILLED. ALL PLATE CUTS [redacted] PREFERABLY [redacted] SAW CUTS, HOWEVER; FLAME CUTTING [redacted] PERMITTED PROVIDED ALL EDGES ARE GROUND. METAL PROJECTING BEYOND THE PLANE OF THE PLATE FACE [redacted] NOT [redacted] PERMITTED. STEEL FUSE PLATES [redacted] CONFORM TO THE REQUIREMENTS OF ASTM-A36. ASTM-A441, ASTM-572 GRADE 50, OR ASTM-A588 MAY BE SUBSTITUTED FOR A36 AT THE OPTION OF THE FABRICATOR. STEEL USED [redacted] HAVE AN ULTIMATE TENSILE STRENGTH NOT TO EXCEED 80 KSI.

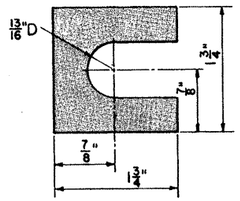

SHIM DETAIL

FURNISH 2"±.012"± THICK AND 2"±.032"± THICK SHIMS PER POST. SHIMS [redacted] FABRICATED FROM BRASS SHIM STOCK OR STRIP CONFORMING TO A.S.T.M. -B36.

For General Notes pertaining to this sheet see the General Notes on Standard Sheet SMD(8-1).

STATE DEPARTMENT OF HIGHWAYS AND PUBLIC TRANSPORTATION

STRUCTURAL MOUNTING DETAILS FOR LARGE GUIDE SIGNS

SMD(8-2)

DRAWING DATE: 4-78	STATE DISTRICT	FEDERAL REGION	FEDERAL AID PROJECT	SHEET
REVISIONS: 1-82 7-85 Fuse Plate 8-86	21	6	NH92(50)M	528
DN:- CK.:- DN:- CK.:-	COUNTY	CONTROL	SECTION	JOB	HIGHWAY
	HIDALGO	39	17	97	US83(181) 17

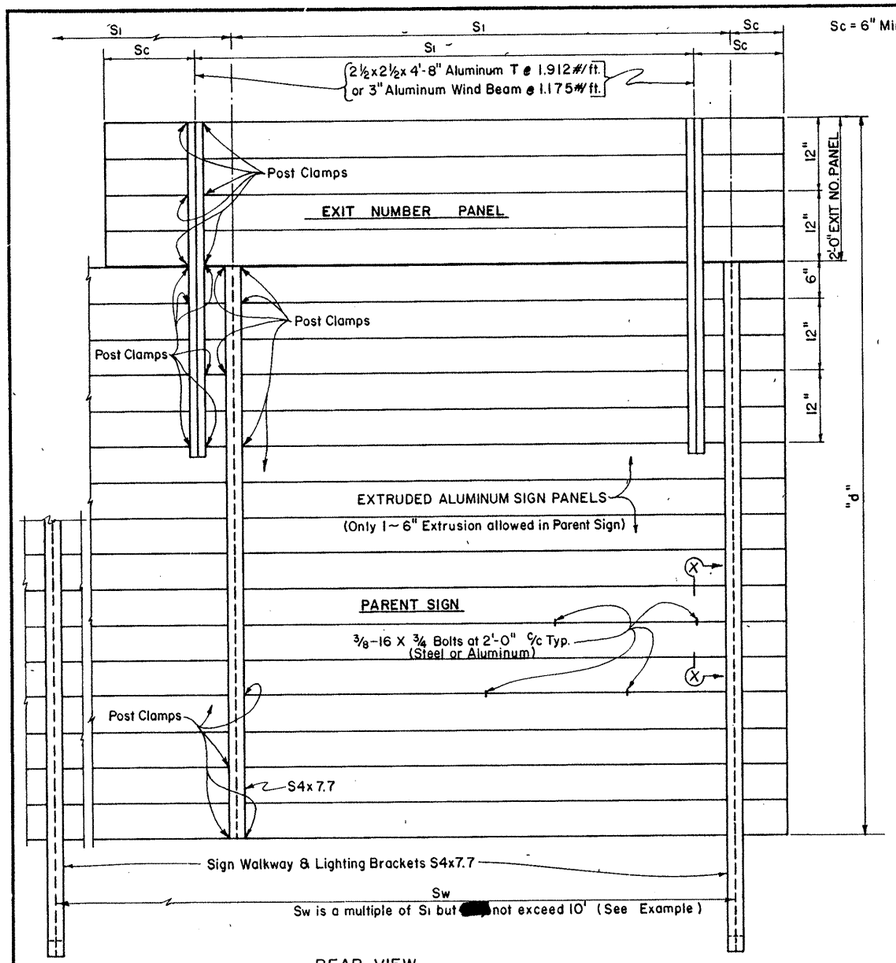

REAR VIEW

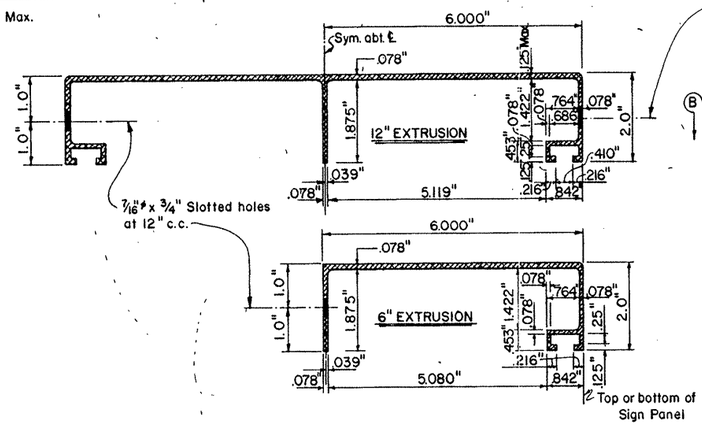

EXTRUSION DETAILS FOR ALUMINUM SIGN PANELS

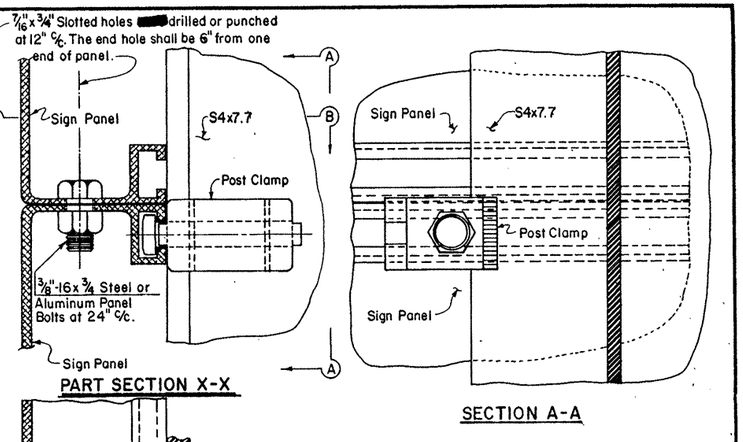

EXAMPLES (FOR DETERMINING Si AND Sw)

NO.	ZONE	"d"	EXIT. PANEL	WALKWAY	Si	Sw	COMMENT
①	1	15.0	YES	YES	4.5	9.0	Sw = 2x(Si)
②	2	14.0	YES	NO	7.5	7.5	Sw = 1x(Si)
③	1	15.0	NO	NO	8.5	8.5	Sw = 1x(Si)
④	3	14.0	NO	YES	10.0	10.0	Sw = Si

Values shown for Si are maximum values. Si varied for different sign lengths and Truss mounting conditions. Sw not exceed two times Si (Max.) or 10 feet.

PANEL CONNECTION DETAILS

GENERAL NOTES:

Materials, fabrication, construction and erection conform with the requirments of the Department's Standard Specifications.

All structural steel, bolts, nuts and washers galvanized after fabrication.

Structural steel conform with A.S.T.M. Specification A-36. Steel bolts have square heads and hexagon nuts and conform with A.S.T.M. Specification A-307. Dimensions in accordance with ANSI B 18.2.1.

Aluminum Post Clamps cast aluminum Alloy 356-T6.

Aluminum bolts Alloy 2024-T4.

MAXIMUM SIGN SUPPORT SPACING "Si" (FEET)

"d" Deepest Sign in Group (Ft.)	EXTRUDED ALUMINUM SIGN PANELS															
	WITH EXIT NUMBER PANELS								WITHOUT EXIT NUMBER PANELS							
	WITH WALKWAYS				WITHOUT WALKWAYS				WITH WALKWAYS				WITHOUT WALKWAYS			
	WIND ZONE				WIND ZONE				WIND ZONE				WIND ZONE			
	1	2	3	4	1	2	3	4	1	2	3	4	1	2	3	4
15	4.5	7	8	10	5	7	8	10	7	8	9	10	8.5	10	10	10
14	6	7.5	9.5	10	6	7.5	9.5	10	8	9	10	10	10	10	10	10
13	7.5	9	10	10	7.5	9	10	10	9	10	10	10	10	10	10	10
12	8.5	10	10	10	8.5	10	10	10	10	10	10	10	10	10	10	10
11 or less	10	10	10	10	10	10	10	10	10	10	10	10	10	10	10	10

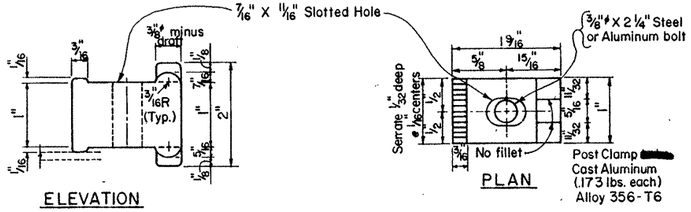

POST CLAMP DETAILS

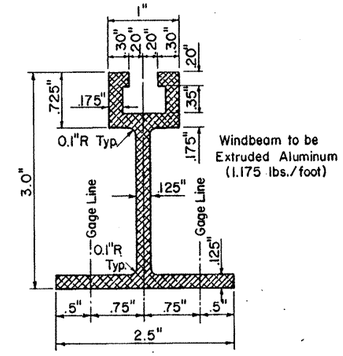

WINDBEAM CROSS SECTION

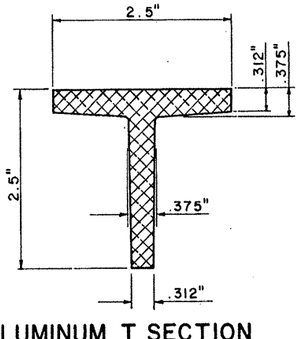

ALUMINUM T SECTION

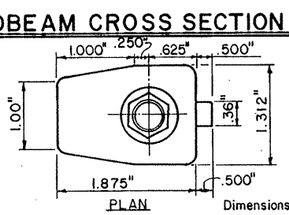

Dimensions are approx.

ALTERNATE POST CLAMP DETAIL

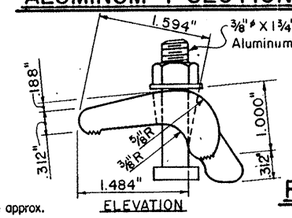

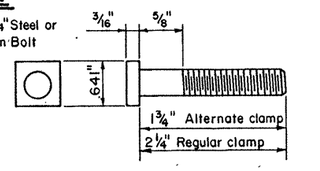

POST CLAMP BOLT DETAIL

(Aluminum Alloy 2024-T4)

STATE DEPARTMENT OF HIGHWAYS AND PUBLIC TRANSPORTATION

STRUCTURAL MOUNTING DETAILS FOR OVERHEAD SIGN BRIDGES

ALUMINUM SMD(A-1)

ORIGINAL DRAWING DATE: 7-83	STATE DISTRICT	FEDERAL REGION	FEDERAL AID PROJECT #	SHEET
DN:-CWC REVISIONS	21	6	NH 92(50) M	529
CK:-LEH	COUNTY	CONTROL	SECTION	JOB	HIGHWAY
DW:-EDS	HIDALGO	39	17	97	US83(38)
CK:-CWC					18A

ZONE 1 NO ICE 100 M.P.H. WIND

TRUSS DETAILS

5/8"ϕ H.S. Bolts Spans 40' Thru 75' — 3/4"ϕ H.S. Bolts Spans 76' Thru 155'

SPAN	40'	45'	50'	55'	60'	65'	70'	75'	80'	85'	90'	95'	100'	105'	110'
W x D = WIDTH x DEPTH	4.5 X 4.5	4.5 X 4.5	4.5 X 4.5	4.5 X 4.5	4.5 X 4.5	4.5 X 4.5	4.5 X 4.5	4.5 X 4.5	4.5 X 4.5	4.5 X 4.5	4.5 X 4.5	4.5 X 4.5	5.0 X 5.0	5.0 X 5.0	5.0 X 5.0
CHORD	3X3X3/16 ③	3X3X1/4 ④	3X3X1/4 ④	3X3X1/4 (HS50) ⑥	3½X3½X1/4(HS50) ⑦	3½X3½X5/16(HS50) ⑨	3½X3½X5/16(HS50) ⑨	4 X 4 X5/16(HS50) ⑩	3½X3½X3/8(HS50) ⑧	4X4X3/8 (HS50) ⑨	4X4X3/8 (HS50) ⑩	4X4X 7/16(HS50) ⑪	5X5X3/8 (HS50) ⑪	4X4X ½ (HS50) ⑫	5X5X3/8 (HS50) ⑭
DEAD LOAD DIAGONAL	2½X1½X3/16 ②	2½X1½X3/16 ②	2½X1½X3/16 ②	2½X1½X3/16 ②	2½X1½X3/16 ②	2½X1½X3/16 ②	2½X1½X3/16 ②	2½X1½X3/16 ②	3X2X3/16 ②	3X2X3/16 ②	3X2X3/16 ②	3X2X3/16 ②	3X2X3/16 ②	3X2X3/16 ②	3X2X3/16 ②
WIND LOAD DIAGONAL	3X3X3/16 ②	3X3X3/16 ②	3X3X3/16 ②	3X2½X1/4 ③	3X2½X1/4 ③	3X2½X1/4 ③	3X3X1/4 ③	3X3X1/4 ③	3X3X1/4 ③	3X3X1/4 ③	3X3X1/4 ③	3½X3½X1/4 ③	3½X3½X1/4 ③	3½X3½X1/4 ③	3½X3½X1/4 ③
DEAD LOAD VERTICAL	2½X1½X3/16 ②	2½X1½X3/16 ②	2½X1½X3/16 ②	2½X1½X3/16 ②	2½X1½X3/16 ②	2½X1½X3/16 ②	2½X1½X3/16 ②	2½X1½X3/16 ②	3X2X3/16 ②	3X2X3/16 ②	3X2X3/16 ②	3X2X3/16 ②	3X2X3/16 ②	3X2X3/16 ②	3X2X3/16 ②
WIND LOAD STRUT	2X2X3/16 ①	2X2X3/16 ①	2X2X3/16 ①	2X2X3/16 ①	2X2X3/16 ①	2X2X3/16 ①	2X2X3/16 ①	2X2X3/16 ①	2½X2½X3/16 ①	2½X2½X3/16 ①	2½X2½X3/16 ①	2½X2½X3/16 ①	2½X2½X3/16 ①	2½X2½X3/16 ①	2½X2½X3/16 ①
TOTAL DEFL. & TRUSS D.L.	△=0.12" DL=42#/ft.	△=0.18" DL=42#/ft.	△=0.21" DL=47#/ft.	△=0.30" DL=47#/ft.	△=0.38" DL=53#/ft.	△=0.44" DL=59#/ft.	△=0.58" DL=60#/ft.	△=0.75" DL=64#/ft.	△=0.86" DL=70#/ft.	△=1.08" DL=76#/ft.	△=1.20" DL=76#/ft.	△=1.43" DL=86#/ft.	△=1.46" DL=92#/ft.	△=1.58" DL=95#/ft.	△=1.88" DL=101#/ft.

TOWER DETAILS

S=COLUMN SPACING	6.0'	6.0'	6.0'	6.0'	6.5'	6.5'	6.5'	6.5'	7.0'	7.0'	7.0'	7.0'	7.5'	7.5'	7.5'
HEIGHT	COLUMN SIZE & UPLIFT (KIPS)														
15'	W1017 (28.0)	W1017 (31.5)	W1022 (34.3)	W1022 (37.8)	W1022 (36.7)	W1022 (39.9)	W1022 (42.9)	W1026 (45.7)	W1026 (44.0)	W1026 (46.8)	W1226 (50.0)	W1226 (52.8)	W1226 (54.0)	W1226 (56.4)	W1430 (59.5)
16'	W1017 (30.0)	W1022 (33.7)	W1022 (36.7)	W1022 (40.5)	W1022 (39.3)	W1022 (42.7)	W1026 (45.9)	W1026 (48.9)	W1026 (47.2)	W1026 (50.1)	W1226 (53.6)	W1226 (56.5)	W1226 (57.8)	W1430 (60.4)	W1430 (63.7)
17'	W1022 (32.0)	W1022 (36.0)	W1022 (39.0)	W1022 (43.1)	W1026 (42.3)	W1026 (45.5)	W1026 (48.8)	W1226 (53.4)	W1226 (51.2)	W1226 (54.3)	W1226 (57.2)	W1226 (60.3)	W1430 (61.5)	W1430 (64.4)	W1430 (68.0)
18'	W1022 (34.0)	W1022 (38.2)	W1022 (41.4)	W1022 (45.8)	W1026 (44.9)	W1026 (48.4)	W1026 (51.9)	W1226 (56.8)	W1226 (54.4)	W1226 (57.7)	W1226 (60.8)	W1430 (64.1)	W1430 (65.4)	W1430 (68.4)	W1430 (72.2)
19'	W1022 (36.4)	W1022 (40.5)	W1026 (43.9)	W1026 (48.4)	W1026 (47.6)	W1226 (51.8)	W1226 (55.6)	W1226 (59.3)	W1226 (57.7)	W1430 (61.8)	W1430 (65.1)	W1430 (68.6)	W1430 (69.2)	W1434 (73.0)	W1430 (76.4)
20'	W1022 (38.5)	W1022 (42.7)	W1026 (46.4)	W1026 (51.1)	W1026 (50.2)	W1226 (54.7)	W1226 (58.7)	W1226 (62.6)	W1226 (60.9)	W1430 (65.3)	W1430 (68.8)	W1430 (72.5)	W1434 (73.1)	W1434 (77.1)	W1434 (80.7)
21'	W1022 (40.6)	W1026 (45.0)	W1026 (49.3)	W1226 (54.4)	W1226 (53.6)	W1226 (57.6)	W1226 (61.8)	W1430 (66.8)	W1430 (65.0)	W1430 (68.8)	W1430 (72.5)	W1434 (76.5)	W1434 (77.6)	W1636 (82.0)	W1636 (85.8)
22'	W1022 (42.7)	W1026 (47.4)	W1026 (51.9)	W1226 (57.1)	W1226 (56.4)	W1226 (60.6)	W1226 (64.9)	W1430 (70.3)	W1430 (68.3)	W1430 (72.4)	W1434 (76.3)	W1434 (80.4)	W1434 (81.6)	W1636 (86.2)	W1636 (90.1)
23'	W1026 (44.2)	W1026 (49.7)	W1226 (55.1)	W1226 (60.0)	W1226 (59.2)	W1430 (64.6)	W1430 (69.1)	W1430 (73.7)	W1430 (71.7)	W1434 (76.0)	W1434 (80.0)	W1636 (85.2)	W1636 (86.5)	W1636 (90.4)	W1640 (94.3)
24'	W1026 (46.3)	W1026 (52.0)	W1226 (57.7)	W1226 (62.8)	W1226 (62.0)	W1430 (67.7)	W1430 (72.4)	W1430 (77.2)	W1434 (75.1)	W1434 (79.5)	W1434 (83.8)	W1636 (89.3)	W1636 (90.6)	W1640 (94.6)	W1640 (98.7)
25'	W1226 (49.7)	W1226 (55.0)	W1226 (60.3)	W1430 (66.9)	W1430 (65.9)	W1430 (70.7)	W1434 (75.6)	W1434 (80.5)	W1434 (78.6)	W1636 (83.0)	W1636 (88.7)	W1636 (93.4)	W1640 (94.5)	W1640 (98.8)	W1640 (103.1)
26'	W1226 (51.9)	W1226 (57.4)	W1226 (63.0)	W1430 (69.8)	W1430 (68.8)	W1430 (73.8)	W1434 (78.9)	W1434 (84.0)	W1434 (82.0)	W1636 (86.6)	W1636 (92.5)	W1640 (97.4)	W1640 (98.6)	W1640 (103.1)	W1846 (107.6)
27'	W1226 (54.1)	W1226 (59.9)	W1430 (67.0)	W1430 (72.8)	W1430 (71.6)	W1434 (76.9)	W1434 (82.2)	W1636 (87.4)	W1636 (86.7)	W1636 (91.6)	W1640 (96.4)	W1640 (101.4)	W1640 (100.2)	W1846 (108.5)	W1846 (113.4)
28'	W1226 (56.4)	W1226 (62.4)	W1430 (69.8)	W1430 (75.8)	W1430 (74.7)	W1434 (80.0)	W1434 (85.5)	W1636 (90.9)	W1636 (90.2)	W1636 (95.4)	W1640 (100.3)	W1640 (105.6)	W1640 (104.2)	W1846 (112.9)	W1846 (118.0)
29'	W1226 (58.7)	W1430 (66.5)	W1430 (72.6)	W1434 (78.7)	W1434 (77.6)	W1434 (83.1)	W1636 (90.4)	W1636 (94.5)	W1640 (93.7)	W1640 (97.5)	W1640 (104.2)	W1846 (111.2)	W1846 (112.4)	W1846 (117.3)	W1846 (122.6)
30'	W1226 (61.0)	W1430 (69.1)	W1430 (75.5)	W1434 (81.7)	W1434 (80.7)	W1636 (86.3)	W1636 (93.9)	W1636 (98.0)	W1640 (97.3)	W1640 (101.2)	W1846 (108.2)	W1846 (115.5)	W1846 (116.6)	W1846 (121.8)	W1850 (127.2)

Height = (HL+HR)/2

ZONE 1 NO ICE 100 M.P.H. WIND

TRUSS DETAILS

SPAN	115'	120'	125'	130'	135'	140'	145'	150'	155'
W x D	5.0 X 5.0	5.0 X 5.0	5.0 X 5.0	5.0 X 5.0	5.0 X 5.0	5.5 X 5.5	5.5 X 5.5	5.5 X 5.5	5.5 X 5.5
CHORD	5X5X7/16(HS50) ⑮	5X5X½ (HS50) ⑯	5X5X½ (HS50) ⑱	6X6X½ (HS50) ⑳	6X6X½ (HS50) ㉑	6X6X½ (HS50) ㉑	6X6X9/16(HS50) ㉓	6X6X9/16(HS50) ㉔	6X6X5/8 (HS50) ㉖
D.L. DIAG.	3X2X3/16 ②	3X2½X3/16 ②	3X3X3/16 ②	3X2X1/4 ②	3X2½X1/4 ②	3X2½X1/4 ②	3X2½X1/4 ②	3X2½X1/4 ②	3X3X1/4 ③
W.L. DIAG.	3½X3½X1/4 ④	4X4X1/4 ④	4X4X1/4 ④	4X4X1/4 ④	3½X3½X5/16 ④	3½X3½X5/16 ④	3½X3½X5/16 ④	3½X3½X5/16 ④	4X3½X5/16 ④
D.L. VERT.	3X2X3/16 ②	3X2½X3/16 ②	3X2½X3/16 ②	3X2½X3/16 ②	3X2½X3/16 ②	3X3X5/16 ②	3X2½X1/4 ②	3X2½X1/4 ②	3X2½X1/4 ②
W.L. STRUT	2½X2½X3/16 ①	2½X2½X3/16 ①	2½X2½X3/16 ①	2½X2½X3/16 ①	2½X2½X3/16 ①	2½X2½X3/16 ①	2½X2½X3/16 ①	2½X2½X3/16 ①	2½X2½X3/16 ①
DEFL. & D.L.	△=2.04" DL=101#/ft.	△=2.30" DL=113#/ft.	△=2.61" DL=114#/ft.	△=2.74" DL=130#/ft.	△=3.14" DL=133#/ft.	△=3.09" DL=137#/ft.	△=3.36" DL=149#/ft.	△=3.82" DL=149#/ft.	△=4.14 DL=162#/ft.

TOWER DETAILS

S=COL. SPA.	7.5'	7.5'	7.5'	7.5'	7.5'	7.5'	7.5'	7.5'	7.5'
HEIGHT	COLUMN SIZE & UPLIFT (KIPS)								
15'	W1430 (62.0)	W1434 (64.5)	W1434 (66.9)	W1434 (69.2)	W1434 (71.9)	W1434 (74.8)	W1636 (77.2)	W1636 (80.1)	W1636 (82.6)
16'	W1430 (66.4)	W1434 (69.1)	W1434 (71.6)	W1434 (74.2)	W1434 (77.0)	W1434 (80.1)	W1636 (82.7)	W1636 (85.8)	W1636 (88.5)
17'	W1434 (70.6)	W1434 (73.7)	W1434 (76.4)	W1434 (79.1)	W1636 (82.7)	W1636 (85.5)	W1636 (88.3)	W1640 (91.5)	W1640 (94.3)
18'	W1434 (75.1)	W1434 (78.3)	W1434 (81.2)	W1636 (84.1)	W1636 (88.0)	W1636 (90.8)	W1640 (93.8)	W1640 (97.2)	W1640 (100.3)
19'	W1434 (79.6)	W1636 (83.6)	W1636 (86.7)	W1636 (89.9)	W1640 (93.8)	W1640 (96.1)	W1640 (99.3)	W1846 (104.5)	W1846 (107.7)
20'	W1636 (84.1)	W1636 (88.3)	W1636 (91.6)	W1640 (95.0)	W1640 (99.1)	W1640 (101.5)	W1640 (104.9)	W1846 (110.4)	W1846 (113.9)
21'	W1636 (88.4)	W1640 (92.9)	W1640 (96.4)	W1640 (99.5)	W1846 (104.4)	W1846 (108.6)	W1846 (112.2)	W1846 (116.3)	W1846 (120.0)
22'	W1636 (92.9)	W1640 (97.7)	W1640 (101.3)	W1640 (105.1)	W1846 (109.8)	W1846 (114.2)	W1846 (118.0)	W1846 (122.3)	W1850 (126.2)
23'	W1640 (98.3)	W1640 (102.4)	W1846 (107.2)	W1846 (111.2)	W1846 (115.2)	W1846 (119.8)	W1846 (123.8)	W1850 (128.1)	W1850 (132.1)
24'	W1640 (102.9)	W1846 (107.2)	W1846 (112.2)	W1846 (116.5)	W1846 (120.6)	W1846 (125.4)	W1850 (129.6)	W1850 (134.1)	W1850 (138.3)
25'	W1846 (108.8)	W1846 (113.1)	W1846 (117.3)	W1850 (121.6)	W1850 (126.1)	W1850 (130.8)	W1850 (135.2)	W1855 (140.0)	W1855 (144.4)
26'	W1846 (113.5)	W1846 (118.0)	W1846 (122.3)	W1850 (126.9)	W1850 (131.6)	W1850 (136.5)	W1855 (141.1)	W1855 (146.1)	W1855 (150.7)
27'	W1846 (118.3)	W1846 (122.9)	W1850 (127.5)	W1850 (132.2)	W1850 (137.1)	W1855 (141.9)	W1855 (146.8)	W2157 (154.0)	W2157 (158.9)
28'	W1846 (123.0)	W1850 (127.9)	W1850 (132.6)	W1850 (137.5)	W1855 (142.6)	W1855 (147.7)	W1855 (152.7)	W2157 (160.2)	W2157 (165.3)
29'	W1850 (127.7)	W1850 (132.9)	W1855 (137.5)	W1855 (142.6)	W1855 (148.1)	W2157 (153.7)	W2157 (155.6)	W2157 (160.8)	W2162 (166.5)	W2162 (171.8)
30'	W1850 (132.5)	W1850 (137.9)	W1855 (142.6)	W1855 (147.9)	W2157 (153.7)	W2157 (161.5)	W2157 (166.8)	W2162 (172.7)	W2162 (178.3)

Height = (HL+HR)/2

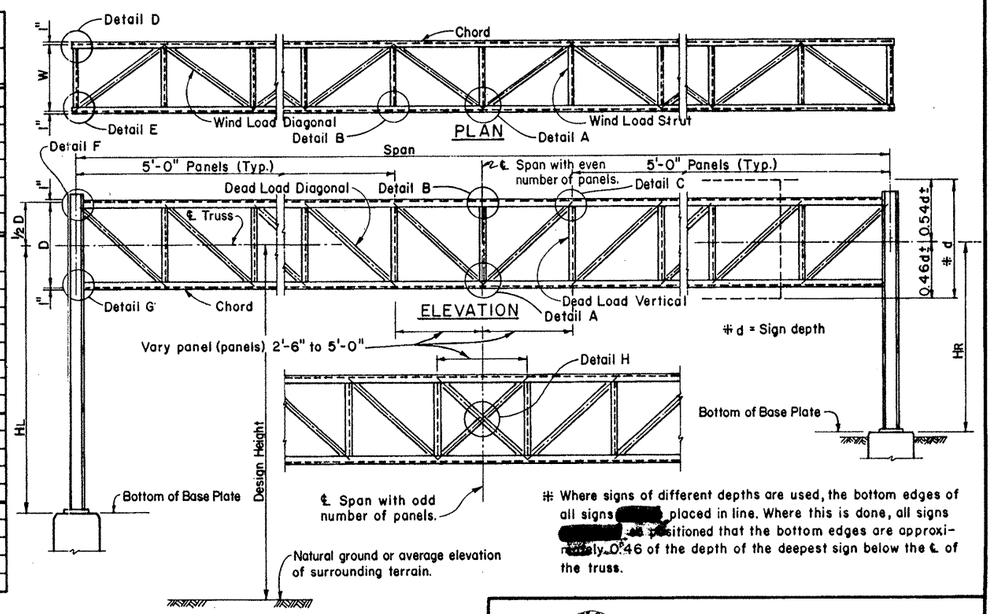

KEY TO TRUSS AND TOWER DETAILS

Truss members are all angles.

Truss columns are all wide flange shapes.

W 10 25 (42.2) ——— Uplift (Kips) at base plate.
- W — Wide Flange
- 10 — 10" Nominal size.
- 25 — 25 Pounds per foot.

△ = 3.02" Deflection due to dead load of truss, walkway, signs and lights.

DL = 77#/ft. Dead load of truss members only, does not include walkway, signs or lights.

GENERAL NOTES:

For over head sign bridges with different tower heights, use column sizes required for the average height of the two towers. Use heights to the nearest foot, for exactly 0.5' increase to the next larger foot.

For truss lengths falling between those shown in the tables use the sizes called for in the next longer span.

Over head sign bridges are designed for the equivalent area of a 10 foot deep sign panel over 75 percent of the span length, located as necessary to produce maximum stress. Design includes 3#/□' for sign panel and 20#/lin. ft. for lights and 50#/lin. ft. for walkway, all placed as specified for the design sign panel.

Details on this sheet are applicable for design height up to 30 feet.

Number of High Strength Bolts required in truss connection or splice are indicated thus ③ after the member size.

PREPARED BY AND FOR THE USE OF TEXAS SDH&PT.

STATE DEPARTMENT OF HIGHWAYS AND PUBLIC TRANSPORTATION

OVERHEAD SIGN BRIDGE DETAILS

OSB-Z1

SHEET 1 OF 3

ORIGINAL DRAWING DATE: 7-83	STATE DISTRICT	FEDERAL REGION	FEDERAL AID PROJECT ⊕			SHEET
DR.:-CWC REVISIONS	21	6	NH 92(50)M			531
CK.:-MPN	COUNTY		CONTROL	SECTION	JOB	HIGHWAY
DW.:-EDS	HIDALGO		39	17	97	U583/281
CK.:-CWC						32*

ZONE I NO ICE 100 M.P.H. WIND

TRUSS DETAILS

5/8" H.S. BOLTS | 3/4" H.S. BOLTS

SPAN	40'	45'	50'	55'	60'	65'	70'	75'	80'	85'	90'	95'	100'	105'	110'
W x D = WIDTH x DEPTH	4.5' x 4.5'	4.5' x 4.5'	4.5 x 4.5'	4.5' x 4.5'	4.5' x 4.5'	4.5' x 4.5'	4.5' x 4.5'	4.5' x 4.5'	4.5' x 4.5'	4.5' x 4.5'	4.5' x 4.5'	4.5' x 4.5'	5.0' x 5.0'	5.0' x 5.0'	5.0' x 5.0'
CHORD	3x3x3/16 ③	3x3x1/4 ④	3x3x1/4 ④	3½x3½x5/16 ⑥	3½x3½x5/16 * ⑧	3½x3½x5/16* ⑧	3½x3½x5/16* ⑨	4x4x5/16 * ⑩	3½x3½x3/8 * ⑦	4x4x3/8 * ⑨	4x4x3/8 * ⑨	4x4x7/16* ⑩	5x5x3/8 * ⑪	4x4x½ * ⑫	5x5x7/16 * ⑬
DEAD LOAD DIAGONAL	2½x1½x3/16 ②	2½x1½x3/16 ②	2½x1½x3/16 ②	2½x1½x3/16 ②	2½x1½x3/16 ②	2½x1½x3/16 ②	2½x1½x3/16 ②	2½x1½x3/16 ②	3x2x3/16 ②	3x2x3/16 ②	3x2x3/16 ②	3x2x3/16 ②	3x2x3/16 ②	3x2x3/16 ②	3x2x3/16 ②
WIND LOAD DIAGONAL	3x3x3/16 ③	3x3x3/16 ③	3x3x3/16 ③	3x2½x1/4 ④	3x2½x1/4 ③	3x3x1/4 ③	3x3x1/4 ④	3x3x1/4 ④	3x3x1/4 ③	3x3x1/4 ③	3½x3½x1/4 ③	3½x3½x1/4 ③	3½x3½x1/4 ③	3½x3½x1/4 ③	3½x3½x1/4 ③
DEAD LOAD VERTICAL	2½x1½x3/16 ②	2½x1½x3/16 ②	2½x1½x3/16 ②	2½x1½x3/16 ②	2½x1½x3/16 ②	2½x1½x3/16 ②	2½x1½x3/16 ②	2½x1½x3/16 ②	3x2x3/16 ②	3x2x3/16 ②	3x2x3/16 ②	3x2x3/16 ②	3x2x3/16 ②	3x2x3/16 ②	3x2x3/16 ②
WIND LOAD STRUT	2x2x3/16 ①	2x2x3/16 ①	2x2x3/16 ①	2x2x3/16 ①	2x2x3/16 ①	2x2x3/16 ①	2x2x3/16 ①	2x2x3/16 ①	2½x2½x3/16 ①	2½x2½x3/16 ①	2½x2½x3/16 ①	2½x2½x3/16 ①	2½x2½x3/16 ①	2½x2½x3/16 ①	2½x2½x3/16 ①
TOTAL DEFL. & TRUSS D.L.	△=0.14" DL=42#/ft.	△=0.15" DL=47#/ft.	△=0.22" DL=47#/ft.	△=0.25" DL=59#/ft.	△=0.35" DL=59#/ft.	△=0.46" DL=60#/ft.	△=0.61" DL=60#/ft.	△=0.80" DL=64#/ft.	△=0.86" DL=70#/ft.	△=0.99" DL=76#/ft.	△=1.24" DL=78#/ft.	△=1.40" DL=86#/ft.	△=1.42" DL=92#/ft.	△=1.59" DL=95#/ft.	△=1.88" DL=101#/ft.

TOWER DETAILS

* = HS 50

S=COLUMN SPACING		6.0'		6.0'		6.0'		6.0'		6.5'		6.5'		6.5'		7.0'		7.0'		7.0'		7.0'		7.5'		7.5'		7.5'	
HEIGHT	COLUMN SIZE & UPLIFT (KIPS)																												
25'		W1226	(54.9)	W1226	(60.7)	W1430	(66.4)	W1430	(72.5)	W1434	(74.6)	W1434	(79.9)	W1434	(85.3)	W1636	(90.6)	W1636	(88.8)	W1636	(93.8)	W1640	(98.6)	W1640	(103.8)	W1640	(101.0)	W1640	(105.6)	W1846	(110.4)
26'		W1226	(57.4)	W1226	(63.4)	W1430	(69.6)	W1430	(75.7)	W1434	(77.9)	W1434	(83.5)	W1434	(89.1)	W1636	(94.6)	W1636	(92.7)	W1640	(97.6)	W1640	(102.9)	W1640	(108.3)	W1640	(105.5)	W1846	(110.2)	W1846	(115.3)
27'		W1226	(59.9)	W1430	(66.2)	W1430	(72.6)	W1434	(78.5)	W1434	(81.3)	W1434	(87.1)	W1636	(92.7)	W1636	(98.7)	W1640	(96.4)	W1640	(101.8)	W1640	(107.3)	W1846	(112.7)	W1846	(109.8)	W1846	(114.9)	W1846	(120.1)
28'		W1226	(62.5)	W1430	(69.0)	W1434	(75.5)	W1434	(82.0)	W1434	(84.7)	W1636	(90.6)	W1636	(96.6)	W1640	(102.4)	W1640	(100.3)	W1640	(105.9)	W1846	(111.5)	W1846	(117.3)	W1846	(114.2)	W1846	(119.5)	W1850	(124.9)
29'		W1430	(65.1)	W1430	(71.8)	W1434	(78.5)	W1434	(85.3)	W1636	(88.0)	W1636	(94.2)	W1640	(100.1)	W1640	(106.5)	W1640	(104.3)	W1846	(110.0)	W1846	(115.9)	W1846	(121.9)	W1846	(118.7)	W1850	(124.1)	W1850	(129.7)
30'		W1430	(67.7)	W1434	(74.6)	W1434	(81.6)	W1434	(88.6)	W1636	(91.5)	W1636	(97.9)	W1640	(104.0)	W1640	(110.6)	W1846	(108.2)	W1846	(114.2)	W1846	(120.4)	W1846	(126.5)	W1850	(123.1)	W1850	(128.8)	W1850	(134.6)
31'		W1430	(70.3)	W1434	(77.5)	W1434	(84.7)	W1636	(91.7)	W1636	(95.0)	W1640	(101.3)	W1640	(108.0)	W1846	(114.6)	W1846	(112.3)	W1846	(118.5)	W1846	(124.8)	W1850	(131.0)	W1850	(127.6)	W1850	(133.5)	W1855	(139.4)
32'		W1434	(75.6)	W1434	(80.3)	W1636	(87.6)	W1636	(95.1)	W1640	(98.2)	W1640	(105.0)	W1846	(111.8)	W1846	(118.8)	W1846	(116.3)	W1850	(122.6)	W1850	(129.1)	W1850	(135.7)	W1850	(132.2)	W1855	(138.3)	W1855	(144.3)
33'		W1434	(76.9)	W1434	(83.2)	W1636	(90.7)	W1636	(98.4)	W1640	(101.7)	W1640	(108.8)	W1846	(115.8)	W1846	(123.0)	W1846	(120.4)	W1850	(126.8)	W1850	(133.6)	W1850	(140.4)	W1855	(136.8)	W1855	(142.7)	W2157	(149.0)
34'		W1434	(78.3)	W1636	(85.9)	W1636	(93.8)	W1640	(101.4)	W1640	(105.3)	W1846	(112.4)	W1846	(119.7)	W1850	(127.0)	W1850	(124.3)	W1850	(131.2)	W1850	(138.1)	W1855	(145.0)	W1855	(141.0)	W2157	(147.4)	W2157	(154.0)
35'		W1434	(81.0)	W1636	(88.9)	W1636	(97.0)	W1640	(104.8)	W1640	(108.8)	W1846	(116.2)	W1846	(123.8)	W1850	(131.2)	W1850	(128.5)	W1850	(135.5)	W1855	(142.6)	W1855	(149.5)	W2157	(145.6)	W2157	(152.3)	W2157	(159.0)
36'		W1636	(83.5)	W1636	(91.8)	W1640	(99.8)	W1640	(108.2)	W1846	(112.4)	W1846	(120.0)	W1850	(127.6)	W1850	(135.5)	W1850	(132.6)	W1855	(139.8)	W1855	(147.1)	W2157	(154.2)	W2157	(150.2)	W2157	(157.1)	W2157	(164.0)
37'		W1636	(86.2)	W1636	(94.8)	W1640	(103.0)	W1846	(108.6)	W1846	(115.9)	W1846	(123.8)	W1850	(131.6)	W1855	(139.8)	W1855	(136.8)	W1855	(144.0)	W2157	(151.4)	W2157	(159.0)	W2157	(154.9)	W2157	(161.9)	W2162	(168.9)
38'		W1636	(89.0)	W1640	(97.0)	W1640	(106.2)	W1846	(112.0)	W1846	(119.6)	W1850	(127.5)	W1850	(135.7)	W1855	(144.0)	W1855	(140.9)	W2157	(148.2)	W2157	(156.0)	W2157	(163.8)	W2162	(159.5)	W2162	(166.6)	W2162	(173.9)
39'		W1636	(91.8)	W1640	(100.0)	W1846	(109.2)	W1846	(115.4)	W1846	(123.3)	W1850	(131.4)	W1855	(139.8)	W2157	(148.4)	W2157	(144.7)	W2157	(152.6)	W2157	(160.6)	W2162	(168.4)	W2162	(164.0)	W2162	(171.5)	W2162	(179.0)
40'		W1640	(93.7)	W1640	(103.0)	W1846	(112.5)	W1846	(125.3)	W1850	(126.7)	W1850	(135.3)	W1855	(143.9)	W2157	(152.3)	W2157	(149.0)	W2157	(157.0)	W2157	(165.2)	W2162	(173.2)	W2162	(168.7)	W2162	(176.4)	W2168	(188.9)
42'		W1640	(99.4)	W1846	(109.3)	W1846	(119.0)	W1850	(136.1)	W1850	(134.1)	W1855	(143.1)	W2157	(151.8)	W2157	(161.0)	W2157	(157.5)	W2162	(165.7)	W2162	(174.3)	W2162	(183.0)	W2168	(177.9)	W2168	(185.9)	W2168	(194.1)
45'		W1846	(108.1)	W1846	(118.5)	W1855	(137.1)	W1855	(147.6)	W2157	(145.4)	W2157	(155.1)	W2157	(164.4)	W2162	(174.3)	W2162	(170.2)	W2162	(179.2)	W2168	(188.7)	W2168	(198.1)	W2168	(192.3)	W2468	(200.1)	W2468	(209.6)

Height = HL + HR/2

TRUSS DETAILS

SPAN	115'	120'	125'	130'	135'	140'	145'	150'	155'
W x D	5.0' x 5.0'	5.0' x 5.0'	5.0' x 5.0'	5.0' x 5.0'	5.0' x 5.0'	5.5' x 5.5'	5.5' x 5.5'	5.5' x 5.5'	5.5' x 5.5'
CHORD	5x5x7/16 * ⑭	5x5x½ * ⑯	5x5x½ * ⑯	6x6x½ * ⑲	6x6x9/16* ㉑	6x6x9/16 * ㉑	6x6x9/16 * ㉒	6x6x9/16* ㉓	6x6x5/8 * ㉕
D.L. DIAG.	3x2x3/16 ②	3x2x3/16 ②	3x3x3/16 ②	3x2x1/4 ②	3x2½x1/4 ③	3½x3½x5/16 ④	3½x3½x5/16 ④	3x2½x1/4 ③	3x3x1/4 ③
W.L. DIAG.	4x4x1/4 ④	4x4x1/4 ④	4x4x1/4 ④	3½x3½x5/16 ④	3½x3½x5/16 ④	3½x3½x5/16 ④	3½x3½x5/16 ④	4x3½x5/16 ④	4x3½x5/16 ④
D.L. VERT.	3x2x3/16 ②	3x2½x3/16 ②	3x2½x3/16 ②	3x2½x3/16 ②	3x2½x3/16 ②	3x3x3/16 ②	3x3x3/16 ②	3x2½x1/4 ②	3x2½x1/4 ②
W.L. STRUT	2½x2½x3/16 ①	2½x2½x3/16 ①	2½x2½x3/16 ①	2½x2½x3/16 ①	2½x2½x3/16 ①	2½x2½x3/16 ①	2½x2½x3/16 ①	2½x2½x3/16 ①	2½x2½x3/16 ①
DEFL. & D.L.	△=2.24" DL=104#/ft	△=2.32" DL=112#/ft.	△=2.70" DL=114#/ft.	△=3.10" DL=133#/ft.	△=3.03" DL=143#/ft.	△=2.99" DL=147#/ft.	△=3.41" DL=147#/ft.	△=3.86" DL=151#/ft.	△=4.15" DL=162#/ft.

TOWER DETAILS

S=COL. SPA.	HEIGHT	7.5'		7.5'		7.5'		7.5'		7.5		7.5		7.5'		7.5'	
COLUMN SIZE & UPLIFT (KIPS)	25'	W1846	(115.3)	W1846	(119.6)	W1846	(124.3)	W1850	(132.7)	W1850	(137.8)	W1855	(143.1)	W1855	(147.9)	W2157	(152.9)	W2157	(157.7)
	26'	W1846	(120.3)	W1846	(124.8)	W1850	(129.6)	W1850	(138.6)	W1855	(143.9)	W1855	(148.9)	W1855	(154.4)	W2157	(159.7)	W2157	(164.6)
	27'	W1846	(125.3)	W1850	(129.9)	W1850	(135.0)	W1855	(144.3)	W1855	(149.9)	W1855	(155.3)	W2157	(160.8)	W2157	(166.4)	W2157	(171.6)
	28'	W1850	(130.2)	W1850	(135.1)	W1850	(140.4)	W1855	(150.2)	W1855	(156.0)	W2157	(161.5)	W2157	(167.4)	W2162	(173.1)	W2162	(178.5)
	29'	W1850	(135.3)	W1855	(140.4)	W1855	(145.8)	W2157	(156.2)	W2157	(162.0)	W2157	(167.9)	W2162	(173.9)	W2162	(179.9)	W2162	(185.5)
	30'	W1855	(140.4)	W1855	(145.5)	W1855	(151.2)	W2157	(162.1)	W2157	(168.3)	W2162	(174.2)	W2162	(180.5)	W2162	(186.8)	W2162	(192.6)
	31'	W1855	(145.4)	W2157	(150.6)	W2157	(156.6)	W2157	(168.2)	W2162	(174.4)	W2162	(180.7)	W2162	(187.2)	W2168	(193.5)	W2168	(199.5)
	32'	W2157	(150.3)	W2157	(156.0)	W2157	(162.1)	W2162	(174.1)	W2162	(180.6)	W2162	(187.2)	W2168	(193.7)	W2168	(200.4)	W2168	(206.7)
	33'	W2157	(155.4)	W2157	(161.3)	W2157	(167.6)	W2162	(180.2)	W2162	(186.9)	W2168	(193.5)	W2168	(200.4)	W2168	(207.4)	W2468	(213.8)
	34'	W2157	(160.6)	W2157	(166.7)	W2162	(173.0)	W2162	(186.3)	W2168	(193.1)	W2168	(200.0)	W2468	(207.2)	W2468	(214.4)	W2468	(221.0)
	35'	W2157	(165.8)	W2162	(171.9)	W2162	(178.6)	W2168	(192.2)	W2168	(199.4)	W2168	(206.6)	W2468	(214.0)	W2468	(221.4)	W2468	(228.3)
	36'	W2162	(170.8)	W2162	(177.3)	W2162	(184.2)	W2168	(198.4)	W2168	(205.8)	W2468	(213.2)	W2468	(220.8)	W2476	(228.2)	W2467	(235.2)
	37'	W2162	(176.0)	W2162	(182.7)	W2168	(189.6)	W2168	(204.6)	W2468	(212.2)	W2468	(219.9)	W2476	(227.4)	W2476	(235.2)	W2476	(242.5)
	38'	W2162	(182.3)	W2168	(187.9)	W2168	(195.2)	W2468	(210.8)	W2468	(218.7)	W2476	(226.2)	W2476	(234.2)	W2476	(242.3)	W2476	(249.8)
	39'	W2168	(186.3)	W2168	(193.3)	W2168	(200.8)	W2468	(217.1)	W2476	(224.8)	W2476	(232.9)	W2476	(241.1)	W2476	(249.4)	W2784	(256.9)
	40'	W2168	(191.6)	W2168	(198.8)	W2468	(206.5)	W2476	(236.2)	W2476	(231.3)	W2476	(239.6)	W2476	(248.0)	W2784	(256.2)	W2784	(264.2)
	42'	W2468	(212.9)	W2468	(209.8)	W2468	(217.9)	W2476	(236.2)	W2476	(244.3)	W2784	(252.7)	W2784	(261.6)	W2784	(270.5)	W2784	(279.0)
	45'	W2476	(218.3)	W2476	(237.6)	W2476	(234.8)	W2784	(253.9)	W2784	(263.0)	W2784	(273.2)	W2784	(282.7)	W2784	(292.3)	W2794	(300.9)

Height = HL + HR/2

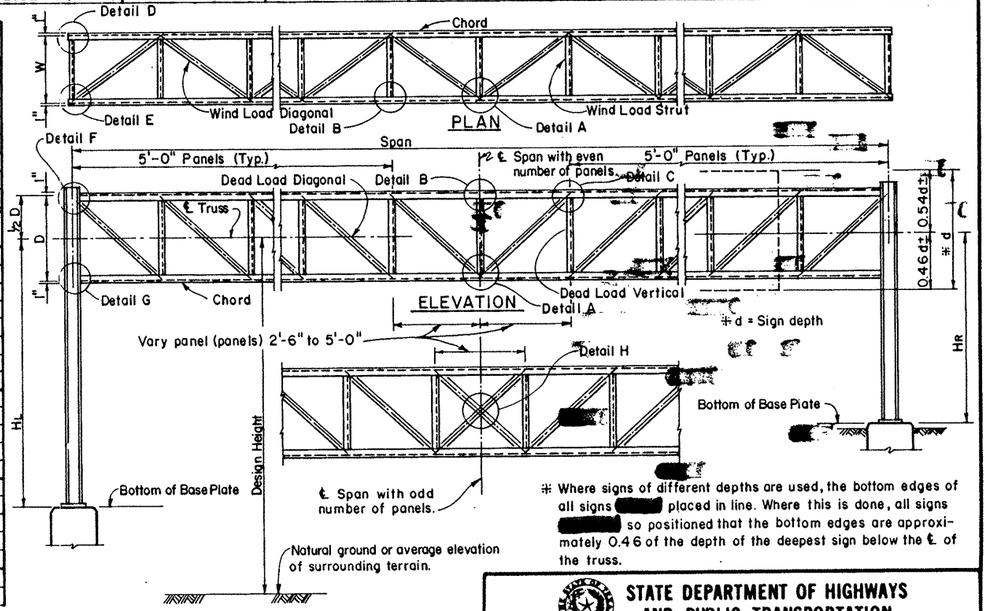

Where signs of different depths are used, the bottom edges of all signs [redacted] placed in line. Where this is done, all signs [redacted] so positioned that the bottom edges are approximately 0.46 of the depth of the deepest sign below the ℄ of the truss.

KEY TO TRUSS AND TOWER DETAILS

Truss members are all angles.

Truss columns are all wide flange shapes.

W 10 26 (42.2) ← Uplift (Kips) at base plate.
- W — Wide Flange
- 10 — 10" Nominal size.
- 26 — 26 Pounds per foot.

△ = 3.02" Deflection due to dead load of truss, walkway, signs and lights.

DL = 77#/ft. Dead load of truss members only, does not include walkway, signs or lights.

GENERAL NOTES:

For over head sign bridges with different tower heights, use column sizes required for the average height of the two towers. Use heights to the nearest foot; for exactly 0.5' increase to the next larger foot.

For truss lengths falling between those shown in the tables use the sizes called for in the next longer span.

Over head sign bridges are designed for the equivalent area of a 10 foot deep sign panel over 75 percent of the span length, located as necessary to produce maximum stress. Design includes 3#/□' for sign panel and 20#/lin. ft. for lights and 50#/lin. ft. for walkway, all placed as specified for the design sign panel.

Details on this sheet are applicable for design heights between 30 and 50 feet.

Number of High Strength Bolts required in truss connection or splice are indicated thus ③ after the member size.

STATE DEPARTMENT OF HIGHWAYS AND PUBLIC TRANSPORTATION

HIGH LEVEL OVERHEAD SIGN BRIDGE DETAILS

HOSB-Z1

SHEET 1 OF 3

ORIGINAL DRAWING DATE: 7-83	STATE DISTRICT	FEDERAL REGION	FEDERAL AID PROJECT #	SHEET
DR.:-CWC REVISIONS	21	6	NH92(50)M	532
CK.:-LEH	COUNTY		CONTROL SECTION JOB	HIGHWAY
DW.:-EDS	HIDALGO		39 17 97	US83/281
CK.:-CWC				33

SPECIAL NOTE FOR TOWER BRACING

Normally, the maximum spacing for tower bracing is the same as column spacing; however, this spacing [redacted] increased as follows:

Determine required size column and spacing to satisfy height for the wind zone and truss span being used. Height = $\frac{HL + HR}{2}$

Note the number of times this size column is shown for larger heights for the same span and wind zone.

Spacing of bracing [redacted] increased one foot for each time height is shown, except the increase [redacted] not exceed five feet.

Column Spa. "S"	Truss Bearing Angle	H.S. Bolts
6.0'	L 4 x 4 x 5/16	5/8" ϕ
6.5'	L 5 x 5 x 3/8	5/8" ϕ
7.0'	L 5 x 5 x 1/2	3/4" ϕ
7.5' to 8.5'	L 6 x 6 x 5/8	3/4" ϕ
9.0'	L 6 x 6 x 3/4	3/4" ϕ
9.5'	L 6 x 6 x 7/8	3/4" ϕ

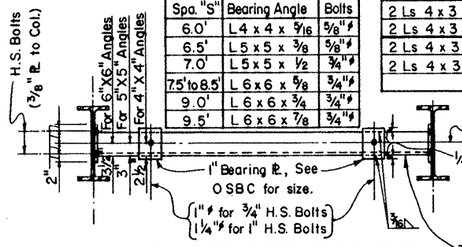

* NOTE: Nominal Dia. X 1½" slots in plate. (Top ℄s only) Use washer on plate side of H.S. Bolt. (See table at left for size of bolts).

BRACING for 9'-0" to 9'-6" COL. SPAC.

SIZE DOUBLE ANGLES	BOLTS REQUIRED BRACING 3/4"	BRACING 7/8"	WT to WF 3/4"	WT to WF 7/8"
2 Ls 4 x 4 x 5/16	6	4	10	8
2 Ls 4 x 4 x 5/16	6	4	10	8
2 Ls 4 x 4 x 5/16	6	4	10	8
2 Ls 4 x 4 x 5/16	6	4	10	8
2 Ls 4 x 3½ x 5/16	5	4	10	8
2 Ls 4 x 3½ x 5/16	5	4	10	8
2 Ls 4 x 3½ x 5/16	5	4	10	8
2 Ls 4 x 3 x 5/16	5	4	10	8
2 Ls 4 x 3 x 5/16	5	4	10	8
2 Ls 4 x 3 x 5/16	5	4	10	8
2 Ls 4 x 3 x 5/16	5	4	10	8

BRACING for 8'-0" to 8'-6" COL. SPAC.

SIZE DOUBLE ANGLES	BOLTS REQUIRED BRACING 3/4"	BRACING 7/8"	WT to WF 3/4"	WT to WF 7/8"
2 Ls 4 x 3 x 5/16	5	4	10	8
2 Ls 4 x 3 x 5/16	5	4	10	8
2 Ls 4 x 3 x 5/16	5	4	10	8
2 Ls 4 x 3 x 5/16	5	4	10	8
2 Ls 3½ x 3 x 5/16	5	4	8	6
2 Ls 3½ x 3 x 5/16	5	4	8	6
2 Ls 3½ x 3 x 5/16	5	4	8	6
2 Ls 4 x 3 x ¼	4	3	8	6
2 Ls 4 x 3 x ¼	4	3	8	6
2 Ls 4 x 3 x ¼	4	3	8	6
2 Ls 3½ x 3 x ¼	4	3	8	6
2 Ls 3½ x 3 x ¼	4	3	8	6

BRACING for 7'-0" to 7'-6" COL. SPAC.

SIZE DOUBLE ANGLES	BOLTS REQUIRED BRACING 5/8"	BRACING 3/4"	BRACING 7/8"	WT to WF 5/8"	WT to WF 3/4"	WT to WF 7/8"
2 Ls 4 x 3 x 5/16	7	5	4	12	10	8
2 Ls 4 x 3 x 5/16	7	5	4	12	10	8
2 Ls 3½ x 3 x 5/16	6	5	4	12	8	6
2 Ls 3½ x 3 x ¼	6	4	3	10	8	6
2 Ls 3½ x 3 x ¼	6	4	3	10	8	6
2 Ls 3½ x 3 x ¼	6	4	3	10	8	6
2 Ls 3½ x 3 x ¼	6	4	3	10	8	6
2 Ls 3½ x 3 x ¼	6	4	3	10	8	6
2 Ls 3½ x 3 x ¼	5	4	3	10	6	4
2 Ls 3½ x 2½ x ¼	5	4	3	8	6	4
2 Ls 3½ x 2½ x ¼	4	3	~	8	6	4
2 Ls 3 x 2½ x ¼	4	3	~	8	6	4
2 Ls 3 x 2½ x ¼	4	3	~	8	6	4
2 Ls 3 x 2½ x ¼	3	2	~	6	4	4
2 Ls 3 x 3 x 3/16	2	2	~	4	4	4
2 Ls 3 x 3 x 3/16	2	2	~	4	4	4
2 Ls 2½ x 2½ x 3/16	2	~	~	4	4	4
2 Ls 2½ x 1½ x 3/16	2	~	~	4	4	4

BRACING for 6'-0" to 6'-6" COL. SPAC.

SIZE DOUBLE ANGLES	BOLTS REQUIRED BRACING 5/8"	BRACING 3/4"	WT to WF 5/8"	WT to WF 3/4"
2 Ls 3 x 3 x ¼	4	3	8	6
2 Ls 3 x 3 x ¼	4	3	8	6
2 Ls 3 x 2½ x ¼	4	3	8	6
2 Ls 3 x 2½ x ¼	4	3	6	4
2 Ls 3 x 2½ x ¼	4	3	6	4
2 Ls 3 x 2½ x ¼	4	3	6	4
2 Ls 3 x 2½ x ¼	4	3	6	4
2 Ls 3 x 2½ x ¼	4	3	6	4
2 Ls 2½ x 2½ x 3/16	3	~	4	4
2 Ls 2½ x 1½ x 3/16	2	~	4	4
2 Ls 2½ x 1½ x 3/16	2	~	4	4
2 Ls 2½ x 1½ x 3/16	2	~	4	4
2 Ls 2½ x 1½ x 3/16	2	~	4	4

"X"	"Y"	"Z"	BASE PLATE SIZE	ANCHOR BOLT SIZE	FOUNDATION DATA	COLUMN SIZE
15¼	5	4	18" x 3¼" x 3'-4½"	2¾" ϕ x 5'-8"	48" ϕ Shaft with 18 # 11	W24117
15¼	5	4	18" x 3⅛" x 3'-4½"	2¾" ϕ x 5'-8"	48" ϕ Shaft with 18 # 11	W24104
15¼	5	4	18" x 3" x 3'-4½"	2¾" ϕ x 5'-8"	48" ϕ Shaft with 18 # 11	W2494
15	4½	3¾	16½" x 3" x 3'-3"	2½" ϕ x 5'-2"	48" ϕ Shaft with 14 # 11	W2484
14¾	4½	3¾	16½" x 2¾" x 3'-2½"	2½" ϕ x 5'-2"	48" ϕ Shaft with 14 # 11	W2476
14¾	4½	3¾	16½" x 2¾" x 3'-2½"	2½" ϕ x 5'-2"	48" ϕ Shaft with 14 # 11	W2468
13½	4½	3¾	16½" x 2¾" x 3'-0"	2½" ϕ x 5'-2"	42" ϕ Shaft with 12 # 11	W2168
13½	4½	3¾	16½" x 2½" x 3'-0"	2½" ϕ x 5'-2"	42" ϕ Shaft with 12 # 11	W2162
13	4	3½	15" x 2½" x 2'-10"	2¼" ϕ x 4'-9"	42" ϕ Shaft with 10 # 11	W2157
11¾	4	3½	15" x 2½" x 2'-7½"	2¼" ϕ x 4'-9"	42" ϕ Shaft with 10 # 11	W1855
11½	4	3½	15" x 2½" x 2'-7½"	2¼" ϕ x 4'-9"	42" ϕ Shaft with 10 # 11	W1850
11½	3½	3	13" x 2½" x 2'-6"	2" ϕ x 4'-3"	42" ϕ Shaft with 8 # 10	W1846
10½	3½	3	13" x 2¼" x 2'-4"	2" ϕ x 4'-3"	36" ϕ Shaft with 8 # 10	W1640
10¼	3	2¾	11½" x 2¼" x 2'-2½"	1¾" ϕ x 3'-10"	36" ϕ Shaft with 8 # 9	W1636
9½	3	2¾	11½" x 2¼" x 2'-1"	1¾" ϕ x 3'-10"	36" ϕ Shaft with 8 # 9	W1434
9¼	3	2¾	11½" x 2" x 2'-0½"	1¾" ϕ x 3'-10"	36" ϕ Shaft with 8 # 9	W1430
8	2¾	2⅛	9¾" x 1¾" x 1'-9½"	1½" ϕ x 3'-4"	30" ϕ Shaft with 8 # 8	W1226
7	2½	2	9" x 1¾" x 1'-7"	1⅜" ϕ x 3'-1"	30" ϕ Shaft with 8 # 8	W1026
6¾	2¼	1⅞	8¼" x 1½" x 1'-6"	1¼" ϕ x 2'-11"	30" ϕ Shaft with 8 # 8	W1022
6¾	2	1⅝	7¼" x 1⅜" x 1'-5½"	1⅛" ϕ x 2'-8"	24" ϕ Shaft with 8 # 7	W1017
6½	1¾	1½	6½" x 1¼" x 1'-4½"	1" ϕ x 2'-5"	24" ϕ Shaft with 8 # 7	W1015

ANCHOR BOLT SIZE

DIA.	LENGTH *	PROJ. & THREAD
1" ϕ	2'-5"	4"
1⅛" ϕ	2'-8"	4½"
1¼" ϕ	2'-11"	5"
1⅜" ϕ	3'-1"	5½"
1½" ϕ	3'-4"	6"
1¾" ϕ	3'-10"	7"
2" ϕ	4'-3"	8"
2¼" ϕ	4'-9"	9"
2½" ϕ	5'-2"	10"
2¾" ϕ	5'-8"	11"

* Minimum dimensions are given.

ANCHOR BOLT DIA. d	WASHER DIMENSIONS OUTSIDE DIAMETER	HOLE DIAMETER	THICKNESS MIN.	THICKNESS MAX.	HOLE IN BASE PLATE
1½" or less	2 d	d + ⅛"	0.136"	0.177"	d + ¼"
1¾"	2 d - ⅛"	d + ⅛"	0.178"	0.280"	d + 5/16"
2"	2 d - ¼"	d + ⅛"	0.178"	0.280"	d + 5/16"
Over 2"	2 d - ½"	d + ⅛"	0.240"	0.340"	d + 5/16"

GENERAL NOTES:

Design conforms to Standard Specification for Structural Supports for Highway Signs, Luminaires and Traffic Signals for Design Heights up to 50'.

For size and spacing of columns see sheet 1 of 3.

At Contractor's option tower bracing connections [redacted] high strength bolted or welded. If welded connections are used, length of connection [redacted] taken from the table shown on sheet 3 of 3.

All connection bolts [redacted] conform to ASTM A325 or A449. Washers [redacted] conform to ASTM F436 - 76B. Bolts, nuts and washers [redacted] galvanized.

All structural steel [redacted] conform to ASTM A-36 except where noted. HS 50 [redacted] conform to ASTM A441, ASTM A572 or ASTM A588. Structural steel [redacted] galvanized after fabrication.

Nuts for Anchor Bolts [redacted] heavy hex and [redacted] conform to ASTM A194 Gr. 2H. Anchor bolts [redacted] conform to ASTM [redacted] 193-B7 or A687. Galvanize anchor bolt projection plus 6". Threads for anchor bolts and nuts [redacted] 8UN threads.

Anchor bolts [redacted] rigidly held in position during concrete placement by using steel templates at the top and bottom. The bottom template and anchor plate assembly [redacted] remain in place and [redacted] not [redacted] damaged during concrete placement. The top template shall be removed after concrete has set.

Exposed nuts and washers [redacted] galvanized in accordance with the Specifications. Embeded nuts and top and bottom templates need not be galvanized.

Concrete [redacted] Class "A".

Unless shown otherwise, welded steel bands [redacted] replaced with spiral as noted on the foundation detail.

All vertical reinforcing [redacted] carried to the bottom of the Drilled Shaft.

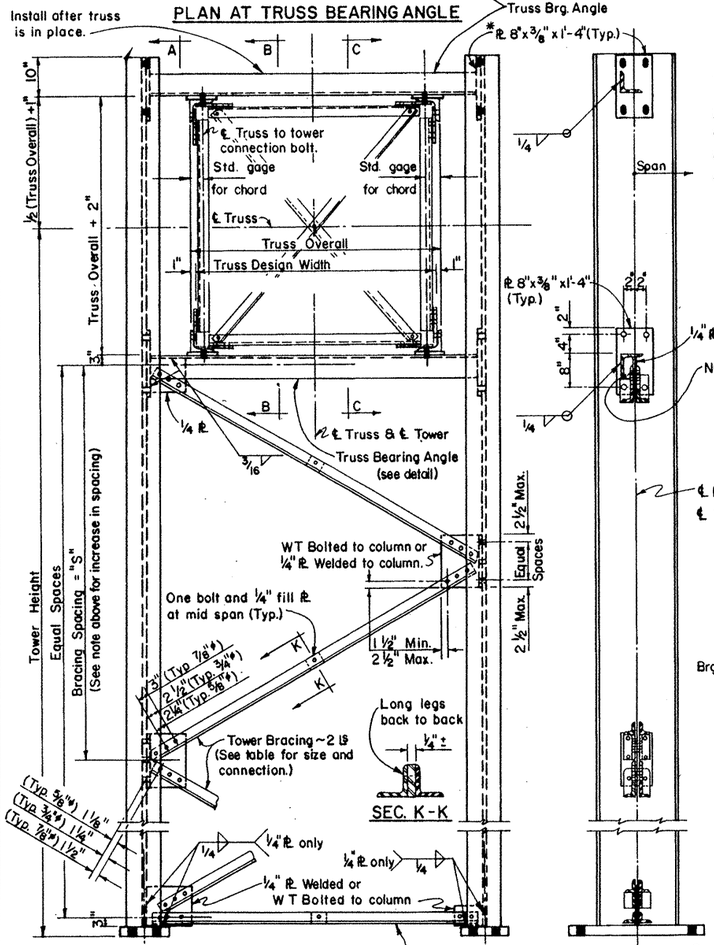

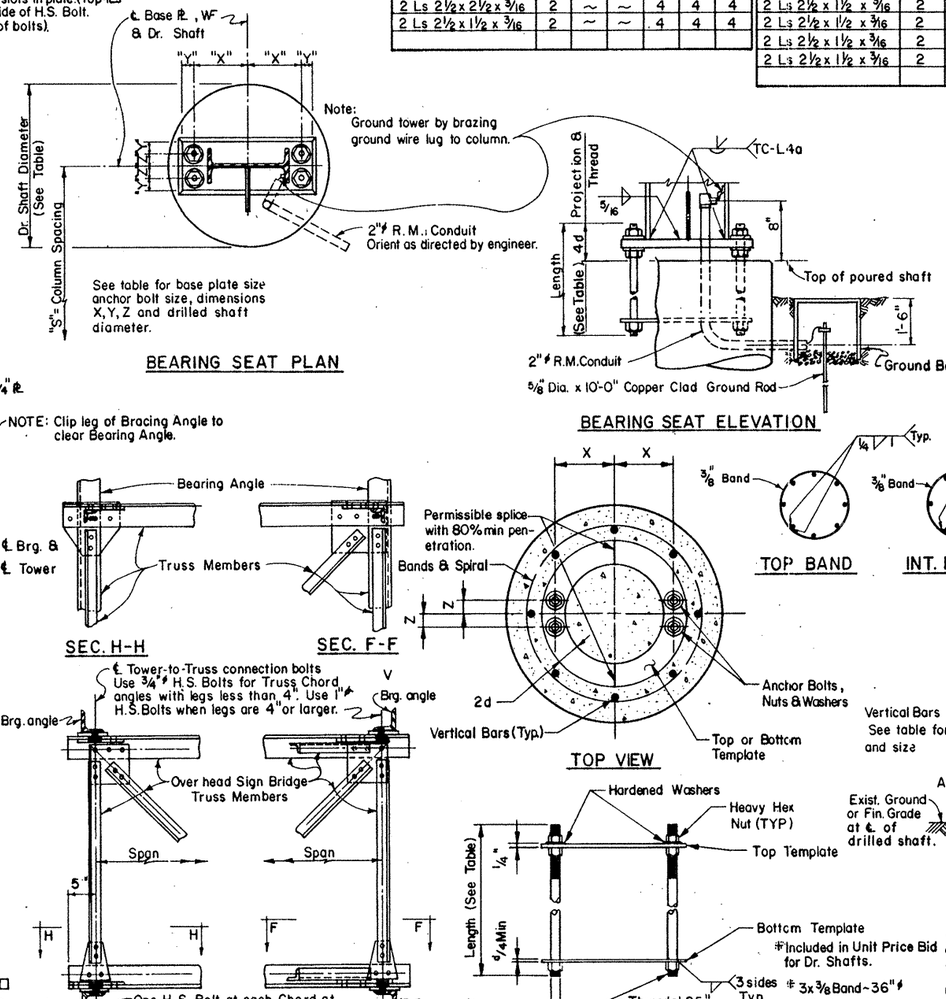

STATE DEPARTMENT OF HIGHWAYS AND PUBLIC TRANSPORTATION

OVERHEAD SIGN BRIDGE TOWER DETAILS

PREPARED BY AND FOR THE USE OF TEXAS SDHPT: OSBT

SHEET 2 OF 3

ORIGINAL DRAWING DATE 7-83	STATE DISTRICT	FEDERAL REGION	FEDERAL AID PROJECT #	SHEET
REVISIONS	21	6	NH 92(50)M	533
DN:-LEH CK:-CWC DW:-EDS CK:-LEH	COUNTY	CONTROL	SECTION	JOB	HIGHWAY
	HIDALGO	39	17	97	US83/281

45

NOTE: When chord angles of different thickness are spliced, use shim plate and number of bolts required for thinner angle. For Splice Angle use thickness of the thinner angle.

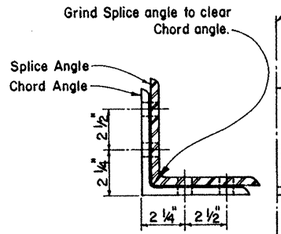

6" L Shown
Others similar.

SECTION ON ℄ SPLICE

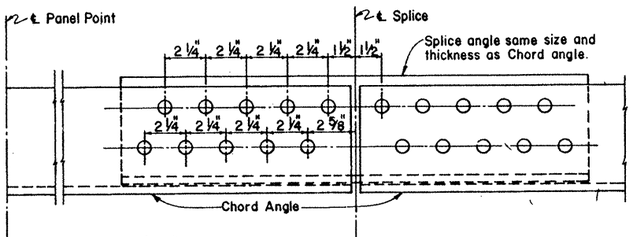

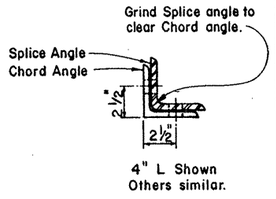

4" L Shown
Others similar.

SECTION ON ℄ SPLICE

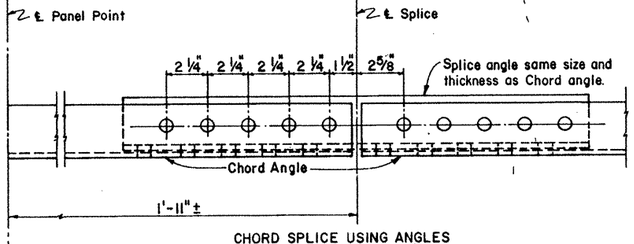

CHORD SPLICE USING ANGLES
(SINGLE SHEAR)
(Place splice angle on inside of truss.)

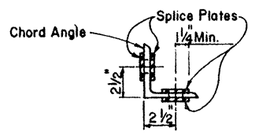

Area of Splice Plates [redacted] equal to or greater than area of Chord angle.

4" L shown
Others similar.

SECTION ON ℄ SPLICE

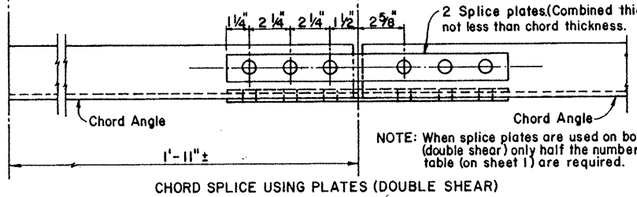

NOTE: When splice plates are used on both sides of chord angle (double shear) only half the number of bolts shown in the table (on sheet 1) are required.

CHORD SPLICE USING PLATES (DOUBLE SHEAR)

SPLICE DETAILS

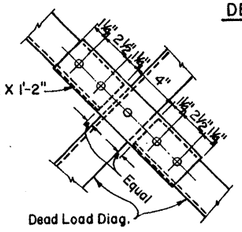

DETAIL H

TOTAL NO. OF BOLTS IN DIAGS. IN JOINT	NUMBER OF BOLTS REQD. IN GUSSET ℄ TO CHORD CONNECTION
0	2
2	2
3	3
4	3
5	4
6	4
8	5
10	6
12	6

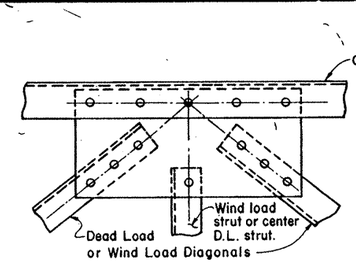

DETAIL A

DETAIL B

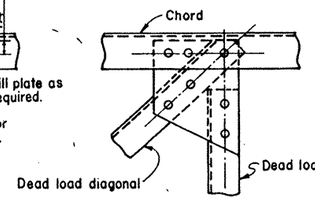

DETAIL C

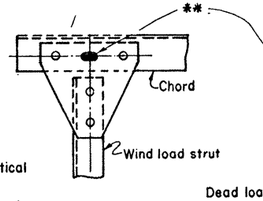

DETAIL D

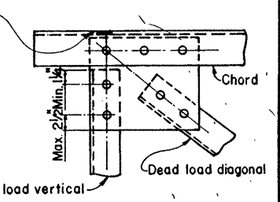

DETAIL F

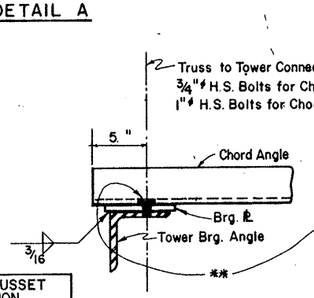

ELEVATION

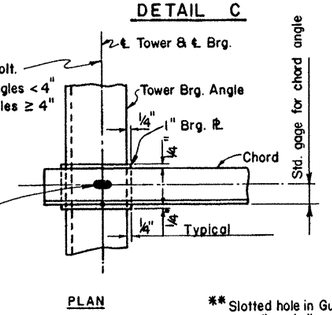

PLAN

BEARING PLATE DETAILS

NOTE: Bearing Plate t [redacted] omitted if if welded connections are used on Wind Truss.

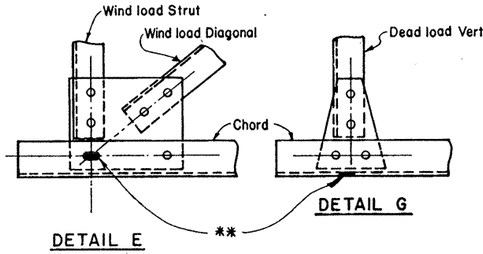

DETAIL E

DETAIL G

** Slotted hole in Gusset ℄ and Chord Angle.
1" X 1 1/2" slot for 3/4"ϕ bolts.
1 1/4" X 2" slot for 1"ϕ bolts.
Use ℄ washer on Gusset ℄ side.

CONNECTION DETAILS

GENERAL NOTES:

All bolts [redacted] high strength bolts conforming to A S T M A 325 or A 449.

The truss [redacted] have an upward camber not less than the dead load deflections shown in the table on sheet 1 of 3 when blocked at the ends under dead load of the truss only.

Chord angles [redacted] spliced in convenient lengths for galvanizing.

Connection and splice details are typical only; actual size of member and number of bolts will vary. The details shown on this sheet are intended as a guide only. See sheet 1 of 3 for number of bolts and size of members. Number of bolts shown for chord splice is based on single shear.

Gusset plates [redacted] same thickness as thickest web member in connection.

[redacted]

[redacted]

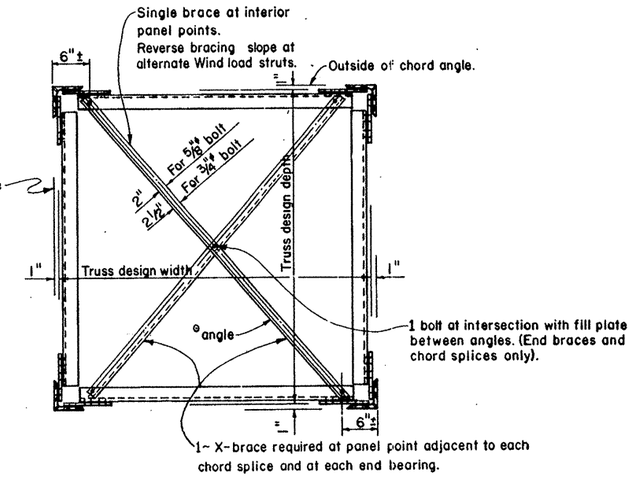

° 2" X 1 1/2" X 3/16" angle for 5/8"ϕ bolts. (1)
2 1/2" X 1 1/2" X 3/16" angle for 3/4"ϕ bolts. (1)

TRUSS SECTION
(DIAGONALS NOT SHOWN)

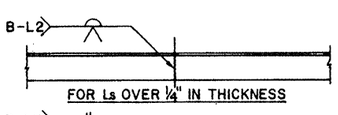

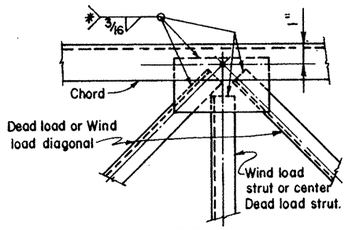

DETAIL A

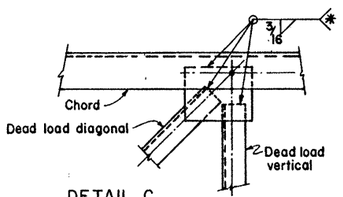

DETAIL C

Gussets plates in details "E" & "F" to be similar.

* MINIMUM LENGTH OF 3/16" FILLET WELD REQUIRED		
NUMBER OF BOLTS	TO REPLACE 5/8"ϕ BOLTS	TO REPLACE 3/4"ϕ BOLTS
1	2"	3"
2	4"	6"
3	6"	9"
4	8"	11 1/2"
5	10"	14 1/2"
6	12"	17 1/2"
7	14"	20"

ALTERNATE WELDED SPLICE AND CONNECTION DETAILS

[redacted]PREPARED BY AND FOR THE USE OF TEXAS SDHPT.

STATE DEPARTMENT OF HIGHWAYS AND PUBLIC TRANSPORTATION

OVERHEAD SIGN BRIDGE TRUSS DETAILS

OSBC

SHEET 3 OF 3

ORIGINAL DRAWING DATE: 7-83		STATE DISTRICT	FEDERAL REGION	FEDERAL AID PROJECT ϕ		SHEET
DN.:-CWC	REVISIONS	21	6	NH 92(50)M		534
CK.:- LEH		COUNTY		CONTROL	SECTION	JOB	HIGHWAY
DW.:-EDS		HIDALGO		39	17	97	US83/281
CK.:-CWC							46

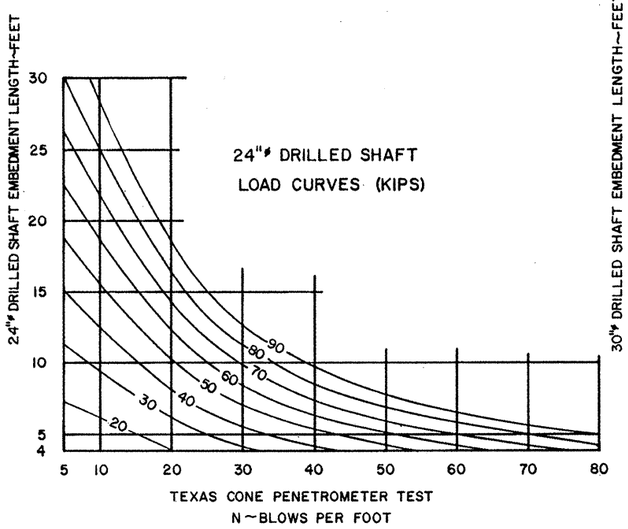

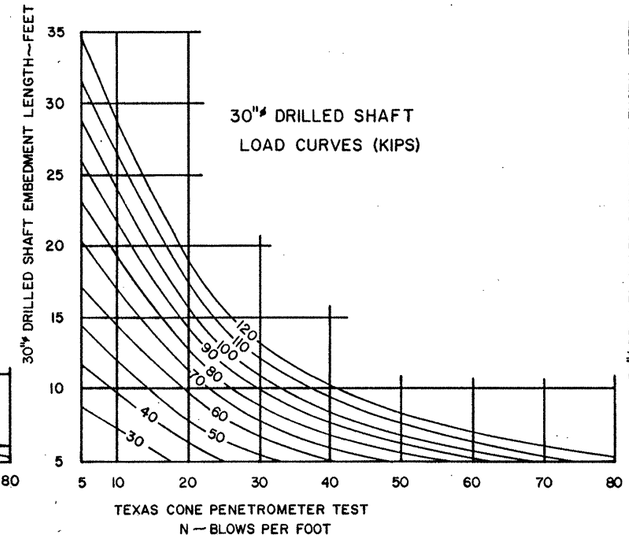

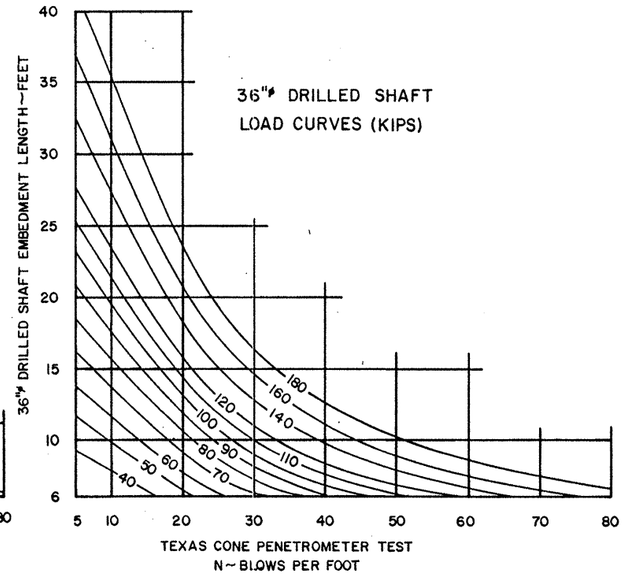

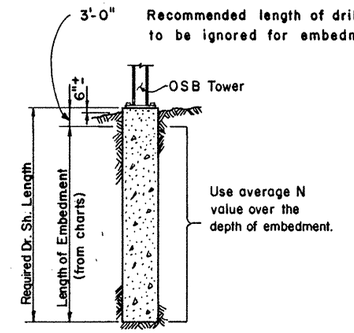

PROCEDURE:

1. Determine uplift from the applicable OSB sheet 1 of 3.
2. Determine required drilled shaft diameter from the applicable OSBT sheet 2 of 3.
3. Make an initial estimate of the required embedment length.
4. From Texas Cone Penetrometer Test data determine the average N value over the length of embedment.
5. Enter chart (for the correct shaft diameter) from the bottom at the average N value.
6. Proceed vertically into chart and locate intersection with column uplift, interpolate between curves as needed.
7. From intersection point turn 90° to left and read embedment length along vertical scale.
8. If embedment length differs significantly from estimated value, return to step 4 with the embedment length determined in step 7.
9. Compute the required length of drilled shaft by adding 3'-0" to the required embedment length.

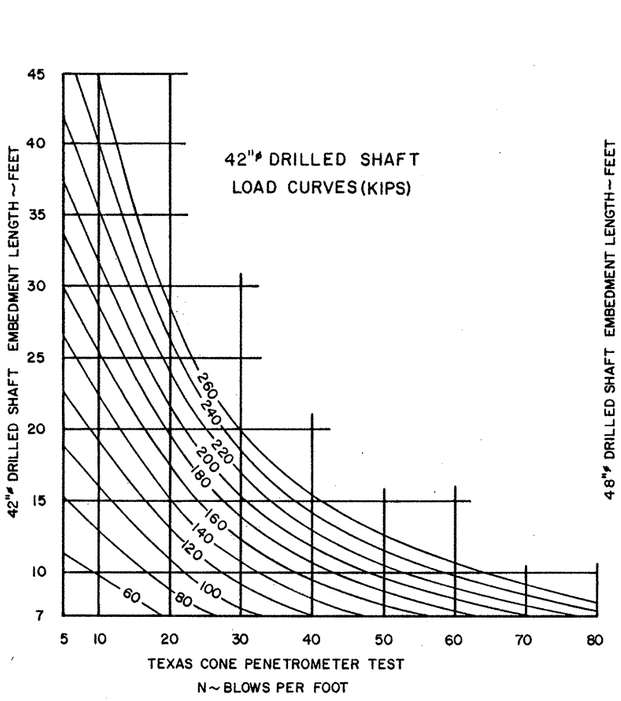

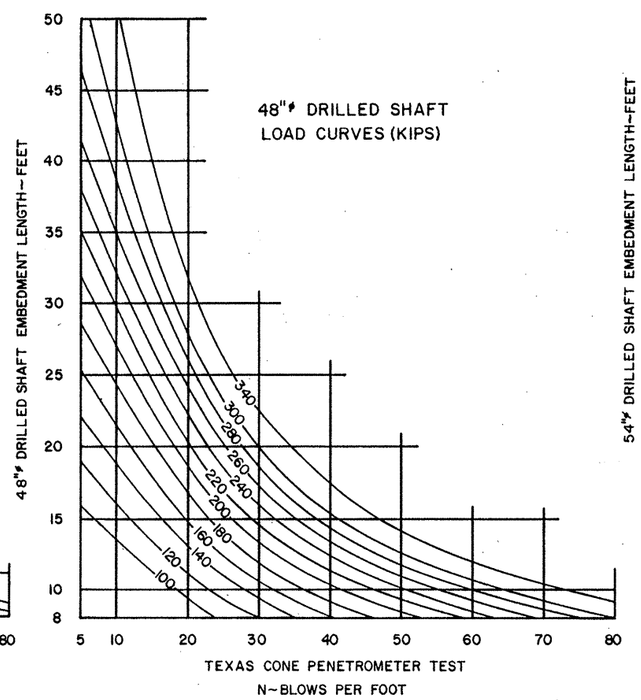

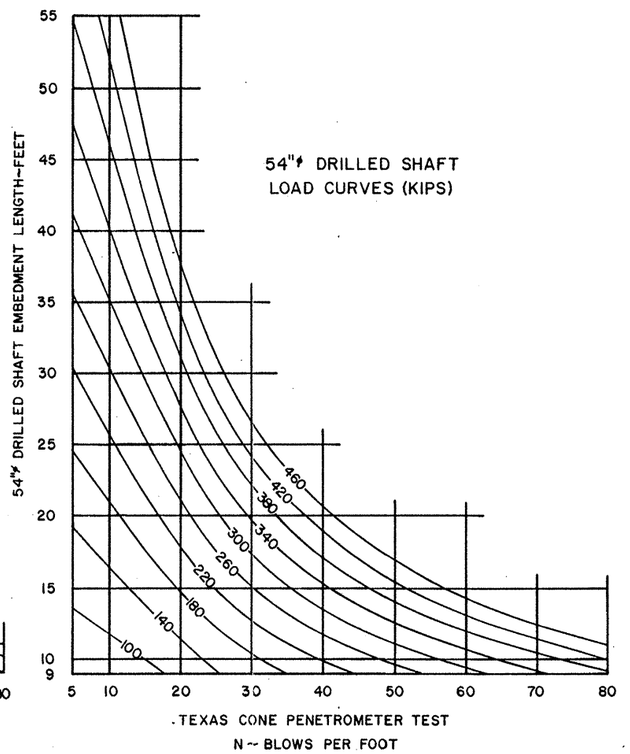

GENERAL NOTES:

These charts are [redacted] used for Simple Span Overhead Sign Bridges with two shafts per tower.

Numbers shown on curved lines are uplift in Kips.
Dead load of concrete in drilled shafts is included in curves.
Minimum embedment of drilled shafts is two diameters.
Load curves [redacted] not [redacted] extrapolated below the N value of 5 blows per foot.

STATE DEPARTMENT OF HIGHWAYS AND PUBLIC TRANSPORTATION

FOUNDATION EMBEDMENT SELECTION CHARTS

OSB-FD

ORIGINAL DRAWING DATE: 7-83	STATE DISTRICT	FEDERAL REGION	FEDERAL AID PROJECT #	SHEET
DN.:-LEH	21	6	NH 92(50)M	535
CK.:-HEH	COUNTY	CONTROL	SECTION	JOB	HIGHWAY
DW.:-EDS	HIDALGO	39	17	97	US83/281
CK.:-LEH					52

REVISIONS

ZONE 1 100 M.P.H. WIND

TOWER HGT. FT.	10' SPAN											15' SPAN												20' SPAN												25' SPAN												TOWER HGT. FT.
	TOWER PIPE			ANCHOR BOLTS			BASE PLATE	TRUSS	DESIGN LOADS			TOWER PIPE			ANCHOR BOLTS			BASE PLATE	TRUSS	DESIGN LOADS			TOWER PIPE			ANCHOR BOLTS			BASE PLATE	TRUSS	DESIGN LOADS			TOWER PIPE			ANCHOR BOLTS			BASE PLATE	TRUSS	DESIGN LOADS				
	O.D. IN.	WALL THICK. IN.	DEFL. ΔH IN.	SIZE	NO.	BOLT CIRCLE DIA.	SIZE IN.	DEFL. Δv IN.	SHEAR V KIPS	TORSION T K-FT	MOMENT M K-FT	O.D. IN.	WALL THICK. IN.	DEFL. ΔH IN.	SIZE	NO.	BOLT CIRCLE DIA.	SIZE IN.	DEFL. Δv IN.	SHEAR V KIPS	TORSION T K-FT	MOMENT M K-FT	O.D. IN.	WALL THICK. IN.	DEFL. ΔH IN.	SIZE	NO.	BOLT CIRCLE DIA.	SIZE IN.	DEFL. Δv IN.	SHEAR V KIPS	TORSION T K-FT	MOMENT M K-FT	O.D. IN.	WALL THICK. IN.	DEFL. ΔH IN.	SIZE	NO.	BOLT CIRCLE DIA.	SIZE IN.	DEFL. Δv IN.	SHEAR V KIPS	TORSION T K-FT	MOMENT M K-FT	
14'	16	0.250	0.108	1¼"ϕ	8	20½"	24X1¼"	0.2	5.61	25.29	77.33	16	0.344	0.180	1½"ϕ	8	21"	25X1¾"	0.5	8.43	58.69	118.08	20	0.310	0.177	1¾"ϕ	8	25⅜"	29¾X1¾"	0.6	11.53	107.50	162.73	24	0.310	0.165	1¾"ϕ	8	29⅜"	33¾X1½"	0.8	14.40	168.25	205.58	14'
15'	↓	↓	0.124	↓	↓	↓	24X1¼"	↓	5.64	↓	82.92	↓	0.344	0.206	↓	↓	↓	↓	↓	8.46	↓	126.44	↓	0.310	0.203	↓	↓	↓	↓	0.6	11.56	↓	174.09	↓	0.310	0.189	↓	↓	↓	33¾X1½"	↓	14.44	↓	219.64	15'
16'			0.141				24X1¼"		5.66		88.55		0.344	0.235						8.48		134.84		0.310	0.231					0.7	11.59		185.51		0.310	0.215				33¾X1⅝"		14.48		233.79	16'
17'			0.159				24X1¼"		5.69		94.20		0.344	0.265						8.51		143.27		0.344	0.240						11.62		197.01		0.344	0.221				33¾X1⅝"		14.52		248.01	17'
18'			0.178				24X1⅜"		5.71		99.88		0.375	0.274	↑					8.54		151.73		0.344	0.269						11.66		208.52		0.344	0.248	↓			33¾X1⅝"	0.8	14.56		262.29	18'
19'			0.198	↓		↓	24X1⅜"		5.74		105.58		0.375	0.306	1½"ϕ		21"	25X1¾"		8.56		160.23		0.344	0.300				29¾X1¾"		11.69		220.08		0.344	0.276	1¾"ϕ		29⅜"	33¾X1¾"	0.9	14.60		276.65	19'
20'			0.220	1¼"ϕ		20½"	24X1½"		5.77		111.32		0.406	0.315	1¾"ϕ		21½"	26X1⅞"		8.59		168.76		0.375	0.306				29¾X1⅞"		11.72		231.68		0.344	0.306	2"ϕ		29¾"	34½X1¾"		14.64		291.07	20'
21'		0.250	0.242	1⅜"ϕ		20¾"	24½X1½"		5.79		117.09		0.406	0.347	↑		↑	26X1⅞"		8.62		177.32		0.375	0.337				29¾X1⅞"		11.76		243.33		0.375	0.311	↑			34½X1⅞"		14.68		305.54	21'
22'		0.281	0.238	↑		↑	24½X1½"		5.82		122.88		0.438	0.354				26X2"		8.64		185.91		0.406	0.341				29¾X1⅞"		11.79		255.00		0.375	0.341				34½X1⅞"		14.72		320.07	22'
23'		0.281	0.260				24½X1⅝"		5.85		128.70		0.438	0.387				26X2"		8.67		194.53		0.406	0.373	1¾"ϕ		25⅜"	29¾X2"	0.7	11.82		266.73		0.375	0.373				34½X2"		14.76		334.66	23'
24'		0.281	0.283				24½X1⅝"		5.87		134.55		0.469	0.395				26X2"		8.69		203.18		0.406	0.406	2"		25¾"	30½X2"	0.8	11.86		278.50		0.406	0.376				34½X2"	0.9	14.80		349.29	24'
25'		0.312	0.279	1⅜"ϕ		20¾"	24½X1⅝"		5.90		140.42		0.469	0.429				26X2⅛"		8.72		211.85		0.438	0.410				30½X2⅛"		11.89		290.30		0.406	0.408				34½X2"	1.0	14.84		363.98	25'
26'		0.312	0.302	1½"ϕ		21"	25X1¾"		5.93		146.33		0.500	0.440				26X2⅛"		8.75		220.56		0.438	0.443				30½X2⅛"		11.92		302.15		0.406	0.442				34½X2"		14.88		378.72	26'
27'		0.312	0.325	↑		↑	25X1¾"		5.95		152.26		0.500	0.474	↑		↑	26X2⅛"		8.77		229.30		0.469	0.449				30½X2⅛"		11.96		314.03		0.406	0.476	↑			34½X2⅛"		14.92		393.51	27'
28'		0.344	0.320				25X1¾"		5.98		158.22		0.531	0.482	1¾"ϕ		21½"	26X2¼"		8.80		238.06		0.469	0.483				30½X2¼"		11.99		325.95		0.438	0.477	2"ϕ		29¾"	34½X2⅛"		14.96		408.34	28'
29'		0.344	0.343				25X1⅞"		6.01		164.20		0.531	0.517	2"ϕ		22"	27X2¼"		8.83		246.85		0.500	0.488				30½X2¼"		12.02		337.91		0.438	0.512	2¼"ϕ		30"	35X2¼"		15.00		423.22	29'
30'		0.344	0.367	1½"ϕ		21"	25X1⅞"		6.03		170.21		0.656	0.459	2"ϕ		22"	27X2⅜"		8.85		255.67		0.500	0.523				30½X2¼"		12.05		349.90		0.469	0.513				35X2¼"		15.04		438.15	30'
31'	↓	0.375	0.362	1¾"ϕ	↓	21½"	26X1⅞"	↓	6.06	↓	176.25	↓	0.656	0.490	2"ϕ	↑	22"	27X2⅜"	↓	8.88	↓	264.52	↓	0.531	0.528	↓	↓	↓	30½X2¼"	↓	12.09	↓	361.93	↓	0.469	0.548	↓	↓	↓	35X2¼"	1.0	15.08	↓	453.12	31'
32'	16	0.375	0.385	1¾"ϕ	8	21½"	26X1⅞"	0.2	6.09	25.29	182.32	16	0.656	0.523	2"ϕ	8	22"	27X2⅜"	0.5	8.91	58.69	273.39	20	0.531	0.563	2"	8	25¾"	30½X2⅜"	0.8	12.12	107.50	374.00	24	0.469	0.584	2¼"ϕ	8	30"	35X2¼"	1.1	15.12	168.25	468.13	32'

TOWER HGT. FT.	30' SPAN											35' SPAN												40' SPAN												TOWER HGT. FT.
	TOWER PIPE			ANCHOR BOLTS			BASE PLATE	TRUSS	DESIGN LOADS			TOWER PIPE			ANCHOR BOLTS			BASE PLATE	TRUSS	DESIGN LOADS			TOWER PIPE			ANCHOR BOLTS			BASE PLATE	TRUSS	DESIGN LOADS				
	O.D. IN.	WALL THICK. IN.	DEFL. ΔH IN.	SIZE	NO.	BOLT CIRCLE DIA.	SIZE IN.	DEFL. Δv IN.	SHEAR V KIPS	TORSION T K-FT	MOMENT M K-FT	O.D. IN.	WALL THICK. IN.	DEFL. ΔH IN.	SIZE	NO.	BOLT CIRCLE DIA.	SIZE IN.	DEFL. Δv IN.	SHEAR V KIPS	TORSION T K-FT	MOMENT M K-FT	O.D. IN.	WALL THICK. IN.	DEFL. ΔH IN.	SIZE	NO.	BOLT CIRCLE DIA.	SIZE IN.	DEFL. Δv IN.	SHEAR V KIPS	TORSION T K-FT	MOMENT M K-FT			
14'	24	0.375	0.199	2"ϕ	8	29¾"	34½X1¾"	1.1	17.16	242.54	249.26	30	0.310	0.178	2"ϕ	8	35¾"	40½X1⅝"	1.3	20.11	330.60	296.99	30	0.375	0.206	2¼"ϕ	8	36"	41X1⅞"	1.8	22.89	432.38	347.21			
15'	↓	0.375	0.238	↓	↓	↓	34½X1¾"	1.2	17.20	↓	265.80	↓	0.310	0.205	↓	↓	↓	40½X1⅝"	1.4	20.16	↓	316.04	↓	0.410	0.219	↓	↓	↓	↓	1.8	22.94	↓	368.40			
16'		0.406	0.251				34½X1⅞"	↕	17.24		282.45		0.310	0.233				40½X1⅝"	↕	20.21		335.27		0.410	0.249					1.8	22.99		389.82			
17'		0.406	0.283				34½X1⅞"		17.28		299.21		0.344	0.239				40½X1¾"		20.26		354.65		0.410	0.282				↓	1.9	23.04		411.46			
18'		0.438	0.296				34½X1⅞"	1.2	17.32		316.06		0.344	0.268				40½X1¾"	1.4	20.31		374.16		0.410	0.316				41X1⅞"	2.0	23.09		433.29			
19'		0.438	0.329				34½X 2"	1.3	17.36		332.99		0.344	0.299				40½X1¾"	1.5	20.36		393.81		0.440	0.327				41 X 2"	2.0	23.14		455.29			
20'		0.438	0.355				34½X 2"	1.3	17.40		350.00		0.344	0.331	2"ϕ		35¾"	40½X1¾"	1.5	20.41		413.56		0.440	0.362				↓	2.0	23.19		477.44			
21'		0.467	0.377	2"ϕ		29¾"	34½X 2"	1.3	17.44		367.09		0.375	0.336	2¼"ϕ		36"	41X1⅞"	1.5	20.46		433.43		0.440	0.399					2.1	23.24		499.74			
22'		0.467	0.414	2¼"ϕ		30"	35X2⅛"	1.4	17.48		384.25		0.375	0.369	↑		↑	41X1⅞"	1.6	20.51		453.39		0.440	0.438	↑		↑	41 X 2"	2.2	23.29		522.16			
23'		0.467	0.452	↑		↑	35X2⅛"	↕	17.52		401.47		0.375	0.403				41 X 2"	1.6	20.56		473.44		0.470	0.531	2¼"ϕ		36"	41X2⅛"	2.2	23.34		544.69			
24'		0.500	0.463				35X2⅛"		17.56		418.75		0.375	0.439				41 X 2"	1.7	20.61		493.59		0.470	0.489	2½"ϕ		36½"	42X2⅛"	2.2	23.39		567.34			
25'		0.530	0.475				35X2¼"		17.60		436.09		0.406	0.442				41 X 2"	↓	20.66		513.81		0.470	0.531	↓		↓	42X2¼"	2.3	23.44		590.10			
26'		0.530	0.514				35X2¼"	1.4	17.64		453.50		0.406	0.478				41X2"		20.70		534.12		0.500	0.540				42X2¼"	↑	23.49		612.95			
27'		0.530	0.554				35X2¼"	1.5	17.68		470.95		0.406	0.512				41 X 2"		20.75		554.50		0.500	0.582				42X2¼"		23.54		635.89			
28'		0.530	0.596				35X2⅜"	1.5	17.72		488.46		0.438	0.514				41X2⅛"		20.80		574.96		0.500	0.626				42X2⅜"		23.59		658.93			
29'		0.562	0.607	↓		↓	35X2⅜"	1.5	17.76		506.03		0.438	0.552	↑		↑	41X2¼"	1.7	20.85		595.49		0.531	0.647				42X2⅜"	2.3	23.64		682.04			
30'		0.562	0.649	2¼"ϕ		30"	35X2⅜"	1.6	17.80		523.64		0.438	0.591	2¼"ϕ		36"	41X2¼"	1.8	20.90		616.08		0.531	0.692				42X2⅜"	2.4	23.69		705.24			
31'	↓	0.594	0.659	2½"ϕ	↓	30½"	36X2½"	1.6	17.84	↓	541.31	↓	0.469	0.591	2½"ϕ	↑	36½"	42X2¼"	1.8	20.95	↓	636.75	↓	0.562	0.687	↓	↓	↓	42X2⅜"	2.4	23.73	↓	728.52			
32'	24	0.594	0.702	2½"ϕ	8	30½"	36X2½"	1.6	17.88	242.54	559.02	30	0.469	0.630	2½"ϕ	8	36½"	42X2¼"	1.8	21.00	330.60	657.48	30	0.562	0.732	2½"ϕ	8	36½"	42X2½"	2.4	23.78	432.38	751.87			

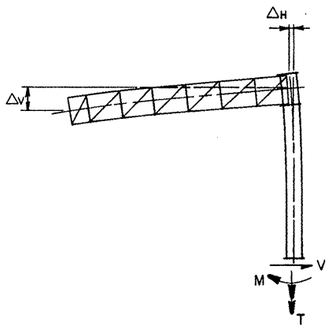

ELEVATION

(SHOWING DESIGN LOADS AND DEAD LOAD DEFLECTIONS)

TRUSS DETAILS

SPAN	10', 15' & 20'	25'	30'	35'	40'
W x D = WIDTH x DEPTH	4.5 X 4.5	4.5 X 4.5	4.5 X 4.5	4.5 X 4.5	4.5 X 4.5
CHORD	3 X 3 X 3/16 ③	3 X 3 X ¼ ④	3½X3½X¼(HS50) ⑦	3½X3½X5/16(HS50) ⑨	3½X3½X⅜(HS50) ⑧
DEAD LOAD DIAGONAL	2½ X 1½ X 3/16 ②	2½ X 1½ X 3/16 ②	2½ X 1½ X 3/16 ②	2½X 1½ X 3/16 ②	3 X 2 X 3/16 ②
WIND LOAD DIAGONAL	3 X 3 X 3/16 ②	3 X 3 X 3/16 ②	3 X 2½ X ¼ ③	3 X 3 X ¼ ③	3 X 3 X ¼ ③
DEAD LOAD VERTICAL	2½ X 1½ X 3/16 ②	2½ X 1½ X 3/16 ②	2½ X 1½ X 3/16 ②	2½ X 1½ X 3/16 ②	3 X 2 X 3/16 ②
WIND LOAD STRUT	2 X 2 X 3/16 ①	2 X 2 X 3/16 ①	2 X 2 X 3/16 ①	2 X 2 X 3/16 ①	2½ X 2½ X 3/16 ①
TRUSS DEAD LOAD	42 #/ft.	47 #/ft.	53 #/ft.	60 #/ft.	70 #/ft.
SIZE H.S. BOLTS IN CONN.	5/8"ϕ	5/8"ϕ	5/8"ϕ	5/8"ϕ	¾"ϕ
NO. & SIZE OF H.S. BOLTS IN CHORD ANGLE TO TOWER CONNECTION PLATE	3 ~ 5/8"ϕ ea.	5 ~ 5/8"ϕ or 3 ~ ¾"ϕ ea.	7 ~ 5/8"ϕ or 5 ~ ¾"ϕ ea.	9 ~ 5/8"ϕ or 7 ~ ¾"ϕ ea.	8 ~ ¾"ϕ ea.

All truss members are angles.

Number of High Strength bolts required in truss connection or splice are indicated thus ③ after the member size.

Deflections shown include the design loads for Truss, Sign Panel, Lights and Walkways.

GENERAL NOTES:

Steel for tower pipe [redacted] conform to ASTM A53 Grade B or to ASTM A501. Tower pipe wall thickness shown is the minimum allowable. Fabricator [redacted] use the wall thickness shown or pipe of the same diameter with greater wall thickness.

All other structural steel [redacted] conform to ASTM A36 except where noted HS 50 which [redacted] ASTM A 441, ASTM A572 or ASTM A588.

All connection bolts [redacted] conform to ASTM A325 or ASTM A449.

All structural steel, connection bolts, nuts and washers [redacted] galvanized in accordance with the Specifications.

Compensate for truss deflection at free end by offsetting upper and lower bolt holes at truss-to-tower connection.

For truss details see sheet 2 of 3.

For base and foundation details see sheet 3 of 3.

For cantilever truss lengths falling between those shown use sizes called for in the next longer span.

Towers for cantilever sign supports are designed for the equivalent area of a 10 foot deep sign panel over 100% of the span length. Design includes 3 lb./□' for sign panel and 20 lb./lin. ft. for lights and 50 lb./lin. ft. for walkways all placed as specified for the design sign panel.

Details called for hereon are applicable for Design Wind Heights up to 30' inclusive.

PREPARED BY AND FOR THE USE OF TEXAS SDHPT.

STATE DEPARTMENT OF HIGHWAYS AND PUBLIC TRANSPORTATION

CANTILEVER OVERHEAD SIGN SUPPORTS

COSS-Z1

ORIGINAL DRAWING DATE: 7-83	STATE DISTRICT	FEDERAL REGION	FEDERAL AID PROJECT #		SHEET
DN.:-CWC	21	6	NH 92(50)M		536
CK.:-LEH	COUNTY		CONTROL	SECTION	JOB	HIGHWAY
DW.:-EDS	HIDALGO		39	17	97	US83/281
CK.:-LEH						61

REVISIONS

ZONE I 100 M.P.H. WIND

TOWER HGT. FT.	10' SPAN										15' SPAN									
	TOWER PIPE			ANCHOR BOLTS			BASE PLATE	TRUSS	DESIGN LOADS		TOWER PIPE			ANCHOR BOLTS			BASE PLATE	TRUSS	DESIGN LOADS	
	O.D. IN.	WALL THICK. IN.	DEFL. ΔH IN.	SIZE	NO.	BOLT CIRCLE DIA.	SIZE IN.	DEFL. ΔV IN.	SHEAR V KIPS	TORSION T K-FT	MOMENT M K-FT	O.D. IN.	WALL THICK. IN.	DEFL. ΔH IN.	SIZE	NO.	BOLT CIRCLE DIA.	SIZE IN.	DEFL. ΔV IN.	SHEAR V KIPS	TORSION T K-FT	MOMENT M K-FT
25'	16	0.375	0.24	1½"	8	21.0	25 x 1¾	0.2	6.46	27.82	153.7	16	0.531	0.384	1¾"	8	21½	26 x 2¼	0.5	9.30	62.60	225.51
26'	16	0.375	0.25	1½"	8	21.0	25 x 1¾		6.49	27.82	160.15	16	0.531	0.415	1¾"	8	21½	26 x 2¼		9.33	62.60	234.80
27'	16	0.406	0.26	1½"	8	21.0	25 x 1¾		6.52	27.82	166.65	16	0.531	0.448	1¾"	8	21½	26 x 2¼		9.36	62.60	244.12
28'	16	0.438	0.26	1½"	8	21.0	25 x 1⅞		6.55	27.82	173.18	16	0.656	0.400	2"	8	22	27 x 2⅜		9.39	62.60	253.47
29'	16	0.469	0.26	1½"	8	21.0	25 x 1⅞		6.58	27.82	179.73	16	0.656	0.429	2"	8	22	27 x 2⅜		9.42	62.60	262.85
30'	16	0.469	0.27	1¾"	8	21.5	26 x 1⅞		6.61	27.82	186.32	16	0.687	0.441	2"	8	22	27 x 2½		9.45	62.60	272.26
31'	16	0.469	0.29	1¾"	8	21.5	26 x 2		6.64	27.82	192.94	16	0.687	0.471	2"	8	22	27 x 2½		9.48	62.60	281.70
32'	16	0.469	0.31	1¾"	8	21.5	26 x 2		6.67	27.82	199.59	16	0.687	0.502	2"	8	22	27 x 2½		9.50	62.60	291.17
33'	16	0.500	0.32	1¾"	8	21.5	26 x 2⅛		6.70	27.82	206.26	16	0.687	0.534	2"	8	22	27 x 2½		9.53	62.60	300.68
34'	16	0.500	0.33	1¾"	8	21.5	26 x 2⅛		6.73	27.82	212.97	16	0.750	0.525	2"	8	22	27 x 2½		9.56	62.60	310.21
35'	16	0.500	0.35	1¾"	8	21.5	26 x 2⅛		6.75	27.82	219.70	16	0.750	0.557	2¼"	8	22½	28 x 2⅝		9.59	62.60	319.77
36'	16	0.531	0.35	1¾"	8	21.5	26 x 2⅛		6.78	27.82	226.47	16	0.750	0.589	2¼"	8	22½	28 x 2⅝		9.62	62.60	329.37
37'	16	0.531	0.37	1¾"	8	21.5	26 x 2¼		6.81	27.82	233.26	16	0.750	0.622	2¼"	8	22½	28 x 2¾		9.65	62.60	338.99
38'	16	0.531	0.39	1¾"	8	21.5	26 x 2¼		6.84	27.82	240.08	16	0.750	0.656	2¼"	8	22½	28 x 2¾		9.65	62.60	347.49
39'	16	0.656	0.35	1¾"	8	21.5	26 x 2¼		6.87	27.82	246.94	16	0.843	0.626	2¼"	8	22½	28 x 2⅞		9.71	62.60	358.32
40'	16	0.656	0.36	1¾"	8	21.5	26 x 2¼		6.90	27.82	253.82	16	0.843	0.658	2¼"	8	22½	28 x 2⅞		9.74	62.60	368.03
42'	16	0.656	0.40	2"	8	22.0	27 x 2⅜		6.96	27.82	267.67	16	0.843	0.726	2½"	8	22½	28 x 3		9.80	62.60	387.55
44'	16	0.687	0.42	2"	8	22.0	27 x 2⅜		7.02	27.82	281.64	16	1.031	0.675	2¼"	8	22½	28 x 3		9.85	62.60	407.18
45'	16	0.687	0.44	2"	8	22.0	27 x 2⅜	0.2	7.05	27.82	288.67	16	1.218	0.619	2¼"	8	22½	28 x 3	0.5	9.88	62.60	417.04

TOWER HGT. FT.	20' SPAN										25' SPAN										TOWER HGT. FT.
	TOWER PIPE			ANCHOR BOLTS			BASE PLATE	TRUSS	DESIGN LOADS		TOWER PIPE			ANCHOR BOLTS			BASE PLATE	TRUSS	DESIGN LOADS		
	O.D. IN.	WALL THICK. IN.	DEFL. ΔH IN.	SIZE	NO.	BOLT CIRCLE DIA.	SIZE IN.	DEFL. ΔV IN.	SHEAR V KIPS	TORSION T K-FT	MOMENT M K-FT	O.D. IN.	WALL THICK. IN.	DEFL. ΔH IN.	SIZE	NO.	BOLT CIRCLE DIA.	SIZE IN.	DELF. ΔV IN.	SHEAR V KIPS	TORSION T K-FT	MOMENT M K-FT	
25'	20	0.438	0.411	2"	8	25¾	30½x2⅛	0.8	12.34	111.29	300.38	24	0.469	0.356	2"	8	29¾	34½x2⅛	0.9	15.37	173.89	375.94	25'
26'	20	0.438	0.444	2"	8	25¾	30½x2⅛		12.37	111.29	312.67	24	0.469	0.385	2"	8	29¾	34½x2⅛		15.41	173.89	391.21	26'
27'	20	0.469	0.449	2"	8	25¾	30½x2¼		12.41	111.29	325.01	24	0.500	0.391	2"	8	29¾	34½x2¼		15.46	173.89	406.54	27'
28'	20	0.500	0.455	2"	8	25¾	30½x2¼		12.44	111.29	337.38	24	0.500	0.421	2¼"	8	30	35 x2¼		15.50	173.89	421.92	28'
29'	20	0.500	0.488	2"	8	25¾	30½x2¼		12.48	111.29	349.80	24	0.500	0.451	2¼"	8	30	35 x2¼		15.54	173.89	437.35	29'
30'	20	0.531	0.495	2"	8	25¾	30½x2¼		12.52	111.29	362.25	24	0.500	0.483	2¼"	8	30	35 x2¼		15.59	173.89	452.82	30'
31'	20	0.562	0.501	2"	8	25¾	30½x2⅜		12.55	111.29	374.75	24	0.531	0.488	2¼"	8	30	35 x2¼	0.9	15.63	173.89	468.35	31'
32'	20	0.562	0.534	2¼"	8	26	31 x 2⅜		12.59	111.29	387.28	24	0.531	0.520	2¼"	8	30	35 x2¼	1.0	15.68	173.89	483.93	32'
33'	20	0.562	0.568	2¼"	8	26	31 x 2⅜		12.63	111.29	399.85	24	0.531	0.553	2¼"	8	30	35 x2¼		15.72	173.89	499.55	33'
34'	20	0.594	0.573	2¼"	8	26	31 x 2⅜		12.66	111.29	412.46	24	0.531	0.587	2¼"	8	30	35 x2⅜		15.76	173.89	515.23	34'
35'	20	0.594	0.607	2¼"	8	26	31 x2½		12.70	111.29	425.11	24	0.531	0.622	2½"	8	30½	36 x2⅜		15.81	173.89	530.95	35'
36'	20	0.594	0.643	2¼"	8	26	31 x 2⅝		12.74	111.29	437.80	24	0.562	0.624	2½"	8	30½	36 x2½		15.85	173.89	546.71	36'
37'	20	0.625	0.648	2¼"	8	26	31 x 2⅝		12.77	111.29	450.53	24	0.562	0.659	2½"	8	30½	36 x2½	1.0	15.89	173.89	562.53	37'
38'	20	0.625	0.684	2¼"	8	26	31 x 2⅝		12.81	111.29	463.29	24	0.562	0.695	2½"	8	30½	36 x2½	1.1	15.94	173.89	578.39	38'
39'	20	0.656	0.689	2¼"	8	26	31 x 2¾		12.84	111.29	476.09	24	0.594	0.696	2½"	8	30½	36 x2⅝		15.98	173.89	594.30	39'
40'	20	0.656	0.725	2¼"	8	26	31 x 2¾		12.88	111.29	488.93	24	0.594	0.732	2½"	8	30½	36 x2⅝		16.03	173.89	610.25	40'
42'	20	0.719	0.736	2½"	8	26½	31½x2¾		12.95	111.29	514.72	24	0.625	0.770	2½"	8	30½	36 x2¾		16.11	173.89	642.29	42'
44'	20	0.750	0.779	2½"	8	26½	31½x2⅞		13.03	111.29	540.66	24	0.656	0.808	2½"	8	30½	36 x2¾		16.20	173.89	674.52	44'
45'	20	0.750	0.814	2½"	8	26½	31½x2⅞	0.8	13.06	111.29	553.68	24	0.688	0.809	2½"	8	30½	36 x2¾	1.1	16.24	173.89	690.71	45'

TOWER HGT. FT.	30' SPAN										35' SPAN										TOWER HGT. FT.
	TOWER PIPE			ANCHOR BOLTS			BASE PLATE	TRUSS	DESIGN LOADS		TOWER PIPE			ANCHOR BOLTS			BASE PLATE	TRUSS	DESIGN LOADS		
	O.D. IN.	WALL THICK. IN.	DEFL. ΔH IN.	SIZE	NO.	BOLT CIRCLE DIA.	SIZE IN.	DEFL. ΔV IN.	SHEAR V KIPS	TORSION T K-FT	MOMENT M K-FT	O.D. IN.	WALL THICK. IN.	DEFL. ΔH IN.	SIZE	NO.	BOLT CIRCLE DIA.	SIZE IN.	DEFL. ΔV IN.	SHEAR V KIPS	TORSION T K-FT	MOMENT M K-FT	
25'	24	0.531	0.475	2¼"	8	30.0	35 x2¼	1.4	18.21	250.41	449.85	30	0.406	0.442	2¼"	8	36	41 x2	1.6	21.34	340.83	529.13
26'	24	0.531	0.514	2¼"	8	30.0	35 x2¼		18.25	250.41	467.86	30	0.406	0.478	2¼"	8	36	41 x2	1.7	21.40	340.83	550.13
27'	24	0.562	0.526	2¼"	8	30.0	35 x2⅜		18.29	250.41	485.93	30	0.438	0.479	2¼"	8	36	41 x2⅛		21.45	340.83	571.21
28'	24	0.562	0.566	2¼"	8	30.0	35 x2⅜	1.4	18.34	250.41	504.07	30	0.438	0.515	2¼"	8	36	41 x2⅛		21.50	340.83	592.37
29'	24	0.562	0.607	2¼"	8	30.0	35 x2⅜	1.5	18.38	250.41	522.25	30	0.438	0.552	2¼"	8	36	41 x2⅛		21.56	340.83	613.61
30'	24	0.594	0.617	2½"	8	30.5	36 x2½	1.5	18.43	250.41	540.50	30	0.438	0.591	2½"	8	36½	42 x2¼		21.61	340.83	634.92
31'	24	0.594	0.659	2½"	8	30.5	36 x2½	1.5	18.47	250.41	558.79	30	0.469	0.591	2½"	8	36½	42 x2¼	1.7	21.67	340.83	656.31
32'	24	0.594	0.702	2½"	8	30.5	36 x2⅝	1.6	18.51	250.41	577.14	30	0.469	0.630	2½"	8	36½	42 x2¼	1.8	21.72	340.83	677.76
33'	24	0.625	0.712	2½"	8	30.5	36 x2⅝		18.56	250.41	595.54	30	0.469	0.670	2½"	8	36½	42 x2⅜		21.78	340.83	699.28
34'	24	0.625	0.756	2½"	8	30.5	36 x2⅝		18.60	250.41	614.00	30	0.500	0.669	2½"	8	36½	42 x2⅜		21.83	340.83	720.87
35'	24	0.656	0.766	2½"	8	30.5	36 x2¾		18.64	250.41	632.50	30	0.500	0.709	2½"	8	36½	42 x2½		21.89	340.83	742.53
36'	24	0.656	0.811	2½"	8	30.5	36 x2¾		18.69	250.41	651.05	30	0.500	0.750	2½"	8	36½	42 x2½		21.94	340.83	764.25
37'	24	0.688	0.820	2½"	8	30.5	36 x2¾		18.73	250.41	669.66	30	0.531	0.749	2½"	8	36½	42 x2½		22.00	340.83	786.04
38'	24	0.688	0.865	2½"	8	30.5	36 x2¾		18.78	250.41	688.31	30	0.531	0.790	2¾"	8	37	43 x2⅞		22.05	340.83	807.89
39'	24	0.719	0.875	2½"	8	30.5	36 x2⅞		18.82	250.41	707.01	30	0.562	0.788	2¾"	8	37	43 x2⅞		22.10	340.83	829.80
40'	24	0.719	0.920	2¾"	8	31.5	38 x2⅞		18.86	250.41	725.76	30	0.562	0.829	2¾"	8	37	43 x2¾		22.16	340.83	851.78
42'	24	0.750	0.977	2¾"	8	31.5	38 x3		18.95	250.41	763.41	30	0.594	0.868	2¾"	8	37	43 x2¾		22.27	340.83	895.92
44'	24	0.937	0.877	2¾"	8	31.5	38 x3		19.04	250.41	801.24	30	0.625	0.905	2¾"	8	37	43 x2¾	1.8	22.38	340.83	940.31
45'	24	0.937	0.918	2¾"	8	31.5	38 x3⅛	1.6	19.08	250.41	820.23	30	0.625	0.947	2¾"	8	37	43 x2¾	1.9	22.43	340.83	962.59

TOWER HGT. FT.	40' SPAN										TOWER HGT. FT.
	TOWER PIPE			ANCHOR BOLTS			BASE PLATE	TRUSS	DESIGN LOADS		
	O.D. IN.	WALL THICK. IN.	DEFL. ΔH IN.	SIZE	NO.	BOLT CIRCLE DIA.	SIZE IN.	DEFL. ΔV IN.	SHEAR V KIPS	TORSION T K-FT	MOMENT M K-FT	
25'	30	0.500	0.502	2½"	8	36½	42 x2¼	2.1	24.18	445.17	606.83	25'
26'	30	0.500	0.543	2½"	8	36½	42 x2¼	2.2	24.23	445.17	630.43	26'
27'	30	0.500	0.586	2½"	8	36½	42 x2⅜	2.3	24.29	445.17	654.13	27'
28'	30	0.531	0.595	2½"	8	36½	42 x2⅜		24.34	445.17	677.92	28'
29'	30	0.531	0.638	2½"	8	36½	42 x2⅜		24.40	445.17	701.81	29'
30'	30	0.531	0.683	2½"	8	36½	42 x2½	2.3	24.45	445.17	725.77	30'
31'	30	0.562	0.691	2½"	8	36½	42 x2½	2.4	24.51	445.17	749.82	31'
32'	30	0.562	0.737	2¾"	8	37	43 x2½		24.56	445.17	773.96	32'
33'	30	0.562	0.783	2¾"	8	37	43 x2⅝		24.61	445.17	798.17	33'
34'	30	0.594	0.789	2¾"	8	37	43 x2⅝		24.67	445.17	822.45	34'
35'	30	0.594	0.836	2¾"	8	37	43 x2⅝	2.4	24.72	445.17	846.81	35'
36'	30	0.594	0.885	2¾"	8	37	43 x2¾	2.5	24.78	445.17	871.25	36'
37'	30	0.625	0.891	2¾"	8	37	[redacted]2¾		24.83	445.17	895.75	37'
38'	30	0.625	0.940	2¾"	8	37	43 x2¾		24.89	445.17	920.33	38'
39'	30	0.656	0.946	2¾"	8	37	43 x2¾		24.94	445.17	944.97	39'
40'	30	0.656	0.995	2¾"	8	37	43 x2⅞	2.5	25.00	445.17	969.68	40'
42'	30	0.688	1.150	3"	8	37½	44 x 3	2.7	25.11	445.17	1019.30	42'
44'	30	0.719	1.106	3"	8	37½	44 x 3	2.6	25.22	445.17	1068.19	44'
45'	30	0.719	1.157	3"	8	37½	44 x 3	2.6	25.27	445.17	1094.23	45'

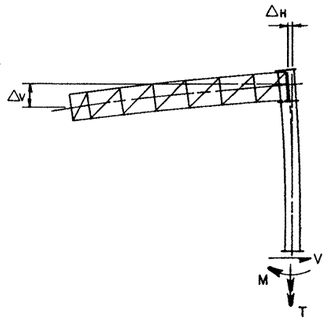

ELEVATION

(SHOWING DESIGN LOADS AND DEAD LOAD DEFLECTIONS)

TRUSS DETAILS

SPAN	10', 15' & 20'	25'	30'	35'	40'
W x D = WIDTH x DEPTH	4.5 X 4.5	4.5 X 4.5	4.5 X 4.5	4.5 X 4.5	4.5 X 4.5
CHORD	3 x 3 x 3/16 (3)	3 x 3 x ¼ (4)	3½x3½x 5/16(HS50) (8)	3½x3½x 5/16(HS50) (9)	3½x3½x 5/16(HS50) (8)
DEAD LOAD DIAGONAL	2½x1½ x 3/16 (2)	2½x1½x 3/16 (2)	2½x 1½ x 3/16 (2)	2½x 1½ x 3/16 (2)	3 x 2 x 3/16 (2)
WIND LOAD DIAGONAL	3 x 3 x 3/16 (3)	3 x 3 x 3/16 (3)	3 x 2½ x ¼ (3)	3 x 3 x ¼ (4)	3 x 3 x ¼ (3)
DEAD LOAD VERTICAL	2½ x 1½ x 3/16 (2)	2½x1½x 3/16 (2)	2½x1½x 3/16 (2)	2½x1½x 3/16 (2)	3 x 2 x 3/16 (2)
WIND LOAD STRUT	2 x 2 x 3/16 (1)	2 x 2 x 3/16 (1)	2 x 2 x 3/16 (1)	2 x 2 x 3/16 (1)	2½ x 2½ x 3/16 (1)
TRUSS DEAD LOAD	42 #/ft.	47 #/ft.	59 #/ft.	60 #/ft.	70 #/ft.
SIZE H.S. BOLTS IN CONN.	5/8"ø	5/8"ø	5/8"ø	5/8"ø	¾"ø
NO. & SIZE OF H.S. BOLTS IN CHORD ANGLE TO TOWER CONNECTION PLATE	3~ 5/8"ø	5~ 5/8"ø or 3~ ¾"ø ea.	8~ 5/8"ø or 6~ ¾"ø ea.	9~ 5/8"ø or 7~ ¾"ø ea.	8~ ¾"ø ea.

All truss members are angles.

Number of High Strength bolts required in truss connection or splice are indicated thus (3) after the member size.

Deflections shown include the design loads for Truss, Sign Panel, Lights and Walkways.

GENERAL NOTES:

Steel for tower pipe [redacted] conform to ASTM A53 Grade B or to ASTM A501. Tower pipe wall thickness shown is the minimum allowable. Fabricator [redacted] use the wall thickness shown or pipe of the same diameter with greater wall thickness.

All other structural steel [redacted] conform to ASTM A36 except where noted HS 50 which [redacted] ASTM A 441, ASTM A572 or ASTM A588.

All connection bolts shall conform to ASTM A325 or ASTM A449.

All structural steel, connection bolts, nuts and washers [redacted] galvanized in accordance with the Specifications.

Compensate for truss deflection at free end by offsetting upper and lower bolt holes at truss-to-tower connection.

For truss details see sheet 2 of 3.

For base and foundation details see sheet 3 of 3.

For cantilever truss lengths falling between those shown use sizes called for in the next longer span.

Towers for cantilever sign supports are designed for the equivalent area of a 10 foot deep sign panel over 100% of the span length. Design includes 3 lb./□' for sign panel and 20 lb./lin. ft. for lights and 50 lb./lin. ft. for walkways all placed as specified for the design sign panel.

Details called for hereon are applicable for Design Wind Heights of 30' to 50' inclusive.

PREPARED BY AND FOR THE USE OF TEXAS SDH&PT.

STATE DEPARTMENT OF HIGHWAYS AND PUBLIC TRANSPORTATION

HIGH LEVEL CANTILEVER OVERHEAD SIGN SUPPORTS HCOSS-Z1

ORIGINAL DRAWING DATE: 7-83	STATE DISTRICT	FEDERAL REGION	FEDERAL AID PROJECT #	SHEET
DR.:-CWC REVISIONS	21	6	NH 92(50)M	537
CK.:-LEH	COUNTY	CONTROL	SECTION	JOB	HIGHWAY
DW.:-EDS	HIDALGO	39	17	97	US83/281
CK.:-LEH					62

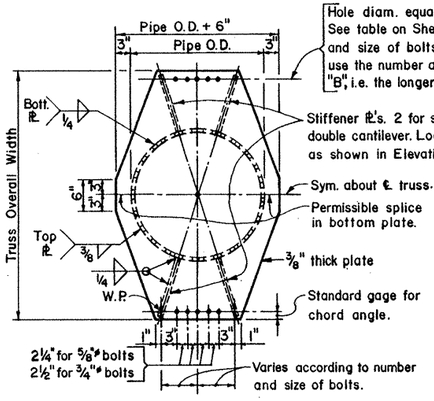

CONNECTION PLATE DETAIL

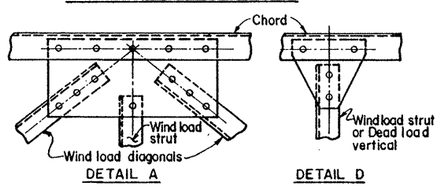

DETAIL A DETAIL D DETAIL G

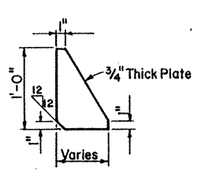

STIFFENER ℄ DETAIL

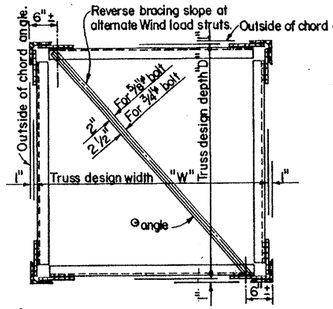

⊙ 2"X1½"X 3/16 angle for 5/8"ø bolts. Ⓘ
2½"X1½"X 3/16 angle for 3/4"ø bolts. Ⓘ

TRUSS SECTION
(DIAGONALS NOT SHOWN)

NUMBER OF BOLTS ℄ TO CHORD CONNECTION	
TOTAL NO. OF BOLTS IN DIAGS. IN JOINT	
0	2
2	2
3	3
4	3
5	4
6	4
8	5
10	6

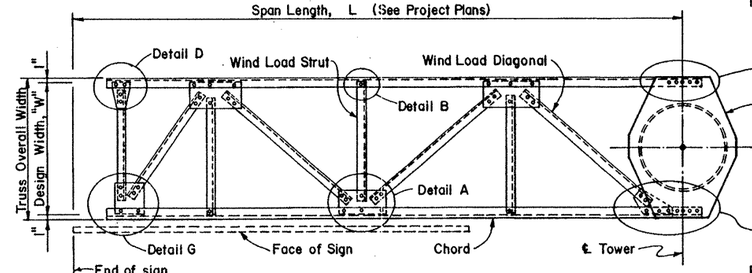

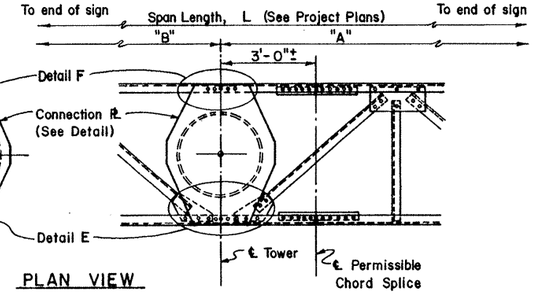

PLAN VIEW

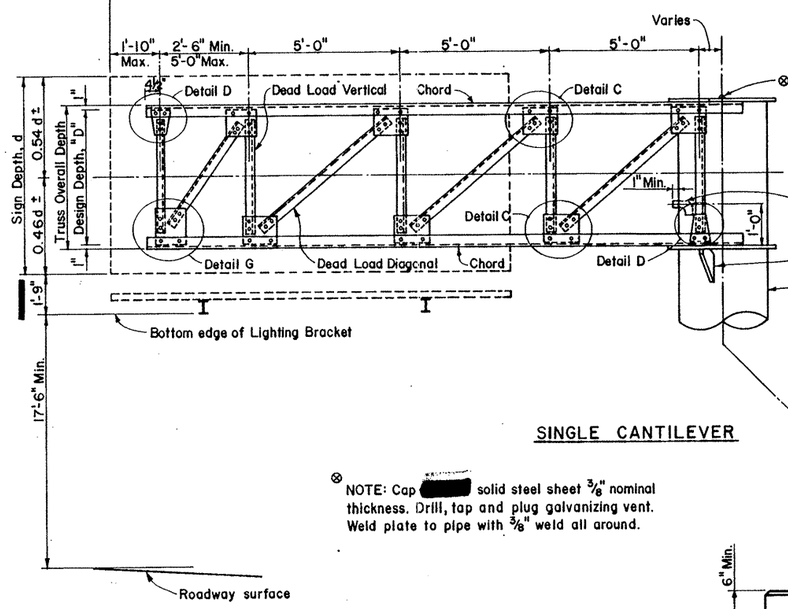

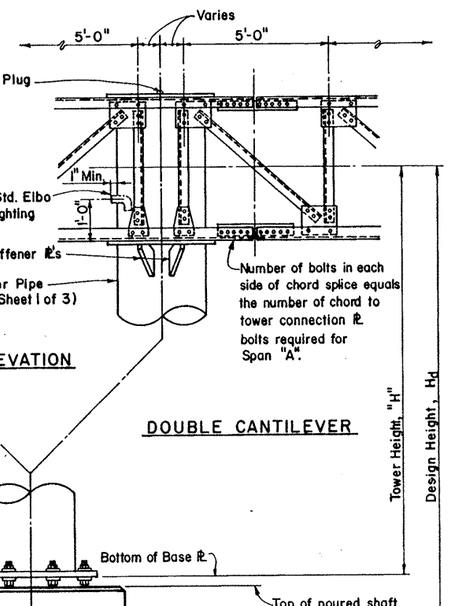

ELEVATION

SINGLE CANTILEVER DOUBLE CANTILEVER

⊗ NOTE: Cap [redacted] solid steel sheet 3/8" nominal thickness. Drill, tap and plug galvanizing vent. Weld plate to pipe with 3/8" weld all around.

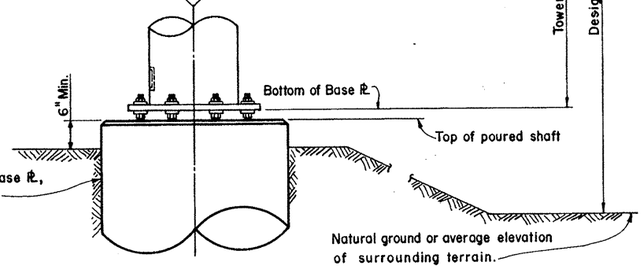

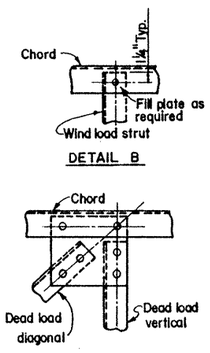

DETAIL B

DETAIL C

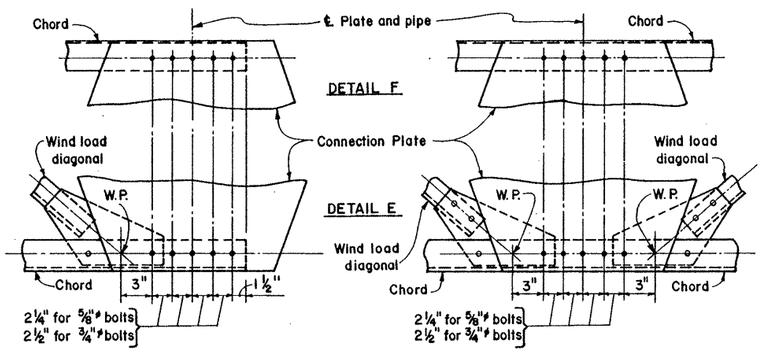

SINGLE CANTILEVER DOUBLE CANTILEVER

CONNECTION DETAILS

* MINIMUM LENGTH OF 3/16" FILLET WELD REQUIRED		
NUMBER OF BOLTS	TO REPLACE 5/8"ø BOLTS	TO REPLACE 3/4"ø BOLTS
1	2"	3"
2	4"	6"
3	6"	9"
4	8"	11½"
5	10"	14½"
6	12"	17½"
7	14"	20"

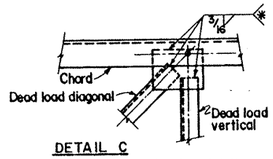

DETAIL C
(Gusset plates in other details similar)

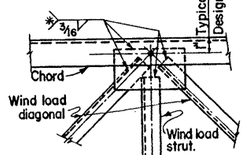

DETAIL A

ALTERNATE WELDED CONNECTION DETAILS

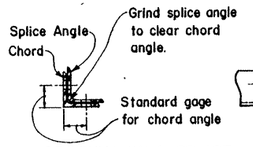

SECTION ON ℄ SPLICE

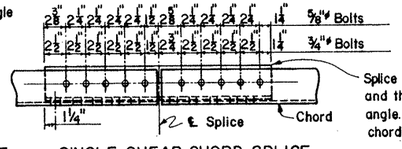

SINGLE SHEAR CHORD SPLICE

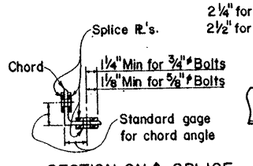

SECTION ON ℄ SPLICE

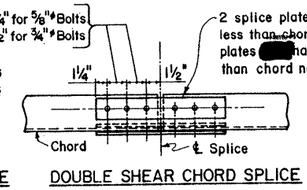

DOUBLE SHEAR CHORD SPLICE

Note: Each side of the double shear chord splice requires only half the number of bolts shown in the table on sheet 1 of 3.

SPLICE DETAILS

GENERAL NOTES:

Design conforms to 1975 AASHTO Standard Specifications for Structural Supports for Highway Signs, Luminaires and Traffic Signals and Interim revisions thereto. Connection details are typical only. Actual size of member and number of bolts [redacted] vary. The details on this sheet are intended as a guide only. See Sheet 1 of 3 for number of bolts and size of members.

Gusset plates to be same thickness as thickest web member in connection.

STATE DEPARTMENT OF HIGHWAYS AND PUBLIC TRANSPORTATION

CANTILEVER OVERHEAD SIGN SUPPORT DETAILS

COSSD SHEET 2 OF 3

ORIGINAL DRAWING DATE: 7-83	REVISIONS	STATE DISTRICT	FEDERAL REGION	FEDERAL AID PROJECT ⊗	SHEET
DW.:-LEH	7-86	21	6	NH 92(50)M	539
CK.:-THD		COUNTY	CONTROL	SECTION	JOB	HIGHWAY
DW.:-EDS		HIDALGO	39	17	97	U583781
CK.:-LEH						66

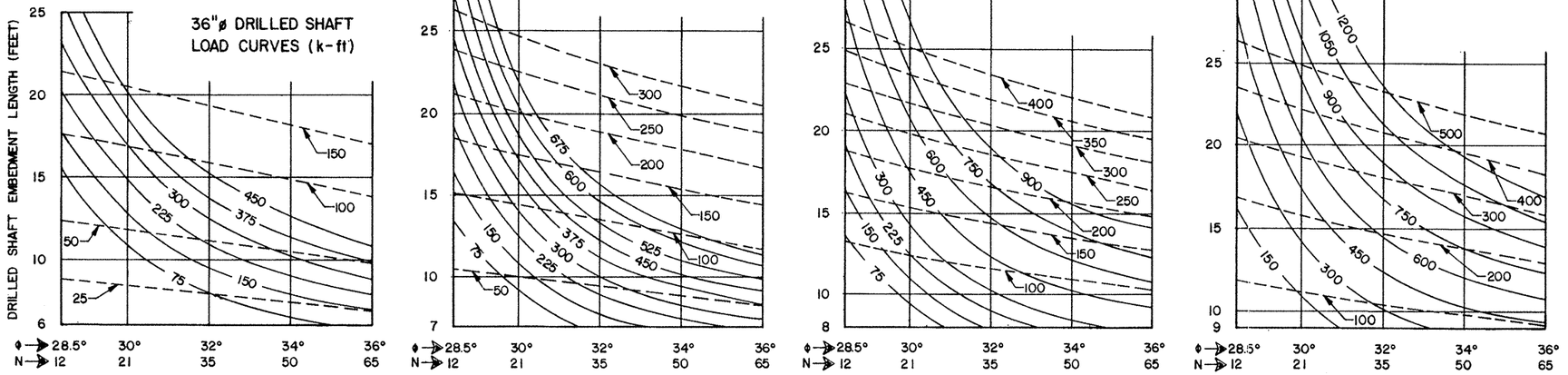

SUBMERGED SAND SOIL (COHESIONLESS) ✱

MOMENT ——————

TORSION - - - - - - - -

✱NOTE:
For unsubmerged sands and clayey sands the charts for clay soil will give a conservative foundation design.

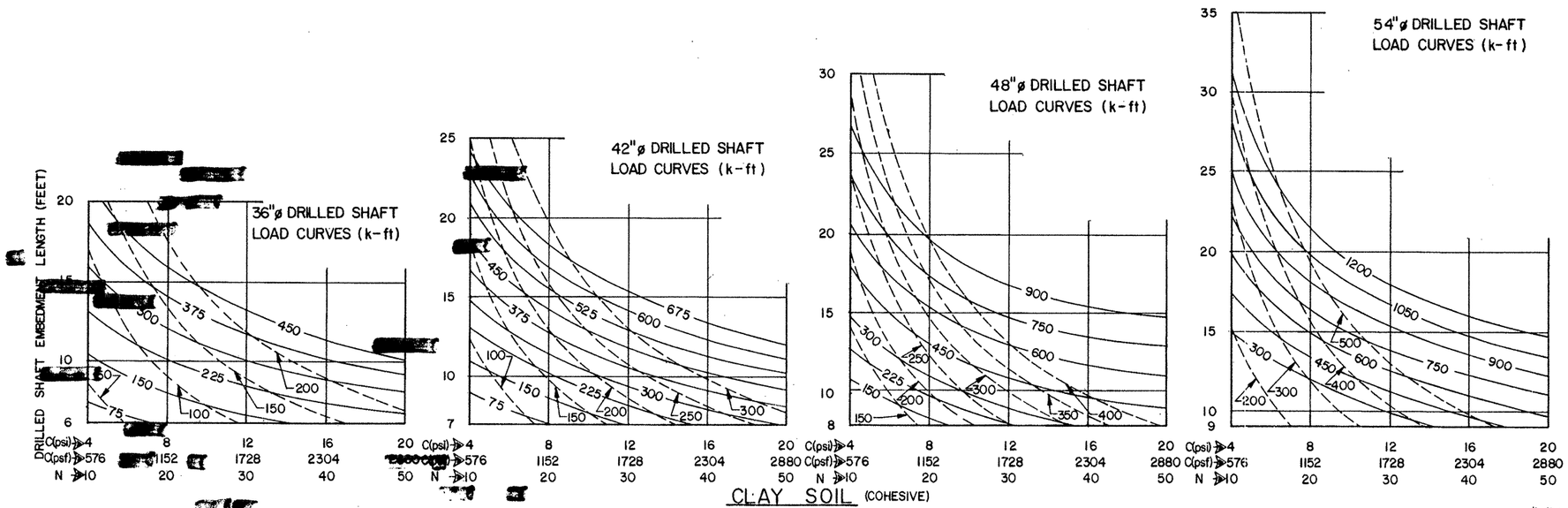

CLAY SOIL (COHESIVE)

MOMENT ——————

TORSION - - - - - - - -

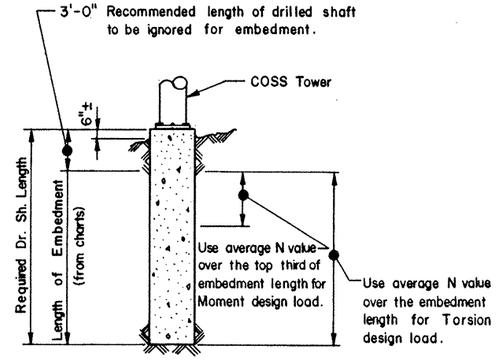

PROCEDURE:

1. Determine design moment and torsion, and the required drilled shaft diameter as outlined in the selection example sheet COSS-SE.
2. Make an initail estimate of the required embedment length.
3. From soil exploration data determine type of soil and average N value or soil property along the upper third of the drilled shaft.
4. Enter chart (for the correct shaft diameter and soil type) from the bottom at the average N value or soil property determined in Step 3.
5. Proceed vertically into chart and locate intersection with design moment. Interpolate between moment curves (solid lines) as needed.
6. From intersection point turn 90° to left and read embedment length along vertical scale.
7. If embedment length differs significantly from estimated value return to Step 3 with the embedment length determined in Step 6.
8. From soil exploration data determine average N value or soil property over the entire length of the embedment.
9. Enter chart (for correct shaft diameter and soil type) from the bottom at the average N value or soil property determined in Step 8.
10. Proceed vertically into chart and locate intersection with design torsion. Interpolate between torsion curves (dashed lines) as needed.
11. From intersection point turn 90° to left and read embedment length along vertical scale.
12. Compute the required length of drilled shaft by adding 3'-0" to longer embedment length required for moment or torsion.

GENERAL NOTES:

These charts are for use with Cantilever Overhead Sign Supports with one shaft per tower.

Solid curves are base moment in k-ft.

Dash curves are base torsion in k-ft.

C = Cohesive shear strength of soil (psf or psi)

ϕ = Angle of internal friction of soil (degrees)

N = Texas Cone Pentrometer value (blows per ft)

Minimum embedment of drilled shaft is two diameters.

Add 3'-0" to the required embedment length to determine the required length of drilled shaft.

STATE DEPARTMENT OF HIGHWAYS AND PUBLIC TRANSPORTATION

FOUNDATION EMBEDMENT SELECTION CHARTS

COSS-FD

ORIGINAL DRAWING DATE: 7-83	STATE DISTRICT	FEDERAL REGION	FEDERAL AID PROJECT #	SHEET
DN:-CWC REVISIONS	21	6	NH92(50)M	540
CK:-LEH	COUNTY	CONTROL	SECTION	JOB	HIGHWAY
DW:-JWK	HIDALGO	39	17	97	US83/281
CK:-LEH					68

BRUNING 44.1425T049

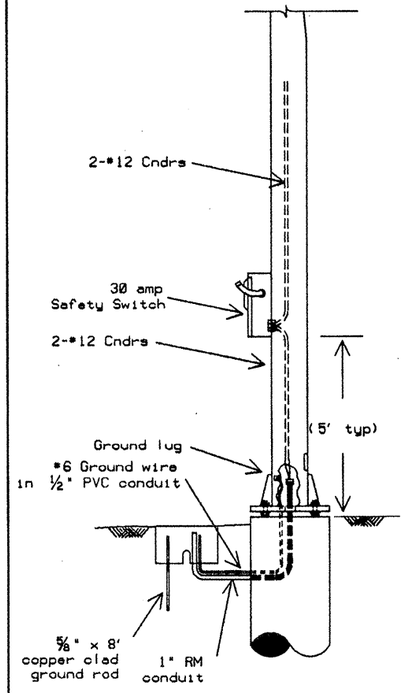

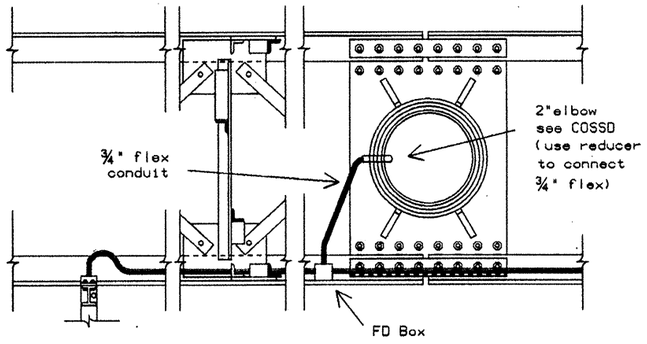

PLAN

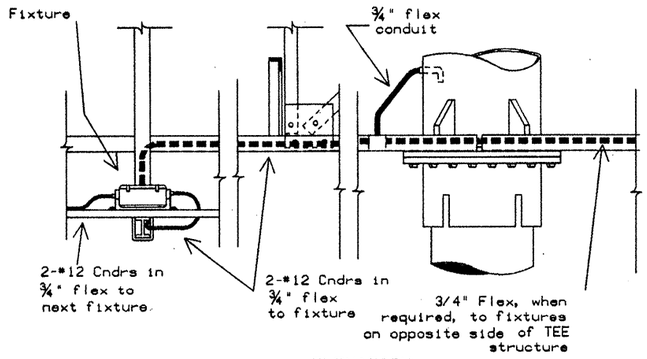

ELEVATION

TYPICAL ELECTRICAL DETAILS
SIGN STRUCTURE

NOTES:

1. See OSBT and COSSF for additional foundation details.
2. Furnish and install grounding lugs on sign structures as shown herein.
3. Safety switch [redacted] a 30 amp 240, 480, or 600 volt, as required. Fusible safety switch [redacted] in a NEMA 3R enclosure and [redacted] heavy duty. DO NOT switch the grounded conductor. Install 20 amp fuses.
4. Circuit conductors [redacted] two insulated conductors (Type XHHW).
5. Flex conduit [redacted] liquid-tight flexible metal conduit or liquid-tight flexible non-metallic conduit. All fittings [redacted] NEC and NEMA approved for outdoor use.
6. Ends of all rigid metal conduit not terminating in a threaded hub [redacted] fitted with a grounding bushings. Conduit (flex and rigid) [redacted] strapped to sign structures using stainless steel strapping or galvanized malleable iron conduit straps at 5 foot increments (maximum).
7. The No. 6 grounding conductor (bonding jumper) [redacted] continuous, without splice, from the sign structure to the ground rod and [redacted] run as straight as possible (do not coil wire). Connect the grounding conductor from the branch circuit to the No. 6 bonding jumper and to the conduit bushing in the ground box.
8. The Contractor [redacted] modify safety switch to allow padlocking in the "ON" and in the "OFF" positions.
9. Safety switch [redacted] not [redacted] paid for directly but [redacted] subsidiary to Item 652, "Highway Sign Lighting Fixtures". Conduit, Conductor and miscellaneous items from ground box to sign lights [redacted] not [redacted] paid for separately but [redacted] subsidiary to the various bid items.

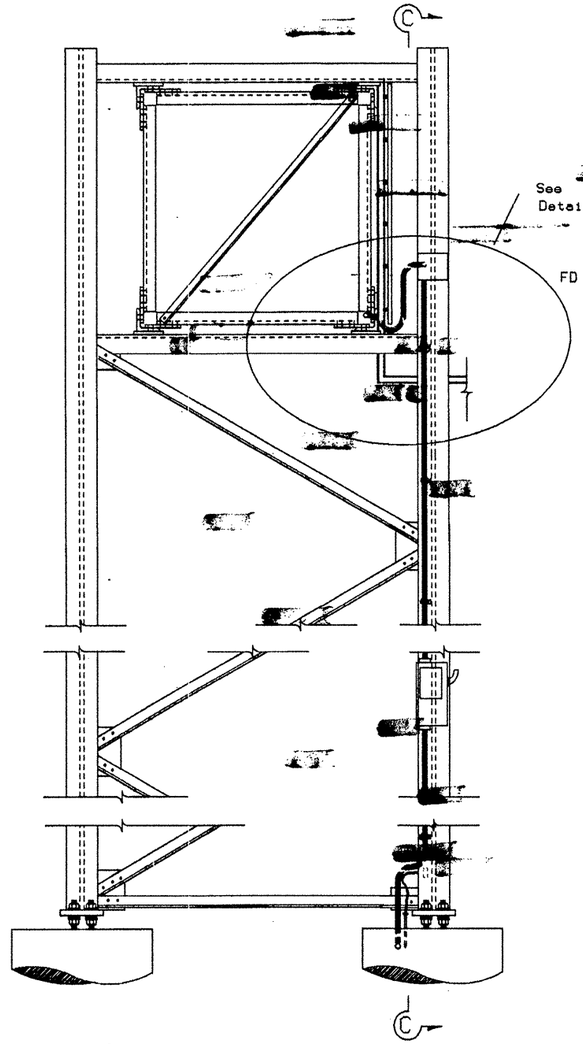

TYPICAL ELECTRICAL DETAILS
OVERHEAD SIGN BRIDGE

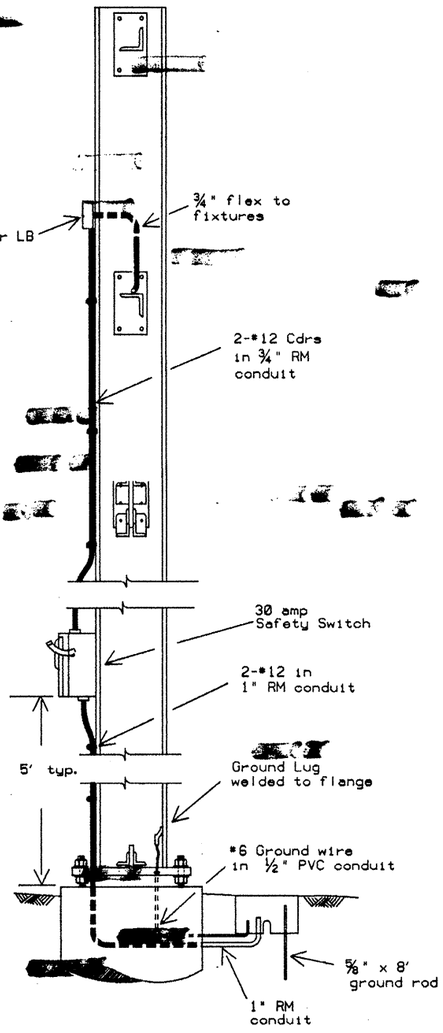

SECTION C-C

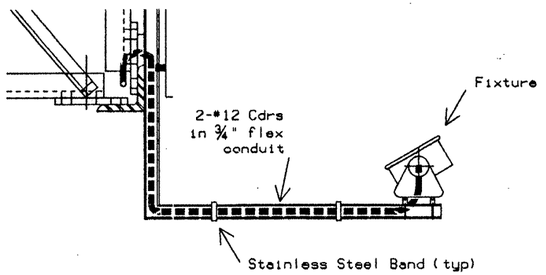

DETAIL A

(ITEM 652)

STANDARD PLANS
TEXAS DEPARTMENT OF TRANSPORTATION

SIGN LIGHTING
ELECTRICAL DETAILS
SL(1)

ORIGINAL DRAWING DATED 01-92		STATE DISTRICT	FEDERAL REGION	FEDERAL AID PROJECT				SHEET
DN.: K. A. B.	REVISIONS	21	6	NH 92(50)M				541
CK.: T. B.		COUNTY		CONTROL	SECTION	JOB	HIGHWAY	
DW.: D. N.		HIDALGO		39	17	97	US83/281	
CK.: R. E. S.								

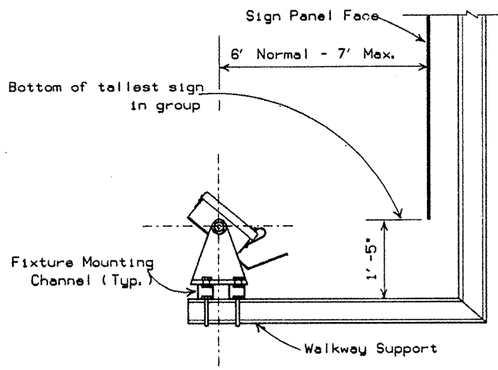

MOUNTING DETAILS

END ELEVATION

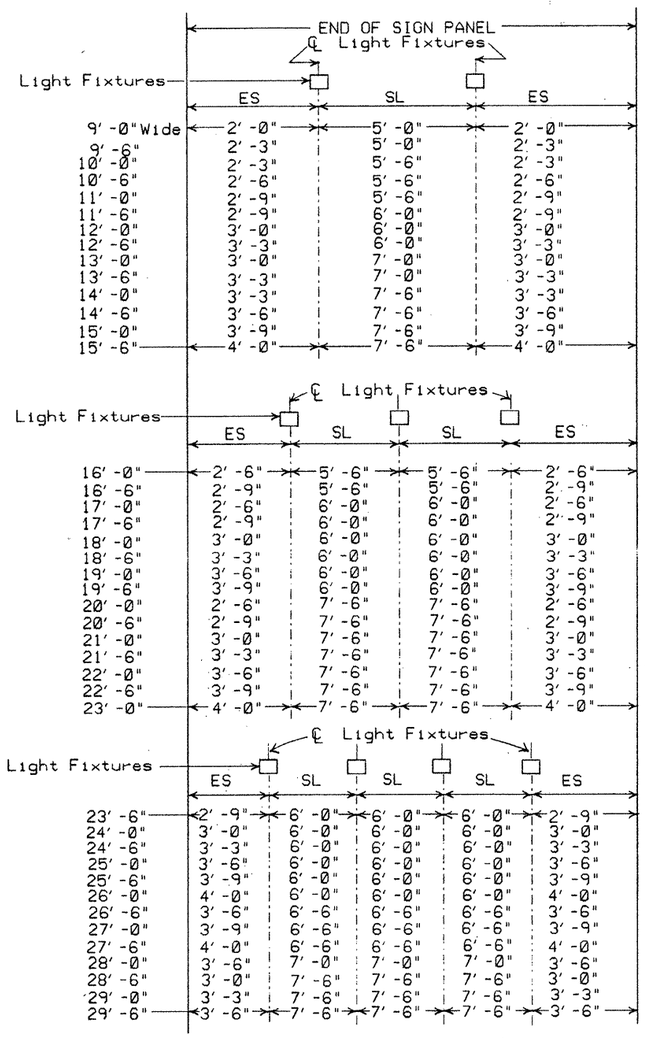

SPACING FOR 100W MERCURY VAPOR LIGHT FIXTURES PER SIGN PANEL

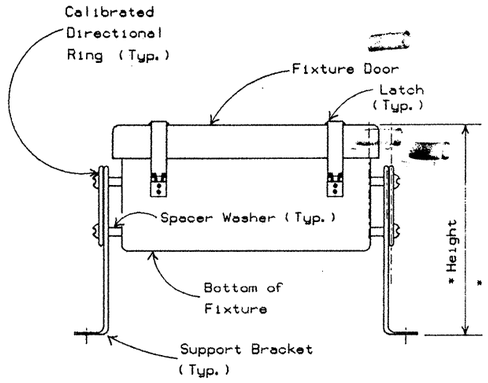

* 11 in. max. when properly aimed, see note I.B.

FRONT ELEVATION

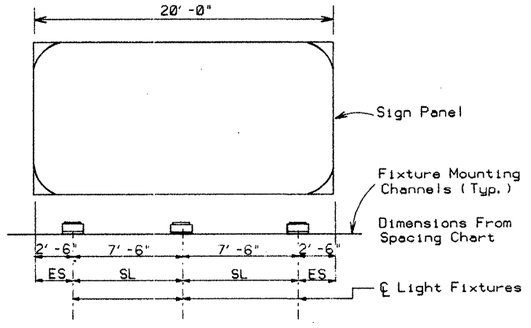

EXAMPLE OF TYPICAL FIXTURE PLACEMENT

(FOR 20'-0" SIGN PANEL WIDTH)

NOTES

I. Fixtures.

A. Fixtures [redacted] constructed of aluminum, galvanized steel or other approved weather-resistant materials and so constructed as to form a weather-tight unit of sufficient strength to withstand normal installation and maintenance operations. The fixture [redacted] not exceed 2.0 square feet in projected area nor exceed 35.0 pounds in gross weight, including ballast.

B. The fixture [redacted] have aiming provisions that are continuously variable through all aiming angles for 15 degrees either side of the optimum aiming angle. Aiming [redacted] marked in 5-degree increments. Provisions [redacted] incorporated to positively lock the fixture in the desired position. Mounting provisions shall rigidly support the fixture and be compatible with mounting requirements shown on plans. When aimed at any of the required angles, the overall height of the fixture above a plane passing through and parallel to the mounting base [redacted] not exceed 11 inches.

C. The optic assembly [redacted] fitted with resilient gaskets to maintain a positive seal against weather and other contaminants. The lens of the optic assembly [redacted] tempered glass. Removable covers and lens for fixture and ballast [redacted] so designed to be opened for routine maintenance without the use of tools. A keeper [redacted] provided to prevent unintentional separation of lens assemblies or covers from the fixture housing. The metal socket [redacted] incorporate a means to positively resist lamp removal and [redacted] include a porcelain base that completely encases the metal shell. The socket [redacted] UL-approved.

D. When shown on the plans or required by the Engineer, light shields [redacted] installed on fixtures to prevent glare to the motorists. All fixtures that are to be installed on bridge-mounted signs [redacted] equipped with vandal guards approved by the Engineer. Guards and/or light shields [redacted] not [redacted] paid for directly but [redacted] considered incidental to the Item "Highway Sign Lighting Fixtures".

E. The lighting fixture shown is an example only and [redacted] not intended to specify a certain manufacturer's product. Other comparable designs which meet the requirements of the specifications and approved by the Engineer, [redacted] accepted.

II. Ballasts.

A. The fixture [redacted] internally or externally ballasted with a regulated output-type ballast (CW) designed to operate mercury vapor lamps. External ballast [redacted] in weatherproof encasement.

B. During fluctuation of the primary voltage to the ballast up to 13 percent of rated voltage, the input wattage to the ballast [redacted] not vary more than 8 percent, nor exceed 150 per cent of the lamp's rated wattage. At rated voltage, the power factor [redacted] not less than 90 per cent. Each ballast [redacted] permanently and clearly indicate the following: ballast type, lamp type, catalog number, voltage rating and wiring diagram. When stick-on or glue-on label is used, permanency [redacted] considered satisfactory when no more than 25 per cent of the label [redacted] removed in one piece. Ballast [redacted] individually fused with an easily accessible in-line 10 amp fuses.

III. Lamps.

A. Lamps [redacted] 100 watt phosphor-coated mercury vapor with a rated average life of not less than 24,000 hours.

IV. Photometric Requirements.

A. The 100 watt fixture, when mounted vertically six feet (to midpoint of mounting channels) above and horizontally 18 in. below, the midpoint of either short side of a horizontal rectangular area measuring eight feet by ten feet, with the fixture facing the center of the opposite short side, and when aimed at the optimum angle, [redacted] provide measured intensities of not less than 3.0 nor greater than 50 footcandles on any point within the rectangular area. Measured intensities on the surface of the rectangular area [redacted] change at a rate not to exceed 2.6 footcandles in any one foot interval.

B. Optimum angle is that angle which produces equal measured footcandles on all four corners of the rectangular area. The supplier [redacted] state the optimum angle or the indicator mark [redacted] centered on 0 at the optimum angle.

V. Testing.

A. Sampling and testing [redacted] in accordance with the SDHPT Materials and Test Division's Manual of Testing Procedures. The fixture [redacted] tested using a lamp furnished for the same project.

B. The Department will bear the cost of testing all materials meeting the requirements of this drawing and the specifications. The Contractor will bear the cost of testing all materials failing to meet the above requirements. Costs for testing failed materials [redacted] deducted from amounts due the Contractor on monthly and final estimates.

VI. Conduit and Conductors.

A. Conduit and fittings furnished and installed under this Item [redacted] in accordance with the Item "Conduit", except for measurement and payment.

B. Conductors furnished and installed under this Item [redacted] in accordance with the Item "Electrical Conductors", except for measurement and payment.

(ITEM 652)

STANDARD PLANS
TEXAS DEPARTMENT OF TRANSPORTATION

MERCURY VAPOR SIGN LIGHTING FIXTURE SL (MV)

ORIGINAL DRAWING DATE: 01-92	STATE DISTRICT	FEDERAL REGION	FEDERAL AID PROJECT	SHEET
DN:- K. A. B. REVISIONS	21	6	NH 92(50)M	542
CK:- T. B.	COUNTY	CONTROL	SECTION	JOB	HIGHWAY
DN:- R. C. S.	HIDALGO	39	17	97	US83/281
CK:- T. B.					

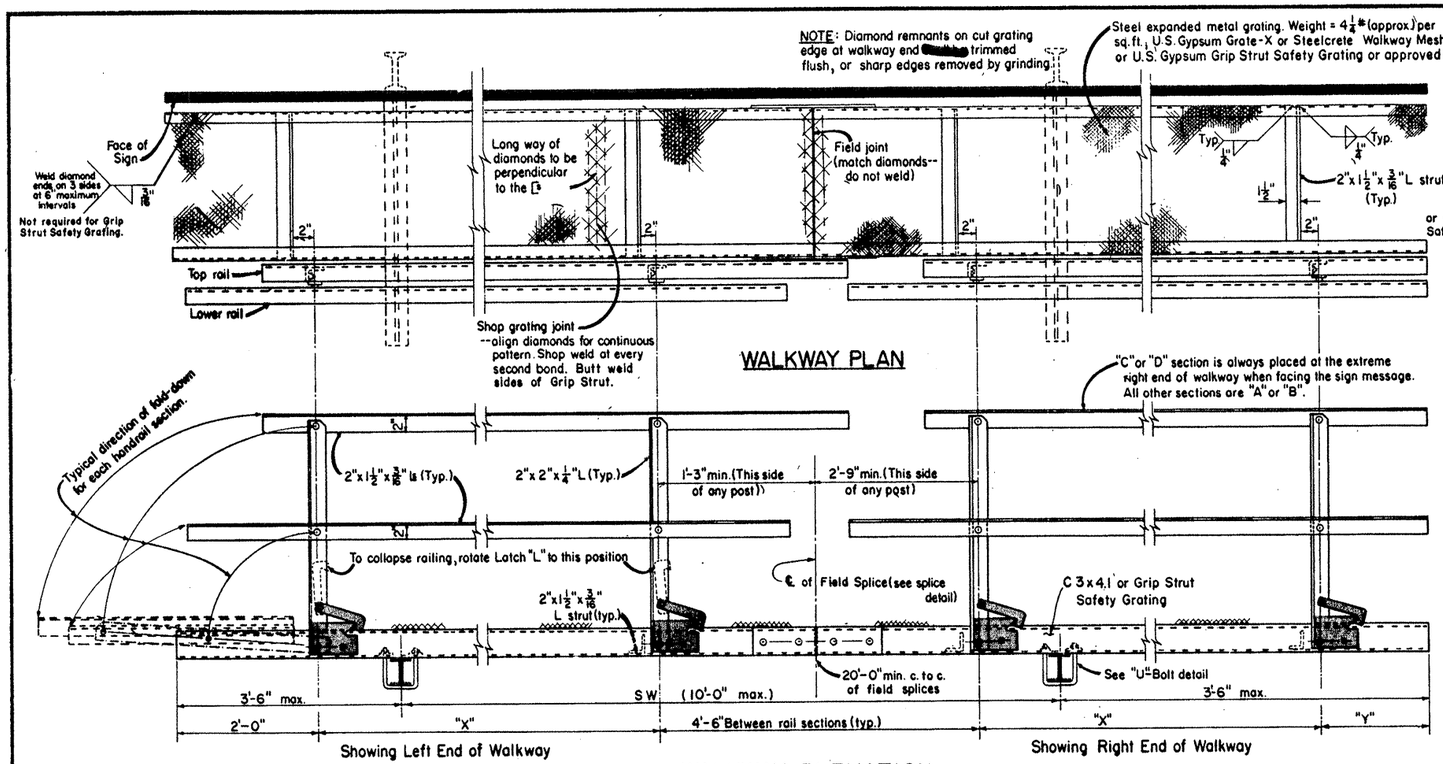

WALKWAY ELEVATION

10'-0" Maximum spacing for Walkway, Lights and Sign Support Bracket Spacing, see sheets SL(2), SL(MV), SMD(P-1) PLYWOOD & SMD(A-1) ALUMINUM for other limitations to spacing.

NOTE: Eliminate C 3x4.1 when Grip Strut Safety Grating is used. All other details and materials apply unless otherwise noted.

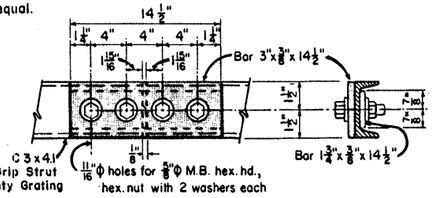

FIELD SPLICE DETAIL

SEE WALKWAY ELEVATION FOR LOCATION

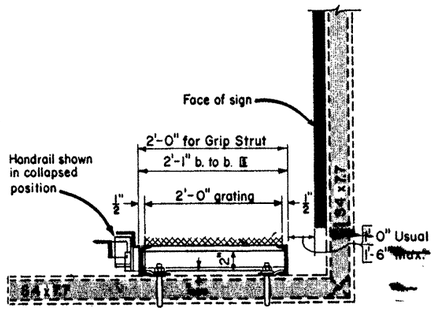

END VIEW OF WALKWAY

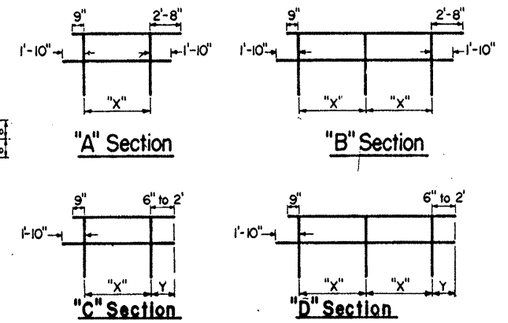

TYPES OF HANDRAIL SECTIONS

Walkway Length	Minimum "X" Dimension	Required No. of Sections			
		"A" Sec.	"B" Sec.	"C" Sec.	"D" Sec.
7'-6" to 12'-0"	1 @ 5'-0"	–	–	1	–
12'-6" to 20'-0"	2 @ 5'-0"	–	–	–	1
20'-6" to 24'-6"	2 @ 6'-9"	1	–	1	–
25'-0" to 32'-6"	3 @ 6'-0"	–	1	1	–
33'-0" to 40'-6"	4 @ 6'-6"	–	1	–	1
41'-0" to 45'-0"	4 @ 7'-4½"	1	1	1	–
45'-6" to 53'-0"	5 @ 6'-9"	–	2	1	–
53'-6" to 61'-0"	6 @ 7'-0"	–	2	–	1
61'-6" to 73'-6"	7 @ 6'-6"	–	3	1	–
74'-0" to 81'-6"	8 @ 7'-3"	–	3	–	1
82'-0" to 94'-0"	9 @ 6'-10"	–	4	1	–
94'-6" to 102'-0"	10 @ 7'-4"	–	4	–	1
102'-6" to 114'-6"	11 @ 7'-0"	–	5	1	–
115'-0" to 122'-6"	12 @ 7'-6"	–	5	–	1

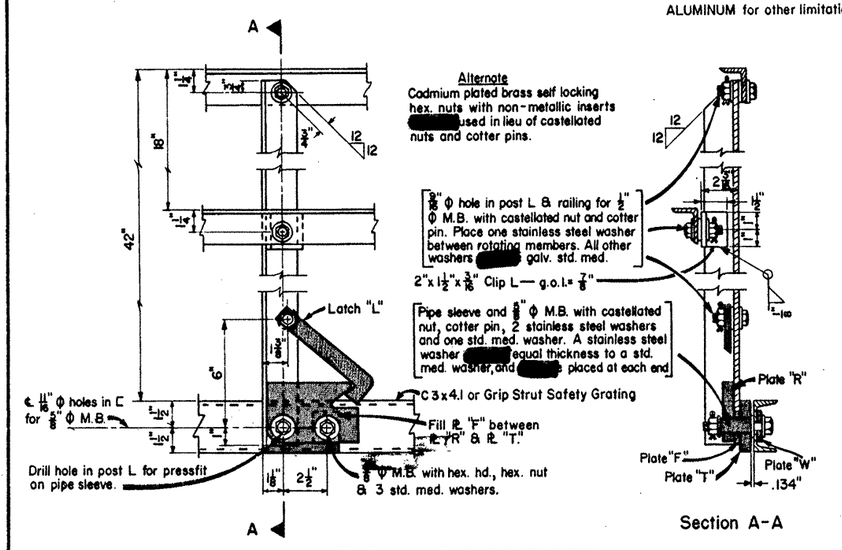

RAILING AND POST DETAIL

After erection, adjust all castellated nuts to remove only excess play in rotating parts then lock in position with cotter pins. Adjust nut on latch "L" for free latch operation.

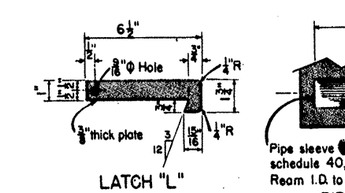

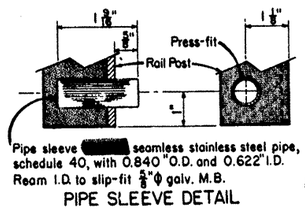

PIPE SLEEVE DETAIL

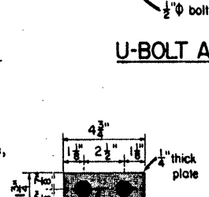

PLATE "W"

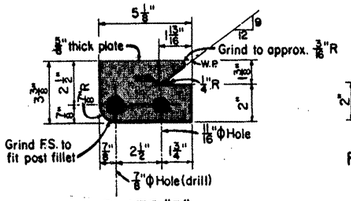

PLATE "R"

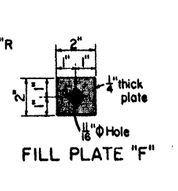

FILL PLATE "F"

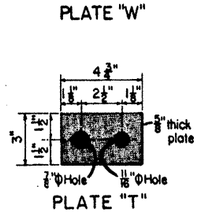

PLATE "T"

PLATE AND MISCELLANEOUS DETAILS

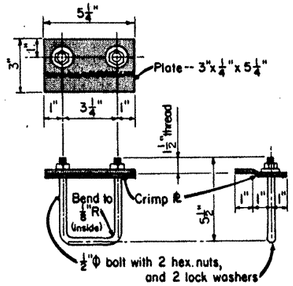

U-BOLT AND CLAMP DETAIL

GENERAL NOTES

DESIGN CONFORMS WITH AASHTO SPECIFICATIONS FOR THE DESIGN AND CONSTRUCTION OF STRUCTURAL SUPPORTS FOR HIGHWAY SIGNS.

MATERIALS, FABRICATION, CONSTRUCTION, AND ERECTION CONFORM WITH THE SPECIFICATIONS.

STRUCTURAL STEEL CONFORM WITH ASTM SPECIFICATION A 36. BOLTS SHALL HAVE HEXAGON HEADS AND NUTS AND CONFORM WITH ASTM SPECIFICATION A 307.

STAINLESS STEEL PIPE BUSHINGS CONFORM WITH ASTM SPECIFICATION A 312 TYPE TP 304.

STAINLESS STEEL WASHERS CONFORM WITH ASTM SPECIFICATION A 167 TYPE 302.

ALL PARTS EXCEPT STAINLESS STEEL GALVANIZED AFTER FABRICATION.

THE STAINLESS STEEL BUSHINGS PRESSED IN THE RAIL POSTS AFTER POSTS ARE GALVANIZED.

THE WALKWAY AND RAILING SHOP ASSEMBLED TO CHECK FABRICATION.

STATE DEPARTMENT OF HIGHWAYS AND PUBLIC TRANSPORTATION

SIGN WALKWAY AND HANDRAIL

SWW(1)

ORIGINAL DRAWING DATE: 2-82	STATE DISTRICT	FEDERAL REGION	FEDERAL AID PROJECT #	SHEET
DN.:- CK.:- DW.:- CK.:- REVISIONS	21	6	NH 92(50)M	543
	COUNTY	CONTROL	SECTION	JOB	HIGHWAY
	HIDALGO	39	17	97	0583/281

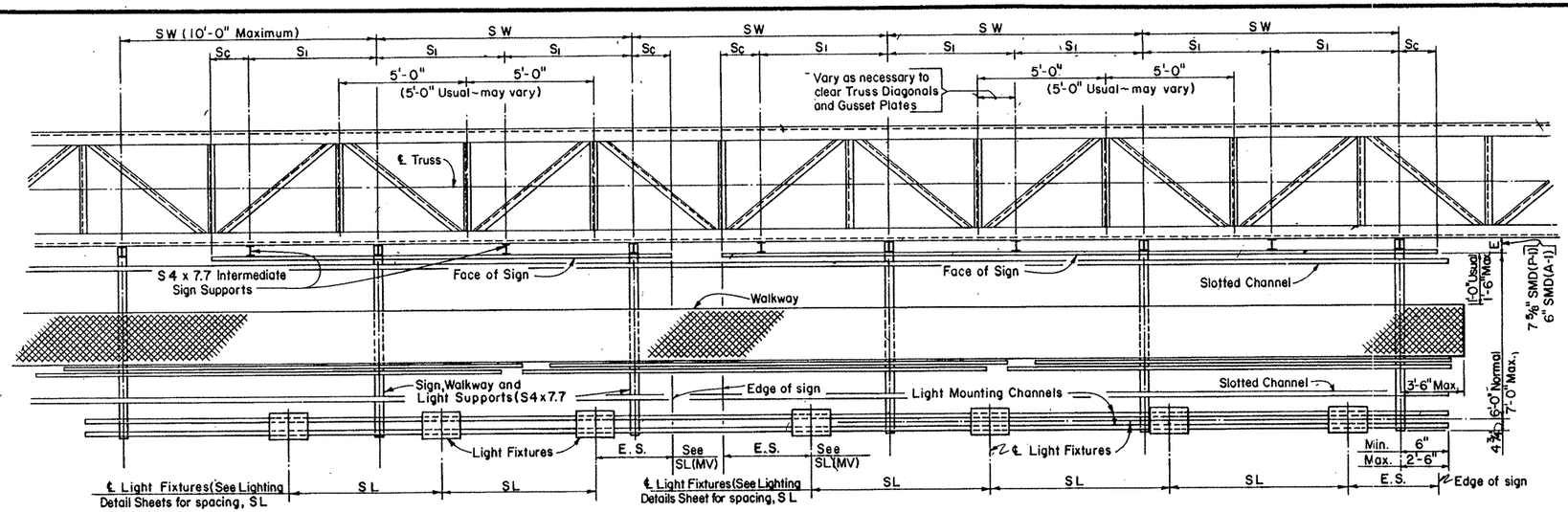

Sc = 6" Min. and .25 S1 Max.

PART PLAN

(Showing Truss, Signs, Walkways and Lights)

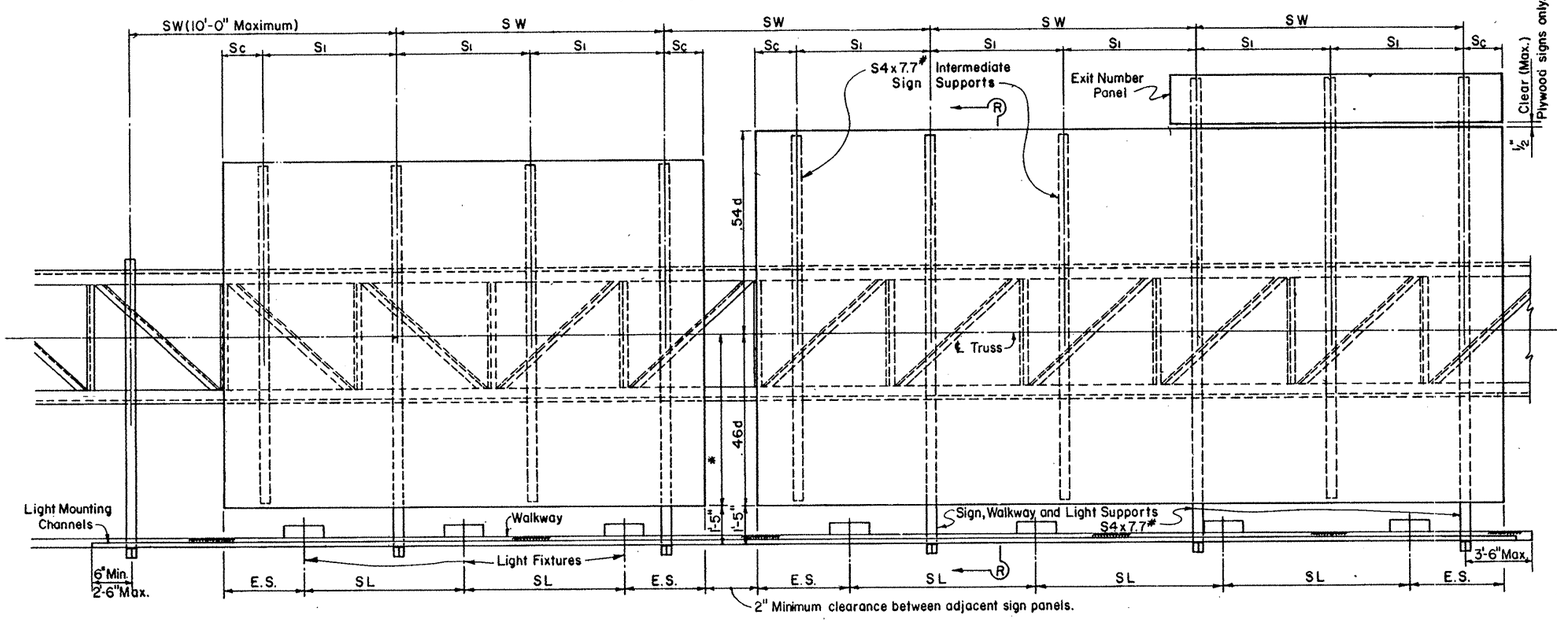

PART ELEVATION

* Where signs of different depths are used, the bottom edges of all signs [redacted] placed in line. Where this is done, all signs [redacted] so positioned that the bottom edges are approximately 0.46 of the depth of the deepest sign below the ℄ of the truss. When signs are spaced thusly, S1 is determined by the deepest sign.

See Sheet SL (MV-1) for Lighting Details & Spa. S.L. & E.S.
See Sheet SWW(1) for Walkway Details.
See Sheet SMD(A-1) for Aluminum Sign Details & Max. Spa. for S1.
See Sheet SMD(P-1) for Plywood Sign Details & Max. Spa. for S1.
Sc = 6" Minimum, .25 S1 Maximum.

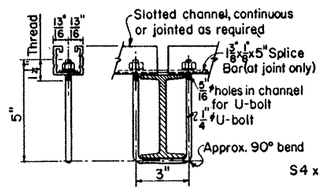

SECTION A-A

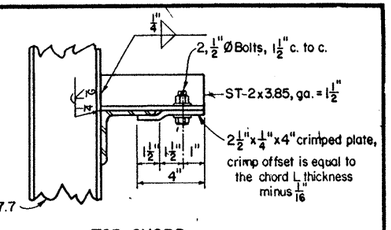

TOP CHORD

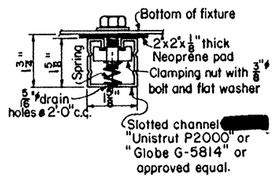

TYPICAL SLOTTED CHANNEL CONNECTED TO LIGHTING FIXTURE

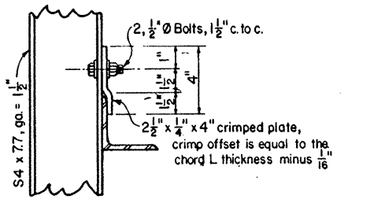

BOTTOM CHORD

SUPPORT TO TRUSS CONNECTION

NOTE: Exit Panel [redacted] supported by sign support brackets as shown hereon, or [redacted] supported as shown on sheets SMD(P-1) & SMD(A-1). Regardless of method used spacing of supports [redacted] not exceed S1.

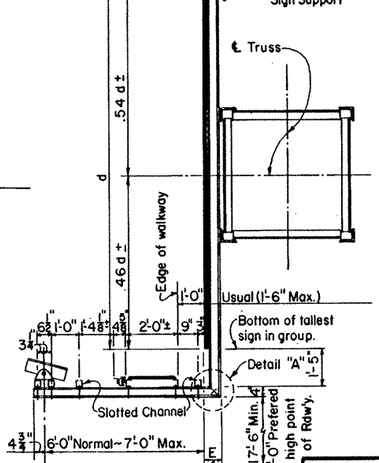

SECTION R-R

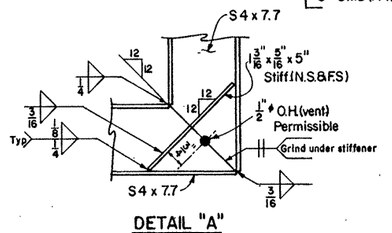

DETAIL "A"

GENERAL NOTES:

Design conforms to the AASHTO Standard Specifications for Structural Supports for Highway Signs, Luminaires and Traffic Signals.

Materials, Fabrication, Construction and Erection [redacted] conform with the requirements of specifications for Interstate Signing and Delineation Projects and Texas Department of Highways and Public Transportation Standard Specifications for Construction of Highways, Streets and Bridges. Structural Steel [redacted] conform with A.S.T.M. Specification A36 unless noted otherwise.

Bolts [redacted] have Hexagon Heads and Nuts and conform with A.S.T.M. Specification A307.

All parts [redacted] galvanized after fabrication

STATE DEPARTMENT OF HIGHWAYS AND PUBLIC TRANSPORTATION

SUPPORT BRACKETS FOR SIGNS, WALKWAY & LIGHTS

SB (SWL-1)

ORIGINAL DRAWING DATE: 2-82	STATE DISTRICT	FEDERAL REGION	FEDERAL AID PROJECT #	SHEET
DN.:-CWC	21	6	NH 92(50)M	544
CK.:-	COUNTY	CONTROL	SECTION	JOB	HIGHWAY
DW.:-EDS	HIDALGO	39	17	97	U583(28)
CK.:-CWC					84

REVISIONS

NOTES:

1. Pole, Ring, and Ring Support [redacted] assembled and erected so that Reference Line is parallel to center line of roadway or as shown on "Lighting Layouts" sheets.
2. Fixture Placement on ring [redacted] provide a min. Clearance of 7" between Fixtures.

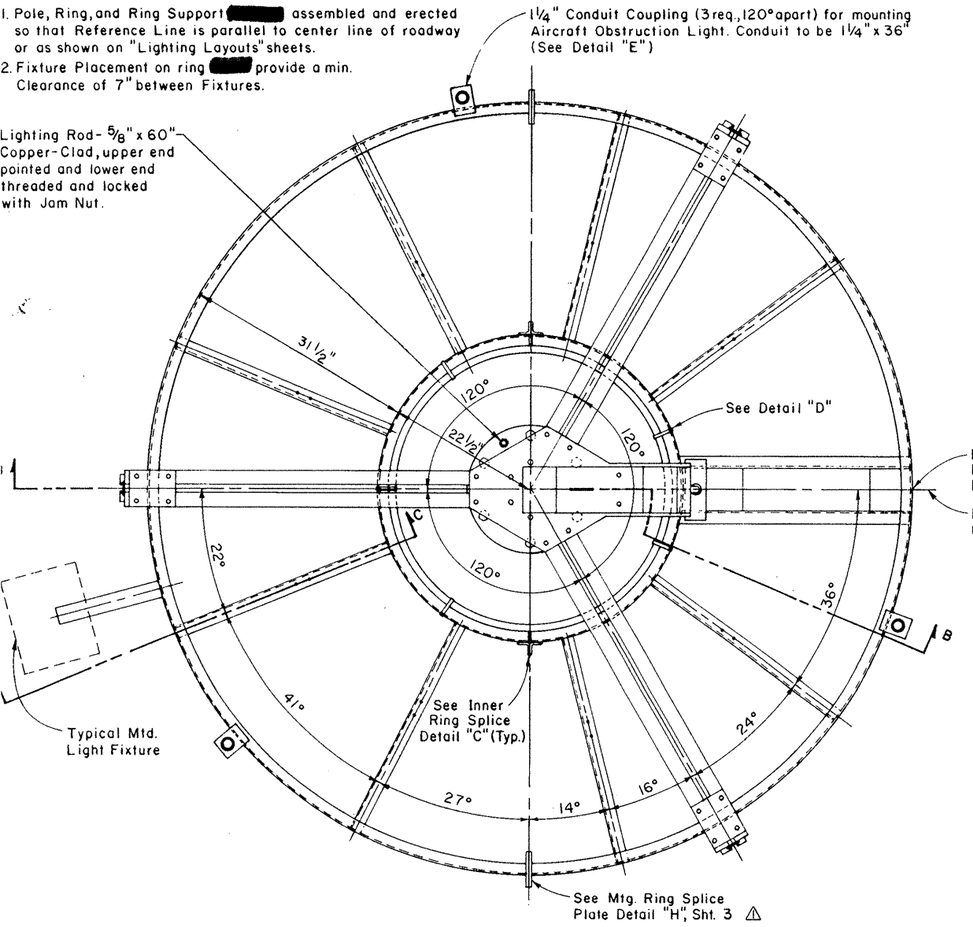

LIGHT MOUNTING RING & SUPPORT ASSEMBLY

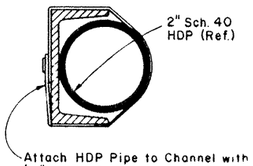

DETAIL "D"
BUMPER RING ATTACHMENT

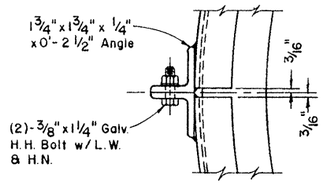

PLAN

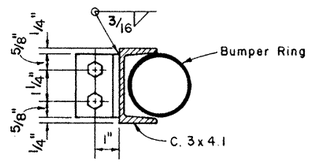

DETAIL "C"
INNER RING SPLICE

* As required by Trunnion Adapter supplied.

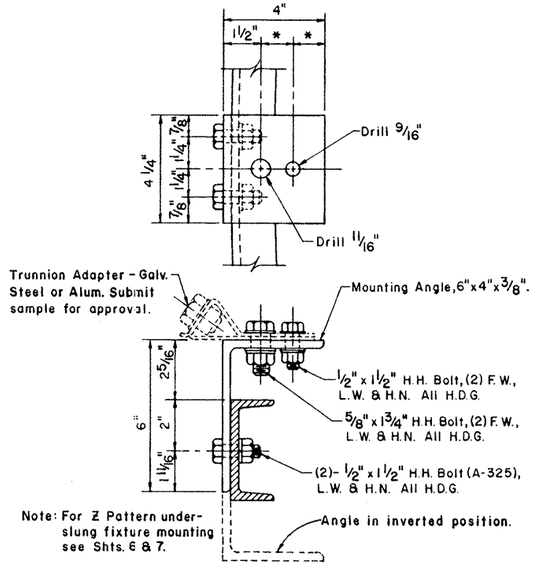

NOTE: Aiming capabilities [redacted] by method shown or by Steel Mounting-Aiming Device as approved by the Engineer. Mark position of fixture with center punch or drill after fixture [redacted] aligned to the right position on the roadway, as directed by the Engineer.

4 4 SECTION C-C
(FOR TRUNNION MOUNT)

NOTE: Provide S.S. or galv. cable safety lanyard for Light Fixture when Trunnion Mount is used.

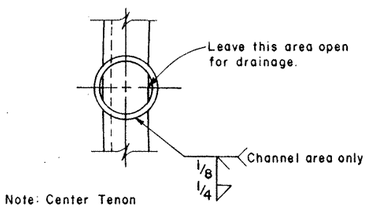

Note: Center Tenon on Channel.

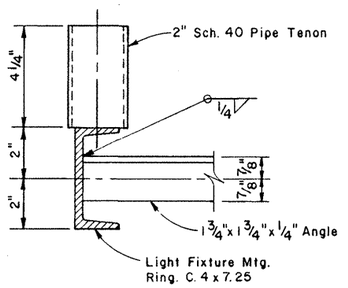

SECTION C-C
(FOR FLOODLIGHTS)

4 REV. 10-1-87 H.P.

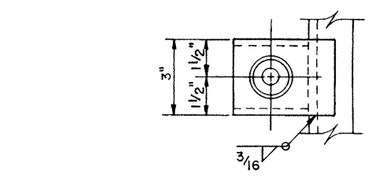

DETAIL "E"
(CONDUIT ATTACHMENT FOR OBSTRUCTION LIGHTS. TYPICAL (3) PLACES)

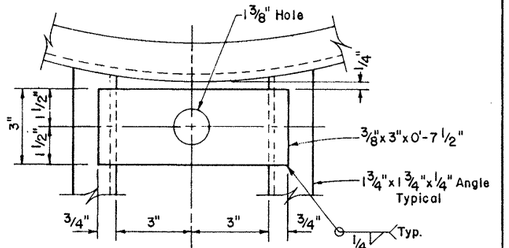

Note: Confirm Connector Size. Use 1" All Thread Nipple & (2) 1" Jam Nuts to Connect Grip to Cord Connector.

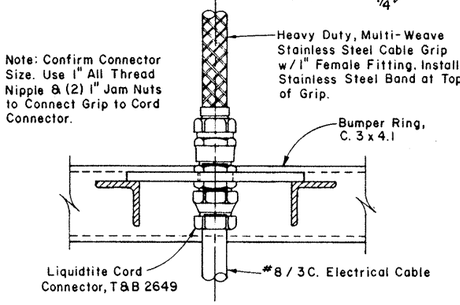

SECTION D-D

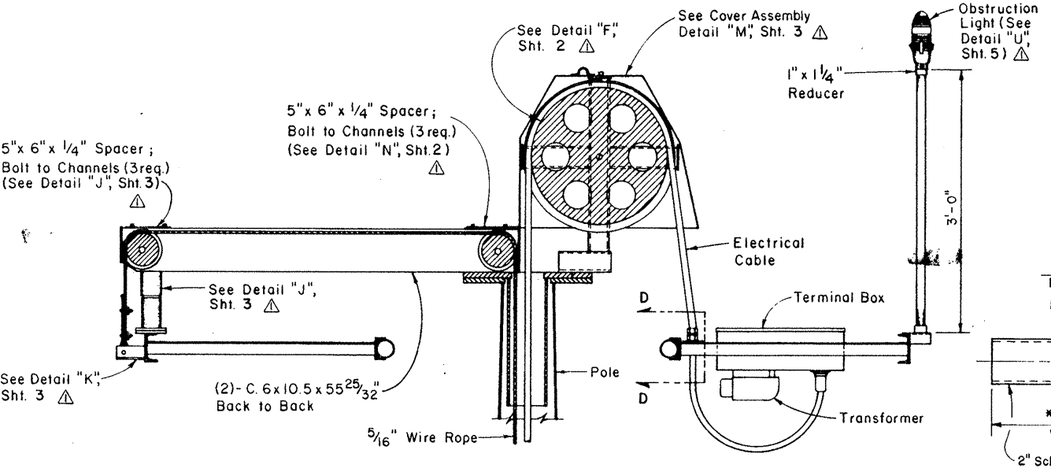

SECTION B-B

* Note: Tenon Length to be Determined by Fixture Used and Required Clearance.

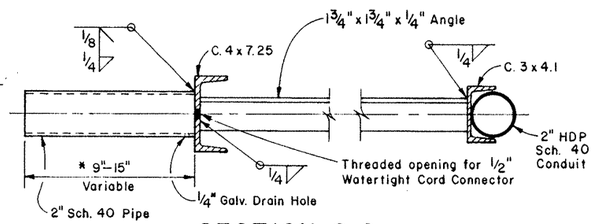

SECTION C-C
(FOR AREALIGHTS)

STATE DEPARTMENT OF HIGHWAYS AND PUBLIC TRANSPORTATION

HIGH MAST ILLUMINATION DETAILS
HMID (1)-86

DN	DRAWING	DATE	FED. RD. DIV. NO.	STATE	FEDERAL PROJECT NO.			HIGHWAY NO.
CK DN	ORIGINAL	1-6-86						
DW H.P.	1 5-5-86 CHG. SHT. NO.		6	TEXAS	NH 92( ) M 4583			
CK DW	2 REV. 4-1-87, H.P.		STATE DIST. NO.	COUNTY		CONT.	SECT.	JOB	SHEET NO.
TR	3 REV. 5-29-87, H.P.		21	Hidalgo		39	17	97	545
CK TR									

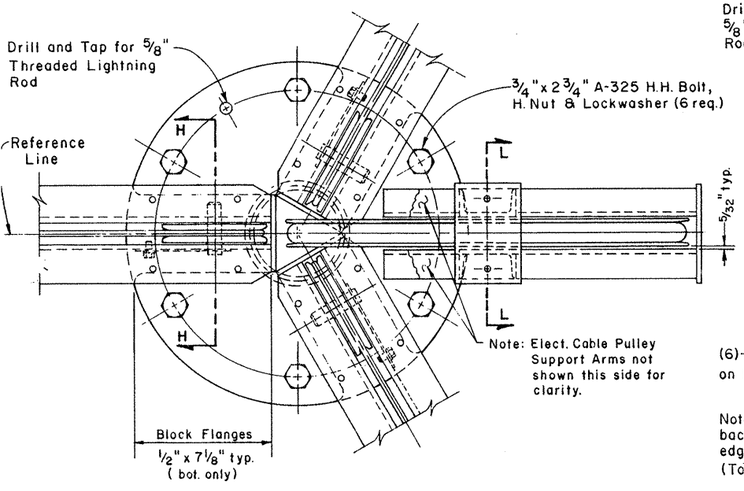

PLAN VIEW

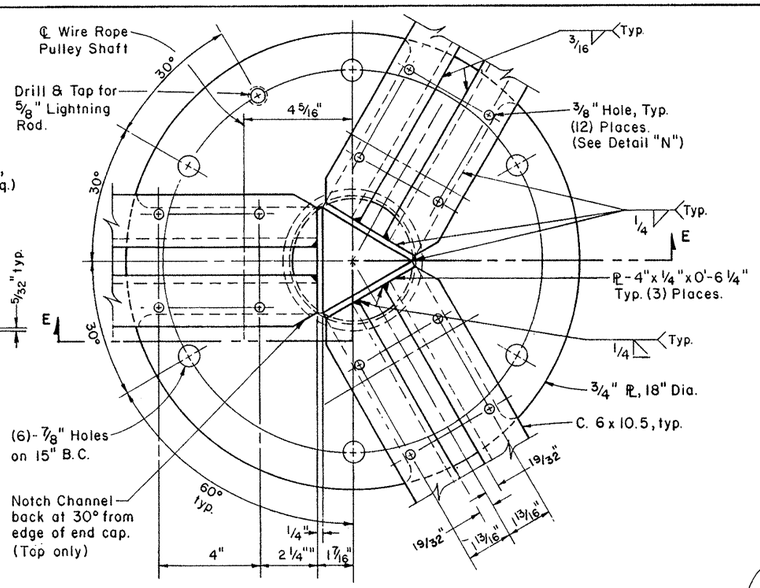

DETAIL "G"
TOP PLATE CONNECTION
(LESS ELECT. CABLE PULLEY SUPPORT)
(SEE DETAIL "L")

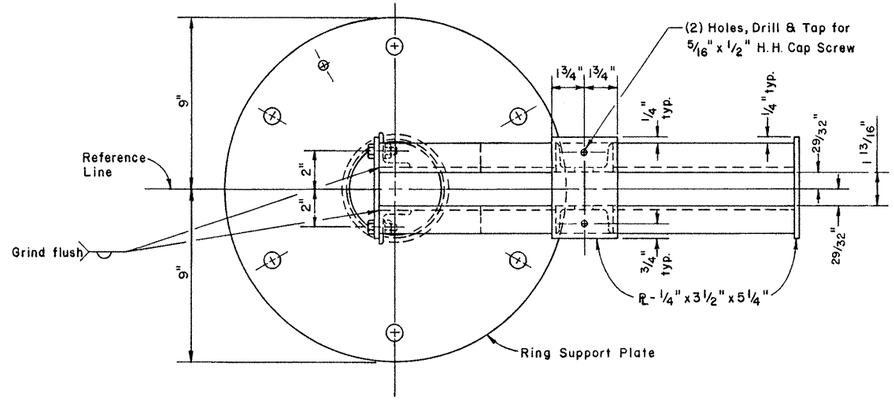

PLAN VIEW

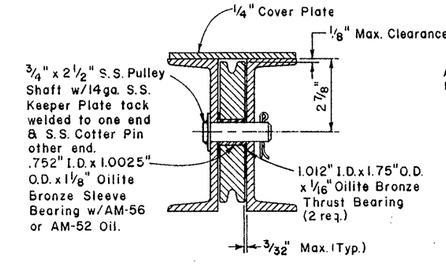

SECTION "H-H"
PULLEY MOUNTING FOR
RING SUPPORT ARMS

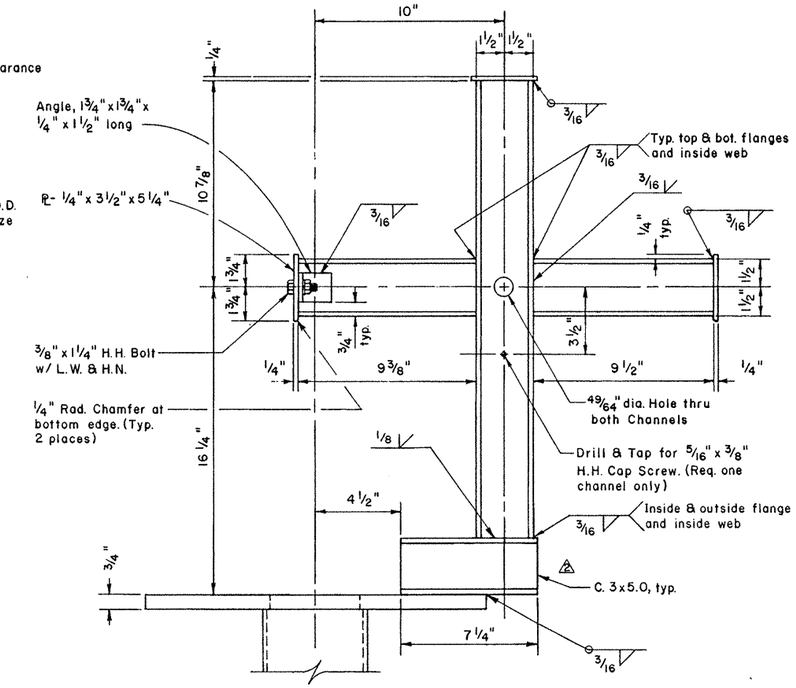

DETAIL "L"
ELECT. CABLE PULLEY SUPPORT
(RING SUPPORT ARMS NOT SHOWN FOR CLARITY)

DETAIL "F"
RING SUPPORT ASSEMBLY
(NEAR SIDE SUPPORT ARM & ELECT. CABLE
PULLEY COVER NOT SHOWN FOR CLARITY)

SECTION "E-E"

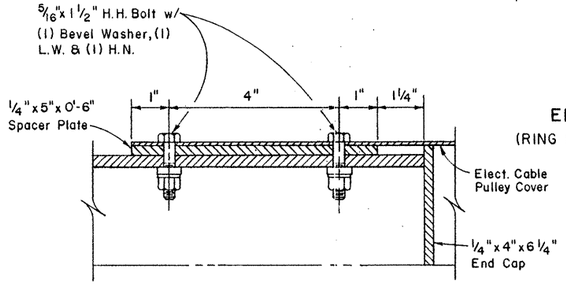

DETAIL "N"

4 12-22-87 ADDED WELD
3 5-26-87 CHG. SHT. NO.

STATE DEPARTMENT OF HIGHWAYS AND PUBLIC TRANSPORTATION

HIGH MAST ILLUMINATION DETAILS
HMID (2)-86

DN	DRAWING	DATE	FED. RD. DIV. NO.	STATE	FEDERAL PROJECT NO.			HIGHWAY NO.
CK DN	ORIGINAL	1-6-86	6	TEXAS	NH 92( ) M			USB3
DW H.P	4 4-29-86. CHG. PIPE & HOLE SIZE.		STATE DIST. NO.	COUNTY	CONT.	SECT.	JOB	SHEET NO.
CK DW	3 5-22-86 CHG. CHANNEL CONN.		21	Hidalgo	39	17	97	546
TR								
CK TR								

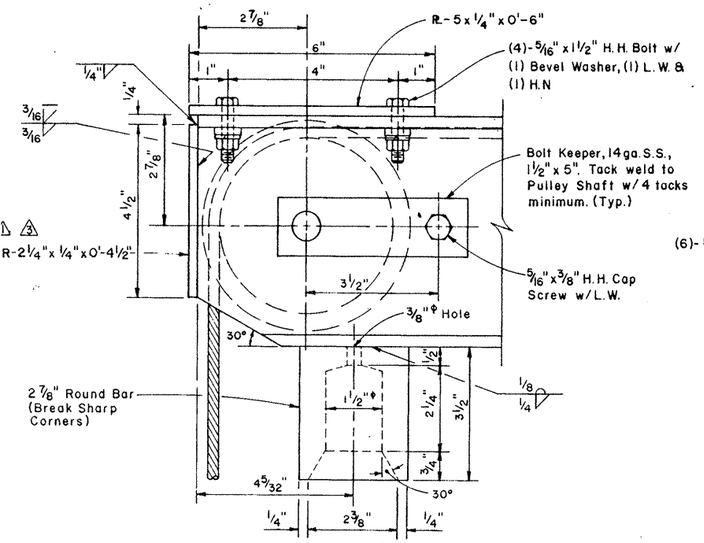

DETAIL "J"

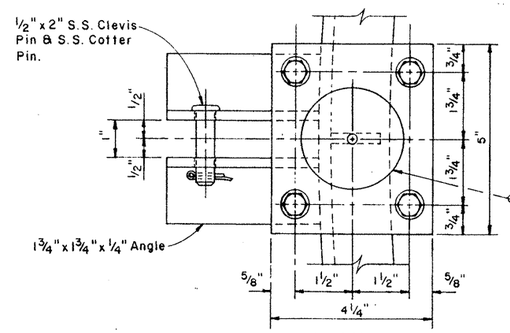

PLAN

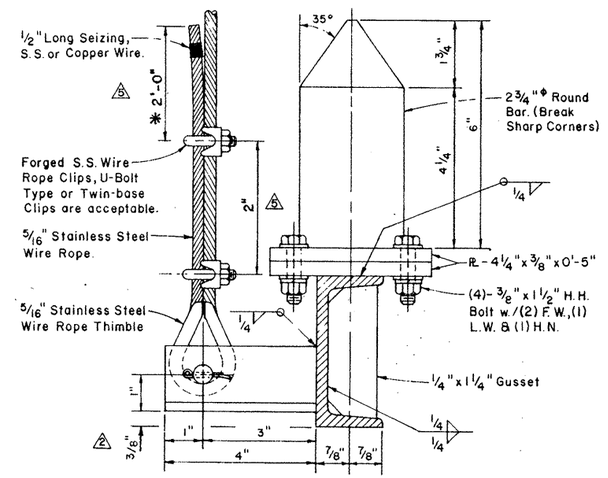

DETAIL "K"
MOUNTING RING CONNECTION & STABILIZER

△ ✱ EXTRA 2'-0" of wire cable [redacted] attached to ring with SS Bands as directed by the Engineer.

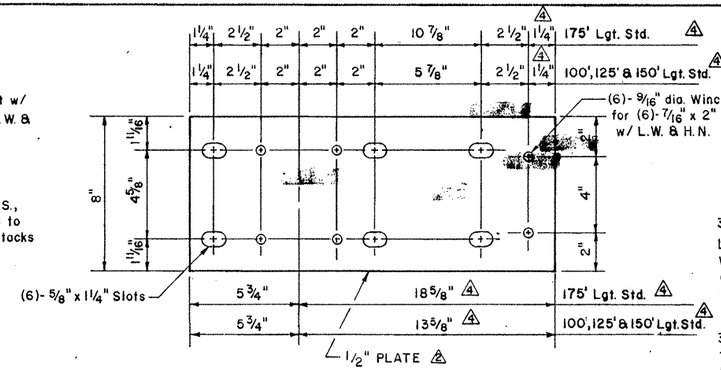

DETAIL "V"
WINCH MOUNTING PLATE

NOTE: Dimensions may vary-Verify with winch manufacturer.

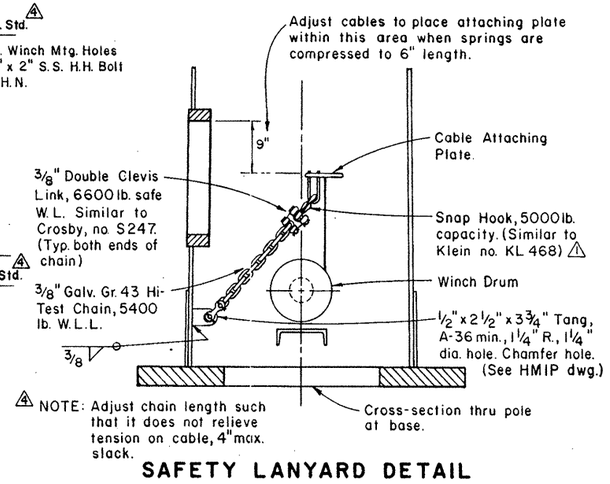

△ NOTE: Adjust chain length such that it does not relieve tension on cable, 4" max. slack.

SAFETY LANYARD DETAIL

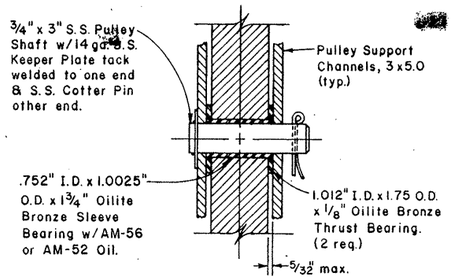

SECTION L-L
ELECTRICAL CABLE PULLEY MOUNTING

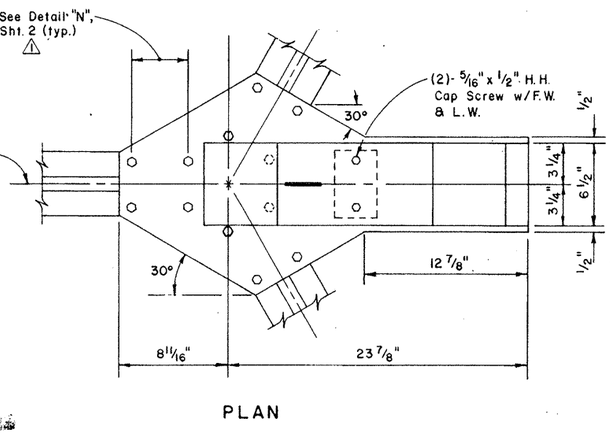

PLAN

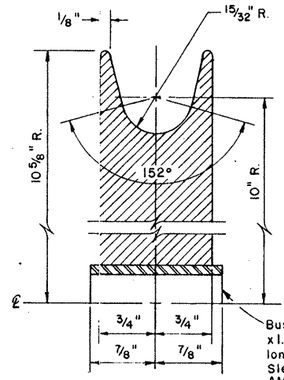

SECTION F-F
ELECTRICAL CABLE PULLEY

(Pulley material to be aluminum alloy, type 356-T6 or equal.)

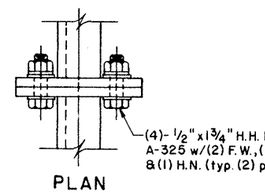

PLAN

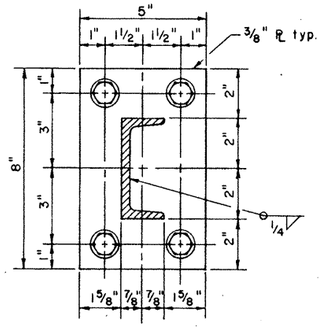

DETAIL "H"
MOUNTING RING SPLICE PLATE

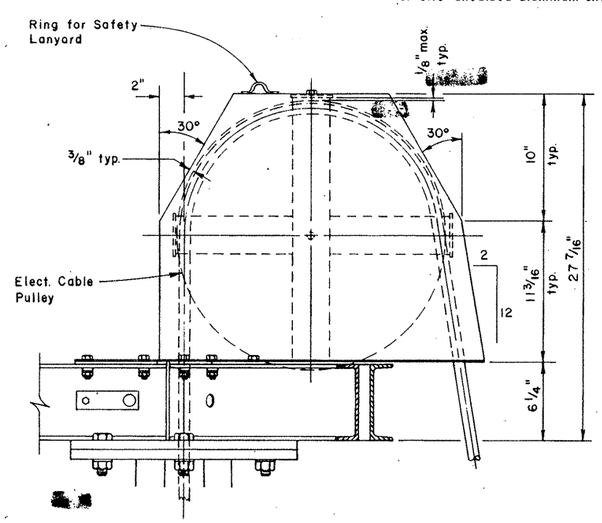

NOTE: Cover [redacted] 14 ga. galv. sht. metal or 0.10" anodized aluminum sheet.

DETAIL "M"
COVER CAP ASSEMBLY

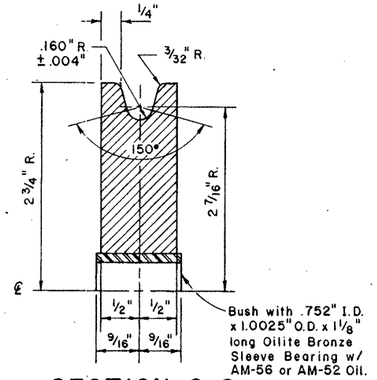

SECTION G-G
WIRE ROPE PULLEY

(Pulley material [redacted] plated steel or Stainless Steel)

△ REV. 10-88 HR

△ 10-27-87, CHG. DIM.

△ 5-10-86, CHG. END CAP SIZE

STATE DEPARTMENT OF HIGHWAYS AND PUBLIC TRANSPORTATION

HIGH MAST ILLUMINATION DETAILS

HMID (3)-86

DN	DRAWING	DATE	FED. RD. DIV. NO.	STATE	FEDERAL PROJECT NO.		HIGHWAY NO.
CK DN	ORIGINAL	1-6-86	6	TEXAS	NH 92( ) SM		4583
DW H. P.	△ CHG. KLEIN NO., SHT. NO. & END CAP SIZE.		STATE DIST. NO.	COUNTY		CONT. SECT. JOB	SHEET NO.
CK DW	△ 5-5-86 ADD DIM.		21	Hidalgo		39 17 97	547
TR							
CK TR							

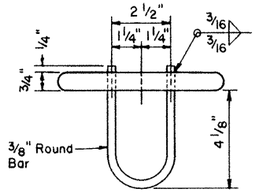

VIEW "M-M"

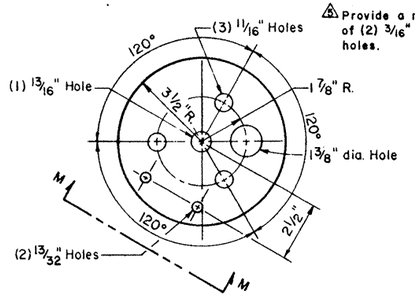

PLAN VIEW

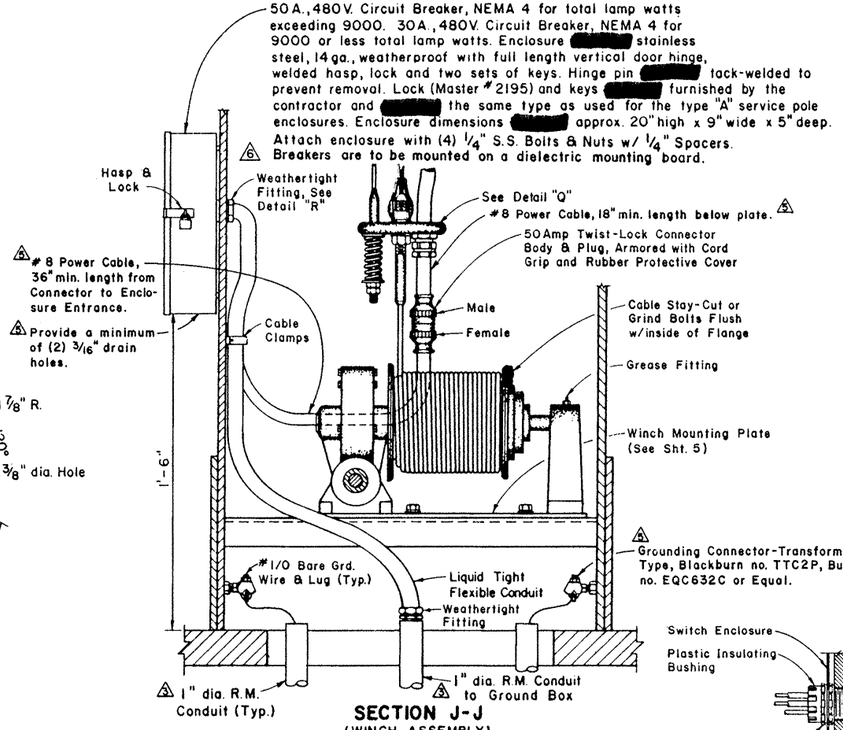

SECTION J-J
(WINCH ASSEMBLY)

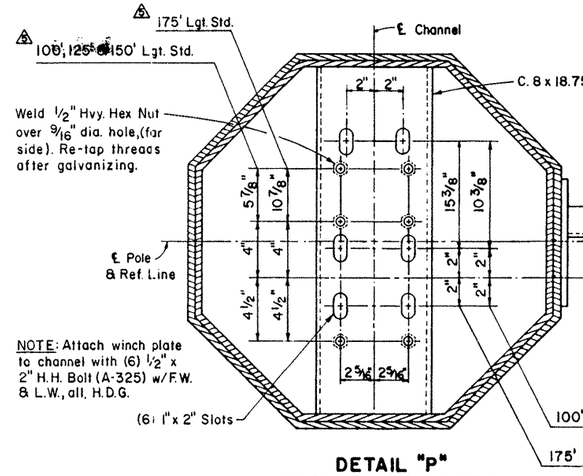

DETAIL "P"
(WINCH MOUNTING CHANNEL)
Dimensions [redacted] vary - Verify with winch manufacturer.

NOTE:
The drive train of the Power Drive Assembly between the driving motor and the winch [redacted] within two degrees of perfect alignment.

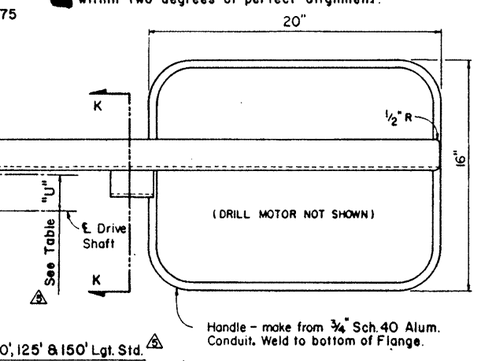

TABLE OF "U" DIMENSIONS

Pole Ht. Ft.	8 Sided 80 MPH	8 Sided 100 MPH	12 Sided 80 MPH	12 Sided 100 MPH
100	3 1/2"	3 1/2"	2 1/2"	2 1/2"
125	3 1/2"	3 1/2"	2 1/2"	2 1/2"
150	3 1/2"	3 1/2"	2 1/2"	2 1/2"
175	4 1/2"	4 1/2"	3 1/2"	3 1/2"

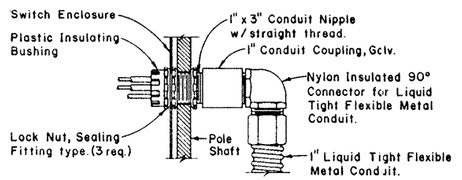

(POWER FEED FROM GROUND BOX)

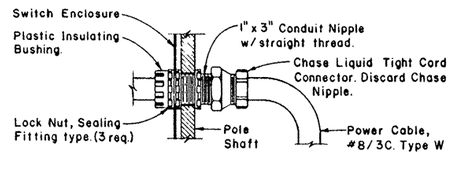

(POWER OUT TO LIGHT RING)

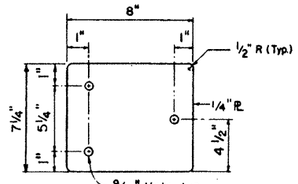

DETAIL "S"
(WINCH DRIVE ACCESS COVER)

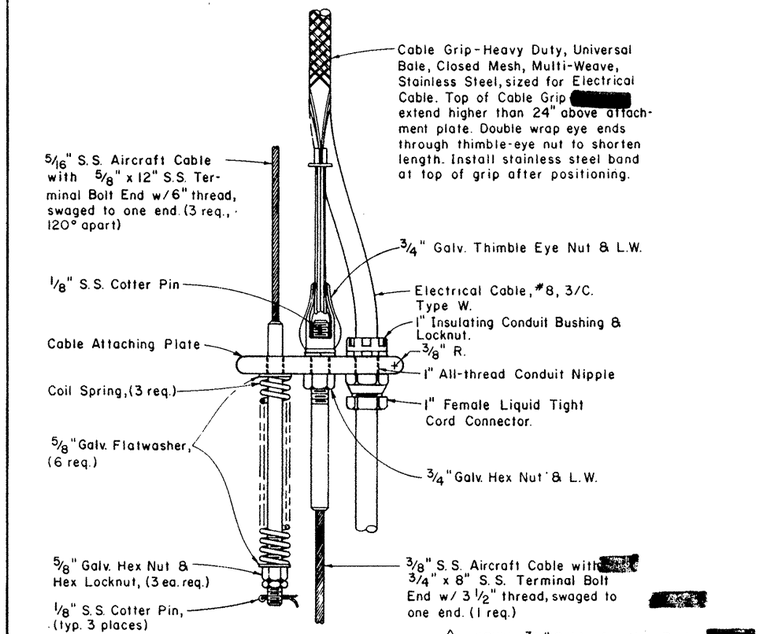

DETAIL "Q"
(CABLE ATTACHING PLATE)

NOTE: 3/8" Cable for this Project [redacted] 19 x 7 Rotation Resistant per HMID (9)-86, Item 8.A.

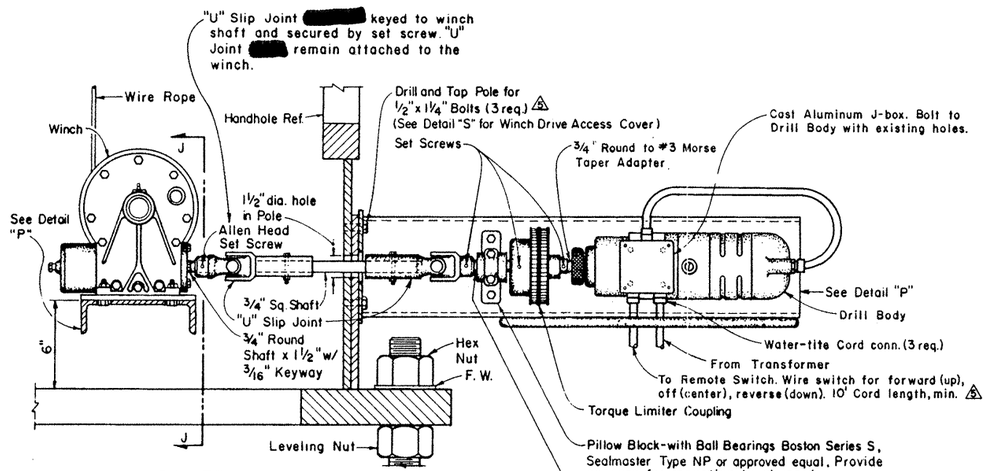

POWER DRIVE ASSEMBLY

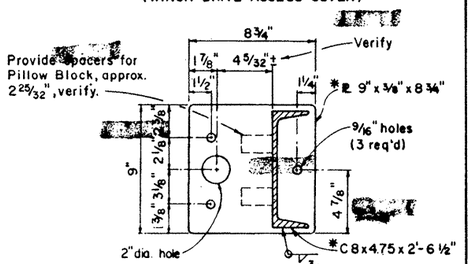

SECTION K-K
(DRILL MOTOR MOUNTING PLATE)

* Make from 6061-T6 Aluminum

△ 4-14-89 ADD BREAKER NOTE
△ 12-22-87 VARIOUS REVISIONS, H.P.
△ 12-8-86, CHG. DRILL & MTG. PLATE
△ REV. 12-3-86, H.P.

STATE DEPARTMENT OF HIGHWAYS AND PUBLIC TRANSPORTATION

HIGH MAST ILLUMINATION DETAILS

HMID (4)-86

DN	DRAWING	DATE	FED. RD. DIV. NO.	STATE	FEDERAL PROJECT NO.				HIGHWAY NO.
CK ON	ORIGINAL	1-6-86	6	TEXAS	NH 92( )M				4583
DW H.P.	△ 4-29-86 CHG. PLATE TO 7" DIA. H.P.		STATE PROJ. NO.	COUNTY		CONT.	SECT.	JOB	SHEET NO.
CK DW	△ 5-30-86, ADD NOTE, H.P.		21	Hildalgo		39	17	97	548
TR									
CK TR									

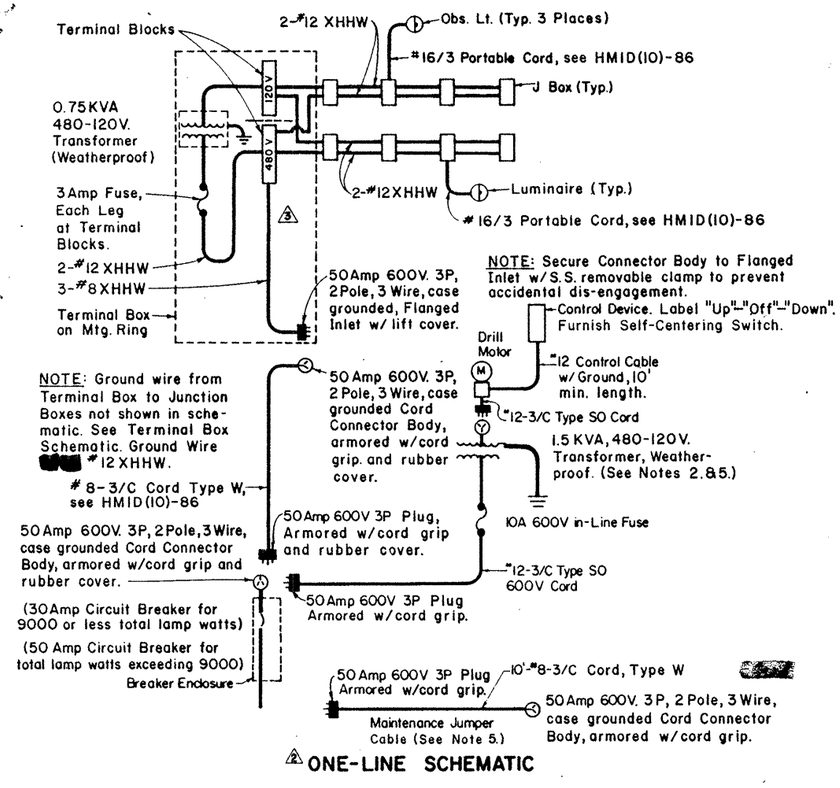

⚠2 ONE-LINE SCHEMATIC

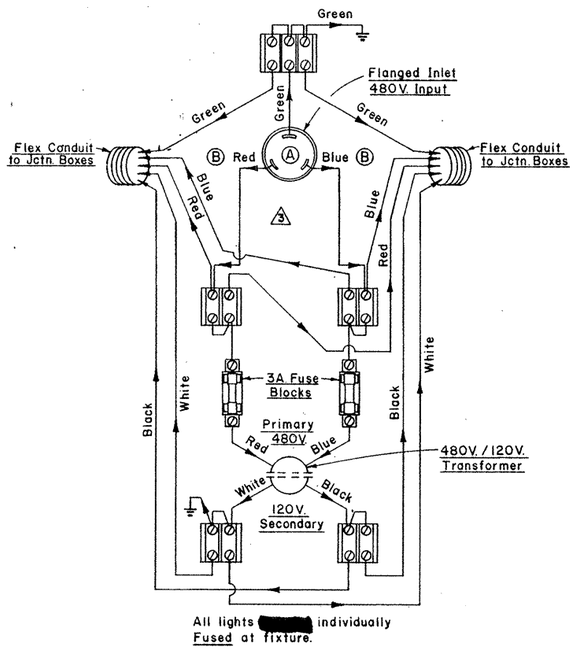

TERMINAL BOX SCHEMATIC

NOTES:

1. Obstruction Lights Color Code: From secondary side of transformer throughout-circuit to socket. White-Neutral, Black-Load, Green-Case Ground.
2. Power Supply Cord to Flanged Inlet: Green-ground, White-line, Black-line. From Flanged Inlet Ⓐ to Terminal Blocks: Green-ground, Red-line, Blue-line. From there on-all 480V. circuit wires [redacted] Red and Blue to junction boxes.
3. Wire size from Power Supply to Terminal Blocks [redacted] no. 8 AWG – See Ⓑ [redacted]
4. Wire size from Terminal Blocks to Junction Boxes [redacted] no. 12 AWG.
5. Mount Terminal Blocks on 3/4" exterior grade plywood.
6. For 2-Wire, 480V. Service, omit fuse in grounded conductor.

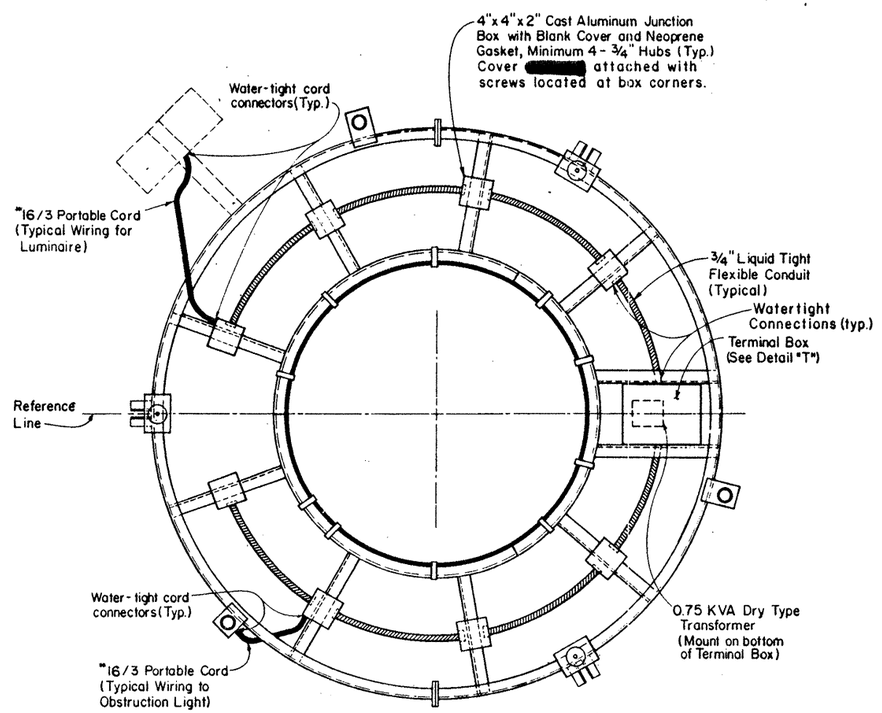

LIGHT MOUNTING RING

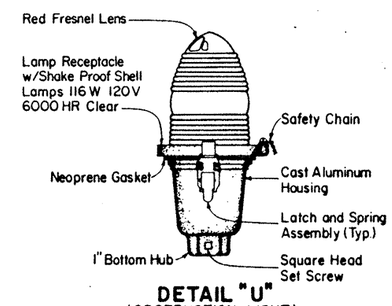

DETAIL "U" (OBSTRUCTION LIGHT)

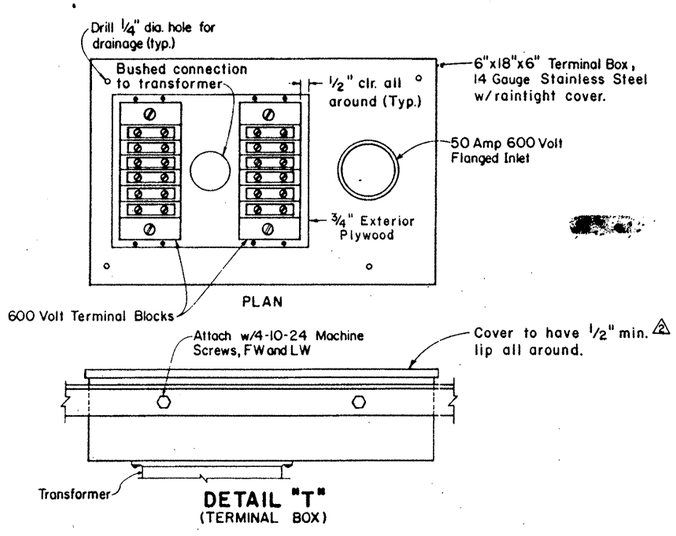

DETAIL "T" (TERMINAL BOX)

GENERAL NOTES:

⚠2 1. All plugs, connector bodies and flanged inlets [redacted] "twist-lock" type, 3 prong, rated at 50 amps for 600 V. ⚠1 and 20 amps for 120V. 50 amp connectors [redacted] 3-wire case grounded, armored, with cord grip. 20 amp connectors [redacted] 3-wire grounding with cord grip, NEMA Type L5-20.

2. Provide handle on 1.5 KVA transformer for portability. (See One-Line Schematic above)
3. Circuit breakers [redacted] ITE #E43B030 or #E43B050, Square "D" #FAL24030 S/N or #FAL24050 S/N, or equal.
4. Conduit entries into Terminal Box [redacted] made with hubs in the side of the box.

⚠2 5. A minimum of one (1) Maintenance Jumper Cable [redacted] supplied for each project. Supply one (1) Portable Transformer for each Power Drive Unit required for project.

STATE DEPARTMENT OF HIGHWAYS AND PUBLIC TRANSPORTATION

HIGH MAST ILLUMINATION DETAILS

HMID (5)-86

DN	DRAWING	DATE	FED.RD. DIV. NO.	STATE	FEDERAL PROJECT NO.			HIGHWAY NO.
CK DN	ORIGINAL	1-6-86	6	TEXAS	NH 92(	)M		US83
DW H.P.	⚠1 6-15-87, REV., H.P.		STATE DIST. NO.	COUNTY		CONT.	SECT.	JOB	SHEET NO.
CK DW	⚠2 11-13-87, REV., H.P.								
TR	⚠3 10-3-88, REV., H.P.		21	Hidalgo		39	17	97	549
CK TR									

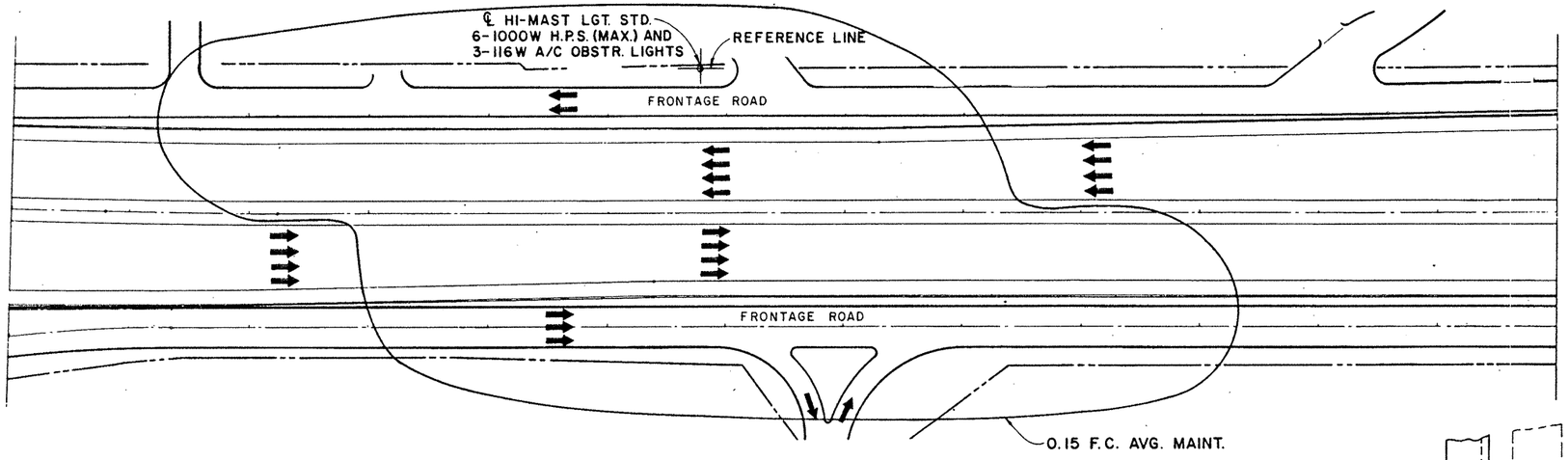

TYPICAL REVERSE "Z" PATTERN ARRAY

NOTES:

1. THE ABOVE PATTERN IS THE APPROXIMATE SIZE AND TYPE OF PATTERN [redacted] PRODUCED BY EACH POLE. REVERSE "Z" PATTERN IS REQUIRED TO MINIMIZE GLARE TO THE ONCOMING MOTORIST.
2. SIX FIXTURES ARE THE MAXIMUM NUMBER ALLOWED PER POLE TO PRODUCE THE "Z" PATTERN. A LESSER NUMBER OF FIXTURES PER POLE [redacted] ALLOWED IF TESTING PROVES THAT THE LESSER NUMBER OF FIXTURES WILL PRODUCE THE REQUIRED PHOTOMETRICS.

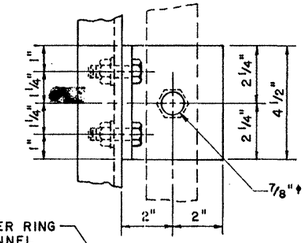

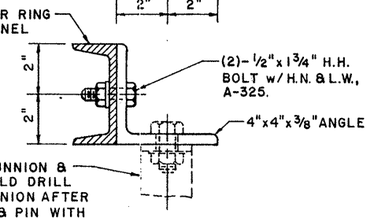

⚠2 UNDERSLUNG FIXTURE MOUNTING BRACKET

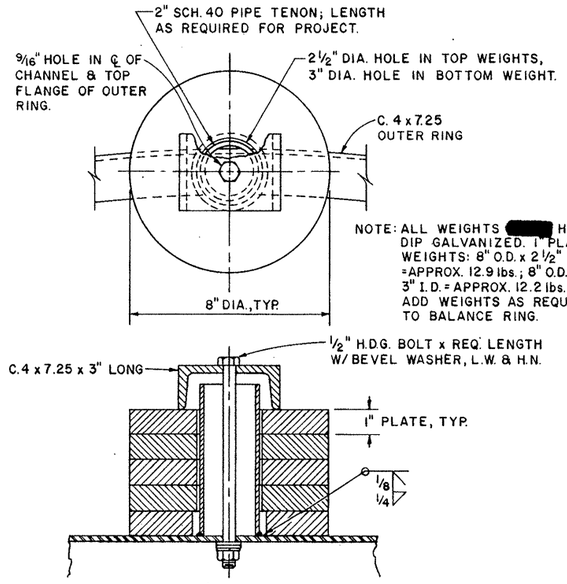

SUGGESTED COUNTERWEIGHT DETAIL

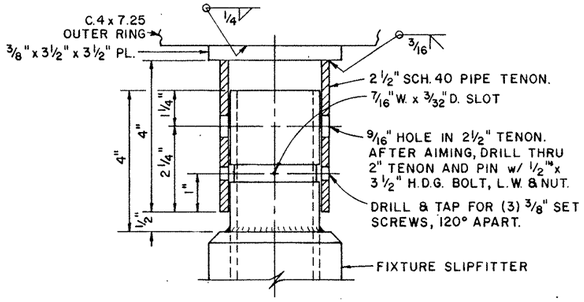

ALTERNATE UNDERSLUNG FIXTURE TENON DETAIL

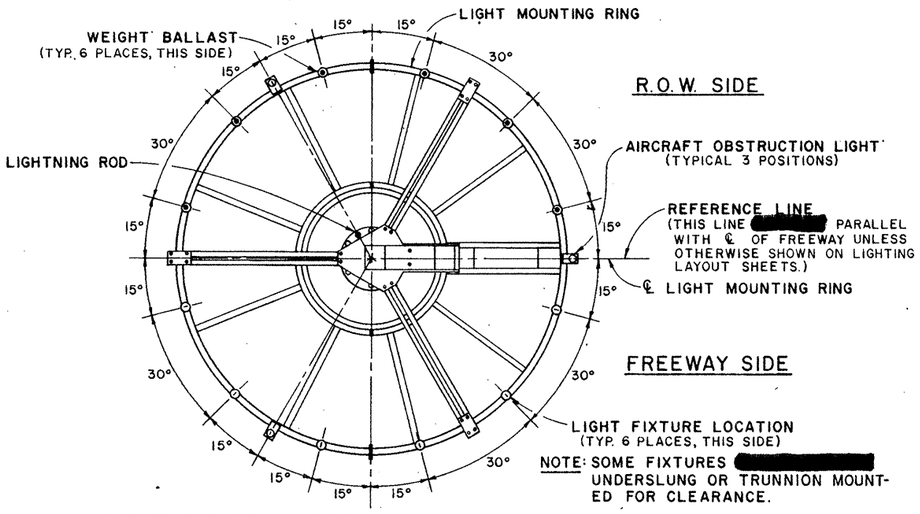

LIGHT MOUNTING RING & SUPPORT ASSEMBLY (6 LIGHT "Z" PATTERN)

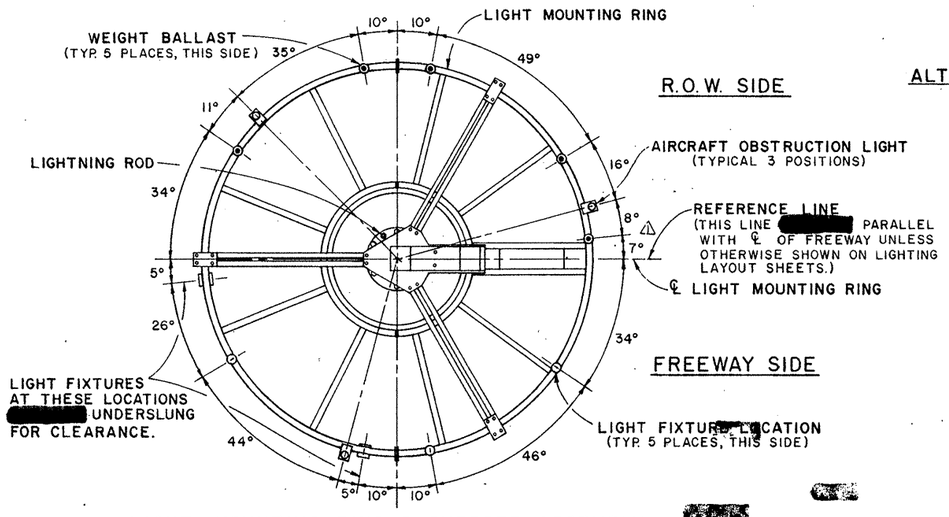

LIGHT MOUNTING RING & SUPPORT ASSEMBLY (5 LIGHT "Z" PATTERN)

STATE DEPARTMENT OF HIGHWAYS AND PUBLIC TRANSPORTATION

HIGH MAST ILLUMINATION DETAILS

HMID (6)-86

DN	DRAWING	DATE	FED. RD. DIV. NO.	STATE	FEDERAL PROJECT NO.				HIGHWAY NO.
CK DN	ORIGINAL	1-6-86	6	TEXAS	NH92( )M				US83
DW H.P.	⚠1 7-15-86 REV. ANGLE		STATE DIST. NO.	COUNTY		CONT.	SECT.	JOB	SHEET NO.
CK DW	⚠2 6-12-87 ADD DETAIL; H.R		21	Hidalgo		39	17	97	550
TR									
CK TR									

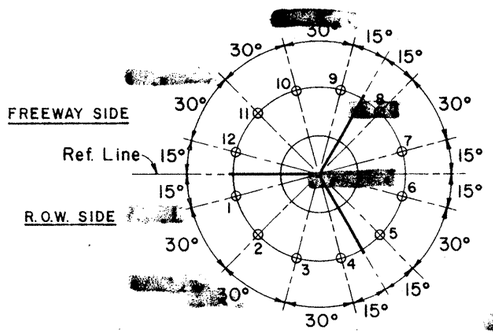

12-LIGHT SETTING

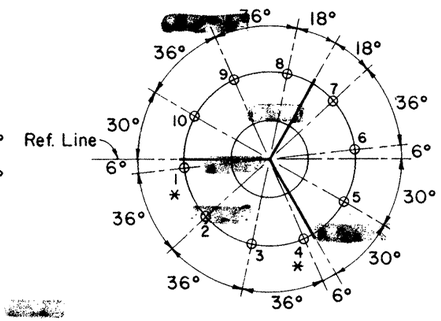

10-LIGHT SETTING

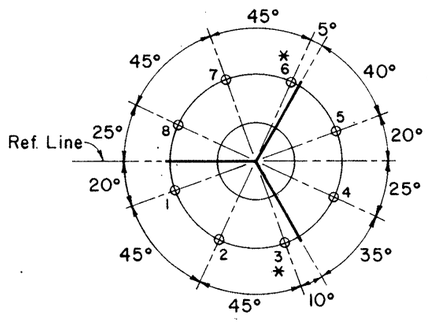

8-LIGHT SETTING

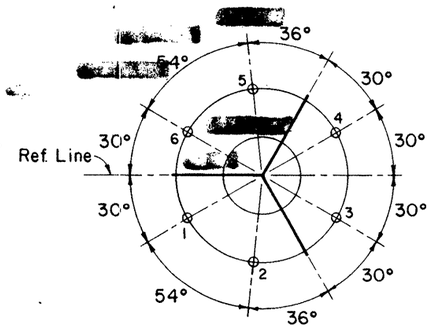

6-LIGHT SETTING

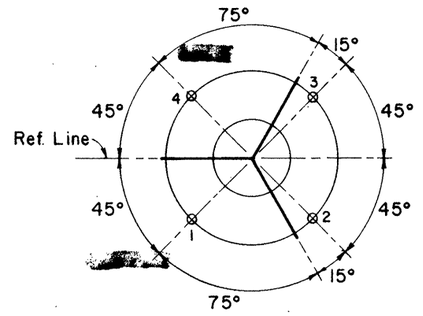

4-LIGHT SETTING

LUMINAIRE LOCATIONS

*-NOTE: FIXTURES AT THESE LOCATIONS [redacted] UNDERSLUNG TO CLEAR SUPPORT ARM. THIS [redacted] DETERMINED BY FIXTURE SUPPLIED AND MOUNTING REQUIREMENTS.

NOTE: Aircraft Obstruction Light locations not shown. Three are required located approx. 120° apart. Locations [redacted] vary dependent on the light setting used.

NOTE: MIN. SWAGE LENGTH = 2.06
MAX. SWAGE LENGTH = 2.94

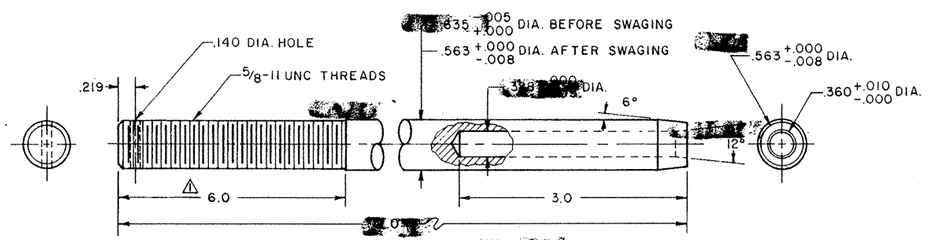

TERMINAL FOR 5/16" WIRE ROPE
MATERIAL: STAINLESS STEEL, TYPE 303SE OR 304
WITH 115,000 p.s.i. MAX. ULTIMATE TENSILE STRENGTH

NOTE: MIN. SWAGE LENGTH = 3.12
MAX. SWAGE LENGTH = 3.44

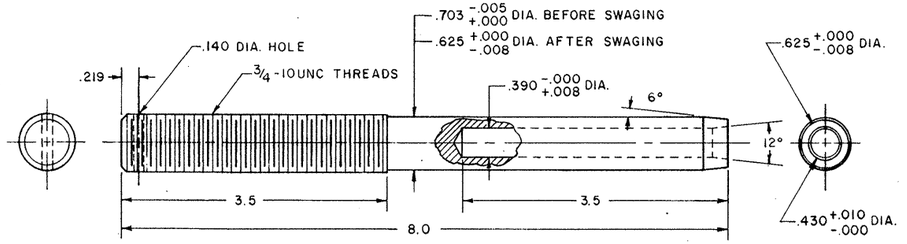

TERMINAL FOR 3/8" WIRE ROPE
MATERIAL: STAINLESS STEEL, TYPE 303SE OR 304
WITH 115,000 p.s.i. MAX. ULTIMATE TENSILE STRENGTH

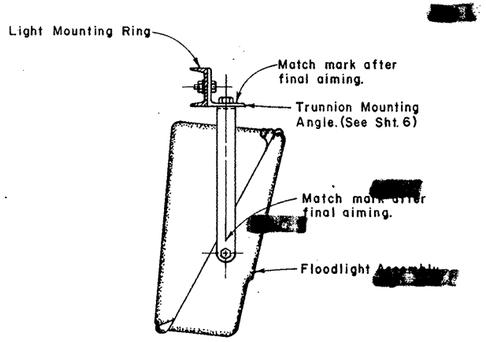

FLOODLIGHT MOUNTING ASSEMBLY
(UNDERSLUNG TRUNNION TYPE)
2

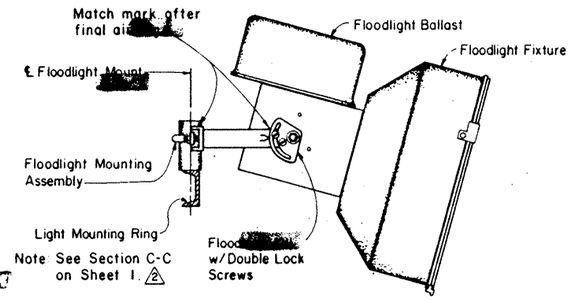

FLOODLIGHT MOUNTING ASSEMBLY
(METHOD OF MOUNTING MAY VARY)

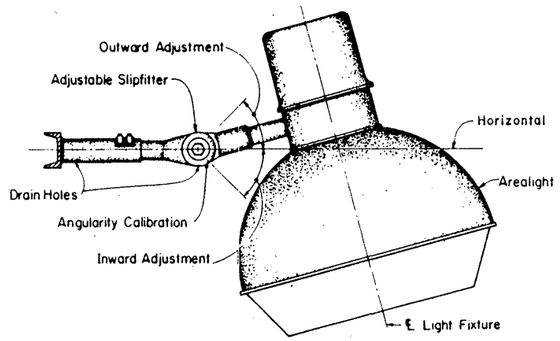

AREALIGHT MOUNTING ASSEMBLY
(SYMMETRIC AND ASYMMETRIC)

NOTES: Adjustable Slipfitter [redacted] furnished only on Arealight Units noted and only if aiming capabilities are not built into lighting units provided for this project.
See schedule for Light Fixtures [redacted] adjusted.
Final adjustment [redacted] made in the field as directed by the Engineer.
If Asymmetric Fixtures are used, the Refractors [redacted] oriented to properly illuminate the adjacent roadways. Orientation [redacted] as shown in plans.

GENERAL NOTES:
1. After final aiming [redacted] completed and approved by the Engineer, fixtures [redacted] locked in position. Contractor must submit proposed locking scheme with the fixture submittal.

STATE DEPARTMENT OF HIGHWAYS AND PUBLIC TRANSPORTATION

HIGH MAST ILLUMINATION DETAILS
HMID (7)-86

DN	DRAWING	DATE	FED. RD. DIV. NO.	STATE	FEDERAL PROJECT NO.			HIGHWAY NO.
CK DN	ORIGINAL	1-6-86	6	TEXAS	NH 92( )M			4583
DW H.P.	1 4-29-86. CHG. THREAD LENGTH FROM 3" TO 6".		STATE DIST. NO.	COUNTY	CONT.	SECT.	JOB	SHEET NO.
CK DW			21	Hidalgo	39	17	97	651
TR	2 6-15-87 REV., H.P.							
CK TR								

1. AREA LIGHTING

A. Area lighting [redacted] Symmetric, Asymmetric or Area[redacted]dlights. The number and wattages of the fixtures on each pole [redacted] as shown on the lighting layouts. The lighting pattern for symmetric fixtures [redacted] IES Type V, for asymmetric fixtures, IES Type II, III, OR IV.

B. The lighting systems [redacted] meet the following requirements unless otherwise approved by the Engineer. The lighting systems [redacted] produce an average initial horizontal footcandle level of 0.8 on the travelways with the pole spacing and mounting heights shown on layouts. The average to minimum ratio [redacted] no greater than 3 to 1 nor [redacted] the average to maximum ratio exceed 3 to 1. Light intensities along the travelways [redacted] not decrease at a rate less than 0.7 nor increase at a rate greater than 1.4 based on a 30 ft. grid. Contractor [redacted] furnish aiming charts and lighting footcandle arrays. Photometric performance [redacted] determined on the roadway after installation, or at the Engineer's option, [redacted] tested at the Department's test facility. Minimum initial light level [redacted] be 0.3 footcandle. 1

C. Symmetric and Asymmetric fixtures [redacted] meet the following requirements unless otherwise approved by the Engineer:

3 (1) Omitted

(2) The optic assembly [redacted] a sealed unit with aluminum alzak reflector and equipped with a tempered door glass or prismatic glass. The optic assembly [redacted] provided with resilient gaskets and so constructed that a positive seal against weather and other contaminants [redacted] maintained.

3 (3) Lamp sockets [redacted] mogul nickel plated and porcelain-enclosed with a lamp-gripping device. 1000 watt fixture [redacted] include an end lamp support opposite the base.

(4) The luminaire housing [redacted] cast or drawn from a non-ferrous alloy and [redacted] free of cracks and excessive porosity. All nuts, screws, clips, washers and attaching hardware [redacted] made of stainless steel; steel coated with an acidic chromate-phosphate-binder system primer, top coated with a polytetrafluoroethylene modified silicon primer, bright metallic in color, meeting the requirements of General Motors automotive specification GM 164M; or other approved conversion coatings except that brackets [redacted] made from pre-galvanized steel. All threaded surfaces used in the housing [redacted] lubricated with a silicone grease.

(5) Fixture weight, including ballast, [redacted] exceed 70 pounds and effective projected area [redacted] exceed 2.5 square feet.

D. Area floodlights [redacted] meet the following requirements:

3 (1) Area floodlights [redacted] meet the photometric requirements stated in paragraph 1.B above, using 12 - 400 watt HPS units per pole or other number of fixtures shown on the plans. Vertical aiming angles and candela distribution [redacted] such as to restrict maximum candela at 80 degrees above nadir to 12,500. Contractor [redacted] submit for approval iso-candela curves and candela traces showing vertical and horizontal distribution through the zero axis of the floodlights. Where less than 12 floodlights are used, Contractor [redacted] provide counterweights to balance the support ring.

(2) Floodlights [redacted] have permanently marked scales for horizontal and vertical aiming. Scales [redacted] in 5° increments. Contractor [redacted] after all aiming adjustments are made, mark final aiming settings on all floodlights.

3 (3) Floodlights [redacted] NEMA Class HDB (heavy duty with integral ballast), except that floodlights with fiberglass housings [redacted] used. Lens retainer, slipfitter trunnion-mounting bolts and all machine screws exterior and interior [redacted] stainless steel. Floodlights [redacted] have silicone rubber or elastomer gasket between door and housing and [redacted] arranged to drain water when positioned in the final proposed aiming position. Lens [redacted] fully gasketed with high-temperature non-hardening pressure-applied mastic to insure a positive seal. Lens [redacted] heat and impact-resistance tempered glass. Reflector [redacted] removable. Lamp sockets [redacted] nickel plated, mogul base, porcelain with lamp-gripping device.

Lens [redacted] fully gasketed with high-temperature non-hardening

(4) Floodlight mounting [redacted] trunnion or slipfitter types. Trunnions [redacted] constructed of 2" x 1/4" steel, hot-dipped galvanized or painted with two coats of ZRC paint. Trunnion length [redacted] as approved by the Engineer. Floodlights [redacted] fitted with a watertight cord connector for #16/3 portable cord or ½ inch non-metallic flexible conduit connector. A grounding terminal [redacted] provided inside fixture housing.

(5) Area floodlights [redacted] have an effective projected area not to exceed 3.3 square feet, except where floodlight with fiberglass housing is permitted, EPA may be 4.3 square feet.

2. SPILL LIGHT LEVEL When shown on the plans, spill light [redacted] restricted to [redacted] .15 horizontal footcandles.

3 Revised: Various; Revised C. para.

2 Revised: Fixtures, IES Types; Removed Z-Pattern

STATE DEPARTMENT OF HIGHWAYS AND PUBLIC TRANSPORTATION

HIGH MAST ILLUMINATION DETAILS HMID (8)-86

ORIGINAL DRAWING DATE:	REVISIONS	STATE DISTRICT	FEDERAL REGION	FEDERAL AID PROJECT		SHEET
DN.:	1-12-87	21	6	NH 92(	)M	552
CK.:	5-02-91	COUNTY		CONTROL	SECT-ON	JOB	HIGHWAY
DW.:	9-30-91	Hidalgo		39	17	97	4583
CK.:	- -						

3. BALLASTS

A. Ballasts for 1000 watt HPS lamps [redacted] regulated auto-transformer type (CWA) rated 480 volts. Ballasts for 400 watt HPS lamps [redacted] regulated isolated winding type (CW) rated 480 volts. Ballasts [redacted] capable of starting lamps at an ambient temperature of -20 F. Ballast wiring shall include a grounding terminal bonded to metal housing. Ballasts [redacted] fused with time-delay fuses in insulated fuse holders, 8 amp for 1000 watt, 5 amp for 400 watt. Fuse holders [redacted] internal to the housing. Ballast wiring to terminal board [redacted] through a quick-disconnect plug. Ballast nameplate [redacted] permanently and clearly indicate the following: Manufacturer's name, catalog number, voltage rating, lamp type, and connection diagram.

B. When the circuit voltage indicated on the plans is applied, the ballast input wattage during fluctuations of the test voltage of plus 5 percent and minus 10 percent [redacted] not exceed the following:

Lamp Wattage	Maximum Wattage Input
400	552 Watts
1000	1400 Watts

C. During fluctuation of the line voltage of plus 5 percent or minus 10 percent, the lamp wattage fluctuation [redacted] not exceed a total of 20 percent and ballast [redacted] maintain lamp wattage within the following limits:

Nom. Lamp Watts	Minimum Lamp Watts	Maximum Lamp Watts
400	280	475
1000	750	1200

D. The power factor for all ballasts when tested at nominal line voltage [redacted] not less than 90 percent.

E. The electronic starting aid [redacted] meet the following requirements:

	400 Watts	1000 Watts
Starting pulse amplitude, volts	2500 - 4000	3000 - 5000
Pulse width, minimum	1.0 micro-sec. at 2250 volts	4 micro-sec. at 2700 volts
Pulse peak current, min. amps	0.2	0.2
Pulse repetition rate, min.	50 per sec.	50 per sec.

Starting pulse position [redacted] between 90 percent of peak open circuit voltage (leading edge) and 20 electrical degrees beyond center of open circuit wave form, measured at 70 percent of peak voltage.

4. LAMPS

A. Lamps [redacted] high pressure sodium, 400 watt or 1000 watt as specified in the plans. Lamps [redacted] have been manufactured no earlier than six months prior to date contract was awarded.

B. High pressure sodium lamps [redacted] have the following characteristics:

Wattage	Average Initial Lumens	Average Rated Life (Hrs.)
400	50,000	24,000
1000	140,000	24,000

C. When tested after 30 minutes burn-in, 400 Watt HPS lamps [redacted] not have a lamp voltage greater than 108 volts. Lamp voltage for 1000 Watt HPS lamps [redacted] 250 Watts +- 10 %.

5. TESTING

A. Fixtures, lamps and ballasts [redacted] sampled and tested in accordance with the Department Manual of Testing Procedures except as noted in these specifications.

B. Ballasts and fixtures [redacted] tested using lamps furnished for the same project.

C. The Department [redacted] bear the cost of all testing of equipment that complies with the specification requirements. However, the source of supply of fixtures and ballasts [redacted] approved as required in Article 6.1 of the Standard Specifications. Such approval [redacted] contingent on the supplier agreeing to bear the cost of testing any equipment that fails to comply with the specification requirements listed in this specification.

D. All other equipment [redacted] tested in accordance with Item 614 of the Standard Specifications and Materials and Test Division Test Standards.

E. After High Mast Assembly [redacted] completely assembled, the Engineer may require to fully lower and raise each HM ring one time to demonstrate proper operation of the lowering mechanism. If any malfunction occurs, the problem [redacted] corrected at the Contractor's expense and the lowering test [redacted] repeated.

6. MOUNTING RING AND SUPPORT ASSEMBLY

A. Ring and support assembly [redacted] fabricated from steel having a minimum yield strength of 36 KSI.

B. Cover assemblies, fittings and miscellaneous parts [redacted] as outlined on the plans.

C. All hardware [redacted] hot-dipped galvanized per ASTM A153 or [redacted] stainless steel, unless noted otherwise on plans.

7. WINCH

A. Housing [redacted] high tensile strength die-cast silicon aluminum. Cable drum [redacted] fabricated from seamless steel tubing with stamped steel flanges and shall be hot-dipped galvanized. Drum [redacted] have a minimum diameter of 4.5 inches. Drum [redacted] keyed to drum shaft. Drum and flanges [redacted] sized so that, when the floodlight mounting ring is in the raised position, the cable including one full layer will fill the drum to no more than two-thirds of full capacity. Drum shaft [redacted] ground from stainless steel and mounted on lubricated bronze bearings with seals. Worm gear [redacted] made of nickel-bronze and worm shaft [redacted] high-strength stress-proofed steel, ground and polished and supported by tapered roller bearings.

B. Gear ratio [redacted] 36:1 with safe hoisting capacity of not less than 4000 pounds.

C. Winch [redacted] incorporate adjustable automatic brake to assure positive load suspension. Brake [redacted] multiple disc with friction plates running in oil bath and one-direction clutch which operates only when load is suspended or lowered. Winch [redacted] not have throw-out clutch.

8. WIRE ROPE AND TERMINALS

2 3 A. Wire rope [redacted] 7x19 IWRC stainless steel, (Fed. Spec. RR-W-410D, Type VI, class 3), except, where shown on plans, wire rope for winch [redacted] 19x7 Rotation Resistant IWRC stainless steel. Where 19x7 rotation resistant is specified, it [redacted] meet the construction requirements of Fed. Spec. RR-W-410D, Type IV, class 2, modified for stainless steel with a nominal breaking strength of 11,100 lbs. All wire rope [redacted] pre-formed and factory lubricated. Wire rope [redacted] meet the requirements of the applicable specification except where modified. Quality Assurance testing [redacted] the responsability of the manufacturer and [redacted] meet recognized wire rope industry standards. No special tensile or torsion testing [redacted] required. Mill Test Reports [redacted] furnished.

B. Winch cable [redacted] of sufficient length to leave a minimum of one full layer of cable on the drum when the floodlight mounting ring is in the full down position.

C. Wire rope terminals [redacted] stainless steel, solid stud type as shown on HMID (7)-86 drawing. All terminals [redacted] drilled for cotter pin. Material [redacted] 303 SE or 304 stainless steel with a maximum tensile strength of 115,000 p.s.i. Mill Test Reports [redacted] furnished.

STATE DEPARTMENT OF HIGHWAYS AND PUBLIC TRANSPORTATION

HIGH MAST ILLUMINATION DETAILS HMID (9)-86

ORIGINAL DRAWING DATE:	REVISIONS	STATE DISTRICT	FEDERAL REGION	FEDERAL AID PROJECT	SHEET
DN.:	2-12-86	21	6	NH 92(M	553
CK.:	1-12-87	COUNTY		CONTROL SECTION JOB	HIGHWAY
DW.:	4-18-89	Hidalgo		39 17 92	US83
CK.:	-				

D. All terminals [redacted] proof-tested by the manufacturer to 40% of rated strength of the wire rope. Each terminal [redacted] identified by manufacturers logo permanently incised on terminal. Manufacturer shall furnish certification of tests. Contractor [redacted] also furnish one sample of each size of terminal with 5' of wire rope for load tests by the State. Samples tested must withstand test load not less than 100 percent of rated breaking strength of wire rope. If sample fails test, all terminals of same size [redacted] rejected.

9. SPRINGS

A. Provide three steel springs as shown on plans.

B. Springs [redacted] have an uncompressed length of approximately 8 inches and [redacted] compress 3 inches under 700-pound load.

C. Springs [redacted] contain approximately 19 total coils with ID of 0.875 and OD of 1.375 inches. Ends [redacted] closed and ground. Springs [redacted] zinc-plated.

D. Springs [redacted] made from 1/4" diameter oil-tempered MB Steel treated for overstress. Springs [redacted] not develop permanent set from 3-inch compression.

10. ELECTRICAL POWER CABLE

Power cable [redacted] No. 8 AWG three-conductor round Type W, rated 90° C, 600 volt or 2000 volt. Each condutor [redacted] copper and [redacted] consist ⚠3 of 133 wires. Insulation [redacted] ethylene propylene rubber. Jacket [redacted] chlorosulfonated polyetyhylene or neoprene with glass fiber or nylon mesh reinforcing. Nominal diameter [redacted] 0.91". Filler [redacted] rubber compound or other approved non-hygroscopic compound.

11. LUMINAIRE ELECTRICAL CORD

⚠3 A. Portable cord for connecting luminaire to junction boxes [redacted] No. 16 AWG three-conductor portable cord rated 90 C and 600 volts.

⚠3 B. Each conductor [redacted] copper and [redacted] consist of a minimum of 26 No. 30 wires.

⚠3 C. Insulation [redacted] ethylene propylene rubber. Jacket [redacted] chlorosulfonated polyethylene.

12. POWER DRIVE ASSEMBLY (ONE ONLY THIS CONTRACT)

A. Drive Motor

(1) Drive motor [redacted] 1-1/4" heavy-duty reversible portable electric drill modified as shown on plans.

⚠ (2) [redacted] have a minimum of 6 radial ball bearings, one thrust bearing, and one needle bearing.

(3) [redacted] have No. 3 Morse Taper socket.

(4) [redacted] be designed for 115 volt 60 Hertz single phase operation 250 RPM at no load.

⚠⚠ (5) [redacted] designed for continuous rated duty of 160 RPM and 15 amperes at 115 volts with delivery of 33-pound-feet of torque. Drill motor to be operated only at low speed range. (I.e. 150 TO 160 RPM)

⚠ (6) [redacted] develop 240 pound-feet of torque at stalled rotor condition.

B. Torque Limiter Coupling

(1) Torque limiter coupling [redacted] consist of standard torque limiter with Type A sprocket center member coupled to a Type B sprocket by an ASA double strand roller chain. Type A sprocket [redacted] chrome-plated.

(2) Coupling [redacted] have torque capacity minimum of 15 pound-feet and a maximum of 55 pound-feet.

(3) Limiter section of coupling [redacted] consist of integral hub and pressure plate, two friction facings, sintered iron bushing, pilot plate, disk spring, lock washer and hex adjustment nut. All major components except spring and friction facings [redacted] cadmium-plated with dichromate treatment.

(4) Type A center sprocket [redacted] have ground face (63 micro-inch) and [redacted] run-in for 4 minutes at approximately 60 RPM at a torque setting of 70% to 80% of spring rating. Contractor [redacted] provide written certification that run-in has been accomplished.

(5) The torque limiter coupling [redacted], after run-in, [redacted] set to a torque limit of 35 pound-feet or as directed by the Engineer. The proper setting of the coupling [redacted] demonstrated to the Engineer.

C. Universal Joints

(1) [redacted] slip-type with 4-inch barrel. A grease fitting [redacted] so located in the spider that a l caps and needle bearings [redacted] adequately serviced. The assembly [redacted] disassembled and zinc-plated, then reassembled and properly lubricated.

(2) [redacted] have a minimum torque rating of 1270 inch-pounds at 200 RPM.

(3) [redacted] have set screw and keyed coupling as shown on plans.

13. CONSTRUCTION METHODS

A. Fabrication

(1) Fabrication and welding [redacted] in accordance with the Item "Steel Structures", and Department Bulletin C-5.

(2) All holes supporting pulley shafts [redacted] drilled (not punched) prior to galvanizing.

(3) All component parts [redacted] galvanized where galvanizing is applicable, after fabrication.

(4) Galvanizing on all parts which have become scratched, chipped or otherwise damaged [redacted] thoroughly cleaned and the cleaned area painted with two coats of zinc dust-zinc oxide paint conforming to the requirements of repair compounds meeting Federal Specification TT-P-641b.

(5) Mounting rings and ring support assemblies [redacted] fabricated with the use of jigs that have been inspected and approved by Material and Test Division personnel prior to their usage.

⚠ (6) The fabricator [redacted] submit his proposed welding procedures in accordance with bulletin C-5.

B. Installing Wire Rope

(1) Prior to installation of winches and wire ropes, all wire ropes [redacted] extended full length in a clean area. Any wire rope that does not lie straight or that has other evidence of set, kinks, or other damage [redacted] rejected.

(2) Extreme care [redacted] used to prevent wire rope from kinking, nicking, or from sustaining other damage during installation. Rope [redacted] installed by pulling from flat coil, but [redacted] carefully unrolled its full length or placed on a horizontal axis and unreeled according to wire rope industry standards.

(3) For right lay rope, the rope [redacted] attached to the drum on the end opposite the winch gear train, and wound on drum so that the free end of the rope comes off the backside of the drum during normal operation of the winch. Rope [redacted] unreeled carefully as stated above. Care [redacted] taken to insure that all layers lay full and tight on drum.

(4) Installation of all wire rope [redacted] accomplished only under direct supervision of the Engineer or his authorized representative. Contractor [redacted] not remove wire rope from manufacturer's reel until authorized by the Engineer. Installation of wire rope on winch [redacted] in accordance with the above and accepted industry practice. Installation of the three hoist cables [redacted] made from the top end of the pole and as directed by the Engineer or his representative.

C. Installing Wire Rope Clips

(1) Turn back approx. 2'-3" of rope, measured from the top of thimble. Apply seizing to pigtail end of wire rope prior to cutting to length. See detail "K", HMID(3)-86. Apply first clip approx. 3" from the dead end of the wire rope with U-bolt over dead end and live end in clip saddle. Tighten nuts evenly to 30 pound-feet of torque, or as recommended by manufacturer.

(2) Install second clip as near loop as possible, take out slack and torque nuts evenly to 30 pound-feet or as recommended by manufacturer.

(3) After final erection and assembly of the pole and HM assembly, retighten nuts to required torque.

STATE DEPARTMENT OF HIGHWAYS AND PUBLIC TRANSPORTATION

HIGH MAST ILLUMINATION DETAILS HMID (10)-86

ORIGINAL DRAWING DATE:	REVISIONS	STATE DISTRICT	FEDERAL REGION	FEDERAL AID PROJECT #		SHEET
DN.:	1-12-87 ⚠	21	6	NH 92( )M		554
CK.:	5-26-87 ⚠⚠	COUNTY		CONTROL	SECTION	JOB	HIGHWAY
DW.:	4-13-89 ⚠	Hidalgo		39	17	97	4583
CK.:	- -						

QS:Alt[3]14[3]3HMID

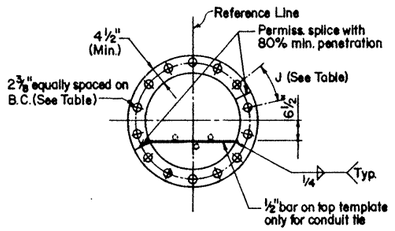

TOP AND BOTTOM ANCHOR BOLT TEMPLATE

ANCHOR BOLT TABLE

Design Wind mph	Pole Height ft	Dia. in	Length	No. of Bolts	Bolt Circle B.C.	Angle J
100	175'	2¼"	4'-10"	20	46"	18°
100	150'	2¼"	4'-10"	16	42"	22.5°
100	125'	2¼"	4'-10"	12	38"	30°
100	100'	2¼"	4'-10"	10	34"	36°
80	175'	2¼"	4'-10"	16	40"	22.5°
80	150'	2¼"	4'-10"	12	36"	30°
80	125'	2¼"	4'-10"	8	33"	45°
80	100'	2¼"	4'-10"	6	30"	60°

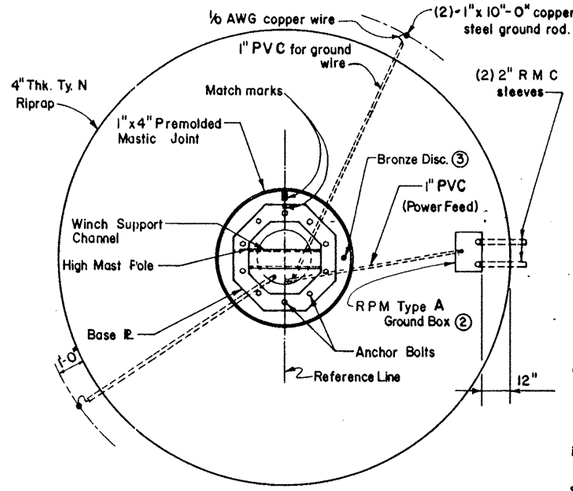

DRILLED SHAFT LENGTH

Pole No.	Pole Location Station	Pole Location Offset	Ground Elev.	Top Sh. Elev.	Avg. N blows/ft	Shaft Dia. in.	Shaft Length ft.
1	1480+00	87'(LT)	112.9	115.9	25	60	30
2	1490+50	92'(LT)	110.1	113.1	25	60	30
3	1499+00	144'(LT)	109.0	112.0	23	60	30
* 4	862+00	108'(RT)	108.6	111.6	21	60	32
5	1509+10	90'(RT)	114.0	117.0	21	60	32
6	1517+80	77'(LT)	116.0	119.0	18	60	32
7	1527+84	154'(RT)	107.0	110.0	18	60	32
8	1537+05	145'(LT)	111.0	114.0	22	60	30
9	1547+60	75'(LT)	105.1	108.1	19	60	32
10	1557+38	78'(LT)	105.3	108.3	19	60	32
* 11	852+12	102'(RT)	108.8	111.8	22	60	30
						TOTAL	[redacted]

* STATION / OFFSET ON US 281 ALIGNMENT

GENERAL NOTES:

Anchor Bolts and Nuts [redacted] galvanized.

Bronze Disc [redacted] used. [redacted] selected during plan preparation.

Drilled Shafts [redacted] constructed in accordance with the Item "Slurry Displacement Drilled Shafts" ~~"Drilled Shaft Foundations"~~

Unless otherwise noted, the welded steel bands [redacted] replaced with spiral as shown on the foundation details.

Anchor Bolts [redacted] conform to ASTM A193-B7, or A687. Nuts for A193 bolts [redacted] conform to ASTM [redacted] Gr. 2H. Nuts for A687 bolts [redacted] conform to ASTM A194 Gr. 2H or A563 Gr. D or better. Washers [redacted] conform to ASTM F436 and [redacted] galvanized. Threads for anchor bolts [redacted] rolled or cut threads of 8 pitch or unified coarse thread series except for A193 bolts which shall be 8 pitch thread series. If rolled, the diameter of the unthreaded portion [redacted] less than the minimum pitch diameter nor more than the maximum major diameter of the threads. Threads [redacted] have Class 2 fit tolerances.

Unless otherwise noted, the upper 14 inches of anchor bolts and the top anchor bolt nuts [redacted] galvanized. Anchor bolts are noted not [redacted] galvanized the upper 14 inches [redacted] painted with two coats of zinc-rich coating containing a minimum of 95 percent zinc and meeting Federal Specification DOD-P-21035A. Exposed nuts [redacted] also be painted with the same zinc rich paint [redacted] are painted.

Threads of anchor bolts [redacted] coated with pipe joint compound prior to installation of upper nuts when erecting pole. After poles are plumbed and in permanent alignment, the exposed upper threads of painted bolts are [redacted] cleaned and an additional coat of the zinc-rich paint applied to seal the bolt thread-nut joint.

Anchor bolts [redacted] placed in foundation so there are always two bolts on reference line.

The anchor bolt and template assembly [redacted] rigidly held in position during concrete placement. The top template may be removed after the concrete has achieved its initial [redacted]

Conduit [redacted] held in place with [redacted] attached to upper template, and [redacted] capped prior to placing concrete.

After the pole [redacted] plumbed in its final position, tack weld top and bottom anchor bolt nuts to washers and washers to base plate in three places for each washer. Do not weld to bolt. Galvanizing in tack areas must be repaired by zinc-rich paint.

Drilled shaft lengths as determined from the foundation design chart or other acceptable methods are listed in the above summary table. Type N Riprap, Ground Box, Conduit, Ground Rods, and Wiring as shown on the foundation details [redacted] paid for separately, but [redacted] considered subsidiary to the drilled shaft.

80 MPH POLES

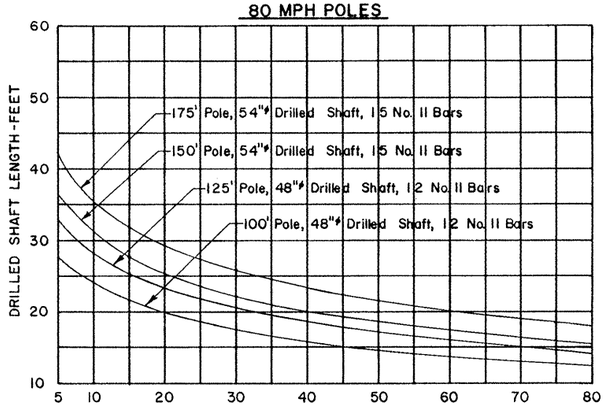

TEXAS CONE PENETROMETER TEST
N-BLOWS PER FOOT

Do not extrapolate below 5 Blows/Ft. A special design [redacted] required for soil less than 5 Blows/Ft.

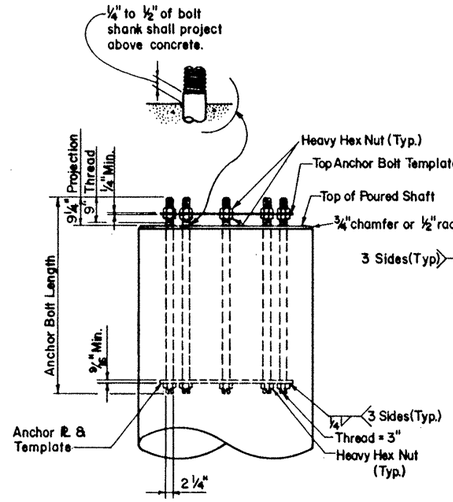

ANCHOR BOLT ASSEMBLY

(See Anchor Bolt Table for number of bolts required)

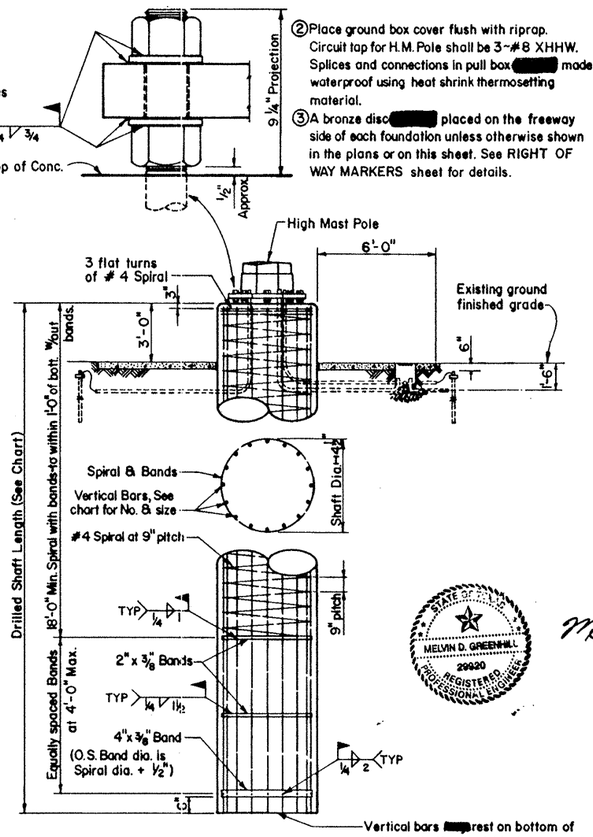

DRILLED SHAFT FOUNDATION DETAIL

④ If rock is encountered, the Drilled Shaft [redacted] extend a minimum of two diameters into solid rock.

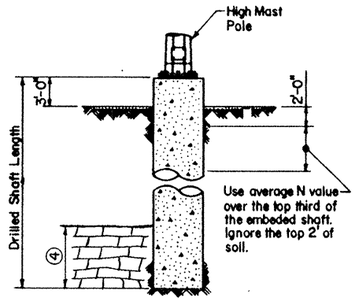

DRILLED SHAFT

100 MPH POLES

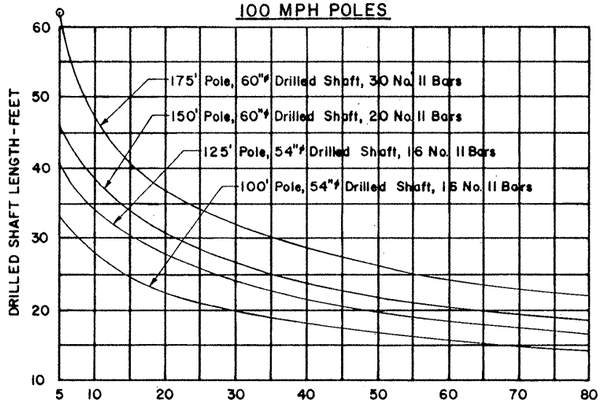

TEXAS CONE PENETROMETER TEST
N-BLOWS PER FOOT

Do not extrapolate below 5 Blows/Ft. A special design [redacted] required for soil less than 5 Blows/Ft.

FOUNDATION DESIGN

STATE OF TEXAS
MELVIN D. GREENHILL
29920
REGISTERED PROFESSIONAL ENGINEER

Melvin D. Greenhill
March 3, 1992

STATE DEPARTMENT OF HIGHWAYS AND PUBLIC TRANSPORTATION

HIGH MAST ILLUMINATION POLE FOUNDATION

HMIF(MOD)

[redacted] RFG					
[redacted] JJP	Rev. 3-87	6	NH 92 ( )M		555
[redacted] EDS		COUNTY			SHEET
[redacted] RFG		HIDALGO	39	17	97 US 83

ORIGINAL STANDARD DATE: NOV. 1986

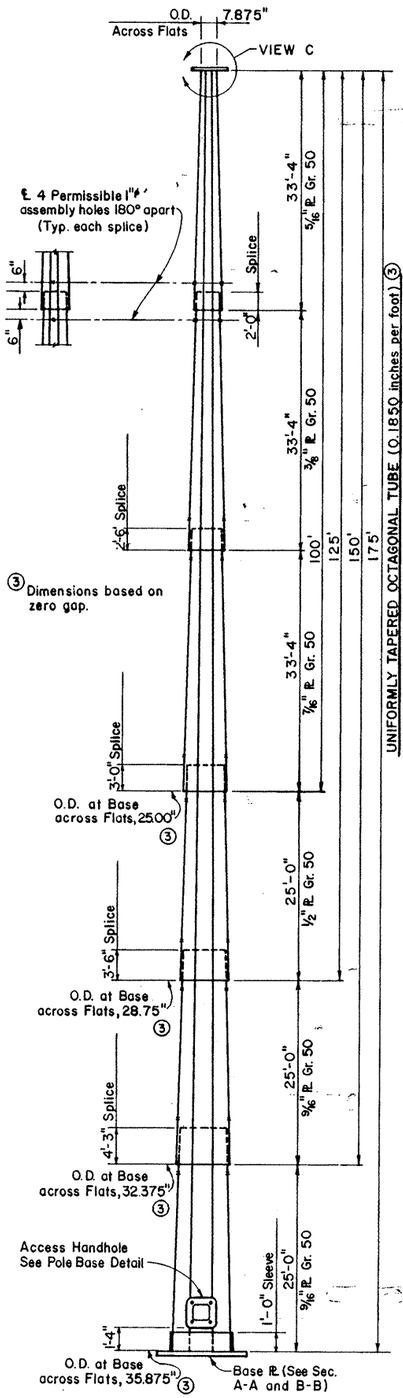

POLE ELEVATION

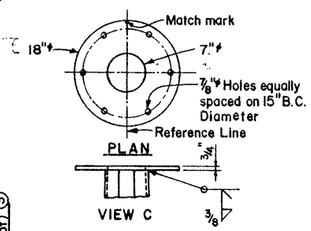

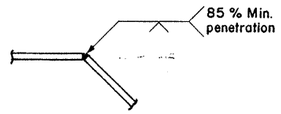

Longitudinal seam welds in outer sections at splices and at base plate must have 100 % penetration for 1.5 pole diameters.

POLE SEAM WELDS

TABLE OF VARIABLE DIMENSIONS (INCHES)

Pole Height	BASE PLATE A	B	C	D	E	J	HANDHOLE M	Q	R	S	T	POWER DRIVE U	V	W
175'	52"	15 ¼"	10 ¾"	27"	46"	18°	1'-9½"	1'-3½"	3"	1¾"	3½"	3¾"	4⅛"	1⅞"
150'	49"	14 ⅜"	10⅛"	24"	42"	22.5°	↑	↑	↑	↑	4"	3¼"	4⅛"	1⅞"
125'	44"	12⅞"	9⅛"	21"	38"	30°	↑	↑	↑	↑	4½"	3"	3⅜"	2⅝"
100'	40"	11¾"	8¼"	17"	34"	36°	1'-9½"	1'-3½"	3"	1¾"	4½"	3"	3⅜"	2⅝"

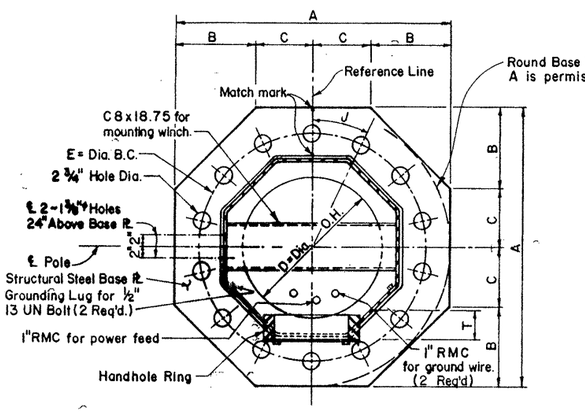

SECTION A-A

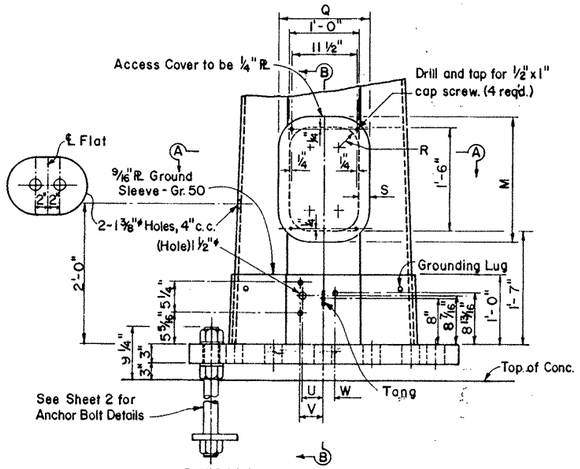

DETAIL OF POLE BASE

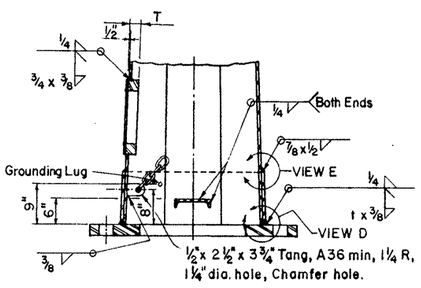

SECTION B-B

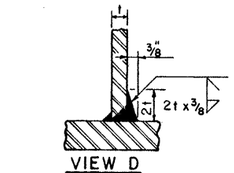

(a) Prepare Shaft and ground sleeve,
(b) Weld shaft to base plate, chip and grind flush (⅛ in. max. radius acceptable at toe.)

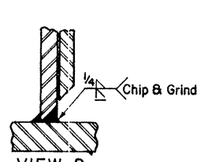

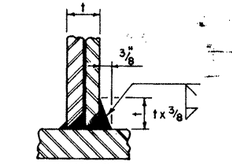

(c) Position ground sleeve,
(d) Weld to base plate with tapered reinforcement.

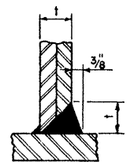

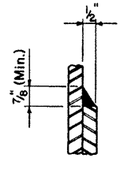

FABRICATION TOLERANCES

Part	Dimension	Tolerance (inches)
Pole Shaft	Length (unassembled sections)	+/- 1
	Shaft thickness	+0.12 - 0.02
	I.D. of outside slip fitting	+ ⅛ - 1/16
	O.D. of inside slip fitting	+ 1/32 - ⅛
	Difference between flats	+/- ¼
	Straightness	¼ in 10 ft.
	Attachment locations	+/- 1
Pole Assembly	Perpendicular to baseplate	⅛ in 24
	Pole centered on baseplate	+/- ¼
	Twist in shaft	4 deg. in 100 ft.
	Position of winch channel	+/- ¼
Baseplate	Overall	+/- ¼
	Thickness	+ ¼ - 1/16
	Deviation from flat	⅛ in 24
	Spacing between holes	+/- 3/16
	Bolt hole size	+/- 1/32
Anchor Bolt Templates	Outside diameter	+/- ⅛
	Inside diameter	+/- ¼
	Thickness	+ ¼ - 1/32
	Spacing between holes	+/- ⅛
	Bolt hole size	+/- 1/32
Anchor Bolt	Length	+/- ½
	Threaded length	+/- ½
	Galvanized length	- ¼
Miscellaneous	Bolt hole spacing	+/- 1/16

GENERAL NOTES:

Design conforms to 1975 A.A.S.H.T.O. Standard Specifications for Structural Supports for Highway Signs, Luminaires and Traffic Signals and Interim revisions thereto. Design Wind Speed equals 100 mph plus a 1.3 gust factor. Design loads correspond to 12 luminaires mounted on an 9-foot diameter support ring.

Materials:
- Steel Pole - ASTM A588 or A572 Gr. 50 or A595
- Ground Sleeve - ASTM A588 or A572 Gr. 50
- Base Plate - ASTM
- Access Hole Ring - ASTM } A633
- Misc. Steel - ASTM

Design yield for A595 shall be 50 ksi.

The component parts of the high mast illumination pole assembly [redacted] galvanized after fabrication. Proper draining procedures [redacted] used to avoid zinc build up in slip joint areas.

Commercial pole design [redacted] considered subject to the following requirements.

a. The pole design [redacted] meet the above requirements unless otherwise stated below.
b. Complete design calculations and proposed materials including anchor bolts [redacted] submitted for approval prior to submission of shop drawings.
c. The applied loads on the assembly at the top of the pole [redacted] 1800 lbs. vertically and 3500 lbs.(3750 lbs. for 150 ft. and 175 ft. poles) horizontally.
d. The top diameter of the pole [redacted] compatible with the mounting detail for the luminaire ring. The bottom diameter of the pole [redacted] compatible with the foundation details. Anchor bolt number, spacing and size [redacted] changed. The maximum design yield for anchor bolts [redacted] 55 ksi.
e. Welded connections of the sections manufactured to ASTM A595 [redacted] not [redacted] permitted.
f. Minimum splice length [redacted] 1.5 times the average pole diameter at the splice.
g. Approval to eliminate the ground sleeve or to significantly modify the access hole ring will require testing a full scale specimen of the base section. The specimen [redacted] supported at the baseplate on double nutted anchor bolts. The specimen [redacted] loaded to produce maximum compression on the access hole ring. The test results [redacted] clearly demonstrate that the specimen developed the factored moment capacity (1.38 times 1.4 times f_b) which [redacted] approximafely the fully plastic bending capacity.

Each pole section, top flange plate, and base plate [redacted] permanently marked on the reference line and shown on shop plans. The required mark locations are shown on the base plate, top plate, and foundation plan details. These marks [redacted] used in pole assembly and erection alignment. The reference line and anchor bolt orientation [redacted] parallel to roadway centerline unless otherwise shown on Lighting Layouts.

The high mast lighting pole [redacted] have an erection tolerance of ± 12 inches from vertical. During erection of the poles the contractor [redacted] provide and install sufficient temporary slings, chains or wire rope to prevent unintentional separation of the pole sections.

STATE DEPARTMENT OF HIGHWAYS AND PUBLIC TRANSPORTATION

HIGH MAST ILLUMINATION POLES 100'-125'-150'-175'

(100 M.P.H.)

HMIP 100

ORIGINAL DRAWING DATE NOV. 1986	STATE DISTRICT	FEDERAL REGION	FEDERAL AID PROJECT	SHEET
DR.-RFG	21	6	NH 92( )M	556
CK.-JJP	COUNTY		CONTROL SECTION JOB	HIGHWAY
DR.-EDS	Hidalgo		39 17 97	U583
CK.-RFG				

REVISIONS

GENERAL NOTES:

I. SCOPE

Details herein apply to roadway lighting installations bid under the following Specification items: Roadway Illumination Assemblies, Relocate Roadway Illumination Assemblies, Roadway Illumination Assembly Foundations, Conduit, Electrical Conductor, Duct Cable, Ground Box, Circuit Protector Assembly, Service Poles, Transformer Stations and Special Specifications relating to lighting and electrical items. All work, materials and services not shown on plans which [redacted] necessary for complete and proper construction [redacted] performed, furnished and installed by the Contractor. Faulty fabrication or poor workmanship in any material, equipment and installation [redacted] considered justification for rejection. Materials and installation [redacted] comply with the applicable provisions of the National Electrical Code and National Electrical Manufacturers Association standards. Where manufacturer's provide warranties or guarantees as a customary trade practice, Contractor [redacted] furnish to the State such warranties or guarantees.

II. MATERIALS

A. General

All materials [redacted] new and unused. Alternate material equal to or better than those specified [redacted] substituted with the approval of the Engineer.

B. Roadway Illumination Assembly

1. Structural Support Design for Mast-Arm Mounted Luminaires. Lighting standards [redacted] designed in accordance with the latest issue of the AASHTO "Standard Specifications for Structural Supports for Highway Signs, Luminaires and Traffic Signals." All poles [redacted] designed for 90 mph wind loads. An additional 1.3 gust factor [redacted] applied to the wind loads. For transformer base poles, fabricator [redacted] include transformer base and connecting hardware in design calculations and shop drawing submittals. Manufacturer's shop drawings [redacted] include the ASTM designations for all material [redacted] used. See paragraph III D for additional requirements for the transformer base.

2. Slip Joint Poles. Poles [redacted] fabricated in two sections and field-assembled by the lap-joint method. The two sections [redacted] telescope together with a lap length of not less than 1-1/2 times the shaft diameter at the lap joint. The longitudinal seam weld within 13 inches of the slip joint [redacted] a full penetration weld.

3. Mast Arm Attachments. All poles and attachments [redacted] structurally designed to support two 12-foot mast arms and luminaires. Poles [redacted] supplied with mast arm combinations as shown in the plans. All mast arms [redacted] designed for a 55-pound luminaire having an effective projected area of 1.4 square feet.

4. Minor Damage Repair. The finished pole [redacted] have a smooth, uniform finish free of pits, blisters, or other defects. Scratched, chipped, or damaged areas on galvanized poles and mast arms [redacted] thoroughly cleaned by wire brushing. The cleaned area [redacted] painted with two coats of zinc dust-zinc oxide paint conforming to the requirements of Federal Specifications TT-P-641b, or repaired by the application of repair compounds meeting Federal Specification O-G93 (stick only) in accordance with the manufacturer's recommendations.

5. Pole Bonding Means. All shoe base poles, including poles on concrete traffic barriers, [redacted] have a grounding lug with 1/2-13 NC female threads inside the pole near the hand hole, minimum of 3 full threads.

6. Hand Holes. All shoe base poles [redacted] have hand holes with reinforcing frames and covers. The openings on all poles [redacted] approximately 4 inches x 6-1/2 inches located approximately 10 inches from the bottom of the pole and except for poles mounted on concrete traffic barrier, [redacted] placed 90 degrees to mast arm unless otherwise noted on plans. See paragraph III.B.4 for CTB mounted poles.

7. CTB Poles. Poles installed on concrete traffic barrier [redacted] also meet the requirements of CTB details.

8. J-Hooks. All mast arm type poles [redacted] equippped with a J-hook inside the pole, near the top for supporting vertical conductors.

9. Base Plate Bolt Circle. Bolt circle for poles (except CTB-mounted poles) less than 40 feet MH [redacted] 13 inches. For MH 40 feet or greater, bolt circle shall be 15 inches. For poles placed on existing bridge brackets or existing foundations, bolt circle [redacted] coordinated with anchor bolts in place.

10. Steel Poles.

a. Steel poles [redacted] fabricated in accordance with the item "Steel Structures." Longitudinal seam welds for pole sections shall have 60% minimum penetration. All welding [redacted] in accordance with Departmental Construction Bulletin C-5. Two-section poles joined by circumferential welds [redacted] not [redacted] permitted.

b. Pole components [redacted] constructed using the following materials:

Shaft: ASTM A-572 Grade 50 or ASTM A-595 Grade A (50 KSI min. yield) or ASTM A-36M50, in accordance with Item 4146. Galvanized in accordance with ASTM A-123.

Base Plate: ASTM A-27 Grade 65-35 or ASTM A-36 - galvanized in accordance with ASTM A-123.

Mast Arm Connector: ASTM A-27 Grade 65-35 - galvanized in accordance with ASTM A-153 Class A.

Mast Arms: Steel Pipe ASTM A-53 Grade A or B or ASTM A-501 or A-513 TY I with minimum 30 KSI yield and 20% elongation in 2 inches, galvanized in accordance with ASTM A-123.

Pole Cap: Pole cap [redacted] zinc die-cast, aluminimum, or galvanized metal, secured by three stainless steel or galvanized screws.

Pole Hardware: All bolts except mast arm connection bolts [redacted] stainless steel or standard steel galvanized ASTM A-153 Class C or D, or B-695 Class 40. Mast arm connection bolts [redacted] ASTM A-325, ASTM A-321 or ASTM A-193 Grade B-7, galvanized as above. Nuts and washers [redacted] compatible with the bolts and shall be stainless steel or steel, galvanized as above. Lock washers [redacted] provided on all bolted connections.

△ 11. Aluminum Poles.

a. Aluminum poles [redacted] fabricated in accordance with "Structural Welding, Aluminum" ANSI/AWS D1.2.

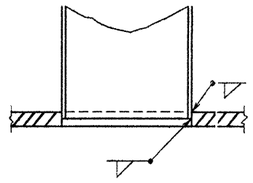

SECTION
POLE SHAFT TO BASE PLATE

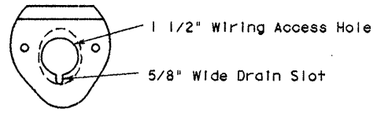

MAST ARM CONNECTOR

△ Steel Poles Only
Aluminum Pole Connector
Shall Be Clamp-on Type

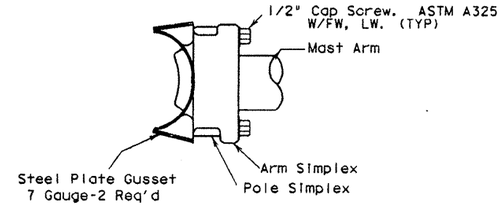

MAST ARM TO POLE SHAFT CONNECTION

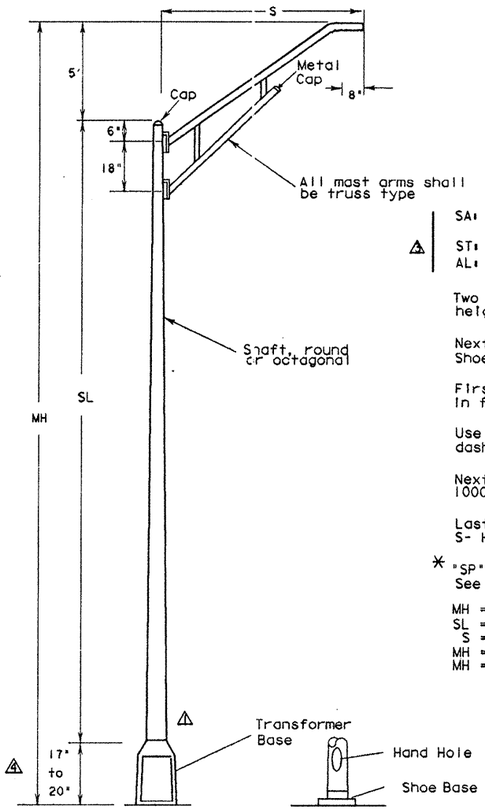

ROADWAY ILLUMINATION ASSEMBLY

EXPLANATION OF ROADWAY ILLUMINATION ASSEMBLY DESIGNATIONS

TYPE * SA 50 T 8 8 .4KW S

△ SA: Pole assembly [redacted] steel or aluminum.
△ ST: Pole assembly [redacted] steel.
AL: Pole assembly [redacted] aluminum.

Two numerical digits denote mounting height in feet.

Next letter denotes type of base, (S- Shoe Base, T-Transformer Base).

First number denotes length of mast arm in feet.

Use of second mast arm is indicated by second dashed number which denotes length in feet.

Next three figures indicate luminaire rating (1 KW= 1000 watts, .4 KW= 400 watts, etc.)

Last letter indicates the type of lamp (M- Mercury, S- High Pressure Sodium, L- Low Pressure Sodium).

* "SP" denotes special (ovalized) steel pole for installing on CTB. See standard sheet CTB1 (4).

MH = Mounting Height
SL = Shaft Length
S = Spread (Mast arm length)
MH = SL + 5' + 20" (T-Base)
MH = SL + 5' (Shoe Base)

△ 11-90 Modified T-Base.
△ 4-90 Changed pole material.
△ 8-89 Reduced to 34" Sheet.
△ 8-89 Removed hand hole for T-Base poles.

STATE DEPARTMENT OF HIGHWAYS AND PUBLIC TRANSPORTATION

ROADWAY ILLUMINATION DETAILS
RID (1)-88

	DRAWING	DATE	FED. RD. DIV. NO.	STATE	FEDERAL AID PROJECT NO.			SHEET NO.
DN.:	ORIGINAL	1-88	6	TEXAS	NH 92( )M			557
CK.:	REVISIONS	8-89	STATE DIST. NO.	COUNTY	CONT.	SECT.	JOB	HIGHWAY NO.
DW.:	REVISIONS	4-90	21	Hidalgo	39	17	97	4583
CK.:	REVISIONS	11-90						

-79-47

b. Pole components [redacted] constructed using the following material:

Shaft: ASTM B-221 or B-241 Alloy 6063-T6, ASTM B-209 Alloy 5086-H34; ASTM B-221 Alloy 6005-T5.

Base Flange: ASTM B-26 Alloy 356.0-T6 or ASTM B-108 Alloy A356.0-T6.

Mast Arm Fittings: ASTM B-209 Alloy 6061-T6 or ASTM B-221 Alloy 6005-T5.

Mast Arms: ASTM B-241 Alloy 6061-T6 or Alloy 6063-T6.

Pole Cap: ASTM B-209 Alloy 5086-H32 or ASTM B-108 or B-26 Alloy 356.0-T6.

Bolts: Stainless Steel AISI 300. Bolts threading into aluminum threads [redacted] treated with anti-seize compound, Never-Seez Compound, Permatex 133K or equal.

12. Alternate material equal to or better than material specified may be substituted with the approval of the Engineer.

13. Installation of High Strength Bolts. The tightening of nuts on high strength bolts [redacted] in accordance with the Item "Structural Bolting."

C. Foundations

1. Concrete and reinforcing steel for foundations [redacted] included for payment under Item "Roadway Illumination Assembly Foundations" only. Top 6 inches of foundation shall be formed and struck level.
2. Anchor bolts for all poles except CTB-mounted poles [redacted] steel, ASTM A-36M55. Anchor bolts for CTB-mounted poles [redacted] steel, ASTM A-325 or A-321 threaded rod. Nuts for CTB anchor bolts [redacted] ASTM A-563 Grade D heavy hex, galvanized. The top 8 inches of all anchor bolts [redacted] galvanized per ASTM A-153. Anchor bolts in foundations [redacted] 1 1/4 in. x 48 in. and [redacted] have top end threaded not less then 5 inches and furnished with galvanized hex nuts, flat and lock washers. The lower end of the bolt [redacted] bent at a right angle or threaded and furnished with nut and washer. When bolts with rolled threads are furnished, bolt body need not be full size. See CTB details for anchor bolts in CTB. Anchor bolts and nuts [redacted] have Class 2A and 2B fit. Nuts [redacted] tapped or chased after galvanizing.
3. Concrete shall be Class A or C in accordance with Item "Concrete for Structures". Reinforcing steel [redacted] meet the requirements of the Item "Reinforcing Steel".
4. The bolt circle in foundations for transformer base poles with a mounting height (MH) less than 40 feet [redacted] 14 inches. The bolt circle for shoe base poles less than 40 feet MH [redacted] 13 inches. For poles with MH 40 feet or greater, bolt circle in foundations [redacted] 17-1/4 inches in diameter if a transformer base is used and 15 inches if a shoe base mounting is used.
5. A minimum of two conduits [redacted] installed in each foundation. See lighting layout sheets for locations of foundations with more than 2 conduits. Any unused conduits in foundations [redacted] capped on both ends.

D. Transformer Base

1. Transformer base [redacted] cast from aluminum, ASTM B-108 or B-26 Alloy 356.0-T6, and [redacted] furnished with four washers or lugs as recommended by the manufacturer. Base for poles less than 40 feet MH [redacted] have a bottom bolt circle to accommodate a 14 inch anchor bolt circle. Top bolt circle [redacted] 13 inches. Bases for poles with MH 40 feet or greater [redacted] have a bottom bolt circle to accommodate a 17-1/4 inch anchor bolt circle, top bolt circle [redacted] 14 inches to 15 inches.
2. Transformer base [redacted] approximately 17 to 20 inches high and [redacted] have a door approximately 12 inches X 10 inches X 9-1/4 inches. Screw or bolts for attachment of door to base [redacted] stainless steel. Four machine bolts with four nuts, eight flat washers and four lock washers, galvanized ASTM A-153 Class C or D, or B-695 Class 40, [redacted] provided with each transformer base for connecting the pole. Bolts [redacted] ASTM A325 or approved equal. Nuts [redacted] be ASTM A-563 Grade DH, galvanized. A ½-13 NC female threaded grounding lug [redacted] provided inside the transformer base. Leveling nuts [redacted] not be used under transformer bases.
3. Transformer bases [redacted] meet the breakaway requirements of the AASTHO "Standard Specifications for Structural Supports for Highway Signs, Luminaires and Traffic Signals," 1985 edition, and [redacted] have been tested by FHWA-approved methods.
4. Transformer bases [redacted] have been structurally tested to meet or exceed the full designed plastic moment capacity of the pole.
5. Certification of the plastic moment load test and FHWA breakaway requirement test [redacted] submitted with shop drawings. Shop drawings shall show transformer base model number and logo.
6. Aluminum transformer bases [redacted] stamped, incised or by other approved permanent means, marked to show fabricators name or logo, model number and maximum allowable pole weight. Such information [redacted] placed in a readily seen location, inside or outside the base, but [redacted] not be placed on the door.
7. Doors for transformer bases [redacted] made of plastic, fiberglass or other non-aluminum material approved by the Engineer.

E. All Luminaires

1. The luminaire housing [redacted] cast or drawn from a non-ferrous alloy and [redacted] free of cracks and excessive porosity. All nuts, screws, clips, washers and attaching hardware [redacted] made of stainless steel or steel electro-zinc-plated, minimum thickness 0.0002 inch with olive green drab or yellow chromate conversion coating, or other approved conversion coatings except that brackets [redacted] made from pre-galvanized steel. All threaded surfaces used in the housing [redacted] lubricated with a silicone grease.
2. The slipfitter [redacted] securely clamp the luminaire to the mast arm. A positive means of vertical adjustment [redacted] provided. The refractor [redacted] crystal-clear pressed glass. The optic assembly [redacted] provided with resilient gaskets and so constructed that a positive seal against weather and other contaminants [redacted] maintained. The luminaire [redacted] designed to permit ready removal of the refractor from the luminaire but [redacted] provide a positive means of preventing an unintentional separation. The latch [redacted] provide a positive means of maintaining closure of the luminaire. The socket shell [redacted] rigidly attached to a high grade porcelain base which [redacted] extend and enclose the metal shell. A locking means [redacted] incorporated in the shell of the socket to positively resist the removal of the lamp. Reflectors [redacted] aluminum and [redacted] not [redacted] painted.
3. Mast-arm mounted luminaires, except underpass luminaires, [redacted] provided with a leveling device which is clearly visible from the ground. Unless otherwise directed by the Engineer, mast-arm mounted luminaires [redacted] tested and installed in the level position.
4. Underpass luminaires [redacted] fused internally. Fuses [redacted] 5 amp time-delay type.

II. B. 13. Fabrication Tolerances

Part	Dimension	Tolerance
Pole Assembly	Shaft length	±1 in.
	I.D. of outside piece of slip fitting pieces	+1/8 in., -1/16 in.
	O.D. of inside piece of slip fitting pieces	+1/32 in., -1/8 in.
	Shaft diameter: other	+3/16 in.
	Out of "round"	1/4 in.
	Straightness of shaft	±1/4 in. in 10 ft.
	Twist in shaft	4° in 50 ft.
	Perpendicular to baseplate	1/8 in. in 24 in.
	Pole centered on baseplate	± 1/4 in.
	Location of Attachments	± 1/4 in.
Arm Assembly	Arm Length	± 3 in.
	Arm Rise	±1 3/4 in. in 10 ft.
	Arm Diameter	± 3/16 in.
	Overall length or width	± 1/4 in.
	Thickness	+1/4 in., -1/16 in.
	Deviation from flat	1/8 in. in 12 in.
	Spacing between holes	±3/32 in.
	Anchor bolt hole size	±1/16 in.
Anchor Bolt	Length	+1 in., -1/4 in.
	Threaded length	+1 1/2 in., -1/8 in.
	Galvanized length (if required)	+8 in., -1/4 in.
Miscellaneous	Bolt hole spacing	± 1/16 in.
	Strut location in truss arms	± 1 1/2 in.

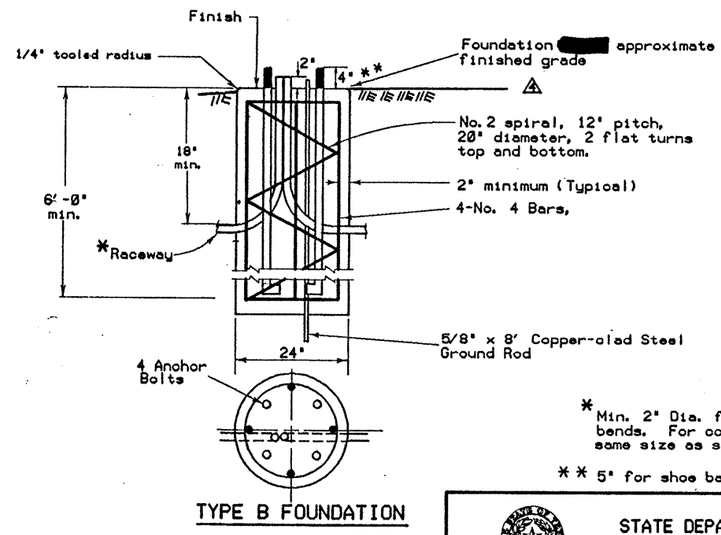

TYPE B FOUNDATION

TYPE A FOUNDATION

Same except without reinforcing steel

* Min. 2" Dia. for duct cable, 18" radius bends. For conductor in conduit system, same size as system conduit.

** 5" for shoe base poles.

11-90 Modified T-Base.
9-90 Top of foundation at grade.
4-90 Changed to '85 AASHTO.
8-89 Non-Aluminum doors REQ'D.
8-89 Reduced to 34" Sheet.

STATE DEPARTMENT OF HIGHWAYS AND PUBLIC TRANSPORTATION

ROADWAY ILLUMINATION DETAILS
RID (2)-88

	DRAWING		DATE
DN:	ORIGINAL		1-88
CK:	REVISIONS		4-90
DW:	REVISIONS		9-90
CK:	REVISIONS		11-90

FED. RD. DIV. NO.	STATE	FEDERAL AID PROJECT NO.			SHEET NO.
6	TEXAS	NH 92( )M			558
STATE DIST. NO.	COUNTY	CONT.	SECT.	JOB	HIGHWAY NO.
21	Hidalgo	39	17	97	US83

II. F. High Pressure Sodium Vapor Luminaires

1. Photometrics

a. The (TY UP) (SPL-CO) (.15KW)S underpass luminaires [redacted] 150 watt high pressure sodium, IES TYPE M-C-III. The fixtures shall provide a minimum measured intensity of .2 footcandles in a rectangular area measuring 80 feet X 30 feet, when mounted 20 foot above the midpoint of either long side of the surface area.

b. The 250-watt mast-arm mounted luminaire [redacted] IES Type M-S-III and, when mounted 40 feet above the midpoint of either long side of a rectangular area 200 feet by 50 feet, [redacted] provide a measured minimum intensity of 0.1 footcandle at any point on the surface of this area. Light intensities measured in footcandles along a line parallel to and 20 feet in from the long side of the previously defined rectangular area above which the luminaire is mounted [redacted] decrease at a rate not to exceed 0.8 footcandle in any ten-foot interval along the aforementioned line from 10 to 70 feet on both sides of the luminaire.

The uniformity factor "F" [redacted] not less than 7.0 when calculated from the equation:

$$F = \frac{L\ (I\ Min.)}{I\ Max.}$$

Where:
F = the uniformity factor
L = 200
I Min. = minimum measured intensity within the rectangle
I Max. = maximum measured intensity within the rectangle

c. The 400-watt mast-arm mounted luminaire [redacted] IES Type M-S-III and, when mounted 50 feet above the point of either long side of a rectangular area 250 feet by 80 feet, [redacted] provide a measured minimum intensity of 0.1 footcandle at any point on the surface of this area. Lighting intensities measured in footcandles along a line parallel to and 30 feet in from the long side of the previously defined rectangle above which the luminaire is mounted [redacted] decrease at a rate not to exceed 0.8 footcandle in any ten-foot interval along the aforementioned line from 10 to 70 feet on both sides of the luminaire.

The uniformity factor "F" [redacted] not less than 7.0 when calculated from the equation:

$$F = \frac{L\ (I\ Min.)}{I\ Max.}$$

Where:
F = the uniformity factor
L = 250
I Min. = minimum measured intensity within the rectangle
I Max. = maximum measured intensity within the rectangle

d. The luminaires [redacted] meet the photometric requirements shown above, when energized at 90 percent of rated line voltage.

2. Ballasts

a. All ballasts [redacted] isolated-winding lag-type magnetic regulator and [redacted] designed to operate high pressure sodium lamps.

b. When the circuit voltage indicated in the plans is applied, the ballast input wattage during fluctuations of the test voltage of +10 and -10 percent [redacted] not exceed the following:

Nominal Lamp Rating, Watts	Maximum Wattage Input
150	220
250	400
400	552

c. During fluctuation of the test voltage of +10 and -10 percent, the lamp wattage fluctuation [redacted] not exceed a total of 20 percent and ballast [redacted] maintain lamp wattage within the following limits:

Nominal Lamp Watts	Minimum Lamp Watts	Maximum Lamp Watts
150	110	180
250	175	370
400	280	475

d. The power factor of any ballast when tested at circuit voltage indicated in the plans [redacted] not less than 90 percent.

e. The electronic starting aid [redacted] provide a starting pulse with an amplitude of 2500 volts minimum, 4000 volts maximum. The pulse width [redacted] a minimum of 0.8 microseconds at 2250 volts. The pulse [redacted] occur when the open-circuit voltage is equal to or greater than 90 percent of peak open-circuit voltage. Pulse repetition rate [redacted] a minimum of one per cycle and pulse current [redacted] a minimum of 0.18 amperes. Electronic starting aids for mast-arm mounted poles [redacted] replaceable without the use of tools.

f. Luminaires [redacted] tested for satisfactory operation of the starter board under open-circuit (lamp-out) condition for a minimum of 72 hours. Any failures of starter boards [redacted] considered grounds for rejection of the model starter board being supplied.

g. Ballasts [redacted] permanently and clearly indicate the following: lamp type, catalog number, voltage rating, connection diagram, and manufacturer. Capacitors in all luminaires [redacted] non-PCB type.

3. Lamps

a. All lamps [redacted] new and [redacted] have been manufactured no earlier than six months prior to the date the project is awarded.

b. High pressure sodium vapor lamps in the wattage range of 200 to 400 watts inclusive [redacted] have a lamp voltage not greater than 108 volts when tested after thirty minutes' burn-in. 150 watt lamps [redacted] rated for 55 volts.

4. Testing

a. Ballasts and luminaires [redacted] tested using a lamp furnished for the same project.

b. Luminaires, ballasts, and lamps [redacted] sampled and tested in accordance with the SDHPT Materials and Test Division's Manual of Testing Procedures.

G. Wood Poles. For projects requiring more than 10 transformer and/or service poles, poles [redacted] creosote-treated to eight pounds per cubic foot-retention in accordance with the item "Timber Preservative and Treatment." For projects requiring ten or fewer poles, treatment [redacted] as stated above and Contractor may purchase poles locally if source and treatment are documented. All poles [redacted] meet the requirements of ANSI 05.1-1972.

H. Electrical Conductors

1. All conductors [redacted] of annealed copper meeting the requirements of ASTM B-3 or B-33 and the NEC.

2. Insulated conductors [redacted] NEC Type XHHW or Type USE(XLP). Conductors in circuits containing two or more insulated conductors [redacted] color-coded at each accessible point (i.e., ground boxes, pole bases, junction boxes). Color-coding [redacted] required on pre-conditized duct cable containing two or more insulated conductors. Color-coding of electrical conductors [redacted] made using colored tape. Tape marker [redacted] consist of half-lap layer of tape covering a six inch length of jacket. Tape markers [redacted] placed on all insulated conductors needing coding at all pole bases, ground boxes, junction boxes, service assembly enclosures and luminaires.

3. Insulated conductors [redacted] marked in accordance with Article 310 of the NEC, and [redacted] meet the requirements of Underwriters Laboratories' Standards.

4. Neutral conductors [redacted] insulated and [redacted] white or black with white tape marking. White [redacted] not [redacted] used for any other conductor. Grounding conductors [redacted] bare or if insulated [redacted] have green jacket or green tape marking. Green [redacted] not [redacted] used for any other conductor.

I. Conduit and Fittings

1. Conduit [redacted] UL-approved for the intended use shown on plan sheets. Aluminum conduit [redacted] not [redacted] permitted, unless allowed by plan note.

2. Fittings for steel conduit [redacted] steel or malleable iron, threaded or threadless, rain-tight. Die cast, set screw, indenter or push-on (socks) fittings [redacted] not [redacted] permitted.

3. Insulated grounding bushings [redacted] used on all metallic conduit entries into boxes or enclosures without bossed hubs and in ground boxes.

4. Expansion joints for metallic conduit [redacted] provided with a grounding strap. Expansion joints for metal conduit shall be Appleton UNYL 50 Series, OZ AX Series or equal.

J. Ground Boxes

1. Ground Boxes [redacted] meet the following requirements.

a. Boxes [redacted] manufactured from Reinforced Polymer Concrete (RPM) composed of borosilicate glass fiber, a catalyzed polyester resin and an aggregate.

b. Minimum inside dimensions (WxLxH) [redacted] as follows:
Type A shall be 12 inches x 23 inches x 11 inches.
Type B shall be 12 inches x 23 inches x 22 inches.
Type C shall be 16 inches x 29 inches x 11 inches.
Type D shall be 16 inches x 29 inches x 22 inches.

c. Bottom edge of box or extension [redacted] footed (2-1/2 inch flange).

d. Ground boxes and covers [redacted] designed for heavy duty loading (15,000 lb load over 10 inches x 10 inches area). Ground boxes and covers [redacted] have been tested to meet required loading. Contractor [redacted] submit certification of such tests.

e. All ground boxes and covers [redacted] permanently marked with manufacturer's name or logo and manufacturer's model number.

f. Ground box covers [redacted] steel, hot dipped galvanized, and [redacted] have "ELECTRIC" imprint. Covers [redacted] bolted down. A grounding lug with 1/2-13 NC female threads [redacted] placed on the underside of the cover. Cover [redacted] bonded to grounded conductor with 3 foot jumper, Blackburn TTC4 or Burndy KC22B2 connector and split bolt connector.

2. Where indicated on plans, ground box [redacted] encased in concrete apron as detailed.

3. A minimum gravel fill of 9 inches [redacted] placed under each ground box.

4. The Contractor [redacted] cut the necessary conduit holes in box extensions only. Holes [redacted] 18 inches or more below the cover.

5. The Contractor [redacted] make brochure submittal (four copies) on ground boxes.

⚠ 8-89 Removed note H-5.
⚠ 8-89 Reduced to 34" Sheet.

STATE DEPARTMENT OF HIGHWAYS AND PUBLIC TRANSPORTATION

ROADWAY ILLUMINATION DETAILS

RID (3)-88

	DRAWING	DATE	FED. RD. DIV. NO.	STATE	FEDERAL AID PROJECT NO.				SHEET NO.
DN.	ORIGINAL	1-88	6	TEXAS	NH 92(		)M		559
CK.	REVISED	3-88	STATE DIST. NO.	COUNTY		CONT.	SECT.	JOB	HIGHWAY NO.
DN.	REVISED	4-89	21	Hildalgo		39	17	9745	83
CK.	REVISED	8-89							

7FA3:[122.106]RID346

-79-17

II. K. Junction Boxes

2 1. Junction boxes [redacted] cast iron or cast steel, hot-dipped galvanized, or cast aluminum (surface-mounted only) unless otherwise noted on plans.

2. Surface-mounted junction boxes for conduit 1-1/4 inches and larger [redacted] Crouse Hinds Type WAB, OZ Type YS, or Adalet Type 3R, with mounting lugs, minimum size 6 inches x 6 inches x 4 inches, or approved equal. For conduit 1 inch or smaller, surface-mounted boxes [redacted] 4-1/2 inches round and approximately 3 inches deep, Crouse Hinds Type GRFX, Appleton Type JBDX, three-gang FD, or approved equal.

3. Flush-mounted junction boxes installed in concrete struotures [redacted] Crouse Hinds, OZ, or approved equal similar to boxes described above but for flush mounting.

III. CONSTRUCTION METHODS

A. General

1. The location of poles, conductors, conduits, junction boxes, transformer stations and service poles are diagrammatic only and [redacted] shifted by the Engineer to accommodate local conditions.

2. Erection and/or removal of poles and luminaires located near any overhead electrical lines [redacted] accomplished using established industry and utility safety practices. The Contractor [redacted] consult with the appropriate utility company prior to beginning such work.

B. Roadway Illumination Assemblies

1. Roadway Illumination Assembly poles [redacted] erected plumb and true. Top of foundation [redacted] struck level and shims used to plumb pole, except that for shoe base poles only leveling nuts [redacted] used. Leveling nuts [redacted] not [redacted] used under transformer bases. Grout [redacted] hot [redacted] placed between base flange and the foundation.

2. In each pole, continuous color-coded stranded No. 12 AWG copper Type XHHW or other approved XLP conductors [redacted] connected to the line side of each ballast. Color coding [redacted] accomplished as described in paragraph II.H.

3. A fused connector assembly or fuse-holder as specified [redacted] connected in each hot wire on the line side of each ballast. Luminaires on poles [redacted] fused using quick-disconnect fuse-holders as shown in details. Fuses [redacted] 5 ampere time-delay type.

4. For median-mounted poles placed on concrete median barrier, all hand holes [redacted] on same side of the median.

5. Acorn nuts [redacted] not [redacted] allowed for attaching pole to transformer base or foundation. Nut covers [redacted] not [redacted] allowed.

C. Conduit

1. Continuous runs of conduit in excess of 150 feet attached to structures [redacted] have expansion joints at mid-span or 150-foot intervals and at struoture expansion joints or as shown in plans.

2. Conduit hangers or straps [redacted] spaced at maximum intervals of 5 feet. Hangers [redacted] Unistrut Series J1200, Globe Series 450, or equal, unless otherwise indicated in the plans. Conduit spacers [redacted] used on Rigid Metal conduit placed on vertical surface of concrete structures (see conduit detail).

3. Conduit hangers [redacted] not [redacted] attached directly to prestressed concrete girders except as shown in the plans and approved by the Engineer.

4. Conduit placement beneath existing paved surfaces [redacted] accomplished by jacking or boring in accordance with the pertinent provisions of Article 476.3 "Construction" of the item "Jacking, Boring or Tunneling Pipe," unless otherwise noted on plans. Jacking, boring, or tunneling [redacted] not [redacted] paid for directly but [redacted] subsidiary to the item "Conduit." Duct cable [redacted] extended through the conduit in one continuous length or conductors [redacted] encased in a continuous length of conduit where passing under an existing roadway. Direct burial of conductor [redacted] not [redacted] allowed.

5. For all conduit placed by trenching, trenching and backfilling [redacted] in accordance with the item, "Excavation and Backfill for Sewers," except for measurement and payment. Trenching depth [redacted] provide a minimum of 18 inch cover over conduit, unless noted otherwise on the plans.

6. With approval of the Engineer conduit placed under new roadways [redacted] trenched in subgrade and backfilled with excavated material. When approved by the Engineer, conduit [redacted] trenched in sub-base but [redacted] backfilled with cement-stabilized base. Conduit placed after base or surfacing operation has begun [redacted] jacked or bored. Conduit placed under existing roadways, driveways or sidewalks [redacted] placed as directed by the Engineer or as shown on plans.

7. Open ends of all conduit and raceways [redacted] fitted with temporary caps or plugs to prevent entry of dirt, debris and rodents during construction.

8. Conduit entry into junction boxes [redacted] made weathertight using threaded fittings or hubs, or with sealing locknuts inside and out.

9. The ends of all metallic conduit terminating in a ground box, junction box, enclosure, or light pole base carrying individual conductors [redacted] fitted with insulated grounding bushings. A bonding jumper [redacted] installed from bushings to nearest ground rod, grounding lug, or grounded conductor. At service poles, bonding jumper [redacted] AWG Size no. 6. All other jumpers [redacted] minimum size AWG No. 8. Metallic conduit run undergroundand not exposed or accessible at any point [redacted] not [redacted] grounded.

10. Conduits [redacted] sealed with heat shrink boots or tubes, with sealant, or [redacted] sealed by other methods approved by Engineer. Sealing [redacted] done after completion of the pull test described in paragraph III.D.3.

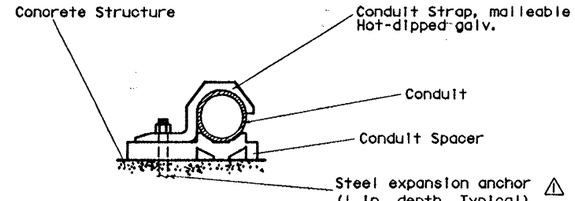

CONDUIT DETAIL
(Attachment to vertical surfaces)
(See para. III.C.2)

Proposed class A concrete apron reinforced with No.3 reinforcing steel. Subsidiary to item 624

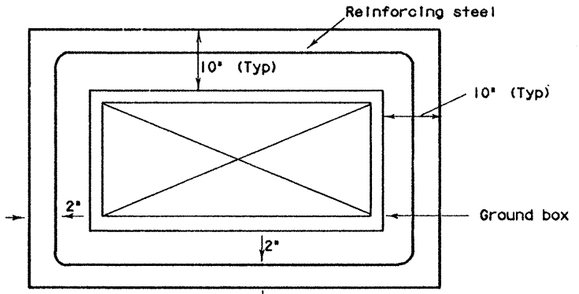

PLAN VIEW

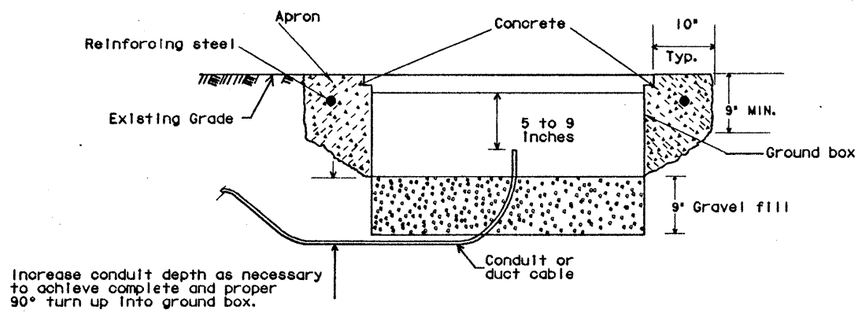

SECTION

APRON FOR GROUND BOXES 1
(Where required by plan note)

2 8-89 Reduced to 34" Sheet.
1 8-89 Modified apron, specified anchor.
2 8-89 Clarified note.

STATE DEPARTMENT OF HIGHWAYS AND PUBLIC TRANSPORTATION

ROADWAY ILLUMINATION DETAILS

RID (4)-88

	DRAWING	DATE	FED. RD. DIV. NO.	STATE	FEDERAL AID PROJECT NO.			SHEET NO.
DN.:	ORIGINAL	1-88	6	TEXAS	NH92( )M			560
CK.:	REVISED	3-88	STATE DIST. NO.	COUNTY	CONT.	SECT.	JOB	HIGHWAY NO.
DN.:	REVISED	4-89						
CK.:	REVISED	8-89	21	Hidalgo	39	17	977	583

III C.

11. All conduit entering ground boxes and pole bases and used to carry individual conductors [redacted] furnished with bell end fittings or bushings. Metallic conduit [redacted] fitted with grounding strap and bonding jumper. Jumper [redacted] tied to nearest ground rod or grounding conductor.

12. Where called for on plans, the conduit [redacted] placed on a 2-inch sand cushion and backfilled with a minimum of 6-inch sand fill.

13. Conduits entering ground boxes [redacted] placed so that the conduit ends [redacted] not less than 5 inches nor more than 9 inches from the box cover (see ground box detail).

D. Electrical Conductor

1. A non-metallic pull rope [redacted] used in pulling conductor in non-metallic conduit.

2. After installation and prior to connecting ends, each continuous run of insulated conductor [redacted] have a minimum D.C. insulation resistance of one megohm when tested at 1000 volts D.C. All or part of conductor system may be tested by the Engineer. Conductors exhibiting an insulation resistance of less than one megohm [redacted] replaced by the Contractor at his own expense.

3. After conductor is placed in conduit, a pull test [redacted] made on conductors. Any length of conductor that [redacted] pulled easily [redacted] replaced by the Contractor at his expense.

4. Conductors [redacted] supported by a J-hook in top of illumination poles..

5. A minimum length of 3 feet of conductor [redacted] left in ground boxes and pole bases for making up connections.

E. Duct Cable

1. Duct cable [redacted] placed by the open trench method, except where otherwise noted, at a depth of 18 inches unless otherwise indicated. Bends in duct cable [redacted] made in the manner recommended by the manufacturer. Minimum bending radi[redacted] as follows:

1-inch duct : 15 inches R.
1-1/4 inch duct : 18 inches R.

Handling of duct cable reels and installation of duct [redacted] as recommended by the manufacturer. Duct entering ground boxes [redacted] placed so that the duct ends [redacted] not less than 5 inches nor more than 9 inches from the box cover.

2. All ducts entering ground boxes [redacted] securely lashed together in vertical position. After duct cable [redacted] installed, a pull test [redacted] made on conductors. If conductors cannot be easily pulled, Contractor [redacted] replace or otherwise adjust installation to free up the conductors. Duct cable ends [redacted] sealed with approved compound after pull test is completed.

3. Where noted on plans duct cable [redacted] placed on a 2-inch sand cushion and backfilled with a minimum 6 inches of sand.

F. Bonding and Grounding

1. The Contractor [redacted] insure that all exposed metal containing electrical conductors is bonded and grounded, using ground rods, grounding bushings, locknuts, and other fittings as necessary.

2. Metallic conduit, lighting poles, and luminaires on bridge structures [redacted] grounded. Each structure [redacted] have at least one 5/8-inch x 8 foot copper-clad ground rod driven in the ground and a No. 8 AWG copper bonding jumper [redacted] installed from the ground rod to the grounding conductor of the lighting circuit.

3. The bonding jumper [redacted] bare or, if insulated, [redacted] green. Ground rods, connectors, and bonding jumpers [redacted] not [redacted] paid for separately, but [redacted] subsidiary to the various bid items.

G. Connectors and Splices

1. Splices, in locations permitted by the Engineer, [redacted] made with approved compression sleeves or split bolt connectors insulated with heavy-wall heat shrink tubing containing factory-applied sealant or approved waterproof mechanical splice kit (Homac "Flood Seal"). Heat shrink sleeves [redacted] lap conductor insulation a minimum of 2 inches on both sides of the splice. If split bolt connectors are used, connectors [redacted] covered with two half-lap layers of rubber tape before insulation is applied.

2. When approved by the Engineer, wire nuts [redacted] used for No. 8 and smaller conductors in above ground junction boxes but not in pole bases or ground boxes. Wire nuts [redacted] positioned upright to prevent the accumulation of water.

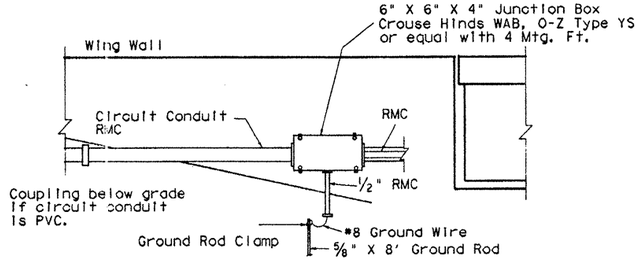

NOTES

1. Conduit [redacted] 2" RMC for duct cable entry to junction box.
2. Ground rod clamp to be Blackburn GG 5/8H, Weaver W5/8 or equal.
3. All conduit entering junction box [redacted] have locknuts and bushings. Conduit for ground wire [redacted] have grounding type bushing.
4. For conduit [redacted] placed in structure use flush-mounted box, Crouse Hinds WEB, O-Z Type YU or equal.

CONDUIT ENTRY TO BRIDGE STRUCTURE DETAIL

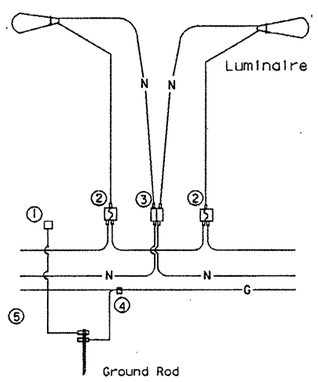

THREE WIRE CIRCUIT-OUTSIDE GROUNDED
LUMINAIRES SERVED AT 480V

NOTES:

(1) Pole Bonding Connector-Blackburn *TTC3 or Weaver *TGC3 or equal.
(2) Fused Connector-Homac, Bussman HEB, HEX, or equal.
* (3) Un-fused Connector-Homac, Bussman HEB, HEX, or equal.
(4) Split Bolt Connector.
(5) Ground Rod Clamp - 2 Required - Blackburn GG58H Burndy GKP635 or equal.
(6) All fuses [redacted] time-delay types, 10 Amp (Littlefuse FLQ, Bussman FNQ or equal)

*For Transformer Base Poles. On Shoe Base Poles, omit un-fused connector for neutral conductor.

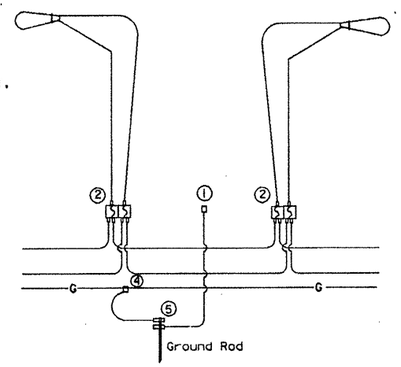

FOR THREE-WIRE CIRCUIT-CENTER GROUNDED
LUMINAIRES SERVED AT 480V

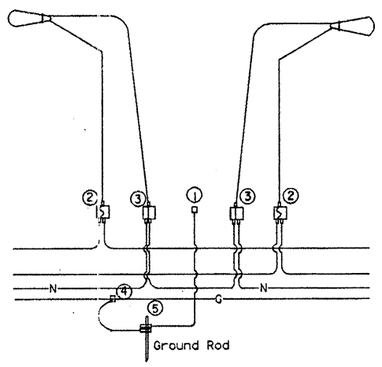

FOUR-WIRE CIRCUIT-CENTER GROUNDED
LUMINAIRES SERVED AT 240V

⚠ 8-89 Reduced to 34" Sheet.

STATE DEPARTMENT OF HIGHWAYS AND PUBLIC TRANSPORTATION

ROADWAY ILLUMINATION DETAILS
RID (5)-88

	DRAWING	DATE
DN. *	ORIGINAL	1-88
CK. *	REVISED	3-89
DW. *	REVISED	8-89
CK. *	REVISED	

FED. RD. DIV. NO.	STATE	FEDERAL AID PROJECT NO.			SHEET NO.
6	TEXAS	NH 92( )M			561
STATE DIST. NO.	COUNTY		CONT.	SECT.	JOB	HIGHWAY NO.
21	Hidalgo		39	17	97	4583

ZFA3: 0122 :0618:0345

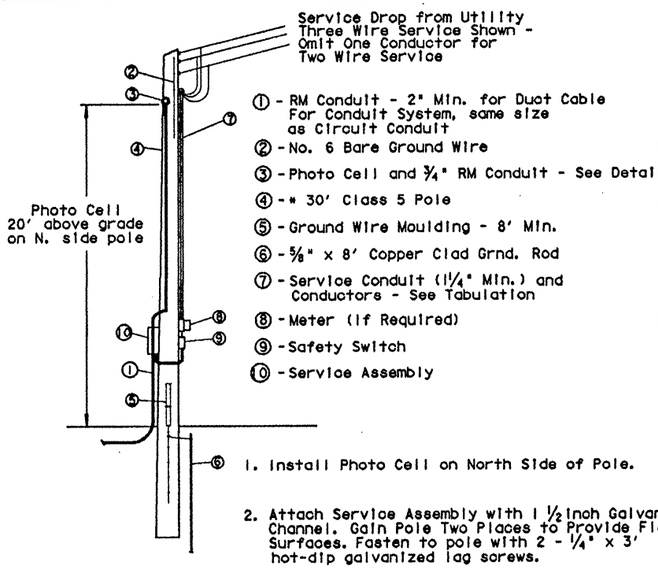

1. Install Photo Cell on North Side of Pole.

2. Attach Service Assembly with 1 ½ inch Galvanized Channel. Gain Pole Two Places to Provide Flat Surfaces. Fasten to pole with 2 - ¼" x 3" hot-dip galvanized lag screws.

* Or as Required By NESC and Utility Company.

TYPICAL SERVICE POLE

See Service Pole Schematic For Types.

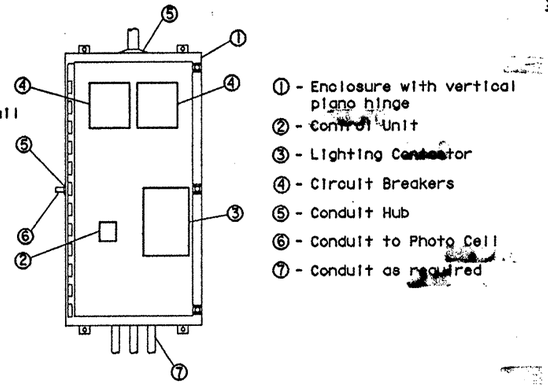

SERVICE ASSEMBLY DETAIL

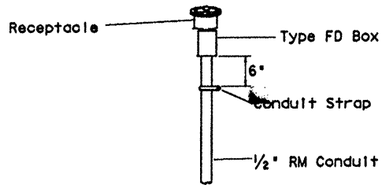

DETAIL
PHOTO CELL MOUNTING

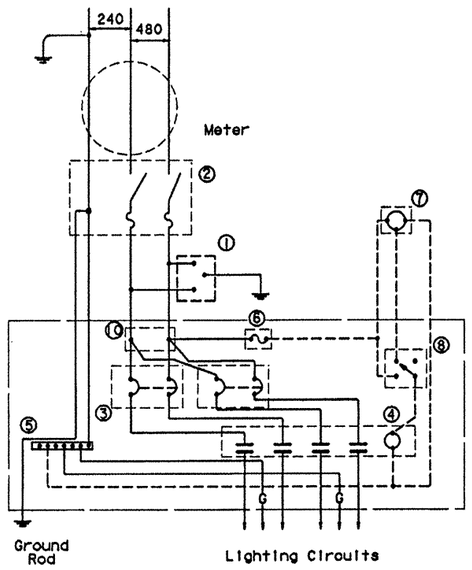

① Lightning Arrester
② Fusible Safety Switch
③ Circuit Breaker
④ Lighting Contactor
⑤ Factory-made Ground Bus
⑥ Insulated Fuseholder, 5 Amp Fuse
⑦ Photo-Electric Control
⑧ Control Unit-"Manual-Off-Automatic"
⑨ Control Transformer
⑩ Distribution Block

——— Power Wiring
------- Control Wiring

SERVICE POLE TYPE A
240 / 480 VOLTS - THREE WIRE

Luminaires Served at 480V

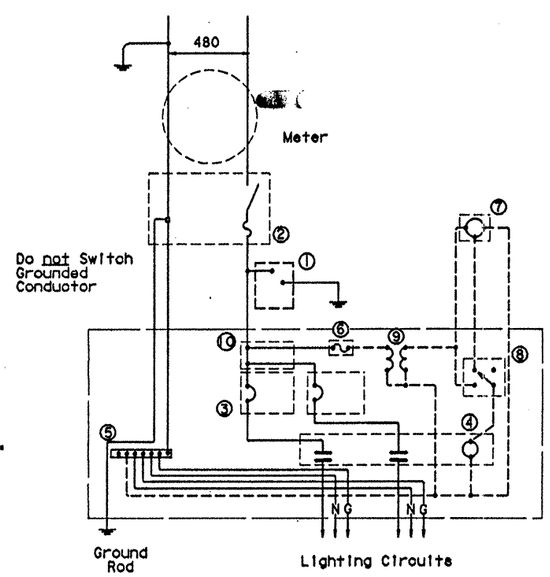

SERVICE POLE TYPE B
480 VOLTS - THREE WIRE

SERVICE POLE SCHEMATIC

GENERAL NOTES:

SERVICE POLE AND CIRCUIT PROTECTOR ASSEMBLY

1. Service Assembly Enclosure. NEMA 3R enclosure consisting of NEMA 12 enclosure with drip shield and conversion hardware, constructed of 14-gauge steel, with piano hinge and resilient gasket. Door held with clamps with provisions for padlock. Equipment-mounting panel 12-gauge steel, primed and painted white. Enclosure [redacted] galvanized outside and primed and painted white inside.

2. Lighting Contactor. Electrically-held, of type designed to control tungsten, mercury vapor and other lighting loads, Square D Class 8903 Type S, Allen Bradley 702L or approved equal.

3. Control Unit. Standard duty 3-position (Auto-Manual-Off) control station in NEMA 1 enclosure.

4. Photo-Electric Control. Dry-type hermetically sealed cadmium sulfide cell, expulsion arrester and electro-mechanical relay, mounted in weatherproof plastic housing having twist-lock base. Turn-on range of 0.5 to 5 footcandles, factory-set at 1 + 1/2 footcandle. Turn-off 2 footcandles higher than turn-on. Voltage range 100 to 285. Control circuit [redacted] fused with enclosed in-line fuseholder and 5 ampere fuse.

5. Lightning Arrester. Valve-type, 0-650 volt with bracket for pole mounting.

6. Circuit Breakers for a three-wire center-grounded 240/480 service [redacted] rated 277/480 volts. Circuit breakers for a two-wire 480 volt system [redacted] rated 480 volts, and shall control only one circuit. Circuit breakers for 120/240 volt systems [redacted] rated 240 volts.

7. Fusible Safety Switch. [redacted] heavy-duty type, two-pole, rated 480 volts with a solid neutral assembly in a NEMA 3R enclosure. Switches for 240 volt systems shall be same except rated 120/240 volts. All fuses [redacted] class R time-delay type. Contractor [redacted] modify switch to allow padlocking in the "ON" position.

8. Metering. Where metering is required, utility company [redacted] provide the meter base. Contractor [redacted] install the base. Some utility companies require the meter base [redacted] installed on the load side of the safety switch. Contractor [redacted] consult with the utility company before making up the service poles.

9. Circuit Protector Assemblies [redacted] similar to service poles except that wood poles [redacted] furnished and installed by others.

10. The Contractor [redacted] responsible for paying all costs involved in obtaining power, except that the costs incurred in extending primary line to service pole location [redacted] paid for separately.

SERVICE POLES

Service Pole Designation	Type	Service Conduit Size	Service Conductors No./Size	Fuseltah Rating Amp/Fuse	Contactor Poles/Amps	Circuit No.	Circuit Breakers	KVA Load
#1	A	1½"	3/#6	60A/35A	2P/20A	HM	2P/20A	7.20
#2	A	1½"	3/#6	60A/35A	2P/20A	HM	2P/20A	7.20
#3	A	1½"	3/#6	60A/35A	3P/20A	HM	2P/20A	7.63
						SL	1P/20A	
#4	A	1½"	3/#6	60A/35A	3P/20A	HM	2P/20A	8.50
						SL	1P/20A	
#5	A	1½"	3/#6	60A/35A	3P/20A	HM	2P/20A	7.63
						SL	1P/20A	
#6	A	1½"	3/#6	60A/35A	2P/20A	HM	2P/20A	7.20
#7	A	1½"	3/#6	60A/35A	2P/20A	HM	2P/20A	7.20
#8	A	1½"	3/#6	60A/35A	2P/20A	HM	2P/20A	7.20
#9	A	1½"	3/#6	60A/35A	2P/20A	HM	2P/20A	7.20
#10	A	1½"	3/#6	60A/35A	3P/20A	HM	2P/20A	7.50
						SL	1P/20A	
#11	A	1½"	3/#6	60A/35A	3P/20A	HM	2P/20A	7.90
						SL	1P/20A	

⚠ 8-89 Reduced to 34" Sheet.

STATE DEPARTMENT OF HIGHWAYS AND PUBLIC TRANSPORTATION

ROADWAY ILLUMINATION DETAILS
RID (6)-88

DN	DRAWING	DATE	FED. ROAD DIV. NO.	STATE	FEDERAL AID PROJECT NO.		SHEET NO.
CK DN	ORIGINAL	1-88					
DW	REVISED	8-88	6	TEXAS	NH 92( )M		562
CK DW	REVISED	4-89	STATE DIST. NO.	COUNTY	CONT. NO.	SEC. NO.	JOB NO.	HIGHWAY NO.
TR	REVISED		21	Hidalgo	39	17	97	US83
CK								

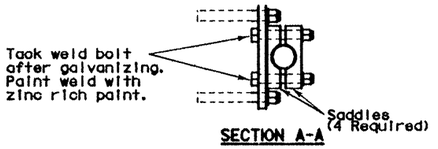

SECTION A-A

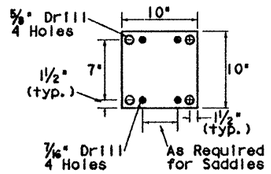

MOUNTING PLATE

Make from 3/8" Plate Galv. after fabrication

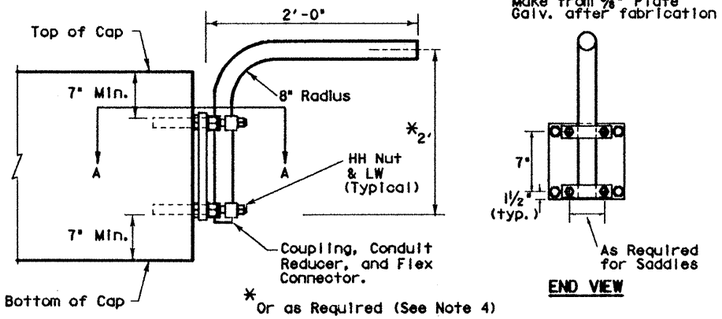

PROFILE VIEW

END VIEW

UNDERPASS LIGHTING ARM TYPE 1

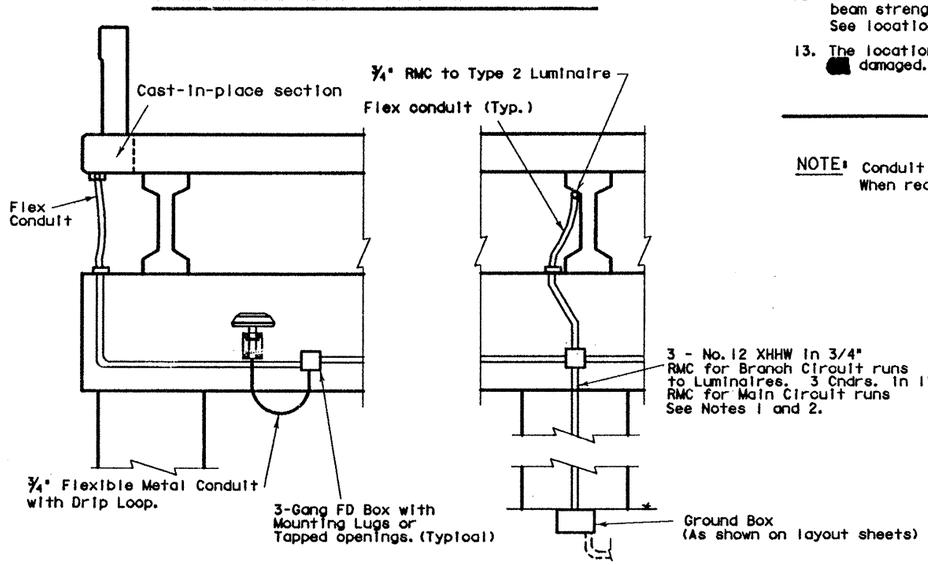

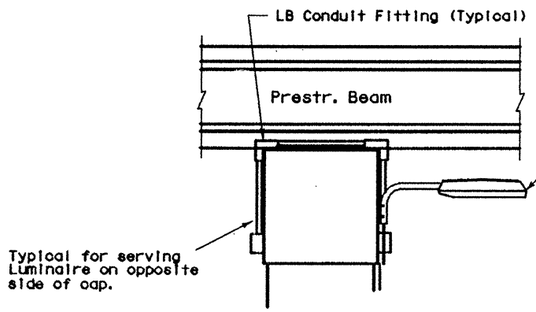

**Note: If Luminaire overhangs traffic lane, or shoulder, bottom of Luminaire [redacted] at elevation of bottom of Beam.

*If bridge has pre-stressed panels under deck, run circuit under deck edge. See detail at left.

U/P (SPL-CO) (KW) S (TYPE 1)

NOTES :

ALL LUMINAIRES

1. Luminaire locations, conduit and conductor sizes and routing are typical and diagrammatic only. See project layout sheets for specific details.
2. All No. 12 Conductors and 3/4" conduit necessary for installation of U/P lights shall not be paid for directly but [redacted] considered subsidiary to the various bid items. All larger conductors and conduit [redacted] paid for under the items "Conduit" and "Electrical Conductor." See lighting layout sheets.
3. A ground rod [redacted] installed and attached to the equipment grounding conductor in all ground boxes containing conduit that extends above ground. All RMC in these boxes [redacted] have grounding bushings and [redacted] properly bonded.
4. Adjust conduit in saddles to place fixture height and orientation as required. See fixture orientation detail and layout sheet. Where traffic is likely to pass under luminaires, place luminaires so that bottom of luminaire is above bottom of beam, maximum of 3 inches.
5. All bolts, nuts and washers [redacted] galvanized.
6. Fabrication of brackets [redacted] not [redacted] paid for directly but [redacted] subsidiary to Item 610, Rdwy Illum Assemblies.

TYPE 1

7. Type 1 arm shaft - 1-1/2" rigid metal conduit (1.90" O.D. .145" wall).
8. Anchor bolts for Type 1 luminaire [redacted] 3/8 in. bolt or stud expansion anchors with min. pull out of 3000 lb pull out each, with 4 in. min. embedment. Provide lock washers.
9. Attach conduit to plate with 4 saddles, 4-3/8" bolts, HHN & LW.

TYPE 2

10. Reduce conduit length for Type C concrete beams. Field cutting and threading [redacted] permitted.
11. Connecting conduit [redacted] strapped to tapered section only of precast beams as shown. Anchor as approved by the Engineer. Maximum anchor depth is 1 inch.
12. Indiscriminate drilling into precast concrete beams [redacted] result in reduced beam strength. Drilling location [redacted] only as directed by Engineer. See location of underpass lighting mounting bracket detail.
13. The locations given in the table are such that reinforcing strands [redacted] not [redacted] damaged.

NOTE: Conduit on Columns, Caps, and Slab is shown surface mounted. When required by the Engineer, Contractor [redacted] embed conduit.

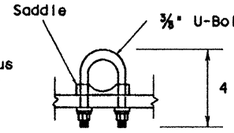

CLAMP
(2 Req'd)

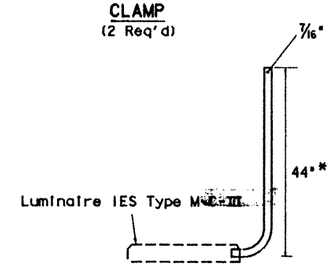

* See note 10.

SIDE

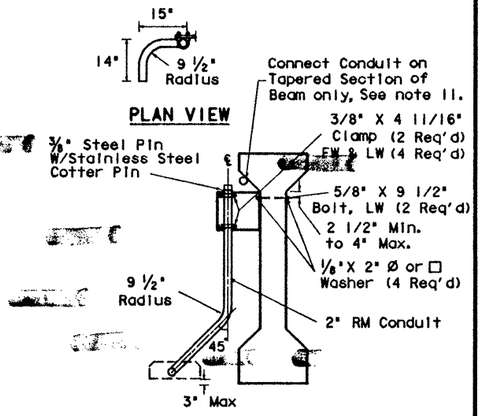

FRONT

UNDERPASS LIGHTING ARM TYPE 2

Bridge Span Length	Minimum Distance From Bent Cap to Fixture Mounting Arm
<50'	10'
50'-70'	15'
70'-90'	20'
>90'	25'

See detail below.

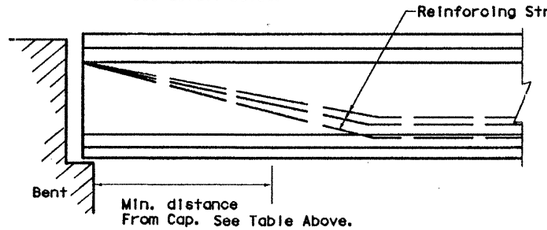

LOCATION OF UNDERPASS LIGHT MOUNTING BRACKET

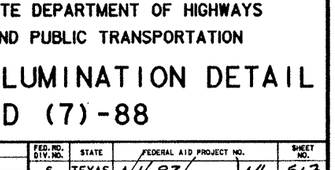

FIXTURE ORIENTATION

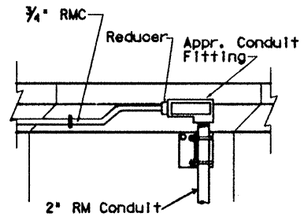

CONDUIT CONNECTION
(TYPICAL)

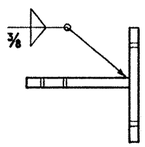

PLAN VIEW

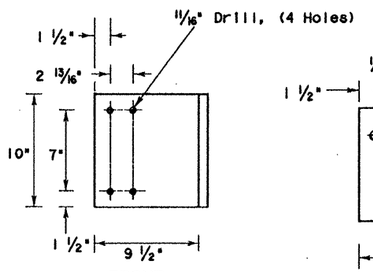

FRONT

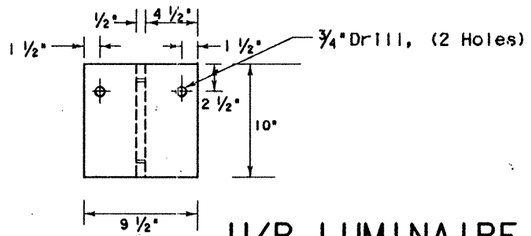

SIDE

BRACKET DETAIL

Make From 1/2" Plate (ASTM A-36) Galv. after fabrication

U/P (SPL-CO) (KW) (TYPE 2)

U/P LUMINAIRE DETAILS

8-89 Reduced to 34" Sheet.

STATE DEPARTMENT OF HIGHWAYS AND PUBLIC TRANSPORTATION

ROADWAY ILLUMINATION DETAIL RID (7)-88

	DRAWING	DATE
DN.:	ORIGINAL	1-88
CK.:	REVISIONS	3-88
DW.:	REVISIONS	4-89
CK.:	REVISIONS	8-89

FED. ROAD DIV. NO.	STATE	FEDERAL AID PROJECT NO.	SHEET NO.
6	TEXAS	NH 92( )NI	563
STATE DIST. NO.	COUNTY	CONT. / SECT. / JOB	HIGHWAY NO.
21	Hidalgo	39 / 17 / 97	4583

EACH FRONT AND REAR ANCHOR TO BE SECURED TO CONCRETE PAD USING SIX ¾" DIA. x 6 ¼" CONC. ANCHOR BOLTS, ¾" HEX HEAD NUTS AND ¾" FLAT WASHERS

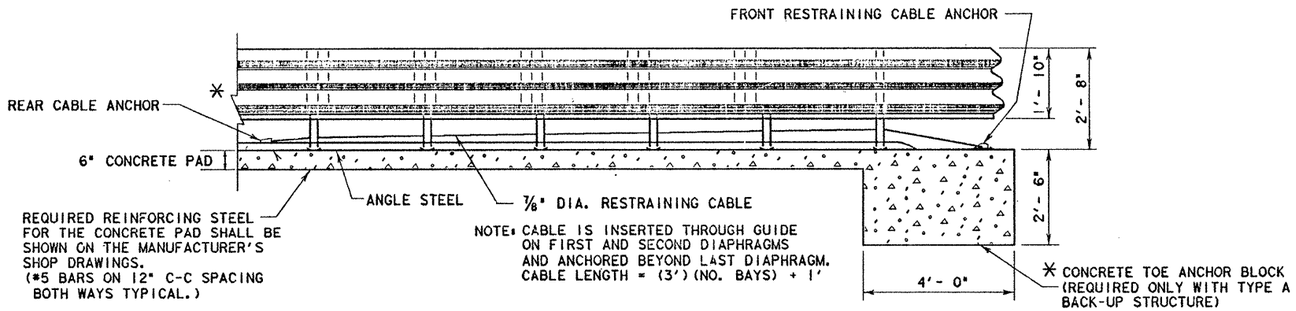

ELEVATION

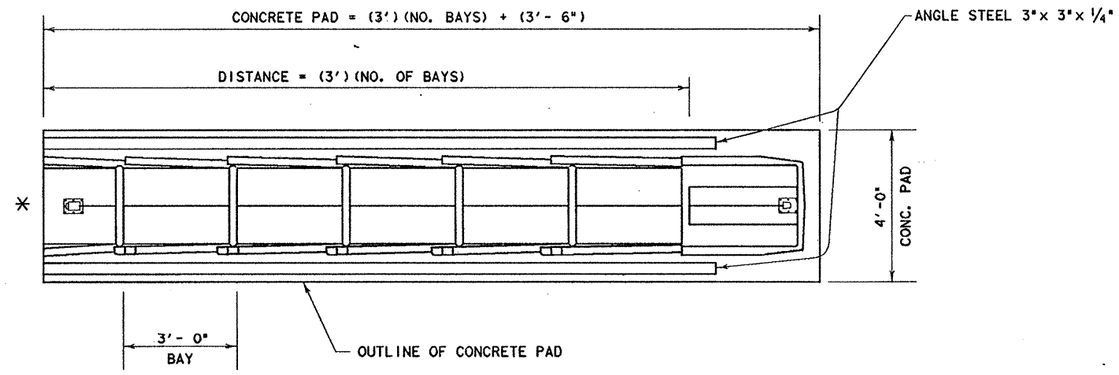

PLAN

* SEE NOTE FOR BACK-UP STRUCTURE INFORMATION

STRUCTURAL INFORMATION

TYPE A TENSION STRUT: CONSISTS OF DIAGONAL STRUTS, CONNECTIONS, AND ACCESSORIES, AS DETAILED BY THE MANUFACTURER, LOCATED AT REAR OF G.R.E.A.T. UNIT. WHEN USED, A 4' x 4' x 2'- 6" CONCRETE TOE ANCHOR BLOCK [redacted] PROVIDED BENEATH THE FRONT PORTION OF THE CONCRETE PAD EXCEPT WHERE THE G.R.E.A.T. UNIT [redacted] PLACED ON CONTINUOUSLY REINFORCED CONCRETE PAVEMENT.

TYPE B CAST-IN-PLACE CONCRETE WALL BACKUP: WHEN A TYPE B BACKUP IS SPECIFIED, THE BACKUP WALL [redacted] DETAILED ELSEWHERE IN THE PLANS. IF CAST-IN-PLACE STRUCTURES SUCH AS CONCRETE TRAFFIC BARRIER, BRIDGE PARAPETS, COLUMNS, OR SPECIAL WALLS ARE USED AS BACKUP STRUCTURES, THEN INTERMEDIATE WALLS AS DETAILED ELSEWHERE IN THE PLANS [redacted] PROVIDED BETWEEN THESE STRUCTURES AND THE G.R.E.A.T. UNIT. THE INTERMEDIATE WALLS [redacted] EQUAL IN HEIGHT AND WIDTH TO THAT OF THE G.R.E.A.T. UNIT. THE INTERMEDIATE WALLS [redacted] REINFORCED WITH A STEEL CAGE. PRECAST CONCRETE MEDIAN BARRIER [redacted] NOT [redacted] USED AS A BACKUP STRUCTURE FOR THE G.R.E.A.T. UNIT.

TYPE C WIDE FLANGE BACK-UP: CONISTS OF TWO 6WF25 x 6'-2" STEEL POSTS ERECTED VERTICALLY AT REAR OF G.R.E.A.T. UNIT. POSTS ARE SET IN A CAST-IN-PLACE, REINFORCED FOUNDATION WHICH IS 4'-0" x 2'-0" x 3'-0", WITH THE 3'-0" DEPTH MEASURED FROM THE TOP OF CONCRETE PAD. DETAILS FOR CONNECTIONS AND ACCESSORIES FOR THE WIDE FLANGE BACK-UP PROVIDED BY THE MANUFACTURER.

TYPE CZ CONSTRUCTION ZONE BACK-UP: CONSISTS OF A STEEL BASE AND BACK-UP AS INTEGRAL PARTS OF THE G.R.E.A.T. UNIT. ANCHORAGE PROVIDED BY ANCHOR BOLTS WHERE THE UNIT IS PLACED ON CONCRETE OR BY DRIVEN, STEEL ANGLE ANCHOR PINS FOR PLACEMENT ON OTHER THAN CONCRETE. THE TYPE CZ UNIT IS ONLY AVAILABLE IN 2' OR 2.5' WIDTHS WITH 3 OR 6 BAYS.

NOTES: TYPE OF BACK-UP STRUCTURE FOR EACH LOCATION SPECIFIED ELSEWHERE IN THE PLANS.

DETAILS OF COMPONENTS TO THE GUARD RAIL ENERGY ABSORBING TERMINAL [redacted] SHOWN ON SHOP DRAWINGS FURNISHED TO THE ENGINEER BY THE MANUFACTURER.

DESIGN SPEED (MPH)	NO. OF BAYS ①
40 OR LESS	3
45	4
50	5
55	6
60	8
65	10

① BASED ON MAXIMUM DECELERATION FORCE OF 6 G's

IF TYPE CZ UNIT IS USED, REFER TO STRUCTURAL INFORMATION FOR FOR WIDTHS AND NUMBER OF BAYS.

STATE DEPARTMENT OF HIGHWAYS AND PUBLIC TRANSPORTATION

GUARD RAIL ENERGY ABSORBING TERMINAL

GREAT-89

REVISIONS	FED. RD. DIV. NO.	STATE	FEDERAL AID PROJECT NO.				SHEET NO.
	6	TEXAS	NH 92(50)M				564
	STATE DIST. NO.	COUNTY	CONT.	SECT.	JOB		HIGHWAY NO.
	21	Hidalgo	39	17	97		0583

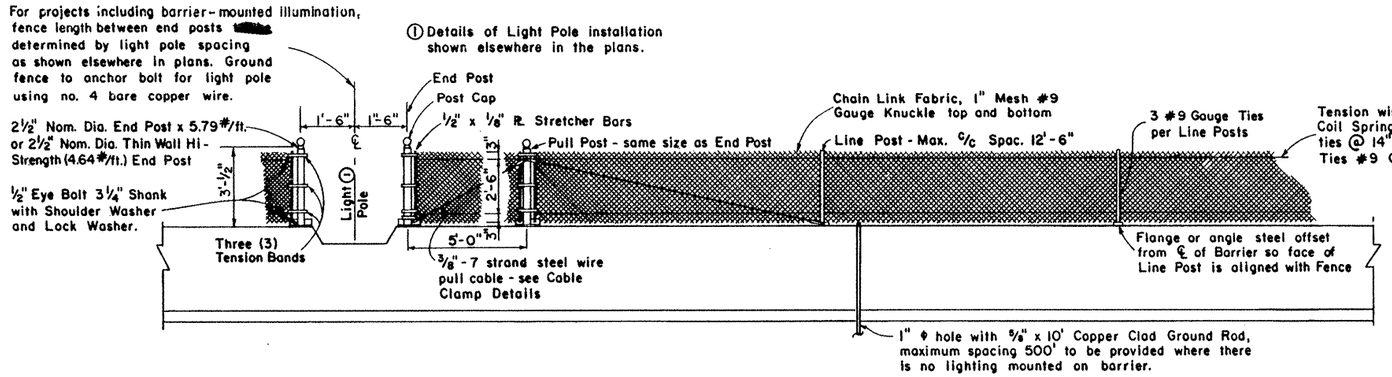

ELEVATION OF HEADLIGHT BARRIER FENCE MOUNTED ON CONCRETE TRAFFIC BARRIER

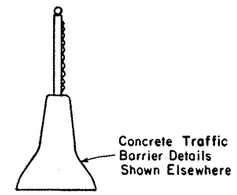

TYPICAL SECTION

GENERAL NOTES

1. THE HEADLIGHT BARRIER FENCE [redacted] ELECTRICALLY GROUNDED. A GROUND [redacted] PLACED AT A MAXIMUM SPACING OF 500 FEET EXCEPT WHERE LONG BRIDGES PRECLUDE ATTAINING THIS SPACE AND EACH INDEPENDENT SECTION [redacted] HAVE AT LEAST ONE GROUND AT OR BETWEEN END POSTS REGARDLESS OF LENGTH. A GROUND [redacted] CONSIST OF 5/8" X 8' COPPER CLAD STEEL ROD AND NO. 4 BARE COPPER WIRE WITH GROUND ROD CLAMP.
2. FOR PROJECTS INVOLVING ILLUMINATION MOUNTED ON CONCRETE TRAFFIC BARRIER, A COMMON GROUND [redacted] USED FOR A LIGHT POLE AND SECTIONS OF HEADLIGHT BARRIER FENCE. FOR THESE CONDITIONS INVOLVING ILLUMINATION, NO. 4 BARE COPPER WIRES [redacted] CONNECTED FROM THE ADJACENT SECTIONS OF HEADLIGHT BARRIER FENCE TO ILLUMINATION POLE ANCHOR BOLTS.
3. CONCRETE TRAFFIC BARRIER DETAILS SHOWN ELSEWHERE IN THE PLANS.

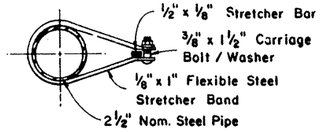

DETAIL OF STRETCHER BAR & BAND

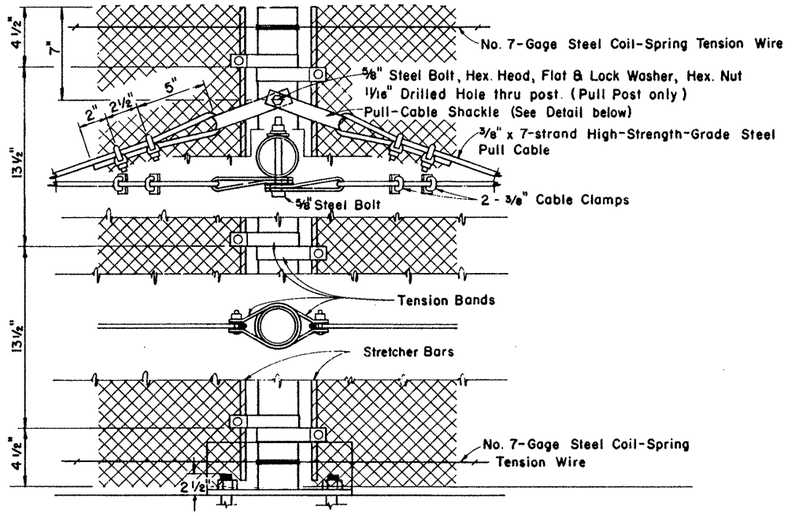

TENSION BAND AND CABLE CLAMP DETAILS

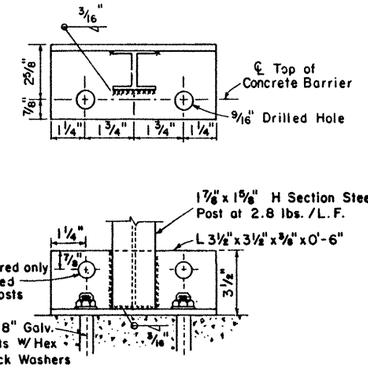

LINE POST DETAILS

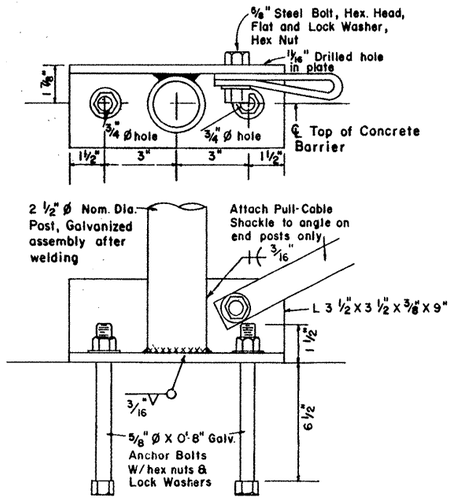

ELEVATION END & PULL POST

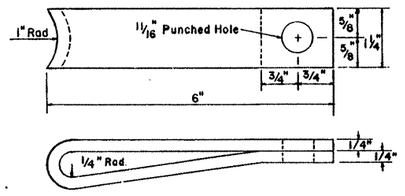

PULL-CABLE SHACKLE DETAIL

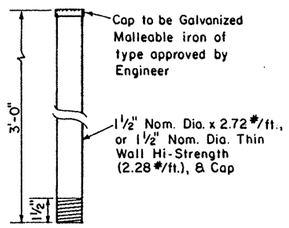

ELEVATION

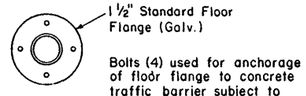

PLAN

OPTIONAL LINE POST DETAILS

STATE DEPARTMENT OF HIGHWAYS AND PUBLIC TRANSPORTATION

HEADLIGHT BARRIER FENCE

MOUNTED ON CONCRETE TRAFFIC BARRIER

HBF (CTB) - 81

ORIGINAL DRAWING DATE:		STATE DISTRICT	FEDERAL REGION	FEDERAL AID PROJECT #	SHEET
DN.:- CK.:- DW.:- CK.:-	REVISIONS	21	6	NH 92(50)M	565
		COUNTY	CONTROL	SECTION	JOB	HIGHWAY
		Hidalgo	39	17	97	4583
						A-58

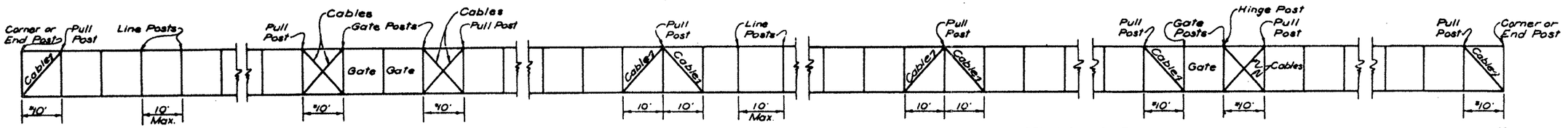

TYPICAL CABLE AND POST ARRANGEMENT DIAGRAM

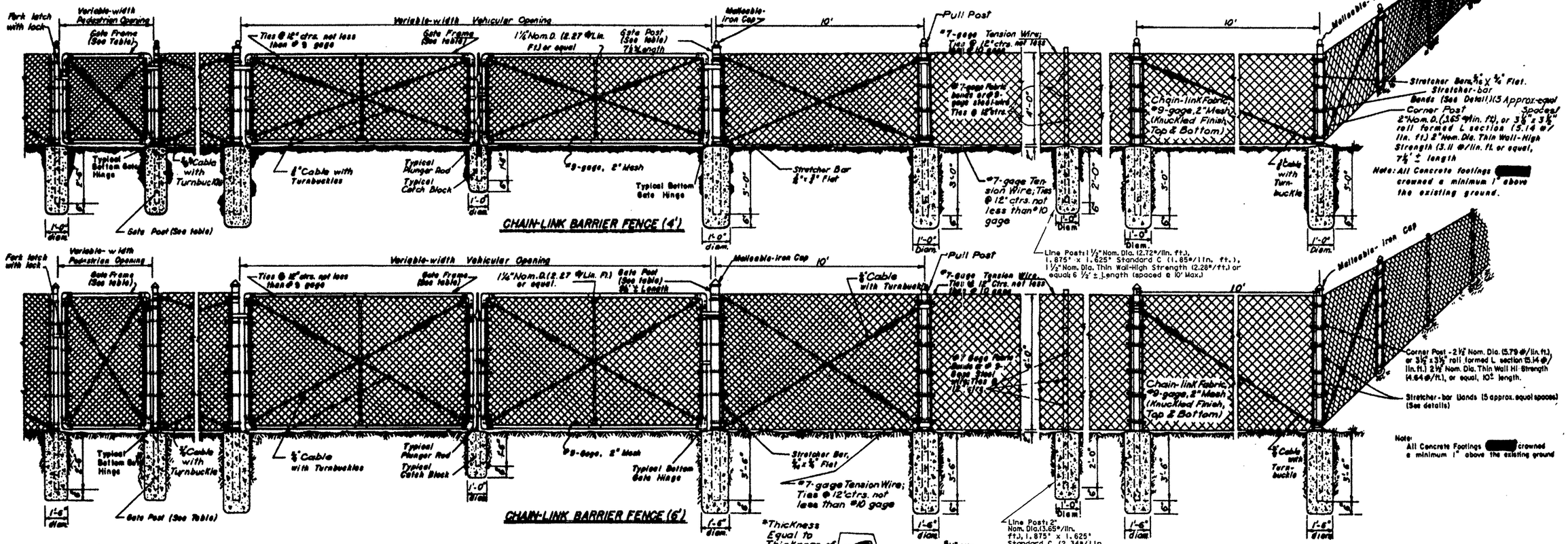

TABLE OF MINIMUM SIZES & WEIGHTS

GATE OPENING TYPE		GATE FRAME		GATE POSTS	
SINGLE, INCLUSIVE	DOUBLE, INCLUSIVE	SIZE	WT. / LIN. FT.	SIZE	WT. / LIN. FT.
Up to 6'	Up to 12'	1¼" Nom. O. or Equal	2.72 Lbs.	2½" Nom. O. or equal	5.79 Lbs.
Over 6' to 12'	Over 12' to 24'		2.72 Lbs.	3½" Nom. O. or equal	9.11 Lbs.
Over 12' to 18'	Over 24' to 36'		2.72 Lbs.	5" Nom. O.	19.97 Lbs.
Over 18'	Over 36'		2.72 Lbs.	8" Nom. O.	24.70 Lbs.

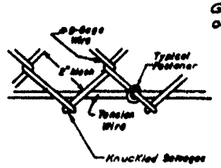

Fabric & Tension Wire Detail Top & Bottom

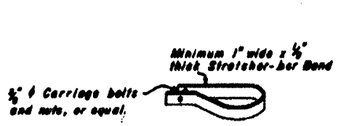

Typical Stretcher-bar Band

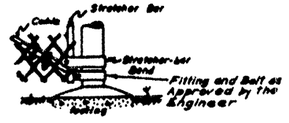

Terminal Post Detail

GENERAL NOTES

1. TYPICAL INSTALLATION PLAN MAY VARY AS SHOWN ELSEWHERE ON THE PLANS OR AS DIRECTED BY THE ENGINEER. LOCATION OF GATES SHOWN ELSEWHERE ON PLANS.
2. GATE-FRAME MEMBERS [redacted] BOLTED, AT FRAME CORNERS, TO JOINT FITTINGS WITH FOUR 1/2" BOLTS PER JOINT.
3. ALL CABLE CONNECTIONS [redacted] MADE WITH TWO 3/8" CABLE CLAMPS.
4. ALL PULL POSTS AND END POSTS AND THEIR FOUNDATIONS [redacted] HAVE THE SAME RESPECTIVE DIMENSIONS AS THOSE SHOWN FOR CORNER POSTS.
5. ALL PULL POSTS [redacted] FURNISHED WITH TWO STRETCHER BARS.
6. ONE END OF EACH TURNBUCKLE [redacted] ATTACHED DIRECTLY TO FITTINGS WITH A CLEVIS.

STATE DEPARTMENT OF HIGHWAYS AND PUBLIC TRANSPORTATION

CHAIN-LINK BARRIER FENCE

4 AND 6 FOOT HEIGHT

CLF-90

REVISIONS	FED. RD. DIV. NO.	STATE	FEDERAL AID PROJECT NO.			SHEET NO.
	6	TEXAS	NH 92(58)M			566
	STATE DIST. NO.	COUNTY	CONT.	SECT.	JOB	HIGHWAY NO.
	21	Hidalgo	39	17	97	4583

* POST SPACING OF 6'- 3" [redacted] USED ON THE DOWNSTREAM (FROM A TRAFFIC FLOW STANDPOINT) END OF MBGF PLACED ON ROADWAYS WITH ONE-WAY TRAFFIC OPERATIONS.

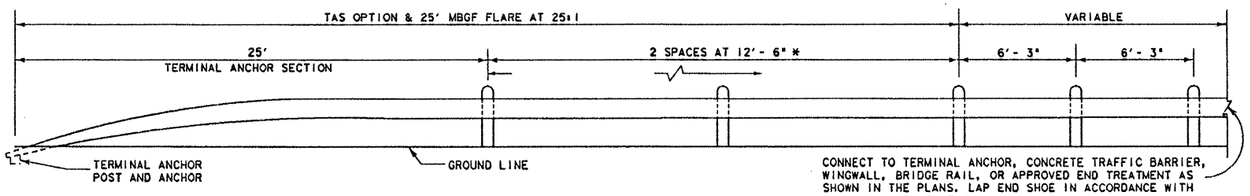

ELEVATION

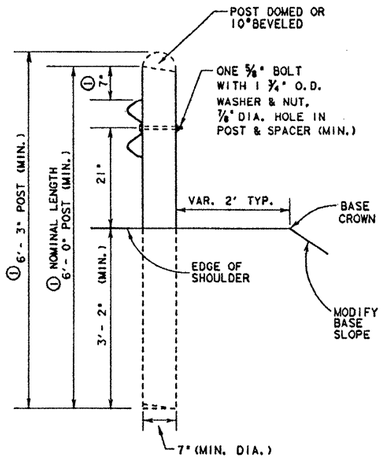

WOOD LINE POST

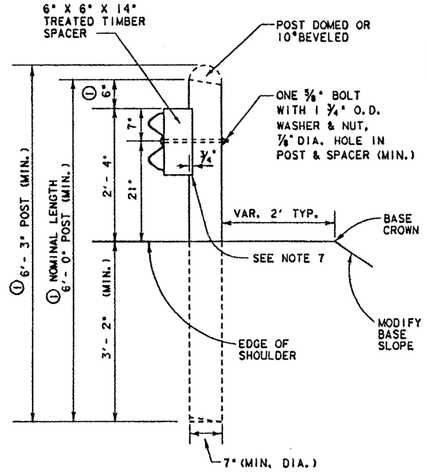

WOOD LINE POST
(BLOCKOUT)

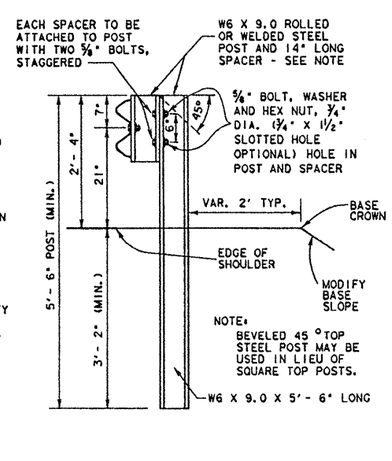

STEEL LINE POST
(BLOCKOUT)

NOTE ① : WHERE A NOMINAL LENGTH OF 5'- 6" IS SPECIFIED AS ACCEPTABLE ELSEWHERE IN THE PLANS, THESE DIMENSIONS SHALL BE REDUCED BY 0'- 6".

THE DESIGNER [redacted] SPECIFY THE REDUCED LENGTH ONLY ON HIGHWAYS WHERE FUTURE ACP OVERLAYS ARE UNLIKELY.

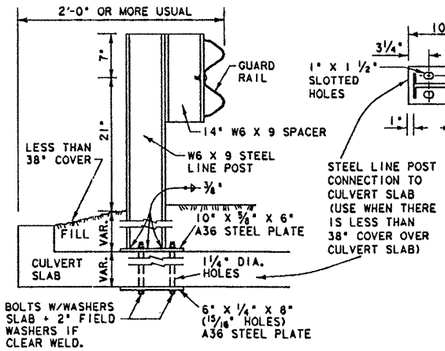

LOW FILL CULVERT POST MOUNTING OPTION

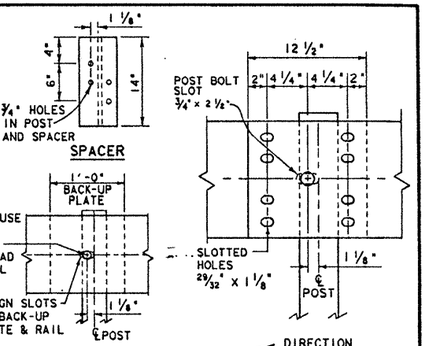

POST CONNECTION
STEEL POST
NON-SPLICE STEEL POST ONLY

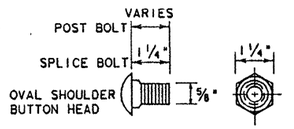

CONNECTOR DETAIL
(7/8" HEX BOLTS REQUIRED FOR TERMINAL CONNECTOR)

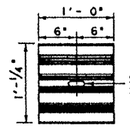

BACK-UP PLATE

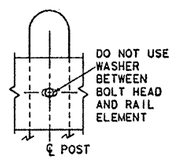

POST CONNECTION
WOOD POST

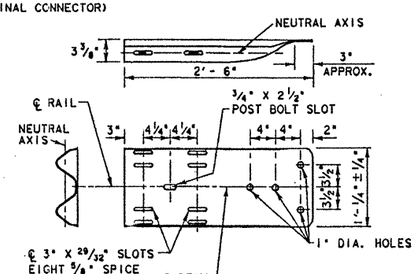

TERMINAL CONNECTOR
(10 GAGE MINIMUM)

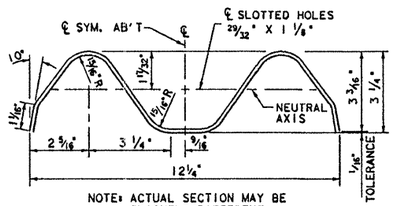

NOTE: ACTUAL SECTION MAY BE SLIGHTLY DIFFERENT DEPENDING UPON THE MANUFACTURER.

SECTION THRU GUARD RAIL AND BACK-UP PLATE

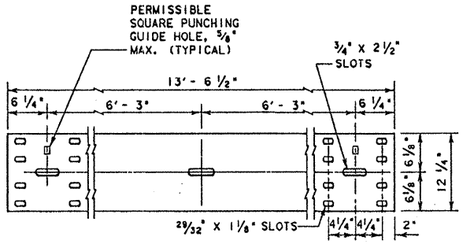

ELEVATION OF NOMINAL
12 1/2 FOOT GUARD RAIL
(25 FOOT SECTIONS MAY ALSO BE SUPPLIED)

GENERAL NOTES

1. THE EXACT POSITION OF GUARD FENCE [redacted] AS SHOWN ELSEWHERE ON THE PLANS OR AS DIRECTED BY THE ENGINEER. GUARD FENCE SHALL BE TRANSITIONED TO A SMOOTH CONNECTION WITH OTHER GUARD FENCE OR STRUCTURE RAILING AS SHOWN ELSEWHERE ON PLANS.
2. AT THE OPTION OF THE CONTRACTOR THE RAIL ELEMENTS FOR THE GUARD FENCE [redacted] BE FURNISHED IN EITHER 12 1/2 OR 25 FOOT NOMINAL LENGTHS WITH POST BOLT SLOTS FOR CONNECTION TO POSTS.
3. BOLTS [redacted] OF SUFFICIENT LENGTH TO EXTEND THROUGH THE FULL THICKNESS OF THE NUT AND NO MORE THAN 3/4" BEYOND IT.
4. THE TOP OF THE TERMINAL ANCHOR POST AND ALL STEEL FITTINGS THEREON [redacted] GALVANIZED A MINIMUM OF 10" AS SHOWN.
5. WHERE SOLID ROCK IS ENCOUNTERED OR WHERE SHOWN ON THE PLANS, THE DIAMETER OF THE HOLES [redacted] APPROXIMATELY 12 INCHES. THE BACKFILLING [redacted] WITH A COHESIONLESS MATERIAL, AND EMBEDMENT DEPTH [redacted] 1'-6" OR MORE AS DIRECTED BY THE ENGINEER. TIMBER POSTS SHALL NOT BE SET IN CONCRETE.
6. THE TERMINAL ANCHOR POST [redacted] SET IN CLASS "A", "B" OR "C" CONCRETE IN ACCORDANCE WITH ITEM, "CONCRETE FOR STRUCTURES", OR SET IN CONCRETE IN ACCORDANCE WITH ITEM, "CONCRETE PAVEMENT". CONCRETE [redacted] SUBSIDIARY TO THE BID ITEM REQUIRING CONSTRUCTION OF THE TERMINAL RAIL SECTION AND ANCHORAGE SYSTEM.
7. TIMBER POSTS [redacted] BEVELED AT APPROXIMATELY 10 DEGREES ON THE TOP OF BOTH ENDS WITH HIGH SIDE OF TOP OF POST PLACED TOWARD THE ROADWAY OR THEY MAY BE DOMED, WHEN "BLOCKED OUT". THE UPPER PORTION OF THE POST [redacted] NOTCHED 3/4" TO PROVIDE FLAT SURFACE FOR TIMBER SPACER. A TOLERANCE OF 1/4 WILL BE PERMITTED ON THE NOTCHED PORTION OF THE POST. ROUTING THE TIMBER SPACER [redacted] USED IN LIEU OF NOTCHING THE POST.
8. AN ANCHOR OTHER THAN TO A TERMINAL ANCHOR POST [redacted] CONSIST OF A CONNECTION SIMILAR TO THE RAIL SPLICE OR SIMILAR TO THE TERMINAL CONNECTOR.
9. SPECIAL FABRICATION [redacted] REQUIRED IN INSTALLATIONS HAVING A CURVATURE OF LESS THAN 150' RADIUS.
10. POST SPACING [redacted] 6'-3" EXCEPT THAT THE FIRST POST [redacted] 25' FROM THE TERMINAL ANCHOR POST AND THE NEXT TWO POSTS SPACED AT 12'-6" WITH A MINIMUM OF 8 POSTS ADJACENT TO STRUCTURES SPACED AT 3'-1 1/2".
11. THE 10 GAGE TERMINAL CONNECTORS [redacted] USED WITH THE OPTIONAL TERMINAL ANCHOR POST. EITHER ANCHOR POST [redacted] USED WITH EITHER CONCRETE ANCHOR.
12. CROWN [redacted] WIDENED TO ACCOMMODATE GUARD FENCE.
13. STEEL POSTS [redacted] BLOCKED OUT. A W6 x 8.5 OR W6 x 9.0 STEEL SPACER [redacted] USED WITH STEEL POSTS. BACK-UP PLATES SHALL BE PROVIDED AT INTERMEDIATE (NON-SPLICE) STEEL POSTS.
14. WHEN BLOCKOUT GUARD FENCE IS SPECIFIED ELSEWHERE IN THE PLANS, A 6" x 6" x 14" TREATED TIMBER SPACER OF YELLOW PINE [redacted] USED WITH WOOD POSTS.
15. UNLESS OTHERWISE SHOWN IN THE PLANS, GUARD FENCE PLACED IN THE VICINITY OF CURBS [redacted] BLOCKED OUT SO THAT THE FACE OF CURB IS LOCATED DIRECTLY BELOW OR BEHIND THE FACE OF RAIL. RAIL PLACED OVER CURBS [redacted] INSTALLED SO THAT THE POST BOLT IS LOCATED APPROXIMATELY 21 INCHES ABOVE THE GUTTER PAN OR ROADWAY SURFACE.
16. WELDED STEEL POSTS AND SPACERS [redacted] MEET THE REQUIREMENTS OF ASTM A-769. THE FLANGE WIDTH AND THICKNESS, WEB THICKNESS, AND DEPTH OF WELDED POSTS AND SPACERS [redacted] EQUAL OR EXCEED THE DIMENSIONS OF A STANDARD ROLLED W6 x 8.5.
17. STEEL POSTS AND SPACERS [redacted] MEET THE REQUIREMENTS OF ASTM A-36. BOLT HOLES [redacted] APPROXIMATELY CENTERED BETWEEN WEB AND EDGE OF FLANGE OF SPACERS AND POSTS.
18. UNLESS OTHERWISE SHOWN IN THE PLANS, MBGF [redacted] PLACED WITH THE FACE OF RAIL DIRECTLY ABOVE THE SHOULDER EDGE (OR CURBFACE) EXCEPT THE 25' TERMINAL ANCHOR SECTION AND ADJACENT 25' OR MBGF [redacted] FLARED AT 25:1 (LONGITUDINAL:LATERAL) TO PROVIDE A 2' OFFSET BETWEEN BURIED ANCHOR AND SHOULDER EDGE (OR CURBFACE). FLARING THE 25' TERMINAL ANCHOR AND ADJACENT 25' MBGF IS OPTIONAL FOR ONE-WAY TRAFFIC CONDITIONS ON THE DOWNSTREAM END OF GUARD FENCE.
19. WASHERS USED WITH THE EIGHT 5/8" SPLICE BOLTS AND NUTS THAT ARE PROVIDED FOR TERMINAL CONNECTORS AND/OR TERMINAL ANCHOR POSTS [redacted] 1 3/4" x 3" x 5/16", OR 1" I.D. AND 2" O.D. x 0.134" (ANSI B27.2) NARROW TYPE A PLAIN WASHERS.
20. BACK-UP PLATES [redacted] CONFORM TO THE MATERIALS AND GALVANIZING REQUIREMENTS SPECIFIED FOR THE RAIL ELEMENT, AND [redacted] OF THE SAME NOMINAL THICKNESS AS THE RAIL ELEMENT USED.

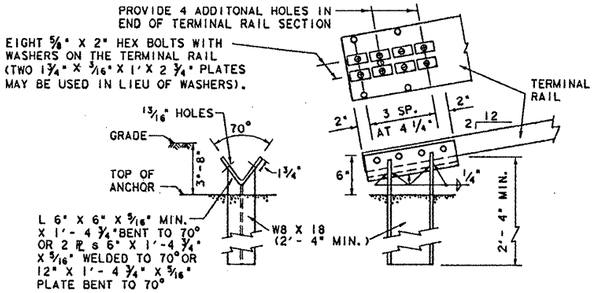

NOTE: THIS POST REQUIRES 4 ADDITIONAL HOLES (SHOP OR FIELD) IN THE TERMINAL RAIL MEMBER WITH EIGHT 5/8" BOLTS AND WASHER PLATES AS SHOWN FOR ATTACHMENT.

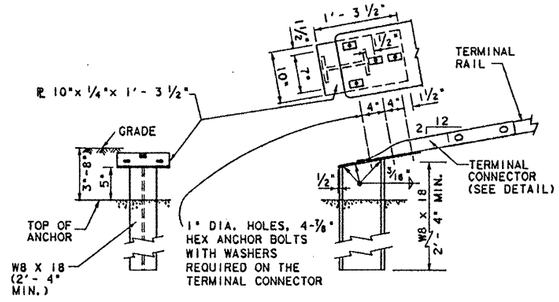

NOTE: THIS OPTIONAL POST REQUIRES THE USE OF THE 10 GA. TERMINAL CONNECTOR WITH FOUR 7/8" HEX BOLTS FOR ATTACHMENT TO THE ANCHOR POST.

TERMINAL ANCHOR POST OPTIONS

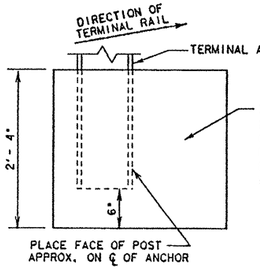

NOTES: EITHER POST [redacted] USED WITH EITHER ANCHOR.

NO CONSTRUCTION JOINT IS ALLOWED IN THE CONCRETE ANCHOR.

TERMINAL RAIL [redacted] BOLTED TO POST AND IN TWIST POSITION PRIOR TO PLACING CONCRETE ANCHOR.

UPPER 10" (MIN.) OF ANCHOR POST MUST BE GALVANIZED.

IF CONCRETE ANCHOR IS PRECAST, THE AREA [redacted] COMPACTED AS DIRECTED BY THE ENGINEER, WHEN PLACED IN THE FIELD.

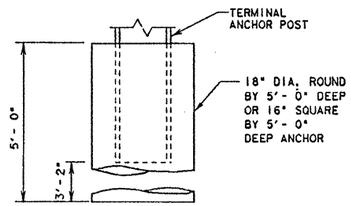

TERMINAL CONCRETE ANCHOR OPTIONS

TEXAS DEPARTMENT OF TRANSPORTATION

METAL BEAM GUARD FENCE

MBGF-91

MODIFICATIONS	FED. RD. DIV. NO.	STATE	FEDERAL AID PROJECT NO.				SHEET NO.
	6	TEXAS	NH 92 (50) M				567
	STATE DIST. NO.	COUNTY		CONT.	SECT.	JOB	HIGHWAY NO.
	21	Hidalgo		39	17	97	US 83

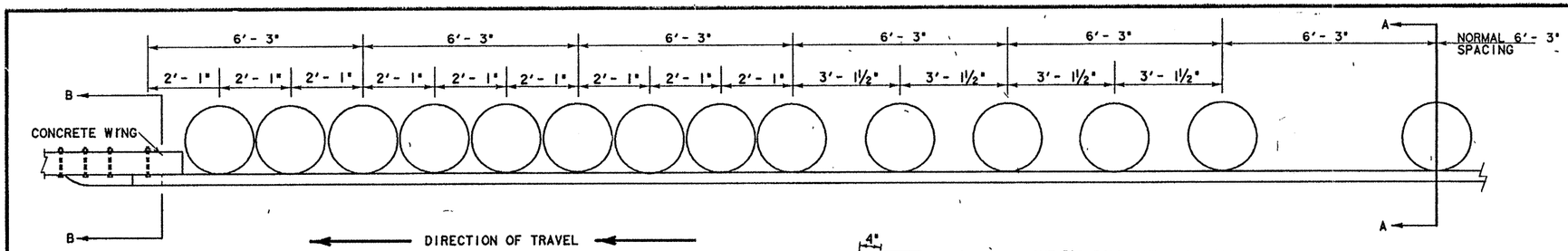

PLAN VIEW

ATTACHMENT TO BRIDGE RAIL OR CONCRETE TRAFFIC BARRIER

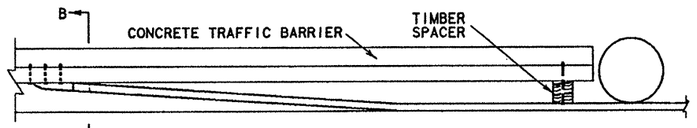

WHEN ATTACHING RAIL ELEMENTS TO TRAFFIC BARRIER, A 4" X 6" X 14" TREATED TIMBER SPACER [redacted] REQUIRED AND THE RAIL ELEMENT [redacted] EXTENDED AN ADDITIONAL 12'- 6" BEYOND THE BLOCKOUT.

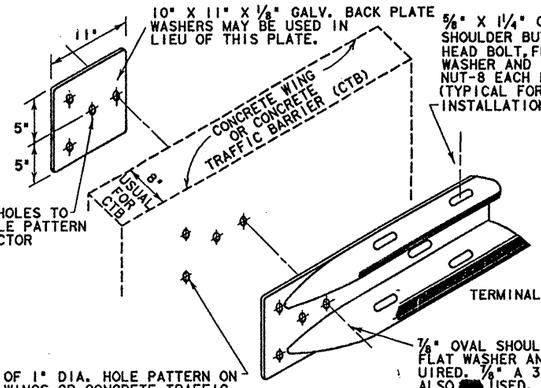

ATTACHMENT TO BRIDGE RAIL OR CONCRETE TRAFFIC BARRIER

SECTION B-B

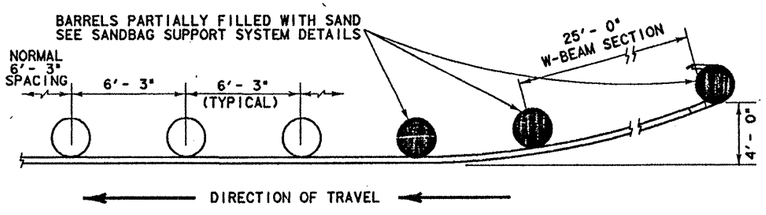

PLAN

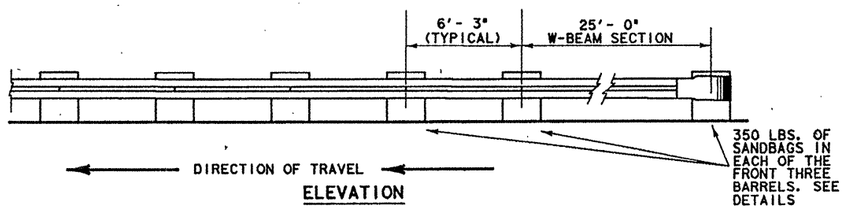

ELEVATION

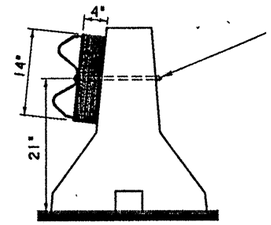

ONE ⅝" BOLT AND NUT WITH 1-¾" O.D. WASHER, ⅛" Ø HOLE IN SPACER AND CONCRETE TRAFFIC BARRIER. BOLT LENGTH SHALL BE SUFFICIENT TO EXTEND THROUGH THE FULL THICKNESS OF THE NUT AND NO MORE THAN ¾" BEYOND IT.

CONCRETE TRAFFIC BARRIER

SHOWING BLOCKOUT

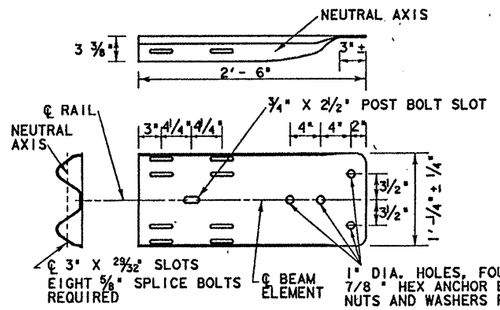

TERMINAL CONNECTOR

(10 GAUGE MINIMUM)

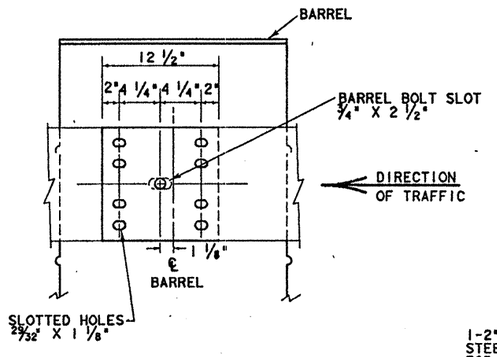

RAIL SPLICE

GENERAL NOTES

1. RAIL ELEMENT [redacted] EITHER 12.5 OR 25 FOOT LENGTHS, EXCEPT A 25 FOOT LENGTH IS REQUIRED ON THE APPROACH TERMINAL, AND EITHER 10 OR 12 GAUGE.
2. MINIMUM LENGTH OF PLACEMENT EQUALS 100 FEET EXCEPT WHERE BOTH ENDS ARE CONNECTED TO A POSITIVE BARRIER (BRIDGE RAIL, CTB, ETC.) MINIMUM LENGTH OF PLACEMENT EQUALS 75 FEET WHERE ONE END IS CONNECTED TO A POSITIVE BARRIER.
3. WHEN THE ROADWAY SURFACE IS ASPHALT, PLYWOOD [redacted] PLACED UNDER THE BARRELS TO PREVENT DAMAGE TO THE PERMANENT ASPHALTIC PAVEMENT.
4. LOCATION OF BARREL MOUNTED GUARD FENCE IS SHOWN ELSEWHERE IN THE PLANS.
5. RAIL ELEMENT SPLICES SHALL BE LAPPED IN THE DIRECTION OF TRAFFIC.
6. RAIL SPLICES [redacted] CONNECTED WITH THE NORMAL EIGHT 1 ¼" LONG OVAL SHOULDER BUTTON HEAD BOLTS WHICH ARE ⅝" IN DIAMETER.
7. BARREL SPACING [redacted] 6'-3", EXCEPT CLOSER SPACING [redacted] USED AS SHOWN TO TRANSITION INTO A CONNECTION WITH A BRIDGE RAIL, CONCRETE TRAFFIC BARRIER, OR SIMILAR FIXED OBJECT. WHEN USED AS A TRANSITION SPACING OF BARRELS [redacted] (FROM FRONT BARREL) ONE SPACE AT 25', 3 SPACES AT 6'-3", 4 SPACES AT 3'-1½" AND 8 SPACES AT 2'-1".
8. DRAINAGE HOLES [redacted] DRILLED IN THE BOTTOM OF THE BARRELS TO ALLOW FOR DRAINAGE OF WATER.
9. APPROACH END OF THE TEMPORARY BARRIER [redacted] FLARED AWAY FROM THE ROADWAY AND [redacted] TREATED AS SHOWN.
10. IF THE BARRIER IS USED AS A CHANNELIZING DEVICE IN NIGHTTIME SITUATIONS, IT [redacted] SUPPLEMENTED BY DELINEATION OR CHANNELIZATION MARKINGS OR DEVICES. REFLECTORIZED MARKINGS ON DRUMS AS DETAILED ON THE BC STANDARD SHEETS, OR VERTICAL PANELS, OR DELINEATORS [redacted] USED TO PROVIDE SUPPLEMENTAL DELINEATION.

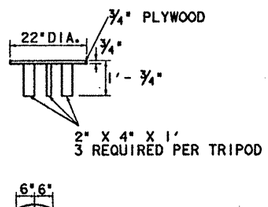

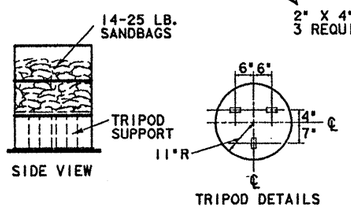

SANDBAG SUPPORT SYSTEM

(THREE BARRELS ON APPROACH END)

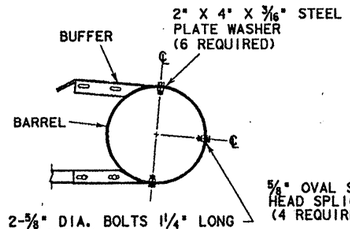

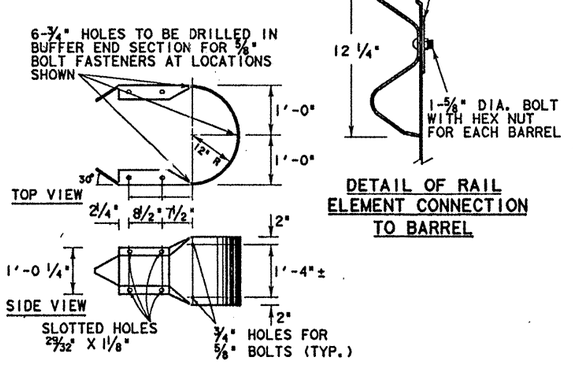

BUFFER DETAIL

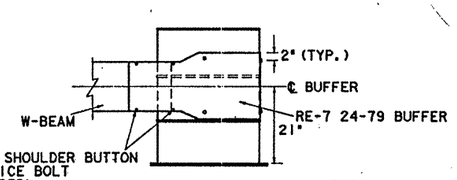

NOTE: 6- ¾" DIAMETER HOLES [redacted] DRILLED IN BARRELS. LOCATE HOLES BY FITTING BUFFER AROUND BARREL AND MARKING BARREL TO ENSURE PROPER FIT.

BARREL CONNECTION DETAILS

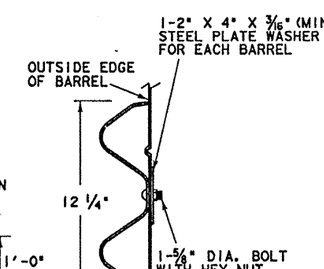

DETAIL OF RAIL ELEMENT CONNECTION TO BARREL

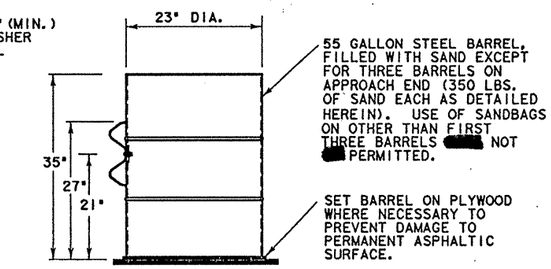

SECTION A-A

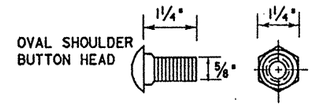

BARREL CONNECTOR OR SPLICE BOLT ⅝" NUT

POST BOLT: SIMILAR EXCEPT LENGTH

(⅞" HEX BOLTS REQUIRED FOR TERMINAL CONNECTOR)

STATE DEPARTMENT OF HIGHWAYS AND PUBLIC TRANSPORTATION

TEMPORARY BARRIER BARREL-MOUNTED GUARD FENCE

TB (BMGF)-88

REVISIONS	FED. RD. DIV. NO.	STATE	FEDERAL AID PROJECT NO.				SHEET NO.
	6	TEXAS	NH 92(50)M				568
	STATE DIST. NO.	COUNTY	CONT.	SECT.	JOB		HIGHWAY NO.
	21	Hidalgo	39	17	97	4583	

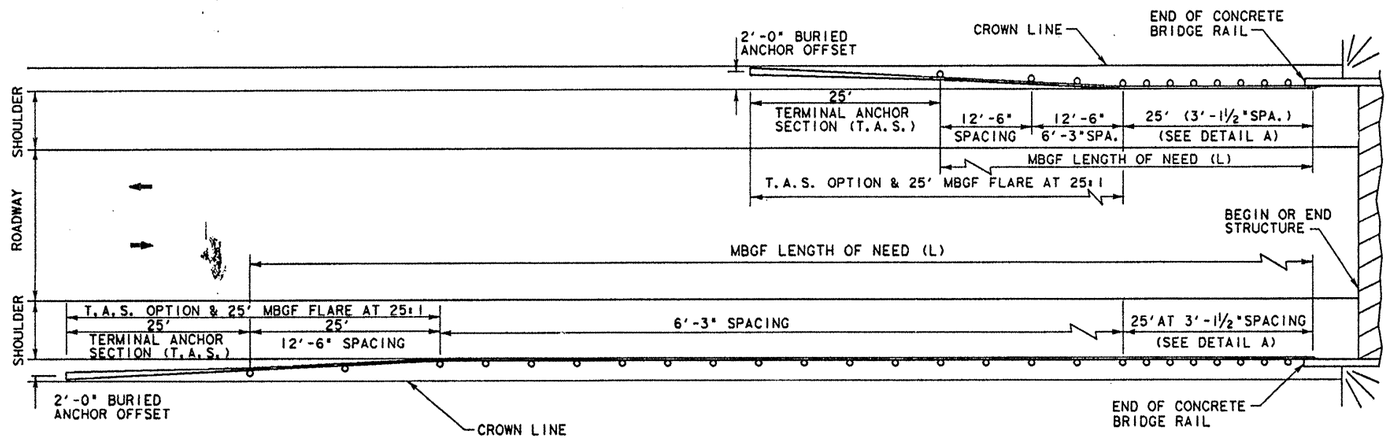

TWO LANE (RURAL) HIGHWAYS

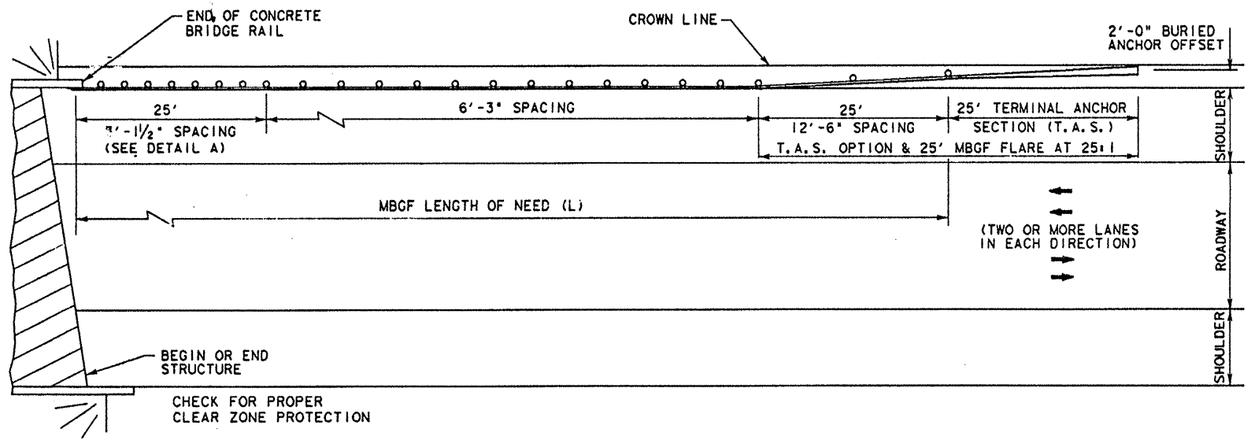

MULTILANE UNDIVIDED (RURAL) HIGHWAYS

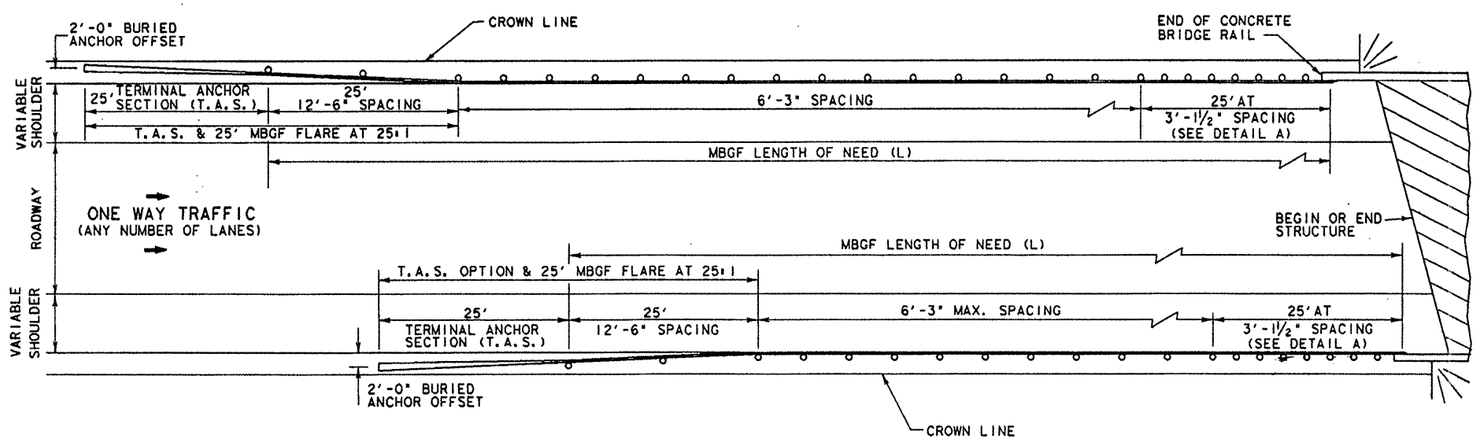

ONE WAY TRAFFIC

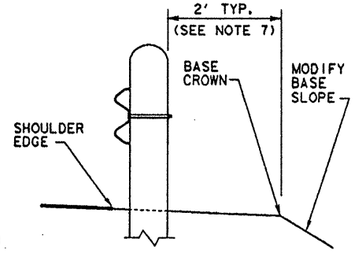

TYPICAL CROSS SECTION

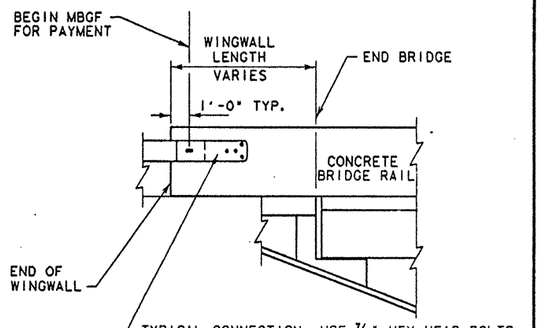

DETAIL A

GENERAL NOTES

1. FOR METAL BEAM GUARD FENCE DETAILS, SEE MBGF PLAN SHEET.
2. QUANTITIES OF METAL BEAM GUARD FENCE (MBGF) AT INDIVIDUAL BRIDGE ENDS ARE SHOWN ELSEWHERE IN PLANS.
3. USE AVERAGE DAILY TRAFFIC (ADT) FOR THE CURRENT YEAR TO DETERMINE MBGF LENGTH OF NEED IN ACCORDANCE WITH THE DESIGN MANUAL UNLESS OTHERWISE SPECIFED. WHERE SIGNIFICANT TRAFFIC VOLUME GROWTH IS ANTICIPATED ON LOW VOLUME (0-750 ADT) HIGHWAYS USE LENGTH DETERMINATIONS FOR THE HIGHER VOLUME CATEGORY.
4. WHERE LENGTH (L) OF MBGF USED IS 50 FEET, POST SPACING [redacted] AS DETAILED HEREON (SEE PLAN LAYOUT FOR TWO LANE (RURAL) HIGHWAYS, LEFT SIDE OF TRAFFIC APPROACHING BRIDGE). WHERE LENGTH (L) OF MBGF IS 75' OR MORE, POST SPACING [redacted] 3'-1 ½" FOR THE 25' SECTION ADJACENT TO THE BRIDGE, 12'-6" FOR THE 25' SECTION AJACENT TO THE T.A.S., AND 6'-3" FOR REMAINING INTERVENING LENGTH. WHEN T6 BRIDGE RAIL IS USED, THE MIN. MBGF POST SPACING [redacted] 6'- 3".
5. MBGF [redacted] NOT [redacted] REQUIRED TO SHIELD DEPARTURE END OF BRIDGE UNLESS OTHER HAZARDS WITHIN THE CLEAR ZONE WARRANT MBGF. WHERE INSTALLED ON THE DEPARTURE END, 6'- 3" POST SPACING IS ACCEPTABLE THOUGHOUT THE PLACEMENT LENGTH INCLUDING ADJACENT TO BRIDGE END.
6. WHEN SPECIFIED, THE T.A.S. AND TYPICALLY ADJACENT 25' MBGF [redacted] FLARED FROM THE SHOULDER EDGE AT 25:1 TO PROVIDE A 2' USUAL OFFSET TO BURIED ANCHOR. THE 6'-3" POST SPACING [redacted] MAINTAINED TO THE LENGTH OF NEED WHEN END TREATMENTS OTHER THAN T.A.S. ARE USED.
7. THE CROWN [redacted] WIDENED TO ACCOMMODATE MBGF. TYPICALLY THE CROWN LINE [redacted] 2 FEET FROM THE BACK OF THE MBGF POST. THIS APPLIES TO NEW CONSTRUCTION ON NEW ALIGNMENT OR WHERE EXISTING ROADWAY CROSS SECTION IS [redacted] WIDENED TO INCREASE ROADWAY WIDTH. THIS DOES NOT APPLY TO REHABILITATION WORK WHERE EXISTING ROADWAY CROWN WIDTH IS [redacted] RETAINED (SEE TYPICAL CROSS SECTION).
8. FOR RESTRICTIVE WIDTH BRIDGES, A 25-FOOT TANGENT SECTION OF MBGF SHOULD CONNECT TO THE WINGWALL. THE ADJOINING MBGF THAT LIES WITHIN THE ROADWAY (LANES & SHOULDER AREA) CROWN SHOULD BE FLARED AT THE RATE OF 25:1 (LONGITUDINAL: LATERAL). LENGTH ON THESE BRIDGES SHOULD BE DETERMINED AS STATED ABOVE OR THE LENGTH NECESSARY TO LOCATE THE BURIED ANCHOR AT A 2-FOOT OFFSET FROM SHOULDER EDGE, WHICHEVER IS GREATER.
9. VARIATIONS IN POST SPACINGS AND/OR THE USE OF SPACER BLOCKS OR SHIMS [redacted] REQUIRED BY THE ENGINEER IN ORDER TO ACCOMMODATE THE REQUIRED RAIL CONNECTION TO EXISTING STRUCTURES.

TEXAS DEPARTMENT OF TRANSPORTATION

BRIDGE END DETAILS

BED-91

REVISIONS	FED. RD. DIV. NO.	STATE	FEDERAL AID PROJECT NO.	SHEET NO.
	6	TEXAS	NH 92(50)M	569
	STATE DIST. NO.	COUNTY	CONT. SECT. JOB	HIGHWAY NO.
	21	Hidalgo	39 17 97	4583

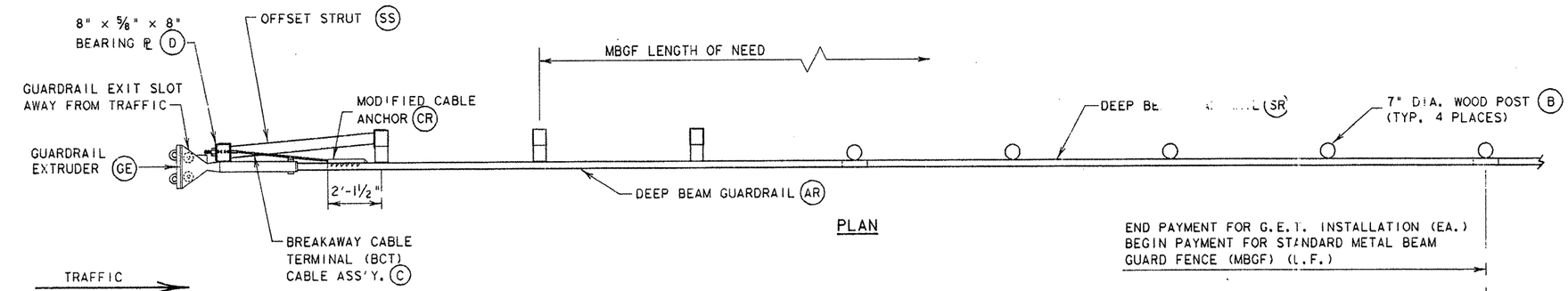

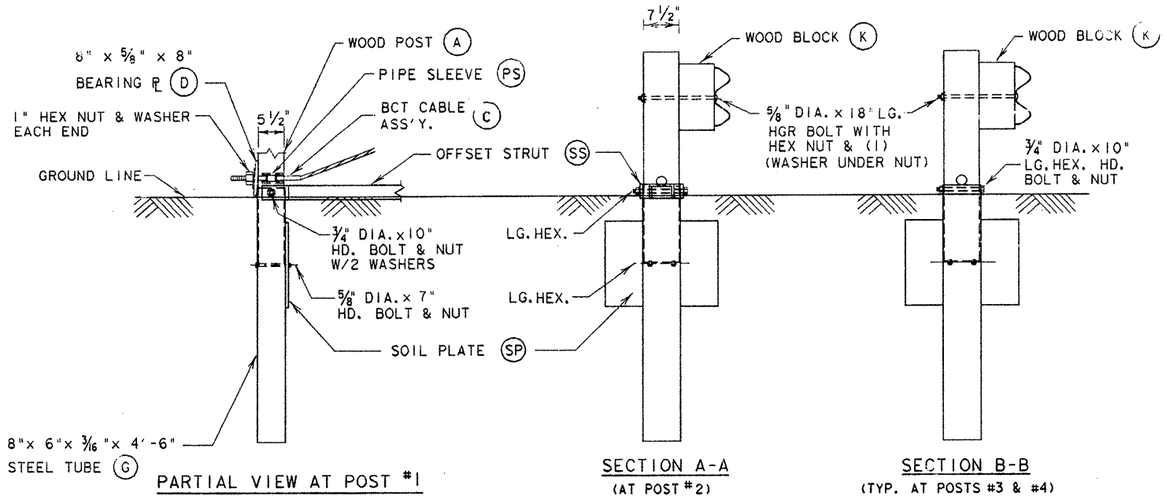

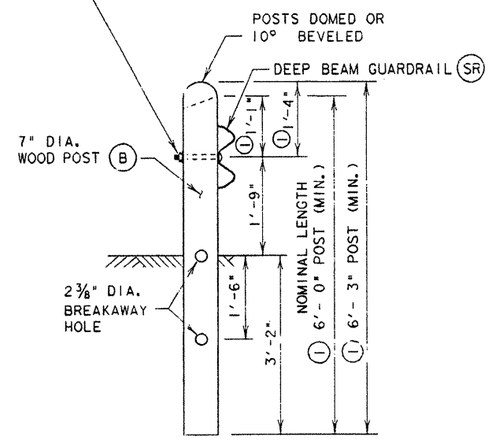

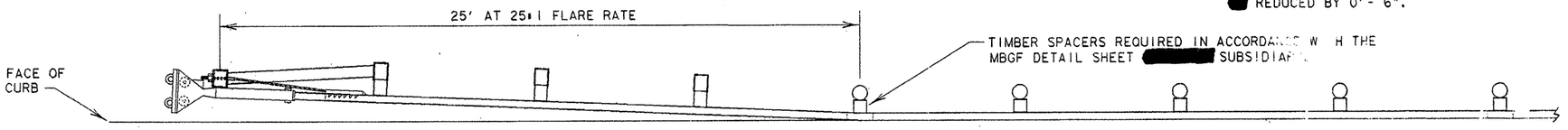

GENERAL NOTES

1. THE POSTS REQUIRED WITH THE GUARDRAIL EXTRUDER TERMINAL [redacted] TIMBER POSTS.
2. ALL BOLTS, NUTS, CABLE ASSEMBLIES, CABLE ANCHORS AND BEARING PLATES, [redacted] GALVANIZED.
3. WHEN THE GUARDRAIL EXTRUDER TERMINAL IS SPECIFIED AS THE END TREATMENT FOR A MBGF INSTALLATION, THE MBGF WILL NOT BE FLARED, UNLESS IT IS PLACED OVER A CURB. IN SUCH CASE, A 25:1 FLARE RATE BEGINNING AT POST (5) AND ENDING AT THE EXTRUDER [redacted] REQUIRED. THE 7" DIA. WOOD POSTS [redacted] ALSO REQUIRE TIMBER SPACERS IN ACCORDANCE WITH THE MBGF STANDARD DETAIL SHEET. THESE SPACERS [redacted] CONSIDERED SUBSIDIARY ITEMS (SEE DETAIL A).
4. A TYPE III OBJECT MARKER, IN CONFORMANCE WITH THE TEXAS MUTCD, [redacted] MOUNTED SEPARATELY WITHIN 6 FEET OF THE FRONT OF THE EXTRUDER SUBJECT TO THE APPROVAL OF THE ENGINEER. THE OBJECT MARKER [redacted] SUBSIDIARY TO THE INSTALLATION OF THE GUARDRAIL EXTRUDER TERMINAL.

BILL OF MATERIAL		
ITEM	QTY.	DESCRIPTION
(A)	4	5 1/2" × 7 1/2" WOOD POST
(AR)	1	DEEP BEAM GUARDRAIL 12 GA. × 25'-0" CONTINUOUS SECTION
(B)	4	7" DIA. WOOD POST
(C)	1	BCT CABLE ASSEMBLY
(CR)	1	MODIFIED CABLE ANCHOR
(D)	1	8" × 5/8" × 8" BEARING PL
(G)	4	S.T. 8" × 6" × 3/16" × 4'- 6" LG.
(GE)	1	GUARDRAIL EXTRUDER
(K)	3	WOOD BLOCK 5 1/2" × 7 1/2" × 14"
(LS)	2	LEG SUPPORT
(PS)	1	PIPE SLEEVE
(SP)	4	SOIL PLATE 18" × 24"
(SR)	1	DEEP BEAM GUARDRAIL 12 GA. × 25'-0" CONTINUOUS SECTION
(SS)	1	OFFSET STRUT

TEXAS DEPARTMENT OF TRANSPORTATION

GUARDRAIL EXTRUDER TERMINAL DETAILS

GET-91A

MODIFICATIONS	FED. RD. DIV. NO.	STATE	FEDERAL AID PROJECT NO.	SHEET NO.
	6	TEXAS	NH 92(50)M	570
	STATE DIST. NO.	COUNTY	CONT. / SECT. / JOB	HIGHWAY NO.
	21	Hidalgo	39 / 17 / 97	US 83

DIVISION OF HIGHWAYS STANDARD | A-5

Types 1 and 4 Object Marker

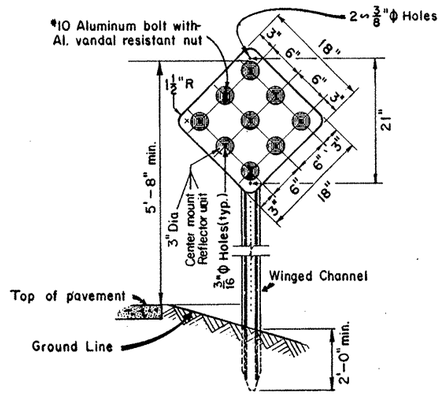

Types 1 and 4 Object Markers [redacted] consist of Center Mount Reflector Units mounted on 0.080" thick sheet aluminum conforming with ASTM B-209 Alloy 6061-T6, or 12 gage sheet steel conforming with ASTM A-415.

TYPE 1 OM-1R
REFLECTOR UNIT - YELLOW
BACKGROUND - (YELLOW - NON-REFLECTIVE)

TYPE 4 OM-4R
REFLECTOR UNIT - RED
BACKGROUND - (RED NON-REFLECTIVE)

Delineators

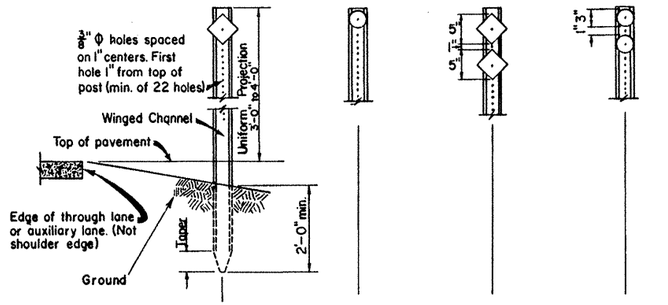

D-SY(a) D-SW(a) D-SR(a) | D-SY(b) D-SW(b) D-SR(b) | D-DY(a) D-DW(a) | D-DY(b) D-DW(b)

Single Reflectors — Double Reflectors

(Y-yellow, W-white, R-red)

Type 2 Object Markers

YELLOW [redacted] GUARDRAIL
(R- reflector unit, P-panel)

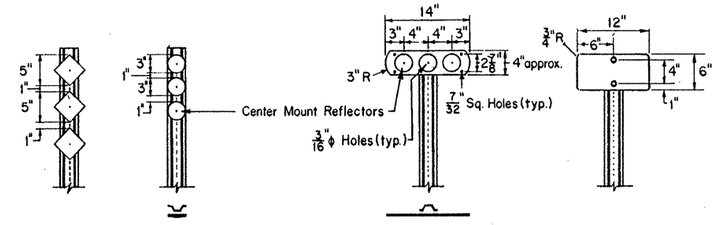

OM-2SR(a) OM-2SR(b) OM-2HR OM-2HP ✱

See Details Below

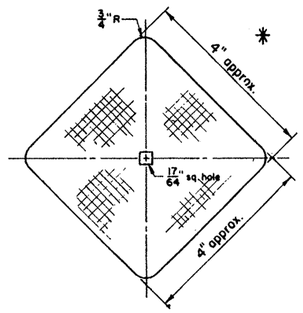

TYPICAL
HIGH SPECIFIC INTENSITY
REFLECTOR UNIT
TYPE (a)

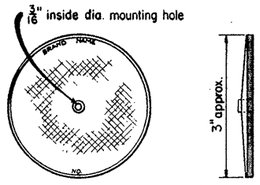

TYPICAL
CENTER MOUNT
REFLECTOR UNIT
TYPE (b)

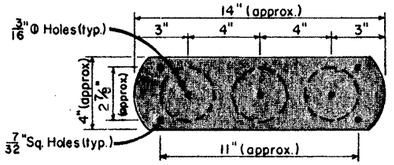

The mounting plate shall be 0.063" thick aluminum 3003-H-14 or similar aluminum.

OM-2HR HORIZONTAL MOUNTING PLATE
DETAIL

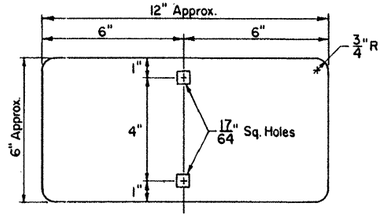

The plate shall be 0.063" thick Aluminum
3003 H-14 or similar Aluminum

OM-2HP HORIZONTAL PANEL
DETAIL

Type 3 Object Markers

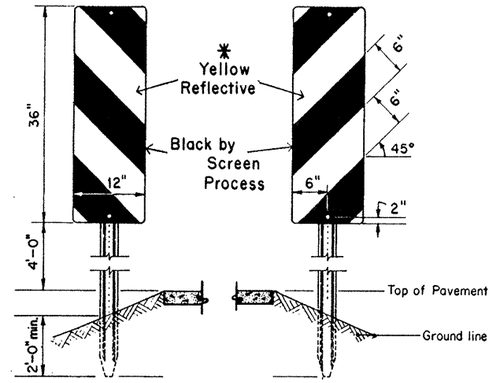

OM-3L OM-3R

SIGN BLANK TO BE .080" THICK SHEET ALUMINUM CONFORMING TO ASTM B209 ALLOY 6061-T6.

✱ REFLECTIVE SHEETING [redacted] THE HIGH SPECIFIC INTENSITY TYPE IN ACCORDANCE WITH THE PROJECT SPECIFICATION.

GENERAL NOTES:
CENTER MOUNT AND HIGH SPECIFIC INTENSITY REFLECTOR UNITS [redacted] CONSTRUCTED IN ACCORDANCE WITH THE PROJECT SPECIFICATIONS.

DELINEATORS [redacted] UNIFORMLY PLACED NOT LESS THAN 2 FEET NOR MORE THAN 6 FEET FROM THE EDGE OF SHOULDER OR THE FACE OF UNMOUNTABLE CURB, OR THEY [redacted] PLACED IN LINE WITH GUARDRAIL WHERE GUARDRAIL IS USED.

OBJECT MARKERS [redacted] LOCATED AT POINTS DESIGNATED ON PLAN SHEETS.

HARDWARE [redacted] GALVANIZED STEEL, STAINLESS STEEL, OR ALUMINUM, EXCEPT AS NOTED.

POSTS FOR SUPPORTING DELINEATORS AND OBJECT MARKERS [redacted] IN ACCORDANCE WITH THE PROJECT SPECIFICATIONS.

STATE DEPARTMENT OF HIGHWAYS AND PUBLIC TRANSPORTATION

DELINEATORS and OBJECT MARKERS

D & OM(1)

DRAWING DATE: 1-81	STATE DISTRICT	FEDERAL REGION	FEDERAL AID PROJECT			SHEET
REVISIONS	21	6	NH 92(50)M			571
2-82	COUNTY		CONTROL	SECTION	JOB	HIGHWAY
	HIDALGO		39	17	97	US83 281
						20A

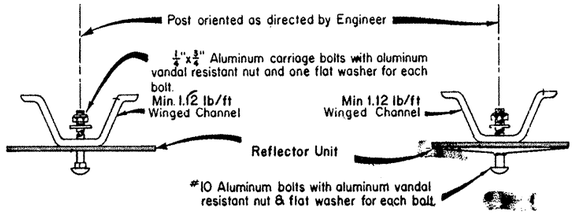

High Specific Intensity Reflector Units Center Mount Reflector Units

PLAN VIEW OF MONODIRECTIONAL MOUNTINGS

For Single and Double Delineators and
Object Marker types OM-2SR(a) & OM-2SR(b)

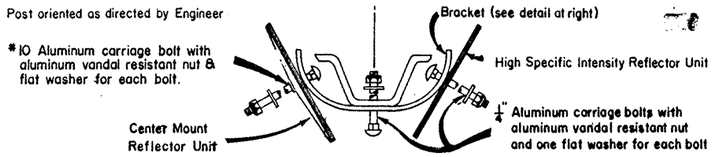

PLAN VIEW OF BIDIRECTIONAL MOUNTINGS

For Single Delineators Only

(DEPICTING HIGH SPECIFIC INTENSITY REFLECTOR UNIT OR CENTER MOUNT REFLECTOR UNIT)

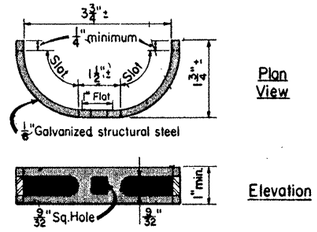

BIDIRECTIONAL BRACKET

The delineator spacing, S, on the curve is found from the formula $S = 3\sqrt{R-50}$, where R is the radius of the curve in feet. The first spaces immediatelly in advance of and beyond the curve are 2.0 x S; the second spaces are 3.0 x S, and the third spaces are 6.0 x S but not to exceed 300 feet. Distance for spaces rounded to nearest 5 feet.

Spacing for Highway Delineators on Horizontal Curve

Degree of Curve	Radius on Curve	Spacing on Curve	Spacing in Advance of and Beyond Curves		
			First Space	Second Space	Third Space
	Feet	Feet	Feet	Feet	Feet
1	5730	225	300	300	300
2	2865	160			
3	1910	130	260		
4	1433	110	225		
5	1146	100	200		
6	955	90	185	275	
7	819	85	165	250	
8	716	75	155	230	
9	637	75	145	220	
10	573	70	135	205	
11	521	65	130	195	
12	478	60	125	185	

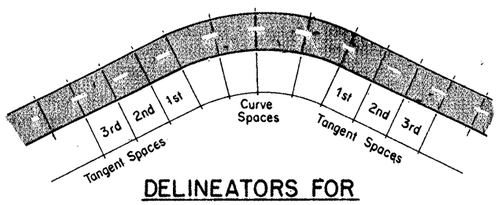

DELINEATORS FOR CURVES OR TANGENT SECTIONS

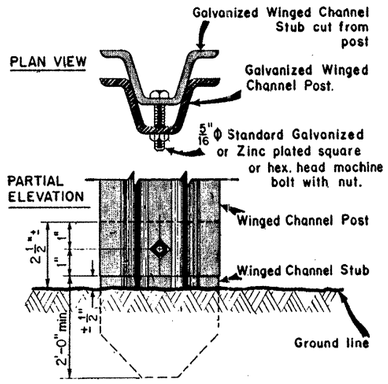

BREAK AWAY CHANNEL POST

(Where specified in the plans)

OM-2HR HORIZONTAL MOUNTING PLATE

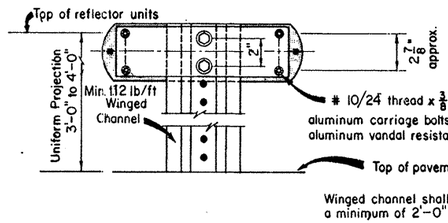

OM-2HP HORIZONTAL PANEL

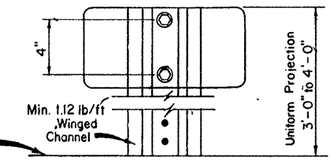

REAR ELEVATION

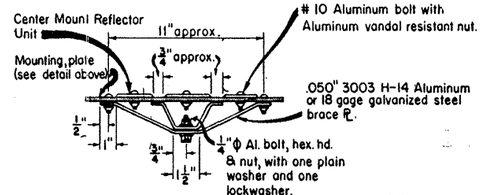

PLAN VIEW

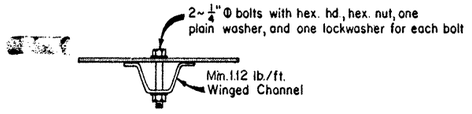

OBJECT MARKER TYPES 1, 3 and 4

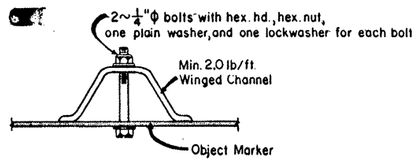

PLAN VIEW

STATE DEPARTMENT OF HIGHWAYS AND PUBLIC TRANSPORTATION

DELINEATORS and OBJECT MARKERS

D & OM(2)

DRAWING DATE: 1-81	STATE DISTRICT	FEDERAL REGION	FEDERAL AID PROJECT				SHEET
REVISIONS	21	6	NH92(50)M				572
DR.:- 2-82	COUNTY		CONTROL	SECTION	JOB	HIGHWAY	
CK.:-	HIDALGO		39	17	97	US83/281	
DR.:-							208
CK.:-							

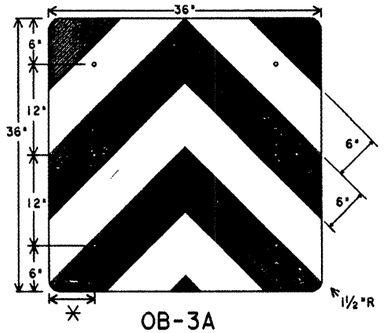

OB-3A

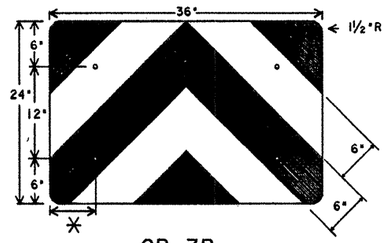

OB-3B

* adjust to fit center of drums, per attenuator manufacturers recommendation, or as directed by the Engineer.

Object Marker reflective sheeting [redacted] conform to Material Specification D-9-8300, type C.

Object Marker blank to be 5/8 " Plywood (Type A) in accordance with Standard Specification Item 634, or .08 Aluminum as per Specification D-9-7110.

Background - yellow reflective, chevron - black.
Mounting flush with top of VIA.
Minimum size 36" x 24".

Nuts and bolts [redacted] used to fasten Object Markers to attenuator.

Class A or B reflectors [redacted] used to delineate side of attenuator.

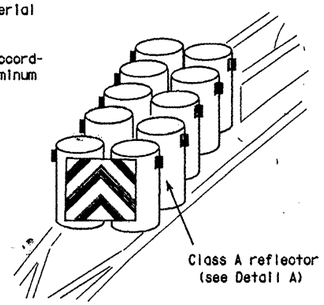

Class A reflector (see Detail A)

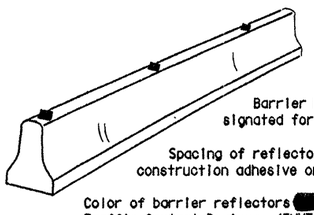

Barrier Reflectors [redacted] installed only on barriers designated for reflectorization as required elsewhere in the plans.

Spacing of reflectors is 40 feet. Mount reflectors to barrier by construction adhesive or butyl rubber adhesive.

Color of barrier reflectors [redacted] conform to the Texas Manual on Uniform Traffic Control Devices, (TMUTCD).

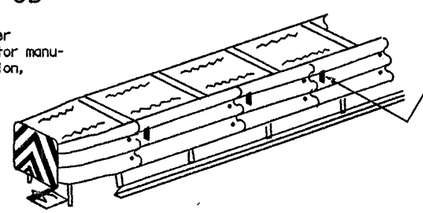

Class B reflector installed per manufacturer's recommendation (see Detail B)

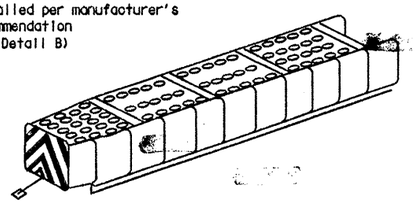

OB-3E

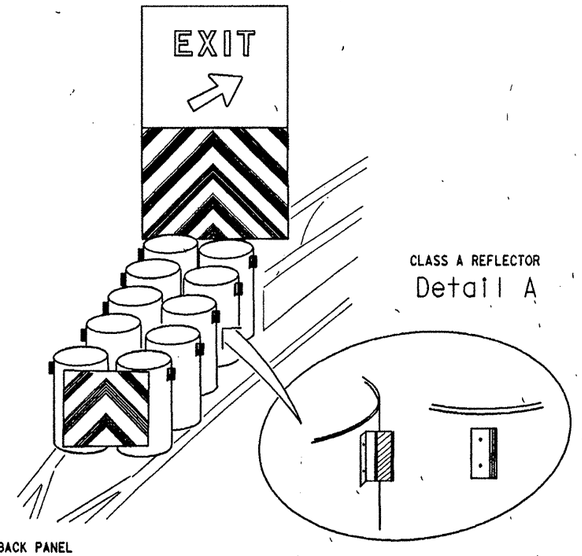

CLASS A REFLECTOR
Detail A

OPTIONAL BACK PANEL

Back Panel (OM-3E) [redacted] made of 5/8 " plywood (Type A) panels unless otherwise noted in the plans. Type C sheeting per Material Specification D-9-8300.

Background - yellow reflective, chevron - black.

Back Panel [redacted] mounted independently of the VIA, minimum height flush with top of VIA.

May have alternating flashing yellow lights added. Lights [redacted] mounted minimum 72" above pavement.

VIA [redacted] have additional striping, yellow reflective and black, and/or reflectors placed on sides. Also, [redacted] have Chevrons beyond attenuators to delineate roadway curvature. These additional devices [redacted] installed if required elsewhere in the plans.

Mount Back Panel per details on SMD(2), or as detailed elsewhere in the plans.

CLASS A REFLECTOR [redacted]

Reflectors for Contrete Median Barrier and Drum Type Attenuator may be:

1. Davidson Plastics Co. - PCBM-12
2. Cal. Tex. Ind., Inc. - Microprism Delineator
3. Cal. Tex. Ind., Inc. - Cube Corner Delineator
4. Stimsonite - Barrier and Guardrail Delineator, Model 965
5. Stemsonite - Barrier Delineator, Model 967
6. Astro Optics - JD-1 or No. 181
7. Reflexite Corp. - Model 661, Model 662
8. Duraflex Corp. - Flexx 2020

CLASS B REFLECTOR [redacted]

Reflectors for other type Attenuator and Metal Beam Guard Fence

1. Stemsonite - Barrier and Guardrail Delineator, Model 965
2. Astro Optics - Guardrail Delineator, Model 567

Class A or B reflectors [redacted] installed using pop rivets, nuts and bolts, construction adhesive or butyl rubber adhesive.

Class A or B reflectors [redacted] conform to the color and reflectivity requirements of Specification D-9-8600.

Color of Class [redacted] reflector [redacted] the same color as the nearest edge line, gore pavement markings or as directed by the Engineer.

GENERAL NOTES:

1. Holes, slots or other openings [redacted] cut or drilled throught OB-3 Object Markers to allow cable or other attachments.
2. Minimum size [redacted] reduced to fit smaller attenuators.
3. When traffic passes only on one side of attenuator, only the OM-3 marker [redacted] installed. OM-3 [redacted] installed per the requirement of Standard Sheet D & OM (1) with a mounting height of 18 inches.
4. OM-3 marker [redacted] meet the color and reflective requirements of the Material Specification D-9-8600.
5. All traffic control devices [redacted] conform [redacted] the TMUTCD.

TRAFFIC FLOW	BOTH SIDES						ONE SIDE
ATTENUATOR TYPE	OB-3A	OB-3B	OB-3C	OB-3D	L	OM-1	
GREAT	NR	✓	NR	✓	96"	✓	OM-3
Steel Drum	✓	✓	✓	✓	114"	✓	
Hydraulic	✓	✓	NR	NR	NR	✓	
Hex Foam	✓	✓	NR	NR	NR	✓	
Low Maintenance	NR	✓	NR	✓	96"	✓	
Sand Filled Plastic Modules	NR	NR	NR	NR	NR	✓	
Sand Tire	NR	NR	NR	NR	NR	✓	

NR - Not Recommended

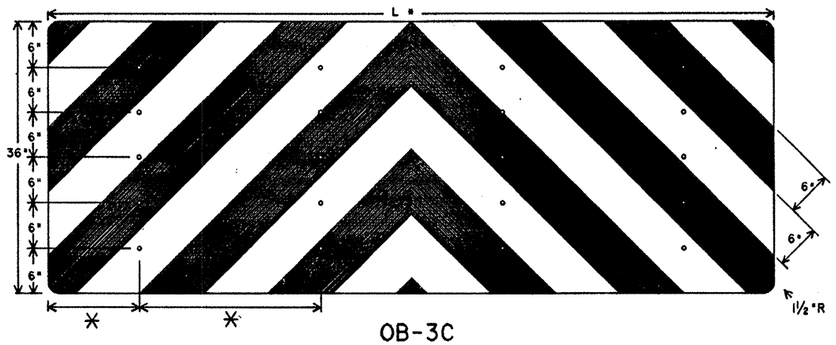

OB-3C

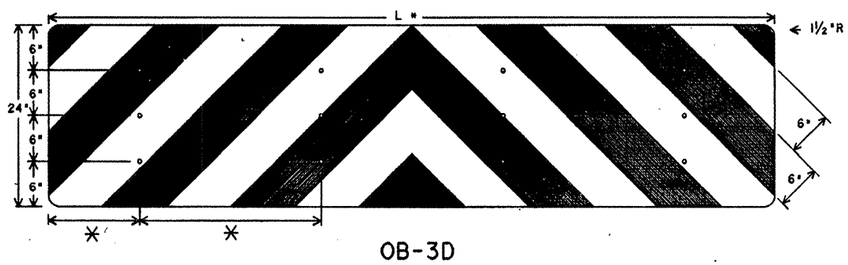

OB-3D

*spacing adjusted to attach through centerline of drum, per attenuator manufacturers recommendation, or as directed by the Engineer.

Object Marker sheeting [redacted] conform to Specification D-9-8300, type C.

Background - yellow reflective, chevron - black.
Mounting flush with top of VIA.
Minimum size 96' x 24".

Pop rivets or nuts and bolts [redacted] used to attach reflector to attenuators.

Reflective sheeting applied to galvanized sheet metal gauge 24 to 28 per ASTM A366.025 nominal, Aluminum sheet of 6061-T6 or 5052-H38 alloys approximately .065 inch thickness, Low Density Polyethylene approximately .080 inch thickness or Medium Density Polyethylene approximately .080 inch thickness. Other materials [redacted] called for in the plans or approved by the Engineer.

Class A or B reflectors [redacted] used to delineate side of attenuator.

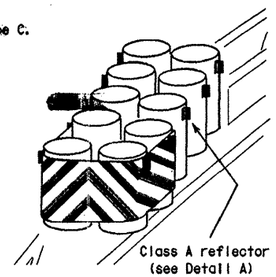

Class A reflector (see Detail A)

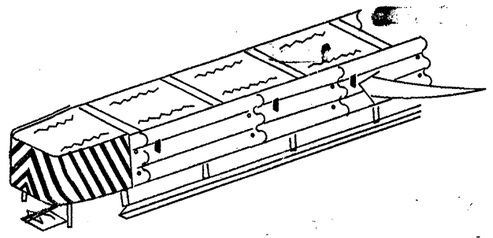

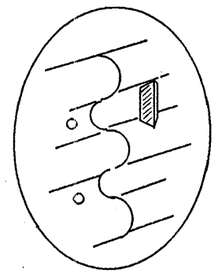

CLASS B REFLECTOR
Detail B

STATE DEPARTMENT OF HIGHWAYS AND PUBLIC TRANSPORTATION

DELINEATORS and OBJECT MARKERS

D & OM(3)

ORIGINAL DRAWING DATE: 12-89	REVISIONS	STATE DISTRICT	FEDERAL REGION	FEDERAL AID PROJECT	SHEET
DN. : DN	4-90	21	6	NH 92(50)M	573
CK. : MT/LR		COUNTY	CONTROL	SECTION	JOB	HIGHWAY
DN. :		HIDALGO	39	17	97	US83/281
CK. :						

WORK ZONE PAVEMENT MARKINGS

Raised Markers

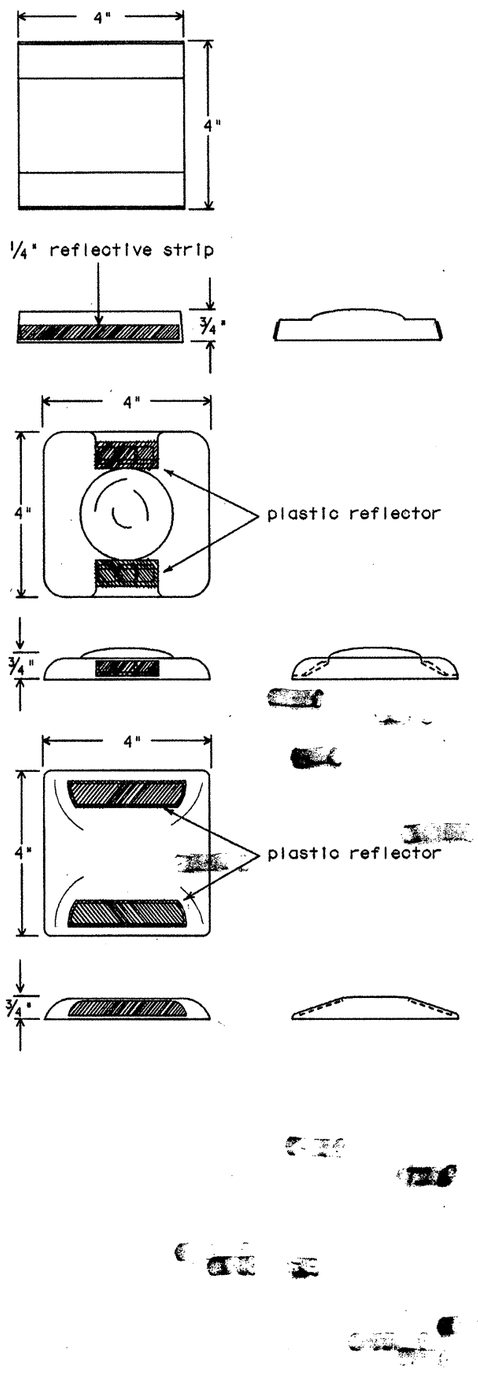

NOTES FOR WORK ZONE PAVEMENT MARKINGS

GENERAL

1) This sheet is [redacted] used in conjunction with Standard Sheet TCP(5-2).
2) Dimensions indicated on this sheet are typical and approximate. Variations in size and height [redacted] occur between markers or devices made by manufacturers, by as much as 1/4 inch, unless otherwise noted.
3) Raised markers and temporary flexible-reflective roadway marker tabs [redacted] require normal maintenance replacement when used on roadways with an ADT per lane of up to 7500 vehicles with no more than 10% truck mix. When roadways exceed these values additional maintenance replacement of devices [redacted] planned, or permanent individual unit pavement markings used, as detailed on sheets 1PM(1), 1PM(2), PM(0), PM(1), PM(2), PM(3) or as detailed elsewhere in the plans.

RAISED MARKERS

General

1) Raised Markers detailed on this sheet [redacted] designated Type AA (two amber reflective surfaces with yellow body), Type A (one amber reflective surface with yellow body) or Type C (one silver reflective surface with white body). Color used [redacted] in accordance with the TMUTCD.

Sampling & Testing

1) Pavement Markings detailed on this sheet [redacted] inspected and accepted by the Project Engineer or designated representative. Sampling and testing is not normally required.

ABBREVIATED PAVEMENT MARKINGS

General

1) Temporary flexible-reflective roadway marker tabs detailed on this sheet [redacted] designated Type Y-2 (two amber reflective surfaces with yellow body), Type Y (one amber reflective surface with yellow body), and Type W (one silver reflective surface with white body).

Material

1) Temporary flexible-reflective roadway marker tabs [redacted] meet requirements of Department Material Specification D-9-8242.
2) The body of the temporary flexible-reflective roadway marker tabs [redacted] consist of a base and vertical wall made of polyurethane, polyester elastomer or other material approved by the Materials and Tests Division.
3) The reflective material [redacted] protected with an easily removable heat resistant transparent cover capable of withstanding and protecting the reflective material from the application of 400 degree F asphalt. Stapling or clipping devices used to retain the protective cover [redacted] not protrude through the reflective material.

Sampling & Testing

1) Temporary flexible-reflective roadway marker tabs for seal coat projects detailed on this sheet [redacted] inspected and accepted by the Project Engineer or designated representative. Sampling and testing is not normally required, however at the option of the Engineer, either "A" or "B" below [redacted] imposed to assure quality before placement on the roadway.
   A) Select five (5) or more temporary flexible-reflective roadway marker tabs at random from each lot or shipment and submit to the Materials and Tests Division to determine specification compliance.
   B) Select five (5) temporary flexible-reflective roadway marker tabs and submit to the following test. Affix five (5) tabs at two (2) foot intervals on an asphaltic pavement in a straight line. Using a medium size passenger vehicle or pickup, run over the markers with front and rear wheels at a speed of 35 to 40 miles per hour, four times in each direction. No more than one (1) out of five reflective surfaces [redacted] lost or displaced as a result of this test.

Maintenance

1) When dry, the temporary flexible-reflective roadway marker tabs [redacted] visible for a minimum distance of 200 feet during normal daylight hours and when illuminated by automobile low-beam head light at night, unless sight distance is restricted by roadway geometrics.
2) No two consecutive tabs nor four tabs per 1000 feet of line [redacted] missing or fail to meet the visual performance requirements of note 1.
3) The Contactor [redacted] responsible for maintaining the abbreviated pavement markings, when they are used, until the standard pavement markings are in place. When the Contractor is responsible for placement of the standard pavement markings, no segment of roadway [redacted] remain without standard pavement markings for a period greater than two (2) weeks unless weather conditions prohibit placement. The standard pavement markings [redacted] placed as soon as weather permits.
4) After 72 hours following the seal coat operation, provided the standard pavement markings have not been placed, any temporary flexible-reflective roadway marker tabs not meeting the visibility requirements stated in note 1, [redacted] replaced as directed by the Engineer.

REMOVABLE - PREFABRICATED PAVEMENT MARKINGS

Sampling & Testing

1) Removable - Prefabricated Pavement Markings [redacted] a material of manufacture and product code or designation shown on the list of approved materials covered by the Department Materials Specification D-9-8241. The list of approved materials [redacted] obtained from the Equipment and Procurement Division.

CONSTRUCTION GRADE - PREFABRICATED PAVEMENT MARKINGS (FOIL BACK)

Sampling & Testing

1) Construction Grade - Prefabricated Pavement Markings [redacted] a material of manufacture and product code or designation shown on the list of approved material covered by the Specification SDHPT - 550-74-01. The list of approved materials [redacted] obtained from the Equipment and Procurement Division.

WORK ZONE PAVEMENT MARKINGS

Temporary Flexible-Reflective Roadway Marker Tabs for Seal Coat Projects

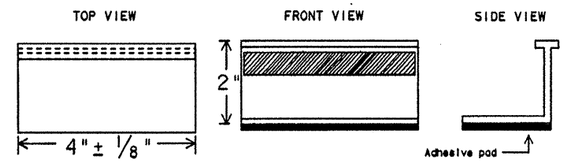

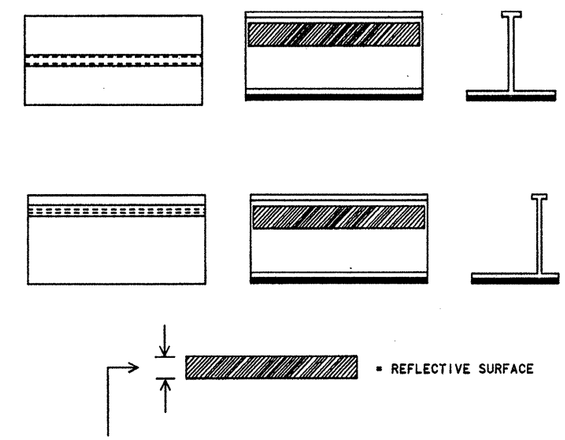

Height of sheeting [redacted] determined by Note 1 under Maintenance of ABBREVIATED PAVEMENT MARKINGS. Usually more than .2 inch and less than 1 inch.

PREQUALIFICATION PROCEDURES [redacted] OBTAINED BY WRITING:

EQUIPMENT AND PROCUREMENT DIVISION
STATE DEPT. OF HIGHWAY & PUBLIC TRANS.
125 EAST 11th STREET
AUSTIN, TX 78701-2483

SPECIFICATION REFERENCE TABLE
, MATERIALS AND TEST SPECIFICATIONS (D-9)

PREFABRICATED PAVEMENT MARKINGS-REMOVABLE	D-9-8241
TEMPORARY FLEXIBLE-REFLECTIVE ROADWAY MARKER TABS	D-9-8242

STANDARD PLANS
STATE DEPARTMENT OF HIGHWAYS AND PUBLIC TRANSPORTATION

WORK ZONE PAVEMENT MARKINGS

(1 of 2) TCP(5-1)-91

ORIGINAL DATE: 5-88	STATE DISTRICT	FEDERAL REGION	FEDERAL AID PROJECT	SHEET
DN.:- LR	21	6	NH 92(50)M	574
CK.:- REVISIONS 3-91	COUNTY	CONTROL	SECTION	JOB	HIGHWAY
DR.:- DN	HIDALGO	39	17	97	US83/281
CK.:-					

WORK ZONE PAVEMENT MARKINGS DETAILS

SOLID LINES

DOUBLE NO-PASSING LINE

RAISED MARKERS 4" to 12"

PAINT & BEAD 4" to 12"

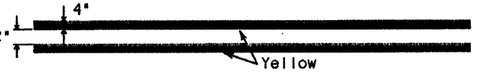

* ABBREVIATED MARKINGS 4" to 12"

EDGE LINE OR SINGLE NO-PASSING LINE

RAISED MARKERS

PAINT & BEAD

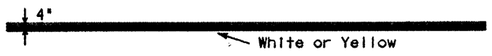

WIDE LINE

RAISED MARKERS

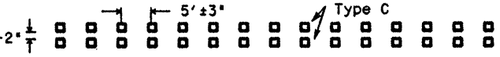

(FOR LEFT TURN CHANNELIZING LINE OR CHANNELIZING LINE USED TO DISCOURAGE LANE CHANGING.)

PAINT & BEAD

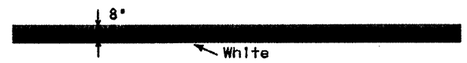

BROKEN LINE

(FOR CENTER LINE OR LANE LINE.)

RAISED MARKERS

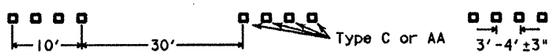

PAINT & BEAD

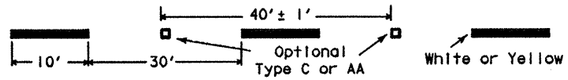

* ABBREVIATED MARKINGS

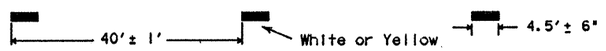

NOTES FOR STANDARD WORK ZONE PAVEMENT MARKINGS

1) Standard Work Zone Pavement Markings [redacted] of paint and beads, raised markers or combination of paint and raised markers. Thermoplastic paint and beads [redacted] used in lieu of paint and beads unless otherwise specified elsewhere in the plans. Abbreviated marking patterns are not [redacted] used for standard pavement markings.
2) Raised markers detailed on TCP(5-1) are [redacted] placed according to the patterns on this sheet. Standard, permanent, raised markers as detailed on sheets 1PM(1) and 1PM(2) [redacted] placed according to patterns on sheets 1PM(1), 1PM(2), PM(0), PM(1), PM(2) or PM(3).
3) For additional details on Work Zone pavement markings see sheet TCP(5-1).
4) Spacing for pavement markings on this sheet are maximum spacings and [redacted] reduced to fit field conditions.
5) Adhesive used for work zone raised pavement markings [redacted] Bituminous material hot applied, or Butyl Rubber/pad.
6) Channelizing (wide) lines [redacted] minimum 8" wide.

ABBREVIATED (SHORT TERM) PAVEMENT MARKING DETAILS

STICK DOWN TAPE

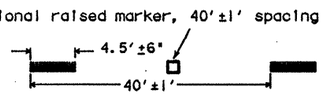

RAISED PAVEMENT MARKERS

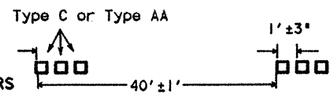

NOTES FOR ABBREVIATED (SHORT TERM) PAVEMENT MARKINGS

1) Abbreviated pavement marking materials [redacted] stick down tape, raised markers or paint and beads unless otherwise specified elsewhere in the plans.
2) Abbreviated pavement markings for seal coat projects [redacted] use temporary flexible-reflective roadway marker tabs. Temporary flexible-reflective roadway marker tabs are [redacted] installed to provide true alignment for striping crews as directed by the Engineer.
3) Temporary flexible-reflective roadway marker tabs for seal coat projects [redacted] applied to the pavement no more than two days before the seal coat is applied. After the seal coat is rolled and swept the cover over the reflective strip [redacted] removed, and standard markings installed.
4) Abbreviated pavement markings [redacted] not [redacted] used to simulate edge lines.

USE OF ABBREVIATED (SHORT TERM) PAVEMENT MARKINGS

1) On low volume two lane roadways, 4000 ADT or less, signs [redacted] used to indicate no-passing zones for up to two weeks. Standard centerline markings [redacted] placed within two weeks.
2) On two lane roadways with more than 4000 ADT, signs [redacted] used to indicate no-passing zones for up to three days. Standard centerline markings should be placed within three days.
3) On undivided highways with four or more lanes, standard centerline and lane line pavement markings [redacted] in place at the end of each workday on roadways open to traffic. On divided highways, abbreviated markings [redacted] used for lane lines for up to two weeks. Standard markings [redacted] in place after two weeks.

PAVEMENT MARKING PATTERNS

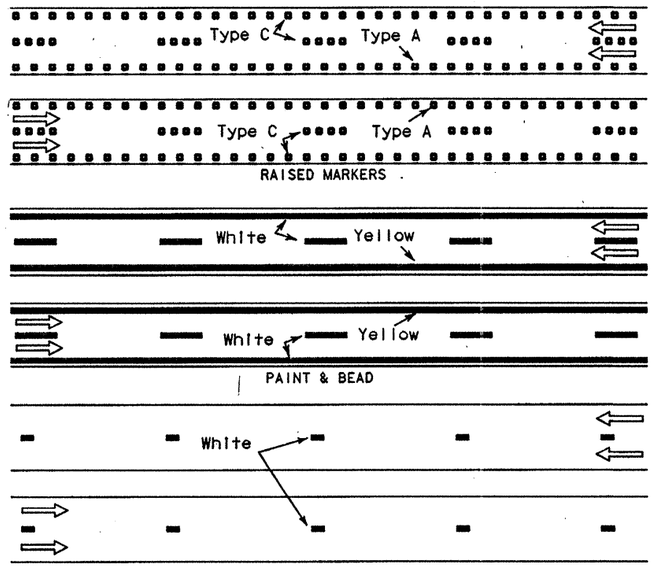

EDGE & LANE LINES FOR DIVIDED HIGHWAY

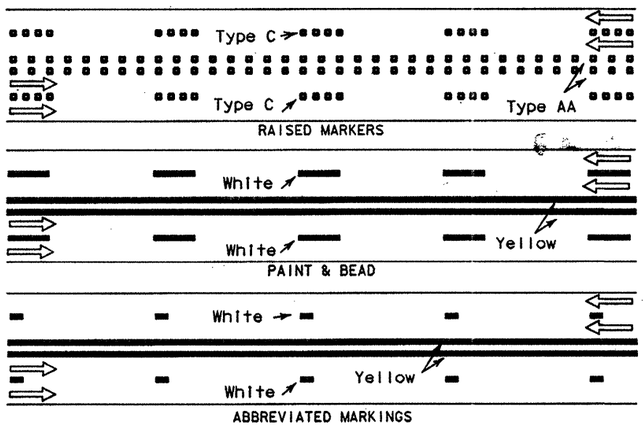

LANE & CENTER LINES FOR MULTILANE UNDIVIDED HIGHWAYS

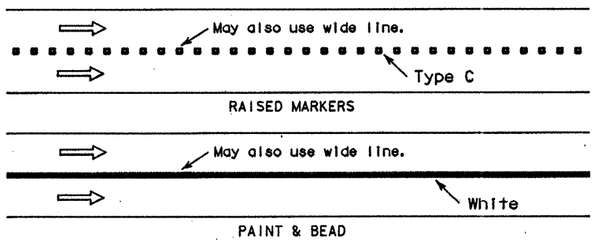

CHANNELIZING LINE TO DISCOURAGE LANE CHANGING

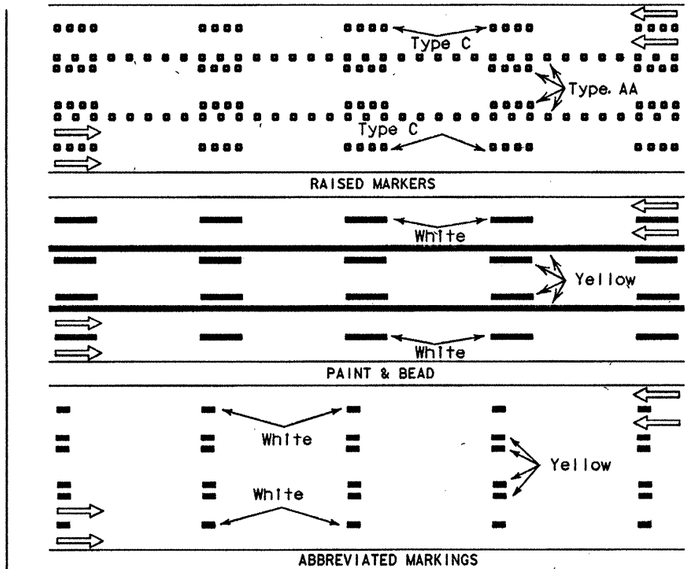

PAVEMENT MARKINGS FOR TWO-WAY LEFT TURN LANE

CENTER LINE & NO-PASSING ZONE BARRIER LINES FOR TWO LANE TWO-WAY HIGHWAYS

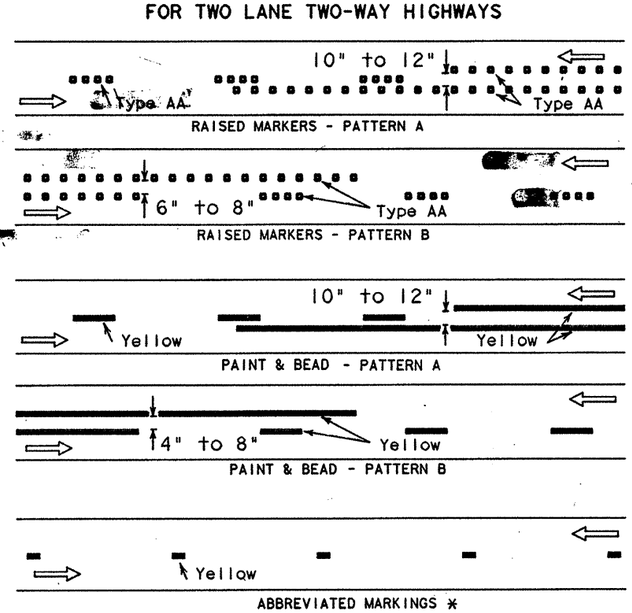

NOTE

1) Spacing between markers [redacted] uniform with no more than a 10% variation in spacing.
2) Pattern A is the Department Standard. Pattern B may be used if approved by the Engineer.
*3) When abbreviated markings are used in areas of no-passing zones, signs in accordance with the TMUTCD [redacted] used to indicate the limits of the no-passing zones.

STANDARD PLANS
STATE DEPARTMENT OF HIGHWAYS AND PUBLIC TRANSPORTATION

WORK ZONE PAVEMENT MARKINGS (2 of 2) TCP(5-2)-91

ORIGINAL DRAWING DATE: 5-88		STATE DISTRICT	FEDERAL REGION	FEDERAL AID PROJECT	SHEET
DN.: LR	REVISIONS	21	6	NH92(50)M	575
CK.:	6-89	COUNTY	CONTROL	SECTION	JOB	HIGHWAY
DW.: DN	3-91	HIDALGO	39	17	97	US83(28)
CK.:						

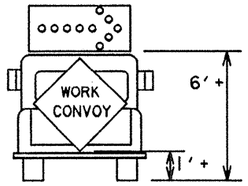

Typical Trail Vehicle
with Right DIRECTIONAL
Flashing Arrow Panel

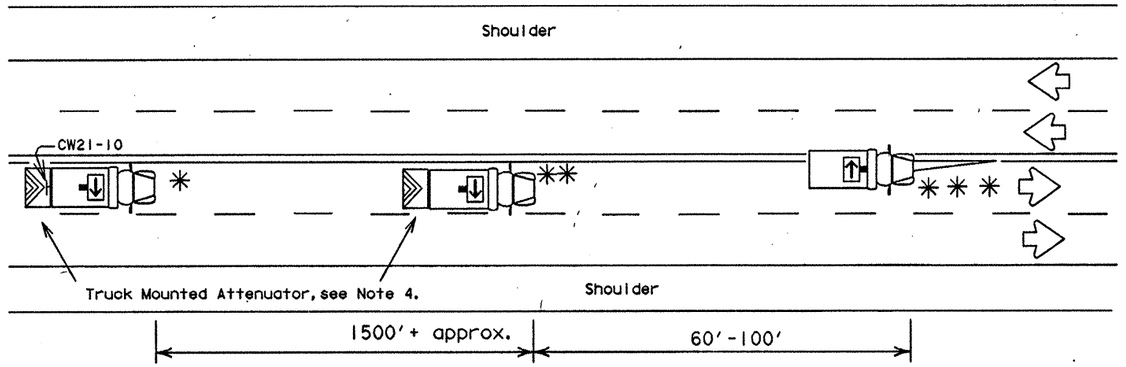

TCP (3-1a)
Undivided Multilane Roadway

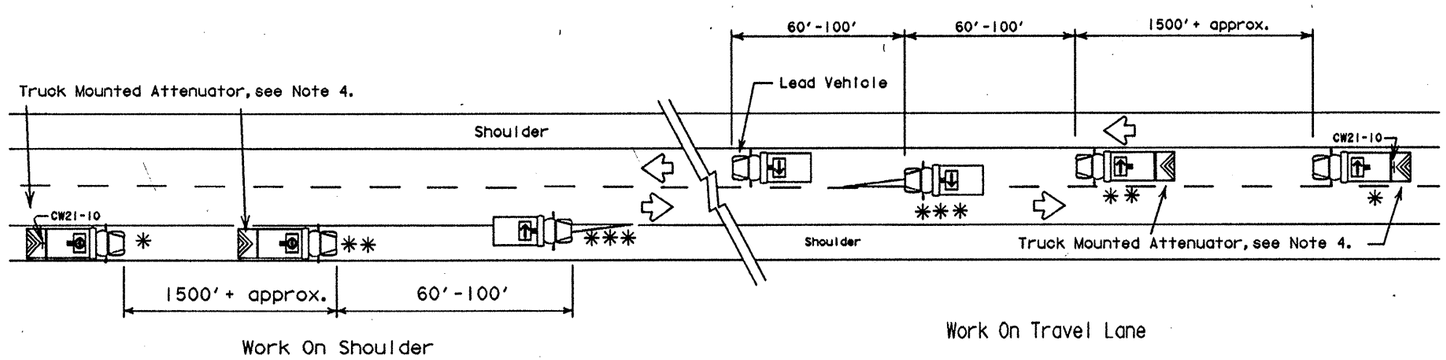

TCP (3-1b)
Two-Way Roadway With Paved Shoulders

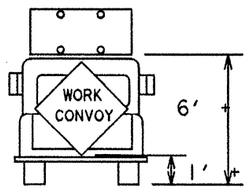

Typical Trail Vehicle
with CAUTION mode
Flashing Arrow Panel

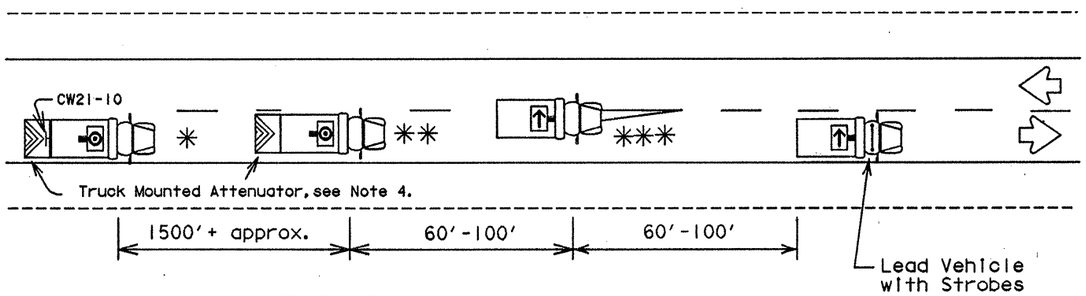

TCP (3-1c)
Two-Way Roadway Without Paved Shoulders

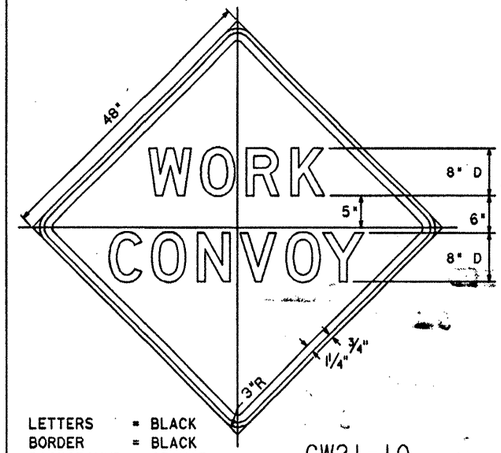

LETTERS = BLACK
BORDER = BLACK
BACKGROUND = ORANGE

CW21-10

Legend:

- * Trail Vehicle
- ** Shadow Vehicle
- *** Work Vehicle
- Truck mounted attenuator
- Flashing Arrow Panels:
  - Right DIRECTIONAL
  - Left DIRECTIONAL
  - Double Arrow DIRECTIONAL
  - CAUTION mode

GENERAL NOTES:

1. The Engineer [redacted] determine if the LEAD VEHICLE and/or TRAIL VEHICLE are optional based on prevailing roadway conditions, traffic volume, and sight distance restrictions.
2. All traffic control devices [redacted] in accordance with the "Texas Manual on Uniform Traffic Control Devices" (TMUTCD), latest edition.
3. The use of blue and/or yellow rotating beacons or strobe lights on vehicles is optional unless otherwise stated elsewhere in the plans.
4. The use of truck mounted attenuators (TMA) on the SHADOW VEHICLE or the TRAIL VEHICLE is optional unless otherwise stated elsewhere in the plans.
5. Flashing Arrow Panels [redacted] Type B or Type C. The panel operation [redacted] controlled from inside the vehicle.
6. Each vehicle [redacted] have two-way radio communication capability.
7. When work convoys [redacted] change lanes, the TRAIL VEHICLE [redacted] change lanes first to shadow other convoy vehicles.
8. Vehicle spacing between TRAIL VEHICLE and SHADOW VEHICLE [redacted] vary depending on sight distance restrictions. Motorists approaching the work convoy [redacted] able to see the TRAIL VEHICLE in time to slow down and/or change lanes as they approach the TRAIL VEHICLE.

STANDARD PLANS
STATE DEPARTMENT OF HIGHWAYS
AND PUBLIC TRANSPORTATION

TRAFFIC CONTROL PLAN
MOVING OPERATIONS
CONVENTIONAL HIGHWAYS

TCP(3-1)-91

ORIGINAL DRAWING DATE: 11-85		STATE DISTRICT	FEDERAL REGION	FEDERAL AID PROJECT			SHEET
DN.: LR	REVISIONS	21	6	NH 92(50)M			583
CK.:	9-87	COUNTY		CONTROL	SECTION	JOB	HIGHWAY
DW.: DB	6-88	HIDALGO		39	17	97	US83/281
CK.:	3-91						

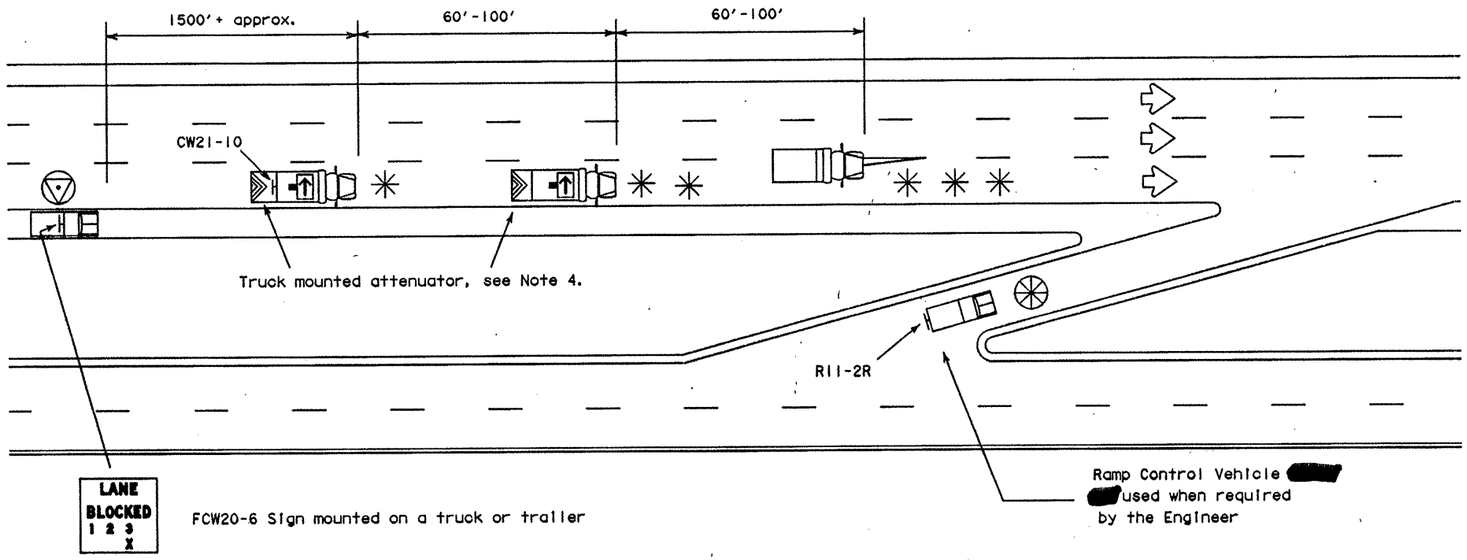

FCW20-6 Sign mounted on a truck or trailer

General Notes

1. The Engineer [redacted] determine if the LEAD VEHICLE and/or TRAIL VEHICLE are optional based on prevailing roadway conditions, traffic volume, and sight distance restrictions.
2. All traffic control devices [redacted] in accordance with the "Texas Manual on Uniform Traffic Control Devices" (TMUTCD), latest edition.
3. The use of blue and/or yellow rotating beacons or strobe lights on vehicles is optional unless otherwise stated elsewhere in the plans.
4. The use of truck mounted attenuators (TMA) on the SHADOW VEHICLE or the TRAIL VEHICLE is optional unless otherwise stated elsewhere in the plans.
5. Flashing Arrow Panels [redacted] Type B or Type C. The panel operation [redacted] controlled from inside the vehicle.
6. Each vehicle [redacted] have two-way radio communication capability.
7. When work convoys [redacted] change lanes, the TRAIL VEHICLE [redacted] change lanes first to shadow other convoy vehicles.
8. Vehicle spacing between TRAIL VEHICLE and SHADOW VEHICLE [redacted] vary depending on sight distance restrictions. Motorists approaching the work convoy [redacted] able to see the TRAIL VEHICLE in time to slow down and/or change lanes as they approach the TRAIL VEHICLE.
9. The LANE BLOCKED sign (FCW20-6) [redacted] used on divided highways and [redacted] mounted on a truck or trailer. For divided highways with two lanes in each direction, the LANE REDUCTION TRANSITION sign (FCW4-2, 48"x48") [redacted] substituted for the LANE BLOCKED sign (FCW20-6).

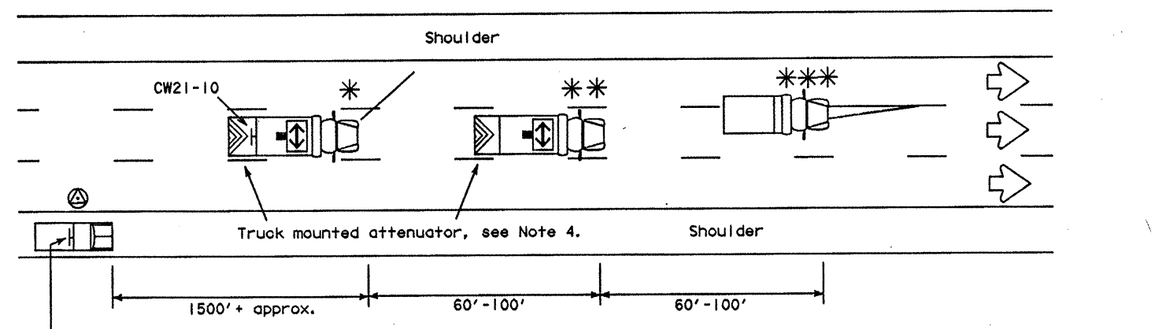

FCW20-6 Sign mounted on a truck or trailer

R11-2R

LETTERS = BLACK
BORDER = BLACK
BACKGROUND = WHITE

Legend:

- ✱ Trail Vehicle
- ✱✱ Shadow Vehicle
- ✱✱✱ Work Vehicle
- Truck mounted attenuator
- Advance Warning Vehicle or Trailer
- Ramp Control Vehicle
- Flashing Arrow Panels:
  - Right DIRECTIONAL
  - Left DIRECTIONAL
  - Double Arrow DIRECTIONAL
  - CAUTION mode

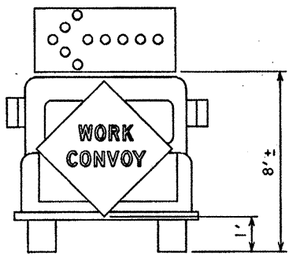

Typical Trail Vehicle
(Left Arrow DIRECTIONAL Mode)

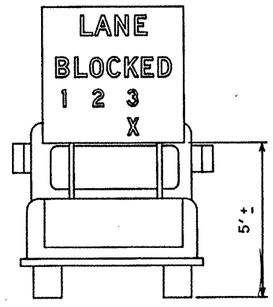

Typical Advance
Warning Vehicle

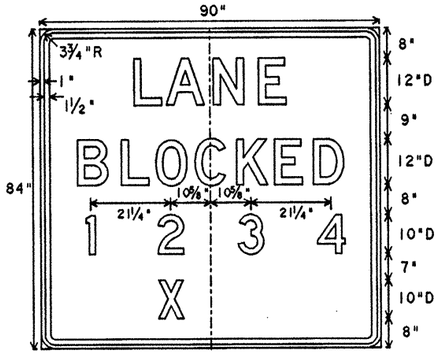

FCW20-6

LETTERS = BLACK
BORDER = BLACK
BACKGROUND = ORANGE

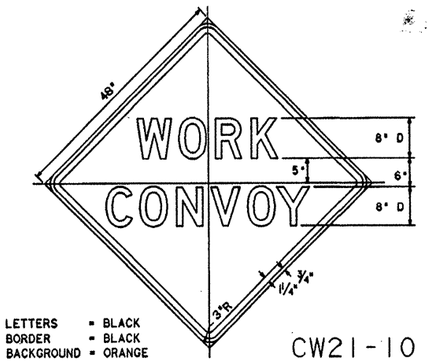

LETTERS = BLACK
BORDER = BLACK
BACKGROUND = ORANGE

CW21-10

STANDARD PLANS
STATE DEPARTMENT OF HIGHWAYS AND PUBLIC TRANSPORTATION

TRAFFIC CONTROL PLAN
MOVING OPERATIONS
DIVIDED HIGHWAYS
TCP(3-2)-91

ORIGINAL DRAWING DATE: 12-85	STATE DISTRICT	FEDERAL REGION	FEDERAL AID PROJECT	SHEET
DN.: LR REVISIONS 9-87	21	6	NH92(50)M	584
CK.: 6-88	COUNTY	CONTROL	SECTION	JOB	HIGHWAY
DW.: DB 3-91	HIDALGO	39	17	97	US83/281
CK.:					176

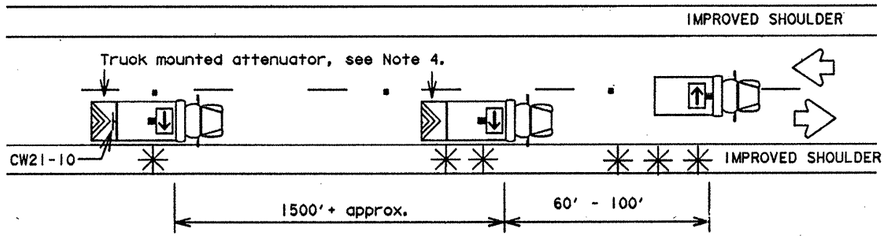

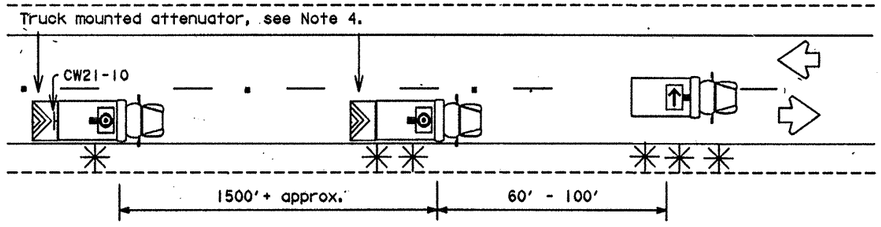

TYPICAL TRAIL VEHICLE

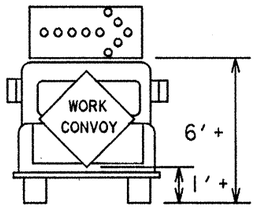

Two Lane Highway
With Paved Shoulders
(Work On Travel Lane)

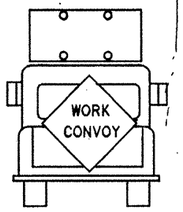

Two Lane Highway
Without Paved Shoulders
(Work On Travel Lane)

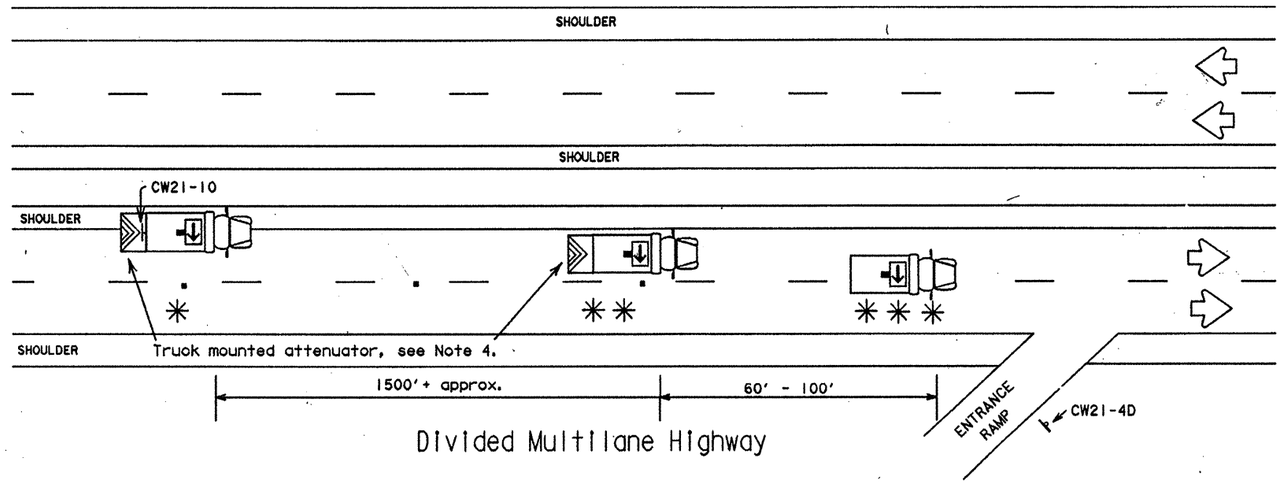

Divided Multilane Highway

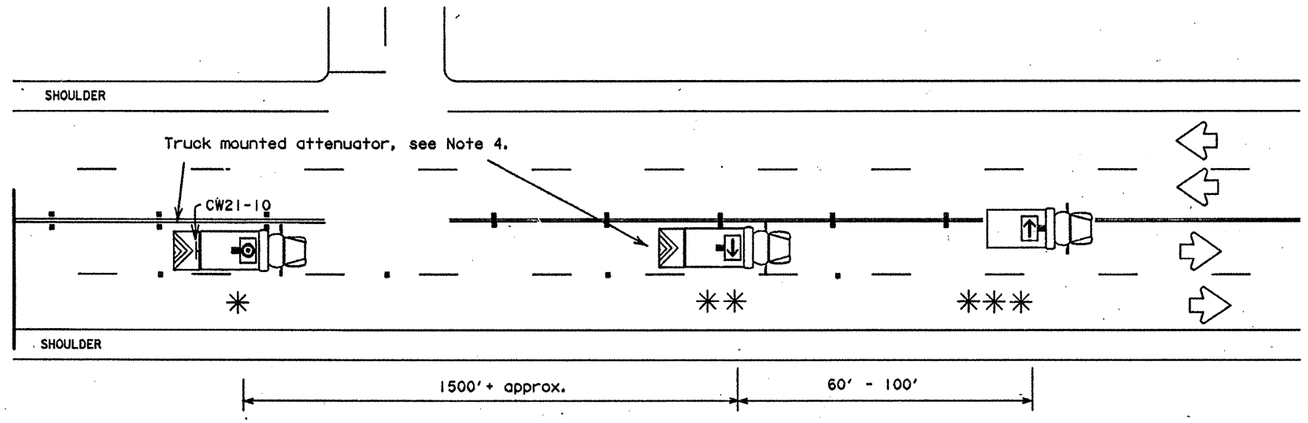

Undivided Multilane Highway

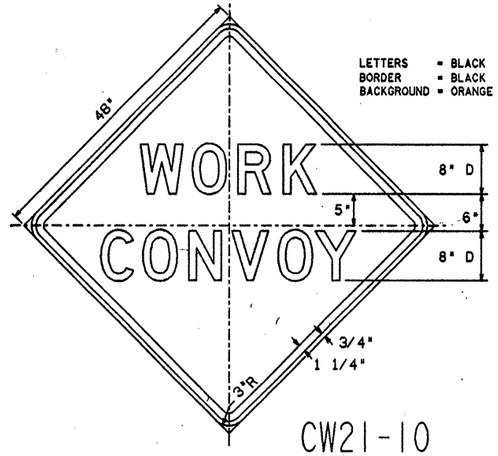

CW21-10

Legend:

- ✱ Trail Vehicle
- ✱✱ Shadow Vehicle
- ✱✱✱ Work Vehicle
- Truck mounted attenuator
- Flashing Arrow Panels:
  - Right DIRECTIONAL
  - Left DIRECTIONAL
  - Double Arrow DIRECTIONAL
  - CAUTION mode

GENERAL NOTES:

1. The Engineer [redacted] determine if the LEAD VEHICLE and/or TRAIL VEHICLE are optional based on prevailing roadway conditions, traffic volume, and sight distance restrictions.
2. All traffic control devices [redacted] in accordance with the "Texas Manual on Uniform Traffic Control Devices" (TMUTCD), latest edition.
3. The use of blue and/or yellow rotating beacons or strobe lights on vehicles is optional unless otherwise stated elsewhere in the plans.
4. The use of truck mounted attenuators (TMA) on the SHADOW VEHICLE or the TRAIL VEHICLE is optional unless otherwise stated elsewhere in the plans.
5. Flashing Arrow Panels [redacted] Type B or Type C. The panel operation [redacted] controlled from inside the vehicle.
6. Each vehicle [redacted] have two-way radio communication capability.
7. When work convoys [redacted] change lanes, the TRAIL VEHICLE [redacted] change lanes first to shadow other convoy vehicles.
8. Vehicle spacing between TRAIL VEHICLE and SHADOW VEHICLE [redacted] vary depending on sight distance restrictions. Motorists approaching the work convoy [redacted] able to see the TRAIL VEHICLE in time to slow down and/or change lanes as they approach the TRAIL VEHICLE.

STANDARD PLANS
STATE DEPARTMENT OF HIGHWAYS
AND PUBLIC TRANSPORTATION

TRAFFIC CONTROL PLAN
INDIVIDUAL UNIT PAVEMENT MARKING OPERATION

TCP(3-3)-91

ORIGINAL DRAWING DATE: 9-87		STATE DISTRICT	FEDERAL REGION	FEDERAL AID PROJECT			SHEET
DN.: LR	REVISIONS	21	6	NH 92(50)M			585
CK.:	6-88	COUNTY		CONTROL	SECTION	JOB	HIGHWAY
DN.: DB	3-91	HIDALGO		39	17	'97	US83/281
CK.:							

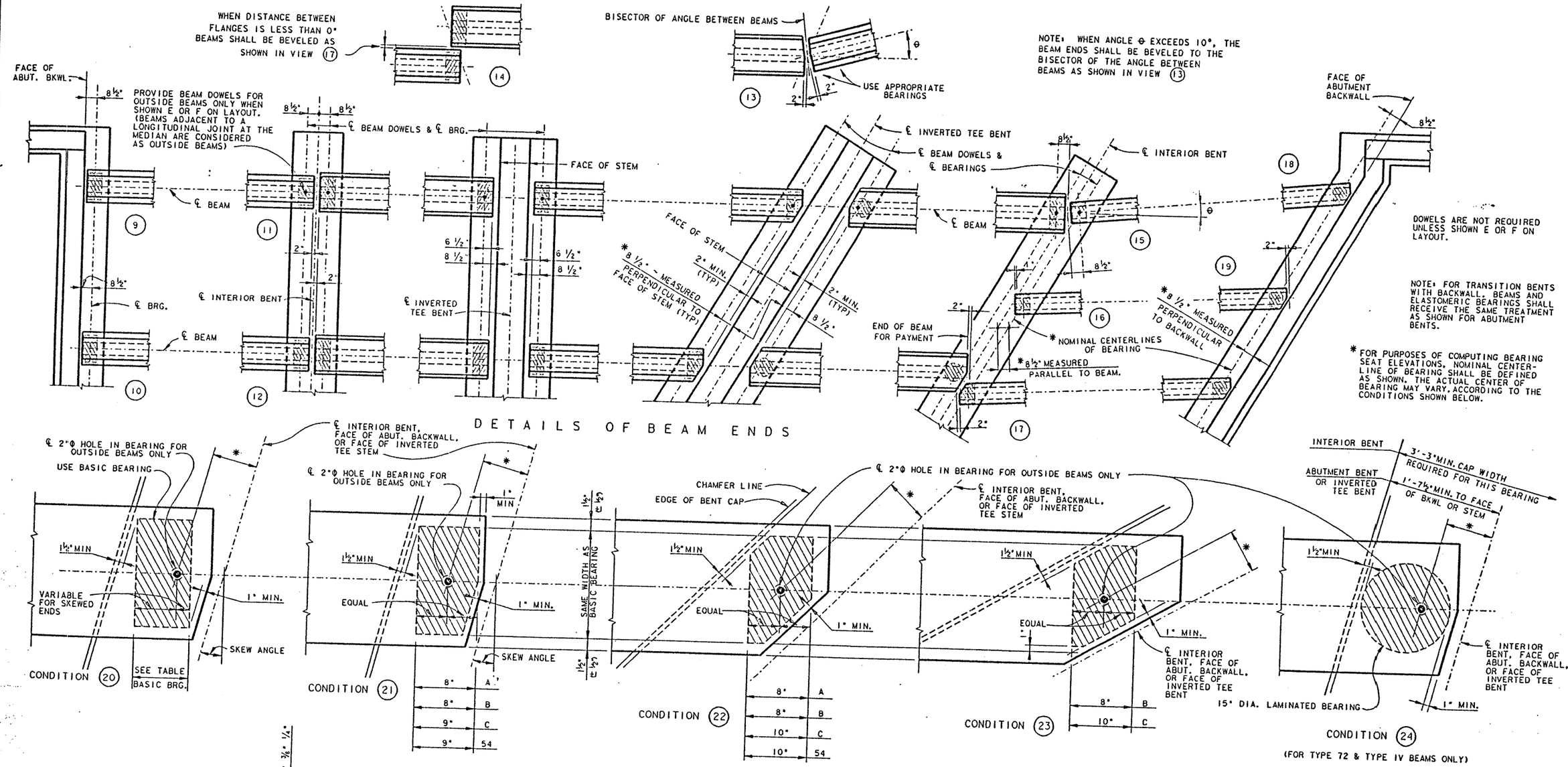

DETAILS OF BEAM ENDS

NOTE: BASIC BEARINGS ARE TO BE USED FOR SQUARE BEAM ENDS AND FOR MODERATELY SKEWED BEAM ENDS AS COVERED IN CONDITION (20). HOLES IN BEARINGS FOR SQUARE BEAMS SHALL BE CENTERED IN PAD.

DETAILS OF ELASTOMERIC BEARINGS

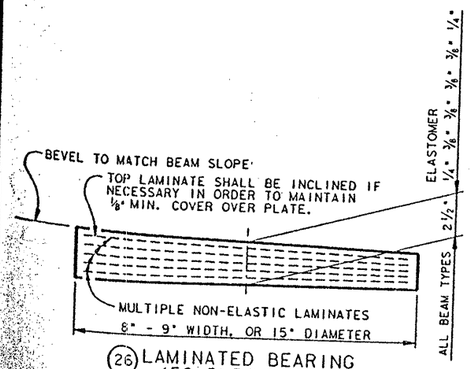

BASIC BEARINGS		
BM. TYPE	SIZE, THICKNESS "T" & DESCRIPTION	
A	8" X 14" X 2½"	LAMINATED
B	8" X 16" X 2½"	LAMINATED
C	9" X 19" X 2½"	LAMINATED
54	9" X 14" X 2½"	LAMINATED
72	9" X 20" X 2½"	LAMINATED
IV	9" X 22" X 2½"	LAMINATED

BEARINGS FOR BEVELED BEAM ENDS					
BM. TYPE	CONDITION (20)	CONDITION (21)	CONDITION (22)	CONDITION (23)	CONDITION (24)
A	0° THRU 20°	20° THRU 30°	OVER 30°	N/A	N/A
B	0° THRU 15°	15° THRU 30°	30° THRU 55°	OVER 55°	N/A
C	0° THRU 10°	10° THRU 20°	20° THRU 50°	OVER 50°	N/A
54	0° THRU 10°	10° THRU 25°	OVER 25°	N/A	N/A
72	0° THRU 10°	N/A	N/A	N/A	OVER 10°
IV	0° THRU 8°	N/A	N/A	N/A	OVER 8°

SKEW ANGLE OF BEAM END

GENERAL NOTES:

BEAMS SHALL BE SEATED ON ELASTOMERIC BEARINGS OF THE DIMENSIONS SHOWN.

BEARINGS SHALL BE FURNISHED WITH THEIR THICKNESS VARYING IN ONE DIRECTION DEPENDING ON THE SLOPE OF THE ERECTED BEAM.

CONSTANT THICKNESS BEARINGS MAY BE USED FOR MODERATE BEAM SLOPES IF THE VARIATION IS WITHIN THE ALLOWABLE DIMENSIONAL TOLERANCES GIVEN IN THE SPECIFICATIONS.

COST OF FURNISHING AND INSTALLING ELASTOMERIC BEARINGS SHALL BE INCLUDED IN UNIT PRICE BID FOR "PRESTRESSED CONCRETE BEAMS".

REV. 3-30-92

HS 20 LOADING

STATE DEPARTMENT OF HIGHWAYS AND PUBLIC TRANSPORTATION

PRESTRESSED CONCRETE BEAMS

BEAM ENDS AND BEARINGS

GpB-3

D45350A1:ZFA2:(3551003310MOD02.DGN		PREPARED BY AND FOR USE OF TEXAS SDH&PT					
ORIGINAL DRAWING DATE: JUNE 1991	REVISIONS	STATE DISTRICT	FEDERAL REGION	FEDERAL AID PROJECT #			SHEET
DN.: THD		21	6	NH92( )M			38
CK.: THD		COUNTY		CONTROL	SECTION	JOB	HIGHWAY
DW.: AS / DRG		HIDALGO		0039	17	097	US83 281
CK.: RLR / JCC							

(DARS)

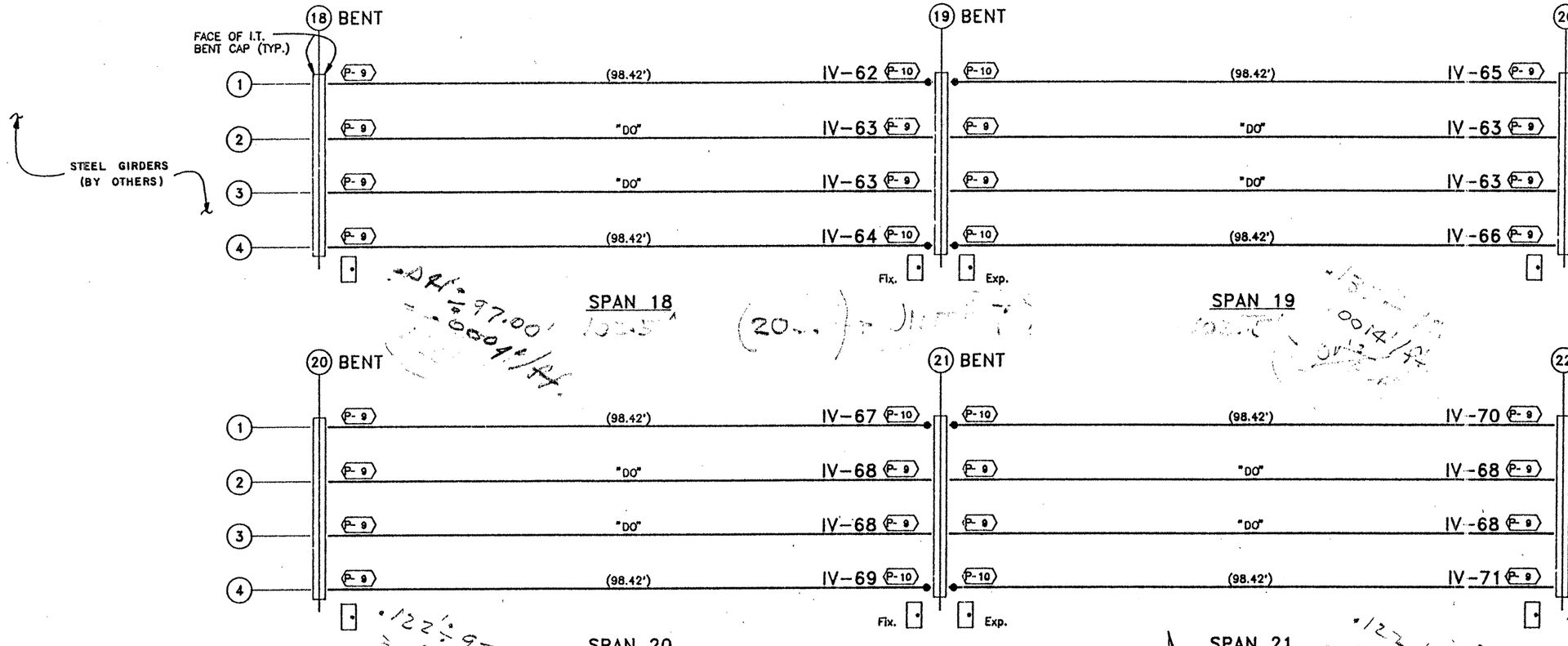

TEXAS DEPARTMENT OF TRANSPORTATION
APPROVED EXCEPT AS NOTED
DIVISION OF BRIDGES AND STRUCTURES

SEP 24 1992

APPROVAL OF THIS DRAWING DOES NOT RELIEVE THE CONTRACTOR OF THE RESPONSIBILITY FOR THE CORRECTNESS OF DETAIL.

U.S. 83/281 INTERCHANGE
RAMP 1

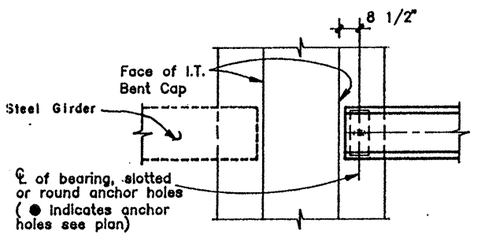

PLAN AT BENTS 18 & 25
(BENT 22 OPP. HAND)

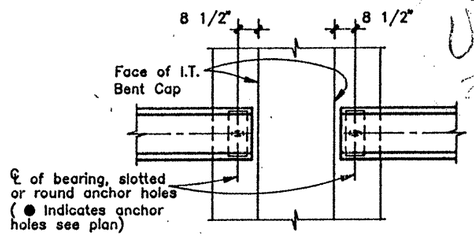

PLAN AT BENTS 19-21,26

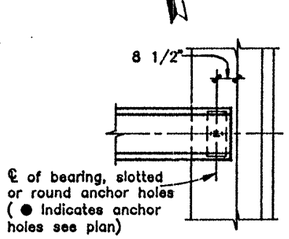

PLAN AT ABUT. 27

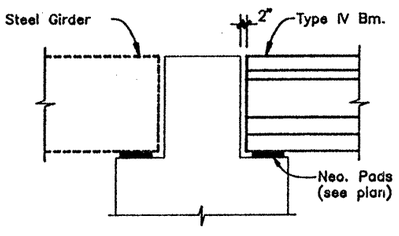

ELEV. AT BENTS 18 & 25
(BENT 22 OPP. HAND)

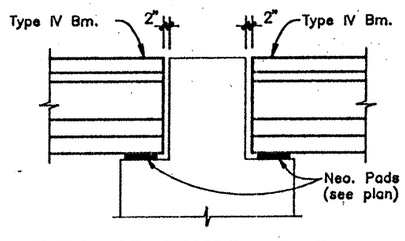

ELEV. AT BENTS 19-21,26

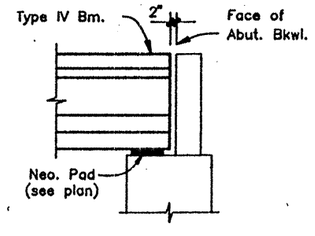

ELEV. AT ABUT. 27

* NOTE: 45° HANGAR SPACING HAS NOT BEEN CHECKED, BUT MUST BE IN ACCORDANCE WITH THE APPROVED "FORMING DETAILS".

MANCO PRESTRESS COMPANY					
CONTRACTOR Gilbert of Texas Construction					
CONTRACTORS OPTIONS	END DIAFRAM : N/A INTERIOR DIAFRAM : N/A				SLAB : PANELS
FED.RD. DIV.NO.	STATE	PROJECT NO.			HWY. NO.
6	TEXAS	NH 92(50)M			83/281
STATE DIST.NO.	COUNTY		CONTROL NO.	SECTION NO.	JOB NO.
21	HIDALGO		39	17	97

COPYRIGHT 1989 BY
STRUCTURAL ENGINEERING ASSOCIATES, INC.
CONSULTING ENGINEERS, SAN ANTONIO, TEXAS

JOB NO.	DRAWN	CHECKED	DATE	SHEET NO.
92-018	C.A.J.	D.M.P.	8/26/92	E-10
SEA JOB NO. 92-059H	ERECTION SHEET			

328071

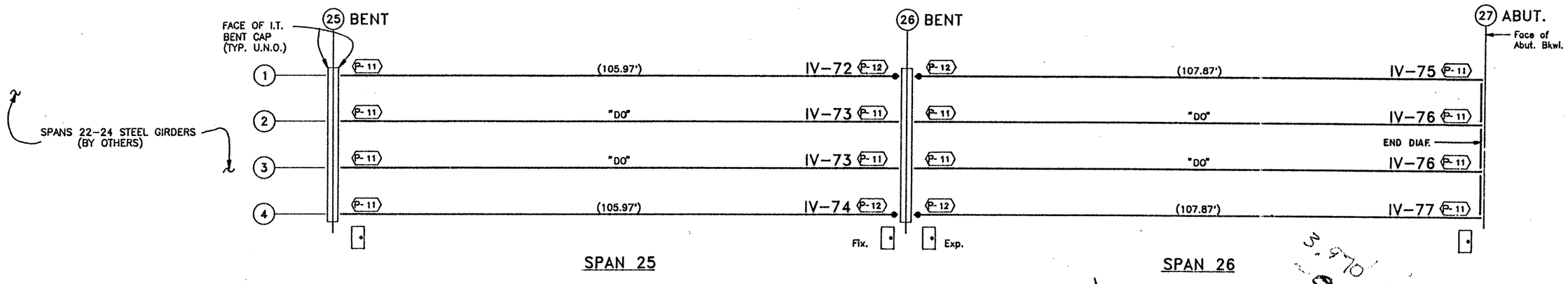

U.S. 83/281 INTERCHANGE
RAMP 1

UNIT 10

3.352' ÷ 104.88'
= .03175'/10

110'-0

3.970' ÷ 106.82'
= .037'/10

ELEV. Sht 232

TEXAS DEPARTMENT OF TRANSPORTATION
APPROVED
DIVISION OF BRIDGES AND STRUCTURES

SEP 24 1992

APPROVAL OF THIS DRAWING DOES NOT RELIEVE THE CONTRACTOR OF THE RESPONSIBILITY FOR THE CORRECTNESS OF DETAIL.

( ) INDICATES BEAM LENGTH

MANCO PRESTRESS COMPANY				
CONTRACTOR Gilbert of Texas Construction				
CONTRACTORS OPTIONS	END DIAFRAM :E.D.O. #2 INTERIOR DIAFRAM :N/A			SLAB : PANELS
FED.RD. DIV.NO.	STATE	PROJECT NO.		HWY. NO.
6	TEXAS	NH 92(50)M		83/281
STATE DIST.NO.	COUNTY	CONTROL NO.	SECTION NO.	JOB NO.
21	HIDALGO	39	17	97

COPYRIGHT 1989 BY SEA STRUCTURAL ENGINEERING ASSOCIATES, INC. CONSULTING ENGINEERS, SAN ANTONIO, TEXAS

JOB NO.	DRAWN	CHECKED	DATE	SHEET NO.
92-018	C.A.J.	D.M.P.	8/26/92	E-11
SEA JOB NO. 92-059H	ERECTION SHEET			

328071

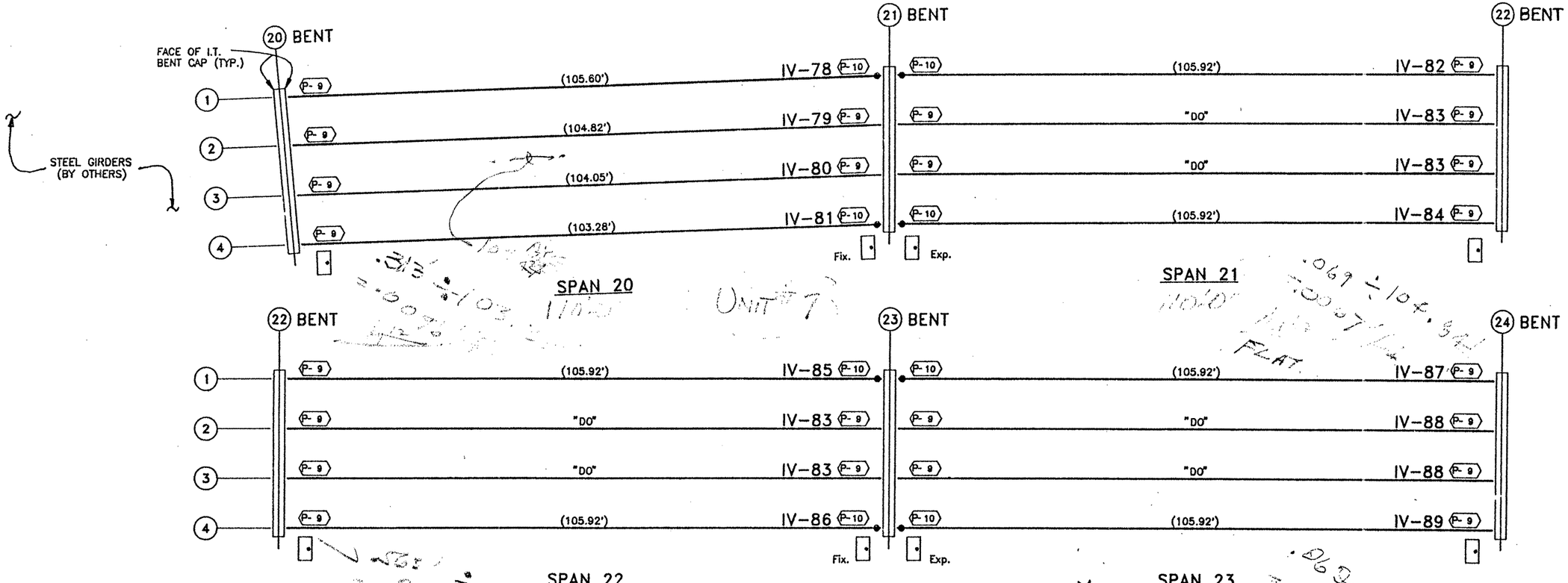

U.S. 83/281 INTERCHANGE
RAMP 2

N

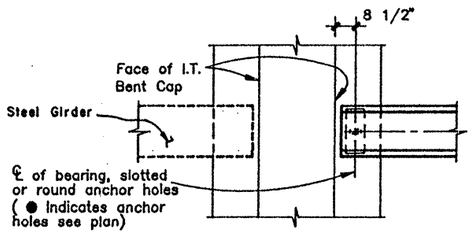

PLAN AT BENT 20

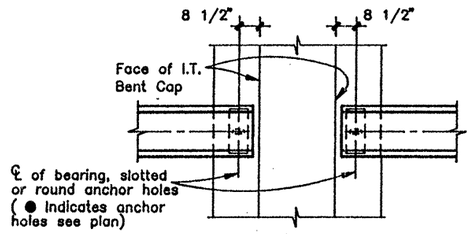

PLAN AT BENTS 21–29

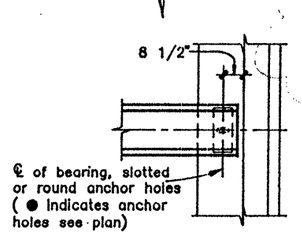

PLAN AT ABUT. 30

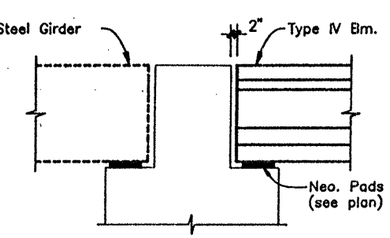

ELEV. AT BENT 20

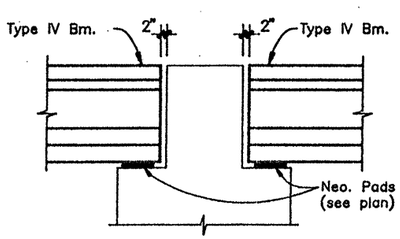

ELEV. AT BENTS 21–29

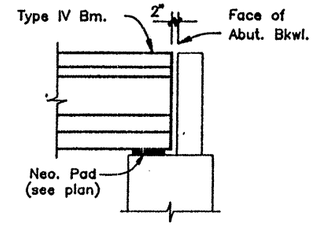

ELEV. AT ABUT. 30

( ) INDICATES BEAM LENGTH

TEXAS DEPARTMENT OF TRANSPORTATION
APPROVED
DIVISION OF BRIDGES AND STRUCTURES
SEP 24 1992
APPROVAL OF THIS DRAWING DOES NOT RELIEVE THE CONTRACTOR OF THE RESPONSIBILITY FOR THE CORRECTNESS OF DETAIL.

MANCO PRESTRESS COMPANY					
CONTRACTOR Gilbert of Texas Construction					
CONTRACTORS OPTIONS	END DIAFRAM :N/A INTERIOR DIAFRAM :N/A				SLAB : PANELS
FED.RD. DIV.NO.	STATE	PROJECT NO.			HWY. NO.
6	TEXAS	NH 92(50)M			83/281
STATE DIST.NO.	COUNTY		CONTROL NO.	SECTION NO.	JOB NO.
21	HIDALGO		39	17	97

COPYRIGHT 1989 BY STRUCTURAL ENGINEERING ASSOCIATES, INC. *CONSULTING ENGINEERS*, SAN ANTONIO, TEXAS

JOB NO.	DRAWN	CHECKED	DATE	SHEET NO.
92-018	C.A.J.	D.M.P.	8 / 26 / 92	E-12
SEA JOB NO. 92-059H	ERECTION SHEET			

328071

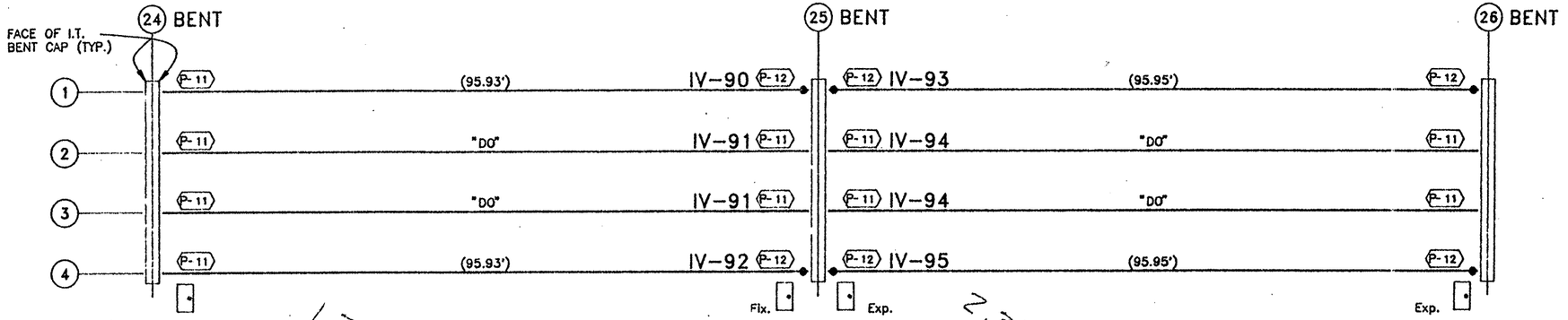

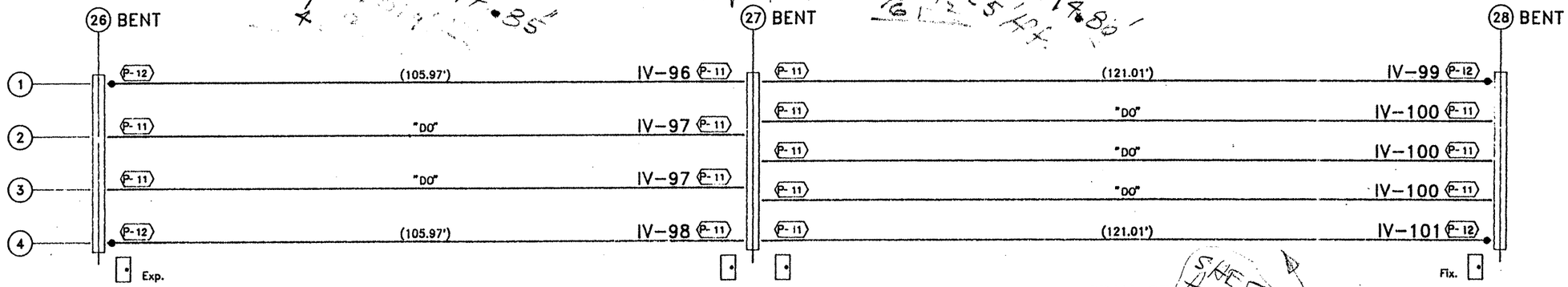

U.S. 83/281 INTERCHANGE
RAMP 2

( ) INDICATES BEAM LENGTH

TEXAS DEPARTMENT OF TRANSPORTATION
APPROVED
DIVISION OF BRIDGES AND STRUCTURES

SEP 2 4 1992

APPROVAL OF THIS DRAWING DOES NOT RELIEVE THE CONTRACTOR OF THE RESPONSIBILITY FOR THE CORRECTNESS OF DETAIL.

MANCO PRESTRESS COMPANY

CONTRACTOR Gilbert of Texas Construction

CONTRACTORS OPTIONS	END DIAFRAM :N/A INTERIOR DIAFRAM :N/A			SLAB : PANELS
FED.RD. DIV.NO.	STATE	PROJECT NO.		HWY. NO.
6	TEXAS	NH 92(50)M		83/281
STATE DIST.NO.	COUNTY	CONTROL NO.	SECTION NO.	JOB NO.
21	HIDALGO	39	17	97

COPYRIGHT 1989 BY STRUCTURAL ENGINEERING ASSOCIATES, INC. *CONSULTING ENGINEERS*, SAN ANTONIO, TEXAS

JOB NO. 92-018	DRAWN C.A.J.	CHECKED D.M.P.	DATE 8/26/92	SHEET NO. E-13
SEA JOB NO. 92-059H	ERECTION SHEET			

328071

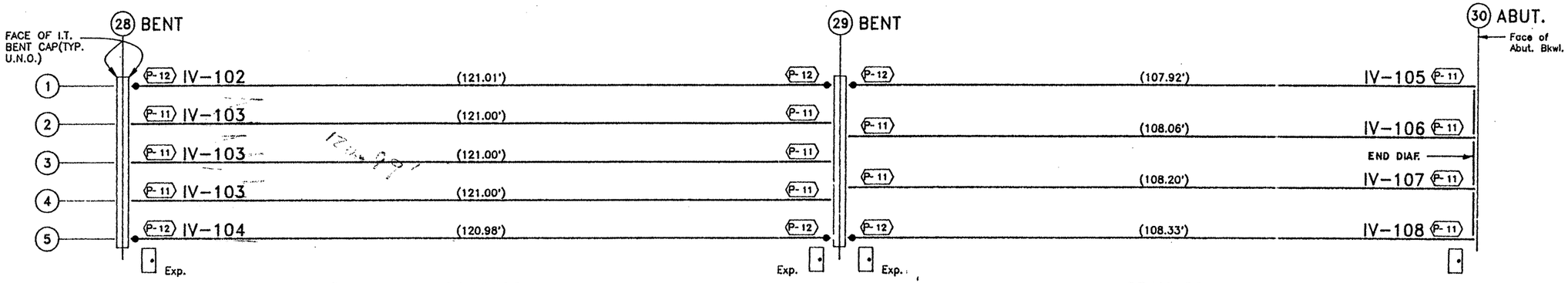

SPAN 28

SPAN 29

U.S. 83/281 INTERCHANGE
RAMP 2

( ) INDICATES BEAM LENGTH

TEXAS DEPARTMENT OF TRANSPORTATION
APPROVED
DIVISION OF BRIDGES AND STRUCTURES

SEP 24 1992

APPROVAL OF THIS DRAWING DOES NOT RELIEVE THE CONTRACTOR OF THE RESPONSIBILITY FOR THE CORRECTNESS OF DETAIL.

MANCO PRESTRESS COMPANY

CONTRACTOR Gilbert of Texas Construction

CONTRACTORS OPTIONS	END DIAFRAM :E.D.O. #2 INTERIOR DIAFRAM :N/A			SLAB : PANELS
FED.RD. DIV.NO.	STATE	PROJECT NO.		HWY. NO.
6	TEXAS	NH 92(50)M		83/281
STATE DIST.NO.	COUNTY	CONTROL NO.	SECTION NO.	JOB NO.
21	HIDALGO	39	17	97

COPYRIGHT 1989 BY STRUCTURAL ENGINEERING ASSOCIATES, INC. *CONSULTING ENGINEERS*, SAN ANTONIO, TEXAS

JOB NO.	DRAWN	CHECKED	DATE	SHEET NO.
92-018	C.A.J.	D.M.P.	8/26/92	E-14
SEA JOB NO. 92-059H	ERECTION SHEET			

328071

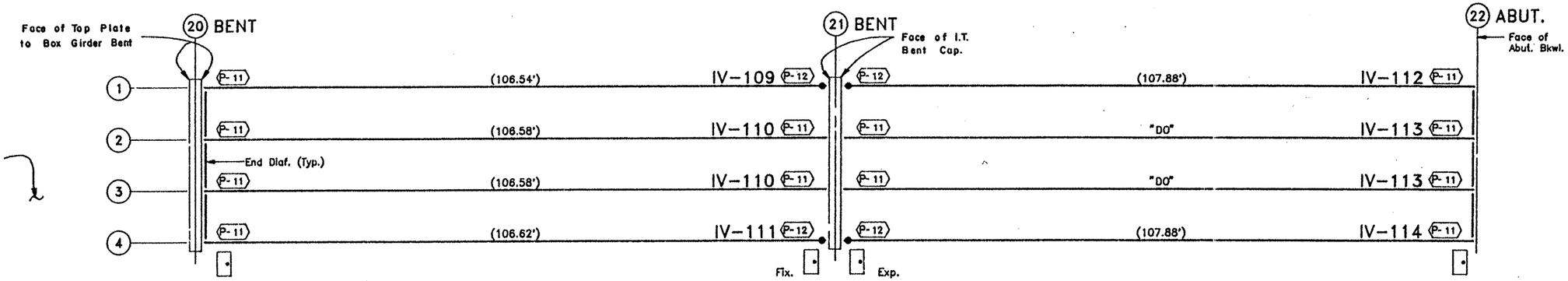

SPAN 20

SPAN 21

U.S. 83/281 INTERCHANGE
RAMP 3

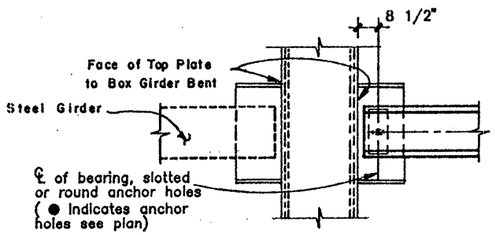

PLAN AT BENT 20

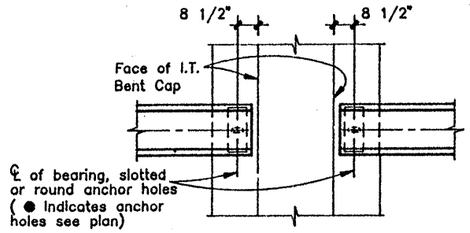

PLAN AT BENT 21

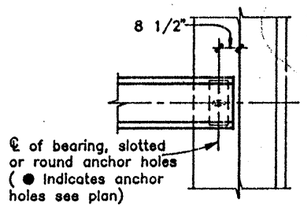

PLAN AT ABUT. 22

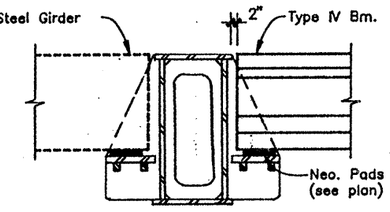

ELEV. AT BENT 20

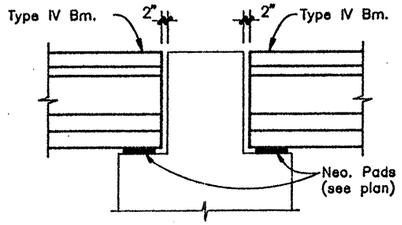

ELEV. AT BENT 21

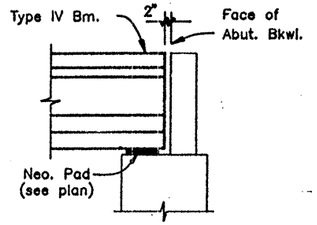

ELEV. AT ABUT. 22

( ) INDICATES BEAM LENGTH

TEXAS DEPARTMENT OF TRANSPORTATION
APPROVED
DIVISION OF BRIDGES AND STRUCTURES

SEP 24 1992

APPROVAL OF THIS DRAWING DOES NOT RELIEVE THE CONTRACTOR OF THE RESPONSIBILITY FOR THE CORRECTNESS OF DETAIL.

MANCO PRESTRESS COMPANY

CONTRACTOR Gilbert of Texas Construction

CONTRACTORS OPTIONS	END DIAFRAM :E.D.O. #2 INTERIOR DIAFRAM :N/A	SLAB : PANELS

FED.RD. DIV.NO.	STATE	PROJECT NO.	HWY. NO.
6	TEXAS	NH 92(50)M	83/281

STATE DIST.NO.	COUNTY	CONTROL NO.	SECTION NO.	JOB NO.
21	HIDALGO	39	17	97

COPYRIGHT 1989 BY STRUCTURAL ENGINEERING ASSOCIATES, INC. *CONSULTING ENGINEERS*, SAN ANTONIO, TEXAS

JOB NO.	DRAWN	CHECKED	DATE	SHEET NO.
92-018	C.A.J.	D.M.P.	8 / 26 / 92	E-15
SEA JOB NO. 92-059H	ERECTION SHEET			

328071

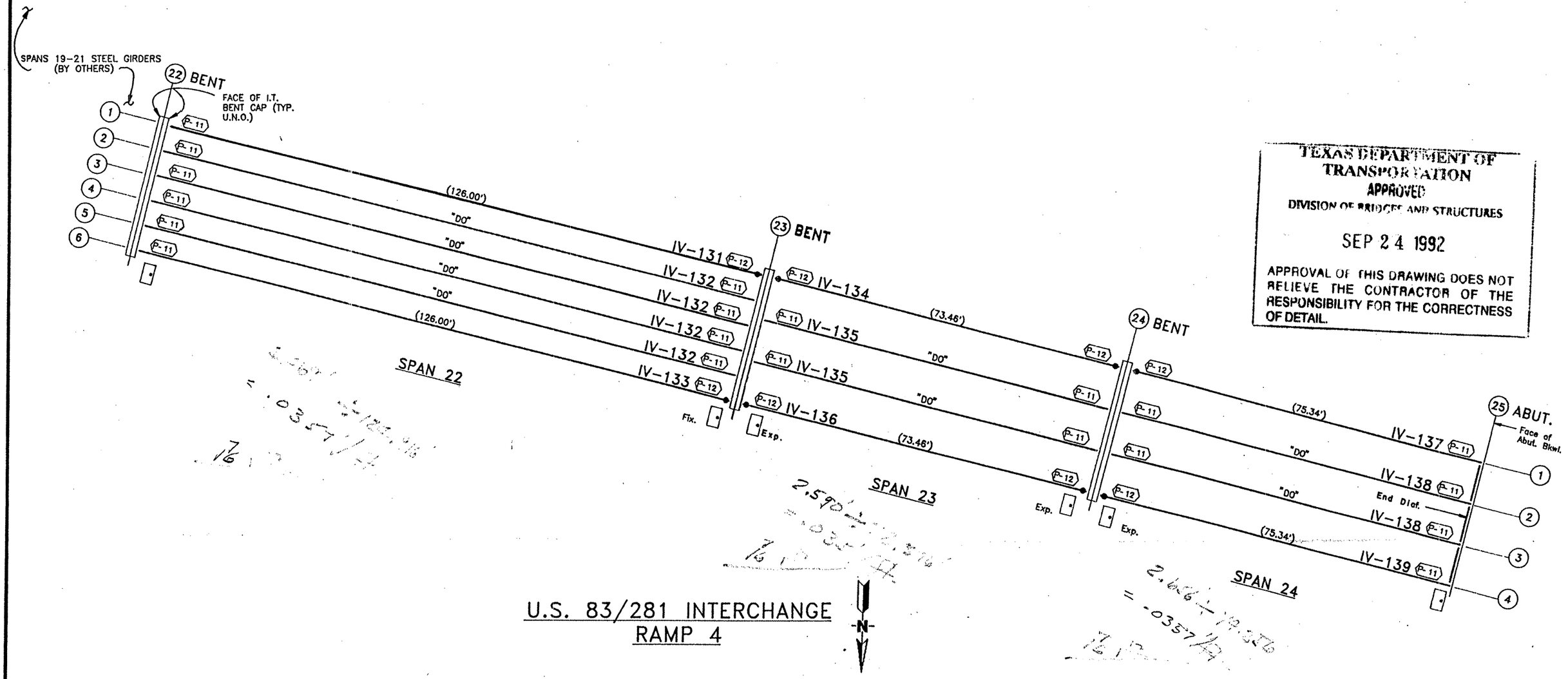

TEXAS DEPARTMENT OF TRANSPORTATION
APPROVED
DIVISION OF BRIDGES AND STRUCTURES

SEP 24 1992

APPROVAL OF THIS DRAWING DOES NOT RELIEVE THE CONTRACTOR OF THE RESPONSIBILITY FOR THE CORRECTNESS OF DETAIL.

U.S. 83/281 INTERCHANGE
RAMP 4

( ) INDICATES BEAM LENGTH

MANCO PRESTRESS COMPANY					
CONTRACTOR Gilbert of Texas Construction					
CONTRACTORS OPTIONS	END DIAFRAM :E.D.O. #2 INTERIOR DIAFRAM :N/A				SLAB : PANELS
FED.RD. DIV.NO.	STATE	PROJECT NO.			HWY. NO.
6	TEXAS	NH 92(50)M			83/281
STATE DIST.NO.	COUNTY		CONTROL NO.	SECTION NO.	JOB NO.
21	HIDALGO		39	17	97

COPYRIGHT 1989 BY STRUCTURAL ENGINEERING ASSOCIATES, INC. *CONSULTING ENGINEERS*, SAN ANTONIO, TEXAS

JOB NO.	DRAWN	CHECKED	DATE	SHEET NO.
92-018	C.A.J.	D.M.P.	8 / 26 / 92	E-17
SEA JOB NO. 92-059H	ERECTION SHEET			

328071

INDEX

STRUCTURE		BEAM		LENGTH			1/2"ø–270k LO-LAX STRANDS					CONCRETE		ENDS		BEAM DETAIL SHEET NO.	DESIGN REFERENCE NO.	REMARKS
										DEPRESSED								
DESIG-NATION	SPAN NO.	TYPE & MARK NO.	QUANTITY	I.D.T.S. ADDED	DESIGN (A)	CAST (B)	TOTAL QUANTITY	"e" AT ℄	"e" AT END	QUAN.	AT	MINIMUM RELEASE	MIN. COMP. 28 DAY STRENGTH	SKEW (INCHES)	BATTER (INCHES)			
U.S. 83/281 INTERCHANGE RAMP 1	18	IV–62	1	None	98.42'	98.47'	48	18.42"	10.92"	10	A–52	5220	5810	None	None	IV–62	O.D.# 9	NONE
	18,19	IV–63	4	None	98.42'	98.47'	48	18.42"	10.92"	10	A–52	5220	5810	None	None	IV–63	O.D.# 9	NONE
	18	IV–64	1	None	98.42'	98.47'	48	18.42"	10.92"	10	A–52	5220	5810	None	None	IV–64	O.D.# 9	NONE
	19	IV–65	1	None	98.42'	98.47'	48	18.42"	10.92"	10	A–52	5220	5810	None	None	IV–65	O.D.# 9	NONE
	19	IV–66	1	None	98.42'	98.47'	48	18.42"	10.92"	10	A–52	5220	5810	None	None	IV–66	O.D.# 9	NONE
	20	IV–67	1	None	98.42'	98.47'	46	18.84"	12.23"	8	A–52	5280	5760	None	None	IV–67	O.D.# 11	NONE
	20,21	IV–68	4	None	98.42'	98.47'	46	18.84"	12.23"	8	A–52	5280	5760	None	None	IV–68	O.D.# 11	NONE
	20	IV–69	1	None	98.42'	98.47'	46	18.84"	12.23"	8	A–52	5280	5760	None	None	IV–69	O.D.# 11	NONE
	21	IV–70	1	None	98.42'	98.47'	46	18.84"	12.23"	8	A–52	5280	5760	None	None	IV–70	O.D.# 11	NONE
	21	IV–71	1	None	98.42'	98.47'	46	18.84"	12.23"	8	A–52	5280	5760	None	None	IV–71	O.D.# 11	NONE
	25	IV–72	1	None	105.97'	106.02'	46	19.88"	12.23"	8	A–52	5278	6088	None	1 3/4"	IV–72	GPNSLR	NONE
	25	IV–73	2	None	105.97'	106.02'	46	19.88"	12.23"	8	A–52	5278	6088	None	1 3/4"	IV–73	GPNSLR	NONE
	25	IV–74	1	None	105.97'	106.02'	46	19.88"	12.23"	8	A–52	5278	6088	None	1 3/4"	IV–74	GPNSLR	NONE
	26	IV–75	1	None	107.87'	107.92'	48	19.67"	10.92"	10	A–52	5209	6343	None	2"	IV–75	GPNSLR	NONE
	26	IV–76	2	None	107.87'	107.92'	48	19.67"	10.92"	10	A–52	5209	6343	None	2"	IV–76	GPNSLR	NONE
	26	IV–77	1	None	107.87'	107.92'	48	19.67"	10.92"	10	A–52	5209	6343	None	2"	IV–77	GPNSLR	NONE
U.S. 83/281 INTERCHANGE RAMP 2	20	IV–78	1	None	105.60'	105.65'	46	19.88"	12.23"	8	A–52	5278	6088	5/8"	None	IV–78	GPNSLR	NONE
	20	IV–79	1	None	104.82'	104.87'	46	19.88"	12.23"	8	A–52	5278	6088	5/8"	None	IV–79	GPNSLR	NONE
	20	IV–80	1	None	104.05'	104.10'	46	19.88"	12.23"	8	A–52	5278	6088	5/8"	None	IV–80	GPNSLR	NONE
	20	IV–81	1	None	103.28'	103.33'	46	19.88"	12.23"	8	A–52	5278	6088	5/8"	None	IV–81	GPNSLR	NONE
	21	IV–82	1	None	105.92'	105.97'	46	19.88"	12.23"	8	A–52	5278	6088	None	None	IV–82	GPNSLR	NONE
	21,22	IV–83	4	None	105.92'	105.97'	46	19.88"	12.23"	8	A–52	5278	6088	None	None	IV–83	GPNSLR	NONE
	21	IV–84	1	None	105.92'	105.97'	46	19.88"	12.23"	8	A–52	5278	6088	None	None	IV–84	GPNSLR	NONE
	22	IV–85	1	None	105.92'	105.97'	46	19.88"	12.23"	8	A–52	5278	6088	None	None	IV–85	GPNSLR	NONE
	22	IV–86	1	None	105.92'	105.97'	46	19.88"	12.23"	8	A–52	5278	6088	None	None	IV–86	GPNSLR	NONE
	23	IV–87	1	None	105.92'	105.97'	46	19.88"	12.23"	8	A–52	5278	6088	None	5/8"	IV–87	GPNSLR	NONE
	23	IV–88	2	None	105.92'	105.97'	46	19.88"	12.23"	8	A–52	5278	6088	None	5/8"	IV–88	GPNSLR	NONE
	23	IV–89	1	None	105.92'	105.97'	46	19.88"	12.23"	8	A–52	5278	6088	None	5/8"	IV–89	GPNSLR	NONE
	24	IV–90	1	None	95.93'	95.98'	46	18.84"	12.23"	8	A–52	5280	5280	None	1"	IV–90	O.D.# 12	NONE
	24	IV–91	2	None	95.93'	95.98'	46	18.84"	12.23"	8	A–52	5280	5280	None	1"	IV–91	O.D.# 12	NONE
	24	IV–92	1	None	95.93'	95.98'	46	18.84"	12.23"	8	A–52	5280	5280	None	1"	IV–92	O.D.# 12	NONE
	25	IV–93	1	None	95.95'	96.00'	46	18.84"	12.23"	8	A–52	5280	5280	None	1 3/8"	IV–93	O.D.# 12	NONE
	25	IV–94	2	None	95.95'	96.00'	46	18.84"	12.23"	8	A–52	5280	5280	None	1 3/8"	IV–94	O.D.# 12	NONE
	25	IV–95	1	None	95.95'	96.00'	46	18.84"	12.23"	8	A–52	5280	5280	None	1 3/8"	IV–95	O.D.# 12	NONE
	26	IV–96	1	None	105.97'	106.02'	46	19.88"	12.23"	8	A–52	5278	6088	None	1 3/4"	IV–96	GPNSLR	NONE
	26	IV–97	2	None	105.97'	106.02'	46	19.88"	12.23"	8	A–52	5278	6088	None	1 3/4"	IV–97	GPNSLR	NONE
	26	IV–98	1	None	105.97'	106.02'	46	19.88"	12.23"	8	A–52	5278	6088	None	1 3/4"	IV–98	GPNSLR	NONE
	27	IV–99	1	None	121.01'	121.07'	48	19.67"	10.92"	10	A–52	5250	7143	None	2 1/8"	IV–99	GPNSLR	NONE
	27	IV–100	3	None	121.01'	121.07'	48	19.67"	10.92"	10	A–52	5250	7143	None	2 1/8"	IV–100	GPNSLR	NONE
	27	IV–101	1	None	121.01'	121.07'	48	19.67"	10.92"	10	A–52	5250	7143	None	2"	IV–101	GPNSLR	NONE
	28	IV–102	1	None	121.01'	121.07'	48	19.67"	10.92"	10	A–52	5250	7143	None	2 1/8"	IV–102	GPNSLR	NONE
	28	IV–103	3	None	121.00'	121.06'	48	19.67"	10.92"	10	A–52	5250	7143	None	2"	IV–103	GPNSLR	NONE
	28	IV–104	1	None	120.98'	121.04'	48	19.67"	10.92"	10	A–52	5250	7143	None	1 3/4"	IV–104	GPNSLR	NONE
	29	IV–105	1	None	107.92'	107.97'	48	19.67"	10.92"	10	A–52	5209	6343	None	2 1/8"	IV–105	GPNSLR	NONE
	29	IV–106	1	None	108.06'	108.11'	48	19.67"	10.92"	10	A–52	5209	6343	None	2"	IV–106	GPNSLR	NONE
	29	IV–107	1	None	108.20'	108.25'	48	19.67"	10.92"	10	A–52	5209	6343	None	1 7/8"	IV–107	GPNSLR	NONE
	29	IV–108	1	None	108.33'	108.38'	48	19.67"	10.92"	10	A–52	5209	6343	None	1 3/4"	IV–108	GPNSLR	NONE
U.S 83/281 INTERCHANGE RAMP 3	20	IV–109	1	None	106.54'	106.59'	46	19.88"	12.23"	8	A–52	5278	6088	None	1 3/4"	IV–109	GPNSLR	NONE
	20	IV–110	2	None	106.58'	106.63'	46	19.88"	12.23"	8	A–52	5278	6088	None	1 7/8"	IV–110	GPNSLR	NONE
	20	IV–111	1	None	106.62'	106.67'	46	19.88"	12.23"	8	A–52	5278	6088	None	2 1/8"	IV–111	GPNSLR	NONE
	21	IV–112	1	None	107.88'	107.93'	48	19.67"	10.92"	10	A–52	5209	6343	None	2 1/8"	IV–112	GPNSLR	NONE

TEXAS DEPARTMENT OF TRANSPORTATION
APPROVED
DIVISION OF BRIDGES AND STRUCTURES

SEP 24 1992

APPROVAL OF THIS DRAWING DOES NOT RELIEVE THE CONTRACTOR OF THE RESPONSIBILITY FOR THE CORRECTNESS OF DETAIL.

FINAL SUBMITTAL NO. 3
TOTAL LINEAR FEET OF THIS PROJECT : 10569.61'

MANCO PRESTRESS COMPANY

CONTRACTOR : Gilbert of Texas Construction

FED.RD. DIV.NO.	STATE	PROJECT NO.	HWY. NO.
6	TEXAS	NH 92(50)M	83/281

STATE DIST.NO.	COUNTY	CONTROL NO.	SECTION NO.	JOB NO.
21	HIDALGO	39	17	97

COPYRIGHT 1989 BY SEA STRUCTURAL ENGINEERING ASSOCIATES, INC. *CONSULTING ENGINEERS*, SAN ANTONIO, TEXAS

JOB NO.	DRAWN	CHECKED	DATE	SHEET NO.
92-018	C.A.J.	D.M.P.	8 / 26 / 92	I-4
SEA JOB NO. 92-059H	INDEX SHEET			

(P-2887-F)

INDEX

STRUCTURE DESIGNATION	SPAN NO.	BEAM TYPE & MARK NO.	BEAM QUANTITY	LENGTH I.D.T.S. ADDED	LENGTH DESIGN (A)	LENGTH CAST (B)	1/2"ø-270k LO-LAX STRANDS TOTAL QUANTITY	"e" AT ℄	"e" AT END	DEPRESSED QUAN.	DEPRESSED AT	CONCRETE MINIMUM RELEASE	CONCRETE MIN. COMP. 28 DAY STRENGTH	ENDS SKEW (INCHES)	ENDS BATTER (INCHES)	BEAM DETAIL SHEET NO.	DESIGN REFERENCE NO.	REMARKS
U.S. 83/281 INTERCHANGE RAMP 3	21	IV-113	2	None	107.88'	107.93'	48	19.67"	10.92"	10	A-52	5209	6343	None	2 1/8"	IV-113	GPNSLR	NONE
	21	IV-114	1	None	107.88'	107.93'	48	19.67"	10.92"	10	A-52	5209	6343	None	2 1/8"	IV-114	GPNSLR	NONE
U.S. 83/281 INTERCHANGE RAMP 4	15	IV-115	1	None	89.69'	89.73'	48	12.17"	12.17"	STRAIGHT		5600	6040	1 1/8"	None	IV-115	O.D.# 10	NONE
	15	IV-116	1	None	88.55'	88.59'	32	21.00"	13.88"	6	A-44	4000	5000	1 1/8"	None	IV-116	O.D.# 14	NONE
	15	IV-117	1	None	87.41'	87.45'	32	21.00"	13.88"	6	A-44	4000	5000	1 1/8"	None	IV-117	O.D.# 14	NONE
	15	IV-118	1	None	86.27'	86.31'	30	21.15"	15.55"	6	A-34	4000	5000	1 1/8"	None	IV-118	O.D.# 16	NONE
	16	IV-119	1	None	89.68'	89.72'	48	12.17"	12.17"	STRAIGHT		5600	6040	1 1/8"	None	IV-119	O.D.# 10	NONE
	16	IV-120	1	None	88.55'	88.59'	30	21.15"	15.55"	6	A-34	4000	5000	1 1/8"	None	IV-120	GPNSLR	NONE
	16	IV-121	1	None	87.41'	87.45'	30	21.15"	15.55"	6	A-34	4000	5000	1 1/8"	None	IV-121	GPNSLR	NONE
	16	IV-122	1	None	86.27'	86.31'	30	21.15"	15.55"	6	A-34	4000	5000	1 1/8"	None	IV-122	O.D.# 16	NONE
	17	IV-123	1	None	89.70'	89.74'	32	21.00"	13.88"	6	A-44	4000	5000	1 1/8"	5/8"	IV-123	GPNSLR	NONE
	17	IV-124	1	None	88.56'	88.60'	30	21.15"	15.55"	6	A-34	4000	5000	1 1/8"	5/8"	IV-124	GPNSLR	NONE
	17	IV-125	1	None	87.42'	87.46'	30	21.15"	15.55"	6	A-34	4000	5000	1 1/8"	5/8"	IV-125	GPNSLR	NONE
	17	IV-126	1	None	86.28'	86.32'	30	21.15"	15.55"	6	A-34	4000	5000	1 1/8"	5/8"	IV-126	O.D.# 16	NONE
	18	IV-127	1	None	89.70'	89.74'	32	21.00"	13.88"	6	A-44	4000	5000	1 1/8"	7/8"	IV-127	GPNSLR	NONE
	18	IV-128	1	None	88.56'	88.60'	30	21.15"	15.55"	6	A-34	4000	5000	1 1/8"	7/8"	IV-128	GPNSLR	NONE
	18	IV-129	1	None	87.42'	87.46'	30	21.15"	15.55"	6	A-34	4000	5000	1 1/8"	7/8"	IV-129	GPNSLR	NONE
	18	IV-130	1	None	86.28'	86.32'	30	21.15"	15.55"	6	A-34	4000	5000	1 1/8"	7/8"	IV-130	O.D.# 16	NONE
	22	IV-131	1	None	126.00'	126.06'	46	19.88"	12.23"	8	A-52	5342	7169	None	1 7/8"	IV-131	GPNSLR	NONE
	22	IV-132	4	None	126.00'	126.06'	46	19.88"	12.23"	8	A-52	5342	7169	None	1 7/8"	IV-132	GPNSLR	NONE
	22	IV-133	1	None	126.00'	126.06'	46	19.88"	12.23"	8	A-52	5342	7169	None	1 7/8"	IV-133	GPNSLR	NONE
	23	IV-134	1	None	73.46'	73.50'	46	12.23"	12.23"	STRAIGHT		5360	5360	None	1 7/8"	IV-134	O.D.# 13	NONE
	23	IV-135	2	None	73.46'	73.50'	46	12.23"	12.23"	STRAIGHT		5360	5360	None	1 7/8"	IV-135	O.D.# 13	NONE
	23	IV-136	1	None	73.46'	73.50'	32	13.88"	13.88"	STRAIGHT		4020	5000	None	1 7/8"	IV-136	O.D.# 15	NONE
	24	IV-137	1	None	75.34'	75.38'	22	21.84"	17.84"	4	A-26	4000	5000	None	1 7/8"	IV-137	GPNSLR	NONE
	24	IV-138	2	None	75.34'	75.38'	22	21.84"	17.84"	4	A-26	4000	5000	None	1 7/8"	IV-138	GPNSLR	NONE
	24	IV-139	1	None	75.34'	75.38'	22	21.84"	17.84"	4	A-26	4000	5000	None	1 7/8"	IV-139	GPNSLR	NONE

TEXAS DEPARTMENT OF TRANSPORTATION
APPROVED
DIVISION OF BRIDGES AND STRUCTURES

SEP 24 1992

APPROVAL OF THIS DRAWING DOES NOT RELIEVE THE CONTRACTOR OF THE RESPONSIBILITY FOR THE CORRECTNESS OF DETAIL.

MANCO PRESTRESS COMPANY

CONTRACTOR : Gilbert of Texas Construction

FED.RD. DIV.NO.	STATE	PROJECT NO.			HWY. NO.
6	TEXAS	NH 92(50)M			83/281
STATE DIST.NO.	COUNTY	CONTROL NO.	SECTION NO.	JOB NO.	
21	HIDALGO	39	17	97	

COPYRIGHT 1989 BY SEA STRUCTURAL ENGINEERING ASSOCIATES, INC. CONSULTING ENGINEERS, SAN ANTONIO, TEXAS

JOB NO.	DRAWN	CHECKED	DATE	SHEET NO.
92-018	C.A.J.	D.M.P.	8/26/92	I-5
SEA JOB NO. 92-059H	INDEX SHEET			

ELASTOMERIC BEARING PADS SCHEDULE

MARK	TYPE	DURO.	QUANT.	X	Y	L	W	A	B	C	D	E	F
P-9	A	50	62	2 1/2"	2 1/2"	22"	9"	——	——	——	——	——	——
P-10	AH	50	26	2 1/2"	2 1/2"	22"	9"	——	——	——	——	4 1/2"	11"
P-11	A	50	86	2 5/8"	2 3/8"	22"	9"	——	——	——	——	——	——
P-12	AH	50	34	2 5/8"	2 3/8"	22"	9"	——	——	——	——	4 1/2"	11"

P-9 = 62
P-10 = 34

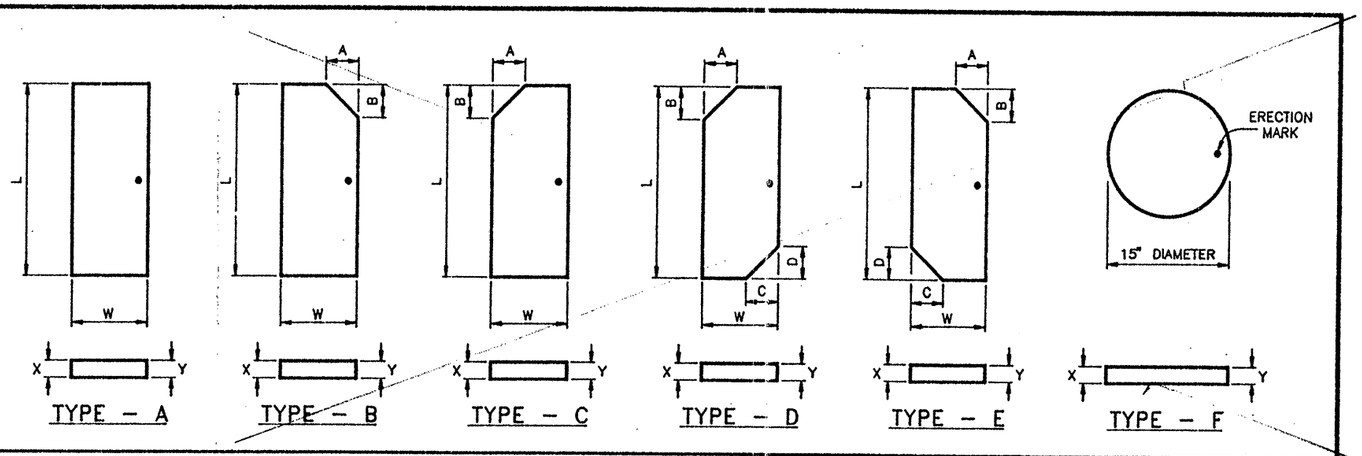

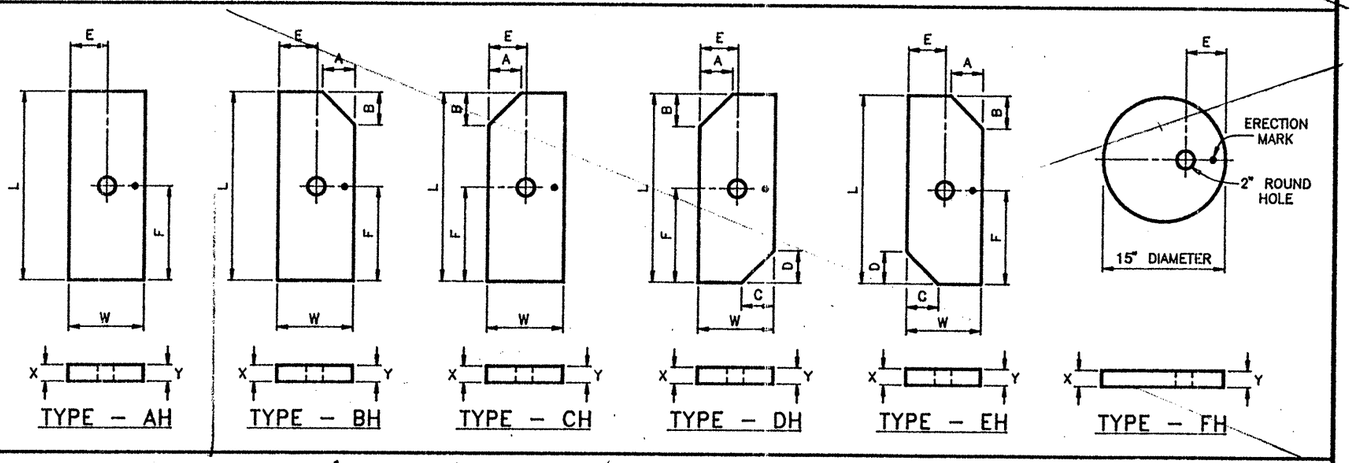

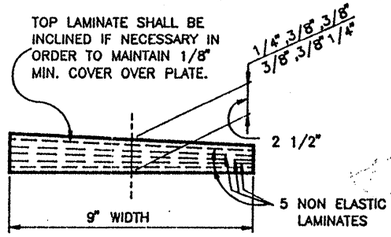

50 DUROMETER
LAMINATED BEARING

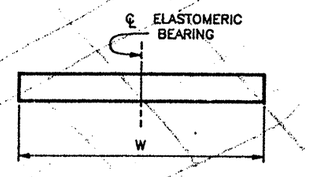

70 DUROMETER
PLAIN BEARING

TEXAS DEPARTMENT OF TRANSPORTATION
APPROVED
DIVISION OF BRIDGES AND STRUCTURES

SEP 24 1992

APPROVAL OF THIS DRAWING DOES NOT RELIEVE THE DESIGNER OR DRAWER OF THE RESPONSIBILITY FOR THE CORRECTNESS OF DETAIL.

℄ DENOTES ERECTION MARK

MANCO PRESTRESS COMPANY

CONTRACTOR : Gilbert of Texas Construction

FED.RD. DIV.NO.	STATE	PROJECT NO.			HWY. NO.
6	TEXAS	NH 92(50)M			83/281
STATE DIST.NO.	COUNTY	CONTROL NO.	SECTION NO.	JOB NO.	
21	HIDALGO	39	17	97	

COPYRIGHT 1989 BY
STRUCTURAL ENGINEERING ASSOCIATES, INC.
CONSULTING ENGINEERS, SAN ANTONIO, TEXAS

JOB NO.	DRAWN	CHECKED	DATE	SHEET NO.
92-018	C.A.J.	D.M.P.	8/26/92	NP-3
SEA JOB NO. 92-059H	NEOPRENE PADS			

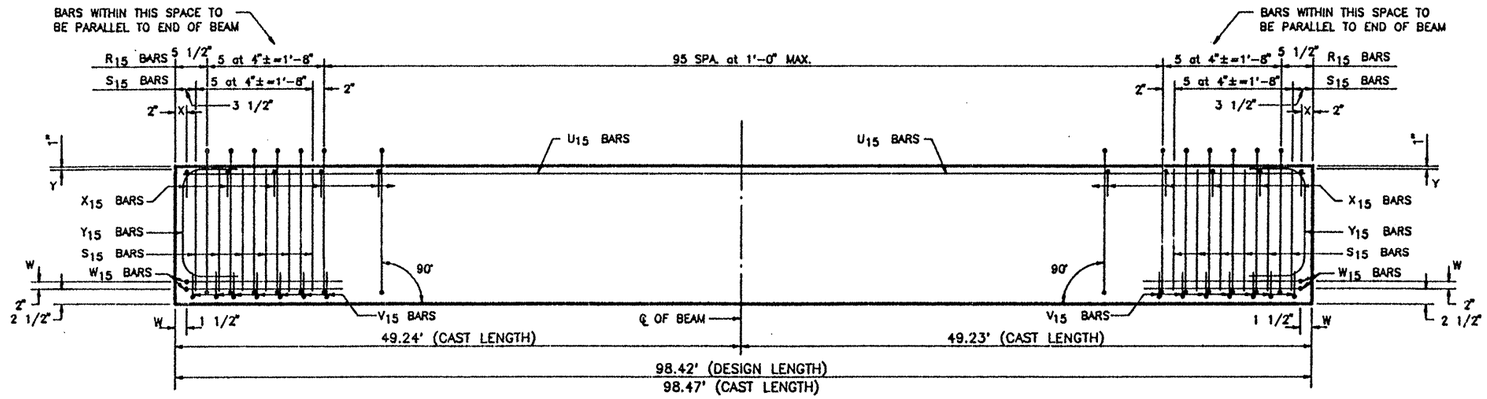

ELEVATION – REINFORCING STEEL

REINFORCING STEEL SCHEDULE				
BAR	QUANTITY PER BEAM	TOTAL QUANTITY	SIZE	LENGTH
R_{15}	106	106	#3	standard
X_{15}	102	102	#3	standard
Y_{15}	4	4	#6	standard
S_{15}	24	24	#7	standard
V_{15}	14	14	#3	standard
W_{15}	4	4	#5	standard
U_{15}	2	2	#5	98'-2"

TEXAS DEPARTMENT OF TRANSPORTATION
APPROVED
DIVISION OF BRIDGES AND STRUCTURES
SEP 24 1992
APPROVAL OF THIS DRAWING DOES NOT RELIEVE THE CONTRACTOR OF THE RESPONSIBILITY FOR THE CORRECTNESS OF DETAIL.

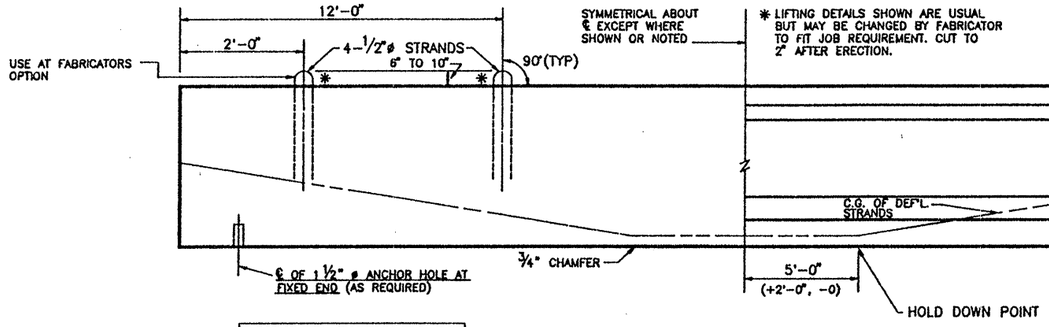

DOUBLE LIFTING LOOP DETAIL
(TYP. FOR BEAMS OVER 75')

BEAM ELEVATION
SEE PLAN VIEW FOR HOLE(S) LOCATION

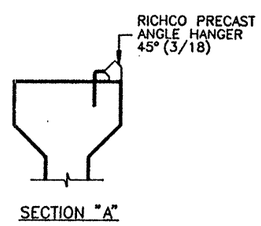

SECTION "A"

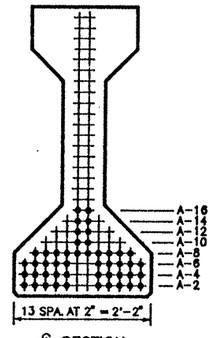

℄ SECTION

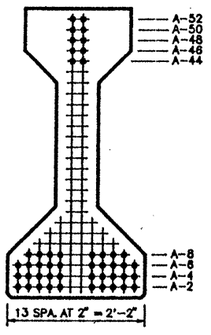

END VIEW

TYPE "IV" BEAM QUANTITY : 1

LO-LAX STRAND PATTERN	
NUMBER OF STRANDS	: 48 ~1/2" ø 270 K @ 31.00 K EACH
NUMBER OF STRAIGHT STRANDS	: 38
NUMBER OF DEFLECTED STRANDS	: 10 @ A – 52
CONCRETE RELEASE STRENGTH	: 5220 PSI
CONCRETE DESIGN STRENGTH	: 5810 PSI
ECCENTRICITY @ ℄	: 18.42" ECCENTRICITY @ END : 10.92"

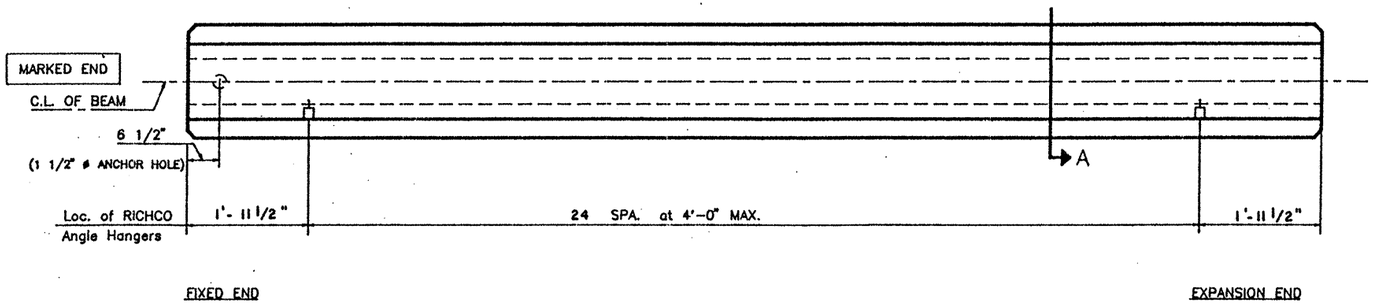

PLAN

TOP FINISH PANELS
SEE STANDARD SHEET S-"IV" FOR TOP FINISH AND OTHER NOTES AND DETAILS.

DESIGN NO. : O.D.# 9
TOTAL BEAM LENGTH OF THIS SHEET : 98.42'

MANCO PRESTRESS COMPANY

CONTRACTOR Gilbert of Texas Construction

FED.RD. DIV.NO.	STATE	PROJECT NO.	HWY. NO.
6	TEXAS	NH 92(50)M	83/281

STATE DIST.NO.	COUNTY	CONTROL NO.	SECTION NO.	JOB NO.
21	HIDALGO	39	17	97

COPYRIGHT 1989 BY SEA STRUCTURAL ENGINEERING ASSOCIATES, INC. CONSULTING ENGINEERS, SAN ANTONIO, TEXAS

JOB NO.	DRAWN	CHECKED	DATE	SHEET/MARK NO.
92-018	C.A.J.	D.M.P.	8/26/92	IV-62
SEA JOB NO. 92-059H	FABRICATION SHEET			

330020

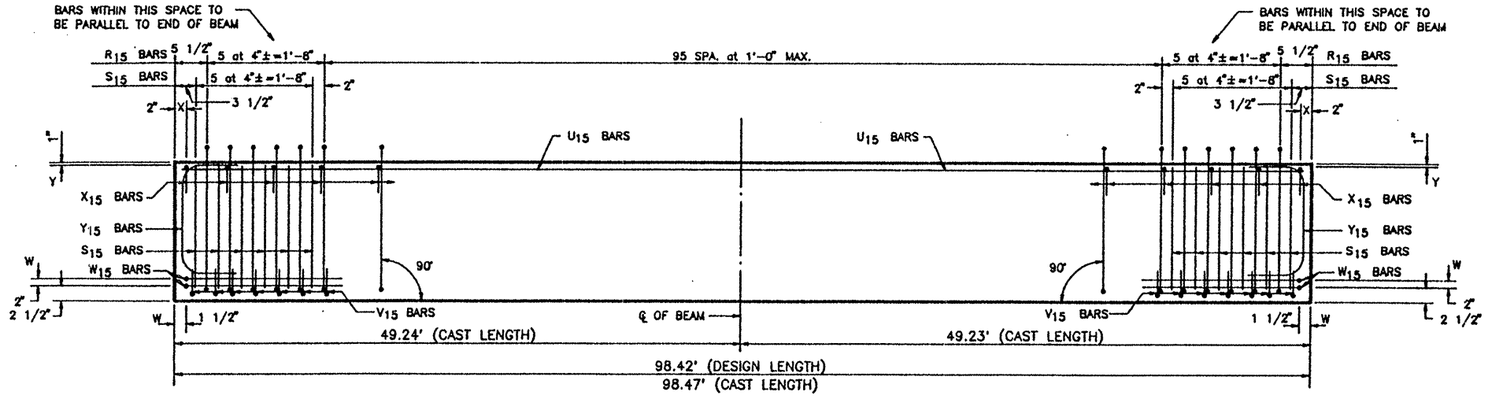

ELEVATION – REINFORCING STEEL

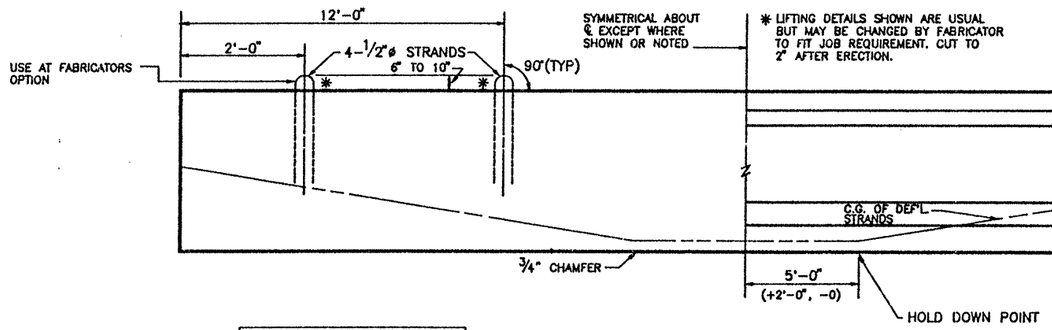

DOUBLE LIFTING LOOP DETAIL
(TYP. FOR BEAMS OVER 75')

BEAM ELEVATION
SEE PLAN VIEW FOR HOLE(S) LOCATION

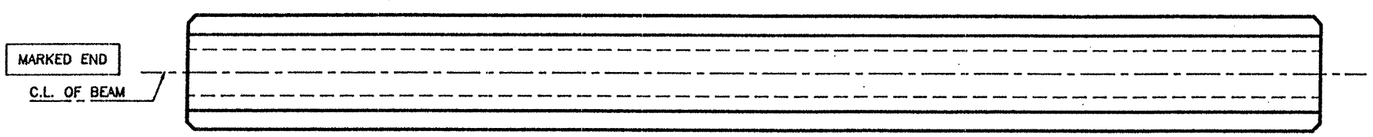

PLAN

TOP FINISH PANELS
SEE STANDARD SHEET S-"IV" FOR TOP FINISH AND OTHER NOTES AND DETAILS.

TEXAS DEPARTMENT OF TRANSPORTATION
APPROVED
DIVISION OF BRIDGES AND STRUCTURES
SEP 24 1992
APPROVAL OF THIS DRAWING DOES NOT RELIEVE THE CONTRACTOR OF THE RESPONSIBILITY FOR THE CORRECTNESS OF DETAIL.

REINFORCING STEEL SCHEDULE

BAR	QUANTITY PER BEAM	TOTAL QUANTITY	SIZE	LENGTH
R_{15}	106	424	#3	standard
X_{15}	102	408	#3	standard
Y_{15}	4	16	#6	standard
S_{15}	24	96	#7	standard
V_{15}	14	56	#3	standard
W_{15}	4	16	#5	standard
U_{15}	2	8	#5	98'-2"

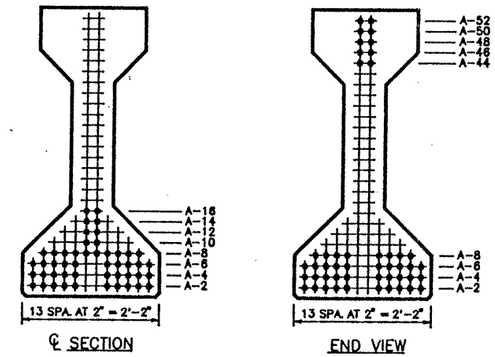

TYPE "IV" BEAM QUANTITY : 4

LO-LAX STRAND PATTERN		
NUMBER OF STRANDS : 48 ~1/2" ø 270 K @ 31.00 K EACH		
NUMBER OF STRAIGHT STRANDS	: 38	
NUMBER OF DEFLECTED STRANDS	: 10 @ A – 52	
CONCRETE RELEASE STRENGTH	: 5220	PSI
CONCRETE DESIGN STRENGTH	: 5810	PSI
ECCENTRICITY @ ℄ : 18.42"	ECCENTRICITY @ END : 10.92"	

DESIGN NO. : O.D.# 9
TOTAL BEAM LENGTH OF THIS SHEET : 393.68'

MANCO PRESTRESS COMPANY
CONTRACTOR Gilbert of Texas Construction

FED.RD. DIV.NO.	STATE	PROJECT NO.	HWY. NO.
6	TEXAS	NH 92(50)M	83/281

STATE DIST.NO.	COUNTY	CONTROL NO.	SECTION NO.	JOB NO.
21	HIDALGO	39	17	97

COPYRIGHT 1989 BY
STRUCTURAL ENGINEERING ASSOCIATES, INC.
CONSULTING ENGINEERS, SAN ANTONIO, TEXAS

JOB NO.	DRAWN	CHECKED	DATE	SHEET/MARK NO.
92-018	C.A.J.	D. M.P.	8 /26 /92	IV-63
SEA JOB NO. 92-059H	FABRICATION SHEET			

330020

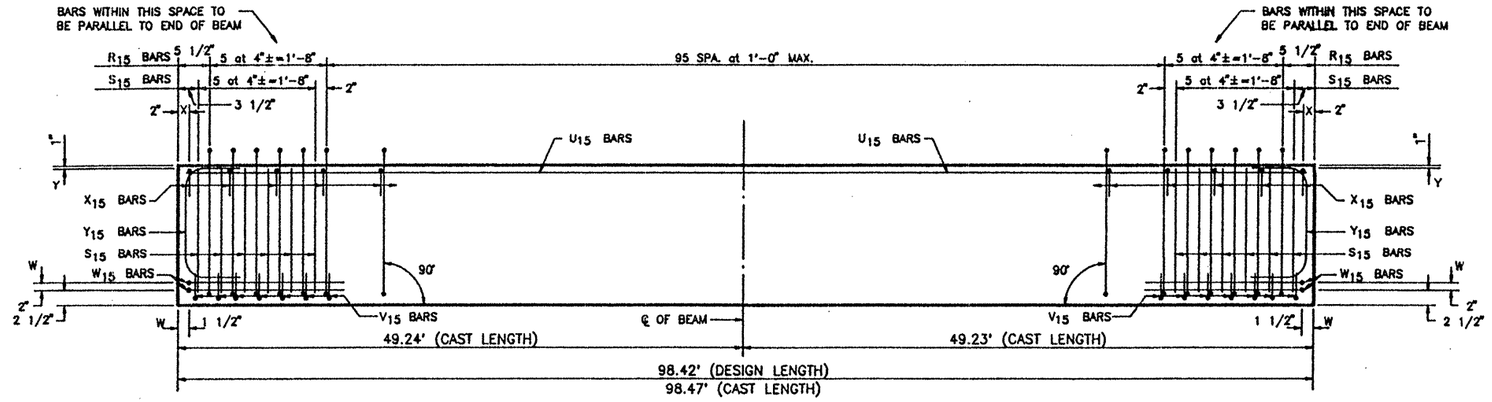

ELEVATION – REINFORCING STEEL

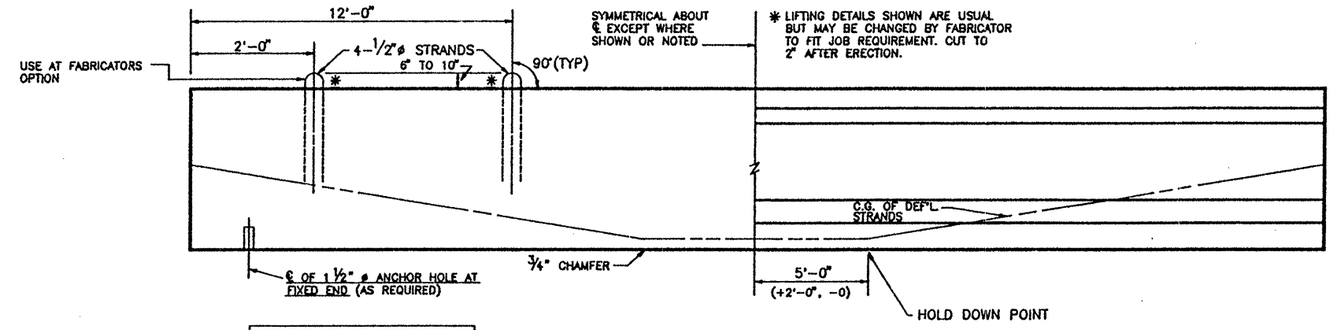

DOUBLE LIFTING LOOP DETAIL
(TYP. FOR BEAMS OVER 75')

BEAM ELEVATION
SEE PLAN VIEW FOR HOLE(S) LOCATION

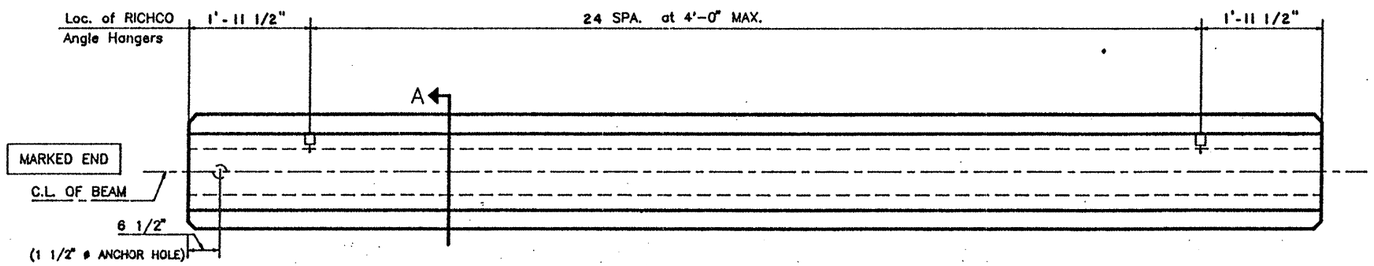

FIXED END

EXPANSION END

PLAN

TOP FINISH PANELS
SEE STANDARD SHEET S-"IV" FOR TOP FINISH AND OTHER NOTES AND DETAILS.

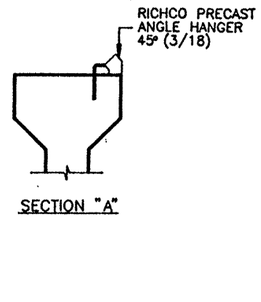

SECTION "A"

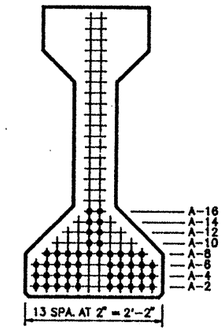

℄ SECTION

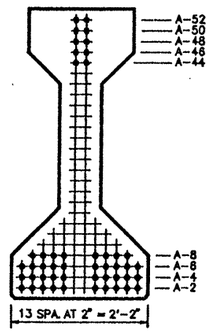

END VIEW

TYPE "IV" BEAM QUANTITY : 1

REINFORCING STEEL SCHEDULE				
BAR	QUANTITY PER BEAM	TOTAL QUANTITY	SIZE	LENGTH
R_{15}	106	106	#3	standard
X_{15}	102	102	#3	standard
Y_{15}	4	4	#6	standard
S_{15}	24	24	#7	standard
V_{15}	14	14	#3	standard
W_{15}	4	4	#5	standard
U_{15}	2	2	#5	98'-2"

TEXAS DEPARTMENT OF TRANSPORTATION
APPROVED
DIVISION OF BRIDGES AND STRUCTURES
SEP 24 1992
APPROVAL OF THIS DRAWING DOES NOT RELIEVE THE CONTRACTOR OF THE RESPONSIBILITY FOR THE CORRECTNESS OF DETAIL.

LO-LAX STRAND PATTERN		
NUMBER OF STRANDS	: 48 ~1/2" ø 270 K @ 31.00 K EACH	
NUMBER OF STRAIGHT STRANDS	: 38	
NUMBER OF DEFLECTED STRANDS	: 10 @ A – 52	
CONCRETE RELEASE STRENGTH	: 5220	PSI
CONCRETE DESIGN STRENGTH	: 5810	PSI
ECCENTRICITY @ ℄	: 18.42"	ECCENTRICITY @ END : 10.92"

DESIGN NO. : O.D.# 9
TOTAL BEAM LENGTH OF THIS SHEET : 98.42'

MANCO PRESTRESS COMPANY
CONTRACTOR Gilbert of Texas Construction

FED.RD. DIV.NO.	STATE	PROJECT NO.	HWY. NO.
6	TEXAS	NH 92(50)M	83/281

STATE DIST.NO.	COUNTY	CONTROL NO.	SECTION NO.	JOB NO.
21	HIDALGO	39	17	97

COPYRIGHT 1989 BY STRUCTURAL ENGINEERING ASSOCIATES, INC. CONSULTING ENGINEERS, SAN ANTONIO, TEXAS

JOB NO.	DRAWN	CHECKED	DATE	SHEET/MARK NO.
92-018	C.A.J.	D.M.P.	8/26/92	IV-64
SEA JOB NO. 92-059H	FABRICATION SHEET			

330020

Form 1284A

TEXAS DOT — DIVISION OF BRIDGES and STRUCTURES

County Hidalgo Highway US 281 Design GAF Date 12/92

C-S-J 0039-17-97 Ck Dsn Date

Structure U.S. 83 - U.S. 281 Interchange

Design for Modular Joint Blockout Reinforcing Sheet 1 of 1

Sketch Not to scale

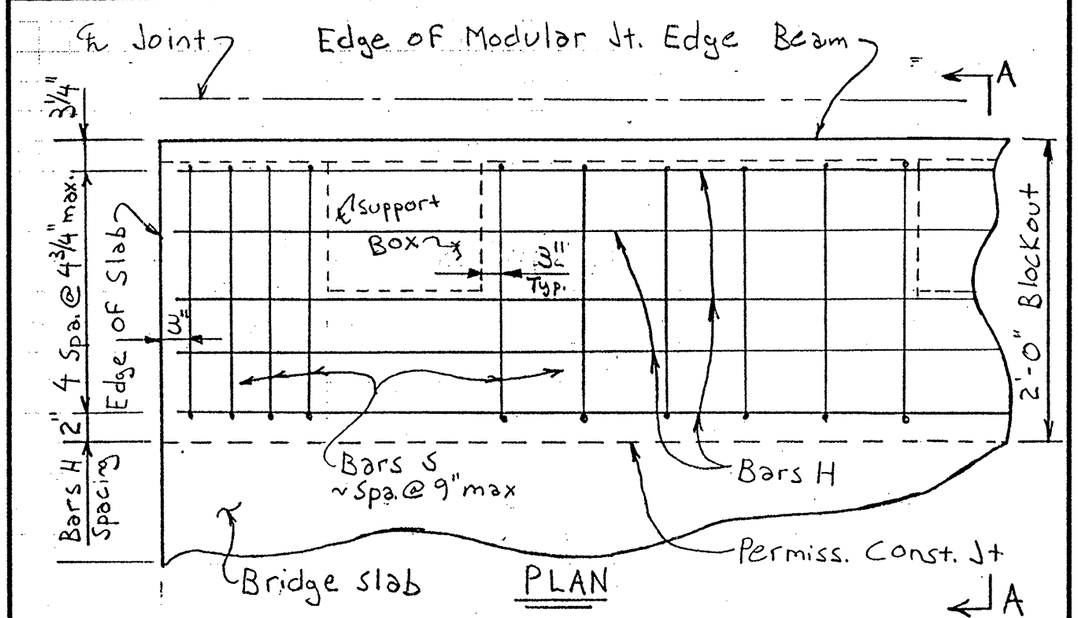

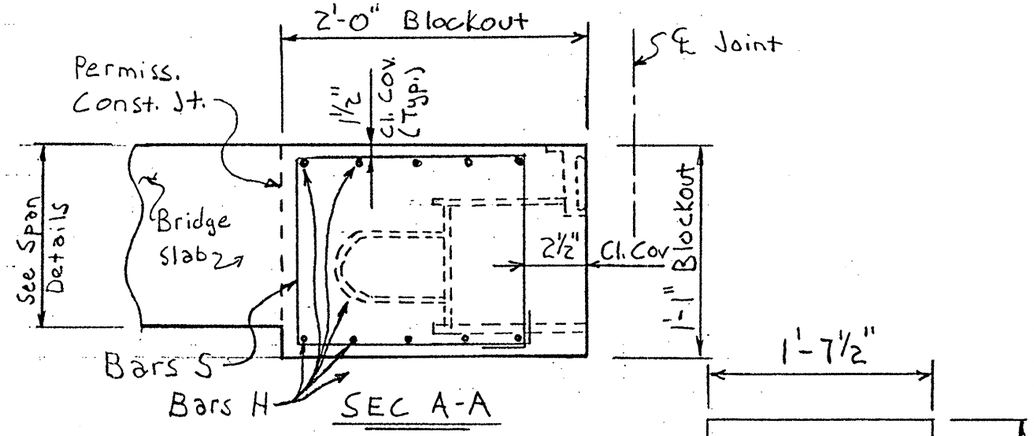

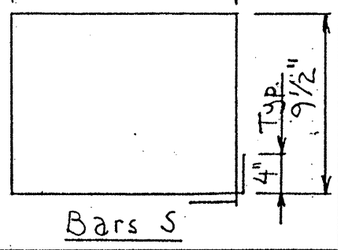

Notes: Bars H ~ #5 31'-9" long
Bars S ~ #4 5'-6" long

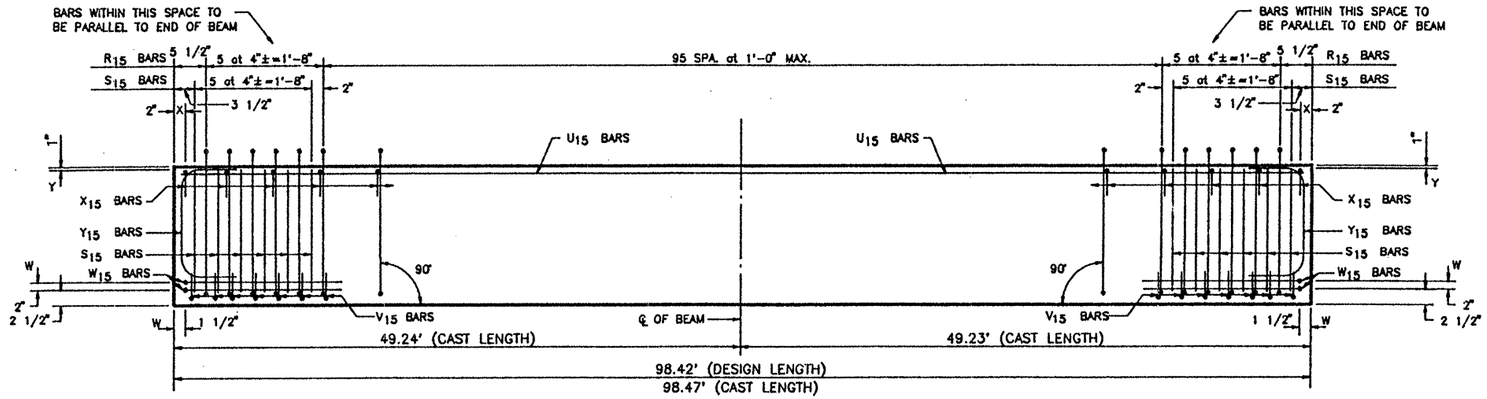

ELEVATION – REINFORCING STEEL

REINFORCING STEEL SCHEDULE				
BAR	QUANTITY PER BEAM	TOTAL QUANTITY	SIZE	LENGTH
R_{15}	106	106	#3	standard
X_{15}	102	102	#3	standard
Y_{15}	4	4	#6	standard
S_{15}	24	24	#7	standard
V_{15}	14	14	#3	standard
W_{15}	4	4	#5	standard
U_{15}	2	2	#5	98'-2"

TEXAS DEPARTMENT OF TRANSPORTATION
APPROVED
DIVISION OF BRIDGES AND STRUCTURES

SEP 24 1992

APPROVAL OF THIS DRAWING DOES NOT RELIEVE THE CONTRACTOR OF THE RESPONSIBILITY FOR THE CORRECTNESS OF DETAIL.

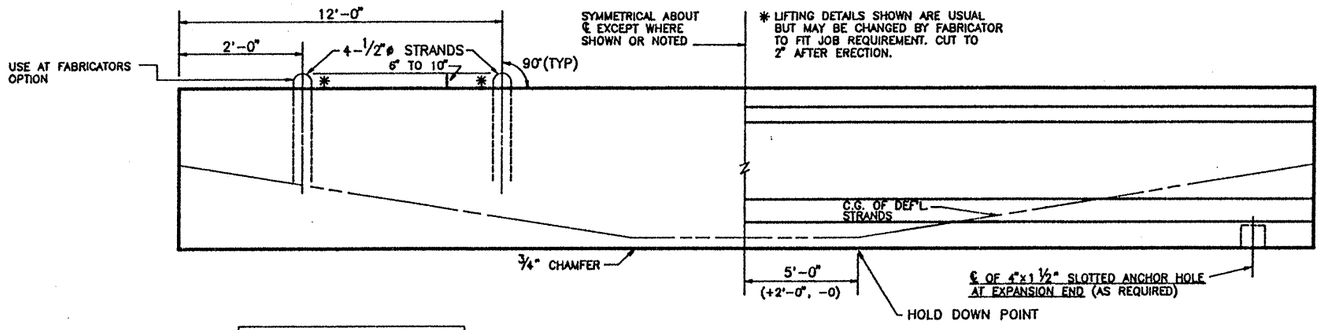

DOUBLE LIFTING LOOP DETAIL
(TYP. FOR BEAMS OVER 75')

BEAM ELEVATION
SEE PLAN VIEW FOR HOLE(S) LOCATION

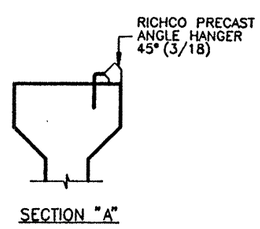

SECTION "A"

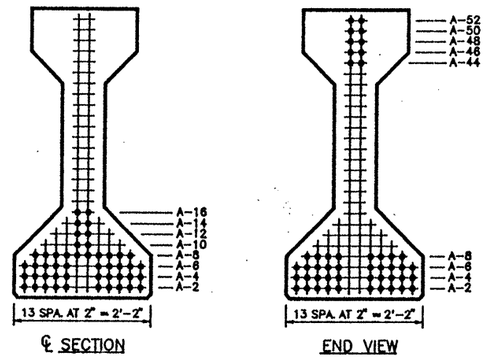

TYPE "IV" BEAM QUANTITY : 1

LO-LAX STRAND PATTERN	
NUMBER OF STRANDS	: 48 ~1/2" ø 270 K @ 31.00 K EACH
NUMBER OF STRAIGHT STRANDS	: 38
NUMBER OF DEFLECTED STRANDS	: 10 @ A – 52
CONCRETE RELEASE STRENGTH	: 5220 PSI
CONCRETE DESIGN STRENGTH	: 5810 PSI
ECCENTRICITY @ ℄	: 18.42" ECCENTRICITY @ END : 10.92"

DESIGN NO. : O.D.# 9
TOTAL BEAM LENGTH OF THIS SHEET : 98.42'

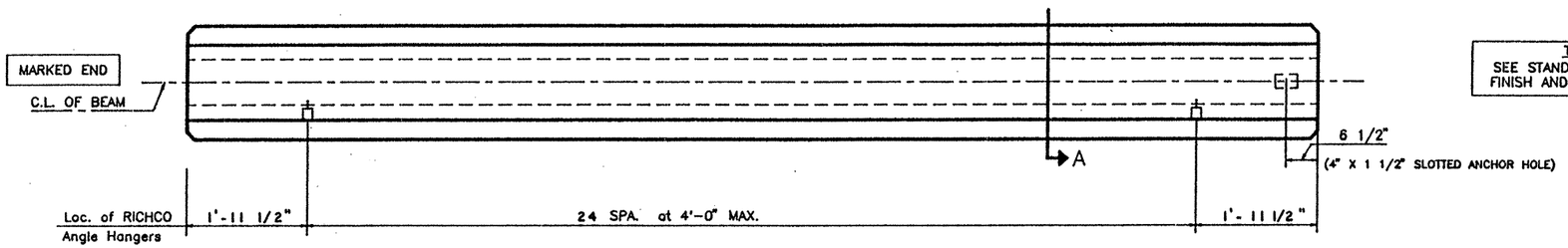

PLAN

TOP FINISH PANELS
SEE STANDARD SHEET S-"IV" FOR TOP FINISH AND OTHER NOTES AND DETAILS.

MANCO PRESTRESS COMPANY				
CONTRACTOR Gilbert of Texas Construction				
FED.RD. DIV.NO.	STATE	PROJECT NO.		HWY. NO.
6	TEXAS	NH 92(50)M		83/281
STATE DIST.NO.	COUNTY	CONTROL NO.	SECTION NO.	JOB NO.
21	HIDALGO	39	17	97

COPYRIGHT 1989 BY STRUCTURAL ENGINEERING ASSOCIATES, INC. *CONSULTING ENGINEERS*, SAN ANTONIO, TEXAS

JOB NO. 92-018	DRAWN C.A.J.	CHECKED D. M. P.	DATE 8/26/92	SHEET/MARK NO. IV-65
SEA JOB NO. 92-059H	FABRICATION SHEET			

3300020

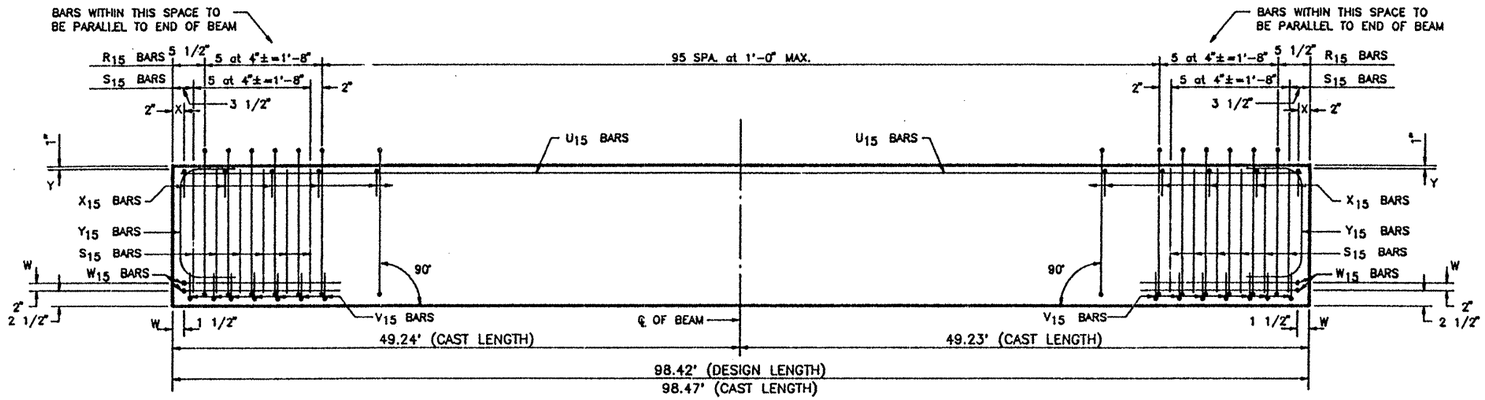

ELEVATION – REINFORCING STEEL

REINFORCING STEEL SCHEDULE				
BAR	QUANTITY PER BEAM	TOTAL QUANTITY	SIZE	LENGTH
R_{15}	106	106	#3	standard
X_{15}	102	102	#3	standard
Y_{15}	4	4	#6	standard
S_{15}	24	24	#7	standard
V_{15}	14	14	#3	standard
W_{15}	4	4	#5	standard
U_{15}	2	2	#5	98'-2"

TEXAS DEPARTMENT OF TRANSPORTATION
APPROVED
DIVISION OF BRIDGES AND STRUCTURES
SEP 24 1992
APPROVAL OF THIS DRAWING DOES NOT RELIEVE THE CONTRACTOR OF THE RESPONSIBILITY FOR THE CORRECTNESS OF DETAIL.

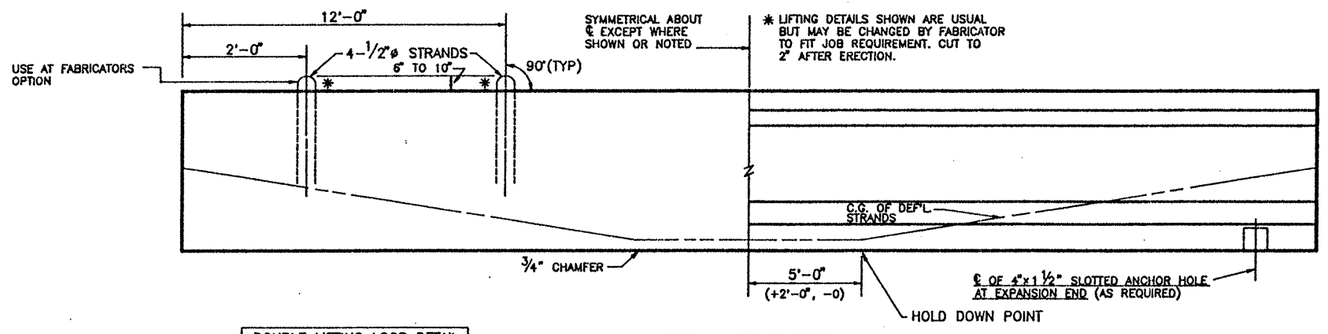

DOUBLE LIFTING LOOP DETAIL
(TYP. FOR BEAMS OVER 75')

BEAM ELEVATION
SEE PLAN VIEW FOR HOLE(S) LOCATION

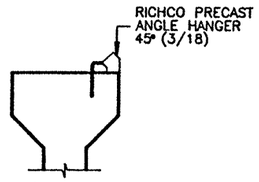

SECTION "A"

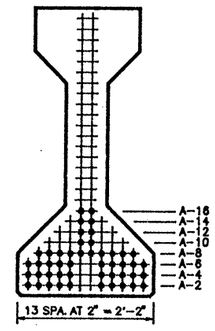

℄ SECTION

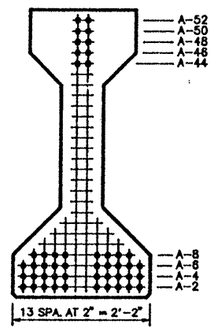

END VIEW

TYPE "IV" BEAM QUANTITY : 1

LO-LAX STRAND PATTERN		
NUMBER OF STRANDS : 48 ~1/2" ø 270 K @ 31.00 K EACH		
NUMBER OF STRAIGHT STRANDS	: 38	
NUMBER OF DEFLECTED STRANDS	: 10 @ A – 52	
CONCRETE RELEASE STRENGTH	: 5220	PSI
CONCRETE DESIGN STRENGTH	: 5810	PSI
ECCENTRICITY @ ℄ : 18.42"	ECCENTRICITY @ END : 10.92"	

DESIGN NO. : O.D.# 9
TOTAL BEAM LENGTH OF THIS SHEET : 98.42'

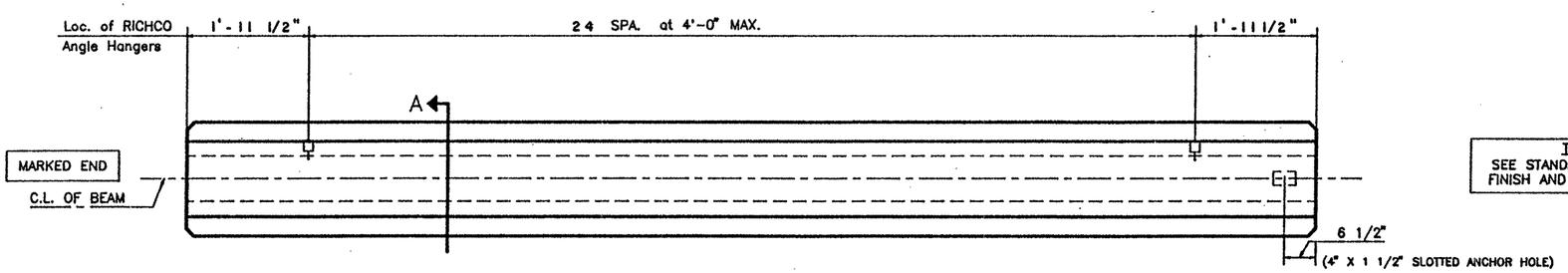

TOP FINISH PANELS
SEE STANDARD SHEET S-"IV" FOR TOP FINISH AND OTHER NOTES AND DETAILS.

FIXED END

EXPANSION END

PLAN

MANCO PRESTRESS COMPANY				
CONTRACTOR Gilbert of Texas Construction				
FED.RD. DIV.NO.	STATE	PROJECT NO.		HWY. NO.
6	TEXAS	NH 92(50)M		83/281
STATE DIST.NO.	COUNTY	CONTROL NO.	SECTION NO.	JOB NO.
21	HIDALGO	39	17	97

COPYRIGHT 1989 BY STRUCTURAL ENGINEERING ASSOCIATES, INC. CONSULTING ENGINEERS, SAN ANTONIO, TEXAS

JOB NO.	DRAWN	CHECKED	DATE	SHEET/MARK NO.
92-018	C.A.J.	D. M. P.	8 / 26 / 92	IV-66
SEA JOB NO. 92-059H	FABRICATION SHEET			

330020

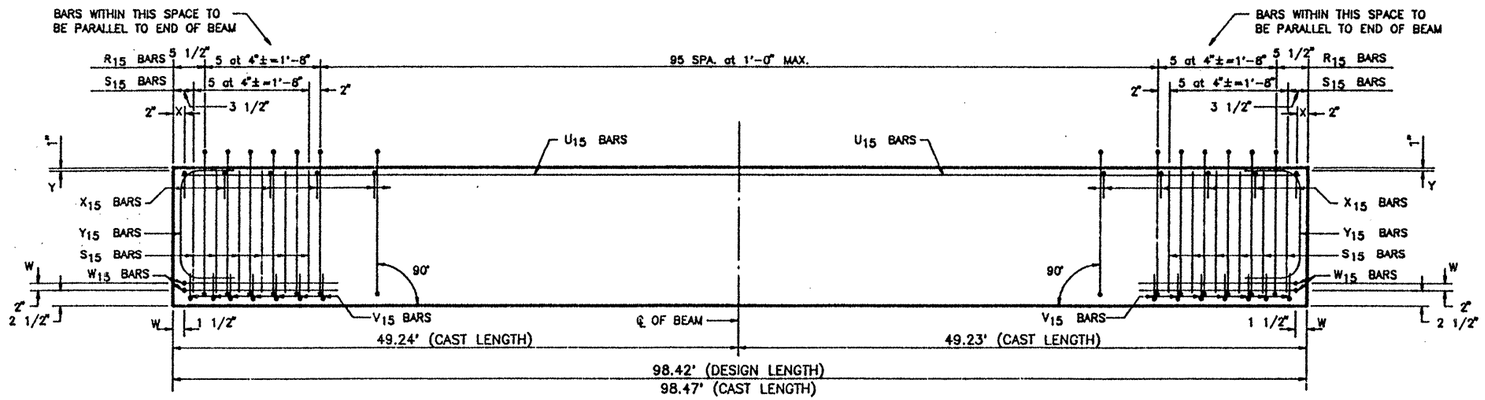

ELEVATION – REINFORCING STEEL

REINFORCING STEEL SCHEDULE				
BAR	QUANTITY PER BEAM	TOTAL QUANTITY	SIZE	LENGTH
R_{15}	106	106	#3	standard
X_{15}	102	102	#3	standard
Y_{15}	4	4	#6	standard
S_{15}	24	24	#7	standard
V_{15}	14	14	#3	standard
W_{15}	4	4	#5	standard
U_{15}	2	2	#5	98'-2"

TEXAS DEPARTMENT OF TRANSPORTATION
APPROVED
DIVISION OF BRIDGES AND STRUCTURES

SEP 2 4 1992

APPROVAL OF THIS DRAWING DOES NOT RELIEVE THE CONTRACTOR OF THE RESPONSIBILITY FOR THE CORRECTNESS OF DETAIL.

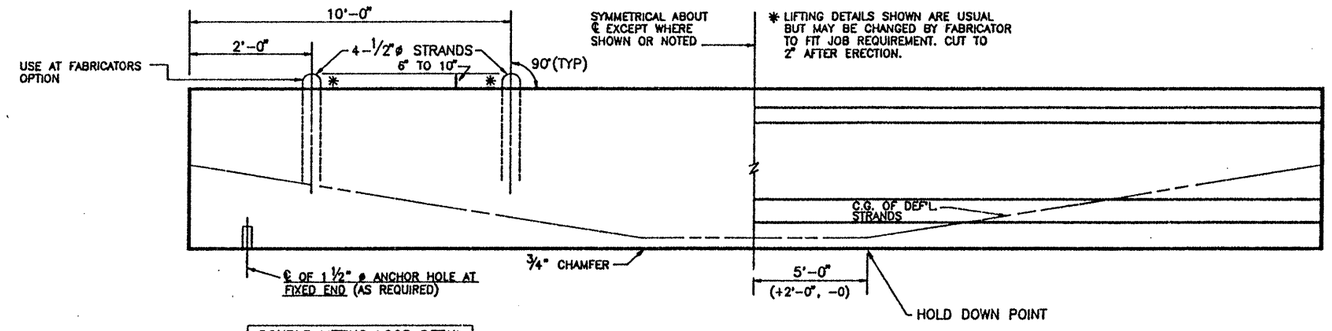

DOUBLE LIFTING LOOP DETAIL
(TYP. FOR BEAMS OVER 75')

BEAM ELEVATION
SEE PLAN VIEW FOR HOLE(S) LOCATION

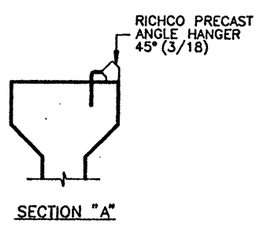

SECTION "A"

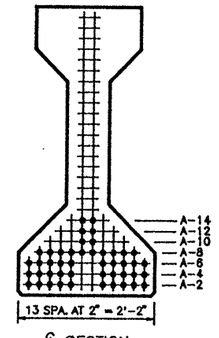

℄ SECTION

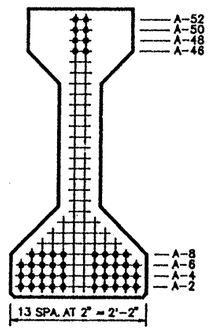

END VIEW

TYPE "IV" BEAM QUANTITY : 1

LO-LAX STRAND PATTERN		
NUMBER OF STRANDS	: 46 ~1/2" ø 270 K @ 31.00 K EACH	
NUMBER OF STRAIGHT STRANDS	: 38	
NUMBER OF DEFLECTED STRANDS	: 8 @ A – 52	
CONCRETE RELEASE STRENGTH	: 5280	PSI
CONCRETE DESIGN STRENGTH	: 5760	PSI
ECCENTRICITY @ ℄	: 18.84"	ECCENTRICITY @ END : 12.23"

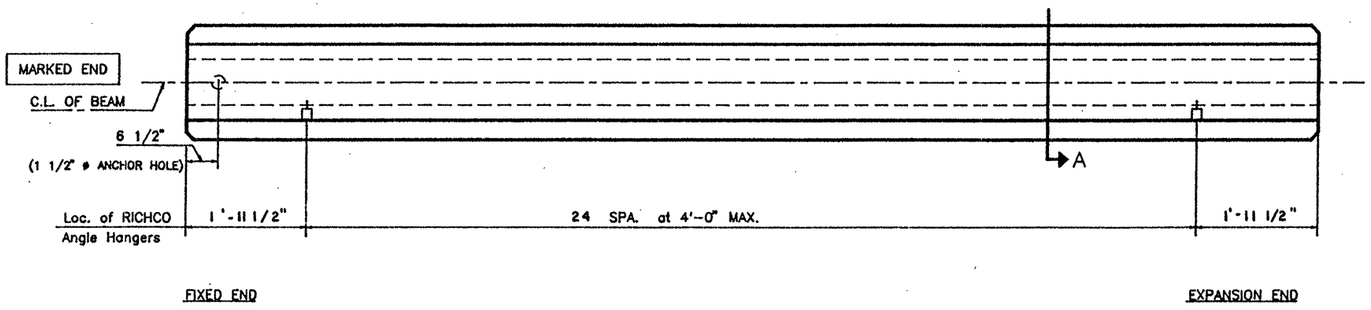

PLAN

TOP FINISH PANELS
SEE STANDARD SHEET S-"IV" FOR TOP FINISH AND OTHER NOTES AND DETAILS.

DESIGN NO. : O.D.# 11
TOTAL BEAM LENGTH OF THIS SHEET : 98.42'

MANCO PRESTRESS COMPANY

CONTRACTOR Gilbert of Texas Construction

FED.RD. DIV.NO.	STATE	PROJECT NO.	HWY. NO.
6	TEXAS	NH 92(50)M	83/281

STATE DIST.NO.	COUNTY	CONTROL NO.	SECTION NO.	JOB NO.
21	HIDALGO	39	17	97

COPYRIGHT 1989 BY
STRUCTURAL ENGINEERING ASSOCIATES, INC.
CONSULTING ENGINEERS, SAN ANTONIO, TEXAS

JOB NO.	DRAWN	CHECKED	DATE	SHEET/MARK NO.
92-018	C.A.J.	D.M.P.	8 /26 /92	IV-67
SEA JOB NO. 92-059H	FABRICATION SHEET			

330020

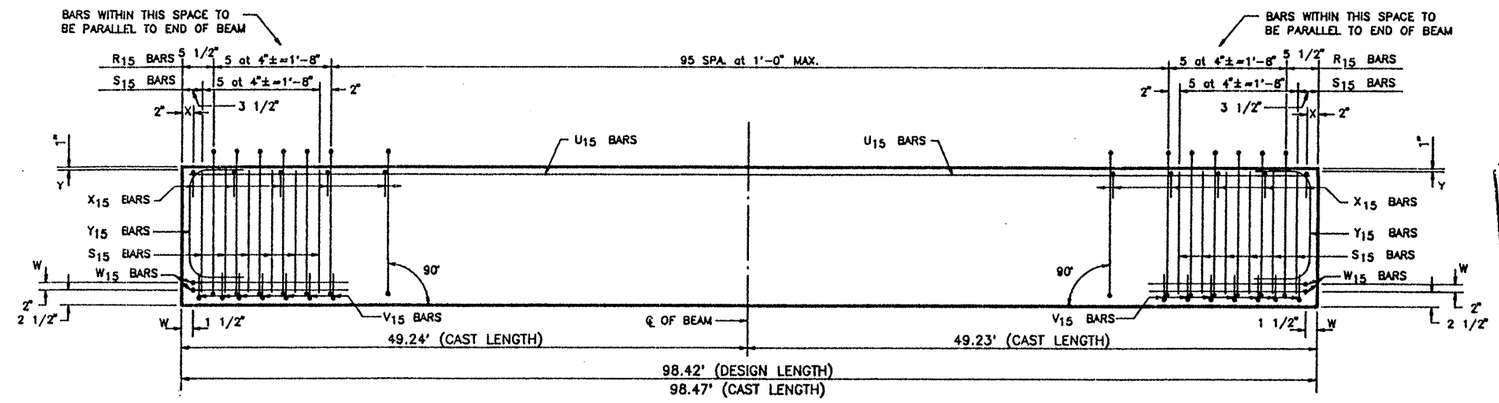

ELEVATION – REINFORCING STEEL

REINFORCING STEEL SCHEDULE				
BAR	QUANTITY PER BEAM	TOTAL QUANTITY	SIZE	LENGTH
R_{15}	106	424	#3	standard
X_{15}	102	408	#3	standard
Y_{15}	4	16	#6	standard
S_{15}	24	96	#7	standard
V_{15}	14	56	#3	standard
W_{15}	4	16	#5	standard
U_{15}	2	8	#5	98'-2"

TEXAS DEPARTMENT OF TRANSPORTATION
APPROVED
DIVISION OF BRIDGES AND STRUCTURES
SEP 24 1992
APPROVAL OF THIS DRAWING DOES NOT RELIEVE THE CONTRACTOR OF THE RESPONSIBILITY FOR THE CORRECTNESS OF DETAIL.

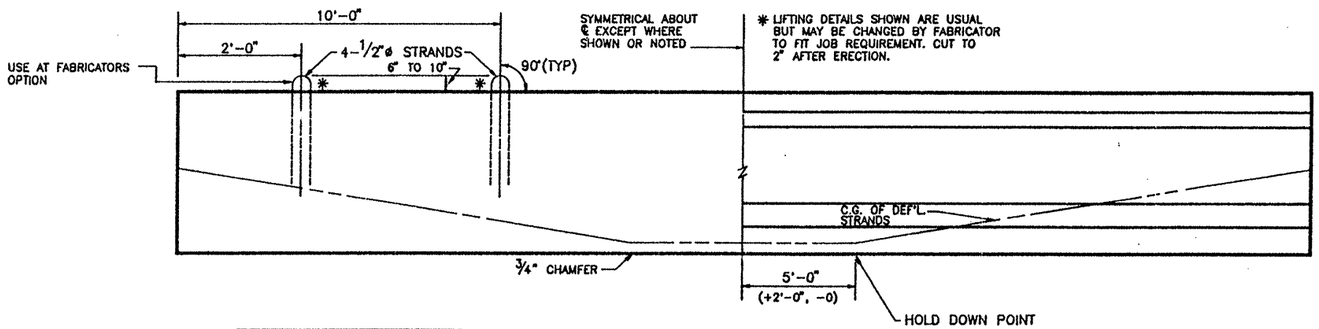

DOUBLE LIFTING LOOP DETAIL
(TYP. FOR BEAMS OVER 75')

BEAM ELEVATION
SEE PLAN VIEW FOR HOLE(S) LOCATION

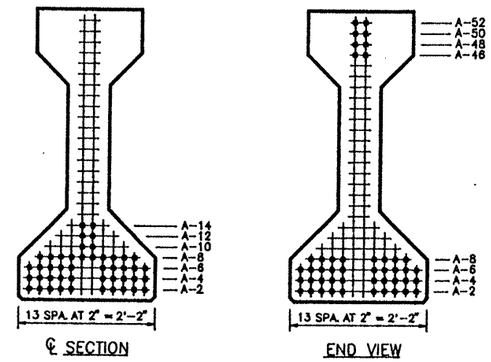

TYPE "IV" BEAM QUANTITY : 4

LO-LAX STRAND PATTERN		
NUMBER OF STRANDS	: 46 ~1/2" ø 270 K @ 31.00 K EACH	
NUMBER OF STRAIGHT STRANDS	: 38	
NUMBER OF DEFLECTED STRANDS	: 8 @ A – 52	
CONCRETE RELEASE STRENGTH	: 5280	PSI
CONCRETE DESIGN STRENGTH	: 5760	PSI
ECCENTRICITY @ ℄	: 18.84"	ECCENTRICITY @ END : 12.23"

DESIGN NO. : O.D.# 11
TOTAL BEAM LENGTH OF THIS SHEET : 393.68'

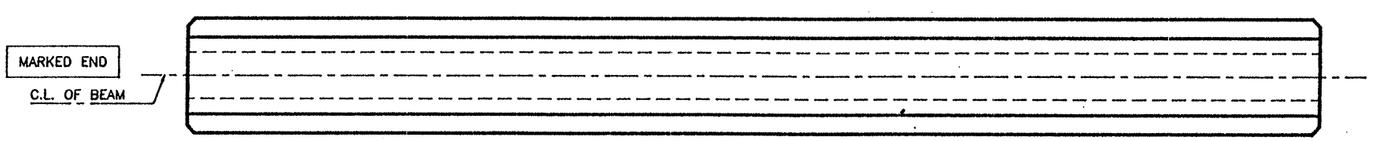

PLAN

TOP FINISH PANELS
SEE STANDARD SHEET S-"IV" FOR TOP FINISH AND OTHER NOTES AND DETAILS.

MANCO PRESTRESS COMPANY

CONTRACTOR Gilbert of Texas Construction

FED.RD. DIV.NO.	STATE	PROJECT NO.	HWY. NO.
6	TEXAS	NH 92(50)M	83/281

STATE DIST.NO.	COUNTY	CONTROL NO.	SECTION NO.	JOB NO.
21	HIDALGO	39	17	97

COPYRIGHT 1989 BY STRUCTURAL ENGINEERING ASSOCIATES, INC. *CONSULTING ENGINEERS*, SAN ANTONIO, TEXAS

JOB NO.	DRAWN	CHECKED	DATE	SHEET/MARK NO.
92-018	C.A.J.	D.M.P.	8/26/92	IV-68
SEA JOB NO. 92-059H	FABRICATION SHEET			

330020

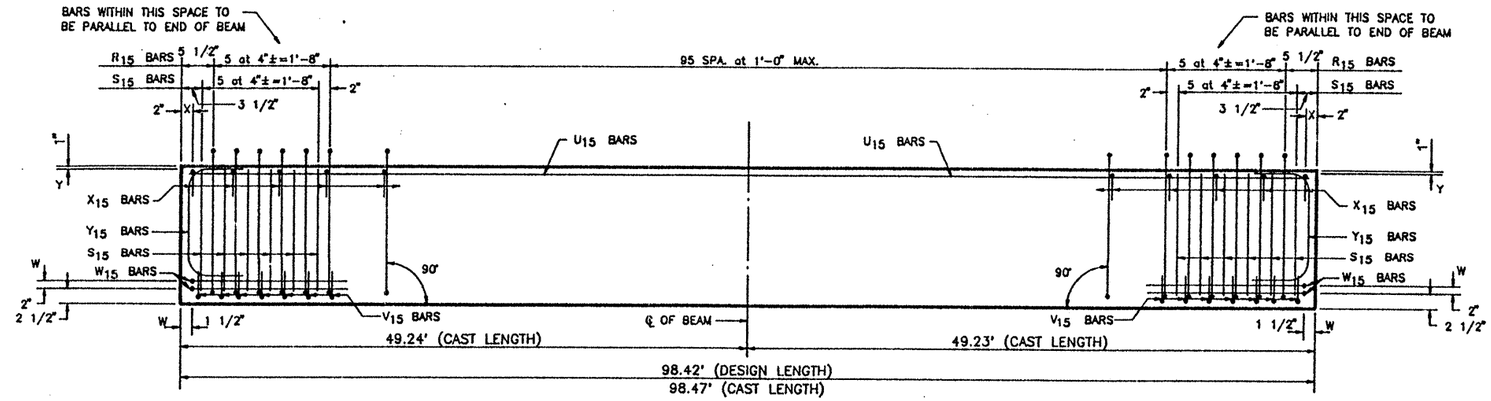

ELEVATION – REINFORCING STEEL

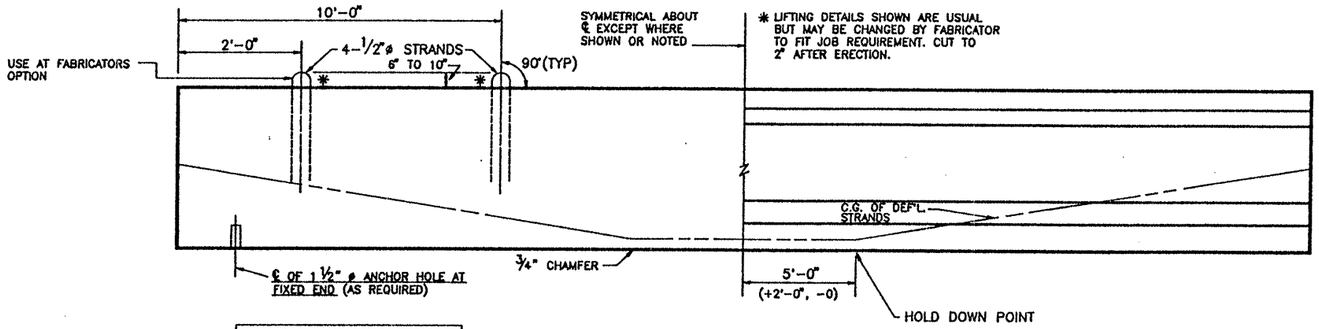

DOUBLE LIFTING LOOP DETAIL
(TYP. FOR BEAMS OVER 75')

BEAM ELEVATION
SEE PLAN VIEW FOR HOLE(S) LOCATION

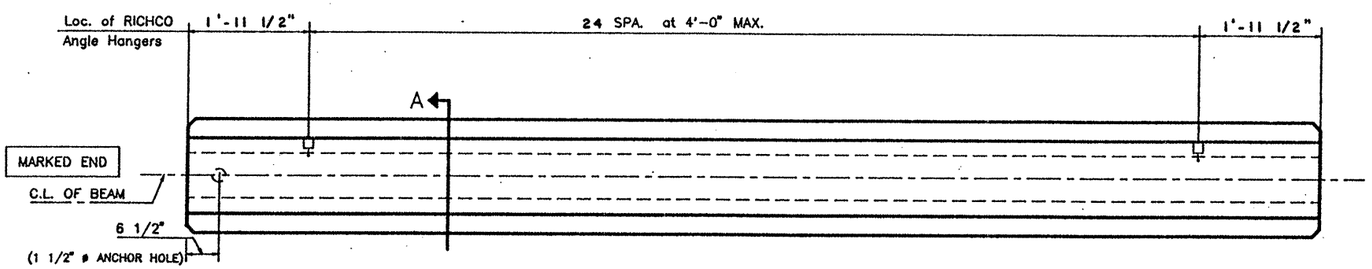

FIXED END

EXPANSION END

PLAN

TOP FINISH PANELS
SEE STANDARD SHEET S-"IV" FOR TOP FINISH AND OTHER NOTES AND DETAILS.

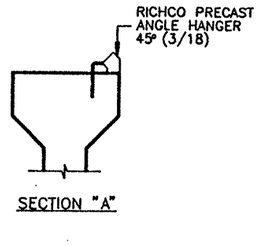

SECTION "A"

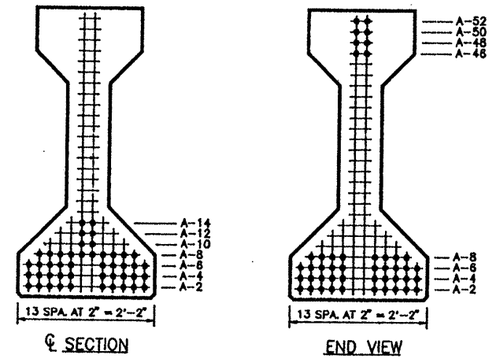

℄ SECTION

END VIEW

TYPE "IV" BEAM QUANTITY : 1

REINFORCING STEEL SCHEDULE

BAR	QUANTITY PER BEAM	TOTAL QUANTITY	SIZE	LENGTH
R_{15}	106	106	#3	standard
X_{15}	102	102	#3	standard
Y_{15}	4	4	#6	standard
S_{15}	24	24	#7	standard
V_{15}	14	14	#3	standard
W_{15}	4	4	#5	standard
U_{15}	2	2	#5	98'-2"

TEXAS DEPARTMENT OF TRANSPORTATION
APPROVED
DIVISION OF BRIDGES AND STRUCTURES
SEP 24 1992
APPROVAL OF THIS DRAWING DOES NOT RELIEVE THE CONTRACTOR OF THE RESPONSIBILITY FOR THE CORRECTNESS OF DETAIL.

LO-LAX STRAND PATTERN		
NUMBER OF STRANDS	: 46 ~1/2" ø 270 K @ 31.00 K EACH	
NUMBER OF STRAIGHT STRANDS	: 38	
NUMBER OF DEFLECTED STRANDS	: 8 @ A – 52	
CONCRETE RELEASE STRENGTH	: 5280	PSI
CONCRETE DESIGN STRENGTH	: 5760	PSI
ECCENTRICITY @ ℄	: 18.84"	ECCENTRICITY @ END : 12.23"

DESIGN NO. : O.D.# 11
TOTAL BEAM LENGTH OF THIS SHEET : 98.42'

MANCO PRESTRESS COMPANY
CONTRACTOR Gilbert of Texas Construction

FED.RD. DIV.NO.	STATE	PROJECT NO.	HWY. NO.
6	TEXAS	NH 92(50)M	83/281

STATE DIST.NO.	COUNTY	CONTROL NO.	SECTION NO.	JOB NO.
21	HIDALGO	39	17	97

COPYRIGHT 1989 BY
STRUCTURAL ENGINEERING ASSOCIATES, INC.
CONSULTING ENGINEERS, SAN ANTONIO, TEXAS

JOB NO.	DRAWN	CHECKED	DATE	SHEET/MARK NO.
92-018	C.A.J.	D.M.P.	8/26/92	IV-69
SEA JOB NO. 92-059H	FABRICATION SHEET			

330020

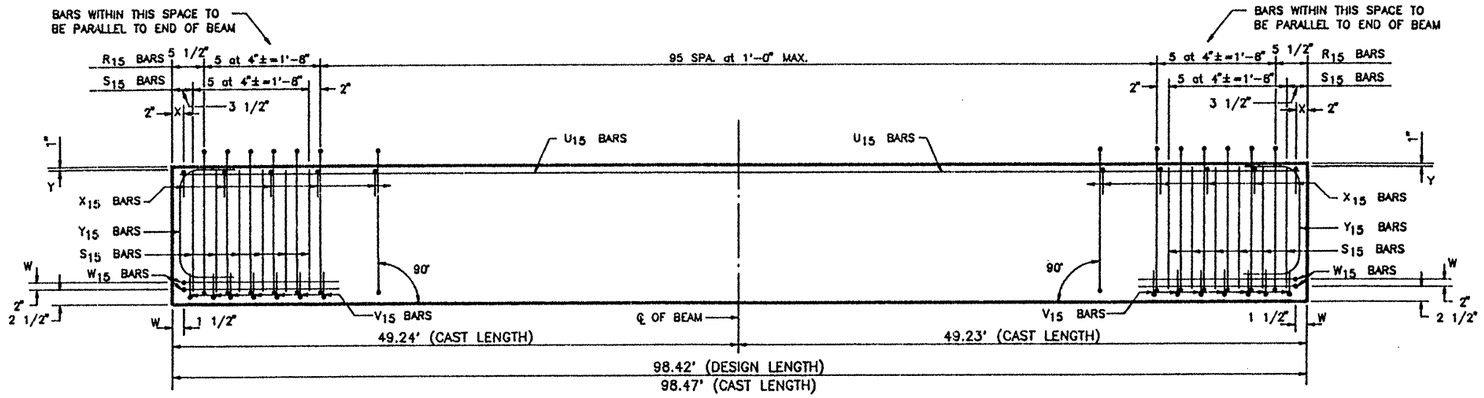

ELEVATION – REINFORCING STEEL

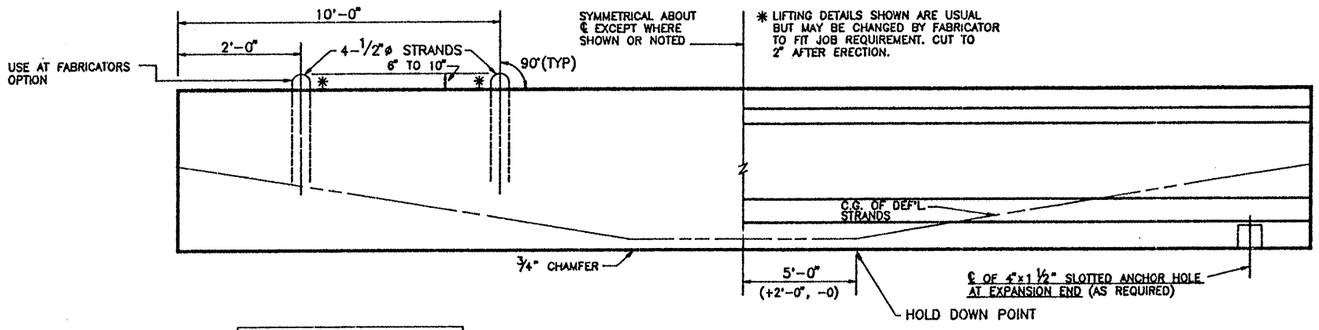

DOUBLE LIFTING LOOP DETAIL
(TYP. FOR BEAMS OVER 75')

BEAM ELEVATION
SEE PLAN VIEW FOR HOLE(S) LOCATION

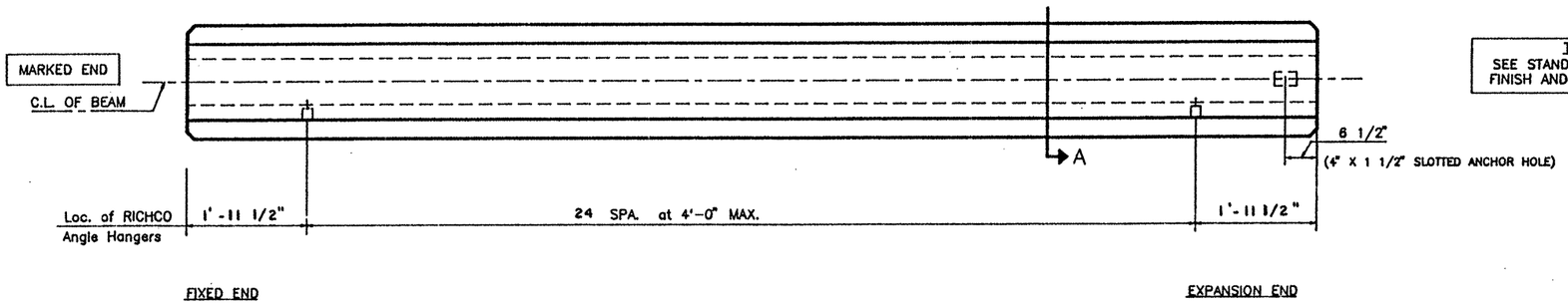

PLAN

TOP FINISH PANELS
SEE STANDARD SHEET S-"IV" FOR TOP FINISH AND OTHER NOTES AND DETAILS.

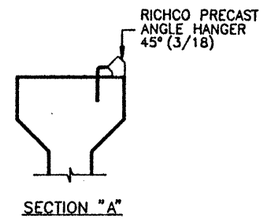

SECTION "A"

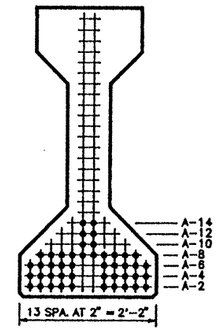

℄ SECTION

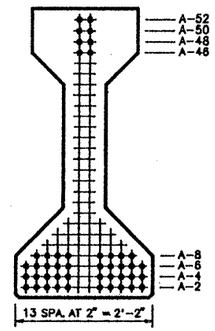

END VIEW

TYPE "IV" BEAM QUANTITY : 1

REINFORCING STEEL SCHEDULE

BAR	QUANTITY PER BEAM	TOTAL QUANTITY	SIZE	LENGTH
R_{15}	106	106	#3	standard
X_{15}	102	102	#3	standard
Y_{15}	4	4	#6	standard
S_{15}	24	24	#7	standard
V_{15}	14	14	#3	standard
W_{15}	4	4	#5	standard
U_{15}	2	2	#5	98'-2"

TEXAS DEPARTMENT OF TRANSPORTATION
APPROVED
DIVISION OF BRIDGES AND STRUCTURES
SEP 24 1992
APPROVAL OF THIS DRAWING DOES NOT RELIEVE THE CONTRACTOR OF THE RESPONSIBILITY FOR THE CORRECTNESS OF DETAIL.

LO-LAX STRAND PATTERN		
NUMBER OF STRANDS	: 46 ~1/2" ø 270 K @ 31.00 K EACH	
NUMBER OF STRAIGHT STRANDS	: 38	
NUMBER OF DEFLECTED STRANDS	: 8 @ A – 52	
CONCRETE RELEASE STRENGTH	: 5280	PSI
CONCRETE DESIGN STRENGTH	: 5760	PSI
ECCENTRICITY @ ℄	: 18.84"	ECCENTRICITY @ END : 12.23"

DESIGN NO. : O.D.# 11
TOTAL BEAM LENGTH OF THIS SHEET : 98.42'

MANCO PRESTRESS COMPANY
CONTRACTOR Gilbert of Texas Construction

FED.RD. DIV.NO.	STATE	PROJECT NO.		HWY. NO.
6	TEXAS	NH 92(50)M		83/281
STATE DIST.NO.	COUNTY	CONTROL NO.	SECTION NO.	JOB NO.
21	HIDALGO	39	17	97

COPYRIGHT 1989 BY
STRUCTURAL ENGINEERING ASSOCIATES, INC.
CONSULTING ENGINEERS, SAN ANTONIO, TEXAS

JOB NO.	DRAWN	CHECKED	DATE	SHEET/MARK NO.
92-018	C.A.J.	D.M.P.	8 / 26 / 92	IV-70
SEA JOB NO. 92-059H	FABRICATION SHEET			

330020

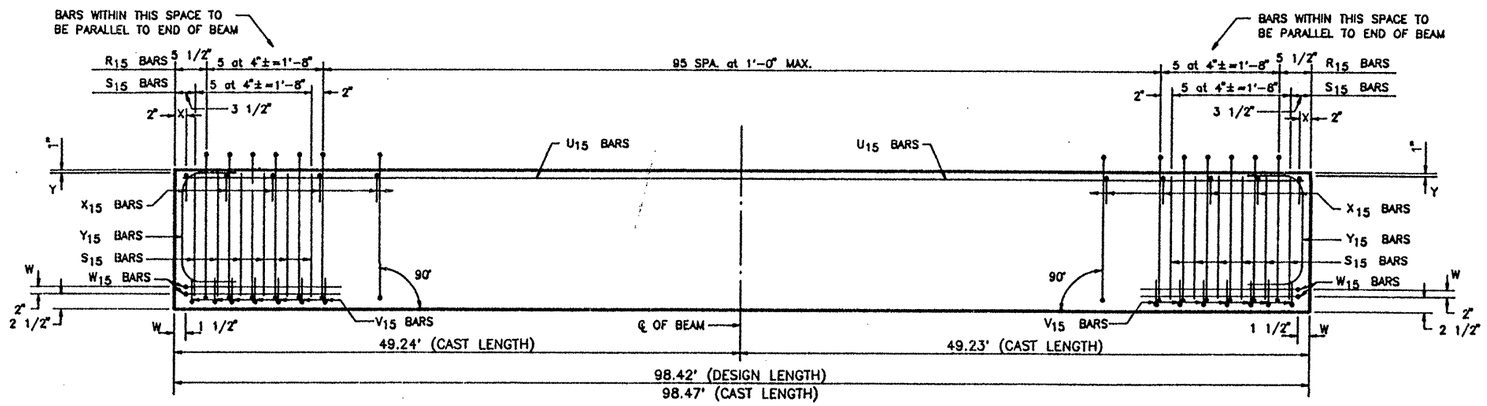

ELEVATION – REINFORCING STEEL

REINFORCING STEEL SCHEDULE				
BAR	QUANTITY PER BEAM	TOTAL QUANTITY	SIZE	LENGTH
R_{15}	106	106	#3	standard
X_{15}	102	102	#3	standard
Y_{15}	4	4	#6	standard
S_{15}	24	24	#7	standard
V_{15}	14	14	#3	standard
W_{15}	4	4	#5	standard
U_{15}	2	2	#5	98'-2"

TEXAS DEPARTMENT OF TRANSPORTATION
APPROVED
DIVISION OF BRIDGES AND STRUCTURES

SEP 24 1992

APPROVAL OF THIS DRAWING DOES NOT RELIEVE THE CONTRACTOR OF THE RESPONSIBILITY FOR THE CORRECTNESS OF DETAIL.

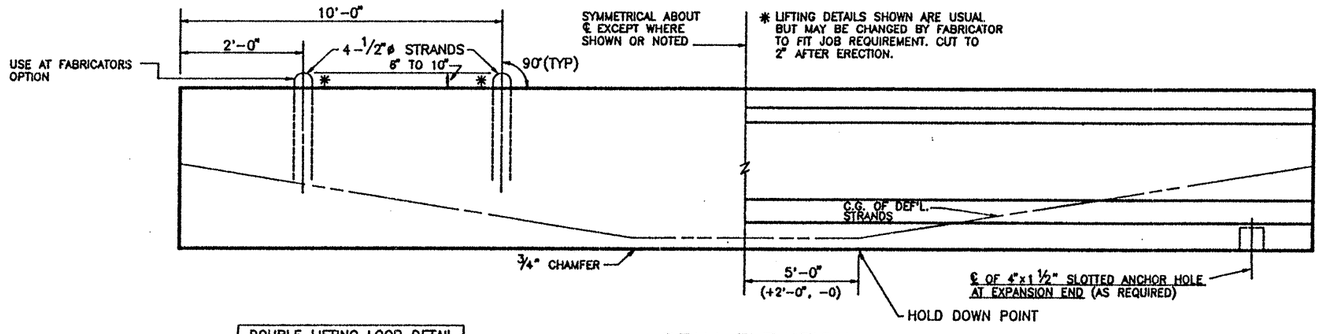

DOUBLE LIFTING LOOP DETAIL
(TYP. FOR BEAMS OVER 75')

BEAM ELEVATION
SEE PLAN VIEW FOR HOLE(S) LOCATION

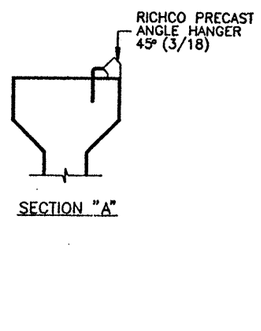

SECTION "A"

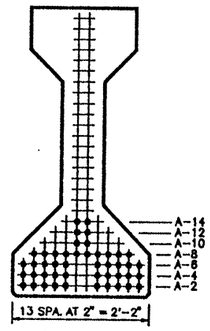

℄ SECTION

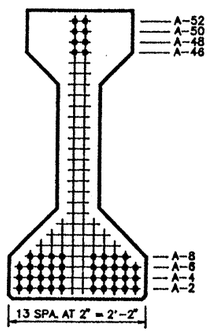

END VIEW

TYPE "IV" BEAM QUANTITY : 1

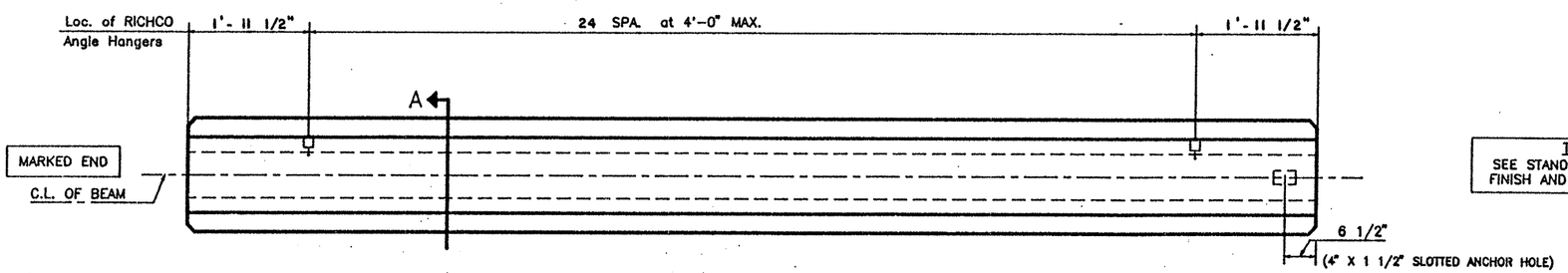

FIXED END

EXPANSION END

PLAN

TOP FINISH PANELS
SEE STANDARD SHEET S-"IV" FOR TOP FINISH AND OTHER NOTES AND DETAILS.

LO-LAX STRAND PATTERN	
NUMBER OF STRANDS	: 46 ~1/2" ø 270 K @ 31.00 K EACH
NUMBER OF STRAIGHT STRANDS	: 38
NUMBER OF DEFLECTED STRANDS	: 8 @ A – 52
CONCRETE RELEASE STRENGTH	: 5280 PSI
CONCRETE DESIGN STRENGTH	: 5760 PSI
ECCENTRICITY @ ℄	: 18.84" ECCENTRICITY @ END : 12.23"

DESIGN NO. : O.D.# 11
TOTAL BEAM LENGTH OF THIS SHEET : 98.42'

MANCO PRESTRESS COMPANY				
CONTRACTOR Gilbert of Texas Construction				
FED.RD. DIV.NO.	STATE	PROJECT NO.		HWY. NO.
6	TEXAS	NH 92(50)M		83/281
STATE DIST.NO.	COUNTY	CONTROL NO.	SECTION NO.	JOB NO.
21	HIDALGO	39	17	97

COPYRIGHT 1989 BY
STRUCTURAL ENGINEERING ASSOCIATES, INC.
CONSULTING ENGINEERS, SAN ANTONIO, TEXAS

JOB NO.	DRAWN	CHECKED	DATE	SHEET/MARK NO.
92-018	C.A.J.	D.M.P.	8 / 26 / 92	IV-71
SEA JOB NO. 92-059H	FABRICATION SHEET			

330020

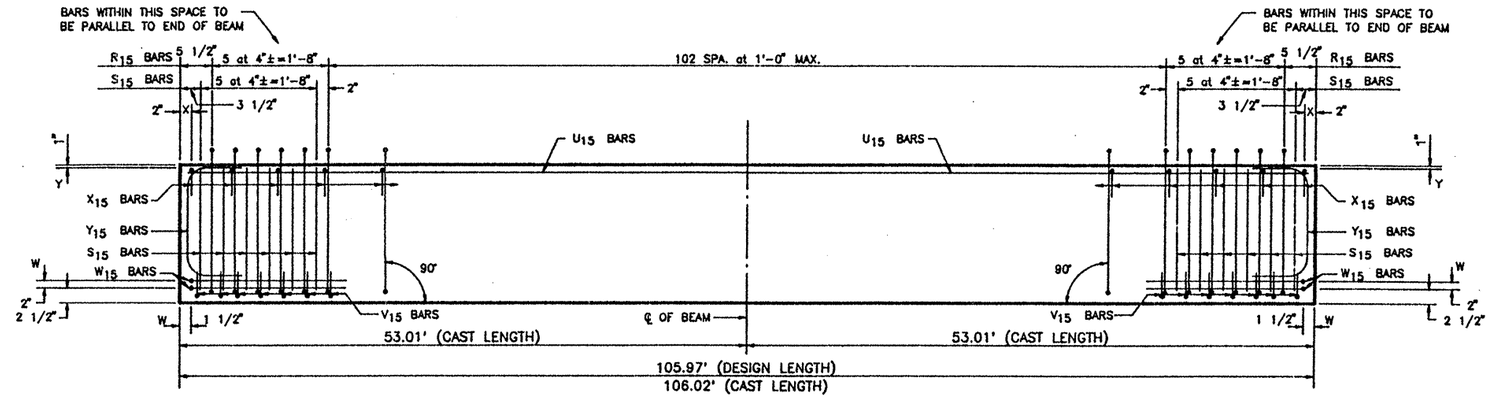

ELEVATION – REINFORCING STEEL

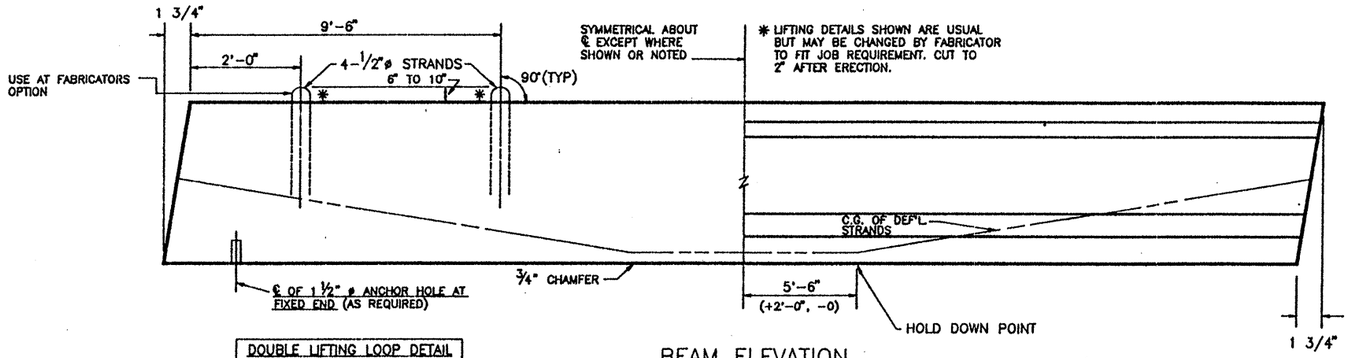

DOUBLE LIFTING LOOP DETAIL
(TYP. FOR BEAMS OVER 75')

BEAM ELEVATION
SEE PLAN VIEW FOR HOLE(S) LOCATION

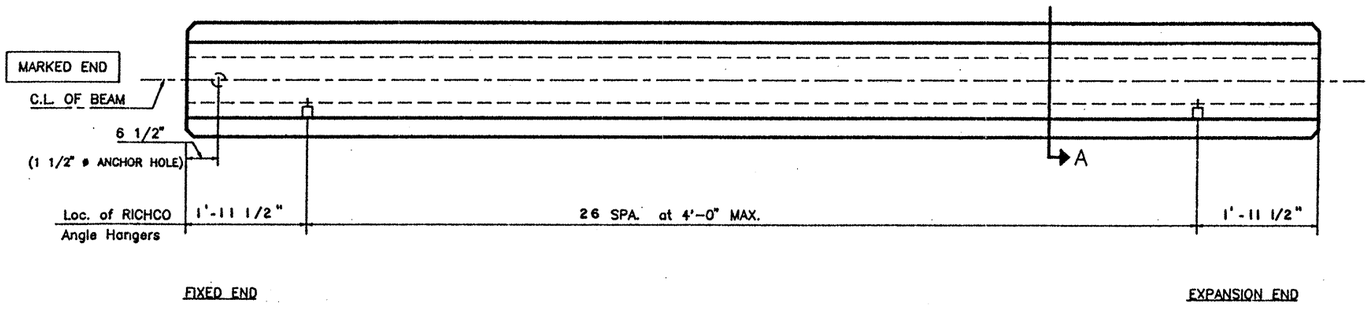

PLAN

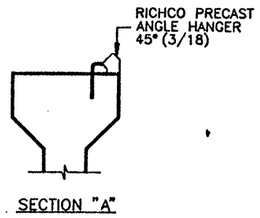

SECTION "A"

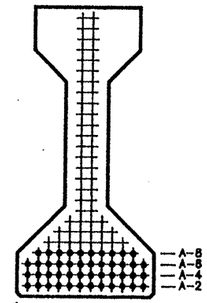

℄ SECTION

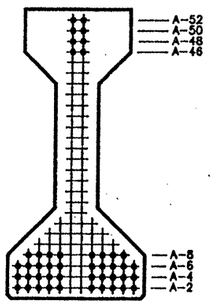

END VIEW

TYPE "IV" BEAM QUANTITY : 1

REINFORCING STEEL SCHEDULE

BAR	QUANTITY PER BEAM	TOTAL QUANTITY	SIZE	LENGTH
R_{15}	113	113	#3	standard
X_{15}	109	109	#3	standard
Y_{15}	4	4	#6	standard
S_{15}	24	24	#7	standard
V_{15}	14	14	#3	standard
W_{15}	4	4	#5	standard
U_{15}	2	2	#5	105'-9"

TEXAS DEPARTMENT OF TRANSPORTATION
APPROVED
DIVISION OF BRIDGES AND STRUCTURES

SEP 24 1992

APPROVAL OF THIS DRAWING DOES NOT RELIEVE THE CONTRACTOR OF THE RESPONSIBILITY FOR THE CORRECTNESS OF DETAIL.

LO-LAX STRAND PATTERN		
NUMBER OF STRANDS	: 46 ~1/2" ø 270 K @ 31.00 K EACH	
NUMBER OF STRAIGHT STRANDS	: 38	
NUMBER OF DEFLECTED STRANDS	: 8 @ A – 52	
CONCRETE RELEASE STRENGTH	: 5278	PSI
CONCRETE DESIGN STRENGTH	: 6088	PSI
ECCENTRICITY @ ℄	: 19.88"	ECCENTRICITY @ END : 12.23"

DESIGN NO. : GPNSLR

TOTAL BEAM LENGTH OF THIS SHEET : 105.97'

TOP FINISH PANELS
SEE STANDARD SHEET S-"IV" FOR TOP FINISH AND OTHER NOTES AND DETAILS.

MANCO PRESTRESS COMPANY

CONTRACTOR Gilbert of Texas Construction

FED.RD. DIV.NO.	STATE	PROJECT NO.	HWY. NO.
6	TEXAS	NH 92(50)M	83/281

STATE DIST.NO.	COUNTY	CONTROL NO.	SECTION NO.	JOB NO.
21	HIDALGO	39	17	97

COPYRIGHT 1989 BY
STRUCTURAL ENGINEERING ASSOCIATES, INC.
CONSULTING ENGINEERS, SAN ANTONIO, TEXAS

JOB NO.	DRAWN	CHECKED	DATE	SHEET/MARK NO.
92-018	C.A.J.	D. M.P.	8 /26/ 92	IV-72
SEA JOB NO. 92-059H	FABRICATION SHEET			

330020

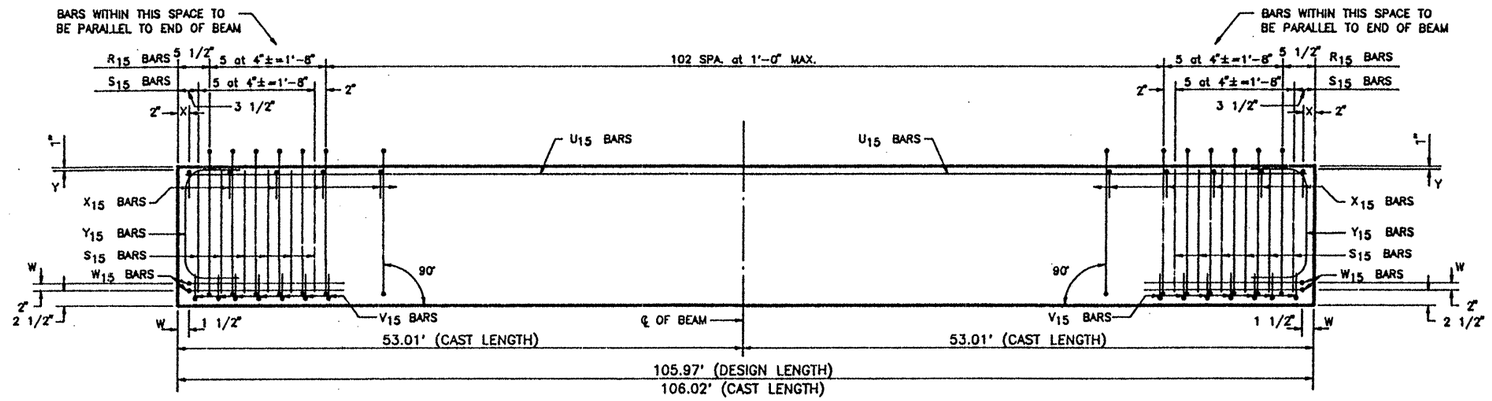

ELEVATION – REINFORCING STEEL

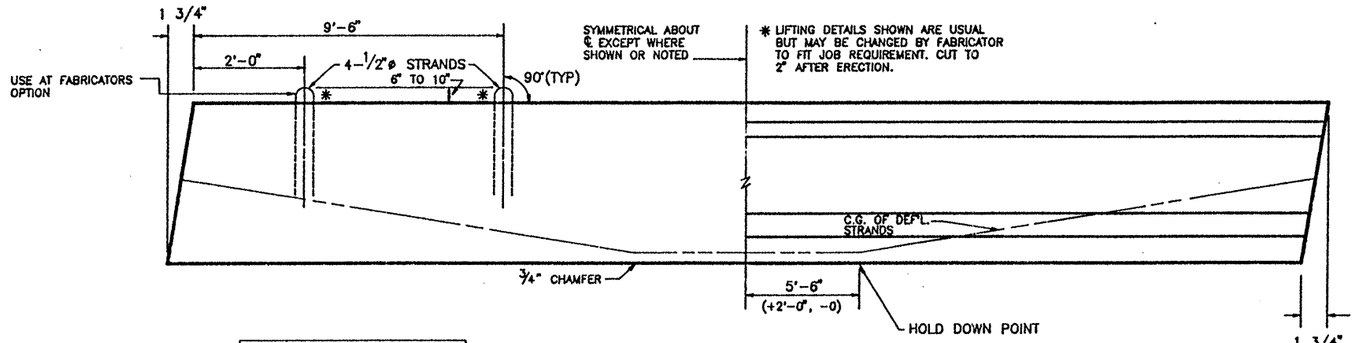

DOUBLE LIFTING LOOP DETAIL
(TYP. FOR BEAMS OVER 75')

BEAM ELEVATION
SEE PLAN VIEW FOR HOLE(S) LOCATION

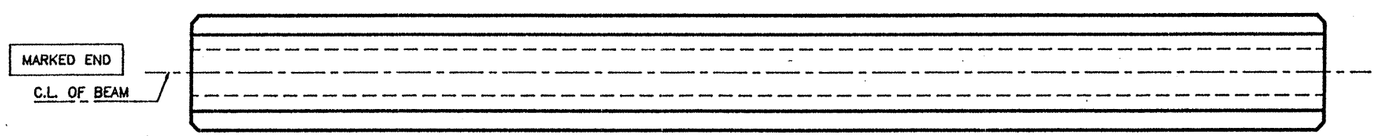

PLAN

TEXAS DEPARTMENT OF TRANSPORTATION
APPROVED
DIVISION OF BRIDGES AND STRUCTURES

SEP 24 1992

APPROVAL OF THIS DRAWING DOES NOT RELIEVE THE CONTRACTOR OF THE RESPONSIBILITY FOR THE CORRECTNESS OF DETAIL.

REINFORCING STEEL SCHEDULE

BAR	QUANTITY PER BEAM	TOTAL QUANTITY	SIZE	LENGTH
R_{15}	113	226	#3	standard
X_{15}	109	218	#3	standard
Y_{15}	4	8	#6	standard
S_{15}	24	48	#7	standard
V_{15}	14	28	#3	standard
W_{15}	4	8	#5	standard
U_{15}	2	4	#5	105'-9"

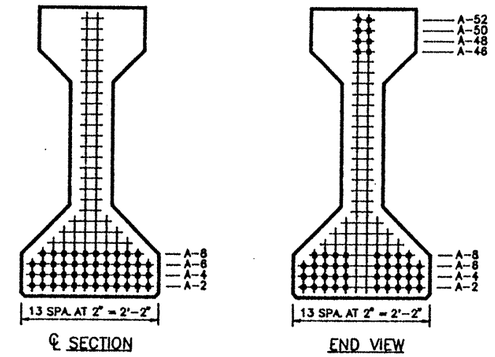

TYPE "IV" BEAM QUANTITY : 2

LO-LAX STRAND PATTERN		
NUMBER OF STRANDS : 46 ~1/2" ø 270 K @ 31.00 K EACH		
NUMBER OF STRAIGHT STRANDS	: 38	
NUMBER OF DEFLECTED STRANDS	: 8 @ A – 52	
CONCRETE RELEASE STRENGTH	: 5278	PSI
CONCRETE DESIGN STRENGTH	: 6088	PSI
ECCENTRICITY @ ℄ : 19.88"	ECCENTRICITY @ END : 12.23"	

DESIGN NO. : GPNSLR
TOTAL BEAM LENGTH OF THIS SHEET : 211.94'

TOP FINISH PANELS
SEE STANDARD SHEET S-"IV" FOR TOP FINISH AND OTHER NOTES AND DETAILS.

MANCO PRESTRESS COMPANY

CONTRACTOR Gilbert of Texas Construction

FED.RD. DIV.NO.	STATE	PROJECT NO.		HWY. NO.
6	TEXAS	NH 92(50)M		83/281
STATE DIST.NO.	COUNTY	CONTROL NO.	SECTION NO.	JOB NO.
21	HIDALGO	39	17	97

COPYRIGHT 1989 BY
STRUCTURAL ENGINEERING ASSOCIATES, INC.
CONSULTING ENGINEERS, SAN ANTONIO, TEXAS

JOB NO. 92-018	DRAWN C.A.J.	CHECKED D.M.P.	DATE 8/26/92	SHEET/MARK NO. IV-73
SEA JOB NO. 92-059H	FABRICATION SHEET			

330020

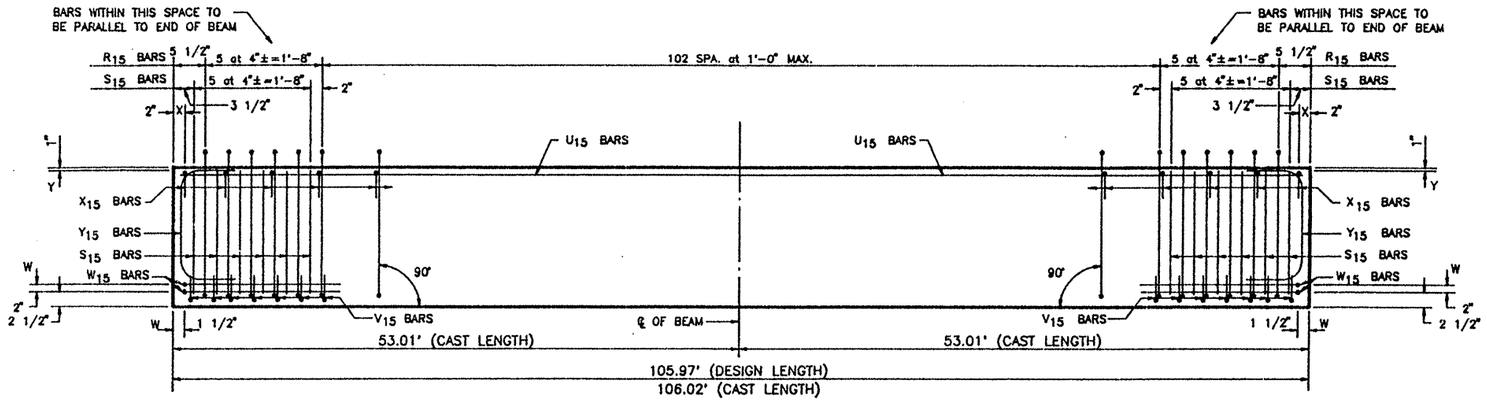

ELEVATION – REINFORCING STEEL

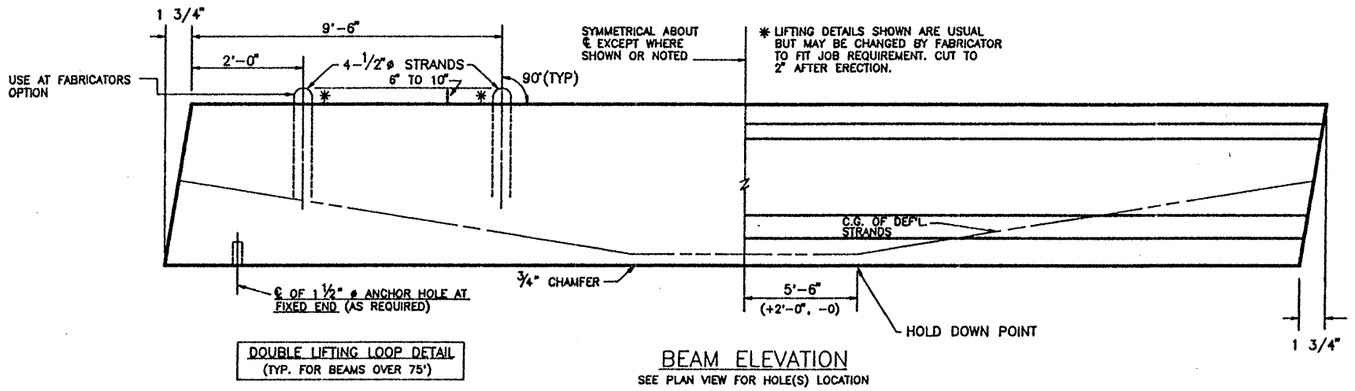

DOUBLE LIFTING LOOP DETAIL
(TYP. FOR BEAMS OVER 75')

BEAM ELEVATION
SEE PLAN VIEW FOR HOLE(S) LOCATION

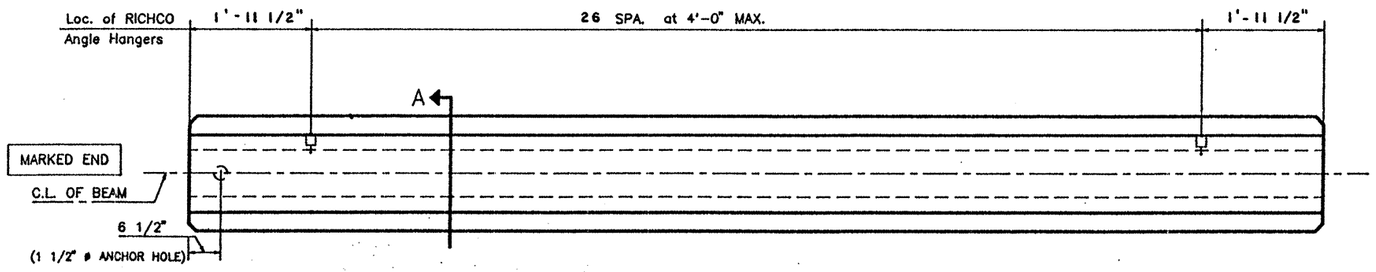

FIXED END

EXPANSION END

PLAN

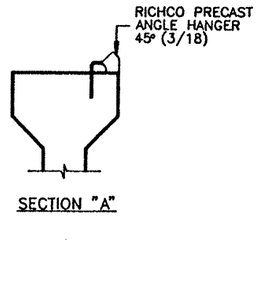

SECTION "A"

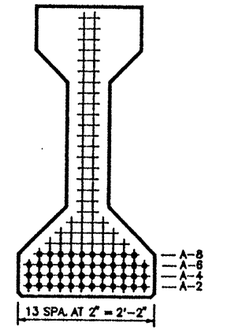

℄ SECTION

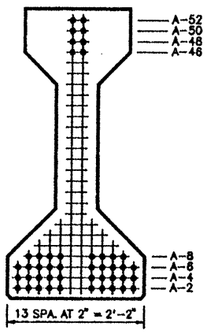

END VIEW

TYPE "IV" BEAM QUANTITY : 1

REINFORCING STEEL SCHEDULE				
BAR	QUANTITY PER BEAM	TOTAL QUANTITY	SIZE	LENGTH
R_{15}	113	113	#3	standard
X_{15}	109	109	#3	standard
Y_{15}	4	4	#6	standard
S_{15}	24	24	#7	standard
V_{15}	14	14	#3	standard
W_{15}	4	4	#5	standard
U_{15}	2	2	#5	105'-9"

TEXAS DEPARTMENT OF TRANSPORTATION
APPROVED
DIVISION OF BRIDGES AND STRUCTURES
SEP 24 1992
APPROVAL OF THIS DRAWING DOES NOT RELIEVE THE CONTRACTOR OF THE RESPONSIBILITY FOR THE CORRECTNESS OF DETAIL

LO-LAX STRAND PATTERN		
NUMBER OF STRANDS	: 46 ~1/2" ø 270 K @ 31.00 K EACH	
NUMBER OF STRAIGHT STRANDS	: 38	
NUMBER OF DEFLECTED STRANDS	: 8 @ A – 52	
CONCRETE RELEASE STRENGTH	: 5278	PSI
CONCRETE DESIGN STRENGTH	: 6088	PSI
ECCENTRICITY @ ℄ : 19.88"	ECCENTRICITY @ END : 12.23"	

TOP FINISH PANELS
SEE STANDARD SHEET S-"IV" FOR TOP FINISH AND OTHER NOTES AND DETAILS.

DESIGN NO. : GPNSLR
TOTAL BEAM LENGTH OF THIS SHEET : 105.97'

MANCO PRESTRESS COMPANY
CONTRACTOR Gilbert of Texas Construction

FED.RD. DIV.NO.	STATE	PROJECT NO.			HWY. NO.
6	TEXAS	NH 92(50)M			83/281
STATE DIST.NO.	COUNTY	CONTROL NO.	SECTION NO.	JOB NO.	
21	HIDALGO	39	17	97	

COPYRIGHT 1989 BY
STRUCTURAL ENGINEERING ASSOCIATES, INC.
CONSULTING ENGINEERS, SAN ANTONIO, TEXAS

JOB NO.	DRAWN	CHECKED	DATE	SHEET/MARK NO.
92-018	C.A.J.	D.M.P.	8/26/92	IV-74
SEA JOB NO. 92-059H	FABRICATION SHEET			

330020

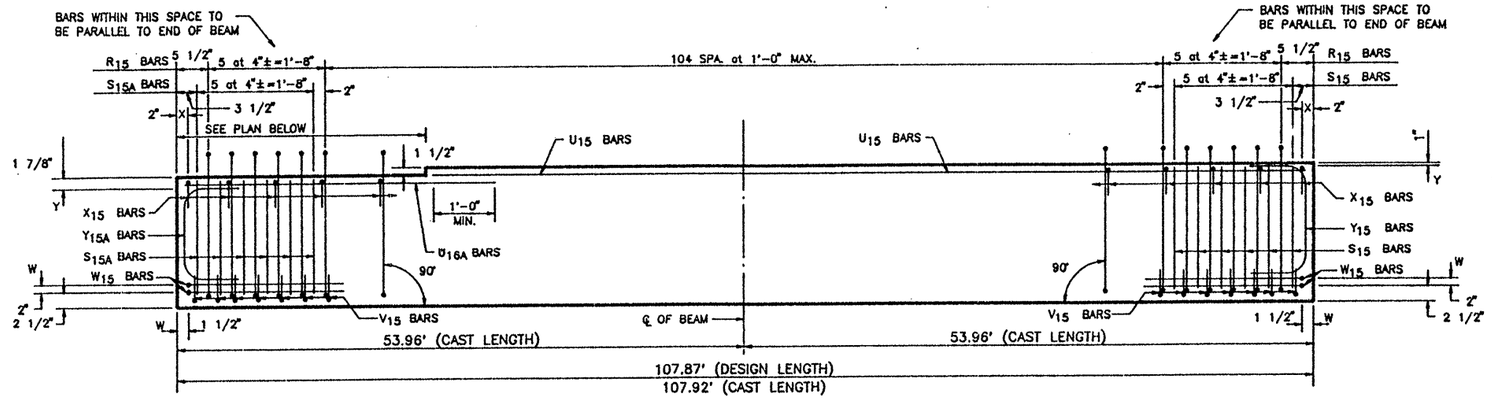

ELEVATION – REINFORCING STEEL

REINFORCING STEEL SCHEDULE				
BAR	QUANTITY PER BEAM	TOTAL QUANTITY	SIZE	LENGTH
R_{15}	115	115	#3	standard
X_{15}	111	111	#3	standard
Y_{15}	2	2	#6	standard
S_{15}	12	12	#7	standard
V_{15}	14	14	#3	standard
W_{15}	4	4	#5	standard
U_{15}	2	2	#5	103'–10"
Y_{15A}	2	2	#6	standard
S_{15A}	12	12	#7	standard
U_{16A}	2	2	#5	6'–6"

TEXAS DEPARTMENT OF TRANSPORTATION
APPROVED
DIVISION OF BRIDGES AND STRUCTURES
SEP 24 1992
APPROVAL OF THIS DRAWING DOES NOT RELIEVE THE CONTRACTOR OF THE RESPONSIBILITY FOR THE CORRECTNESS OF DETAIL.

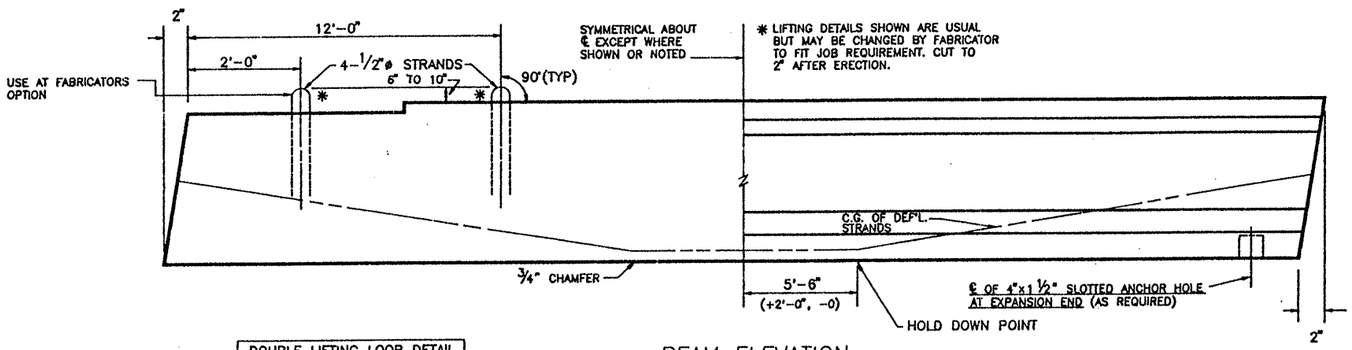

DOUBLE LIFTING LOOP DETAIL
(TYP. FOR BEAMS OVER 75')

BEAM ELEVATION
SEE PLAN VIEW FOR HOLE(S) LOCATION

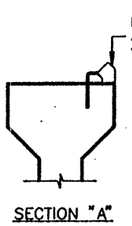

SECTION "A"

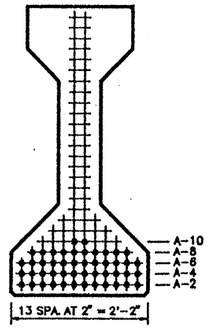

℄ SECTION

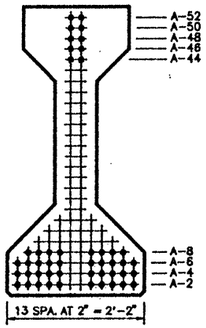

END VIEW

TYPE "IV" BEAM QUANTITY : 1

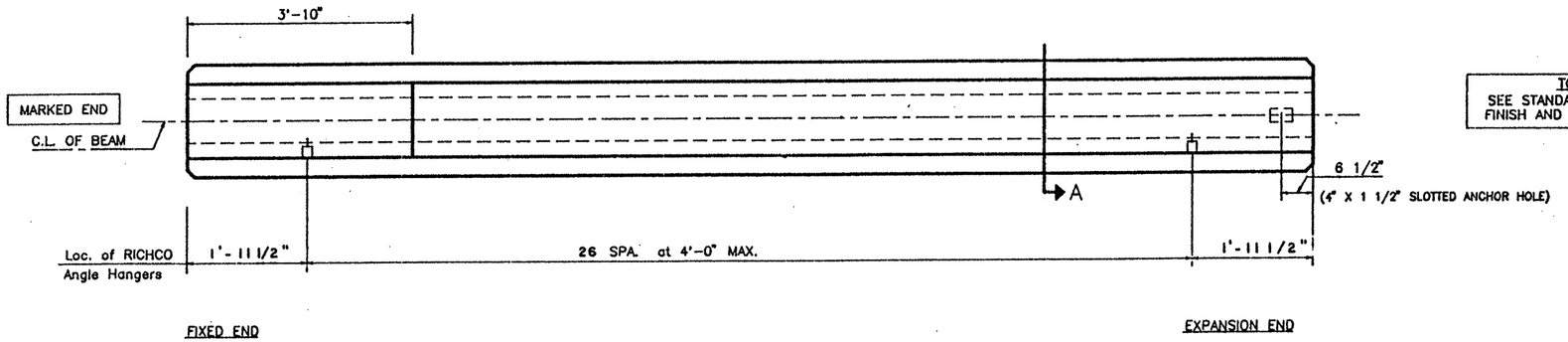

PLAN

TOP FINISH PANELS
SEE STANDARD SHEET S-"IV" FOR TOP FINISH AND OTHER NOTES AND DETAILS.

LO-LAX STRAND PATTERN		
NUMBER OF STRANDS	: 48 ~1/2" ø 270 K @ 31.00 K EACH	
NUMBER OF STRAIGHT STRANDS	: 38	
NUMBER OF DEFLECTED STRANDS	: 10 @ A – 52	
CONCRETE RELEASE STRENGTH	: 5209	PSI
CONCRETE DESIGN STRENGTH	: 6343	PSI
ECCENTRICITY @ ℄	: 19.67"	ECCENTRICITY @ END : 10.92"

DESIGN NO. : GPNSLR
TOTAL BEAM LENGTH OF THIS SHEET : 107.87'

MANCO PRESTRESS COMPANY

CONTRACTOR Gilbert of Texas Construction

FED.RD. DIV.NO.	STATE	PROJECT NO.	HWY. NO.
6	TEXAS	NH 92(50)M	83/281

STATE DIST.NO.	COUNTY	CONTROL NO.	SECTION NO.	JOB NO.
21	HIDALGO	39	17	97

COPYRIGHT 1989 BY
STRUCTURAL ENGINEERING ASSOCIATES, INC.
CONSULTING ENGINEERS, SAN ANTONIO, TEXAS

JOB NO.	DRAWN	CHECKED	DATE	SHEET/MARK NO.
92-018	C.A.J.	D.M.P.	8 / 26 / 92	IV-75
SEA JOB NO. 92-059H	FABRICATION SHEET			

330020

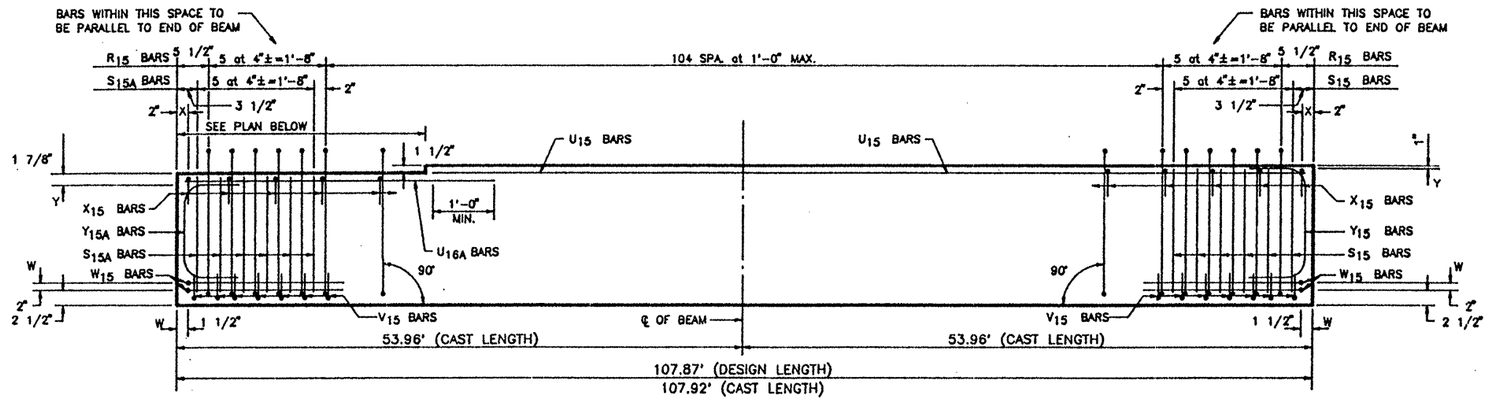

ELEVATION – REINFORCING STEEL

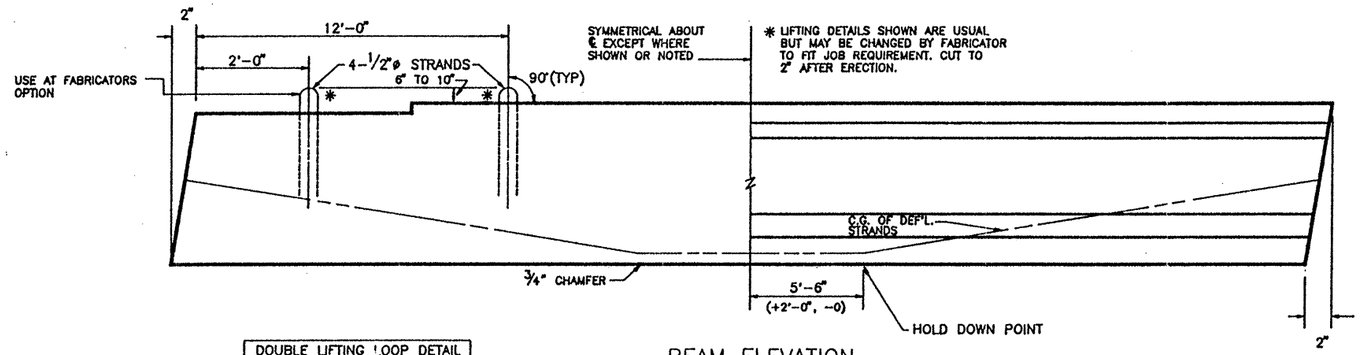

DOUBLE LIFTING LOOP DETAIL
(TYP. FOR BEAMS OVER 75')

BEAM ELEVATION
SEE PLAN VIEW FOR HOLE(S) LOCATION

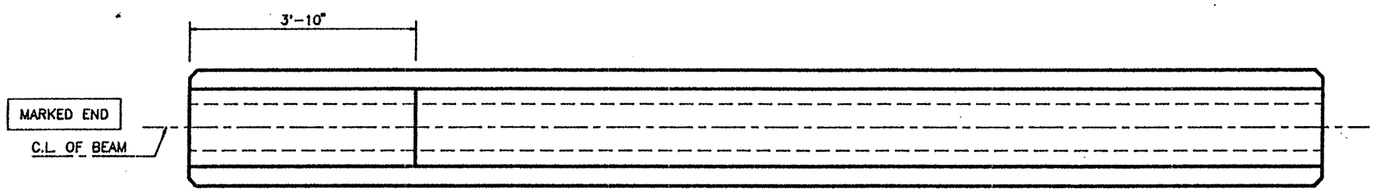

PLAN

TOP FINISH PANELS
SEE STANDARD SHEET S-"IV" FOR TOP FINISH AND OTHER NOTES AND DETAILS.

TEXAS DEPARTMENT OF TRANSPORTATION
APPROVED
DIVISION OF BRIDGES AND STRUCTURES
SEP 24 1992
APPROVAL OF THIS DRAWING DOES NOT RELIEVE THE CONTRACTOR OF THE RESPONSIBILITY FOR THE CORRECTNESS OF DETAIL.

REINFORCING STEEL SCHEDULE

BAR	QUANTITY PER BEAM	TOTAL QUANTITY	SIZE	LENGTH
R_{15}	115	230	#3	standard
X_{15}	111	222	#3	standard
Y_{15}	2	4	#6	standard
S_{15}	12	24	#7	standard
V_{15}	14	28	#3	standard
W_{15}	4	8	#5	standard
U_{15}	2	4	#5	103'-10"
Y_{15A}	2	4	#6	standard
S_{15A}	12	24	#7	standard
U_{16A}	2	4	#5	6'-6"

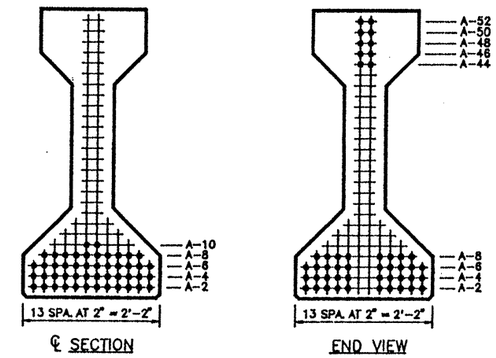

TYPE "IV" BEAM QUANTITY : 2

LO-LAX STRAND PATTERN

NUMBER OF STRANDS : 48 ~1/2" ø 270 K @ 31.00 K EACH		
NUMBER OF STRAIGHT STRANDS	: 38	
NUMBER OF DEFLECTED STRANDS	: 10 @ A – 52	
CONCRETE RELEASE STRENGTH	: 5209	PSI
CONCRETE DESIGN STRENGTH	: 6343	PSI
ECCENTRICITY @ ℄ : 19.67"	ECCENTRICITY @ END : 10.92"	

DESIGN NO. : GPNSLR
TOTAL BEAM LENGTH OF THIS SHEET : 215.74'

MANCO PRESTRESS COMPANY
CONTRACTOR Gilbert of Texas Construction

FED.RD. DIV.NO.	STATE	PROJECT NO.	HWY. NO.
6	TEXAS	NH 92(50)M	83/281

STATE DIST.NO.	COUNTY	CONTROL NO.	SECTION NO.	JOB NO.
21	HIDALGO	39	17	97

COPYRIGHT 1989 BY STRUCTURAL ENGINEERING ASSOCIATES, INC. CONSULTING ENGINEERS, SAN ANTONIO, TEXAS

JOB NO.	DRAWN	CHECKED	DATE	SHEET/MARK NO.
92-018	C.A.J.	D.M.P.	8 / 26 /92	IV-76
SEA JOB NO. 92-059H	FABRICATION SHEET			

330020

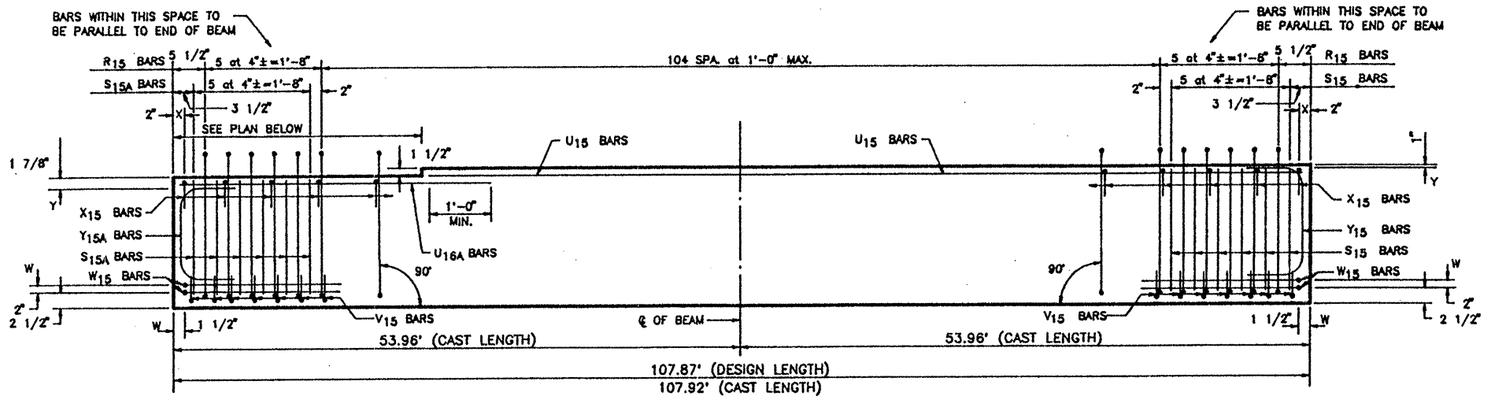

ELEVATION – REINFORCING STEEL

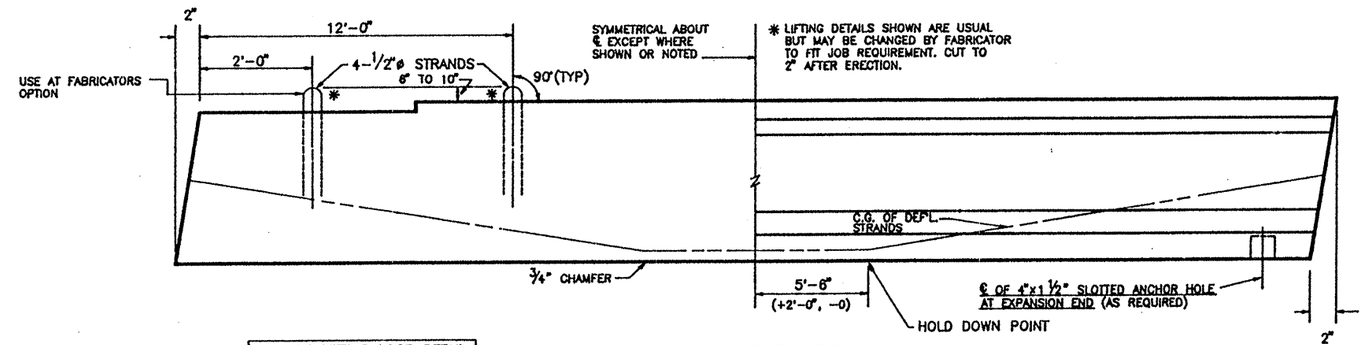

DOUBLE LIFTING LOOP DETAIL
(TYP. FOR BEAMS OVER 75')

BEAM ELEVATION
SEE PLAN VIEW FOR HOLE(S) LOCATION

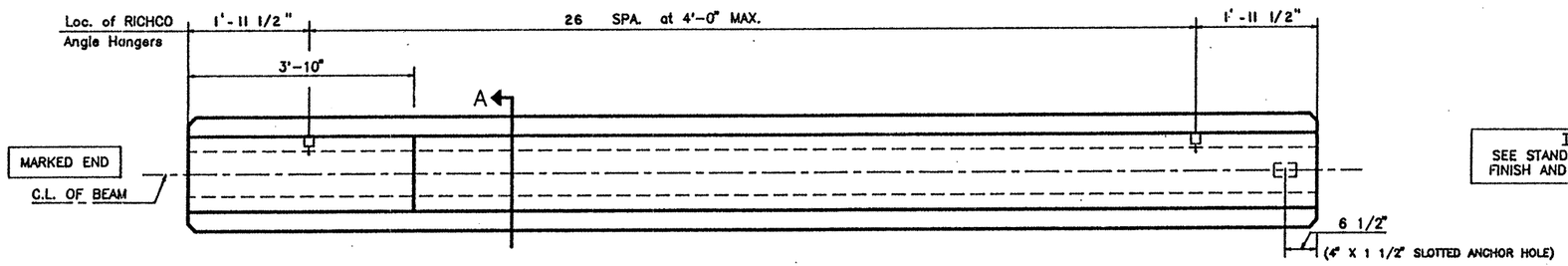

FIXED END

EXPANSION END

PLAN

TOP FINISH PANELS
SEE STANDARD SHEET S-"IV" FOR TOP FINISH AND OTHER NOTES AND DETAILS.

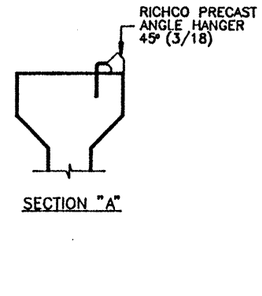

SECTION "A"

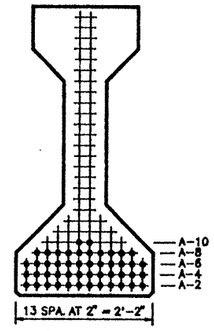

℄ SECTION

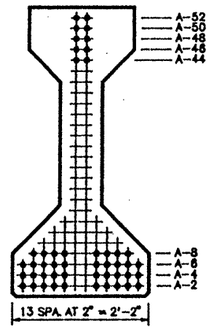

END VIEW

TYPE "IV" BEAM QUANTITY : 1

LO-LAX STRAND PATTERN		
NUMBER OF STRANDS : 48 ~1/2" ø 270 K ● 31.00 K EACH		
NUMBER OF STRAIGHT STRANDS	: 38	
NUMBER OF DEFLECTED STRANDS	: 10 ⊕ A – 52	
CONCRETE RELEASE STRENGTH	: 5209	PSI
CONCRETE DESIGN STRENGTH	: 6343	PSI
ECCENTRICITY ● ℄ : 19.67"	ECCENTRICITY ● END : 10.92"	

DESIGN NO. : GPNSLR
TOTAL BEAM LENGTH OF THIS SHEET : 107.87'

REINFORCING STEEL SCHEDULE

BAR	QUANTITY PER BEAM	TOTAL QUANTITY	SIZE	LENGTH
R_{15}	115	115	#3	standard
X_{15}	111	111	#3	standard
Y_{15}	2	2	#6	standard
S_{15}	12	12	#7	standard
V_{15}	14	14	#3	standard
W_{15}	4	4	#5	standard
U_{15}	2	2	#5	103'-10"
Y_{15A}	2	2	#6	standard
S_{15A}	12	12	#7	standard
U_{16A}	2	2	#5	6'-6"

TEXAS DEPARTMENT OF TRANSPORTATION
APPROVED
DIVISION OF BRIDGES AND STRUCTURES
SEP 24 1992
APPROVAL OF THIS DRAWING DOES NOT RELIEVE THE CONTRACTOR OF THE RESPONSIBILITY FOR THE CORRECTNESS OF DETAIL.

MANCO® PRESTRESS COMPANY

CONTRACTOR Gilbert of Texas Construction

FED.RD. DIV.NO.	STATE	PROJECT NO.			HWY. NO.
6	TEXAS	NH 92(50)M			83/281
STATE DIST.NO.	COUNTY		CONTROL NO.	SECTION NO.	JOB NO.
21	HIDALGO		39	17	97

COPYRIGHT 1989 BY SEA STRUCTURAL ENGINEERING ASSOCIATES, INC. CONSULTING ENGINEERS, SAN ANTONIO, TEXAS

JOB NO.	DRAWN	CHECKED	DATE	SHEET/MARK NO.
92-018	C.A.J.	D. M.P.	8 /26 /92	IV-77
SEA JOB NO. 92-059H	FABRICATION SHEET			

330020

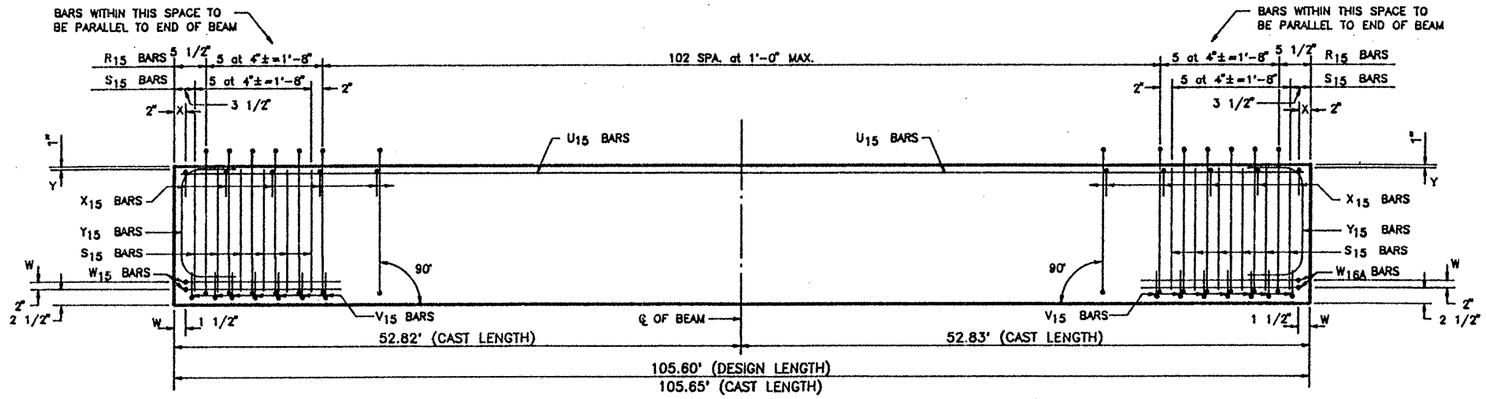

ELEVATION – REINFORCING STEEL

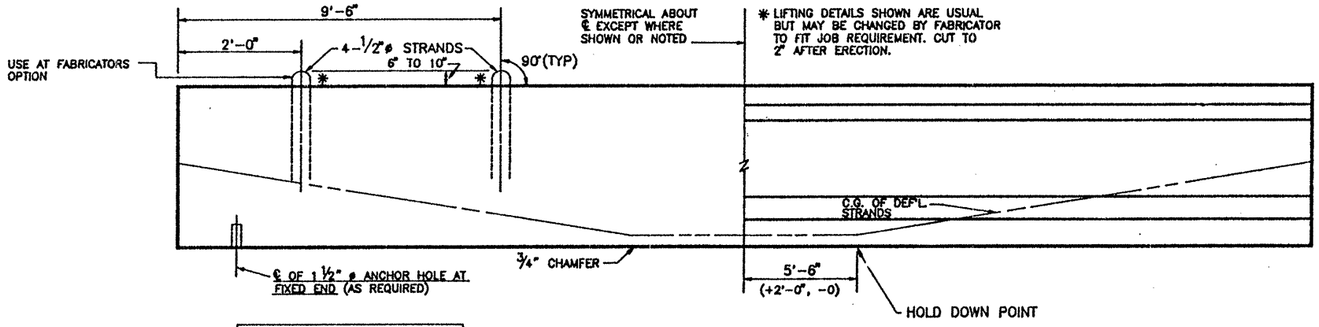

DOUBLE LIFTING LOOP DETAIL
(TYP. FOR BEAMS OVER 75')

BEAM ELEVATION
SEE PLAN VIEW FOR HOLE(S) LOCATION

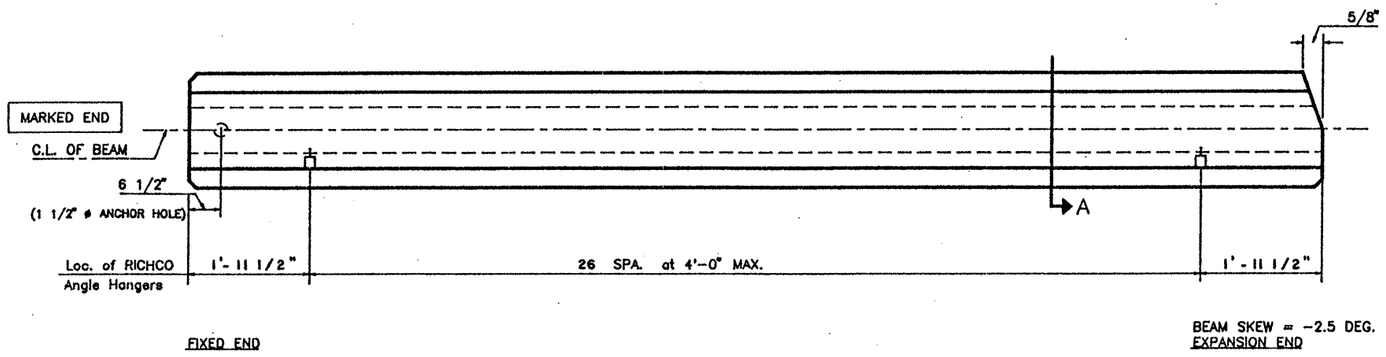

PLAN

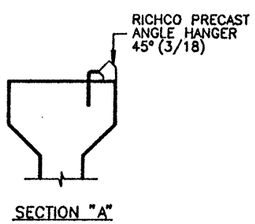

SECTION "A"

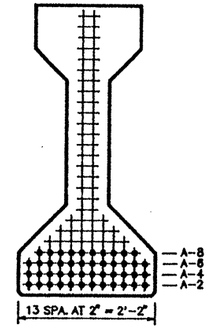

℄ SECTION

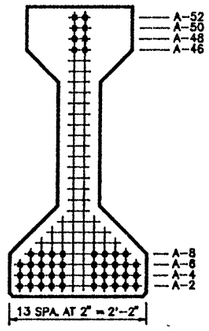

END VIEW

TYPE "IV" BEAM QUANTITY : 1

TOP FINISH PANELS
SEE STANDARD SHEET S-"IV" FOR TOP FINISH AND OTHER NOTES AND DETAILS.

TEXAS DEPARTMENT OF TRANSPORTATION
APPROVED
DIVISION OF BRIDGES AND STRUCTURES

SEP 24 1992

APPROVAL OF THIS DRAWING DOES NOT RELIEVE THE CONTRACTOR OF THE RESPONSIBILITY FOR THE CORRECTNESS OF DETAIL.

REINFORCING STEEL SCHEDULE

BAR	QUANTITY PER BEAM	TOTAL QUANTITY	SIZE	LENGTH
R_{15}	113	113	#3	standard
X_{15}	109	109	#3	standard
Y_{15}	4	4	#6	standard
S_{15}	24	24	#7	standard
V_{15}	14	14	#3	standard
W_{15}	2	2	#5	standard
U_{15}	2	2	#5	105'-5"
W_{16A}	2	2	#5	standard

LO-LAX STRAND PATTERN		
NUMBER OF STRANDS	: 46 ~1/2" ø 270 K @ 31.00 K EACH	
NUMBER OF STRAIGHT STRANDS	: 38	
NUMBER OF DEFLECTED STRANDS	: 8 @ A – 52	
CONCRETE RELEASE STRENGTH	: 5278	PSI
CONCRETE DESIGN STRENGTH	: 6088	PSI
ECCENTRICITY @ ℄	: 19.88"	ECCENTRICITY @ END : 12.23"

DESIGN NO. : GPNSLR
TOTAL BEAM LENGTH OF THIS SHEET : 105.60'

MANCO PRESTRESS COMPANY

CONTRACTOR Gilbert of Texas Construction

FED.RD. DIV.NO.	STATE	PROJECT NO.		HWY. NO.
6	TEXAS	NH 92(50)M		83/281
STATE DIST.NO.	COUNTY	CONTROL NO.	SECTION NO.	JOB NO.
21	HIDALGO	39	17	97

COPYRIGHT 1989 BY
STRUCTURAL ENGINEERING ASSOCIATES, INC.
CONSULTING ENGINEERS, SAN ANTONIO, TEXAS

JOB NO.	DRAWN	CHECKED	DATE	SHEET/MARK NO.
92-018	C.A.J.	D.M.P.	8 / 26 / 92	IV-78
SEA JOB NO. 92-059H	FABRICATION SHEET			

330020

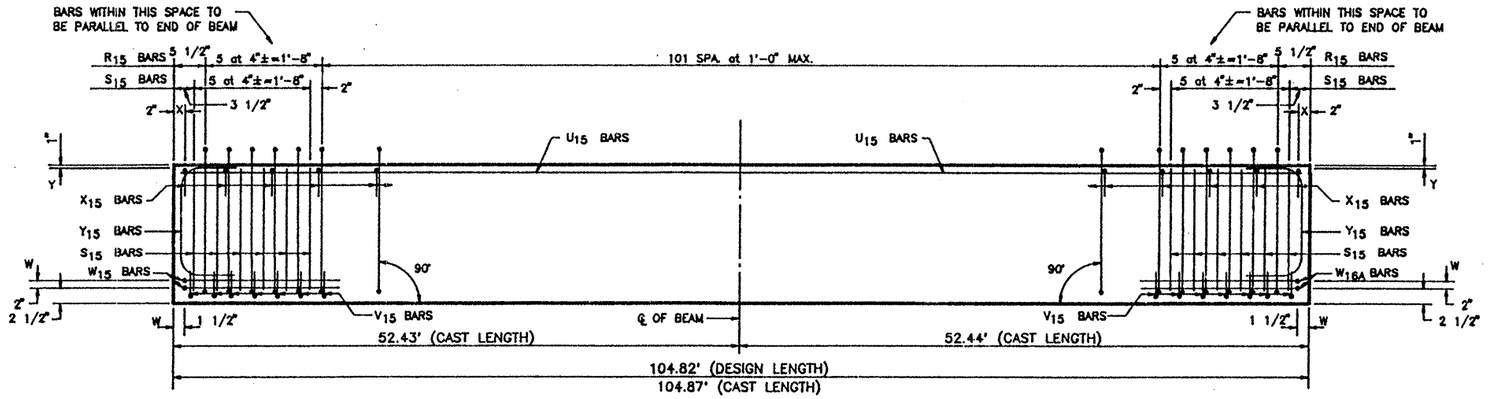

ELEVATION – REINFORCING STEEL

REINFORCING STEEL SCHEDULE				
BAR	QUANTITY PER BEAM	TOTAL QUANTITY	SIZE	LENGTH
R_{15}	112	112	#3	standard
X_{15}	108	108	#3	standard
Y_{15}	4	4	#6	standard
S_{15}	24	24	#7	standard
V_{15}	14	14	#3	standard
W_{15}	2	2	#5	standard
U_{15}	2	2	#5	104'-7"
W_{16A}	2	2	#5	standard

TEXAS DEPARTMENT OF TRANSPORTATION
APPROVED
DIVISION OF BRIDGES AND STRUCTURES
SEP 2 4 1992
APPROVAL OF THIS DRAWING DOES NOT RELIEVE THE CONTRACTOR OF THE RESPONSIBILITY FOR THE CORRECTNESS OF DETAIL.

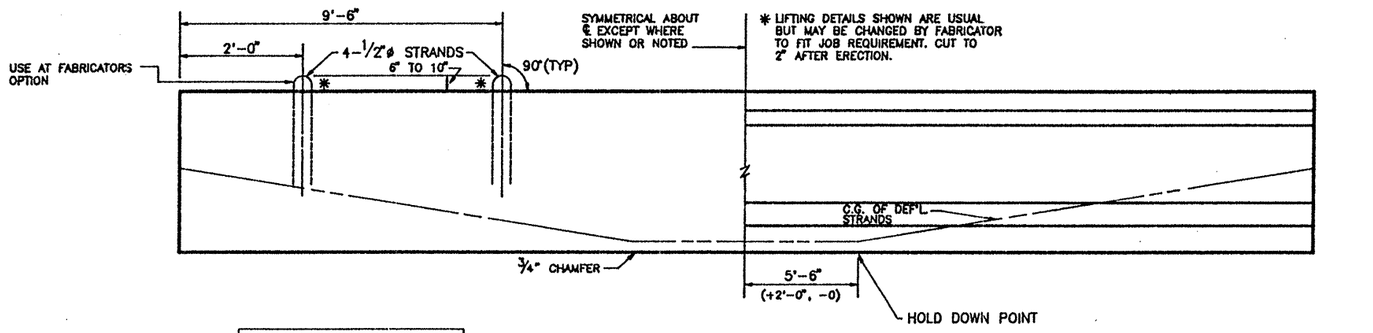

DOUBLE LIFTING LOOP DETAIL
(TYP. FOR BEAMS OVER 75')

BEAM ELEVATION
SEE PLAN VIEW FOR HOLE(S) LOCATION

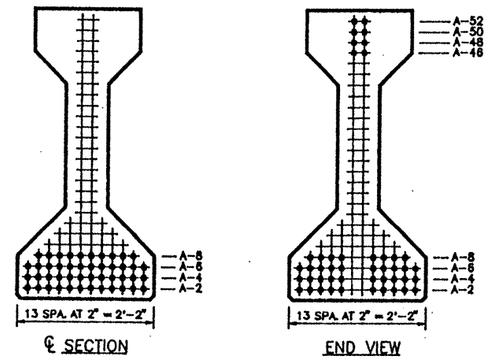

℄ SECTION

END VIEW

TYPE "IV" BEAM QUANTITY : 1

LO-LAX STRAND PATTERN		
NUMBER OF STRANDS	: 46 ~1/2" ø 270 K @ 31.00 K EACH	
NUMBER OF STRAIGHT STRANDS	: 38	
NUMBER OF DEFLECTED STRANDS	: 8 @ A – 52	
CONCRETE RELEASE STRENGTH	: 5278	PSI
CONCRETE DESIGN STRENGTH	: 6088	PSI
ECCENTRICITY @ ℄	: 19.88" ECCENTRICITY @ END	: 12.23"

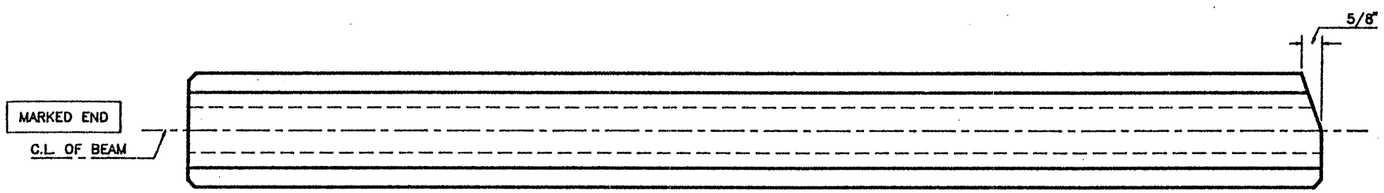

FIXED END

BEAM SKEW = –2.5 DEG.
EXPANSION END

TOP FINISH PANELS
SEE STANDARD SHEET S-"IV" FOR TOP FINISH AND OTHER NOTES AND DETAILS.

PLAN

DESIGN NO. : GPNSLR
TOTAL BEAM LENGTH OF THIS SHEET : 104.82'

MANCO PRESTRESS COMPANY
CONTRACTOR Gilbert of Texas Construction

FED.RD. DIV.NO.	STATE	PROJECT NO.		HWY. NO.
6	TEXAS	NH 92(50)M		83/281
STATE DIST.NO.	COUNTY	CONTROL NO.	SECTION NO.	JOB NO.
21	HIDALGO	39	17	97

COPYRIGHT 1989 BY STRUCTURAL ENGINEERING ASSOCIATES, INC. CONSULTING ENGINEERS, SAN ANTONIO, TEXAS

JOB NO.	DRAWN	CHECKED	DATE	SHEET/MARK NO.
92-018	C.A.J.	D.M.P.	8 / 26 / 92	IV-79
SEA JOB NO. 92-059H	FABRICATION SHEET			

330020

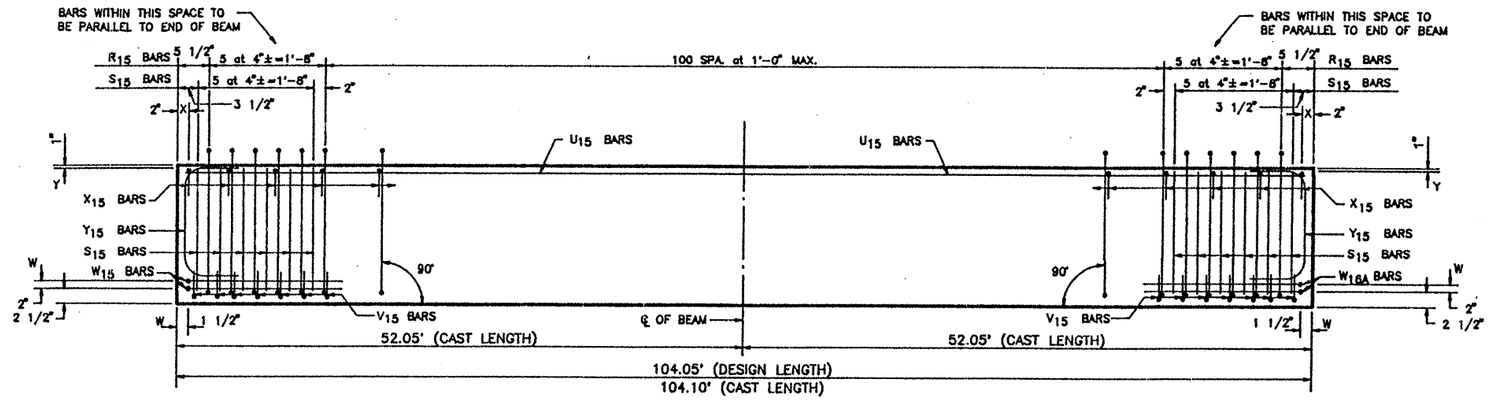

ELEVATION – REINFORCING STEEL

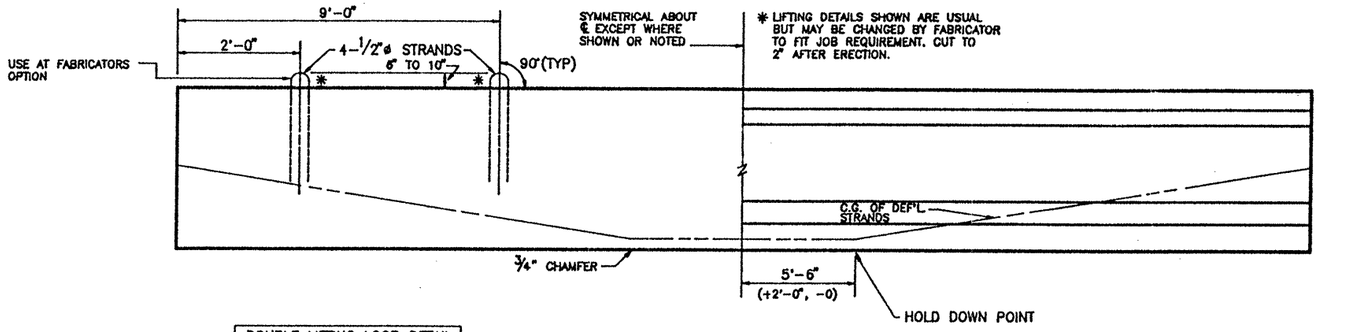

DOUBLE LIFTING LOOP DETAIL
(TYP. FOR BEAMS OVER 75')

BEAM ELEVATION
SEE PLAN VIEW FOR HOLE(S) LOCATION

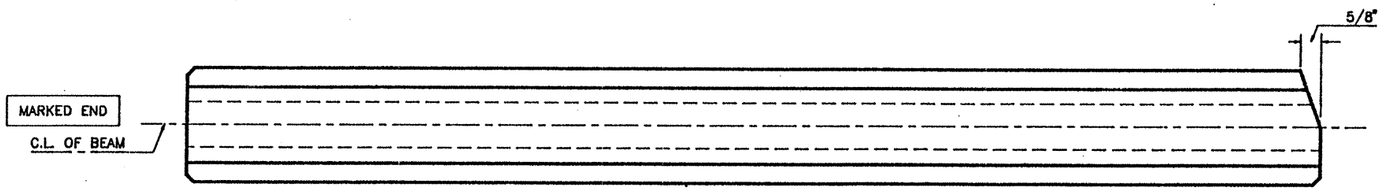

PLAN

TOP FINISH PANELS
SEE STANDARD SHEET S-"IV" FOR TOP FINISH AND OTHER NOTES AND DETAILS.

REINFORCING STEEL SCHEDULE				
BAR	QUANTITY PER BEAM	TOTAL QUANTITY	SIZE	LENGTH
R_{15}	111	111	#3	standard
X_{15}	107	107	#3	standard
Y_{15}	4	4	#6	standard
S_{15}	24	24	#7	standard
V_{15}	14	14	#3	standard
W_{15}	2	2	#5	standard
U_{15}	2	2	#5	103'-10"
W_{16A}	2	2	#5	standard

TEXAS DEPARTMENT OF TRANSPORTATION
APPROVED
DIVISION OF BRIDGES AND STRUCTURES

SEP 24 1992

APPROVAL OF THIS DRAWING DOES NOT RELIEVE THE CONTRACTOR OF THE RESPONSIBILITY FOR THE CORRECTNESS OF DETAIL.

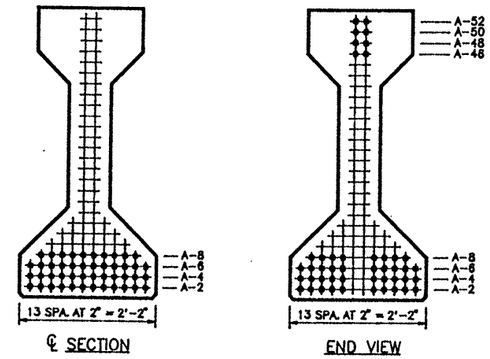

TYPE "IV" BEAM QUANTITY : 1

LO-LAX STRAND PATTERN		
NUMBER OF STRANDS	: 46 ~1/2" ø 270 K @ 31.00 K EACH	
NUMBER OF STRAIGHT STRANDS	: 38	
NUMBER OF DEFLECTED STRANDS	: 8 @ A - 52	
CONCRETE RELEASE STRENGTH	: 5278	PSI
CONCRETE DESIGN STRENGTH	: 6088	PSI
ECCENTRICITY @ ℄	: 19.88"	ECCENTRICITY @ END : 12.23"

DESIGN NO. : GPNSLR
TOTAL BEAM LENGTH OF THIS SHEET : 104.05'

MANCO PRESTRESS COMPANY				
CONTRACTOR Gilbert of Texas Construction				
FED.RD. DIV.NO.	STATE	PROJECT NO.		HWY. NO.
6	TEXAS	NH 92(50)M		83/281
STATE DIST.NO.	COUNTY	CONTROL NO.	SECTION NO.	JOB NO.
21	HIDALGO	39	17	97

COPYRIGHT 1989 BY
STRUCTURAL ENGINEERING ASSOCIATES, INC.
CONSULTING ENGINEERS, SAN ANTONIO, TEXAS

JOB NO.	DRAWN	CHECKED	DATE	SHEET/MARK NO.
92-018	C.A.J.	D.M.P.	8 / 26 / 92	IV-80
SEA JOB NO. 92-059H	FABRICATION SHEET			

330020

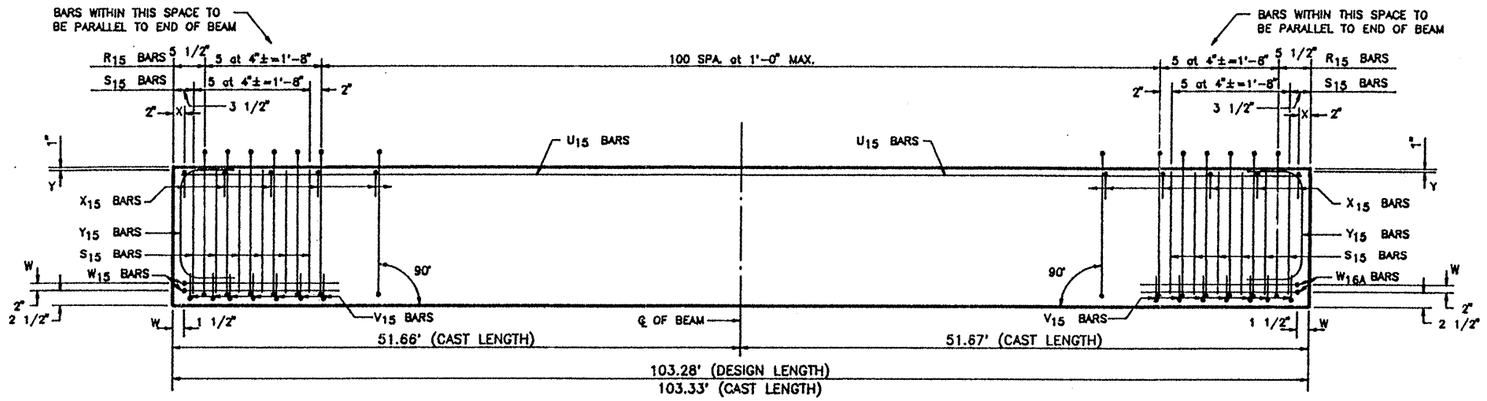

ELEVATION – REINFORCING STEEL

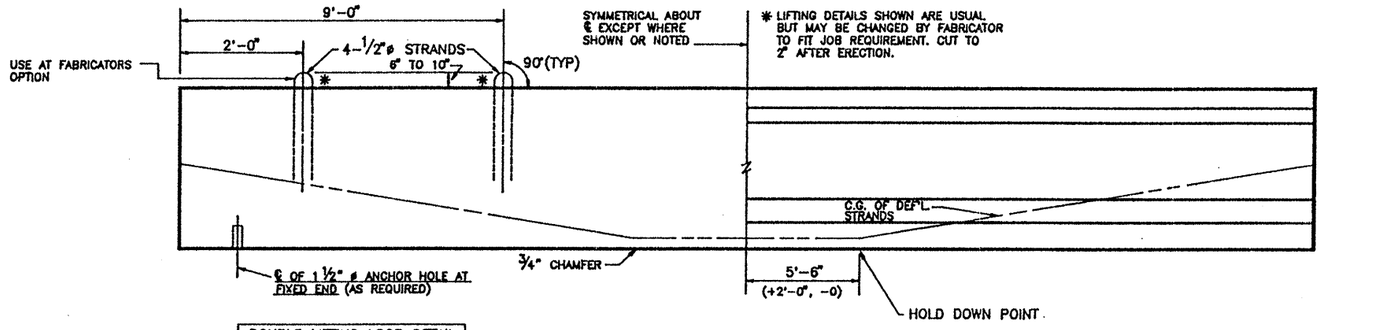

DOUBLE LIFTING LOOP DETAIL
(TYP. FOR BEAMS OVER 75')

BEAM ELEVATION
SEE PLAN VIEW FOR HOLE(S) LOCATION

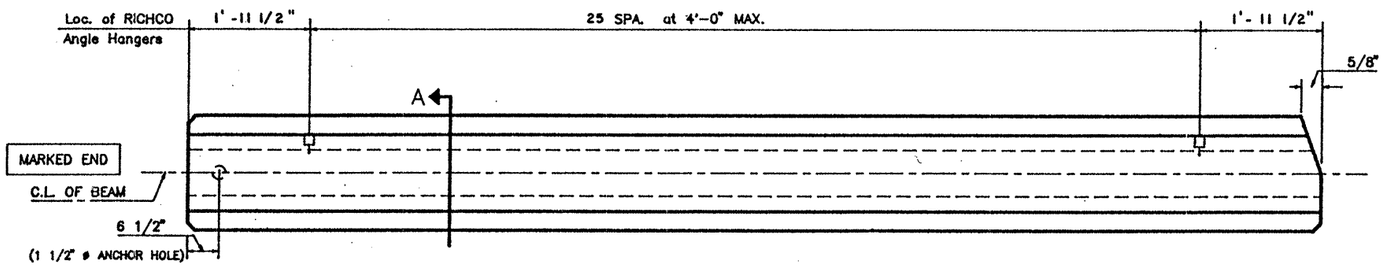

FIXED END

BEAM SKEW = -2.5 DEG.
EXPANSION END

PLAN

TOP FINISH PANELS
SEE STANDARD SHEET S-"IV" FOR TOP FINISH AND OTHER NOTES AND DETAILS.

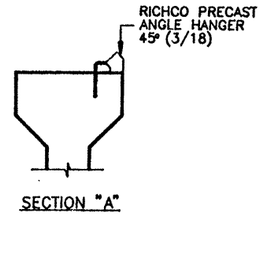

SECTION "A"

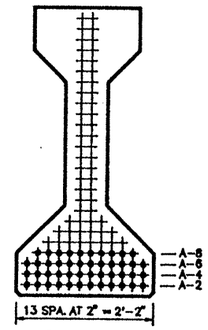

℄ SECTION

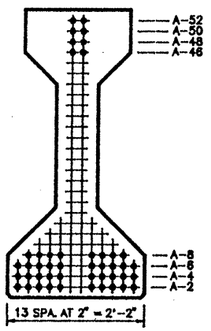

END VIEW

TYPE "IV" BEAM QUANTITY : 1

LO-LAX STRAND PATTERN		
NUMBER OF STRANDS	: 46 ~1/2" ø 270 K ● 31.00 K EACH	
NUMBER OF STRAIGHT STRANDS	: 38	
NUMBER OF DEFLECTED STRANDS	: 8 ● A – 52	
CONCRETE RELEASE STRENGTH	: 5278	PSI
CONCRETE DESIGN STRENGTH	: 6088	PSI
ECCENTRICITY ● ℄	: 19.88"	ECCENTRICITY ● END : 12.23"

DESIGN NO. : GPNSLR
TOTAL BEAM LENGTH OF THIS SHEET : 103.28'

REINFORCING STEEL SCHEDULE				
BAR	QUANTITY PER BEAM	TOTAL QUANTITY	SIZE	LENGTH
R_{15}	111	111	#3	standard
X_{15}	107	107	#3	standard
Y_{15}	4	4	#6	standard
S_{15}	24	24	#7	standard
V_{15}	14	14	#3	standard
W_{15}	2	2	#5	standard
U_{15}	2	2	#5	103'-1"
W_{16A}	2	2	#5	standard

TEXAS DEPARTMENT OF TRANSPORTATION
APPROVED
DIVISION OF BRIDGES AND STRUCTURES
SEP 24 1992
APPROVAL OF THIS DRAWING DOES NOT RELIEVE THE CONTRACTOR OF THE RESPONSIBILITY FOR THE CORRECTNESS OF DETAIL.

MANCO PRESTRESS COMPANY

CONTRACTOR Gilbert of Texas Construction

FED.RD. DIV.NO.	STATE	PROJECT NO.	HWY. NO.
6	TEXAS	NH 92(50)M	83/281

STATE DIST.NO.	COUNTY	CONTROL NO.	SECTION NO.	JOB NO.
21	HIDALGO	39	17	97

COPYRIGHT 1989 BY STRUCTURAL ENGINEERING ASSOCIATES, INC. CONSULTING ENGINEERS, SAN ANTONIO, TEXAS

JOB NO.	DRAWN	CHECKED	DATE	SHEET/MARK NO.
92-018	C.A.J.	D.M.P.	8 / 26 / 92	IV-81
SEA JOB NO. 92-059H	FABRICATION SHEET			

330020

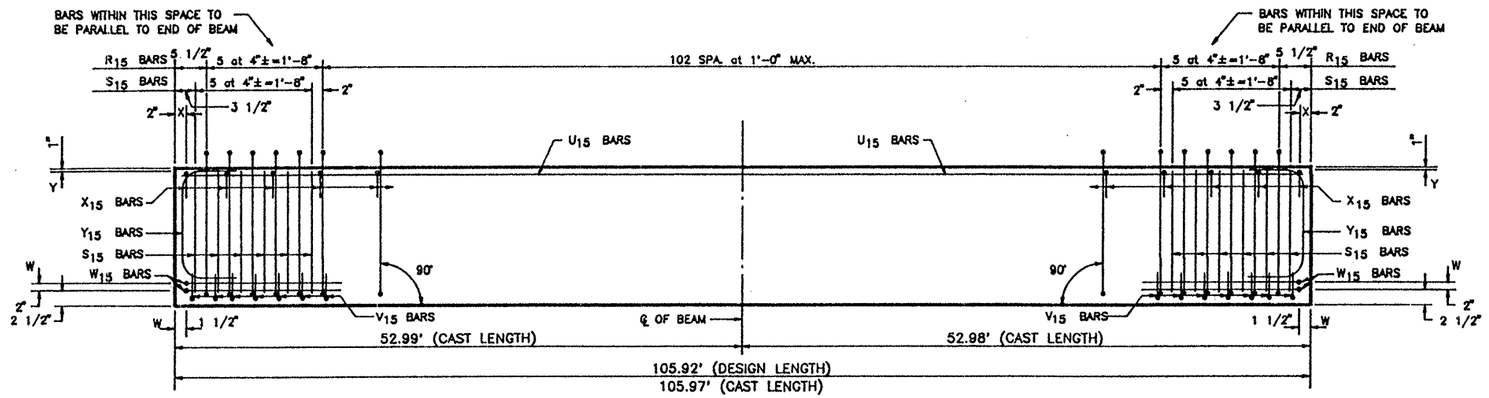

ELEVATION – REINFORCING STEEL

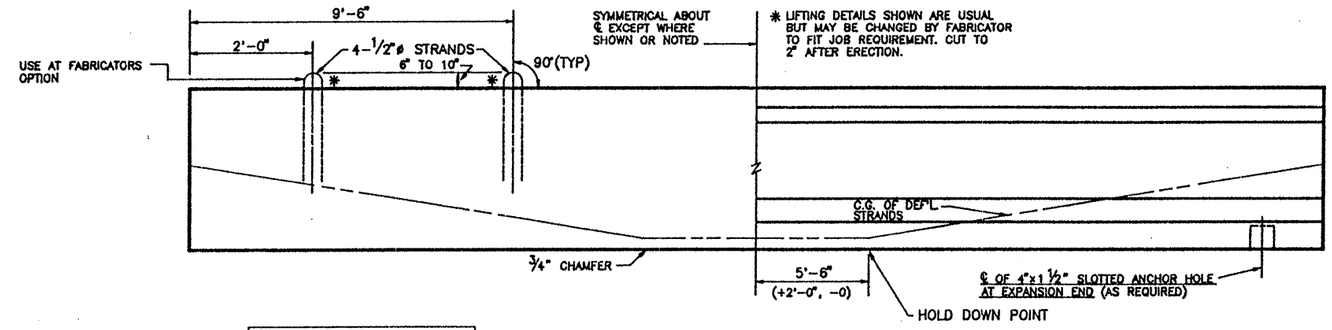

DOUBLE LIFTING LOOP DETAIL
(TYP. FOR BEAMS OVER 75')

BEAM ELEVATION
SEE PLAN VIEW FOR HOLE(S) LOCATION

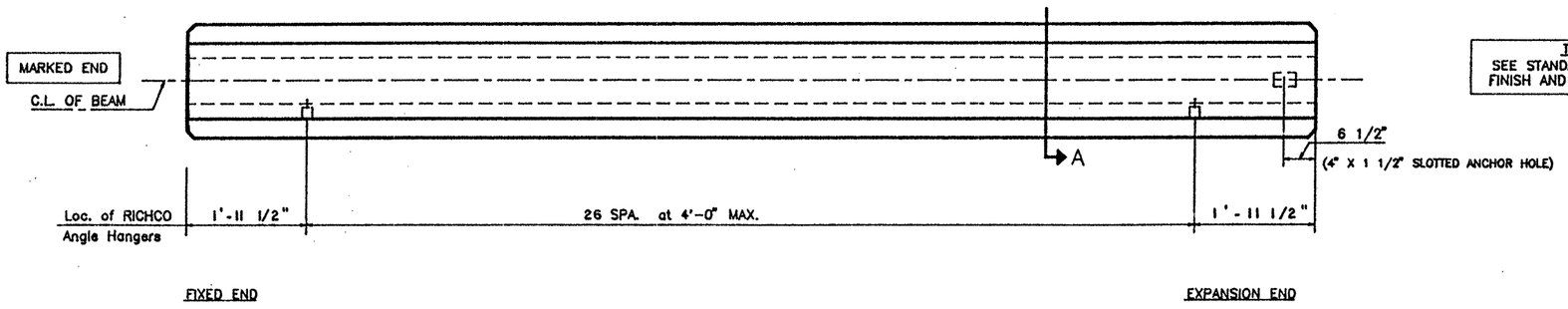

PLAN

TOP FINISH PANELS
SEE STANDARD SHEET S-"IV" FOR TOP FINISH AND OTHER NOTES AND DETAILS.

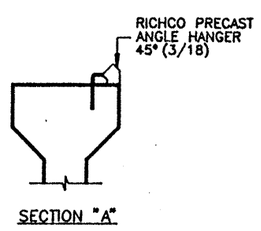

SECTION "A"

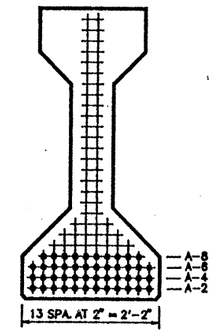

℄ SECTION

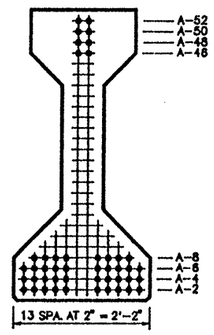

END VIEW

TYPE "IV" BEAM QUANTITY : 1

REINFORCING STEEL SCHEDULE				
BAR	QUANTITY PER BEAM	TOTAL QUANTITY	SIZE	LENGTH
R_{15}	113	113	#3	standard
X_{15}	109	109	#3	standard
Y_{15}	4	4	#6	standard
S_{15}	24	24	#7	standard
V_{15}	14	14	#3	standard
W_{15}	4	4	#5	standard
U_{15}	2	2	#5	105'-8"

TEXAS DEPARTMENT OF TRANSPORTATION
APPROVED
DIVISION OF BRIDGES AND STRUCTURES
SEP 24 1992
APPROVAL OF THIS DRAWING DOES NOT RELIEVE THE CONTRACTOR OF THE RESPONSIBILITY FOR THE CORRECTNESS OF DETAIL.

LO-LAX STRAND PATTERN		
NUMBER OF STRANDS	: 46 ~1/2" ø 270 K @ 31.00 K EACH	
NUMBER OF STRAIGHT STRANDS	: 38	
NUMBER OF DEFLECTED STRANDS	: 8 @ A – 52	
CONCRETE RELEASE STRENGTH	: 5278	PSI
CONCRETE DESIGN STRENGTH	: 6088	PSI
ECCENTRICITY @ ℄	: 19.88"	ECCENTRICITY @ END : 12.23"

DESIGN NO. : GPNSLR
TOTAL BEAM LENGTH OF THIS SHEET : 105.92'

MANCO PRESTRESS COMPANY

CONTRACTOR Gilbert of Texas Construction

FED.RD. DIV.NO.	STATE	PROJECT NO.	HWY. NO.
6	TEXAS	NH 92(30)M	83/281

STATE DIST.NO.	COUNTY	CONTROL NO.	SECTION NO.	JOB NO.
21	HIDALGO	39	17	97

COPYRIGHT 1989 BY
STRUCTURAL ENGINEERING ASSOCIATES, INC.
CONSULTING ENGINEERS, SAN ANTONIO, TEXAS

JOB NO.	DRAWN	CHECKED	DATE	SHEET/MARK NO.
92-018	C.A.J.	D.M.P.	8 / 26 / 92	IV-82
SEA JOB NO. 92-059H	FABRICATION SHEET			

330020

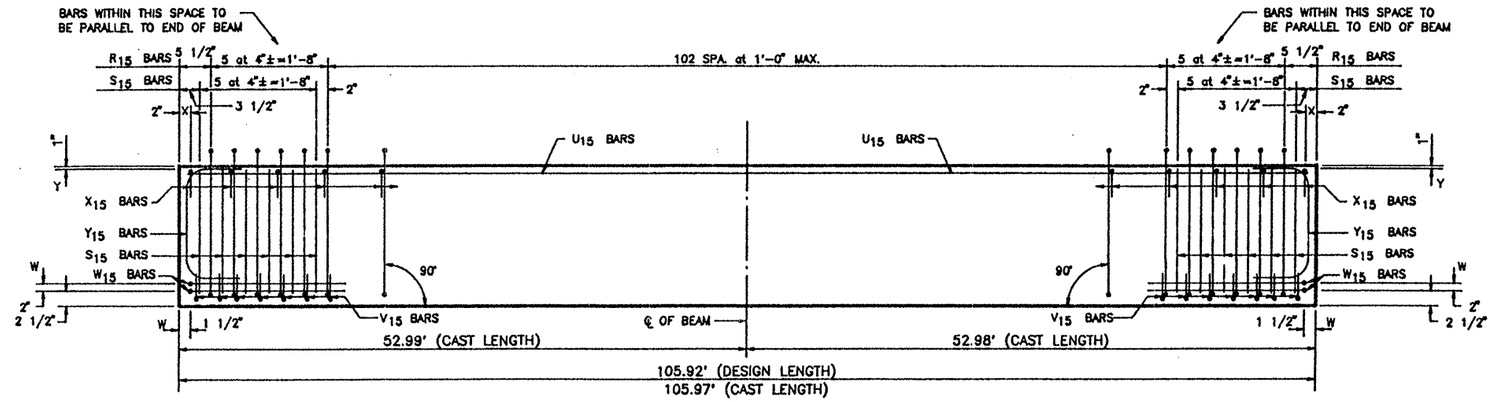

ELEVATION – REINFORCING STEEL

REINFORCING STEEL SCHEDULE				
BAR	QUANTITY PER BEAM	TOTAL QUANTITY	SIZE	LENGTH
R_{15}	113	452	#3	standard
X_{15}	109	436	#3	standard
Y_{15}	4	16	#6	standard
S_{15}	24	96	#7	standard
V_{15}	14	56	#3	standard
W_{15}	4	16	#5	standard
U_{15}	2	8	#5	105'-8"

TEXAS DEPARTMENT OF TRANSPORTATION
APPROVED
DIVISION OF BRIDGES AND STRUCTURES
SEP 24 1992
APPROVAL OF THIS DRAWING DOES NOT RELIEVE THE CONTRACTOR OF THE RESPONSIBILITY FOR THE CORRECTNESS OF DETAIL.

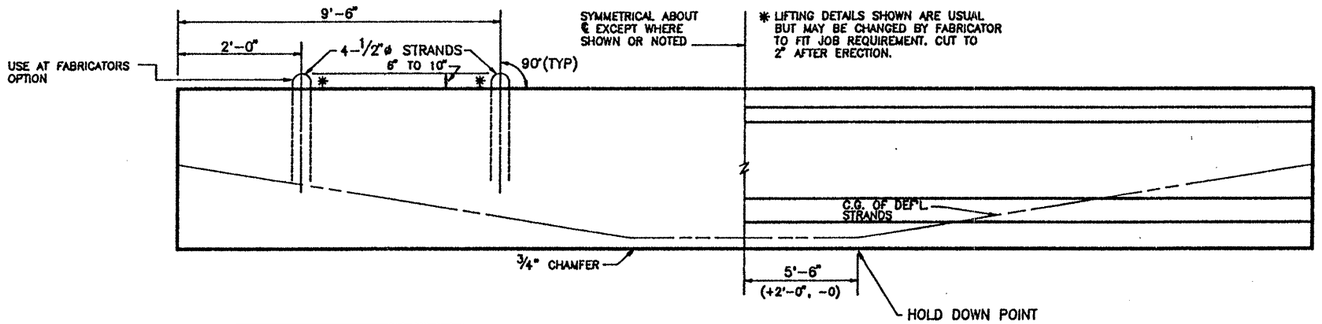

DOUBLE LIFTING LOOP DETAIL
(TYP. FOR BEAMS OVER 75')

BEAM ELEVATION
SEE PLAN VIEW FOR HOLE(S) LOCATION

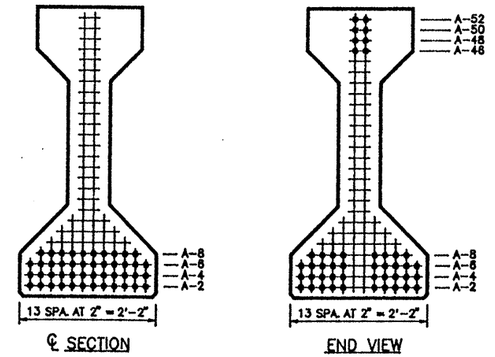

℄ SECTION

END VIEW

TYPE "IV" BEAM QUANTITY : 4

LO-LAX STRAND PATTERN		
NUMBER OF STRANDS	: 46 ~1/2" ø 270 K @ 31.00 K EACH	
NUMBER OF STRAIGHT STRANDS	: 38	
NUMBER OF DEFLECTED STRANDS	: 8 @ A – 52	
CONCRETE RELEASE STRENGTH	: 5278	PSI
CONCRETE DESIGN STRENGTH	: 6088	PSI
ECCENTRICITY @ ℄	: 19.88" ECCENTRICITY @ END	: 12.23"

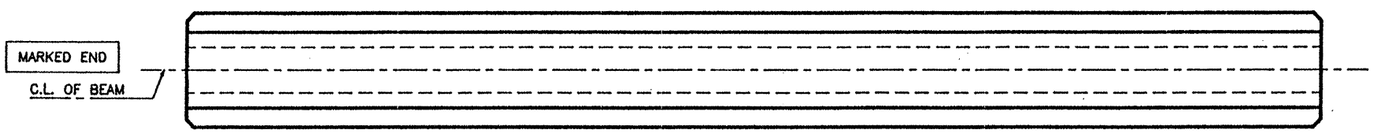

PLAN

TOP FINISH PANELS
SEE STANDARD SHEET S-"IV" FOR TOP FINISH AND OTHER NOTES AND DETAILS.

DESIGN NO. : GPNSLR
TOTAL BEAM LENGTH OF THIS SHEET : 423.68'

MANCO PRESTRESS COMPANY
CONTRACTOR Gilbert of Texas Construction

FED.RD. DIV.NO.	STATE	PROJECT NO.	HWY. NO.
6	TEXAS	NH 92(50)M	83/281

STATE DIST.NO.	COUNTY	CONTROL NO.	SECTION NO.	JOB NO.
21	HIDALGO	39	17	97

COPYRIGHT 1989 BY
STRUCTURAL ENGINEERING ASSOCIATES, INC.
CONSULTING ENGINEERS, SAN ANTONIO, TEXAS

JOB NO.	DRAWN	CHECKED	DATE	SHEET/MARK NO.
92-018	C.A.J.	D.M.P.	8/26/92	IV-83
SEA JOB NO. 92-059H	FABRICATION SHEET			

330020

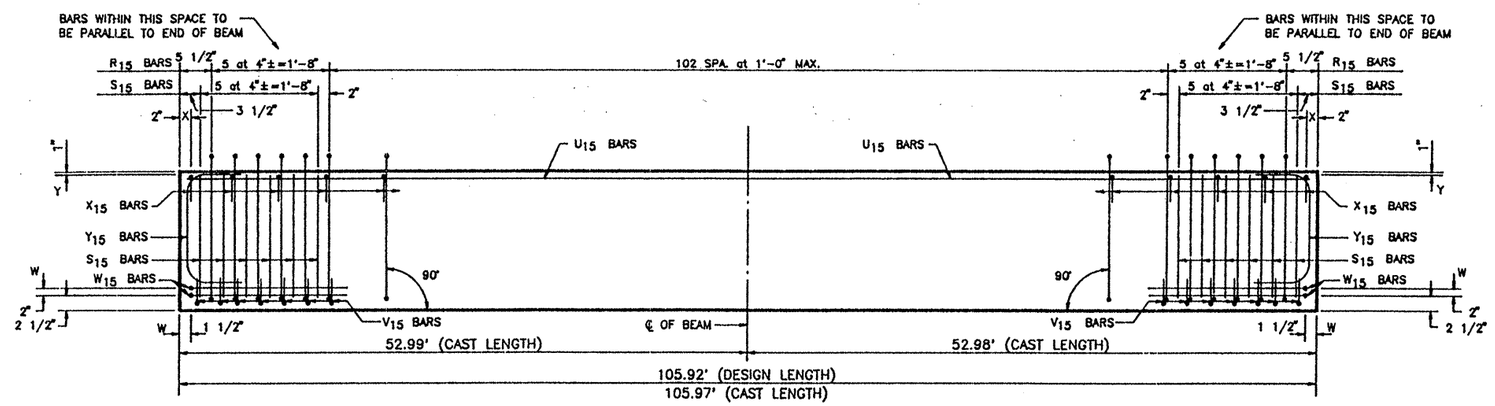

ELEVATION – REINFORCING STEEL

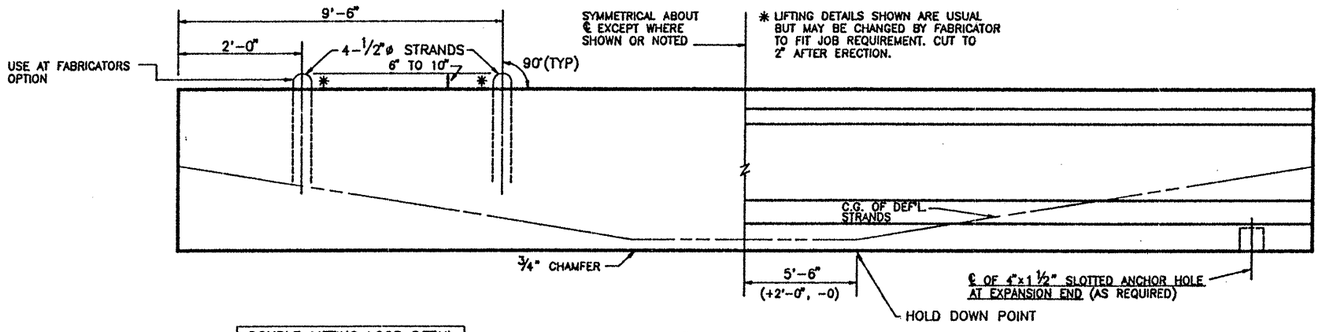

DOUBLE LIFTING LOOP DETAIL
(TYP. FOR BEAMS OVER 75')

BEAM ELEVATION
SEE PLAN VIEW FOR HOLE(S) LOCATION

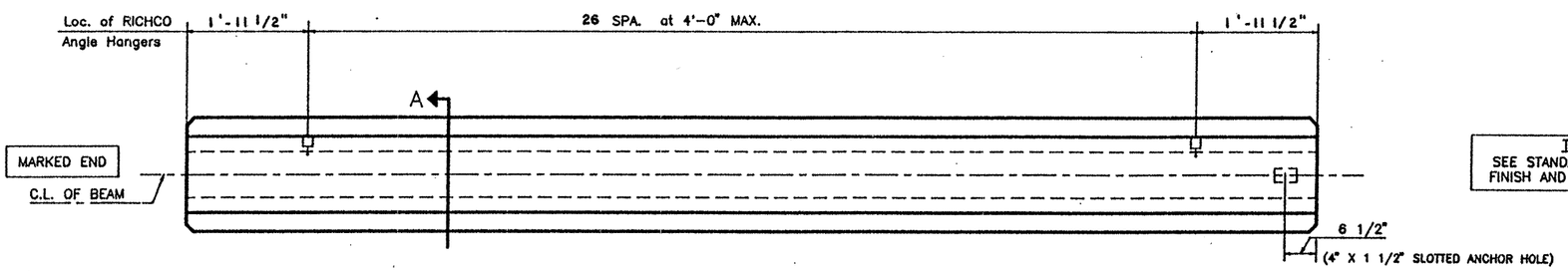

FIXED END

EXPANSION END

PLAN

TOP FINISH PANELS
SEE STANDARD SHEET S-"IV" FOR TOP FINISH AND OTHER NOTES AND DETAILS.

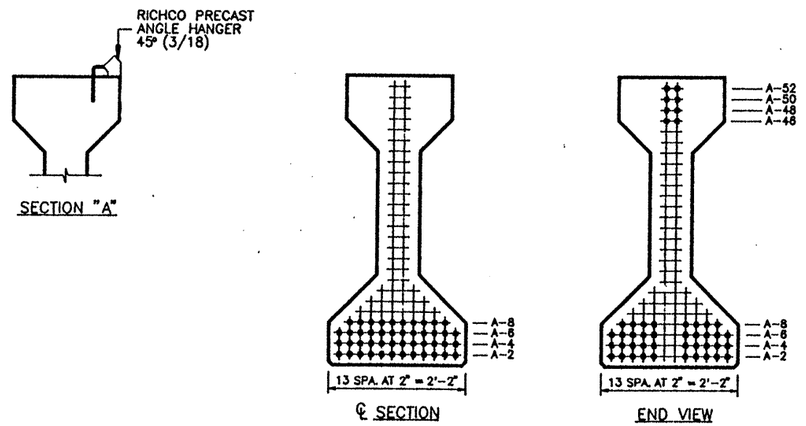

TYPE "IV" BEAM QUANTITY : 1

REINFORCING STEEL SCHEDULE				
BAR	QUANTITY PER BEAM	TOTAL QUANTITY	SIZE	LENGTH
R_{15}	113	113	#3	standard
X_{15}	109	109	#3	standard
Y_{15}	4	4	#6	standard
S_{15}	24	24	#7	standard
V_{15}	14	14	#3	standard
W_{15}	4	4	#5	standard
U_{15}	2	2	#5	105'-8"

TEXAS DEPARTMENT OF TRANSPORTATION
APPROVED
DIVISION OF BRIDGES AND STRUCTURES
SEP 24 1992
APPROVAL OF THIS DRAWING DOES NOT RELIEVE THE CONTRACTOR OF THE RESPONSIBILITY FOR THE CORRECTNESS OF DETAIL.

LO-LAX STRAND PATTERN		
NUMBER OF STRANDS	: 46 ~1/2" ø 270 K @ 31.00 K EACH	
NUMBER OF STRAIGHT STRANDS	: 38	
NUMBER OF DEFLECTED STRANDS	: 8 @ A – 52	
CONCRETE RELEASE STRENGTH	: 5278	PSI
CONCRETE DESIGN STRENGTH	: 6088	PSI
ECCENTRICITY @ ℄	: 19.88"	ECCENTRICITY @ END : 12.23"

DESIGN NO. : GPNSLR
TOTAL BEAM LENGTH OF THIS SHEET : 105.92'

MANCO PRESTRESS COMPANY
CONTRACTOR Gilbert of Texas Construction

FED.RD. DIV.NO.	STATE	PROJECT NO.	HWY. NO.
6	TEXAS	NH 92(50)M	83/281

STATE DIST.NO.	COUNTY	CONTROL NO.	SECTION NO.	JOB NO.
21	HIDALGO	39	17	97

COPYRIGHT 1989 BY
STRUCTURAL ENGINEERING ASSOCIATES, INC.
CONSULTING ENGINEERS, SAN ANTONIO, TEXAS

JOB NO.	DRAWN	CHECKED	DATE	SHEET/MARK NO.
92-018	C.A.J.	D.M.P.	8/26/92	IV-84
SEA JOB NO. 92-059H	FABRICATION SHEET			

330020

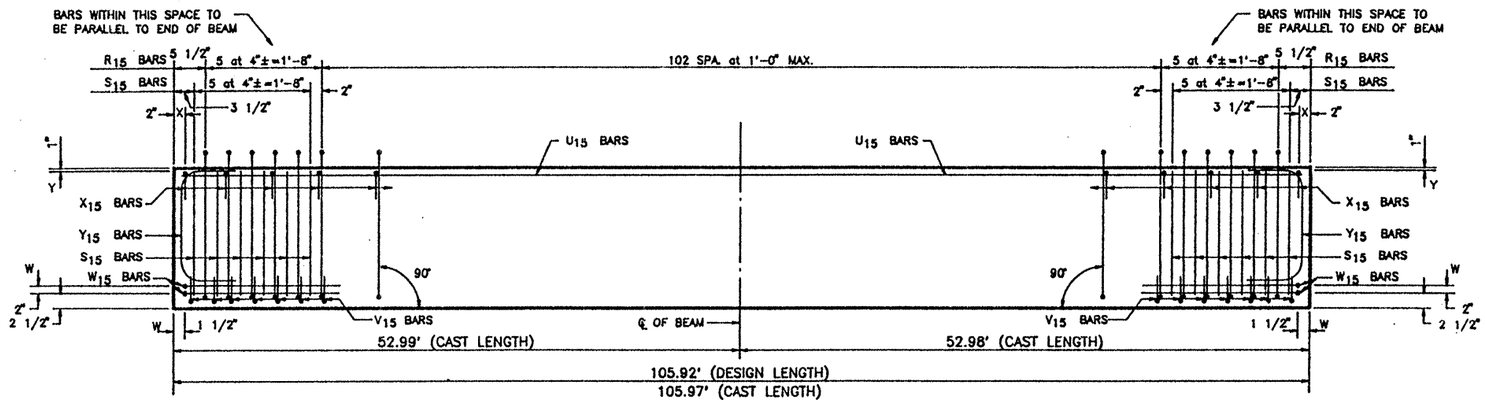

ELEVATION – REINFORCING STEEL

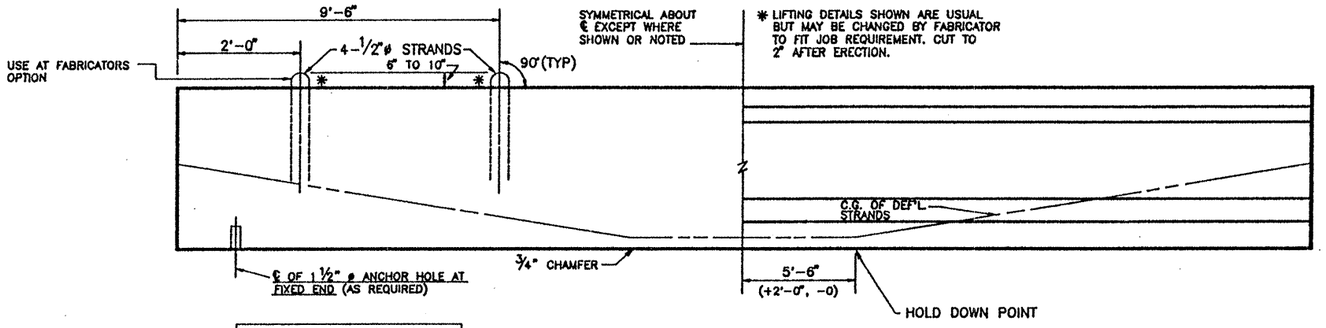

DOUBLE LIFTING LOOP DETAIL
(TYP. FOR BEAMS OVER 75')

BEAM ELEVATION
SEE PLAN VIEW FOR HOLE(S) LOCATION

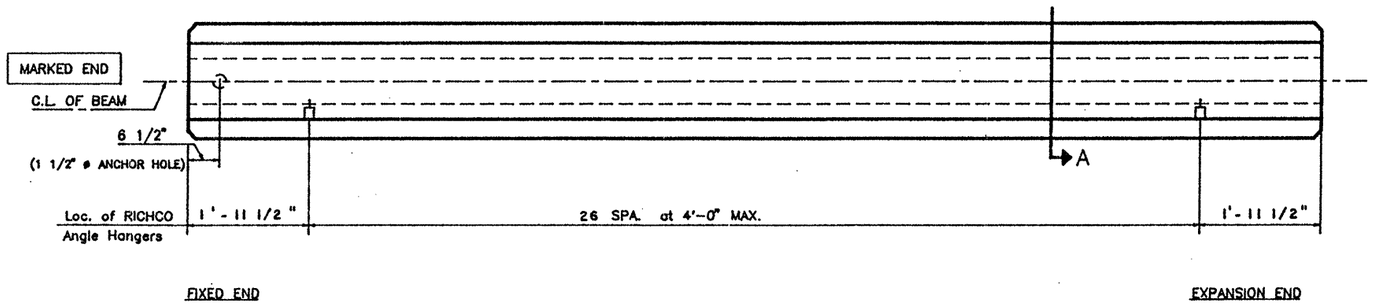

PLAN

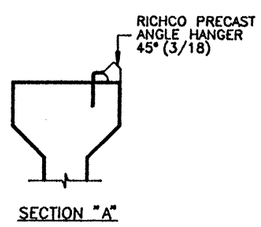

SECTION "A"

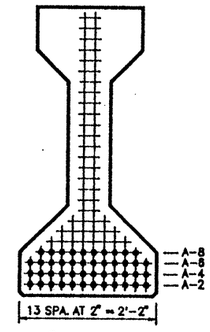

℄ SECTION

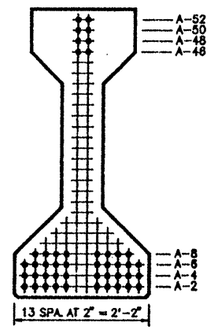

END VIEW

TYPE "IV" BEAM QUANTITY : 1

LO-LAX STRAND PATTERN	
NUMBER OF STRANDS	: 46 ~1/2" ø 270 K @ 31.00 K EACH
NUMBER OF STRAIGHT STRANDS	: 38
NUMBER OF DEFLECTED STRANDS	: 8 @ A – 52
CONCRETE RELEASE STRENGTH	: 5278 PSI
CONCRETE DESIGN STRENGTH	: 6088 PSI
ECCENTRICITY @ ℄	: 19.88" ECCENTRICITY @ END : 12.23"

DESIGN NO. : GPNSLR
TOTAL BEAM LENGTH OF THIS SHEET : 105.92'

TOP FINISH PANELS
SEE STANDARD SHEET S-"IV" FOR TOP FINISH AND OTHER NOTES AND DETAILS.

REINFORCING STEEL SCHEDULE				
BAR	QUANTITY PER BEAM	TOTAL QUANTITY	SIZE	LENGTH
R_{15}	113	113	#3	standard
X_{15}	109	109	#3	standard
Y_{15}	4	4	#6	standard
S_{15}	24	24	#7	standard
V_{15}	14	14	#3	standard
W_{15}	4	4	#5	standard
U_{15}	2	2	#5	105'-8"

TEXAS DEPARTMENT OF TRANSPORTATION
APPROVED
DIVISION OF BRIDGES AND STRUCTURES
SEP 24 1992
APPROVAL OF THIS DRAWING DOES NOT RELIEVE THE CONTRACTOR OF THE RESPONSIBILITY FOR THE CORRECTNESS OF DETAIL.

MANCO PRESTRESS COMPANY

CONTRACTOR Gilbert of Texas Construction

FED.RD. DIV.NO.	STATE	PROJECT NO.	HWY. NO.
6	TEXAS	NH 92(50)M	83/281

STATE DIST.NO.	COUNTY	CONTROL NO.	SECTION NO.	JOB NO.
21	HIDALGO	39	17	97

COPYRIGHT 1989 BY STRUCTURAL ENGINEERING ASSOCIATES, INC. CONSULTING ENGINEERS, SAN ANTONIO, TEXAS

JOB NO.	DRAWN	CHECKED	DATE	SHEET/MARK NO.
92-018	C.A.J.	D.M.P.	8 /26 /92	IV-85
SEA JOB NO. 92-059H	FABRICATION SHEET			

330020

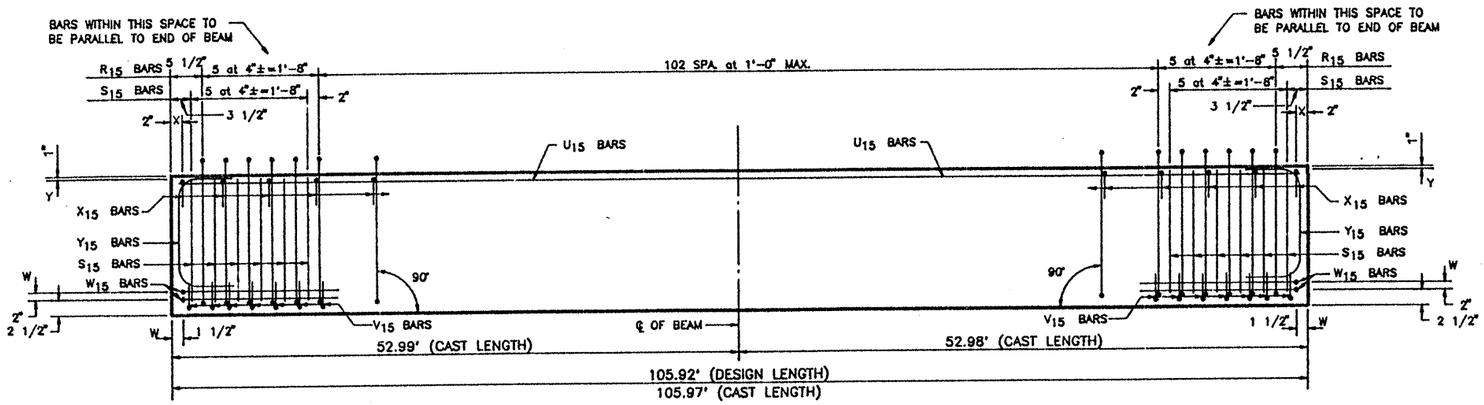

ELEVATION – REINFORCING STEEL

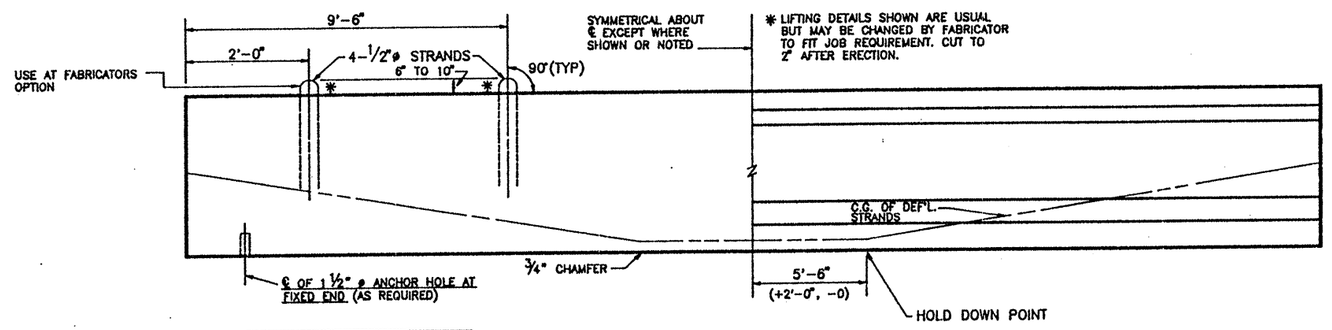

DOUBLE LIFTING LOOP DETAIL
(TYP. FOR BEAMS OVER 75')

BEAM ELEVATION
SEE PLAN VIEW FOR HOLE(S) LOCATION

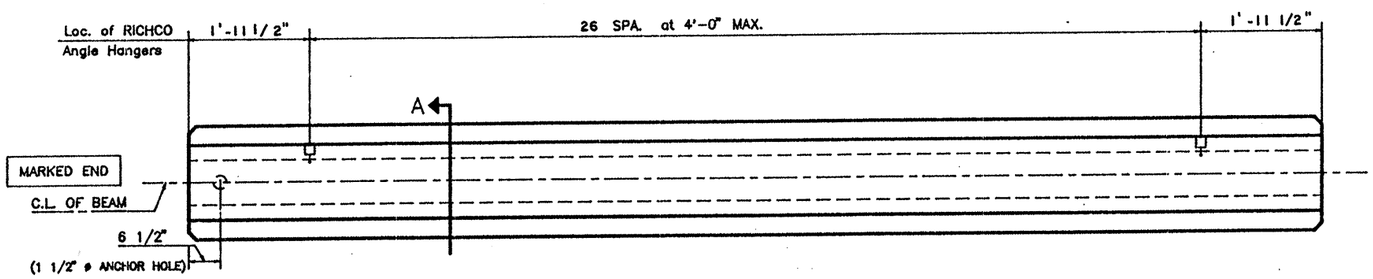

FIXED END

EXPANSION END

PLAN

TOP FINISH PANELS
SEE STANDARD SHEET S-"IV" FOR TOP FINISH AND OTHER NOTES AND DETAILS.

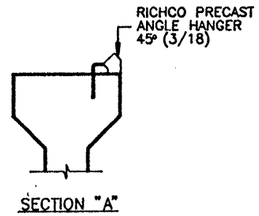

SECTION "A"

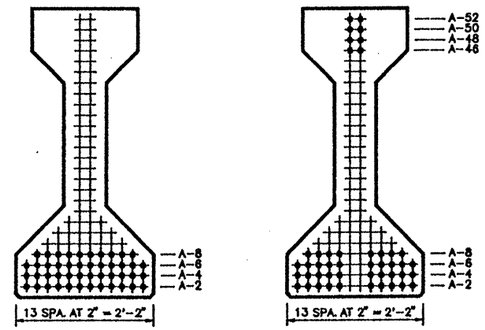

℄ SECTION

END VIEW

TEXAS DEPARTMENT OF TRANSPORTATION
APPROVED
DIVISION OF BRIDGES AND STRUCTURES
SEP 2 4 1992
APPROVAL OF THIS DRAWING DOES NOT RELIEVE THE CONTRACTOR OF THE RESPONSIBILITY FOR THE CORRECTNESS OF DETAIL.

REINFORCING STEEL SCHEDULE

BAR	QUANTITY PER BEAM	TOTAL QUANTITY	SIZE	LENGTH
R_{15}	113	113	#3	standard
X_{15}	109	109	#3	standard
Y_{15}	4	4	#6	standard
S_{15}	24	24	#7	standard
V_{15}	14	14	#3	standard
W_{15}	4	4	#5	standard
U_{15}	2	2	#5	105'-8"

TYPE "IV" BEAM QUANTITY : 1

LO-LAX STRAND PATTERN

NUMBER OF STRANDS	: 46 ~1/2" ø 270 K @ 31.00 K EACH	
NUMBER OF STRAIGHT STRANDS	: 38	
NUMBER OF DEFLECTED STRANDS	: 8 @ A – 52	
CONCRETE RELEASE STRENGTH	: 5278	PSI
CONCRETE DESIGN STRENGTH	: 6088	PSI
ECCENTRICITY @ ℄	: 19.88"	ECCENTRICITY @ END : 12.23"

DESIGN NO. : GPNSLR
TOTAL BEAM LENGTH OF THIS SHEET : 105.92'

MANCO PRESTRESS COMPANY
CONTRACTOR Gilbert of Texas Construction

FED.RD. DIV.NO.	STATE	PROJECT NO.	HWY. NO.
6	TEXAS	NH 92(50)M	83/281

STATE DIST.NO.	COUNTY	CONTROL NO.	SECTION NO.	JOB NO.
21	HIDALGO	39	17	97

COPYRIGHT 1989 BY SEA STRUCTURAL ENGINEERING ASSOCIATES, INC. CONSULTING ENGINEERS, SAN ANTONIO, TEXAS

JOB NO.	DRAWN	CHECKED	DATE	SHEET/MARK NO.
92-018	C.A.J.	D.M.P.	8 /26 /92	IV-86
SEA JOB NO. 92-059H	FABRICATION SHEET			

330020

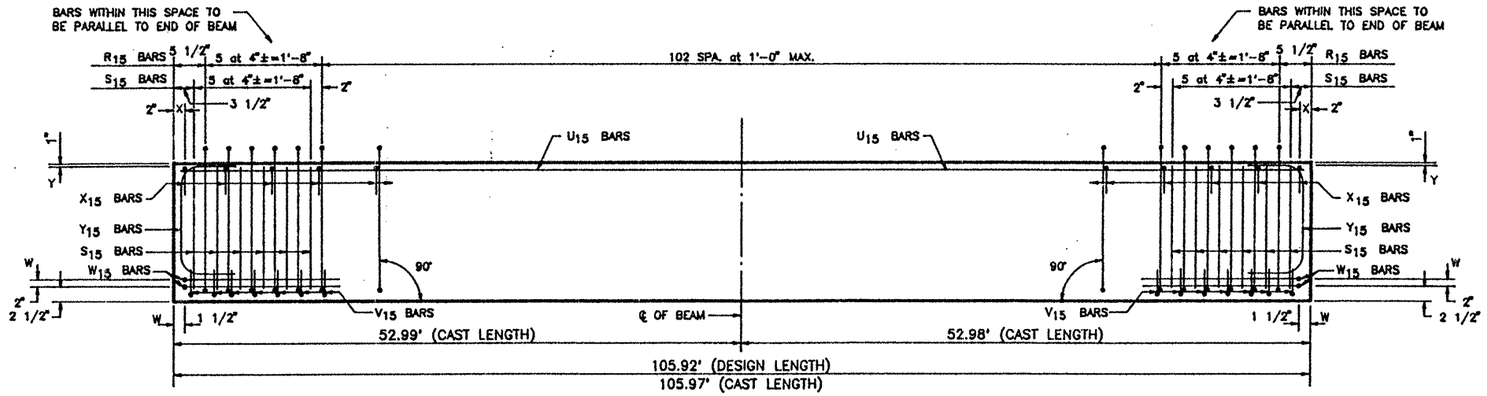

ELEVATION – REINFORCING STEEL

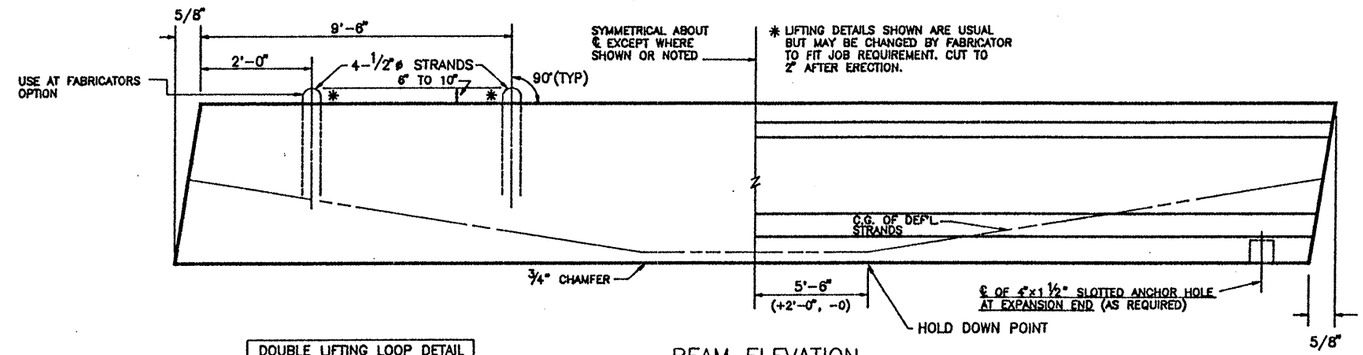

DOUBLE LIFTING LOOP DETAIL
(TYP. FOR BEAMS OVER 75')

BEAM ELEVATION
SEE PLAN VIEW FOR HOLE(S) LOCATION

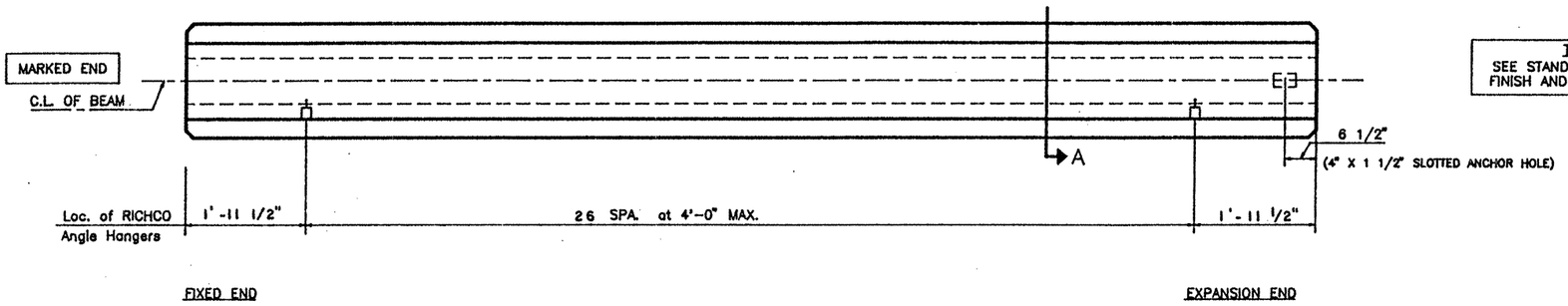

PLAN

REINFORCING STEEL SCHEDULE				
BAR	QUANTITY PER BEAM	TOTAL QUANTITY	SIZE	LENGTH
R_{15}	113	113	#3	standard
X_{15}	109	109	#3	standard
Y_{15}	4	4	#6	standard
S_{15}	24	24	#7	standard
V_{15}	14	14	#3	standard
W_{15}	4	4	#5	standard
U_{15}	2	2	#5	105'-8"

TEXAS DEPARTMENT OF TRANSPORTATION
APPROVED
DIVISION OF BRIDGES AND STRUCTURES
SEP 24 1992
APPROVAL OF THIS DRAWING DOES NOT RELIEVE THE CONTRACTOR OF THE RESPONSIBILITY FOR THE CORRECTNESS OF DETAIL.

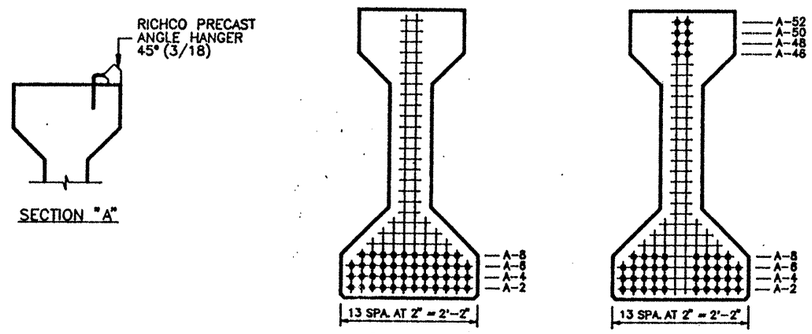

TYPE "IV" BEAM QUANTITY : 1

LO-LAX STRAND PATTERN		
NUMBER OF STRANDS	: 46 ~1/2" ø 270 K @ 31.00 K EACH	
NUMBER OF STRAIGHT STRANDS	: 38	
NUMBER OF DEFLECTED STRANDS	: 8 @ A – 52	
CONCRETE RELEASE STRENGTH	: 5278	PSI
CONCRETE DESIGN STRENGTH	: 6088	PSI
ECCENTRICITY @ ℄	: 19.88"	ECCENTRICITY @ END : 12.23"

TOP FINISH PANELS
SEE STANDARD SHEET S-"IV" FOR TOP FINISH AND OTHER NOTES AND DETAILS.

DESIGN NO. : GPNSLR
TOTAL BEAM LENGTH OF THIS SHEET : 105.92'

MANCO PRESTRESS COMPANY
CONTRACTOR Gilbert of Texas Construction

FED.RD. DIV.NO.	STATE	PROJECT NO.	HWY. NO.
6	TEXAS	NH 92(50)M	83/281

STATE DIST.NO.	COUNTY	CONTROL NO.	SECTION NO.	JOB NO.
21	HIDALGO	39	17	97

COPYRIGHT 1989 BY
STRUCTURAL ENGINEERING ASSOCIATES, INC.
CONSULTING ENGINEERS, SAN ANTONIO, TEXAS

JOB NO.	DRAWN	CHECKED	DATE	SHEET/MARK NO.
92-018	C.A.J.	D.M.P.	8 / 26 / 92	IV-87
SEA JOB NO. 92-059H	FABRICATION SHEET			

330020

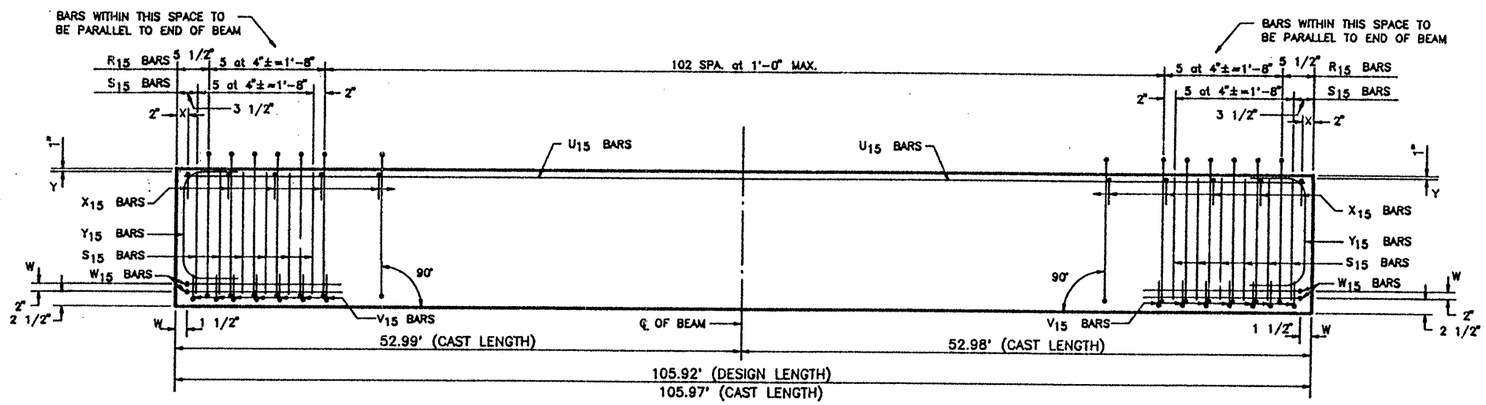

ELEVATION – REINFORCING STEEL

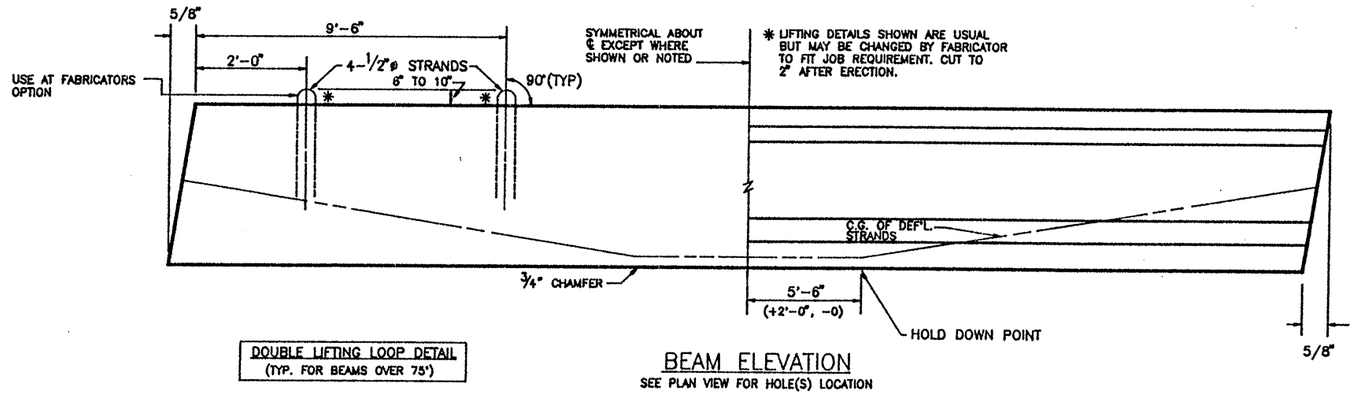

DOUBLE LIFTING LOOP DETAIL
(TYP. FOR BEAMS OVER 75')

BEAM ELEVATION
SEE PLAN VIEW FOR HOLE(S) LOCATION

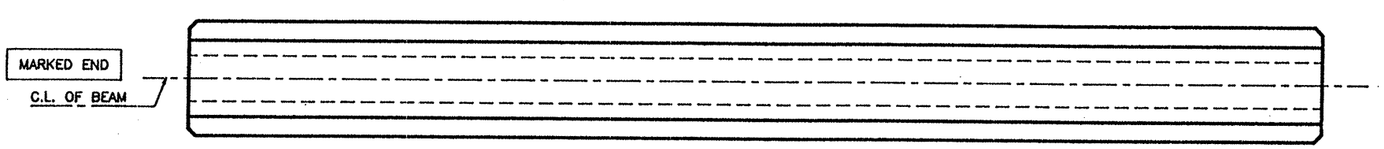

FIXED END

EXPANSION END

PLAN

TOP FINISH PANELS
SEE STANDARD SHEET S-"IV" FOR TOP FINISH AND OTHER NOTES AND DETAILS.

TEXAS DEPARTMENT OF TRANSPORTATION
APPROVED
DIVISION OF BRIDGES AND STRUCTURES

SEP 24 1992

APPROVAL OF THIS DRAWING DOES NOT RELIEVE THE CONTRACTOR OF THE RESPONSIBILITY FOR THE CORRECTNESS OF DETAIL.

REINFORCING STEEL SCHEDULE

BAR	QUANTITY PER BEAM	TOTAL QUANTITY	SIZE	LENGTH
R_{15}	113	226	#3	standard
X_{15}	109	218	#3	standard
Y_{15}	4	8	#6	standard
S_{15}	24	48	#7	standard
V_{15}	14	28	#3	standard
W_{15}	4	8	#5	standard
U_{15}	2	4	#5	105'-8"

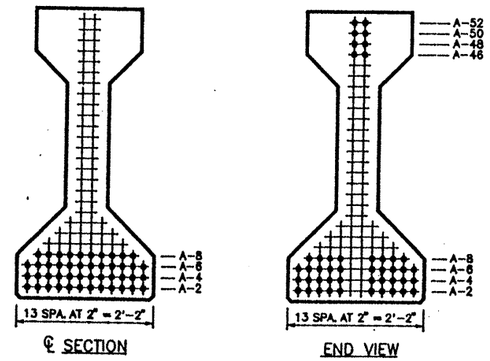

TYPE "IV" BEAM QUANTITY : 2

LO-LAX STRAND PATTERN		
NUMBER OF STRANDS : 46 ~1/2" ø 270 K @ 31.00 K EACH		
NUMBER OF STRAIGHT STRANDS	: 38	
NUMBER OF DEFLECTED STRANDS	: 8 @ A – 52	
CONCRETE RELEASE STRENGTH	: 5278	PSI
CONCRETE DESIGN STRENGTH	: 6088	PSI
ECCENTRICITY @ ℄ : 19.88"	ECCENTRICITY @ END : 12.23"	

DESIGN NO. : GPNSLR
TOTAL BEAM LENGTH OF THIS SHEET : 211.84'

MANCO PRESTRESS COMPANY

CONTRACTOR Gilbert of Texas Construction

FED.RD. DIV.NO.	STATE	PROJECT NO.	HWY. NO.
6	TEXAS	NH 92(50)M	83/281

STATE DIST.NO.	COUNTY	CONTROL NO.	SECTION NO.	JOB NO.
21	HIDALGO	39	17	97

COPYRIGHT 1989 BY STRUCTURAL ENGINEERING ASSOCIATES, INC. CONSULTING ENGINEERS, SAN ANTONIO, TEXAS

JOB NO.	DRAWN	CHECKED	DATE	SHEET/MARK NO.
92-018	C.A.J.	D.M.P.	8 /26 / 92	IV-88
SEA JOB NO. 92-059H	FABRICATION SHEET			

330020

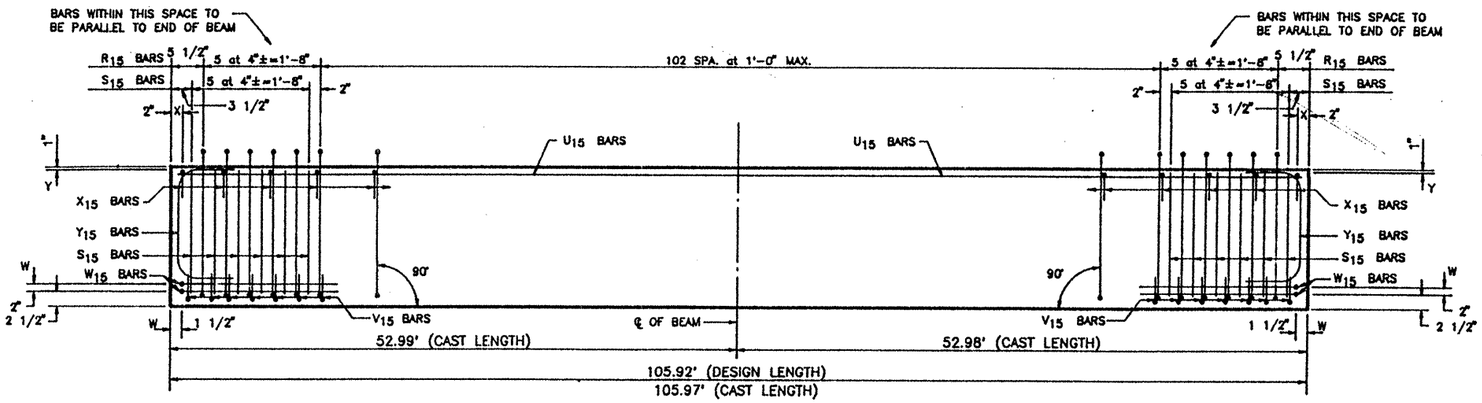

ELEVATION – REINFORCING STEEL

REINFORCING STEEL SCHEDULE				
BAR	QUANTITY PER BEAM	TOTAL QUANTITY	SIZE	LENGTH
R_{15}	113	113	#3	standard
X_{15}	109	109	#3	standard
Y_{15}	4	4	#6	standard
S_{15}	24	24	#7	standard
V_{15}	14	14	#3	standard
W_{15}	4	4	#5	standard
U_{15}	2	2	#5	105'-8"

TEXAS DEPARTMENT OF TRANSPORTATION
APPROVED
DIVISION OF BRIDGES AND STRUCTURES
SEP 24 1992
APPROVAL OF THIS DRAWING DOES NOT RELIEVE THE CONTRACTOR OF THE RESPONSIBILITY FOR THE CORRECTNESS OF DETAIL.

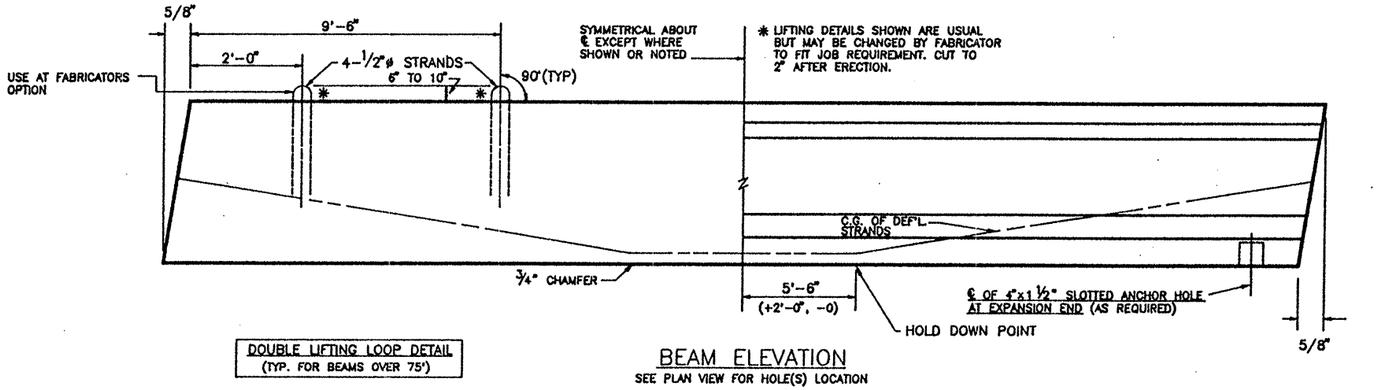

DOUBLE LIFTING LOOP DETAIL (TYP. FOR BEAMS OVER 75')

BEAM ELEVATION
SEE PLAN VIEW FOR HOLE(S) LOCATION

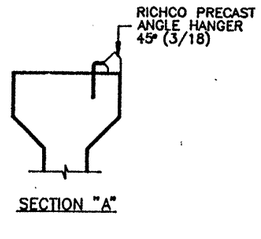

SECTION "A"

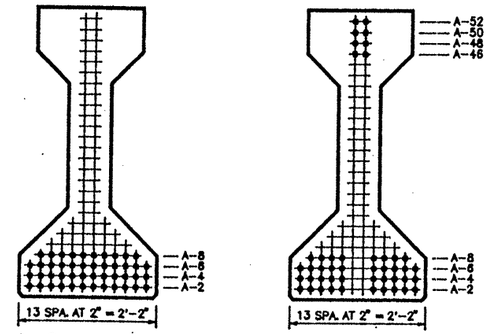

℄ SECTION

END VIEW

TYPE "IV" BEAM QUANTITY : 1

LO-LAX STRAND PATTERN
NUMBER OF STRANDS : 46 ~1/2" ø 270 K @ 31.00 K EACH
NUMBER OF STRAIGHT STRANDS : 38
NUMBER OF DEFLECTED STRANDS : 8 @ A – 52
CONCRETE RELEASE STRENGTH : 5278 PSI
CONCRETE DESIGN STRENGTH : 6088 PSI
ECCENTRICITY @ ℄ : 19.88" ECCENTRICITY @ END : 12.23"

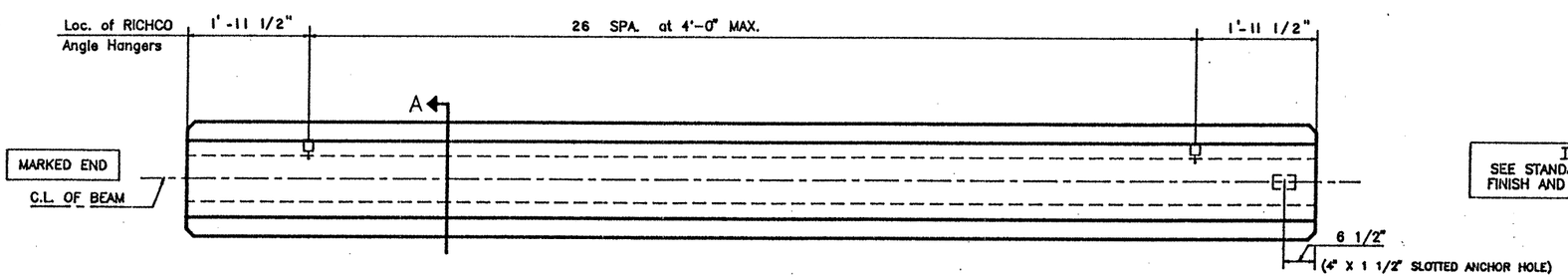

FIXED END

EXPANSION END

PLAN

TOP FINISH PANELS
SEE STANDARD SHEET S-"IV" FOR TOP FINISH AND OTHER NOTES AND DETAILS.

DESIGN NO. : GPNSLR
TOTAL BEAM LENGTH OF THIS SHEET : 105.92'

MANCO PRESTRESS COMPANY				
CONTRACTOR Gilbert of Texas Construction				
FED.RD. DIV.NO.	STATE	PROJECT NO.		HWY. NO.
6	TEXAS	NH 92(50)M		83/281
STATE DIST.NO.	COUNTY	CONTROL NO.	SECTION NO.	JOB NO.
21	HIDALGO	39	17	97

COPYRIGHT 1989 BY
STRUCTURAL ENGINEERING ASSOCIATES, INC.
CONSULTING ENGINEERS, SAN ANTONIO, TEXAS

JOB NO. 92-018	DRAWN C.A.J.	CHECKED D.M.P.	DATE 8 / 26 / 92	SHEET/MARK NO. IV-89
SEA JOB NO. 92-059H	FABRICATION SHEET			

330020

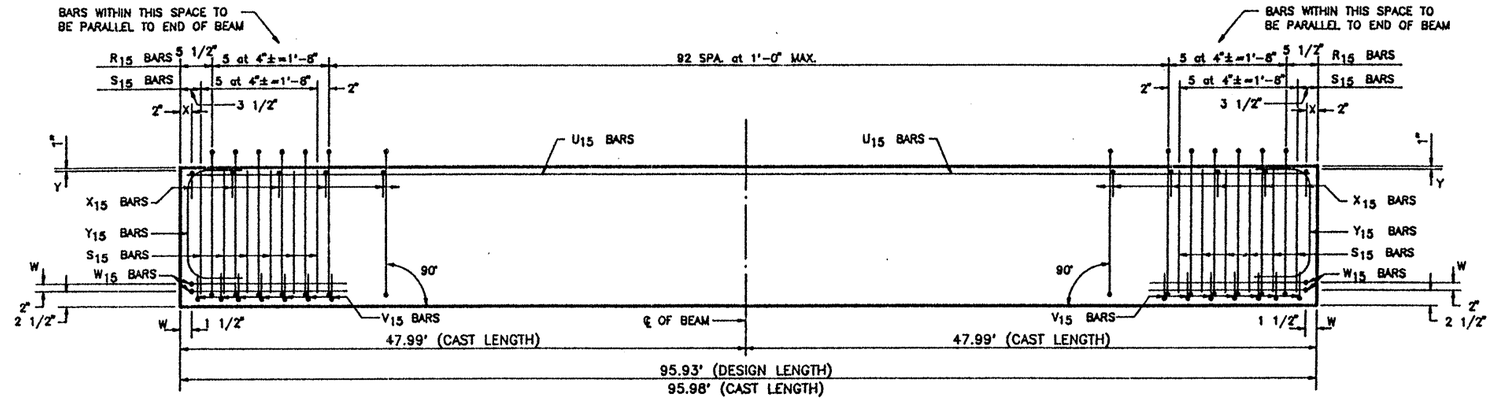

ELEVATION – REINFORCING STEEL

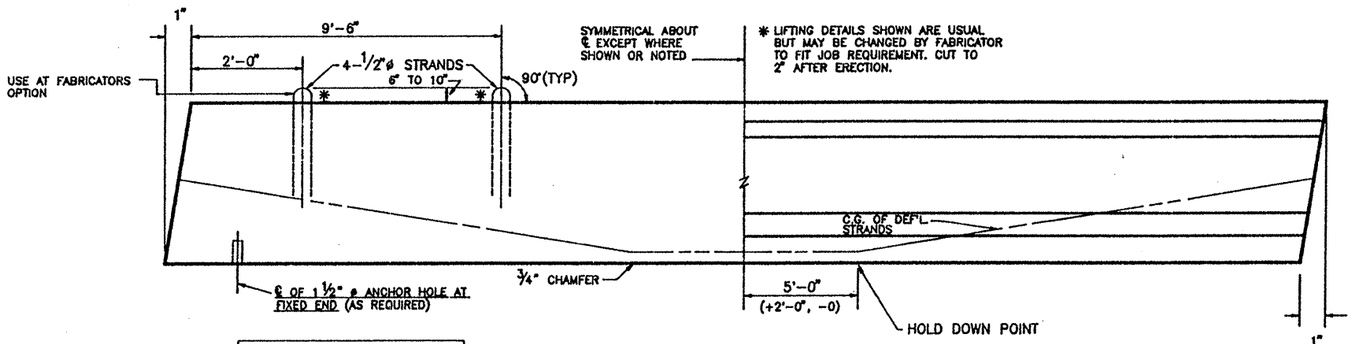

DOUBLE LIFTING LOOP DETAIL
(TYP. FOR BEAMS OVER 75')

BEAM ELEVATION
SEE PLAN VIEW FOR HOLE(S) LOCATION

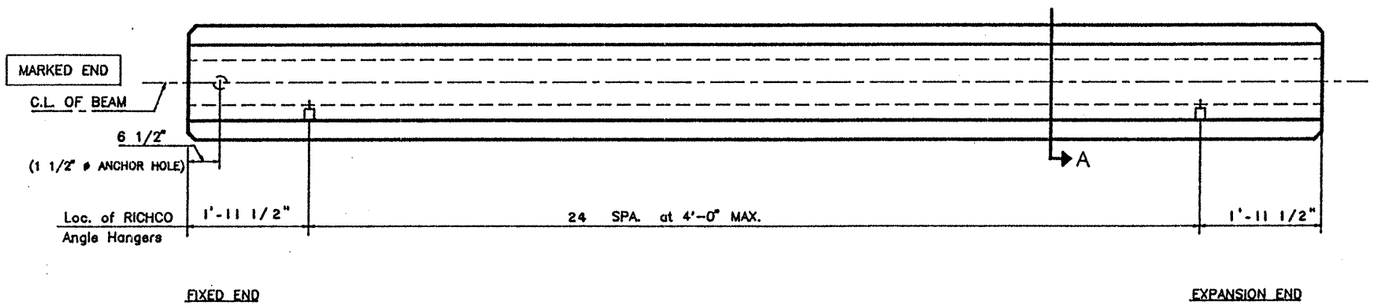

PLAN

TOP FINISH PANELS
SEE STANDARD SHEET S-"IV" FOR TOP FINISH AND OTHER NOTES AND DETAILS.

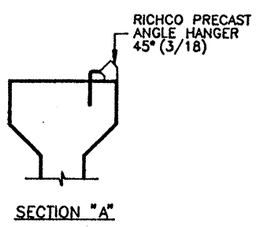

SECTION "A"

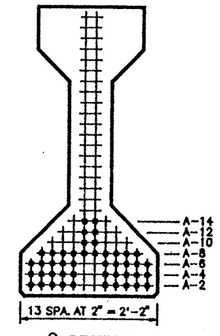

℄ SECTION

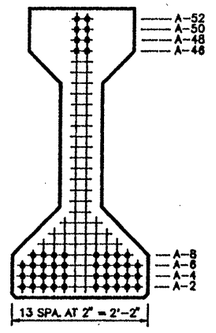

END VIEW

TYPE "IV" BEAM QUANTITY : 1

REINFORCING STEEL SCHEDULE				
BAR	QUANTITY PER BEAM	TOTAL QUANTITY	SIZE	LENGTH
R_{15}	103	103	#3	standard
X_{15}	99	99	#3	standard
Y_{15}	4	4	#6	standard
S_{15}	24	24	#7	standard
V_{15}	14	14	#3	standard
W_{15}	4	4	#5	standard
U_{15}	2	2	#5	95'-9"

TEXAS DEPARTMENT OF TRANSPORTATION
APPROVED
DIVISION OF BRIDGES AND STRUCTURES
SEP 24 1992
APPROVAL OF THIS DRAWING DOES NOT RELIEVE THE CONTRACTOR OF THE RESPONSIBILITY FOR THE CORRECTNESS OF DETAIL.

LO-LAX STRAND PATTERN		
NUMBER OF STRANDS	: 46 ~1/2" ø 270 K @ 31.00 K EACH	
NUMBER OF STRAIGHT STRANDS	: 38	
NUMBER OF DEFLECTED STRANDS	: 8 @ A – 52	
CONCRETE RELEASE STRENGTH	: 5280	PSI
CONCRETE DESIGN STRENGTH	: 5280	PSI
ECCENTRICITY @ ℄	: 18.84"	ECCENTRICITY @ END : 12.23"

DESIGN NO. : O.D.# 12
TOTAL BEAM LENGTH OF THIS SHEET : 95.93'

MANCO PRESTRESS COMPANY

CONTRACTOR Gilbert of Texas Construction

FED.RD. DIV.NO.	STATE	PROJECT NO.			HWY. NO.
6	TEXAS	NH 92(50)M			83/281
STATE DIST.NO.	COUNTY		CONTROL NO.	SECTION NO.	JOB NO.
21	HIDALGO		39	17	97

COPYRIGHT 1989 BY
STRUCTURAL ENGINEERING ASSOCIATES, INC.
CONSULTING ENGINEERS, SAN ANTONIO, TEXAS

JOB NO.	DRAWN	CHECKED	DATE	SHEET/MARK NO.
92-018	C.A.J.	D.M.P.	8/26/92	IV-90
SEA JOB NO. 92-059H	FABRICATION SHEET			

330020

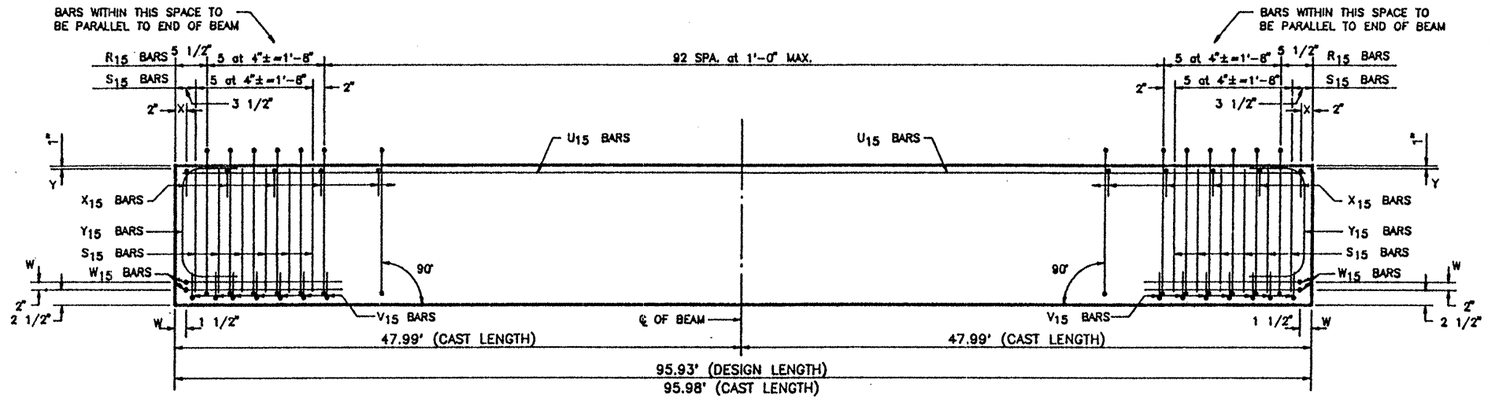

ELEVATION – REINFORCING STEEL

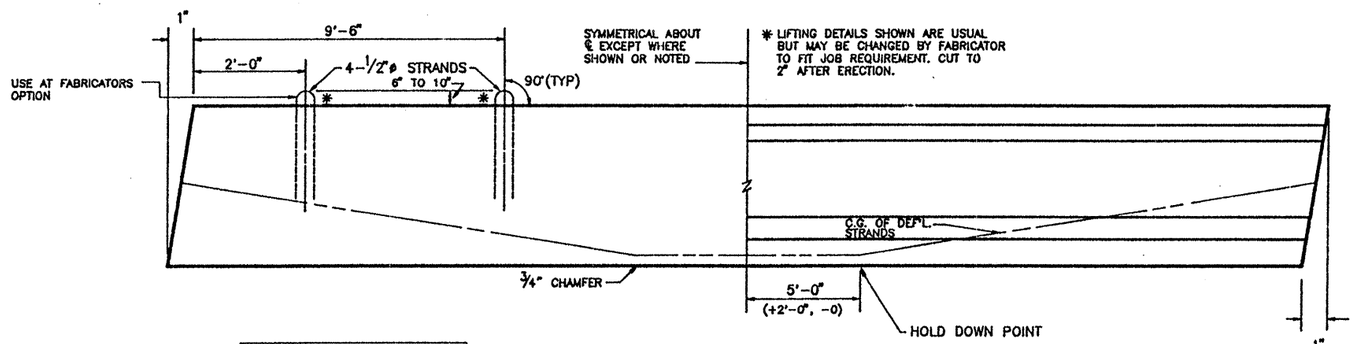

DOUBLE LIFTING LOOP DETAIL (TYP. FOR BEAMS OVER 75')

BEAM ELEVATION
SEE PLAN VIEW FOR HOLE(S) LOCATION

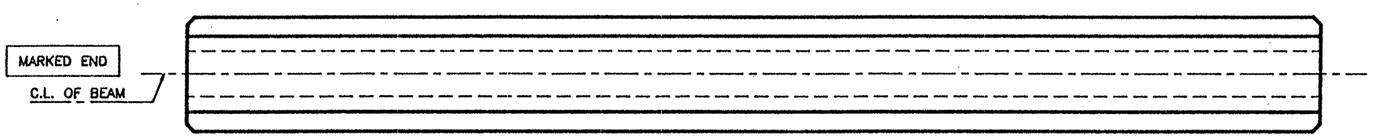

PLAN

TEXAS DEPARTMENT OF TRANSPORTATION
APPROVED
DIVISION OF BRIDGES AND STRUCTURES
SEP 24 1992
APPROVAL OF THIS DRAWING DOES NOT RELIEVE THE CONTRACTOR OF THE RESPONSIBILITY FOR THE CORRECTNESS OF DETAIL.

REINFORCING STEEL SCHEDULE

BAR	QUANTITY PER BEAM	TOTAL QUANTITY	SIZE	LENGTH
R_{15}	103	206	#3	standard
X_{15}	99	198	#3	standard
Y_{15}	4	8	#6	standard
S_{15}	24	48	#7	standard
V_{15}	14	28	#3	standard
W_{15}	4	8	#5	standard
U_{15}	2	4	#5	95'-9"

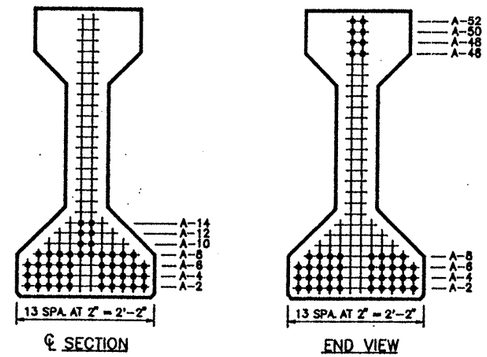

TYPE "IV" BEAM QUANTITY : 2

LO-LAX STRAND PATTERN		
NUMBER OF STRANDS : 46 ~1/2" ø 270 K @ 31.00 K EACH		
NUMBER OF STRAIGHT STRANDS	: 38	
NUMBER OF DEFLECTED STRANDS	: 8 @ A – 52	
CONCRETE RELEASE STRENGTH	: 5280	PSI
CONCRETE DESIGN STRENGTH	: 5280	PSI
ECCENTRICITY @ ℄ : 18.84"	ECCENTRICITY @ END : 12.23"	

TOP FINISH PANELS
SEE STANDARD SHEET S-"IV" FOR TOP FINISH AND OTHER NOTES AND DETAILS.

DESIGN NO. : O.D.# 12
TOTAL BEAM LENGTH OF THIS SHEET : 191.86'

MANCO PRESTRESS COMPANY

CONTRACTOR Gilbert of Texas Construction

FED.RD. DIV.NO.	STATE	PROJECT NO.		HWY. NO.
6	TEXAS	NH 92(50)M		83/281
STATE DIST.NO.	COUNTY	CONTROL NO.	SECTION NO.	JOB NO.
21	HIDALGO	39	17	97

COPYRIGHT 1989 BY STRUCTURAL ENGINEERING ASSOCIATES, INC. CONSULTING ENGINEERS, SAN ANTONIO, TEXAS

JOB NO.	DRAWN	CHECKED	DATE	SHEET/MARK NO.
92-018	C.A.J.	D.M.P.	8 / 26 / 92	IV-91
SEA JOB NO. 92-059H	FABRICATION SHEET			

330020

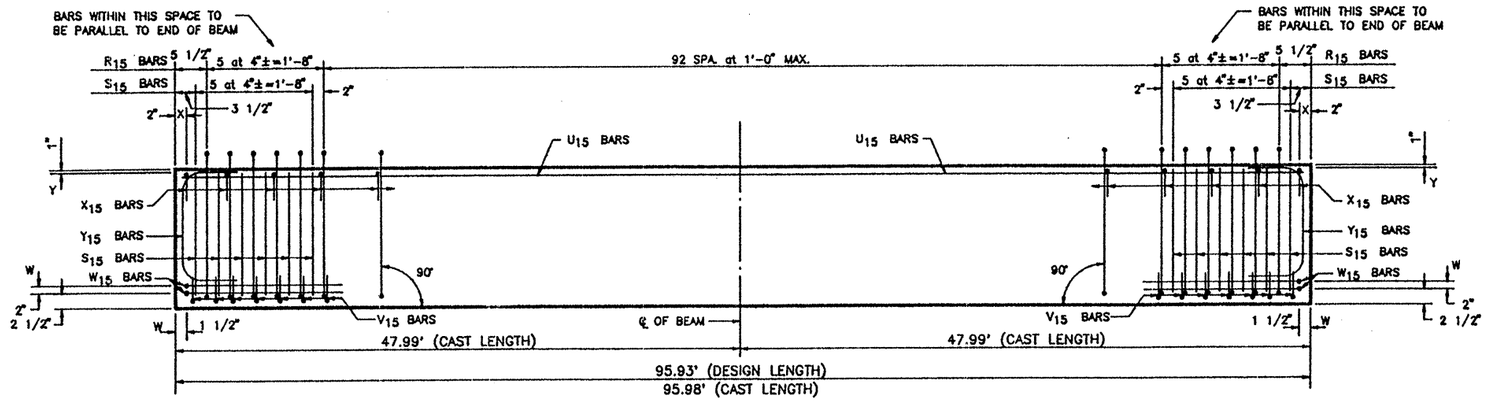

ELEVATION – REINFORCING STEEL

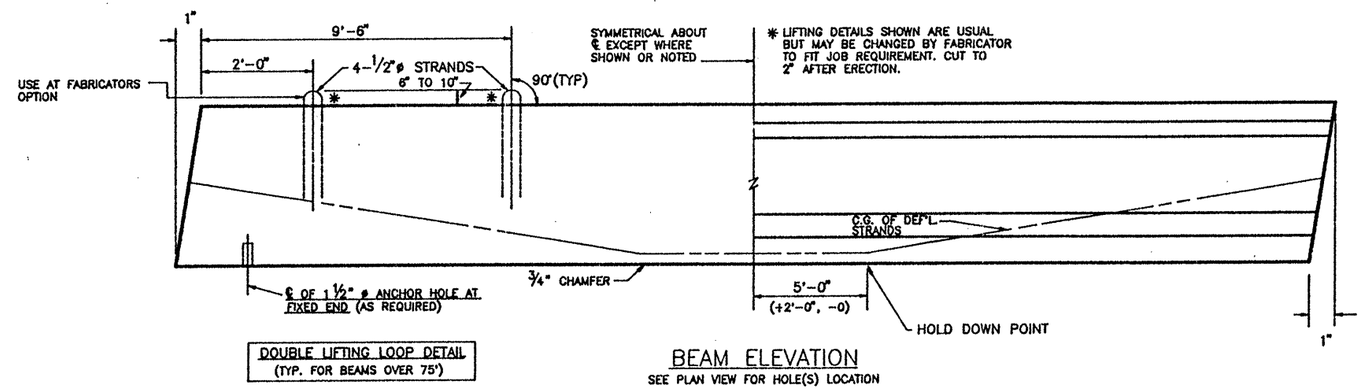

DOUBLE LIFTING LOOP DETAIL (TYP. FOR BEAMS OVER 75')

BEAM ELEVATION
SEE PLAN VIEW FOR HOLE(S) LOCATION

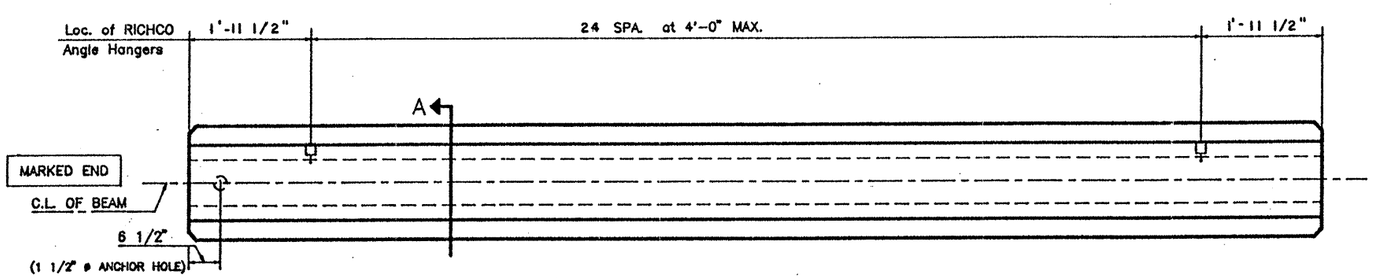

FIXED END

EXPANSION END

PLAN

TEXAS DEPARTMENT OF TRANSPORTATION
APPROVED
DIVISION OF BRIDGES AND STRUCTURES
SEP 24 1992
APPROVAL OF THIS DRAWING DOES NOT RELIEVE THE CONTRACTOR OF THE RESPONSIBILITY FOR THE CORRECTNESS OF DETAIL.

REINFORCING STEEL SCHEDULE

BAR	QUANTITY PER BEAM	TOTAL QUANTITY	SIZE	LENGTH
R_{15}	103	103	#3	standard
X_{15}	99	99	#3	standard
Y_{15}	4	4	#6	standard
S_{15}	24	24	#7	standard
V_{15}	14	14	#3	standard
W_{15}	4	4	#5	standard
U_{15}	2	2	#5	95'-9"

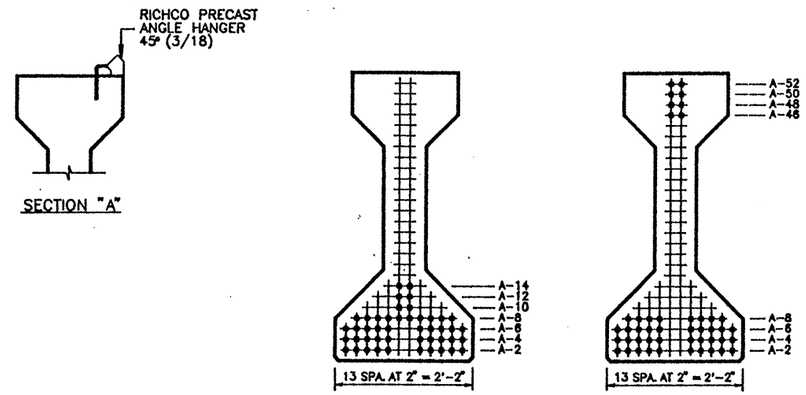

TYPE "IV" BEAM QUANTITY : 1

LO-LAX STRAND PATTERN		
NUMBER OF STRANDS : 46 ~1/2" ø 270 K @ 31.00 K EACH		
NUMBER OF STRAIGHT STRANDS	: 38	
NUMBER OF DEFLECTED STRANDS	: 8 @ A – 52	
CONCRETE RELEASE STRENGTH	: 5280	PSI
CONCRETE DESIGN STRENGTH	: 5280	PSI
ECCENTRICITY @ ℄ : 18.84"	ECCENTRICITY @ END : 12.23"	

TOP FINISH PANELS
SEE STANDARD SHEET S-"IV" FOR TOP FINISH AND OTHER NOTES AND DETAILS.

DESIGN NO. : O.D.# 12
TOTAL BEAM LENGTH OF THIS SHEET : 95.93'

MANCO PRESTRESS COMPANY

CONTRACTOR Gilbert of Texas Construction

FED.RD. DIV.NO.	STATE	PROJECT NO.			HWY. NO.
6	TEXAS	NH 92(50)M			83/281
STATE DIST.NO.	COUNTY		CONTROL NO.	SECTION NO.	JOB NO.
21	HIDALGO		39	17	97

COPYRIGHT 1989 BY STRUCTURAL ENGINEERING ASSOCIATES, INC. CONSULTING ENGINEERS, SAN ANTONIO, TEXAS

JOB NO.	DRAWN	CHECKED	DATE	SHEET/MARK NO.
92-018	C.A.J.	D.M.P.	8/26/92	IV-92
SEA JOB NO. 92-059H	FABRICATION SHEET			

330020

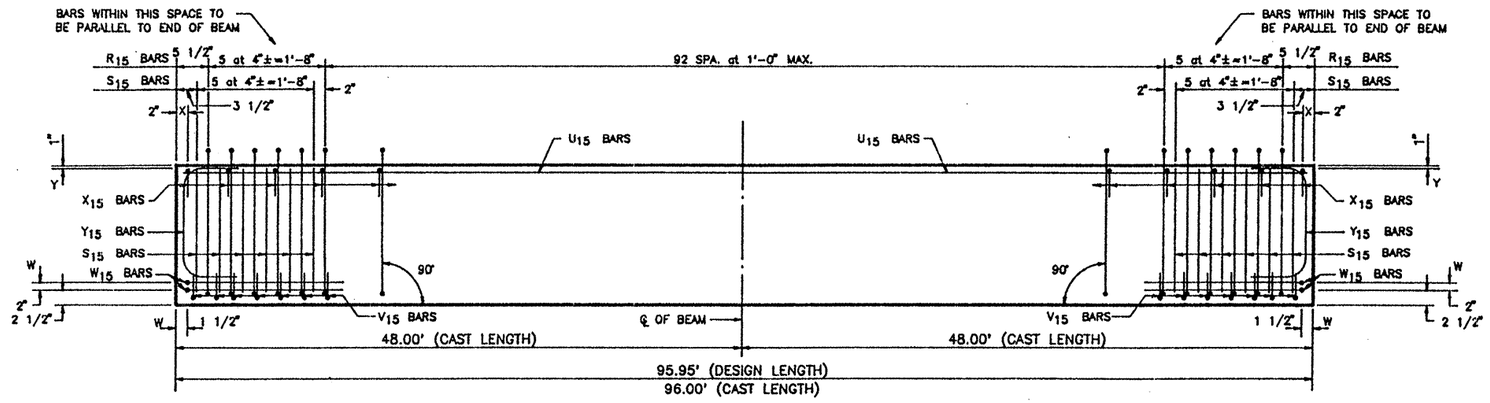

ELEVATION – REINFORCING STEEL

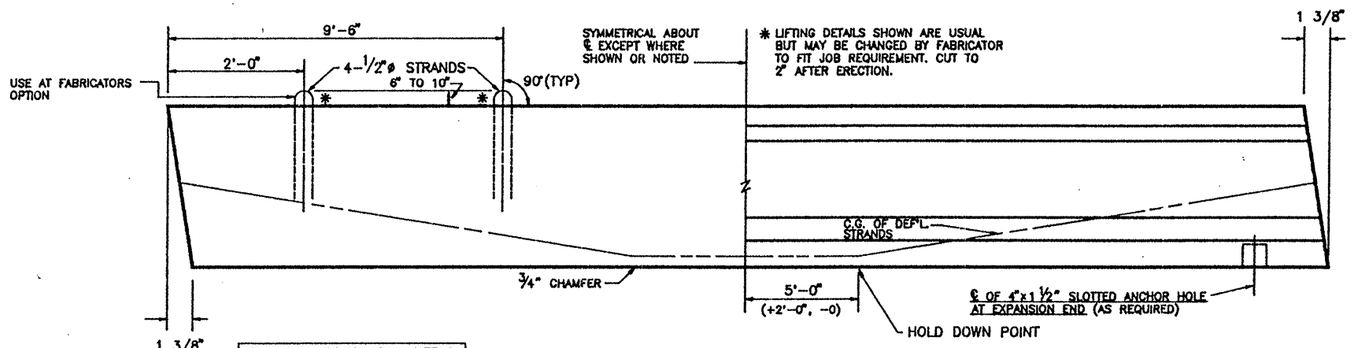

DOUBLE LIFTING LOOP DETAIL
(TYP. FOR BEAMS OVER 75')

BEAM ELEVATION
SEE PLAN VIEW FOR HOLE(S) LOCATION

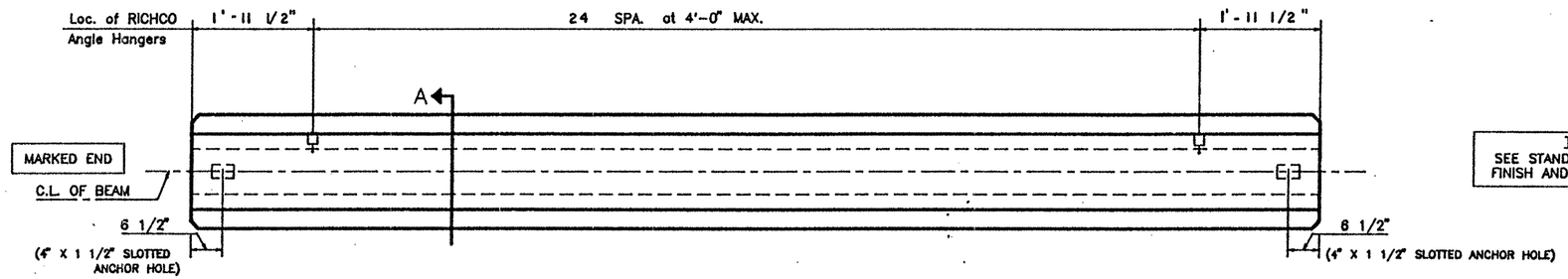

EXPANSION END — EXPANSION END

PLAN

330020

REINFORCING STEEL SCHEDULE				
BAR	QUANTITY PER BEAM	TOTAL QUANTITY	SIZE	LENGTH
R_{15}	103	103	#3	standard
X_{15}	99	99	#3	standard
Y_{15}	4	4	#6	standard
S_{15}	24	24	#7	standard
V_{15}	14	14	#3	standard
W_{15}	4	4	#5	standard
U_{15}	2	2	#5	95'-9"

TEXAS DEPARTMENT OF TRANSPORTATION
APPROVED
DIVISION OF BRIDGES AND STRUCTURES
SEP 24 1992
APPROVAL OF THIS DRAWING DOES NOT RELIEVE THE CONTRACTOR OF THE RESPONSIBILITY FOR THE CORRECTNESS OF DETAIL.

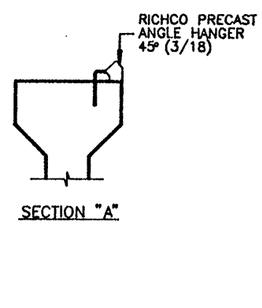

SECTION "A"

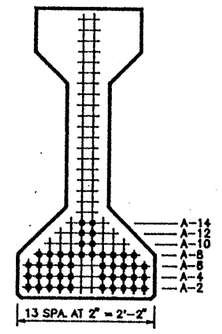

℄ SECTION

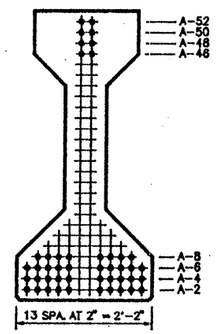

END VIEW

TYPE "IV" BEAM QUANTITY : 1

LO-LAX STRAND PATTERN		
NUMBER OF STRANDS : 46 ~1/2" ø 270 K @ 31.00 K EACH		
NUMBER OF STRAIGHT STRANDS	: 38	
NUMBER OF DEFLECTED STRANDS	: 8 @ A – 52	
CONCRETE RELEASE STRENGTH	: 5280	PSI
CONCRETE DESIGN STRENGTH	: 5280	PSI
ECCENTRICITY @ ℄ : 18.84"	ECCENTRICITY @ END : 12.23"	

DESIGN NO. : O.D.# 12
TOTAL BEAM LENGTH OF THIS SHEET : 95.95'

TOP FINISH PANELS
SEE STANDARD SHEET S-"IV" FOR TOP FINISH AND OTHER NOTES AND DETAILS.

MANCO PRESTRESS COMPANY
CONTRACTOR Gilbert of Texas Construction

FED.RD. DIV.NO.	STATE	PROJECT NO.	HWY. NO.
6	TEXAS	NH 92(50)M	83/281

STATE DIST.NO.	COUNTY	CONTROL NO.	SECTION NO.	JOB NO.
21	HIDALGO	39	17	97

COPYRIGHT 1989 BY
STRUCTURAL ENGINEERING ASSOCIATES, INC.
CONSULTING ENGINEERS, SAN ANTONIO, TEXAS

JOB NO.	DRAWN	CHECKED	DATE	SHEET/MARK NO.
92-018	C.A.J.	D.M.P.	8 / 26 / 92	IV-93
SEA JOB NO. 92-059H	FABRICATION SHEET			

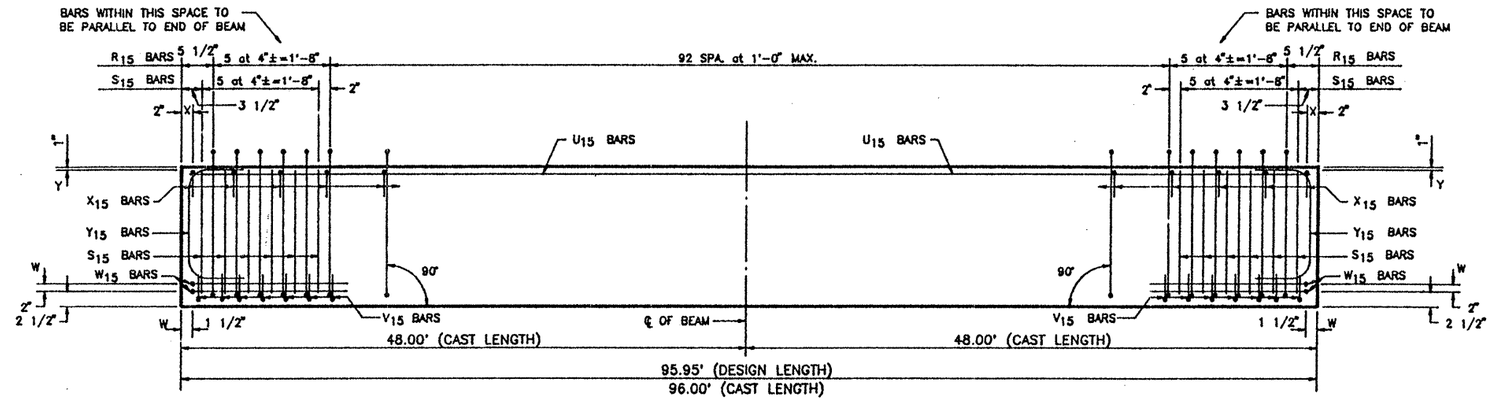

ELEVATION – REINFORCING STEEL

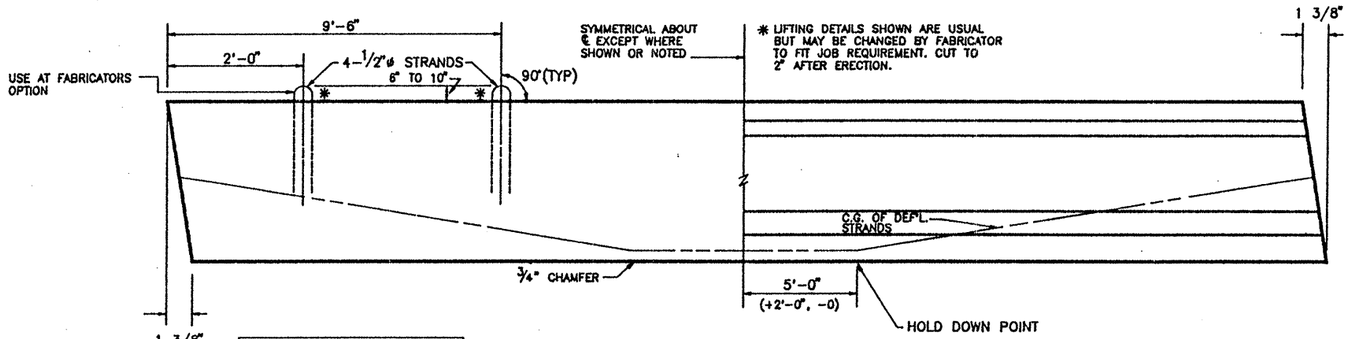

DOUBLE LIFTING LOOP DETAIL
(TYP. FOR BEAMS OVER 75')

BEAM ELEVATION
SEE PLAN VIEW FOR HOLE(S) LOCATION

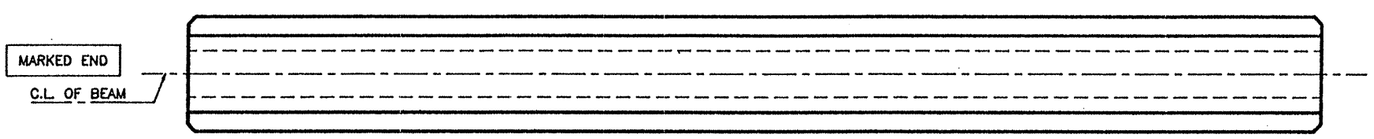

PLAN

TOP FINISH PANELS
SEE STANDARD SHEET S-"IV" FOR TOP FINISH AND OTHER NOTES AND DETAILS.

REINFORCING STEEL SCHEDULE				
BAR	QUANTITY PER BEAM	TOTAL QUANTITY	SIZE	LENGTH
R_{15}	103	206	#3	standard
X_{15}	99	198	#3	standard
Y_{15}	4	8	#6	standard
S_{15}	24	48	#7	standard
V_{15}	14	28	#3	standard
W_{15}	4	8	#5	standard
U_{15}	2	4	#5	95'-9"

TEXAS DEPARTMENT OF TRANSPORTATION
APPROVED
DIVISION OF BRIDGES AND STRUCTURES

SEP 24 1992

APPROVAL OF THIS DRAWING DOES NOT RELIEVE THE CONTRACTOR OF THE RESPONSIBILITY FOR THE CORRECTNESS OF DETAIL.

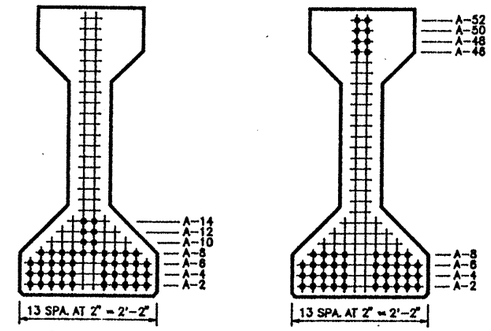

TYPE "IV" BEAM QUANTITY : 2

LO-LAX STRAND PATTERN	
NUMBER OF STRANDS	: 46 ~1/2" ø 270 K @ 31.00 K EACH
NUMBER OF STRAIGHT STRANDS	: 38
NUMBER OF DEFLECTED STRANDS	: 8 @ A – 52
CONCRETE RELEASE STRENGTH	: 5280 PSI
CONCRETE DESIGN STRENGTH	: 5280 PSI
ECCENTRICITY @ ℄	: 18.84" ECCENTRICITY @ END : 12.23"

DESIGN NO. : O.D.# 12
TOTAL BEAM LENGTH OF THIS SHEET : 191.90'

MANCO PRESTRESS COMPANY
CONTRACTOR Gilbert of Texas Construction

FED.RD. DIV.NO.	STATE	PROJECT NO.	HWY. NO.
6	TEXAS	NH 92(50)M	83/281

STATE DIST.NO.	COUNTY	CONTROL NO.	SECTION NO.	JOB NO.
21	HIDALGO	39	17	97

COPYRIGHT 1989 BY
STRUCTURAL ENGINEERING ASSOCIATES, INC.
CONSULTING ENGINEERS, SAN ANTONIO, TEXAS

JOB NO.	DRAWN	CHECKED	DATE	SHEET/MARK NO.
92-018	C.A.J.	D.M.P.	8/26/92	IV-94
SEA JOB NO. 92-059H	FABRICATION SHEET			

330020

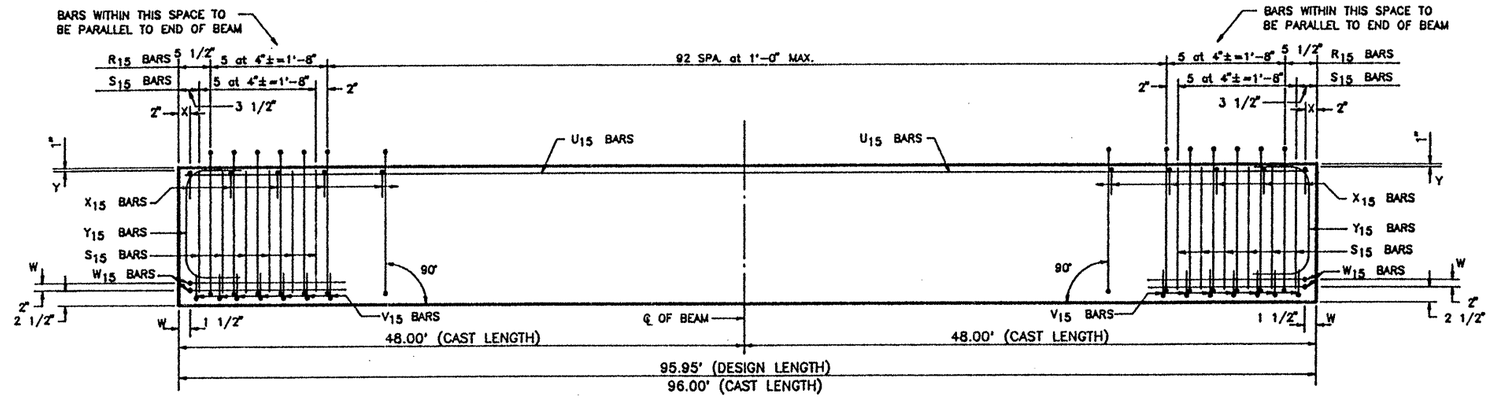

ELEVATION – REINFORCING STEEL

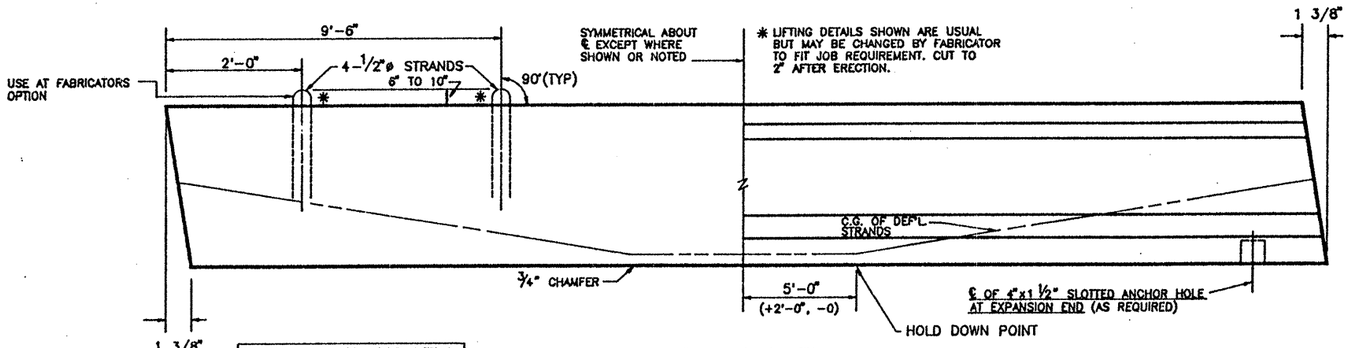

DOUBLE LIFTING LOOP DETAIL
(TYP. FOR BEAMS OVER 75')

BEAM ELEVATION
SEE PLAN VIEW FOR HOLE(S) LOCATION

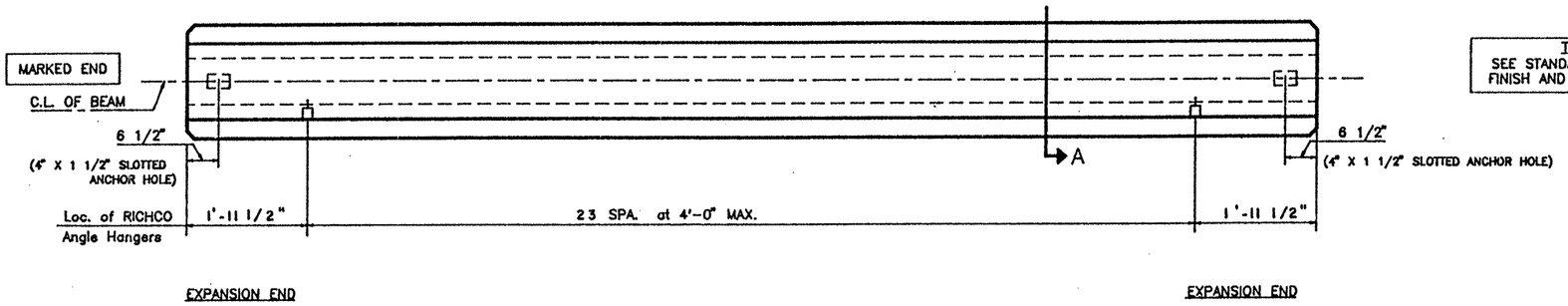

PLAN

TOP FINISH PANELS
SEE STANDARD SHEET S-"IV" FOR TOP FINISH AND OTHER NOTES AND DETAILS.

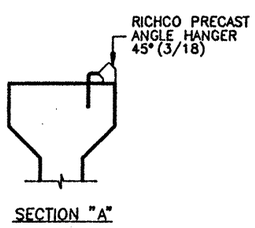

SECTION "A"

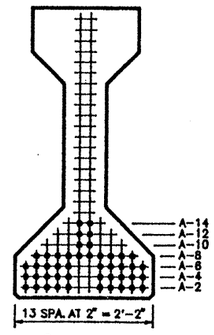

℄ SECTION

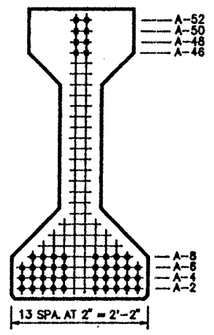

END VIEW

TYPE "IV" BEAM QUANTITY : 1

REINFORCING STEEL SCHEDULE				
BAR	QUANTITY PER BEAM	TOTAL QUANTITY	SIZE	LENGTH
R_{15}	103	103	#3	standard
X_{15}	99	99	#3	standard
Y_{15}	4	4	#6	standard
S_{15}	24	24	#7	standard
V_{15}	14	14	#3	standard
W_{15}	4	4	#5	standard
U_{15}	2	2	#5	95'-9"

TEXAS DEPARTMENT OF TRANSPORTATION
APPROVED
DIVISION OF BRIDGES AND STRUCTURES
SEP 24 1992
APPROVAL OF THIS DRAWING DOES NOT RELIEVE THE CONTRACTOR OF THE RESPONSIBILITY FOR THE CORRECTNESS OF DETAIL.

LO-LAX STRAND PATTERN		
NUMBER OF STRANDS	: 46 ~1/2" ø 270 K @ 31.00 K EACH	
NUMBER OF STRAIGHT STRANDS	: 38	
NUMBER OF DEFLECTED STRANDS	: 8 @ A – 52	
CONCRETE RELEASE STRENGTH	: 5280	PSI
CONCRETE DESIGN STRENGTH	: 5280	PSI
ECCENTRICITY @ ℄	: 18.84"	ECCENTRICITY @ END : 12.23"

DESIGN NO. : O.D.# 12
TOTAL BEAM LENGTH OF THIS SHEET : 95.95'

MANCO PRESTRESS COMPANY
CONTRACTOR Gilbert of Texas Construction

FED.RD. DIV.NO.	STATE	PROJECT NO.		HWY. NO.
6	TEXAS	NH 92(50)M		83/281
STATE DIST.NO.	COUNTY	CONTROL NO.	SECTION NO.	JOB NO.
21	HIDALGO	39	17	97

COPYRIGHT 1989 BY
STRUCTURAL ENGINEERING ASSOCIATES, INC.
CONSULTING ENGINEERS, SAN ANTONIO, TEXAS

JOB NO.	DRAWN	CHECKED	DATE	SHEET/MARK NO.
92-018	C.A.J.	D.M.P.	8 / 26 / 92	IV-95
SEA JOB NO. 92-059H	FABRICATION SHEET			

330020

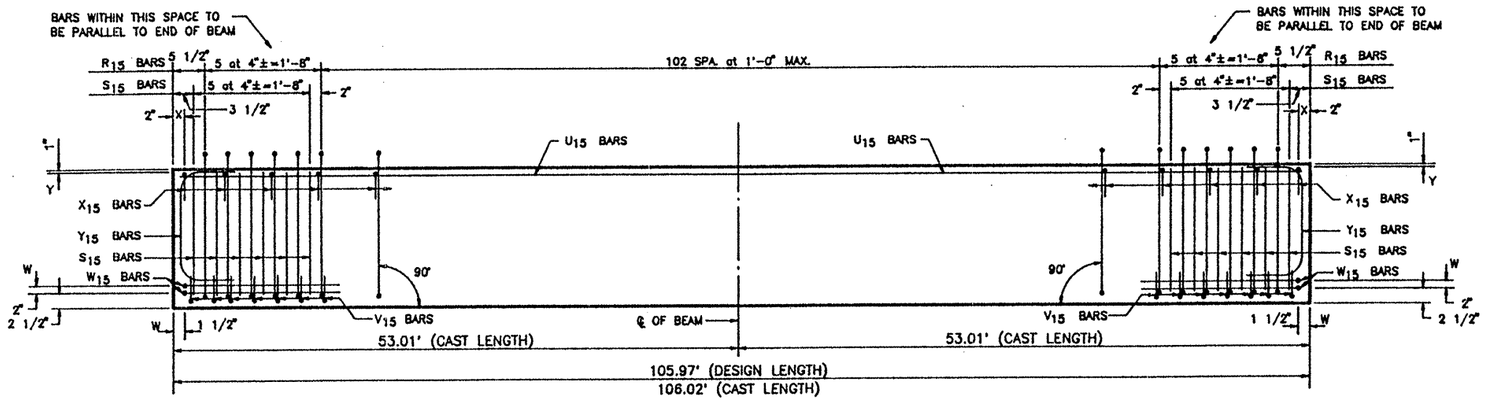

ELEVATION – REINFORCING STEEL

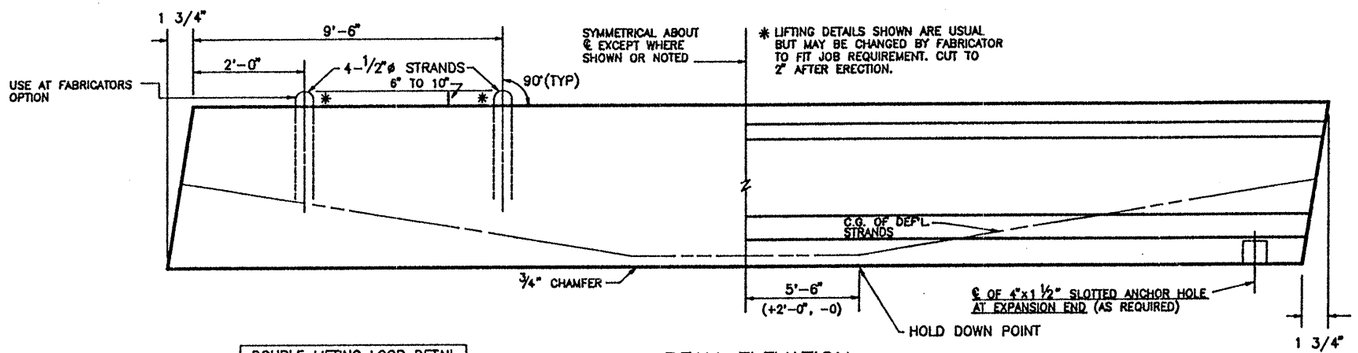

DOUBLE LIFTING LOOP DETAIL
(TYP. FOR BEAMS OVER 75')

BEAM ELEVATION
SEE PLAN VIEW FOR HOLE(S) LOCATION

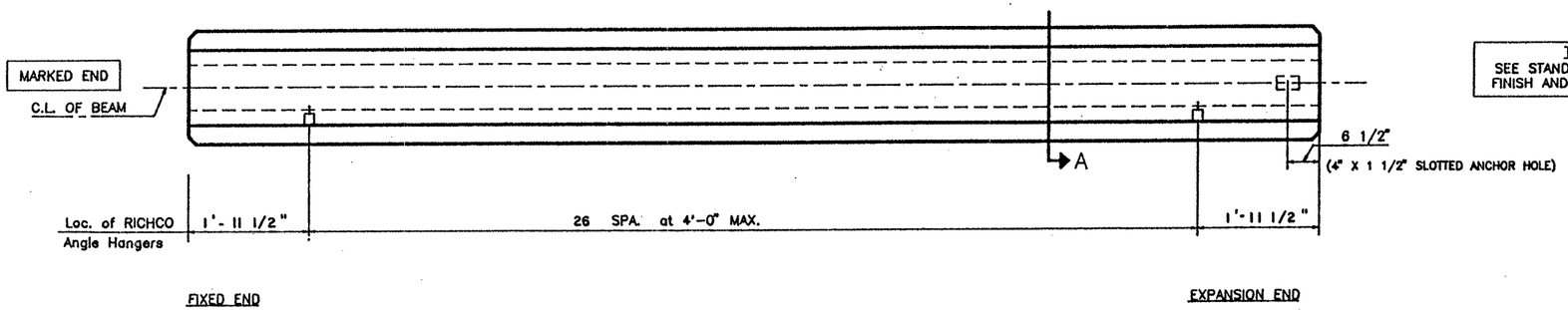

PLAN

REINFORCING STEEL SCHEDULE				
BAR	QUANTITY PER BEAM	TOTAL QUANTITY	SIZE	LENGTH
R_{15}	113	113	#3	standard
X_{15}	109	109	#3	standard
Y_{15}	4	4	#6	standard
S_{15}	24	24	#7	standard
V_{15}	14	14	#3	standard
W_{15}	4	4	#5	standard
U_{15}	2	2	#5	105'-9"

TEXAS DEPARTMENT OF TRANSPORTATION
APPROVED
DIVISION OF BRIDGES AND STRUCTURES
SEP 24 1992
APPROVAL OF THIS DRAWING DOES NOT RELIEVE THE CONTRACTOR OF THE RESPONSIBILITY FOR THE CORRECTNESS OF DETAIL.

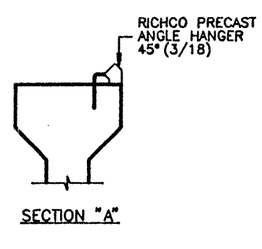

SECTION "A"

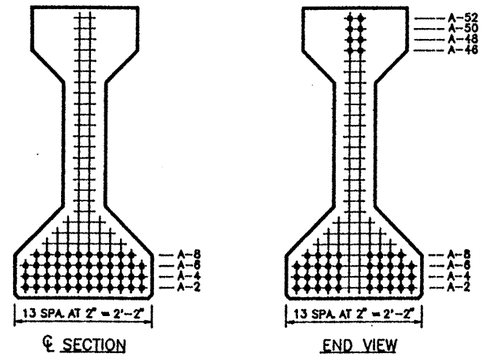

℄ SECTION

END VIEW

TYPE "IV" BEAM QUANTITY : 1

LO-LAX STRAND PATTERN	
NUMBER OF STRANDS : 46 ~1/2" ø 270 K @ 31.00 K EACH	
NUMBER OF STRAIGHT STRANDS	: 38
NUMBER OF DEFLECTED STRANDS	: 8 @ A – 52
CONCRETE RELEASE STRENGTH	: 5278 PSI
CONCRETE DESIGN STRENGTH	: 6088 PSI
ECCENTRICITY @ ℄ : 19.88"	ECCENTRICITY @ END : 12.23"

TOP FINISH PANELS
SEE STANDARD SHEET S-"IV" FOR TOP FINISH AND OTHER NOTES AND DETAILS.

DESIGN NO. : GPNSLR
TOTAL BEAM LENGTH OF THIS SHEET : 105.97'

MANCO PRESTRESS COMPANY

CONTRACTOR Gilbert of Texas Construction

FED.RD. DIV.NO.	STATE	PROJECT NO.	HWY. NO.
6	TEXAS	NH 92(50)M	83/281

STATE DIST.NO.	COUNTY	CONTROL NO.	SECTION NO.	JOB NO.
21	HIDALGO	39	17	97

COPYRIGHT 1989 BY
STRUCTURAL ENGINEERING ASSOCIATES, INC.
CONSULTING ENGINEERS, SAN ANTONIO, TEXAS

JOB NO. 92-018	DRAWN C.A.J.	CHECKED D.M.P.	DATE 8/26/92	SHEET/MARK NO.
SEA JOB NO. 92-059H	FABRICATION SHEET			IV-96

330020

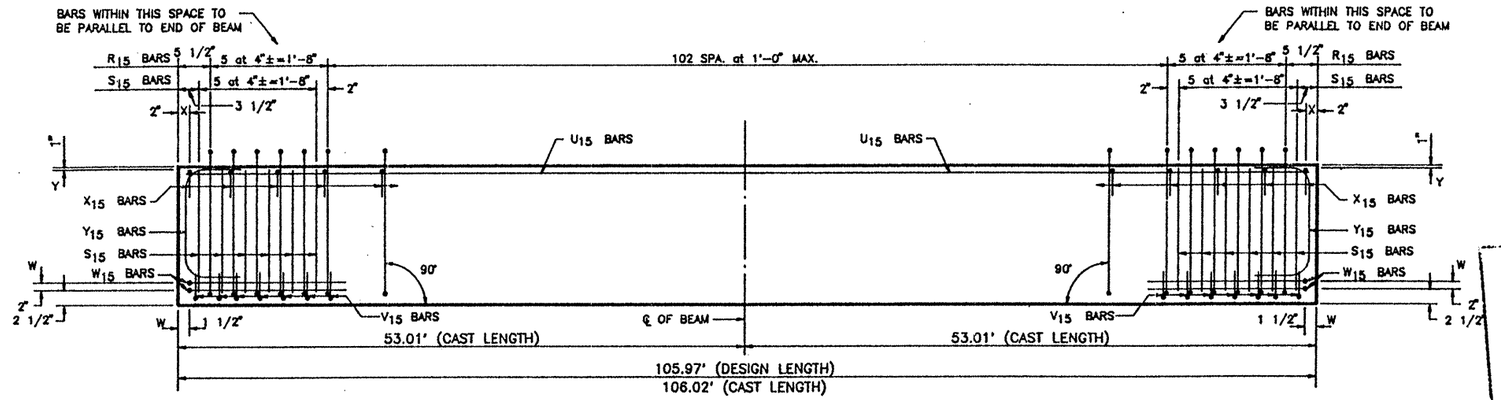

ELEVATION – REINFORCING STEEL

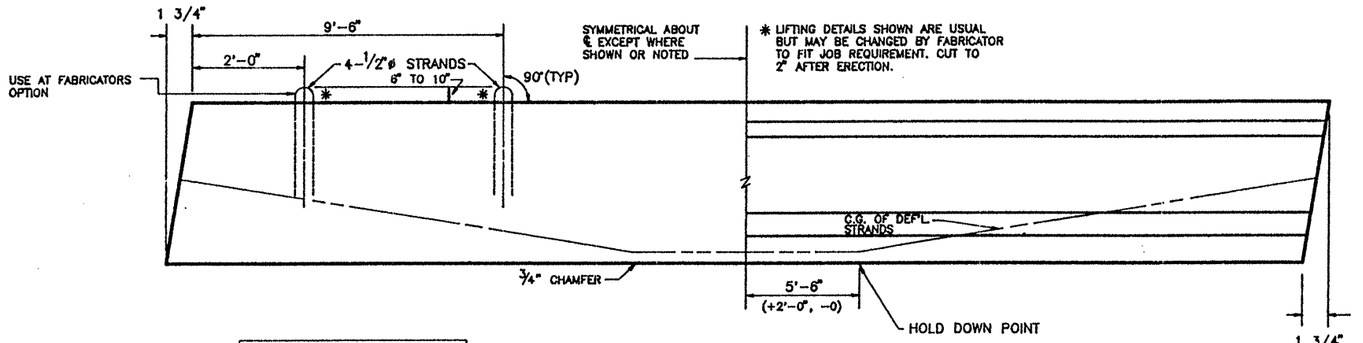

DOUBLE LIFTING LOOP DETAIL
(TYP. FOR BEAMS OVER 75')

BEAM ELEVATION
SEE PLAN VIEW FOR HOLE(S) LOCATION

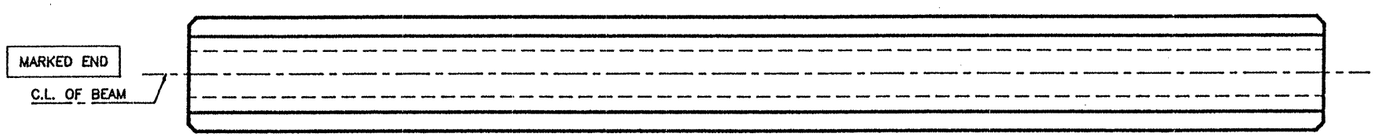

PLAN

REINFORCING STEEL SCHEDULE				
BAR	QUANTITY PER BEAM	TOTAL QUANTITY	SIZE	LENGTH
R_{15}	113	226	#3	standard
X_{15}	109	218	#3	standard
Y_{15}	4	8	#6	standard
S_{15}	24	48	#7	standard
V_{15}	14	28	#3	standard
W_{15}	4	8	#5	standard
U_{15}	2	4	#5	105'-9"

TEXAS DEPARTMENT OF TRANSPORTATION
APPROVED
DIVISION OF BRIDGES AND STRUCTURES
SEP 24 1992
APPROVAL OF THIS DRAWING DOES NOT RELIEVE THE CONTRACTOR OF THE RESPONSIBILITY FOR THE CORRECTNESS OF DETAIL.

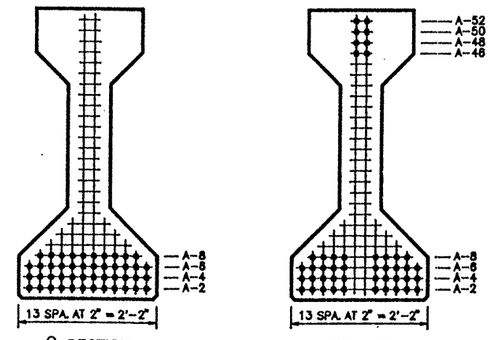

TYPE "IV" BEAM QUANTITY : 2

LO-LAX STRAND PATTERN	
NUMBER OF STRANDS : 46 ~1/2" ø 270 K @ 31.00 K EACH	
NUMBER OF STRAIGHT STRANDS	: 38
NUMBER OF DEFLECTED STRANDS	: 8 @ A – 52
CONCRETE RELEASE STRENGTH	: 5278 PSI
CONCRETE DESIGN STRENGTH	: 6088 PSI
ECCENTRICITY @ ℄ : 19.88"	ECCENTRICITY @ END : 12.23"

TOP FINISH PANELS
SEE STANDARD SHEET S-"IV" FOR TOP FINISH AND OTHER NOTES AND DETAILS.

DESIGN NO. : GPNSLR
TOTAL BEAM LENGTH OF THIS SHEET : 211.94'

MANCO PRESTRESS COMPANY				
CONTRACTOR Gilbert of Texas Construction				
FED.RD. DIV.NO.	STATE	PROJECT NO.		HWY. NO.
6	TEXAS	NH 92(50)M		83/281
STATE DIST.NO.	COUNTY	CONTROL NO.	SECTION NO.	JOB NO.
21	HIDALGO	39	17	97

COPYRIGHT 1989 BY
STRUCTURAL ENGINEERING ASSOCIATES, INC.
CONSULTING ENGINEERS, SAN ANTONIO, TEXAS

JOB NO.	DRAWN	CHECKED	DATE	SHEET/MARK NO.
92-018	C.A.J.	D.M.P.	8 / 26 / 92	IV-97
SEA JOB NO. 92-059H	FABRICATION SHEET			

330020

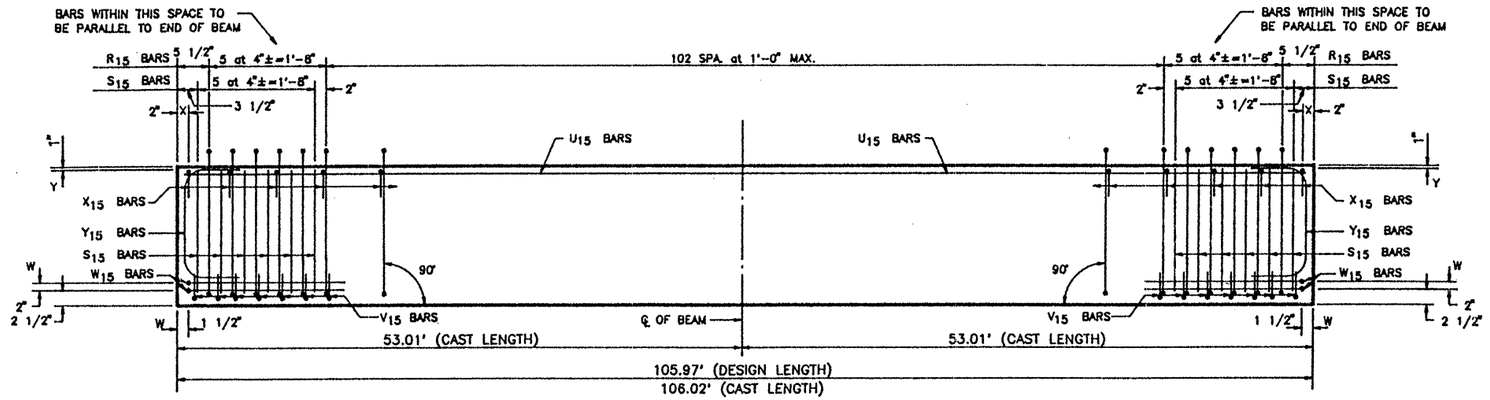

ELEVATION – REINFORCING STEEL

REINFORCING STEEL SCHEDULE				
BAR	QUANTITY PER BEAM	TOTAL QUANTITY	SIZE	LENGTH
R_{15}	113	113	#3	standard
X_{15}	109	109	#3	standard
Y_{15}	4	4	#6	standard
S_{15}	24	24	#7	standard
V_{15}	14	14	#3	standard
W_{15}	4	4	#5	standard
U_{15}	2	2	#5	105'-9"

TEXAS DEPARTMENT OF TRANSPORTATION
APPROVED
DIVISION OF BRIDGES AND STRUCTURES
SEP 2 4 1992
APPROVAL OF THIS DRAWING DOES NOT RELIEVE THE CONTRACTOR OF THE RESPONSIBILITY FOR THE CORRECTNESS OF DETAIL.

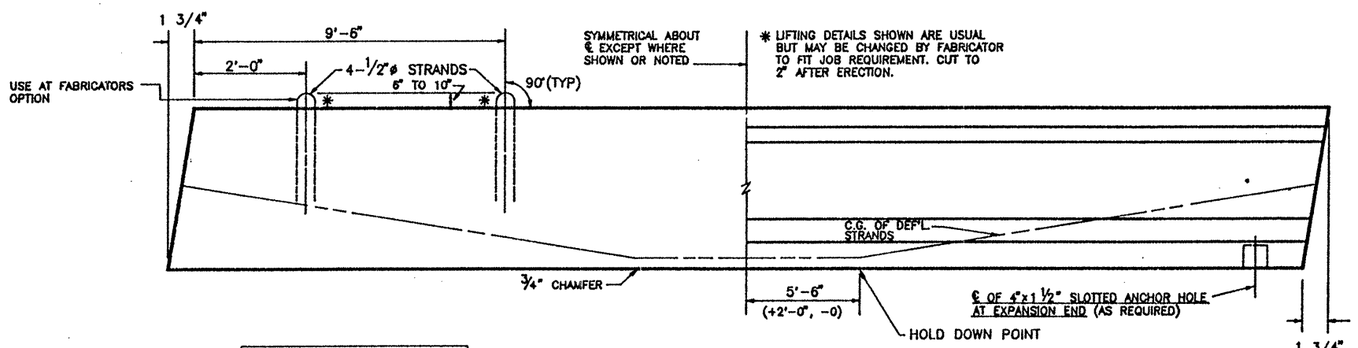

DOUBLE LIFTING LOOP DETAIL
(TYP. FOR BEAMS OVER 75')

BEAM ELEVATION
SEE PLAN VIEW FOR HOLE(S) LOCATION

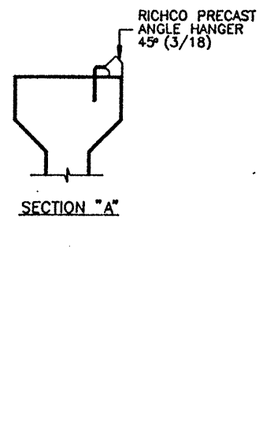

SECTION "A"

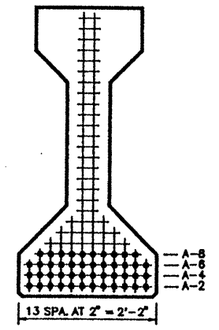

℄ SECTION

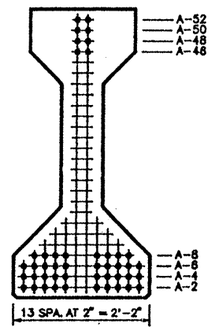

END VIEW

TYPE "IV" BEAM QUANTITY : 1

LO-LAX STRAND PATTERN		
NUMBER OF STRANDS : 46 ~1/2" ø 270 K @ 31.00 K EACH		
NUMBER OF STRAIGHT STRANDS	: 38	
NUMBER OF DEFLECTED STRANDS	: 8 @ A – 52	
CONCRETE RELEASE STRENGTH	: 5278	PSI
CONCRETE DESIGN STRENGTH	: 6088	PSI
ECCENTRICITY @ ℄ : 19.88"	ECCENTRICITY @ END : 12.23"	

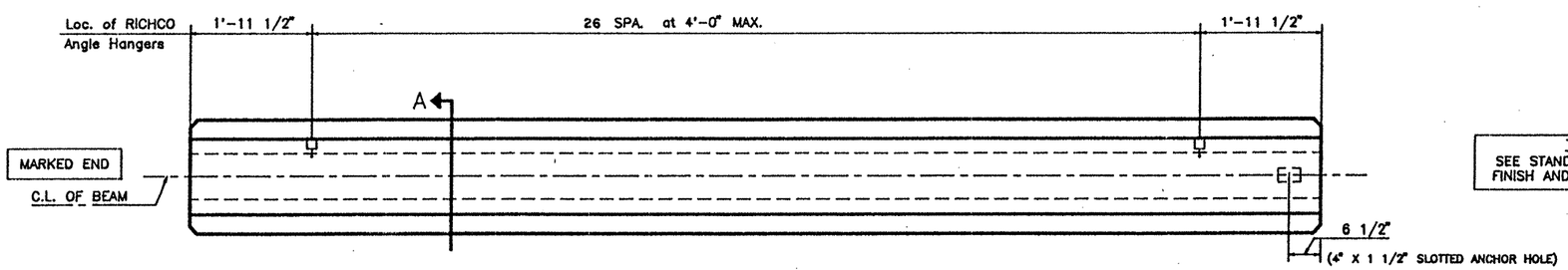

TOP FINISH PANELS
SEE STANDARD SHEET S-"IV" FOR TOP FINISH AND OTHER NOTES AND DETAILS.

FIXED END

EXPANSION END

PLAN

DESIGN NO. : GPNSLR
TOTAL BEAM LENGTH OF THIS SHEET : 105.97'

MANCO PRESTRESS COMPANY				
CONTRACTOR Gilbert of Texas Construction				
FED.RD. DIV.NO.	STATE	PROJECT NO.		HWY. NO.
6	TEXAS	NH 92(50)M		83/281
STATE DIST.NO.	COUNTY	CONTROL NO.	SECTION NO.	JOB NO.
21	HIDALGO	39	17	97

COPYRIGHT 1989 BY STRUCTURAL ENGINEERING ASSOCIATES, INC. CONSULTING ENGINEERS, SAN ANTONIO, TEXAS

JOB NO.	DRAWN	CHECKED	DATE	SHEET/MARK NO.
92-018	C.A.J.	D.M.P.	8 / 26 /92	IV-98
SEA JOB NO. 92-059H	FABRICATION SHEET			

330020

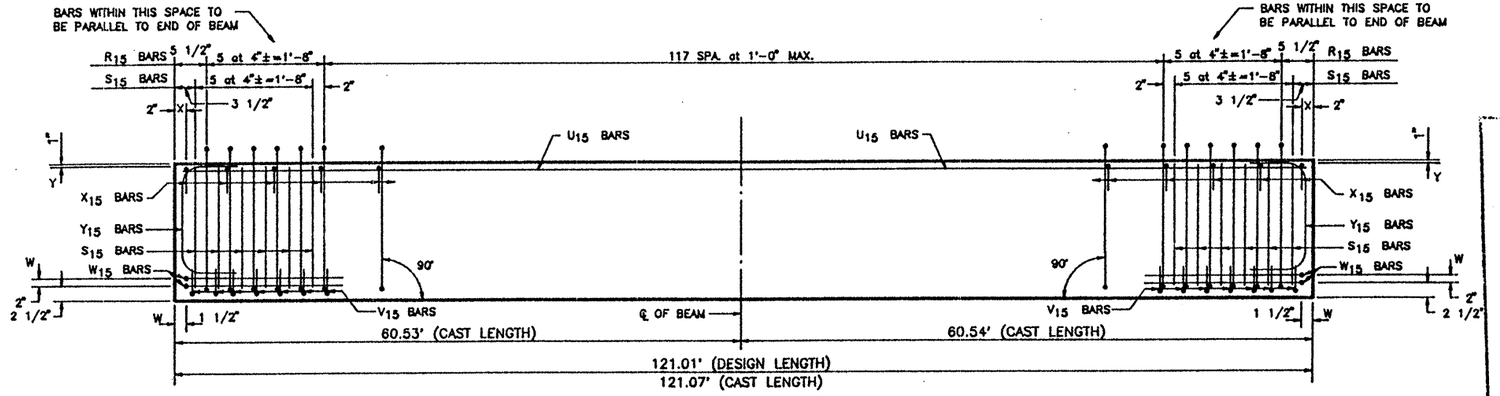

ELEVATION – REINFORCING STEEL

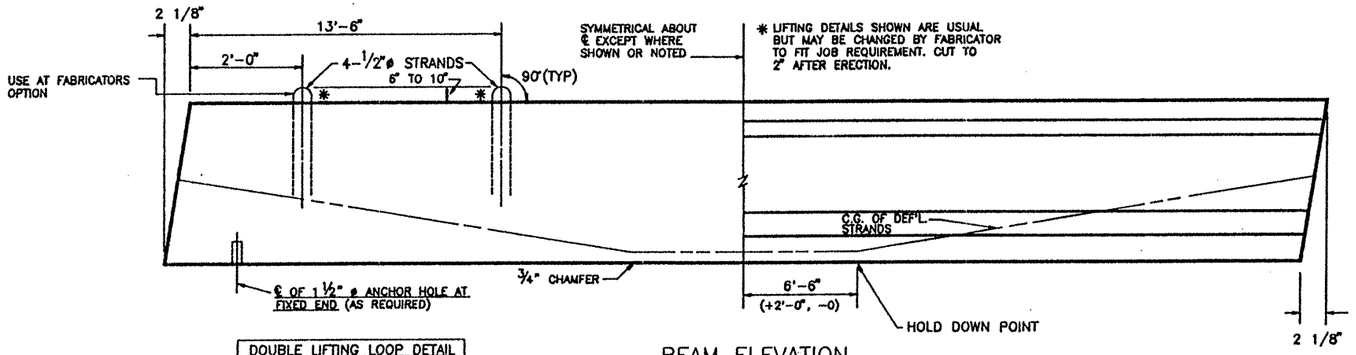

DOUBLE LIFTING LOOP DETAIL
(TYP. FOR BEAMS OVER 75')

BEAM ELEVATION
SEE PLAN VIEW FOR HOLE(S) LOCATION

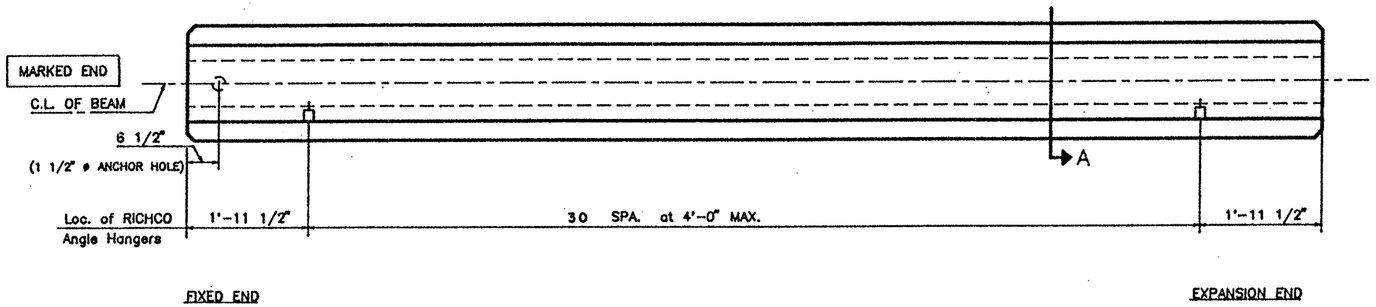

PLAN

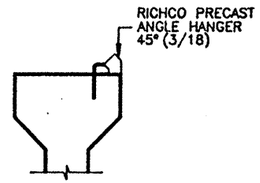

SECTION "A"

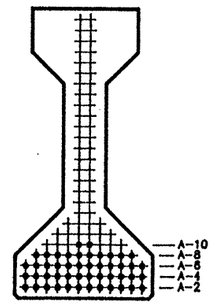

℄ SECTION

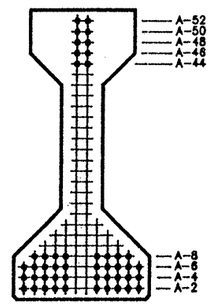

END VIEW

TYPE "IV" BEAM QUANTITY : 1

REINFORCING STEEL SCHEDULE				
BAR	QUANTITY PER BEAM	TOTAL QUANTITY	SIZE	LENGTH
R_{15}	128	128	#3	standard
X_{15}	124	124	#3	standard
Y_{15}	4	4	#6	standard
S_{15}	24	24	#7	standard
V_{15}	14	14	#3	standard
W_{15}	4	4	#5	standard
U_{15}	2	2	#5	120'-10"

TEXAS DEPARTMENT OF TRANSPORTATION
APPROVED
DIVISION OF BRIDGES AND STRUCTURES

SEP 2 4 1992

APPROVAL OF THIS DRAWING DOES NOT RELIEVE THE CONTRACTOR OF THE RESPONSIBILITY FOR THE CORRECTNESS OF DETAIL.

LO-LAX STRAND PATTERN		
NUMBER OF STRANDS	: 48 ~1/2" ø 270 K @ 31.00 K EACH	
NUMBER OF STRAIGHT STRANDS	: 38	
NUMBER OF DEFLECTED STRANDS	: 10 @ A - 52	
CONCRETE RELEASE STRENGTH	: 5250	PSI
CONCRETE DESIGN STRENGTH	: 7143	PSI
ECCENTRICITY @ ℄	: 19.67"	ECCENTRICITY @ END : 10.92"

TOP FINISH PANELS
SEE STANDARD SHEET S-"IV" FOR TOP FINISH AND OTHER NOTES AND DETAILS.

DESIGN NO. : GPNSLR
TOTAL BEAM LENGTH OF THIS SHEET : 121.01'

MANCO PRESTRESS COMPANY

CONTRACTOR Gilbert of Texas Construction

FED.RD. DIV.NO.	STATE	PROJECT NO.	HWY. NO.
6	TEXAS	NH 92(50)M	83/281

STATE DIST.NO.	COUNTY	CONTROL NO.	SECTION NO.	JOB NO.
21	HIDALGO	39	17	97

COPYRIGHT 1989 BY
STRUCTURAL ENGINEERING ASSOCIATES, INC.
CONSULTING ENGINEERS, SAN ANTONIO, TEXAS

JOB NO.	DRAWN	CHECKED	DATE	SHEET/MARK NO.
92-018	C.A.J.	D.M.P.	8 /26 /92	IV-99
SEA JOB NO. 92-059H	FABRICATION SHEET			

330020

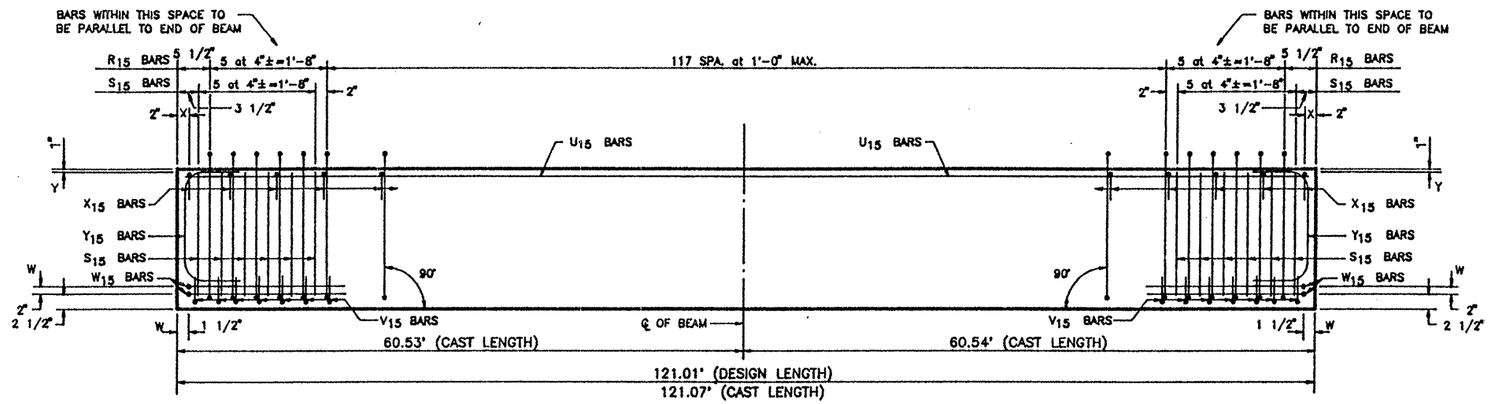

ELEVATION – REINFORCING STEEL

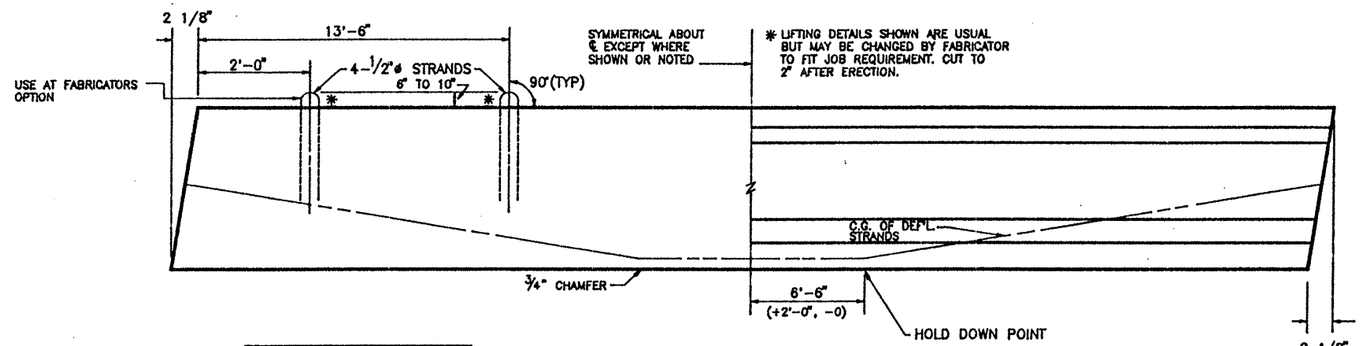

DOUBLE LIFTING LOOP DETAIL (TYP. FOR BEAMS OVER 75')

BEAM ELEVATION
SEE PLAN VIEW FOR HOLE(S) LOCATION

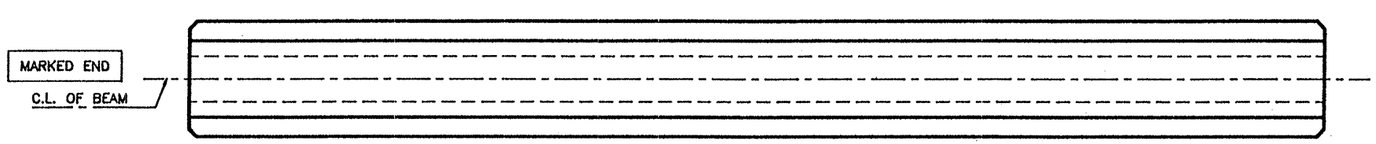

PLAN

TOP FINISH PANELS
SEE STANDARD SHEET S-"IV" FOR TOP FINISH AND OTHER NOTES AND DETAILS.

TEXAS DEPARTMENT OF TRANSPORTATION
APPROVED
DIVISION OF BRIDGES AND STRUCTURES
SEP 24 1992
APPROVAL OF THIS DRAWING DOES NOT RELIEVE THE CONTRACTOR OF THE RESPONSIBILITY FOR THE CORRECTNESS OF DETAIL.

REINFORCING STEEL SCHEDULE

BAR	QUANTITY PER BEAM	TOTAL QUANTITY	SIZE	LENGTH
R_{15}	128	384	#3	standard
X_{15}	124	372	#3	standard
Y_{15}	4	12	#6	standard
S_{15}	24	72	#7	standard
V_{15}	14	42	#3	standard
W_{15}	4	12	#5	standard
U_{15}	2	6	#5	120'-10"

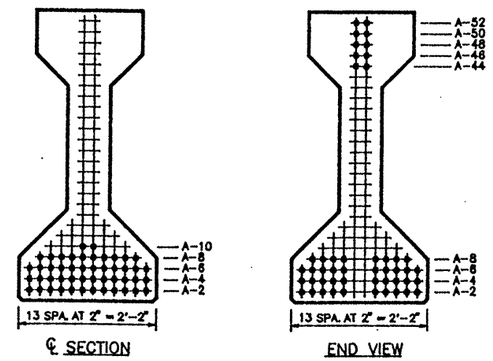

TYPE "IV" BEAM QUANTITY : 3

LO-LAX STRAND PATTERN		
NUMBER OF STRANDS	: 48 ~1/2" ø 270 K @ 31.00 K EACH	
NUMBER OF STRAIGHT STRANDS	: 38	
NUMBER OF DEFLECTED STRANDS	: 10 @ A – 52	
CONCRETE RELEASE STRENGTH	: 5250	PSI
CONCRETE DESIGN STRENGTH	: 7143	PSI
ECCENTRICITY @ ℄	: 19.67"	ECCENTRICITY @ END : 10.92"

DESIGN NO. : GPNSLR
TOTAL BEAM LENGTH OF THIS SHEET : 363.03'

MANCO PRESTRESS COMPANY

CONTRACTOR Gilbert of Texas Construction

FED.RD. DIV.NO.	STATE	PROJECT NO.	HWY. NO.
6	TEXAS	NH 92(50)M	83/281

STATE DIST.NO.	COUNTY	CONTROL NO.	SECTION NO.	JOB NO.
21	HIDALGO	39	17	97

COPYRIGHT 1989 BY
STRUCTURAL ENGINEERING ASSOCIATES, INC.
CONSULTING ENGINEERS, SAN ANTONIO, TEXAS

JOB NO.	DRAWN	CHECKED	DATE	SHEET/MARK NO.
92-018	C.A.J.	D.M.P.	8/26/92	IV-100
SEA JOB NO. 92-059H	FABRICATION SHEET			

330020

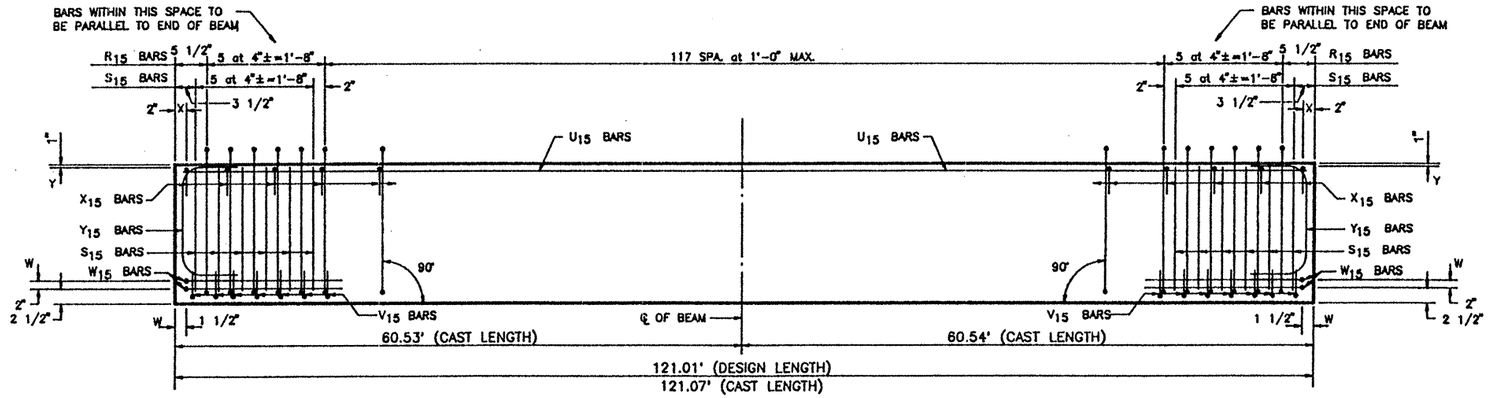

ELEVATION – REINFORCING STEEL

REINFORCING STEEL SCHEDULE				
BAR	QUANTITY PER BEAM	TOTAL QUANTITY	SIZE	LENGTH
R_{15}	128	128	#3	standard
X_{15}	124	124	#3	standard
Y_{15}	4	4	#6	standard
S_{15}	24	24	#7	standard
V_{15}	14	14	#3	standard
W_{15}	4	4	#5	standard
U_{15}	2	2	#5	120'-10"

TEXAS DEPARTMENT OF TRANSPORTATION
APPROVED
DIVISION OF BRIDGES AND STRUCTURES
SEP 24 1992
APPROVAL OF THIS DRAWING DOES NOT RELIEVE THE CONTRACTOR OF THE RESPONSIBILITY FOR THE CORRECTNESS OF DETAIL.

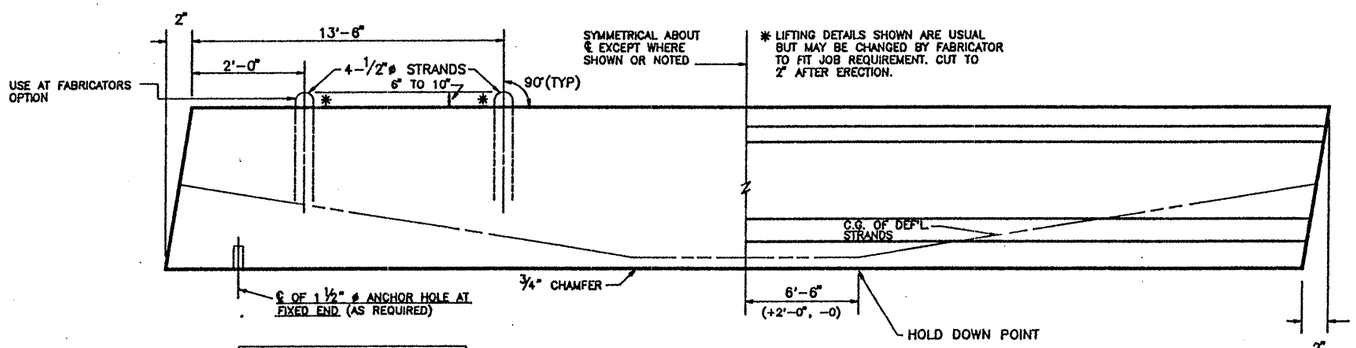

DOUBLE LIFTING LOOP DETAIL
(TYP. FOR BEAMS OVER 75')

BEAM ELEVATION
SEE PLAN VIEW FOR HOLE(S) LOCATION

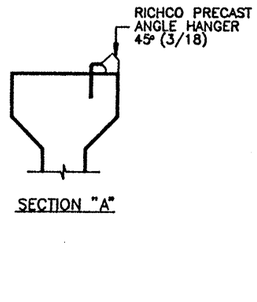

SECTION "A"

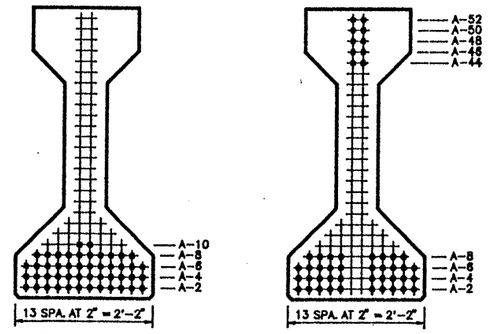

℄ SECTION

END VIEW

TYPE "IV" BEAM QUANTITY : 1

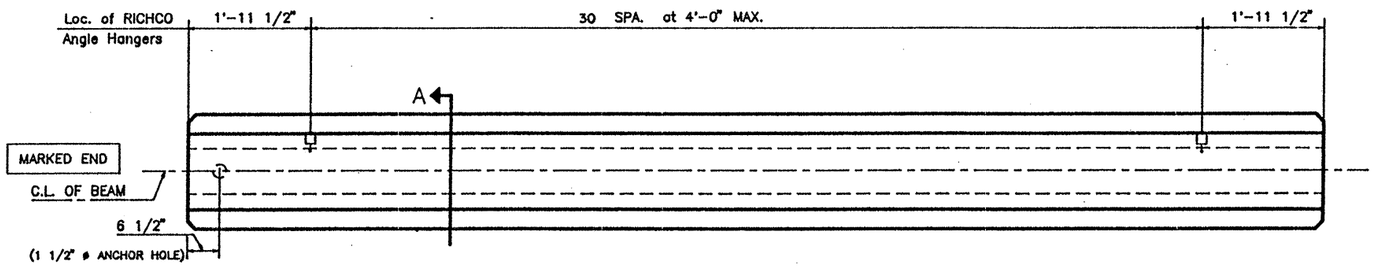

FIXED END

EXPANSION END

PLAN

LO-LAX STRAND PATTERN		
NUMBER OF STRANDS	: 48 ~1/2" ø 270 K @ 31.00 K EACH	
NUMBER OF STRAIGHT STRANDS	: 38	
NUMBER OF DEFLECTED STRANDS	: 10 @ A – 52	
CONCRETE RELEASE STRENGTH	: 5250	PSI
CONCRETE DESIGN STRENGTH	: 7143	PSI
ECCENTRICITY @ ℄	: 19.67" ECCENTRICITY @ END	: 10.92"

TOP FINISH PANELS
SEE STANDARD SHEET S-"IV" FOR TOP FINISH AND OTHER NOTES AND DETAILS.

DESIGN NO. : GPNSLR
TOTAL BEAM LENGTH OF THIS SHEET : 121.01'

MANCO PRESTRESS COMPANY

CONTRACTOR Gilbert of Texas Construction

FED.RD. DIV.NO.	STATE	PROJECT NO.		HWY. NO.
6	TEXAS	NH 92(50)M		83/281
STATE DIST.NO.	COUNTY	CONTROL NO.	SECTION NO.	JOB NO.
21	HIDALGO	39	17	97

COPYRIGHT 1989 BY STRUCTURAL ENGINEERING ASSOCIATES, INC. CONSULTING ENGINEERS, SAN ANTONIO, TEXAS

JOB NO.	DRAWN	CHECKED	DATE	SHEET/MARK NO.
92-018	C.A.J.	D.M.P.	8/26/92	IV-101
SEA JOB NO. 92-059H	FABRICATION SHEET			

330020

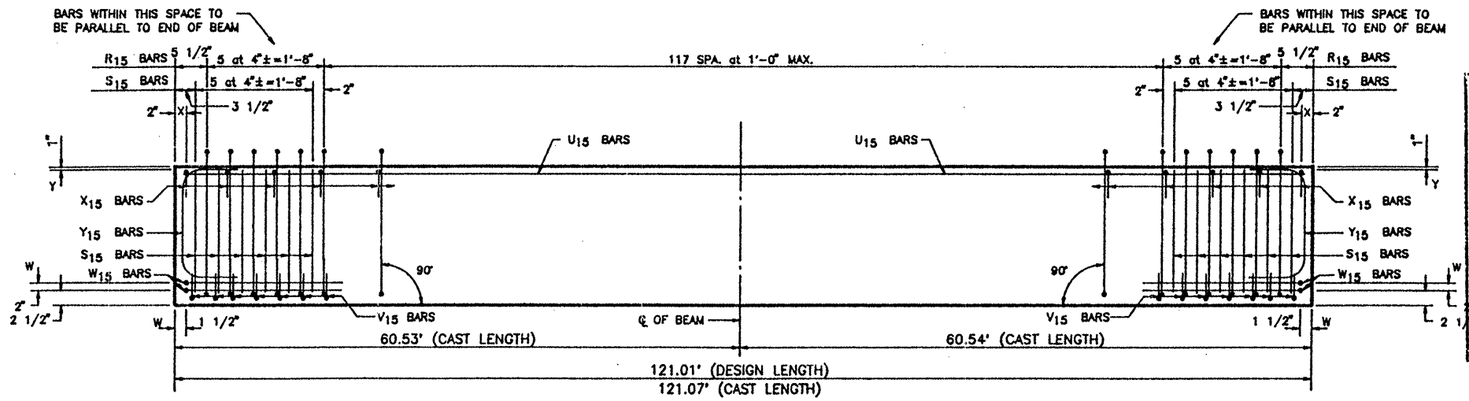

ELEVATION – REINFORCING STEEL

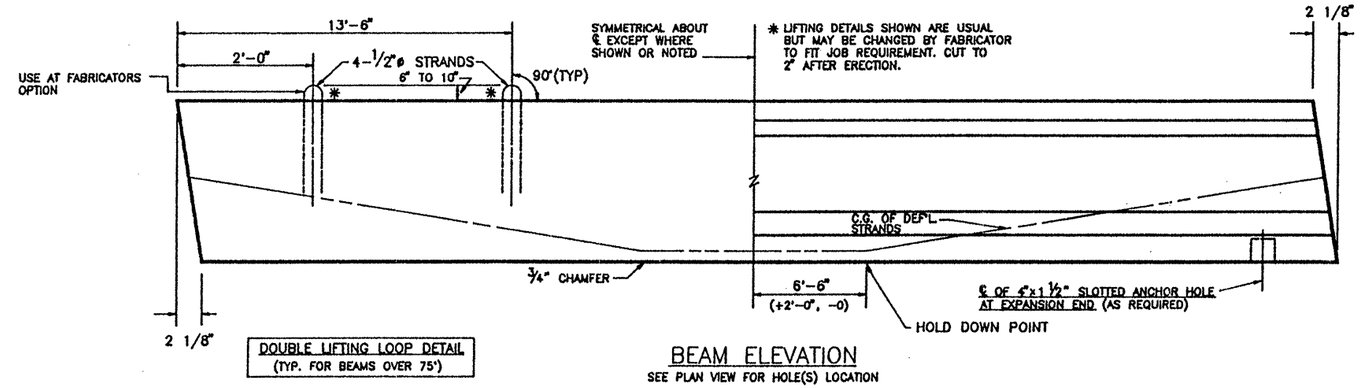

DOUBLE LIFTING LOOP DETAIL
(TYP. FOR BEAMS OVER 75')

BEAM ELEVATION
SEE PLAN VIEW FOR HOLE(S) LOCATION

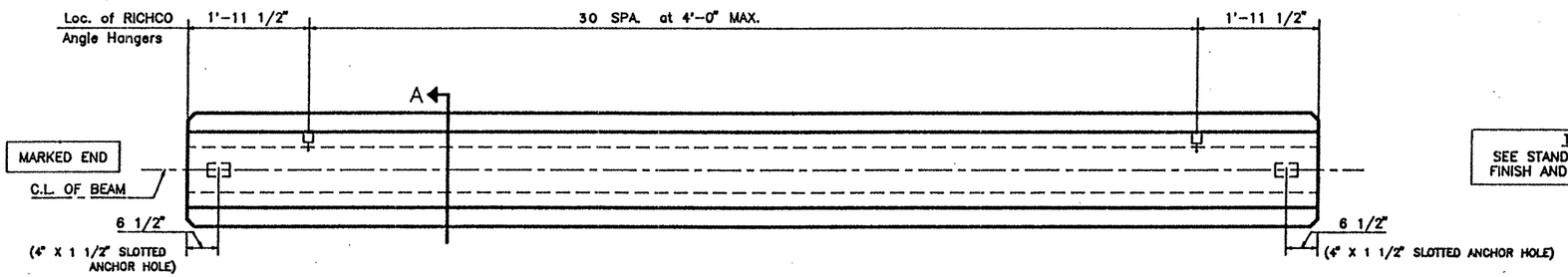

EXPANSION END

EXPANSION END

PLAN

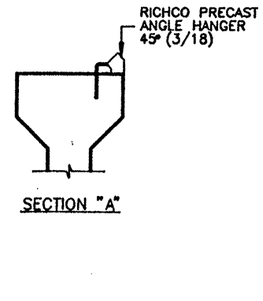

SECTION "A"

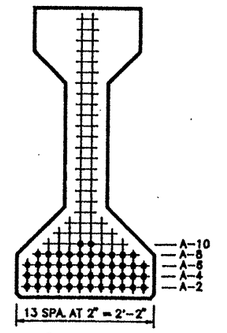

℄ SECTION

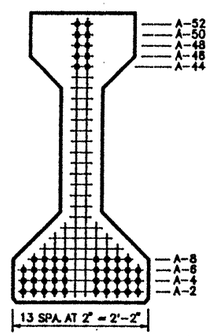

END VIEW

TYPE "IV" BEAM QUANTITY : 1

REINFORCING STEEL SCHEDULE				
BAR	QUANTITY PER BEAM	TOTAL QUANTITY	SIZE	LENGTH
R_{15}	128	128	#3	standard
X_{15}	124	124	#3	standard
Y_{15}	4	4	#6	standard
S_{15}	24	24	#7	standard
V_{15}	14	14	#3	standard
W_{15}	4	4	#5	standard
U_{15}	2	2	#5	120'-10"

TEXAS DEPARTMENT OF TRANSPORTATION
APPROVED
DIVISION OF BRIDGES AND STRUCTURES

SEP 24 1992

APPROVAL OF THIS DRAWING DOES NOT RELIEVE THE CONTRACTOR OF THE RESPONSIBILITY FOR THE CORRECTNESS OF DETAIL.

LO-LAX STRAND PATTERN		
NUMBER OF STRANDS	: 48 ~1/2" ø 270 K @ 31.00 K EACH	
NUMBER OF STRAIGHT STRANDS	: 38	
NUMBER OF DEFLECTED STRANDS	: 10 @ A -- 52	
CONCRETE RELEASE STRENGTH	: 5250	PSI
CONCRETE DESIGN STRENGTH	: 7143	PSI
ECCENTRICITY @ ℄	: 19.67"	ECCENTRICITY @ END : 10.92"

TOP FINISH PANELS
SEE STANDARD SHEET S-"IV" FOR TOP FINISH AND OTHER NOTES AND DETAILS.

DESIGN NO. : GPNSLR
TOTAL BEAM LENGTH OF THIS SHEET : 121.01'

MANCO PRESTRESS COMPANY

CONTRACTOR Gilbert of Texas Construction

FED.RD. DIV.NO.	STATE	PROJECT NO.		HWY. NO.
6	TEXAS	NH 92(50)M		83/281
STATE DIST.NO.	COUNTY	CONTROL NO.	SECTION NO.	JOB NO.
21	HIDALGO	39	17	97

COPYRIGHT 1989 BY
STRUCTURAL ENGINEERING ASSOCIATES, INC.
CONSULTING ENGINEERS, SAN ANTONIO, TEXAS

JOB NO.	DRAWN	CHECKED	DATE	SHEET/MARK NO.
92-018	C.A.J.	D.M.P.	8 / 26 /92	IV-102
SEA JOB NO. 92-059H	FABRICATION SHEET			

330020

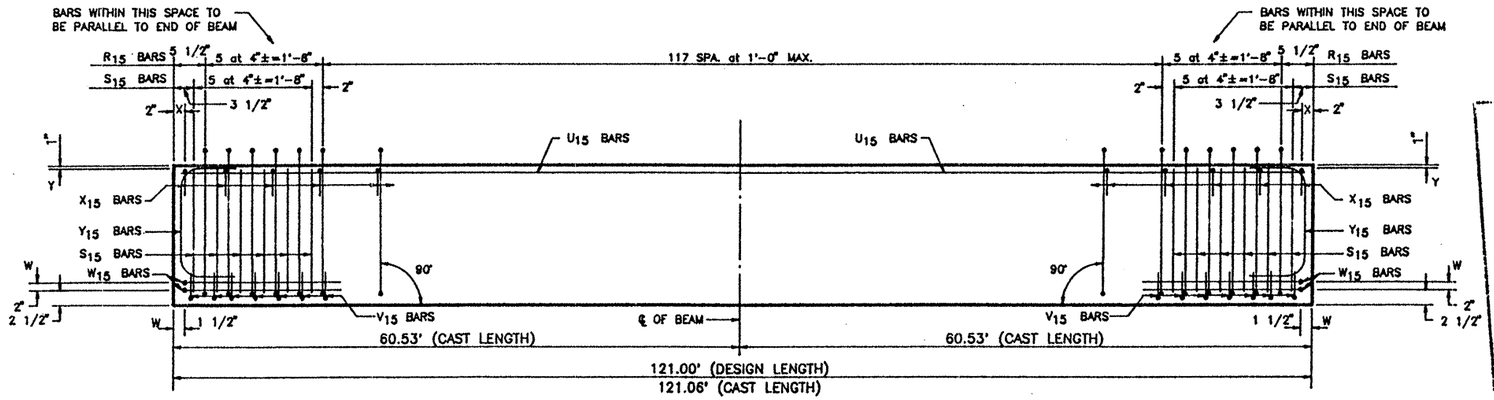

ELEVATION – REINFORCING STEEL

REINFORCING STEEL SCHEDULE				
BAR	QUANTITY PER BEAM	TOTAL QUANTITY	SIZE	LENGTH
R_{15}	128	384	#3	standard
X_{15}	124	372	#3	standard
Y_{15}	4	12	#6	standard
S_{15}	24	72	#7	standard
V_{15}	14	42	#3	standard
W_{15}	4	12	#5	standard
U_{15}	2	6	#5	120'-9"

TEXAS DEPARTMENT OF TRANSPORTATION
APPROVED
DIVISION OF BRIDGES AND STRUCTURES
SEP 24 1992
APPROVAL OF THIS DRAWING DOES NOT RELIEVE THE CONTRACTOR OF THE RESPONSIBILITY FOR THE CORRECTNESS OF DETAIL.

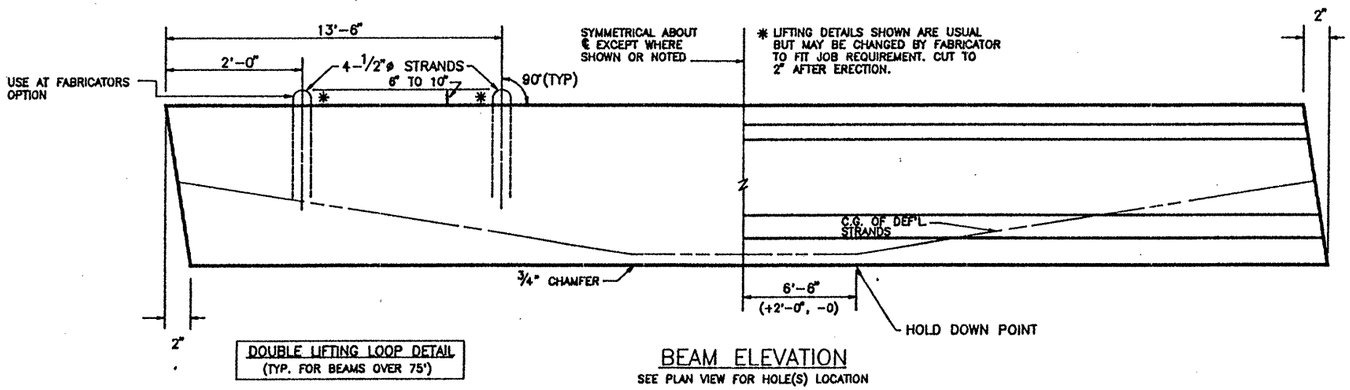

DOUBLE LIFTING LOOP DETAIL
(TYP. FOR BEAMS OVER 75')

BEAM ELEVATION
SEE PLAN VIEW FOR HOLE(S) LOCATION

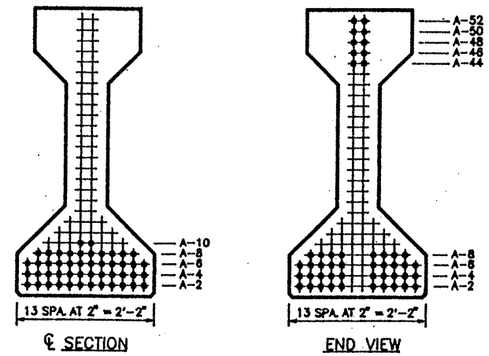

℄ SECTION

END VIEW

TYPE "IV" BEAM QUANTITY : 3

LO-LAX STRAND PATTERN		
NUMBER OF STRANDS : 48 ~1/2" ø 270 K @ 31.00 K EACH		
NUMBER OF STRAIGHT STRANDS	: 38	
NUMBER OF DEFLECTED STRANDS	: 10 @ A – 52	
CONCRETE RELEASE STRENGTH	: 5250	PSI
CONCRETE DESIGN STRENGTH	: 7143	PSI
ECCENTRICITY @ ℄ : 19.67"	ECCENTRICITY @ END : 10.92"	

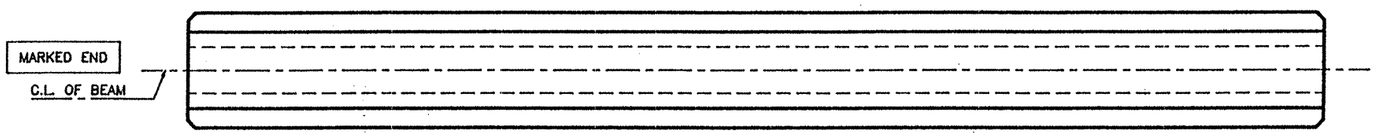

PLAN

TOP FINISH PANELS
SEE STANDARD SHEET S-"IV" FOR TOP FINISH AND OTHER NOTES AND DETAILS.

DESIGN NO. : GPNSLR
TOTAL BEAM LENGTH OF THIS SHEET : 363.00'

MANCO PRESTRESS COMPANY				
CONTRACTOR Gilbert of Texas Construction				
FED.RD. DIV.NO.	STATE	PROJECT NO.		HWY. NO.
6	TEXAS	NH 92(50)M		83/281
STATE DIST.NO.	COUNTY	CONTROL NO.	SECTION NO.	JOB NO.
21	HIDALGO	39	17	97

COPYRIGHT 1989 BY
STRUCTURAL ENGINEERING ASSOCIATES, INC.
CONSULTING ENGINEERS, SAN ANTONIO, TEXAS

JOB NO.	DRAWN	CHECKED	DATE	SHEET/MARK NO.
92-018	C.A.J.	D.M.P.	8/26/92	IV-103
SEA JOB NO. 92-059H	FABRICATION SHEET			

330020

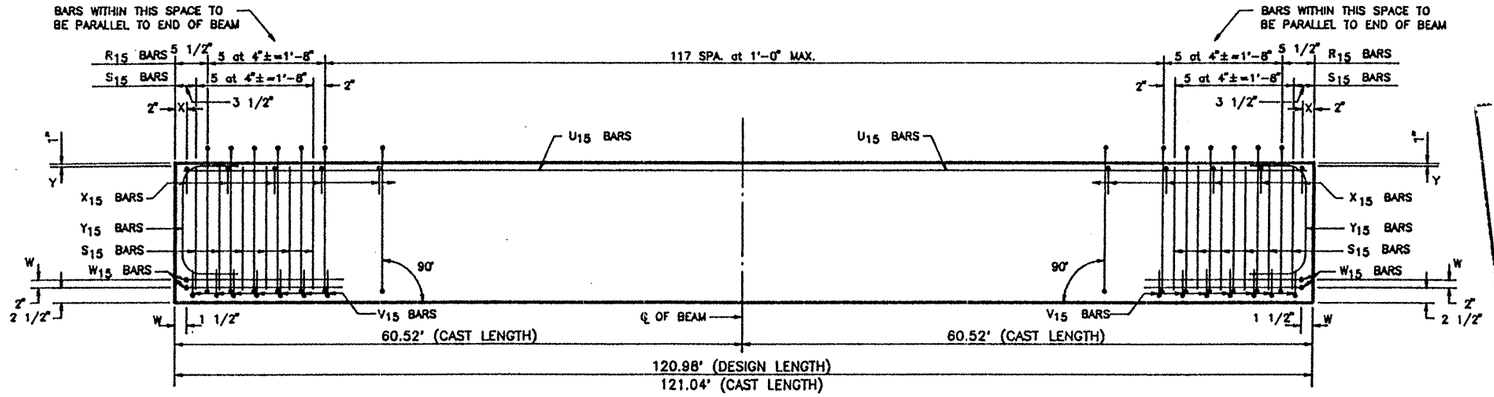

ELEVATION – REINFORCING STEEL

REINFORCING STEEL SCHEDULE				
BAR	QUANTITY PER BEAM	TOTAL QUANTITY	SIZE	LENGTH
R_{15}	128	128	#3	standard
X_{15}	124	124	#3	standard
Y_{15}	4	4	#6	standard
S_{15}	24	24	#7	standard
V_{15}	14	14	#3	standard
W_{15}	4	4	#5	standard
U_{15}	2	2	#5	120'-9"

TEXAS DEPARTMENT OF TRANSPORTATION
APPROVED
DIVISION OF BRIDGES AND STRUCTURES
SEP 2 4 1992
APPROVAL OF THIS DRAWING DOES NOT RELIEVE THE CONTRACTOR OF THE RESPONSIBILITY FOR THE CORRECTNESS OF DETAIL.

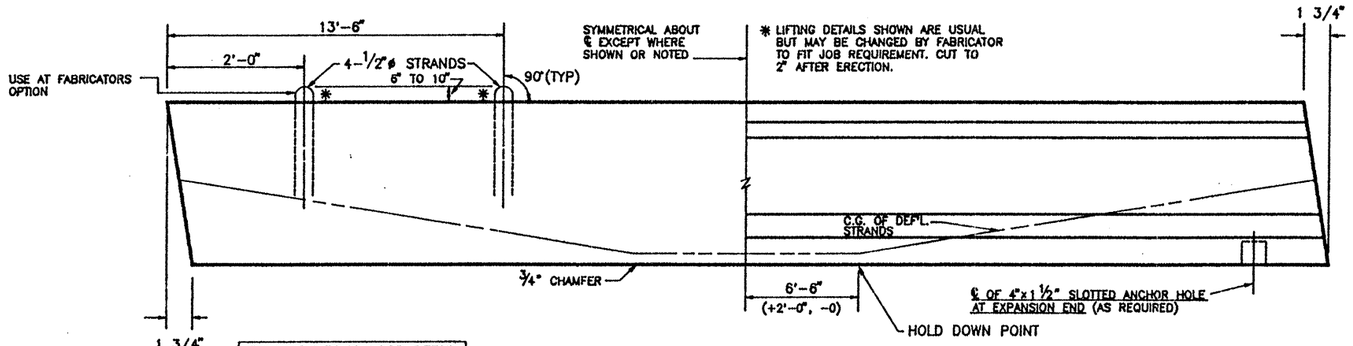

DOUBLE LIFTING LOOP DETAIL
(TYP. FOR BEAMS OVER 75')

BEAM ELEVATION
SEE PLAN VIEW FOR HOLE(S) LOCATION

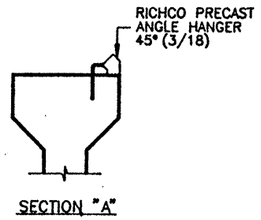

SECTION "A"

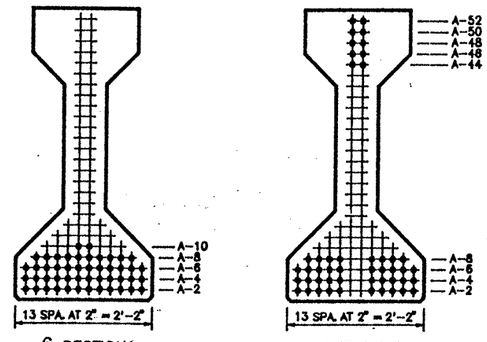

℄ SECTION

END VIEW

TYPE "IV" BEAM QUANTITY : 1

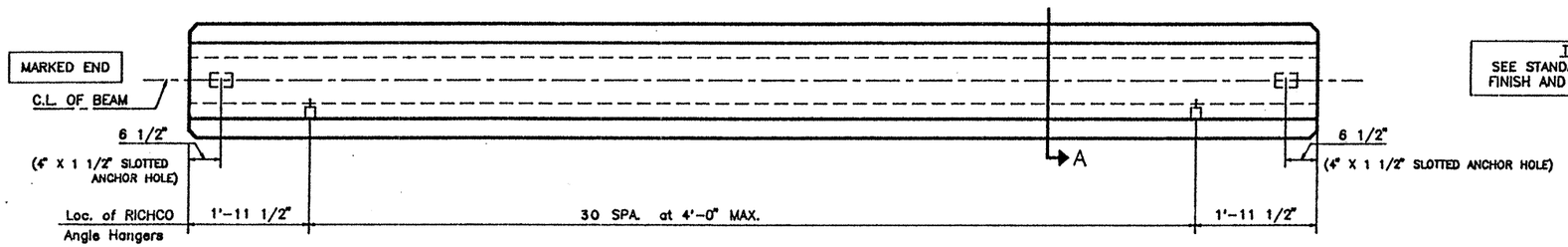

EXPANSION END

EXPANSION END

PLAN

LO-LAX STRAND PATTERN		
NUMBER OF STRANDS : 48 ~1/2" ø 270 K @ 31.00 K EACH		
NUMBER OF STRAIGHT STRANDS	: 38	
NUMBER OF DEFLECTED STRANDS	: 10 @ A – 52	
CONCRETE RELEASE STRENGTH	: 5250	PSI
CONCRETE DESIGN STRENGTH	: 7143	PSI
ECCENTRICITY @ ℄ : 19.67"	ECCENTRICITY @ END : 10.92"	

TOP FINISH PANELS
SEE STANDARD SHEET S-"IV" FOR TOP FINISH AND OTHER NOTES AND DETAILS.

DESIGN NO. : GPNSLR
TOTAL BEAM LENGTH OF THIS SHEET : 120.98'

MANCO PRESTRESS COMPANY

CONTRACTOR Gilbert of Texas Construction

FED.RD. DIV.NO.	STATE	PROJECT NO.	HWY. NO.
6	TEXAS	NH 92(50)M	83/281

STATE DIST.NO.	COUNTY	CONTROL NO.	SECTION NO.	JOB NO.
21	HIDALGO	39	17	97

COPYRIGHT 1989 BY
STRUCTURAL ENGINEERING ASSOCIATES, INC.
CONSULTING ENGINEERS, SAN ANTONIO, TEXAS

JOB NO.	DRAWN	CHECKED	DATE	SHEET/MARK NO.
92-018	C.A.J.	D.M.P.	8 / 26 /92	IV-104
SEA JOB NO. 92-059H	FABRICATION SHEET			

330020

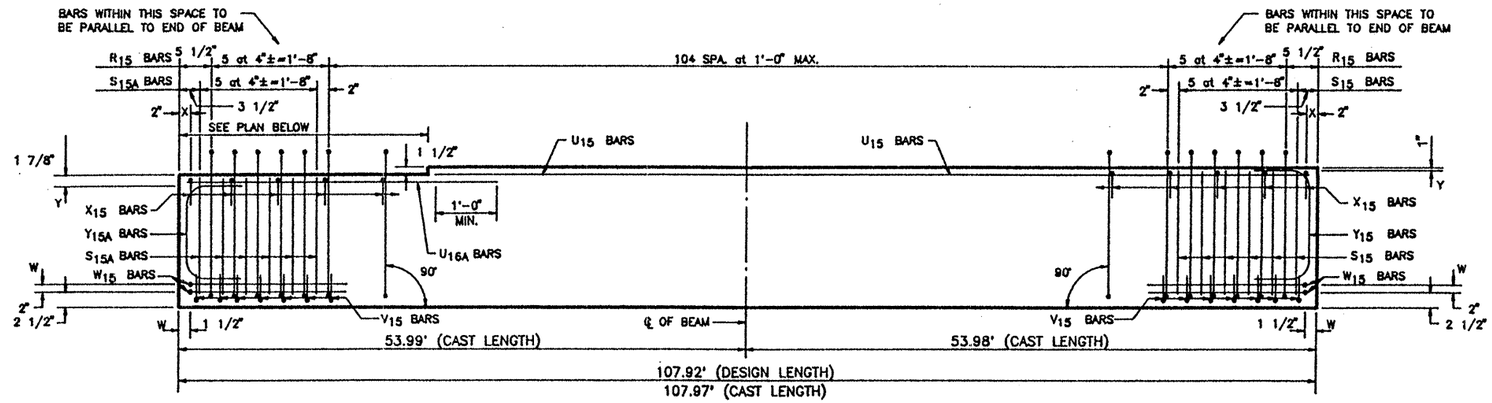

ELEVATION – REINFORCING STEEL

REINFORCING STEEL SCHEDULE				
BAR	QUANTITY PER BEAM	TOTAL QUANTITY	SIZE	LENGTH
R_{15}	115	115	#3	standard
X_{15}	111	111	#3	standard
Y_{15}	2	2	#6	standard
S_{15}	12	12	#7	standard
V_{15}	14	14	#3	standard
W_{15}	4	4	#5	standard
U_{15}	2	2	#5	103'-10"
Y_{15A}	2	2	#6	standard
S_{15A}	12	12	#7	standard
U_{16A}	2	2	#5	6'-6"

TEXAS DEPARTMENT OF TRANSPORTATION
APPROVED
DIVISION OF BRIDGES AND STRUCTURES
SEP 24 1992
APPROVAL OF THIS DRAWING DOES NOT RELIEVE THE CONTRACTOR OF THE RESPONSIBILITY FOR THE CORRECTNESS OF DETAIL.

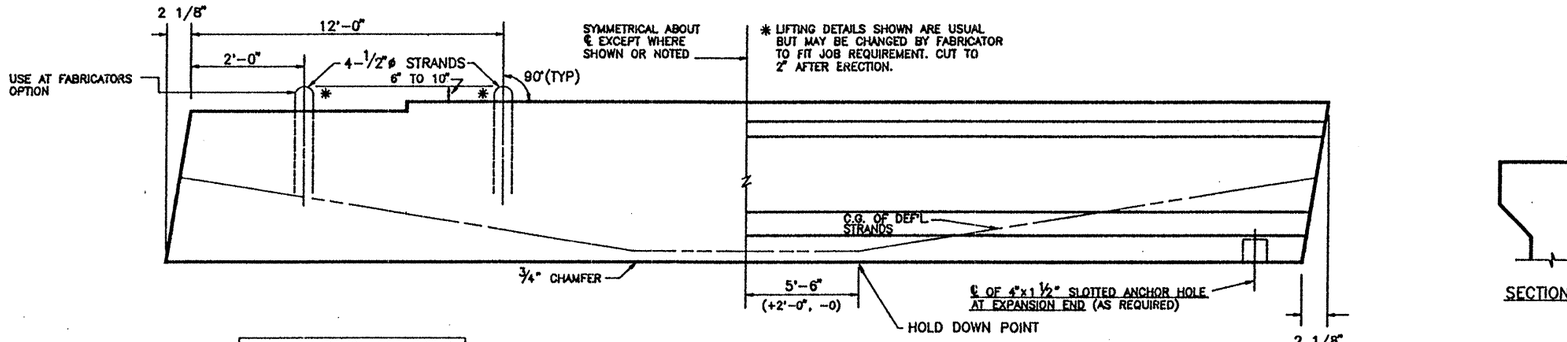

DOUBLE LIFTING LOOP DETAIL
(TYP. FOR BEAMS OVER 75')

BEAM ELEVATION
SEE PLAN VIEW FOR HOLE(S) LOCATION

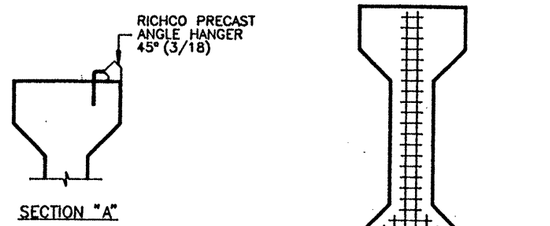

SECTION "A"

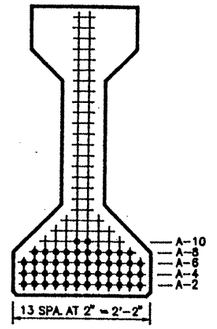

℄ SECTION

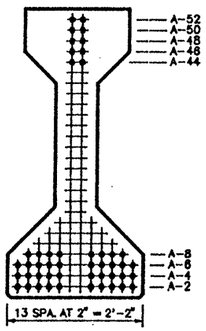

END VIEW

TYPE "IV" BEAM QUANTITY : 1

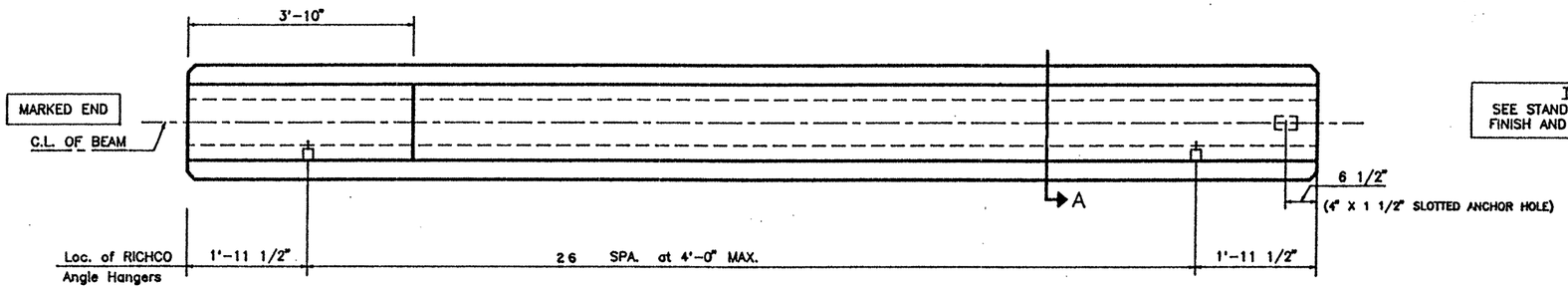

PLAN

TOP FINISH PANELS
SEE STANDARD SHEET S-"IV" FOR TOP FINISH AND OTHER NOTES AND DETAILS.

LO-LAX STRAND PATTERN		
NUMBER OF STRANDS	: 48 ~1/2" ø 270 K @ 31.00 K EACH	
NUMBER OF STRAIGHT STRANDS	: 38	
NUMBER OF DEFLECTED STRANDS	: 10 @ A -- 52	
CONCRETE RELEASE STRENGTH	: 5209	PSI
CONCRETE DESIGN STRENGTH	: 6343	PSI
ECCENTRICITY @ ℄	: 19.67" ECCENTRICITY @ END	: 10.92"

DESIGN NO. : GPNSLR
TOTAL BEAM LENGTH OF THIS SHEET : 107.92'

MANCO PRESTRESS COMPANY
CONTRACTOR Gilbert of Texas Construction

FED.RD. DIV.NO.	STATE	PROJECT NO.		HWY. NO.
6	TEXAS	NH 92(50)M		83/281
STATE DIST.NO.	COUNTY	CONTROL NO.	SECTION NO.	JOB NO.
21	HIDALGO	39	17	97

COPYRIGHT 1989 BY
STRUCTURAL ENGINEERING ASSOCIATES, INC.
CONSULTING ENGINEERS, SAN ANTONIO, TEXAS

JOB NO.	DRAWN	CHECKED	DATE	SHEET/MARK NO.
92-018	C.A.J.	D.M.P.	8 / 26 / 92	IV-105
SEA JOB NO. 92-059H	FABRICATION SHEET			

330020

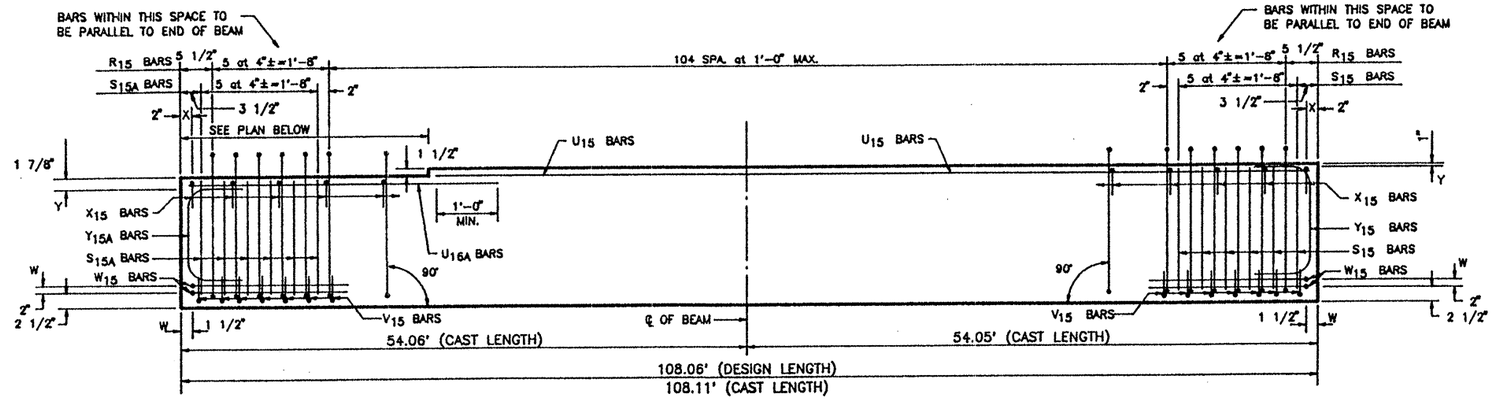

ELEVATION — REINFORCING STEEL

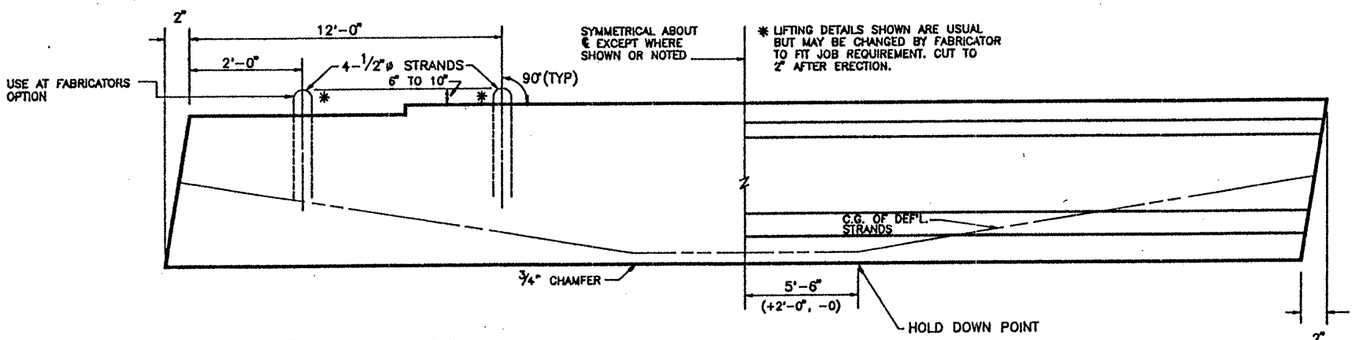

DOUBLE LIFTING LOOP DETAIL (TYP. FOR BEAMS OVER 75')

BEAM ELEVATION
SEE PLAN VIEW FOR HOLE(S) LOCATION

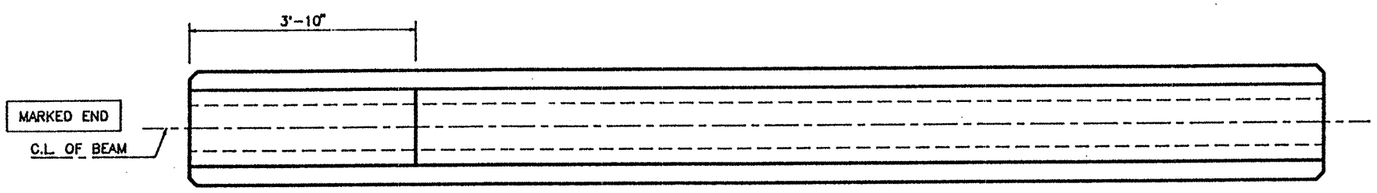

PLAN

REINFORCING STEEL SCHEDULE				
BAR	QUANTITY PER BEAM	TOTAL QUANTITY	SIZE	LENGTH
R_{15}	115	115	#3	standard
X_{15}	111	111	#3	standard
Y_{15}	2	2	#6	standard
S_{15}	12	12	#7	standard
V_{15}	14	14	#3	standard
W_{15}	4	4	#5	standard
U_{15}	2	2	#5	104'-0"
Y_{15A}	2	2	#6	standard
S_{15A}	12	12	#7	standard
U_{16A}	2	2	#5	6'-6"

TEXAS DEPARTMENT OF TRANSPORTATION
APPROVED
DIVISION OF BRIDGES AND STRUCTURES
SEP 24 1992
APPROVAL OF THIS DRAWING DOES NOT RELIEVE THE CONTRACTOR OF THE RESPONSIBILITY FOR THE CORRECTNESS OF DETAIL.

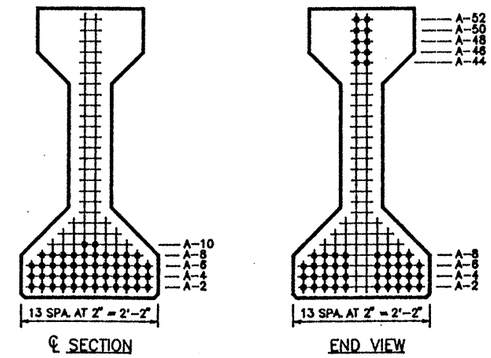

TYPE "IV" BEAM QUANTITY : 1

LO-LAX STRAND PATTERN		
NUMBER OF STRANDS : 48 ~1/2" ø 270 K @ 31.00 K EACH		
NUMBER OF STRAIGHT STRANDS	: 38	
NUMBER OF DEFLECTED STRANDS	: 10 @ A - 52	
CONCRETE RELEASE STRENGTH	: 5209	PSI
CONCRETE DESIGN STRENGTH	: 6343	PSI
ECCENTRICITY @ ℄ : 19.67"	ECCENTRICITY @ END : 10.92"	

TOP FINISH PANELS
SEE STANDARD SHEET S-"IV" FOR TOP FINISH AND OTHER NOTES AND DETAILS.

DESIGN NO. : GPNSLR
TOTAL BEAM LENGTH OF THIS SHEET : 108.06'

MANCO PRESTRESS COMPANY				
CONTRACTOR Gilbert of Texas Construction				
FED.RD. DIV.NO.	STATE	PROJECT NO.		HWY. NO.
6	TEXAS	NH 92(50)M		83/281
STATE DIST.NO.	COUNTY	CONTROL NO.	SECTION NO.	JOB NO.
21	HIDALGO	39	17	97

COPYRIGHT 1989 BY
STRUCTURAL ENGINEERING ASSOCIATES, INC.
CONSULTING ENGINEERS, SAN ANTONIO, TEXAS

JOB NO.	DRAWN	CHECKED	DATE	SHEET/MARK NO.
92-018	C.A.J.	D.M.P.	8/26/92	IV-106
SEA JOB NO. 92-059H	FABRICATION SHEET			

330020

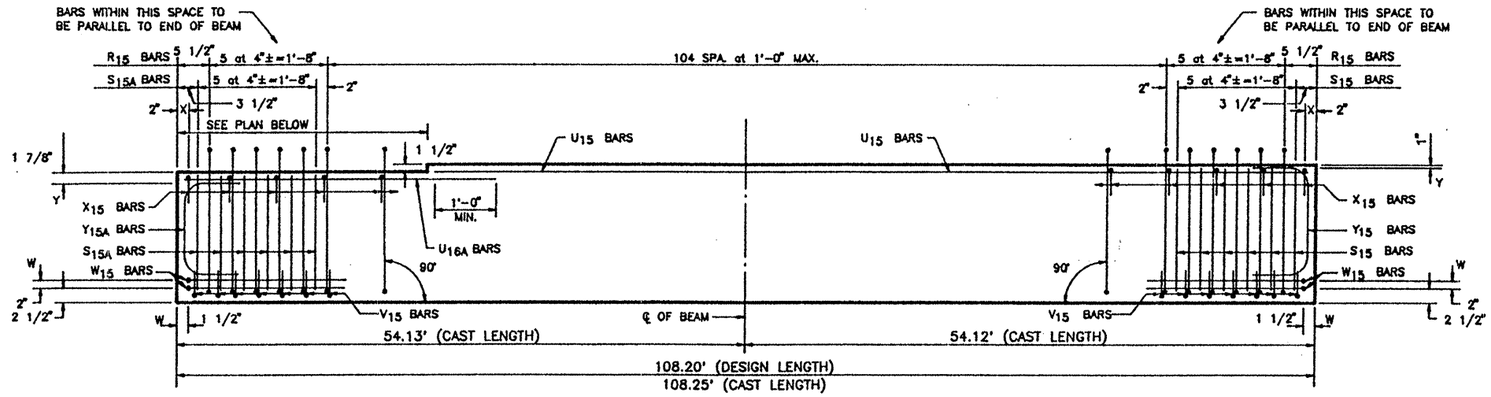

ELEVATION — REINFORCING STEEL

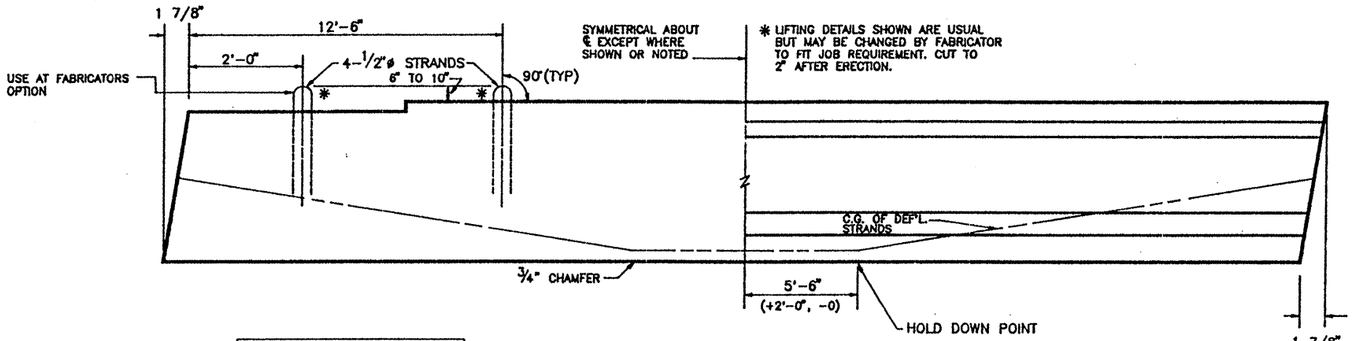

DOUBLE LIFTING LOOP DETAIL
(TYP. FOR BEAMS OVER 75')

BEAM ELEVATION
SEE PLAN VIEW FOR HOLE(S) LOCATION

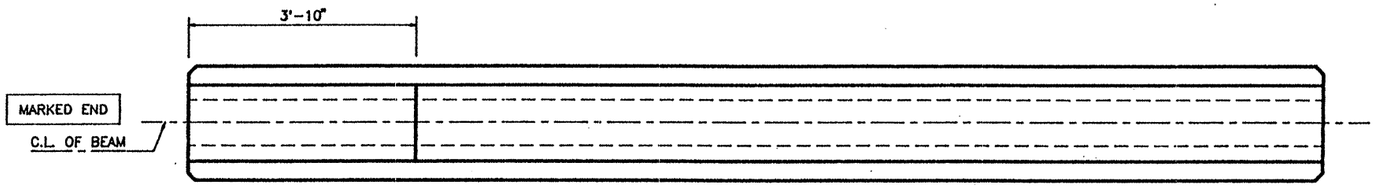

PLAN

TOP FINISH PANELS
SEE STANDARD SHEET S-"IV" FOR TOP FINISH AND OTHER NOTES AND DETAILS.

TEXAS DEPARTMENT OF TRANSPORTATION
APPROVED
DIVISION OF BRIDGES AND STRUCTURES
SEP 24 1992
APPROVAL OF THIS DRAWING DOES NOT RELIEVE THE CONTRACTOR OF THE RESPONSIBILITY FOR THE CORRECTNESS OF DETAIL.

REINFORCING STEEL SCHEDULE

BAR	QUANTITY PER BEAM	TOTAL QUANTITY	SIZE	LENGTH
R_{15}	115	115	#3	standard
X_{15}	111	111	#3	standard
Y_{15}	2	2	#6	standard
S_{15}	12	12	#7	standard
V_{15}	14	14	#3	standard
W_{15}	4	4	#5	standard
U_{15}	2	2	#5	104'-2"
Y_{15A}	2	2	#6	standard
S_{15A}	12	12	#7	standard
U_{16A}	2	2	#5	6'-6"

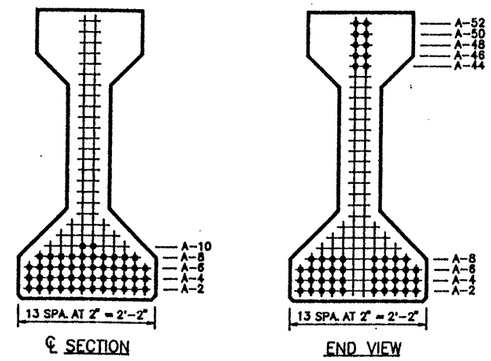

TYPE "IV" BEAM QUANTITY : 1

LO-LAX STRAND PATTERN		
NUMBER OF STRANDS	: 48 ~1/2" ø 270 K @ 31.00 K EACH	
NUMBER OF STRAIGHT STRANDS	: 38	
NUMBER OF DEFLECTED STRANDS	: 10 @ A - 52	
CONCRETE RELEASE STRENGTH	: 5209	PSI
CONCRETE DESIGN STRENGTH	: 6343	PSI
ECCENTRICITY @ ℄	: 19.67"	ECCENTRICITY @ END : 10.92"

DESIGN NO. : GPNSLR
TOTAL BEAM LENGTH OF THIS SHEET : 108.20'

MANCO PRESTRESS COMPANY

CONTRACTOR Gilbert of Texas Construction

FED.RD. DIV.NO.	STATE	PROJECT NO.	HWY. NO.
6	TEXAS	NH 92(50)M	83/281

STATE DIST.NO.	COUNTY	CONTROL NO.	SECTION NO.	JOB NO.
21	HIDALGO	39	17	97

COPYRIGHT 1989 BY STRUCTURAL ENGINEERING ASSOCIATES, INC. *CONSULTING ENGINEERS*, SAN ANTONIO, TEXAS

JOB NO.	DRAWN	CHECKED	DATE	SHEET/MARK NO.
92-018	C.A.J.	D.M.P.	8 / 26 /92	IV-107
SEA JOB NO. 92-059H	FABRICATION SHEET			

330020

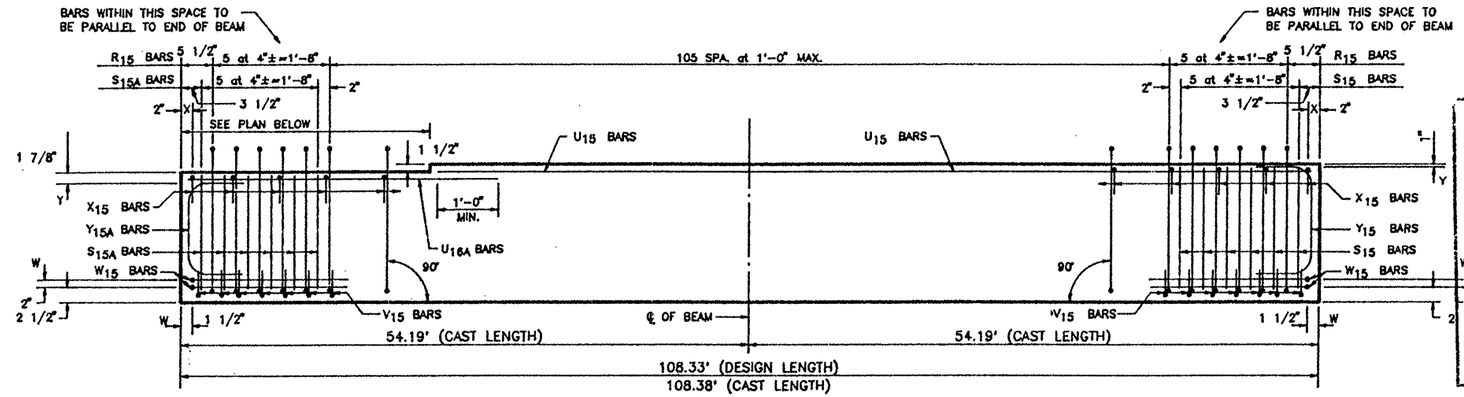

ELEVATION – REINFORCING STEEL

REINFORCING STEEL SCHEDULE				
BAR	QUANTITY PER BEAM	TOTAL QUANTITY	SIZE	LENGTH
R_{15}	116	116	#3	standard
X_{15}	112	112	#3	standard
Y_{15}	2	2	#6	standard
S_{15}	12	12	#7	standard
V_{15}	14	14	#3	standard
W_{15}	4	4	#5	standard
U_{15}	2	2	#5	104'-3"
Y_{15A}	2	2	#6	standard
S_{15A}	12	12	#7	standard
U_{16A}	2	2	#5	6'-6"

TEXAS DEPARTMENT OF TRANSPORTATION
APPROVED
DIVISION OF BRIDGES AND STRUCTURES
SEP 2 4 1992
APPROVAL OF THIS DRAWING DOES NOT RELIEVE THE CONTRACTOR OF THE RESPONSIBILITY FOR THE CORRECTNESS OF DETAIL.

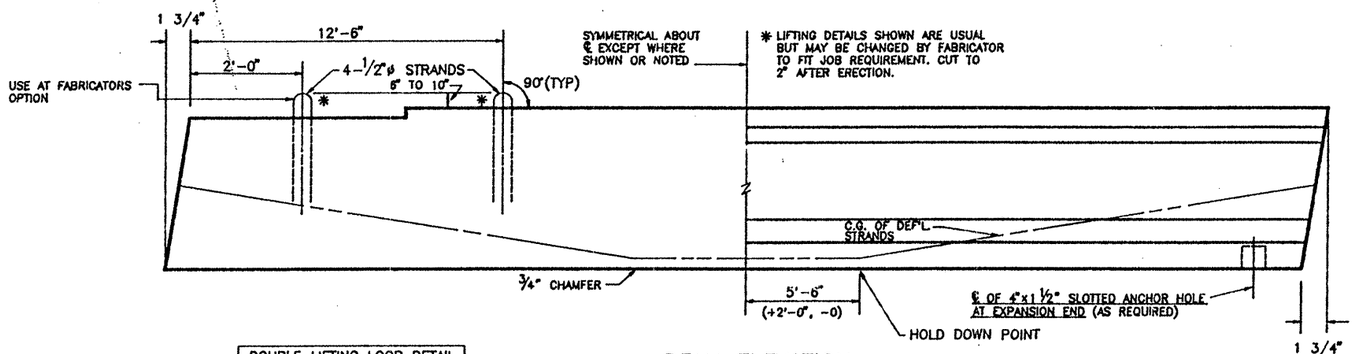

DOUBLE LIFTING LOOP DETAIL
(TYP. FOR BEAMS OVER 75')

BEAM ELEVATION
SEE PLAN VIEW FOR HOLE(S) LOCATION

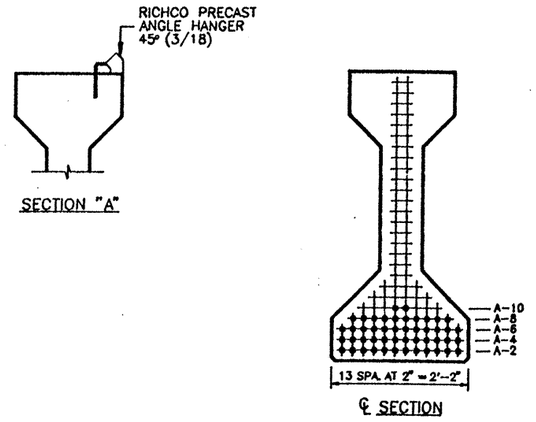

TYPE "IV" BEAM QUANTITY : 1

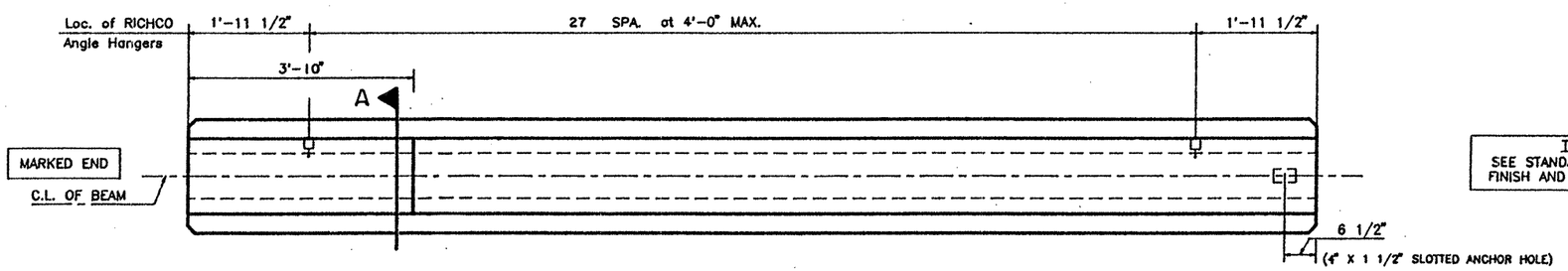

FIXED END

EXPANSION END

PLAN

TOP FINISH PANELS
SEE STANDARD SHEET S-"IV" FOR TOP FINISH AND OTHER NOTES AND DETAILS.

LO-LAX STRAND PATTERN		
NUMBER OF STRANDS	: 48 ~1/2" ø 270 K @ 31.00 K EACH	
NUMBER OF STRAIGHT STRANDS	: 38	
NUMBER OF DEFLECTED STRANDS	: 10 @ A – 52	
CONCRETE RELEASE STRENGTH	: 5209	PSI
CONCRETE DESIGN STRENGTH	: 6343	PSI
ECCENTRICITY @ ℄	: 19.67"	ECCENTRICITY @ END : 10.92"

DESIGN NO. : GPNSLR
TOTAL BEAM LENGTH OF THIS SHEET : 108.33'

MANCO PRESTRESS COMPANY
CONTRACTOR Gilbert of Texas Construction

FED.RD. DIV.NO.	STATE	PROJECT NO.	HWY. NO.
6	TEXAS	NH 92(50)M	83/281

STATE DIST.NO.	COUNTY	CONTROL NO.	SECTION NO.	JOB NO.
21	HIDALGO	39	17	97

COPYRIGHT 1989 BY
STRUCTURAL ENGINEERING ASSOCIATES, INC.
CONSULTING ENGINEERS, SAN ANTONIO, TEXAS

JOB NO.	DRAWN	CHECKED	DATE	SHEET/MARK NO.
92-018	C.A.J.	D.M.P.	8 / 26 /92	IV-108
SEA JOB NO. 92-059H	FABRICATION SHEET			

330020

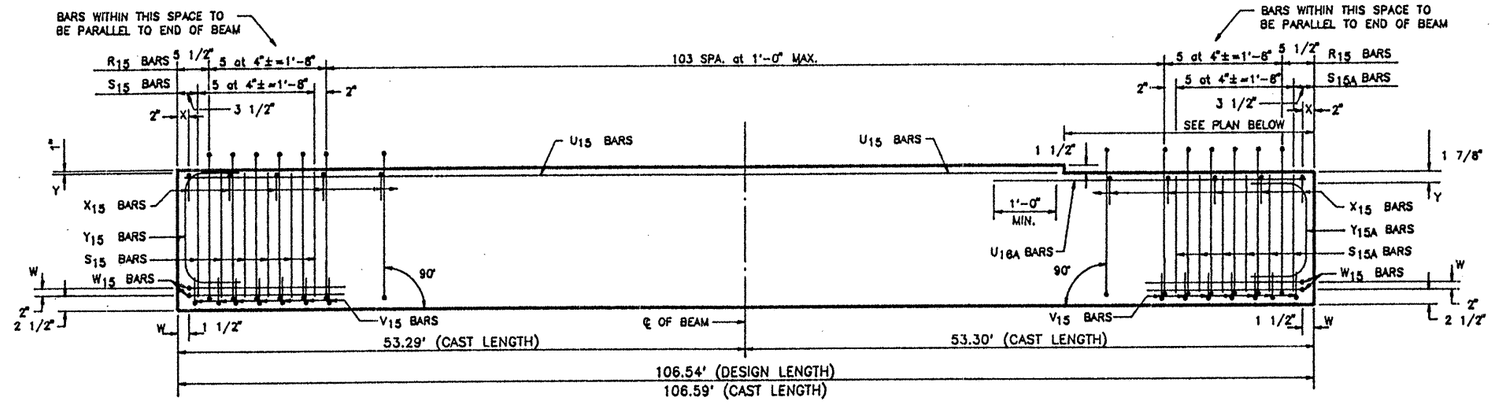

ELEVATION – REINFORCING STEEL

REINFORCING STEEL SCHEDULE				
BAR	QUANTITY PER BEAM	TOTAL QUANTITY	SIZE	LENGTH
R_{15}	114	114	#3	standard
X_{15}	110	110	#3	standard
Y_{15}	2	2	#6	standard
S_{15}	12	12	#7	standard
V_{15}	14	14	#3	standard
W_{15}	4	4	#5	standard
U_{15}	2	2	#5	102'-6"
Y_{15A}	2	2	#6	standard
S_{15A}	12	12	#7	standard
U_{16A}	2	2	#5	6'-6"

TEXAS DEPARTMENT OF TRANSPORTATION
APPROVED
DIVISION OF BRIDGES AND STRUCTURES

SEP 2 4 1992

APPROVAL OF THIS DRAWING DOES NOT RELIEVE THE CONTRACTOR OF THE RESPONSIBILITY FOR THE CORRECTNESS OF DETAIL.

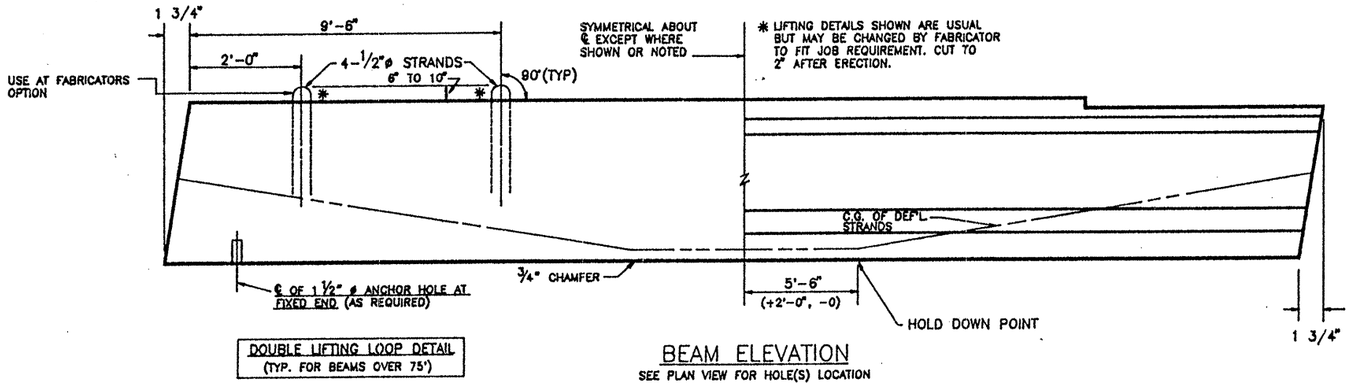

DOUBLE LIFTING LOOP DETAIL
(TYP. FOR BEAMS OVER 75')

BEAM ELEVATION
SEE PLAN VIEW FOR HOLE(S) LOCATION

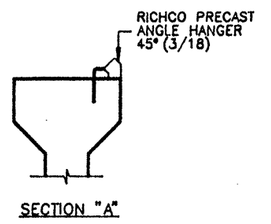

SECTION "A"

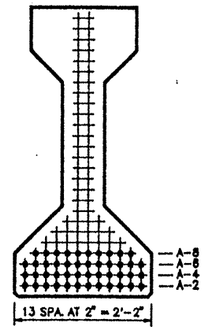

℄ SECTION

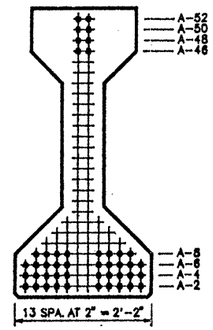

END VIEW

TYPE "IV" BEAM QUANTITY : 1

LO-LAX STRAND PATTERN		
NUMBER OF STRANDS : 46 ~1/2" ø 270 K @ 31.00 K EACH		
NUMBER OF STRAIGHT STRANDS	: 38	
NUMBER OF DEFLECTED STRANDS	: 8 @ A – 52	
CONCRETE RELEASE STRENGTH	: 5278	PSI
CONCRETE DESIGN STRENGTH	: 6088	PSI
ECCENTRICITY @ ℄ : 19.88"	ECCENTRICITY @ END : 12.23"	

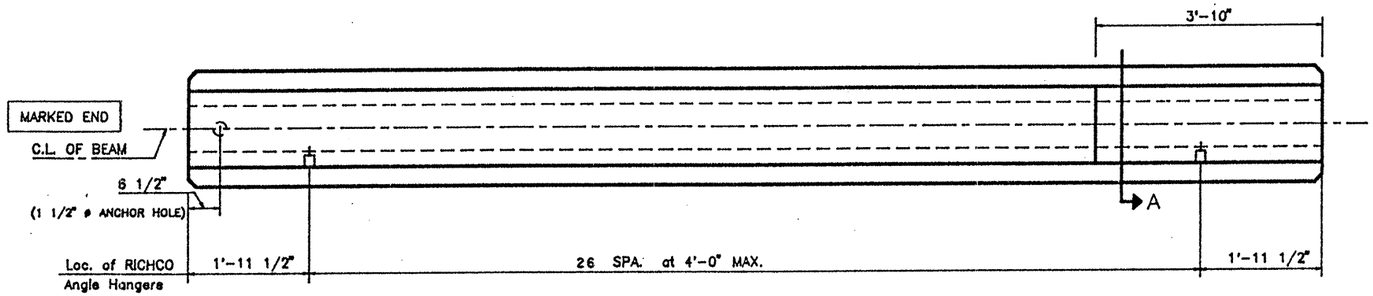

FIXED END

EXPANSION END

PLAN

TOP FINISH PANELS
SEE STANDARD SHEET S-"IV" FOR TOP FINISH AND OTHER NOTES AND DETAILS.

DESIGN NO. : GPNSLR
TOTAL BEAM LENGTH OF THIS SHEET : 106.54'

MANCO PRESTRESS COMPANY				
CONTRACTOR Gilbert of Texas Construction				
FED.RD. DIV.NO.	STATE	PROJECT NO.		HWY. NO.
6	TEXAS	NH 92(50)M		83/281
STATE DIST.NO.	COUNTY	CONTROL NO.	SECTION NO.	JOB NO.
21	HIDALGO	39	17	97

COPYRIGHT 1989 BY
STRUCTURAL ENGINEERING ASSOCIATES, INC.
CONSULTING ENGINEERS, SAN ANTONIO, TEXAS

JOB NO.	DRAWN	CHECKED	DATE	SHEET/MARK NO.
92-018	C.A.J.	D.M.P.	8 /26 /92	IV-109
SEA JOB NO. 92-059H	FABRICATION SHEET			

330020

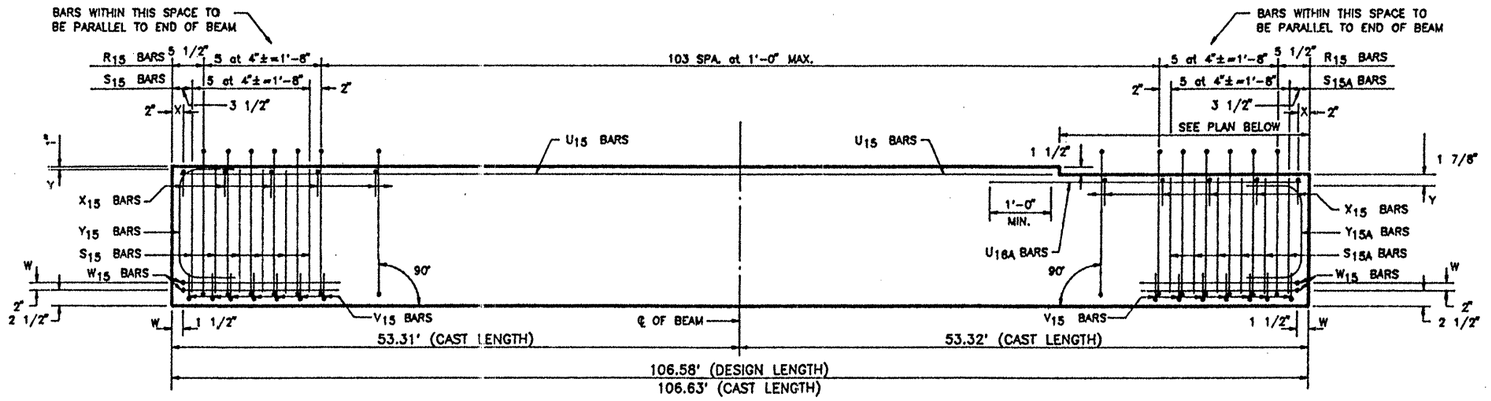

ELEVATION – REINFORCING STEEL

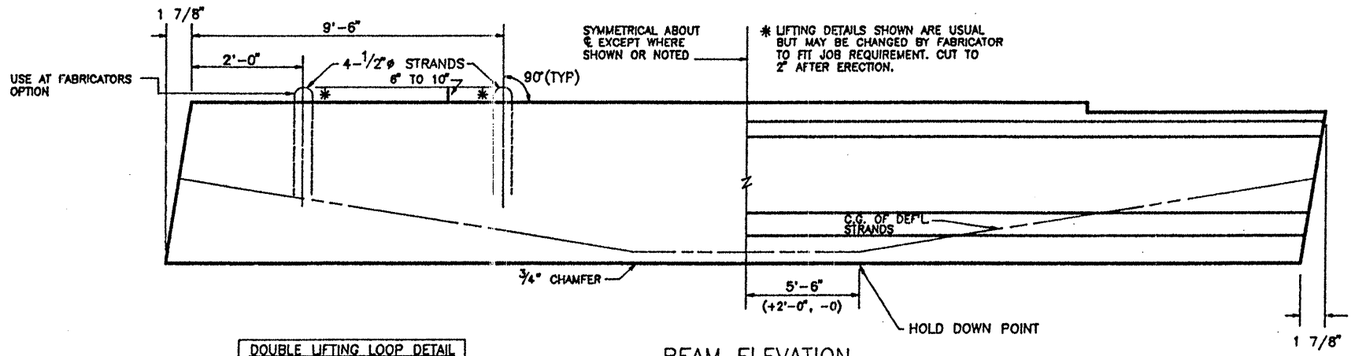

DOUBLE LIFTING LOOP DETAIL (TYP. FOR BEAMS OVER 75')

BEAM ELEVATION
SEE PLAN VIEW FOR HOLE(S) LOCATION

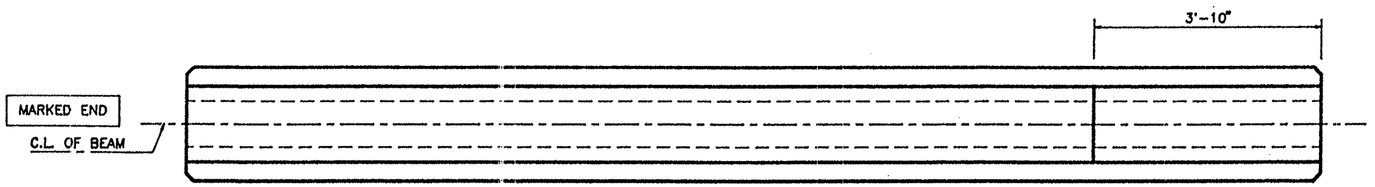

PLAN

TOP FINISH PANELS
SEE STANDARD SHEET S-"IV" FOR TOP FINISH AND OTHER NOTES AND DETAILS.

TEXAS DEPARTMENT OF TRANSPORTATION
APPROVED
DIVISION OF BRIDGES AND STRUCTURES

SEP 24 1992

APPROVAL OF THIS DRAWING DOES NOT RELIEVE THE CONTRACTOR OF THE RESPONSIBILITY FOR THE CORRECTNESS OF DETAIL.

REINFORCING STEEL SCHEDULE

BAR	QUANTITY PER BEAM	TOTAL QUANTITY	SIZE	LENGTH
R_{15}	114	228	#3	standard
X_{15}	110	220	#3	standard
Y_{15}	2	4	#6	standard
S_{15}	12	24	#7	standard
V_{15}	14	28	#3	standard
W_{15}	4	8	#5	standard
U_{15}	2	4	#5	102'-6"
Y_{15A}	2	4	#6	standard
S_{15A}	12	24	#7	standard
U_{16A}	2	4	#5	6'-6"

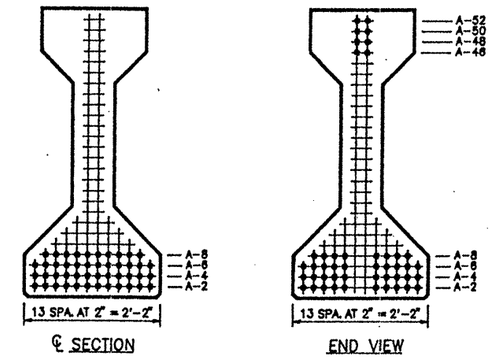

TYPE "IV" BEAM QUANTITY : 2

LO-LAX STRAND PATTERN		
NUMBER OF STRANDS : 46 ~1/2" ø 270 K @ 31.00 K EACH		
NUMBER OF STRAIGHT STRANDS	: 38	
NUMBER OF DEFLECTED STRANDS	: 8 @ A – 52	
CONCRETE RELEASE STRENGTH	: 5278	PSI
CONCRETE DESIGN STRENGTH	: 6088	PSI
ECCENTRICITY @ ℄ : 19.88"	ECCENTRICITY @ END : 12.23"	

DESIGN NO. : GPNSLR
TOTAL BEAM LENGTH OF THIS SHEET : 213.16'

MANCO PRESTRESS COMPANY

CONTRACTOR Gilbert of Texas Construction

FED.RD. DIV.NO.	STATE	PROJECT NO.	HWY. NO.
6	TEXAS	NH 92(50)M	83/281

STATE DIST.NO.	COUNTY	CONTROL NO.	SECTION NO.	JOB NO.
21	HIDALGO	39	17	97

COPYRIGHT 1989 BY
STRUCTURAL ENGINEERING ASSOCIATES, INC.
CONSULTING ENGINEERS, SAN ANTONIO, TEXAS

JOB NO.	DRAWN	CHECKED	DATE	SHEET/MARK NO.
92-018	C.A.J.	D.M.P.	8/26/92	IV-110
SEA JOB NO. 92-059H	FABRICATION SHEET			

330020

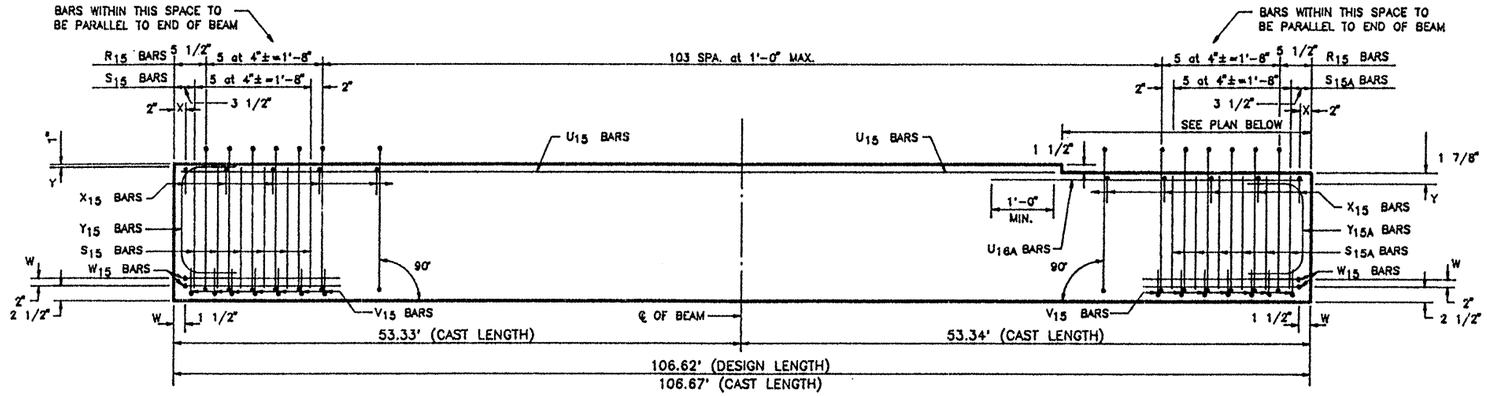

ELEVATION – REINFORCING STEEL

REINFORCING STEEL SCHEDULE				
BAR	QUANTITY PER BEAM	TOTAL QUANTITY	SIZE	LENGTH
R_{15}	114	114	#3	standard
X_{15}	110	110	#3	standard
Y_{15}	2	2	#6	standard
S_{15}	12	12	#7	standard
V_{15}	14	14	#3	standard
W_{15}	4	4	#5	standard
U_{15}	2	2	#5	102'-7"
Y_{15A}	2	2	#6	standard
S_{15A}	12	12	#7	standard
U_{16A}	2	2	#5	6'-6"

TEXAS DEPARTMENT OF TRANSPORTATION
APPROVED
DIVISION OF BRIDGES AND STRUCTURES

SEP 24 1992

APPROVAL OF THIS DRAWING DOES NOT RELIEVE THE CONTRACTOR OF THE RESPONSIBILITY FOR THE CORRECTNESS OF DETAIL.

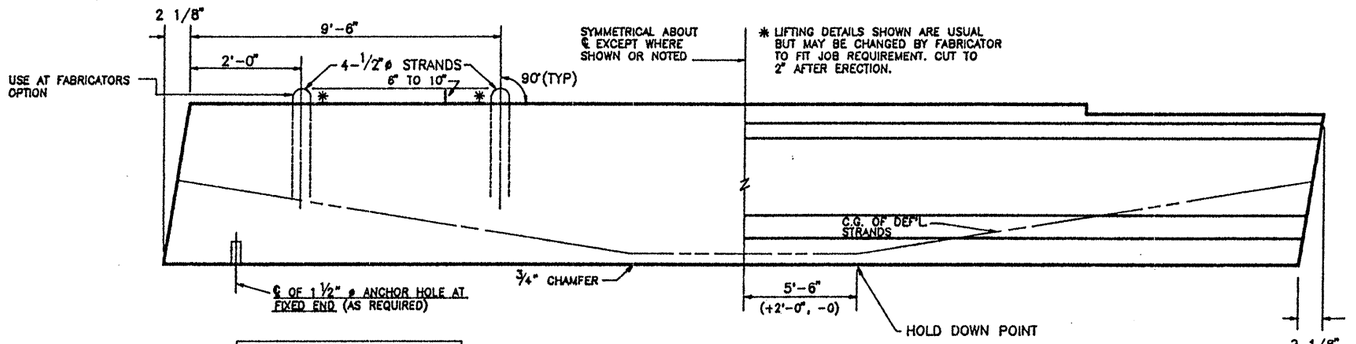

DOUBLE LIFTING LOOP DETAIL
(TYP. FOR BEAMS OVER 75')

BEAM ELEVATION
SEE PLAN VIEW FOR HOLE(S) LOCATION

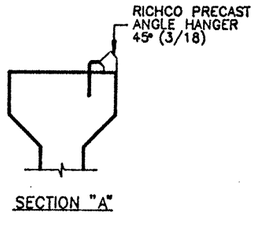

SECTION "A"

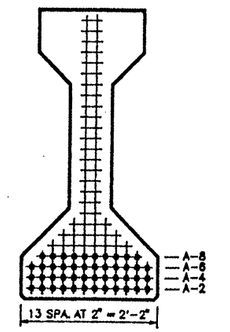

℄ SECTION

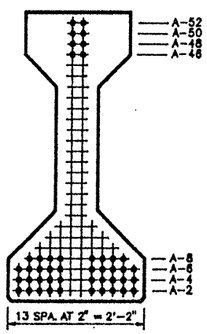

END VIEW

TYPE "IV" BEAM QUANTITY : 1

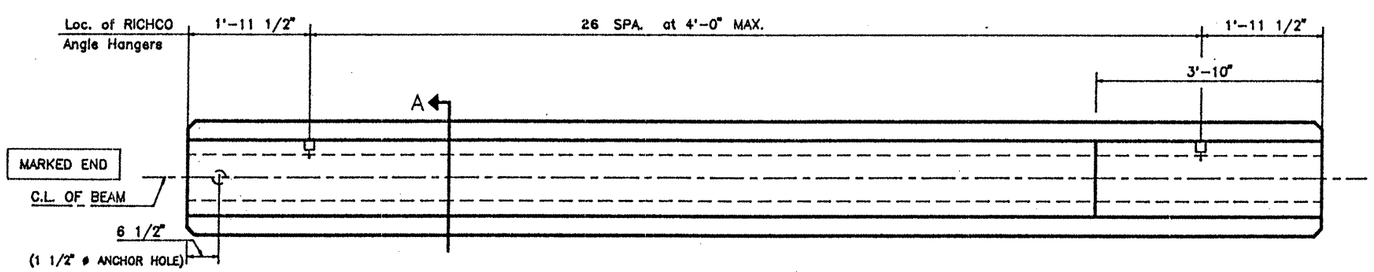

FIXED END

EXPANSION END

PLAN

LO-LAX STRAND PATTERN		
NUMBER OF STRANDS	: 46 ~1/2" ø 270 K @ 31.00 K EACH	
NUMBER OF STRAIGHT STRANDS	: 38	
NUMBER OF DEFLECTED STRANDS	: 8 @ A - 52	
CONCRETE RELEASE STRENGTH	: 5278	PSI
CONCRETE DESIGN STRENGTH	: 6088	PSI
ECCENTRICITY @ ℄	: 19.88"	ECCENTRICITY @ END : 12.23"

TOP FINISH PANELS
SEE STANDARD SHEET S-"IV" FOR TOP FINISH AND OTHER NOTES AND DETAILS.

DESIGN NO. : GPNSLR
TOTAL BEAM LENGTH OF THIS SHEET : 106.62'

MANCO PRESTRESS COMPANY
CONTRACTOR Gilbert of Texas Construction

FED.RD. DIV.NO.	STATE	PROJECT NO.		HWY. NO.
6	TEXAS	NH 92(50)M		83/281
STATE DIST.NO.	COUNTY	CONTROL NO.	SECTION NO.	JOB NO.
21	HIDALGO	39	17	97

COPYRIGHT 1989 BY
STRUCTURAL ENGINEERING ASSOCIATES, INC.
CONSULTING ENGINEERS, SAN ANTONIO, TEXAS

JOB NO.	DRAWN	CHECKED	DATE	SHEET/MARK NO.
92-018	C.A.J.	D.M.P.	8/26/92	IV-111
SEA JOB NO. 92-059H	FABRICATION SHEET			

330020

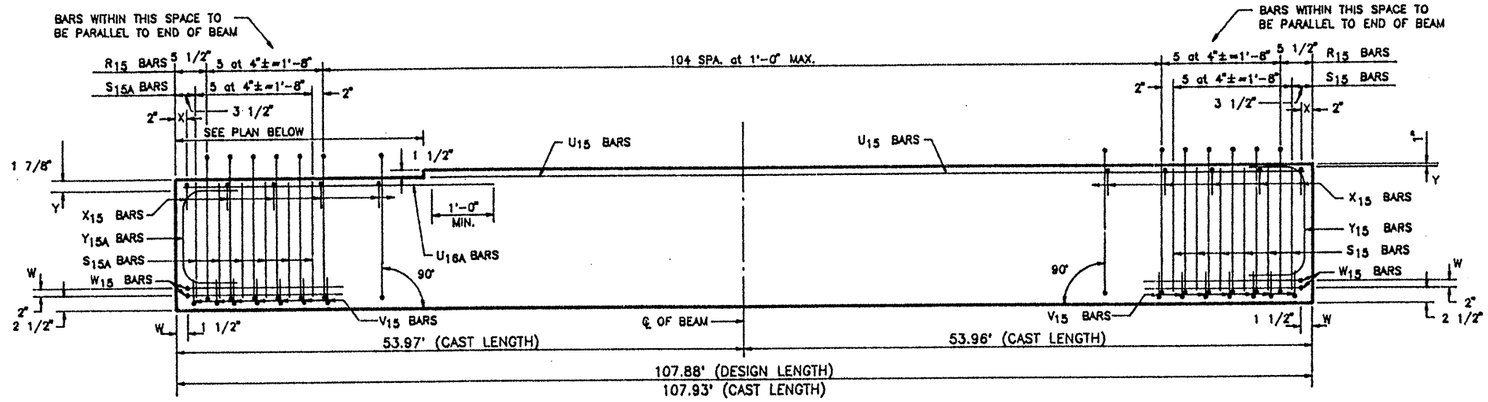

ELEVATION – REINFORCING STEEL

REINFORCING STEEL SCHEDULE				
BAR	QUANTITY PER BEAM	TOTAL QUANTITY	SIZE	LENGTH
R_{15}	115	115	#3	standard
X_{15}	111	111	#3	standard
Y_{15}	2	2	#6	standard
S_{15}	12	12	#7	standard
V_{15}	14	14	#3	standard
W_{15}	4	4	#5	standard
U_{15}	2	2	#5	103'-10"
Y_{15A}	2	2	#6	standard
S_{15A}	12	12	#7	standard
U_{16A}	2	2	#5	6'-6"

TEXAS DEPARTMENT OF TRANSPORTATION
APPROVED
DIVISION OF BRIDGES AND STRUCTURES

SEP 24 1992

APPROVAL OF THIS DRAWING DOES NOT RELIEVE THE CONTRACTOR OF THE RESPONSIBILITY FOR THE CORRECTNESS OF DETAIL.

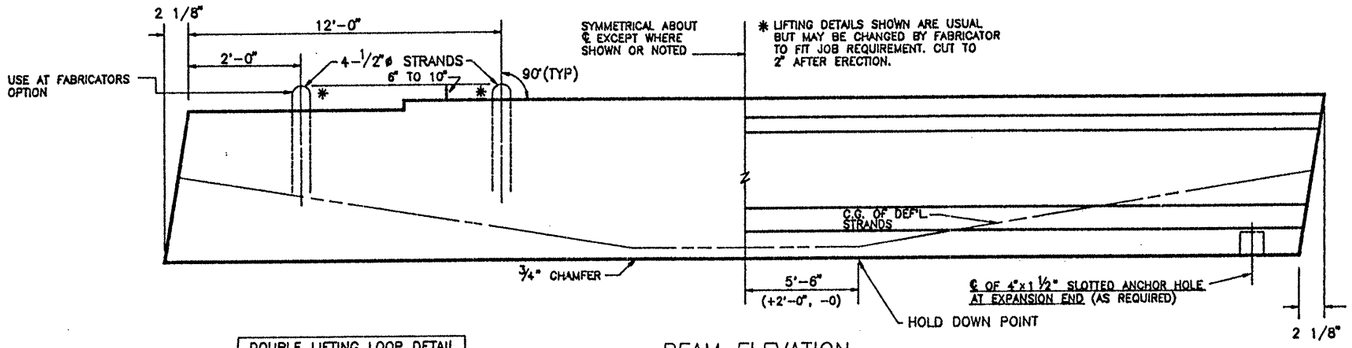

DOUBLE LIFTING LOOP DETAIL
(TYP. FOR BEAMS OVER 75')

BEAM ELEVATION
SEE PLAN VIEW FOR HOLE(S) LOCATION

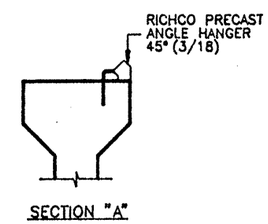

SECTION "A"

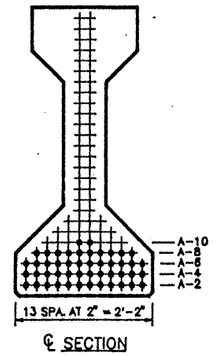

℄ SECTION

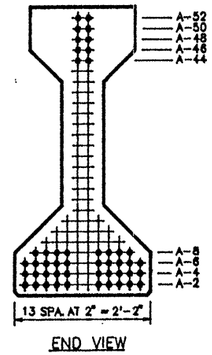

END VIEW

TYPE "IV" BEAM QUANTITY : 1

LO-LAX STRAND PATTERN		
NUMBER OF STRANDS	: 48 ~1/2" ø 270 K @ 31.00 K EACH	
NUMBER OF STRAIGHT STRANDS	: 38	
NUMBER OF DEFLECTED STRANDS	: 10 @ A – 52	
CONCRETE RELEASE STRENGTH	: 5209	PSI
CONCRETE DESIGN STRENGTH	: 6343	PSI
ECCENTRICITY @ ℄	: 19.67"	ECCENTRICITY @ END : 10.92"

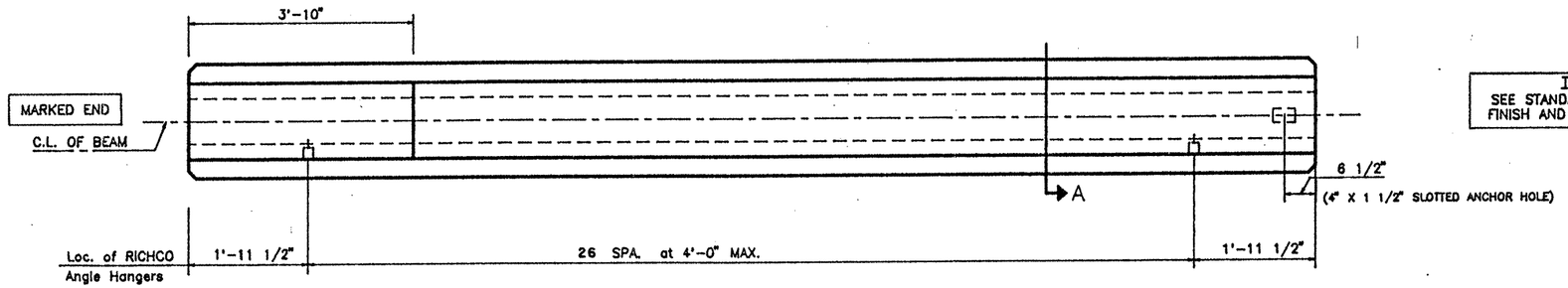

PLAN

TOP FINISH PANELS
SEE STANDARD SHEET S-"IV" FOR TOP FINISH AND OTHER NOTES AND DETAILS.

DESIGN NO. : GPNSLR
TOTAL BEAM LENGTH OF THIS SHEET : 107.88'

MANCO PRESTRESS COMPANY

CONTRACTOR Gilbert of Texas Construction

FED.RD. DIV.NO.	STATE	PROJECT NO.		HWY. NO.
6	TEXAS	NH 92(50)M		83/281
STATE DIST.NO.	COUNTY	CONTROL NO.	SECTION NO.	JOB NO.
21	HIDALGO	39	17	97

COPYRIGHT 1989 BY
STRUCTURAL ENGINEERING ASSOCIATES, INC.
CONSULTING ENGINEERS, SAN ANTONIO, TEXAS

JOB NO.	DRAWN	CHECKED	DATE	SHEET/MARK NO.
92-018	C.A.J.	D.M.P.	8/26/92	IV-112
SEA JOB NO. 92-059H	FABRICATION SHEET			

330020

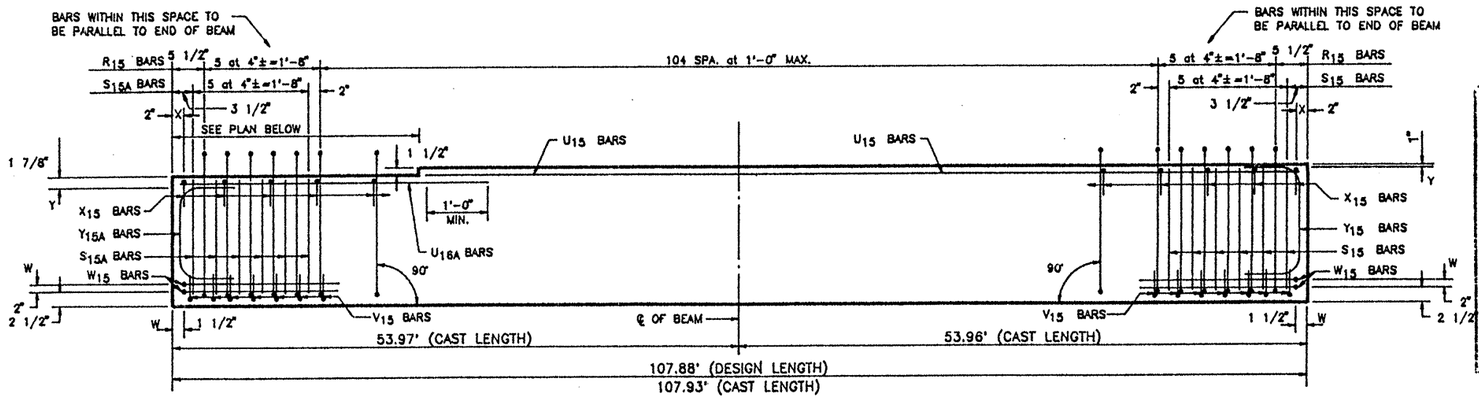

ELEVATION – REINFORCING STEEL

REINFORCING STEEL SCHEDULE				
BAR	QUANTITY PER BEAM	TOTAL QUANTITY	SIZE	LENGTH
R_{15}	115	230	#3	standard
X_{15}	111	222	#3	standard
Y_{15}	2	4	#6	standard
S_{15}	12	24	#7	standard
V_{15}	14	28	#3	standard
W_{15}	4	8	#5	standard
U_{15}	2	4	#5	103'-10"
Y_{15A}	2	4	#6	standard
S_{15A}	12	24	#7	standard
U_{16A}	2	4	#5	6'-6"

TEXAS DEPARTMENT OF TRANSPORTATION
APPROVED
DIVISION OF BRIDGES AND STRUCTURES

SEP 24 1992

APPROVAL OF THIS DRAWING DOES NOT RELIEVE THE CONTRACTOR OF THE RESPONSIBILITY FOR THE CORRECTNESS OF DETAIL.

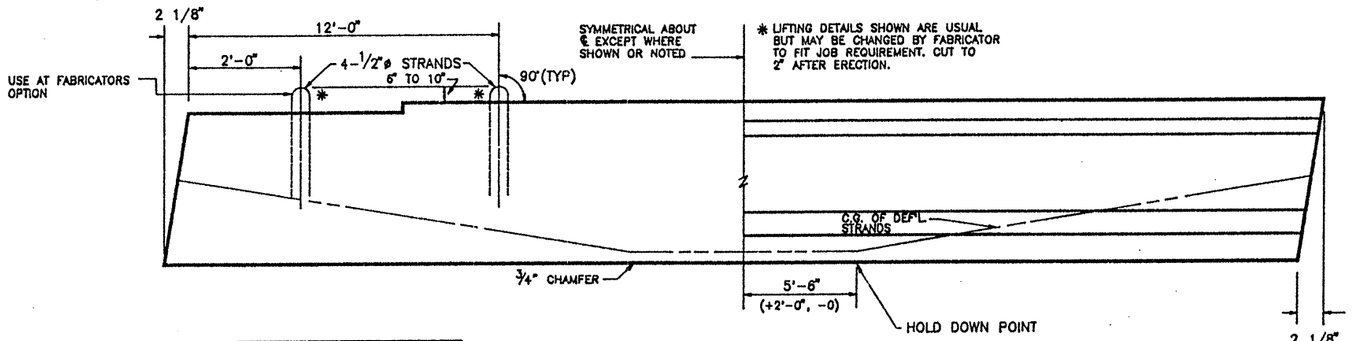

DOUBLE LIFTING LOOP DETAIL
(TYP. FOR BEAMS OVER 75')

BEAM ELEVATION
SEE PLAN VIEW FOR HOLE(S) LOCATION

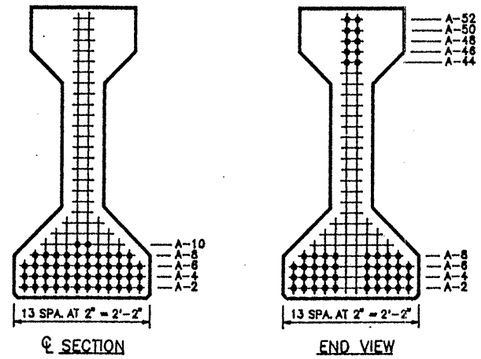

TYPE "IV" BEAM QUANTITY : 2

LO-LAX STRAND PATTERN		
NUMBER OF STRANDS : 48 ~1/2" ø 270 K @ 31.00 K EACH		
NUMBER OF STRAIGHT STRANDS	: 38	
NUMBER OF DEFLECTED STRANDS	: 10 @ A – 52	
CONCRETE RELEASE STRENGTH	: 5209	PSI
CONCRETE DESIGN STRENGTH	: 6343	PSI
ECCENTRICITY @ ℄ : 19.67"	ECCENTRICITY @ END : 10.92"	

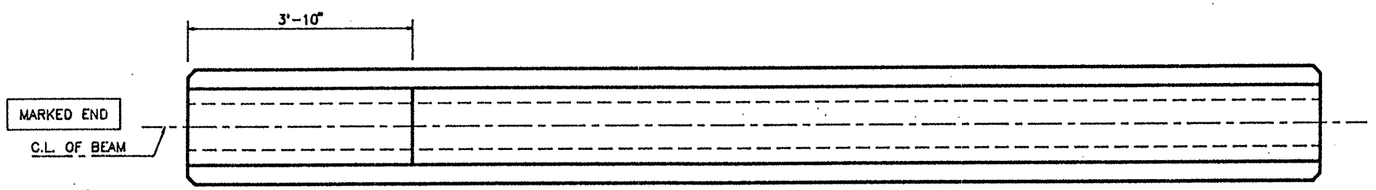

PLAN

TOP FINISH PANELS
SEE STANDARD SHEET S-"IV" FOR TOP FINISH AND OTHER NOTES AND DETAILS.

DESIGN NO. : GPNSLR
TOTAL BEAM LENGTH OF THIS SHEET : 215.76'

MANCO PRESTRESS COMPANY
CONTRACTOR Gilbert of Texas Construction

FED.RD. DIV.NO.	STATE	PROJECT NO.	HWY. NO.
6	TEXAS	NH 92(50)M	83/281

STATE DIST.NO.	COUNTY	CONTROL NO.	SECTION NO.	JOB NO.
21	HIDALGO	39	17	97

COPYRIGHT 1989 BY
STRUCTURAL ENGINEERING ASSOCIATES, INC.
CONSULTING ENGINEERS, SAN ANTONIO, TEXAS

JOB NO.	DRAWN	CHECKED	DATE	SHEET/MARK NO.
92-018	C.A.J.	D.M.P.	8 / 26 / 92	IV-113
SEA JOB NO. 92-059H	FABRICATION SHEET			

330020

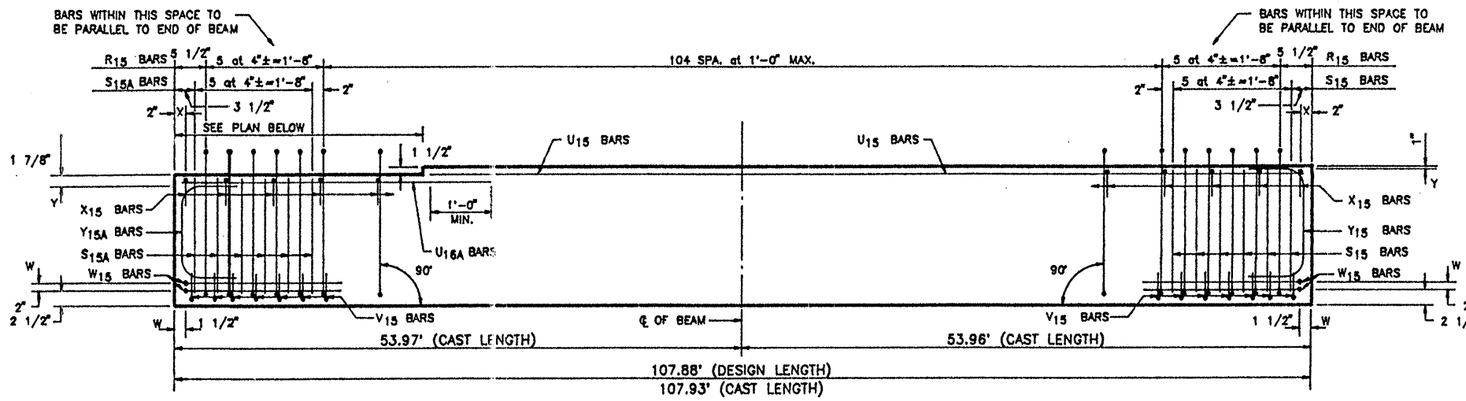

ELEVATION – REINFORCING STEEL

REINFORCING STEEL SCHEDULE				
BAR	QUANTITY PER BEAM	TOTAL QUANTITY	SIZE	LENGTH
R_{15}	115	115	#3	standard
X_{15}	111	111	#3	standard
Y_{15}	2	2	#6	standard
S_{15}	12	12	#7	standard
V_{15}	14	14	#3	standard
W_{15}	4	4	#5	standard
U_{15}	2	2	#5	103'-10"
Y_{15A}	2	2	#6	standard
S_{15A}	12	12	#7	standard
U_{16A}	2	2	#5	6'-6"

TEXAS DEPARTMENT OF TRANSPORTATION
APPROVED
DIVISION OF BRIDGES AND STRUCTURES

SEP 24 1992

APPROVAL OF THIS DRAWING DOES NOT RELIEVE THE CONTRACTOR OF THE RESPONSIBILITY FOR THE CORRECTNESS OF DETAIL.

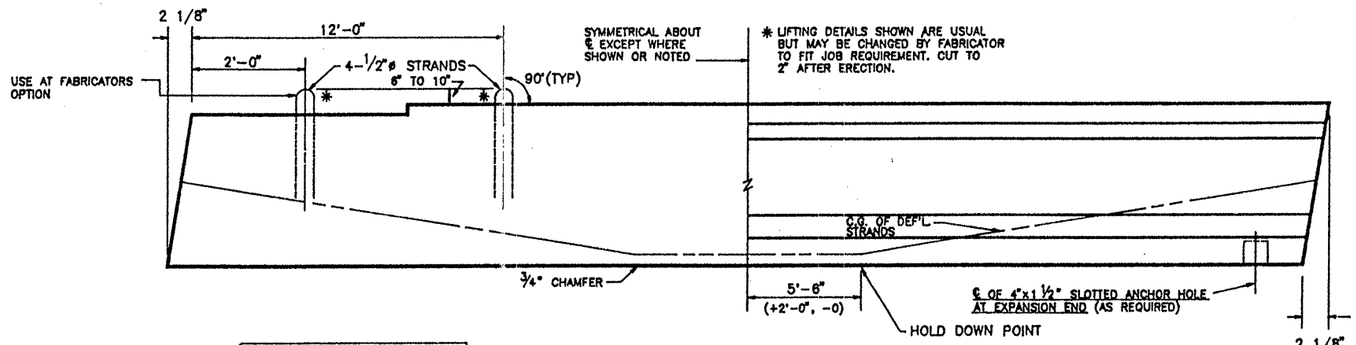

DOUBLE LIFTING LOOP DETAIL (TYP. FOR BEAMS OVER 75')

BEAM ELEVATION
SEE PLAN VIEW FOR HOLE(S) LOCATION

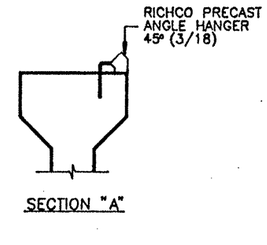

SECTION "A"

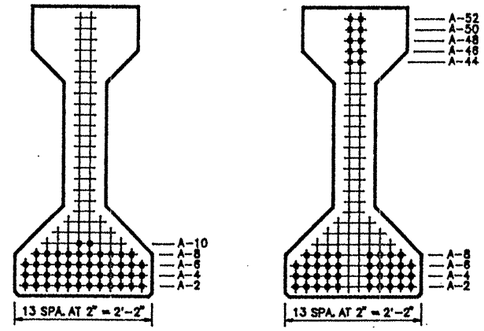

℄ SECTION

END VIEW

TYPE "IV" BEAM QUANTITY : 1

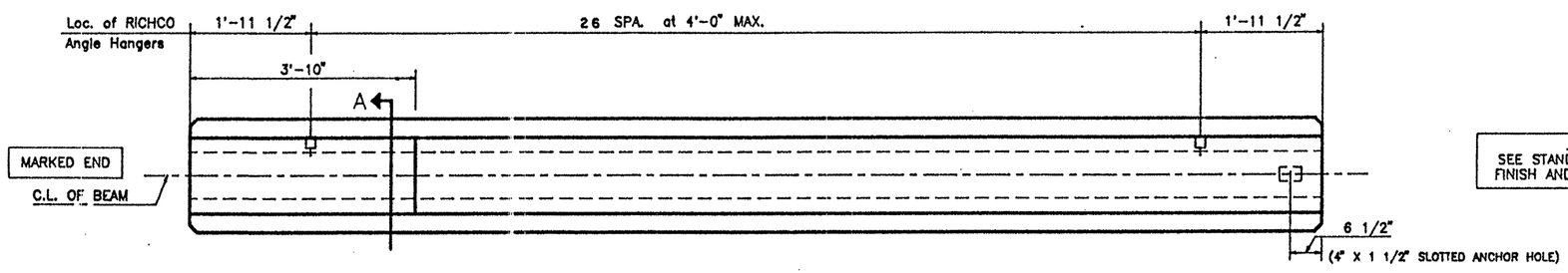

FIXED END

EXPANSION END

PLAN

LO-LAX STRAND PATTERN	
NUMBER OF STRANDS	: 48 ~1/2" ø 270 K ● 31.00 K EACH
NUMBER OF STRAIGHT STRANDS	: 38
NUMBER OF DEFLECTED STRANDS	: 10 ● A – 52
CONCRETE RELEASE STRENGTH	: 5209 PSI
CONCRETE DESIGN STRENGTH	: 6343 PSI
ECCENTRICITY ● ℄	: 19.67" ECCENTRICITY ● END : 10.92"

TOP FINISH PANELS
SEE STANDARD SHEET S-"IV" FOR TOP FINISH AND OTHER NOTES AND DETAILS.

DESIGN NO. : GPNSLR
TOTAL BEAM LENGTH OF THIS SHEET : 107.88'

MANCO PRESTRESS COMPANY
CONTRACTOR Gilbert of Texas Construction

FED.RD. DIV.NO.	STATE	PROJECT NO.			HWY. NO.
6	TEXAS	NH 92(50)M			83/281
STATE DIST.NO.	COUNTY	CONTROL NO.	SECTION NO.	JOB NO.	
21	HIDALGO	39	17	97	

COPYRIGHT 1989 BY
STRUCTURAL ENGINEERING ASSOCIATES, INC.
CONSULTING ENGINEERS, SAN ANTONIO, TEXAS

JOB NO.	DRAWN	CHECKED	DATE	SHEET/MARK NO.
92-018	C.A.J.	D.M.P.	8 / 26 / 92	IV-114
SEA JOB NO. 92-059H	FABRICATION SHEET			

330020

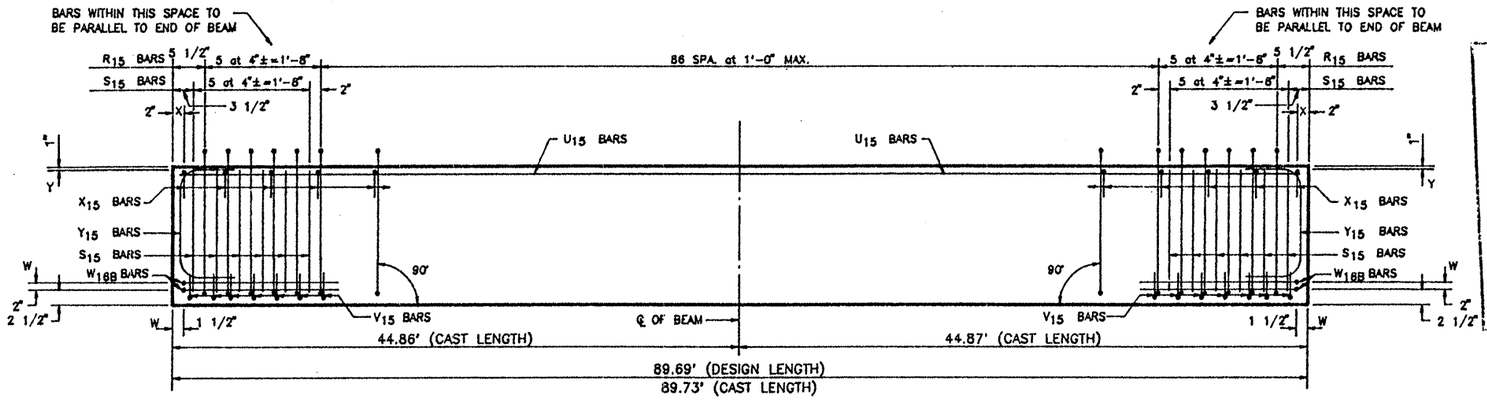

ELEVATION – REINFORCING STEEL

TEXAS DEPARTMENT OF TRANSPORTATION
APPROVED
DIVISION OF BRIDGES AND STRUCTURES

SEP 24 1992

APPROVAL OF THIS DRAWING DOES NOT RELIEVE THE CONTRACTOR OF THE RESPONSIBILITY FOR THE CORRECTNESS OF DETAIL.

REINFORCING STEEL SCHEDULE

BAR	QUANTITY PER BEAM	TOTAL QUANTITY	SIZE	LENGTH
R_{15}	97	97	#3	standard
X_{15}	93	93	#3	standard
Y_{15}	4	4	#6	standard
S_{15}	24	24	#7	standard
V_{15}	14	14	#3	standard
W_{16B}	4	4	#5	standard
U_{15}	2	2	#5	89'-6"

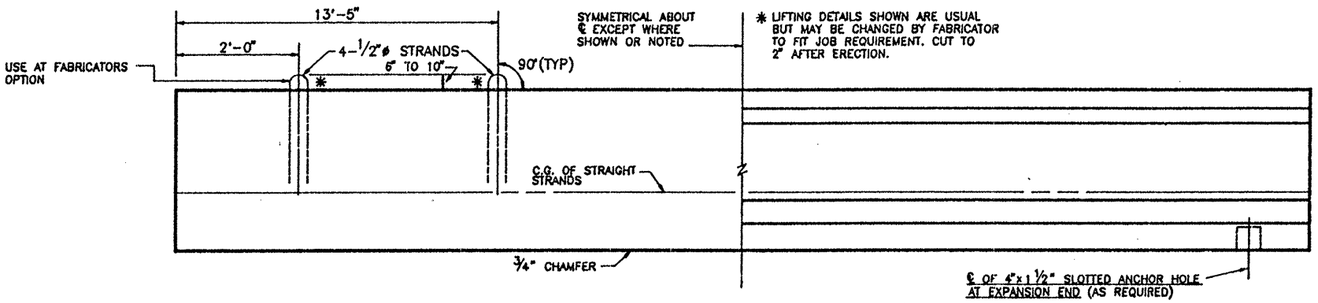

DOUBLE LIFTING LOOP DETAIL
(TYP. FOR BEAMS OVER 75')

BEAM ELEVATION
SEE PLAN VIEW FOR HOLE(S) LOCATION

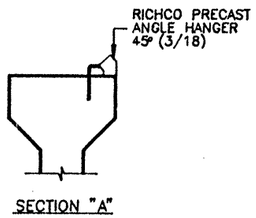

SECTION "A"

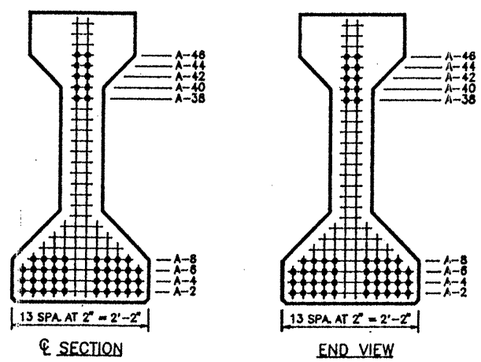

TYPE "IV" BEAM QUANTITY : 1

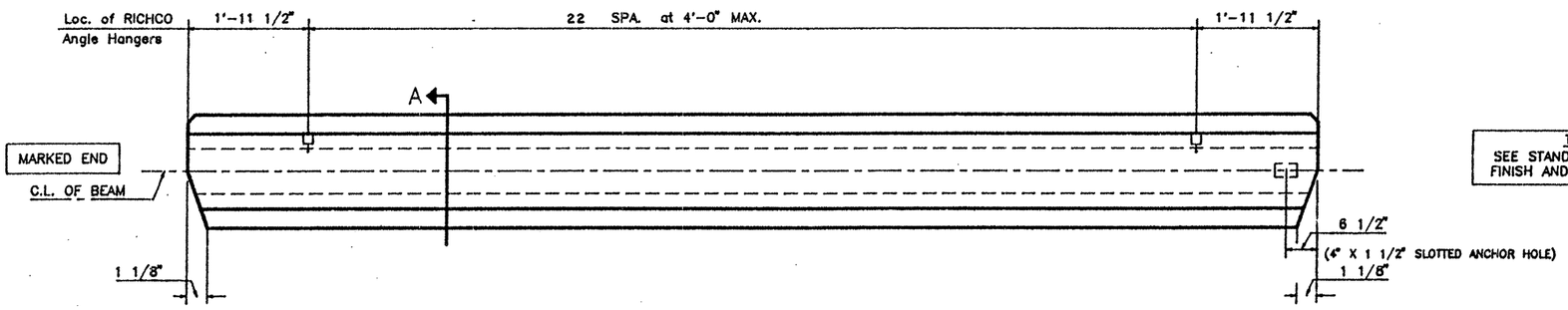

PLAN

TOP FINISH PANELS
SEE STANDARD SHEET S-"IV" FOR TOP FINISH AND OTHER NOTES AND DETAILS.

LO-LAX STRAND PATTERN

NUMBER OF STRANDS	: 48 ~1/2" ø 270 K @ 31.00 K EACH	
NUMBER OF STRAIGHT STRANDS	: 48	
NUMBER OF DEFLECTED STRANDS	: NONE	
CONCRETE RELEASE STRENGTH	: 5600	PSI
CONCRETE DESIGN STRENGTH	: 6040	PSI
ECCENTRICITY @ ℄	: 12.17"	ECCENTRICITY @ END : 12.17"

DESIGN NO. : O.D.# 10
TOTAL BEAM LENGTH OF THIS SHEET : 89.69'

MANCO PRESTRESS COMPANY

CONTRACTOR Gilbert of Texas Construction

FED.RD. DIV.NO.	STATE	PROJECT NO.			HWY. NO.
6	TEXAS	NH 92(50)M			83/281
STATE DIST.NO.	COUNTY		CONTROL NO.	SECTION NO.	JOB NO.
21	HIDALGO		39	17	97

COPYRIGHT 1989 BY
STRUCTURAL ENGINEERING ASSOCIATES, INC.
CONSULTING ENGINEERS, SAN ANTONIO, TEXAS

JOB NO.	DRAWN	CHECKED	DATE	SHEET/MARK NO.
92-018	C.A.J.	D.M.P.	8 /26 /92	IV-115
SEA JOB NO. 92-059H	FABRICATION SHEET			

330020

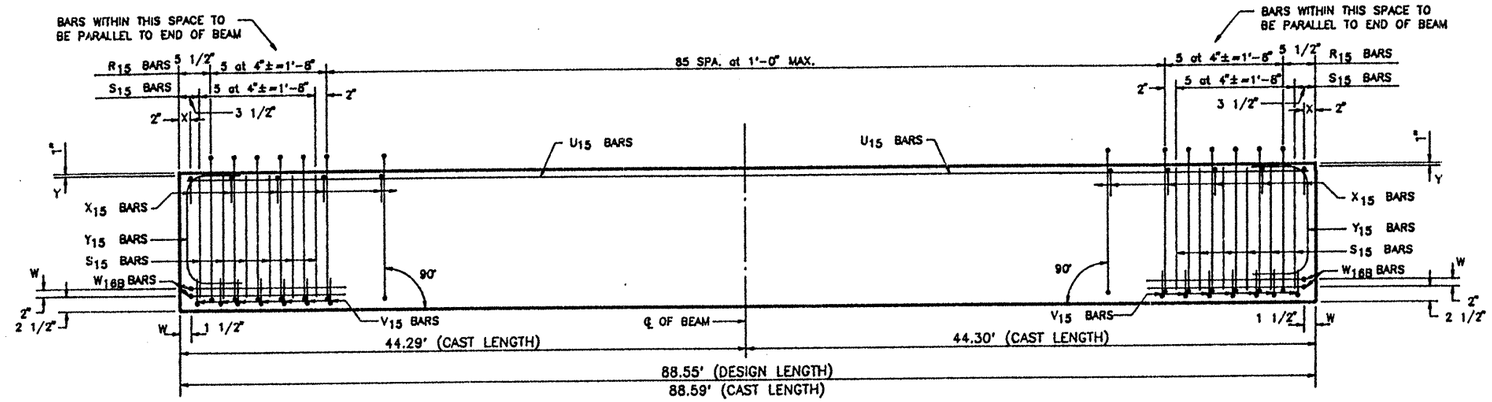

ELEVATION — REINFORCING STEEL

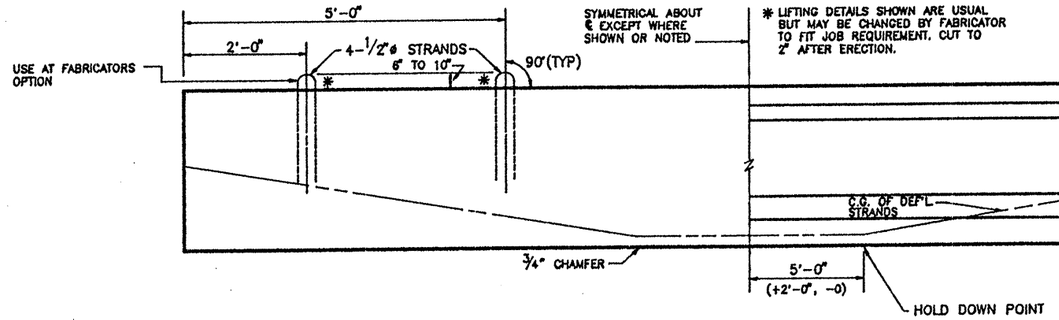

DOUBLE LIFTING LOOP DETAIL
(TYP. FOR BEAMS OVER 75')

BEAM ELEVATION
SEE PLAN VIEW FOR HOLE(S) LOCATION

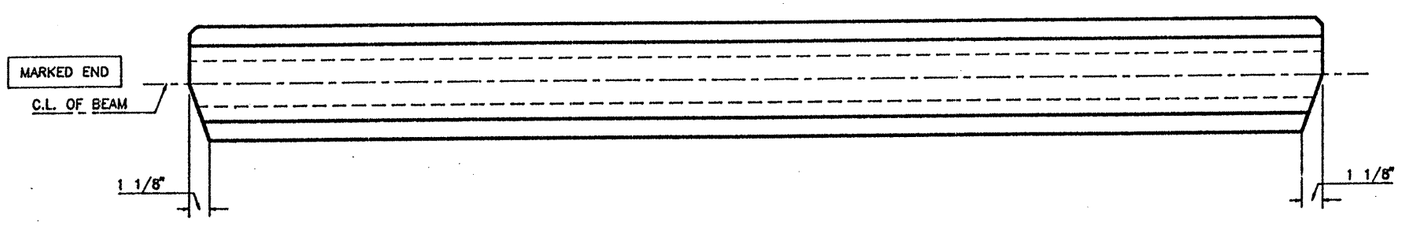

BEAM SKEW = -5 DEG.
FIXED END

BEAM SKEW = 5 DEG.
EXPANSION END

PLAN

TOP FINISH PANELS
SEE STANDARD SHEET S-"IV" FOR TOP FINISH AND OTHER NOTES AND DETAILS.

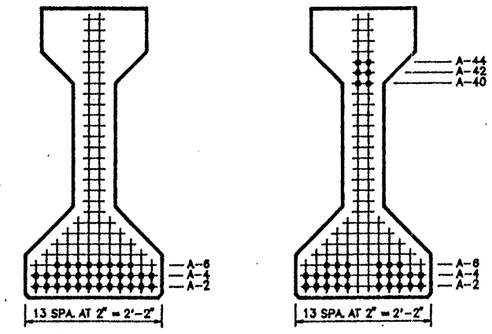

TYPE "IV" BEAM QUANTITY : 1

REINFORCING STEEL SCHEDULE				
BAR	QUANTITY PER BEAM	TOTAL QUANTITY	SIZE	LENGTH
R_{15}	96	96	#3	standard
X_{15}	92	92	#3	standard
Y_{15}	4	4	#6	standard
S_{15}	24	24	#7	standard
V_{15}	14	14	#3	standard
W_{16B}	4	4	#5	standard
U_{15}	2	2	#5	88'-4"

TEXAS DEPARTMENT OF TRANSPORTATION
APPROVED
DIVISION OF BRIDGES AND STRUCTURES
SEP 24 1992
APPROVAL OF THIS DRAWING DOES NOT RELIEVE THE CONTRACTOR OF THE RESPONSIBILITY FOR THE CORRECTNESS OF DETAIL.

LO-LAX STRAND PATTERN		
NUMBER OF STRANDS	: 32 ~1/2" ø 270 K @ 31.00 K EACH	
NUMBER OF STRAIGHT STRANDS	: 26	
NUMBER OF DEFLECTED STRANDS	: 6 @ A - 44	
CONCRETE RELEASE STRENGTH	: 4000	PSI
CONCRETE DESIGN STRENGTH	: 5000	PSI
ECCENTRICITY @ ℄	: 21.00"	ECCENTRICITY @ END : 13.88"

DESIGN NO. : O.D.# 14
TOTAL BEAM LENGTH OF THIS SHEET : 88.55'

MANCO PRESTRESS COMPANY

CONTRACTOR Gilbert of Texas Construction

FED.RD. DIV.NO.	STATE	PROJECT NO.	HWY. NO.
6	TEXAS	NH 92(50)M	83/281

STATE DIST.NO.	COUNTY	CONTROL NO.	SECTION NO.	JOB NO.
21	HIDALGO	39	17	97

COPYRIGHT 1989 BY STRUCTURAL ENGINEERING ASSOCIATES, INC. CONSULTING ENGINEERS, SAN ANTONIO, TEXAS

JOB NO.	DRAWN	CHECKED	DATE	SHEET/MARK NO.
92-018	C.A.J.	D.M.P.	8 / 26 / 92	IV-116
SEA JOB NO. 92-059H	FABRICATION SHEET			

330020

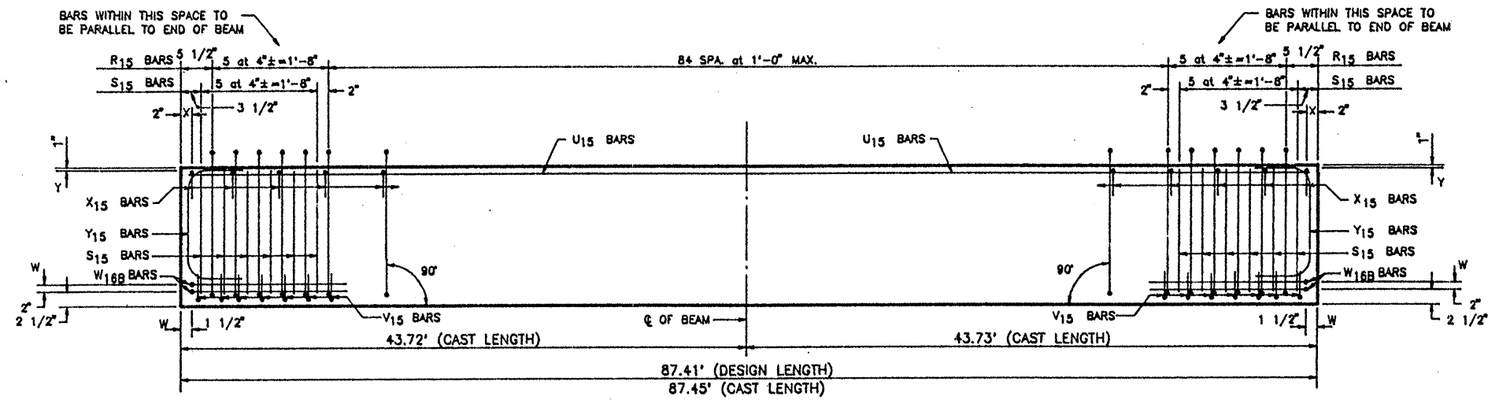

ELEVATION – REINFORCING STEEL

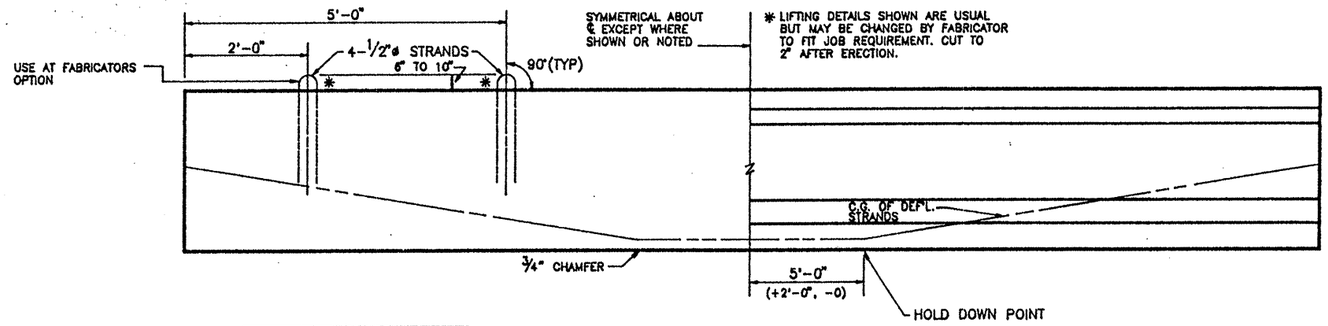

DOUBLE LIFTING LOOP DETAIL
(TYP. FOR BEAMS OVER 75')

BEAM ELEVATION
SEE PLAN VIEW FOR HOLE(S) LOCATION

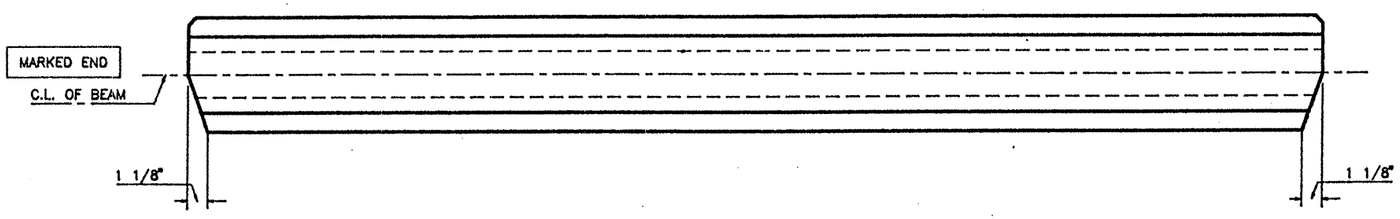

BEAM SKEW = -5 DEG.
FIXED END

BEAM SKEW = 5 DEG.
EXPANSION END

PLAN

TOP FINISH PANELS
SEE STANDARD SHEET S-"IV" FOR TOP FINISH AND OTHER NOTES AND DETAILS.

TEXAS DEPARTMENT OF TRANSPORTATION
APPROVED
DIVISION OF BRIDGES AND STRUCTURES
SEP 24 1992
APPROVAL OF THIS DRAWING DOES NOT RELIEVE THE CONTRACTOR OF THE RESPONSIBILITY FOR THE CORRECTNESS OF DETAIL.

REINFORCING STEEL SCHEDULE

BAR	QUANTITY PER BEAM	TOTAL QUANTITY	SIZE	LENGTH
R_{15}	95	95	#3	standard
X_{15}	91	91	#3	standard
Y_{15}	4	4	#6	standard
S_{15}	24	24	#7	standard
V_{15}	14	14	#3	standard
W_{16B}	4	4	#5	standard
U_{15}	2	2	#5	87'-2"

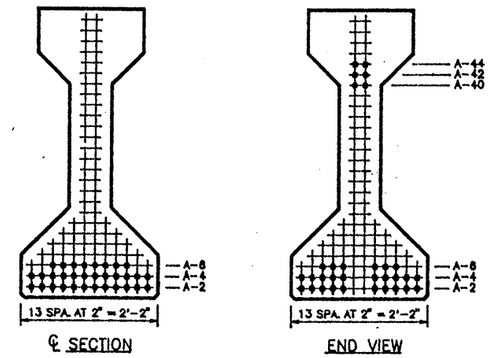

TYPE "IV" BEAM QUANTITY : 1

LO-LAX STRAND PATTERN		
NUMBER OF STRANDS : 32 ~1/2" ø 270 K @ 31.00 K EACH		
NUMBER OF STRAIGHT STRANDS	: 26	
NUMBER OF DEFLECTED STRANDS	: 6 @ A – 44	
CONCRETE RELEASE STRENGTH	: 4000	PSI
CONCRETE DESIGN STRENGTH	: 5000	PSI
ECCENTRICITY @ ℄ : 21.00"	ECCENTRICITY @ END : 13.88"	

DESIGN NO. : O.D.# 14
TOTAL BEAM LENGTH OF THIS SHEET : 87.41'

MANCO PRESTRESS COMPANY
CONTRACTOR Gilbert of Texas Construction

FED.RD. DIV.NO.	STATE	PROJECT NO.	HWY. NO.
6	TEXAS	NH 92(50)M	83/281

STATE DIST.NO.	COUNTY	CONTROL NO.	SECTION NO.	JOB NO.
21	HIDALGO	39	17	97

COPYRIGHT 1989 BY
STRUCTURAL ENGINEERING ASSOCIATES, INC.
CONSULTING ENGINEERS, SAN ANTONIO, TEXAS

JOB NO.	DRAWN	CHECKED	DATE	SHEET/MARK NO.
92-018	C.A.J.	D.M.P.	8 /26 / 92	IV-117
SEA JOB NO. 92-059H	FABRICATION SHEET			

330020

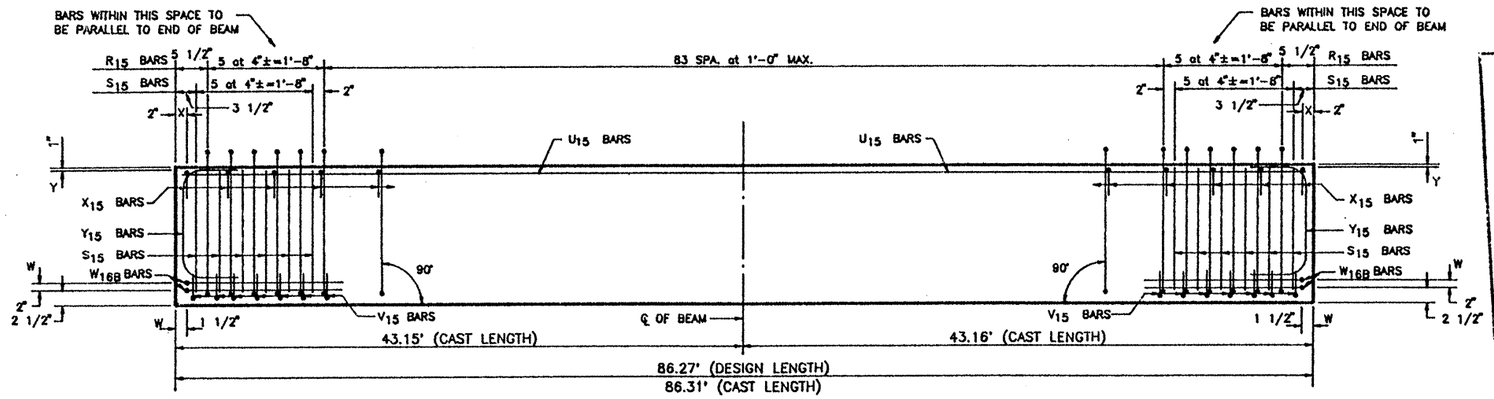

ELEVATION — REINFORCING STEEL

REINFORCING STEEL SCHEDULE				
BAR	QUANTITY PER BEAM	TOTAL QUANTITY	SIZE	LENGTH
R_{15}	94	94	#3	standard
X_{15}	90	90	#3	standard
Y_{15}	4	4	#6	standard
S_{15}	24	24	#7	standard
V_{15}	14	14	#3	standard
W_{16B}	4	4	#5	standard
U_{15}	2	2	#5	86'-1"

TEXAS DEPARTMENT OF TRANSPORTATION
APPROVED
DIVISION OF BRIDGES AND STRUCTURES
SEP 24 1992
APPROVAL OF THIS DRAWING DOES NOT RELIEVE THE CONTRACTOR OF THE RESPONSIBILITY FOR THE CORRECTNESS OF DETAIL.

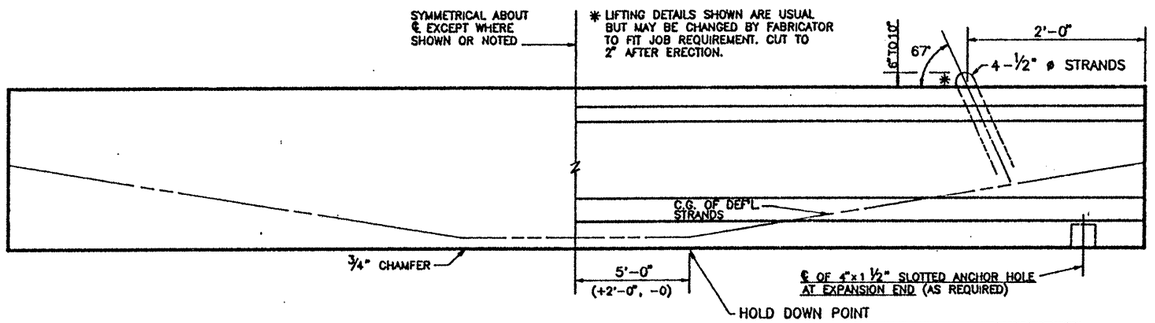

BEAM ELEVATION
SEE PLAN VIEW FOR HOLE(S) LOCATION

SINGLE LIFTING LOOP DETAIL

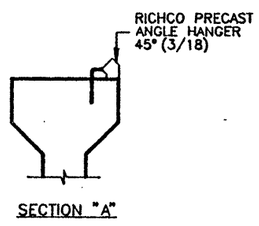

SECTION "A"

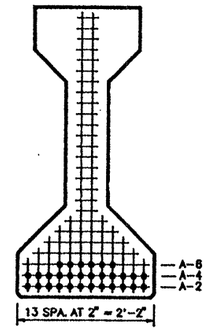

℄ SECTION

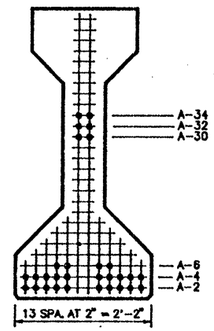

END VIEW

TYPE "IV" BEAM QUANTITY : 1

LO-LAX STRAND PATTERN		
NUMBER OF STRANDS : 30 ~1/2" ø 270 K @ 31.00 K EACH		
NUMBER OF STRAIGHT STRANDS	:	24
NUMBER OF DEFLECTED STRANDS	:	6 @ A - 34
CONCRETE RELEASE STRENGTH	:	4000 PSI
CONCRETE DESIGN STRENGTH	:	5000 PSI
ECCENTRICITY @ ℄ : 21.15"	ECCENTRICITY @ END :	15.55"

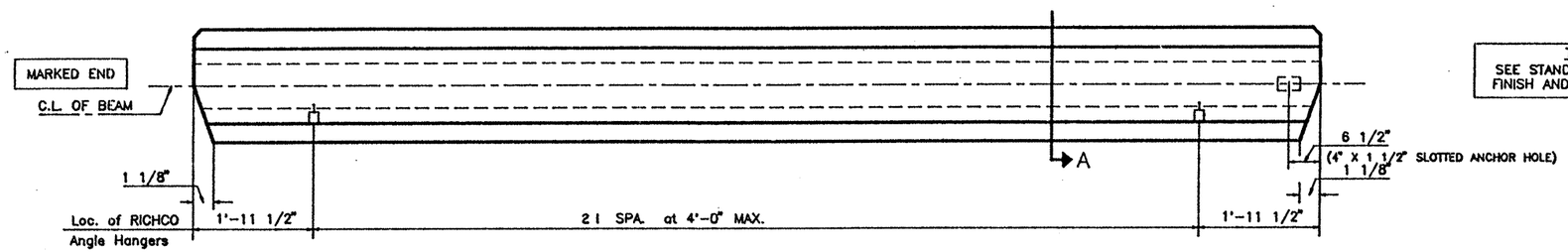

PLAN

TOP FINISH PANELS
SEE STANDARD SHEET S-"IV" FOR TOP FINISH AND OTHER NOTES AND DETAILS.

DESIGN NO. : O.D.# 16
TOTAL BEAM LENGTH OF THIS SHEET : 86.27'

MANCO PRESTRESS COMPANY					
CONTRACTOR Gilbert of Texas Construction					
FED.RD. DIV.NO.	STATE	PROJECT NO.			HWY. NO.
6	TEXAS	NH 92(50)M			83/281
STATE DIST.NO.	COUNTY		CONTROL NO.	SECTION NO.	JOB NO.
21	HIDALGO		39	17	97

COPYRIGHT 1989 BY
STRUCTURAL ENGINEERING ASSOCIATES, INC.
CONSULTING ENGINEERS, SAN ANTONIO, TEXAS

JOB NO. 92-018	DRAWN C.A.J.	CHECKED D.M.P.	DATE 8 / 26 / 92	SHEET/MARK NO. IV-118
SEA JOB NO. 92-059H	FABRICATION SHEET			

330020

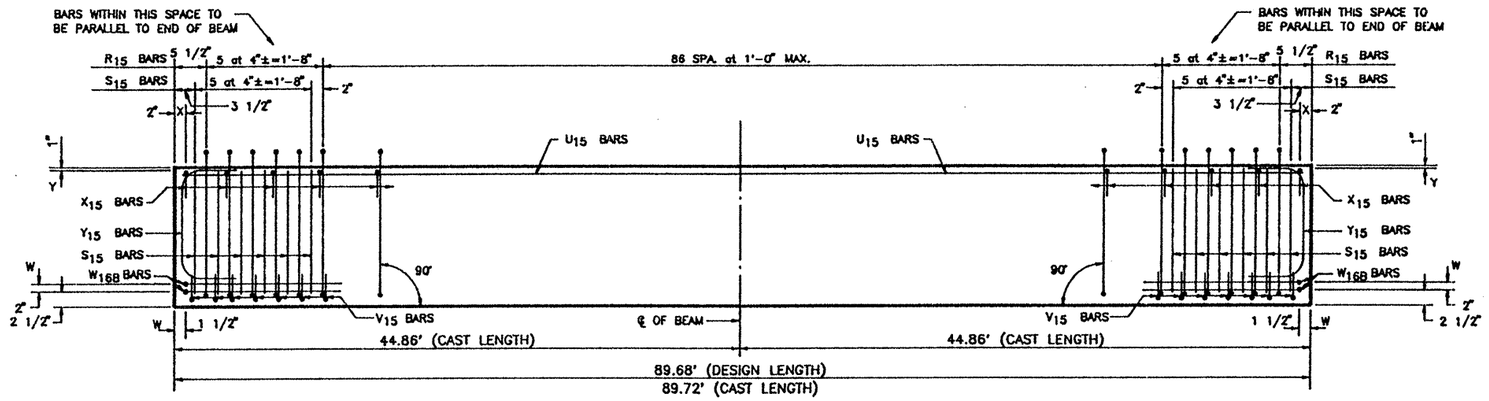

ELEVATION – REINFORCING STEEL

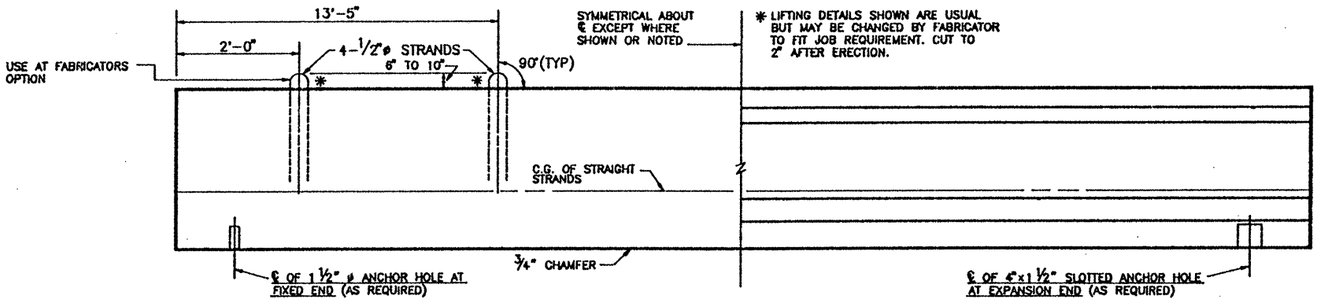

DOUBLE LIFTING LOOP DETAIL
(TYP. FOR BEAMS OVER 75')

BEAM ELEVATION
SEE PLAN VIEW FOR HOLE(S) LOCATION

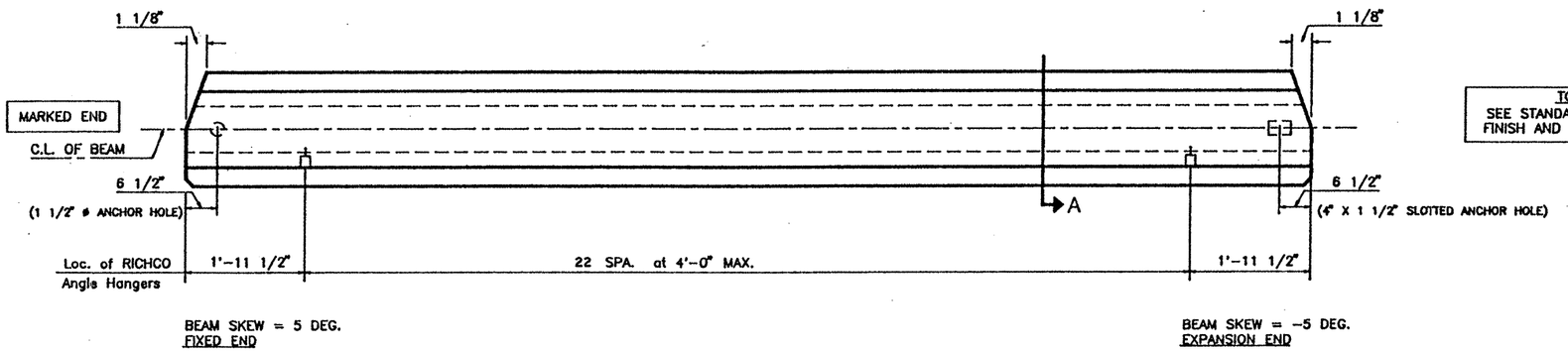

PLAN

TOP FINISH PANELS
SEE STANDARD SHEET S-"IV" FOR TOP FINISH AND OTHER NOTES AND DETAILS.

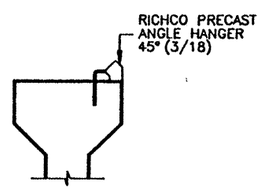

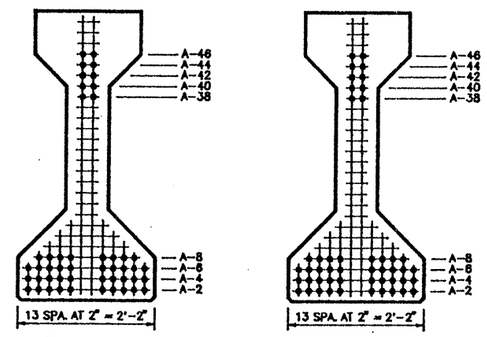

TYPE "IV" BEAM QUANTITY : 1

REINFORCING STEEL SCHEDULE

BAR	QUANTITY PER BEAM	TOTAL QUANTITY	SIZE	LENGTH
R_{15}	97	97	#3	standard
X_{15}	93	93	#3	standard
Y_{15}	4	4	#6	standard
S_{15}	24	24	#7	standard
V_{15}	14	14	#3	standard
W_{16B}	4	4	#5	standard
U_{15}	2	2	#5	89'-6"

TEXAS DEPARTMENT OF TRANSPORTATION
APPROVED
DIVISION OF BRIDGES AND STRUCTURES
SEP 24 1992
APPROVAL OF THIS DRAWING DOES NOT RELIEVE THE CONTRACTOR OF THE RESPONSIBILITY FOR THE CORRECTNESS OF DETAIL.

LO-LAX STRAND PATTERN		
NUMBER OF STRANDS : 48 ~1/2" ø 270 K @ 31.00 K EACH		
NUMBER OF STRAIGHT STRANDS	: 48	
NUMBER OF DEFLECTED STRANDS	: NONE	
CONCRETE RELEASE STRENGTH	: 5600	PSI
CONCRETE DESIGN STRENGTH	: 6040	PSI
ECCENTRICITY @ ℄ : 12.17"	ECCENTRICITY @ END : 12.17"	

DESIGN NO. : O.D.# 10
TOTAL BEAM LENGTH OF THIS SHEET : 89.68'

MANCO PRESTRESS COMPANY
CONTRACTOR Gilbert of Texas Construction

FED.RD. DIV.NO.	STATE	PROJECT NO.	HWY. NO.
6	TEXAS	NH 92(50)M	83/281

STATE DIST.NO.	COUNTY	CONTROL NO.	SECTION NO.	JOB NO.
21	HIDALGO	39	17	97

COPYRIGHT 1989 BY
STRUCTURAL ENGINEERING ASSOCIATES, INC.
CONSULTING ENGINEERS, SAN ANTONIO, TEXAS

JOB NO.	DRAWN	CHECKED	DATE	SHEET/MARK NO.
92-018	C.A.J.	D.M.P.	8 /26 /92	IV-119
SEA JOB NO. 92-059H	FABRICATION SHEET			

330020

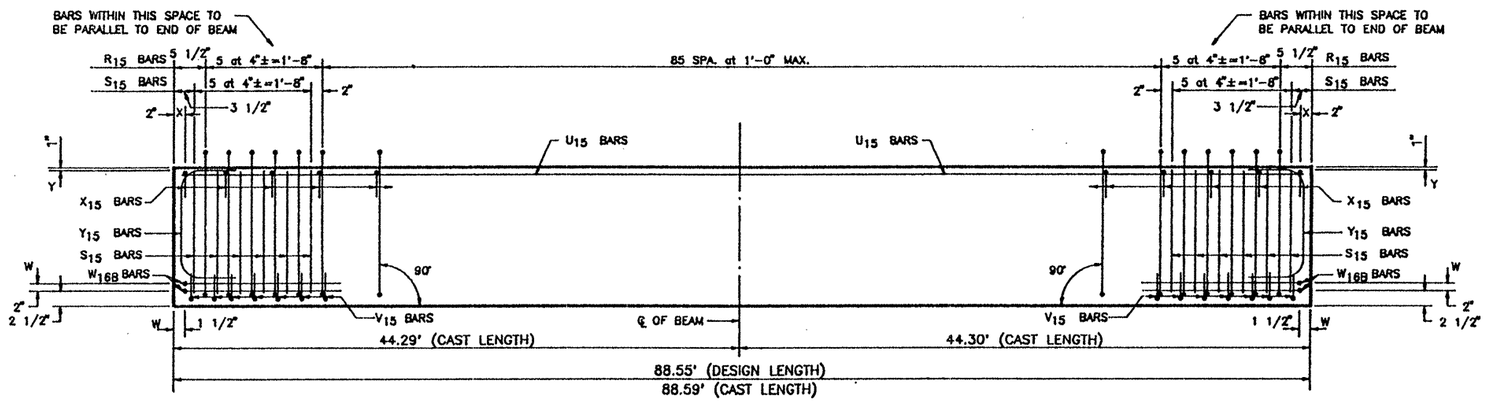

ELEVATION — REINFORCING STEEL

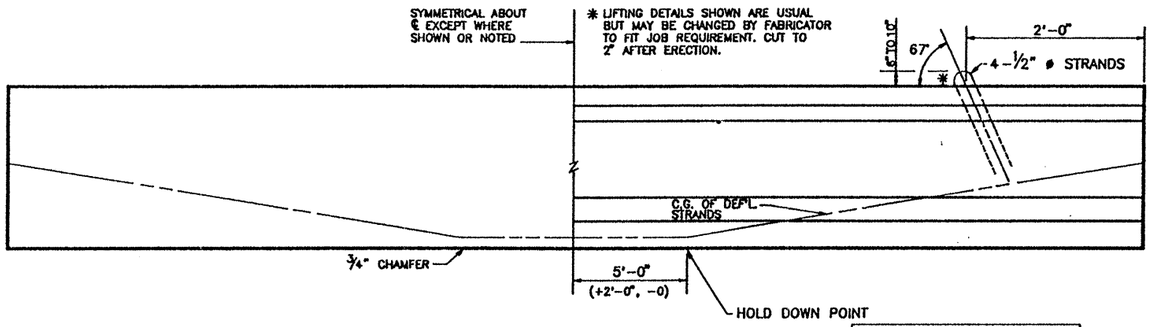

BEAM ELEVATION
SEE PLAN VIEW FOR HOLE(S) LOCATION

SINGLE LIFTING LOOP DETAIL

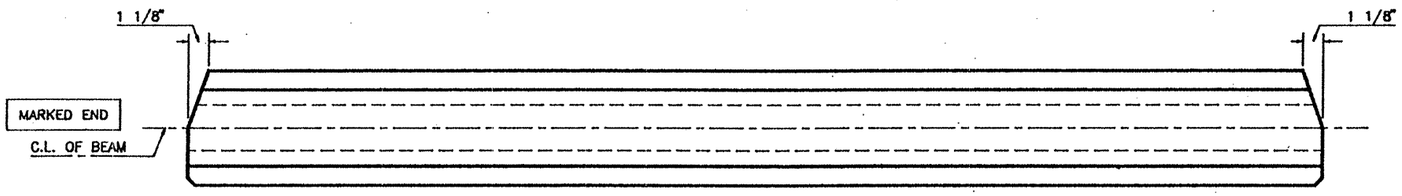

BEAM SKEW = 5 DEG.
FIXED END

BEAM SKEW = -5 DEG.
EXPANSION END

PLAN

TOP FINISH PANELS
SEE STANDARD SHEET S-"IV" FOR TOP FINISH AND OTHER NOTES AND DETAILS.

TEXAS DEPARTMENT OF TRANSPORTATION
APPROVED
DIVISION OF BRIDGES AND STRUCTURES

SEP 24 1992

APPROVAL OF THIS DRAWING DOES NOT RELIEVE THE CONTRACTOR OF THE RESPONSIBILITY FOR THE CORRECTNESS OF DETAIL.

REINFORCING STEEL SCHEDULE

BAR	QUANTITY PER BEAM	TOTAL QUANTITY	SIZE	LENGTH
R_{15}	96	96	#3	standard
X_{15}	92	92	#3	standard
Y_{15}	4	4	#6	standard
S_{15}	24	24	#7	standard
V_{15}	14	14	#3	standard
W_{16B}	4	4	#5	standard
U_{15}	2	2	#5	88'-4"

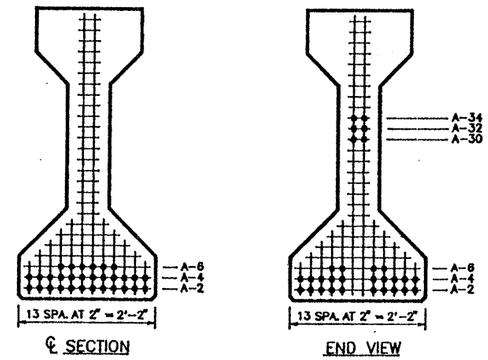

TYPE "IV" BEAM QUANTITY : 1

LO-LAX STRAND PATTERN		
NUMBER OF STRANDS	:	30 ~1/2" ø 270 K @ 31.00 K EACH
NUMBER OF STRAIGHT STRANDS	:	24
NUMBER OF DEFLECTED STRANDS	:	6 @ A - 34
CONCRETE RELEASE STRENGTH	:	4000 PSI
CONCRETE DESIGN STRENGTH	:	5000 PSI
ECCENTRICITY @ ℄	:	21.15" ECCENTRICITY @ END : 15.55"

DESIGN NO. : GPNSLR
TOTAL BEAM LENGTH OF THIS SHEET : 88.55'

MANCO PRESTRESS COMPANY

CONTRACTOR Gilbert of Texas Construction

FED.RD. DIV.NO.	STATE	PROJECT NO.			HWY. NO.
6	TEXAS	NH 92(50)M			83/281
STATE DIST.NO.	COUNTY		CONTROL NO.	SECTION NO.	JOB NO.
21	HIDALGO		39	17	97

COPYRIGHT 1989 BY
STRUCTURAL ENGINEERING ASSOCIATES, INC.
CONSULTING ENGINEERS, SAN ANTONIO, TEXAS

JOB NO.	DRAWN	CHECKED	DATE	SHEET/MARK NO.
92-018	C.A.J.	D.M.P.	8 / 26 /92	IV-120
SEA JOB NO. 92-059H	FABRICATION SHEET			

330020

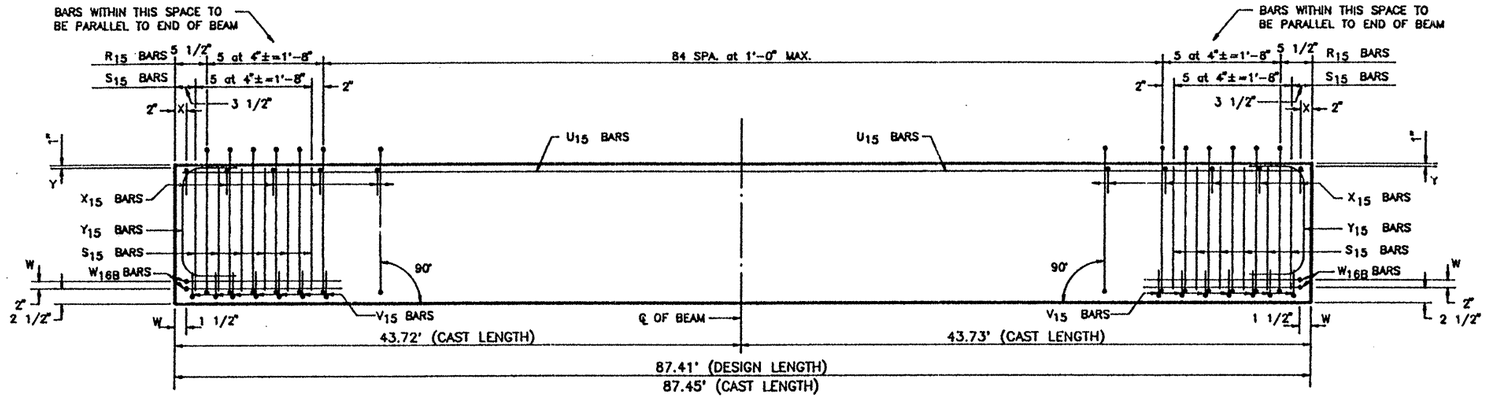

ELEVATION – REINFORCING STEEL

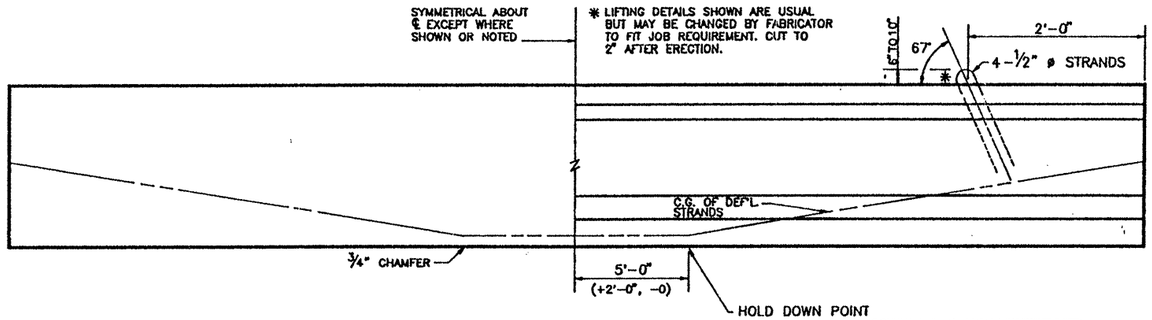

BEAM ELEVATION
SEE PLAN VIEW FOR HOLE(S) LOCATION

SINGLE LIFTING LOOP DETAIL

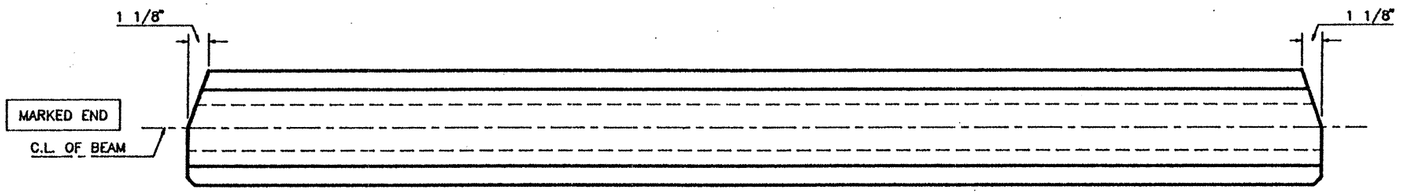

BEAM SKEW = 5 DEG.
FIXED END

BEAM SKEW = -5 DEG.
EXPANSION END

PLAN

TOP FINISH PANELS
SEE STANDARD SHEET S-"IV" FOR TOP FINISH AND OTHER NOTES AND DETAILS.

TEXAS DEPARTMENT OF TRANSPORTATION
APPROVED
DIVISION OF BRIDGES AND STRUCTURES

SEP 24 1992

APPROVAL OF THIS DRAWING DOES NOT RELIEVE THE CONTRACTOR OF THE RESPONSIBILITY FOR THE CORRECTNESS OF DETAIL.

REINFORCING STEEL SCHEDULE

BAR	QUANTITY PER BEAM	TOTAL QUANTITY	SIZE	LENGTH
R_{15}	95	95	#3	standard
X_{15}	91	91	#3	standard
Y_{15}	4	4	#6	standard
S_{15}	24	24	#7	standard
V_{15}	14	14	#3	standard
W_{16B}	4	4	#5	standard
U_{15}	2	2	#5	87'-2"

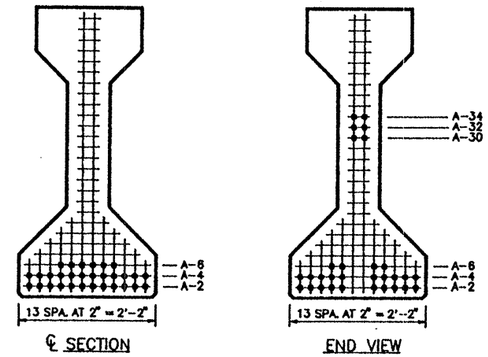

TYPE "IV" BEAM QUANTITY : 1

LO-LAX STRAND PATTERN		
NUMBER OF STRANDS : 30 ~1/2" ø 270 K @ 31.00 K EACH		
NUMBER OF STRAIGHT STRANDS	: 24	
NUMBER OF DEFLECTED STRANDS	: 6 @ A - 34	
CONCRETE RELEASE STRENGTH	: 4000	PSI
CONCRETE DESIGN STRENGTH	: 5000	PSI
ECCENTRICITY @ ℄ : 21.15"	ECCENTRICITY @ END : 15.55"	

DESIGN NO. : GPNSLR
TOTAL BEAM LENGTH OF THIS SHEET : 87.41'

MANCO PRESTRESS COMPANY

CONTRACTOR Gilbert of Texas Construction

FED.RD. DIV.NO.	STATE	PROJECT NO.		HWY. NO.
6	TEXAS	NH 92(50)M		83/281
STATE DIST.NO.	COUNTY	CONTROL NO.	SECTION NO.	JOB NO.
21	HIDALGO	39	17	97

COPYRIGHT 1989 BY STRUCTURAL ENGINEERING ASSOCIATES, INC. CONSULTING ENGINEERS, SAN ANTONIO, TEXAS

JOB NO.	DRAWN	CHECKED	DATE	SHEET/MARK NO.
92-018	C.A.J.	D.M.P.	8 / 26 /92	IV-121
SEA JOB NO. 92-059H	FABRICATION SHEET			

330020

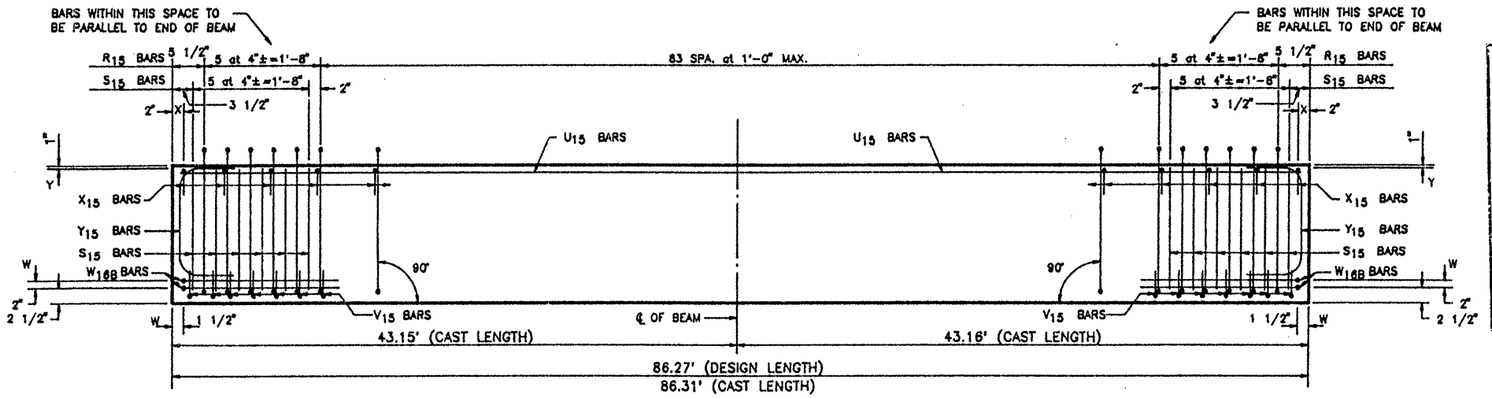

ELEVATION – REINFORCING STEEL

REINFORCING STEEL SCHEDULE				
BAR	QUANTITY PER BEAM	TOTAL QUANTITY	SIZE	LENGTH
R_{15}	94	94	#3	standard
X_{15}	90	90	#3	standard
Y_{15}	4	4	#6	standard
S_{15}	24	24	#7	standard
V_{15}	14	14	#3	standard
W_{16B}	4	4	#5	standard
U_{15}	2	2	#5	86'-1"

TEXAS DEPARTMENT OF TRANSPORTATION
APPROVED
DIVISION OF BRIDGES AND STRUCTURES
SEP 24 1992
APPROVAL OF THIS DRAWING DOES NOT RELIEVE THE CONTRACTOR OF THE RESPONSIBILITY FOR THE CORRECTNESS OF DETAIL.

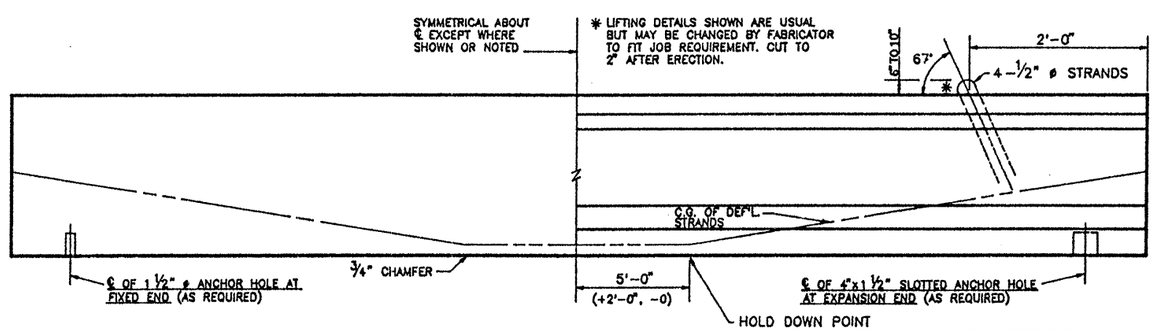

BEAM ELEVATION
SEE PLAN VIEW FOR HOLE(S) LOCATION

SINGLE LIFTING LOOP DETAIL

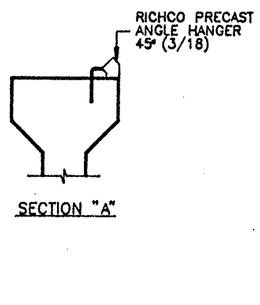

SECTION "A"

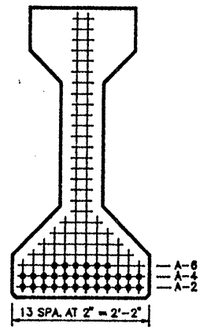

℄ SECTION

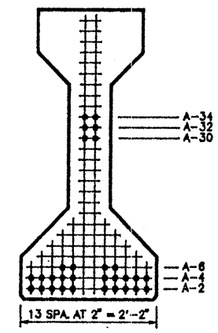

END VIEW

TYPE "IV" BEAM QUANTITY : 1

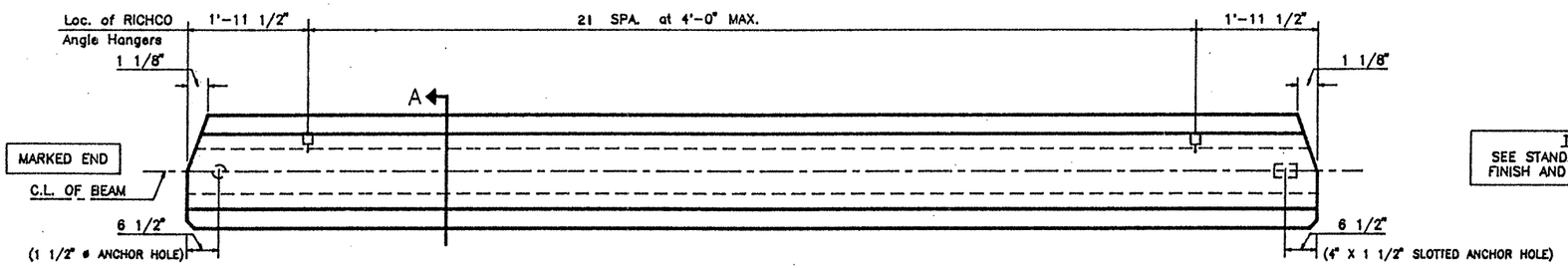

BEAM SKEW = 5 DEG.
FIXED END

BEAM SKEW = -5 DEG.
EXPANSION END

PLAN

TOP FINISH PANELS
SEE STANDARD SHEET S-"IV" FOR TOP FINISH AND OTHER NOTES AND DETAILS.

LO-LAX STRAND PATTERN	
NUMBER OF STRANDS	: 30 ~1/2" ø 270 K @ 31.00 K EACH
NUMBER OF STRAIGHT STRANDS	: 24
NUMBER OF DEFLECTED STRANDS	: 6 @ A – 34
CONCRETE RELEASE STRENGTH	: 4000 PSI
CONCRETE DESIGN STRENGTH	: 5000 PSI
ECCENTRICITY @ ℄	: 21.15" ECCENTRICITY @ END : 15.55"

DESIGN NO. : O.D.# 16
TOTAL BEAM LENGTH OF THIS SHEET : 86.27'

MANCO PRESTRESS COMPANY

CONTRACTOR Gilbert of Texas Construction

FED.RD. DIV.NO.	STATE	PROJECT NO.			HWY. NO.
6	TEXAS	NH 92(50)M			83/281
STATE DIST.NO.	COUNTY		CONTROL NO.	SECTION NO.	JOB NO.
21	HIDALGO		39	17	97

COPYRIGHT 1989 BY STRUCTURAL ENGINEERING ASSOCIATES, INC. CONSULTING ENGINEERS, SAN ANTONIO, TEXAS

JOB NO.	DRAWN	CHECKED	DATE	SHEET/MARK NO.
92-018	C.A.J.	D.M.P.	8 /26/ 92	IV-122
SEA JOB NO. 92-059H	FABRICATION SHEET			

330020

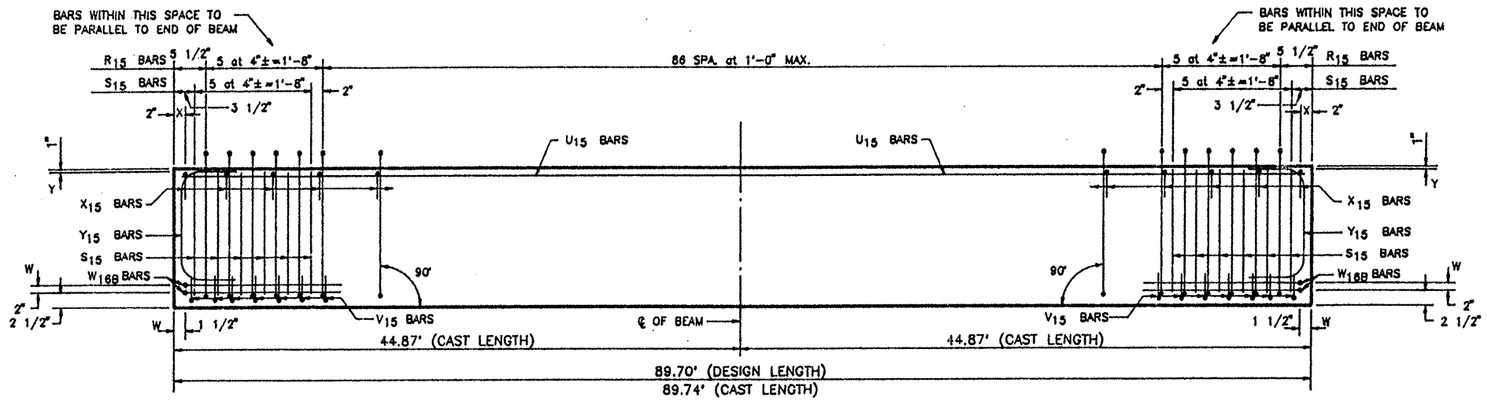

ELEVATION – REINFORCING STEEL

REINFORCING STEEL SCHEDULE				
BAR	QUANTITY PER BEAM	TOTAL QUANTITY	SIZE	LENGTH
R_{15}	97	97	#3	standard
X_{15}	93	93	#3	standard
Y_{15}	4	4	#6	standard
S_{15}	24	24	#7	standard
V_{15}	14	14	#3	standard
W_{16B}	4	4	#5	standard
U_{15}	2	2	#5	89'-6"

TEXAS DEPARTMENT OF TRANSPORTATION
APPROVED
DIVISION OF BRIDGES AND STRUCTURES
SEP 24 1992
APPROVAL OF THIS DRAWING DOES NOT RELIEVE THE CONTRACTOR OF THE RESPONSIBILITY FOR THE CORRECTNESS OF DETAIL.

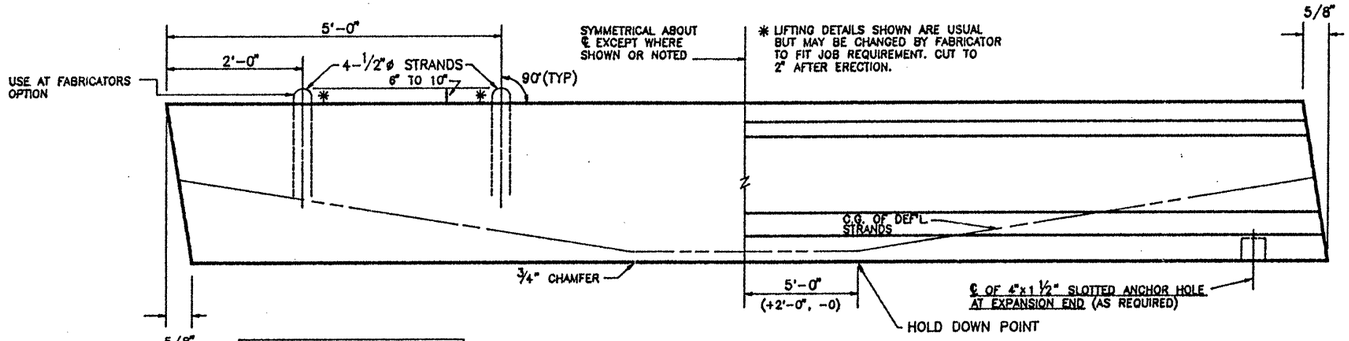

DOUBLE LIFTING LOOP DETAIL
(TYP. FOR BEAMS OVER 75')

BEAM ELEVATION
SEE PLAN VIEW FOR HOLE(S) LOCATION

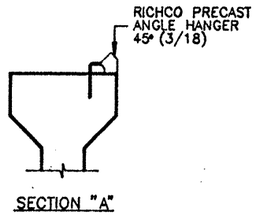

SECTION "A"

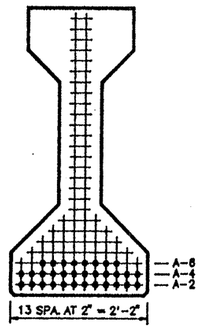

℄ SECTION

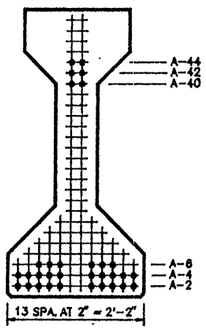

END VIEW

TYPE "IV" BEAM QUANTITY : 1

LO-LAX STRAND PATTERN		
NUMBER OF STRANDS	: 32 ~1/2" ø 270 K @ 31.00 K EACH	
NUMBER OF STRAIGHT STRANDS	: 26	
NUMBER OF DEFLECTED STRANDS	: 6 @ A – 44	
CONCRETE RELEASE STRENGTH	: 4000	PSI
CONCRETE DESIGN STRENGTH	: 5000	PSI
ECCENTRICITY @ ℄	: 21.00"	ECCENTRICITY @ END : 13.88"

DESIGN NO. : GPNSLR
TOTAL BEAM LENGTH OF THIS SHEET : 89.70'

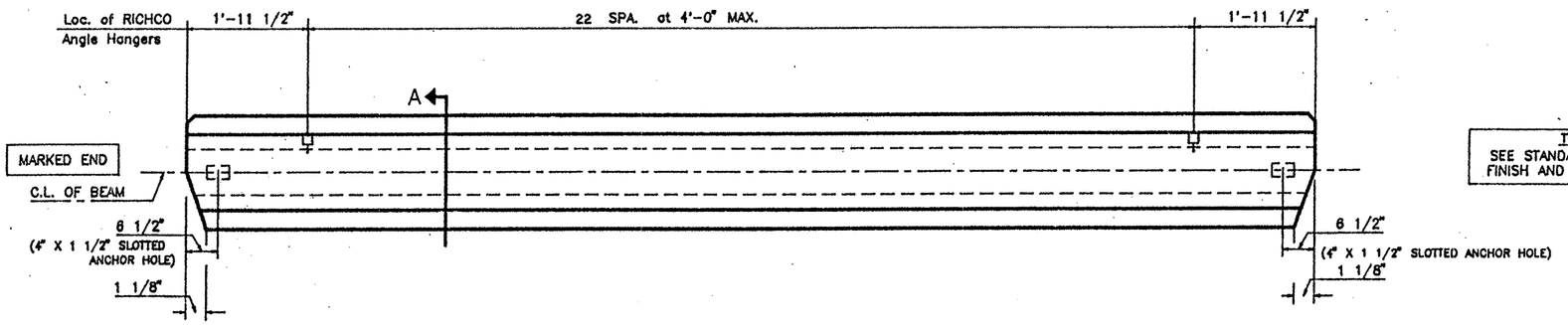

BEAM SKEW = -5 DEG.
EXPANSION END

BEAM SKEW = 5 DEG.
EXPANSION END

TOP FINISH PANELS
SEE STANDARD SHEET S-"IV" FOR TOP FINISH AND OTHER NOTES AND DETAILS.

PLAN

MANCO PRESTRESS COMPANY				
CONTRACTOR Gilbert of Texas Construction				
FED.RD. DIV.NO.	STATE	PROJECT NO.		HWY. NO.
6	TEXAS	NH 92(50)M		83/281
STATE DIST.NO.	COUNTY	CONTROL NO.	SECTION NO.	JOB NO.
21	HIDALGO	39	17	97

COPYRIGHT 1989 BY
STRUCTURAL ENGINEERING ASSOCIATES, INC.
CONSULTING ENGINEERS, SAN ANTONIO, TEXAS

JOB NO.	DRAWN	CHECKED	DATE	SHEET/MARK NO.
92-018	C.A.J.	D.M.P.	8 / 26 / 92	IV-123
SEA JOB NO. 92-059H	FABRICATION SHEET			

330020

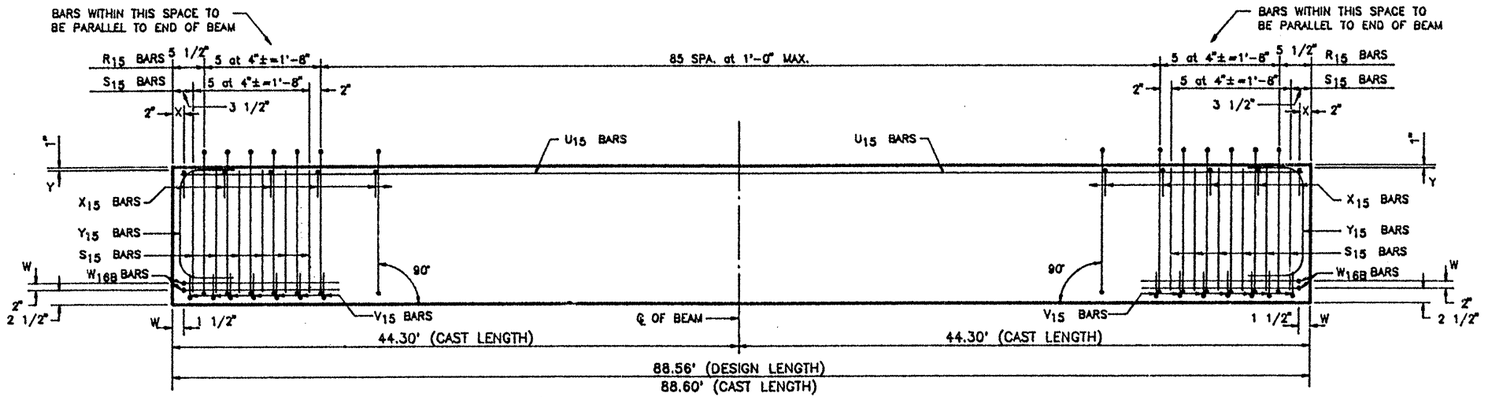

ELEVATION – REINFORCING STEEL

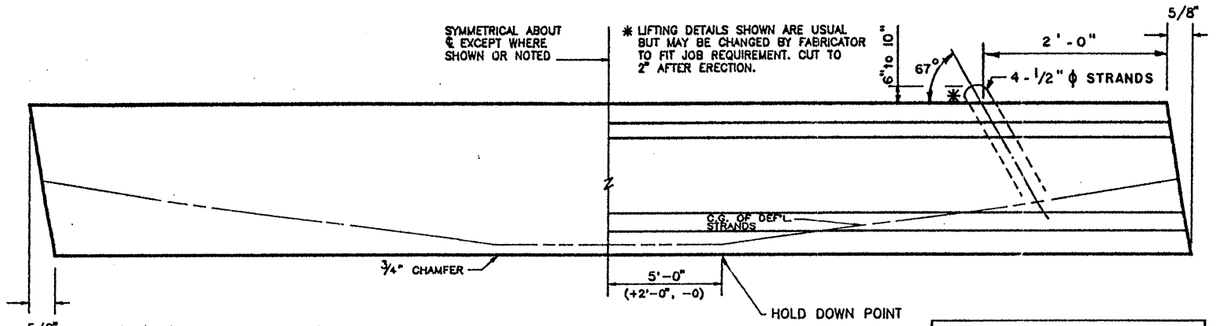

BEAM ELEVATION
SEE PLAN VIEW FOR HOLE(S) LOCATION

SINGLE LIFTING LOOP DETAIL

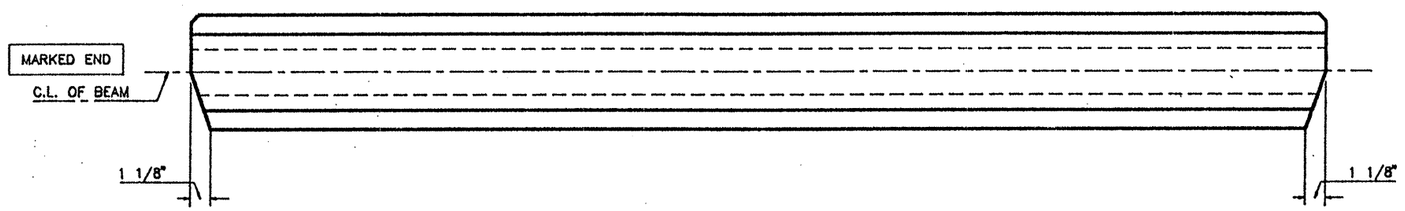

BEAM SKEW = -5 DEG.
EXP. END

BEAM SKEW = 5 DEG.
EXPANSION END

PLAN

TOP FINISH PANELS
SEE STANDARD SHEET S--"IV" FOR TOP FINISH AND OTHER NOTES AND DETAILS.

TEXAS DEPARTMENT OF TRANSPORTATION
APPROVED
DIVISION OF BRIDGES AND STRUCTURES

SEP 24 1992

APPROVAL OF THIS DRAWING DOES NOT RELIEVE THE CONTRACTOR OF THE RESPONSIBILITY FOR THE CORRECTNESS OF DETAIL.

REINFORCING STEEL SCHEDULE

BAR	QUANTITY PER BEAM	TOTAL QUANTITY	SIZE	LENGTH
R_{15}	96	96	#3	standard
X_{15}	92	92	#3	standard
Y_{15}	4	4	#6	standard
S_{15}	24	24	#7	standard
V_{15}	14	14	#3	standard
W_{16B}	4	4	#5	standard
U_{15}	2	2	#5	88'-4"

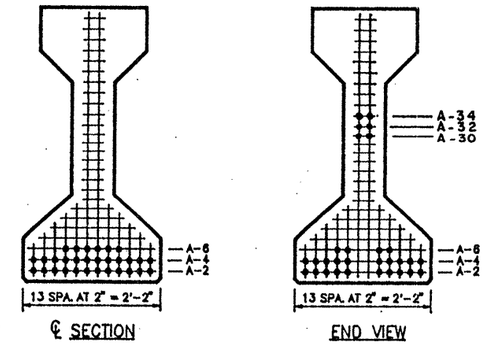

TYPE "IV" BEAM QUANTITY : 1

LO-LAX STRAND PATTERN		
NUMBER OF STRANDS	: 30 ~1/2" ϕ 270 K @ 31.00 K EACH	
NUMBER OF STRAIGHT STRANDS	: 24	
NUMBER OF DEFLECTED STRANDS	: 6 @ A – 34	
CONCRETE RELEASE STRENGTH	: 4000	PSI
CONCRETE DESIGN STRENGTH	: 5000	PSI
ECCENTRICITY @ ℄ : 21.15"	ECCENTRICITY @ END : 15.55"	

DESIGN NO. : GPNSLR
TOTAL BEAM LENGTH OF THIS SHEET : 88.56'

MANCO PRESTRESS COMPANY

CONTRACTOR Gilbert of Texas Construction

FED.RD. DIV.NO.	STATE	PROJECT NO.		HWY. NO.
6	TEXAS	NH 92(50)M		83/281
STATE DIST.NO.	COUNTY	CONTROL NO.	SECTION NO.	JOB NO.
21	HIDALGO	39	17	97

COPYRIGHT 1989 BY
STRUCTURAL ENGINEERING ASSOCIATES, INC.
CONSULTING ENGINEERS, SAN ANTONIO, TEXAS

JOB NO. 92-018	DRAWN C.A.J.	CHECKED D.M.P.	DATE 8 / 26 /92	SHEET/MARK NO. IV-124
SEA JOB NO. 92-059H	FABRICATION SHEET			

330020

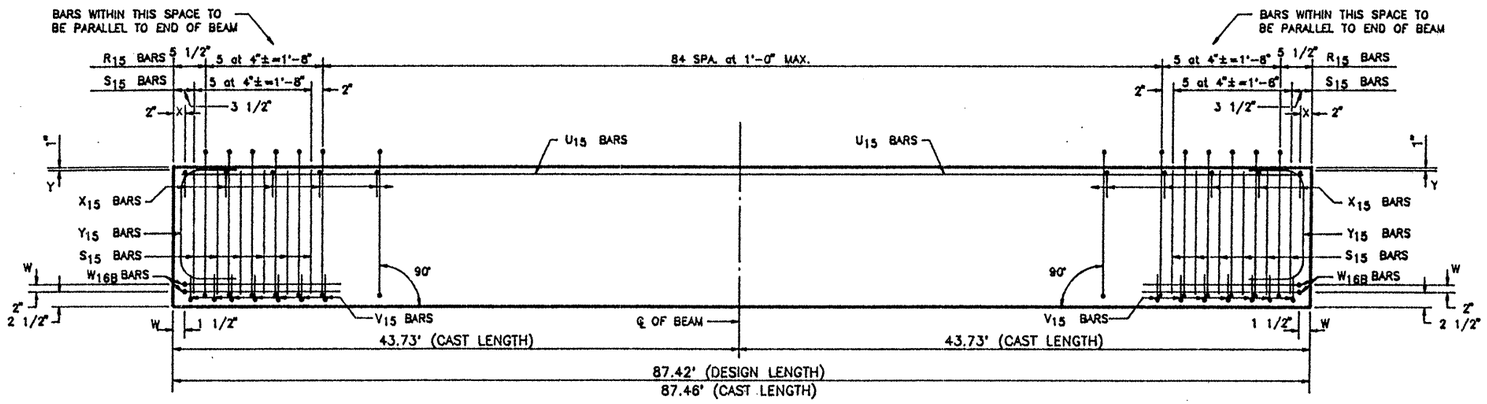

ELEVATION — REINFORCING STEEL

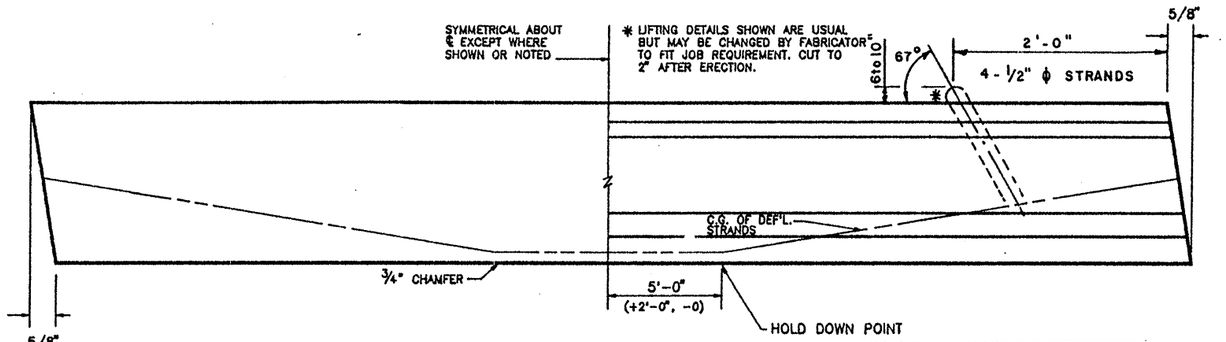

BEAM ELEVATION
SEE PLAN VIEW FOR HOLE(S) LOCATION

SINGLE LIFTING LOOP DETAIL

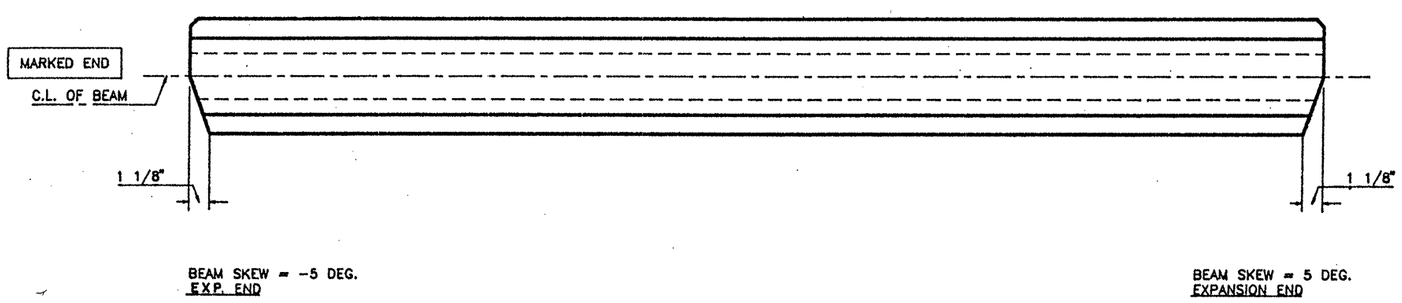

PLAN

TEXAS DEPARTMENT OF TRANSPORTATION
APPROVED
DIVISION OF BRIDGES AND STRUCTURES

SEP 24 1992

APPROVAL OF THIS DRAWING DOES NOT RELIEVE THE CONTRACTOR OF THE RESPONSIBILITY FOR THE CORRECTNESS OF DETAIL.

REINFORCING STEEL SCHEDULE

BAR	QUANTITY PER BEAM	TOTAL QUANTITY	SIZE	LENGTH
R_{15}	95	95	#3	standard
X_{15}	91	91	#3	standard
Y_{15}	4	4	#6	standard
S_{15}	24	24	#7	standard
V_{15}	14	14	#3	standard
W_{16B}	4	4	#5	standard
U_{15}	2	2	#5	87'-2"

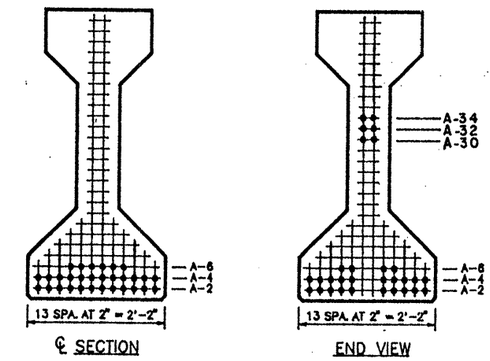

TYPE "IV" BEAM QUANTITY : 1

LO-LAX STRAND PATTERN		
NUMBER OF STRANDS	:	30 ~1/2" ø 270 K @ 31.00 K EACH
NUMBER OF STRAIGHT STRANDS	:	24
NUMBER OF DEFLECTED STRANDS	:	6 @ A - 34
CONCRETE RELEASE STRENGTH	:	4000 PSI
CONCRETE DESIGN STRENGTH	:	5000 PSI
ECCENTRICITY @ ℄	:	21.15" ECCENTRICITY @ END : 15.55"

TOP FINISH PANELS
SEE STANDARD SHEET S-"IV" FOR TOP FINISH AND OTHER NOTES AND DETAILS.

DESIGN NO. : GPNSLR
TOTAL BEAM LENGTH OF THIS SHEET : 87.42'

MANCO PRESTRESS COMPANY

CONTRACTOR Gilbert of Texas Construction

FED.RD. DIV.NO.	STATE	PROJECT NO.	HWY. NO.
6	TEXAS	NH 92(50)M	83/281

STATE DIST.NO.	COUNTY	CONTROL NO.	SECTION NO.	JOB NO.
21	HIDALGO	39	17	97

COPYRIGHT 1989 BY
STRUCTURAL ENGINEERING ASSOCIATES, INC.
CONSULTING ENGINEERS, SAN ANTONIO, TEXAS

JOB NO.	DRAWN	CHECKED	DATE	SHEET/MARK NO.
92-018	C.A.J.	D.M.P.	8/26/92	IV-125
SEA JOB NO. 92-059H	FABRICATION SHEET			

330020

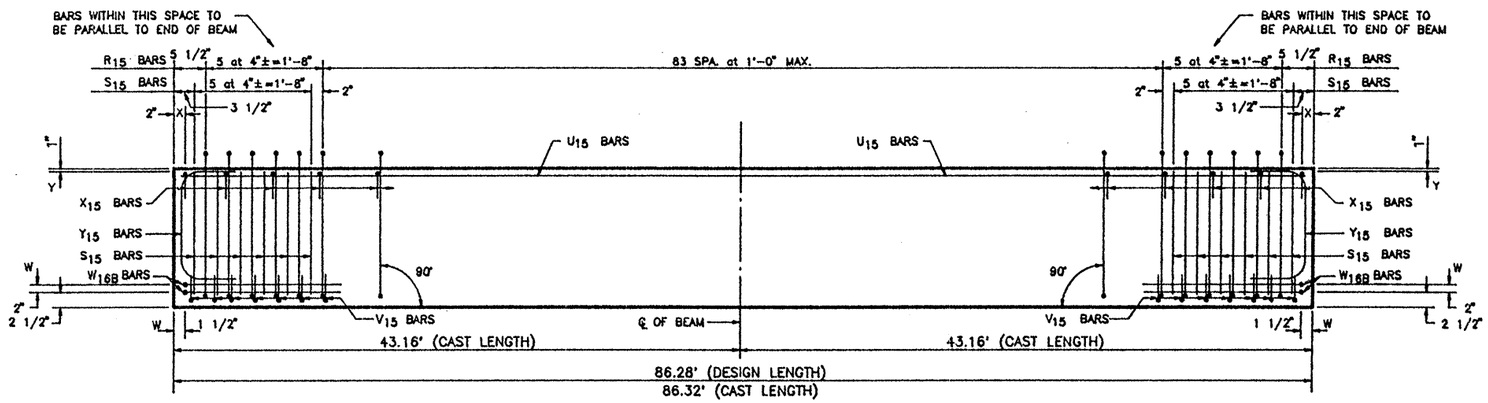

ELEVATION – REINFORCING STEEL

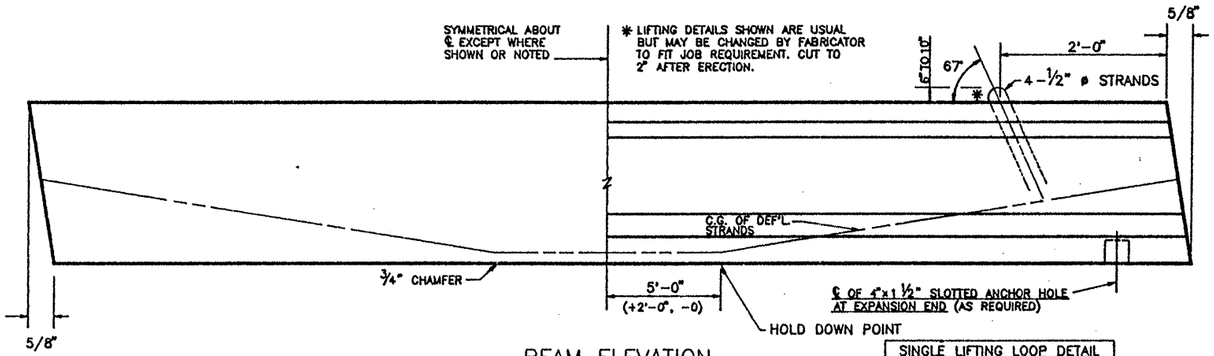

BEAM ELEVATION
SEE PLAN VIEW FOR HOLE(S) LOCATION

SINGLE LIFTING LOOP DETAIL

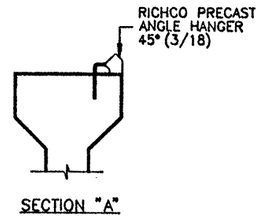

SECTION "A"

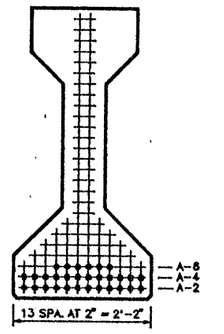

℄ SECTION

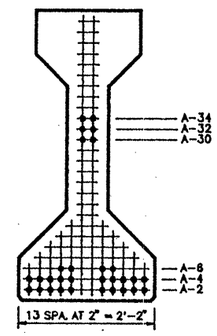

END VIEW

TYPE "IV" BEAM QUANTITY : 1

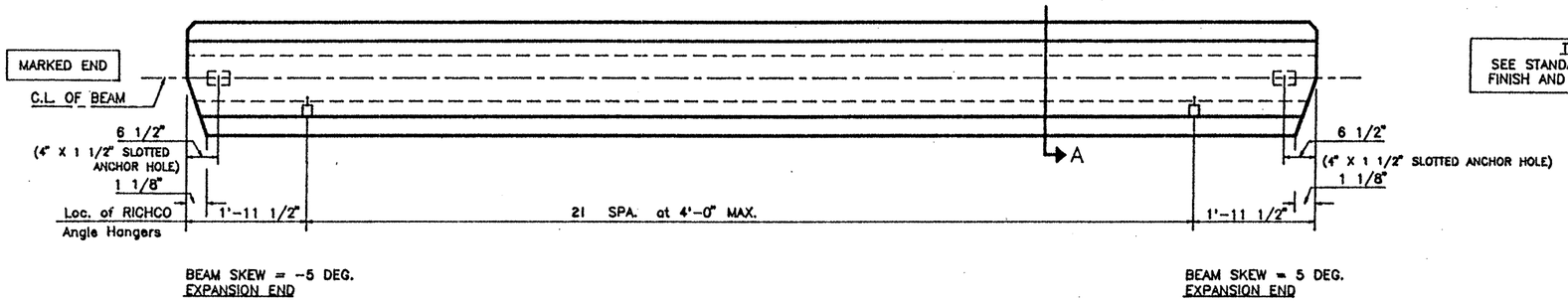

BEAM SKEW = -5 DEG.
EXPANSION END

BEAM SKEW = 5 DEG.
EXPANSION END

PLAN

TOP FINISH PANELS
SEE STANDARD SHEET S-"IV" FOR TOP FINISH AND OTHER NOTES AND DETAILS.

TEXAS DEPARTMENT OF TRANSPORTATION
APPROVED
DIVISION OF BRIDGES AND STRUCTURES

SEP 24 1992

APPROVAL OF THIS DRAWING DOES NOT RELIEVE THE CONTRACTOR OF THE RESPONSIBILITY FOR THE CORRECTNESS OF DETAIL.

REINFORCING STEEL SCHEDULE

BAR	QUANTITY PER BEAM	TOTAL QUANTITY	SIZE	LENGTH
R_{15}	94	94	#3	standard
X_{15}	90	90	#3	standard
Y_{15}	4	4	#6	standard
S_{15}	24	24	#7	standard
V_{15}	14	14	#3	standard
W_{16B}	4	4	#5	standard
U_{15}	2	2	#5	86'-1"

LO-LAX STRAND PATTERN

NUMBER OF STRANDS	: 30 ~1/2" ø 270 K @ 31.00 K EACH	
NUMBER OF STRAIGHT STRANDS	: 24	
NUMBER OF DEFLECTED STRANDS	: 6 @ A – 34	
CONCRETE RELEASE STRENGTH	: 4000	PSI
CONCRETE DESIGN STRENGTH	: 5000	PSI
ECCENTRICITY @ ℄	: 21.15" ECCENTRICITY @ END	: 15.55"

DESIGN NO. : O.D.# 16
TOTAL BEAM LENGTH OF THIS SHEET : 86.28'

MANCO PRESTRESS COMPANY

CONTRACTOR Gilbert of Texas Construction

FED.RD. DIV.NO.	STATE	PROJECT NO.	HWY. NO.
6	TEXAS	NH 92(50)M	83/281

STATE DIST.NO.	COUNTY	CONTROL NO.	SECTION NO.	JOB NO.
21	HIDALGO	39	17	97

COPYRIGHT 1989 BY
STRUCTURAL ENGINEERING ASSOCIATES, INC.
CONSULTING ENGINEERS, SAN ANTONIO, TEXAS

JOB NO.	DRAWN	CHECKED	DATE	SHEET/MARK NO.
92-018	C.A.J.	D.M.P.	8/26/92	IV-126
SEA JOB NO. 92-059H	FABRICATION SHEET			

330020

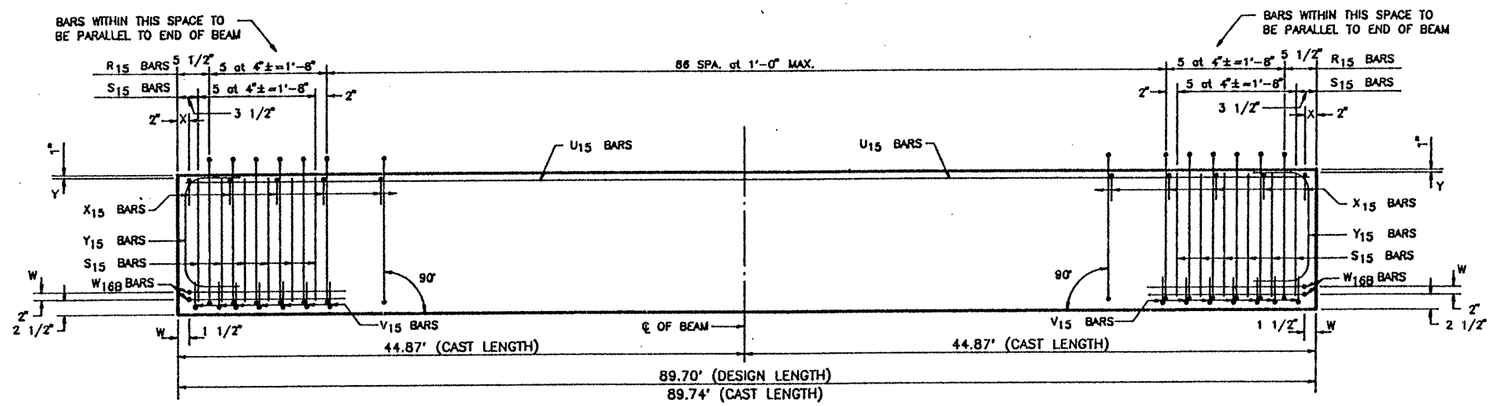

ELEVATION – REINFORCING STEEL

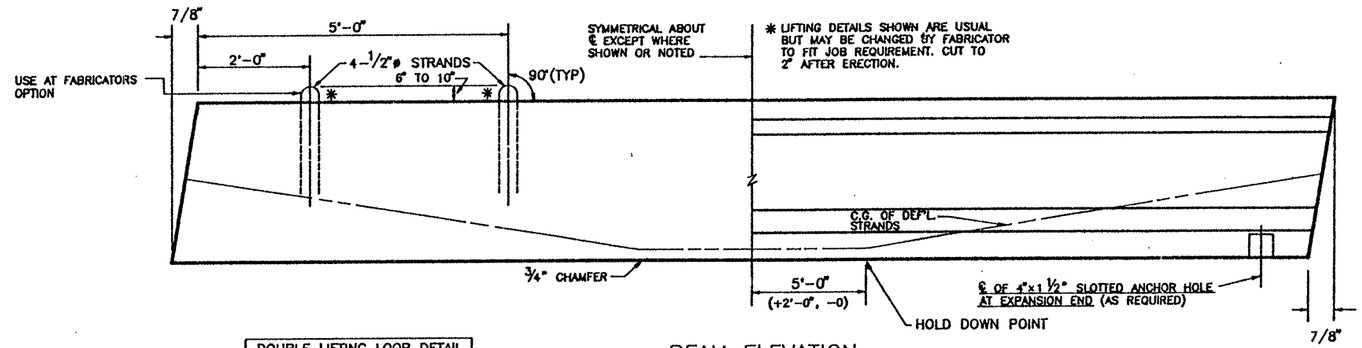

DOUBLE LIFTING LOOP DETAIL (TYP. FOR BEAMS OVER 75')

BEAM ELEVATION
SEE PLAN VIEW FOR HOLE(S) LOCATION

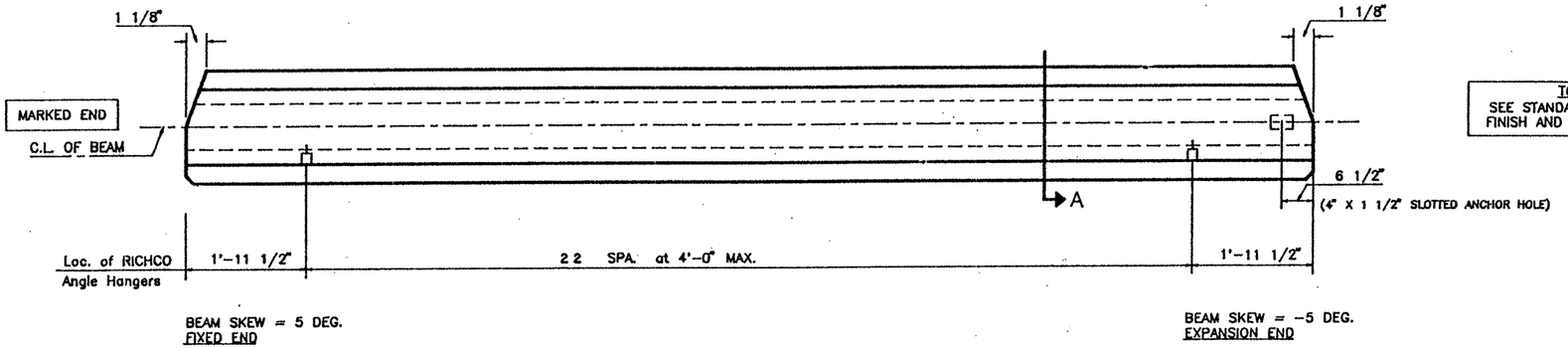

PLAN

TOP FINISH PANELS
SEE STANDARD SHEET S-"IV" FOR TOP FINISH AND OTHER NOTES AND DETAILS.

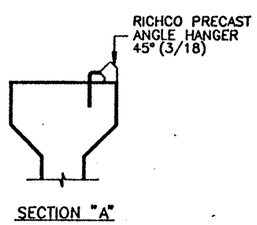

SECTION "A"

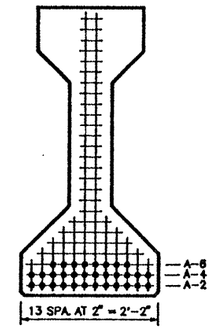

℄ SECTION

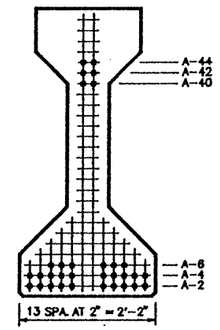

END VIEW

TYPE "IV" BEAM QUANTITY : 1

REINFORCING STEEL SCHEDULE				
BAR	QUANTITY PER BEAM	TOTAL QUANTITY	SIZE	LENGTH
R_{15}	97	97	#3	standard
X_{15}	93	93	#3	standard
Y_{15}	4	4	#6	standard
S_{15}	24	24	#7	standard
V_{15}	14	14	#3	standard
W_{16B}	4	4	#5	standard
U_{15}	2	2	#5	89'-6"

TEXAS DEPARTMENT OF TRANSPORTATION
APPROVED
DIVISION OF BRIDGES AND STRUCTURES
SEP 24 1992
APPROVAL OF THIS DRAWING DOES NOT RELIEVE THE CONTRACTOR OF THE RESPONSIBILITY FOR THE CORRECTNESS OF DETAIL.

LO-LAX STRAND PATTERN		
NUMBER OF STRANDS	: 32 ~1/2" ø 270 K @ 31.00 K EACH	
NUMBER OF STRAIGHT STRANDS	: 26	
NUMBER OF DEFLECTED STRANDS	: 6 @ A – 44	
CONCRETE RELEASE STRENGTH	: 4000	PSI
CONCRETE DESIGN STRENGTH	: 5000	PSI
ECCENTRICITY @ ℄	: 21.00"	ECCENTRICITY @ END : 13.88"

DESIGN NO. : GPNSLR
TOTAL BEAM LENGTH OF THIS SHEET : 89.70'

MANCO PRESTRESS COMPANY

CONTRACTOR Gilbert of Texas Construction

FED.RD. DIV.NO.	STATE	PROJECT NO.		HWY. NO.
6	TEXAS	NH 92(50)M		83/281
STATE DIST.NO.	COUNTY	CONTROL NO.	SECTION NO.	JOB NO.
21	HIDALGO	39	17	97

COPYRIGHT 1989 BY STRUCTURAL ENGINEERING ASSOCIATES, INC. CONSULTING ENGINEERS, SAN ANTONIO, TEXAS

JOB NO.	DRAWN	CHECKED	DATE	SHEET/MARK NO.
92-018	C.A.J.	D.M.P.	8/26/92	IV-127
SEA JOB NO. 92-059H	FABRICATION SHEET			

330020

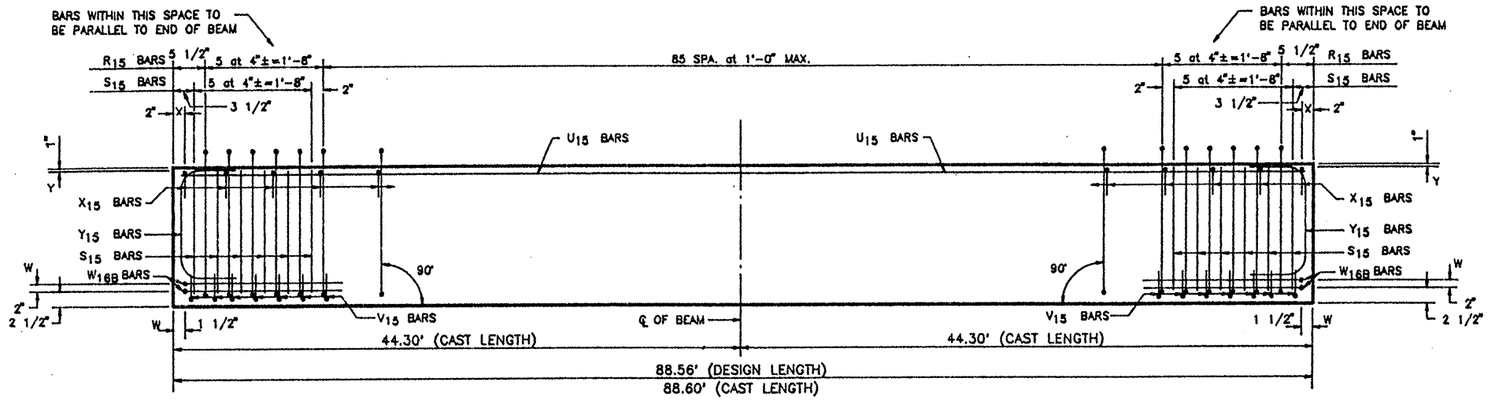

ELEVATION – REINFORCING STEEL

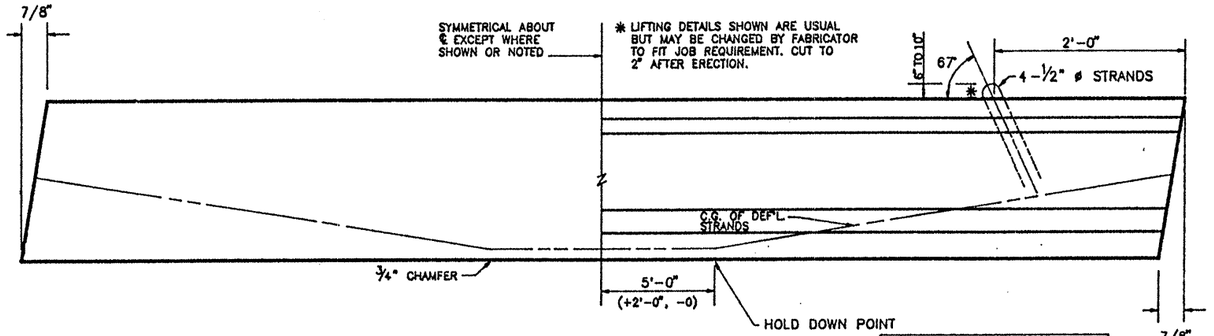

BEAM ELEVATION
SEE PLAN VIEW FOR HOLE(S) LOCATION

SINGLE LIFTING LOOP DETAIL

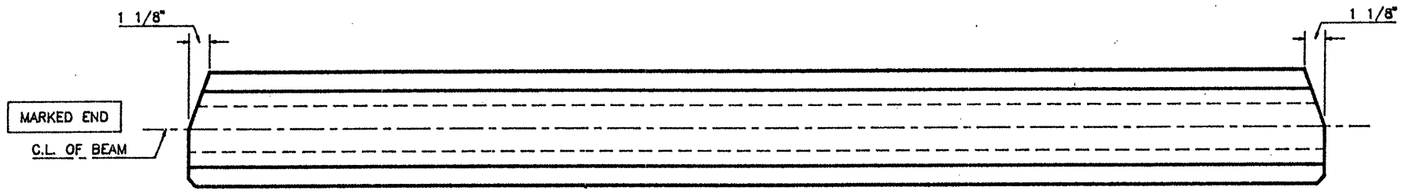

BEAM SKEW = 5 DEG.
FIXED END

BEAM SKEW = -5 DEG.
EXPANSION END

PLAN

TOP FINISH PANELS
SEE STANDARD SHEET S--"IV" FOR TOP FINISH AND OTHER NOTES AND DETAILS.

TEXAS DEPARTMENT OF TRANSPORTATION
APPROVED
DIVISION OF BRIDGES AND STRUCTURES

SEP 24 1992

APPROVAL OF THIS DRAWING DOES NOT RELIEVE THE CONTRACTOR OF THE RESPONSIBILITY FOR THE CORRECTNESS OF DETAIL.

REINFORCING STEEL SCHEDULE

BAR	QUANTITY PER BEAM	TOTAL QUANTITY	SIZE	LENGTH
R_{15}	96	96	#3	standard
X_{15}	92	92	#3	standard
Y_{15}	4	4	#6	standard
S_{15}	24	24	#7	standard
V_{15}	14	14	#3	standard
W_{168}	4	4	#5	standard
U_{15}	2	2	#5	88'-4"

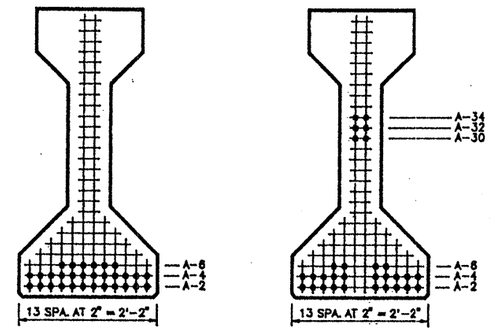

TYPE "IV" BEAM QUANTITY : 1

LO-LAX STRAND PATTERN		
NUMBER OF STRANDS	: 30 ~1/2" ø 270 K @ 31.00 K EACH	
NUMBER OF STRAIGHT STRANDS	: 24	
NUMBER OF DEFLECTED STRANDS	: 6 @ A – 34	
CONCRETE RELEASE STRENGTH	: 4000	PSI
CONCRETE DESIGN STRENGTH	: 5000	PSI
ECCENTRICITY @ ℄	: 21.15"	ECCENTRICITY @ END : 15.55"

DESIGN NO. : GPNSLR
TOTAL BEAM LENGTH OF THIS SHEET : 88.56'

MANCO PRESTRESS COMPANY
CONTRACTOR Gilbert of Texas Construction

FED.RD. DIV.NO.	STATE	PROJECT NO.			HWY. NO.
6	TEXAS	NH 92(50)M			83/281
STATE DIST.NO.	COUNTY	CONTROL NO.	SECTION NO.	JOB NO.	
21	HIDALGO	39	17	97	

COPYRIGHT 1989 BY STRUCTURAL ENGINEERING ASSOCIATES, INC. CONSULTING ENGINEERS, SAN ANTONIO, TEXAS

JOB NO.	DRAWN	CHECKED	DATE	SHEET/MARK NO.
92-018	C.A.J.	D.M.P.	8 / 26 / 92	IV-128
SEA JOB NO. 92-059H	FABRICATION SHEET			

330020

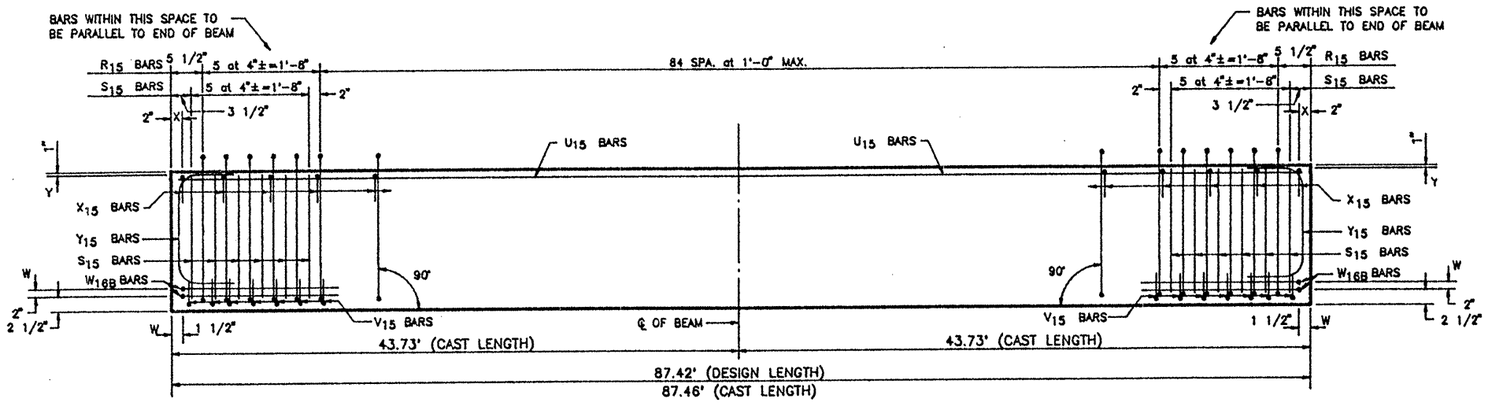

ELEVATION – REINFORCING STEEL

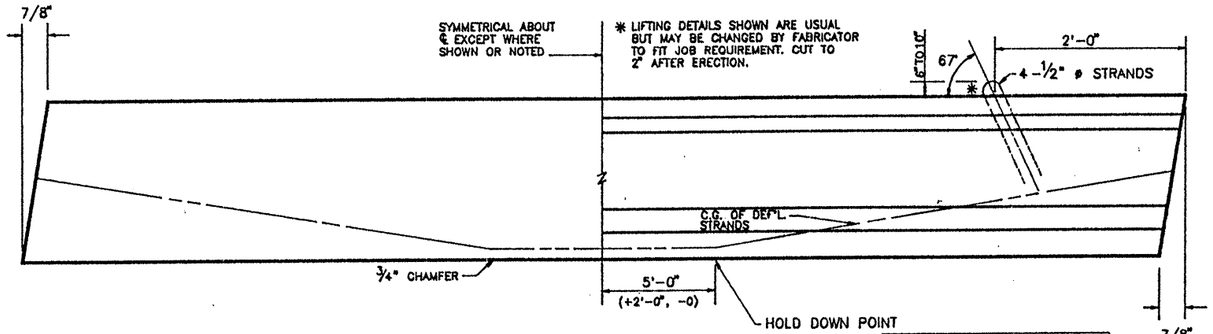

BEAM ELEVATION
SEE PLAN VIEW FOR HOLE(S) LOCATION

SINGLE LIFTING LOOP DETAIL

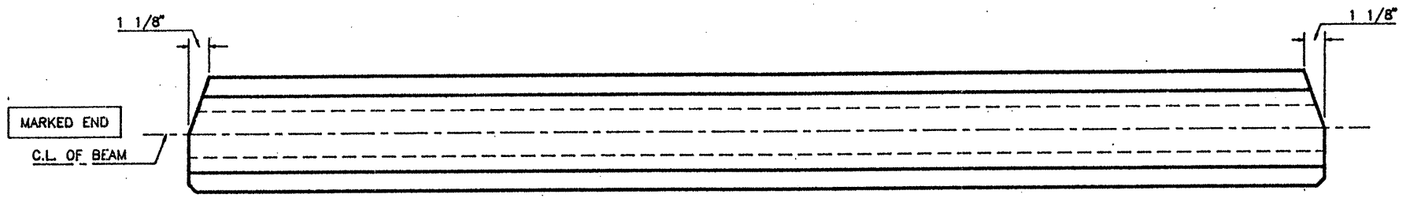

BEAM SKEW = 5 DEG.
FIXED END

BEAM SKEW = -5 DEG.
EXPANSION END

PLAN

TOP FINISH PANELS
SEE STANDARD SHEET S-"IV" FOR TOP FINISH AND OTHER NOTES AND DETAILS.

TEXAS DEPARTMENT OF TRANSPORTATION
APPROVED
DIVISION OF BRIDGES AND STRUCTURES

SEP 24 1992

APPROVAL OF THIS DRAWING DOES NOT RELIEVE THE CONTRACTOR OF THE RESPONSIBILITY FOR THE CORRECTNESS OF DETAIL.

REINFORCING STEEL SCHEDULE

BAR	QUANTITY PER BEAM	TOTAL QUANTITY	SIZE	LENGTH
R_{15}	95	95	#3	standard
X_{15}	91	91	#3	standard
Y_{15}	4	4	#6	standard
S_{15}	24	24	#7	standard
V_{15}	14	14	#3	standard
W_{16B}	4	4	#5	standard
U_{15}	2	2	#5	87'-2"

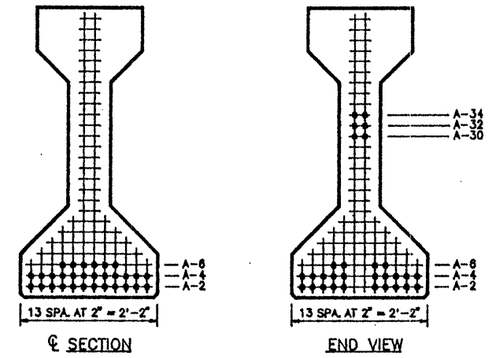

TYPE "IV" BEAM QUANTITY : 1

LO-LAX STRAND PATTERN		
NUMBER OF STRANDS : 30 ~1/2" ø 270 K @ 31.00 K EACH		
NUMBER OF STRAIGHT STRANDS	:	24
NUMBER OF DEFLECTED STRANDS	:	6 @ A – 34
CONCRETE RELEASE STRENGTH	:	4000 PSI
CONCRETE DESIGN STRENGTH	:	5000 PSI
ECCENTRICITY @ ℄ : 21.15"	ECCENTRICITY @ END :	15.55"

DESIGN NO. : GPNSLR
TOTAL BEAM LENGTH OF THIS SHEET : 87.42'

MANCO PRESTRESS COMPANY

CONTRACTOR Gilbert of Texas Construction

FED.RD. DIV.NO.	STATE	PROJECT NO.	HWY. NO.
6	TEXAS	NH 92(50)M	83/281

STATE DIST.NO.	COUNTY	CONTROL NO.	SECTION NO.	JOB NO.
21	HIDALGO	39	17	97

COPYRIGHT 1989 BY
STRUCTURAL ENGINEERING ASSOCIATES, INC.
CONSULTING ENGINEERS, SAN ANTONIO, TEXAS

JOB NO.	DRAWN	CHECKED	DATE	SHEET/MARK NO.
92-018	C.A.J.	D.M.P.	8 / 26 / 92	IV-129
SEA JOB NO. 92-059H	FABRICATION SHEET			

330020

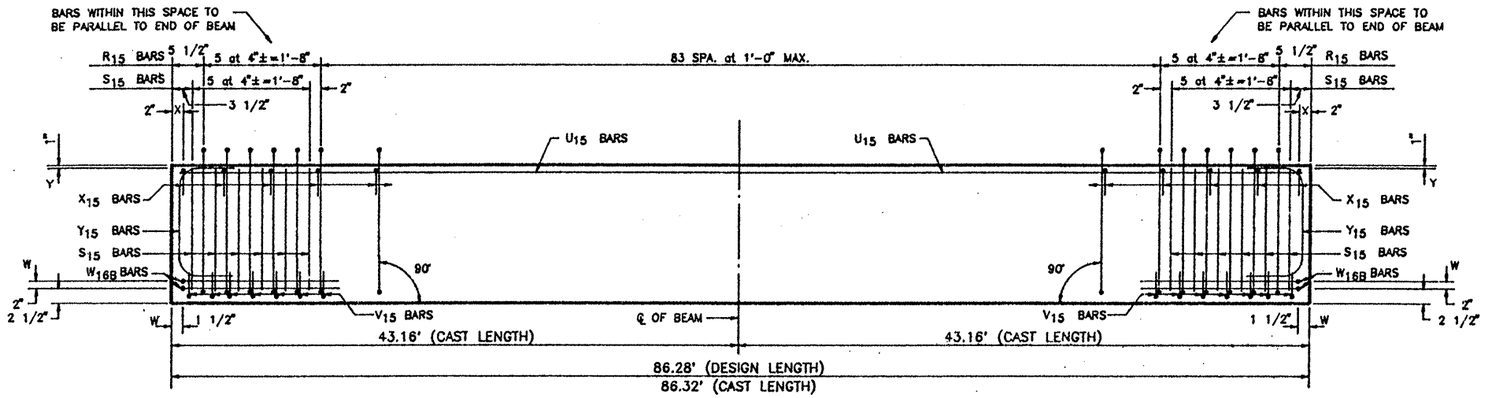

ELEVATION – REINFORCING STEEL

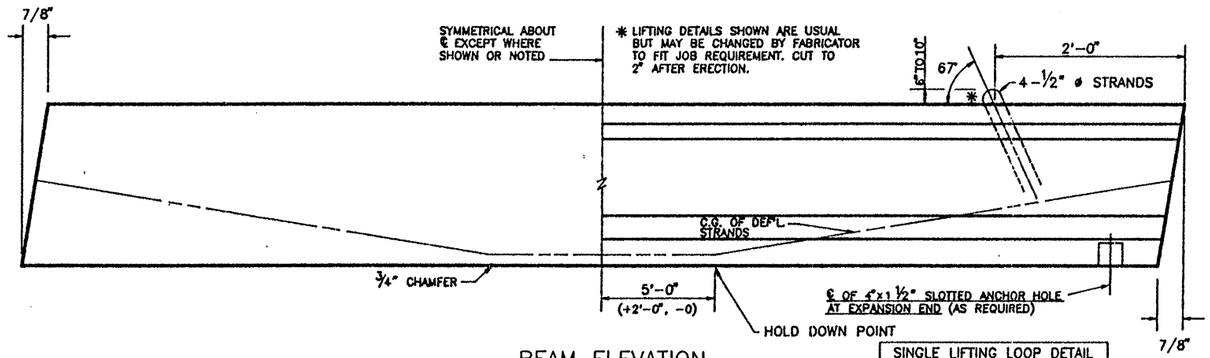

BEAM ELEVATION
SEE PLAN VIEW FOR HOLE(S) LOCATION

SINGLE LIFTING LOOP DETAIL

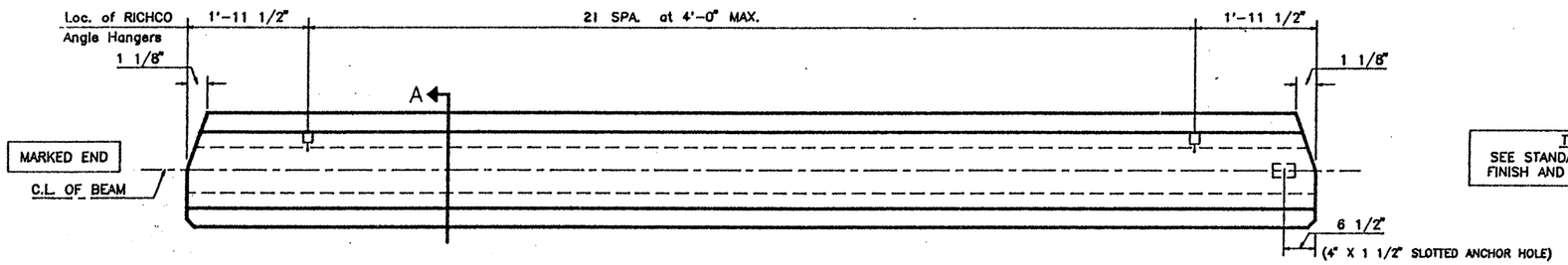

BEAM SKEW = 5 DEG.
FIXED END

BEAM SKEW = -5 DEG.
EXPANSION END

PLAN

TOP FINISH PANELS
SEE STANDARD SHEET S-"IV" FOR TOP FINISH AND OTHER NOTES AND DETAILS.

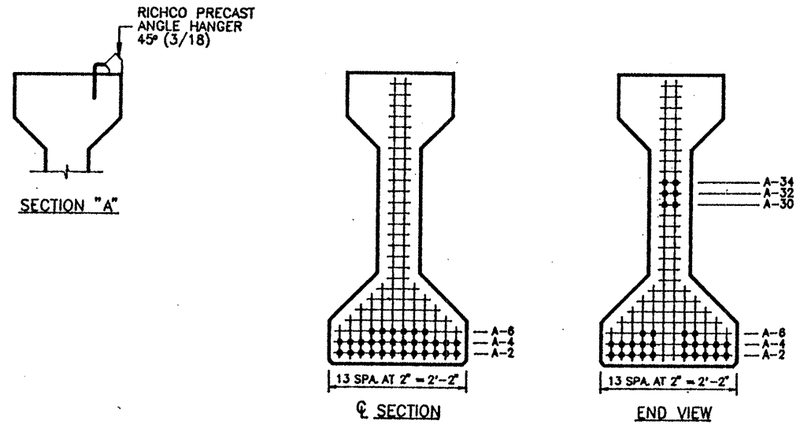

TYPE "IV" BEAM QUANTITY : 1

LO-LAX STRAND PATTERN		
NUMBER OF STRANDS	: 30 ~1/2" ø 270 K @ 31.00 K EACH	
NUMBER OF STRAIGHT STRANDS	: 24	
NUMBER OF DEFLECTED STRANDS	: 6 ● A – 34	
CONCRETE RELEASE STRENGTH	: 4000	PSI
CONCRETE DESIGN STRENGTH	: 5000	PSI
ECCENTRICITY ● ℄	: 21.15" ECCENTRICITY ● END	: 15.55"

DESIGN NO. : O.D.# 16
TOTAL BEAM LENGTH OF THIS SHEET : 86.28'

REINFORCING STEEL SCHEDULE

BAR	QUANTITY PER BEAM	TOTAL QUANTITY	SIZE	LENGTH
R_{15}	94	94	#3	standard
X_{15}	90	90	#3	standard
Y_{15}	4	4	#6	standard
S_{15}	24	24	#7	standard
V_{15}	14	14	#3	standard
W_{16B}	4	4	#5	standard
U_{15}	2	2	#5	86'-1"

TEXAS DEPARTMENT OF TRANSPORTATION
APPROVED
DIVISION OF BRIDGES AND STRUCTURES
SEP 24 1992
APPROVAL OF THIS DRAWING DOES NOT RELIEVE THE CONTRACTOR OF THE RESPONSIBILITY FOR THE CORRECTNESS OF DETAIL.

MANCO PRESTRESS COMPANY
CONTRACTOR Gilbert of Texas Construction

FED.RD. DIV.NO.	STATE	PROJECT NO.	HWY. NO.
6	TEXAS	NH 92(50)M	83/281

STATE DIST.NO.	COUNTY	CONTROL NO.	SECTION NO.	JOB NO.
21	HIDALGO	39	17	97

COPYRIGHT 1989 BY
STRUCTURAL ENGINEERING ASSOCIATES, INC.
CONSULTING ENGINEERS, SAN ANTONIO, TEXAS

JOB NO.	DRAWN	CHECKED	DATE	SHEET/MARK NO.
92-018	C.A.J.	D.M.P.	8/26/92	IV-130
SEA JOB NO. 92-059H	FABRICATION SHEET			

330020

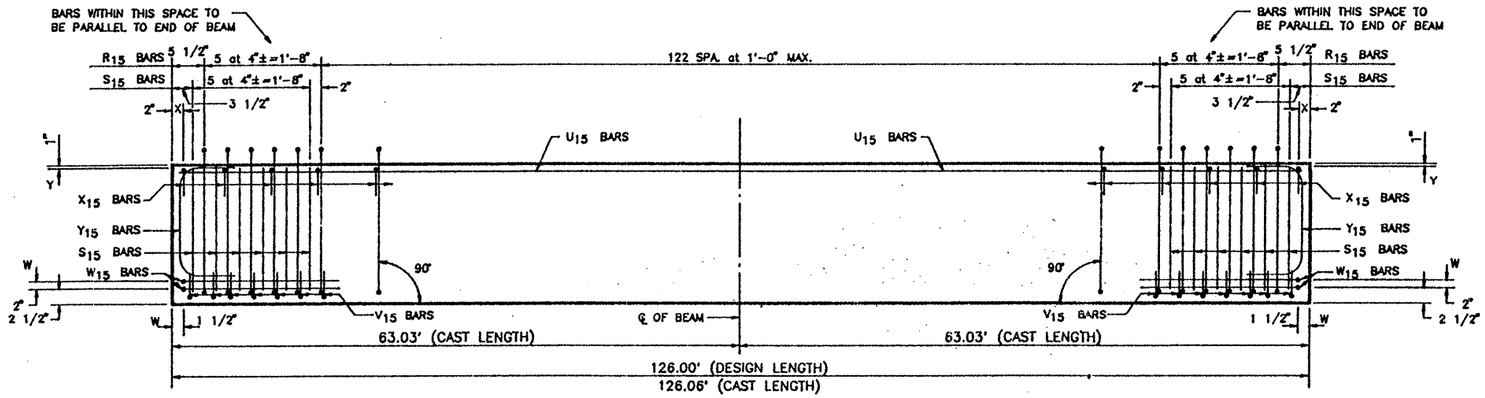

ELEVATION – REINFORCING STEEL

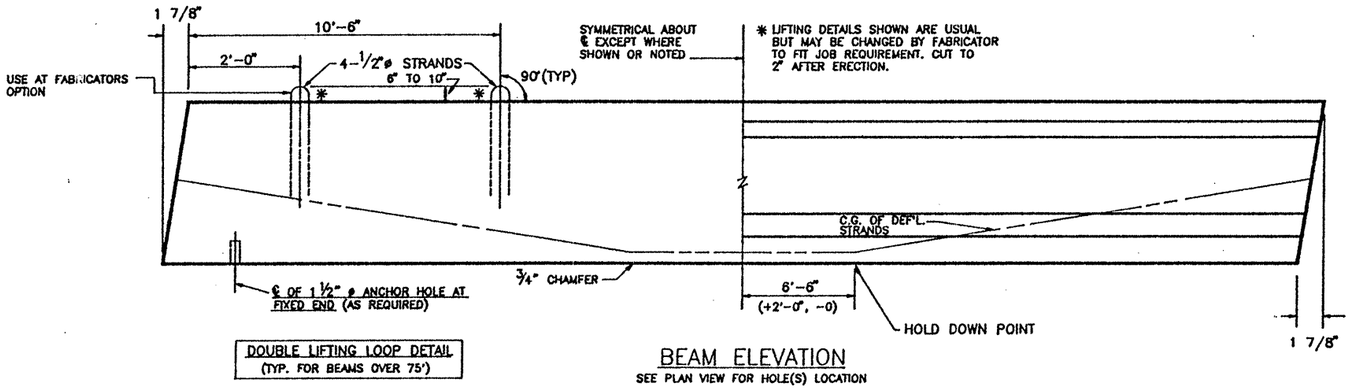

DOUBLE LIFTING LOOP DETAIL
(TYP. FOR BEAMS OVER 75')

BEAM ELEVATION
SEE PLAN VIEW FOR HOLE(S) LOCATION

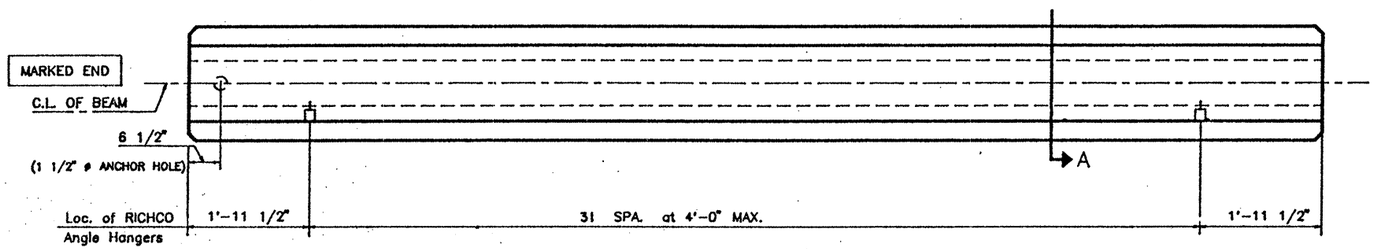

PLAN

TOP FINISH PANELS
SEE STANDARD SHEET S-"IV" FOR TOP FINISH AND OTHER NOTES AND DETAILS.

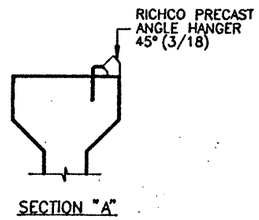

SECTION "A"

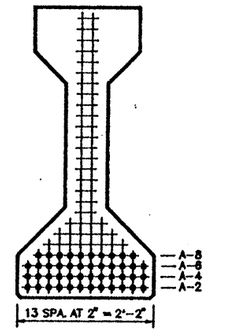

℄ SECTION

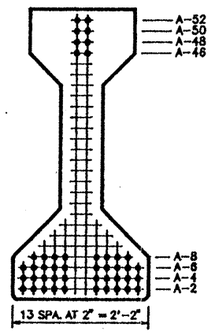

END VIEW

TYPE "IV" BEAM QUANTITY : 1

LO-LAX STRAND PATTERN		
NUMBER OF STRANDS	: 46 ~1/2" ø 270 K @ 31.00 K EACH	
NUMBER OF STRAIGHT STRANDS	: 38	
NUMBER OF DEFLECTED STRANDS	: 8 @ A – 52	
CONCRETE RELEASE STRENGTH	: 5342	PSI
CONCRETE DESIGN STRENGTH	: 7169	PSI
ECCENTRICITY @ ℄	: 19.88" ECCENTRICITY @ END	: 12.23"

DESIGN NO. : GPNSLR
TOTAL BEAM LENGTH OF THIS SHEET : 126.00'

REINFORCING STEEL SCHEDULE

BAR	QUANTITY PER BEAM	TOTAL QUANTITY	SIZE	LENGTH
R_{15}	133	133	#3	standard
X_{15}	129	129	#3	standard
Y_{15}	4	4	#6	standard
S_{15}	24	24	#7	standard
V_{15}	14	14	#3	standard
W_{15}	4	4	#5	standard
U_{15}	2	2	#5	125'-9"

TEXAS DEPARTMENT OF TRANSPORTATION
APPROVED
DIVISION OF BRIDGES AND STRUCTURES
SEP 24 1992
APPROVAL OF THIS DRAWING DOES NOT RELIEVE THE CONTRACTOR OF THE RESPONSIBILITY FOR THE CORRECTNESS OF DETAIL.

MANCO PRESTRESS COMPANY

CONTRACTOR Gilbert of Texas Construction

FED.RD. DIV.NO.	STATE	PROJECT NO.	HWY. NO.
6	TEXAS	NH 92(50)M	83/281

STATE DIST.NO.	COUNTY	CONTROL NO.	SECTION NO.	JOB NO.
21	HIDALGO	39	17	97

COPYRIGHT 1989 BY
STRUCTURAL ENGINEERING ASSOCIATES, INC.
CONSULTING ENGINEERS, SAN ANTONIO, TEXAS

JOB NO.	DRAWN	CHECKED	DATE	SHEET/MARK NO.
92-018	C.A.J.	D.M.P.	8/26/92	IV-131
SEA JOB NO. 92-059H	FABRICATION SHEET			

330020

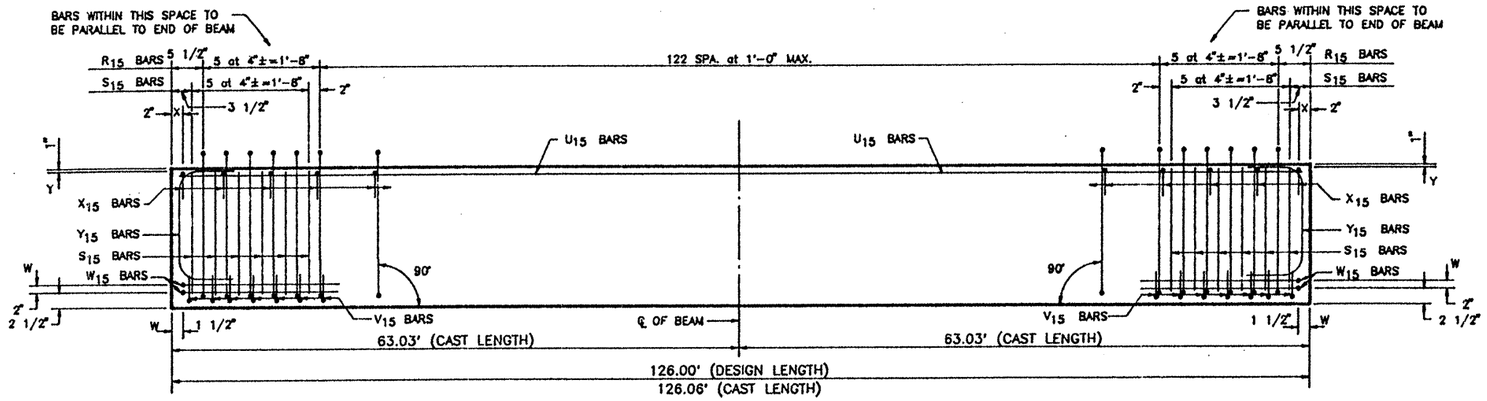

ELEVATION – REINFORCING STEEL

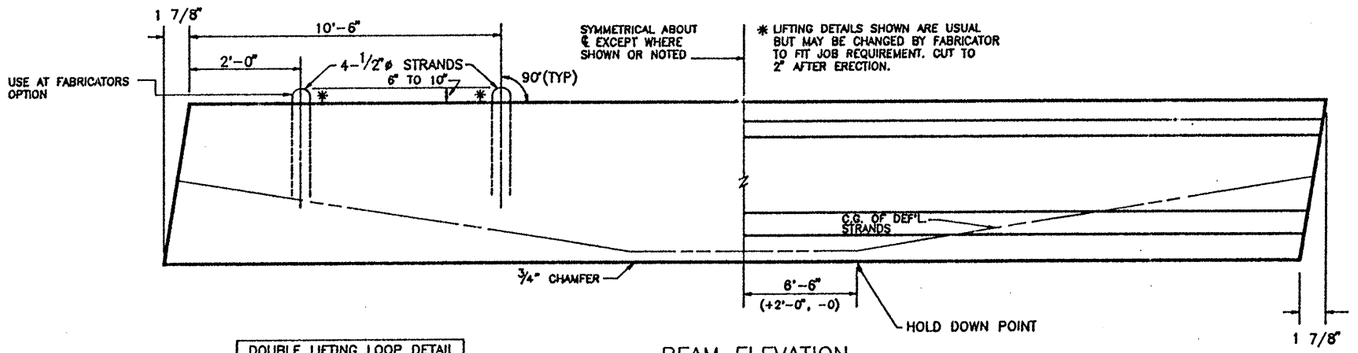

DOUBLE LIFTING LOOP DETAIL (TYP. FOR BEAMS OVER 75')

BEAM ELEVATION

SEE PLAN VIEW FOR HOLE(S) LOCATION

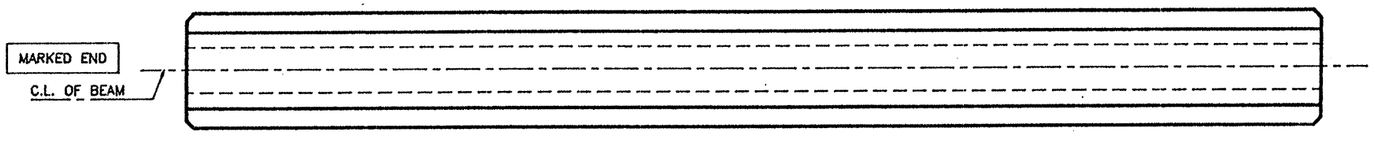

PLAN

TOP FINISH PANELS
SEE STANDARD SHEET S--"IV" FOR TOP FINISH AND OTHER NOTES AND DETAILS.

TEXAS DEPARTMENT OF TRANSPORTATION
APPROVED
DIVISION OF BRIDGES AND STRUCTURES

SEP 24 1992

APPROVAL OF THIS DRAWING DOES NOT RELIEVE THE CONTRACTOR OF THE RESPONSIBILITY FOR THE CORRECTNESS OF DETAIL.

REINFORCING STEEL SCHEDULE

BAR	QUANTITY PER BEAM	TOTAL QUANTITY	SIZE	LENGTH
R_{15}	133	532	#3	standard
X_{15}	129	516	#3	standard
Y_{15}	4	16	#6	standard
S_{15}	24	96	#7	standard
V_{15}	14	56	#3	standard
W_{15}	4	16	#5	standard
U_{15}	2	8	#5	125'-9"

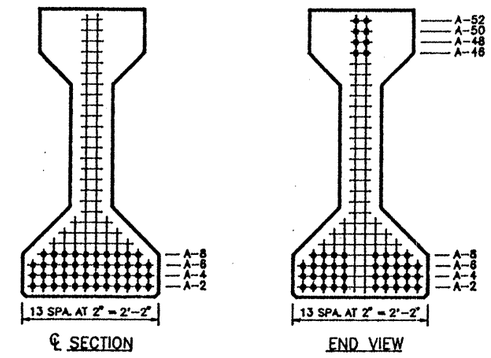

TYPE "IV" BEAM QUANTITY : 4

LO-LAX STRAND PATTERN		
NUMBER OF STRANDS	: 46 ~1/2" ø 270 K @ 31.00 K EACH	
NUMBER OF STRAIGHT STRANDS	: 38	
NUMBER OF DEFLECTED STRANDS	: 8 @ A - 52	
CONCRETE RELEASE STRENGTH	: 5342	PSI
CONCRETE DESIGN STRENGTH	: 7169	PSI
ECCENTRICITY @ ℄	: 19.88"	ECCENTRICITY @ END : 12.23"

DESIGN NO. : GPNSLR

TOTAL BEAM LENGTH OF THIS SHEET : 504.00'

MANCO PRESTRESS COMPANY

CONTRACTOR Gilbert of Texas Construction

FED.RD. DIV.NO.	STATE	PROJECT NO.			HWY. NO.
6	TEXAS	NH 92(50)M			83/281
STATE DIST.NO.	COUNTY		CONTROL NO.	SECTION NO.	JOB NO.
21	HIDALGO		39	17	97

COPYRIGHT 1989 BY

STRUCTURAL ENGINEERING ASSOCIATES, INC.
CONSULTING ENGINEERS, SAN ANTONIO, TEXAS

JOB NO.	DRAWN	CHECKED	DATE	SHEET/MARK NO.
92-018	C.A.J.	D.M.P.	8 / 26 / 92	IV-132
SEA JOB NO. 92-059H	FABRICATION SHEET			

330020

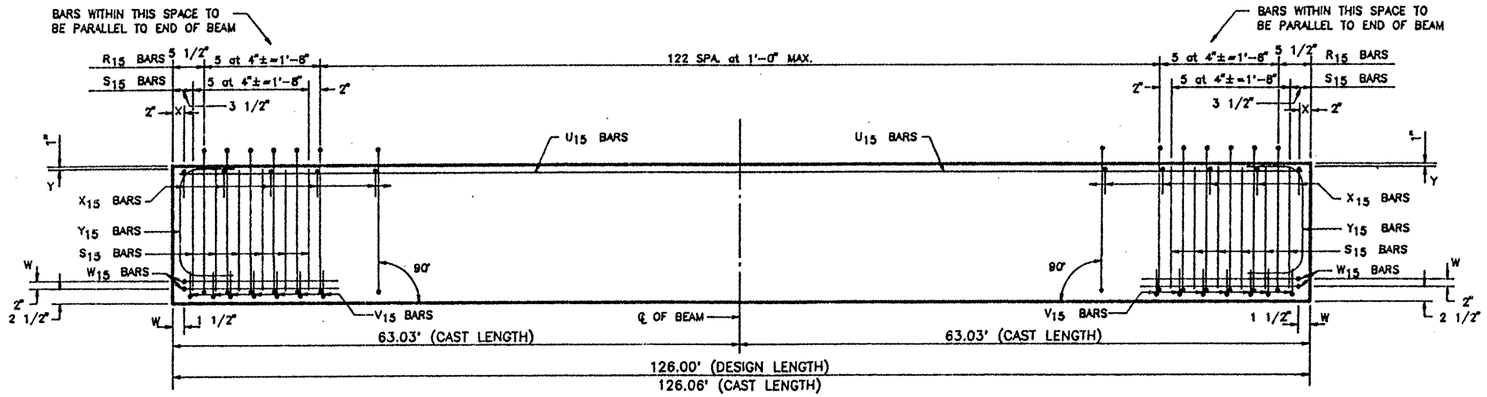

ELEVATION – REINFORCING STEEL

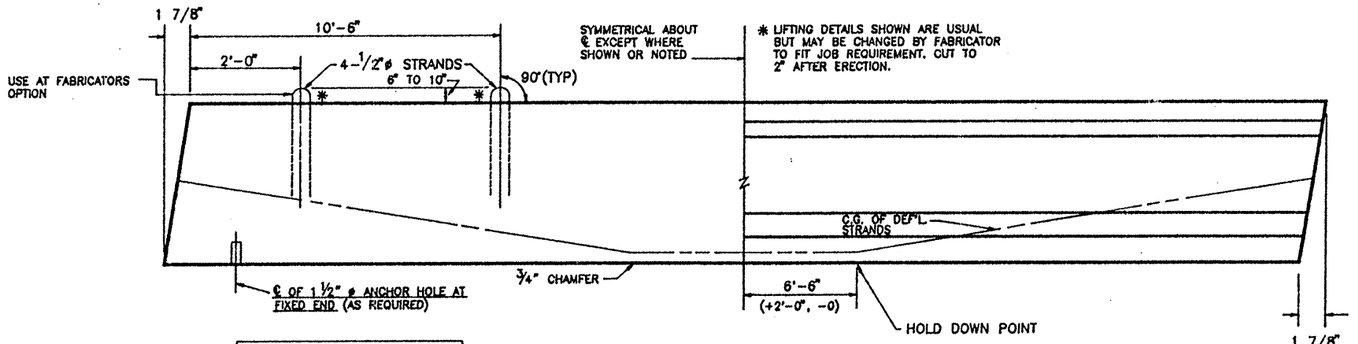

DOUBLE LIFTING LOOP DETAIL (TYP. FOR BEAMS OVER 75')

BEAM ELEVATION
SEE PLAN VIEW FOR HOLE(S) LOCATION

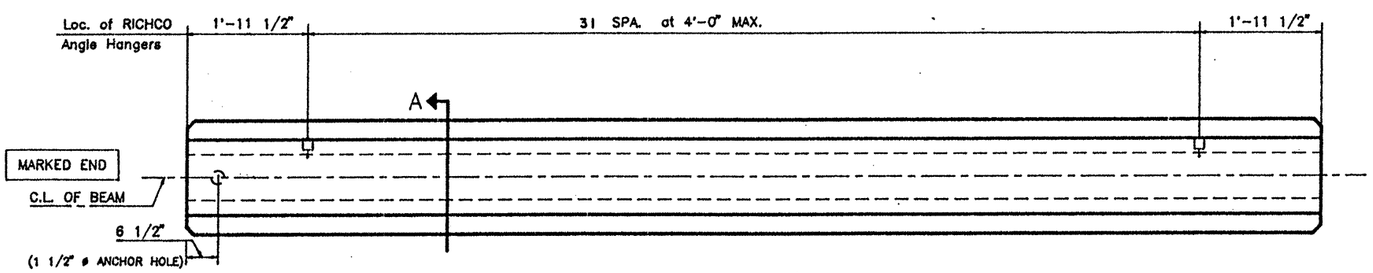

FIXED END

EXPANSION END

PLAN

TOP FINISH PANELS
SEE STANDARD SHEET S-"IV" FOR TOP FINISH AND OTHER NOTES AND DETAILS.

TEXAS DEPARTMENT OF TRANSPORTATION
APPROVED
DIVISION OF BRIDGES AND STRUCTURES

SEP 24 1992

APPROVAL OF THIS DRAWING DOES NOT RELIEVE THE CONTRACTOR OF THE RESPONSIBILITY FOR THE CORRECTNESS OF DETAIL.

REINFORCING STEEL SCHEDULE

BAR	QUANTITY PER BEAM	TOTAL QUANTITY	SIZE	LENGTH
R_{15}	133	133	#3	standard
X_{15}	129	129	#3	standard
Y_{15}	4	4	#6	standard
S_{15}	24	24	#7	standard
V_{15}	14	14	#3	standard
W_{15}	4	4	#5	standard
U_{15}	2	2	#5	125'-9"

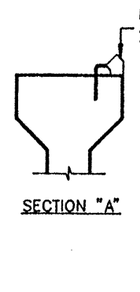

SECTION "A"

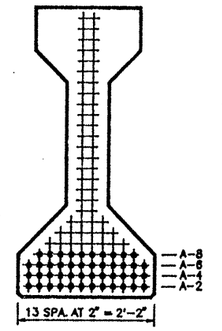

℄ SECTION

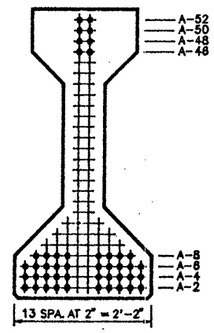

END VIEW

TYPE "IV" BEAM QUANTITY : 1

LO-LAX STRAND PATTERN		
NUMBER OF STRANDS : 46 ~1/2" ø 270 K @ 31.00 K EACH		
NUMBER OF STRAIGHT STRANDS	: 38	
NUMBER OF DEFLECTED STRANDS	: 8 @ A – 52	
CONCRETE RELEASE STRENGTH	: 5342	PSI
CONCRETE DESIGN STRENGTH	: 7169	PSI
ECCENTRICITY @ ℄ : 19.88"	ECCENTRICITY @ END : 12.23"	

DESIGN NO. : GPNSLR
TOTAL BEAM LENGTH OF THIS SHEET : 126.00'

MANCO PRESTRESS COMPANY

CONTRACTOR Gilbert of Texas Construction

FED.RD. DIV.NO.	STATE	PROJECT NO.	HWY. NO.
6	TEXAS	NH 92(50)M	83/281

STATE DIST.NO.	COUNTY	CONTROL NO.	SECTION NO.	JOB NO.
21	HIDALGO	39	17	97

COPYRIGHT 1989 BY
STRUCTURAL ENGINEERING ASSOCIATES, INC.
CONSULTING ENGINEERS, SAN ANTONIO, TEXAS

JOB NO.	DRAWN	CHECKED	DATE	SHEET/MARK NO.
92-018	C.A.J.	D.M.P.	8/26/92	IV-133
SEA JOB NO. 92-059H	FABRICATION SHEET			

330020

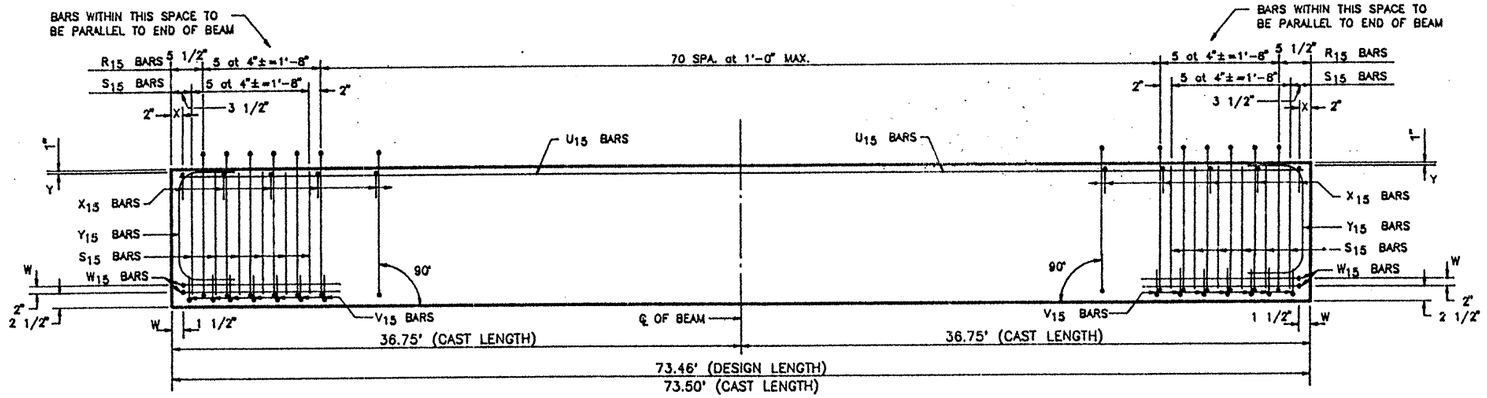

ELEVATION – REINFORCING STEEL

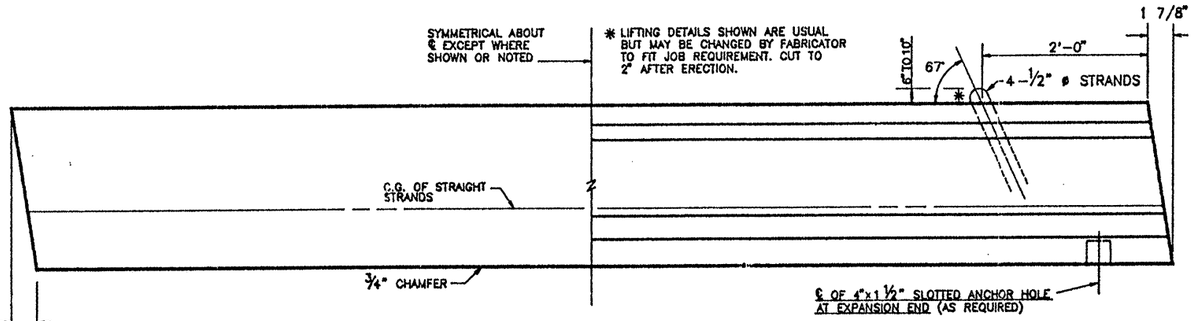

BEAM ELEVATION
SEE PLAN VIEW FOR HOLE(S) LOCATION

SINGLE LIFTING LOOP DETAIL
(TYP. FOR BEAMS UNDER 75')

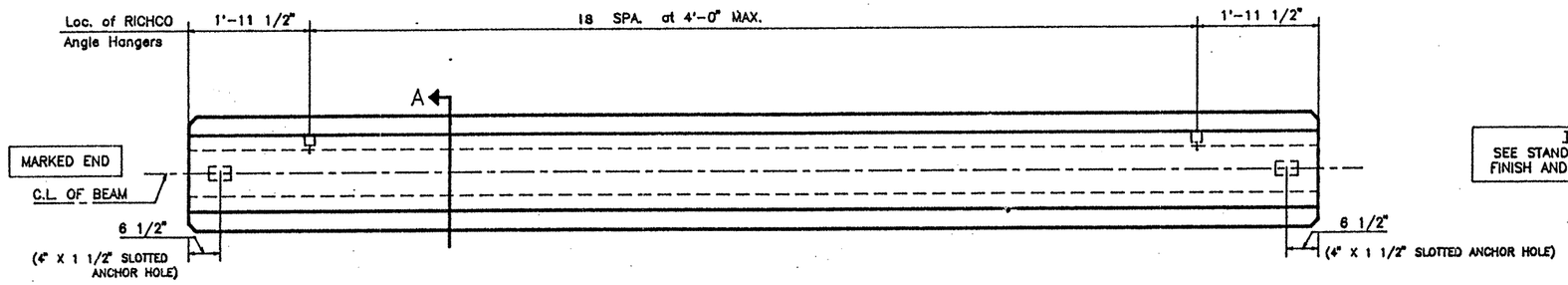

EXPANSION END

EXPANSION END

PLAN

TOP FINISH PANELS
SEE STANDARD SHEET S-"IV" FOR TOP FINISH AND OTHER NOTES AND DETAILS.

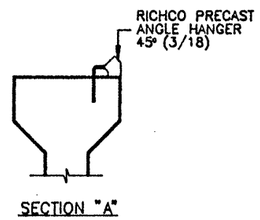

SECTION "A"

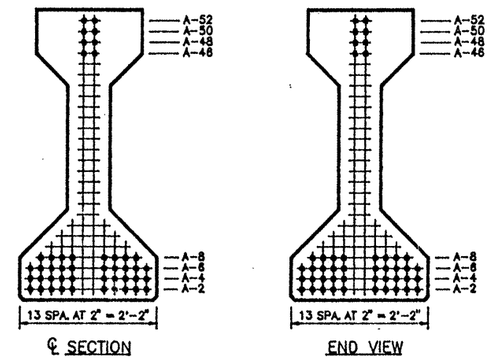

℄ SECTION

END VIEW

TYPE "IV" BEAM QUANTITY : 1

LO-LAX STRAND PATTERN		
NUMBER OF STRANDS	: 46 ~1/2" ø 270 K @ 31.00 K EACH	
NUMBER OF STRAIGHT STRANDS	: 46	
NUMBER OF DEFLECTED STRANDS	: NONE	
CONCRETE RELEASE STRENGTH	: 5360	PSI
CONCRETE DESIGN STRENGTH	: 5360	PSI
ECCENTRICITY @ ℄	: 12.23"	ECCENTRICITY @ END : 12.23"

DESIGN NO. : O.D.# 13
TOTAL BEAM LENGTH OF THIS SHEET : 73.46'

REINFORCING STEEL SCHEDULE

BAR	QUANTITY PER BEAM	TOTAL QUANTITY	SIZE	LENGTH
R_{15}	81	81	#3	standard
X_{15}	77	77	#3	standard
Y_{15}	4	4	#6	standard
S_{15}	24	24	#7	standard
V_{15}	14	14	#3	standard
W_{15}	4	4	#5	standard
U_{15}	2	2	#5	73'-3"

TEXAS DEPARTMENT OF TRANSPORTATION
APPROVED
DIVISION OF BRIDGES AND STRUCTURES

SEP 24 1992

APPROVAL OF THIS DRAWING DOES NOT RELIEVE THE CONTRACTOR OF THE RESPONSIBILITY FOR THE CORRECTNESS OF DETAIL.

MANCO PRESTRESS COMPANY

CONTRACTOR Gilbert of Texas Construction

FED.RD. DIV.NO.	STATE	PROJECT NO.			HWY. NO.
6	TEXAS	NH 92(50)M			83/281
STATE DIST.NO.	COUNTY		CONTROL NO.	SECTION NO.	JOB NO.
21	HIDALGO		39	17	97

COPYRIGHT 1989 BY
STRUCTURAL ENGINEERING ASSOCIATES, INC.
CONSULTING ENGINEERS, SAN ANTONIO, TEXAS

JOB NO.	DRAWN	CHECKED	DATE	SHEET/MARK NO.
92-018	C.A.J.	D.M.P.	8 / 26 /92	IV-134
SEA JOB NO. 92-059H	FABRICATION SHEET			

330020

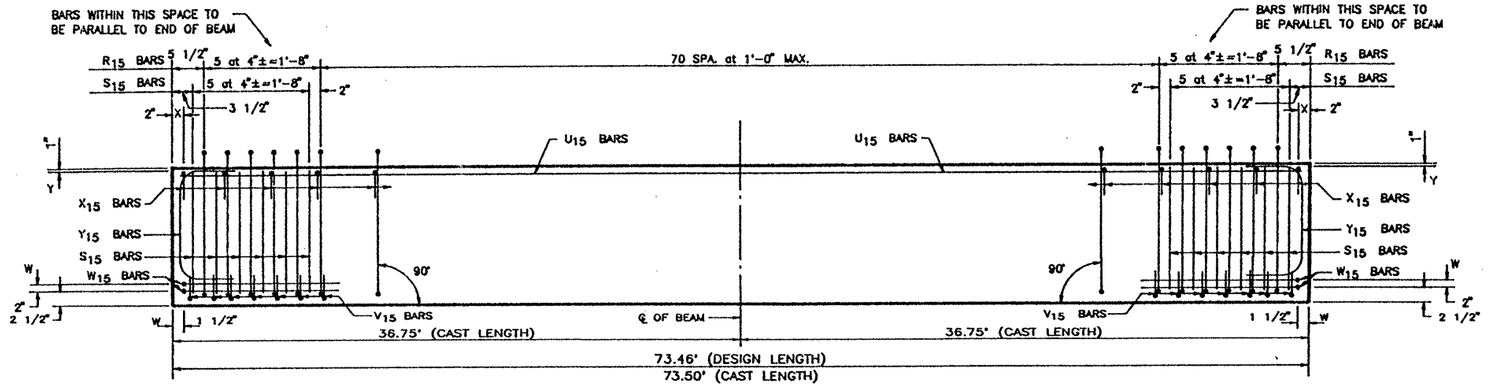

ELEVATION – REINFORCING STEEL

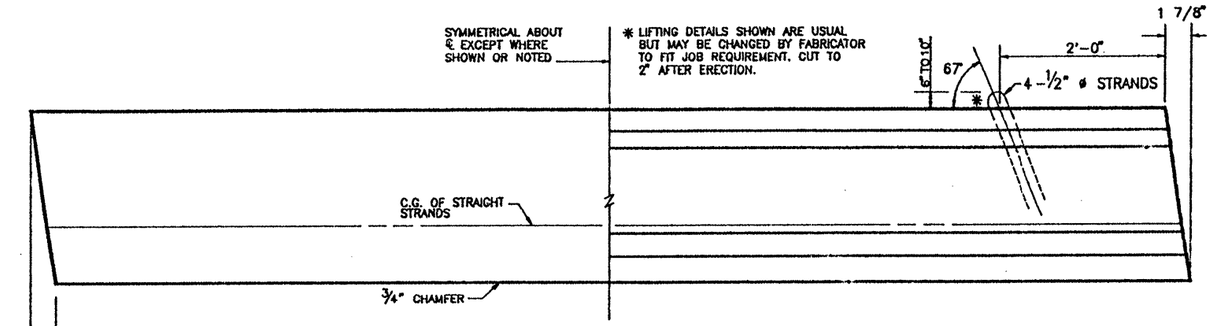

BEAM ELEVATION
SEE PLAN VIEW FOR HOLE(S) LOCATION

SINGLE LIFTING LOOP DETAIL
(TYP. FOR BEAMS UNDER 75')

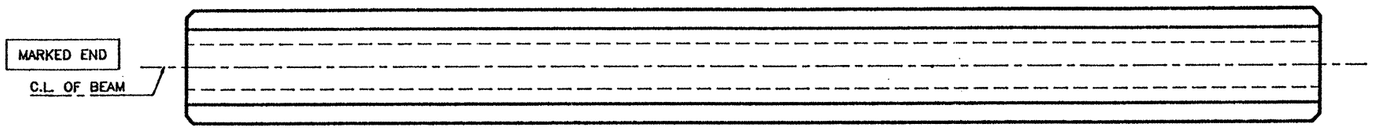

PLAN

TOP FINISH PANELS
SEE STANDARD SHEET S-"IV" FOR TOP FINISH AND OTHER NOTES AND DETAILS.

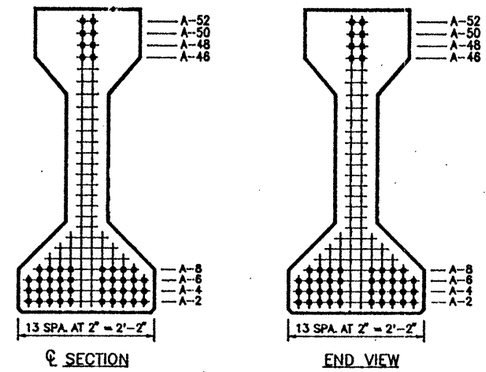

℄ SECTION

END VIEW

TYPE "IV" BEAM QUANTITY : 2

REINFORCING STEEL SCHEDULE				
BAR	QUANTITY PER BEAM	TOTAL QUANTITY	SIZE	LENGTH
R_{15}	81	162	#3	standard
X_{15}	77	154	#3	standard
Y_{15}	4	8	#6	standard
S_{15}	24	48	#7	standard
V_{15}	14	28	#3	standard
W_{15}	4	8	#5	standard
U_{15}	2	4	#5	73'-3"

TEXAS DEPARTMENT OF TRANSPORTATION
APPROVED
DIVISION OF BRIDGES AND STRUCTURES
SEP 24 1992
APPROVAL OF THIS DRAWING DOES NOT RELIEVE THE CONTRACTOR OF THE RESPONSIBILITY FOR THE CORRECTNESS OF DETAIL.

LO-LAX STRAND PATTERN		
NUMBER OF STRANDS	: 46 ~1/2" ø 270 K @ 31.00 K EACH	
NUMBER OF STRAIGHT STRANDS	: 46	
NUMBER OF DEFLECTED STRANDS	: NONE	
CONCRETE RELEASE STRENGTH	: 5360	PSI
CONCRETE DESIGN STRENGTH	: 5360	PSI
ECCENTRICITY @ ℄	: 12.23"	ECCENTRICITY @ END : 12.23"

DESIGN NO. : O.D.# 13
TOTAL BEAM LENGTH OF THIS SHEET : 146.92'

MANCO PRESTRESS COMPANY

CONTRACTOR Gilbert of Texas Construction

FED.RD. DIV.NO.	STATE	PROJECT NO.	HWY. NO.
6	TEXAS	NH 92(50)M	83/281

STATE DIST.NO.	COUNTY	CONTROL NO.	SECTION NO.	JOB NO.
21	HIDALGO	39	17	97

COPYRIGHT 1989 BY
STRUCTURAL ENGINEERING ASSOCIATES, INC.
CONSULTING ENGINEERS, SAN ANTONIO, TEXAS

JOB NO.	DRAWN	CHECKED	DATE	SHEET/MARK NO.
92-018	C.A.J.	D.M.P.	8 / 26 /92	IV-135
SEA JOB NO. 92-059H	FABRICATION SHEET			

330020

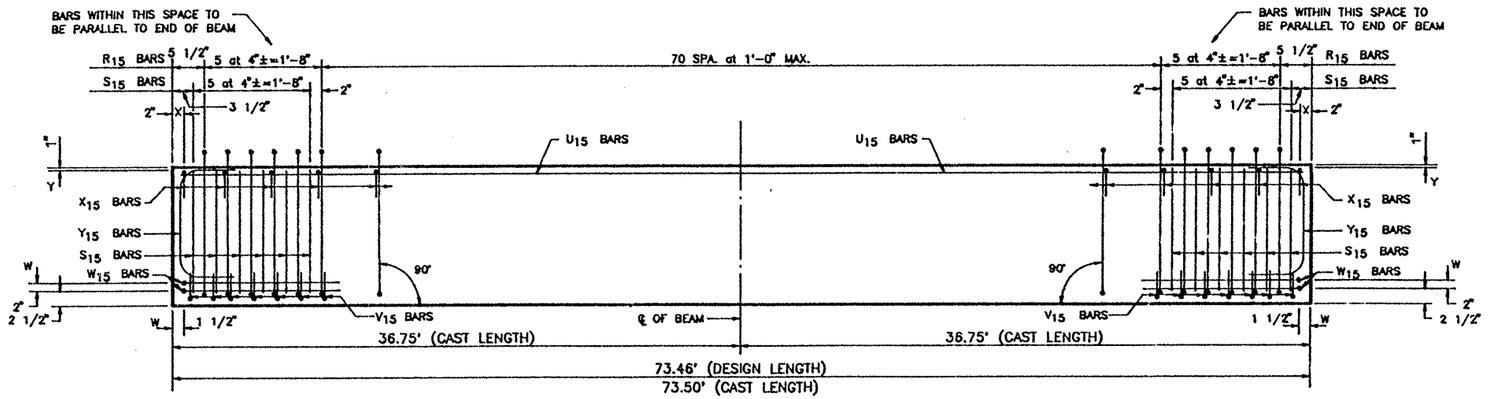

ELEVATION – REINFORCING STEEL

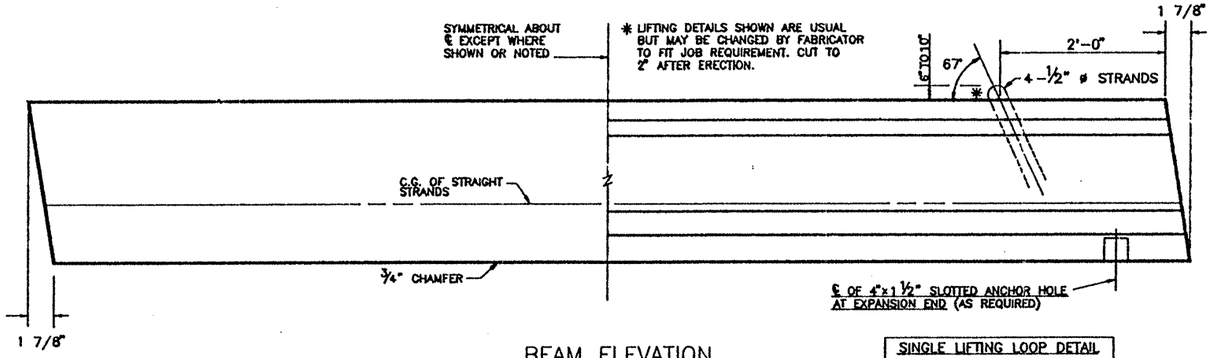

BEAM ELEVATION
SEE PLAN VIEW FOR HOLE(S) LOCATION

SINGLE LIFTING LOOP DETAIL
(TYP. FOR BEAMS UNDER 75')

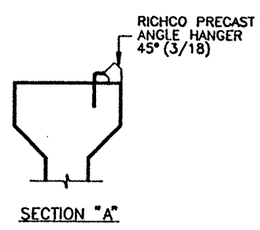

SECTION "A"

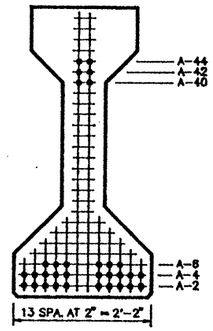

℄ SECTION

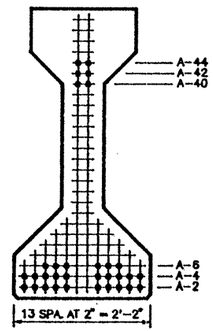

END VIEW

TYPE "IV" BEAM QUANTITY : 1

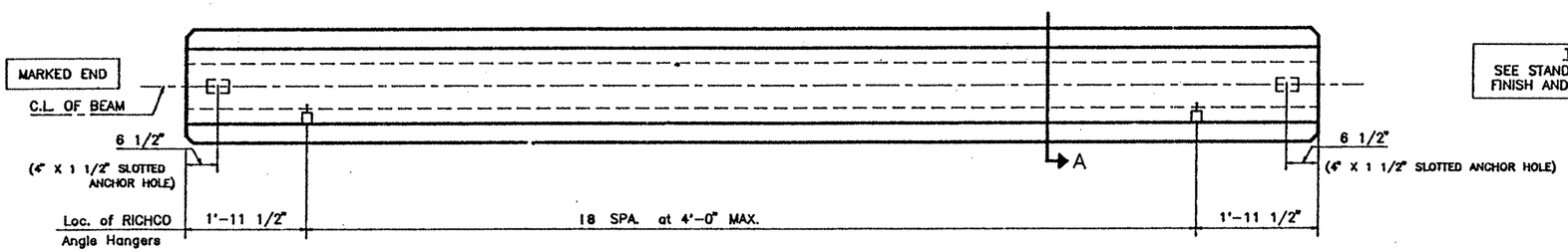

EXPANSION END

EXPANSION END

PLAN

TOP FINISH PANELS
SEE STANDARD SHEET S-"IV" FOR TOP FINISH AND OTHER NOTES AND DETAILS.

TEXAS DEPARTMENT OF TRANSPORTATION
APPROVED
DIVISION OF BRIDGES AND STRUCTURES

SEP 24 1992

APPROVAL OF THIS DRAWING DOES NOT RELIEVE THE CONTRACTOR OF THE RESPONSIBILITY FOR THE CORRECTNESS OF DETAIL.

REINFORCING STEEL SCHEDULE

BAR	QUANTITY PER BEAM	TOTAL QUANTITY	SIZE	LENGTH
R_{15}	81	81	#3	standard
X_{15}	77	77	#3	standard
Y_{15}	4	4	#6	standard
S_{15}	24	24	#7	standard
V_{15}	14	14	#3	standard
W_{15}	4	4	#5	standard
U_{15}	2	2	#5	73'-3"

LO-LAX STRAND PATTERN

NUMBER OF STRANDS	: 32 ~1/2" ø 270 K @ 31.00 K EACH	
NUMBER OF STRAIGHT STRANDS	: 32	
NUMBER OF DEFLECTED STRANDS	: NONE	
CONCRETE RELEASE STRENGTH	: 4020	PSI
CONCRETE DESIGN STRENGTH	: 5000	PSI
ECCENTRICITY @ ℄	: 13.88"	ECCENTRICITY @ END : 13.88"

DESIGN NO. : O.D.# 15
TOTAL BEAM LENGTH OF THIS SHEET : 73.46'

MANCO PRESTRESS COMPANY

CONTRACTOR Gilbert of Texas Construction

FED.RD. DIV.NO.	STATE	PROJECT NO.	HWY. NO.
6	TEXAS	NH 92(50)M	83/281

STATE DIST.NO.	COUNTY	CONTROL NO.	SECTION NO.	JOB NO.
21	HIDALGO	39	17	97

COPYRIGHT 1989 BY
STRUCTURAL ENGINEERING ASSOCIATES, INC.
CONSULTING ENGINEERS, SAN ANTONIO, TEXAS

JOB NO.	DRAWN	CHECKED	DATE	SHEET/MARK NO.
92-018	C.A.J.	D.M.P.	8 / 26 / 92	IV-136
SEA JOB NO. 92-059H	FABRICATION SHEET			

330020

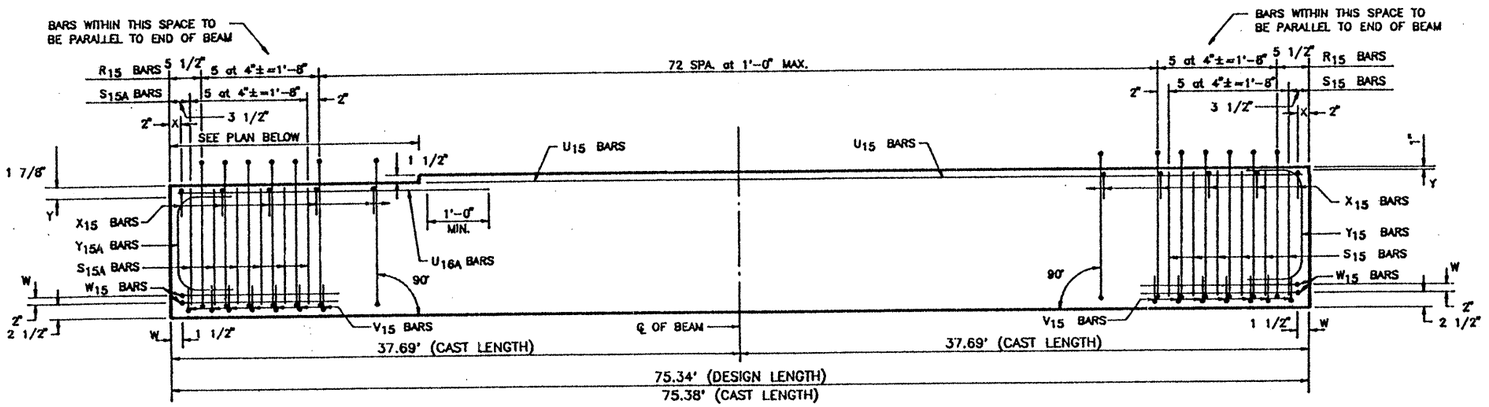

ELEVATION – REINFORCING STEEL

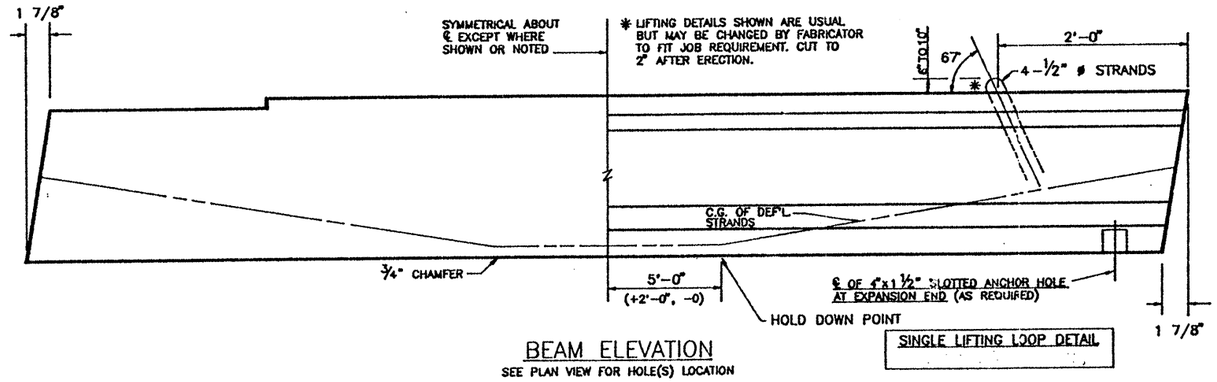

BEAM ELEVATION

SEE PLAN VIEW FOR HOLE(S) LOCATION

SINGLE LIFTING LOOP DETAIL

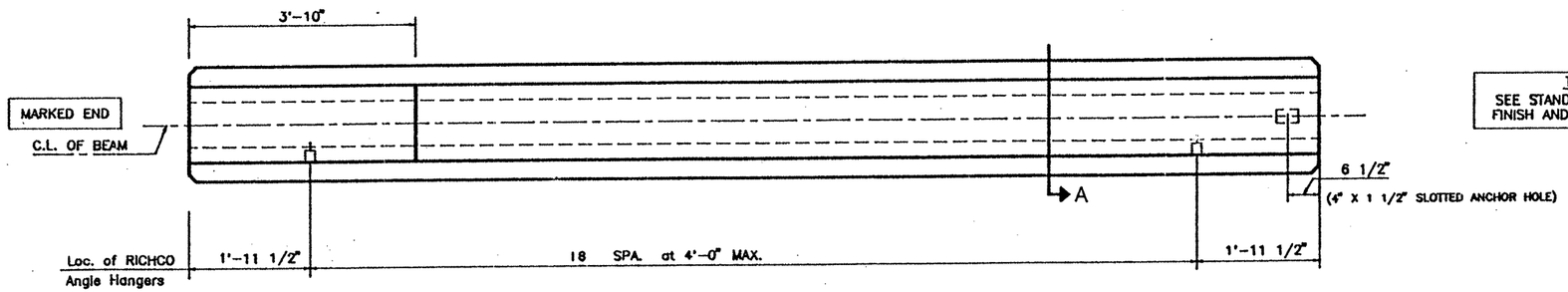

FIXED END

EXPANSION END

PLAN

TOP FINISH PANELS
SEE STANDARD SHEET S-"IV" FOR TOP FINISH AND OTHER NOTES AND DETAILS.

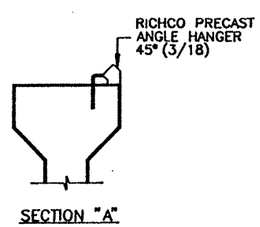

SECTION "A"

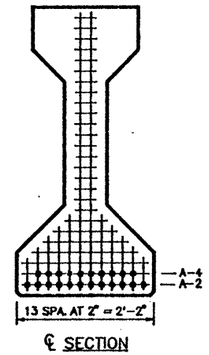

℄ SECTION

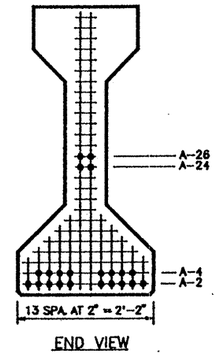

END VIEW

TYPE "IV" BEAM QUANTITY : 1

LO-LAX STRAND PATTERN		
NUMBER OF STRANDS : 22 ~1/2" ø 270 K @ 31.00 K EACH		
NUMBER OF STRAIGHT STRANDS	: 18	
NUMBER OF DEFLECTED STRANDS	: 4 @ A -- 26	
CONCRETE RELEASE STRENGTH	: 4000	PSI
CONCRETE DESIGN STRENGTH	: 5000	PSI
ECCENTRICITY @ ℄ : 21.84"	ECCENTRICITY @ END : 17.84"	

DESIGN NO. : GPNSLR

TOTAL BEAM LENGTH OF THIS SHEET : 75.34'

TEXAS DEPARTMENT OF TRANSPORTATION
APPROVED
DIVISION OF BRIDGES AND STRUCTURES

SEP 24 1992

APPROVAL OF THIS DRAWING DOES NOT RELIEVE THE CONTRACTOR OF THE RESPONSIBILITY FOR THE CORRECTNESS OF DETAIL.

REINFORCING STEEL SCHEDULE

BAR	QUANTITY PER BEAM	TOTAL QUANTITY	SIZE	LENGTH
R_{15}	83	83	#3	standard
X_{15}	79	79	#3	standard
Y_{15}	2	2	#6	standard
S_{15}	12	12	#7	standard
V_{15}	14	14	#3	standard
W_{15}	4	4	#5	standard
U_{15}	2	2	#5	71'-4"
Y_{15A}	2	2	#6	standard
S_{15A}	12	12	#7	standard
U_{16A}	2	2	#5	6'-6"

MANCO PRESTRESS COMPANY

CONTRACTOR Gilbert of Texas Construction

FED.RD. DIV.NO.	STATE	PROJECT NO.		HWY. NO.
6	TEXAS	NH 92(50)M		83/281
STATE DIST.NO.	COUNTY	CONTROL NO.	SECTION NO.	JOB NO.
21	HIDALGO	39	17	97

COPYRIGHT 1989 BY
STRUCTURAL ENGINEERING ASSOCIATES, INC. CONSULTING ENGINEERS, SAN ANTONIO, TEXAS

JOB NO.	DRAWN	CHECKED	DATE	SHEET/MARK NO.
92-018	C.A.J.	D.M.P.	8 / 26 /92	IV-137
SEA JOB NO. 92-059H	FABRICATION SHEET			

330020

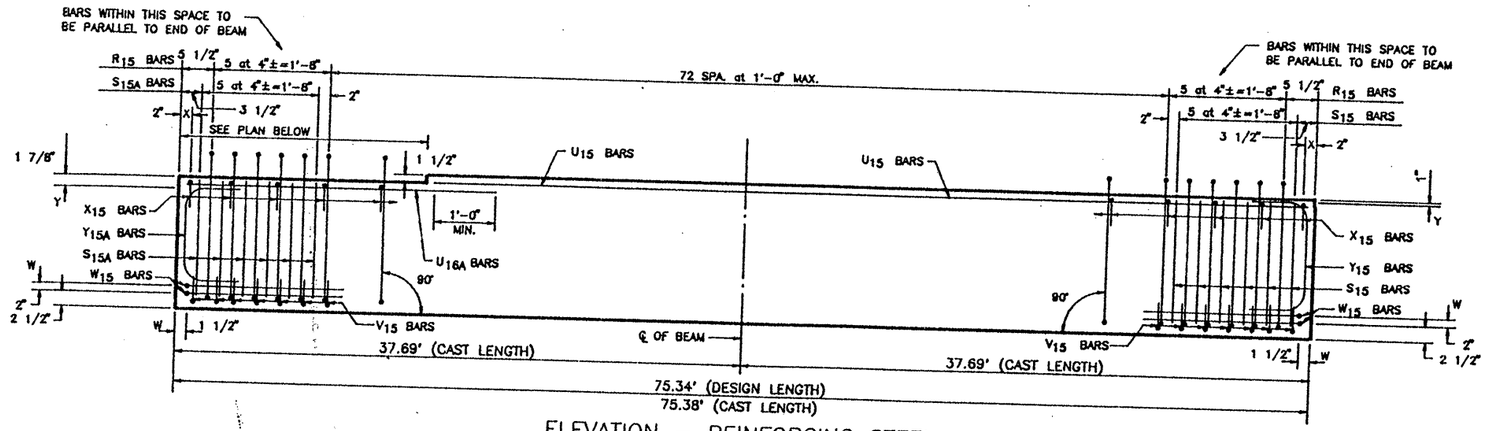

ELEVATION – REINFORCING STEEL

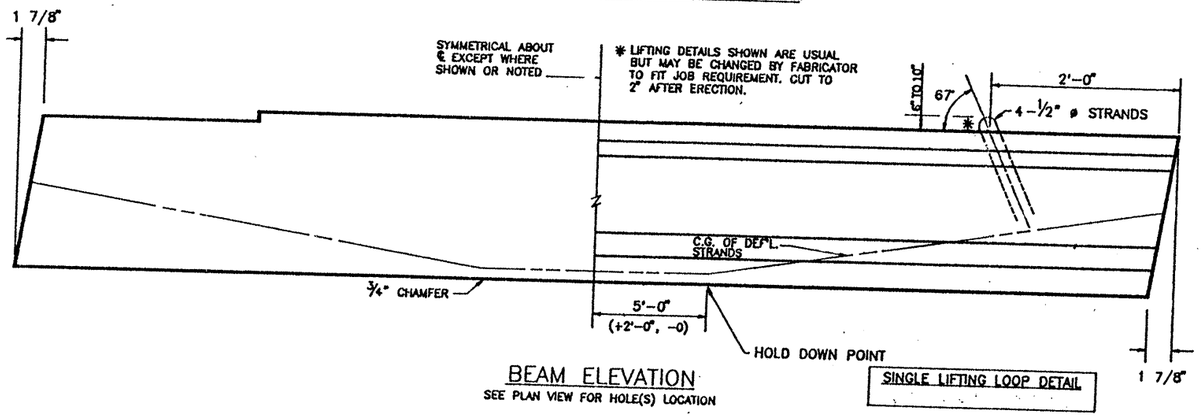

BEAM ELEVATION
SEE PLAN VIEW FOR HOLE(S) LOCATION

SINGLE LIFTING LOOP DETAIL

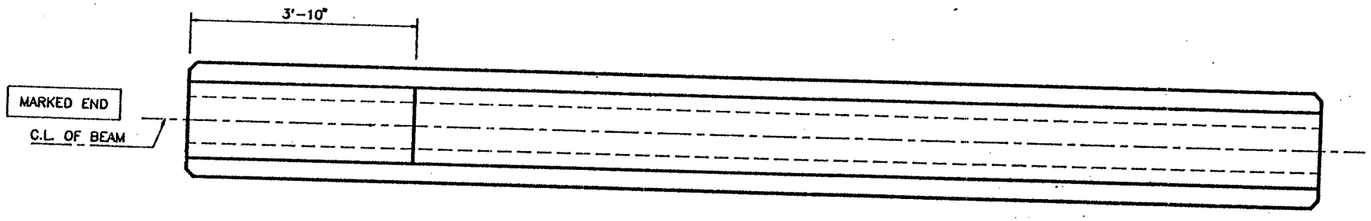

PLAN

TOP FINISH PANELS
SEE STANDARD SHEET S-"IV" FOR TOP FINISH AND OTHER NOTES AND DETAILS.

TEXAS DEPARTMENT OF TRANSPORTATION
APPROVED
DIVISION OF BRIDGES AND STRUCTURES

SEP 24 1992

APPROVAL OF THIS DRAWING DOES NOT RELIEVE THE CONTRACTOR OF THE RESPONSIBILITY FOR THE CORRECTNESS OF DETAIL.

REINFORCING STEEL SCHEDULE

BAR	QUANTITY PER BEAM	TOTAL QUANTITY	SIZE	LENGTH
R_{15}	83	166	#3	standard
X_{15}	79	158	#3	standard
Y_{15}	2	4	#6	standard
S_{15}	12	24	#7	standard
V_{15}	14	28	#3	standard
W_{15}	4	8	#5	standard
U_{15}	2	4	#5	71'-4"
Y_{15A}	2	4	#6	standard
S_{15A}	12	24	#7	standard
U_{16A}	2	4	#5	6'-6"

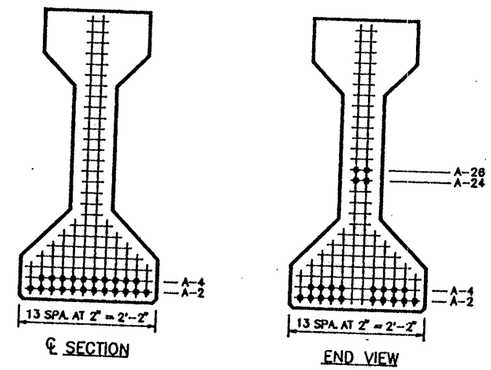

TYPE "IV" BEAM QUANTITY : 2

LO-LAX STRAND PATTERN		
NUMBER OF STRANDS	: 22 ~1/2" ø 270 K @ 31.00 K EACH	
NUMBER OF STRAIGHT STRANDS	: 18	
NUMBER OF DEFLECTED STRANDS	: 4 @ A – 26	
CONCRETE RELEASE STRENGTH	: 4000	PSI
CONCRETE DESIGN STRENGTH	: 5000	PSI
ECCENTRICITY @ ℄	: 21.84"	ECCENTRICITY @ END : 17.84"

DESIGN NO. : GPNSLR
TOTAL BEAM LENGTH OF THIS SHEET : 150.68'

MANCO PRESTRESS COMPANY
CONTRACTOR Gilbert of Texas Construction

FED.RD. DIV.NO.	STATE	PROJECT NO.	HWY. NO.
6	TEXAS	NH 92(50)M	83/281

STATE DIST.NO.	COUNTY	CONTROL NO.	SECTION NO.	JOB NO.
21	HIDALGO	39	17	97

COPYRIGHT 1989 BY
STRUCTURAL ENGINEERING ASSOCIATES, INC.
CONSULTING ENGINEERS, SAN ANTONIO, TEXAS

JOB NO.	DRAWN	CHECKED	DATE	SHEET/MARK NO.
92-018	C.A.J.	D. M.P.	8 / 26 / 92	IV-138
SEA JOB NO. 92-059H	FABRICATION SHEET			

330020

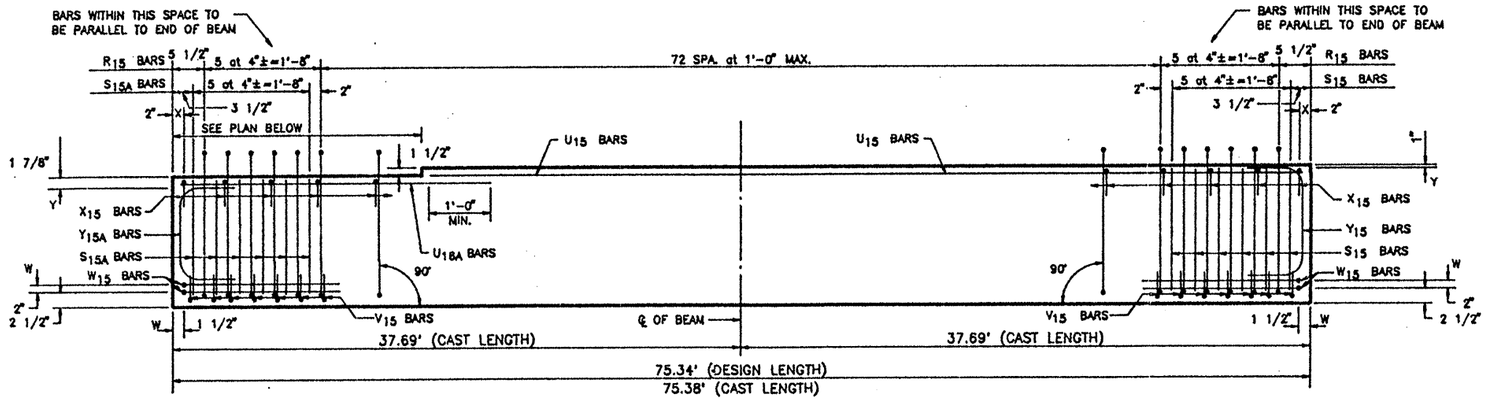

ELEVATION – REINFORCING STEEL

TEXAS DEPARTMENT OF TRANSPORTATION
APPROVED
DIVISION OF BRIDGES AND STRUCTURES

SEP 2 4 1992

APPROVAL OF THIS DRAWING DOES NOT RELIEVE THE CONTRACTOR OF THE RESPONSIBILITY FOR THE CORRECTNESS OF DETAIL.

REINFORCING STEEL SCHEDULE

BAR	QUANTITY PER BEAM	TOTAL QUANTITY	SIZE	LENGTH
R_{15}	83	83	#3	standard
X_{15}	79	79	#3	standard
Y_{15}	2	2	#6	standard
S_{15}	12	12	#7	standard
V_{15}	14	14	#3	standard
W_{15}	4	4	#5	standard
U_{15}	2	2	#5	71'-4"
Y_{15A}	2	2	#6	standard
S_{15A}	12	12	#7	standard
U_{16A}	2	2	#5	6'-6"

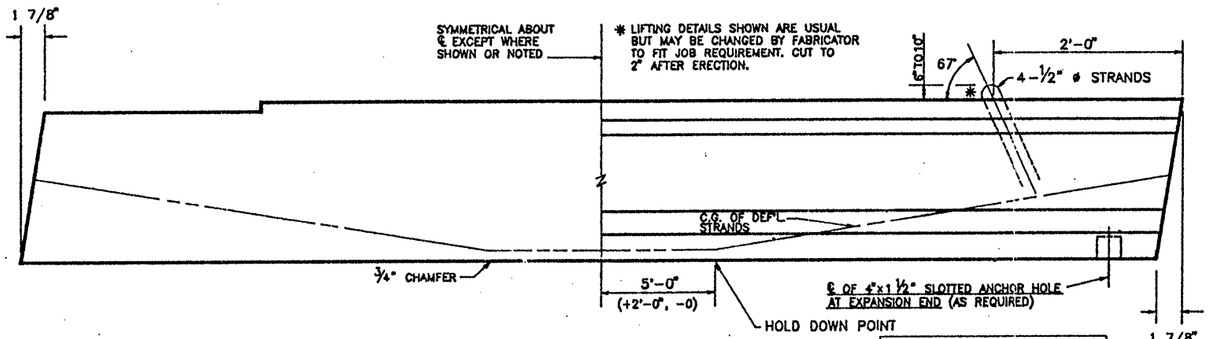

BEAM ELEVATION
SEE PLAN VIEW FOR HOLE(S) LOCATION

SINGLE LIFTING LOOP DETAIL

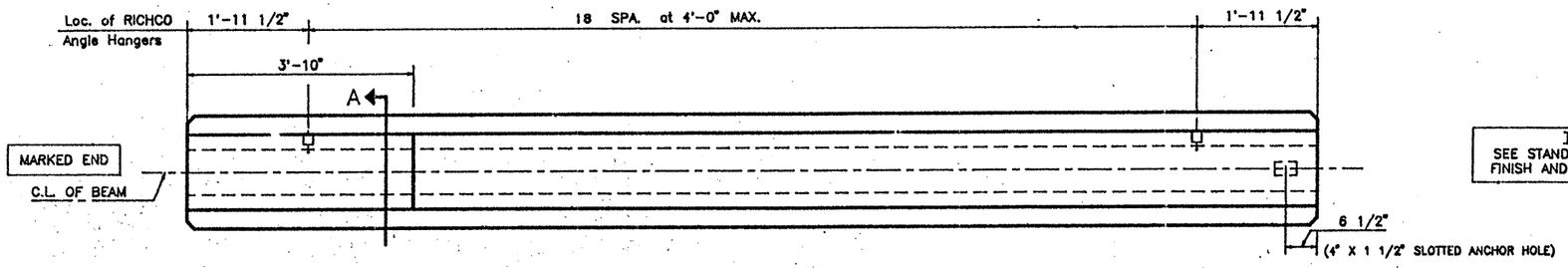

FIXED END

EXPANSION END

PLAN

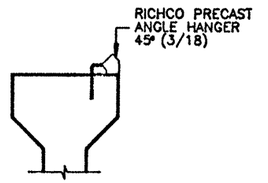

SECTION "A"

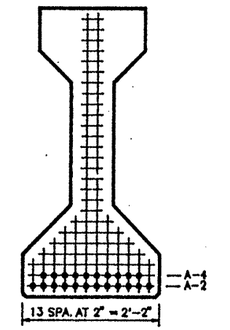

℄ SECTION

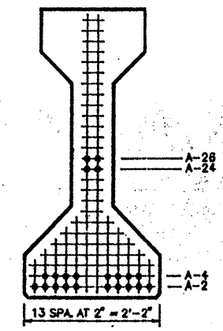

END VIEW

TYPE "IV" BEAM QUANTITY : 1

LO-LAX STRAND PATTERN		
NUMBER OF STRANDS : 22 ~1/2" ø 270 K ● 31.00 K EACH		
NUMBER OF STRAIGHT STRANDS	: 18	
NUMBER OF DEFLECTED STRANDS	: 4 ● A – 26	
CONCRETE RELEASE STRENGTH	: 4000	PSI
CONCRETE DESIGN STRENGTH	: 5000	PSI
ECCENTRICITY ● ℄ : 21.84"	ECCENTRICITY ● END : 17.84"	

TOP FINISH PANELS
SEE STANDARD SHEET S-"IV" FOR TOP FINISH AND OTHER NOTES AND DETAILS.

DESIGN NO. : GPNSLR
TOTAL BEAM LENGTH OF THIS SHEET : 75.34'

MANCO PRESTRESS COMPANY
• CONTRACTOR Gilbert of Texas Construction

FED.RD. DIV.NO.	STATE	PROJECT NO.	HWY. NO.
6	TEXAS	NH 92(50)M	83/281

STATE DIST.NO.	COUNTY	CONTROL NO.	SECTION NO.	JOB NO.
21	HIDALGO	39	17	97

COPYRIGHT 1989 BY
STRUCTURAL ENGINEERING ASSOCIATES, INC.
CONSULTING ENGINEERS, SAN ANTONIO, TEXAS

JOB NO.	DRAWN	CHECKED	DATE	SHEET/MARK NO.
92-018	C.A.J.	D.M.P.	8 / 26 / 92	IV-139
SEA JOB NO. 92-059H	FABRICATION SHEET			

330020

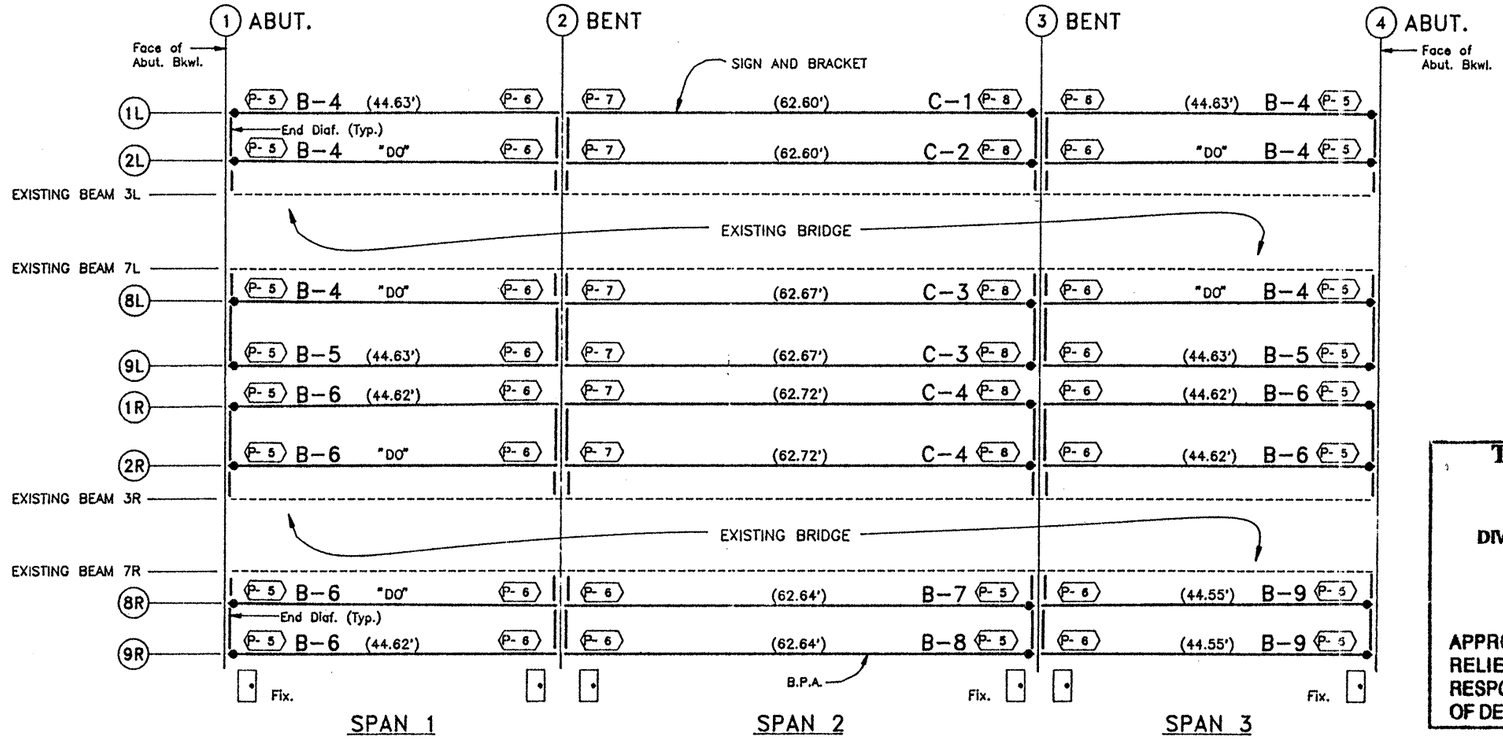

SUGAR ROAD OVERPASS LT.(WB) & RT.(EB)
MAIN LANES WIDENING
(STRUCTURE NO. 106 & 107)

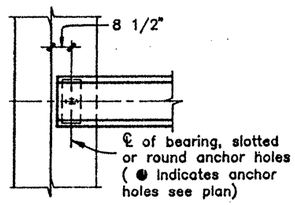

PLAN AT ABUT. 1
(ABUT. 4 SIM.)

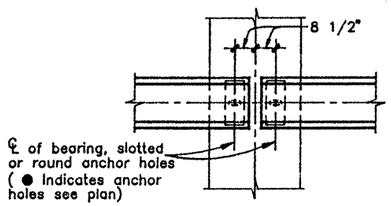

PLAN AT BENT 2&3

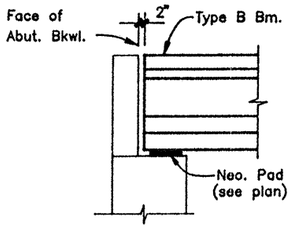

ELEV. AT ABUT. 1
(ABUT. 4 SIM.)

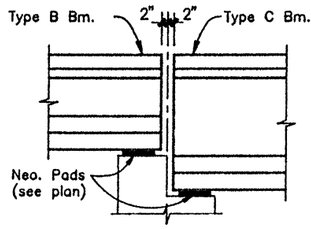

ELEV. AT BENT 2
(FOR BMS. 1L THRU 2R ONLY)

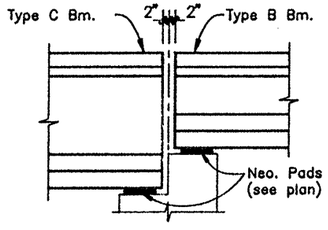

ELEV. AT BENT 3
(FOR BMS. 1L THRU 2R ONLY)

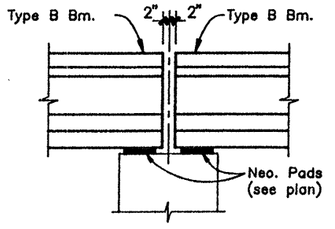

ELEV. AT BENTS 2 & 3
(FOR BMS. 8R & 9R ONLY)

NOTE: BEAM LENGTHS INDICATED ARE AS PER CONTRACTORS FIELD VERIFICATION SURVEY. SEE CONTRACTORS FIELD SURVEY WORKSHEET.

( ) INDICATES BEAM LENGTH

TEXAS DEPARTMENT OF TRANSPORTATION
APPROVED
DIVISION OF BRIDGES AND STRUCTURES

JUL 28 1992

APPROVAL OF THIS DRAWING DOES NOT RELIEVE THE CONTRACTOR OF THE RESPONSIBILITY FOR THE CORRECTNESS OF DETAIL.

MANCO PRESTRESS COMPANY

CONTRACTOR Glibert Texas Construction

CONTRACTORS OPTIONS	END DIAFRAM :STANDARD INTERIOR DIAFRAM :N/A	SLAB : CAST IN PLACE

FED.RD. DIV.NO.	STATE	PROJECT NO.	HWY. NO.
6	TEXAS	NH 92(50)M	U.S. 83/281

STATE DIST.NO.	COUNTY	CONTROL NO.	SECTION NO.	JOB NO.
21	HIDALGO	0039	17	097

COPYRIGHT 1989 BY
STRUCTURAL ENGINEERING ASSOCIATES, INC.
CONSULTING ENGINEERS, SAN ANTONIO, TEXAS

JOB NO. 92-018	DRAWN C.A.J.	CHECKED D.M.P.	DATE 7-01-92	SHEET NO. E-9
SEA JOB NO. 92-059H	ERECTION SHEET			

328071

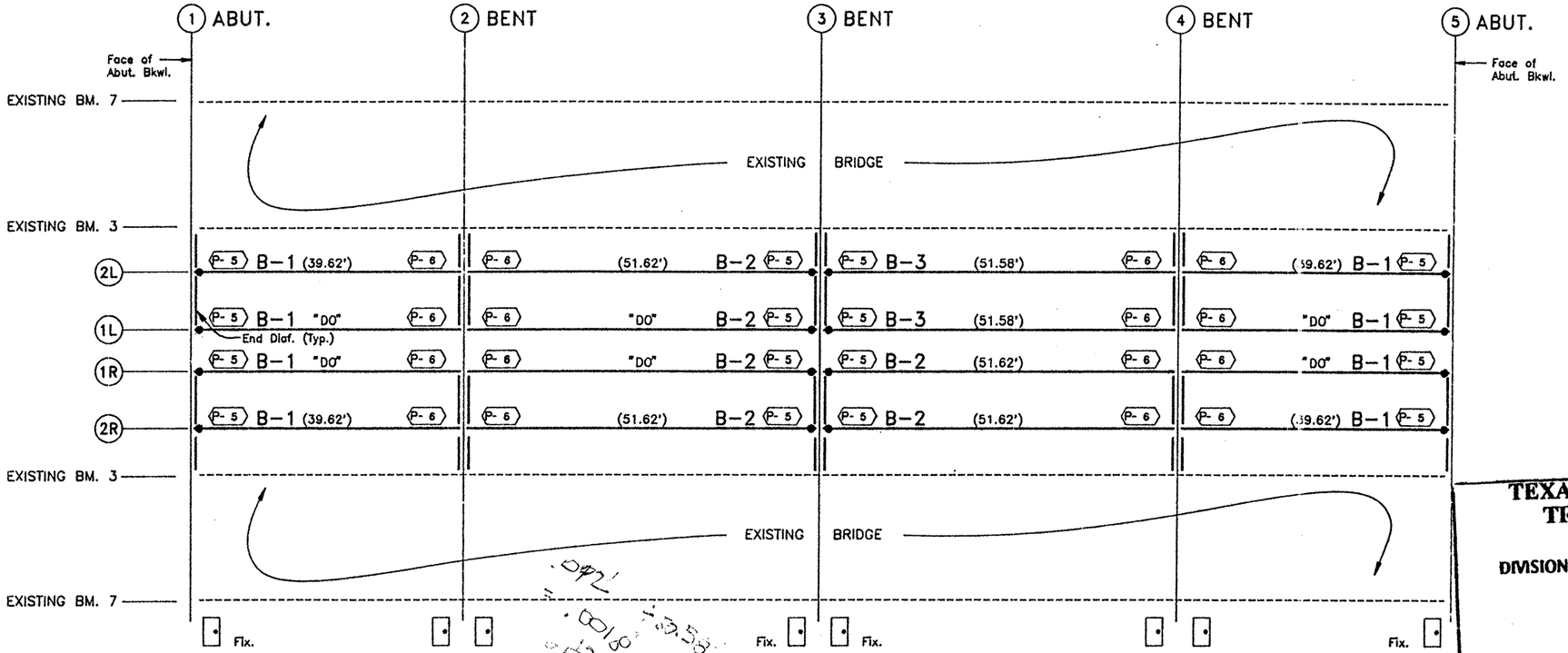

TEXAS DEPARTMENT OF TRANSPORTATION
APPROVED
DIVISION OF BRIDGES AND STRUCTURES

JUL 28 1992

APPROVAL OF THIS DRAWING DOES NOT RELIEVE THE CONTRACTOR OF THE RESPONSIBILITY FOR THE CORRECTNESS OF DETAIL.

U.S. 281 OVERPASS LT. & RT.
MAIN LANES WIDENING
(STRUCTURE NO. 108 & 109)

NOTE: BEAM LENGTHS INDICATED ARE AS PER CONTRACTORS FIELD VERIFICATION SURVEY. SEE CONTRACTORS FIELD SURVEY WORKSHEET.

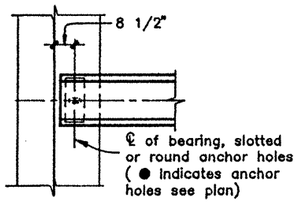

PLAN AT ABUT. 1
(ABUT. 5 SIM.)

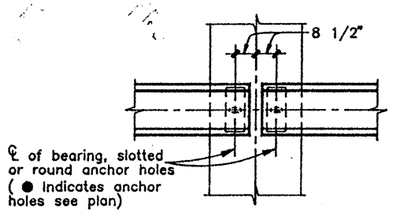

PLAN AT BENTS 2,3 & 4

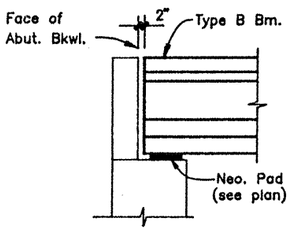

ELEV. AT ABUT. 1
(ABUT. 5 SIM.)

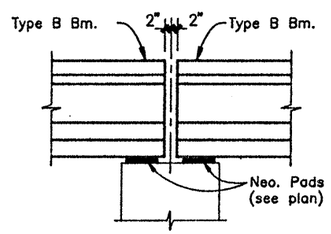

ELEV. AT BENTS 2,3 & 4

( ) INDICATES BEAM LENGTH

MANCO PRESTRESS COMPANY				
CONTRACTOR Gilbert Texas Construction				
CONTRACTORS OPTIONS	END DIAFRAM :STANDARD INTERIOR DIAFRAM :N/A			SLAB : CAST IN PLACE
FED.RD. DIV.NO.	STATE	PROJECT NO.		HWY. NO.
6	TEXAS	NH 92(50)M		U.S. 83/281
STATE DIST.NO.	COUNTY	CONTROL NO.	SECTION NO.	JOB NO.
21	HIDALGO	0039	17	097

COPYRIGHT 1989 BY STRUCTURAL ENGINEERING ASSOCIATES, INC. CONSULTING ENGINEERS, SAN ANTONIO, TEXAS

JOB NO. 92-018	DRAWN C.A.J.	CHECKED D.M.P.	DATE 7-01-92	SHEET NO. E-8
SEA JOB NO. 92-059H	ERECTION SHEET			

328071

INDEX

STRUCTURE		BEAM		LENGTH			1/2"ø-270k LO-LAX STRANDS					CONCRETE		ENDS		BEAM DETAIL SHEET NO.	DESIGN REFERENCE NO.	REMARKS
										DEPRESSED								
DESIGNATION	SPAN NO.	TYPE & MARK NO.	QUANTITY	I.D.T.S. ADDED	DESIGN (A)	CAST (B)	TOTAL QUANTITY	"e" AT ℄	"e" AT END	QUAN.	AT	MINIMUM RELEASE	MIN. COMP. 28 DAY STRENGTH	SKEW (INCHES)	BATTER (INCHES)			
U.S. 281 OVERPASS LT. & RT. MAIN LANES WIDENING (STRUCTURE NO. 108 & 109)	1,4	B-1	8	None	39.62'	39.66'	14	8.93"	8.93"	STRAIGHT		4000	5000	None	None	B-1	O.D.#7	NONE
	2,3	B-2	6	None	51.62'	51.67'	16	11.93"	8.43"	4	A-18	4415	5000	None	None	B-2	GPNSLR	NONE
	3	B-3	2	None	51.58'	51.63'	16	11.93"	8.43"	4	A-18	4415	5000	None	None	B-3	GPNSLR	NONE
SUGAR ROAD OVERPASS LT.(WB) & RT.(EB) MAIN LANES WIDENING (STRUCTURE NO. 106 & 107)	1,3	B-4	6	None	44.63'	44.67'	20	7.13"	7.13"	STRAIGHT		5020	5020	None	None	B-4	O.D.#6	NONE
	1,3	B-5	2	None	44.63'	44.67'	14	11.50"	8.93"	6	A-12	4000	5000	None	None	B-5	GPNSLR	NONE
	1,3	B-6	6	None	44.62'	44.66'	18	7.60"	7.60"	STRAIGHT		4670	5000	None	None	B-6	O.D.#8	NONE
	2	C-1	1	None	62.60'	62.66'	22	13.82"	8.91"	6	A-24	4091	5000	None	None	C-1	GPNSLR	NONE
	2	C-2	1	None	62.60'	62.66'	22	13.82"	8.91"	6	A-24	4091	5000	None	None	C-2	GPNSLR	NONE
	2	C-3	2	None	62.67'	62.73'	22	13.82"	8.91"	6	A-24	4091	5000	None	None	C-3	GPNSLR	NONE
	2	C-4	2	None	62.72'	62.78'	22	13.82"	8.91"	6	A-24	4090	5000	None	None	C-4	O.D.#5	NONE
	2	B-7	1	None	62.64'	62.70'	20	11.33"	7.13"	6	A-20	5092	5092	None	None	B-7	GPNSLR	NONE
	2	B-8	1	None	62.64'	62.70'	20	11.33"	7.13"	6	A-20	5092	5092	None	None	B-8	GPNSLR	NONE
	3	B-9	2	None	44.55'	44.59'	18	7.60"	7.60"	STRAIGHT		4670	5000	None	None	B-9	O.D.#8	NONE

4095

SHEET I-3

TEXAS DEPARTMENT OF TRANSPORTATION
APPROVED EXCEPT AS NOTED
DIVISION OF BRIDGES AND STRUCTURES

JUL 28 1992

APPROVAL OF THIS DRAWING DOES NOT RELIEVE THE CONTRACTOR OF THE RESPONSIBILITY FOR THE CORRECTNESS OF DETAIL.

REV. 4095

PARTIAL SUBMITTAL NO. 2
TOTAL LINEAR FEET OF THIS PROJECT : 1944.96'

MANCO PRESTRESS COMPANY

CONTRACTOR : Gilbert Texas Construction

FED.RD. DIV.NO.	STATE	PROJECT NO.			HWY. NO.
6	TEXAS	NH 92(50)M			U.S. 83/281
STATE DIST.NO.	COUNTY		CONTROL NO.	SECTION NO.	JOB NO.
21	HIDALGO		0039	17	097

COPYRIGHT 1989 BY SEA STRUCTURAL ENGINEERING ASSOCIATES, INC. *CONSULTING ENGINEERS*, SAN ANTONIO, TEXAS

JOB NO.	DRAWN	CHECKED	DATE	SHEET NO.
92-018	C.A.J.	D.M.P.	7-01-92	I-3
SEA JOB NO. 92-059H	INDEX SHEET			

ELASTOMERIC BEARING PADS SCHEDULE

MARK	TYPE	DURO.	QUANT.	X	Y	L	W	A	B	C	D	E	F
P-5	AH	50	34	2 1/2"	2 1/2"	16"	8"	———	———	———	———	4"	8"
P-6	A	50	34	2 1/2"	2 1/2"	16"	8"	———	———	———	———	———	———
P-7	A	50	6	2 1/2"	2 1/2"	19"	9"	———	———	———	———	———	———
P-8	AH	50	6	2 1/2"	2 1/2"	19"	9"	———	———	———	———	4 1/2"	9 1/2"

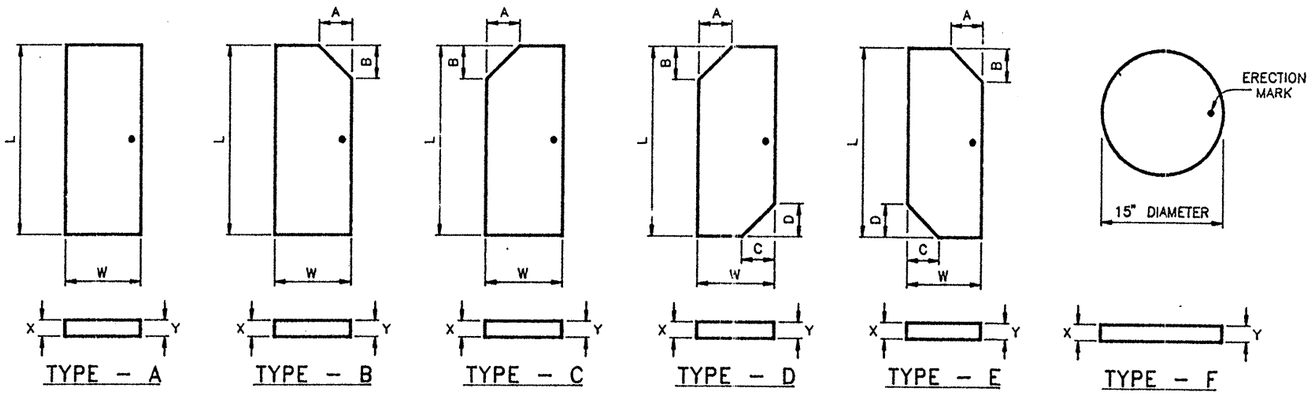

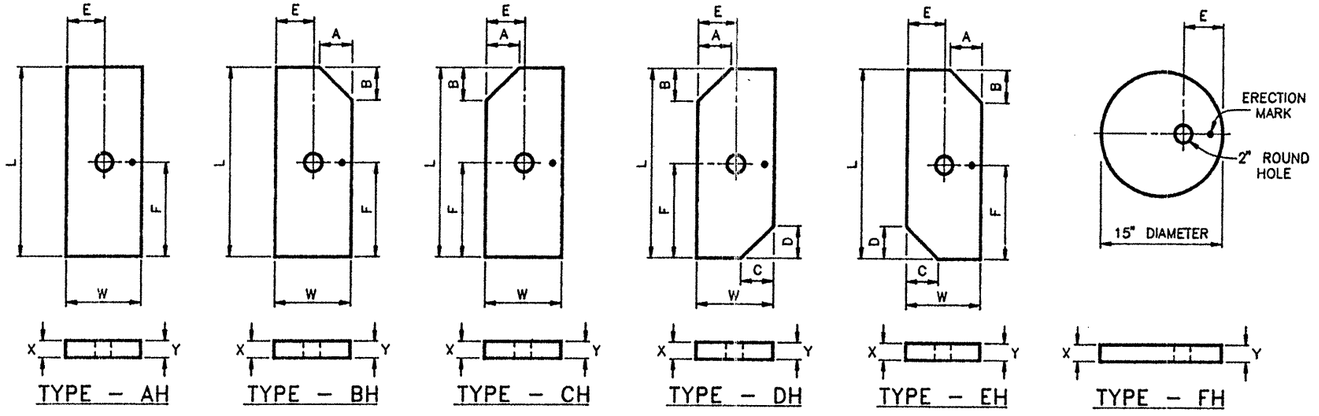

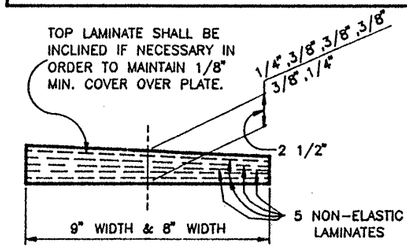

50 DUROMETER
LAMINATED BEARING

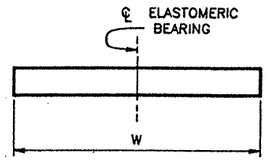

70 DUROMETER
PLAIN BEARING

TEXAS DEPARTMENT OF TRANSPORTATION
APPROVED
DIVISION OF BRIDGES AND STRUCTURES

JUL 28 1992

APPROVAL OF THIS DRAWING DOES NOT RELIEVE THE CONTRACTOR OF THE RESPONSIBILITY FOR THE CORRECTNESS OF DETAIL.

O DENOTES 2" ROUND HOLE

• DENOTES ERECTION MARK

MANCO PRESTRESS COMPANY

CONTRACTOR : Gilbert Texas Construction

FED.RD. DIV.NO.	STATE	PROJECT NO.		HWY. NO.
6	TEXAS	NH 92(50)M		U.S. 83/281
STATE DIST.NO.	COUNTY	CONTROL NO.	SECTION NO.	JOB NO.
21	HIDALGO	0039	17	097

COPYRIGHT 1989 BY SEA STRUCTURAL ENGINEERING ASSOCIATES, INC. *CONSULTING ENGINEERS*, SAN ANTONIO, TEXAS

JOB NO.	DRAWN	CHECKED	DATE	SHEET NO.
92-018	C.A.J.	D.M.P.	7-01-92	NP-2
SEA JOB NO. 92-059H	NEOPRENE PADS			

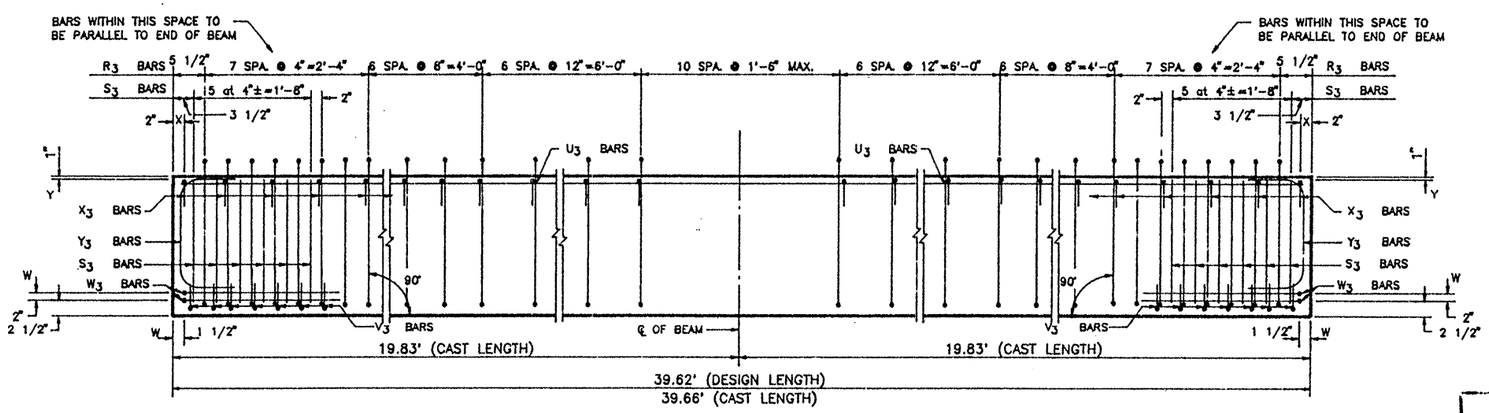

ELEVATION — REINFORCING STEEL

REINFORCING STEEL SCHEDULE				
BAR	QUANTITY PER BEAM	TOTAL QUANTITY	SIZE	LENGTH
R_3	49	392	#4	standard
X_3	43	344	#3	standard
Y_3	4	32	#6	standard
S_3	24	192	#5	standard
V_3	14	112	#3	standard
W_3	4	32	#5	standard
U_3	2	16	#5	39'-5"

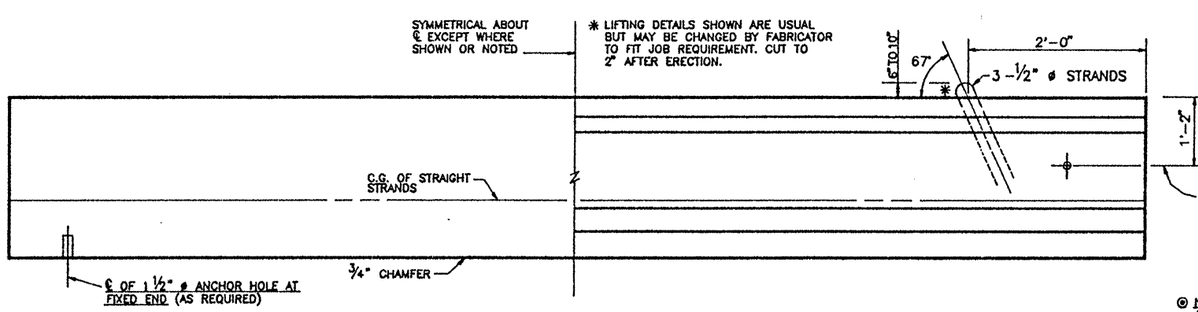

BEAM ELEVATION
SEE PLAN VIEW FOR HOLE(S) LOCATION

SINGLE LIFTING LOOP DETAIL
(TYP. FOR BEAMS UNDER 75')

◉ NOTE
A 2" ø HOLE MAY BE USED AT THE OPTION OF THE FABRICATOR.

TEXAS DEPARTMENT OF TRANSPORTATION
APPROVED
DIVISION OF BRIDGES AND STRUCTURES
JUL 28 1992
APPROVAL OF THIS DRAWING DOES NOT RELIEVE THE CONTRACTOR OF THE RESPONSIBILITY FOR THE CORRECTNESS OF DETAIL.

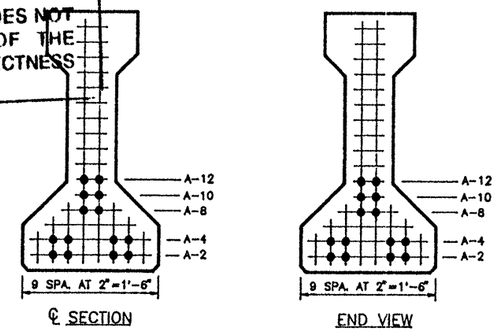

TYPE "B" BEAM QUANTITY : 8

LO-LAX STRAND PATTERN		
NUMBER OF STRANDS : 14 ~1/2" ø 270 K @ 31.00 K EACH		
NUMBER OF STRAIGHT STRANDS	: 14	
NUMBER OF DEFLECTED STRANDS	: NONE	
CONCRETE RELEASE STRENGTH	: 4000	PSI
CONCRETE DESIGN STRENGTH	: 5000	PSI
ECCENTRICITY @ ℄ : 8.93"	ECCENTRICITY @ END : 8.93"	

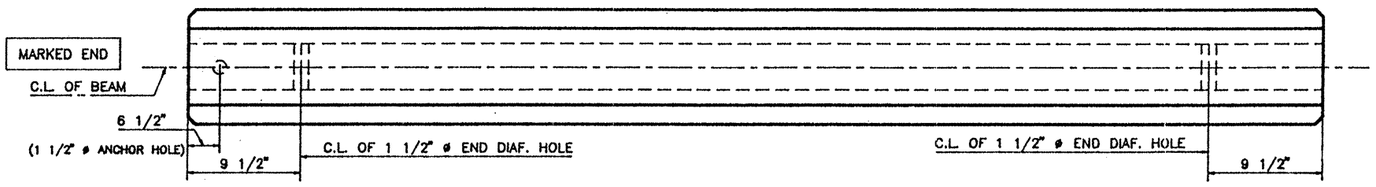

PLAN

TOP FINISH C.I.P.
SEE STANDARD SHEET S-"B" FOR TOP FINISH AND OTHER NOTES AND DETAILS.

DESIGN NO. : O.D.#7
TOTAL BEAM LENGTH OF THIS SHEET : 316.96'

MANCO PRESTRESS COMPANY
CONTRACTOR Gilbert Texas Construction

FED.RD. DIV.NO.	STATE	PROJECT NO.	HWY. NO.
6	TEXAS	NH 92(50)M	U.S. 83/281

STATE DIST.NO.	COUNTY	CONTROL NO.	SECTION NO.	JOB NO.
21	HIDALGO	0039	17	097

COPYRIGHT 1989 BY
STRUCTURAL ENGINEERING ASSOCIATES, INC.
CONSULTING ENGINEERS, SAN ANTONIO, TEXAS

JOB NO.	DRAWN	CHECKED	DATE	SHEET/MARK NO.
92-018	C.A.J.	D.M.P.	7-01-92	B-1
SEA JOB NO. 92-059H	FABRICATION SHEET			

327252

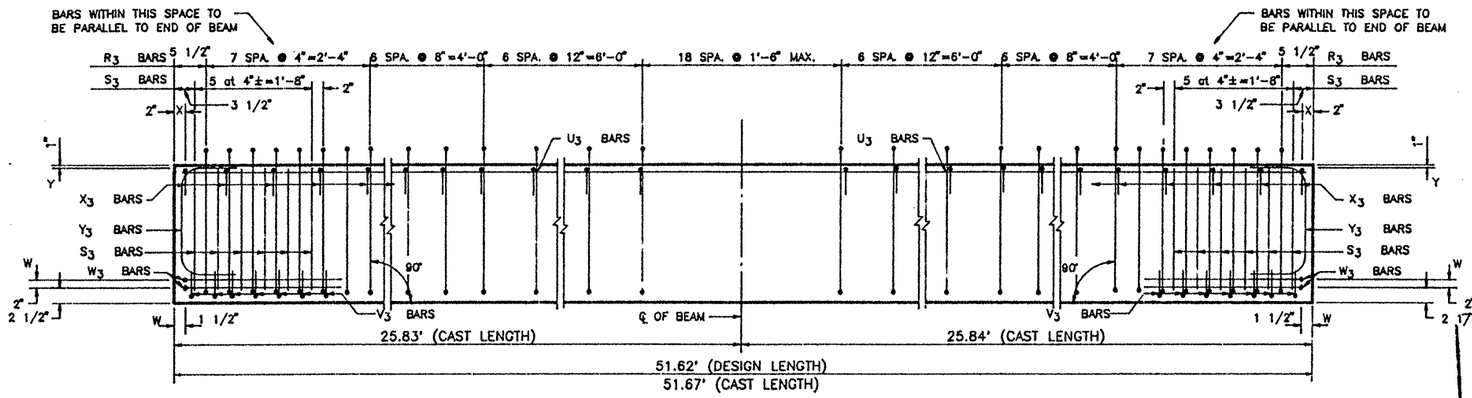

ELEVATION – REINFORCING STEEL

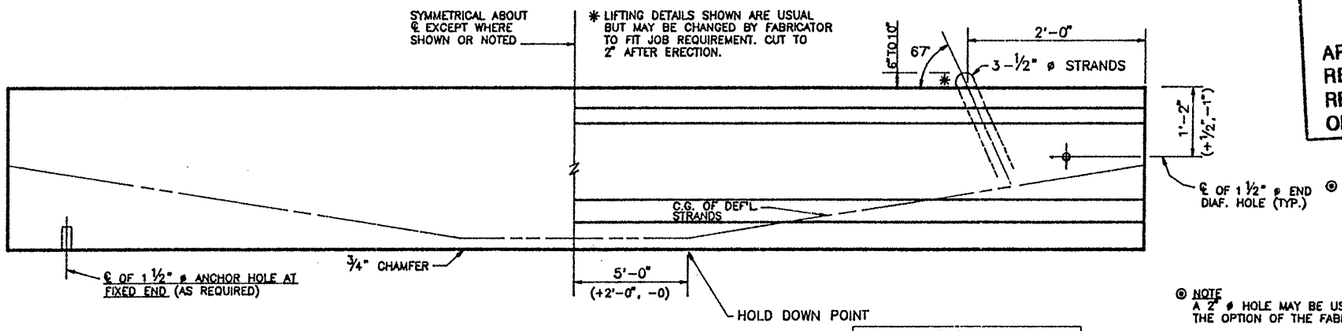

BEAM ELEVATION
SEE PLAN VIEW FOR HOLE(S) LOCATION

SINGLE LIFTING LOOP DETAIL
(TYP. FOR BEAMS UNDER 75')

⊙ NOTE
A 2" ø HOLE MAY BE USED AT THE OPTION OF THE FABRICATOR.

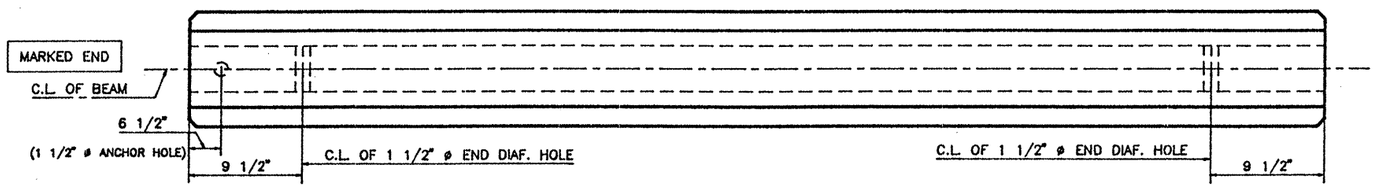

FIXED END

EXPANSION END

PLAN

TOP FINISH C.I.P.
SEE STANDARD SHEET S-"B" FOR TOP FINISH AND OTHER NOTES AND DETAILS.

REINFORCING STEEL SCHEDULE				
BAR	QUANTITY PER BEAM	TOTAL QUANTITY	SIZE	LENGTH
R_3	57	342	#4	standard
X_3	51	306	#3	standard
Y_3	4	24	#6	standard
S_3	24	144	#5	standard
V_3	14	84	#3	standard
W_3	4	24	#5	standard
U_3	2	12	#5	51'-5"

TEXAS DEPARTMENT OF TRANSPORTATION
APPROVED
DIVISION OF BRIDGES AND STRUCTURES
JUL 28 1992
APPROVAL OF THIS DRAWING DOES NOT RELIEVE THE CONTRACTOR OF THE RESPONSIBILITY FOR THE CORRECTNESS OF DETAIL.

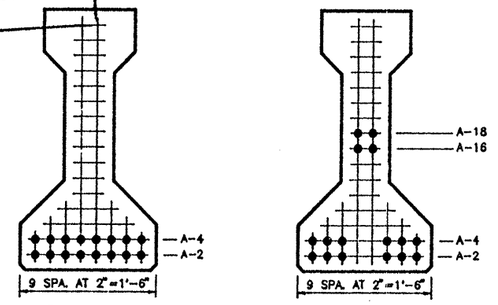

TYPE "B" BEAM QUANTITY : 6

LO-LAX STRAND PATTERN	
NUMBER OF STRANDS : 16 ~1/2" ø 270 K @ 31.00 K EACH	
NUMBER OF STRAIGHT STRANDS	: 12
NUMBER OF DEFLECTED STRANDS	: 4 ❷ A – 18
CONCRETE RELEASE STRENGTH	: 4415 PSI
CONCRETE DESIGN STRENGTH	: 5000 PSI
ECCENTRICITY ❶ ℄ : 11.93"	ECCENTRICITY ❷ END : 8.43"

DESIGN NO. : GPNSLR
TOTAL BEAM LENGTH OF THIS SHEET : 309.72'

MANCO PRESTRESS COMPANY
CONTRACTOR Gilbert Texas Construction

FED.RD. DIV.NO.	STATE	PROJECT NO.		HWY. NO.
6	TEXAS	NH 92(50)M		U.S. 83/281
STATE DIST.NO.	COUNTY	CONTROL NO.	SECTION NO.	JOB NO.
21	HIDALGO	0039	17	097

COPYRIGHT 1989 BY
STRUCTURAL ENGINEERING ASSOCIATES, INC.
CONSULTING ENGINEERS, SAN ANTONIO, TEXAS

JOB NO.	DRAWN	CHECKED	DATE	SHEET/MARK NO.
92-018	C.A.J.	D.M.P.	7-01-92	B-2
SEA JOB NO. 92-059H	FABRICATION SHEET			

327252

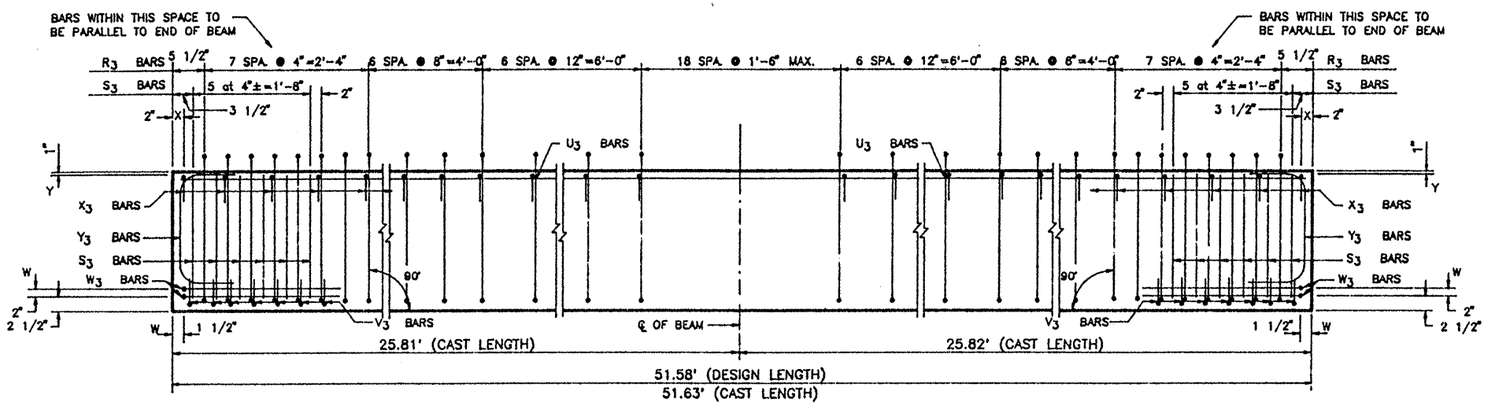

ELEVATION – REINFORCING STEEL

REINFORCING STEEL SCHEDULE				
BAR	QUANTITY PER BEAM	TOTAL QUANTITY	SIZE	LENGTH
R_3	57	114	#4	standard
X_3	51	102	#3	standard
Y_3	4	8	#6	standard
S_3	24	48	#5	standard
V_3	14	28	#3	standard
W_3	4	8	#5	standard
U_3	2	4	#5	51'-4"

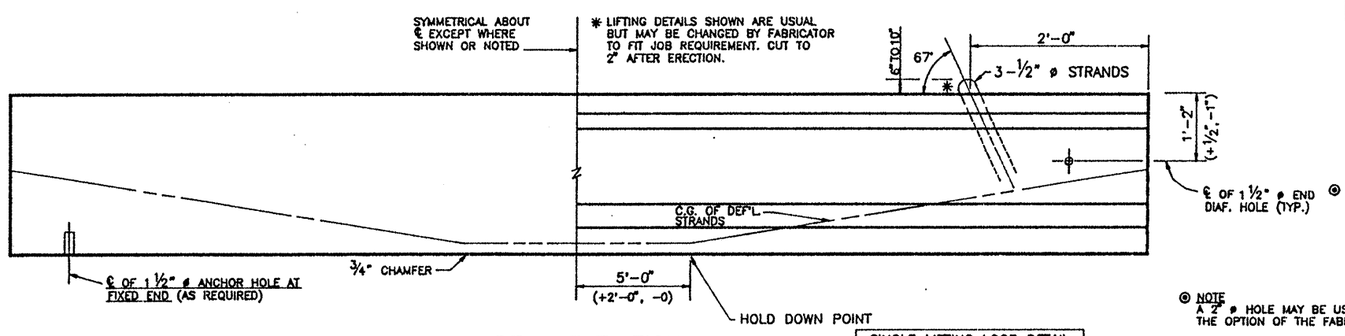

BEAM ELEVATION
SEE PLAN VIEW FOR HOLE(S) LOCATION

SINGLE LIFTING LOOP DETAIL
(TYP. FOR BEAMS UNDER 75')

◎ NOTE
A 2" ø HOLE MAY BE USED AT THE OPTION OF THE FABRICATOR.

TEXAS DEPARTMENT OF TRANSPORTATION
APPROVED
DIVISION OF BRIDGES AND STRUCTURES
JUL 28 1992
APPROVAL OF THIS DRAWING DOES NOT RELIEVE THE CONTRACTOR OF THE RESPONSIBILITY FOR THE CORRECTNESS OF DETAIL.

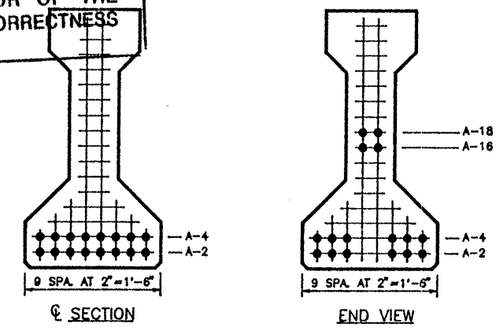

TYPE "B" BEAM QUANTITY : 2

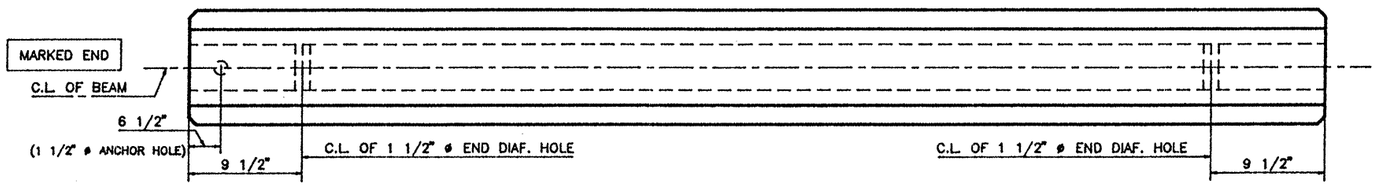

PLAN

TOP FINISH C.I.P.
SEE STANDARD SHEET S-"B" FOR TOP FINISH AND OTHER NOTES AND DETAILS.

LO-LAX STRAND PATTERN		
NUMBER OF STRANDS	: 16 ~1/2" ø 270 K @ 31.00 K EACH	
NUMBER OF STRAIGHT STRANDS	: 12	
NUMBER OF DEFLECTED STRANDS	: 4 @ A – 18	
CONCRETE RELEASE STRENGTH	: 4415	PSI
CONCRETE DESIGN STRENGTH	: 5000	PSI
ECCENTRICITY @ ℄	: 11.93"	ECCENTRICITY @ END : 8.43"

DESIGN NO. : GPNSLR
TOTAL BEAM LENGTH OF THIS SHEET : 103.16'

MANCO PRESTRESS COMPANY
CONTRACTOR Gilbert Texas Construction

FED.RD. DIV.NO.	STATE	PROJECT NO.		HWY. NO.
6	TEXAS	NH 92(50)M		U.S. 83/281
STATE DIST.NO.	COUNTY	CONTROL NO.	SECTION NO.	JOB NO.
21	HIDALGO	0039	17	097

COPYRIGHT 1989 BY STRUCTURAL ENGINEERING ASSOCIATES, INC. *CONSULTING ENGINEERS*, SAN ANTONIO, TEXAS

JOB NO.	DRAWN	CHECKED	DATE	SHEET/MARK NO.
92-018	C.A.J.	D.M.P.	7-01-92	B-3
SEA JOB NO. 92-059H	FABRICATION SHEET			

327252

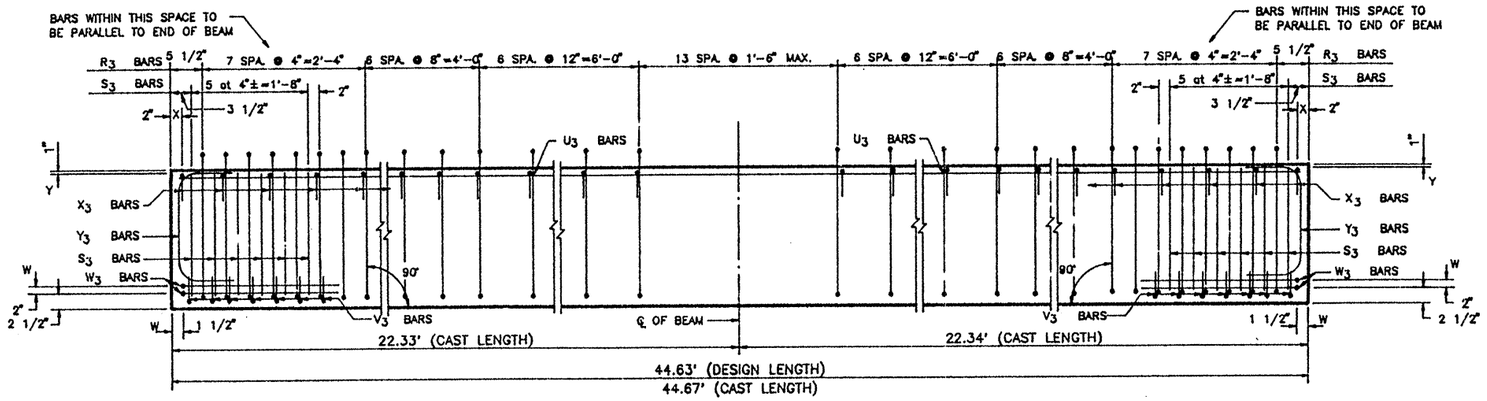

ELEVATION – REINFORCING STEEL

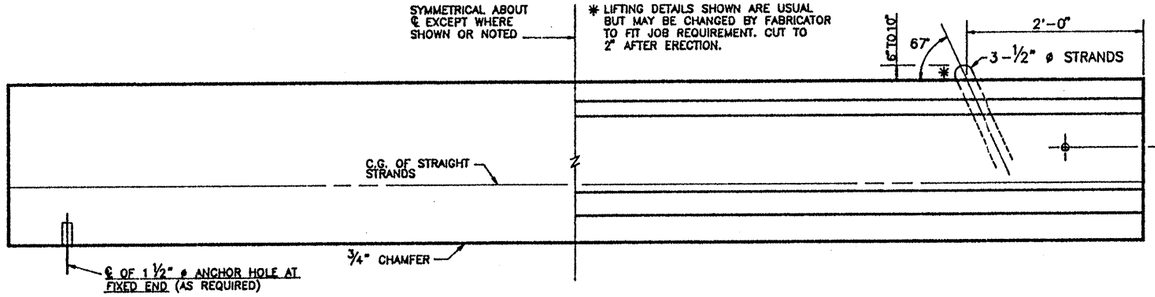

BEAM ELEVATION
SEE PLAN VIEW FOR HOLE(S) LOCATION

SINGLE LIFTING LOOP DETAIL
(TYP. FOR BEAMS UNDER 75')

◎ NOTE
A 2" ø HOLE MAY BE USED AT THE OPTION OF THE FABRICATOR.

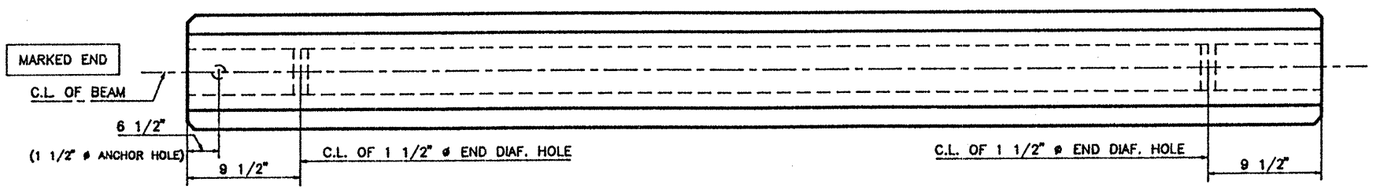

PLAN

TOP FINISH C.I.P.
SEE STANDARD SHEET S-"B" FOR TOP FINISH AND OTHER NOTES AND DETAILS.

REINFORCING STEEL SCHEDULE

BAR	QUANTITY PER BEAM	TOTAL QUANTITY	SIZE	LENGTH
R_3	52	312	#4	standard
X_3	46	276	#3	standard
Y_3	4	24	#6	standard
S_3	24	144	#5	standard
V_3	14	84	#3	standard
W_3	4	24	#5	standard
U_3	2	12	#5	44'-5"

TEXAS DEPARTMENT OF TRANSPORTATION
APPROVED
DIVISION OF BRIDGES AND STRUCTURES
JUL 28 1992
APPROVAL OF THIS DRAWING DOES NOT RELIEVE THE CONTRACTOR OF THE RESPONSIBILITY FOR THE CORRECTNESS OF DETAIL.

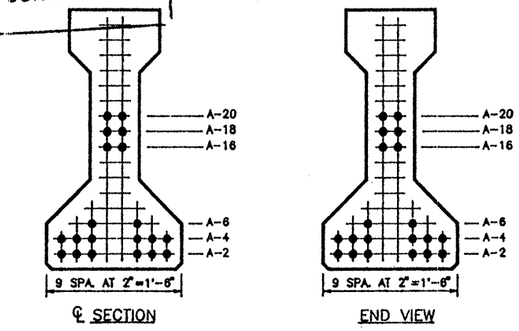

TYPE "B" BEAM QUANTITY : 6

LO-LAX STRAND PATTERN		
NUMBER OF STRANDS : 20 ~1/2" ø 270 K @ 31.00 K EACH		
NUMBER OF STRAIGHT STRANDS	: 20	
NUMBER OF DEFLECTED STRANDS	: NONE	
CONCRETE RELEASE STRENGTH	: 5020	PSI
CONCRETE DESIGN STRENGTH	: 5020	PSI
ECCENTRICITY @ ℄ : 7.13"	ECCENTRICITY @ END : 7.13"	

DESIGN NO. : O.D.#6
TOTAL BEAM LENGTH OF THIS SHEET : 267.78'

MANCO PRESTRESS COMPANY
CONTRACTOR Gilbert Texas Construction

FED.RD. DIV.NO.	STATE	PROJECT NO.	HWY. NO.
6	TEXAS	NH 92(50)M	U.S. 83/281

STATE DIST.NO.	COUNTY	CONTROL NO.	SECTION NO.	JOB NO.
21	HIDALGO	0039	17	097

COPYRIGHT 1989 BY
STRUCTURAL ENGINEERING ASSOCIATES, INC.
CONSULTING ENGINEERS, SAN ANTONIO, TEXAS

JOB NO.	DRAWN	CHECKED	DATE	SHEET/MARK NO.
92-018	C.A.J.	D.M.P.	7-01-92	B-4
SEA JOB NO. 92-059H	FABRICATION SHEET			

327252

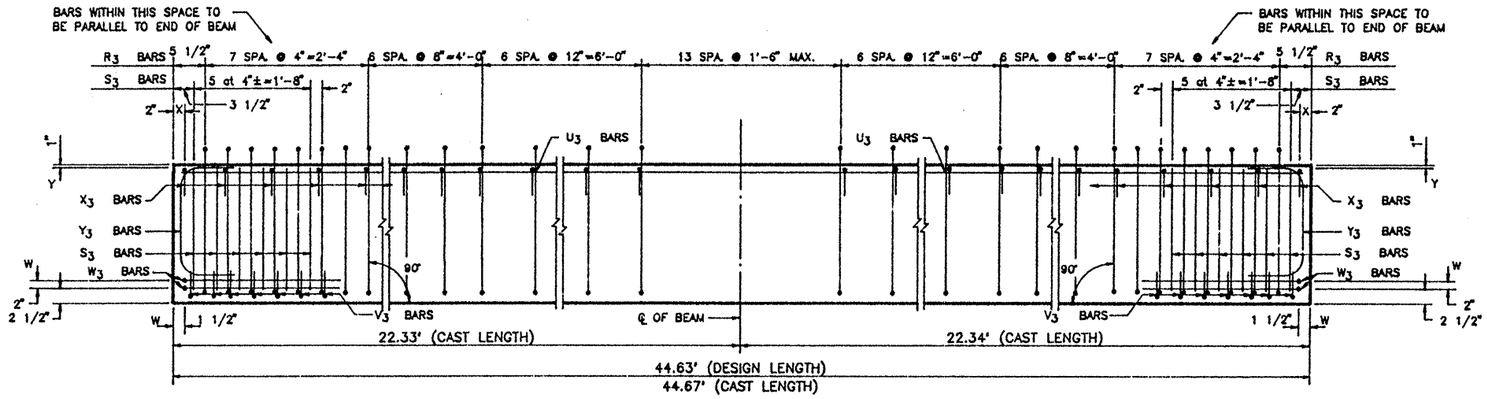

ELEVATION – REINFORCING STEEL

REINFORCING STEEL SCHEDULE				
BAR	QUANTITY PER BEAM	TOTAL QUANTITY	SIZE	LENGTH
R_3	52	104	#4	standard
X_3	46	92	#3	standard
Y_3	4	8	#6	standard
S_3	24	48	#5	standard
V_3	14	28	#3	standard
W_3	4	8	#5	standard
U_3	2	4	#5	44'-5"

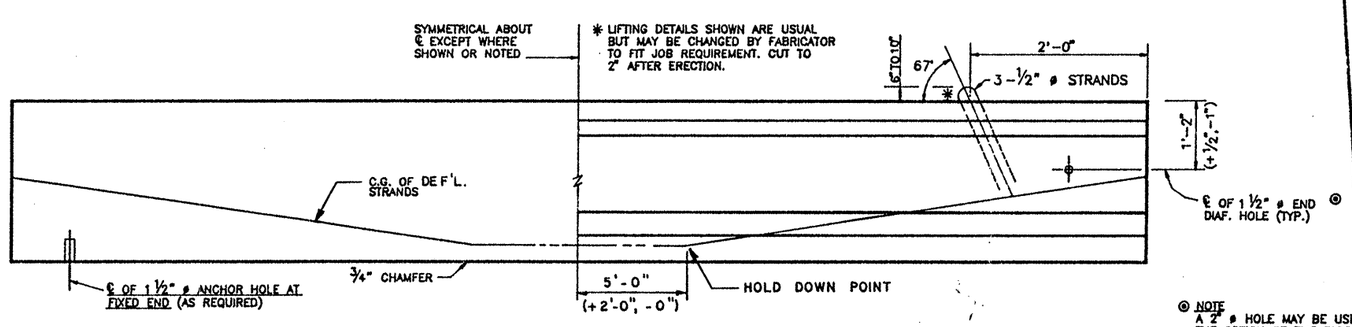

BEAM ELEVATION
SEE PLAN VIEW FOR HOLE(S) LOCATION

SINGLE LIFTING LOOP DETAIL
(TYP. FOR BEAMS UNDER 75')

◉ NOTE
A 2" ø HOLE MAY BE USED AT THE OPTION OF THE FABRICATOR.

TEXAS DEPARTMENT OF TRANSPORTATION
APPROVED
DIVISION OF BRIDGES AND STRUCTURES
JUL 28 1992
APPROVAL OF THIS DRAWING DOES NOT RELIEVE THE CONTRACTOR OF THE RESPONSIBILITY FOR THE CORRECTNESS OF DETAIL.

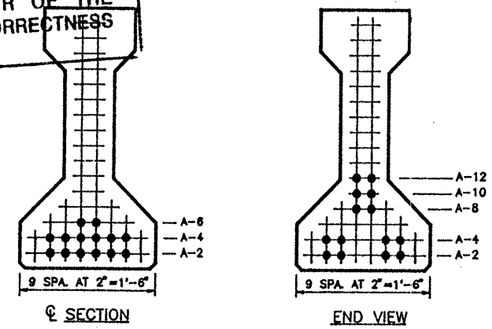

℄ SECTION

END VIEW

TYPE "B" BEAM QUANTITY : 2

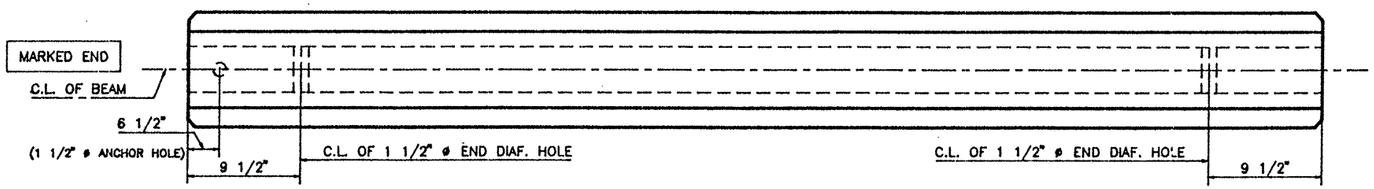

FIXED END

EXPANSION END

PLAN

TOP FINISH C.I.P.
SEE STANDARD SHEET S-"B" FOR TOP FINISH AND OTHER NOTES AND DETAILS.

LO-LAX STRAND PATTERN		
NUMBER OF STRANDS : 14 ~1/2" ø 270 K @ 31.00 K EACH		
NUMBER OF STRAIGHT STRANDS	: 8	
NUMBER OF DEFLECTED STRANDS	: 6 @ A – 12	
CONCRETE RELEASE STRENGTH	: 4000	PSI
CONCRETE DESIGN STRENGTH	: 5000	PSI
ECCENTRICITY @ ℄ : 11.50"	ECCENTRICITY @ END : 8.93"	

DESIGN NO. : GPNSLR
TOTAL BEAM LENGTH OF THIS SHEET : 89.26'

MANCO PRESTRESS COMPANY
CONTRACTOR Gilbert Texas Construction

FED.RD. DIV.NO.	STATE	PROJECT NO.	HWY. NO.
6	TEXAS	NH 92(50)M	U.S. 83/281

STATE DIST.NO.	COUNTY	CONTROL NO.	SECTION NO.	JOB NO.
21	HIDALGO	0039	17	097

COPYRIGHT 1989 BY
STRUCTURAL ENGINEERING ASSOCIATES, INC.
CONSULTING ENGINEERS, SAN ANTONIO, TEXAS

JOB NO.	DRAWN	CHECKED	DATE	SHEET/MARK NO.
92-018	C.A.J.	D.M.P.	7-01-92	B-5
SEA JOB NO. 92-059H	FABRICATION SHEET			

327252

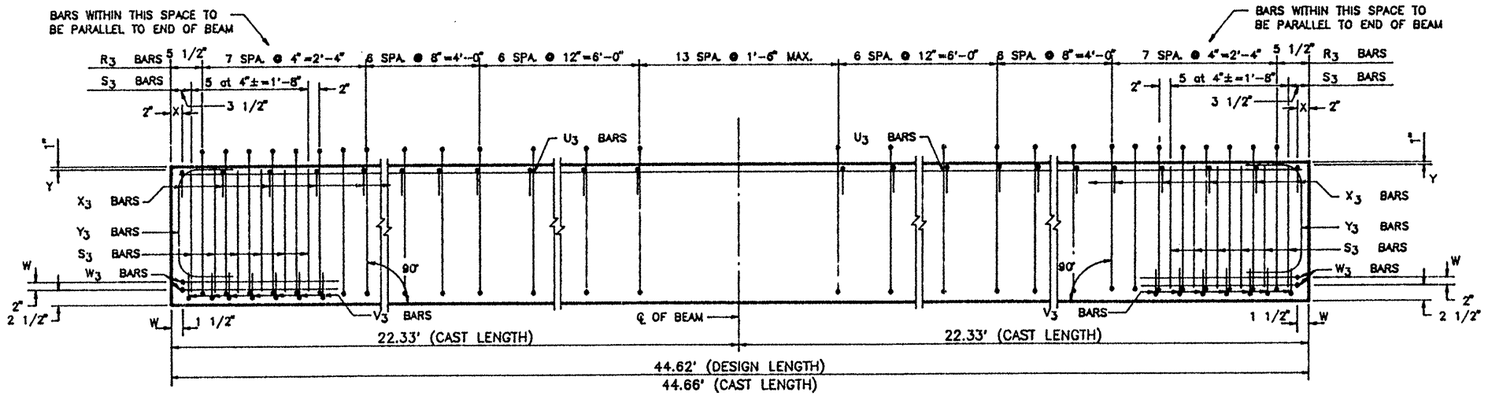

ELEVATION — REINFORCING STEEL

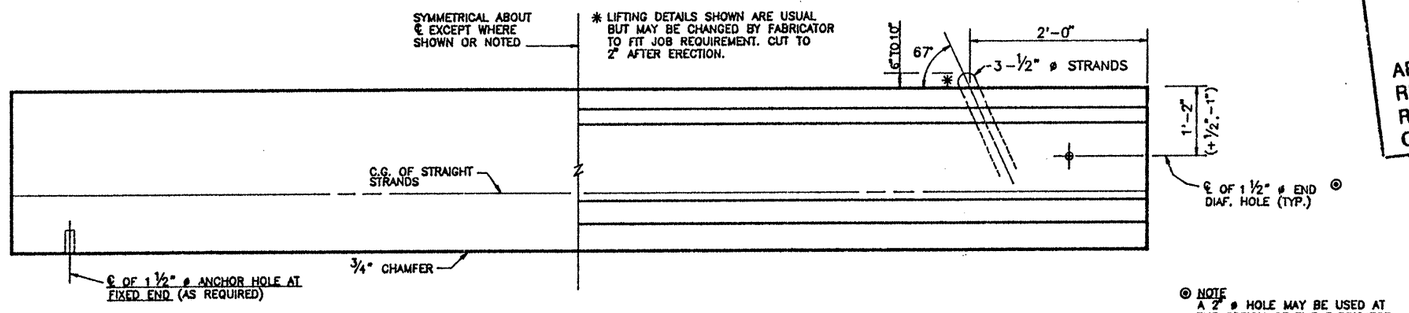

BEAM ELEVATION
SEE PLAN VIEW FOR HOLE(S) LOCATION

SINGLE LIFTING LOOP DETAIL
(TYP. FOR BEAMS UNDER 75')

◎ NOTE
A 2" ø HOLE MAY BE USED AT THE OPTION OF THE FABRICATOR.

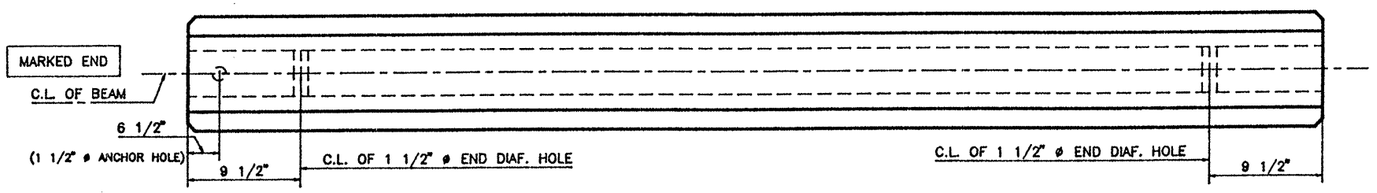

PLAN

TOP FINISH C.I.P.
SEE STANDARD SHEET S-"B" FOR TOP FINISH AND OTHER NOTES AND DETAILS.

REINFORCING STEEL SCHEDULE

BAR	QUANTITY PER BEAM	TOTAL QUANTITY	SIZE	LENGTH
R_3	52	312	#4	standard
X_3	46	276	#3	standard
Y_3	4	24	#6	standard
S_3	24	144	#5	standard
V_3	14	84	#3	standard
W_3	4	24	#5	standard
U_3	2	12	#5	44'-5"

TEXAS DEPARTMENT OF TRANSPORTATION
APPROVED
DIVISION OF BRIDGES AND STRUCTURES
JUL 28 1992
APPROVAL OF THIS DRAWING DOES NOT RELIEVE THE CONTRACTOR OF THE RESPONSIBILITY FOR THE CORRECTNESS OF DETAIL.

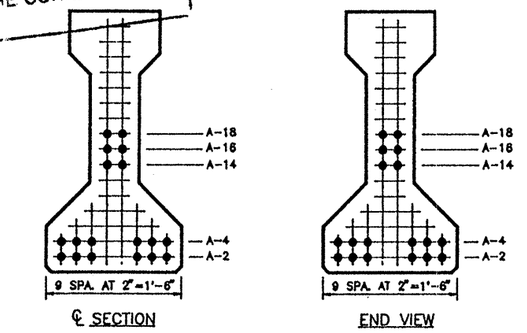

TYPE "B" BEAM QUANTITY : 6

LO-LAX STRAND PATTERN		
NUMBER OF STRANDS : 18 ~1/2" ø 270 K @ 31.00 K EACH		
NUMBER OF STRAIGHT STRANDS	: 18	
NUMBER OF DEFLECTED STRANDS	: NONE	
CONCRETE RELEASE STRENGTH	: 4670	PSI
CONCRETE DESIGN STRENGTH	: 5000	PSI
ECCENTRICITY @ ℄ : 7.60"	ECCENTRICITY @ END : 7.60"	

DESIGN NO. : O.D.#8
TOTAL BEAM LENGTH OF THIS SHEET : 267.72'

MANCO PRESTRESS COMPANY

CONTRACTOR Gilbert Texas Construction

FED.RD. DIV.NO.	STATE	PROJECT NO.	HWY. NO.
6	TEXAS	NH 92(50)M	U.S. 83/281

STATE DIST.NO.	COUNTY	CONTROL NO.	SECTION NO.	JOB NO.
21	HIDALGO	0039	17	097

COPYRIGHT 1989 BY STRUCTURAL ENGINEERING ASSOCIATES, INC.
CONSULTING ENGINEERS, SAN ANTONIO, TEXAS

JOB NO.	DRAWN	CHECKED	DATE	SHEET/MARK NO.
92-018	C.A.J.	D.M.P.	7-01-92	B-6
SEA JOB NO. 92-059H	FABRICATION SHEET			

327252

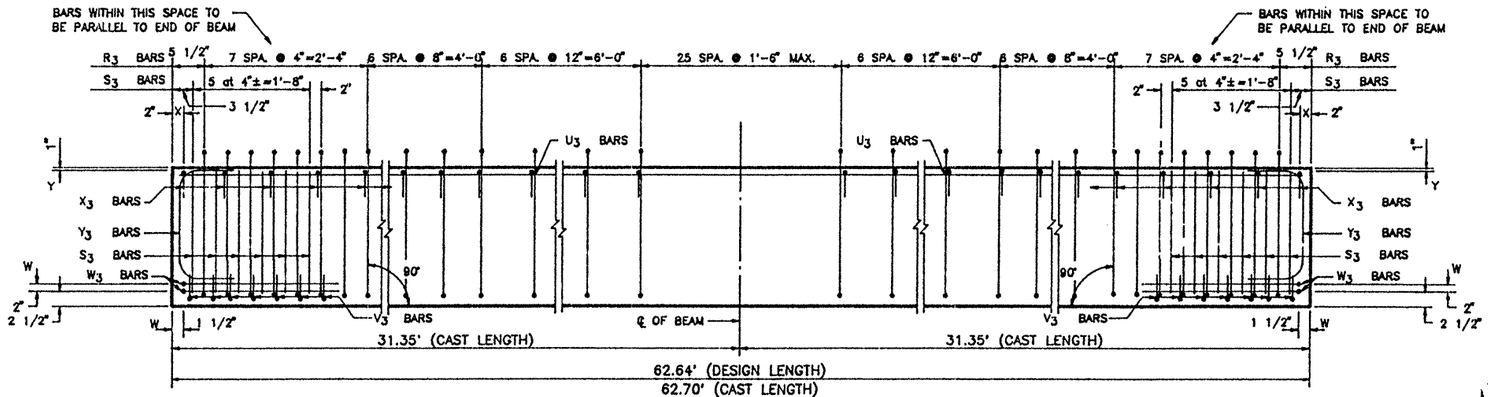

ELEVATION – REINFORCING STEEL

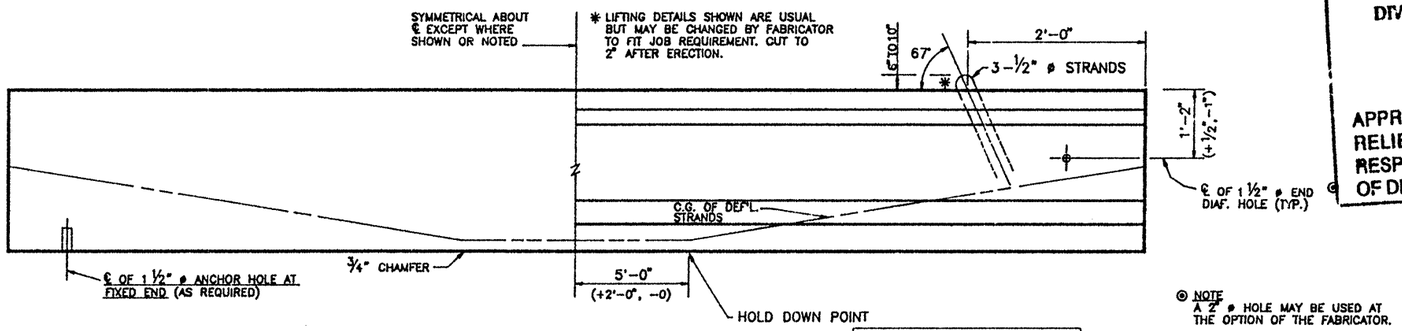

BEAM ELEVATION
SEE PLAN VIEW FOR HOLE(S) LOCATION

SINGLE LIFTING LOOP DETAIL
(TYP. FOR BEAMS UNDER 75')

◉ NOTE
A 2" ø HOLE MAY BE USED AT THE OPTION OF THE FABRICATOR.

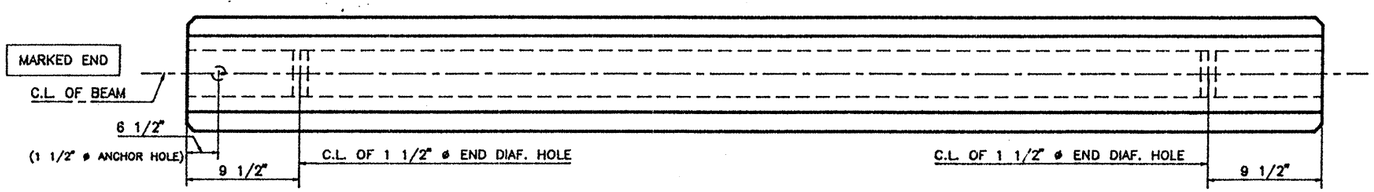

FIXED END

EXPANSION END

PLAN

TOP FINISH C.I.P.
SEE STANDARD SHEET S-"B" FOR TOP FINISH AND OTHER NOTES AND DETAILS.

TEXAS DEPARTMENT OF TRANSPORTATION
APPROVED
DIVISION OF BRIDGES AND STRUCTURES
JUL 28 1992
APPROVAL OF THIS DRAWING DOES NOT RELIEVE THE CONTRACTOR OF THE RESPONSIBILITY FOR THE CORRECTNESS OF DETAIL.

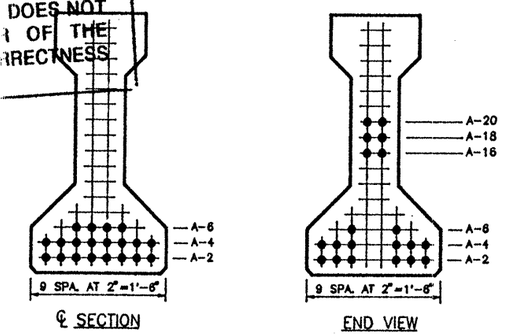

TYPE "B" BEAM QUANTITY : 1

REINFORCING STEEL SCHEDULE				
BAR	QUANTITY PER BEAM	TOTAL QUANTITY	SIZE	LENGTH
R_3	64	64	#4	standard
X_3	58	58	#3	standard
Y_3	4	4	#6	standard
S_3	24	24	#5	standard
V_3	14	14	#3	standard
W_3	4	4	#5	standard
U_3	2	2	#5	62'-5"

LO-LAX STRAND PATTERN		
NUMBER OF STRANDS	: 20 ~1/2" ø 270 K @ 31.00 K EACH	
NUMBER OF STRAIGHT STRANDS	: 14	
NUMBER OF DEFLECTED STRANDS	: 6 @ A -- 20	
CONCRETE RELEASE STRENGTH	: 5092	PSI
CONCRETE DESIGN STRENGTH	: 5092	PSI
ECCENTRICITY @ ℄	: 11.33"	ECCENTRICITY @ END : 7.13"

DESIGN NO. : GPNSLR
TOTAL BEAM LENGTH OF THIS SHEET : 62.64'

MANCO PRESTRESS COMPANY
CONTRACTOR Gilbert Texas Construction

FED.RD. DIV.NO.	STATE	PROJECT NO.	HWY. NO.
6	TEXAS	NH 92(50)M	U.S. 83/281

STATE DIST.NO.	COUNTY	CONTROL NO.	SECTION NO.	JOB NO.
21	HIDALGO	0039	17	097

COPYRIGHT 1989 BY
STRUCTURAL ENGINEERING ASSOCIATES, INC.
CONSULTING ENGINEERS, SAN ANTONIO, TEXAS

JOB NO.	DRAWN	CHECKED	DATE	SHEET/MARK NO.
92-018	C.A.J.	D.M.P.	7-01-92	B-7
SEA JOB NO. 92-059H	FABRICATION SHEET			

327252

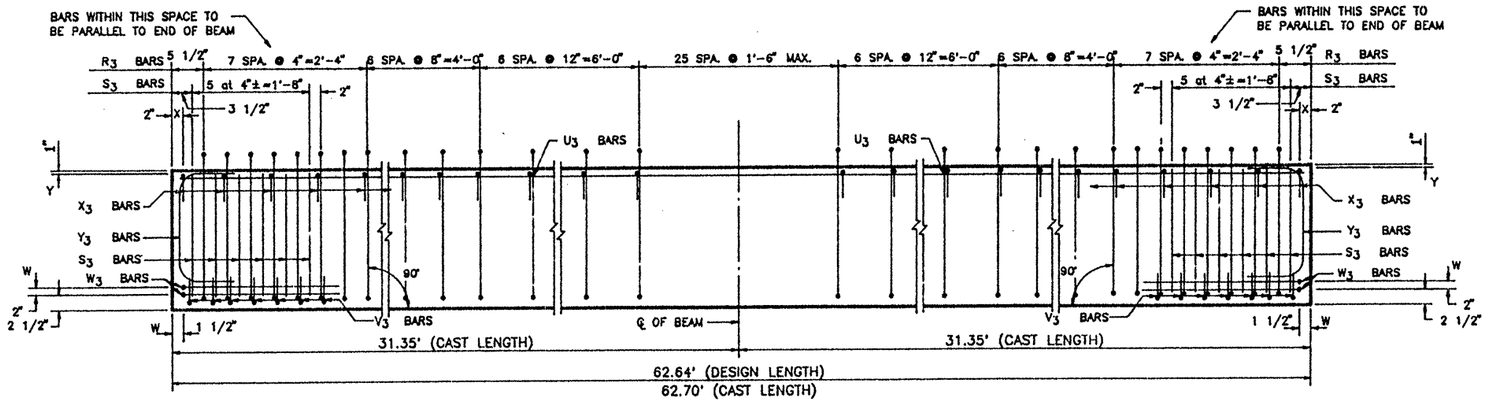

ELEVATION – REINFORCING STEEL

REINFORCING STEEL SCHEDULE				
BAR	QUANTITY PER BEAM	TOTAL QUANTITY	SIZE	LENGTH
R_3	64	64	#4	standard
X_3	58	58	#3	standard
Y_3	4	4	#6	standard
S_3	24	24	#5	standard
V_3	14	14	#3	standard
W_3	4	4	#5	standard
U_3	2	2	#5	62'-5"

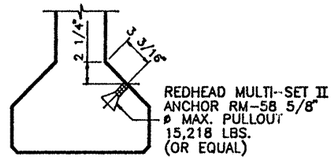

SECTION "A"

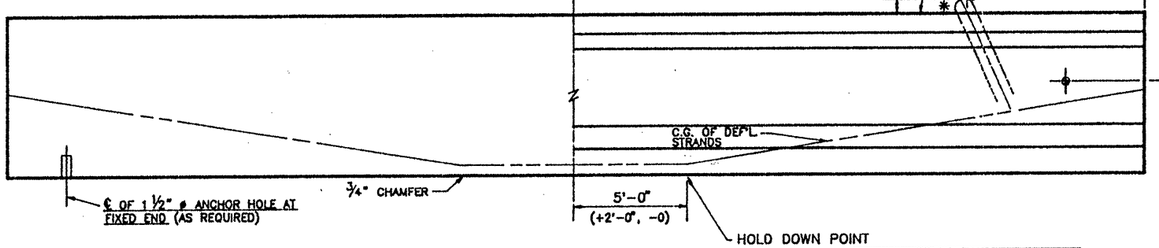

BEAM ELEVATION
SEE PLAN VIEW FOR HOLE(S) LOCATION

SINGLE LIFTING LOOP DETAIL
(TYP. FOR BEAMS UNDER 75')

◉ NOTE
A 2" ø HOLE MAY BE USED AT THE OPTION OF THE FABRICATOR.

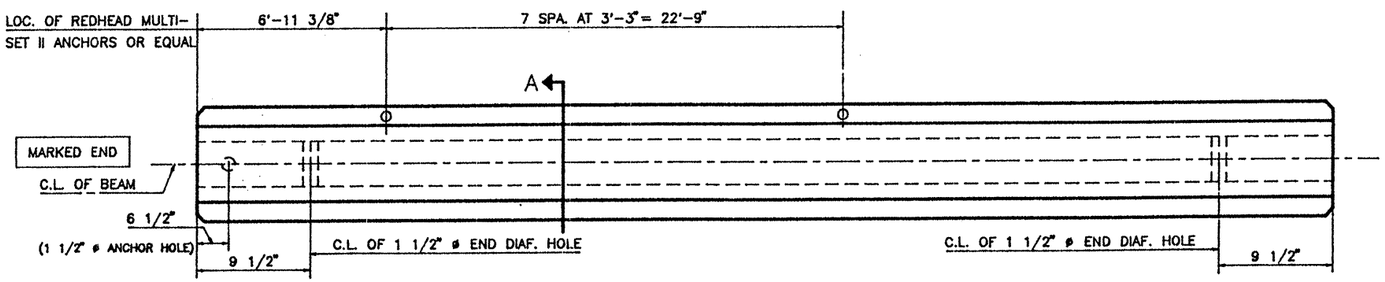

FIXED END

EXPANSION END

PLAN

TOP FINISH C.I.P.
SEE STANDARD SHEET S-"B" FOR TOP FINISH AND OTHER NOTES AND DETAILS.

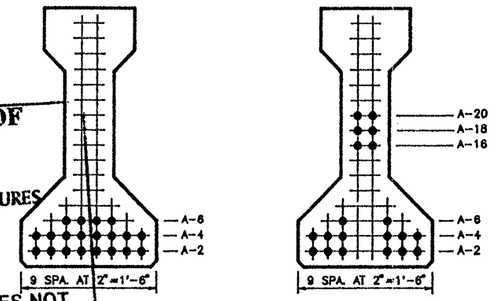

TYPE "B" BEAM QUANTITY : 1

LO-LAX STRAND PATTERN		
NUMBER OF STRANDS	: 20 ~1/2" ø 270 K @ 31.00 K EACH	
NUMBER OF STRAIGHT STRANDS	: 14	
NUMBER OF DEFLECTED STRANDS	: 6 @ A – 20	
CONCRETE RELEASE STRENGTH	: 5092	PSI
CONCRETE DESIGN STRENGTH	: 5092	PSI
ECCENTRICITY @ ℄	: 11.33"	ECCENTRICITY @ END : 7.13"

DESIGN NO. : GPNSLR
TOTAL BEAM LENGTH OF THIS SHEET : 62.64'

TEXAS DEPARTMENT OF TRANSPORTATION
APPROVED
DIVISION OF BRIDGES AND STRUCTURES
JUL 28 1992
APPROVAL OF THIS DRAWING DOES NOT RELIEVE THE CONTRACTOR OF THE RESPONSIBILITY FOR THE CORRECTNESS OF DETAIL.

MANCO PRESTRESS COMPANY

CONTRACTOR Gilbert Texas Construction			
FED.RD. DIV.NO.	STATE	PROJECT NO.	HWY. NO.
6	TEXAS	NH 92(50)M	U.S. 83/281

STATE DIST.NO.	COUNTY	CONTROL NO.	SECTION NO.	JOB NO.
21	HIDALGO	0039	17	097

COPYRIGHT 1989 BY
STRUCTURAL ENGINEERING ASSOCIATES, INC.
CONSULTING ENGINEERS, SAN ANTONIO, TEXAS

JOB NO.	DRAWN	CHECKED	DATE	SHEET/MARK NO.
92-018	C.A.J.	D.M.P.	7-01-92	B-8
SEA JOB NO. 92-059H	FABRICATION SHEET			

327252

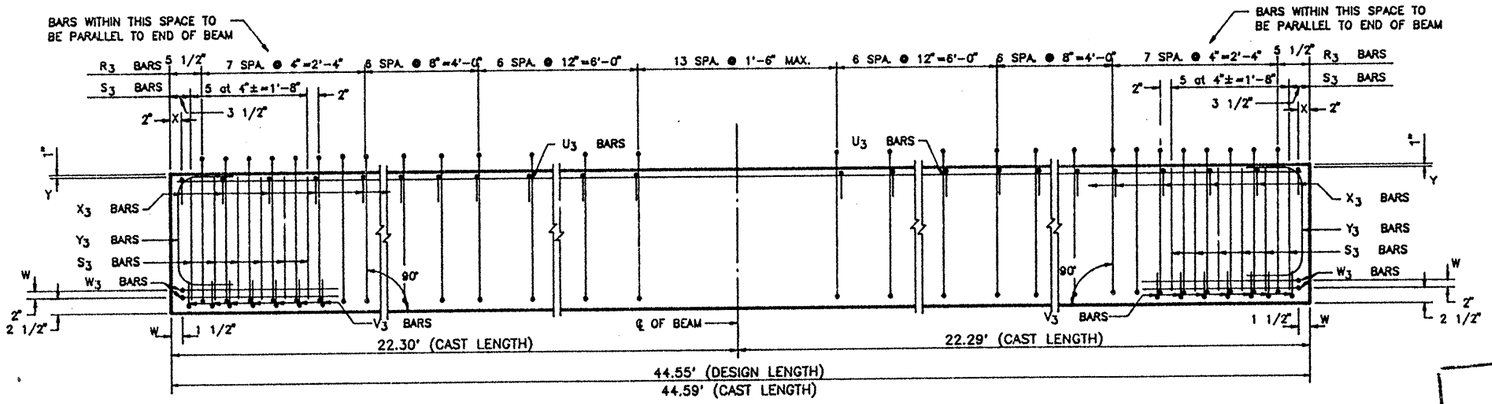

ELEVATION – REINFORCING STEEL

REINFORCING STEEL SCHEDULE				
BAR	QUANTITY PER BEAM	TOTAL QUANTITY	SIZE	LENGTH
R_3	52	104	#4	standard
X_3	46	92	#3	standard
Y_3	4	8	#6	standard
S_3	24	48	#5	standard
V_3	14	28	#3	standard
W_3	4	8	#5	standard
U_3	2	4	#5	44'-4"

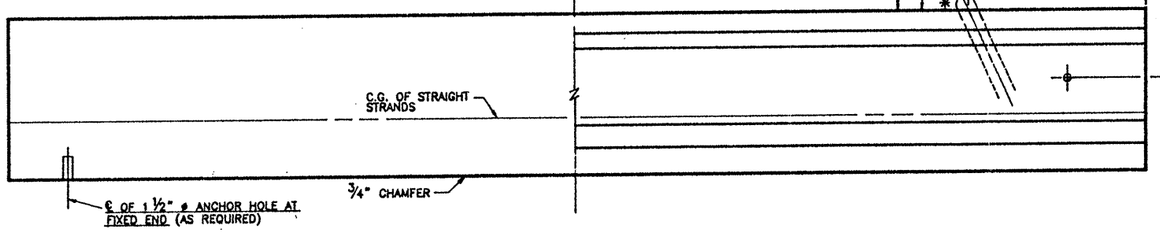

BEAM ELEVATION
SEE PLAN VIEW FOR HOLE(S) LOCATION

SINGLE LIFTING LOOP DETAIL
(TYP. FOR BEAMS UNDER 75')

⊙ NOTE
A 2" ø HOLE MAY BE USED AT THE OPTION OF THE FABRICATOR.

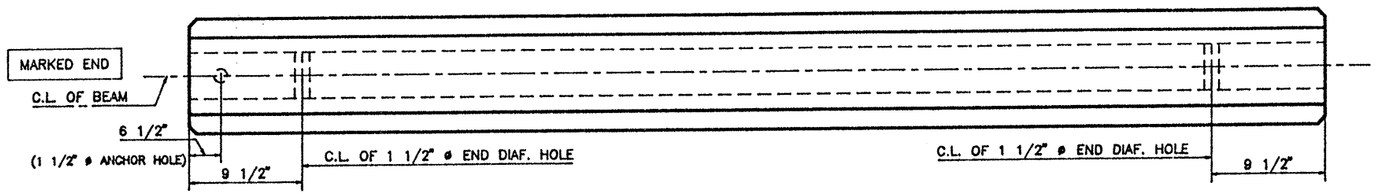

PLAN

TOP FINISH C.I.P.
SEE STANDARD SHEET S-"B" FOR TOP FINISH AND OTHER NOTES AND DETAILS.

TEXAS DEPARTMENT OF TRANSPORTATION
APPROVED
DIVISION OF BRIDGES AND STRUCTURES
JUL 28 1992
APPROVAL OF THIS DRAWING DOES NOT RELIEVE THE CONTRACTOR OF THE RESPONSIBILITY FOR THE CORRECTNESS OF DETAIL.

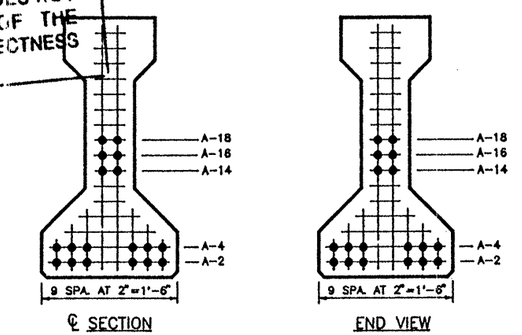

TYPE "B" BEAM QUANTITY : 2

LO-LAX STRAND PATTERN		
NUMBER OF STRANDS : 18 ~1/2" ø 270 K @ 31.00 K EACH		
NUMBER OF STRAIGHT STRANDS	: 18	
NUMBER OF DEFLECTED STRANDS	: NONE	
CONCRETE RELEASE STRENGTH	: 4670	PSI
CONCRETE DESIGN STRENGTH	: 5000	PSI
ECCENTRICITY @ ℄ : 7.60"	ECCENTRICITY @ END : 7.60"	

DESIGN NO. : O.D.#8
TOTAL BEAM LENGTH OF THIS SHEET : 89.10'

MANCO PRESTRESS COMPANY				
CONTRACTOR Gilbert Texas Construction				
FED.RD. DIV.NO.	STATE	PROJECT NO.		HWY. NO.
6	TEXAS	NH 92(50)M		U.S. 83/281
STATE DIST.NO.	COUNTY	CONTROL NO.	SECTION NO.	JOB NO.
21	HIDALGO	0039	17	097

COPYRIGHT 1989 BY
STRUCTURAL ENGINEERING ASSOCIATES, INC.
CONSULTING ENGINEERS, SAN ANTONIO, TEXAS

JOB NO.	DRAWN	CHECKED	DATE	SHEET/MARK NO.
92-018	C.A.J.	D.M.P.	7-01-92	B-9
SEA JOB NO. 92-059H	FABRICATION SHEET			

327252

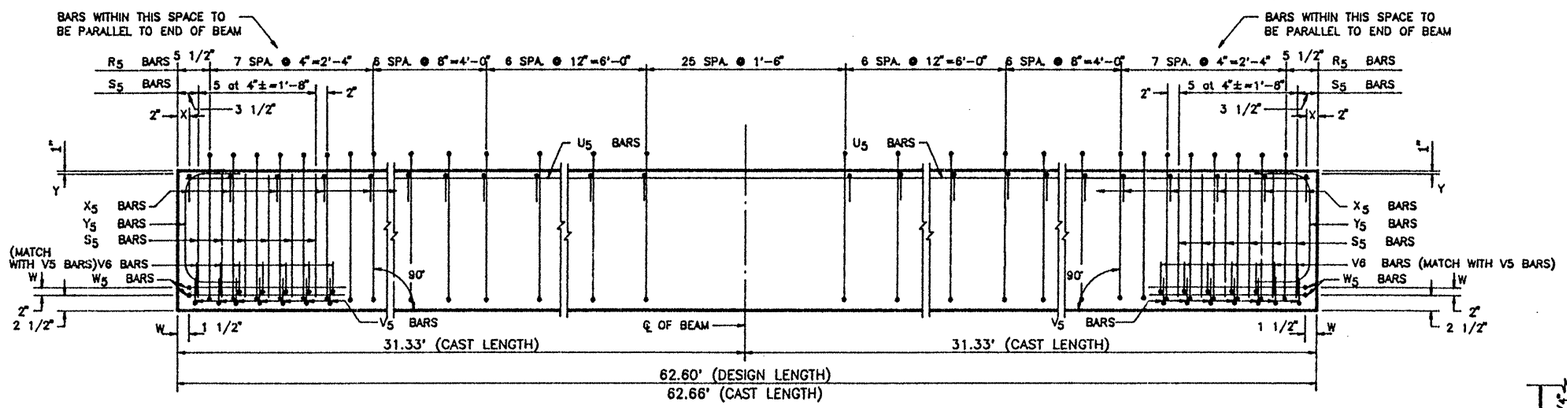

ELEVATION – REINFORCING STEEL

REINFORCING STEEL SCHEDULE

BAR	QUANTITY PER BEAM	TOTAL QUANTITY	SIZE	LENGTH
R_5	64	64	#4	standard
X_5	58	58	#3	standard
Y_5	4	4	#6	standard
S_5	24	24	#5	standard
V_5	14	14	#3	standard
W_5	4	4	#5	standard
U_5	2	2	#5	62'-5"
V_6	28	28	#4	standard

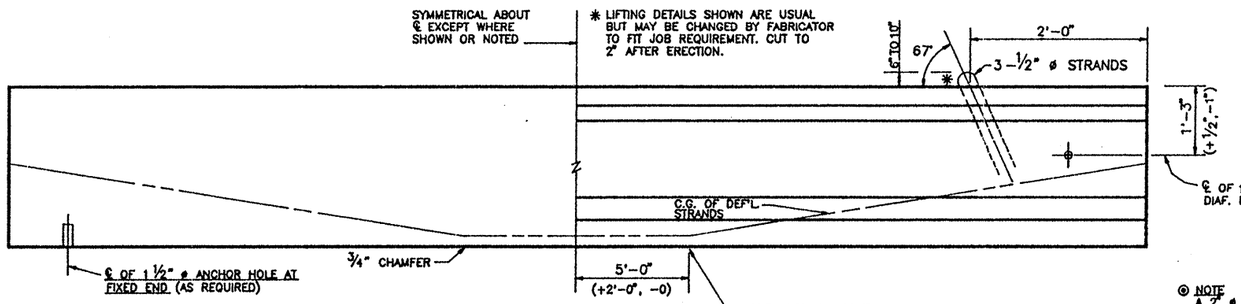

BEAM ELEVATION
SEE PLAN VIEW FOR HOLE(S) LOCATION

SINGLE LIFTING LOOP DETAIL
(TYP. FOR BEAMS UNDER 75')

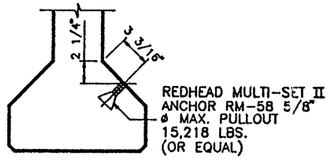

SECTION "A"

◉ NOTE
A 2" ø HOLE MAY BE USED AT THE OPTION OF THE FABRICATOR.

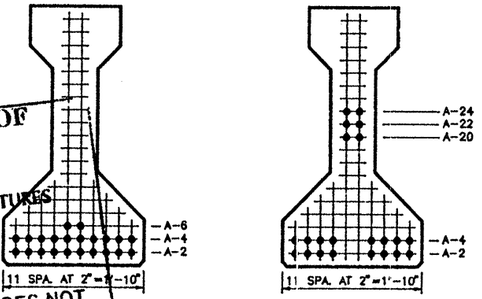

℄ SECTION

END VIEW

TYPE "C" BEAM QUANTITY : 1

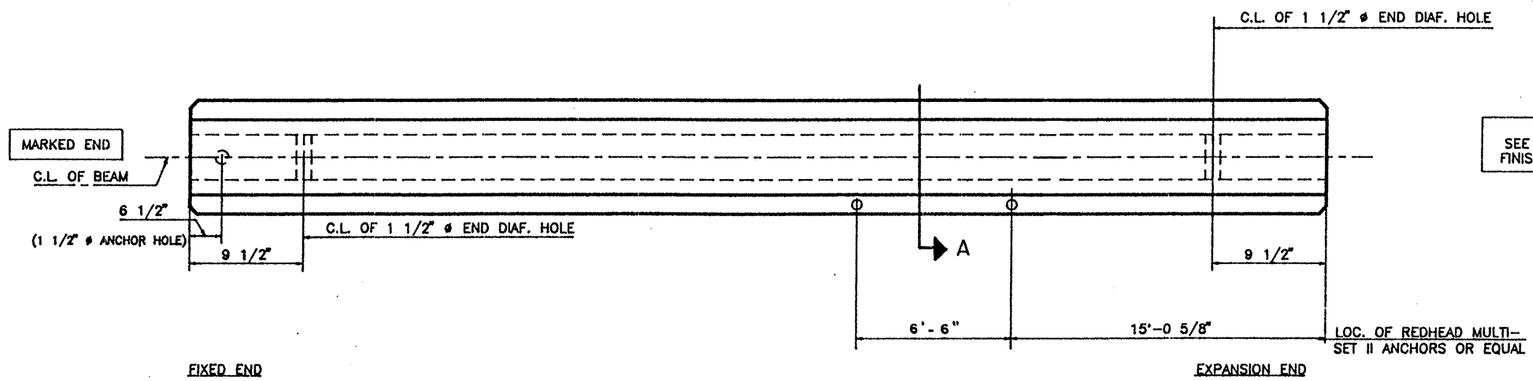

PLAN

TOP FINISH C.I.P.
SEE STANDARD SHEET S-"C" FOR TOP FINISH AND OTHER NOTES AND DETAILS.

LO-LAX STRAND PATTERN		
NUMBER OF STRANDS	: 22 ~1/2" ø 270 K @ 31.00 K EACH	
NUMBER OF STRAIGHT STRANDS	: 16	
NUMBER OF DEFLECTED STRANDS	: 6 @ A – 24	
CONCRETE RELEASE STRENGTH	: 4091	PSI
CONCRETE DESIGN STRENGTH	: 5000	PSI
ECCENTRICITY @ ℄ : 13.82"	ECCENTRICITY @ END : 8.91"	

DESIGN NO. : GPNSLR
TOTAL BEAM LENGTH OF THIS SHEET : 62.60'

TEXAS DEPARTMENT OF TRANSPORTATION
APPROVED
DIVISION OF BRIDGES AND STRUCTURES
JUL 28 1992
APPROVAL OF THIS DRAWING DOES NOT RELIEVE THE CONTRACTOR OF THE RESPONSIBILITY FOR THE CORRECTNESS OF DETAIL.

MANCO PRESTRESS COMPANY

CONTRACTOR Gilbert Texas Construction

FED.RD. DIV.NO.	STATE	PROJECT NO.		HWY. NO.
6	TEXAS	NH 92(50)M		U.S. 83/281
STATE DIST.NO.	COUNTY	CONTROL NO.	SECTION NO.	JOB NO.
21	HIDALGO	0039	17	097

COPYRIGHT 1989 BY
STRUCTURAL ENGINEERING ASSOCIATES, INC.
CONSULTING ENGINEERS, SAN ANTONIO, TEXAS

JOB NO.	DRAWN	CHECKED	DATE	SHEET/MARK NO.
92-018	C.A.J.	D.M.P	7-01-92	C-1
SEA JOB NO. 92-059H	FABRICATION SHEET			

327252

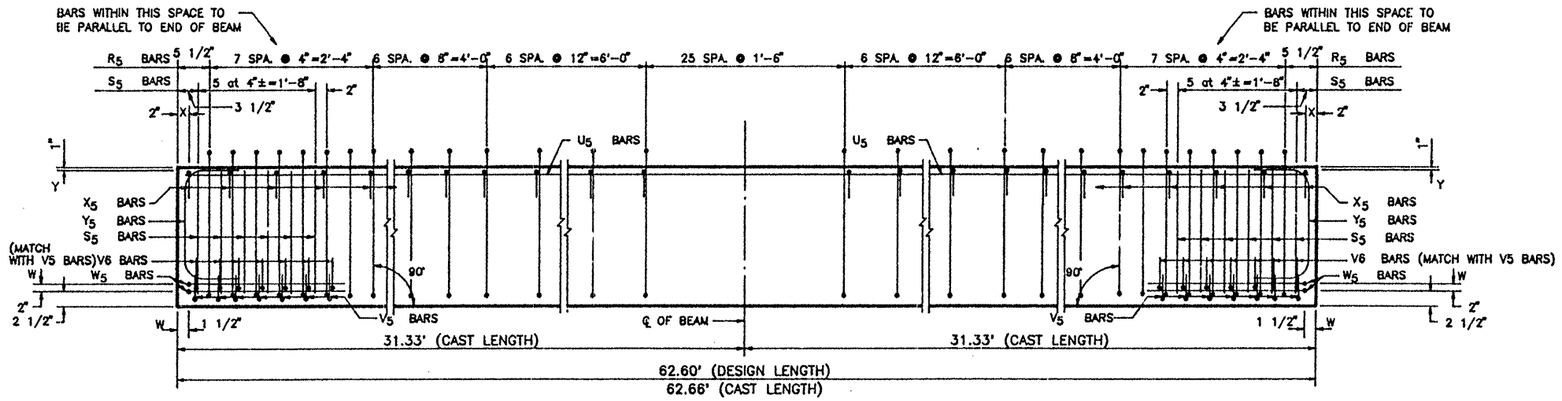

ELEVATION – REINFORCING STEEL

REINFORCING STEEL SCHEDULE				
BAR	QUANTITY PER BEAM	TOTAL QUANTITY	SIZE	LENGTH
R_5	64	64	#4	standard
X_5	58	58	#3	standard
Y_5	4	4	#6	standard
S_5	24	24	#5	standard
V_5	14	14	#3	standard
W_5	4	4	#5	standard
U_5	2	2	#5	62'-5"
V_6	28	28	#4	standard

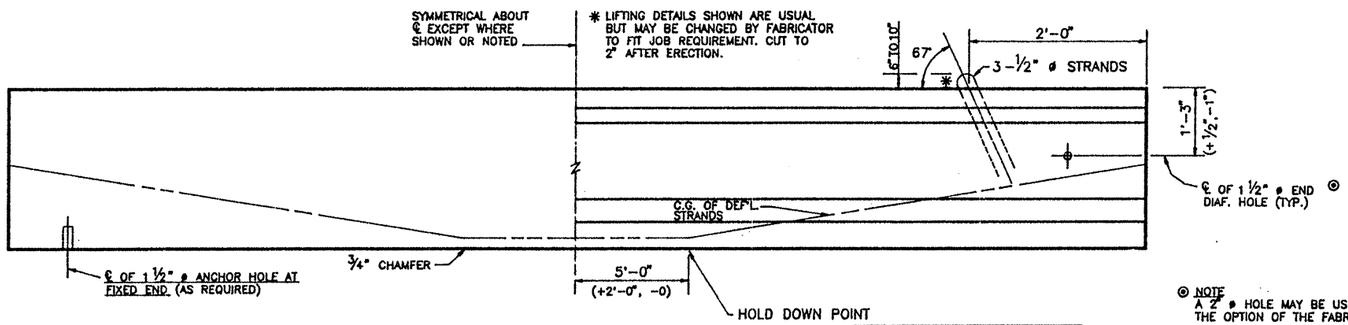

BEAM ELEVATION
SEE PLAN VIEW FOR HOLE(S) LOCATION

SINGLE LIFTING LOOP DETAIL
(TYP. FOR BEAMS UNDER 75')

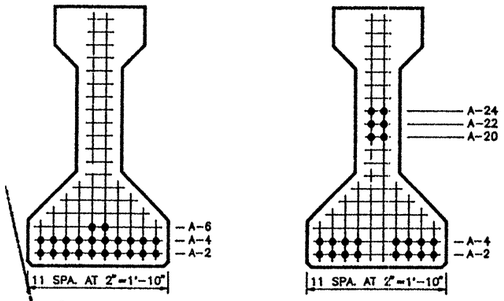

◉ NOTE
A 2" ø HOLE MAY BE USED AT THE OPTION OF THE FABRICATOR

TEXAS DEPARTMENT OF TRANSPORTATION
APPROVED
DIVISION OF BRIDGES AND STRUCTURES
JUL 28 1992
APPROVAL OF THIS DRAWING DOES NOT RELIEVE THE CONTRACTOR OF THE RESPONSIBILITY FOR THE CORRECTNESS OF DETAIL.

TOP FINISH C.I.P.
SEE STANDARD SHEET S-"C" FOR TOP FINISH AND OTHER NOTES AND DETAILS.

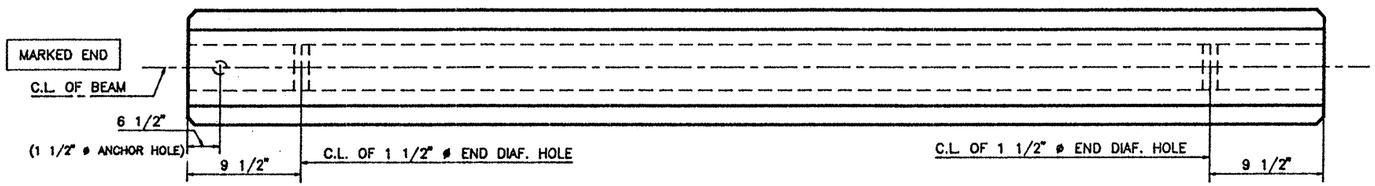

PLAN

TYPE "C" BEAM QUANTITY : 1

LO-LAX STRAND PATTERN		
NUMBER OF STRANDS	: 22 ~1/2" ø 270 K @ 31.00 K EACH	
NUMBER OF STRAIGHT STRANDS	: 16	
NUMBER OF DEFLECTED STRANDS	: 6 @ A - 24	
CONCRETE RELEASE STRENGTH	: 4091	PSI
CONCRETE DESIGN STRENGTH	: 5000	PSI
ECCENTRICITY @ ℄	: 13.82"	ECCENTRICITY @ END : 8.91"

DESIGN NO. : GPNSLR
TOTAL BEAM LENGTH OF THIS SHEET : 62.60'

MANCO PRESTRESS COMPANY
CONTRACTOR Gilbert Texas Construction

FED.RD. DIV.NO.	STATE	PROJECT NO.		HWY. NO.
6	TEXAS	NH 92(50)M		U.S. 83/281
STATE DIST.NO.	COUNTY	CONTROL NO.	SECTION NO.	JOB NO.
21	HIDALGO	0039	17	097

COPYRIGHT 1989 BY STRUCTURAL ENGINEERING ASSOCIATES, INC. CONSULTING ENGINEERS, SAN ANTONIO, TEXAS

JOB NO.	DRAWN	CHECKED	DATE	SHEET/MARK NO.
92-018	C.A.J.	D.M.P.	7-01-92	C-2
SEA JOB NO. 92-059H	FABRICATION SHEET			

327252

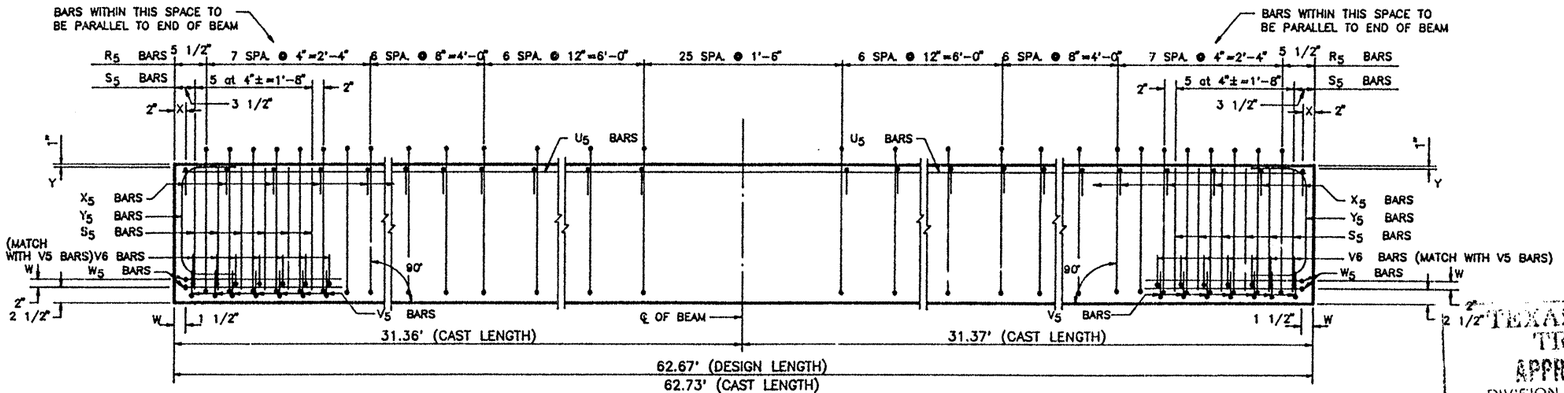

ELEVATION – REINFORCING STEEL

REINFORCING STEEL SCHEDULE				
BAR	QUANTITY PER BEAM	TOTAL QUANTITY	SIZE	LENGTH
R_5	64	128	#4	standard
X_5	58	116	#3	standard
Y_5	4	8	#6	standard
S_5	24	48	#5	standard
V_5	14	28	#3	standard
W_5	4	8	#5	standard
U_5	2	4	#5	62'-5"
V_6	28	56	#4	standard

TEXAS DEPARTMENT OF TRANSPORTATION
APPROVED EXCEPT AS NOTED
DIVISION OF BRIDGES AND STRUCTURES

JUL 28 1992

APPROVAL OF THIS DRAWING DOES NOT RELIEVE THE CONTRACTOR OF THE RESPONSIBILITY FOR THE CORRECTNESS OF DETAIL.

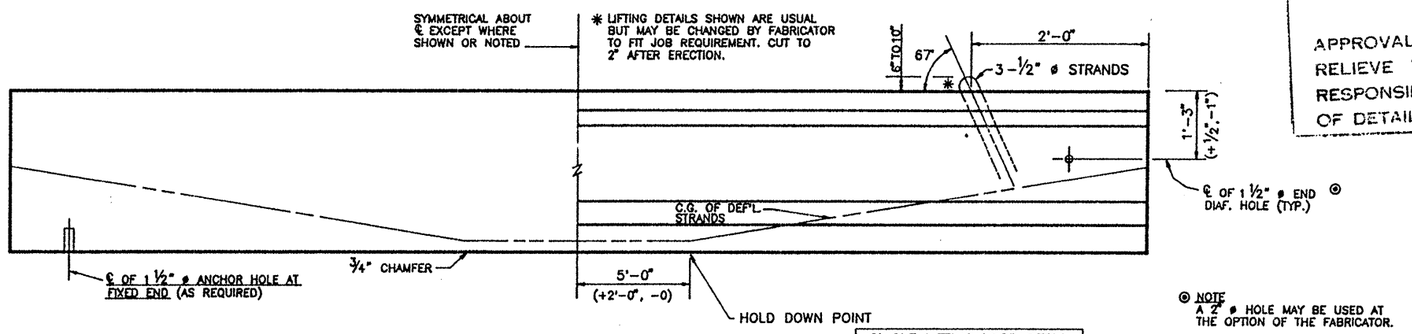

BEAM ELEVATION
SEE PLAN VIEW FOR HOLE(S) LOCATION

SINGLE LIFTING LOOP DETAIL
(TYP. FOR BEAMS UNDER 75')

◎ NOTE
A 2" ø HOLE MAY BE USED AT THE OPTION OF THE FABRICATOR.

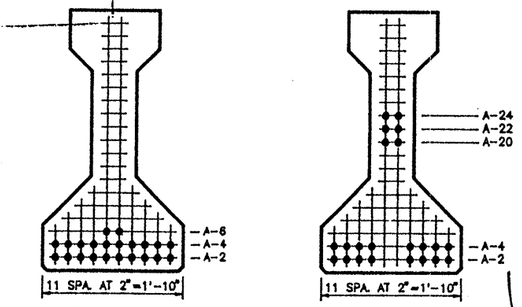

TYPE "C" BEAM QUANTITY : 2

LO-LAX STRAND PATTERN	
NUMBER OF STRANDS : 22 ~1/2" ø 270 K @ 31.00 K EACH	
NUMBER OF STRAIGHT STRANDS	: 16
NUMBER OF DEFLECTED STRANDS	: 6 @ A – 24
CONCRETE RELEASE STRENGTH	: 4091 PSI
CONCRETE DESIGN STRENGTH	: 5000 PSI
ECCENTRICITY @ ℄ : 13.82"	ECCENTRICITY @ END : 8.91"

4095

DESIGN NO. : GPNSLR
TOTAL BEAM LENGTH OF THIS SHEET : 125.34'

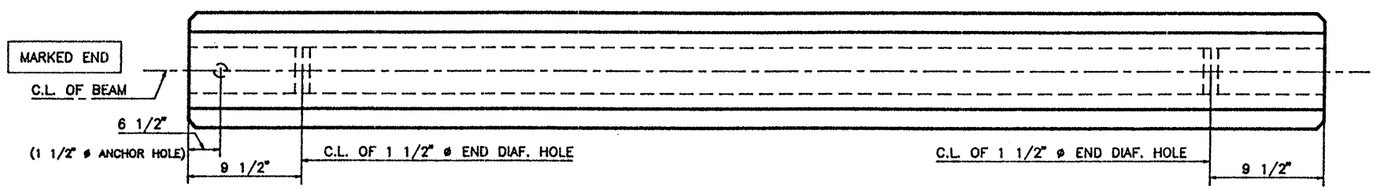

PLAN

TOP FINISH C.I.P.
SEE STANDARD SHEET S-"C" FOR TOP FINISH AND OTHER NOTES AND DETAILS.

MANCO PRESTRESS COMPANY				
CONTRACTOR Gilbert Texas Construction				
FED.RD. DIV.NO.	STATE	PROJECT NO.		HWY. NO.
6	TEXAS	NH 92(50)M		U.S. 83/281
STATE DIST.NO.	COUNTY	CONTROL NO.	SECTION NO.	JOB NO.
21	HIDALGO	0039	17	097

COPYRIGHT 1989 BY
STRUCTURAL ENGINEERING ASSOCIATES, INC.
CONSULTING ENGINEERS, SAN ANTONIO, TEXAS

JOB NO.	DRAWN	CHECKED	DATE	SHEET/MARK NO.
92-018	C.A.J.	D.M.P.	7-01-92	C-3
SEA JOB NO. 92-059H	FABRICATION SHEET			

327252

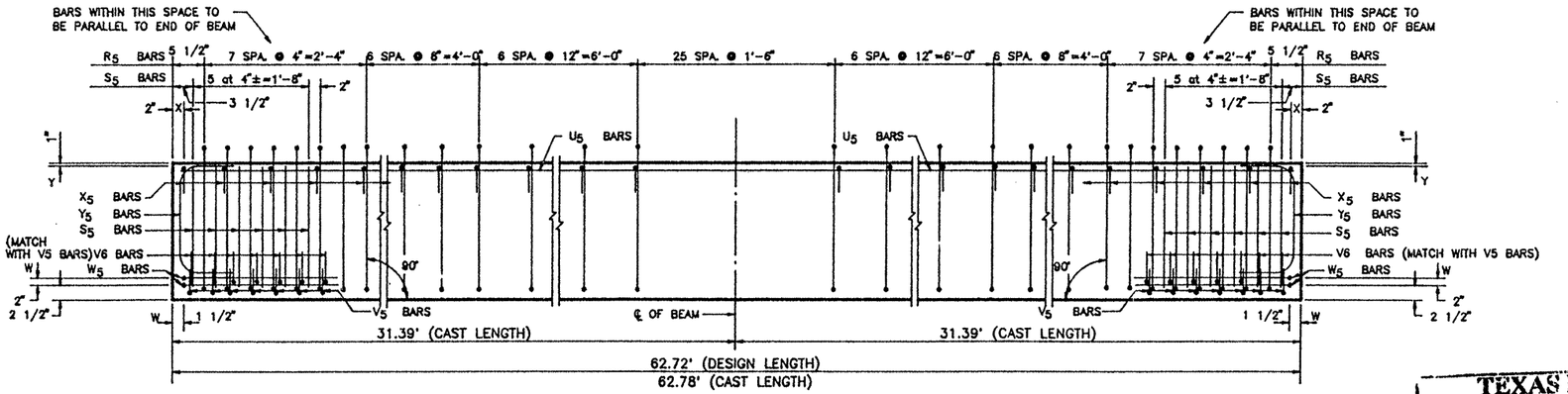

ELEVATION – REINFORCING STEEL

REINFORCING STEEL SCHEDULE				
BAR	QUANTITY PER BEAM	TOTAL QUANTITY	SIZE	LENGTH
R_5	64	128	#4	standard
X_5	58	116	#3	standard
Y_5	4	8	#6	standard
S_5	24	48	#5	standard
V_5	14	28	#3	standard
W_5	4	8	#5	standard
U_5	2	4	#5	62'-6"
V_6	28	56	#4	standard

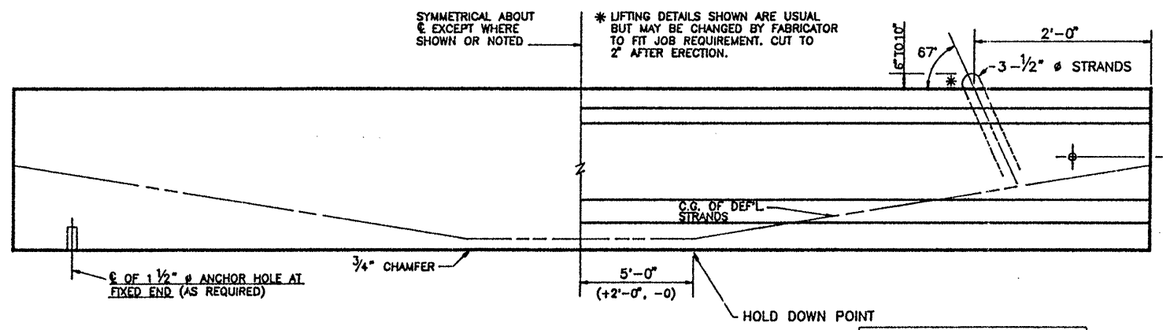

BEAM ELEVATION
SEE PLAN VIEW FOR HOLE(S) LOCATION

SINGLE LIFTING LOOP DETAIL
(TYP. FOR BEAMS UNDER 75')

◉ NOTE
A 2" ø HOLE MAY BE USED AT THE OPTION OF THE FABRICATOR.

TEXAS DEPARTMENT OF TRANSPORTATION
APPROVED
DIVISION OF BRIDGES AND STRUCTURES
JUL 28 1992
APPROVAL OF THIS DRAWING DOES NOT RELIEVE THE CONTRACTOR OF THE RESPONSIBILITY FOR THE CORRECTNESS OF DETAIL.

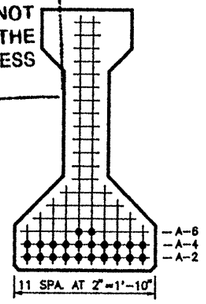

℄ SECTION

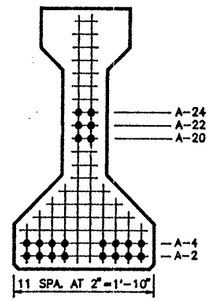

END VIEW

TYPE "C" BEAM QUANTITY : 2

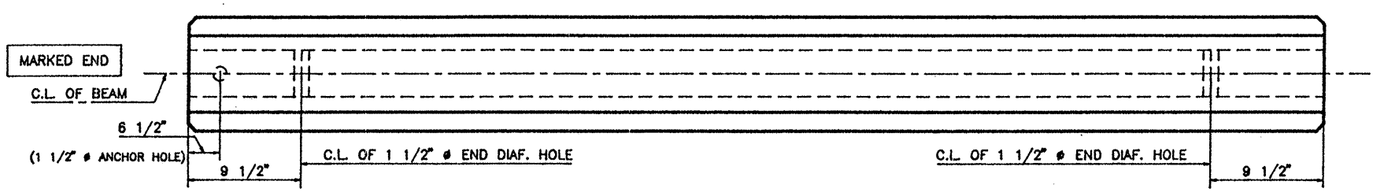

FIXED END

EXPANSION END

PLAN

TOP FINISH C.I.P.
SEE STANDARD SHEET S-"C" FOR TOP FINISH AND OTHER NOTES AND DETAILS.

LO-LAX STRAND PATTERN		
NUMBER OF STRANDS : 22 ~1/2" ø 270 K @ 31.00 K EACH		
NUMBER OF STRAIGHT STRANDS	: 16	
NUMBER OF DEFLECTED STRANDS	: 6 @ A – 24	
CONCRETE RELEASE STRENGTH	: 4090	PSI
CONCRETE DESIGN STRENGTH	: 5000	PSI
ECCENTRICITY @ ℄ : 13.82"	ECCENTRICITY @ END : 8.91"	

DESIGN NO. : O.D.#5
TOTAL BEAM LENGTH OF THIS SHEET : 125.44'

MANCO PRESTRESS COMPANY
CONTRACTOR Gilbert Texas Construction

FED.RD. DIV.NO.	STATE	PROJECT NO.	HWY. NO.
6	TEXAS	NH 92(50)M	U.S. 83/281

STATE DIST.NO.	COUNTY	CONTROL NO.	SECTION NO.	JOB NO.
21	HIDALGO	0039	17	097

COPYRIGHT 1989 BY
STRUCTURAL ENGINEERING ASSOCIATES, INC.
CONSULTING ENGINEERS, SAN ANTONIO, TEXAS

JOB NO.	DRAWN	CHECKED	DATE	SHEET/MARK NO.
92-018	C.A.J.	D.M.P.	7-01-92	C-4
SEA JOB NO. 92-059H	FABRICATION SHEET			

327252

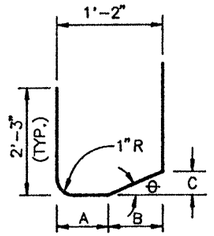

W4A THRU W4Z BARS

BAR	"A"	"B"	"C"	"θ"
W4A	7 1/8"	6 7/8"	3/8"	2 1/2°
W4B	7 1/8"	6 7/8"	5/8"	5°
W4C	7"	7"	7/8"	7 1/2°
W4D	6 7/8"	7 1/8"	1 1/4"	10°
W4E	6 3/4"	7 1/4"	1 5/8"	12 1/2°
W4F	6 3/4"	7 1/4"	2"	15°
W4G	6 3/4"	7 1/4"	2 1/4"	17 1/2°
W4H	6 3/4"	7 1/4"	2 5/8"	20°
W4I	6 5/8"	7 3/8"	3"	22 1/2°
W4J	6 5/8"	7 3/8"	3 1/2"	25°
W4K	6 5/8"	7 3/8"	3 7/8"	27 1/2°
W4L	6 5/8"	7 3/8"	4 1/4"	30°
W4M	6 1/2"	7 1/2"	4 3/4"	32 1/2°
W4N	6 1/2"	7 1/2"	5 1/4"	35°
W4O	6 1/2"	7 1/2"	5 3/4"	37 1/2°
W4P	6 1/2"	7 1/2"	6 1/4"	40°
W4Q	6 3/8"	7 5/8"	7"	42 1/2°
W4R	6 3/8"	7 5/8"	7 5/8"	45°
W4S	6 3/8"	7 5/8"	8 3/8"	47 1/2°
W4T	6 1/4"	7 3/4"	9 1/4"	50°
W4U	6 1/4"	7 3/4"	10 1/8"	52 1/2°
W4V	6 1/4"	7 3/4"	11 1/8"	55°
W4W	6 1/8"	7 7/8"	1'-0 3/8"	57 1/2°
W4X	6 1/8"	7 7/8"	1'-1 5/8"	60°
W4Y	6 1/8"	7 7/8"	1'-3 1/8"	62 1/2°
W4Z	6"	8"	1'-5 1/8"	65°

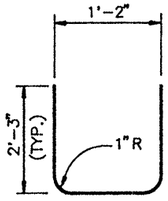

W3 BARS

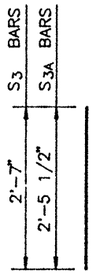

S3 or S3A BARS

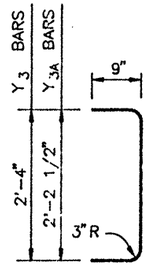

Y3 or Y3A BARS

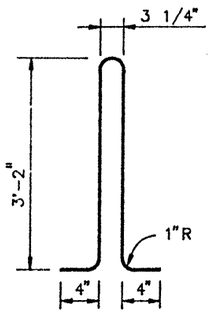

R3 BARS

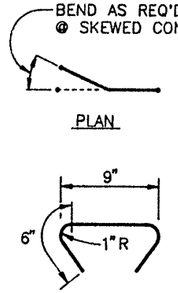

X3 BARS

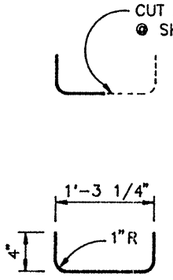

V3 BARS

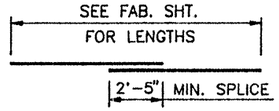

U3 BARS

U BAR SPLICES PERMITTED (40'-0" MIN. C-C SPLICES) NO PORTION OF BAR TO BE LESS THAN 10'-0" (LAP 2'-5" MIN.).U BAR LENGTH INDICATED IS OVERALL LENGTH, DOES NOT INCLUDE SPLICE.

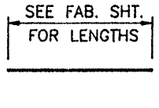

U4A , U4B , U4C , U4D & U4E BARS

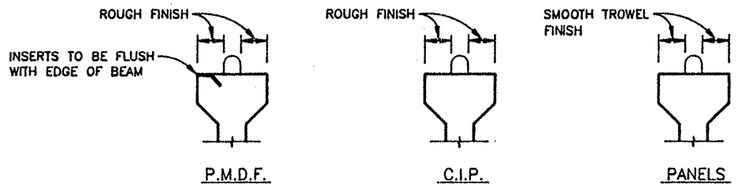

BEAM TOP FINISH

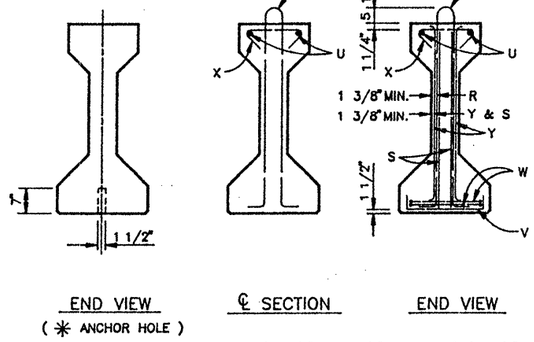

END VIEW ℄ SECTION END VIEW

(✳ ANCHOR HOLE)

✳ NOTE : ANCHOR HOLES MAY BE TAPERED (4 3/4" x 1 5/8" EXP. END) (1 5/8" ø FIXED END) AT BASE. IF HOLES ARE FORMED WITH SHEET METAL, FORMS MAY BE LEFT IN PLACE . HOLES AT FIXED END MAY EXTEND FULL DEPTH OF BEAM. PLUG TOP OR FILL WITH ASPHALT MASTIC. AT FABRICATORS OPTION, ALL BEAMS MAY BE FURNISHED WITH ANCHOR HOLES.

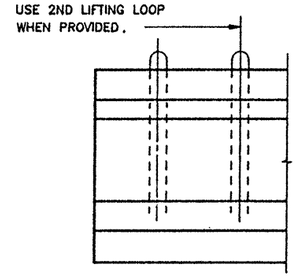

BEAM ERECTION – LIFTING LOOPS

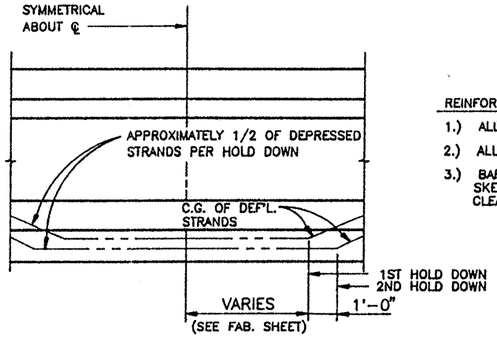

HOLD DOWN POINT DETAIL
(USED WHEN UPLIFT FORCE EXCEEDS BED CAPACITY)

REINFORCING STEEL NOTES:

1.) ALL DIMENSIONS ARE CENTER TO CENTER

2.) ALL STEEL TO BE A.S.T.M. A-615, GR. 60

3.) BARS R AND S MAY BE ADJUSTED FOR SKEWED END CONDITIONS AND ADJUSTED TO CLEAR DIAFRAM HOLE.

GENERAL NOTES

1. SPACING OF BARS R AND S MAY BE VARIED TO AVOID DIAFRAM HOLES.
2. REINFORCING BARS AND/OR STRANDS MAY COME IN CONTACT WITH MATERIALS USED IN FORMING DIAFRAM HOLES.
3. DIMENSIONS RELATING TO BARS OR STRANDS ARE CENTER TO CENTER.
4. BARS V AND X MAY BE TILTED THUS ✓ OR SKEWED AS REQUIRED TO MAINTAIN 1" MIN. CONCRETE COVER.
5. STRANDS MAY BE SPREAD TO MISS DIAFRAM HOLES.
6. STRANDS MAY BE RECESSED 1/2" MAX. INTO END OF BEAM.
7. BEAM ENDS MAY BE FORMED WITH WOOD.
8. BOTTOM CORNERS OF ALL BEAM FLANGES AND OUTSIDE CORNERS OF EXTERIOR BEAM ENDS SHALL BE CHAMFERED OR ROUNDED TO A 3/4" RADIUS. AT FABRICATORS OPTION, ALL VERTICAL EDGES ON ALL BEAMS MAY BE CHAMFERED.
9. BEAM MARKS TO BE PLACED ON FIXED END OR AS NOTED.
10. ALL DIMENSIONS MEASURED ALONG BOTTOM OF BEAM AT ℄ UNLESS NOTED OTHERWISE.

TEXAS DEPARTMENT OF TRANSPORTATION
APPROVED
DIVISION OF BRIDGES AND STRUCTURES
JUL 28 1992
APPROVAL OF THIS DRAWING DOES NOT RELIEVE THE CONTRACTOR OF THE RESPONSIBILITY FOR THE CORRECTNESS OF DETAIL.

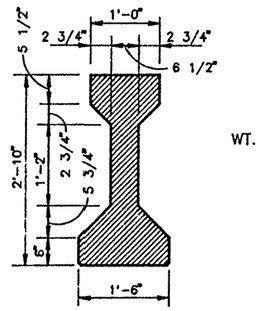

TYPE "B" BEAM

WT./FT.: 375 LBS.
C.Y.: .09

MANCO PRESTRESS COMPANY				
CONTRACTOR Gilbert Texas Construction				
FED.RD. DIV.NO.	STATE	PROJECT NO.		HWY. NO.
6	TEXAS	NH 92(50)M		U.S. 83/281
STATE DIST.NO.	COUNTY	CONTROL NO.	SECTION NO.	JOB NO.
21	HIDALGO	0039	17	097

COPYRIGHT 1989 BY STRUCTURAL ENGINEERING ASSOCIATES, INC. *CONSULTING ENGINEERS*, SAN ANTONIO, TEXAS

JOB NO.	DRAWN	CHECKED	DATE	SHEET
92-018	C.A.J.	D.M.P.	7-01-92	S-"B"
SEA JOB NO. 92-059H	STANDARD SHEET			

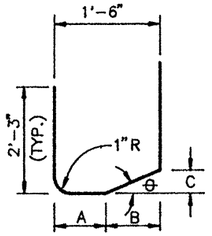

W6A THRU W6Z BARS

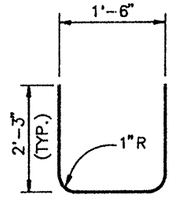

W5 BARS

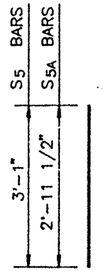

S5 or S5A BARS

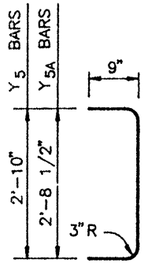

Y5 or Y5A BARS

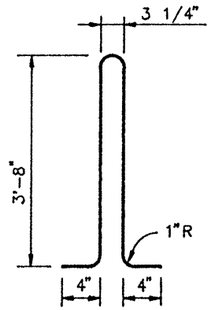

R5 BARS

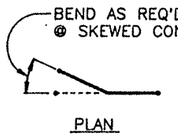

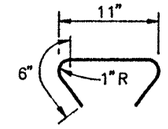

X5 BARS

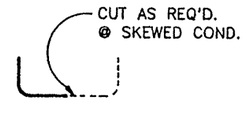

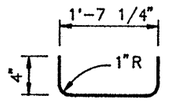

V5 BARS

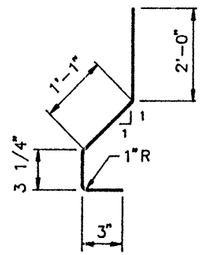

V6 BARS

BAR	"A"	"B"	"C"	"θ"
W6A	8 7/8"	9 1/8"	3/8"	2 1/2°
W6B	8 7/8"	9 1/8"	3/4"	5°
W6C	8 7/8"	9 1/8"	1 1/4"	7 1/2°
W6D	8 7/8"	9 1/8"	1 5/8"	10°
W6E	8 3/4"	9 1/4"	2"	12 1/2°
W6F	8 3/4"	9 1/4"	2 1/2"	15°
W6G	8 3/4"	9 1/4"	2 7/8"	17 1/2°
W6H	8 3/4"	9 1/4"	3 3/8"	20°
W6I	8 5/8"	9 3/8"	3 7/8"	22 1/2°
W6J	8 5/8"	9 3/8"	4 3/8"	25°
W6K	8 5/8"	9 3/8"	4 7/8"	27 1/2°
W6L	8 5/8"	9 3/8"	5 3/8"	30°
W6M	8 1/2"	9 1/2"	6"	32 1/2°
W6N	8 1/2"	9 1/2"	6 5/8"	35°
W6O	8 1/2"	9 1/2"	7 1/4"	37 1/2°
W6P	8 3/8"	9 5/8"	8 1/8"	40°
W6Q	8 3/8"	9 5/8"	8 7/8"	42 1/2°
W6R	8 3/8"	9 5/8"	9 5/8"	45°
W6S	8 1/4"	9 3/4"	10 5/8"	47 1/2°
W6T	8 1/4"	9 3/4"	11 5/8"	50°
W6U	8 1/4"	9 3/4"	1'-0 3/4"	52 1/2°
W6V	8 1/4"	9 3/4"	1'-1 7/8"	55°
W6W	8 1/8"	9 7/8"	1'-3 1/2"	57 1/2°
W6X	8 1/8"	9 7/8"	1'-5 1/8"	60°
W6Y	8"	10"	1'-7 1/4"	62 1/2°
W6Z	8"	10"	1'-9 1/2"	65°

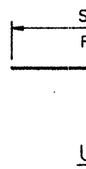

U5 BARS

U BAR SPLICES PERMITTED (40'-0" MIN. C-C SPLICES) NO PORTION OF BAR TO BE LESS THAN 10'-0" (LAP 2'-5" MIN.).U BAR LENGTH INDICATED IS OVERALL LENGTH, DOES NOT INCLUDE SPLICE.

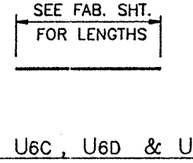

U6A , U6B , U6C , U6D & U6E BARS

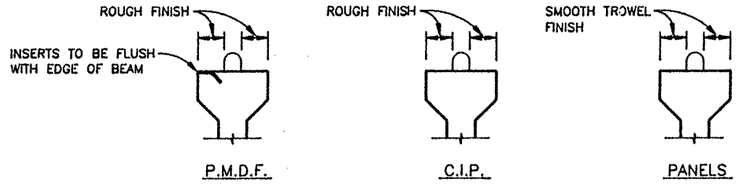

P.M.D.F. C.I.P. PANELS

BEAM TOP FINISH

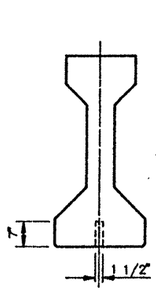

END VIEW

(✳ ANCHOR HOLE)

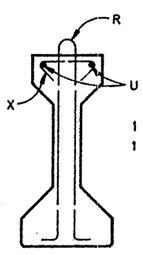

℄ SECTION

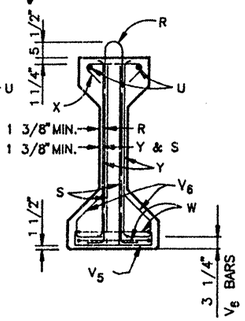

END VIEW

✳ NOTE : ANCHOR HOLES MAY BE TAPERED (4 3/4" x 1 5/8" EXP. END) (1 5/8" ø FIXED END) AT BASE. IF HOLES ARE FORMED WITH SHEET METAL, FORMS MAY BE LEFT IN PLACE . HOLES AT FIXED END MAY EXTEND FULL DEPTH OF BEAM. PLUG TOP OR FILL WITH ASPHALT MASTIC. AT FABRICATORS OPTION, ALL BEAMS MAY BE FURNISHED WITH ANCHOR HOLES.

FOR BEAM ERECTION;
BEAMS OVER 105'-0" USE 2ND LIFTING LOOP WHEN PROVIDED.

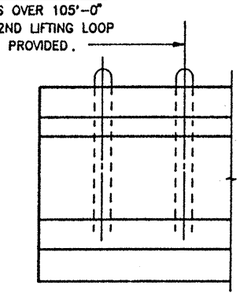

BEAM ERECTION – LIFTING LOOPS

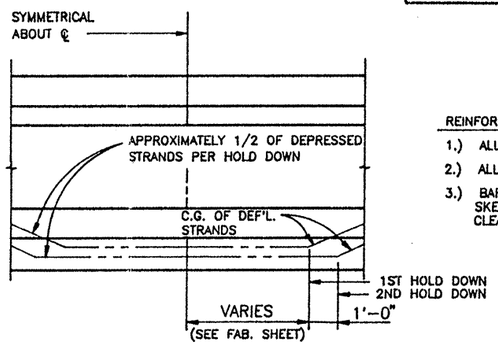

HOLD DOWN POINT DETAIL
(USED WHEN UPLIFT FORCE EXCEEDS BED CAPACITY)

GENERAL NOTES

1. SPACING OF BARS R AND S MAY BE VARIED TO AVOID DIAFRAM HOLES.
2. REINFORCING BARS AND/OR STRANDS MAY COME IN CONTACT WITH MATERIALS USED IN FORMING DIAFRAM HOLES.
3. DIMENSIONS RELATING TO BARS OR STRANDS ARE CENTER TO CENTER.
4. BARS V AND X MAY BE TILTED THUS ⁄ OR SKEWED AS REQUIRED TO MAINTAIN 1" MIN. CONCRETE COVER.
5. STRANDS MAY BE SPREAD TO MISS DIAFRAM HOLES.
6. STRANDS MAY BE RECESSED 1/2" MAX. INTO END OF BEAM.
7. BEAM ENDS MAY BE FORMED WITH WOOD.
8. BOTTOM CORNERS OF ALL BEAM FLANGES AND OUTSIDE CORNERS OF EXTERIOR BEAM ENDS SHALL BE CHAMFERED OR ROUNDED TO A 3/4" RADIUS. AT FABRICATORS OPTION, ALL VERTICAL EDGES ON ALL BEAMS MAY BE CHAMFERED.
9. BEAM MARKS TO BE PLACED ON FIXED END OR AS NOTED.
10. ALL DIMENSIONS MEASURED ALONG BOTTOM OF BEAM AT ℄ UNLESS NOTED OTHERWISE.

TEXAS DEPARTMENT OF TRANSPORTATION
APPROVED
DIVISION OF BRIDGES AND STRUCTURES

JUL 28 1992

APPROVAL OF THIS DRAWING DOES NOT RELIEVE THE CONTRACTOR OF THE RESPONSIBILITY FOR THE CORRECTNESS OF DETAIL.

REINFORCING STEEL NOTES:

1.) ALL DIMENSIONS ARE CENTER TO CENTER
2.) ALL STEEL TO BE A.S.T.M. A-615, GR. 60
3.) BARS R AND S MAY BE ADJUSTED FOR SKEWED END CONDITIONS AND ADJUSTED TO CLEAR DIAFRAM HOLE.

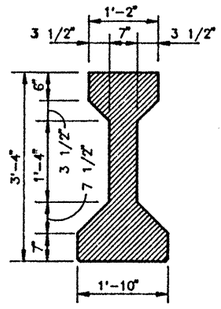

TYPE "C" BEAM

WT./FT.: 516 LBS.
C.Y.: .13

MANCO PRESTRESS COMPANY

CONTRACTOR Gilbert Texas Construction

FED.RD. DIV.NO.	STATE	PROJECT NO.		HWY. NO.
6	TEXAS	NH 92(50)M		U.S. 83/281
STATE DIST.NO.	COUNTY	CONTROL NO.	SECTION NO.	JOB NO.
21	HIDALGO	0039	17	097

COPYRIGHT 1989 BY STRUCTURAL ENGINEERING ASSOCIATES, INC. CONSULTING ENGINEERS, SAN ANTONIO, TEXAS

JOB NO.	DRAWN	CHECKED	DATE	SHEET
92-018	C.A.J.	D.M.P.	7 - 01 - 92	S-"C"
SEA JOB NO. 92-059H	STANDARD SHEET			

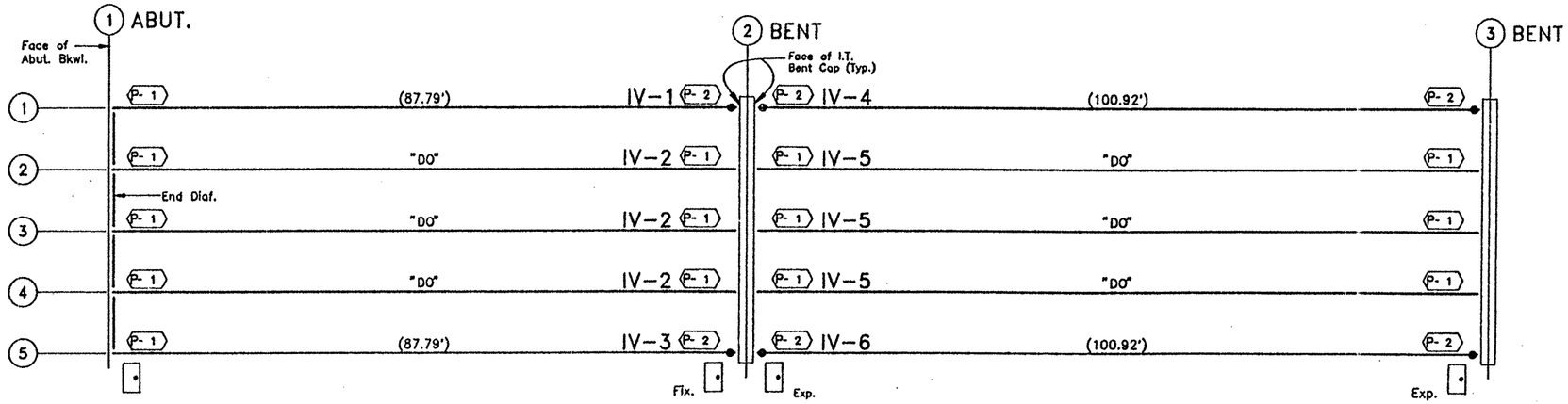

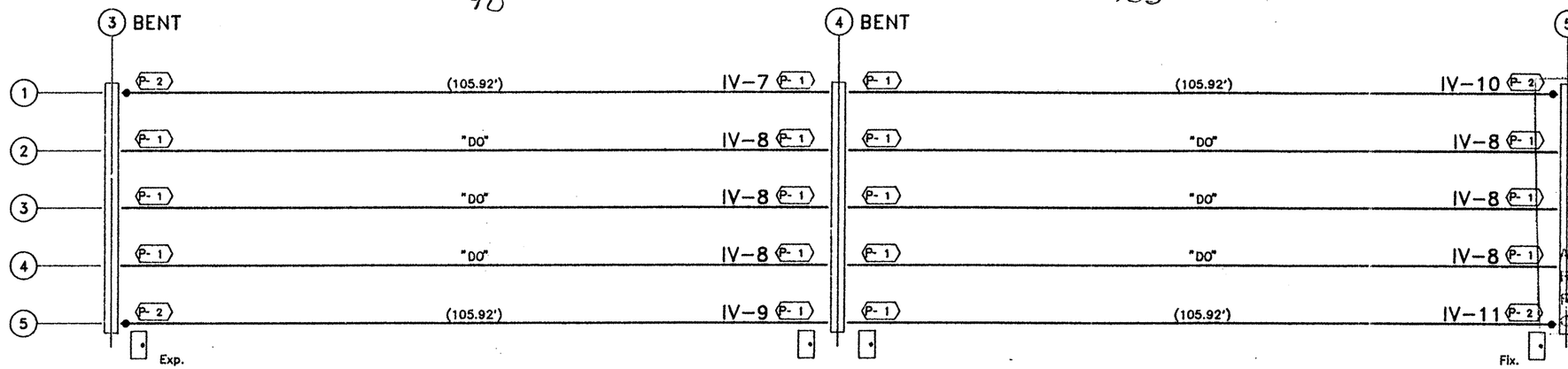

U.S. 83/281 INTERCHANGE
RAMPS 1 & 2

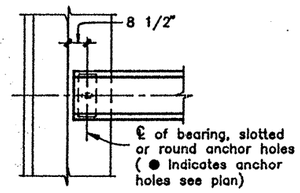

PLAN AT ABUT. 1

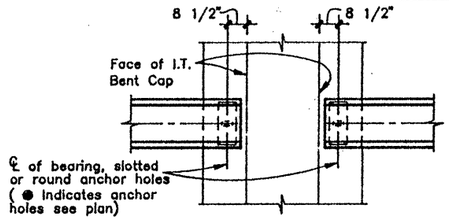

PLAN AT BENTS 2 thru 11

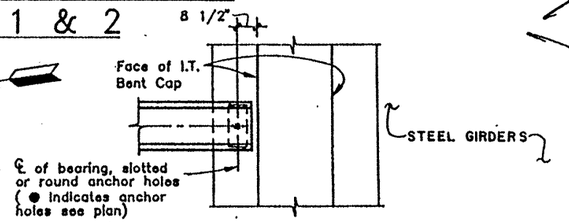

PLAN AT BENT 12

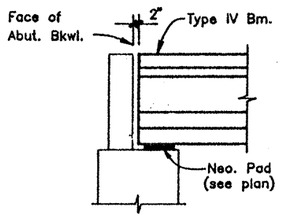

ELEV. AT ABUT. 1

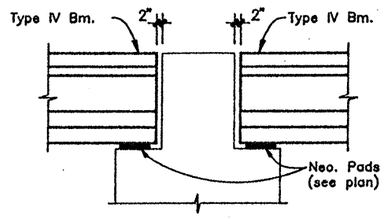

ELEV. AT BENTS 2 thru 11

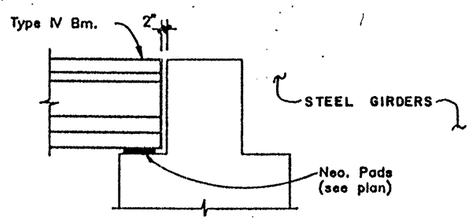

ELEV. AT BENT 12

( ) INDICATES BEAM LENGTH

NOTE!

NOTE:
SEE APPROVED FORMING DETAILS FOR INSERT SPEC'S & INSERT SPACING.

TEXAS DEPARTMENT OF TRANSPORTATION
APPROVED EXCEPT AS NOTED
DIVISION OF BRIDGES AND STRUCTURES
AUG 05 1992
APPROVAL OF THIS DRAWING DOES NOT RELIEVE THE CONTRACTOR OF THE RESPONSIBILITY FOR THE CORRECTNESS OF DETAIL.

MANCO PRESTRESS COMPANY				
CONTRACTOR Gilbert Texas Construction				
CONTRACTORS OPTIONS	END DIAFRAM :E.D.O. #2 INTERIOR DIAFRAM :N/A			SLAB : PANELS
FED.RD. DIV.NO.	STATE	PROJECT NO.		HWY. NO.
6	TEXAS	NH 92(50)M		U.S. 83/281
STATE DIST.NO.	COUNTY	CONTROL NO.	SECTION NO.	JOB NO.
21	HIDALGO	0039	17	097

COPYRIGHT 1989 BY
STRUCTURAL ENGINEERING ASSOCIATES, INC.
CONSULTING ENGINEERS, SAN ANTONIO, TEXAS

JOB NO.	DRAWN	CHECKED	DATE	SHEET NO.
92-018	C.A.J.	D.M.P.	6-16-92	E-1
SEA JOB NO. 92-059H	ERECTION SHEET			

328071

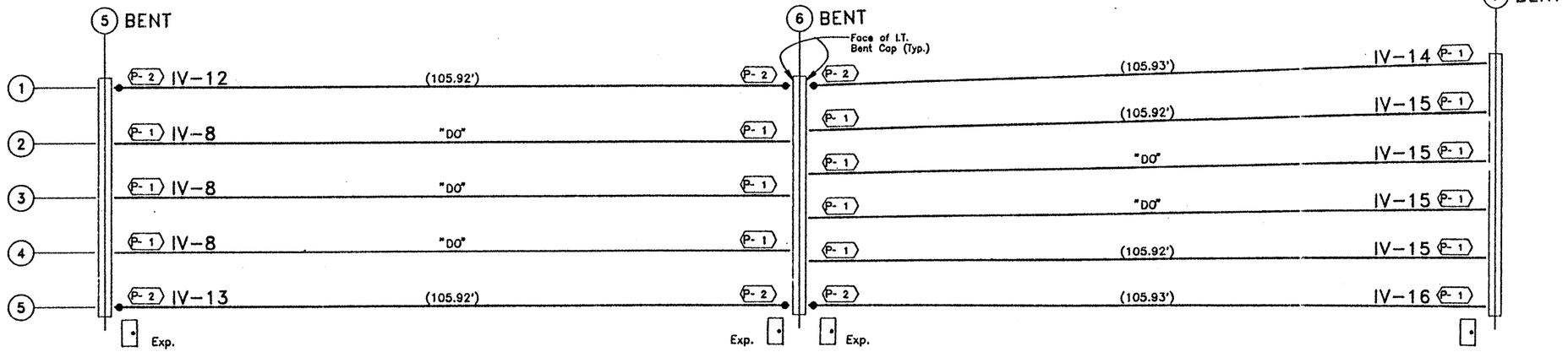

SPAN 5

SPAN 6

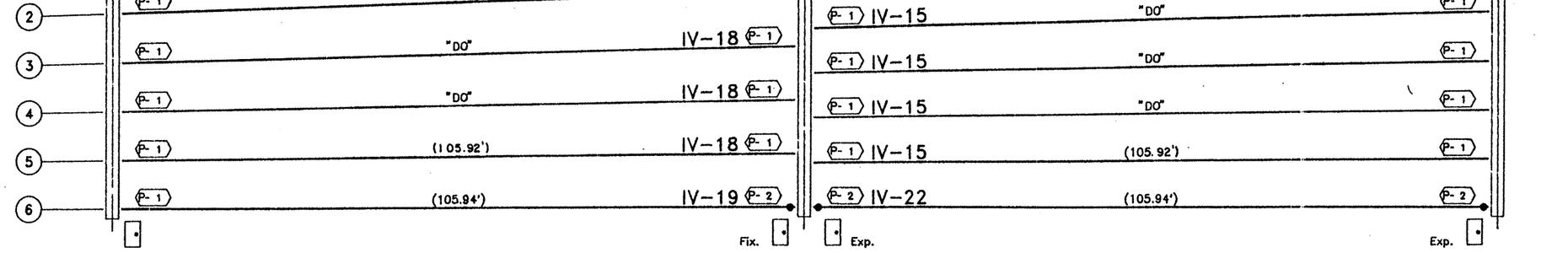

SPAN 7

SPAN 8

U.S. 83/281 INTERCHANGE
RAMPS 1 & 2

TEXAS DEPARTMENT OF TRANSPORTATION
APPROVED
DIVISION OF BRIDGES AND STRUCTURES
AUG 05 1992
APPROVAL OF THIS DRAWING DOES NOT RELIEVE THE CONTRACTOR OF THE RESPONSIBILITY FOR THE CORRECTNESS OF DETAIL.

( ) INDICATES BEAM LENGTH

MANCO PRESTRESS COMPANY

CONTRACTOR Gilbert Texas Construction

CONTRACTORS OPTIONS		SLAB : PANELS
	END DIAFRAM :N/A INTERIOR DIAFRAM :N/A	

FED.RD. DIV.NO.	STATE	PROJECT NO.	HWY. NO.
6	TEXAS	NH 92(50)M	U.S. 83/281

STATE DIST.NO.	COUNTY	CONTROL NO.	SECTION NO.	JOB NO.
21	HIDALGO	0039	17	097

COPYRIGHT 1989 BY STRUCTURAL ENGINEERING ASSOCIATES, INC. *CONSULTING ENGINEERS*, SAN ANTONIO, TEXAS

JOB NO.	DRAWN	CHECKED	DATE	SHEET NO.
92-018	C.A.J.	D.M.P.	6-16-92	E-2
SEA JOB NO. 92-059H	ERECTION SHEET			

328071

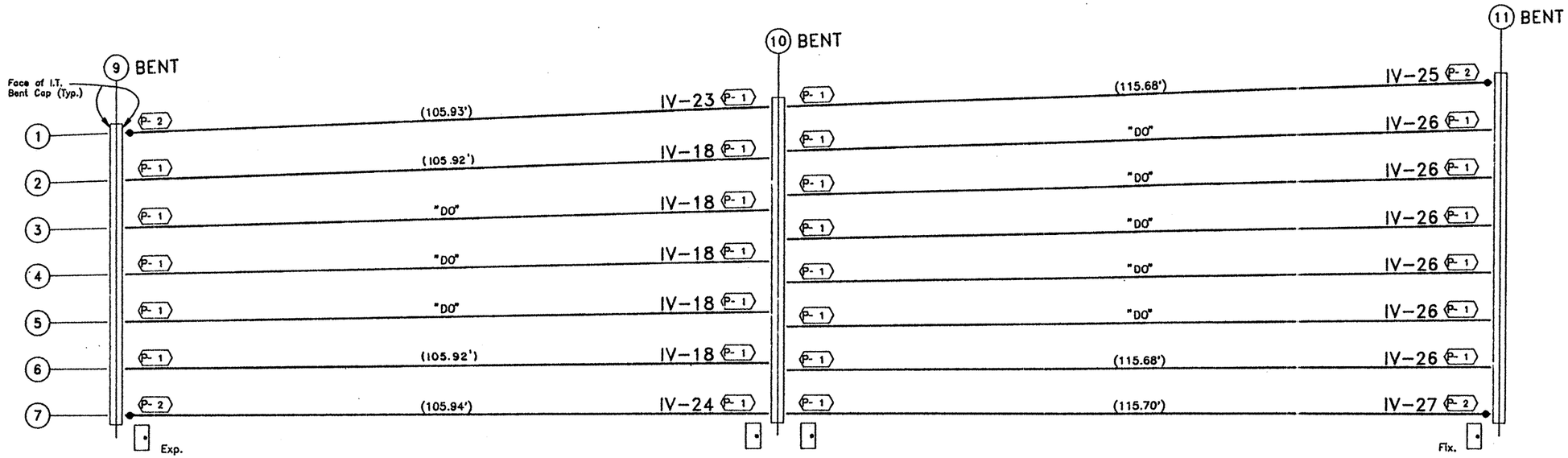

SPAN 9

SPAN 10

U.S. 83/281 INTERCHANGE
RAMPS 1 & 2

TEXAS DEPARTMENT OF TRANSPORTATION
APPROVED
DIVISION OF BRIDGES AND STRUCTURES

AUG 05 1992

APPROVAL OF THIS DRAWING DOES NOT RELIEVE THE CONTRACTOR OF THE RESPONSIBILITY FOR THE CORRECTNESS OF DETAIL.

( ) INDICATES BEAM LENGTH

MANCO PRESTRESS COMPANY				
CONTRACTOR Gilbert Texas Construction				
CONTRACTORS OPTIONS	END DIAFRAM :N/A INTERIOR DIAFRAM :N/A			SLAB : PANELS
FED.RD. DIV.NO.	STATE	PROJECT NO.		HWY. NO.
6	TEXAS	NH 92(50)M		U.S. 83/281
STATE DIST.NO.	COUNTY	CONTROL NO.	SECTION NO.	JOB NO.
21	HIDALGO	0039	17	097

COPYRIGHT 1989 BY STRUCTURAL ENGINEERING ASSOCIATES, INC. *CONSULTING ENGINEERS*, SAN ANTONIO, TEXAS

JOB NO. 92-018	DRAWN C.A.J.	CHECKED D.M.P.	DATE 6-16-92	SHEET NO. E-3
SEA JOB NO. 92-059H	ERECTION SHEET			

328071

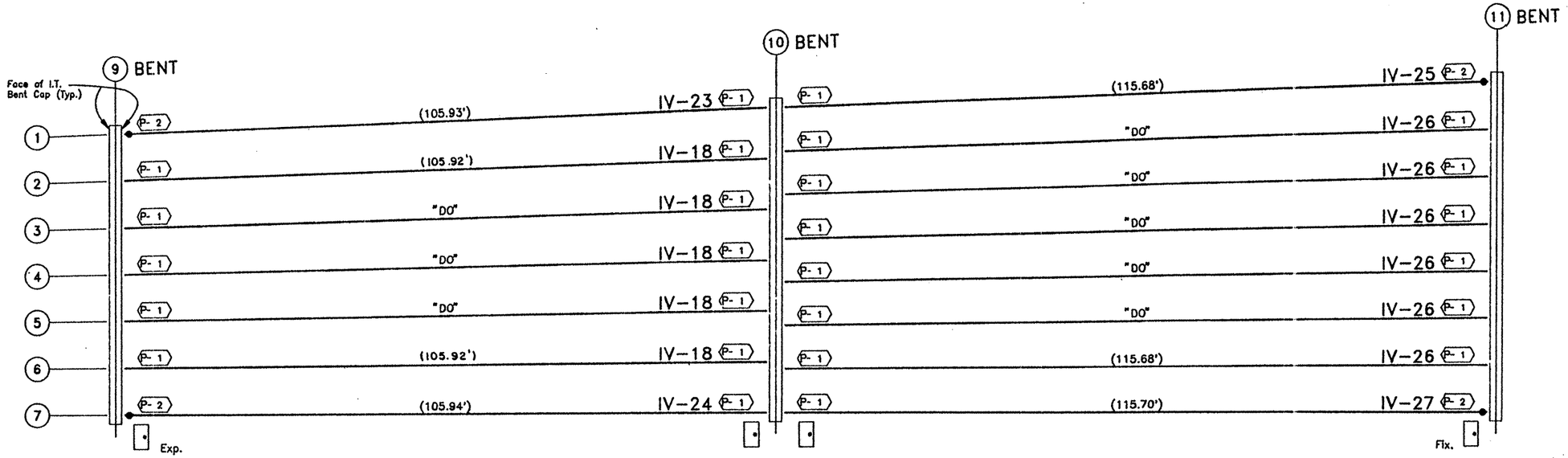

SPAN 9

SPAN 10

U.S. 83/281 INTERCHANGE
RAMPS 1 & 2

TEXAS DEPARTMENT OF TRANSPORTATION
APPROVED
DIVISION OF BRIDGES AND STRUCTURES

AUG 05 1992

APPROVAL OF THIS DRAWING DOES NOT RELIEVE THE CONTRACTOR OF THE RESPONSIBILITY FOR THE CORRECTNESS OF DETAIL.

( ) INDICATES BEAM LENGTH

MANCO PRESTRESS COMPANY				
CONTRACTOR Gilbert Texas Construction				
CONTRACTORS OPTIONS	END DIAFRAM :N/A INTERIOR DIAFRAM :N/A			SLAB : PANELS
FED.RD. DIV.NO.	STATE	PROJECT NO.		HWY. NO.
6	TEXAS	NH 92(50)M		U.S. 83/281
STATE DIST.NO.	COUNTY	CONTROL NO.	SECTION NO.	JOB NO.
21	HIDALGO	0039	17	097

COPYRIGHT 1989 BY STRUCTURAL ENGINEERING ASSOCIATES, INC. *CONSULTING ENGINEERS*, SAN ANTONIO, TEXAS

JOB NO.	DRAWN	CHECKED	DATE	SHEET NO.
92-018	C.A.J.	D.M.P.	6-16-92	E-3
SEA JOB NO. 92-059H	ERECTION SHEET			

328071

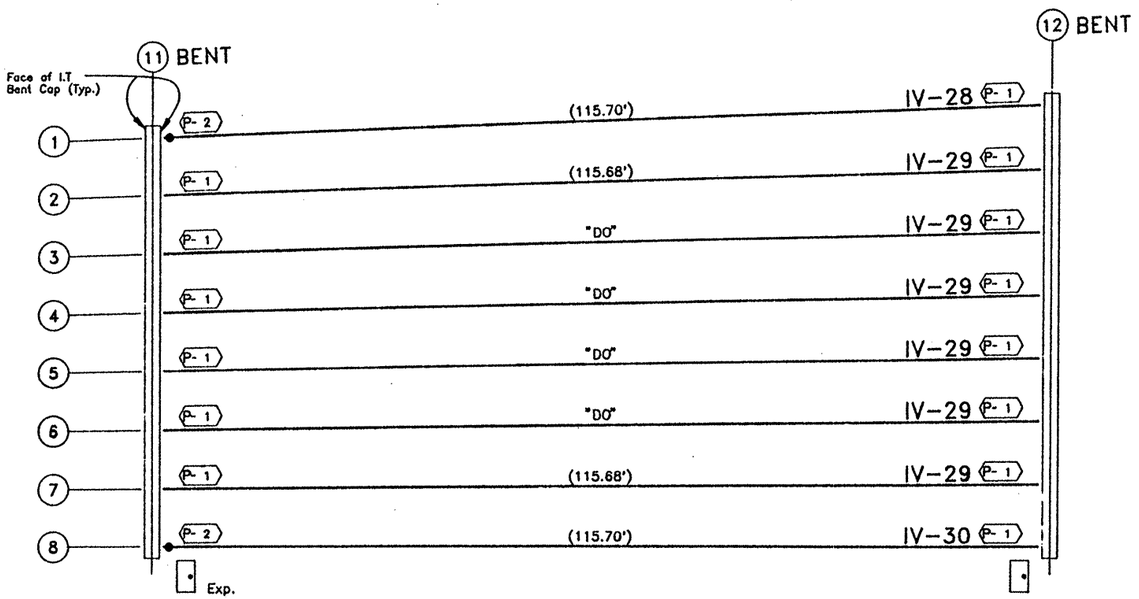

UNIT 5 STEEL GIRDERS
(BY OTHERS)

SPAN 11

U.S. 83/281 INTERCHANGE
RAMPS 1 & 2

TEXAS DEPARTMENT OF TRANSPORTATION
APPROVED
DIVISION OF BRIDGES AND STRUCTURES

AUG 05 1992

APPROVAL OF THIS DRAWING DOES NOT RELIEVE THE CONTRACTOR OF THE RESPONSIBILITY FOR THE CORRECTNESS OF DETAIL.

( ) INDICATES BEAM LENGTH

MANCO PRESTRESS COMPANY				
CONTRACTOR Gilbert Texas Construction				
CONTRACTORS OPTIONS	END DIAFRAM :N/A INTERIOR DIAFRAM :N/A			SLAB : PANELS
FED.RD. DIV.NO.	STATE	PROJECT NO.		HWY. NO.
6	TEXAS	NH 92(50)M		U.S. 83/281
STATE DIST.NO.	COUNTY	CONTROL NO.	SECTION NO.	JOB NO.
21	HIDALGO	0039	17	097

COPYRIGHT 1989 BY STRUCTURAL ENGINEERING ASSOCIATES, INC. *CONSULTING ENGINEERS*, SAN ANTONIO, TEXAS

JOB NO. 92-018	DRAWN C.A.J.	CHECKED D.M.P.	DATE 6-16-92	SHEET NO. E-4
SEA JOB NO. 92-059H	ERECTION SHEET			

328071

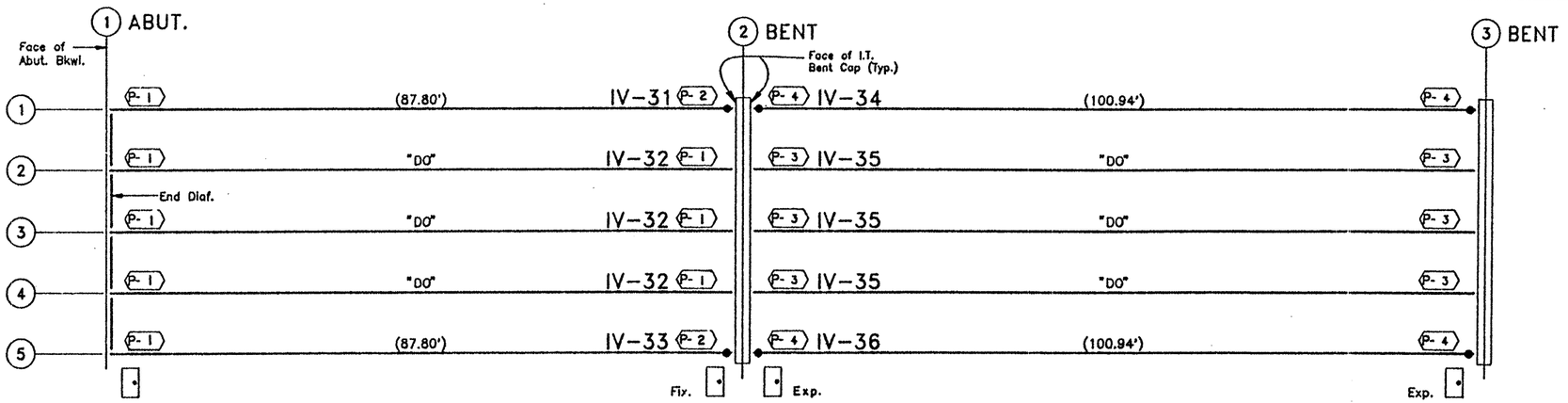

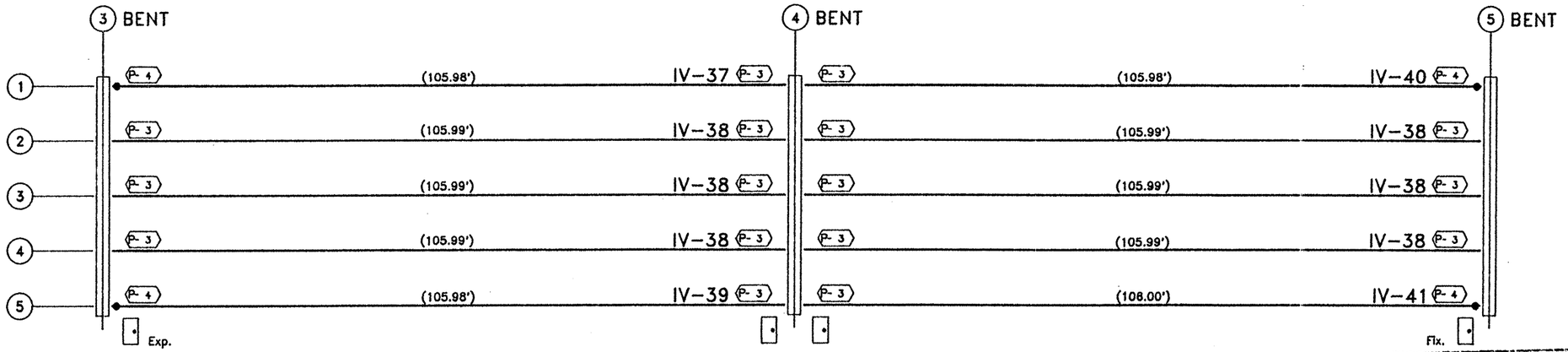

U.S. 83/281 INTERCHANGE
RAMPS 3 & 4

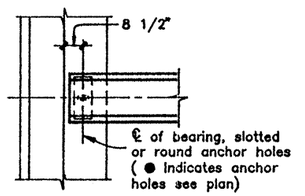

PLAN AT ABUT. 1

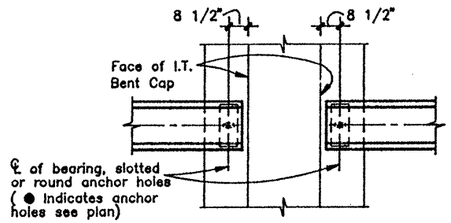

PLAN AT BENTS 2 thru 11

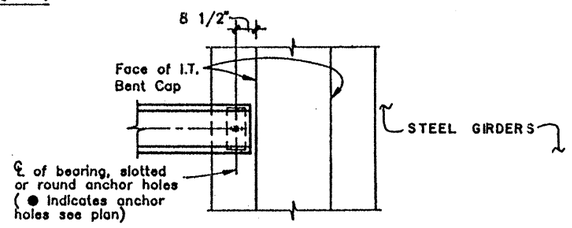

PLAN AT BENT 12

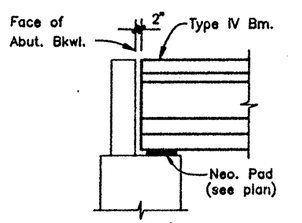

ELEV. AT ABUT. 1

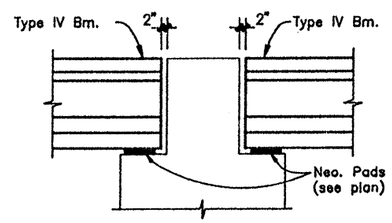

ELEV. AT BENTS 2 thru 11

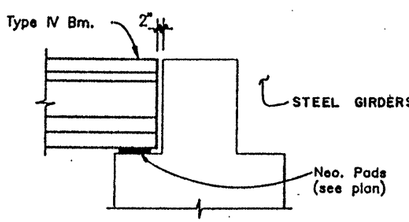

ELEV. AT BENT 12

TEXAS DEPARTMENT OF TRANSPORTATION
APPROVED
DIVISION OF BRIDGES AND STRUCTURES
AUG 05 1992
APPROVAL OF THIS DRAWING DOES NOT RELIEVE THE CONTRACTOR OF THE RESPONSIBILITY FOR THE CORRECTNESS OF DETAIL.

( ) INDICATES BEAM LENGTH

MANCO PRESTRESS COMPANY					
CONTRACTOR Gilbert Texas Construction					
CONTRACTORS OPTIONS	END DIAFRAM :E.D.O. #2 INTERIOR DIAFRAM :N/A				SLAB : PANELS
FED.RD. DIV.NO.	STATE	PROJECT NO.			HWY. NO.
6	TEXAS	NH 92(50)M			U.S. 83/281
STATE DIST.NO.	COUNTY		CONTROL NO.	SECTION NO.	JOB NO.
21	HIDALGO		0039	17	097

COPYRIGHT 1989 BY STRUCTURAL ENGINEERING ASSOCIATES, INC. *CONSULTING ENGINEERS*, SAN ANTONIO, TEXAS

JOB NO. 92-018	DRAWN C.A.J.	CHECKED D.M.P.	DATE 6-16-92	SHEET NO. E-5
SEA JOB NO. 92-059H	ERECTION SHEET			

328071

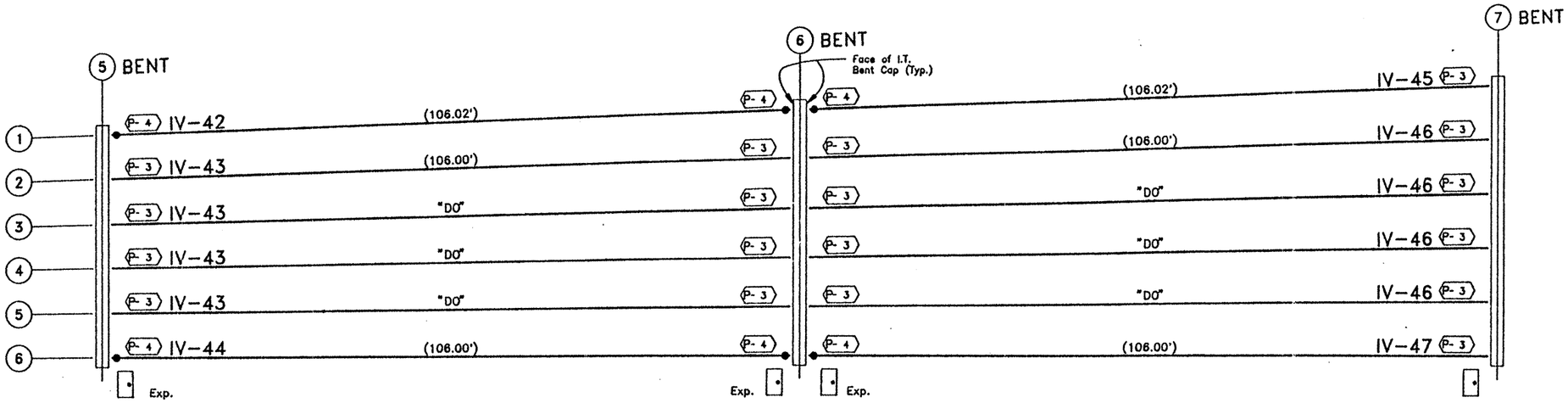

SPAN 5

SPAN 6

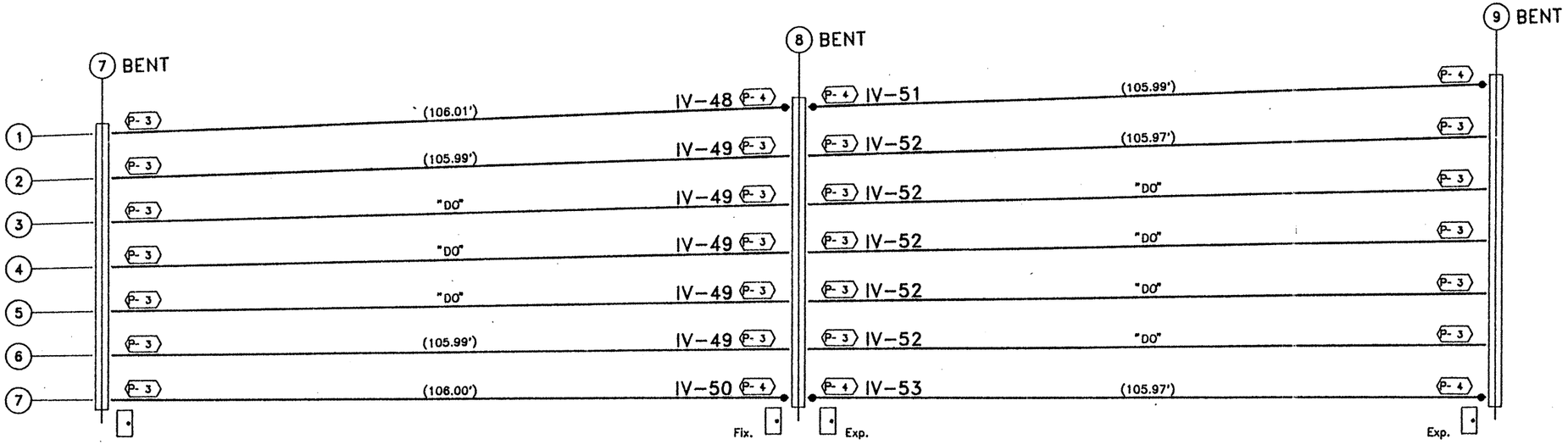

SPAN 7

SPAN 8

U.S. 83/281 INTERCHANGE
RAMPS 3 & 4

TEXAS DEPARTMENT OF TRANSPORTATION
APPROVED
DIVISION OF BRIDGES AND STRUCTURES
AUG 05 1992
APPROVAL OF THIS DRAWING DOES NOT RELIEVE THE CONTRACTOR OF THE RESPONSIBILITY FOR THE CORRECTNESS OF DETAIL.

( ) INDICATES BEAM LENGTH

MANCO PRESTRESS COMPANY

CONTRACTOR Gilbert Texas Construction

CONTRACTORS OPTIONS	END DIAFRAM :N/A INTERIOR DIAFRAM :N/A	SLAB : PANELS

FED.RD. DIV.NO.	STATE	PROJECT NO.	HWY. NO.
6	TEXAS	NH 92(50)M	U.S. 83/281

STATE DIST.NO.	COUNTY	CONTROL NO.	SECTION NO.	JOB NO.
21	HIDALGO	0039	17	097

COPYRIGHT 1989 BY STRUCTURAL ENGINEERING ASSOCIATES, INC. *CONSULTING ENGINEERS*, SAN ANTONIO, TEXAS

JOB NO.	DRAWN	CHECKED	DATE	SHEET NO.
92-018	C.A.J.	D.M.P.	6-16-92	E-6
SEA JOB NO. 92-059H	ERECTION SHEET			

328071

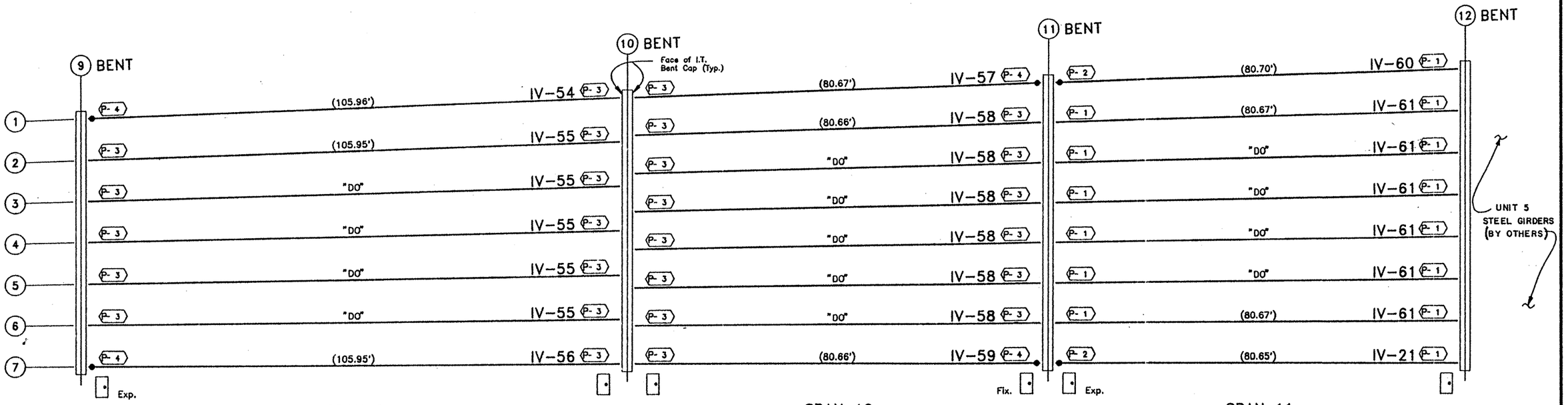

SPAN 9 SPAN 10 SPAN 11

U.S. 83/281 INTERCHANGE
RAMPS 3 & 4

TEXAS DEPARTMENT OF TRANSPORTATION
APPROVED
DIVISION OF BRIDGES AND STRUCTURES
AUG 05 1992
APPROVAL OF THIS DRAWING DOES NOT RELIEVE THE CONTRACTOR OF THE RESPONSIBILITY FOR THE CORRECTNESS OF DETAIL.

( ) INDICATES BEAM LENGTH

MANCO PRESTRESS COMPANY				
CONTRACTOR Gilbert Texas Construction				
CONTRACTORS OPTIONS	END DIAFRAM :N/A INTERIOR DIAFRAM :N/A			SLAB : PANELS
FED.RD. DIV.NO.	STATE	PROJECT NO.		HWY. NO.
6	TEXAS	NH 92(50)M		U.S. 83/281
STATE DIST.NO.	COUNTY	CONTROL NO.	SECTION NO.	JOB NO.
21	HIDALGO	0039	17	097

COPYRIGHT 1989 BY STRUCTURAL ENGINEERING ASSOCIATES, INC. CONSULTING ENGINEERS, SAN ANTONIO, TEXAS

JOB NO.	DRAWN	CHECKED	DATE	SHEET NO.
92-018	C.A.J.	D.M.P.	6-16-92	E-7
SEA JOB NO. 92-059H	ERECTION SHEET			

328071

INDEX

5445 5905

STRUCTURE DESIG-NATION	SPAN NO.	BEAM TYPE & MARK NO.	BEAM QUANTITY	LENGTH I.D.T.S. ADDED	LENGTH DESIGN (A)	LENGTH CAST (B)	1/2" ø -270k LO-LAX STRANDS TOTAL QUANTITY	"e" AT ℄	"e" AT END	DEPRESSED QUAN.	DEPRESSED AT	CONCRETE MINIMUM RELEASE	CONCRETE MIN. COMP. 28 DAY STRENGTH	ENDS SKEW (INCHES)	ENDS BATTER (INCHES)	BEAM DETAIL SHEET NO.	DESIGN REFERENCE NO.	REMARKS
U.S. 83/281 INTERCHANGE RAMPS 1 & 2	1	IV-1	1	None	87.79'	87.83'	52	11.21"	11.21"	STRAIGHT		5820	5900	None	None	IV-1	O.D.#1	NONE
	1	IV-2	3	None	87.79'	87.83'	52	11.21"	11.21"	STRAIGHT		5820	5900	None	None	IV-2	O.D.#1	NONE
	1	IV-3	1	None	87.79'	87.83'	52	11.21"	11.21"	STRAIGHT		5820	5900	None	None	IV-3	O.D.#1	NONE
	2	IV-4	1	None	100.92'	100.97'	48	18.83"	10.92"	10	A-52	5210	5420	None	None	IV-4	O.D.#2	NONE
	2	IV-5	3	None	100.92'	100.97'	48	18.83"	10.92"	10	A-52	5210	5420	None	None	IV-5	O.D.#2	NONE
	2	IV-6	1	None	100.92'	100.97'	48	18.83"	10.92"	10	A-52	5210	5420	None	None	IV-6	O.D.#2	NONE
	3	IV-7	1	None	105.92'	105.97'	44	20.02"	12.02"	8	A-52	5017	5944	None	None	IV-7	GpNsLR	NONE
	3,4,5	IV-8	9	None	105.92'	105.97'	44	20.02"	12.02"	8	A-52	5017	5944	None	None	IV-8	GpNsLR	NONE
	3	IV-9	1	None	105.92'	105.97'	44	20.02"	12.02"	8	A-52	5017	5944	None	None	IV-9	GpNsLR	NONE
	4	IV-10	1	None	105.92'	105.97'	44	20.02"	12.02"	8	A-52	5017	5944	None	None	IV-10	GpNsLR	NONE
	4	IV-11	1	None	105.92'	105.97'	44	20.02"	12.02"	8	A-52	5017	5944	None	None	IV-11	GpNsLR	NONE
	5	IV-12	1	None	105.92'	105.97'	44	20.02"	12.02"	8	A-52	5017	5944	None	None	IV-12	GpNsLR	NONE
	5	IV-13	1	None	105.92'	105.97'	44	20.02"	12.02"	8	A-52	5017	5944	None	None	IV-13	GpNsLR	NONE
	6	IV-14	1	None	105.93'	105.98'	38	20.54"	11.28"	8	A-52	4233	5599	None	None	IV-14	GpNsLR	NONE
	6,8	IV-15	9	None	105.92'	105.97'	38	20.54"	11.28"	8	A-52	4233	5599	None	None	IV-15	GpNsLR	NONE
	6	IV-16	1	None	105.93'	105.98'	38	20.54"	11.28"	8	A-52	4233	5599	None	None	IV-16	GpNsLR	NONE
	7	IV-17	1	None	105.93'	105.98'	42	20.18"	11.80"	8	A-52	4756	5830	None	None	IV-17	GpNsLR	NONE
	7,9	IV-18	9	None	105.92'	105.97'	42	20.18"	11.80"	8	A-52	4756	5830	None	None	IV-18	GpNsLR	NONE
	7	IV-19	1	None	105.94'	105.99'	42	20.18"	11.80"	8	A-52	4756	5830	None	None	IV-19	GpNsLR	NONE
	8	IV-20	1	None	105.93'	105.98'	38	20.54"	11.28"	8	A-52	4233	5599	None	None	IV-20	GpNsLR	NONE
	8	IV-22	1	None	105.94'	105.99'	38	20.54"	11.28"	8	A-52	4233	5599	None	None	IV-22	GpNsLR	NONE
	9	IV-23	1	None	105.93'	105.98'	42	20.18"	11.80"	8	A-52	4756	5830	None	None	IV-23	GpNsLR	NONE
	9	IV-24	1	None	105.94'	105.99'	42	20.18"	11.80"	8	A-52	4756	5830	None	None	IV-24	GpNsLR	NONE
	10	IV-25	1	None	115.68'	115.74'	48	19.67"	10.92"	10	A-52	5250	7143	None	None	IV-25	GpNsLR	NONE
	10	IV-26	6	None	115.68'	115.74'	48	19.67"	10.92"	10	A-52	5250	7143	None	None	IV-26	GpNsLR	NONE
	10	IV-27	1	None	115.70'	115.76'	48	19.67"	10.92"	10	A-52	5250	7143	None	None	IV-27	GpNsLR	NONE
	11	IV-28	1	None	115.70'	115.76'	52	19.29"	11.21"	10	A-52	5717	7148	None	None	IV-28	GpNsLR	NONE
	11	IV-29	6	None	115.68'	115.74'	52	19.29"	11.21"	10	A-52	5717	7148	None	None	IV-29	GpNsLR	NONE
	11	IV-30	1	None	115.70'	115.76'	52	19.29"	11.21"	10	A-52	5717	7148	None	None	IV-30	GpNsLR	NONE

5445 → 5905 → 5305

U.S. 83/281 INTERCHANGE RAMPS 3 & 4	1	IV-31	1	None	87.80'	87.84'	38	13.38"	13.38"	STRAIGHT		4680	5300	None	5/8"	IV-31	O.D.#4	NONE
	1	IV-32	3	None	87.80'	87.84'	52	11.21"	11.21"	STRAIGHT		5820	5900	None	5/8"	IV-32	O.D.#1	NONE
	1	IV-33	1	None	87.80'	87.84'	38	13.38"	13.38"	STRAIGHT		4680	5300	None	5/8"	IV-33	O.D.#4	NONE
	2	IV-34	1	None	100.94'	100.99'	42	20.18"	11.80"	8	A-52	4750	5280	None	1 1/4"	IV-34	O.D.#3	NONE
	2	IV-35	3	None	100.94'	100.99'	48	18.83"	10.92"	10	A-52	5210	5420	None	1 1/4"	IV-35	O.D.#2	NONE
	2	IV-36	1	None	100.94'	100.99'	42	20.18"	11.80"	8	A-52	4750	5280	None	1 1/4"	IV-36	O.D.#3	NONE
	3	IV-37	1	None	105.98'	106.03'	44	20.02"	12.02"	8	A-52	5017	5944	None	1 7/8"	IV-37	GpNsLR	NONE
	3,4	IV-38	6	None	105.99'	106.04'	44	20.02"	12.02"	8	A-52	5017	5944	None	2"	IV-38	GpNsLR	NONE
	3	IV-39	1	None	105.98'	106.03'	44	20.02"	12.02"	8	A-52	5017	5944	None	1 7/8"	IV-39	GpNsLR	NONE
	4	IV-40	1	None	105.98'	106.03'	44	20.02"	12.02"	8	A-52	5017	5944	None	1 7/8"	IV-40	GpNsLR	NONE
	4	IV-41	1	None	106.00'	106.05'	44	20.02"	12.02"	8	A-52	5017	5944	None	2 1/8"	IV-41	GpNsLR	NONE
	5	IV-42	1	None	106.02'	106.07'	38	20.54"	11.28"	8	A-52	4233	5599	None	2 1/8"	IV-42	GpNsLR	NONE
	5	IV-43	4	None	106.00'	106.05'	38	20.54"	11.28"	8	A-52	4233	5599	None	2 1/8"	IV-43	GpNsLR	NONE
	5	IV-44	1	None	106.00'	106.05'	38	20.54"	11.28"	8	A-52	4233	5599	None	2 1/8"	IV-44	GpNsLR	NONE
	6	IV-45	1	None	106.02'	106.07'	42	20.18"	11.80"	8	A-52	4756	5830	None	2 1/8"	IV-45	GpNsLR	NONE
	6	IV-46	4	None	106.00'	106.05'	42	20.18"	11.80"	8	A-52	4756	5830	None	2 1/8"	IV-46	GpNsLR	NONE
	6	IV-47	1	None	106.00'	106.05'	42	20.18"	11.80"	8	A-52	4756	5830	None	2 1/8"	IV-47	GpNsLR	NONE
	7	IV-48	1	None	106.01'	106.06'	38	20.54"	11.28"	8	A-52	4233	5599	None	2"	IV-48	GpNsLR	NONE
	7	IV-49	5	None	105.99'	106.04'	38	20.54"	11.28"	8	A-52	4233	5599	None	2"	IV-49	GpNsLR	NONE
	7	IV-50	1	None	106.00'	106.05'	38	20.54"	11.28"	8	A-52	4233	5599	None	2"	IV-50	GpNsLR	NONE
	8	IV-51	1	None	105.99'	106.04'	42	20.18"	11.80"	8	A-52	4756	5830	None	1 5/8"	IV-51	GpNsLR	NONE
	8	IV-52	5	None	105.97'	106.02'	42	20.18"	11.80"	8	A-52	4756	5830	None	1 5/8"	IV-52	GpNsLR	NONE
	8	IV-53	1	None	105.97'	106.02'	42	20.18"	11.80"	8	A-52	4756	5830	None	1 5/8"	IV-53	GpNsLR	NONE

TEXAS DEPARTMENT OF TRANSPORTATION
APPROVED EXCEPT AS NOTED
DIVISION OF BRIDGES AND STRUCTURES

AUG 05 1992

APPROVAL OF THIS DRAWING DOES NOT RELIEVE THE CONTRACTOR OF THE RESPONSIBILITY FOR THE CORRECTNESS OF DETAIL.

4

PARTIAL SUBMITTAL NO. 1
TOTAL LINEAR FEET OF THIS PROJECT : 13929.03'

MANCO PRESTRESS COMPANY

CONTRACTOR : Gilbert Texas Construction

FED.RD. DIV.NO.	STATE	PROJECT NO.		HWY. NO.
6	TEXAS	NH 92(50)M		U.S. 83/281
STATE DIST.NO.	COUNTY	CONTROL NO.	SECTION NO.	JOB NO.
21	HIDALGO	0039	17	097

COPYRIGHT 1989 BY SEA STRUCTURAL ENGINEERING ASSOCIATES, INC. *CONSULTING ENGINEERS*, SAN ANTONIO, TEXAS

JOB NO. 92-018	DRAWN C.A.J.	CHECKED D.M.P.	DATE 6-16-92	SHEET NO.
SEA JOB NO. 92-059H	INDEX SHEET			I-1

I N D E X

STRUCTURE		BEAM		LENGTH			1/2"ø-270k LO-LAX STRANDS					CONCRETE		ENDS		BEAM DETAIL SHEET NO.	DESIGN REFERENCE NO.	REMARKS
										DEPRESSED								
DESIG-NATION	SPAN NO.	TYPE & MARK NO.	QUANTITY	I.D.T.S. ADDED	DESIGN (A)	CAST (B)	TOTAL QUANTITY	"e" AT ℄	"e" AT END	QUAN.	AT	MINIMUM RELEASE	MIN. COMP. 28 DAY STRENGTH	SKEW (INCHES)	BATTER (INCHES)			
U.S. 83/281 INTERCHANGE RAMPS 3 & 4	9	IV-54	1	None	105.96'	106.01'	44	20.02"	12.02"	8	A-52	5017	5944	None	1 1/8"	IV-54	GpNsLR	NONE
	9	IV-55	5	None	105.95'	106.00'	44	20.02"	12.02"	8	A-52	5017	5944	None	1 1/4"	IV-55	GpNsLR	NONE
	9	IV-56	1	None	105.95'	106.00'	44	20.02"	12.02"	8	A-52	5017	5944	None	1 1/4"	IV-56	GpNsLR	NONE
	10	IV-57	1	None	80.67'	80.71'	22	21.84"	17.84"	4	A-26	4000	5000	None	7/8"	IV-57	GpNsLR	NONE
	10	IV-58	6	None	80.66'	80.70'	22	21.84"	17.84"	4	A-26	4000	5000	None	7/8"	IV-58	GpNsLR	NONE
	10	IV-59	1	None	80.66'	80.70'	22	21.84"	17.84"	4	A-26	4000	5000	None	7/8"	IV-59	GpNsLR	NONE
	11	IV-60	1	None	80.70'	80.74'	22	21.84"	17.84"	4	A-26	4000	5000	None	None	IV-60	GpNsLR	NONE
	11	IV-61	6	None	80.67'	80.71'	22	21.84"	17.84"	4	A-26	4000	5000	None	None	IV-61	GpNsLR	NONE
	11	IV-21	1	None	80.65'	80.69'	22	21.84"	17.84"	4	A-26	4000	5000	None	None	IV-21	GpNsLR	NONE

TEXAS DEPARTMENT OF TRANSPORTATION
APPROVED
DIVISION OF BRIDGES AND STRUCTURES
AUG 05 1992
APPROVAL OF THIS DRAWING DOES NOT RELIEVE THE CONTRACTOR OF THE RESPONSIBILITY FOR THE CORRECTNESS OF DETAIL.

MANCO PRESTRESS COMPANY

CONTRACTOR : Gilbert Texas Construction

FED.RD. DIV.NO.	STATE	PROJECT NO.		HWY. NO.
6	TEXAS	NH 92(50)M		U.S. 83/281
STATE DIST.NO.	COUNTY	CONTROL NO.	SECTION NO.	JOB NO.
21	HIDALGO	0039	17	097

COPYRIGHT 1989 BY
SEA STRUCTURAL ENGINEERING ASSOCIATES, INC.
CONSULTING ENGINEERS, SAN ANTONIO, TEXAS

JOB NO. 92-018	DRAWN C.A.J.	CHECKED D.M.P.	DATE 6-16-92	SHEET NO. I-2
SEA JOB NO. 92-059H	INDEX SHEET			

ELASTOMERIC BEARING PADS SCHEDULE

MARK	TYPE	DURO.	QUANT.	X	Y	L	W	A	B	C	D	E	F
P-1	A	50	128	2 1/2"	2 1/2"	22"	9"	———	———	———	———	———	———
P-2	AH	50	32	2 1/2"	2 1/2"	22"	9"	———	———	———	———	4 1/2"	11"
P-3	A	50	88	2 3/8"	2 5/8"	22"	9"	———	———	———	———	———	———
P-4	AH	50	24	2 3/8"	2 5/8"	22"	9"	———	———	———	———	4 1/2"	11"

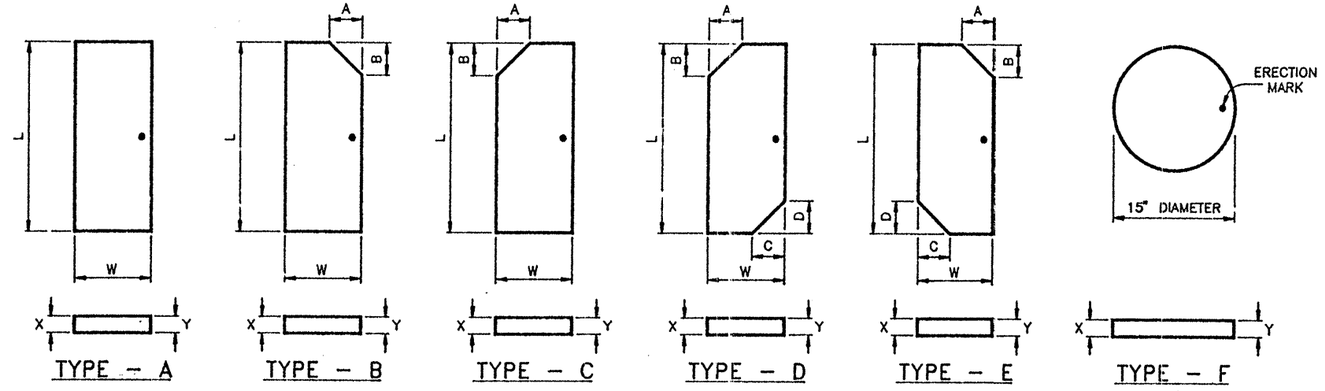

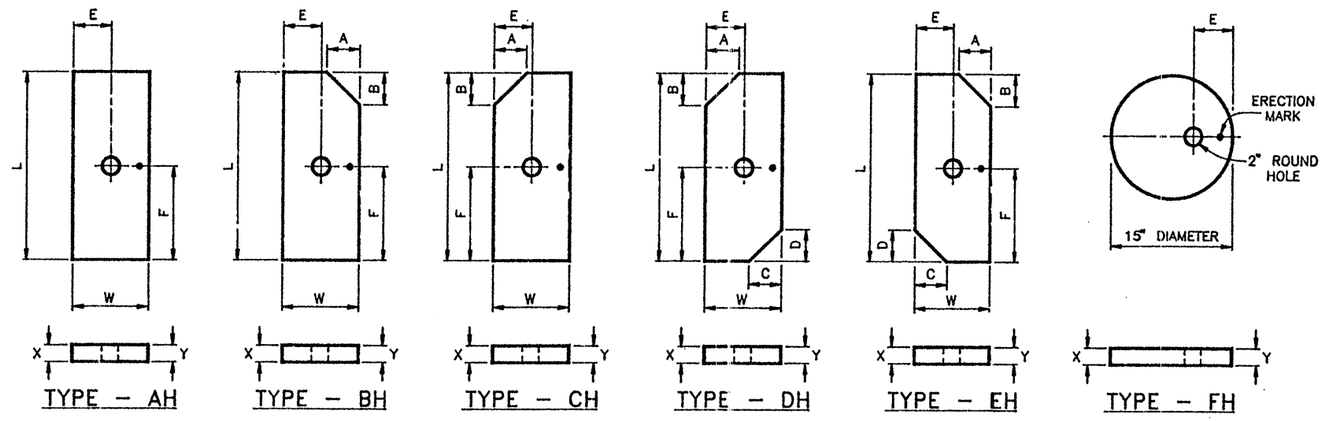

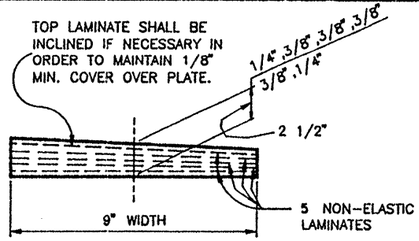

50 DUROMETER
LAMINATED BEARING

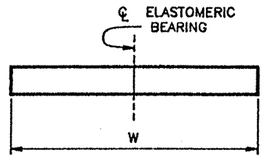

70 DUROMETER
PLAIN BEARING

TEXAS DEPARTMENT OF TRANSPORTATION
APPROVED
DIVISION OF BRIDGES AND STRUCTURES

AUG 05 1992

APPROVAL OF THIS DRAWING DOES NOT RELIEVE THE CONTRACTOR OF THE RESPONSIBILITY FOR THE CORRECTNESS OF DETAIL.

○ DENOTES 2" ROUND HOLE
● DENOTES ERECTION MARK

MANCO PRESTRESS COMPANY				
CONTRACTOR : Gilbert Texas Construction				
FED.RD. DIV.NO.	STATE	PROJECT NO.		HWY. NO.
6	TEXAS	NH 92(50)M		U.S. 83/281
STATE DIST.NO.	COUNTY	CONTROL NO.	SECTION NO.	JOB NO.
21	HIDALGO	0039	17	097

COPYRIGHT 1989 BY SEA STRUCTURAL ENGINEERING ASSOCIATES, INC. *CONSULTING ENGINEERS*, SAN ANTONIO, TEXAS

JOB NO. 92-018	DRAWN C.A.J.	CHECKED D.M.P.	DATE 6-16-92	SHEET NO. NP-1
SEA JOB NO. 92-059H	NEOPRENE PADS			

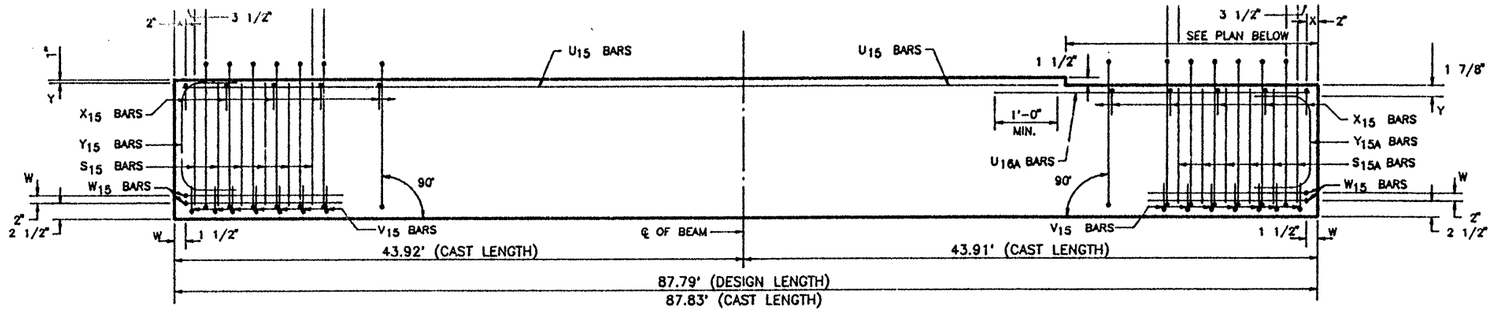

ELEVATION – REINFORCING STEEL

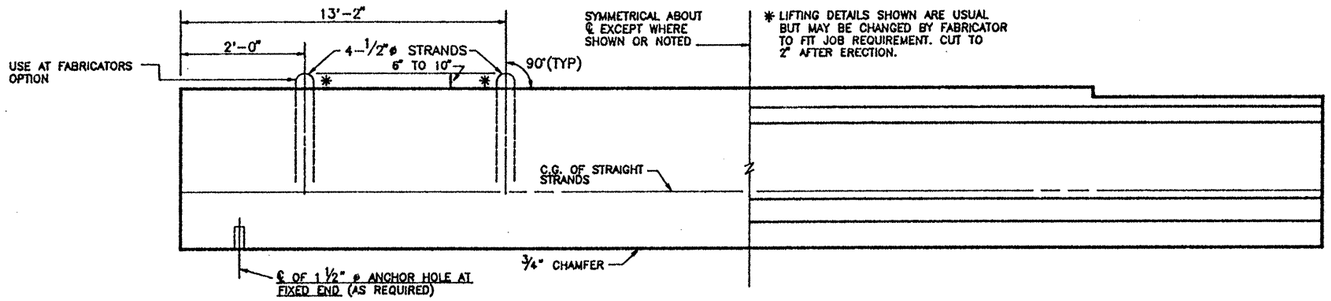

DOUBLE LIFTING LOOP DETAIL
(TYP. FOR BEAMS OVER 75')

BEAM ELEVATION
SEE PLAN VIEW FOR HOLE(S) LOCATION

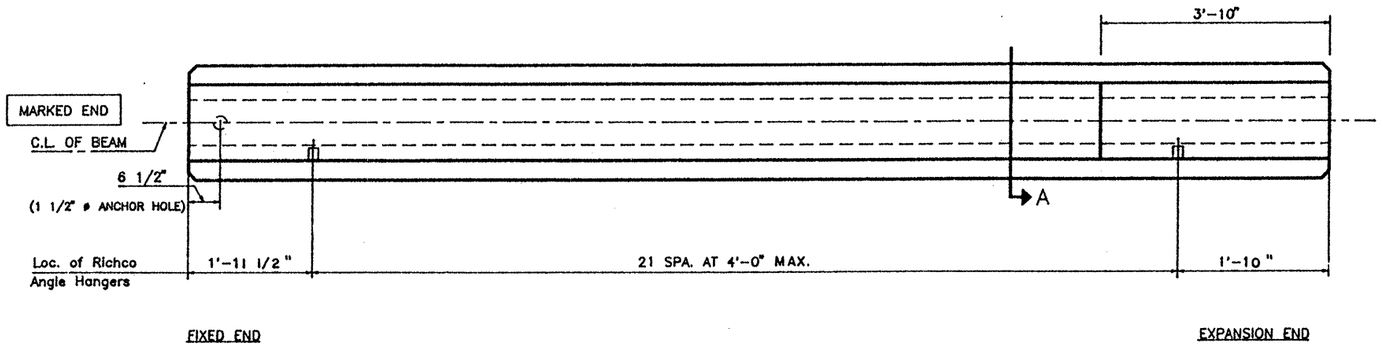

PLAN

TEXAS DEPARTMENT OF TRANSPORTATION
APPROVED EXCEPT AS NOTED
DIVISION OF BRIDGES AND STRUCTURES

AUG 05 1992

APPROVAL OF THIS DRAWING DOES NOT RELIEVE THE CONTRACTOR OF THE RESPONSIBILITY FOR THE CORRECTNESS OF DETAIL.

V_{15}	14	14	#3	standard
W_{15}	4	4	#5	standard
U_{15}	2	2	#5	83'-9"
Y_{15A}	2	2	#6	standard
S_{15A}	12	12	#7	standard
U_{16A}	2	2	#5	6'-6"

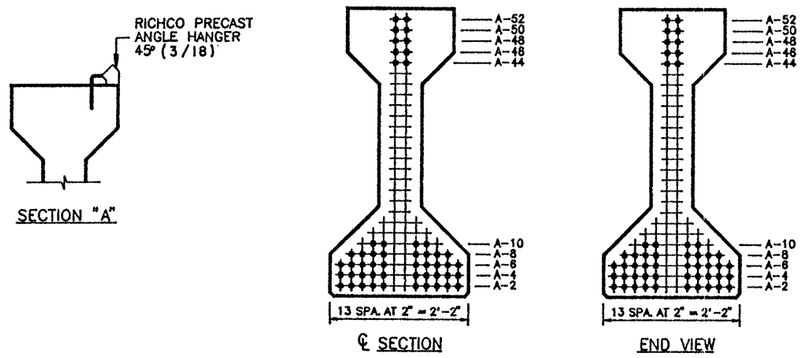

TYPE "IV" BEAM QUANTITY : 1

LO-LAX STRAND PATTERN		
NUMBER OF STRANDS : 52 ~1/2" ø 270 K @ 31.00 K EACH		
NUMBER OF STRAIGHT STRANDS	: 52	
NUMBER OF DEFLECTED STRANDS	: NONE	
CONCRETE RELEASE STRENGTH	: 5820	PSI
CONCRETE DESIGN STRENGTH	5900	PSI
ECCENTRICITY @ ℄ : 11.21"	ECCENTRICITY @ END : 11.21"	

5905

DESIGN NO. : O.D.#1
TOTAL BEAM LENGTH OF THIS SHEET : 87.79'

TOP FINISH PANELS
SEE STANDARD SHEET S-"IV" FOR TOP FINISH AND OTHER NOTES AND DETAILS.

MANCO PRESTRESS COMPANY

CONTRACTOR Gilbert Texas Construction

FED.RD. DIV.NO.	STATE	PROJECT NO.	HWY. NO.
6	TEXAS	NH 92(50)M	U.S. 83/281

STATE DIST.NO.	COUNTY	CONTROL NO.	SECTION NO.	JOB NO.
21	HIDALGO	0039	17	097

COPYRIGHT 1989 BY
STRUCTURAL ENGINEERING ASSOCIATES, INC.
CONSULTING ENGINEERS, SAN ANTONIO, TEXAS

JOB NO.	DRAWN	CHECKED	DATE	SHEET/MARK NO.
92-018	C.A.J.	D.M.P.	6-16-92	IV-1
SEA JOB NO. 92-059H	FABRICATION SHEET			

327252

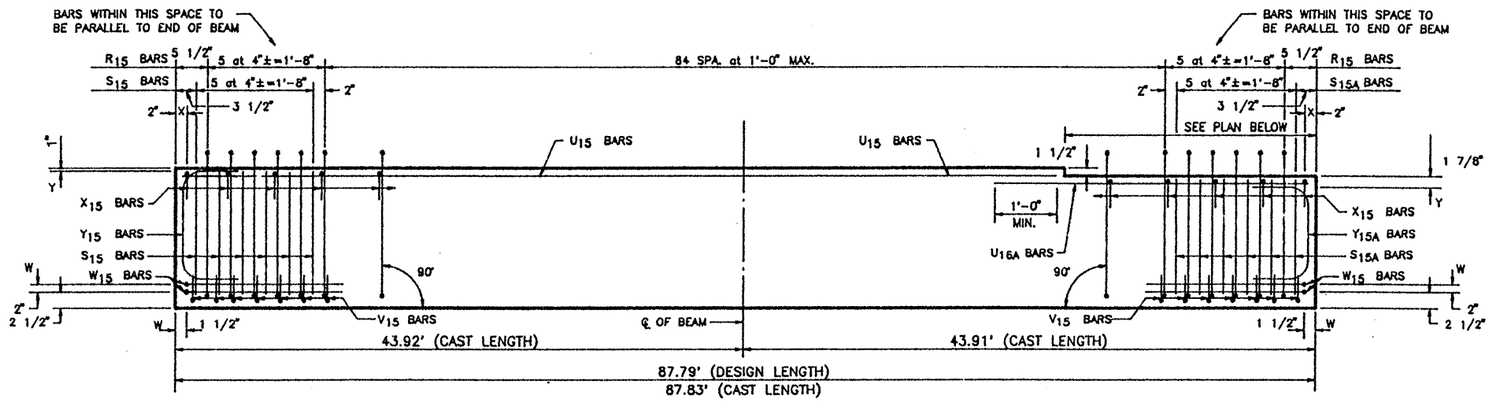

ELEVATION — REINFORCING STEEL

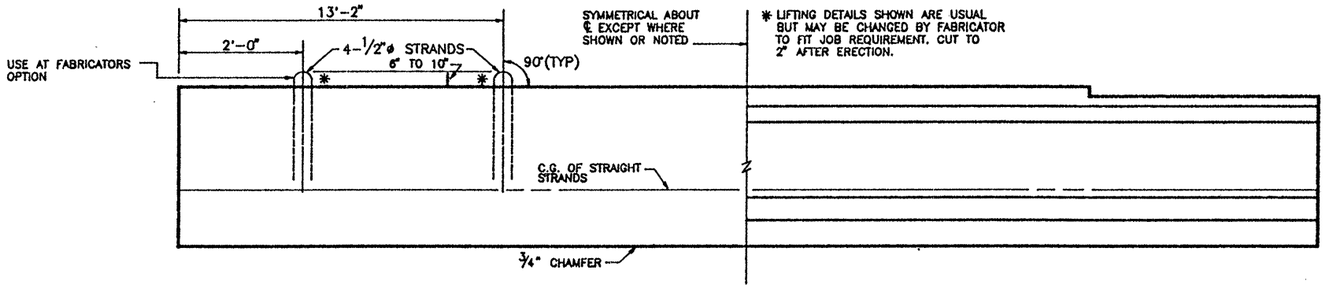

DOUBLE LIFTING LOOP DETAIL
(TYP. FOR BEAMS OVER 75')

BEAM ELEVATION
SEE PLAN VIEW FOR HOLE(S) LOCATION

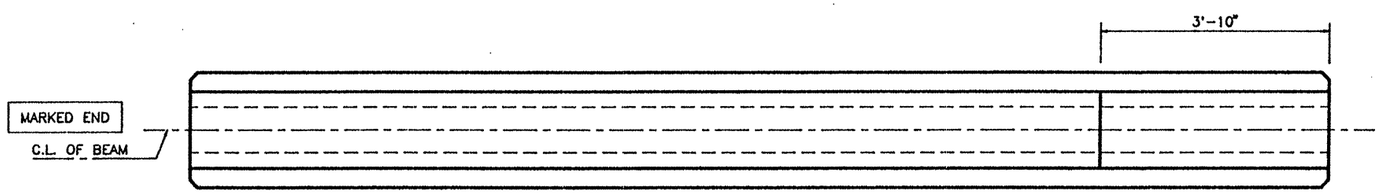

PLAN

TOP FINISH PANELS
SEE STANDARD SHEET S--"IV" FOR TOP FINISH AND OTHER NOTES AND DETAILS.

TEXAS DEPARTMENT OF TRANSPORTATION
APPROVED EXCEPT AS NOTED
DIVISION OF BRIDGES AND STRUCTURES

AUG 05 1992

APPROVAL OF THIS DRAWING DOES NOT RELIEVE THE CONTRACTOR OF THE RESPONSIBILITY FOR THE CORRECTNESS OF DETAIL.

REINFORCING STEEL SCHEDULE				
BAR	QUANTITY PER BEAM	TOTAL QUANTITY	SIZE	LENGTH
R_{15}	95	285	#3	standard
X_{15}	91	273	#3	standard
Y_{15}	2	6	#6	standard
S_{15}	12	36	#7	standard
V_{15}	14	42	#3	standard
W_{15}	4	12	#5	standard
U_{15}	2	6	#5	83'-9"
Y_{15A}	2	6	#6	standard
S_{15A}	12	36	#7	standard
U_{16A}	2	6	#5	6'-6"

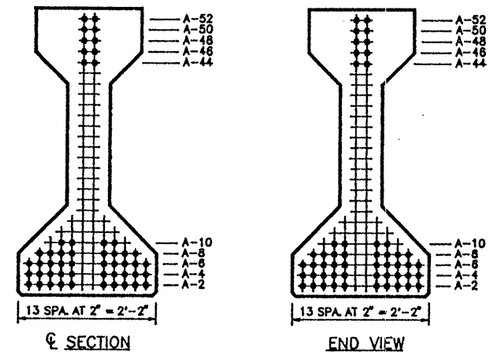

TYPE "IV" BEAM QUANTITY : 3

LO-LAX STRAND PATTERN		
NUMBER OF STRANDS : 52 ~1/2" ø 270 K @ 31.00 K EACH		
NUMBER OF STRAIGHT STRANDS	: 52	
NUMBER OF DEFLECTED STRANDS	: NONE	
CONCRETE RELEASE STRENGTH	: 5820	PSI
CONCRETE DESIGN STRENGTH	5900	PSI
ECCENTRICITY @ ℄ : 11.21"	ECCENTRICITY @ END : 11.21"	

5905

DESIGN NO. : O.D.#1
TOTAL BEAM LENGTH OF THIS SHEET : 263.37'

MANCO PRESTRESS COMPANY				
CONTRACTOR Gilbert Texas Construction				
FED.RD. DIV.NO.	STATE	PROJECT NO.		HWY. NO.
6	TEXAS	NH 92(50)M		U.S. 83/281
STATE DIST.NO.	COUNTY	CONTROL NO.	SECTION NO.	JOB NO.
21	HIDALGO	0039	17	097

COPYRIGHT 1989 BY
STRUCTURAL ENGINEERING ASSOCIATES, INC.
CONSULTING ENGINEERS, SAN ANTONIO, TEXAS

JOB NO.	DRAWN	CHECKED	DATE	SHEET/MARK NO.
92-018	C.A.J.	D.M.P.	6-16-92	IV-2
SEA JOB NO. 92-059H	FABRICATION SHEET			

327252

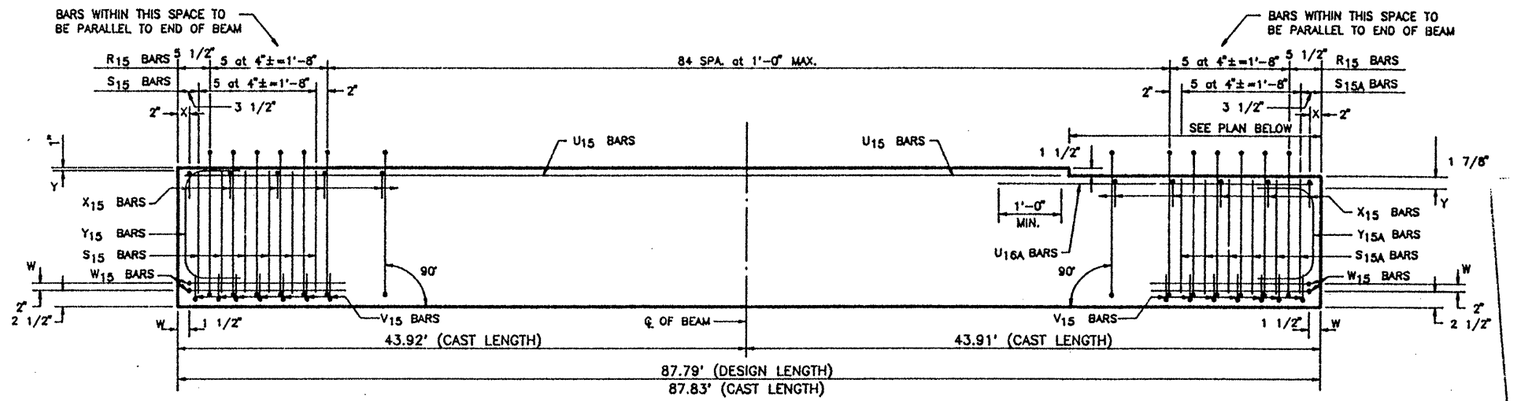

ELEVATION – REINFORCING STEEL

REINFORCING STEEL SCHEDULE				
BAR	QUANTITY PER BEAM	TOTAL QUANTITY	SIZE	LENGTH
R_{15}	95	95	#3	standard
X_{15}	91	91	#3	standard
Y_{15}	2	2	#6	standard
S_{15}	12	12	#7	standard
V_{15}	14	14	#3	standard
W_{15}	4	4	#5	standard
U_{15}	2	2	#5	83'-9"
Y_{15A}	2	2	#6	standard
S_{15A}	12	12	#7	standard
U_{16A}	2	2	#5	6'-6"

TEXAS DEPARTMENT OF TRANSPORTATION
APPROVED EXCEPT AS NOTED
DIVISION OF BRIDGES AND STRUCTURES
AUG 05 1992
APPROVAL OF THIS DRAWING DOES NOT RELIEVE THE CONTRACTOR OF THE RESPONSIBILITY FOR THE CORRECTNESS OF DETAIL.

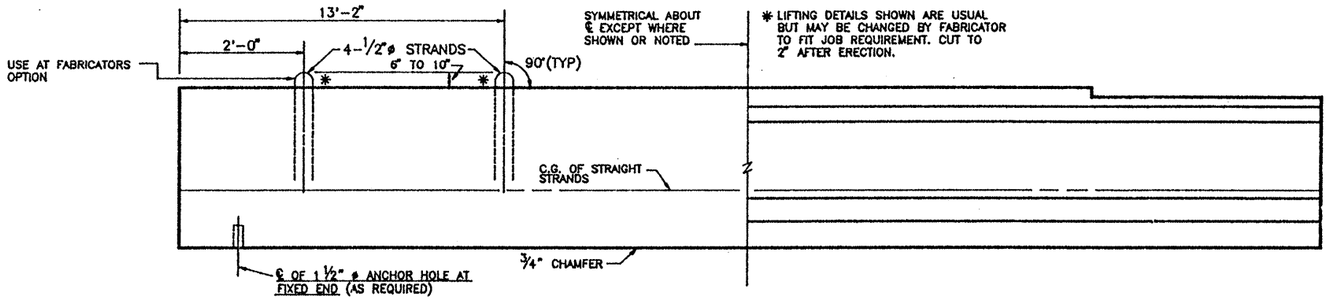

DOUBLE LIFTING LOOP DETAIL
(TYP. FOR BEAMS OVER 75')

BEAM ELEVATION
SEE PLAN VIEW FOR HOLE(S) LOCATION

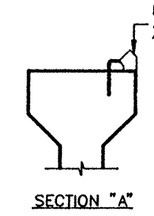

SECTION "A"

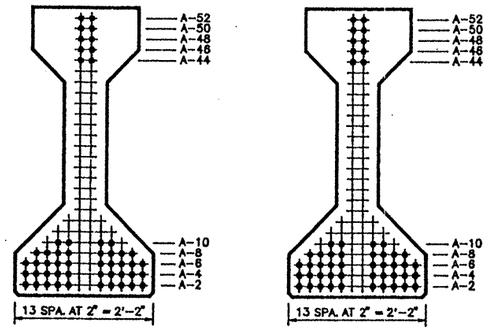

℄ SECTION

END VIEW

TYPE "IV" BEAM QUANTITY : 1

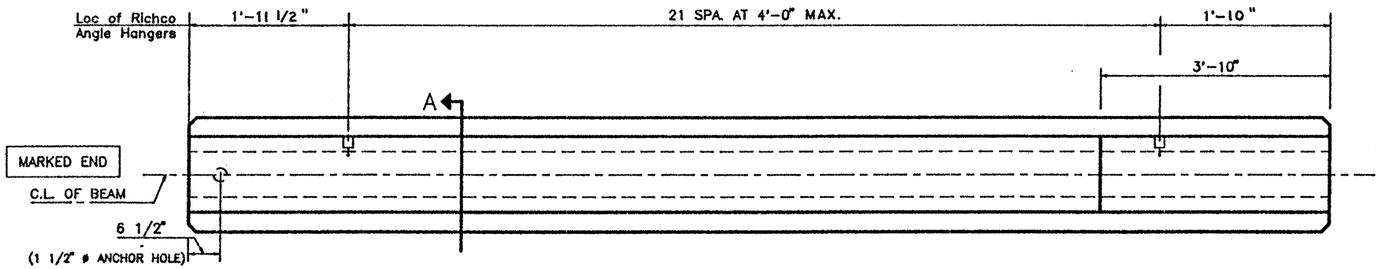

FIXED END

EXPANSION END

PLAN

LO-LAX STRAND PATTERN		
NUMBER OF STRANDS	: 52 ~1/2" ø 270 K @ 31.00 K EACH	
NUMBER OF STRAIGHT STRANDS	: 52	
NUMBER OF DEFLECTED STRANDS	: NONE	
CONCRETE RELEASE STRENGTH	: 5820	PSI
CONCRETE DESIGN STRENGTH	: 5900	PSI
ECCENTRICITY @ ℄	: 11.21"	ECCENTRICITY @ END : 11.21"

5905

DESIGN NO. : O.D.#1
TOTAL BEAM LENGTH OF THIS SHEET : 87.79'

TOP FINISH PANELS
SEE STANDARD SHEET S-"IV" FOR TOP FINISH AND OTHER NOTES AND DETAILS.

MANCO PRESTRESS COMPANY

CONTRACTOR Gilbert Texas Construction

FED.RD. DIV.NO.	STATE	PROJECT NO.	HWY. NO.
6	TEXAS	NH 92(50)M	U.S. 83/281

STATE DIST.NO.	COUNTY	CONTROL NO.	SECTION NO.	JOB NO.
21	HIDALGO	0039	17	097

COPYRIGHT 1989 BY
STRUCTURAL ENGINEERING ASSOCIATES, INC.
CONSULTING ENGINEERS, SAN ANTONIO, TEXAS

JOB NO.	DRAWN	CHECKED	DATE	SHEET/MARK NO.
92-018	C.A.J.	D.M.P.	6-16-92	IV-3
SEA JOB NO. 92-059H	FABRICATION SHEET			

327252

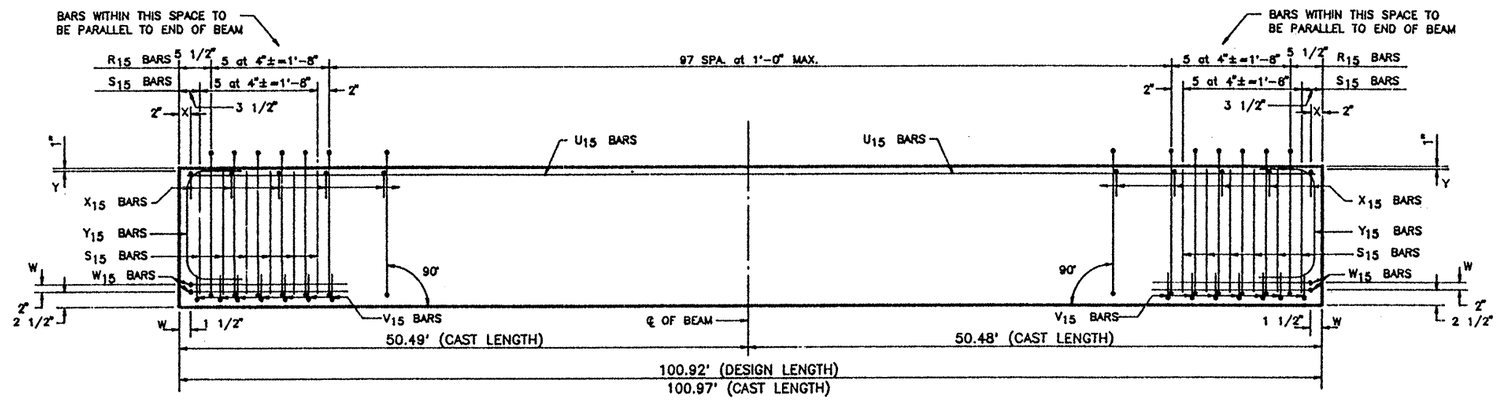

ELEVATION – REINFORCING STEEL

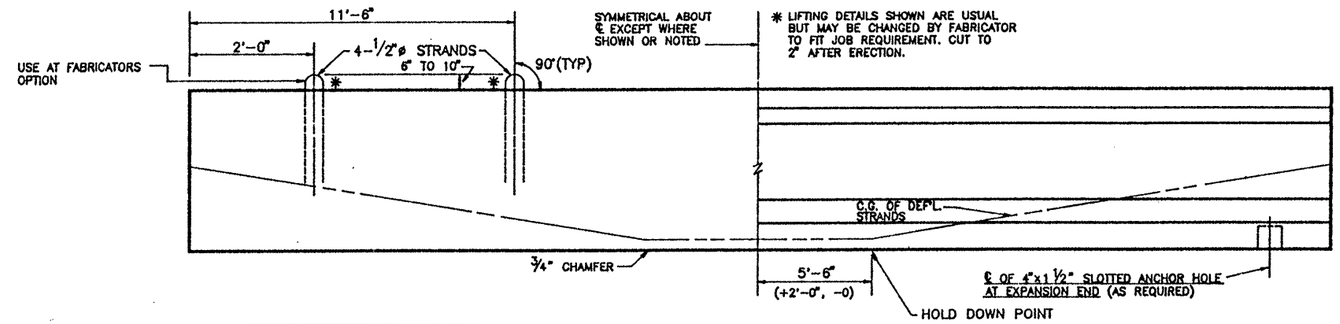

DOUBLE LIFTING LOOP DETAIL
(TYP. FOR BEAMS OVER 75')

BEAM ELEVATION
SEE PLAN VIEW FOR HOLE(S) LOCATION

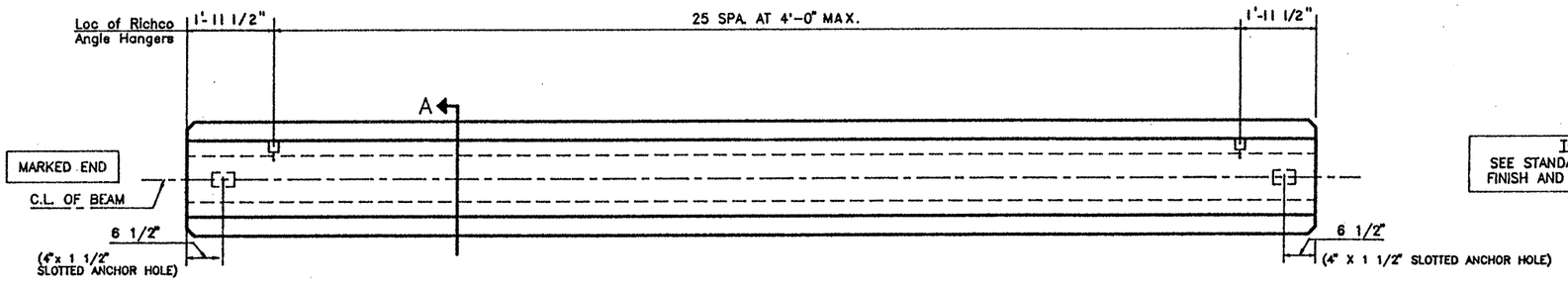

PLAN

TOP FINISH PANELS
SEE STANDARD SHEET S-"IV" FOR TOP FINISH AND OTHER NOTES AND DETAILS.

REINFORCING STEEL SCHEDULE

BAR	QUANTITY PER BEAM	TOTAL QUANTITY	SIZE	LENGTH
R_{15}	108	108	#3	standard
X_{15}	104	104	#3	standard
Y_{15}	4	4	#6	standard
S_{15}	24	24	#7	standard
V_{15}	14	14	#3	standard
W_{15}	4	4	#5	standard
U_{15}	2	2	#5	100'-8"

TEXAS DEPARTMENT OF TRANSPORTATION
APPROVED EXCEPT AS NOTED
DIVISION OF BRIDGES AND STRUCTURES

AUG 05 1992

APPROVAL OF THIS DRAWING DOES NOT RELIEVE THE CONTRACTOR OF THE RESPONSIBILITY FOR THE CORRECTNESS OF DETAIL.

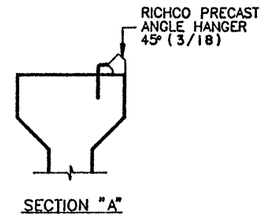

SECTION "A"

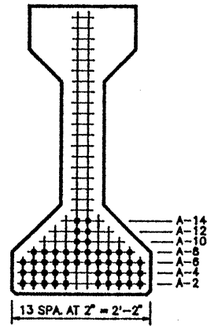

℄ SECTION

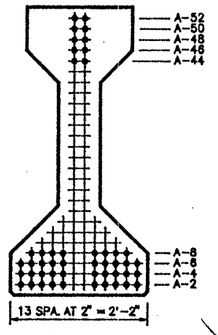

END VIEW

TYPE "IV" BEAM QUANTITY : 1

LO-LAX STRAND PATTERN		
NUMBER OF STRANDS : 48 ~1/2" ø 270 K @ 31.00 K EACH		
NUMBER OF STRAIGHT STRANDS	: 38	
NUMBER OF DEFLECTED STRANDS	: 10 @ A – 52	
CONCRETE RELEASE STRENGTH	: 5210	PSI
CONCRETE DESIGN STRENGTH	5420	PSI
ECCENTRICITY @ ℄ : 18.83"	ECCENTRICITY @ END : 10.92"	

5445

DESIGN NO. : O.D.#2
TOTAL BEAM LENGTH OF THIS SHEET : 100.92'

MANCO PRESTRESS COMPANY

CONTRACTOR Gilbert Texas Construction

FED.RD. DIV.NO.	STATE	PROJECT NO.			HWY. NO.
6	TEXAS	NH 92(50)M			U.S. 83/281
STATE DIST.NO.	COUNTY		CONTROL NO.	SECTION NO.	JOB NO.
21	HIDALGO		0039	17	097

COPYRIGHT 1989 BY STRUCTURAL ENGINEERING ASSOCIATES, INC. CONSULTING ENGINEERS, SAN ANTONIO, TEXAS

JOB NO.	DRAWN	CHECKED	DATE	SHEET/MARK NO.
92-018	C.A.J.	D.M.P.	6-16-92	IV-4
SEA JOB NO. 92-059H	FABRICATION SHEET			

327252

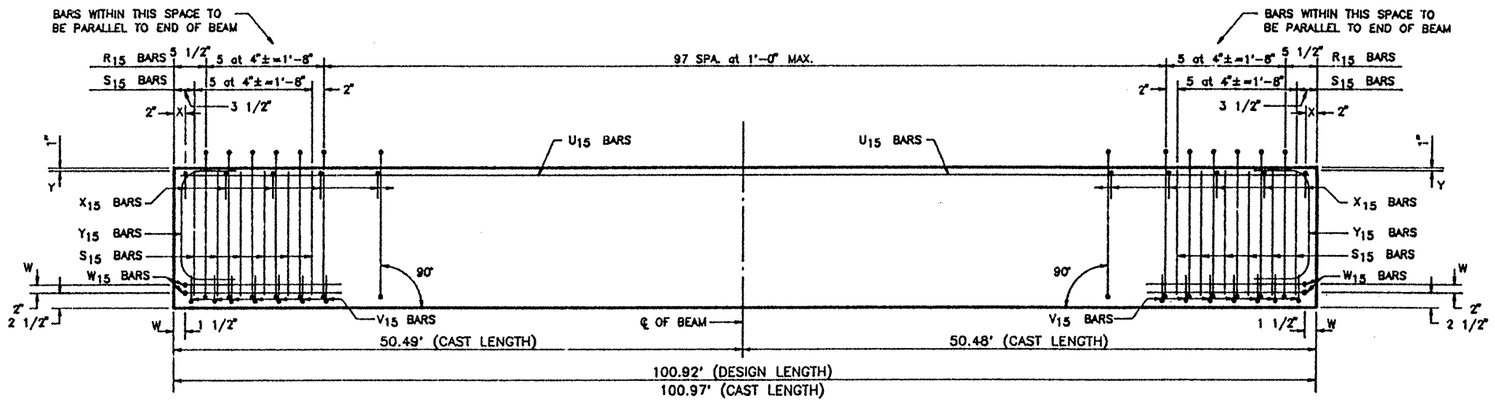

ELEVATION – REINFORCING STEEL

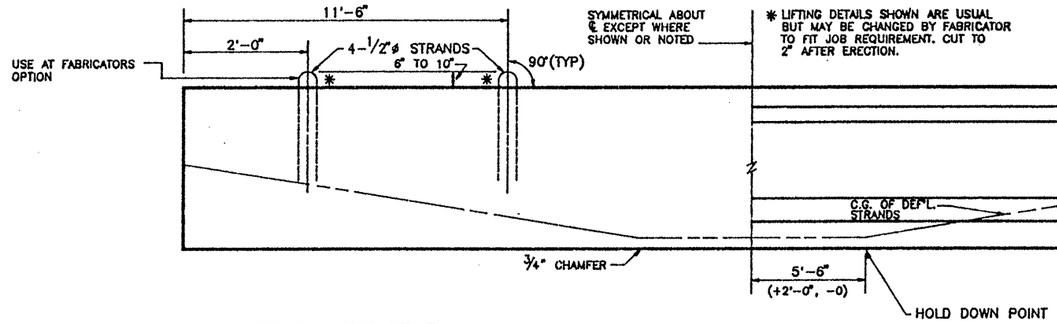

DOUBLE LIFTING LOOP DETAIL
(TYP. FOR BEAMS OVER 75')

BEAM ELEVATION
SEE PLAN VIEW FOR HOLE(S) LOCATION

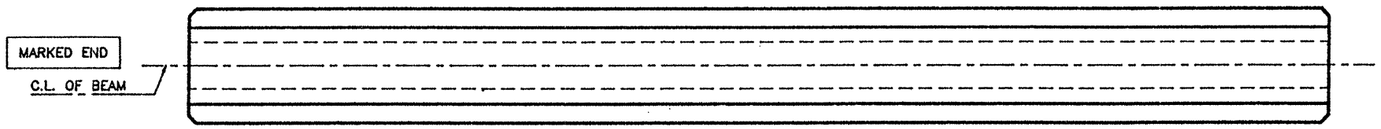

PLAN

TEXAS DEPARTMENT OF TRANSPORTATION
APPROVED EXCEPT AS NOTED
DIVISION OF BRIDGES AND STRUCTURES

AUG 05 1992

APPROVAL OF THIS DRAWING DOES NOT RELIEVE THE CONTRACTOR OF THE RESPONSIBILITY FOR THE CORRECTNESS OF DETAIL.

REINFORCING STEEL SCHEDULE

BAR	QUANTITY PER BEAM	TOTAL QUANTITY	SIZE	LENGTH
R_{15}	108	324	#3	standard
X_{15}	104	312	#3	standard
Y_{15}	4	12	#6	standard
S_{15}	24	72	#7	standard
V_{15}	14	42	#3	standard
W_{15}	4	12	#5	standard
U_{15}	2	6	#5	100'-8"

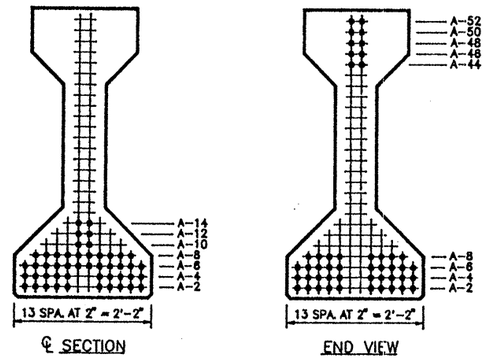

TYPE "IV" BEAM QUANTITY : 3

LO-LAX STRAND PATTERN		
NUMBER OF STRANDS	: 48 ~1/2" ø 270 K @ 31.00 K EACH	
NUMBER OF STRAIGHT STRANDS	: 38	
NUMBER OF DEFLECTED STRANDS	: 10 @ A – 52	
CONCRETE RELEASE STRENGTH	: 5210	PSI
CONCRETE DESIGN STRENGTH	: 5420	PSI
ECCENTRICITY @ ℄	: 18.83" ECCENTRICITY @ END	: 10.92"

5445

DESIGN NO. : O.D.#2
TOTAL BEAM LENGTH OF THIS SHEET : 302.76'

TOP FINISH PANELS
SEE STANDARD SHEET S-"IV" FOR TOP FINISH AND OTHER NOTES AND DETAILS.

MANCO PRESTRESS COMPANY

CONTRACTOR Gilbert Texas Construction

FED.RD. DIV.NO.	STATE	PROJECT NO.	HWY. NO.
6	TEXAS	NH 92(50)M	U.S. 83/281

STATE DIST.NO.	COUNTY	CONTROL NO.	SECTION NO.	JOB NO.
21	HIDALGO	0039	17	097

COPYRIGHT 1989 BY STRUCTURAL ENGINEERING ASSOCIATES, INC. *CONSULTING ENGINEERS*, SAN ANTONIO, TEXAS

JOB NO.	DRAWN	CHECKED	DATE	SHEET/MARK NO.
92-018	C.A.J.	D.M.P.	6-16-92	IV-5
SEA JOB NO. 92-059H	FABRICATION SHEET			

327252

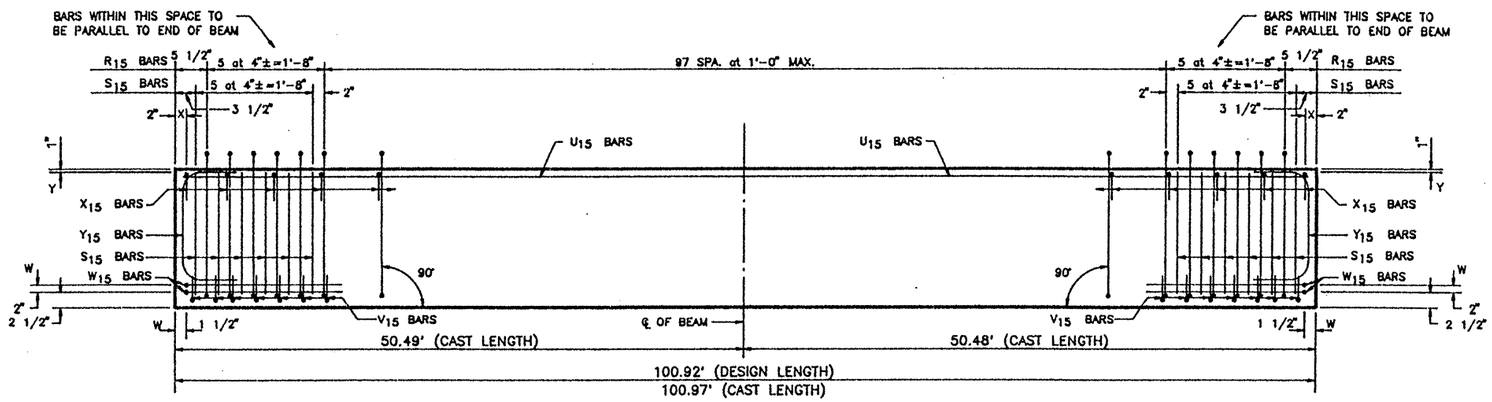

ELEVATION – REINFORCING STEEL

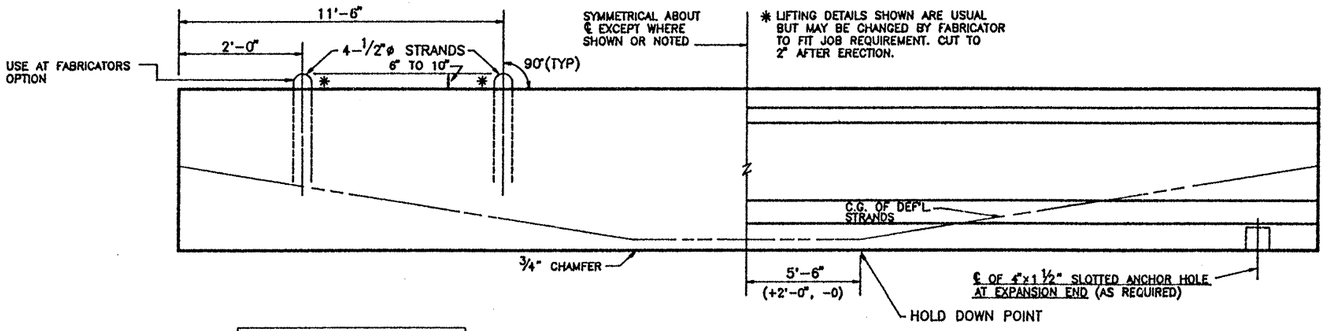

DOUBLE LIFTING LOOP DETAIL
(TYP. FOR BEAMS OVER 75')

BEAM ELEVATION
SEE PLAN VIEW FOR HOLE(S) LOCATION

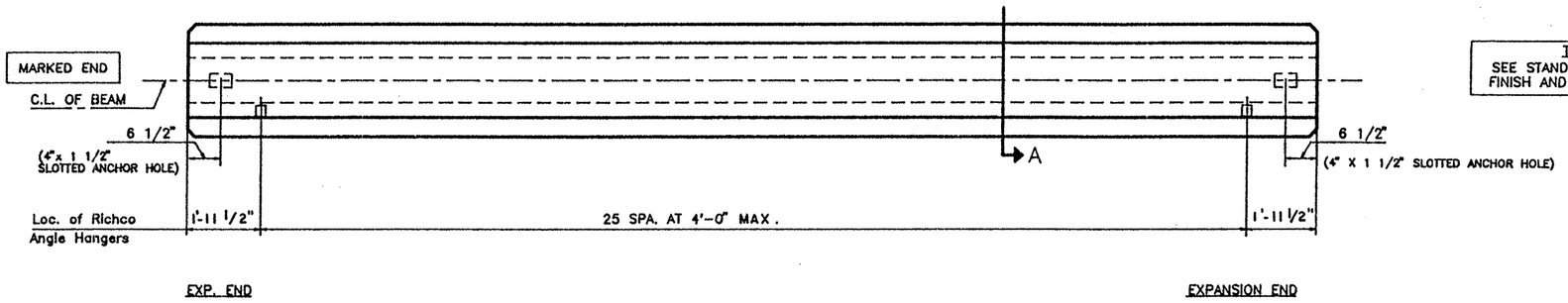

PLAN

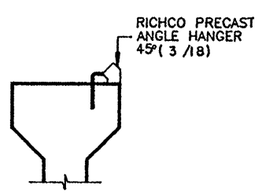

SECTION "A"

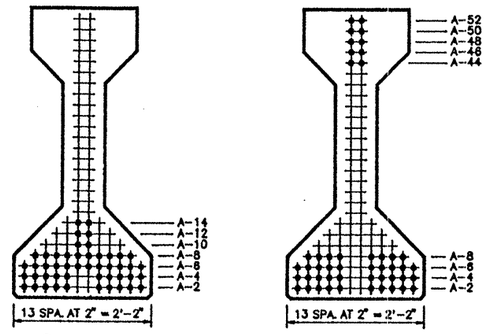

℄ SECTION

END VIEW

TYPE "IV" BEAM QUANTITY : 1

REINFORCING STEEL SCHEDULE				
BAR	QUANTITY PER BEAM	TOTAL QUANTITY	SIZE	LENGTH
R_{15}	108	108	#3	standard
X_{15}	104	104	#3	standard
Y_{15}	4	4	#6	standard
S_{15}	24	24	#7	standard
V_{15}	14	14	#3	standard
W_{15}	4	4	#5	standard
U_{15}	2	2	#5	100'-8"

TEXAS DEPARTMENT OF TRANSPORTATION
APPROVED EXCEPT AS NOTED
DIVISION OF BRIDGES AND STRUCTURES

AUG 05 1992

APPROVAL OF THIS DRAWING DOES NOT RELIEVE THE CONTRACTOR OF THE RESPONSIBILITY FOR THE CORRECTNESS OF DETAIL.

LO-LAX STRAND PATTERN		
NUMBER OF STRANDS	: 48 ~1/2" ø 270 K @ 31.00 K EACH	
NUMBER OF STRAIGHT STRANDS	: 38	
NUMBER OF DEFLECTED STRANDS	: 10 @ A – 52	
CONCRETE RELEASE STRENGTH	: 5210	PSI
CONCRETE DESIGN STRENGTH	5420	PSI
ECCENTRICITY @ ℄ : 18.83"	ECCENTRICITY @ END : 10.92"	

5445

DESIGN NO. : O.D.#2
TOTAL BEAM LENGTH OF THIS SHEET : 100.92'

TOP FINISH PANELS
SEE STANDARD SHEET S-"IV" FOR TOP FINISH AND OTHER NOTES AND DETAILS

MANCO PRESTRESS COMPANY

CONTRACTOR Gilbert Texas Construction

FED.RD. DIV.NO.	STATE	PROJECT NO.		HWY. NO.
6	TEXAS	NH 92(50)M		U.S. 83/281
STATE DIST.NO.	COUNTY	CONTROL NO.	SECTION NO.	JOB NO.
21	HIDALGO	0039	17	097

COPYRIGHT 1989 BY STRUCTURAL ENGINEERING ASSOCIATES, INC. *CONSULTING ENGINEERS*, SAN ANTONIO, TEXAS

JOB NO.	DRAWN	CHECKED	DATE	SHEET/MARK NO.
92-018	C.A.J.	D.M.P.	6-16-92	IV-6
SEA JOB NO. 92-059H	FABRICATION SHEET			

327252

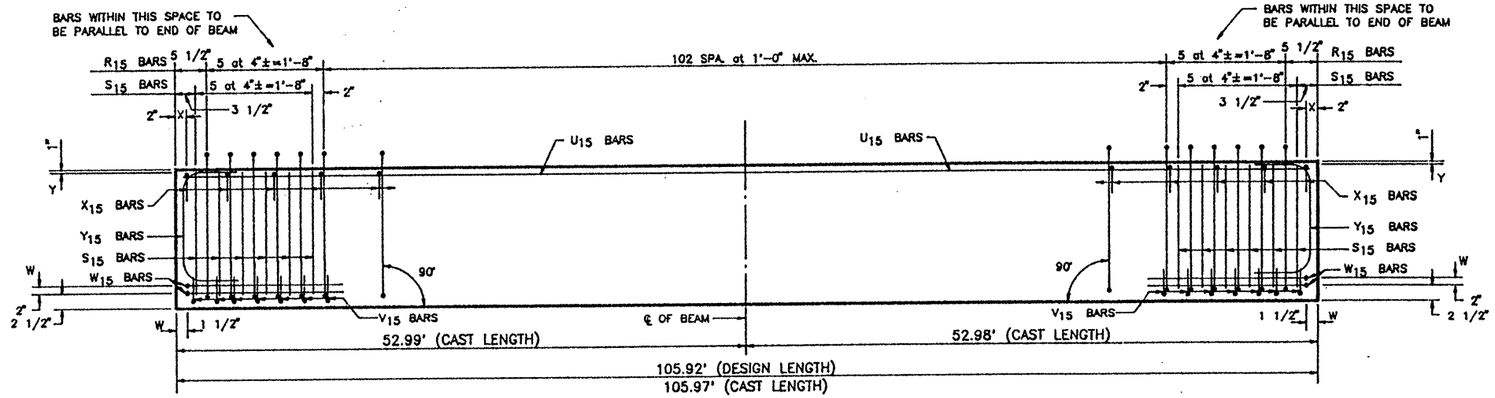

ELEVATION – REINFORCING STEEL

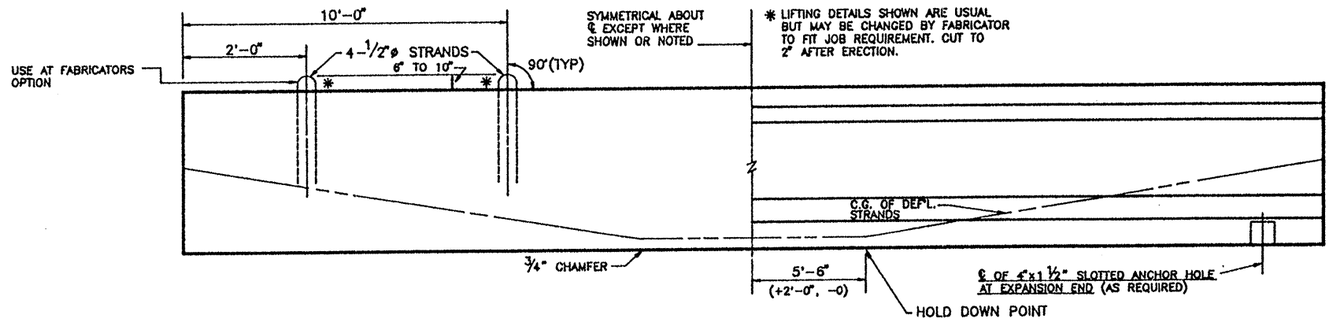

DOUBLE LIFTING LOOP DETAIL
(TYP. FOR BEAMS OVER 75')

BEAM ELEVATION
SEE PLAN VIEW FOR HOLE(S) LOCATION

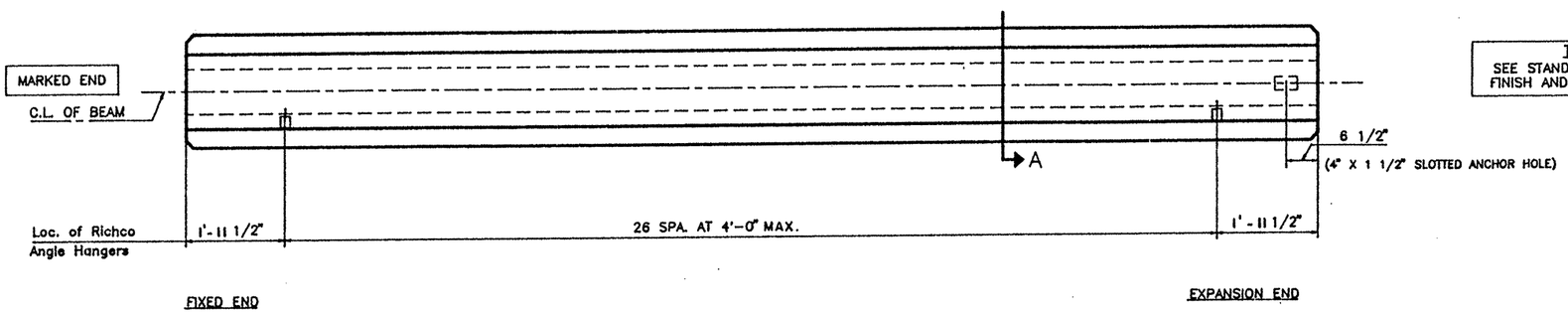

PLAN

TOP FINISH PANELS
SEE STANDARD SHEET S-"IV" FOR TOP FINISH AND OTHER NOTES AND DETAILS.

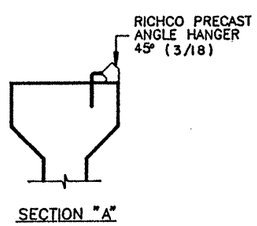

SECTION "A"

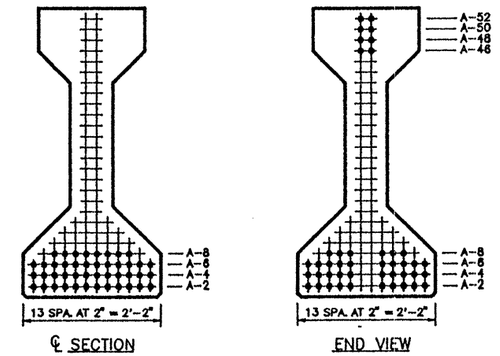

℄ SECTION

END VIEW

TYPE "IV" BEAM QUANTITY : 1

REINFORCING STEEL SCHEDULE				
BAR	QUANTITY PER BEAM	TOTAL QUANTITY	SIZE	LENGTH
R_{15}	113	113	#3	standard
X_{15}	109	109	#3	standard
Y_{15}	4	4	#8	standard
S_{15}	24	24	#7	standard
V_{15}	14	14	#3	standard
W_{15}	4	4	#5	standard
U_{15}	2	2	#5	105°-8"

TEXAS DEPARTMENT OF TRANSPORTATION
APPROVED
DIVISION OF BRIDGES AND STRUCTURES
AUG 05 1992
APPROVAL OF THIS DRAWING DOES NOT RELIEVE THE CONTRACTOR OF THE RESPONSIBILITY FOR THE CORRECTNESS OF DETAIL.

LO-LAX STRAND PATTERN			
NUMBER OF STRANDS	: 44 ~1/2" ø 270 K @ 31.00 K EACH		
NUMBER OF STRAIGHT STRANDS	: 36		
NUMBER OF DEFLECTED STRANDS	: 8 @ A - 52		
CONCRETE RELEASE STRENGTH	: 5017	PSI	
CONCRETE DESIGN STRENGTH	: 5944	PSI	
ECCENTRICITY @ ℄	: 20.02"	ECCENTRICITY @ END	: 12.02"

DESIGN NO. : GpNsLR
TOTAL BEAM LENGTH OF THIS SHEET : 105.92'

MANCO PRESTRESS COMPANY
CONTRACTOR Gilbert Texas Construction

FED.RD. DIV.NO.	STATE	PROJECT NO.		HWY. NO.
6	TEXAS	NH 92(50)M		U.S. 83/281
STATE DIST.NO.	COUNTY	CONTROL NO.	SECTION NO.	JOB NO.
21	HIDALGO	0039	17	097

COPYRIGHT 1989 BY
STRUCTURAL ENGINEERING ASSOCIATES, INC.
CONSULTING ENGINEERS, SAN ANTONIO, TEXAS

JOB NO.	DRAWN	CHECKED	DATE	SHEET/MARK NO.
92-018	C.A.J.	D.M.P.	6-16-92	IV-7
SEA JOB NO. 92-059H	FABRICATION SHEET			

327252

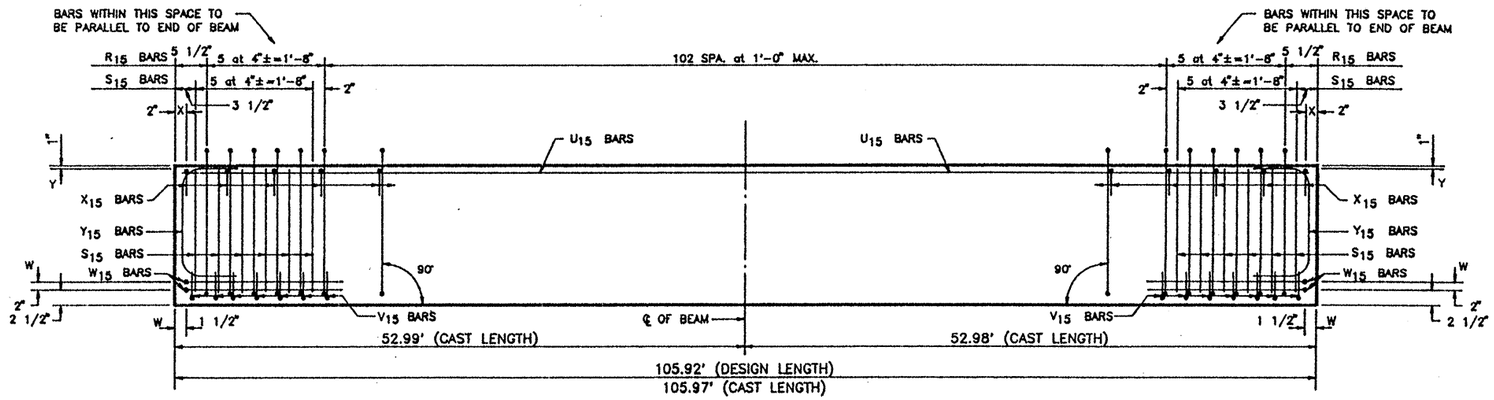

ELEVATION – REINFORCING STEEL

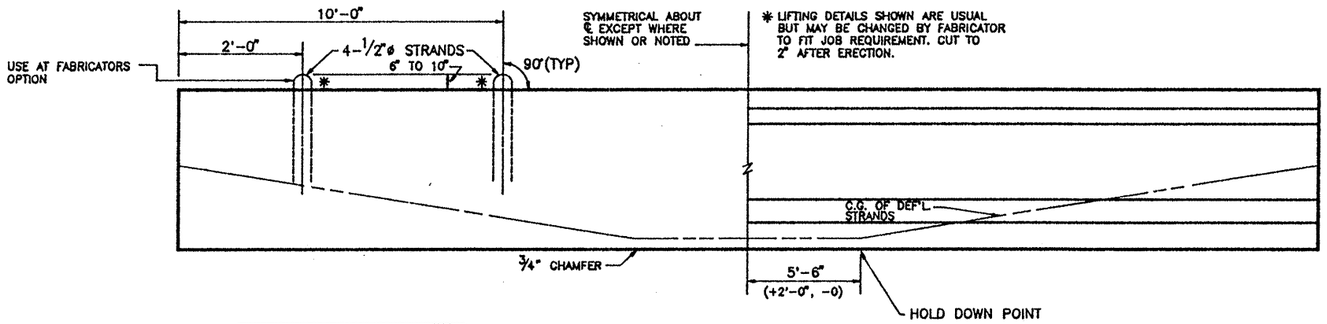

DOUBLE LIFTING LOOP DETAIL
(TYP. FOR BEAMS OVER 75')

BEAM ELEVATION
SEE PLAN VIEW FOR HOLE(S) LOCATION

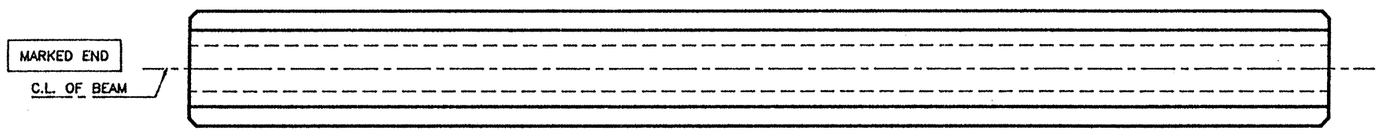

PLAN

TOP FINISH PANELS
SEE STANDARD SHEET S-"IV" FOR TOP FINISH AND OTHER NOTES AND DETAILS.

TEXAS DEPARTMENT OF TRANSPORTATION
APPROVED
DIVISION OF BRIDGES AND STRUCTURES

AUG 05 1992

APPROVAL OF THIS DRAWING DOES NOT RELIEVE THE CONTRACTOR OF THE RESPONSIBILITY FOR THE CORRECTNESS OF DETAIL.

REINFORCING STEEL SCHEDULE

BAR	QUANTITY PER BEAM	TOTAL QUANTITY	SIZE	LENGTH
R_{15}	113	1017	#3	standard
X_{15}	109	981	#3	standard
Y_{15}	4	36	#6	standard
S_{15}	24	216	#7	standard
V_{15}	14	126	#3	standard
W_{15}	4	36	#5	standard
U_{15}	2	18	#5	105'-6"

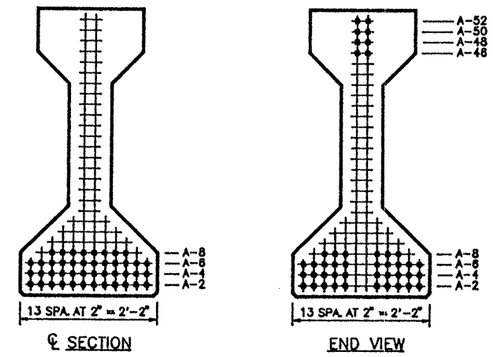

TYPE "IV" BEAM QUANTITY : 9

LO-LAX STRAND PATTERN		
NUMBER OF STRANDS	: 44 ~1/2" ø 270 K @ 31.00 K EACH	
NUMBER OF STRAIGHT STRANDS	: 36	
NUMBER OF DEFLECTED STRANDS	: 8 @ A - 52	
CONCRETE RELEASE STRENGTH	: 5017	PSI
CONCRETE DESIGN STRENGTH	: 5944	PSI
ECCENTRICITY @ ℄	: 20.02"	ECCENTRICITY @ END : 12.02"

DESIGN NO. : GpNsLR
TOTAL BEAM LENGTH OF THIS SHEET : 953.28'

MANCO PRESTRESS COMPANY				
CONTRACTOR Gilbert Texas Construction				
FED.RD. DIV.NO.	STATE	PROJECT NO.		HWY. NO.
6	TEXAS	NH 92(50)M		U.S. 83/281
STATE DIST.NO.	COUNTY	CONTROL NO.	SECTION NO.	JOB NO.
21	HIDALGO	0039	17	097

COPYRIGHT 1989 BY STRUCTURAL ENGINEERING ASSOCIATES, INC. *CONSULTING ENGINEERS*, SAN ANTONIO, TEXAS

JOB NO.	DRAWN	CHECKED	DATE	SHEET/MARK NO.
92-018	C.A.J.	D.M.P.	6-16-92	IV-8
SEA JOB NO. 92-059H	FABRICATION SHEET			

327252

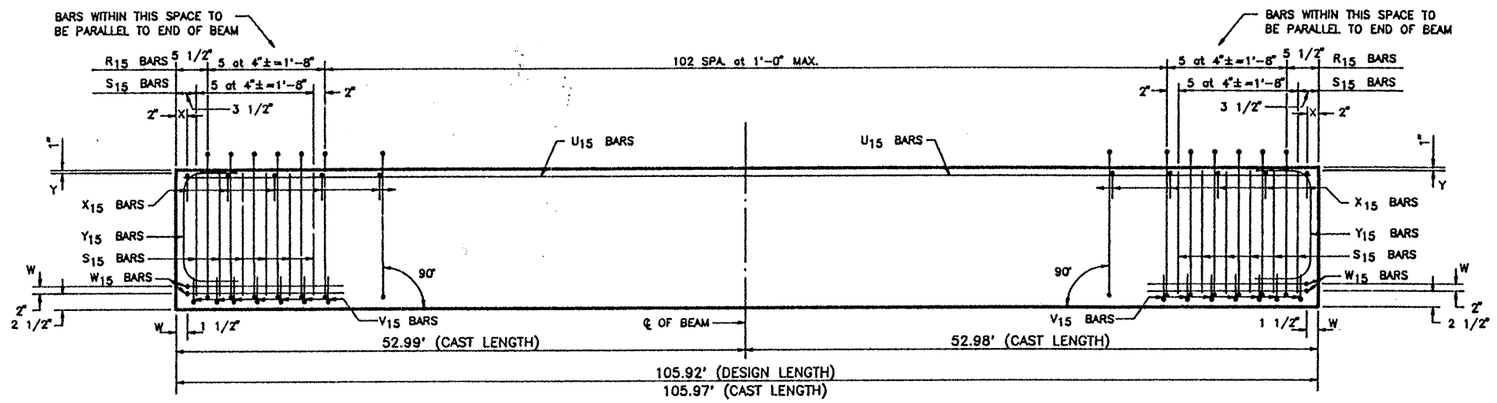

ELEVATION – REINFORCING STEEL

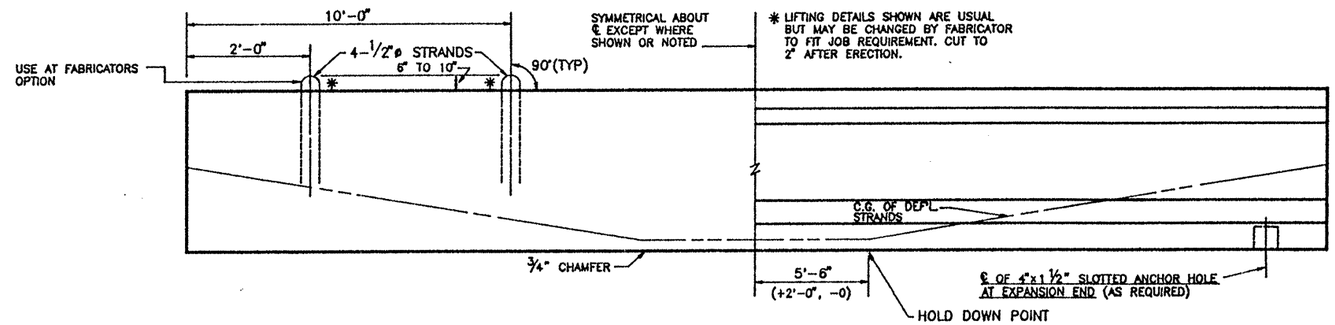

DOUBLE LIFTING LOOP DETAIL
(TYP. FOR BEAMS OVER 75')

BEAM ELEVATION
SEE PLAN VIEW FOR HOLE(S) LOCATION

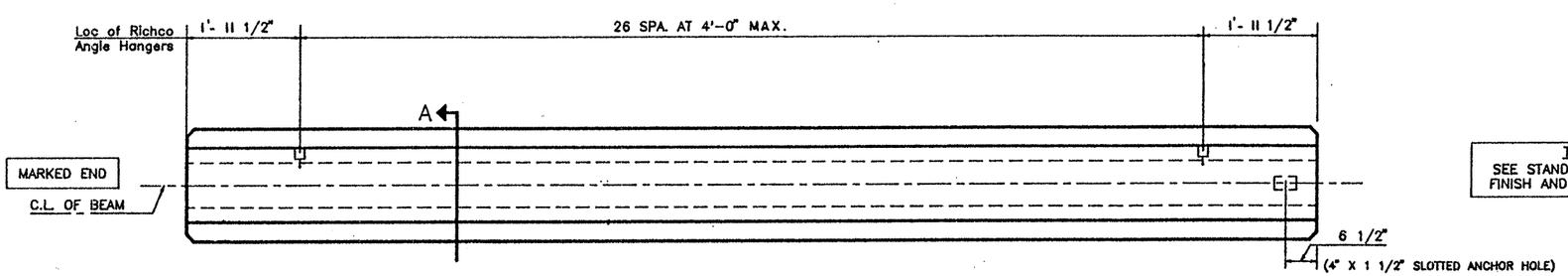

PLAN

TOP FINISH PANELS
SEE STANDARD SHEET S-"IV" FOR TOP FINISH AND OTHER NOTES AND DETAILS.

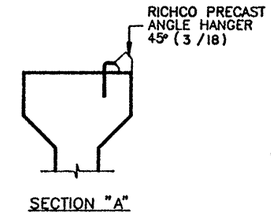

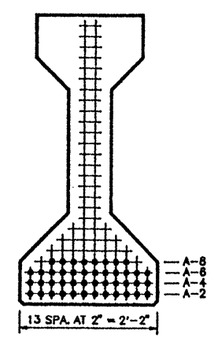

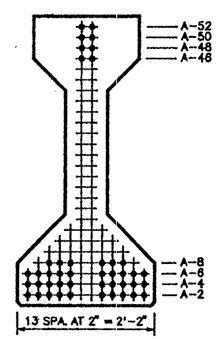

TYPE "IV" BEAM QUANTITY : 1

REINFORCING STEEL SCHEDULE

BAR	QUANTITY PER BEAM	TOTAL QUANTITY	SIZE	LENGTH
R_{15}	113	113	#3	standard
X_{15}	109	109	#3	standard
Y_{15}	4	4	#6	standard
S_{15}	24	24	#7	standard
V_{15}	14	14	#3	standard
W_{15}	4	4	#5	standard
U_{15}	2	2	#5	105'-8"

TEXAS DEPARTMENT OF TRANSPORTATION
APPROVED
DIVISION OF BRIDGES AND STRUCTURES
AUG 05 1992
APPROVAL OF THIS DRAWING DOES NOT RELIEVE THE CONTRACTOR OF THE RESPONSIBILITY FOR THE CORRECTNESS OF DETAIL.

LO-LAX STRAND PATTERN			
NUMBER OF STRANDS	: 44 ~1/2" ø 270 K @ 31.00 K EACH		
NUMBER OF STRAIGHT STRANDS	: 36		
NUMBER OF DEFLECTED STRANDS	: 8 @ A – 52		
CONCRETE RELEASE STRENGTH	: 5017	PSI	
CONCRETE DESIGN STRENGTH	: 5944	PSI	
ECCENTRICITY @ ℄	: 20.02"	ECCENTRICITY @ END	: 12.02"

DESIGN NO. : GpNsLR
TOTAL BEAM LENGTH OF THIS SHEET : 105.92'

MANCO PRESTRESS COMPANY
CONTRACTOR Gilbert Texas Construction

FED.RD. DIV.NO.	STATE	PROJECT NO.	HWY. NO.
6	TEXAS	NH 92(50)M	U.S. 83/281

STATE DIST.NO.	COUNTY	CONTROL NO.	SECTION NO.	JOB NO.
21	HIDALGO	0039	17	097

COPYRIGHT 1989 BY
STRUCTURAL ENGINEERING ASSOCIATES, INC.
CONSULTING ENGINEERS, SAN ANTONIO, TEXAS

JOB NO.	DRAWN	CHECKED	DATE	SHEET/MARK NO.
92-018	C.A.J.	D.M.P.	6-16-92	IV-9
SEA JOB NO. 92-059H	FABRICATION SHEET			

327252

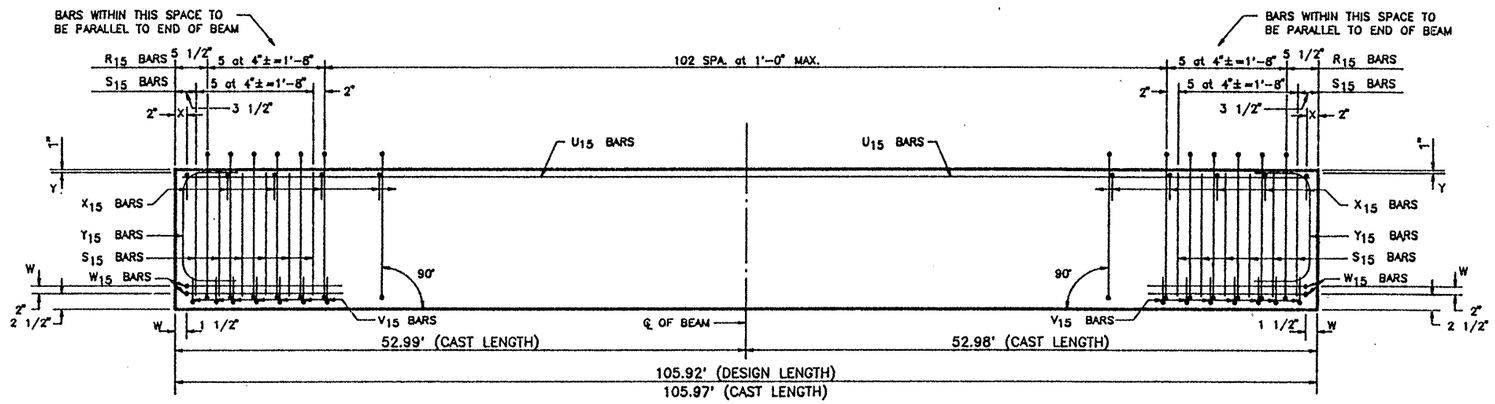

ELEVATION – REINFORCING STEEL

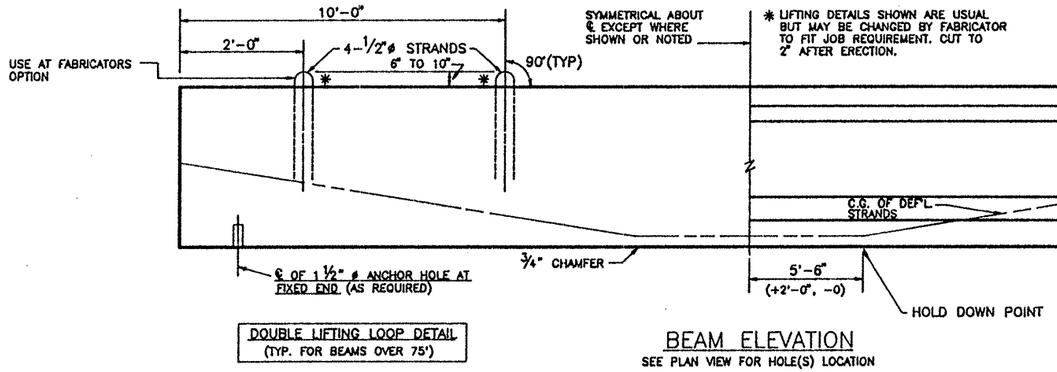

DOUBLE LIFTING LOOP DETAIL
(TYP. FOR BEAMS OVER 75')

BEAM ELEVATION
SEE PLAN VIEW FOR HOLE(S) LOCATION

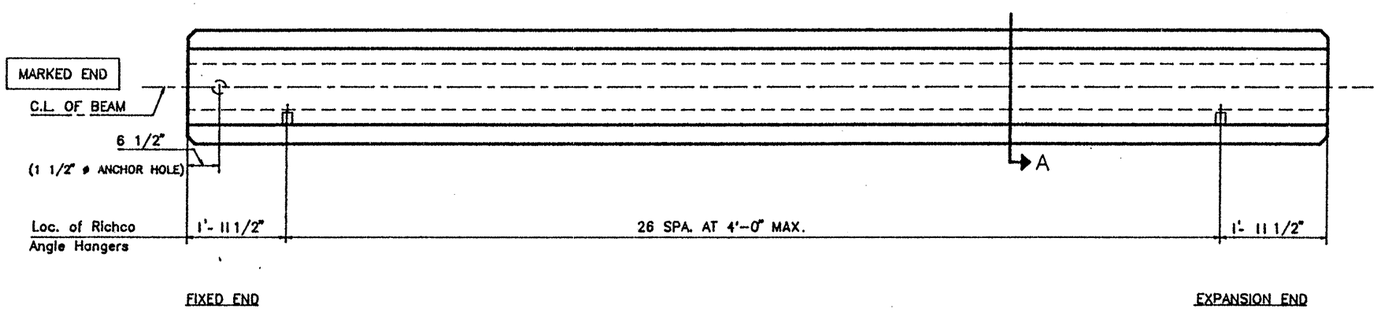

PLAN

TOP FINISH PANELS
SEE STANDARD SHEET S-"IV" FOR TOP FINISH AND OTHER NOTES AND DETAILS.

TEXAS DEPARTMENT OF TRANSPORTATION
APPROVED
DIVISION OF BRIDGES AND STRUCTURES
AUG 05 1992
APPROVAL OF THIS DRAWING DOES NOT RELIEVE THE CONTRACTOR OF THE RESPONSIBILITY FOR THE CORRECTNESS OF DETAIL.

REINFORCING STEEL SCHEDULE

BAR	QUANTITY PER BEAM	TOTAL QUANTITY	SIZE	LENGTH
R_{15}	113	113	#3	standard
X_{15}	109	109	#3	standard
Y_{15}	4	4	#6	standard
S_{15}	24	24	#7	standard
V_{15}	14	14	#3	standard
W_{15}	4	4	#5	standard
U_{15}	2	2	#5	105'-8"

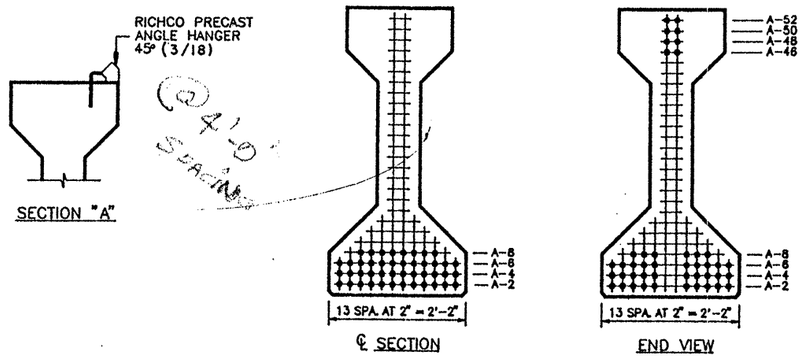

TYPE "IV" BEAM QUANTITY : 1

LO-LAX STRAND PATTERN		
NUMBER OF STRANDS : 44 ~1/2" ø 270 K @ 31.00 K EACH		
NUMBER OF STRAIGHT STRANDS	: 36	
NUMBER OF DEFLECTED STRANDS	: 8 @ A – 52	
CONCRETE RELEASE STRENGTH	: 5017	PSI
CONCRETE DESIGN STRENGTH	: 5944	PSI
ECCENTRICITY @ ℄ : 20.02"	ECCENTRICITY @ END : 12.02"	

DESIGN NO. : GpNsLR
TOTAL BEAM LENGTH OF THIS SHEET : 105.92'

MANCO PRESTRESS COMPANY
CONTRACTOR Gilbert Texas Construction

FED.RD. DIV.NO.	STATE	PROJECT NO.		HWY. NO.
6	TEXAS	NH 92(50)M		U.S. 83/281
STATE DIST.NO.	COUNTY	CONTROL NO.	SECTION NO.	JOB NO.
21	HIDALGO	0039	17	097

COPYRIGHT 1989 BY
STRUCTURAL ENGINEERING ASSOCIATES, INC.
CONSULTING ENGINEERS, SAN ANTONIO, TEXAS

JOB NO.	DRAWN	CHECKED	DATE	SHEET/MARK NO.
92-018	C.A.J.	D.M.P.	6-16-92	IV-10
SEA JOB NO. 92-059H	FABRICATION SHEET			

327252

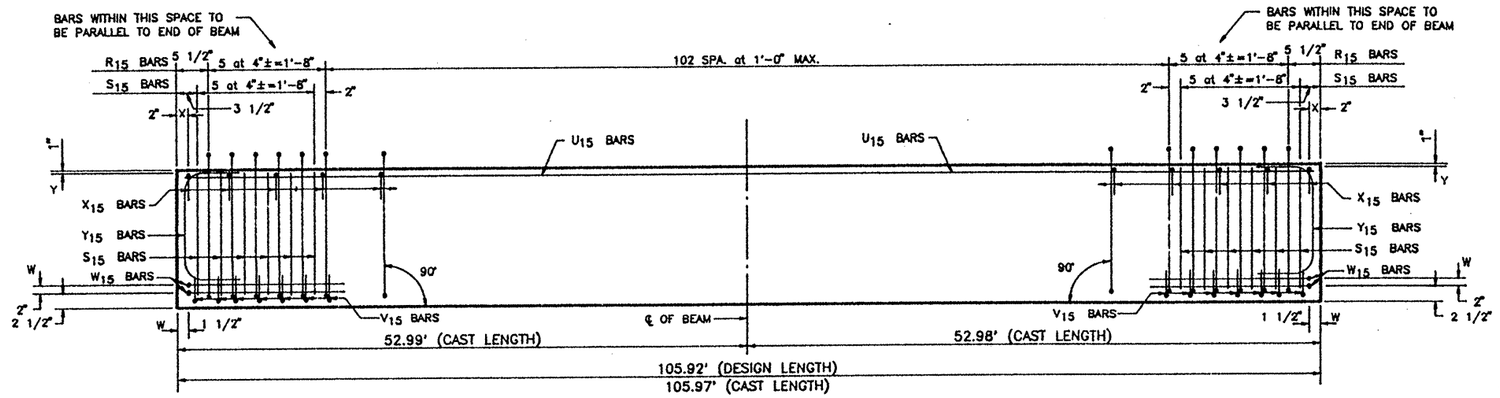

ELEVATION – REINFORCING STEEL

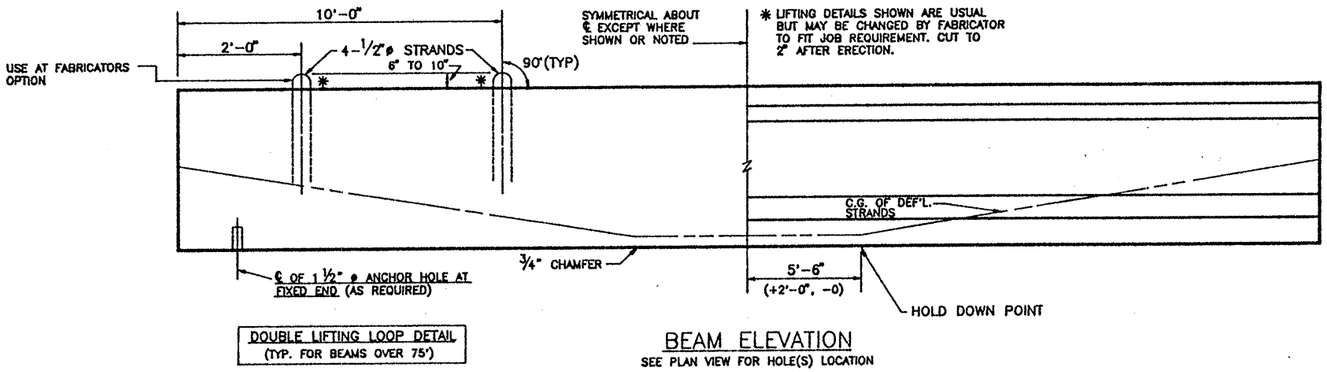

DOUBLE LIFTING LOOP DETAIL
(TYP. FOR BEAMS OVER 75')

BEAM ELEVATION
SEE PLAN VIEW FOR HOLE(S) LOCATION

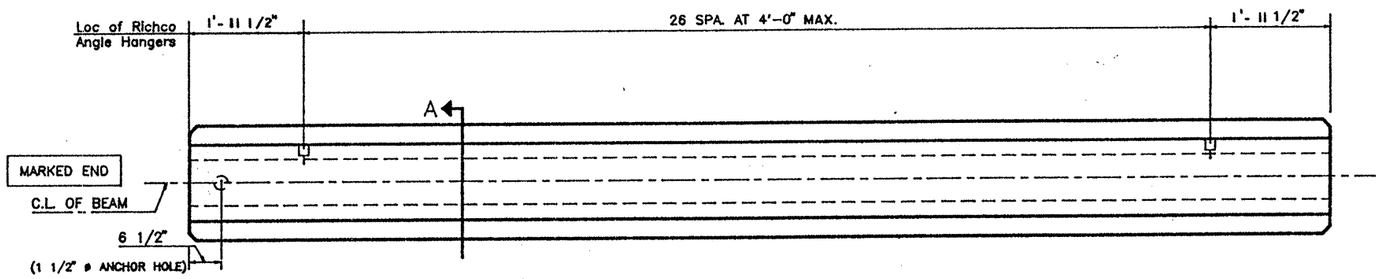

FIXED END

EXPANSION END

PLAN

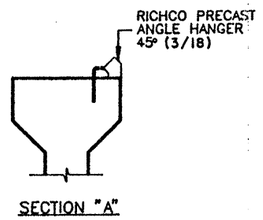

SECTION "A"

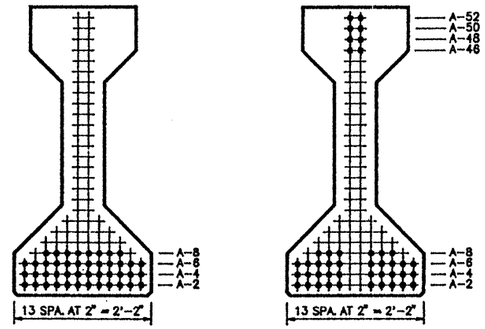

℄ SECTION

END VIEW

TYPE "IV" BEAM QUANTITY : 1

REINFORCING STEEL SCHEDULE

BAR	QUANTITY PER BEAM	TOTAL QUANTITY	SIZE	LENGTH
R_{15}	113	113	#3	standard
X_{15}	109	109	#3	standard
Y_{15}	4	4	#6	standard
S_{15}	24	24	#7	standard
V_{15}	14	14	#3	standard
W_{15}	4	4	#5	standard
U_{15}	2	2	#5	105'-8"

TEXAS DEPARTMENT OF TRANSPORTATION
APPROVED
DIVISION OF BRIDGES AND STRUCTURES

AUG 05 1992

APPROVAL OF THIS DRAWING DOES NOT RELIEVE THE CONTRACTOR OF THE RESPONSIBILITY FOR THE CORRECTNESS OF DETAIL.

LO-LAX STRAND PATTERN		
NUMBER OF STRANDS	: 44 ~1/2" ø 270 K @ 31.00 K EACH	
NUMBER OF STRAIGHT STRANDS	: 36	
NUMBER OF DEFLECTED STRANDS	: 8 @ A – 52	
CONCRETE RELEASE STRENGTH	: 5017	PSI
CONCRETE DESIGN STRENGTH	: 5944	PSI
ECCENTRICITY @ ℄	: 20.02"	ECCENTRICITY @ END : 12.02"

DESIGN NO. : GpNsLR
TOTAL BEAM LENGTH OF THIS SHEET : 105.92'

TOP FINISH PANELS
SEE STANDARD SHEET S-"IV" FOR TOP FINISH AND OTHER NOTES AND DETAILS.

MANCO PRESTRESS COMPANY

CONTRACTOR Gilbert Texas Construction

FED.RD. DIV.NO.	STATE	PROJECT NO.	HWY. NO.
6	TEXAS	NH 92(50)M	U.S. 83/281

STATE DIST.NO.	COUNTY	CONTROL NO.	SECTION NO.	JOB NO.
21	HIDALGO	0039	17	097

COPYRIGHT 1989 BY STRUCTURAL ENGINEERING ASSOCIATES, INC. CONSULTING ENGINEERS, SAN ANTONIO, TEXAS

JOB NO.	DRAWN	CHECKED	DATE	SHEET/MARK NO.
92-018	C.A.J.	D.M.P.	6-16-92	IV-11
SEA JOB NO. 92-059H	FABRICATION SHEET			

327252

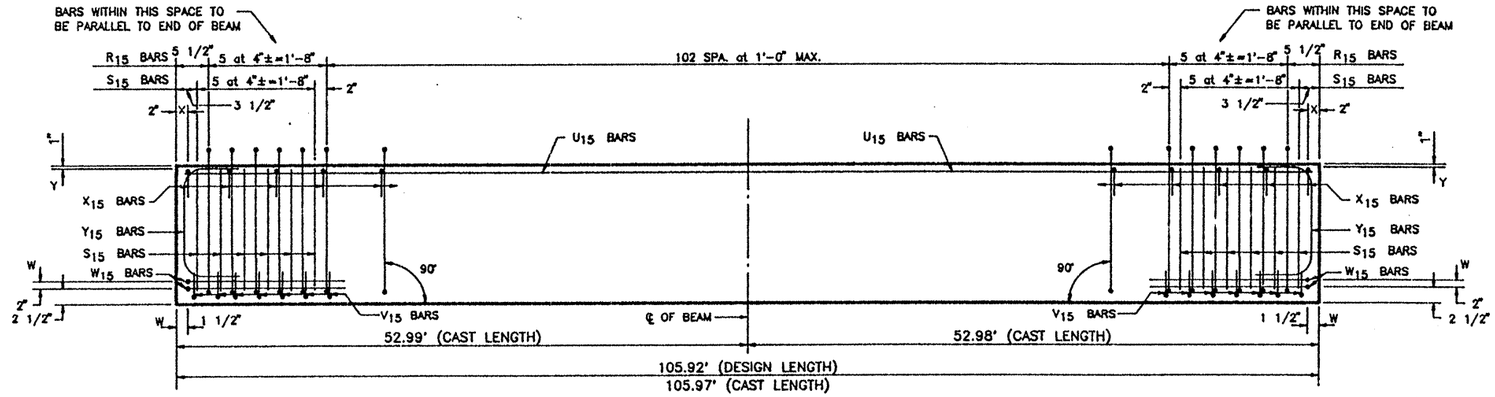

ELEVATION – REINFORCING STEEL

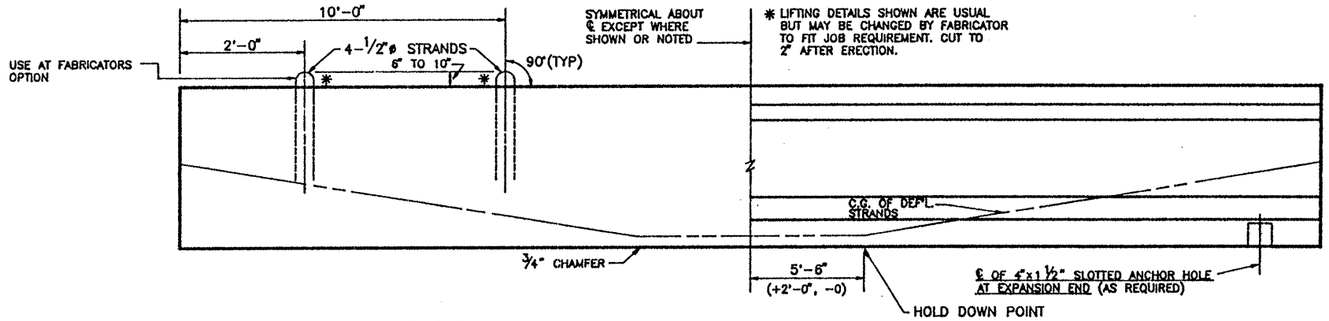

DOUBLE LIFTING LOOP DETAIL
(TYP. FOR BEAMS OVER 75')

BEAM ELEVATION
SEE PLAN VIEW FOR HOLE(S) LOCATION

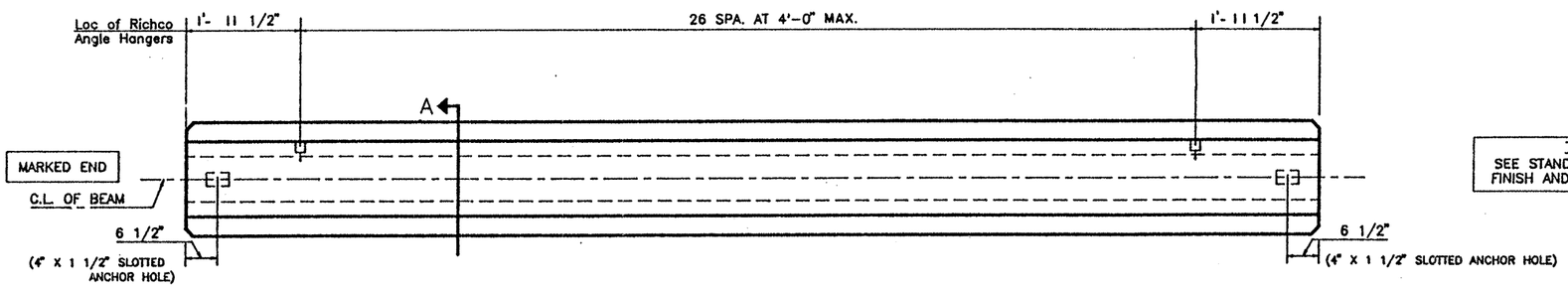

PLAN

TOP FINISH PANELS
SEE STANDARD SHEET S-"IV" FOR TOP FINISH AND OTHER NOTES AND DETAILS.

TEXAS DEPARTMENT OF TRANSPORTATION
APPROVED
DIVISION OF BRIDGES AND STRUCTURES
AUG 05 1992
APPROVAL OF THIS DRAWING DOES NOT RELIEVE THE CONTRACTOR OF THE RESPONSIBILITY FOR THE CORRECTNESS OF DETAIL.

REINFORCING STEEL SCHEDULE

BAR	QUANTITY PER BEAM	TOTAL QUANTITY	SIZE	LENGTH
R_{15}	113	113	#3	standard
X_{15}	109	109	#3	standard
Y_{15}	4	4	#6	standard
S_{15}	24	24	#7	standard
V_{15}	14	14	#3	standard
W_{15}	4	4	#5	standard
U_{15}	2	2	#5	105'-8"

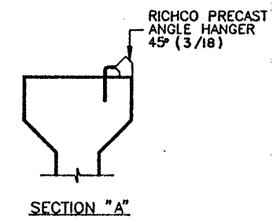

SECTION "A"

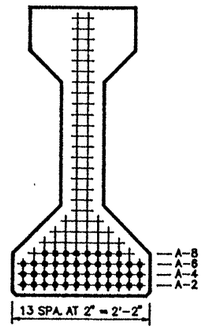

℄ SECTION

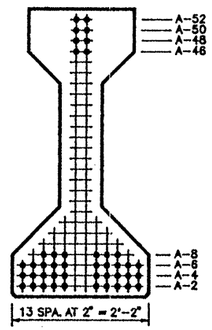

END VIEW

TYPE "IV" BEAM QUANTITY : 1

LO-LAX STRAND PATTERN			
NUMBER OF STRANDS : 44 ~1/2" ø 270 K @ 31.00 K EACH			
NUMBER OF STRAIGHT STRANDS	: 36		
NUMBER OF DEFLECTED STRANDS	: 8 @ A – 52		
CONCRETE RELEASE STRENGTH	: 5017	PSI	
CONCRETE DESIGN STRENGTH	: 5944	PSI	
ECCENTRICITY @ ℄ : 20.02"	ECCENTRICITY @ END : 12.02"		

DESIGN NO. : GpNsLR
TOTAL BEAM LENGTH OF THIS SHEET : 105.92'

MANCO PRESTRESS COMPANY
CONTRACTOR Gilbert Texas Construction

FED.RD. DIV.NO.	STATE	PROJECT NO.	HWY. NO.
6	TEXAS	NH 92(50)M	U.S. 83/281

STATE DIST.NO.	COUNTY	CONTROL NO.	SECTION NO.	JOB NO.
21	HIDALGO	0039	17	097

COPYRIGHT 1989 BY STRUCTURAL ENGINEERING ASSOCIATES, INC. CONSULTING ENGINEERS, SAN ANTONIO, TEXAS

JOB NO.	DRAWN	CHECKED	DATE	SHEET/MARK NO.
92-018	C.A.J.	D.M.P.	6-16-92	IV-12
SEA JOB NO. 92-059H	FABRICATION SHEET			

327252

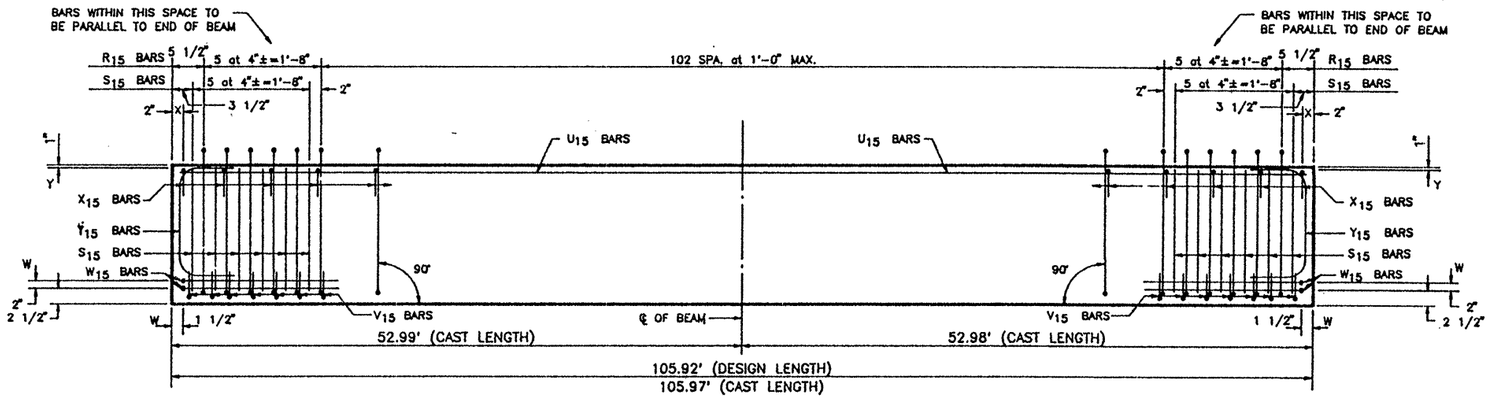

ELEVATION – REINFORCING STEEL

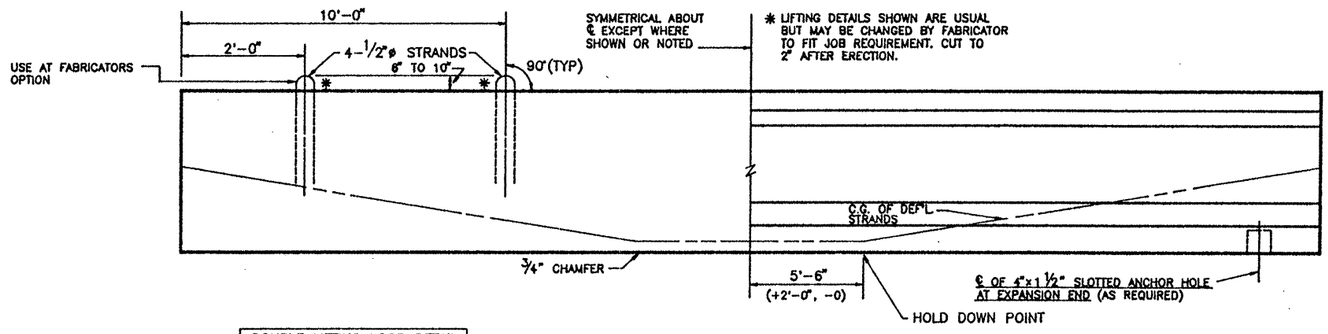

DOUBLE LIFTING LOOP DETAIL
(TYP. FOR BEAMS OVER 75')

BEAM ELEVATION
SEE PLAN VIEW FOR HOLE(S) LOCATION

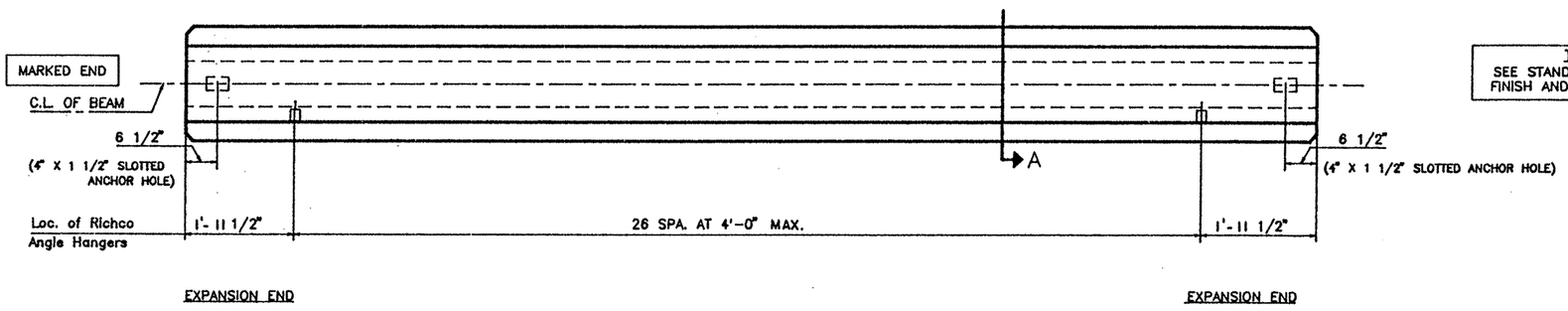

PLAN

TOP FINISH PANELS
SEE STANDARD SHEET S-"IV" FOR TOP FINISH AND OTHER NOTES AND DETAILS.

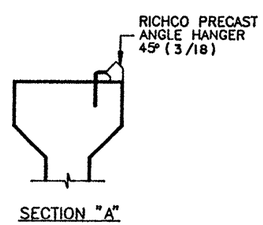

SECTION "A"

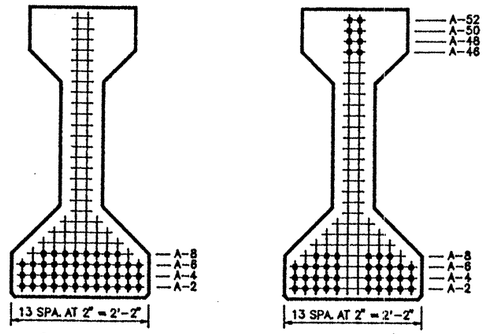

TYPE "IV" BEAM QUANTITY : 1

LO-LAX STRAND PATTERN		
NUMBER OF STRANDS : 44 ~1/2" ø 270 K @ 31.00 K EACH		
NUMBER OF STRAIGHT STRANDS	: 36	
NUMBER OF DEFLECTED STRANDS	: 8 @ A – 52	
CONCRETE RELEASE STRENGTH	: 5017	PSI
CONCRETE DESIGN STRENGTH	: 5944	PSI
ECCENTRICITY @ ℄ : 20.02"	ECCENTRICITY @ END : 12.02"	

DESIGN NO. : GpNsLR
TOTAL BEAM LENGTH OF THIS SHEET : 105.92'

REINFORCING STEEL SCHEDULE

BAR	QUANTITY PER BEAM	TOTAL QUANTITY	SIZE	LENGTH
R_{15}	113	113	#3	standard
X_{15}	109	109	#3	standard
Y_{15}	4	4	#6	standard
S_{15}	24	24	#7	standard
V_{15}	14	14	#3	standard
W_{15}	4	4	#5	standard
U_{15}	2	2	#5	105'-8"

TEXAS DEPARTMENT OF TRANSPORTATION
APPROVED
DIVISION OF BRIDGES AND STRUCTURES
AUG 05 1992
APPROVAL OF THIS DRAWING DOES NOT RELIEVE THE CONTRACTOR OF THE RESPONSIBILITY FOR THE CORRECTNESS OF DETAIL.

MANCO PRESTRESS COMPANY
CONTRACTOR Gilbert Texas Construction

FED.RD. DIV.NO.	STATE	PROJECT NO.	HWY. NO.
6	TEXAS	NH 92(50)M	U.S. 83/281

STATE DIST.NO.	COUNTY	CONTROL NO.	SECTION NO.	JOB NO.
21	HIDALGO	0039	17	097

COPYRIGHT 1989 BY
STRUCTURAL ENGINEERING ASSOCIATES, INC.
CONSULTING ENGINEERS, SAN ANTONIO, TEXAS

JOB NO.	DRAWN	CHECKED	DATE	SHEET/MARK NO.
92-018	C.A.J.	D.M.P.	6-16-92	IV-13
SEA JOB NO. 92-059H	FABRICATION SHEET			

327252

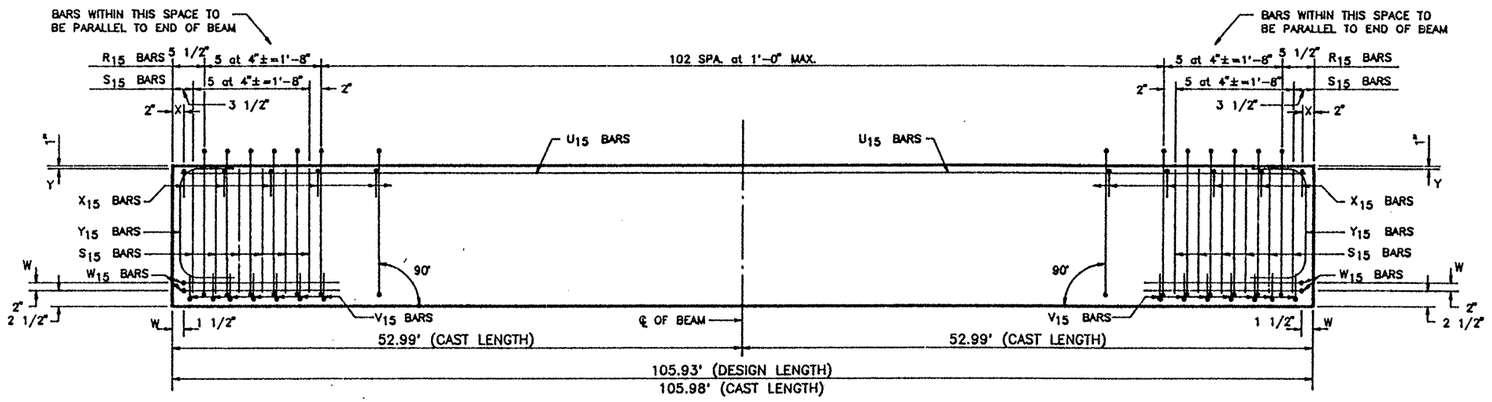

ELEVATION – REINFORCING STEEL

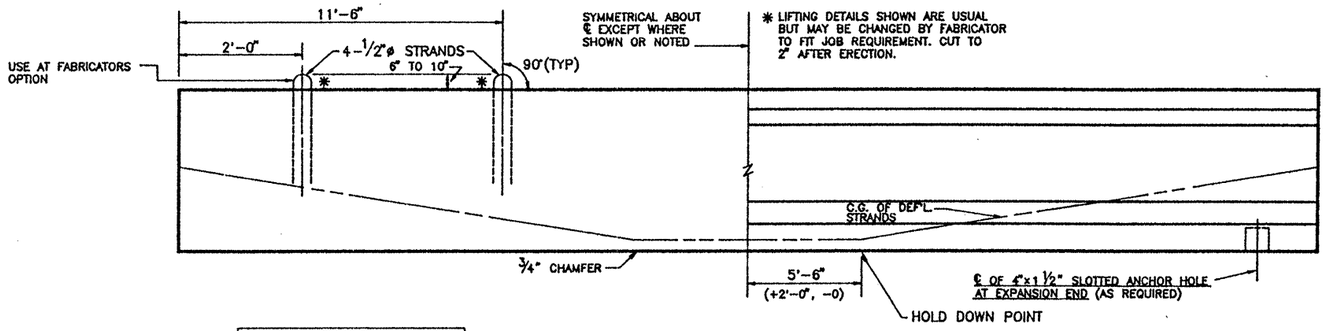

DOUBLE LIFTING LOOP DETAIL
(TYP. FOR BEAMS OVER 75')

BEAM ELEVATION
SEE PLAN VIEW FOR HOLE(S) LOCATION

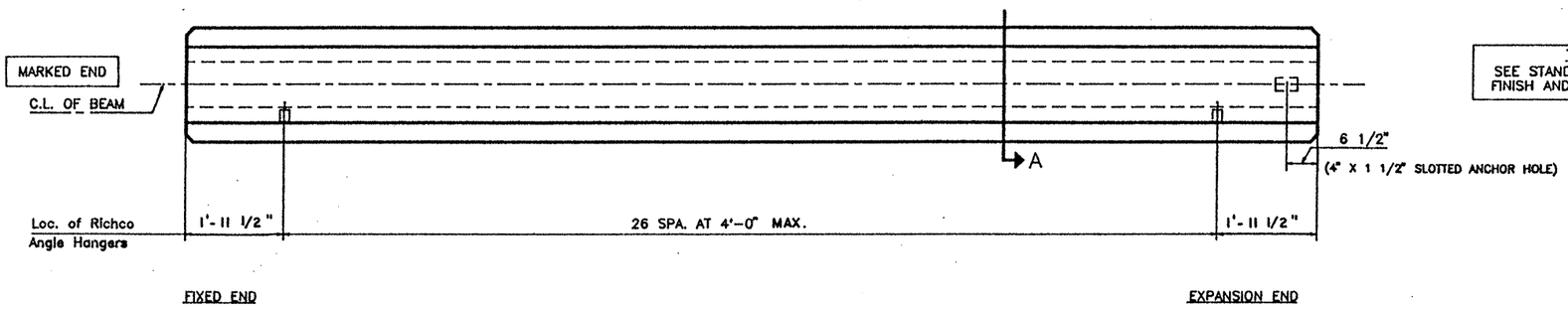

PLAN

TOP FINISH PANELS
SEE STANDARD SHEET S-"IV" FOR TOP FINISH AND OTHER NOTES AND DETAILS.

TEXAS DEPARTMENT OF TRANSPORTATION
APPROVED
DIVISION OF BRIDGES AND STRUCTURES
AUG 05 1992
APPROVAL OF THIS DRAWING DOES NOT RELIEVE THE CONTRACTOR OF THE RESPONSIBILITY FOR THE CORRECTNESS OF DETAIL.

REINFORCING STEEL SCHEDULE

BAR	QUANTITY PER BEAM	TOTAL QUANTITY	SIZE	LENGTH
R_{15}	113	113	#3	standard
X_{15}	109	109	#3	standard
Y_{15}	4	4	#6	standard
S_{15}	24	24	#7	standard
V_{15}	14	14	#3	standard
W_{15}	4	4	#5	standard
U_{15}	2	2	#5	105'-9"

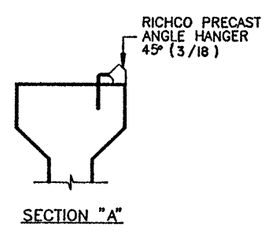

SECTION "A"

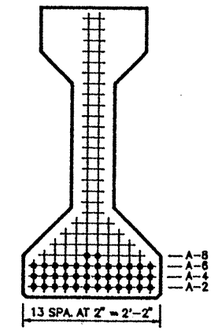

℄ SECTION

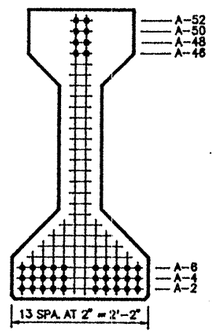

END VIEW

TYPE "IV" BEAM QUANTITY : 1

LO-LAX STRAND PATTERN		
NUMBER OF STRANDS	: 38 ~1/2" ø 270 K @ 31.00 K EACH	
NUMBER OF STRAIGHT STRANDS	: 30	
NUMBER OF DEFLECTED STRANDS	: 8 @ A – 52	
CONCRETE RELEASE STRENGTH	: 4233	PSI
CONCRETE DESIGN STRENGTH	: 5599	PSI
ECCENTRICITY @ ℄	: 20.54"	ECCENTRICITY @ END : 11.28"

DESIGN NO. : GpNsLR
TOTAL BEAM LENGTH OF THIS SHEET : 105.93'

MANCO PRESTRESS COMPANY
CONTRACTOR Gilbert Texas Construction

FED.RD. DIV.NO.	STATE	PROJECT NO.	HWY. NO.
6	TEXAS	NH 92(50)M	U.S. 83/281

STATE DIST.NO.	COUNTY	CONTROL NO.	SECTION NO.	JOB NO.
21	HIDALGO	0039	17	097

COPYRIGHT 1989 BY
STRUCTURAL ENGINEERING ASSOCIATES, INC.
CONSULTING ENGINEERS, SAN ANTONIO, TEXAS

JOB NO.	DRAWN	CHECKED	DATE	SHEET/MARK NO.
92-018	C.A.J.	D.M.P.	6-16-92	IV-14
SEA JOB NO. 92-059H	FABRICATION SHEET			

327252

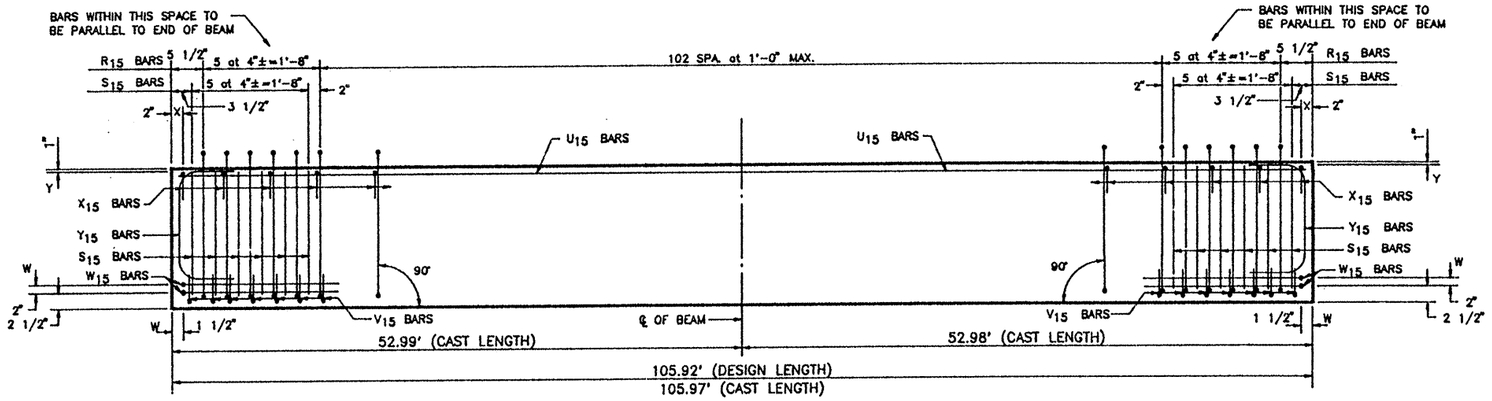

ELEVATION – REINFORCING STEEL

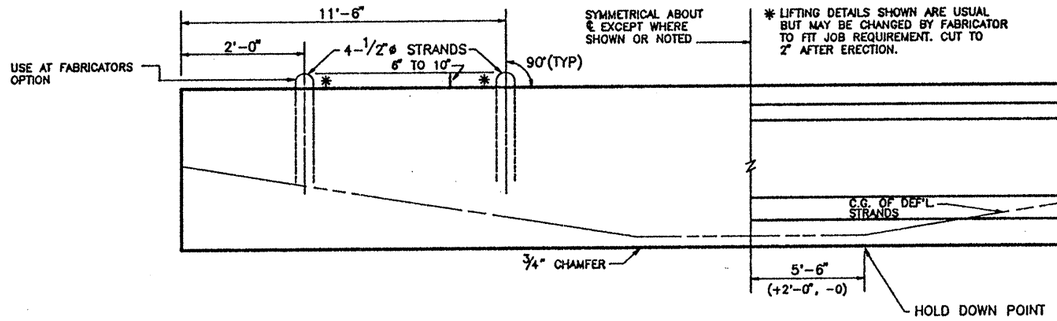

DOUBLE LIFTING LOOP DETAIL
(TYP. FOR BEAMS OVER 75')

BEAM ELEVATION
SEE PLAN VIEW FOR HOLE(S) LOCATION

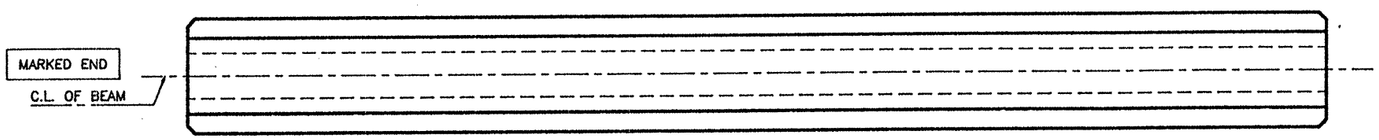

PLAN

TOP FINISH PANELS
SEE STANDARD SHEET S-"IV" FOR TOP FINISH AND OTHER NOTES AND DETAILS.

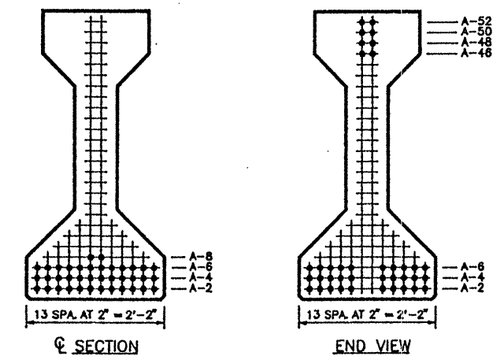

TYPE "IV" BEAM QUANTITY : 9

REINFORCING STEEL SCHEDULE

BAR	QUANTITY PER BEAM	TOTAL QUANTITY	SIZE	LENGTH
R_{15}	113	1017	#3	standard
X_{15}	109	981	#3	standard
Y_{15}	4	36	#6	standard
S_{15}	24	216	#7	standard
V_{15}	14	126	#3	standard
W_{15}	4	36	#5	standard
U_{15}	2	18	#5	105'-8"

TEXAS DEPARTMENT OF TRANSPORTATION
APPROVED
DIVISION OF BRIDGES AND STRUCTURES
AUG 05 1992
APPROVAL OF THIS DRAWING DOES NOT RELIEVE THE CONTRACTOR OF THE RESPONSIBILITY FOR THE CORRECTNESS OF DETAIL.

LO-LAX STRAND PATTERN		
NUMBER OF STRANDS	: 38 ~1/2" ø 270 K @ 31.00 K EACH	
NUMBER OF STRAIGHT STRANDS	: 30	
NUMBER OF DEFLECTED STRANDS	: 8 @ A – 52	
CONCRETE RELEASE STRENGTH	: 4233	PSI
CONCRETE DESIGN STRENGTH	: 5599	PSI
ECCENTRICITY @ ℄	: 20.54"	ECCENTRICITY @ END : 11.28"

DESIGN NO. : GpNsLR
TOTAL BEAM LENGTH OF THIS SHEET : 953.28'

MANCO PRESTRESS COMPANY
CONTRACTOR Gilbert Texas Construction

FED.RD. DIV.NO.	STATE	PROJECT NO.		HWY. NO.
6	TEXAS	NH 92(50)M		U.S. 83/281
STATE DIST.NO.	COUNTY	CONTROL NO.	SECTION NO.	JOB NO.
21	HIDALGO	0039	17	097

COPYRIGHT 1989 BY
STRUCTURAL ENGINEERING ASSOCIATES, INC.
CONSULTING ENGINEERS, SAN ANTONIO, TEXAS

JOB NO.	DRAWN	CHECKED	DATE	SHEET/MARK NO.
92-018	C.A.J.	D.M.P.	6-16-92	IV-15
SEA JOB NO. 92-059H	FABRICATION SHEET			

327252

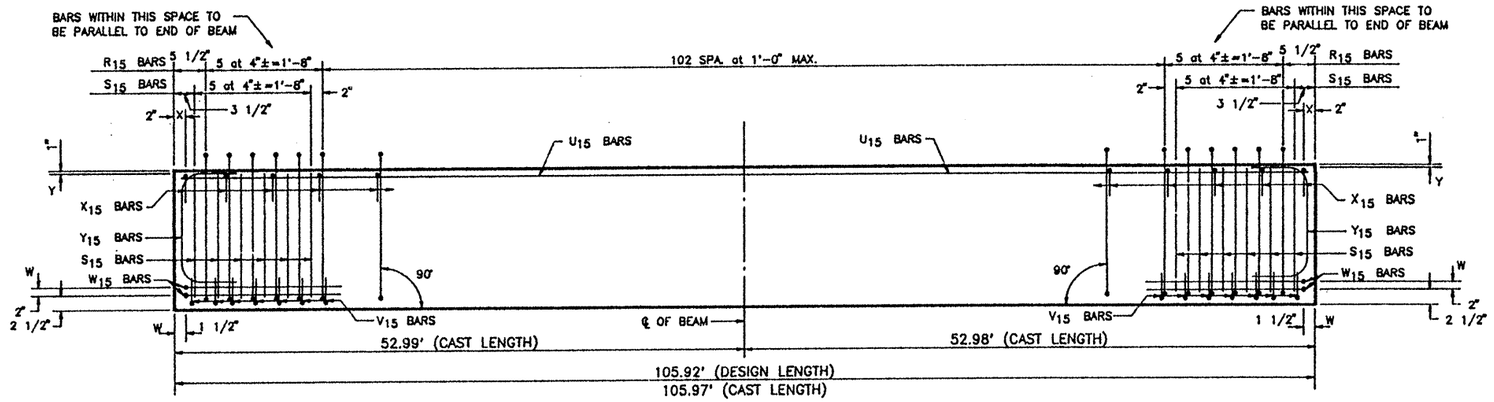

ELEVATION – REINFORCING STEEL

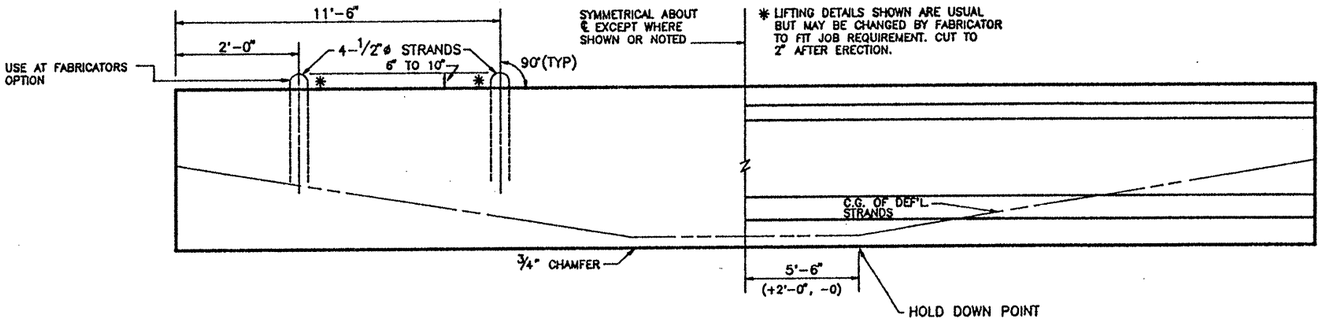

DOUBLE LIFTING LOOP DETAIL
(TYP. FOR BEAMS OVER 75')

BEAM ELEVATION
SEE PLAN VIEW FOR HOLE(S) LOCATION

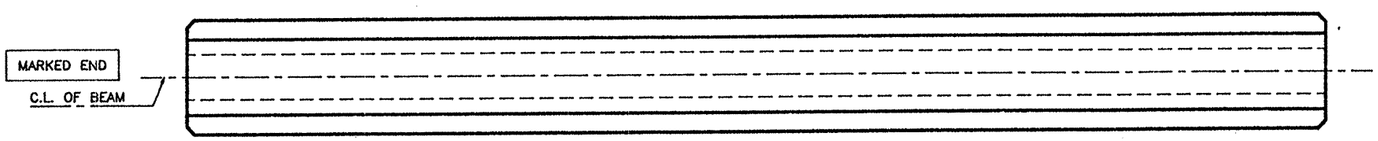

PLAN

TOP FINISH PANELS
SEE STANDARD SHEET S-"IV" FOR TOP FINISH AND OTHER NOTES AND DETAILS.

TEXAS DEPARTMENT OF TRANSPORTATION
APPROVED
DIVISION OF BRIDGES AND STRUCTURES
AUG 05 1992
APPROVAL OF THIS DRAWING DOES NOT RELIEVE THE CONTRACTOR OF THE RESPONSIBILITY FOR THE CORRECTNESS OF DETAIL.

REINFORCING STEEL SCHEDULE

BAR	QUANTITY PER BEAM	TOTAL QUANTITY	SIZE	LENGTH
R_{15}	113	1017	#3	standard
X_{15}	109	981	#3	standard
Y_{15}	4	36	#6	standard
S_{15}	24	216	#7	standard
V_{15}	14	126	#3	standard
W_{15}	4	36	#5	standard
U_{15}	2	18	#5	105'-8"

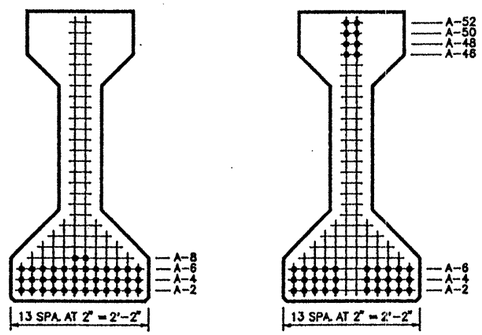

TYPE "IV" BEAM QUANTITY : 9

LO-LAX STRAND PATTERN		
NUMBER OF STRANDS : 38 ~1/2" ø 270 K @ 31.00 K EACH		
NUMBER OF STRAIGHT STRANDS	: 30	
NUMBER OF DEFLECTED STRANDS	: 8 @ A – 52	
CONCRETE RELEASE STRENGTH	: 4233	PSI
CONCRETE DESIGN STRENGTH	: 5599	PSI
ECCENTRICITY @ ℄ : 20.54"	ECCENTRICITY @ END : 11.28"	

DESIGN NO. : GpNsLR
TOTAL BEAM LENGTH OF THIS SHEET : 953.28'

MANCO PRESTRESS COMPANY
CONTRACTOR Gilbert Texas Construction

FED.RD. DIV.NO.	STATE	PROJECT NO.	HWY. NO.
6	TEXAS	NH 92(50)M	U.S. 83/281

STATE DIST.NO.	COUNTY	CONTROL NO.	SECTION NO.	JOB NO.
21	HIDALGO	0039	17	097

COPYRIGHT 1989 BY
STRUCTURAL ENGINEERING ASSOCIATES, INC.
CONSULTING ENGINEERS, SAN ANTONIO, TEXAS

JOB NO.	DRAWN	CHECKED	DATE	SHEET/MARK NO.
92-018	C.A.J.	D.M.P.	6-16-92	IV-15
SEA JOB NO. 92-059H	FABRICATION SHEET			

327252

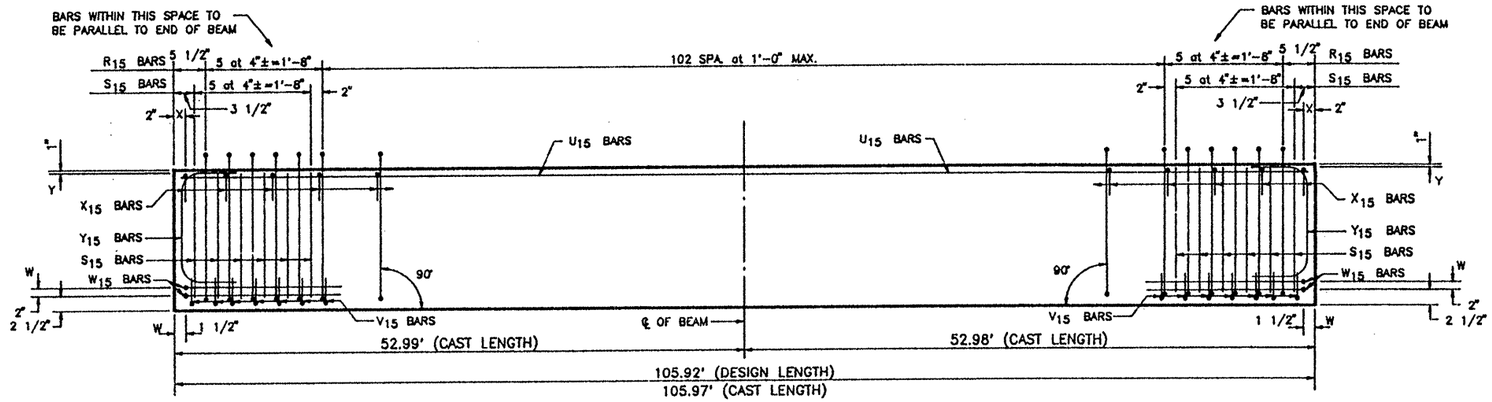

ELEVATION – REINFORCING STEEL

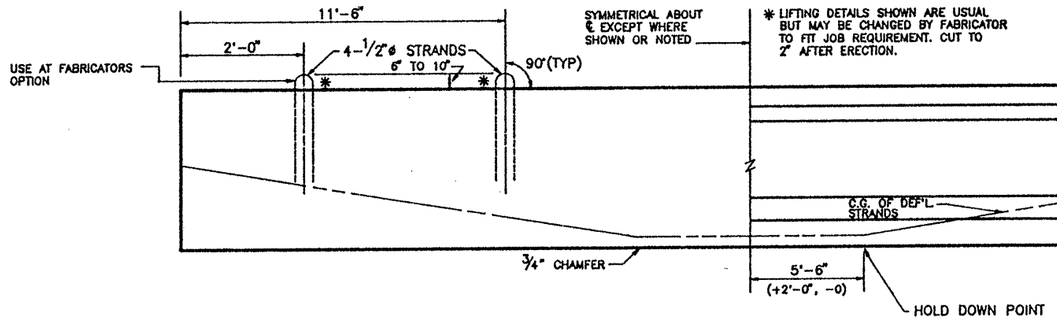

DOUBLE LIFTING LOOP DETAIL
(TYP. FOR BEAMS OVER 75')

BEAM ELEVATION
SEE PLAN VIEW FOR HOLE(S) LOCATION

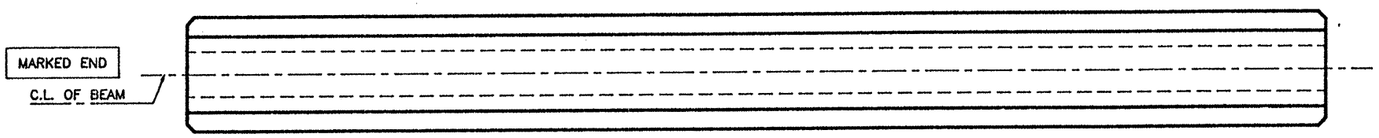

PLAN

TOP FINISH PANELS
SEE STANDARD SHEET S-"IV" FOR TOP FINISH AND OTHER NOTES AND DETAILS.

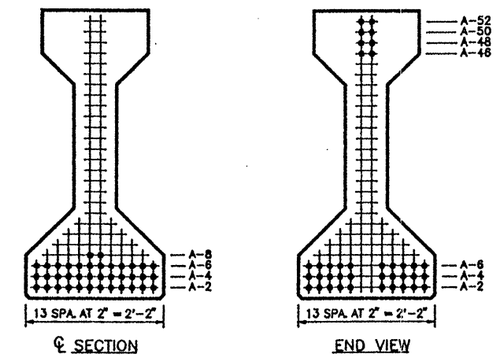

TYPE "IV" BEAM QUANTITY : 9

REINFORCING STEEL SCHEDULE

BAR	QUANTITY PER BEAM	TOTAL QUANTITY	SIZE	LENGTH
R_{15}	113	1017	#3	standard
X_{15}	109	981	#3	standard
Y_{15}	4	36	#6	standard
S_{15}	24	216	#7	standard
V_{15}	14	126	#3	standard
W_{15}	4	36	#5	standard
U_{15}	2	18	#5	105'-8"

TEXAS DEPARTMENT OF TRANSPORTATION
APPROVED
DIVISION OF BRIDGES AND STRUCTURES
AUG 05 1992
APPROVAL OF THIS DRAWING DOES NOT RELIEVE THE CONTRACTOR OF THE RESPONSIBILITY FOR THE CORRECTNESS OF DETAIL.

LO-LAX STRAND PATTERN		
NUMBER OF STRANDS	: 38 ~1/2" ø 270 K @ 31.00 K EACH	
NUMBER OF STRAIGHT STRANDS	: 30	
NUMBER OF DEFLECTED STRANDS	: 8 @ A – 52	
CONCRETE RELEASE STRENGTH	: 4233	PSI
CONCRETE DESIGN STRENGTH	: 5599	PSI
ECCENTRICITY @ ℄	: 20.54"	ECCENTRICITY @ END : 11.28"

DESIGN NO. : GpNsLR
TOTAL BEAM LENGTH OF THIS SHEET : 953.28'

MANCO PRESTRESS COMPANY

CONTRACTOR Gilbert Texas Construction

FED.RD. DIV.NO.	STATE	PROJECT NO.		HWY. NO.
6	TEXAS	NH 92(50)M		U.S. 83/281
STATE DIST.NO.	COUNTY	CONTROL NO.	SECTION NO.	JOB NO.
21	HIDALGO	0039	17	097

COPYRIGHT 1989 BY STRUCTURAL ENGINEERING ASSOCIATES, INC. *CONSULTING ENGINEERS*, SAN ANTONIO, TEXAS

JOB NO.	DRAWN	CHECKED	DATE	SHEET/MARK NO.
92-018	C.A.J.	D.M.P.	6-16-92	IV-15
SEA JOB NO. 92-059H	FABRICATION SHEET			

327252

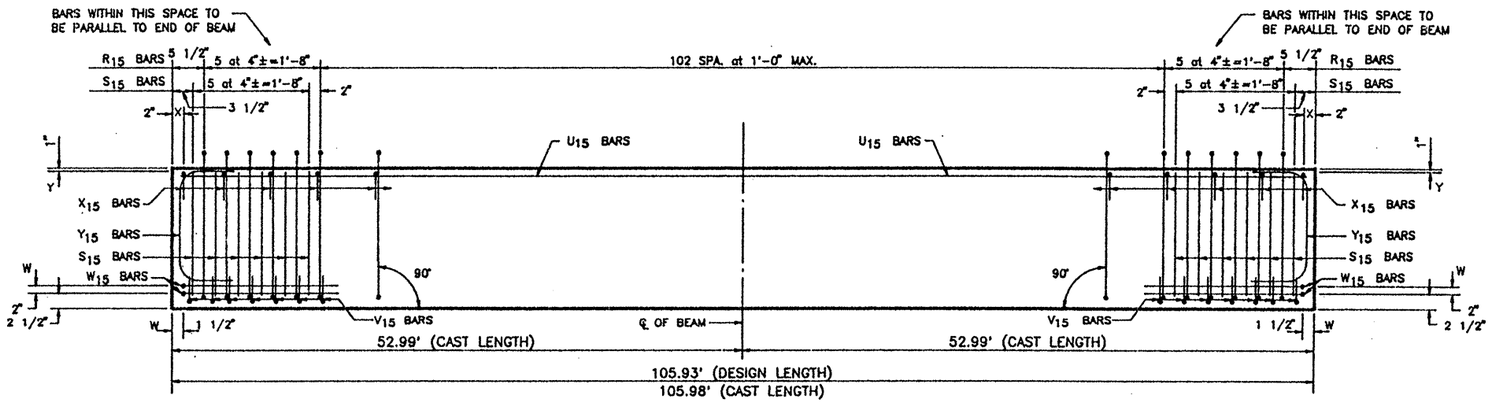

ELEVATION – REINFORCING STEEL

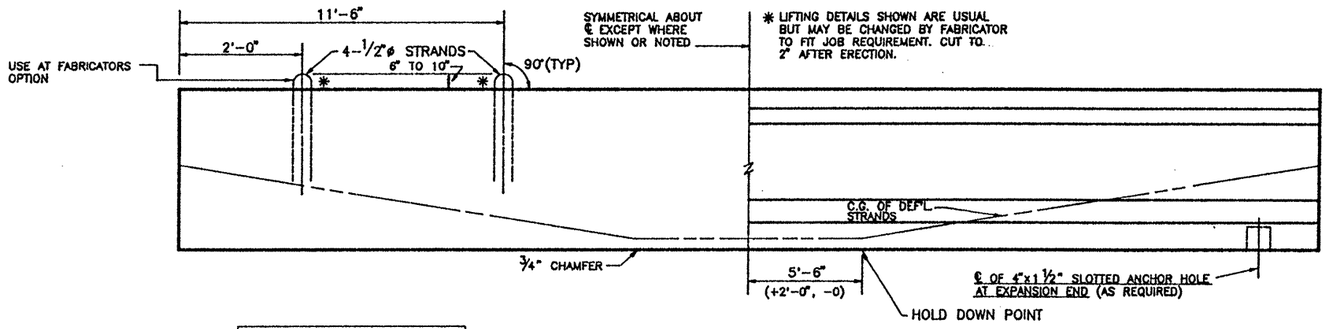

DOUBLE LIFTING LOOP DETAIL
(TYP. FOR BEAMS OVER 75')

BEAM ELEVATION
SEE PLAN VIEW FOR HOLE(S) LOCATION

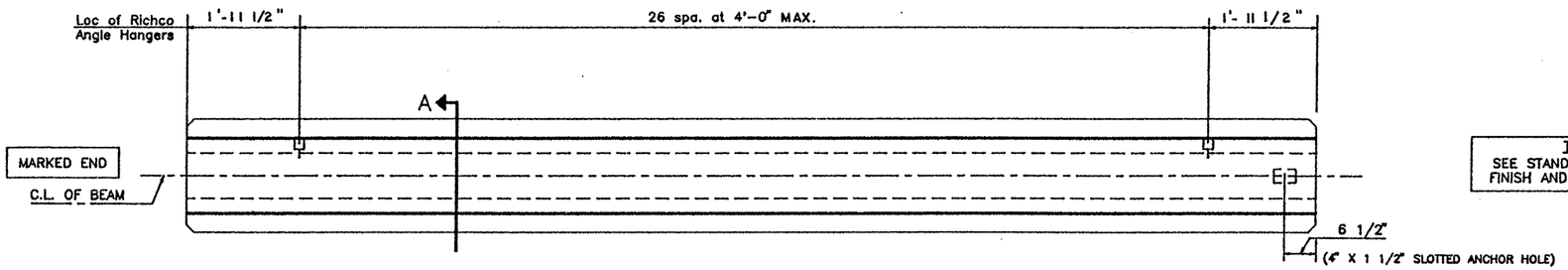

FIXED END

EXPANSION END

PLAN

TOP FINISH PANELS
SEE STANDARD SHEET S-"IV" FOR TOP FINISH AND OTHER NOTES AND DETAILS.

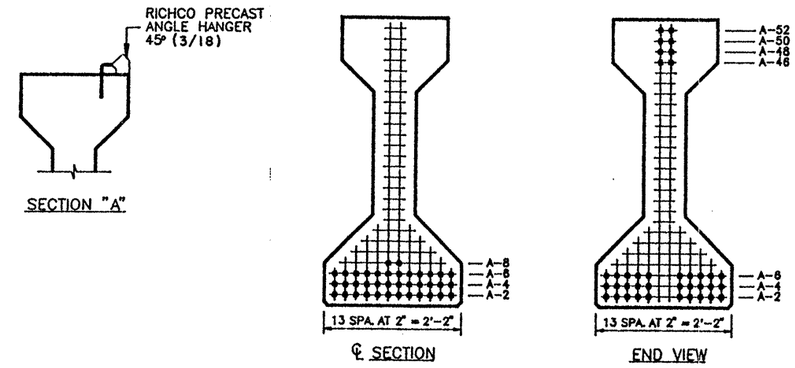

TYPE "IV" BEAM QUANTITY : 1

REINFORCING STEEL SCHEDULE

BAR	QUANTITY PER BEAM	TOTAL QUANTITY	SIZE	LENGTH
R_{15}	113	113	#3	standard
X_{15}	109	109	#3	standard
Y_{15}	4	4	#6	standard
S_{15}	24	24	#7	standard
V_{15}	14	14	#3	standard
W_{15}	4	4	#5	standard
U_{15}	2	2	#5	105'-9"

TEXAS DEPARTMENT OF TRANSPORTATION
APPROVED
DIVISION OF BRIDGES AND STRUCTURES
AUG 05 1992
APPROVAL OF THIS DRAWING DOES NOT RELIEVE THE CONTRACTOR OF THE RESPONSIBILITY FOR THE CORRECTNESS OF DETAIL.

LO-LAX STRAND PATTERN		
NUMBER OF STRANDS	: 38 ~1/2" ø 270 K @ 31.00 K EACH	
NUMBER OF STRAIGHT STRANDS	: 30	
NUMBER OF DEFLECTED STRANDS	: 8 @ A – 52	
CONCRETE RELEASE STRENGTH	: 4233	PSI
CONCRETE DESIGN STRENGTH	: 5599	PSI
ECCENTRICITY @ ℄	: 20.54"	ECCENTRICITY @ END : 11.28"

DESIGN NO. : GpNsLR
TOTAL BEAM LENGTH OF THIS SHEET : 105.93'

MANCO PRESTRESS COMPANY
CONTRACTOR Gilbert Texas Construction

FED.RD. DIV.NO.	STATE	PROJECT NO.	HWY. NO.
6	TEXAS	NH 92(50)M	U.S. 83/281

STATE DIST.NO.	COUNTY	CONTROL NO.	SECTION NO.	JOB NO.
21	HIDALGO	0039	17	097

COPYRIGHT 1989 BY
STRUCTURAL ENGINEERING ASSOCIATES, INC.
CONSULTING ENGINEERS, SAN ANTONIO, TEXAS

JOB NO.	DRAWN	CHECKED	DATE	SHEET/MARK NO.
92-018	C.A.J.	D.M.P.	6-16-92	IV-16
SEA JOB NO. 92-059H	FABRICATION SHEET			

327252

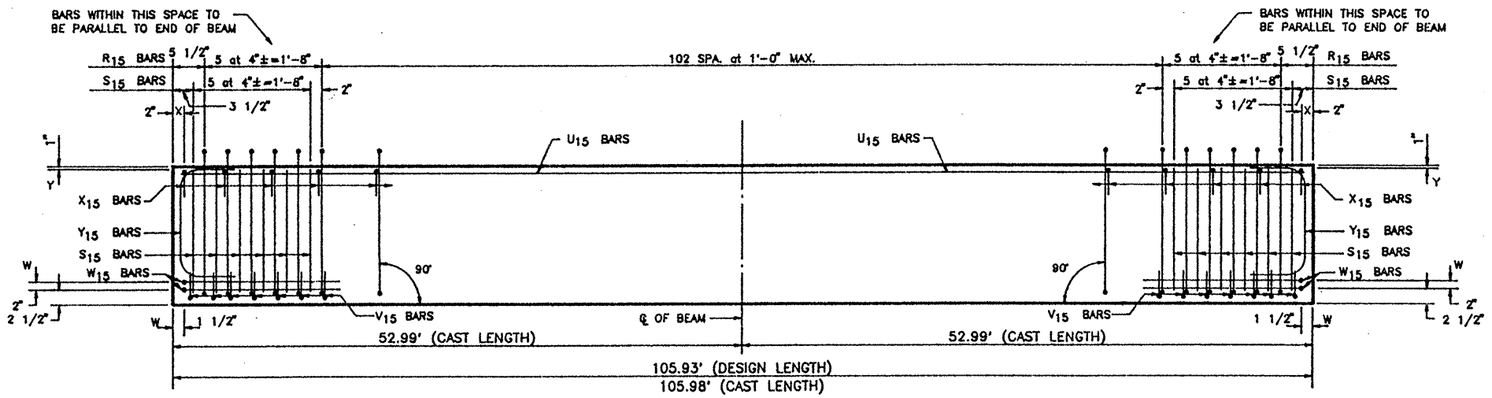

ELEVATION – REINFORCING STEEL

REINFORCING STEEL SCHEDULE				
BAR	QUANTITY PER BEAM	TOTAL QUANTITY	SIZE	LENGTH
R_{15}	113	113	#3	standard
X_{15}	109	109	#3	standard
Y_{15}	4	4	#6	standard
S_{15}	24	24	#7	standard
V_{15}	14	14	#3	standard
W_{15}	4	4	#5	standard
U_{15}	2	2	#5	105'-9"

TEXAS DEPARTMENT OF TRANSPORTATION
APPROVED
DIVISION OF BRIDGES AND STRUCTURES

AUG 05 1992

APPROVAL OF THIS DRAWING DOES NOT RELIEVE THE CONTRACTOR OF THE RESPONSIBILITY FOR THE CORRECTNESS OF DETAIL.

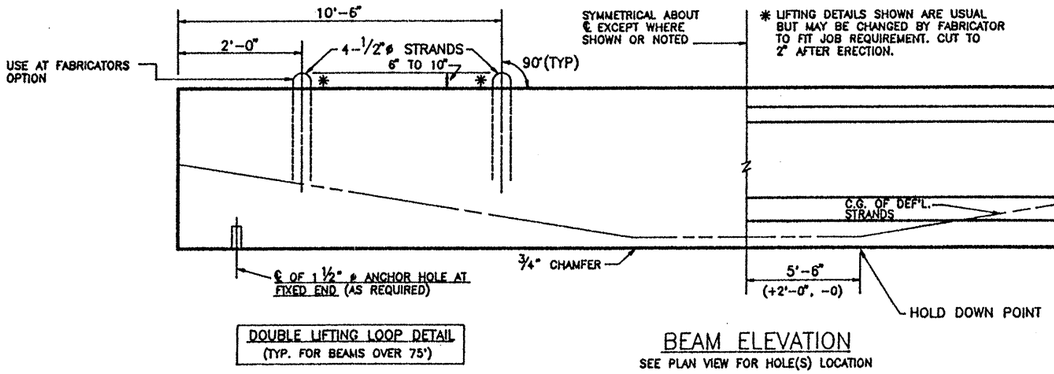

DOUBLE LIFTING LOOP DETAIL
(TYP. FOR BEAMS OVER 75')

BEAM ELEVATION
SEE PLAN VIEW FOR HOLE(S) LOCATION

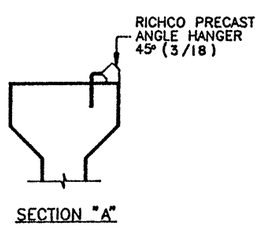

SECTION "A"

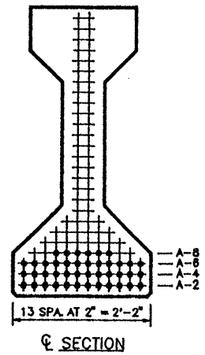

℄ SECTION

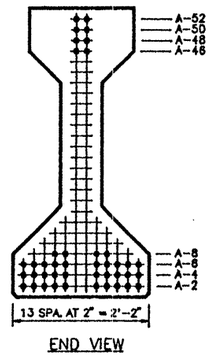

END VIEW

TYPE "IV" BEAM QUANTITY : 1

LO-LAX STRAND PATTERN		
NUMBER OF STRANDS	:	42 ~1/2" ø 270 K @ 31.00 K EACH
NUMBER OF STRAIGHT STRANDS	:	34
NUMBER OF DEFLECTED STRANDS	:	8 @ A – 52
CONCRETE RELEASE STRENGTH	:	4756 PSI
CONCRETE DESIGN STRENGTH	:	5830 PSI
ECCENTRICITY @ ℄	:	20.18" ECCENTRICITY @ END : 11.80"

DESIGN NO. : GpNsLR
TOTAL BEAM LENGTH OF THIS SHEET : 105.93'

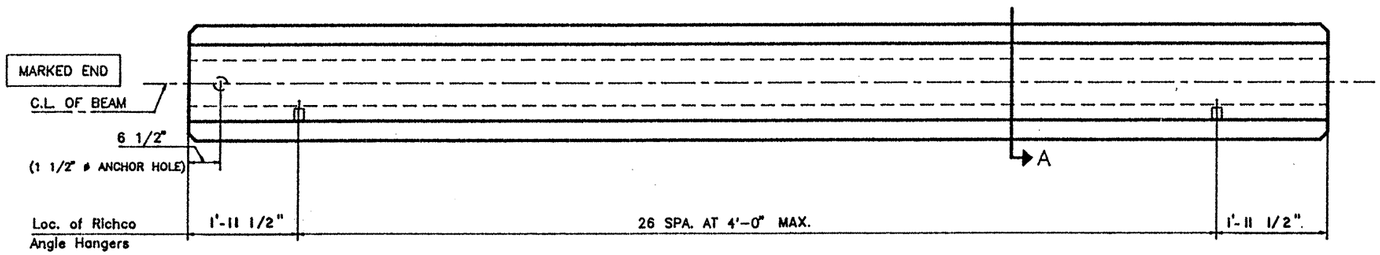

FIXED END

EXPANSION END

PLAN

TOP FINISH PANELS
SEE STANDARD SHEET S-"IV" FOR TOP FINISH AND OTHER NOTES AND DETAILS.

MANCO PRESTRESS COMPANY				
CONTRACTOR Gilbert Texas Construction				
FED.RD. DIV.NO.	STATE	PROJECT NO.		HWY. NO.
6	TEXAS	NH 92(50)M		U.S. 83/281
STATE DIST.NO.	COUNTY	CONTROL NO.	SECTION NO.	JOB NO.
21	HIDALGO	0039	17	097

COPYRIGHT 1989 BY
STRUCTURAL ENGINEERING ASSOCIATES, INC.
CONSULTING ENGINEERS, SAN ANTONIO, TEXAS

JOB NO.	DRAWN	CHECKED	DATE	SHEET/MARK NO.
92-018	C.A.J.	D.M.P.	6-16-92	IV-17
SEA JOB NO. 92-059H	FABRICATION SHEET			

327252

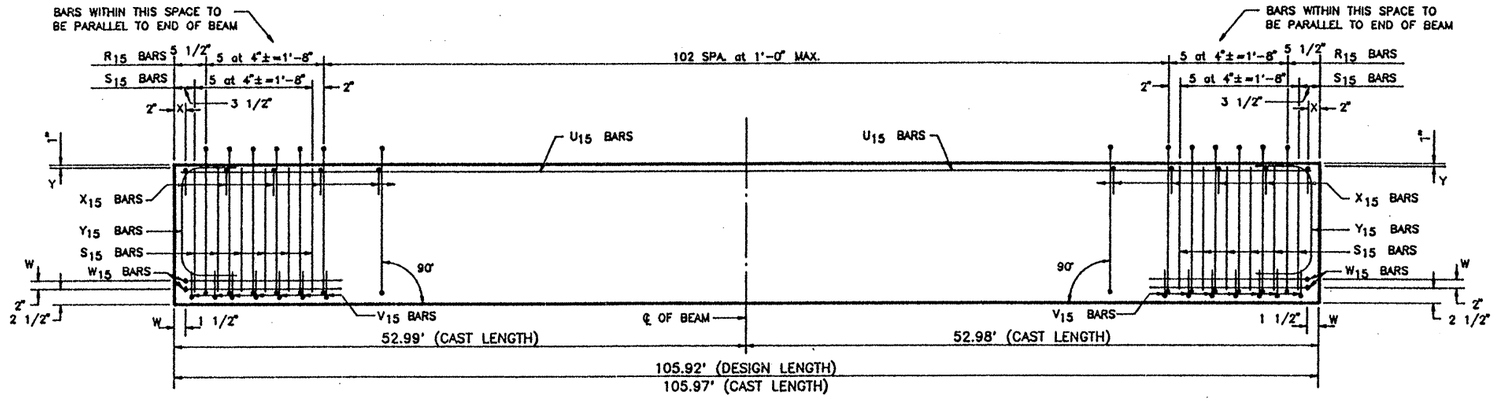

ELEVATION – REINFORCING STEEL

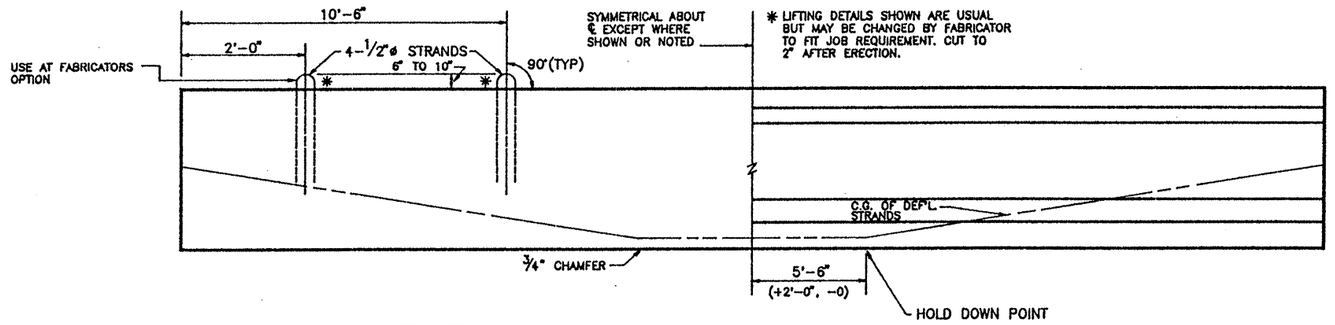

DOUBLE LIFTING LOOP DETAIL
(TYP. FOR BEAMS OVER 75')

BEAM ELEVATION
SEE PLAN VIEW FOR HOLE(S) LOCATION

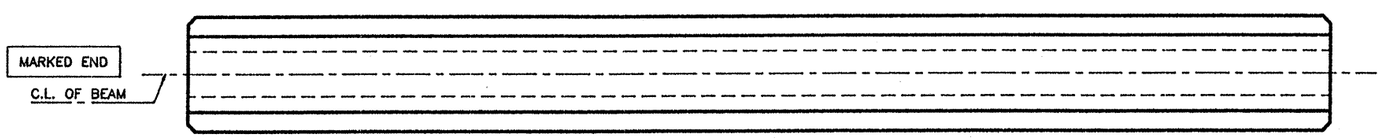

PLAN

TOP FINISH PANELS
SEE STANDARD SHEET S-"IV" FOR TOP FINISH AND OTHER NOTES AND DETAILS.

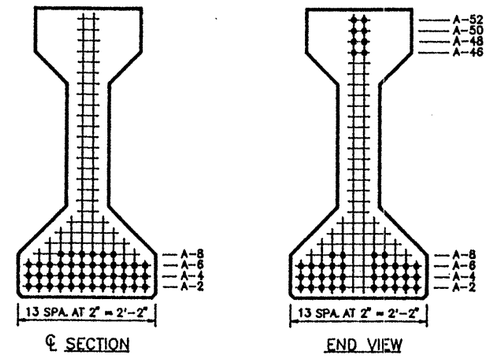

TYPE "IV" BEAM QUANTITY : 9

REINFORCING STEEL SCHEDULE

BAR	QUANTITY PER BEAM	TOTAL QUANTITY	SIZE	LENGTH
R_{15}	113	1017	#3	standard
X_{15}	109	981	#3	standard
Y_{15}	4	36	#6	standard
S_{15}	24	216	#7	standard
V_{15}	14	126	#3	standard
W_{15}	4	36	#5	standard
U_{15}	2	18	#5	105'-8"

TEXAS DEPARTMENT OF TRANSPORTATION
APPROVED
DIVISION OF BRIDGES AND STRUCTURES
AUG 05 1992
APPROVAL OF THIS DRAWING DOES NOT RELIEVE THE CONTRACTOR OF THE RESPONSIBILITY FOR THE CORRECTNESS OF DETAIL.

LO-LAX STRAND PATTERN

NUMBER OF STRANDS	: 42 ~1/2" ø 270 K @ 31.00 K EACH	
NUMBER OF STRAIGHT STRANDS	: 34	
NUMBER OF DEFLECTED STRANDS	: 8 @ A – 52	
CONCRETE RELEASE STRENGTH	: 4756	PSI
CONCRETE DESIGN STRENGTH	: 5830	PSI
ECCENTRICITY @ ℄	: 20.18"	ECCENTRICITY @ END : 11.80"

DESIGN NO. : GpNsLR
TOTAL BEAM LENGTH OF THIS SHEET : 953.28'

MANCO PRESTRESS COMPANY

CONTRACTOR Gilbert Texas Construction

FED.RD. DIV.NO.	STATE	PROJECT NO.	HWY. NO.
6	TEXAS	NH 92(50)M	U.S. 83/281

STATE DIST.NO.	COUNTY	CONTROL NO.	SECTION NO.	JOB NO.
21	HIDALGO	0039	17	097

COPYRIGHT 1989 BY
STRUCTURAL ENGINEERING ASSOCIATES, INC.
CONSULTING ENGINEERS, SAN ANTONIO, TEXAS

JOB NO.	DRAWN	CHECKED	DATE	SHEET/MARK NO.
92-018	C.A.J.	D.M.P.	6-16-92	IV-18
SEA JOB NO. 92-059H	FABRICATION SHEET			

327252

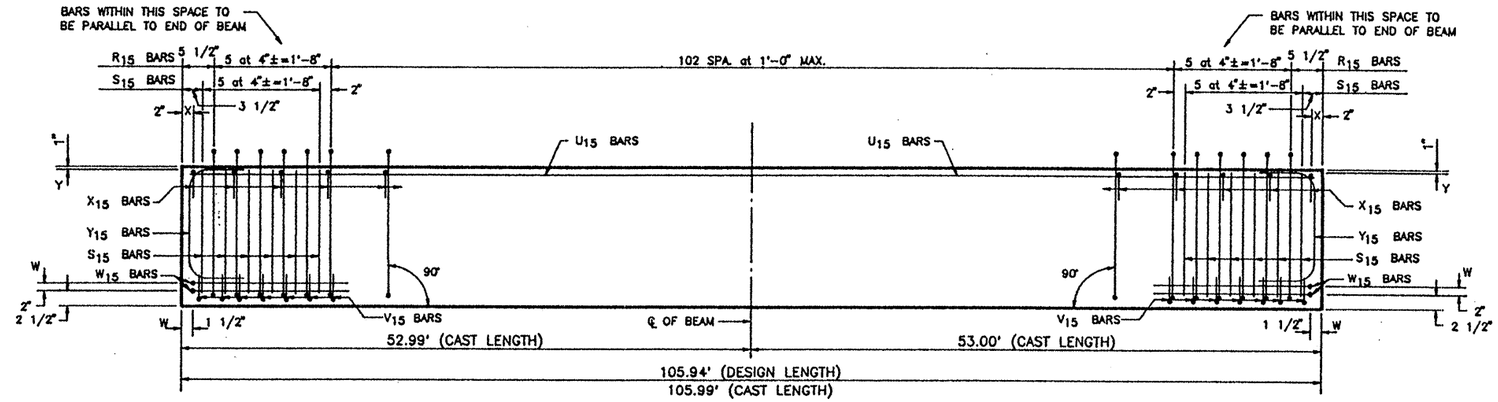

ELEVATION — REINFORCING STEEL

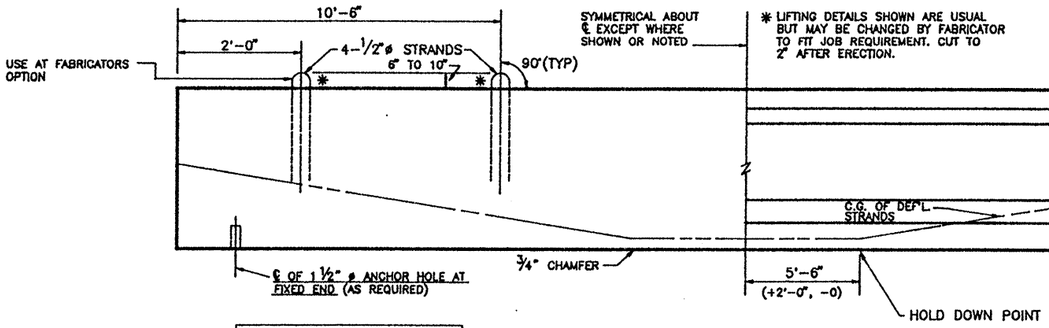

DOUBLE LIFTING LOOP DETAIL
(TYP. FOR BEAMS OVER 75')

BEAM ELEVATION
SEE PLAN VIEW FOR HOLE(S) LOCATION

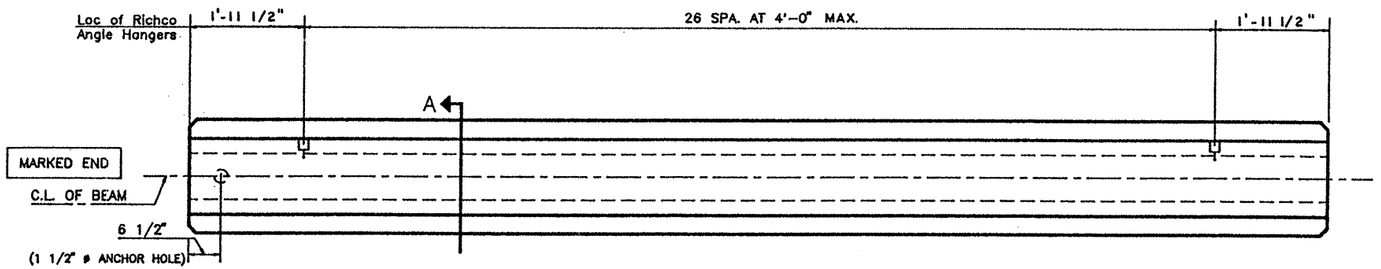

FIXED END

EXPANSION END

PLAN

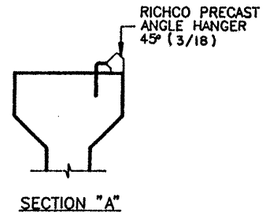

SECTION "A"

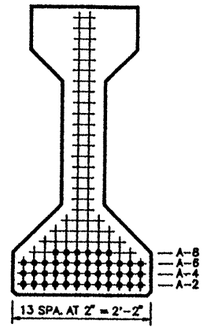

℄ SECTION

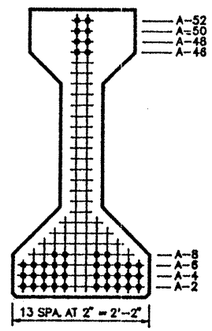

END VIEW

TYPE "IV" BEAM QUANTITY : 1

TOP FINISH PANELS
SEE STANDARD SHEET S-"IV" FOR TOP FINISH AND OTHER NOTES AND DETAILS.

REINFORCING STEEL SCHEDULE				
BAR	QUANTITY PER BEAM	TOTAL QUANTITY	SIZE	LENGTH
R_{15}	113	113	#3	standard
X_{15}	109	109	#3	standard
Y_{15}	4	4	#6	standard
S_{15}	24	24	#7	standard
V_{15}	14	14	#3	standard
W_{15}	4	4	#5	standard
U_{15}	2	2	#5	105'-9"

TEXAS DEPARTMENT OF TRANSPORTATION
APPROVED
DIVISION OF BRIDGES AND STRUCTURES
AUG 05 1992
APPROVAL OF THIS DRAWING DOES NOT RELIEVE THE CONTRACTOR OF THE RESPONSIBILITY FOR THE CORRECTNESS OF DETAIL.

LO-LAX STRAND PATTERN	
NUMBER OF STRANDS	: 42 ~1/2" ø 270 K @ 31.00 K EACH
NUMBER OF STRAIGHT STRANDS	: 34
NUMBER OF DEFLECTED STRANDS	: 8 @ A - 52
CONCRETE RELEASE STRENGTH	: 4756 PSI
CONCRETE DESIGN STRENGTH	: 5830 PSI
ECCENTRICITY @ ℄	: 20.18" ECCENTRICITY @ END : 11.80"

DESIGN NO. : GpNsLR
TOTAL BEAM LENGTH OF THIS SHEET : 105.94'

MANCO PRESTRESS COMPANY
CONTRACTOR Gilbert Texas Construction

FED.RD. DIV.NO.	STATE	PROJECT NO.	HWY. NO.
6	TEXAS	NH 92(50)M	U.S. 83/281

STATE DIST.NO.	COUNTY	CONTROL NO.	SECTION NO.	JOB NO.
21	HIDALGO	0039	17	097

COPYRIGHT 1989 BY
STRUCTURAL ENGINEERING ASSOCIATES, INC.
CONSULTING ENGINEERS, SAN ANTONIO, TEXAS

JOB NO.	DRAWN	CHECKED	DATE	SHEET/MARK NO.
92-018	C.A.J.	D.M.P.	6 - 16 - 92	IV-19
SEA JOB NO. 92-059H	FABRICATION SHEET			

327252

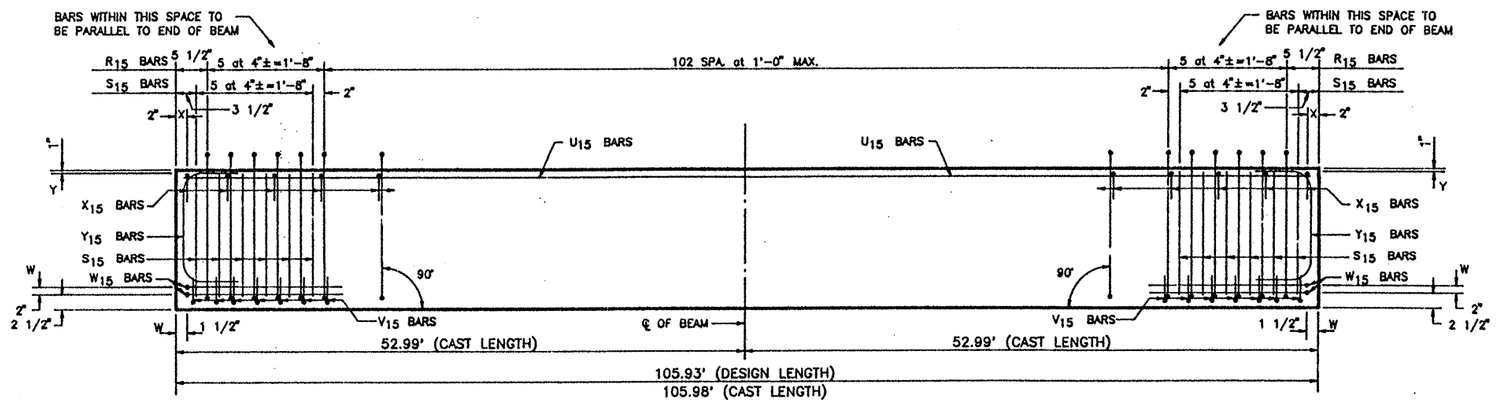

ELEVATION – REINFORCING STEEL

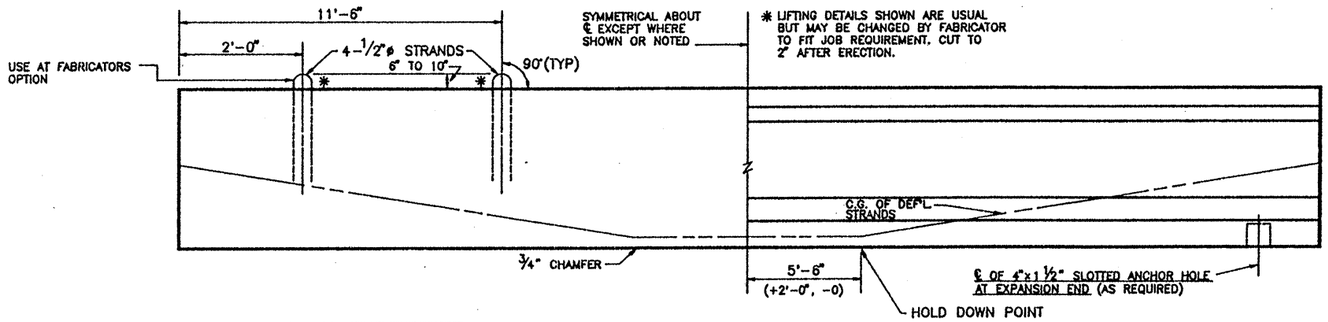

DOUBLE LIFTING LOOP DETAIL
(TYP. FOR BEAMS OVER 75')

BEAM ELEVATION
SEE PLAN VIEW FOR HOLE(S) LOCATION

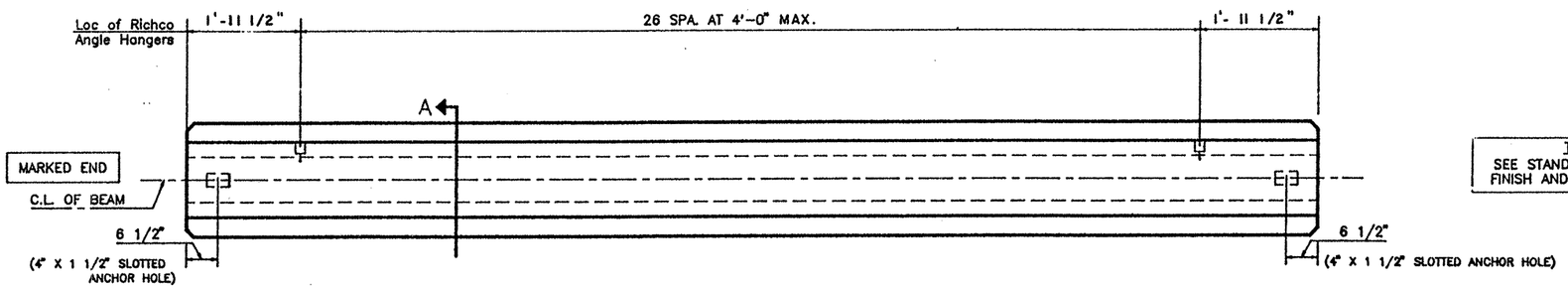

PLAN

TOP FINISH PANELS
SEE STANDARD SHEET S-"IV" FOR TOP FINISH AND OTHER NOTES AND DETAILS.

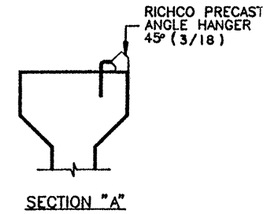

SECTION "A"

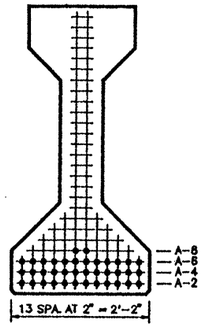

℄ SECTION

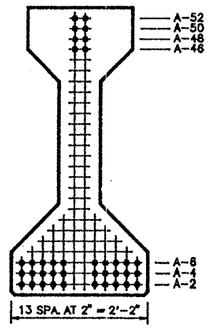

END VIEW

TEXAS DEPARTMENT OF TRANSPORTATION
APPROVED
DIVISION OF BRIDGES AND STRUCTURES
AUG 05 1992
APPROVAL OF THIS DRAWING DOES NOT RELIEVE THE CONTRACTOR OF THE RESPONSIBILITY FOR THE CORRECTNESS OF DETAIL.

REINFORCING STEEL SCHEDULE

BAR	QUANTITY PER BEAM	TOTAL QUANTITY	SIZE	LENGTH
R_{15}	113	113	#3	standard
X_{15}	109	109	#3	standard
Y_{15}	4	4	#6	standard
S_{15}	24	24	#7	standard
V_{15}	14	14	#3	standard
W_{15}	4	4	#5	standard
U_{15}	2	2	#5	105'-9"

TYPE "IV" BEAM QUANTITY : 1

LO-LAX STRAND PATTERN		
NUMBER OF STRANDS	: 38 ~1/2" ø 270 K @ 31.00 K EACH	
NUMBER OF STRAIGHT STRANDS	: 30	
NUMBER OF DEFLECTED STRANDS	: 8 @ A – 52	
CONCRETE RELEASE STRENGTH	: 4233	PSI
CONCRETE DESIGN STRENGTH	: 5599	PSI
ECCENTRICITY @ ℄	: 20.54"	ECCENTRICITY @ END : 11.28"

DESIGN NO. : GpNsLR
TOTAL BEAM LENGTH OF THIS SHEET : 105.93'

MANCO PRESTRESS COMPANY
CONTRACTOR Gilbert Texas Construction

FED.RD. DIV.NO.	STATE	PROJECT NO.	HWY. NO.
6	TEXAS	NH 92(50)M	U.S. 83/281

STATE DIST.NO.	COUNTY	CONTROL NO.	SECTION NO.	JOB NO.
21	HIDALGO	0039	17	097

COPYRIGHT 1989 BY STRUCTURAL ENGINEERING ASSOCIATES, INC. CONSULTING ENGINEERS, SAN ANTONIO, TEXAS

JOB NO.	DRAWN	CHECKED	DATE	SHEET/MARK NO.
92-018	C.A.J.	D. M. P.	6-16-92	IV-20
SEA JOB NO. 92-059H	FABRICATION SHEET			

327252

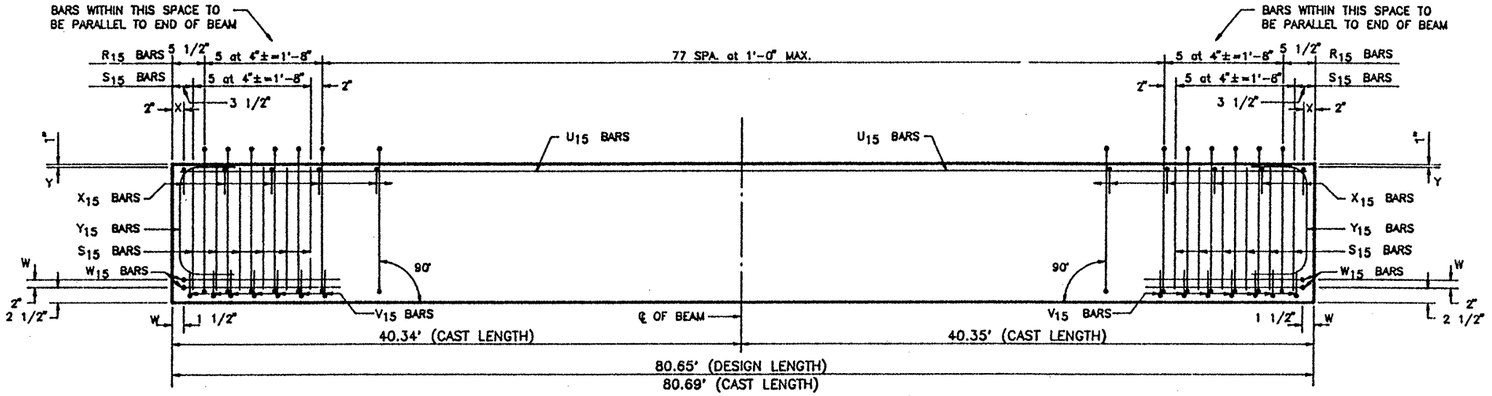

ELEVATION – REINFORCING STEEL

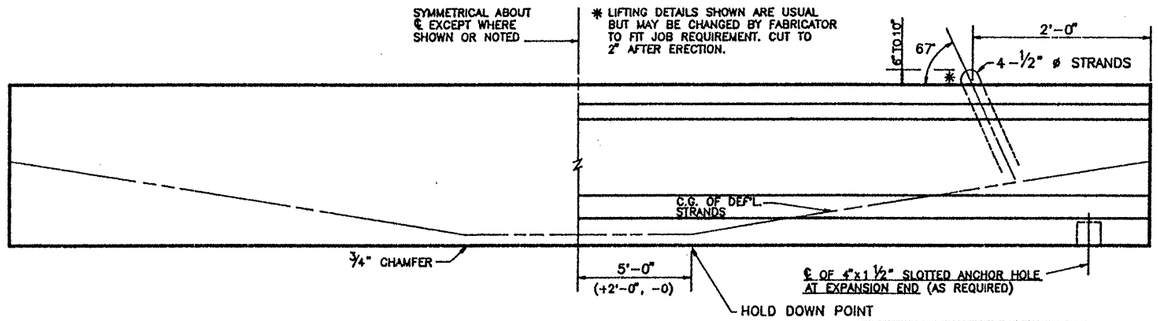

BEAM ELEVATION
SEE PLAN VIEW FOR HOLE(S) LOCATION

SINGLE LIFTING LOOP DETAIL

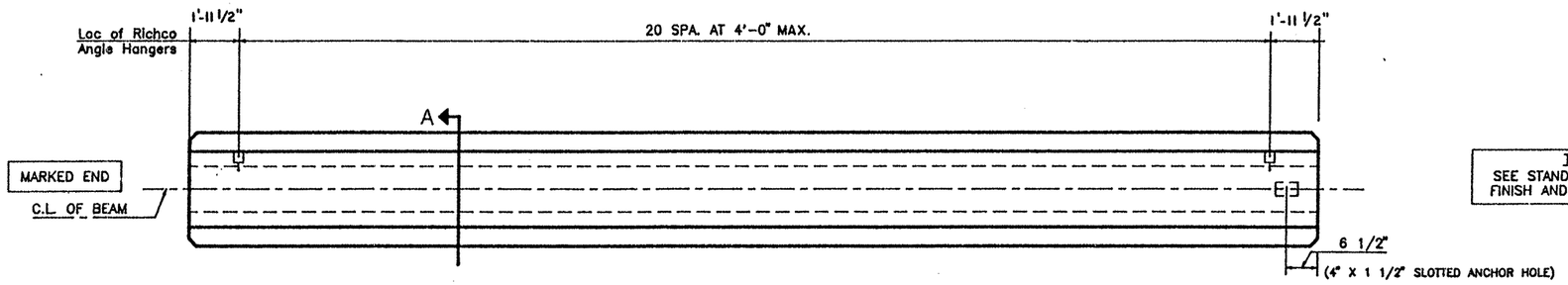

FIXED END

EXPANSION END

PLAN

TOP FINISH PANELS
SEE STANDARD SHEET S-"IV" FOR TOP FINISH AND OTHER NOTES AND DETAILS.

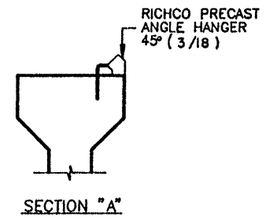

SECTION "A"

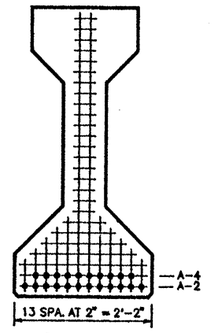

℄ SECTION

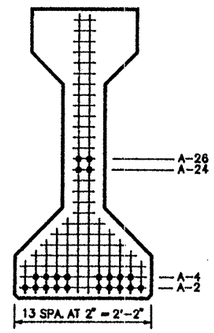

END VIEW

TYPE "IV" BEAM QUANTITY : 1

REINFORCING STEEL SCHEDULE				
BAR	QUANTITY PER BEAM	TOTAL QUANTITY	SIZE	LENGTH
R_{15}	88	88	#3	standard
X_{15}	84	84	#3	standard
Y_{15}	4	4	#6	standard
S_{15}	24	24	#7	standard
V_{15}	14	14	#3	standard
W_{15}	4	4	#5	standard
U_{15}	2	2	#5	80'-5"

TEXAS DEPARTMENT OF TRANSPORTATION
APPROVED
DIVISION OF BRIDGES AND STRUCTURES
AUG 05 1992
APPROVAL OF THIS DRAWING DOES NOT RELIEVE THE CONTRACTOR OF THE RESPONSIBILITY FOR THE CORRECTNESS OF DETAIL.

LO-LAX STRAND PATTERN		
NUMBER OF STRANDS	: 22 ~1/2" ø 270 K @ 31.00 K EACH	
NUMBER OF STRAIGHT STRANDS	: 18	
NUMBER OF DEFLECTED STRANDS	: 4 @ A – 26	
CONCRETE RELEASE STRENGTH	: 4000	PSI
CONCRETE DESIGN STRENGTH	: 5000	PSI
ECCENTRICITY @ ℄	: 21.84"	ECCENTRICITY @ END : 17.84"

DESIGN NO. : GpNsLR
TOTAL BEAM LENGTH OF THIS SHEET : 80.65'

MANCO PRESTRESS COMPANY				
CONTRACTOR Gilbert Texas Construction				
FED.RD. DIV.NO.	STATE	PROJECT NO.		HWY. NO.
6	TEXAS	NH 92(50)M		U.S. 83/281
STATE DIST.NO.	COUNTY	CONTROL NO.	SECTION NO.	JOB NO.
21	HIDALGO	0039	17	097

COPYRIGHT 1989 BY STRUCTURAL ENGINEERING ASSOCIATES, INC. CONSULTING ENGINEERS, SAN ANTONIO, TEXAS

JOB NO.	DRAWN	CHECKED	DATE	SHEET/MARK NO.
92-018	C.A.J.	D.M.P.	6-16-92	IV-21
SEA JOB NO. 92-059H	FABRICATION SHEET			

327252

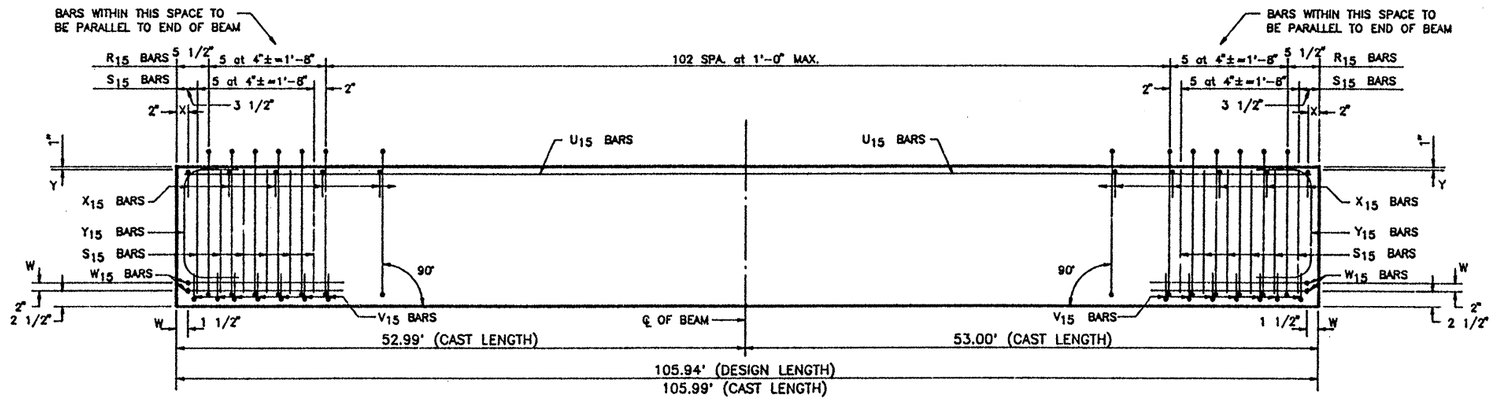

ELEVATION – REINFORCING STEEL

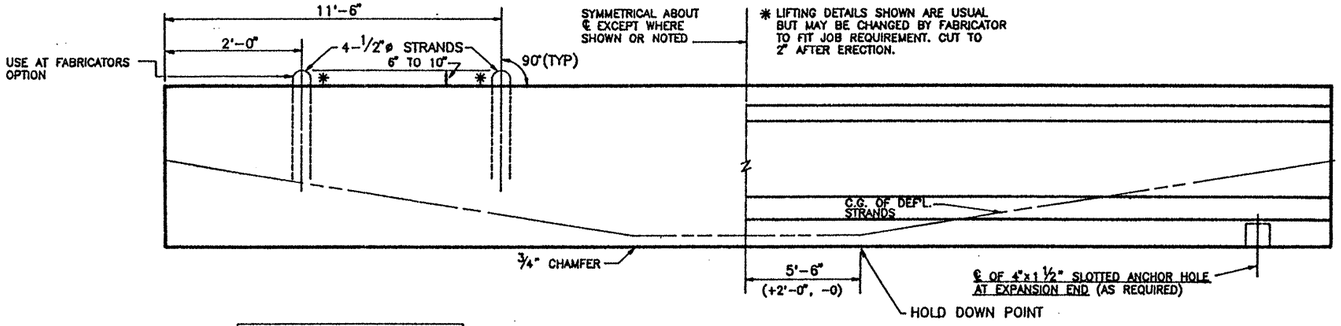

DOUBLE LIFTING LOOP DETAIL
(TYP. FOR BEAMS OVER 75')

BEAM ELEVATION
SEE PLAN VIEW FOR HOLE(S) LOCATION

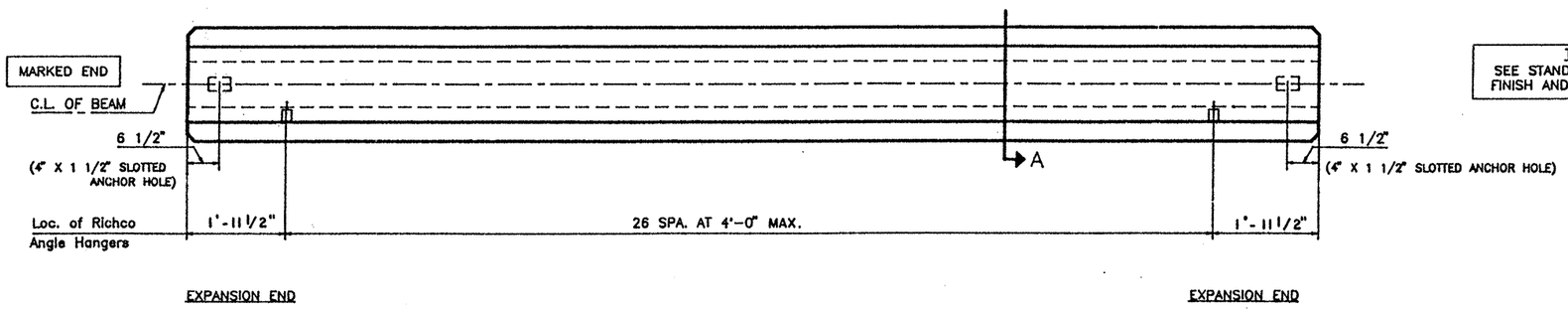

PLAN

TOP FINISH PANELS
SEE STANDARD SHEET S-"IV" FOR TOP FINISH AND OTHER NOTES AND DETAILS.

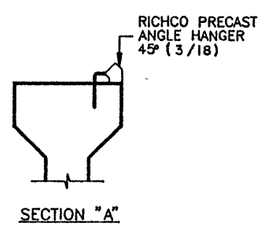

SECTION "A"

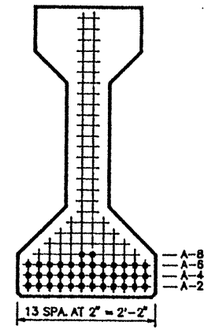

℄ SECTION

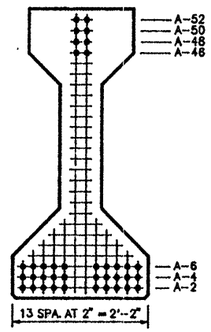

END VIEW

TYPE "IV" BEAM QUANTITY : 1

LO-LAX STRAND PATTERN		
NUMBER OF STRANDS	: 38 ~1/2" ø 270 K @ 31.00 K EACH	
NUMBER OF STRAIGHT STRANDS	: 30	
NUMBER OF DEFLECTED STRANDS	: 8 ❶ A – 52	
CONCRETE RELEASE STRENGTH	: 4233	PSI
CONCRETE DESIGN STRENGTH	: 5599	PSI
ECCENTRICITY ❶ ℄	: 20.54" ECCENTRICITY ❶ END	: 11.28"

DESIGN NO. : GpNsLR
TOTAL BEAM LENGTH OF THIS SHEET : 105.94'

REINFORCING STEEL SCHEDULE				
BAR	QUANTITY PER BEAM	TOTAL QUANTITY	SIZE	LENGTH
R_{15}	113	113	#3	standard
X_{15}	109	109	#3	standard
Y_{15}	4	4	#6	standard
S_{15}	24	24	#7	standard
V_{15}	14	14	#3	standard
W_{15}	4	4	#5	standard
U_{15}	2	2	#5	105'-9"

TEXAS DEPARTMENT OF TRANSPORTATION
APPROVED
DIVISION OF BRIDGES AND STRUCTURES
AUG 05 1992
APPROVAL OF THIS DRAWING DOES NOT RELIEVE THE CONTRACTOR OF THE RESPONSIBILITY FOR THE CORRECTNESS OF DETAIL.

MANCO PRESTRESS COMPANY

CONTRACTOR Gilbert Texas Construction

FED.RD. DIV.NO.	STATE	PROJECT NO.	HWY. NO.
6	TEXAS	NH 92(50)M	U.S. 83/281

STATE DIST.NO.	COUNTY	CONTROL NO.	SECTION NO.	JOB NO.
21	HIDALGO	0039	17	097

COPYRIGHT 1989 BY
STRUCTURAL ENGINEERING ASSOCIATES, INC.
CONSULTING ENGINEERS, SAN ANTONIO, TEXAS

JOB NO.	DRAWN	CHECKED	DATE	SHEET/MARK NO.
92-018	C.A.J.	D.M.R	6-16-92	IV-22
SEA JOB NO. 92-059H	FABRICATION SHEET			

327252

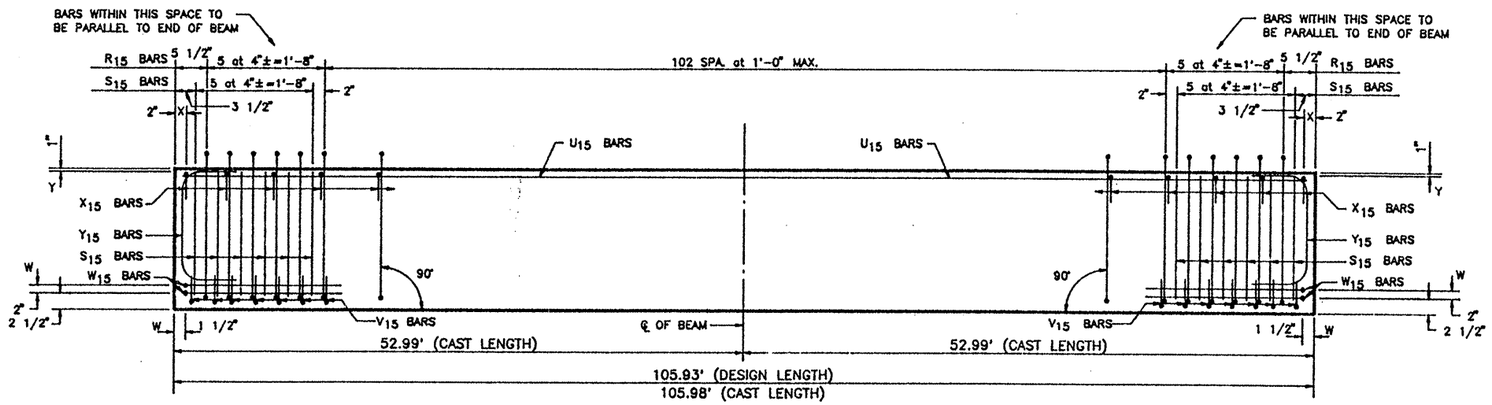

ELEVATION – REINFORCING STEEL

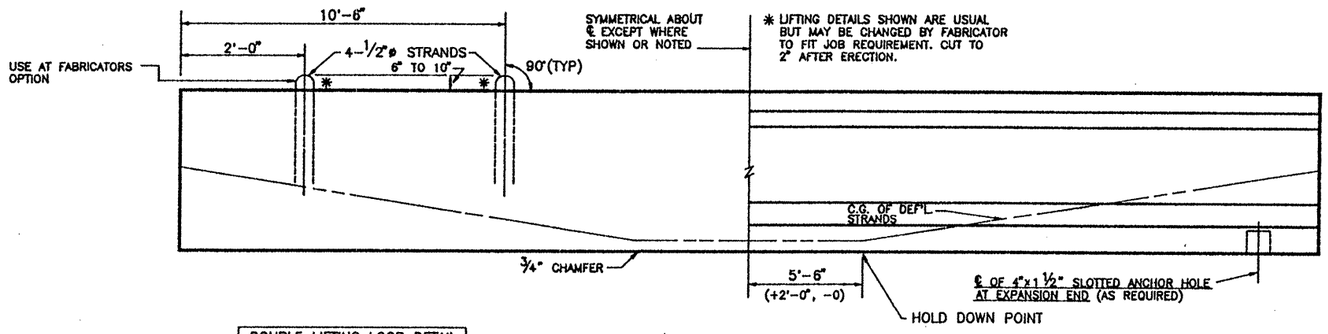

DOUBLE LIFTING LOOP DETAIL
(TYP. FOR BEAMS OVER 75')

BEAM ELEVATION
SEE PLAN VIEW FOR HOLE(S) LOCATION

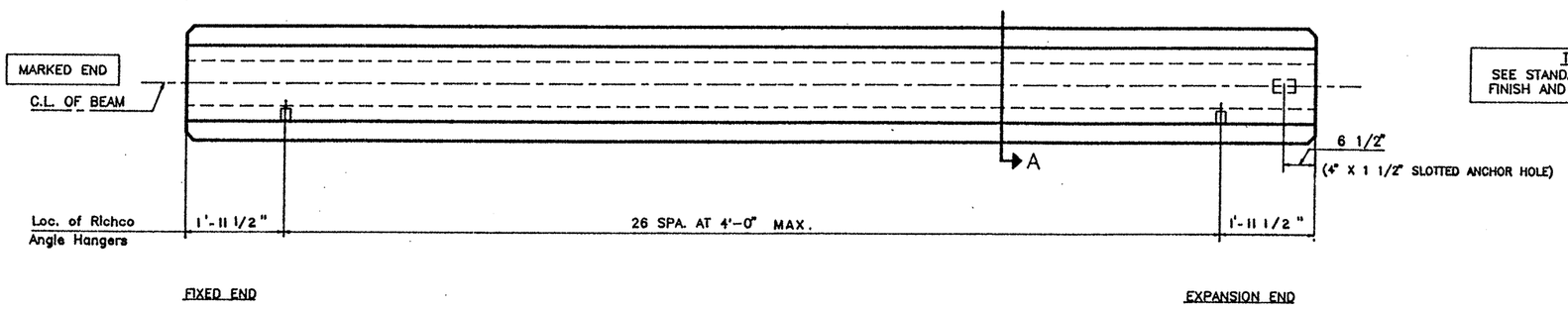

PLAN

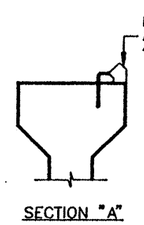

SECTION "A"

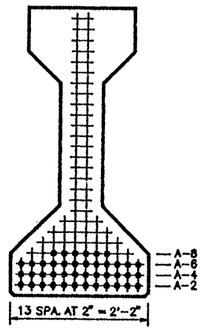

℄ SECTION

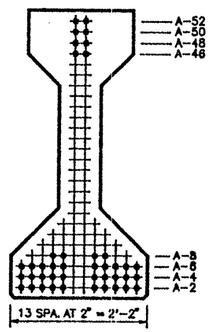

END VIEW

TOP FINISH PANELS
SEE STANDARD SHEET S-"IV" FOR TOP FINISH AND OTHER NOTES AND DETAILS.

TEXAS DEPARTMENT OF TRANSPORTATION
APPROVED
DIVISION OF BRIDGES AND STRUCTURES
AUG 05 1992
APPROVAL OF THIS DRAWING DOES NOT RELIEVE THE CONTRACTOR OF THE RESPONSIBILITY FOR THE CORRECTNESS OF DETAIL.

REINFORCING STEEL SCHEDULE

BAR	QUANTITY PER BEAM	TOTAL QUANTITY	SIZE	LENGTH
R_{15}	113	113	#3	standard
X_{15}	109	109	#3	standard
Y_{15}	4	4	#6	standard
S_{15}	24	24	#7	standard
V_{15}	14	14	#3	standard
W_{15}	4	4	#5	standard
U_{15}	2	2	#5	105'-9"

TYPE "IV" BEAM QUANTITY : 1

LO-LAX STRAND PATTERN		
NUMBER OF STRANDS : 42 ~1/2" ø 270 K @ 31.00 K EACH		
NUMBER OF STRAIGHT STRANDS	: 34	
NUMBER OF DEFLECTED STRANDS	: 8 @ A – 52	
CONCRETE RELEASE STRENGTH	: 4756	PSI
CONCRETE DESIGN STRENGTH	: 5830	PSI
ECCENTRICITY @ ℄ : 20.18"	ECCENTRICITY @ END : 11.80"	

DESIGN NO. : GpNsLR
TOTAL BEAM LENGTH OF THIS SHEET : 105.93'

MANCO PRESTRESS COMPANY
CONTRACTOR Gilbert Texas Construction

FED.RD. DIV.NO.	STATE	PROJECT NO.			HWY. NO.
6	TEXAS	NH 92(50)M			U.S. 83/281
STATE DIST.NO.	COUNTY		CONTROL NO.	SECTION NO.	JOB NO.
21	HIDALGO		0039	17	097

COPYRIGHT 1989 BY
STRUCTURAL ENGINEERING ASSOCIATES, INC.
CONSULTING ENGINEERS, SAN ANTONIO, TEXAS

JOB NO.	DRAWN	CHECKED	DATE	SHEET/MARK NO.
92-018	C.A.J.	D.M.P.	6 - 16 - 92	IV-23
SEA JOB NO. 92-059H	FABRICATION SHEET			

327252

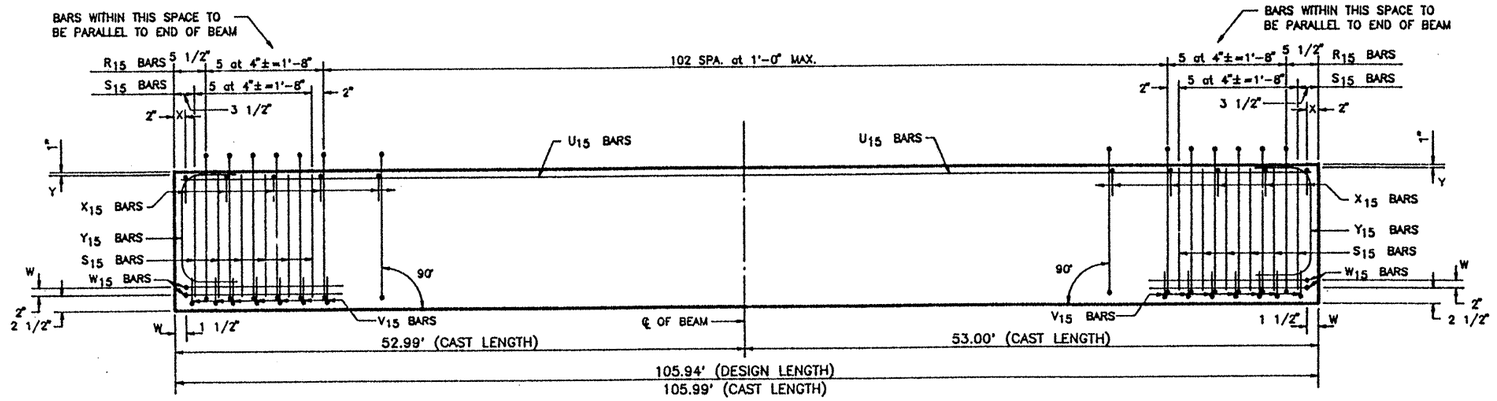

ELEVATION – REINFORCING STEEL

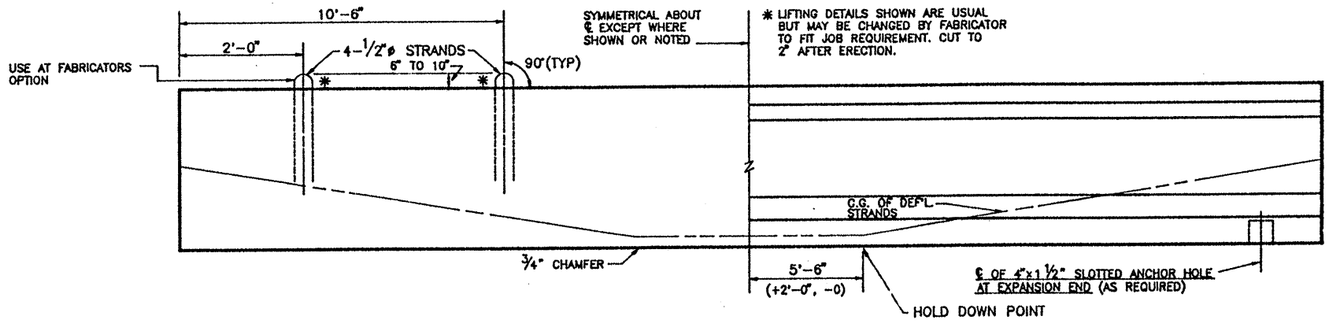

DOUBLE LIFTING LOOP DETAIL
(TYP. FOR BEAMS OVER 75')

BEAM ELEVATION
SEE PLAN VIEW FOR HOLE(S) LOCATION

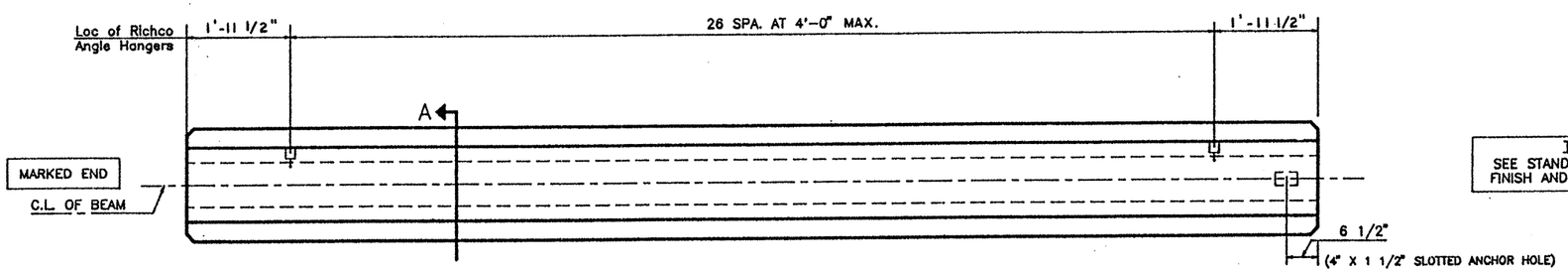

PLAN

TOP FINISH PANELS
SEE STANDARD SHEET S-"IV" FOR TOP FINISH AND OTHER NOTES AND DETAILS.

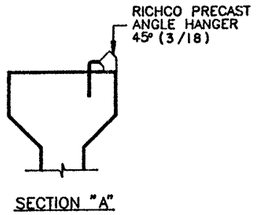

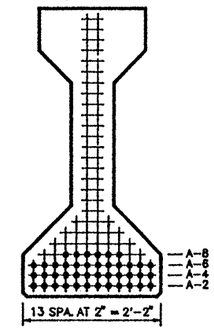

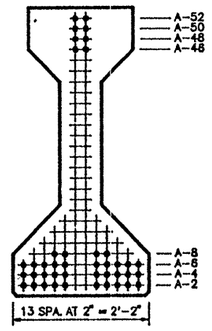

TYPE "IV" BEAM QUANTITY : 1

REINFORCING STEEL SCHEDULE				
BAR	QUANTITY PER BEAM	TOTAL QUANTITY	SIZE	LENGTH
R_{15}	113	113	#3	standard
X_{15}	109	109	#3	standard
Y_{15}	4	4	#6	standard
S_{15}	24	24	#7	standard
V_{15}	14	14	#3	standard
W_{15}	4	4	#5	standard
U_{15}	2	2	#5	105'-9"

LO-LAX STRAND PATTERN		
NUMBER OF STRANDS	: 42 ~1/2" ø 270 K @ 31.00 K EACH	
NUMBER OF STRAIGHT STRANDS	: 34	
NUMBER OF DEFLECTED STRANDS	: 8 @ A – 52	
CONCRETE RELEASE STRENGTH	: 4756	PSI
CONCRETE DESIGN STRENGTH	: 5830	PSI
ECCENTRICITY @ ℄	: 20.18"	ECCENTRICITY @ END : 11.80"

DESIGN NO. : GpNsLR
TOTAL BEAM LENGTH OF THIS SHEET : 105.94'

TEXAS DEPARTMENT OF TRANSPORTATION
APPROVED
DIVISION OF BRIDGES AND STRUCTURES
AUG 05 1992
APPROVAL OF THIS DRAWING DOES NOT RELIEVE THE CONTRACTOR OF THE RESPONSIBILITY FOR THE CORRECTNESS OF DETAIL.

MANCO PRESTRESS COMPANY

CONTRACTOR Gilbert Texas Construction

FED.RD. DIV.NO.	STATE	PROJECT NO.	HWY. NO.
6	TEXAS	NH 92(50)M	U.S. 83/281

STATE DIST.NO.	COUNTY	CONTROL NO.	SECTION NO.	JOB NO.
21	HIDALGO	0039	17	097

COPYRIGHT 1989 BY STRUCTURAL ENGINEERING ASSOCIATES, INC. *CONSULTING ENGINEERS*, SAN ANTONIO, TEXAS

JOB NO.	DRAWN	CHECKED	DATE	SHEET/MARK NO.
92-018	C.A.J.	D.M.P.	6-16-92	IV-24
SEA JOB NO. 92-059H	FABRICATION SHEET			

327252

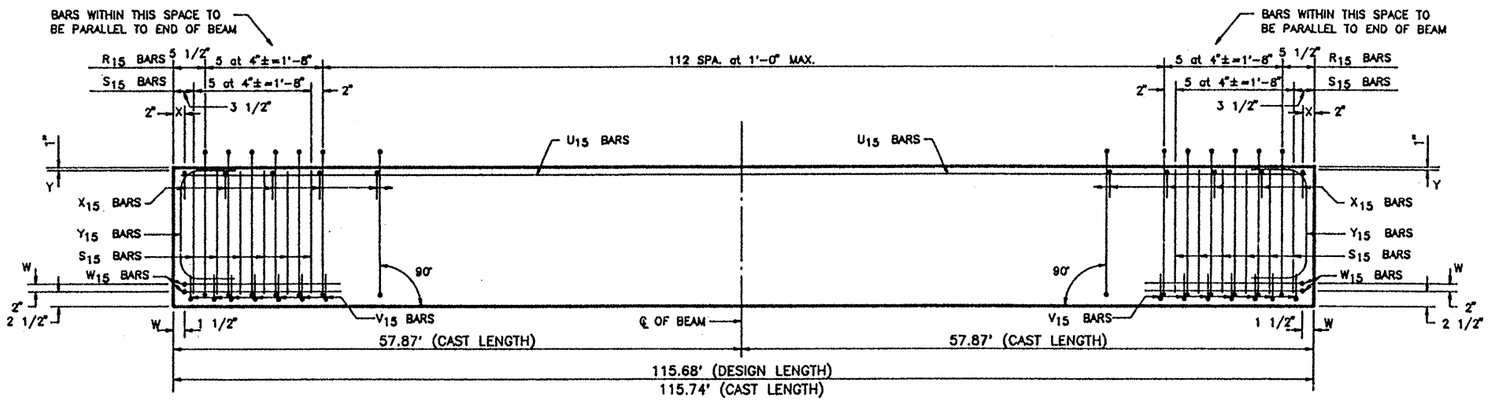

ELEVATION – REINFORCING STEEL

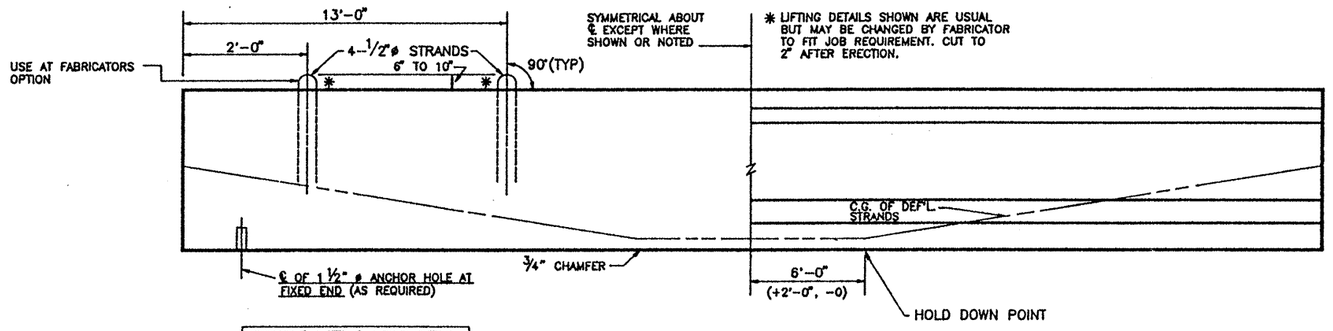

DOUBLE LIFTING LOOP DETAIL
(TYP. FOR BEAMS OVER 75')

BEAM ELEVATION
SEE PLAN VIEW FOR HOLE(S) LOCATION

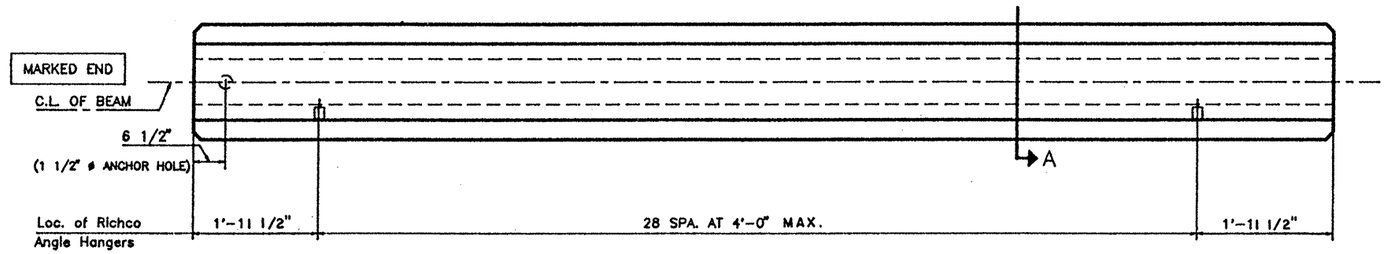

PLAN

TOP FINISH PANELS
SEE STANDARD SHEET S-"IV" FOR TOP FINISH AND OTHER NOTES AND DETAILS.

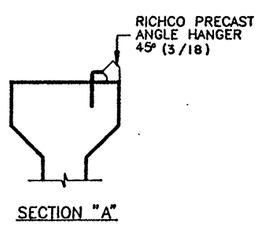

SECTION "A"

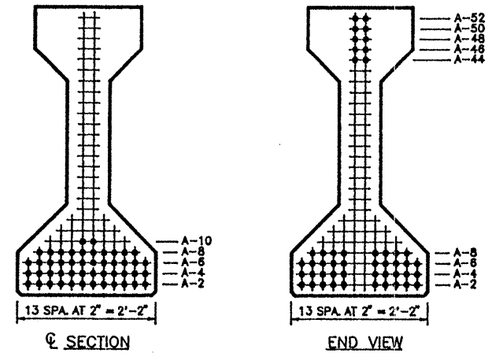

℄ SECTION

END VIEW

TYPE "IV" BEAM QUANTITY : 1

LO-LAX STRAND PATTERN		
NUMBER OF STRANDS	: 48 ~1/2" ø 270 K @ 31.00 K EACH	
NUMBER OF STRAIGHT STRANDS	: 38	
NUMBER OF DEFLECTED STRANDS	: 10 @ A – 52	
CONCRETE RELEASE STRENGTH	: 5250	PSI
CONCRETE DESIGN STRENGTH	: 7143	PSI
ECCENTRICITY @ ℄	: 19.67"	ECCENTRICITY @ END : 10.92"

DESIGN NO. : GpNsLR

TOTAL BEAM LENGTH OF THIS SHEET : 115.68'

REINFORCING STEEL SCHEDULE				
BAR	QUANTITY PER BEAM	TOTAL QUANTITY	SIZE	LENGTH
R_{15}	123	123	#3	standard
X_{15}	119	119	#3	standard
Y_{15}	4	4	#6	standard
S_{15}	24	24	#7	standard
V_{15}	14	14	#3	standard
W_{15}	4	4	#5	standard
U_{15}	2	2	#5	115'-6"

TEXAS DEPARTMENT OF TRANSPORTATION
APPROVED
DIVISION OF BRIDGES AND STRUCTURES

AUG 05 1992

APPROVAL OF THIS DRAWING DOES NOT RELIEVE THE CONTRACTOR OF THE RESPONSIBILITY FOR THE CORRECTNESS OF DETAIL.

MANCO PRESTRESS COMPANY

CONTRACTOR Gilbert Texas Construction

FED.RD. DIV.NO.	STATE	PROJECT NO.	HWY. NO.
6	TEXAS	NH 92(50)M	U.S. 83/281

STATE DIST.NO.	COUNTY	CONTROL NO.	SECTION NO.	JOB NO.
21	HIDALGO	0039	17	097

COPYRIGHT 1989 BY
STRUCTURAL ENGINEERING ASSOCIATES, INC.
CONSULTING ENGINEERS, SAN ANTONIO, TEXAS

JOB NO.	DRAWN	CHECKED	DATE	SHEET/MARK NO.
92-018	C.A.J.	D.M.P.	6-16-92	IV-25
SEA JOB NO. 92-059H	FABRICATION SHEET			

327252

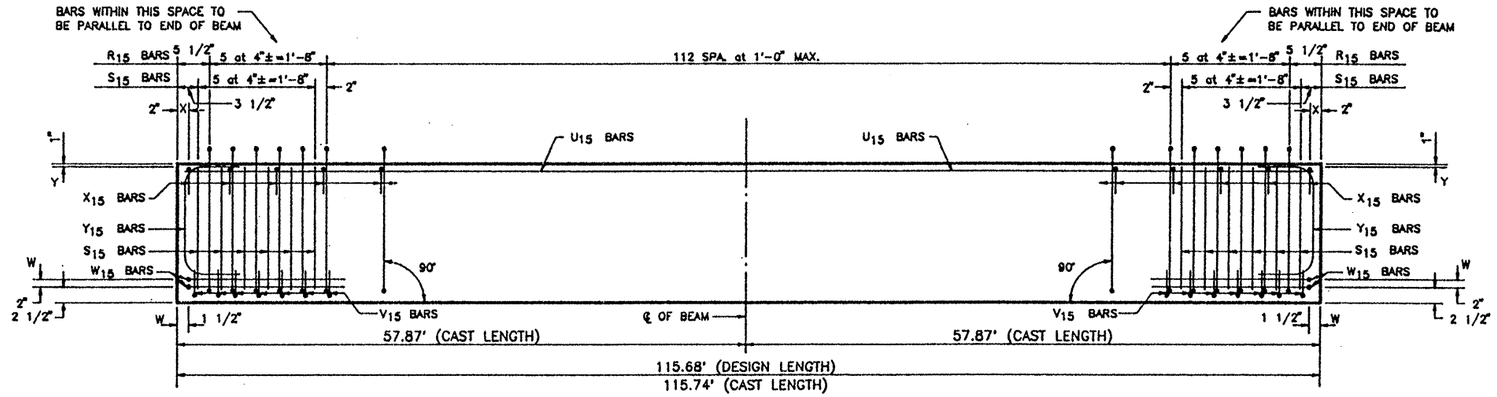

ELEVATION – REINFORCING STEEL

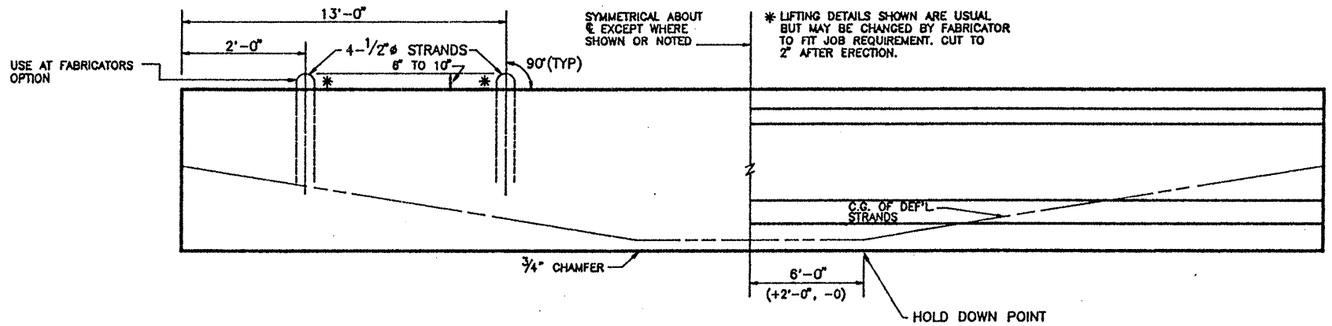

DOUBLE LIFTING LOOP DETAIL
(TYP. FOR BEAMS OVER 75')

BEAM ELEVATION
SEE PLAN VIEW FOR HOLE(S) LOCATION

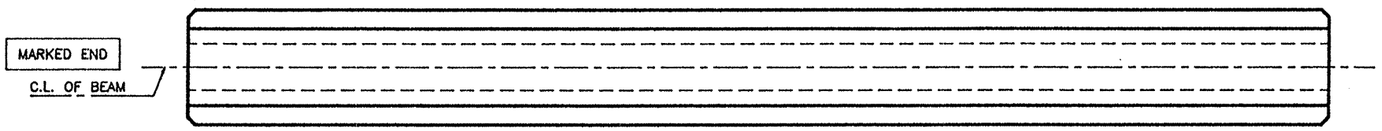

PLAN

TEXAS DEPARTMENT OF TRANSPORTATION
APPROVED
DIVISION OF BRIDGES AND STRUCTURES

AUG 05 1992

APPROVAL OF THIS DRAWING DOES NOT RELIEVE THE CONTRACTOR OF THE RESPONSIBILITY FOR THE CORRECTNESS OF DETAIL.

REINFORCING STEEL SCHEDULE

BAR	QUANTITY PER BEAM	TOTAL QUANTITY	SIZE	LENGTH
R_{15}	123	738	#3	standard
X_{15}	119	714	#3	standard
Y_{15}	4	24	#6	standard
S_{15}	24	144	#7	standard
V_{15}	14	84	#3	standard
W_{15}	4	24	#5	standard
U_{15}	2	12	#5	115'-6"

TOP FINISH PANELS
SEE STANDARD SHEET S-"IV" FOR TOP FINISH AND OTHER NOTES AND DETAILS.

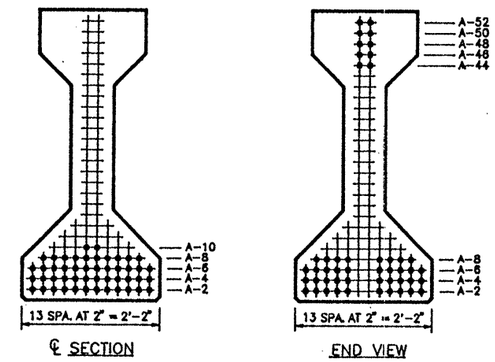

TYPE "IV" BEAM QUANTITY : 6

LO-LAX STRAND PATTERN		
NUMBER OF STRANDS	:	48 ~1/2" ø 270 K @ 31.00 K EACH
NUMBER OF STRAIGHT STRANDS	:	38
NUMBER OF DEFLECTED STRANDS	:	10 @ A - 52
CONCRETE RELEASE STRENGTH	:	5250 PSI
CONCRETE DESIGN STRENGTH	:	7143 PSI
ECCENTRICITY @ ℄	:	19.67" ECCENTRICITY @ END : 10.92"

DESIGN NO. : GpNsLR
TOTAL BEAM LENGTH OF THIS SHEET : 694.08'

MANCO PRESTRESS COMPANY

CONTRACTOR Gilbert Texas Construction

FED.RD. DIV.NO.	STATE	PROJECT NO.	HWY. NO.
6	TEXAS	NH 92(50)M	U.S. 83/281

STATE DIST.NO.	COUNTY	CONTROL NO.	SECTION NO.	JOB NO.
21	HIDALGO	0039	17	097

COPYRIGHT 1989 BY
STRUCTURAL ENGINEERING ASSOCIATES, INC.
CONSULTING ENGINEERS, SAN ANTONIO, TEXAS

JOB NO.	DRAWN	CHECKED	DATE	SHEET/MARK NO.
92-018	C.A.J.	D.M.P.	6-16-92	IV-26
SEA JOB NO. 92-059H	FABRICATION SHEET			

327252

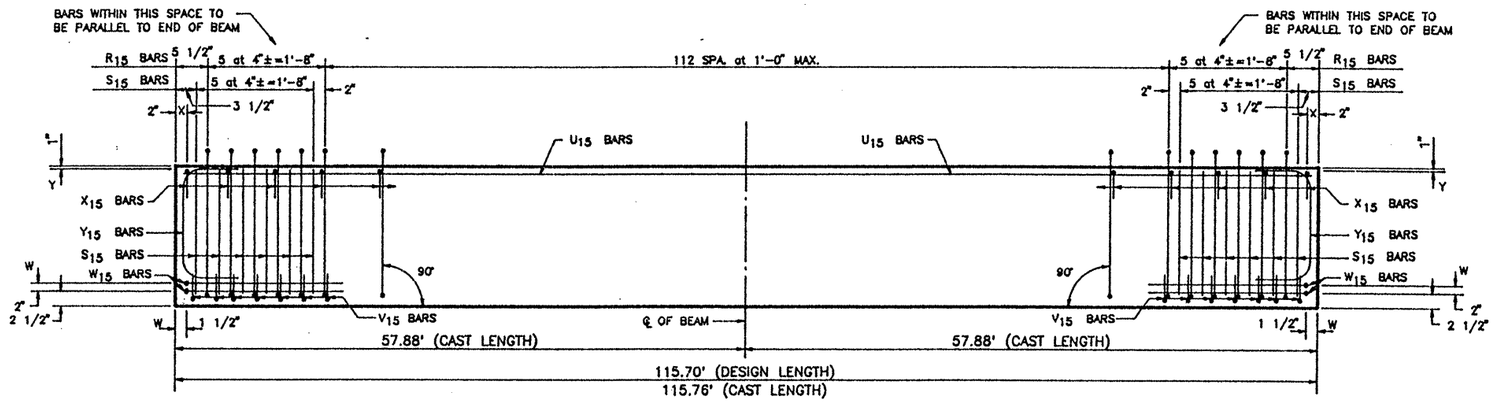

ELEVATION – REINFORCING STEEL

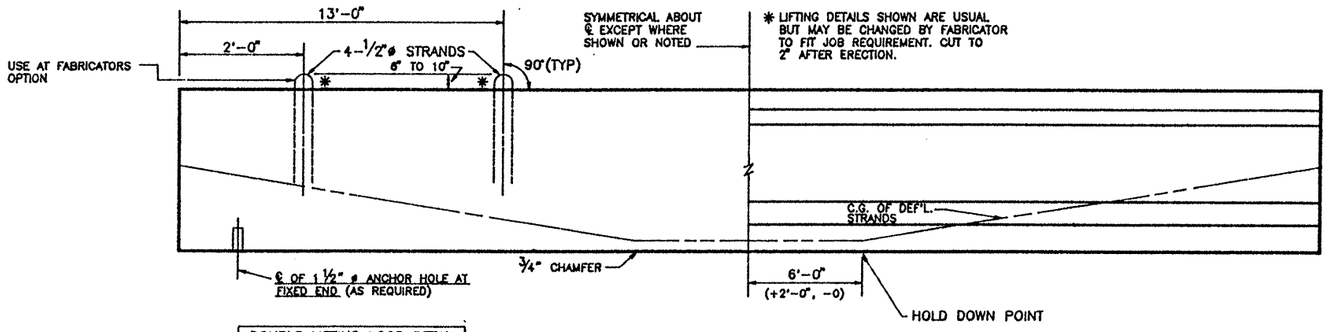

DOUBLE LIFTING LOOP DETAIL
(TYP. FOR BEAMS OVER 75')

BEAM ELEVATION
SEE PLAN VIEW FOR HOLE(S) LOCATION

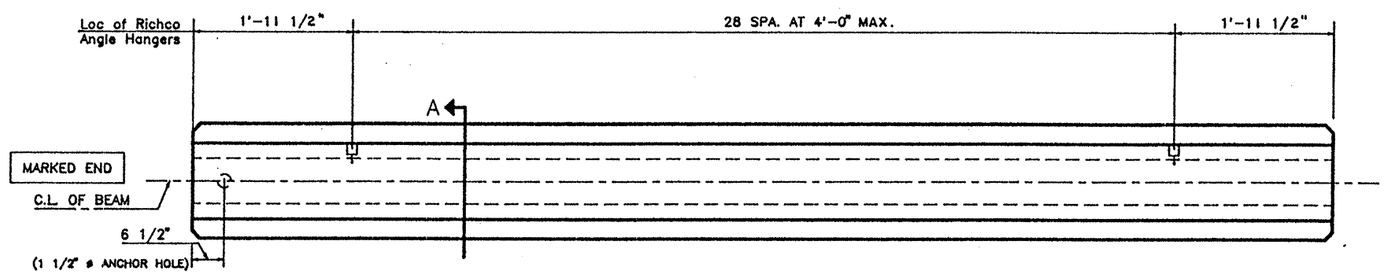

FIXED END

EXPANSION END

PLAN

TOP FINISH PANELS
SEE STANDARD SHEET S-"IV" FOR TOP FINISH AND OTHER NOTES AND DETAILS.

TEXAS DEPARTMENT OF TRANSPORTATION
APPROVED
DIVISION OF BRIDGES AND STRUCTURES

AUG 05 1992

APPROVAL OF THIS DRAWING DOES NOT RELIEVE THE CONTRACTOR OF THE RESPONSIBILITY FOR THE CORRECTNESS OF DETAIL.

REINFORCING STEEL SCHEDULE

BAR	QUANTITY PER BEAM	TOTAL QUANTITY	SIZE	LENGTH
R_{15}	123	123	#3	standard
X_{15}	119	119	#3	standard
Y_{15}	4	4	#6	standard
S_{15}	24	24	#7	standard
V_{15}	14	14	#3	standard
W_{15}	4	4	#5	standard
U_{15}	2	2	#5	115'-6"

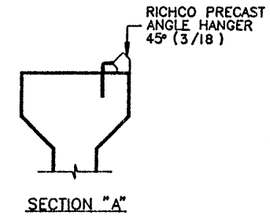

SECTION "A"

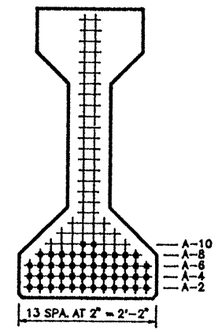

℄ SECTION

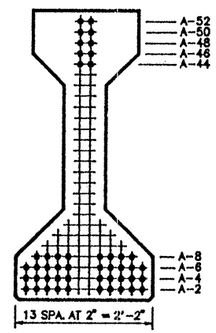

END VIEW

TYPE "IV" BEAM QUANTITY : 1

LO-LAX STRAND PATTERN		
NUMBER OF STRANDS	: 48 ~1/2" ø 270 K @ 31.00 K EACH	
NUMBER OF STRAIGHT STRANDS	: 38	
NUMBER OF DEFLECTED STRANDS	: 10 @ A – 52	
CONCRETE RELEASE STRENGTH	: 5250	PSI
CONCRETE DESIGN STRENGTH	: 7143	PSI
ECCENTRICITY @ ℄	: 19.67" ECCENTRICITY @ END	: 10.92"

DESIGN NO. : GpNsLR
TOTAL BEAM LENGTH OF THIS SHEET : 115.70'

MANCO PRESTRESS COMPANY
CONTRACTOR Gilbert Texas Construction

FED.RD. DIV.NO.	STATE	PROJECT NO.	HWY. NO.
6	TEXAS	NH 92(50)M	U.S. 83/281

STATE DIST.NO.	COUNTY	CONTROL NO.	SECTION NO.	JOB NO.
21	HIDALGO	0039	17	097

COPYRIGHT 1989 BY
STRUCTURAL ENGINEERING ASSOCIATES, INC.
CONSULTING ENGINEERS, SAN ANTONIO, TEXAS

JOB NO.	DRAWN	CHECKED	DATE	SHEET/MARK NO.
92-018	C.A.J.	D.M.P.	6-16-92	IV-27
SEA JOB NO. 92-059H	FABRICATION SHEET			

327252

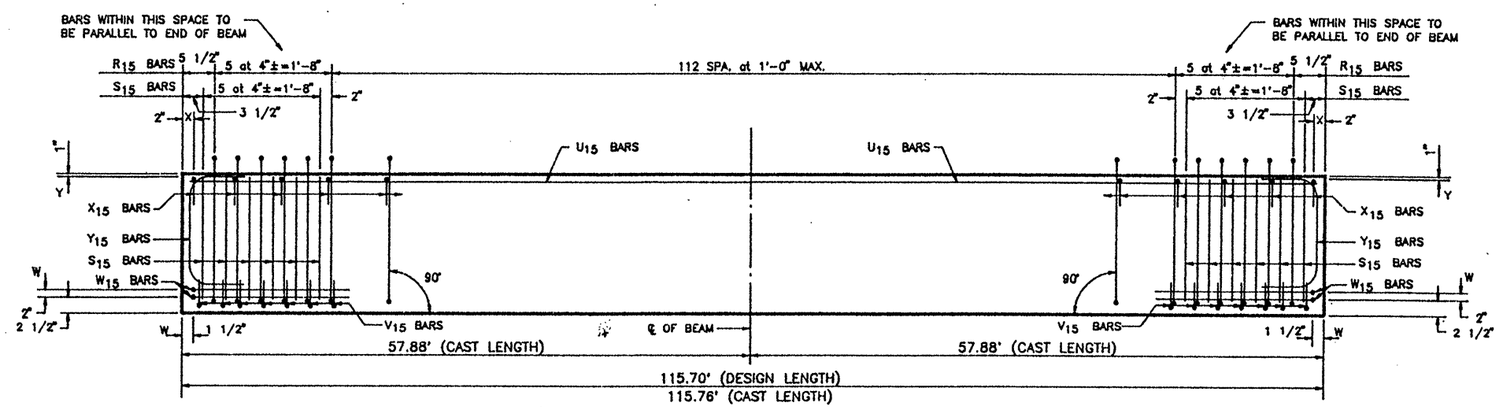

ELEVATION – REINFORCING STEEL

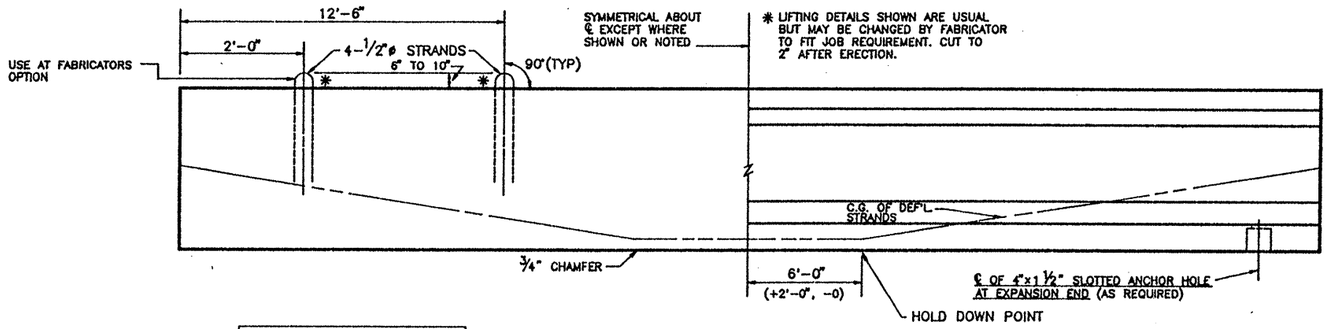

DOUBLE LIFTING LOOP DETAIL
(TYP. FOR BEAMS OVER 75')

BEAM ELEVATION
SEE PLAN VIEW FOR HOLE(S) LOCATION

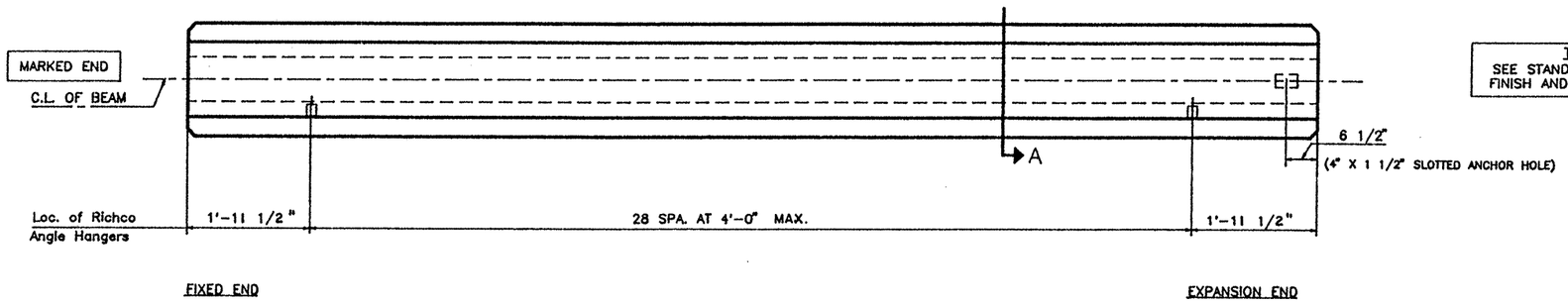

PLAN

TOP FINISH PANELS
SEE STANDARD SHEET S-"IV" FOR TOP FINISH AND OTHER NOTES AND DETAILS.

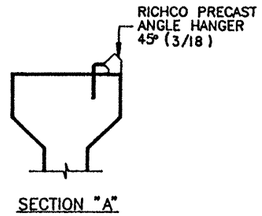

SECTION "A"

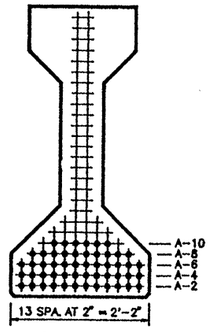

℄ SECTION

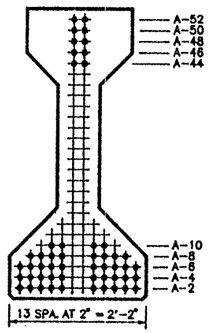

END VIEW

TYPE "IV" BEAM QUANTITY : 1

LO-LAX STRAND PATTERN		
NUMBER OF STRANDS : 52 ~1/2" ø 270 K @ 31.00 K EACH		
NUMBER OF STRAIGHT STRANDS	: 42	
NUMBER OF DEFLECTED STRANDS	: 10 @ A – 52	
CONCRETE RELEASE STRENGTH	: 5717	PSI
CONCRETE DESIGN STRENGTH	: 7148	PSI
ECCENTRICITY @ ℄ : 19.29"	ECCENTRICITY @ END : 11.21"	

DESIGN NO. : GpNsLR
TOTAL BEAM LENGTH OF THIS SHEET : 115.70'

REINFORCING STEEL SCHEDULE

BAR	QUANTITY PER BEAM	TOTAL QUANTITY	SIZE	LENGTH
R_{15}	123	123	#3	standard
X_{15}	119	119	#3	standard
Y_{15}	4	4	#6	standard
S_{15}	24	24	#7	standard
V_{15}	14	14	#3	standard
W_{15}	4	4	#5	standard
U_{15}	2	2	#5	115'-6"

TEXAS DEPARTMENT OF TRANSPORTATION
APPROVED
DIVISION OF BRIDGES AND STRUCTURES
AUG 05 1992
APPROVAL OF THIS DRAWING DOES NOT RELIEVE THE CONTRACTOR OF THE RESPONSIBILITY FOR THE CORRECTNESS OF DETAIL.

MANCO PRESTRESS COMPANY

CONTRACTOR Gilbert Texas Construction

FED.RD. DIV.NO.	STATE	PROJECT NO.	HWY. NO.
6	TEXAS	NH 92(50)M	U.S. 83/281

STATE DIST.NO.	COUNTY	CONTROL NO.	SECTION NO.	JOB NO.
21	HIDALGO	0039	17	097

COPYRIGHT 1989 BY
STRUCTURAL ENGINEERING ASSOCIATES, INC.
CONSULTING ENGINEERS, SAN ANTONIO, TEXAS

JOB NO.	DRAWN	CHECKED	DATE	SHEET/MARK NO.
92-018	C.A.J.	D.M.P.	6-16-92	IV-28
SEA JOB NO. 92-059H	FABRICATION SHEET			

327252

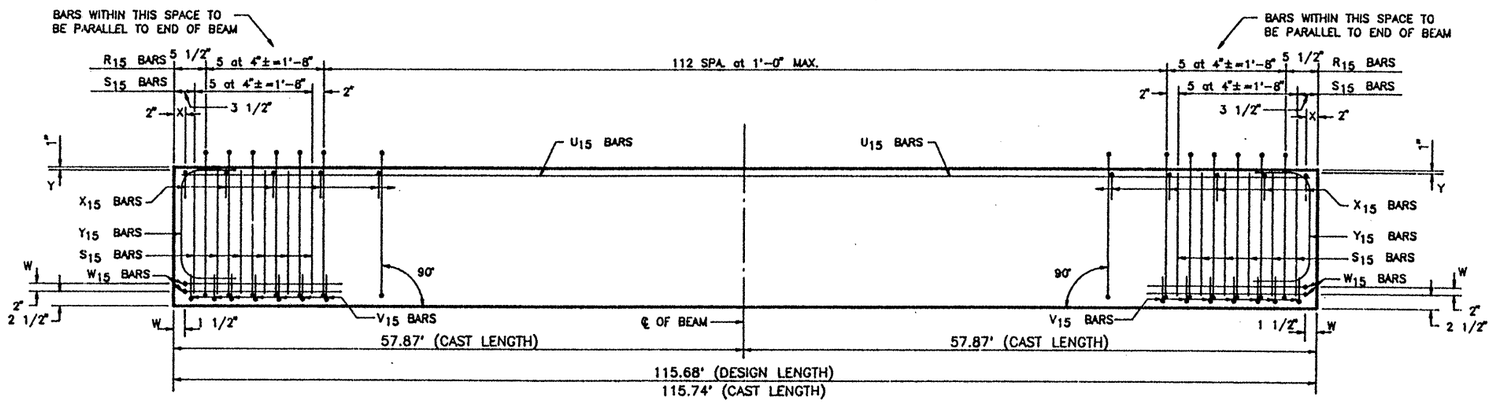

ELEVATION – REINFORCING STEEL

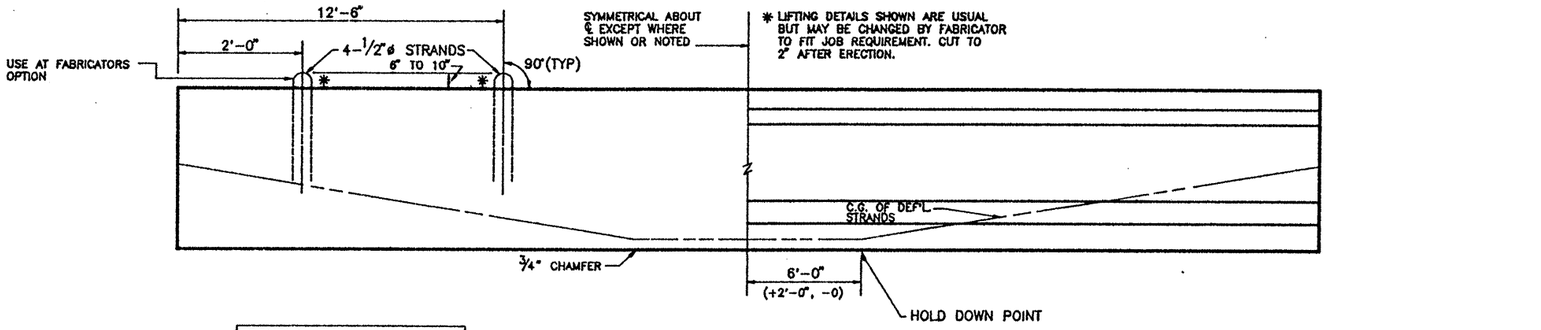

DOUBLE LIFTING LOOP DETAIL
(TYP. FOR BEAMS OVER 75')

BEAM ELEVATION
SEE PLAN VIEW FOR HOLE(S) LOCATION

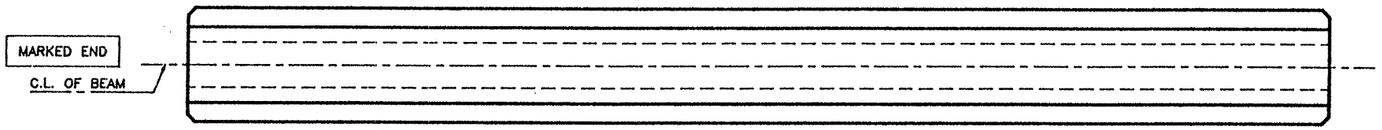

PLAN

TOP FINISH PANELS
SEE STANDARD SHEET S-"IV" FOR TOP FINISH AND OTHER NOTES AND DETAILS.

TEXAS DEPARTMENT OF TRANSPORTATION
APPROVED
DIVISION OF BRIDGES AND STRUCTURES

AUG 05 1992

APPROVAL OF THIS DRAWING DOES NOT RELIEVE THE CONTRACTOR OF THE RESPONSIBILITY FOR THE CORRECTNESS OF DETAIL.

REINFORCING STEEL SCHEDULE

BAR	QUANTITY PER BEAM	TOTAL QUANTITY	SIZE	LENGTH
R_{15}	123	738	#3	standard
X_{15}	119	714	#3	standard
Y_{15}	4	24	#6	standard
S_{15}	24	144	#7	standard
V_{15}	14	84	#3	standard
W_{15}	4	24	#5	standard
U_{15}	2	12	#5	115'-6"

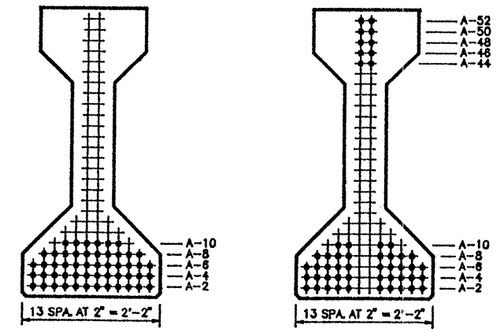

TYPE "IV" BEAM QUANTITY : 6

LO-LAX STRAND PATTERN		
NUMBER OF STRANDS : 52 ~1/2" ø 270 K @ 31.00 K EACH		
NUMBER OF STRAIGHT STRANDS	: 42	
NUMBER OF DEFLECTED STRANDS	: 10 @ A – 52	
CONCRETE RELEASE STRENGTH	: 5717	PSI
CONCRETE DESIGN STRENGTH	: 7148	PSI
ECCENTRICITY @ ℄ : 19.29"	ECCENTRICITY @ END : 11.21"	

DESIGN NO. : GpNsLR
TOTAL BEAM LENGTH OF THIS SHEET : 694.08'

MANCO PRESTRESS COMPANY

CONTRACTOR Gilbert Texas Construction

FED.RD. DIV.NO.	STATE	PROJECT NO.	HWY. NO.
6	TEXAS	NH 92(50)M	U.S. 83/281

STATE DIST.NO.	COUNTY	CONTROL NO.	SECTION NO.	JOB NO.
21	HIDALGO	0039	17	097

COPYRIGHT 1989 BY
STRUCTURAL ENGINEERING ASSOCIATES, INC.
CONSULTING ENGINEERS, SAN ANTONIO, TEXAS

JOB NO.	DRAWN	CHECKED	DATE	SHEET/MARK NO.
92-018	C.A.J.	D.M.P.	6-16-92	IV-29
SEA JOB NO. 92-059H	FABRICATION SHEET			

327252

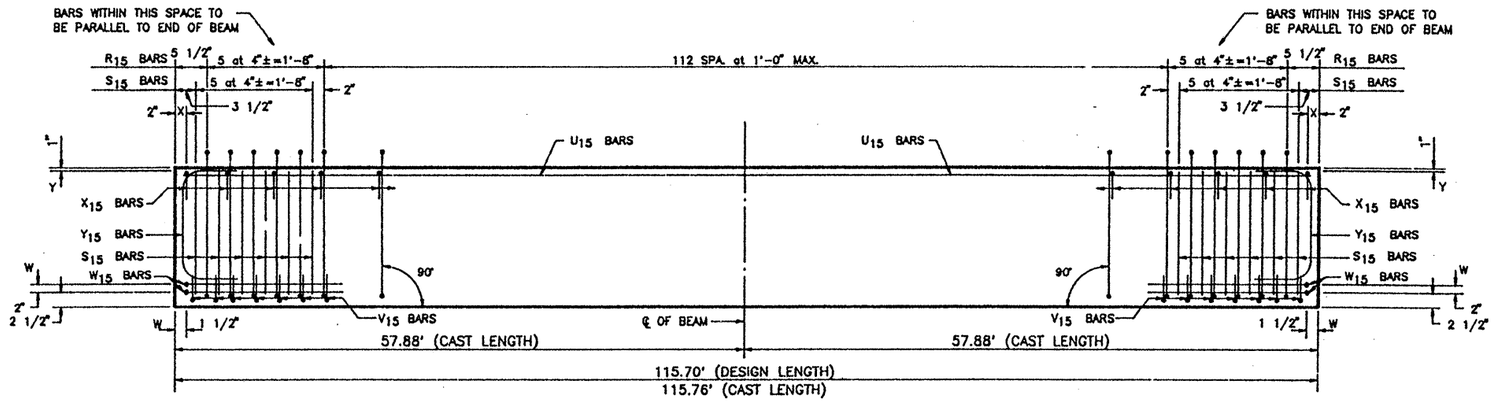

ELEVATION – REINFORCING STEEL

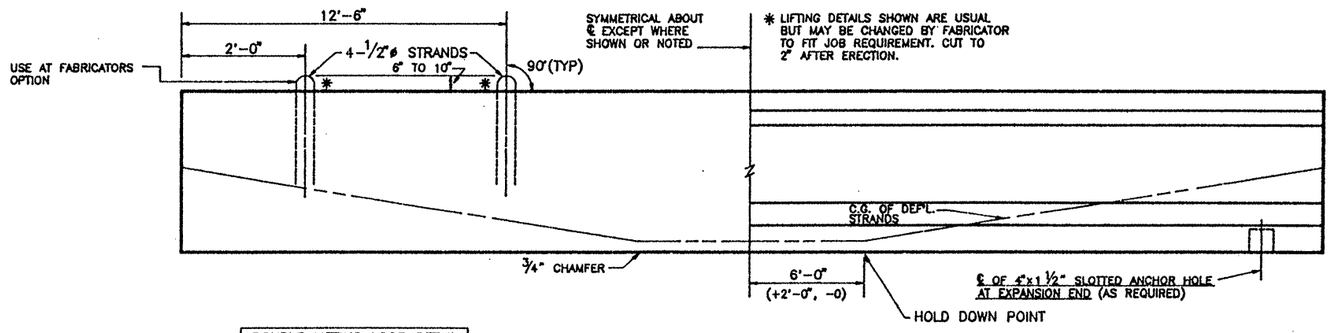

DOUBLE LIFTING LOOP DETAIL (TYP. FOR BEAMS OVER 75')

BEAM ELEVATION

SEE PLAN VIEW FOR HOLE(S) LOCATION

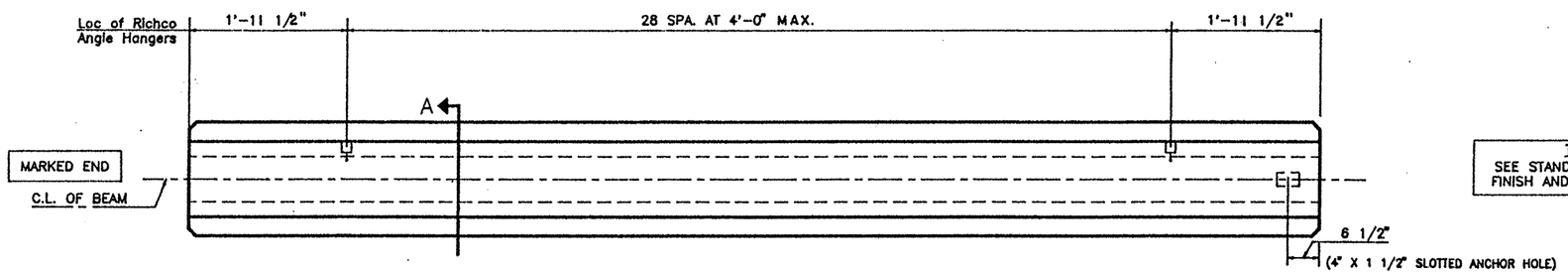

FIXED END

EXPANSION END

PLAN

TOP FINISH PANELS
SEE STANDARD SHEET S-"IV" FOR TOP FINISH AND OTHER NOTES AND DETAILS.

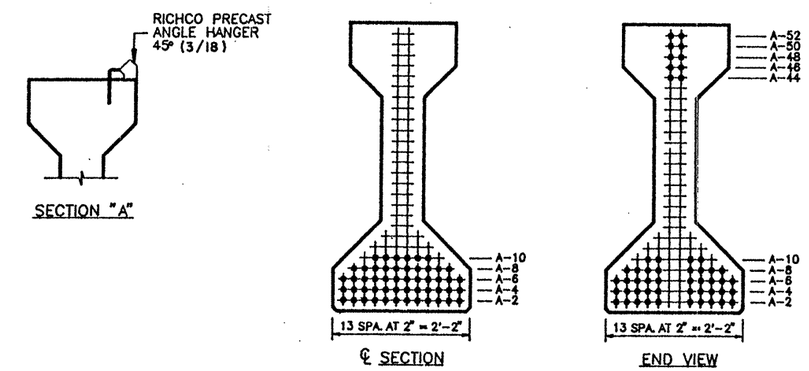

TYPE "IV" BEAM QUANTITY : 1

REINFORCING STEEL SCHEDULE				
BAR	QUANTITY PER BEAM	TOTAL QUANTITY	SIZE	LENGTH
R_{15}	123	123	#3	standard
X_{15}	119	119	#3	standard
Y_{15}	4	4	#6	standard
S_{15}	24	24	#7	standard
V_{15}	14	14	#3	standard
W_{15}	4	4	#5	standard
U_{15}	2	2	#5	115'-6"

TEXAS DEPARTMENT OF TRANSPORTATION
APPROVED
DIVISION OF BRIDGES AND STRUCTURES
AUG 05 1992
APPROVAL OF THIS DRAWING DOES NOT RELIEVE THE CONTRACTOR OF THE RESPONSIBILITY FOR THE CORRECTNESS OF DETAIL.

LO-LAX STRAND PATTERN		
NUMBER OF STRANDS	: 52 ~1/2" ø 270 K @ 31.00 K EACH	
NUMBER OF STRAIGHT STRANDS	: 42	
NUMBER OF DEFLECTED STRANDS	: 10 @ A – 52	
CONCRETE RELEASE STRENGTH	: 5717	PSI
CONCRETE DESIGN STRENGTH	: 7148	PSI
ECCENTRICITY @ ℄	: 19.29"	ECCENTRICITY @ END : 11.21"

DESIGN NO. : GpNsLR

TOTAL BEAM LENGTH OF THIS SHEET : 115.70'

MANCO PRESTRESS COMPANY

CONTRACTOR Gilbert Texas Construction

FED.RD. DIV.NO.	STATE	PROJECT NO.	HWY. NO.
6	TEXAS	NH 92(50)M	U.S. 83/281

STATE DIST.NO.	COUNTY	CONTROL NO.	SECTION NO.	JOB NO.
21	HIDALGO	0039	17	097

COPYRIGHT 1989 BY
STRUCTURAL ENGINEERING ASSOCIATES, INC.
CONSULTING ENGINEERS, SAN ANTONIO, TEXAS

JOB NO.	DRAWN	CHECKED	DATE	SHEET/MARK NO.
92-018	C.A.J.	D.M.P.	6-16-92	IV-30
SEA JOB NO. 92-059H	FABRICATION SHEET			

327252

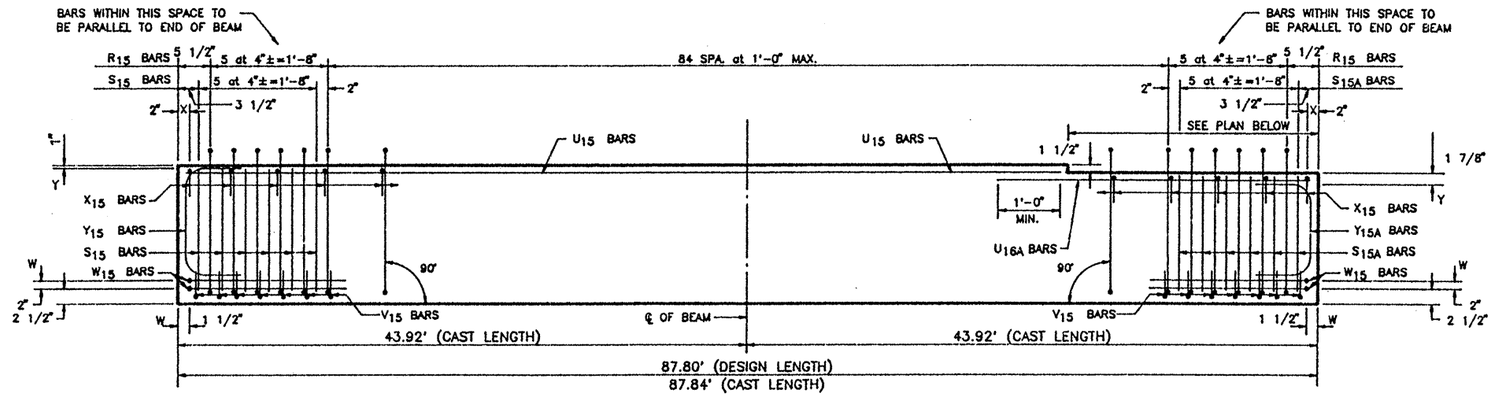

ELEVATION – REINFORCING STEEL

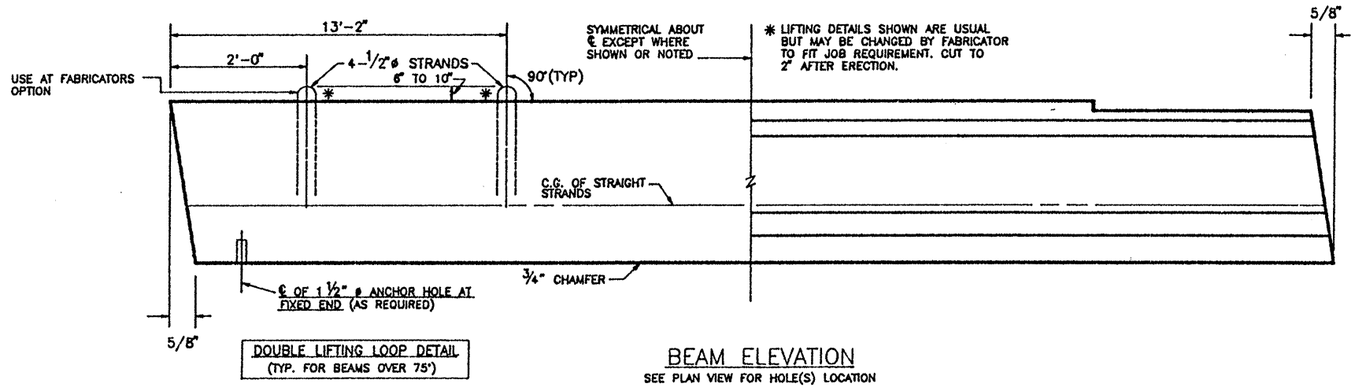

DOUBLE LIFTING LOOP DETAIL
(TYP. FOR BEAMS OVER 75')

BEAM ELEVATION
SEE PLAN VIEW FOR HOLE(S) LOCATION

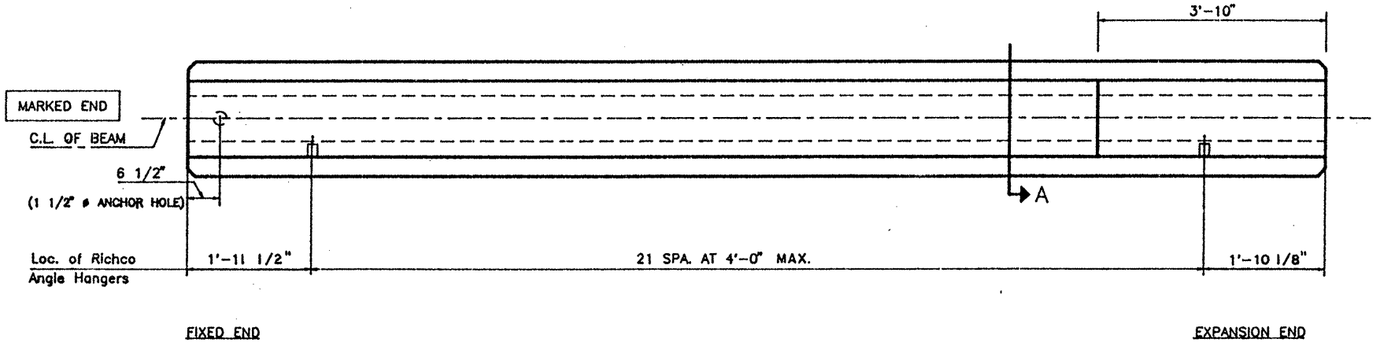

PLAN

TOP FINISH PANELS
SEE STANDARD SHEET S-"IV" FOR TOP FINISH AND OTHER NOTES AND DETAILS.

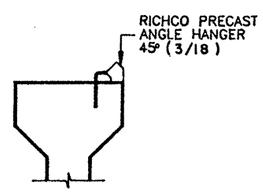

SECTION "A"

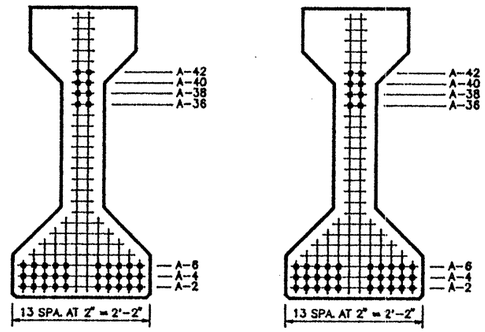

℄ SECTION

END VIEW

TYPE "IV" BEAM QUANTITY : 1

REINFORCING STEEL SCHEDULE				
BAR	QUANTITY PER BEAM	TOTAL QUANTITY	SIZE	LENGTH
R_{15}	95	95	#3	standard
X_{15}	91	91	#3	standard
Y_{15}	2	2	#6	standard
S_{15}	12	12	#7	standard
V_{15}	14	14	#3	standard
W_{15}	4	4	#5	standard
U_{15}	2	2	#5	83'-9"
Y_{15A}	2	2	#6	standard
S_{15A}	12	12	#7	standard
U_{16A}	2	2	#5	6'-6"

TEXAS DEPARTMENT OF TRANSPORTATION
APPROVED
DIVISION OF BRIDGES AND STRUCTURES
AUG 05 1992
APPROVAL OF THIS DRAWING DOES NOT RELIEVE THE CONTRACTOR OF THE RESPONSIBILITY FOR THE CORRECTNESS OF DETAIL.

LO-LAX STRAND PATTERN		
NUMBER OF STRANDS	: 38 ~1/2" ø 270 K @ 31.00 K EACH	
NUMBER OF STRAIGHT STRANDS	: 38	
NUMBER OF DEFLECTED STRANDS	: NONE	
CONCRETE RELEASE STRENGTH	: 4680	PSI
CONCRETE DESIGN STRENGTH	: 5300	PSI
ECCENTRICITY @ ℄ : 13.38"	ECCENTRICITY @ END : 13.38"	

DESIGN NO. : O.D.#4
TOTAL BEAM LENGTH OF THIS SHEET : 87.80'

MANCO PRESTRESS COMPANY
CONTRACTOR Gilbert Texas Construction

FED.RD. DIV.NO.	STATE	PROJECT NO.	HWY. NO.
6	TEXAS	NH 92(50)M	U.S. 83/281

STATE DIST.NO.	COUNTY	CONTROL NO.	SECTION NO.	JOB NO.
21	HIDALGO	0039	17	097

COPYRIGHT 1989 BY
STRUCTURAL ENGINEERING ASSOCIATES, INC.
CONSULTING ENGINEERS, SAN ANTONIO, TEXAS

JOB NO. 92-018	DRAWN C.A.J.	CHECKED D.M.P.	DATE 6-16-92	SHEET/MARK NO. IV-31
SEA JOB NO. 92-059H	FABRICATION SHEET			

327252

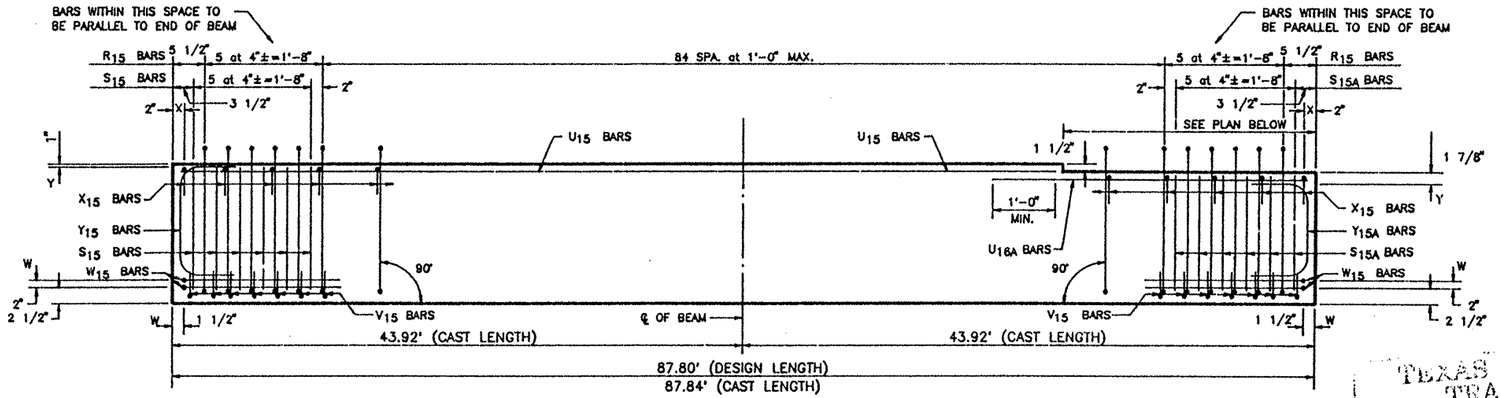

ELEVATION – REINFORCING STEEL

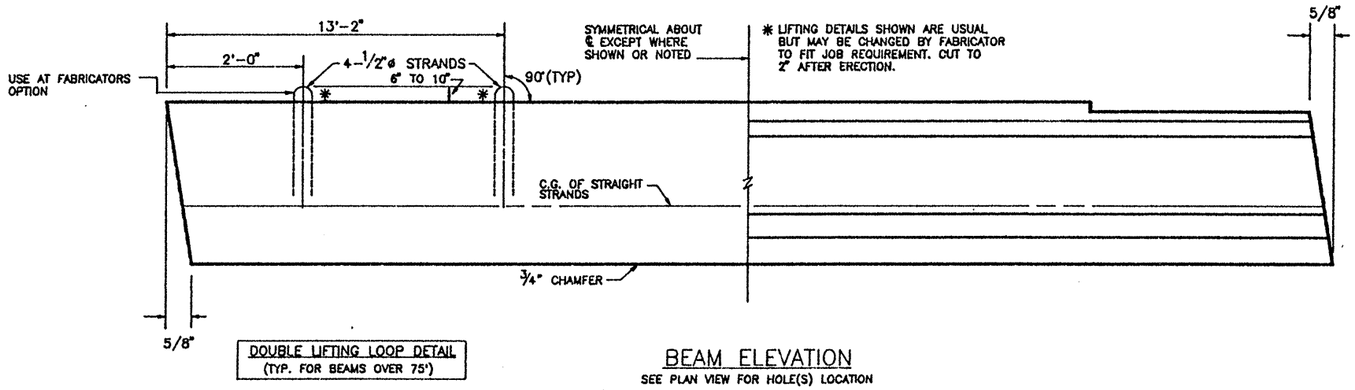

DOUBLE LIFTING LOOP DETAIL
(TYP. FOR BEAMS OVER 75')

BEAM ELEVATION
SEE PLAN VIEW FOR HOLE(S) LOCATION

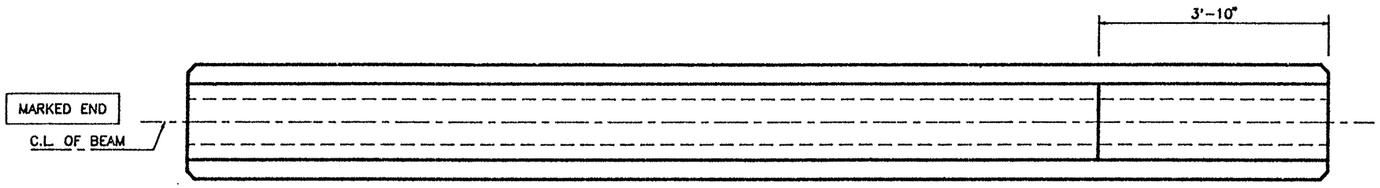

FIXED END

EXPANSION END

PLAN

TOP FINISH PANELS
SEE STANDARD SHEET S-"IV" FOR TOP FINISH AND OTHER NOTES AND DETAILS.

TEXAS DEPARTMENT OF TRANSPORTATION
APPROVED EXCEPT AS NOTED
DIVISION OF BRIDGES AND STRUCTURES
AUG 05 1992
APPROVAL OF THIS DRAWING DOES NOT RELIEVE THE CONTRACTOR OF THE RESPONSIBILITY FOR THE CORRECTNESS OF DETAIL.

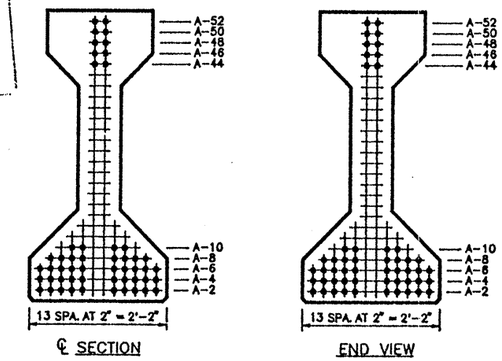

TYPE "IV" BEAM QUANTITY : 3

REINFORCING STEEL SCHEDULE				
BAR	QUANTITY PER BEAM	TOTAL QUANTITY	SIZE	LENGTH
R_{15}	95	285	#3	standard
X_{15}	91	273	#3	standard
Y_{15}	2	6	#6	standard
S_{15}	12	36	#7	standard
V_{15}	14	42	#3	standard
W_{15}	4	12	#5	standard
U_{15}	2	6	#5	83'-9"
Y_{15A}	2	6	#6	standard
S_{15A}	12	36	#7	standard
U_{16A}	2	6	#5	6'-6"

LO-LAX STRAND PATTERN		
NUMBER OF STRANDS : 52 ~1/2" ø 270 K @ 31.00 K EACH		
NUMBER OF STRAIGHT STRANDS	: 52	
NUMBER OF DEFLECTED STRANDS	: NONE	
CONCRETE RELEASE STRENGTH	: 5820	PSI
CONCRETE DESIGN STRENGTH	: 5900	PSI
ECCENTRICITY @ ℄ : 11.21"	ECCENTRICITY @ END : 11.21"	

5905

DESIGN NO. : O.D.#1
TOTAL BEAM LENGTH OF THIS SHEET : 263.40'

MANCO PRESTRESS COMPANY

CONTRACTOR Gilbert Texas Construction

FED.RD. DIV.NO.	STATE	PROJECT NO.	HWY. NO.
6	TEXAS	NH 92(50)M	U.S. 83/281

STATE DIST.NO.	COUNTY	CONTROL NO.	SECTION NO.	JOB NO.
21	HIDALGO	0039	17	097

COPYRIGHT 1989 BY
STRUCTURAL ENGINEERING ASSOCIATES, INC.
CONSULTING ENGINEERS, SAN ANTONIO, TEXAS

JOB NO.	DRAWN	CHECKED	DATE	SHEET/MARK NO.
92-018	C.A.J.	D.M.P.	6-16-92	IV-32
SEA JOB NO. 92-059H	FABRICATION SHEET			

327252

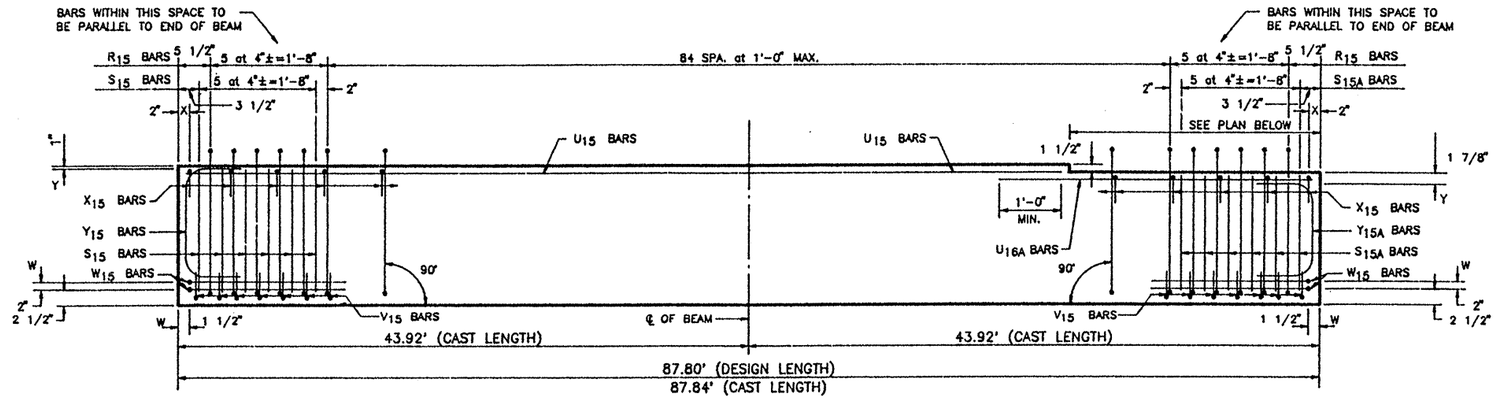

ELEVATION – REINFORCING STEEL

REINFORCING STEEL SCHEDULE				
BAR	QUANTITY PER BEAM	TOTAL QUANTITY	SIZE	LENGTH
R_{15}	95	95	#3	standard
X_{15}	91	91	#3	standard
Y_{15}	2	2	#6	standard
S_{15}	12	12	#7	standard
V_{15}	14	14	#3	standard
W_{15}	4	4	#5	standard
U_{15}	2	2	#5	83'-9"
Y_{15A}	2	2	#6	standard
S_{15A}	12	12	#7	standard
U_{16A}	2	2	#5	6'-6"

TEXAS DEPARTMENT OF TRANSPORTATION
APPROVED
DIVISION OF BRIDGES AND STRUCTURES
AUG 05 1992
APPROVAL OF THIS DRAWING DOES NOT RELIEVE THE CONTRACTOR OF THE RESPONSIBILITY FOR THE CORRECTNESS OF DETAIL.

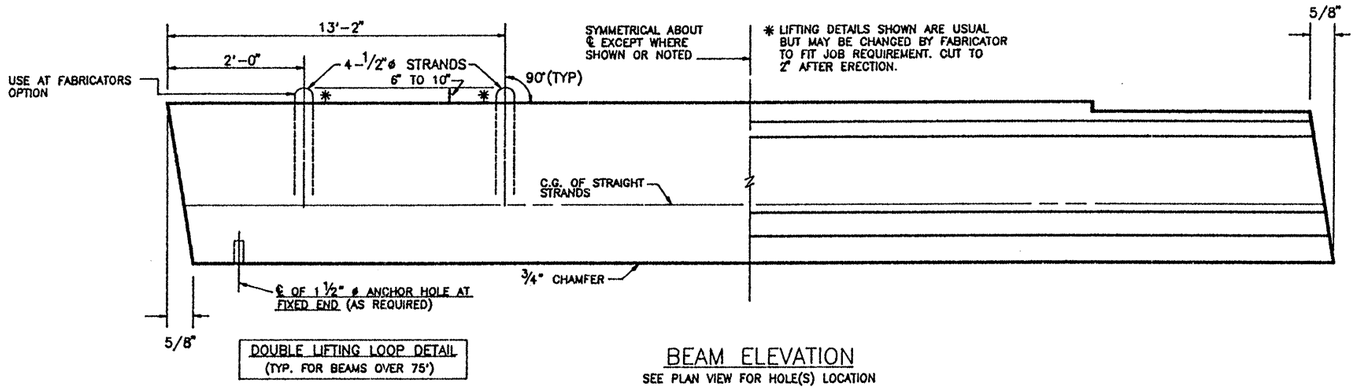

DOUBLE LIFTING LOOP DETAIL
(TYP. FOR BEAMS OVER 75')

BEAM ELEVATION
SEE PLAN VIEW FOR HOLE(S) LOCATION

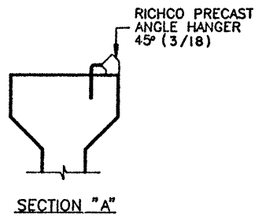

SECTION "A"

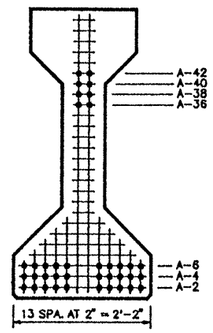

℄ SECTION

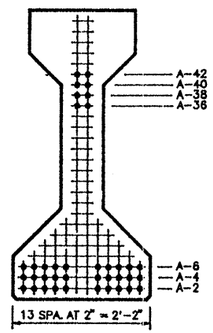

END VIEW

TYPE "IV" BEAM QUANTITY : 1

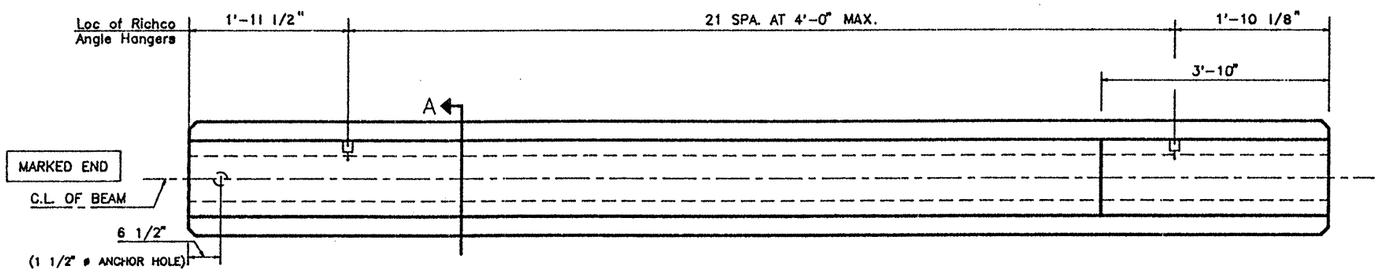

FIXED END

EXPANSION END

PLAN

TOP FINISH PANELS
SEE STANDARD SHEET S-"IV" FOR TOP FINISH AND OTHER NOTES AND DETAILS.

LO-LAX STRAND PATTERN		
NUMBER OF STRANDS : 38 ~1/2" ø 270 K @ 31.00 K EACH		
NUMBER OF STRAIGHT STRANDS	: 38	
NUMBER OF DEFLECTED STRANDS	: NONE	
CONCRETE RELEASE STRENGTH	: 4680	PSI
CONCRETE DESIGN STRENGTH	: 5300	PSI
ECCENTRICITY @ ℄ : 13.38"	ECCENTRICITY @ END : 13.38"	

DESIGN NO. : O.D.#4
TOTAL BEAM LENGTH OF THIS SHEET : 87.80'

MANCO PRESTRESS COMPANY
CONTRACTOR Gilbert Texas Construction

FED.RD. DIV.NO.	STATE	PROJECT NO.	HWY. NO.
6	TEXAS	NH 92(50)M	U.S. 83/281

STATE DIST.NO.	COUNTY	CONTROL NO.	SECTION NO.	JOB NO.
21	HIDALGO	0039	17	097

COPYRIGHT 1989 BY
STRUCTURAL ENGINEERING ASSOCIATES, INC.
CONSULTING ENGINEERS, SAN ANTONIO, TEXAS

JOB NO.	DRAWN	CHECKED	DATE	SHEET/MARK NO.
92-018	C.A.J.	D.M.P.	6-16-92	IV-33
SEA JOB NO. 92-059H	FABRICATION SHEET			

327252

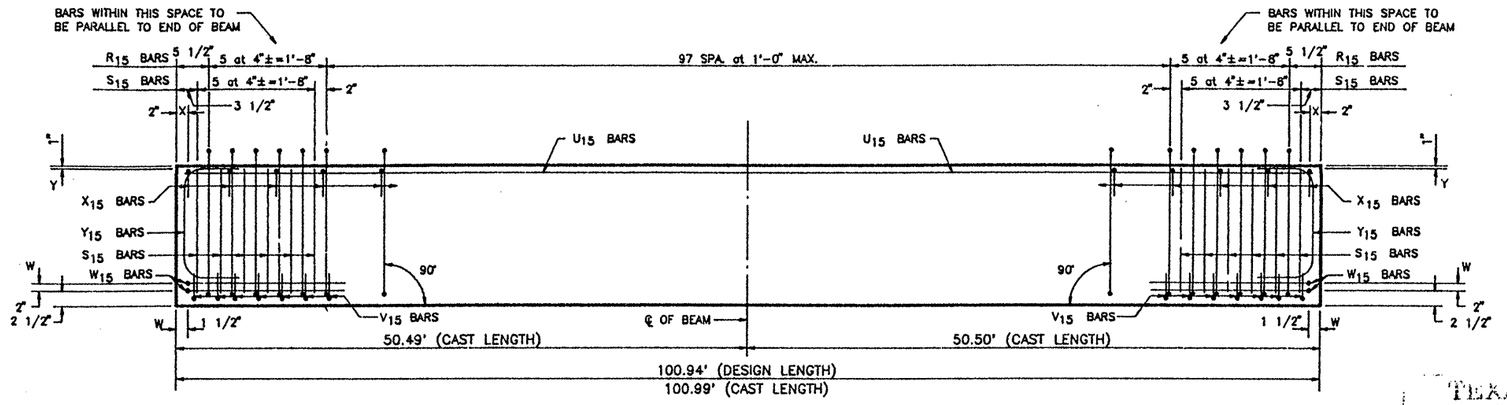

ELEVATION – REINFORCING STEEL

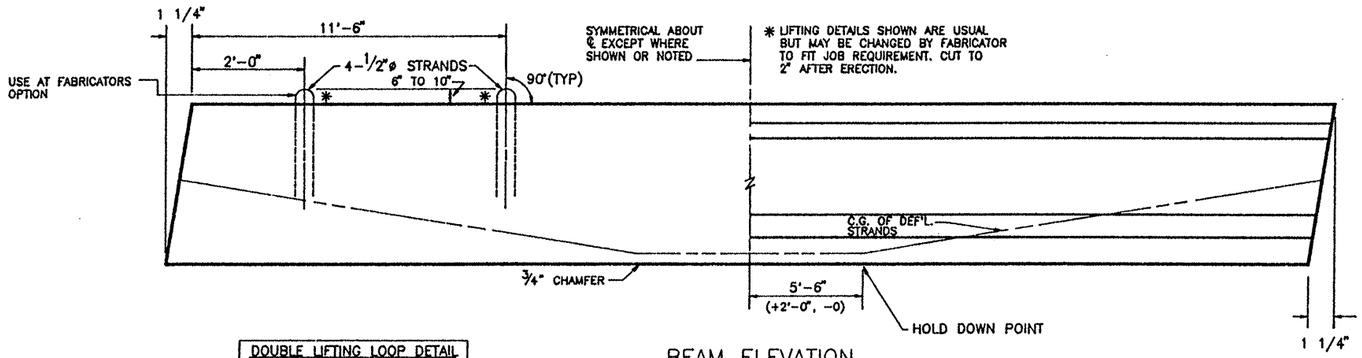

DOUBLE LIFTING LOOP DETAIL
(TYP. FOR BEAMS OVER 75')

BEAM ELEVATION
SEE PLAN VIEW FOR HOLE(S) LOCATION

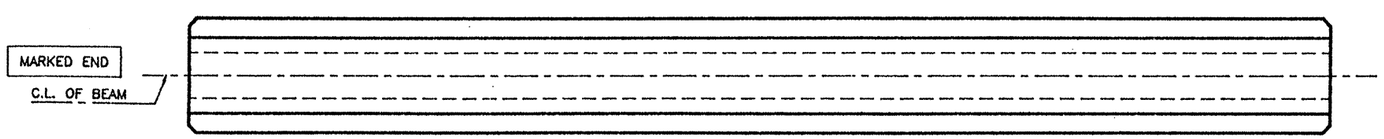

PLAN

TOP FINISH PANELS
SEE STANDARD SHEET S-"IV" FOR TOP FINISH AND OTHER NOTES AND DETAILS.

TEXAS DEPARTMENT OF TRANSPORTATION
APPROVED EXCEPT AS NOTED
DIVISION OF BRIDGES AND STRUCTURES

AUG 05 1992

APPROVAL OF THIS DRAWING DOES NOT RELIEVE THE CONTRACTOR OF THE RESPONSIBILITY FOR THE CORRECTNESS OF DETAIL.

REINFORCING STEEL SCHEDULE				
BAR	QUANTITY PER BEAM	TOTAL QUANTITY	SIZE	LENGTH
R_{15}	108	324	#3	standard
X_{15}	104	312	#3	standard
Y_{15}	4	12	#6	standard
S_{15}	24	72	#7	standard
V_{15}	14	42	#3	standard
W_{15}	4	12	#5	standard
U_{15}	2	6	#5	100'-9"

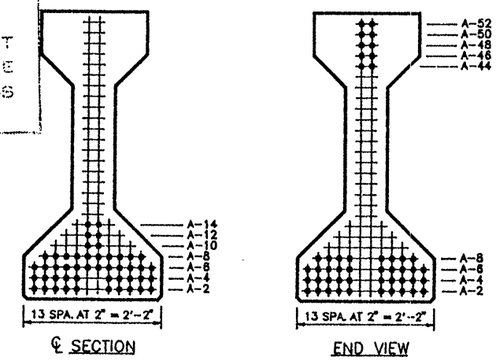

TYPE "IV" BEAM QUANTITY : 3

LO-LAX STRAND PATTERN	
NUMBER OF STRANDS : 48 ~1/2" ø 270 K @ 31.00 K EACH	
NUMBER OF STRAIGHT STRANDS	: 38
NUMBER OF DEFLECTED STRANDS	: 10 @ A – 52
CONCRETE RELEASE STRENGTH	: 5210 PSI
CONCRETE DESIGN STRENGTH	: 5420 PSI
ECCENTRICITY @ ℄ : 18.83"	ECCENTRICITY @ END : 10.92"

5445

DESIGN NO. : O.D.#2
TOTAL BEAM LENGTH OF THIS SHEET : 302.82'

MANCO PRESTRESS COMPANY

CONTRACTOR Gilbert Texas Construction

FED.RD. DIV.NO.	STATE	PROJECT NO.		HWY. NO.
6	TEXAS	NH 92(50)M		U.S. 83/281
STATE DIST.NO.	COUNTY	CONTROL NO.	SECTION NO.	JOB NO.
21	HIDALGO	0039	17	097

COPYRIGHT 1989 BY STRUCTURAL ENGINEERING ASSOCIATES, INC. *CONSULTING ENGINEERS*, SAN ANTONIO, TEXAS

JOB NO.	DRAWN	CHECKED	DATE	SHEET/MARK NO.
92-018	C.A.J.	D.M.P.	6-16-92	IV-35
SEA JOB NO. 92-059H	FABRICATION SHEET			

327252

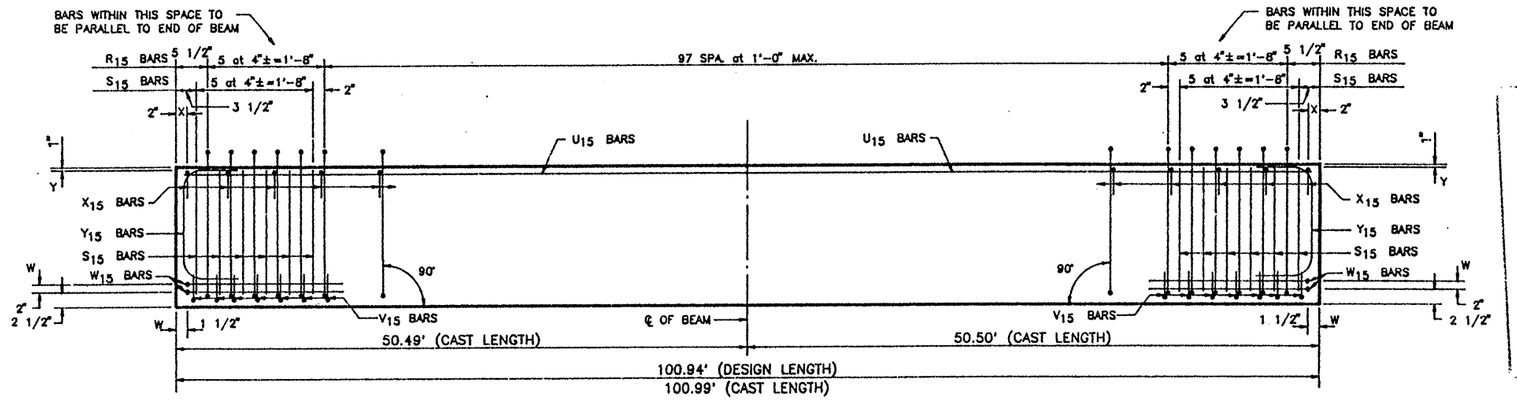

ELEVATION – REINFORCING STEEL

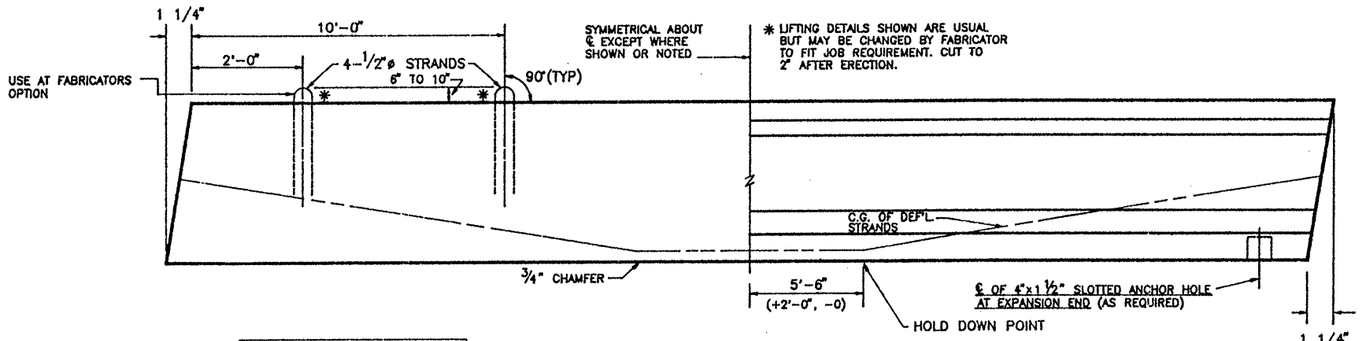

DOUBLE LIFTING LOOP DETAIL
(TYP. FOR BEAMS OVER 75')

BEAM ELEVATION
SEE PLAN VIEW FOR HOLE(S) LOCATION

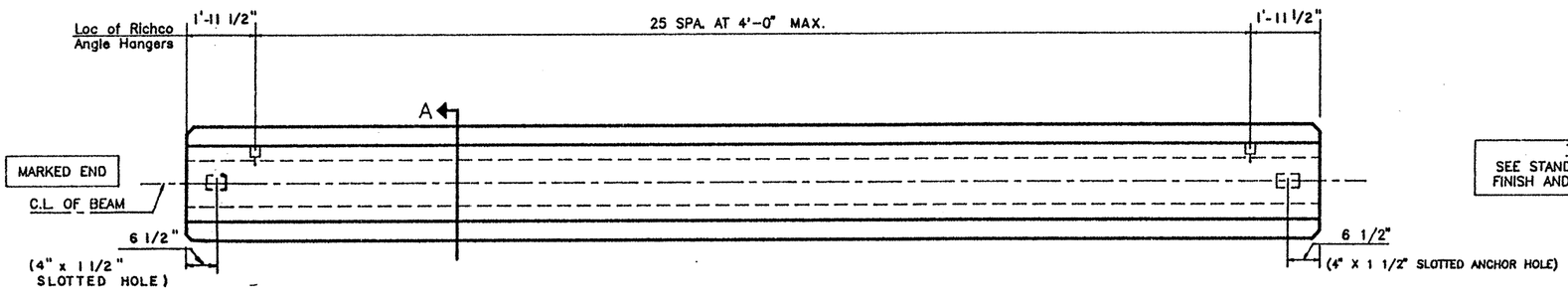

PLAN

TOP FINISH PANELS
SEE STANDARD SHEET S-"IV" FOR TOP FINISH AND OTHER NOTES AND DETAILS.

REINFORCING STEEL SCHEDULE

BAR	QUANTITY PER BEAM	TOTAL QUANTITY	SIZE	LENGTH
R_{15}	108	108	#3	standard
X_{15}	104	104	#3	standard
Y_{15}	4	4	#6	standard
S_{15}	24	24	#7	standard
V_{15}	14	14	#3	standard
W_{15}	4	4	#5	standard
U_{15}	2	2	#5	100'-9"

TEXAS DEPARTMENT OF TRANSPORTATION
APPROVED EXCEPT AS NOTED
DIVISION OF BRIDGES AND STRUCTURES
AUG 05 1992
APPROVAL OF THIS DRAWING DOES NOT RELIEVE THE CONTRACTOR OF THE RESPONSIBILITY FOR THE CORRECTNESS OF DETAIL.

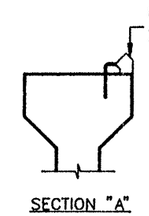

SECTION "A"

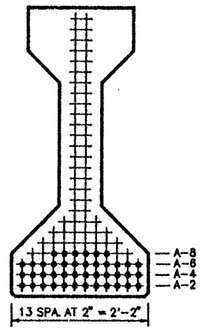

℄ SECTION

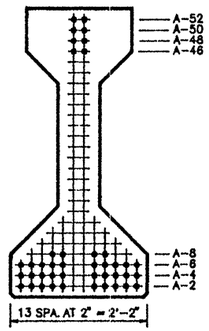

END VIEW

TYPE "IV" BEAM QUANTITY : 1

LO-LAX STRAND PATTERN		
NUMBER OF STRANDS : 42 ~1/2" ø 270 K @ 31.00 K EACH		
NUMBER OF STRAIGHT STRANDS	: 34	
NUMBER OF DEFLECTED STRANDS	: 8 @ A – 52	
CONCRETE RELEASE STRENGTH	: 4750	PSI
CONCRETE DESIGN STRENGTH	: 5280	PSI
ECCENTRICITY @ ℄ : 20.18"	ECCENTRICITY @ END : 11.80"	

5305

DESIGN NO. : O.D.#3
TOTAL BEAM LENGTH OF THIS SHEET : 100.94'

MANCO PRESTRESS COMPANY

CONTRACTOR Gilbert Texas Construction

FED.RD. DIV.NO.	STATE	PROJECT NO.	HWY. NO.
6	TEXAS	NH 92(50)M	U.S. 83/281

STATE DIST.NO.	COUNTY	CONTROL NO.	SECTION NO.	JOB NO.
21	HIDALGO	0039	17	097

COPYRIGHT 1989 BY
STRUCTURAL ENGINEERING ASSOCIATES, INC.
CONSULTING ENGINEERS, SAN ANTONIO, TEXAS

JOB NO.	DRAWN	CHECKED	DATE	SHEET/MARK NO.
92-018	C.A.J.	D.M.P.	6-16-92	IV-34
SEA JOB NO. 92-059H	FABRICATION SHEET			

327252

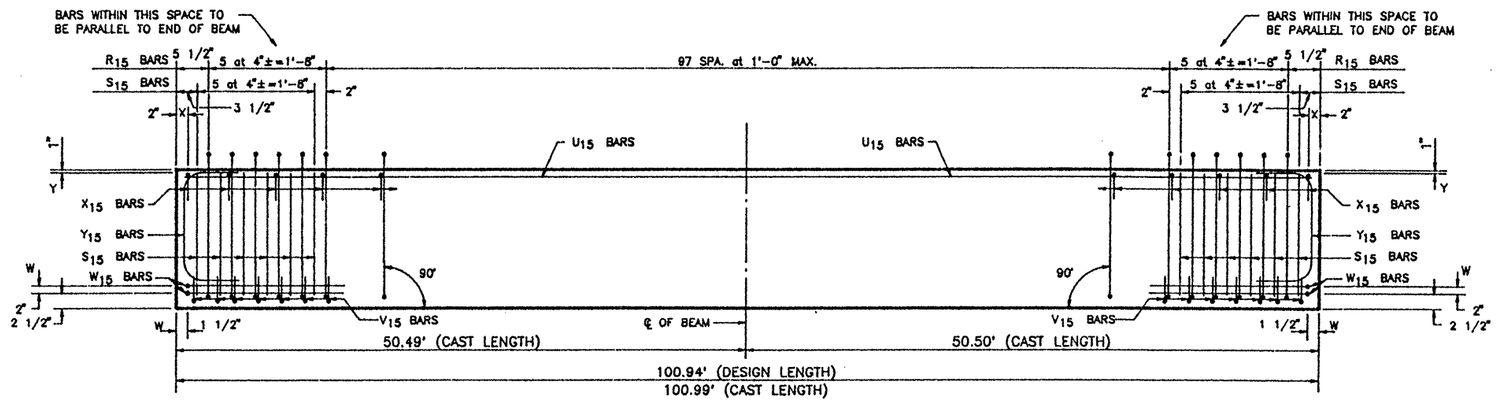

ELEVATION – REINFORCING STEEL

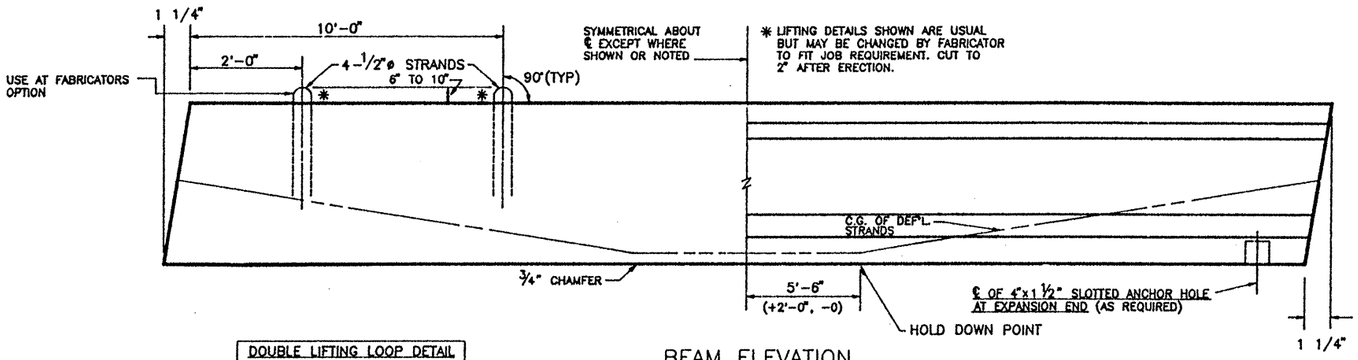

DOUBLE LIFTING LOOP DETAIL
(TYP. FOR BEAMS OVER 75')

BEAM ELEVATION
SEE PLAN VIEW FOR HOLE(S) LOCATION

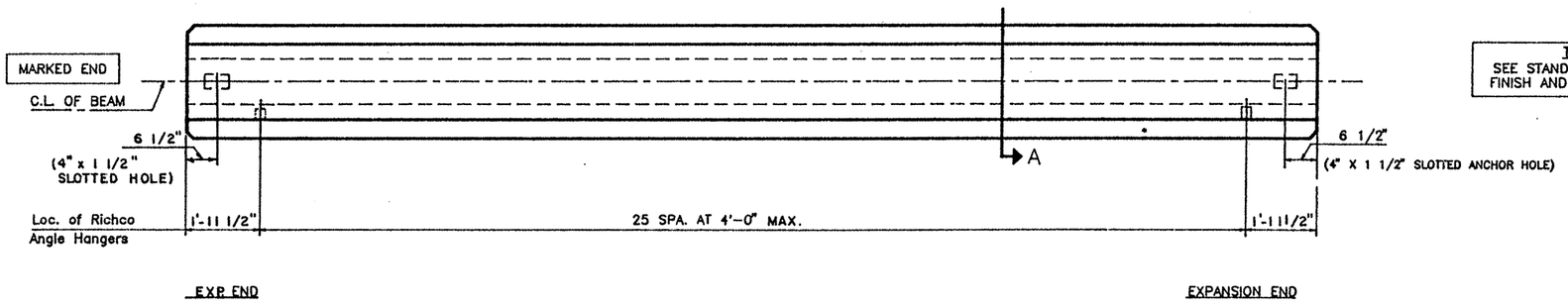

PLAN

TOP FINISH PANELS
SEE STANDARD SHEET S-"IV" FOR TOP FINISH AND OTHER NOTES AND DETAILS.

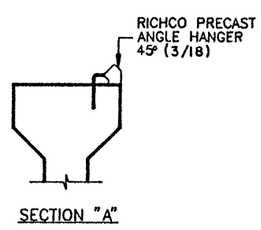

SECTION "A"

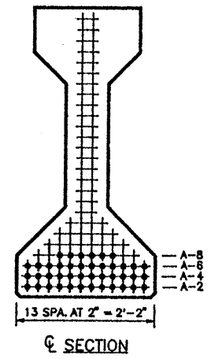

℄ SECTION

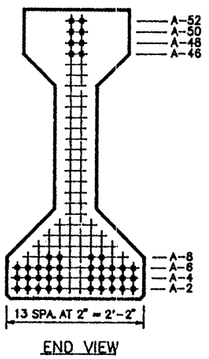

END VIEW

TYPE "IV" BEAM QUANTITY : 1

4

REINFORCING STEEL SCHEDULE

BAR	QUANTITY PER BEAM	TOTAL QUANTITY	SIZE	LENGTH
R_{15}	108	108	#3	standard
X_{15}	104	104	#3	standard
Y_{15}	4	4	#6	standard
S_{15}	24	24	#7	standard
V_{15}	14	14	#3	standard
W_{15}	4	4	#5	standard
U_{15}	2	2	#5	100'-9"

TEXAS DEPARTMENT OF TRANSPORTATION
APPROVED EXCEPT AS NOTED
DIVISION OF BRIDGES AND STRUCTURES

AUG 05 1992

APPROVAL OF THIS DRAWING DOES NOT RELIEVE THE CONTRACTOR OF THE RESPONSIBILITY FOR THE CORRECTNESS OF DETAIL.

LO-LAX STRAND PATTERN		
NUMBER OF STRANDS	: 42 ~1/2" ø 270 K @ 31.00 K EACH	
NUMBER OF STRAIGHT STRANDS	: 34	
NUMBER OF DEFLECTED STRANDS	: 8 @ A – 52	
CONCRETE RELEASE STRENGTH	: 4750	PSI
CONCRETE DESIGN STRENGTH	: 5280	PSI
ECCENTRICITY @ ℄	: 20.18"	ECCENTRICITY @ END : 11.80"

DESIGN NO. : O.D.#3 5305
TOTAL BEAM LENGTH OF THIS SHEET : 100.94'

MANCO PRESTRESS COMPANY

CONTRACTOR Gilbert Texas Construction

FED.RD. DIV.NO.	STATE	PROJECT NO.		HWY. NO.
6	TEXAS	NH 92(50)M		U.S. 83/281
STATE DIST.NO.	COUNTY	CONTROL NO.	SECTION NO.	JOB NO.
21	HIDALGO	0039	17	097

COPYRIGHT 1989 BY STRUCTURAL ENGINEERING ASSOCIATES, INC. CONSULTING ENGINEERS, SAN ANTONIO, TEXAS

JOB NO.	DRAWN	CHECKED	DATE	SHEET/MARK NO.
92-018	C.A.J.	D.M.P.	6-16-92	IV-36
SEA JOB NO. 92-059H	FABRICATION SHEET			

327252

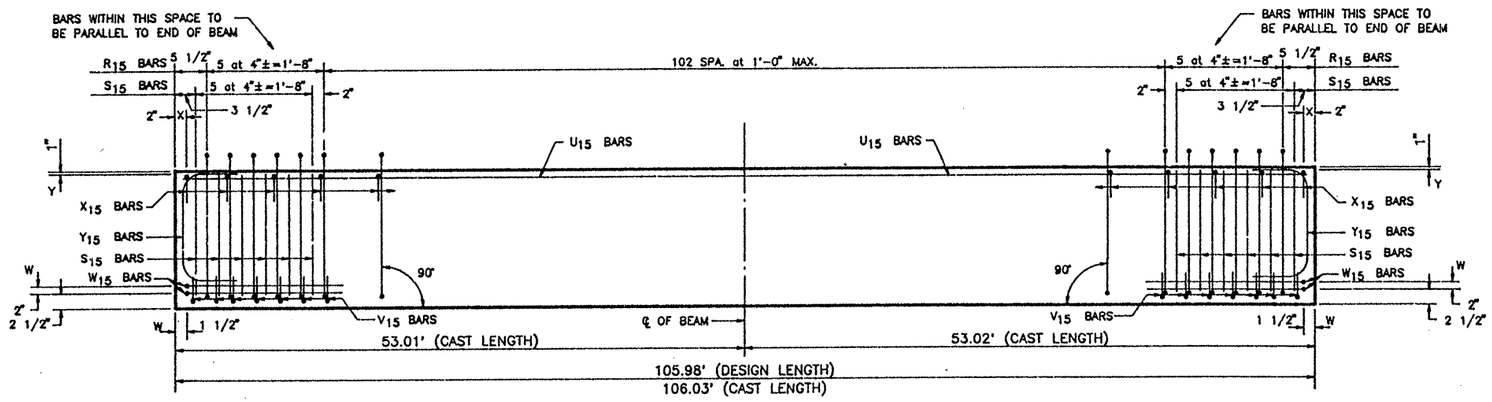

ELEVATION – REINFORCING STEEL

REINFORCING STEEL SCHEDULE				
BAR	QUANTITY PER BEAM	TOTAL QUANTITY	SIZE	LENGTH
R_{15}	113	113	#3	standard
X_{15}	109	109	#3	standard
Y_{15}	4	4	#6	standard
S_{15}	24	24	#7	standard
V_{15}	14	14	#3	standard
W_{15}	4	4	#5	standard
U_{15}	2	2	#5	105'-9"

TEXAS DEPARTMENT OF TRANSPORTATION
APPROVED
DIVISION OF BRIDGES AND STRUCTURES
AUG 05 1992
APPROVAL OF THIS DRAWING DOES NOT RELIEVE THE CONTRACTOR OF THE RESPONSIBILITY FOR THE CORRECTNESS OF DETAIL.

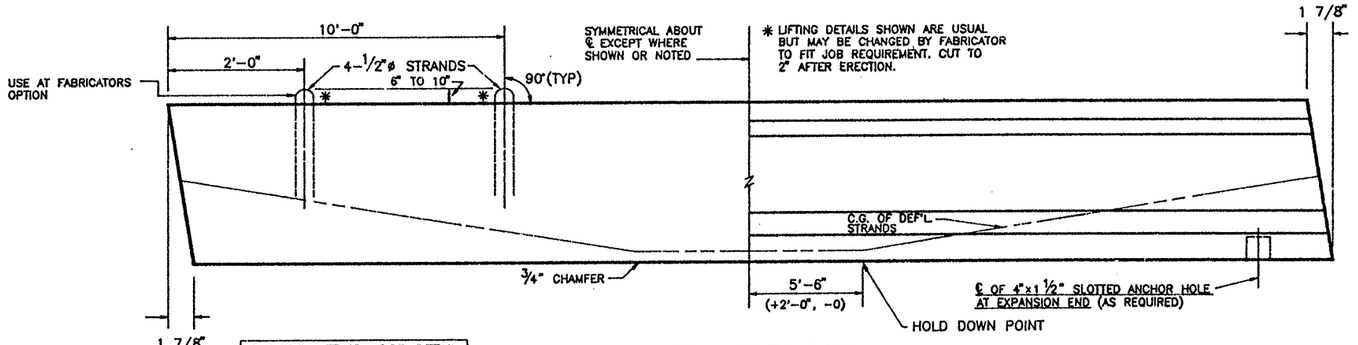

DOUBLE LIFTING LOOP DETAIL
(TYP. FOR BEAMS OVER 75')

BEAM ELEVATION
SEE PLAN VIEW FOR HOLE(S) LOCATION

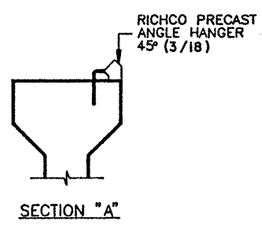

SECTION "A"

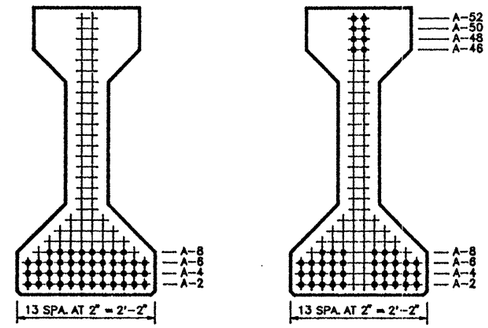

℄ SECTION

END VIEW

TYPE "IV" BEAM QUANTITY : 1

LO-LAX STRAND PATTERN		
NUMBER OF STRANDS : 44 ~1/2" ø 270 K @ 31.00 K EACH		
NUMBER OF STRAIGHT STRANDS	: 36	
NUMBER OF DEFLECTED STRANDS	: 8 @ A – 52	
CONCRETE RELEASE STRENGTH	: 5017	PSI
CONCRETE DESIGN STRENGTH	: 5944	PSI
ECCENTRICITY @ ℄ : 20.02"	ECCENTRICITY @ END : 12.02"	

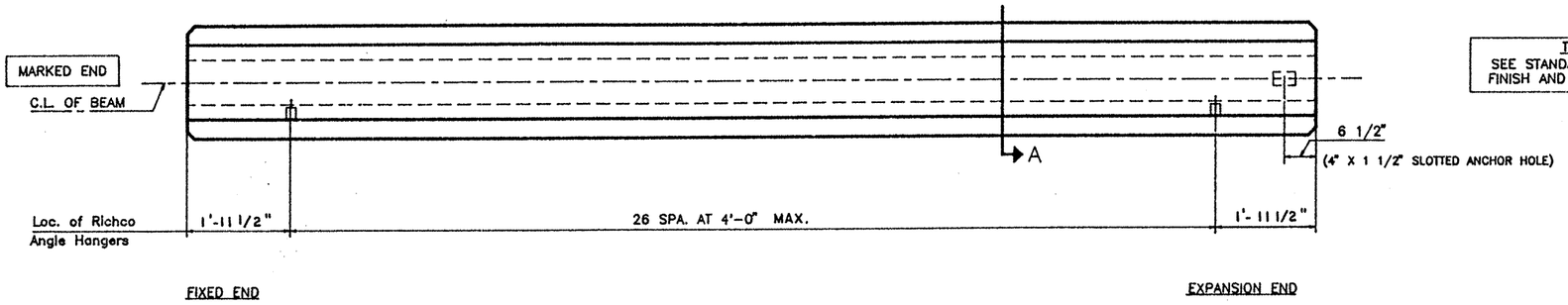

PLAN

TOP FINISH PANELS
SEE STANDARD SHEET S-"IV" FOR TOP FINISH AND OTHER NOTES AND DETAILS.

DESIGN NO. : GpNsLR
TOTAL BEAM LENGTH OF THIS SHEET : 105.98'

MANCO PRESTRESS COMPANY

CONTRACTOR Gilbert Texas Construction

FED.RD. DIV.NO.	STATE	PROJECT NO.		HWY. NO.
6	TEXAS	NH 92(50)M		U.S. 83/281
STATE DIST.NO.	COUNTY	CONTROL NO.	SECTION NO.	JOB NO.
21	HIDALGO	0039	17	097

COPYRIGHT 1989 BY
STRUCTURAL ENGINEERING ASSOCIATES, INC.
CONSULTING ENGINEERS, SAN ANTONIO, TEXAS

JOB NO.	DRAWN	CHECKED	DATE	SHEET/MARK NO.
92-018	C.A.J.	D.M.P.	6-16-92	IV-37
SEA JOB NO. 92-059H	FABRICATION SHEET			

327252

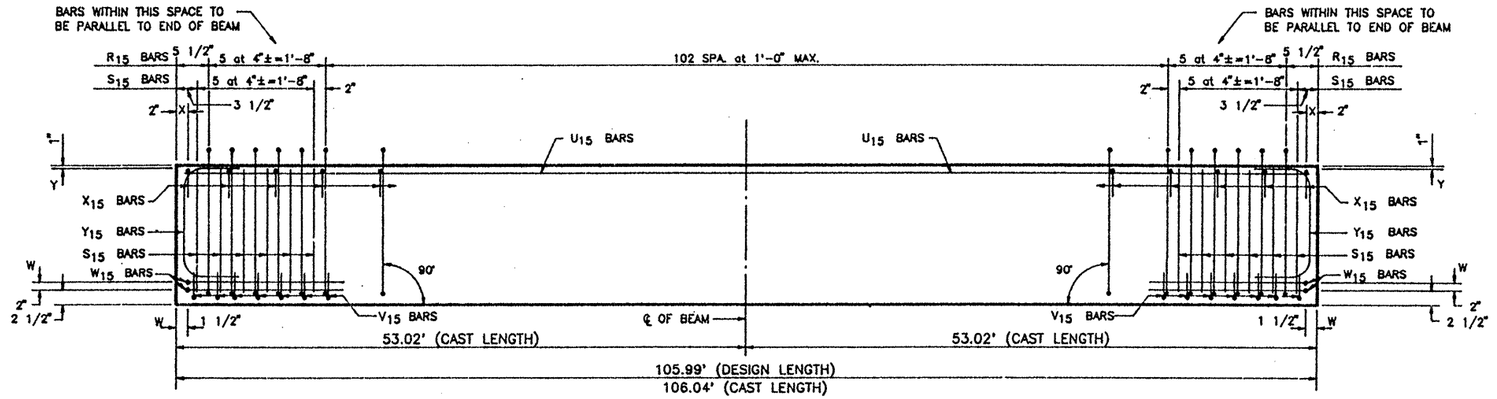

ELEVATION – REINFORCING STEEL

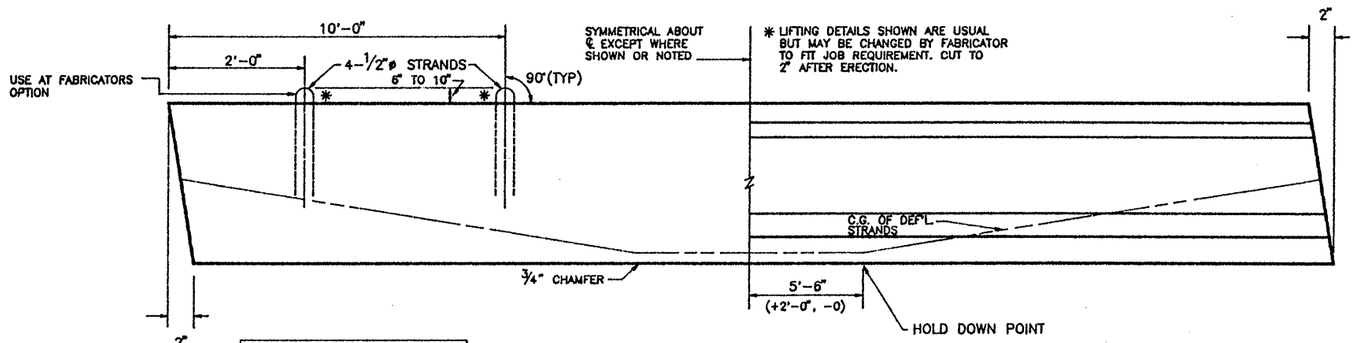

DOUBLE LIFTING LOOP DETAIL
(TYP. FOR BEAMS OVER 75')

BEAM ELEVATION
SEE PLAN VIEW FOR HOLE(S) LOCATION

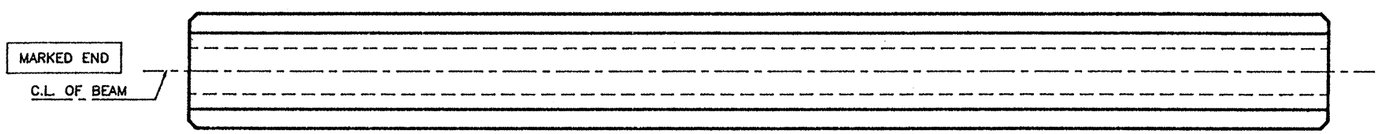

PLAN

TOP FINISH PANELS
SEE STANDARD SHEET S-"IV" FOR TOP FINISH AND OTHER NOTES AND DETAILS.

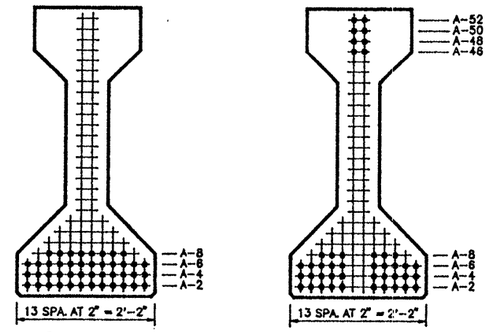

℄ SECTION

END VIEW

TYPE "IV" BEAM QUANTITY : 6

LO-LAX STRAND PATTERN		
NUMBER OF STRANDS	: 44 ~1/2" ø 270 K @ 31.00 K EACH	
NUMBER OF STRAIGHT STRANDS	: 36	
NUMBER OF DEFLECTED STRANDS	: 8 @ A – 52	
CONCRETE RELEASE STRENGTH	: 5017	PSI
CONCRETE DESIGN STRENGTH	: 5944	PSI
ECCENTRICITY @ ℄ : 20.02"	ECCENTRICITY @ END : 12.02"	

DESIGN NO. : GpNsLR
TOTAL BEAM LENGTH OF THIS SHEET : 635.94'

REINFORCING STEEL SCHEDULE				
BAR	QUANTITY PER BEAM	TOTAL QUANTITY	SIZE	LENGTH
R_{15}	113	678	#3	standard
X_{15}	109	654	#3	standard
Y_{15}	4	24	#6	standard
S_{15}	24	144	#7	standard
V_{15}	14	84	#3	standard
W_{15}	4	24	#5	standard
U_{15}	2	12	#5	105'-9"

TEXAS DEPARTMENT OF TRANSPORTATION
APPROVED
DIVISION OF BRIDGES AND STRUCTURES
AUG 05 1992
APPROVAL OF THIS DRAWING DOES NOT RELIEVE THE CONTRACTOR OF THE RESPONSIBILITY FOR THE CORRECTNESS OF DETAIL.

MANCO PRESTRESS COMPANY

CONTRACTOR Gilbert Texas Construction

FED.RD. DIV.NO.	STATE	PROJECT NO.	HWY. NO.
6	TEXAS	NH 92(50)M	U.S. 83/281

STATE DIST.NO.	COUNTY	CONTROL NO.	SECTION NO.	JOB NO.
21	HIDALGO	0039	17	097

COPYRIGHT 1989 BY STRUCTURAL ENGINEERING ASSOCIATES, INC. CONSULTING ENGINEERS, SAN ANTONIO, TEXAS

JOB NO.	DRAWN	CHECKED	DATE	SHEET/MARK NO.
92-018	C.A.J.	D.M.P.	6-16-92	IV-38
SEA JOB NO. 92-059H	FABRICATION SHEET			

327252

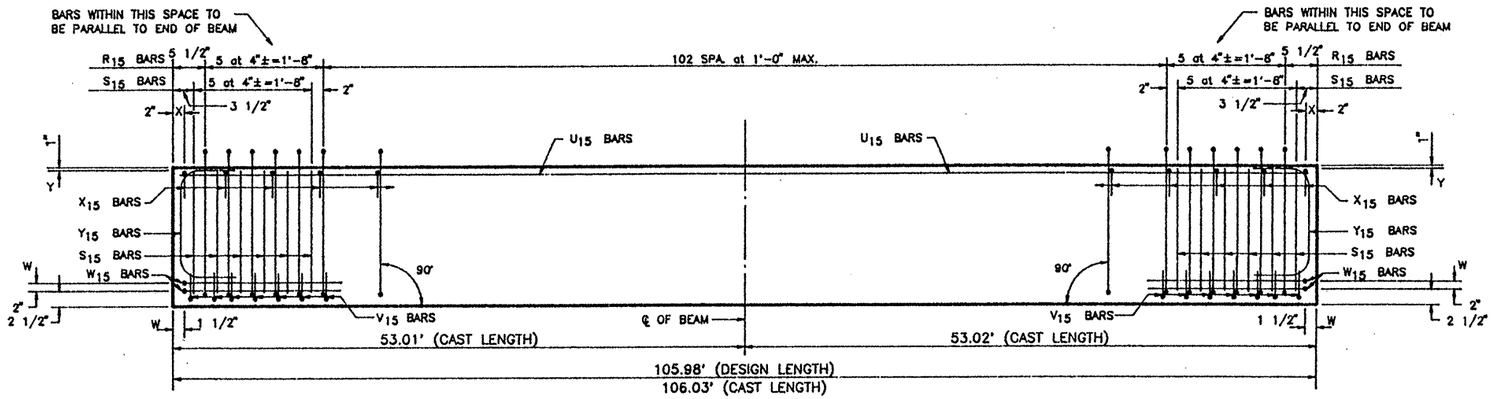

ELEVATION – REINFORCING STEEL

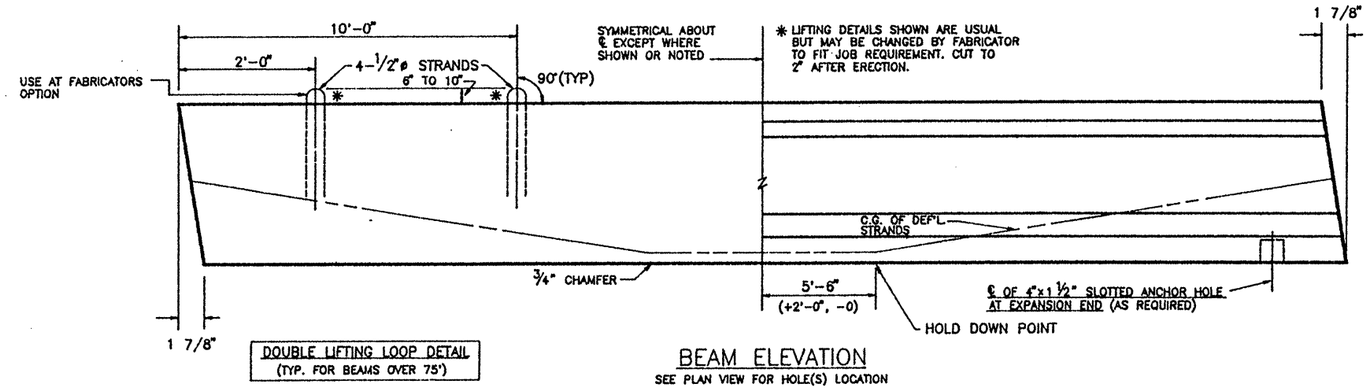

DOUBLE LIFTING LOOP DETAIL
(TYP. FOR BEAMS OVER 75')

BEAM ELEVATION
SEE PLAN VIEW FOR HOLE(S) LOCATION

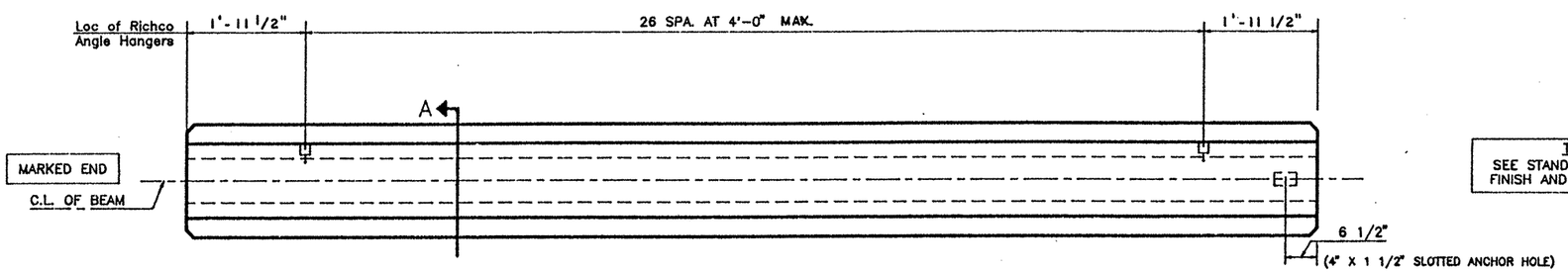

FIXED END

EXPANSION END

PLAN

TOP FINISH PANELS
SEE STANDARD SHEET S-"IV" FOR TOP FINISH AND OTHER NOTES AND DETAILS.

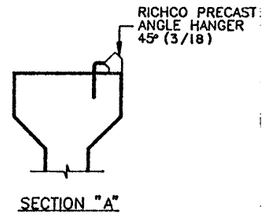

SECTION "A"

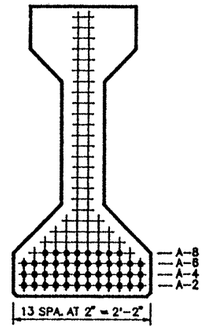

℄ SECTION

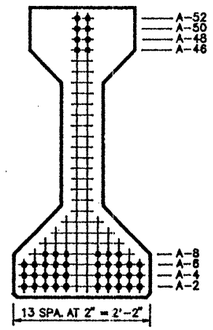

END VIEW

TYPE "IV" BEAM QUANTITY : 1

REINFORCING STEEL SCHEDULE				
BAR	QUANTITY PER BEAM	TOTAL QUANTITY	SIZE	LENGTH
R_{15}	113	113	#3	standard
X_{15}	109	109	#3	standard
Y_{15}	4	4	#6	standard
S_{15}	24	24	#7	standard
V_{15}	14	14	#3	standard
W_{15}	4	4	#5	standard
U_{15}	2	2	#5	105'-9"

TEXAS DEPARTMENT OF TRANSPORTATION
APPROVED
DIVISION OF BRIDGES AND STRUCTURES
AUG 05 1992
APPROVAL OF THIS DRAWING DOES NOT RELIEVE THE CONTRACTOR OF THE RESPONSIBILITY FOR THE CORRECTNESS OF DETAIL.

LO-LAX STRAND PATTERN		
NUMBER OF STRANDS	: 44 ~1/2" ø 270 K @ 31.00 K EACH	
NUMBER OF STRAIGHT STRANDS	: 36	
NUMBER OF DEFLECTED STRANDS	: 8 @ A – 52	
CONCRETE RELEASE STRENGTH	: 5017	PSI
CONCRETE DESIGN STRENGTH	: 5944	PSI
ECCENTRICITY @ ℄	: 20.02"	ECCENTRICITY @ END : 12.02"

DESIGN NO. : GpNsLR
TOTAL BEAM LENGTH OF THIS SHEET : 105.98'

MANCO PRESTRESS COMPANY

CONTRACTOR Gilbert Texas Construction

FED.RD. DIV.NO.	STATE	PROJECT NO.	HWY. NO.
6	TEXAS	NH 92(50)M	U.S. 83/281

STATE DIST.NO.	COUNTY	CONTROL NO.	SECTION NO.	JOB NO.
21	HIDALGO	0039	17	097

COPYRIGHT 1989 BY
STRUCTURAL ENGINEERING ASSOCIATES, INC.
CONSULTING ENGINEERS, SAN ANTONIO, TEXAS

JOB NO.	DRAWN	CHECKED	DATE	SHEET/MARK NO.
92-018	C.A.J.	D.M.P.	6-16-92	IV-39
SEA JOB NO. 92-059H	FABRICATION SHEET			

327252

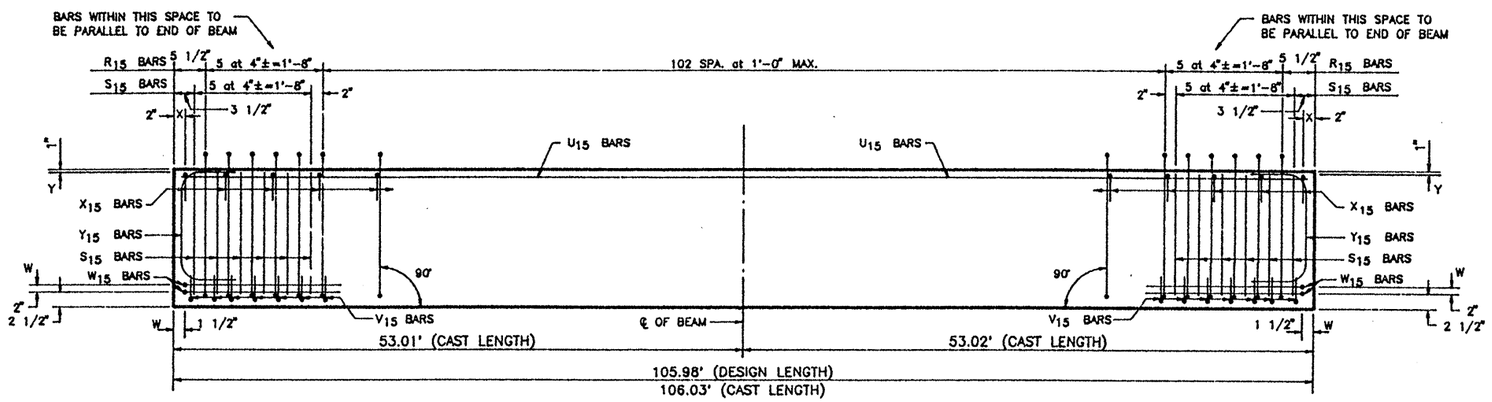

ELEVATION – REINFORCING STEEL

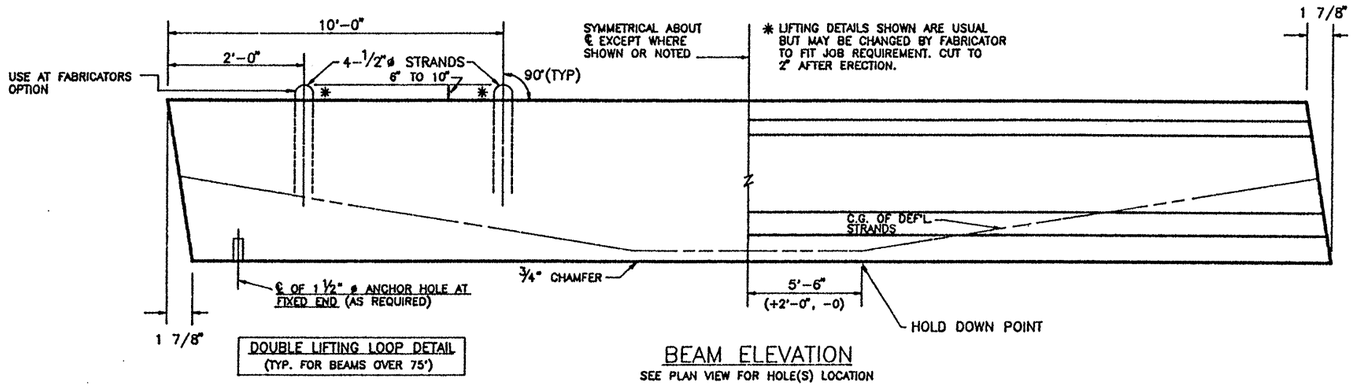

BEAM ELEVATION
SEE PLAN VIEW FOR HOLE(S) LOCATION

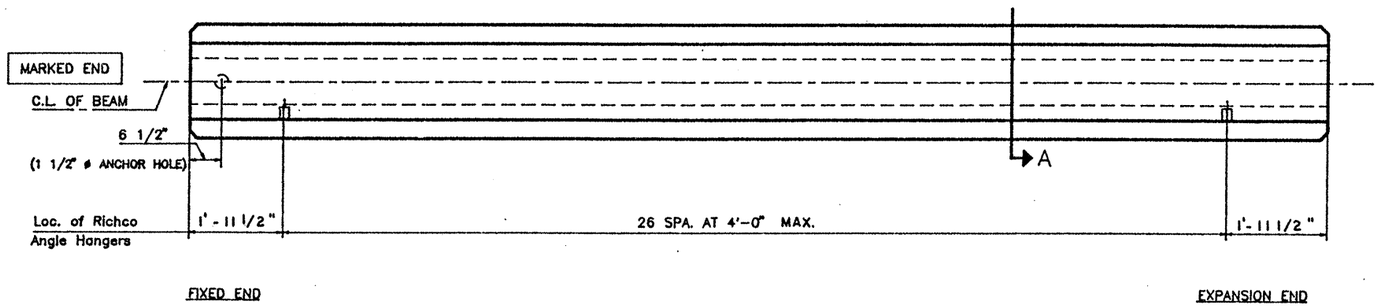

PLAN

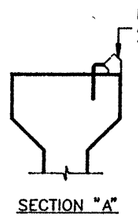

SECTION "A"

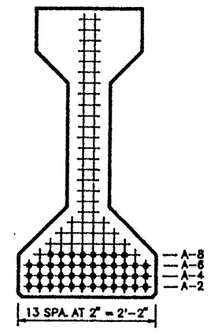

℄ SECTION

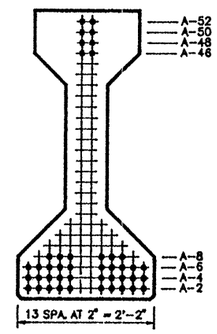

END VIEW

TYPE "IV" BEAM QUANTITY : 1

LO-LAX STRAND PATTERN		
NUMBER OF STRANDS : 44 ~1/2" ø 270 K @ 31.00 K EACH		
NUMBER OF STRAIGHT STRANDS	: 36	
NUMBER OF DEFLECTED STRANDS	: 8 @ A – 52	
CONCRETE RELEASE STRENGTH	: 5017	PSI
CONCRETE DESIGN STRENGTH	: 5944	PSI
ECCENTRICITY @ ℄ : 20.02"	ECCENTRICITY @ END : 12.02"	

DESIGN NO. : GpNsLR
TOTAL BEAM LENGTH OF THIS SHEET : 105.98'

TOP FINISH PANELS
SEE STANDARD SHEET S-"IV" FOR TOP FINISH AND OTHER NOTES AND DETAILS.

REINFORCING STEEL SCHEDULE

BAR	QUANTITY PER BEAM	TOTAL QUANTITY	SIZE	LENGTH
R_{15}	113	113	#3	standard
X_{15}	109	109	#3	standard
Y_{15}	4	4	#6	standard
S_{15}	24	24	#7	standard
V_{15}	14	14	#3	standard
W_{15}	4	4	#5	standard
U_{15}	2	2	#5	105'-9"

TEXAS DEPARTMENT OF TRANSPORTATION
APPROVED
DIVISION OF BRIDGES AND STRUCTURES
AUG 05 1992
APPROVAL OF THIS DRAWING DOES NOT RELIEVE THE CONTRACTOR OF THE RESPONSIBILITY FOR THE CORRECTNESS OF DETAIL.

MANCO PRESTRESS COMPANY

CONTRACTOR Gilbert Texas Construction

FED.RD. DIV.NO.	STATE	PROJECT NO.	HWY. NO.
6	TEXAS	NH 92(50)M	U.S. 83/281
STATE DIST.NO.	COUNTY	CONTROL NO.	SECTION NO.	JOB NO.
21	HIDALGO	0039	17	097

COPYRIGHT 1989 BY STRUCTURAL ENGINEERING ASSOCIATES, INC. CONSULTING ENGINEERS, SAN ANTONIO, TEXAS

JOB NO.	DRAWN	CHECKED	DATE	SHEET/MARK NO.
92-018	C.A.J.	D.M.P.	6-16-92	IV-40
SEA JOB NO. 92-059H	FABRICATION SHEET			

327252

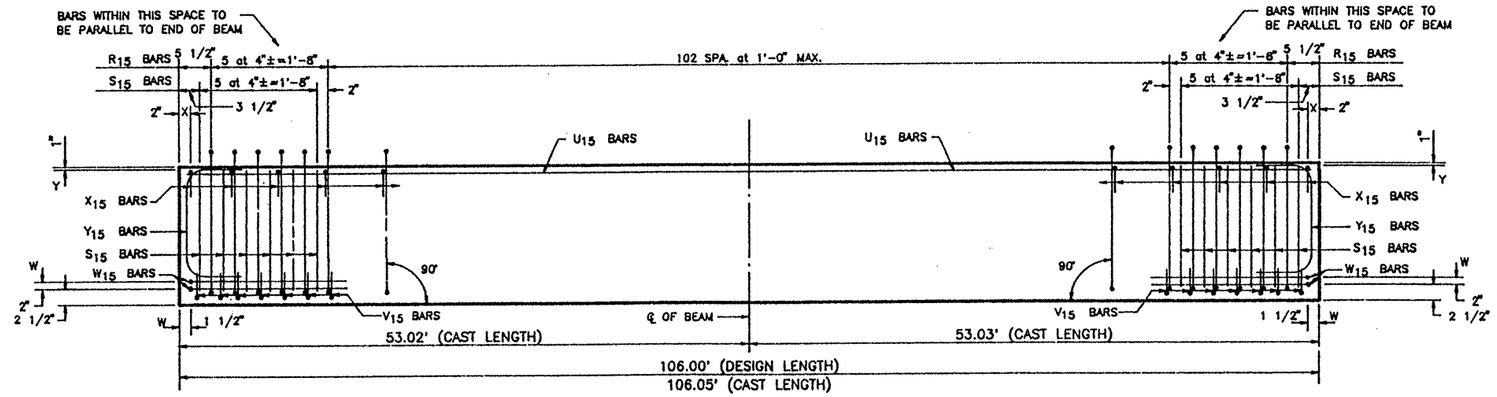

ELEVATION – REINFORCING STEEL

REINFORCING STEEL SCHEDULE				
BAR	QUANTITY PER BEAM	TOTAL QUANTITY	SIZE	LENGTH
R_{15}	113	113	#3	standard
X_{15}	109	109	#3	standard
Y_{15}	4	4	#6	standard
S_{15}	24	24	#7	standard
V_{15}	14	14	#3	standard
W_{15}	4	4	#5	standard
U_{15}	2	2	#5	105'-9"

TEXAS DEPARTMENT OF TRANSPORTATION
APPROVED
DIVISION OF BRIDGES AND STRUCTURES
AUG 05 1992
APPROVAL OF THIS DRAWING DOES NOT RELIEVE THE CONTRACTOR OF THE RESPONSIBILITY FOR THE CORRECTNESS OF DETAIL.

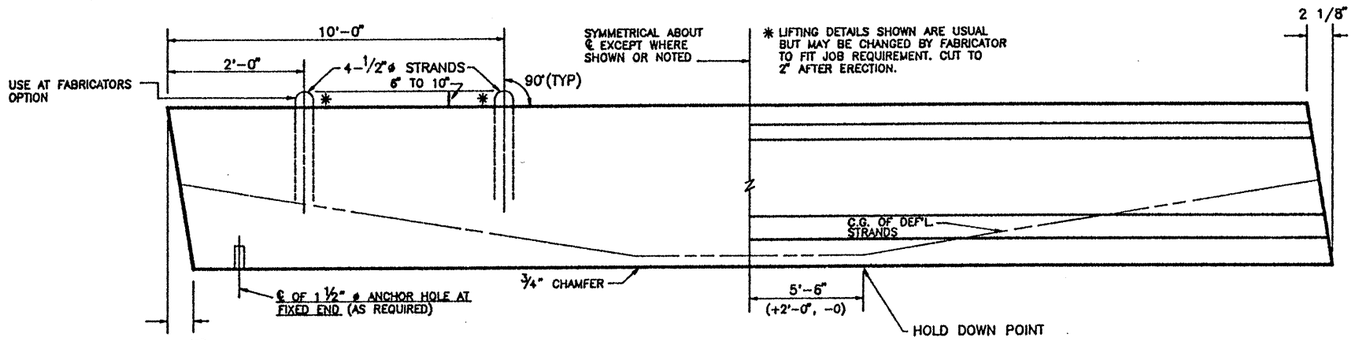

DOUBLE LIFTING LOOP DETAIL
(TYP. FOR BEAMS OVER 75')

BEAM ELEVATION
SEE PLAN VIEW FOR HOLE(S) LOCATION

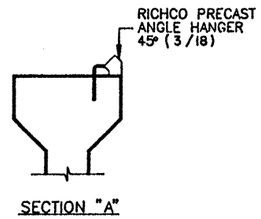

SECTION "A"

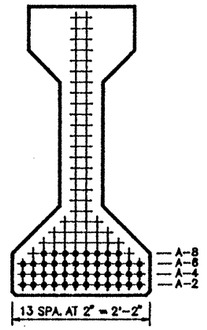

℄ SECTION

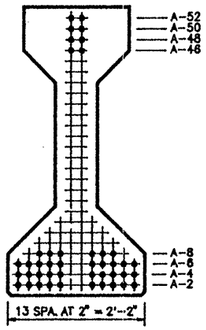

END VIEW

TYPE "IV" BEAM QUANTITY : 1

LO-LAX STRAND PATTERN	
NUMBER OF STRANDS	: 44 ~1/2" ø 270 K @ 31.00 K EACH
NUMBER OF STRAIGHT STRANDS	: 36
NUMBER OF DEFLECTED STRANDS	: 8 @ A – 52
CONCRETE RELEASE STRENGTH	: 5017 PSI
CONCRETE DESIGN STRENGTH	: 5944 PSI
ECCENTRICITY @ ℄	: 20.02" ECCENTRICITY @ END : 12.02"

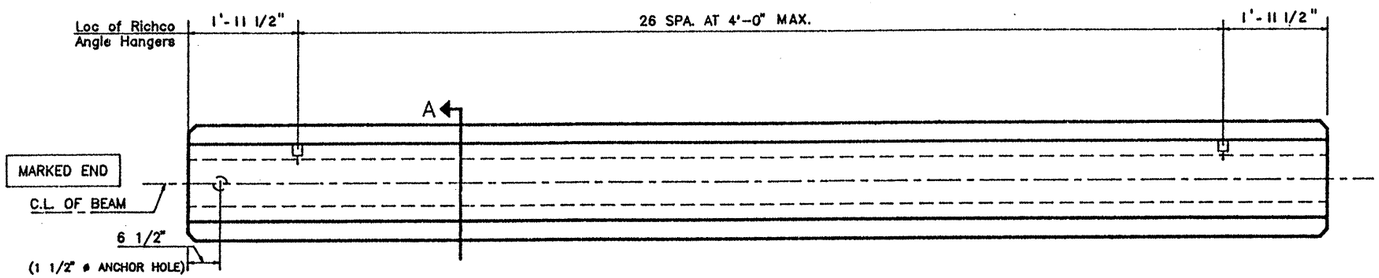

FIXED END

EXPANSION END

PLAN

TOP FINISH PANELS
SEE STANDARD SHEET S-"IV" FOR TOP FINISH AND OTHER NOTES AND DETAILS.

DESIGN NO. : GpNsLR
TOTAL BEAM LENGTH OF THIS SHEET : 106.00'

MANCO PRESTRESS COMPANY

CONTRACTOR Gilbert Texas Construction

FED.RD. DIV.NO.	STATE	PROJECT NO.	HWY. NO.
6	TEXAS	NH 92(50)M	U.S. 83/281

STATE DIST.NO.	COUNTY	CONTROL NO.	SECTION NO.	JOB NO.
21	HIDALGO	0039	17	097

COPYRIGHT 1989 BY
STRUCTURAL ENGINEERING ASSOCIATES, INC.
CONSULTING ENGINEERS, SAN ANTONIO, TEXAS

JOB NO.	DRAWN	CHECKED	DATE	SHEET/MARK NO.
92-018	C.A.J.	D.M.P.	6-16-92	IV-41
SEA JOB NO. 92-059H	FABRICATION SHEET			

327252

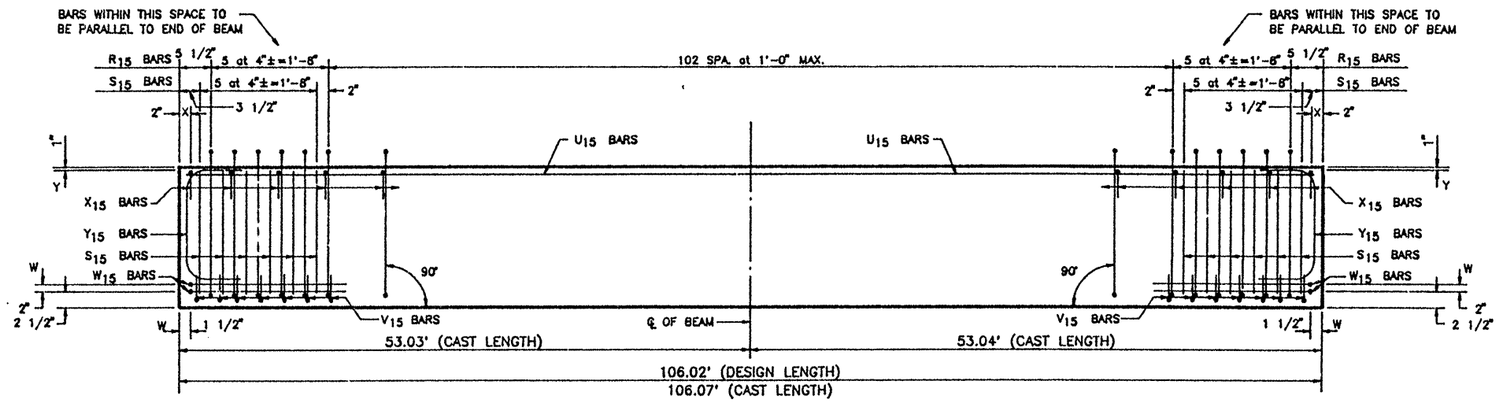

ELEVATION – REINFORCING STEEL

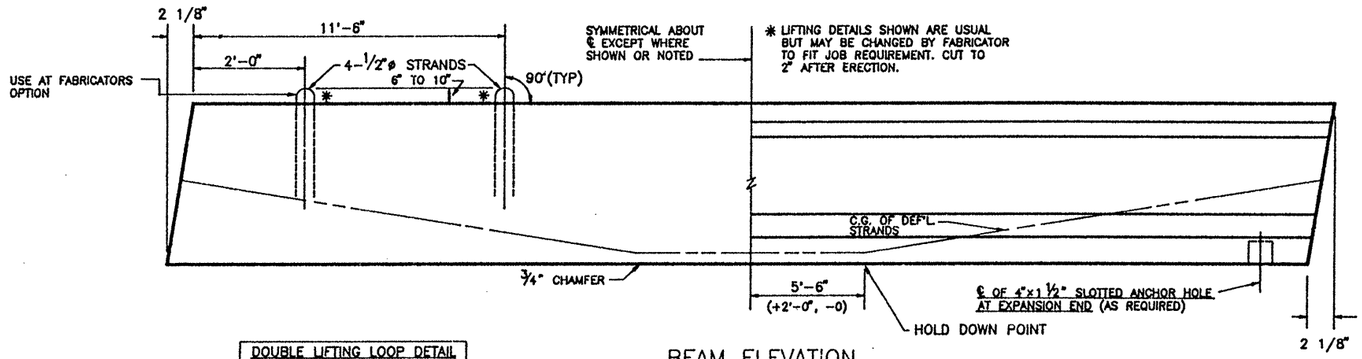

DOUBLE LIFTING LOOP DETAIL
(TYP. FOR BEAMS OVER 75')

BEAM ELEVATION
SEE PLAN VIEW FOR HOLE(S) LOCATION

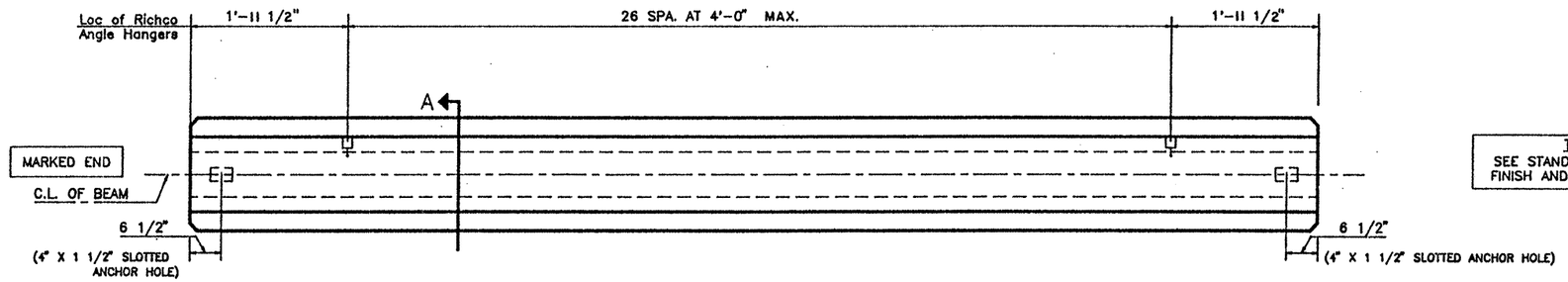

PLAN

TOP FINISH PANELS
SEE STANDARD SHEET S-"IV" FOR TOP FINISH AND OTHER NOTES AND DETAILS.

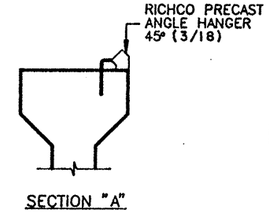

SECTION "A"

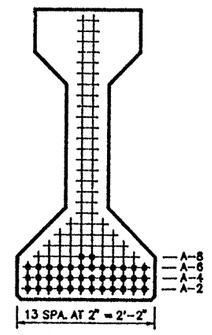

℄ SECTION

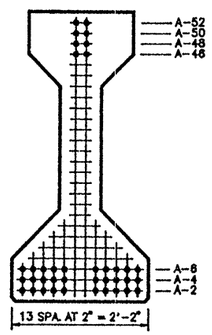

END VIEW

TYPE "IV" BEAM QUANTITY : 1

LO-LAX STRAND PATTERN		
NUMBER OF STRANDS	: 38 ~1/2" ø 270 K @ 31.00 K EACH	
NUMBER OF STRAIGHT STRANDS	: 30	
NUMBER OF DEFLECTED STRANDS	: 8 @ A – 52	
CONCRETE RELEASE STRENGTH	: 4233	PSI
CONCRETE DESIGN STRENGTH	: 5599	PSI
ECCENTRICITY @ ℄	: 20.54" ECCENTRICITY @ END	: 11.28"

DESIGN NO. : GpNsLR
TOTAL BEAM LENGTH OF THIS SHEET : 106.02'

REINFORCING STEEL SCHEDULE

BAR	QUANTITY PER BEAM	TOTAL QUANTITY	SIZE	LENGTH
R_{15}	113	113	#3	standard
X_{15}	109	109	#3	standard
Y_{15}	4	4	#6	standard
S_{15}	24	24	#7	standard
V_{15}	14	14	#3	standard
W_{15}	4	4	#5	standard
U_{15}	2	2	#5	105'-10"

TEXAS DEPARTMENT OF TRANSPORTATION
APPROVED
DIVISION OF BRIDGES AND STRUCTURES
AUG 05 1992
APPROVAL OF THIS DRAWING DOES NOT RELIEVE THE CONTRACTOR OF THE RESPONSIBILITY FOR THE CORRECTNESS OF DETAIL.

MANCO PRESTRESS COMPANY

CONTRACTOR Gilbert Texas Construction

FED.RD. DIV.NO.	STATE	PROJECT NO.	HWY. NO.
6	TEXAS	NH 92(50)M	U.S. 83/281

STATE DIST.NO.	COUNTY	CONTROL NO.	SECTION NO.	JOB NO.
21	HIDALGO	0039	17	097

COPYRIGHT 1989 BY
STRUCTURAL ENGINEERING ASSOCIATES, INC.
CONSULTING ENGINEERS, SAN ANTONIO, TEXAS

JOB NO.	DRAWN	CHECKED	DATE	SHEET/MARK NO.
92-018	C.A.J.	D.M.P.	6-16-92	IV-42
SEA JOB NO. 92-059H	FABRICATION SHEET			

327252

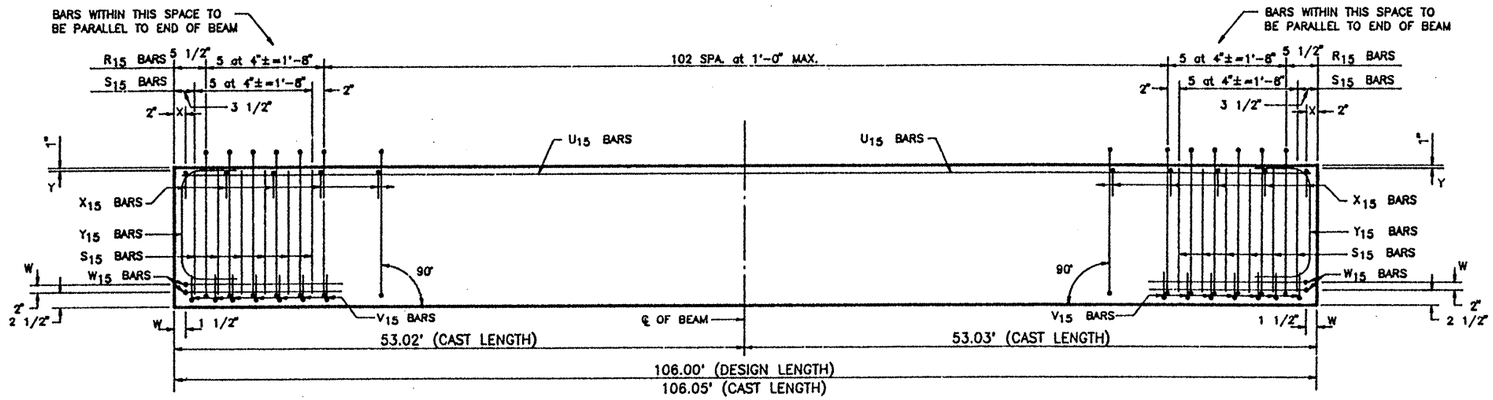

ELEVATION – REINFORCING STEEL

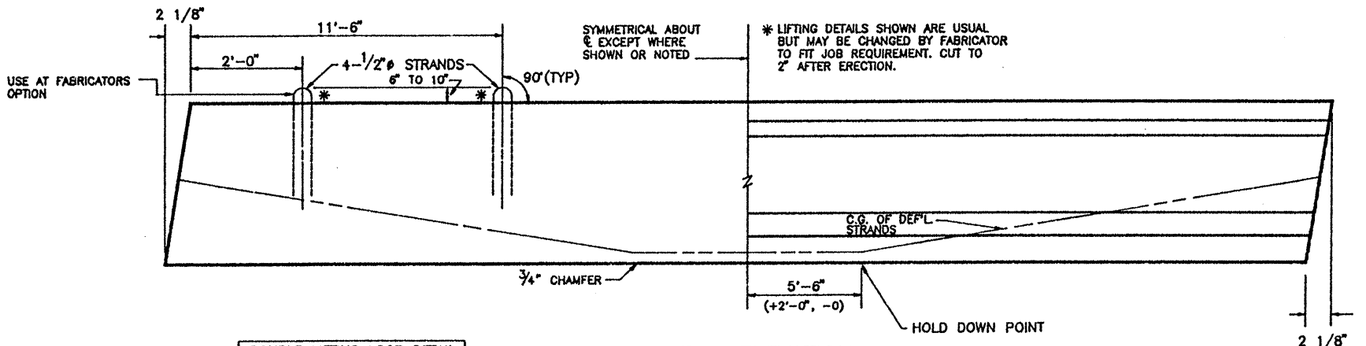

DOUBLE LIFTING LOOP DETAIL
(TYP. FOR BEAMS OVER 75')

BEAM ELEVATION
SEE PLAN VIEW FOR HOLE(S) LOCATION

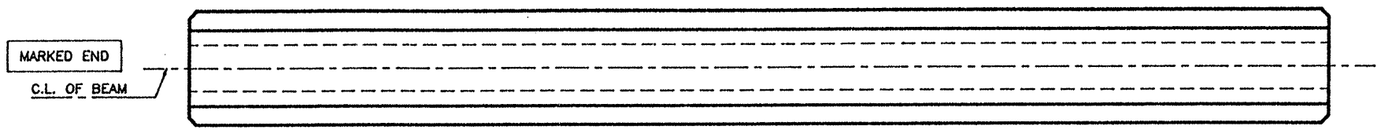

PLAN

TOP FINISH PANELS
SEE STANDARD SHEET S-"IV" FOR TOP FINISH AND OTHER NOTES AND DETAILS.

REINFORCING STEEL SCHEDULE

BAR	QUANTITY PER BEAM	TOTAL QUANTITY	SIZE	LENGTH
R_{15}	113	452	#3	standard
X_{15}	109	436	#3	standard
Y_{15}	4	16	#6	standard
S_{15}	24	96	#7	standard
V_{15}	14	56	#3	standard
W_{15}	4	16	#5	standard
U_{15}	2	8	#5	105'-9"

TEXAS DEPARTMENT OF TRANSPORTATION
APPROVED
DIVISION OF BRIDGES AND STRUCTURES

AUG 05 1992

APPROVAL OF THIS DRAWING DOES NOT RELIEVE THE CONTRACTOR OF THE RESPONSIBILITY FOR THE CORRECTNESS OF DETAIL.

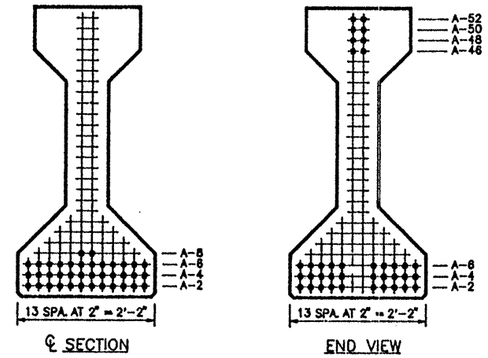

TYPE "IV" BEAM QUANTITY : 4

LO-LAX STRAND PATTERN		
NUMBER OF STRANDS	: 38 ~1/2" ø 270 K @ 31.00 K EACH	
NUMBER OF STRAIGHT STRANDS	: 30	
NUMBER OF DEFLECTED STRANDS	: 8 @ A – 52	
CONCRETE RELEASE STRENGTH	: 4233	PSI
CONCRETE DESIGN STRENGTH	: 5599	PSI
ECCENTRICITY @ ℄	: 20.54"	ECCENTRICITY @ END : 11.28"

DESIGN NO. : GpNsLR
TOTAL BEAM LENGTH OF THIS SHEET : 424.00'

MANCO PRESTRESS COMPANY
CONTRACTOR Gilbert Texas Construction

FED.RD. DIV.NO.	STATE	PROJECT NO.	HWY. NO.
6	TEXAS	NH 92(50)M	U.S. 83/281

STATE DIST.NO.	COUNTY	CONTROL NO.	SECTION NO.	JOB NO.
21	HIDALGO	0039	17	097

COPYRIGHT 1989 BY STRUCTURAL ENGINEERING ASSOCIATES, INC. CONSULTING ENGINEERS, SAN ANTONIO, TEXAS

JOB NO.	DRAWN	CHECKED	DATE	SHEET/MARK NO.
92-018	C.A.J.	D.M.P.	6-16-92	IV-43
SEA JOB NO. 92-059H	FABRICATION SHEET			

327252

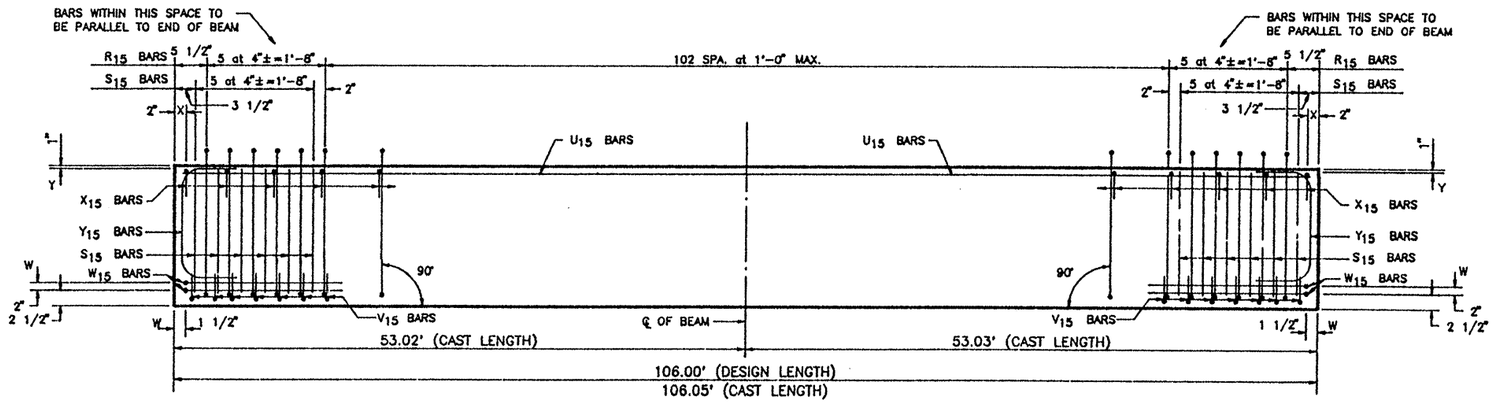

ELEVATION – REINFORCING STEEL

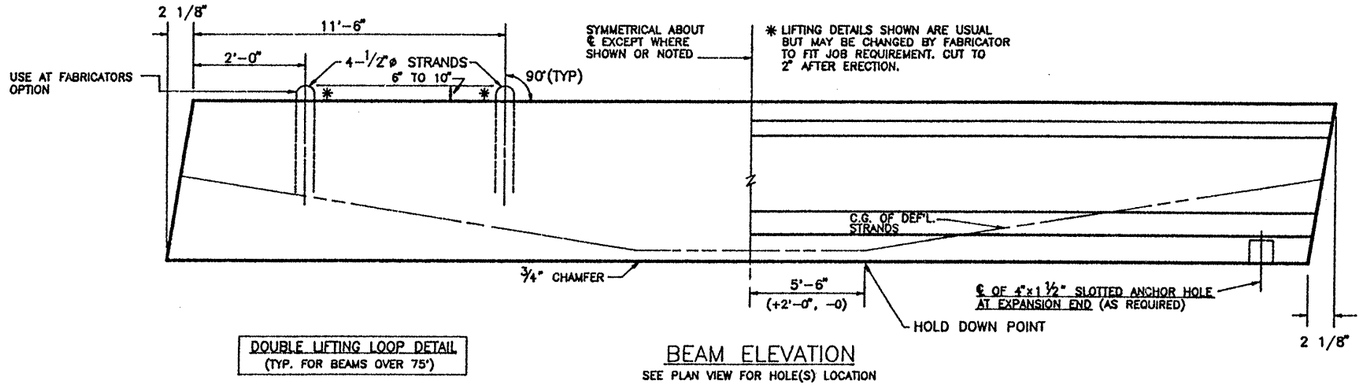

DOUBLE LIFTING LOOP DETAIL
(TYP. FOR BEAMS OVER 75')

BEAM ELEVATION
SEE PLAN VIEW FOR HOLE(S) LOCATION

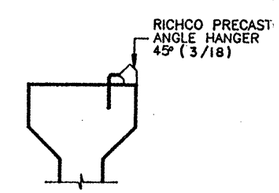

SECTION "A"

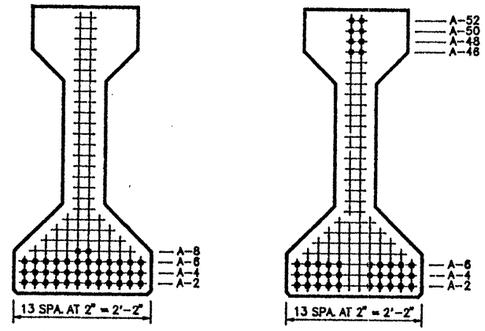

℄ SECTION

END VIEW

TYPE "IV" BEAM QUANTITY : 1

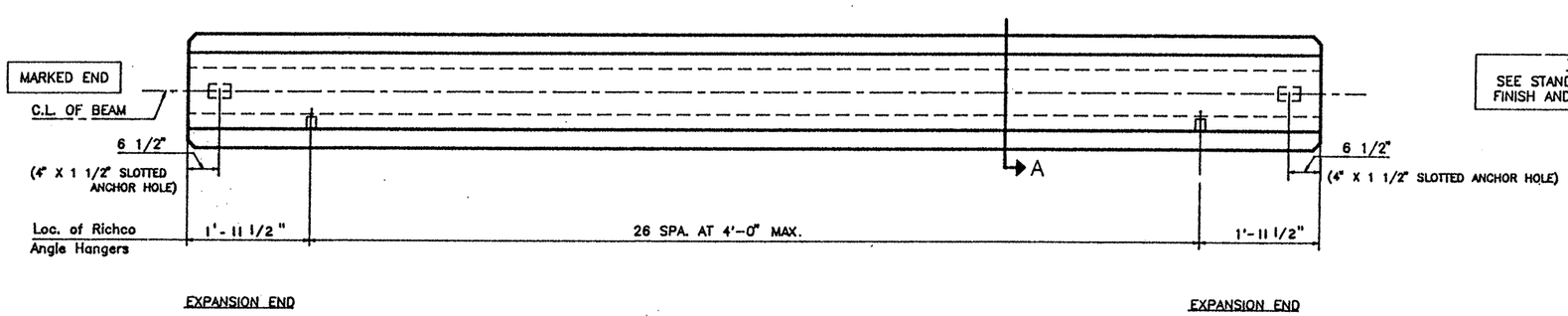

PLAN

TOP FINISH PANELS
SEE STANDARD SHEET S-"IV" FOR TOP FINISH AND OTHER NOTES AND DETAILS.

TEXAS DEPARTMENT OF TRANSPORTATION
APPROVED
DIVISION OF BRIDGES AND STRUCTURES
AUG 05 1992
APPROVAL OF THIS DRAWING DOES NOT RELIEVE THE CONTRACTOR OF THE RESPONSIBILITY FOR THE CORRECTNESS OF DETAIL.

REINFORCING STEEL SCHEDULE

BAR	QUANTITY PER BEAM	TOTAL QUANTITY	SIZE	LENGTH
R_{15}	113	113	#3	standard
X_{15}	109	109	#3	standard
Y_{15}	4	4	#6	standard
S_{15}	24	24	#7	standard
V_{15}	14	14	#3	standard
W_{15}	4	4	#5	standard
U_{15}	2	2	#5	105'-9"

LO-LAX STRAND PATTERN

NUMBER OF STRANDS	: 38 ~1/2" ø 270 K @ 31.00 K EACH
NUMBER OF STRAIGHT STRANDS	: 30
NUMBER OF DEFLECTED STRANDS	: 8 @ A – 52
CONCRETE RELEASE STRENGTH	: 4233 PSI
CONCRETE DESIGN STRENGTH	: 5599 PSI
ECCENTRICITY @ ℄ : 20.54"	ECCENTRICITY @ END : 11.28"

DESIGN NO. : GpNsLR
TOTAL BEAM LENGTH OF THIS SHEET : 106.00'

MANCO PRESTRESS COMPANY

CONTRACTOR Gilbert Texas Construction

FED.RD. DIV.NO.	STATE	PROJECT NO.	HWY. NO.
6	TEXAS	NH 92(50)M	U.S. 83/281

STATE DIST.NO.	COUNTY	CONTROL NO.	SECTION NO.	JOB NO.
21	HIDALGO	0039	17	097

COPYRIGHT 1989 BY SEA STRUCTURAL ENGINEERING ASSOCIATES, INC. CONSULTING ENGINEERS, SAN ANTONIO, TEXAS

JOB NO.	DRAWN	CHECKED	DATE	SHEET/MARK NO.
92-018	C.A.J.	D.M.P.	6-16-92	IV-44
SEA JOB NO. 92-059H	FABRICATION SHEET			

327252

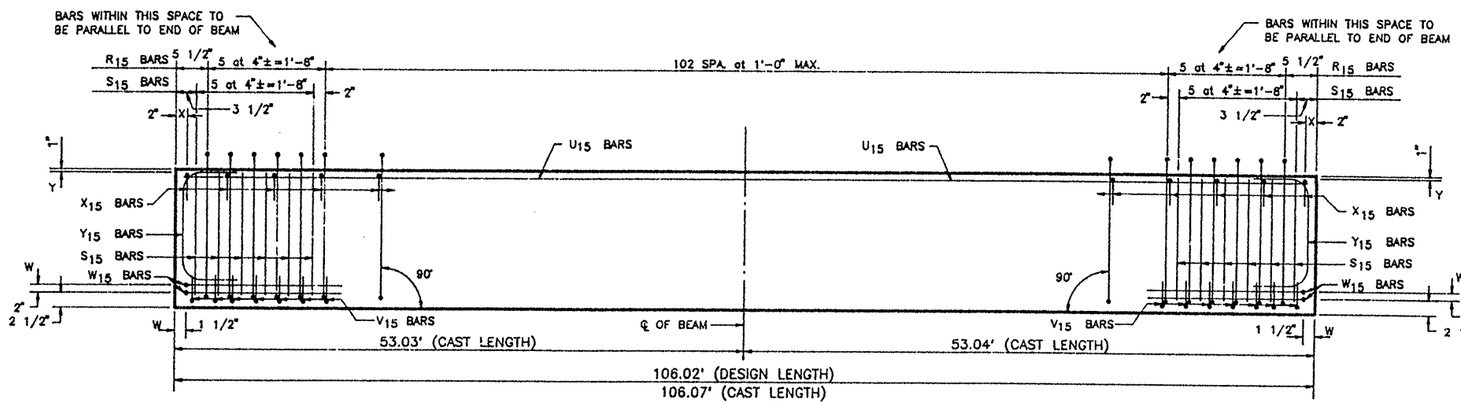

ELEVATION – REINFORCING STEEL

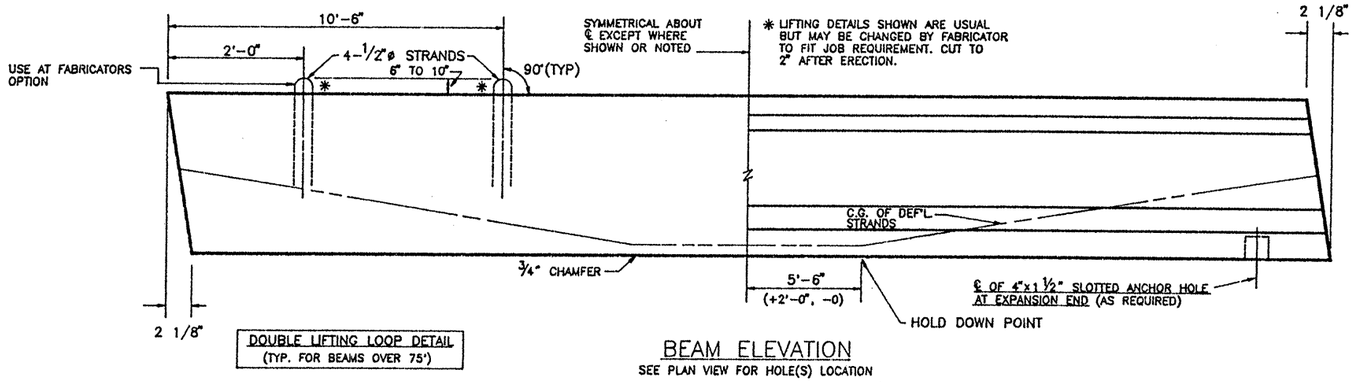

DOUBLE LIFTING LOOP DETAIL
(TYP. FOR BEAMS OVER 75')

BEAM ELEVATION
SEE PLAN VIEW FOR HOLE(S) LOCATION

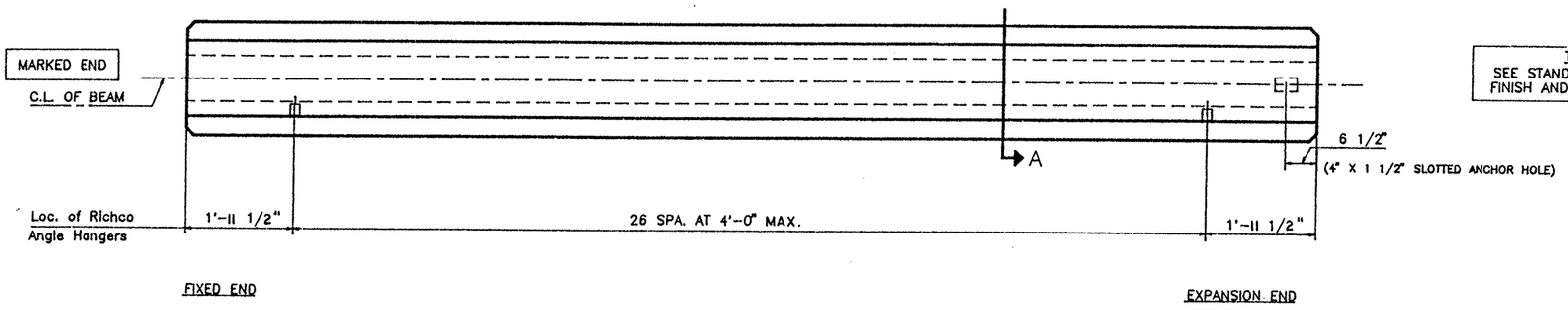

PLAN

TOP FINISH PANELS
SEE STANDARD SHEET S-"IV" FOR TOP FINISH AND OTHER NOTES AND DETAILS.

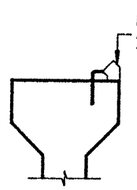

SECTION "A"

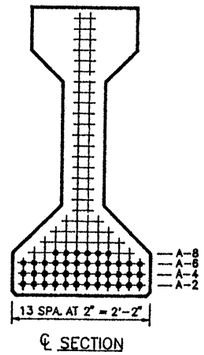

℄ SECTION

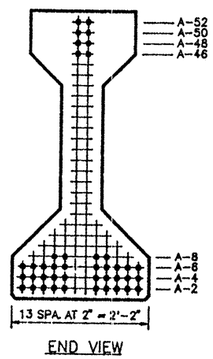

END VIEW

TYPE "IV" BEAM QUANTITY : 1

LO-LAX STRAND PATTERN		
NUMBER OF STRANDS	: 42 ~1/2" ø 270 K @ 31.00 K EACH	
NUMBER OF STRAIGHT STRANDS	: 34	
NUMBER OF DEFLECTED STRANDS	: 8 @ A – 52	
CONCRETE RELEASE STRENGTH	: 4756	PSI
CONCRETE DESIGN STRENGTH	: 5830	PSI
ECCENTRICITY @ ℄ : 20.18"	ECCENTRICITY @ END : 11.80"	

DESIGN NO. : GpNsLR
TOTAL BEAM LENGTH OF THIS SHEET : 106.02'

REINFORCING STEEL SCHEDULE				
BAR	QUANTITY PER BEAM	TOTAL QUANTITY	SIZE	LENGTH
R_{15}	113	113	#3	standard
X_{15}	109	109	#3	standard
Y_{15}	4	4	#6	standard
S_{15}	24	24	#7	standard
V_{15}	14	14	#3	standard
W_{15}	4	4	#5	standard
U_{15}	2	2	#5	105'-10"

TEXAS DEPARTMENT OF TRANSPORTATION
APPROVED
DIVISION OF BRIDGES AND STRUCTURES
AUG 05 1992
APPROVAL OF THIS DRAWING DOES NOT RELIEVE THE CONTRACTOR OF THE RESPONSIBILITY FOR THE CORRECTNESS OF DETAIL.

MANCO PRESTRESS COMPANY
CONTRACTOR Gilbert Texas Construction

FED.RD. DIV.NO.	STATE	PROJECT NO.	HWY. NO.
6	TEXAS	NH 92(50)M	U.S. 83/281

STATE DIST.NO.	COUNTY	CONTROL NO.	SECTION NO.	JOB NO.
21	HIDALGO	0039	17	097

COPYRIGHT 1989 BY
STRUCTURAL ENGINEERING ASSOCIATES, INC.
CONSULTING ENGINEERS, SAN ANTONIO, TEXAS

JOB NO.	DRAWN	CHECKED	DATE	SHEET/MARK NO.
92-018	C.A.J.	D.M.P.	6-16-92	IV-45
SEA JOB NO. 92-059H	FABRICATION SHEET			

327252

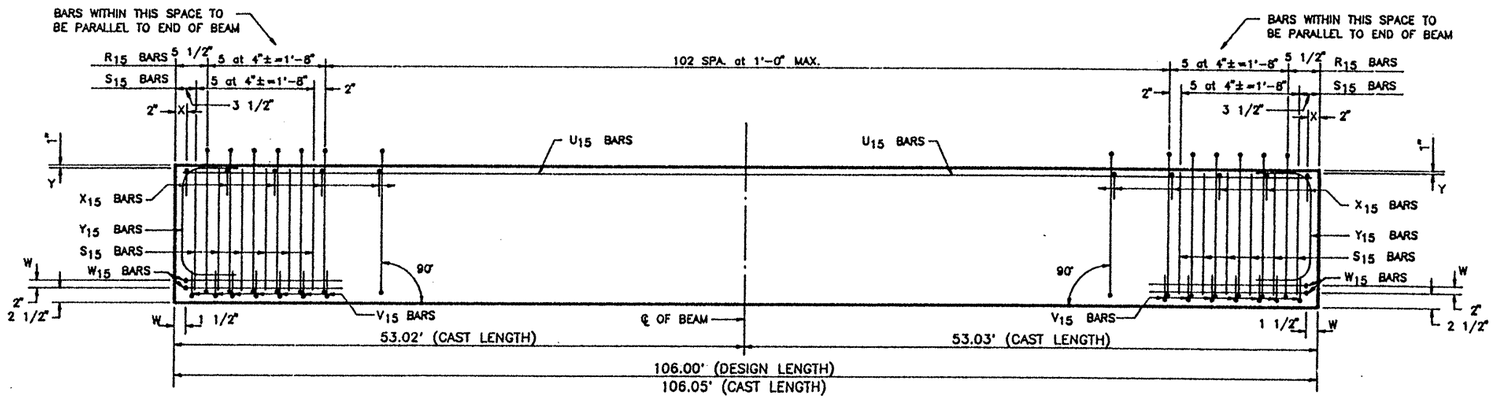

ELEVATION – REINFORCING STEEL

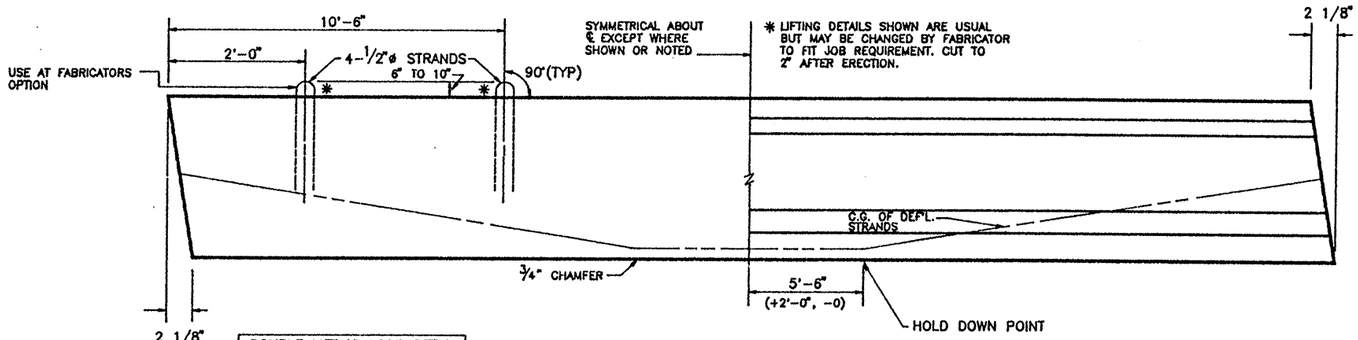

DOUBLE LIFTING LOOP DETAIL
(TYP. FOR BEAMS OVER 75')

BEAM ELEVATION
SEE PLAN VIEW FOR HOLE(S) LOCATION

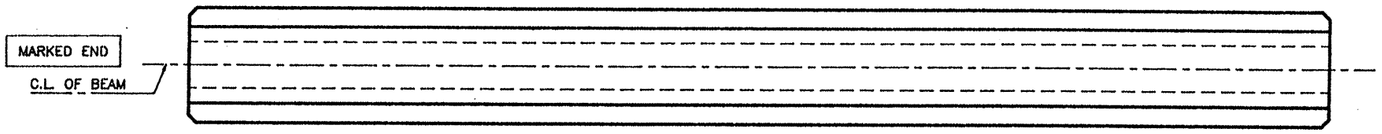

PLAN

TOP FINISH PANELS
SEE STANDARD SHEET S-"IV" FOR TOP FINISH AND OTHER NOTES AND DETAILS.

REINFORCING STEEL SCHEDULE				
BAR	QUANTITY PER BEAM	TOTAL QUANTITY	SIZE	LENGTH
R_{15}	113	452	#3	standard
X_{15}	109	436	#3	standard
Y_{15}	4	16	#6	standard
S_{15}	24	96	#7	standard
V_{15}	14	56	#3	standard
W_{15}	4	16	#5	standard
U_{15}	2	8	#5	105'-9"

TEXAS DEPARTMENT OF TRANSPORTATION
APPROVED
DIVISION OF BRIDGES AND STRUCTURES
AUG 05 1992
APPROVAL OF THIS DRAWING DOES NOT RELIEVE THE CONTRACTOR OF THE RESPONSIBILITY FOR THE CORRECTNESS OF DETAIL.

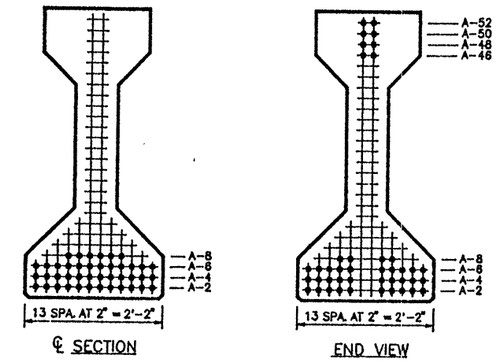

TYPE "IV" BEAM QUANTITY : 4

LO-LAX STRAND PATTERN		
NUMBER OF STRANDS	: 42 ~1/2" ø 270 K @ 31.00 K EACH	
NUMBER OF STRAIGHT STRANDS	: 34	
NUMBER OF DEFLECTED STRANDS	: 8 ❶ A – 52	
CONCRETE RELEASE STRENGTH	: 4756	PSI
CONCRETE DESIGN STRENGTH	: 5830	PSI
ECCENTRICITY ❶ ℄	: 20.18"	ECCENTRICITY ❶ END : 11.80"

DESIGN NO. : GpNsLR
TOTAL BEAM LENGTH OF THIS SHEET : 424.00'

MANCO PRESTRESS COMPANY
CONTRACTOR Gilbert Texas Construction

FED.RD. DIV.NO.	STATE	PROJECT NO.		HWY. NO.
6	TEXAS	NH 92(50)M		U.S. 83/281
STATE DIST.NO.	COUNTY	CONTROL NO.	SECTION NO.	JOB NO.
21	HIDALGO	0039	17	097

COPYRIGHT 1989 BY
STRUCTURAL ENGINEERING ASSOCIATES, INC.
CONSULTING ENGINEERS, SAN ANTONIO, TEXAS

JOB NO.	DRAWN	CHECKED	DATE	SHEET/MARK NO.
92-018	C.A.J.	D.M.P.	6-16-92	IV-46
SEA JOB NO. 92-059H	FABRICATION SHEET			

327252

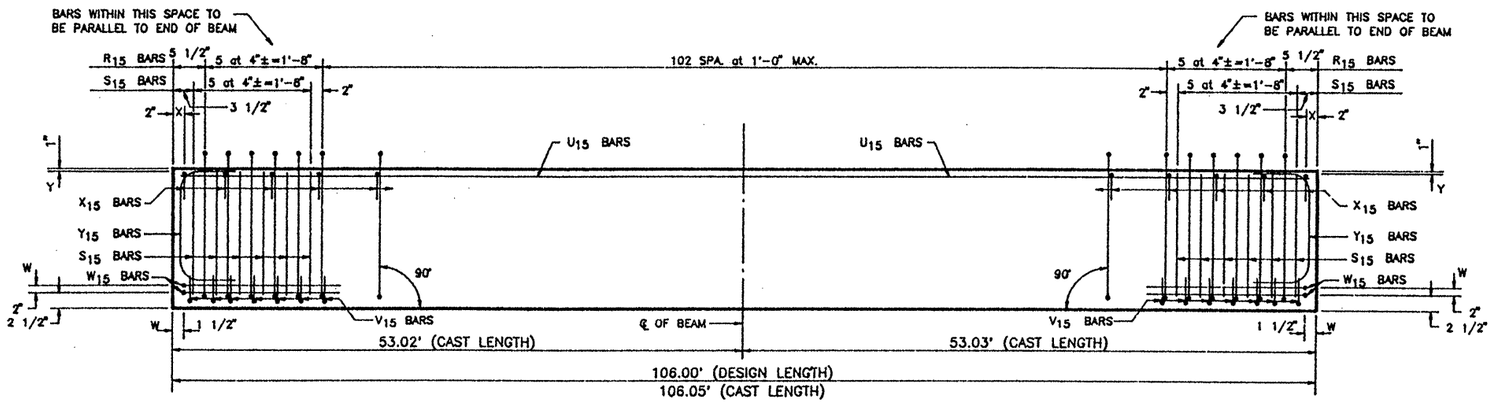

ELEVATION – REINFORCING STEEL

REINFORCING STEEL SCHEDULE				
BAR	QUANTITY PER BEAM	TOTAL QUANTITY	SIZE	LENGTH
R_{15}	113	113	#3	standard
X_{15}	109	109	#3	standard
Y_{15}	4	4	#6	standard
S_{15}	24	24	#7	standard
V_{15}	14	14	#3	standard
W_{15}	4	4	#5	standard
U_{15}	2	2	#5	105'-9"

TEXAS DEPARTMENT OF TRANSPORTATION
APPROVED
DIVISION OF BRIDGES AND STRUCTURES

AUG 05 1992

APPROVAL OF THIS DRAWING DOES NOT RELIEVE THE CONTRACTOR OF THE RESPONSIBILITY FOR THE CORRECTNESS OF DETAIL.

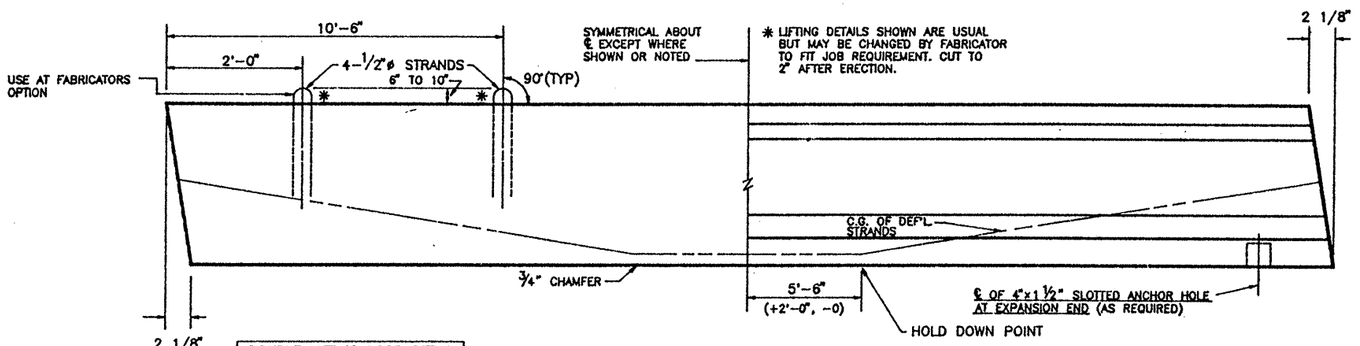

DOUBLE LIFTING LOOP DETAIL
(TYP. FOR BEAMS OVER 75')

BEAM ELEVATION
SEE PLAN VIEW FOR HOLE(S) LOCATION

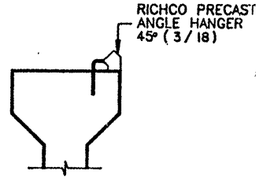

SECTION "A"

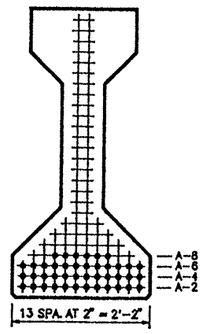

℄ SECTION

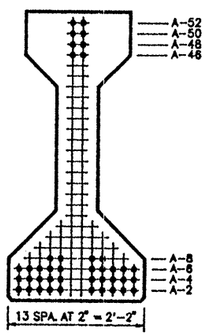

END VIEW

TYPE "IV" BEAM QUANTITY : 1

LO-LAX STRAND PATTERN		
NUMBER OF STRANDS	: 42 ~1/2" ø 270 K @ 31.00 K EACH	
NUMBER OF STRAIGHT STRANDS	: 34	
NUMBER OF DEFLECTED STRANDS	: 8 @ A – 52	
CONCRETE RELEASE STRENGTH	: 4756	PSI
CONCRETE DESIGN STRENGTH	: 5830	PSI
ECCENTRICITY @ ℄	: 20.18"	ECCENTRICITY @ END : 11.80"

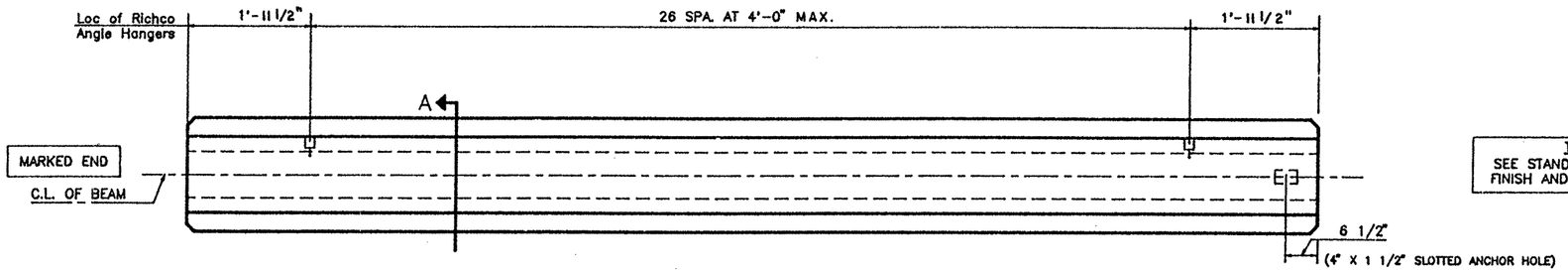

TOP FINISH PANELS
SEE STANDARD SHEET S-"IV" FOR TOP FINISH AND OTHER NOTES AND DETAILS.

FIXED END

EXPANSION END

PLAN

DESIGN NO. : GpNsLR
TOTAL BEAM LENGTH OF THIS SHEET : 106.00'

MANCO PRESTRESS COMPANY
CONTRACTOR Gilbert Texas Construction

FED.RD. DIV.NO.	STATE	PROJECT NO.	HWY. NO.
6	TEXAS	NH 92(50)M	U.S. 83/281

STATE DIST.NO.	COUNTY	CONTROL NO.	SECTION NO.	JOB NO.
21	HIDALGO	0039	17	097

COPYRIGHT 1989 BY
STRUCTURAL ENGINEERING ASSOCIATES, INC.
CONSULTING ENGINEERS, SAN ANTONIO, TEXAS

JOB NO.	DRAWN	CHECKED	DATE	SHEET/MARK NO.
92-018	C.A.J.	D.M.P.	6-16-92	IV-47
SEA JOB NO. 92-059H	FABRICATION SHEET			

327252

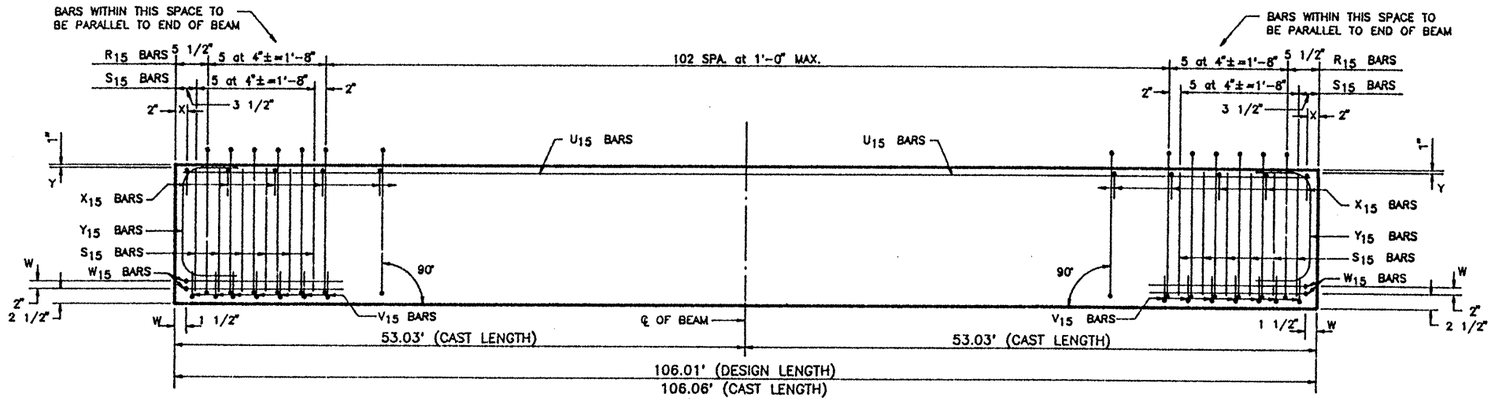

ELEVATION – REINFORCING STEEL

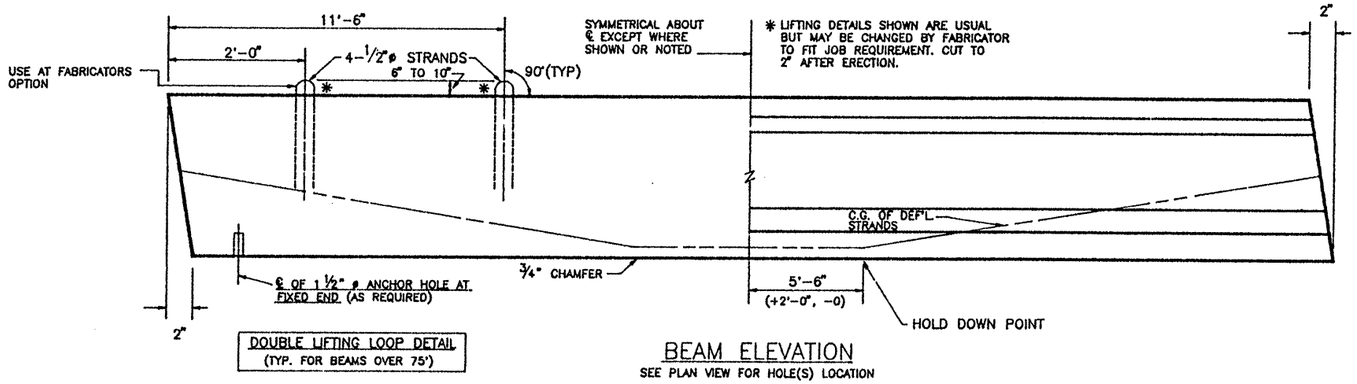

DOUBLE LIFTING LOOP DETAIL
(TYP. FOR BEAMS OVER 75')

BEAM ELEVATION
SEE PLAN VIEW FOR HOLE(S) LOCATION

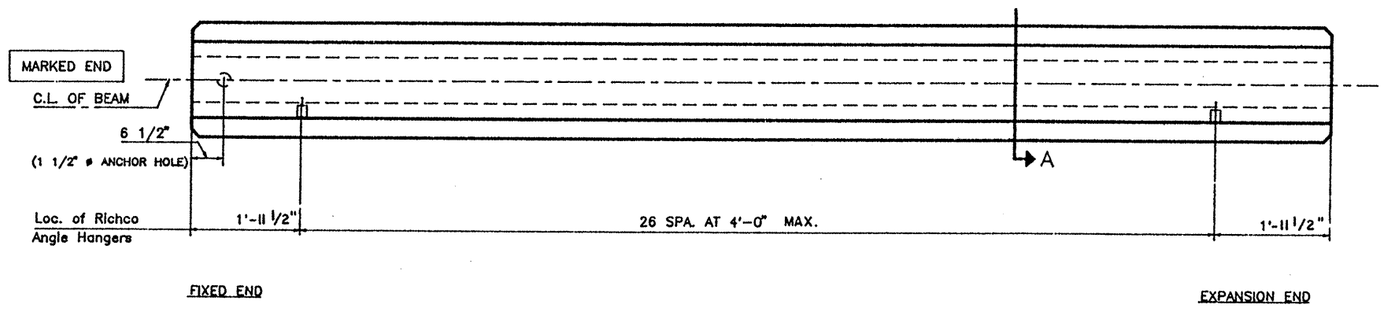

PLAN

TOP FINISH PANELS
SEE STANDARD SHEET S-"IV" FOR TOP FINISH AND OTHER NOTES AND DETAILS.

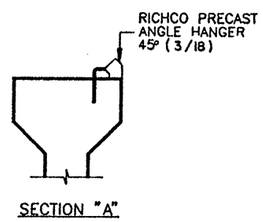

SECTION "A"

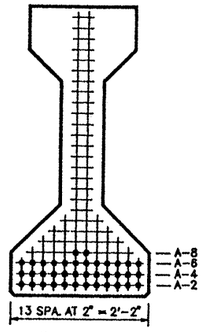

℄ SECTION

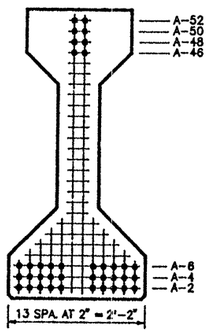

END VIEW

TYPE "IV" BEAM QUANTITY : 1

REINFORCING STEEL SCHEDULE				
BAR	QUANTITY PER BEAM	TOTAL QUANTITY	SIZE	LENGTH
R_{15}	113	113	#3	standard
X_{15}	109	109	#3	standard
Y_{15}	4	4	#6	standard
S_{15}	24	24	#7	standard
V_{15}	14	14	#3	standard
W_{15}	4	4	#5	standard
U_{15}	2	2	#5	105'-10"

TEXAS DEPARTMENT OF TRANSPORTATION
APPROVED
DIVISION OF BRIDGES AND STRUCTURES
AUG 05 1992
APPROVAL OF THIS DRAWING DOES NOT RELIEVE THE CONTRACTOR OF THE RESPONSIBILITY FOR THE CORRECTNESS OF DETAIL.

LO-LAX STRAND PATTERN		
NUMBER OF STRANDS : 38 ~1/2" ø 270 K @ 31.00 K EACH		
NUMBER OF STRAIGHT STRANDS	: 30	
NUMBER OF DEFLECTED STRANDS	: 8 @ A – 52	
CONCRETE RELEASE STRENGTH	: 4233	PSI
CONCRETE DESIGN STRENGTH	: 5599	PSI
ECCENTRICITY @ ℄ : 20.54"	ECCENTRICITY @ END : 11.28"	

DESIGN NO. : GpNsLR
TOTAL BEAM LENGTH OF THIS SHEET : 106.01'

MANCO PRESTRESS COMPANY
CONTRACTOR Gilbert Texas Construction

FED.RD. DIV.NO.	STATE	PROJECT NO.	HWY. NO.
6	TEXAS	NH 92(50)M	U.S. 83/281

STATE DIST.NO.	COUNTY	CONTROL NO.	SECTION NO.	JOB NO.
21	HIDALGO	0039	17	097

COPYRIGHT 1989 BY
STRUCTURAL ENGINEERING ASSOCIATES, INC.
CONSULTING ENGINEERS, SAN ANTONIO, TEXAS

JOB NO.	DRAWN	CHECKED	DATE	SHEET/MARK NO.
92-018	C.A.J.	D.M.P.	6-16-92	IV-48
SEA JOB NO. 92-059H	FABRICATION SHEET			

327252

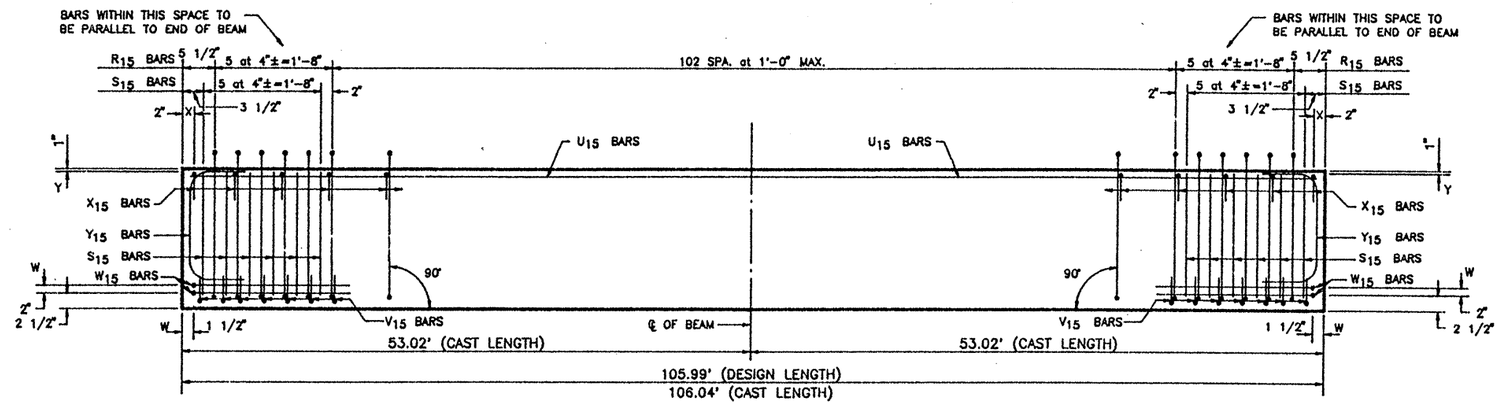

ELEVATION – REINFORCING STEEL

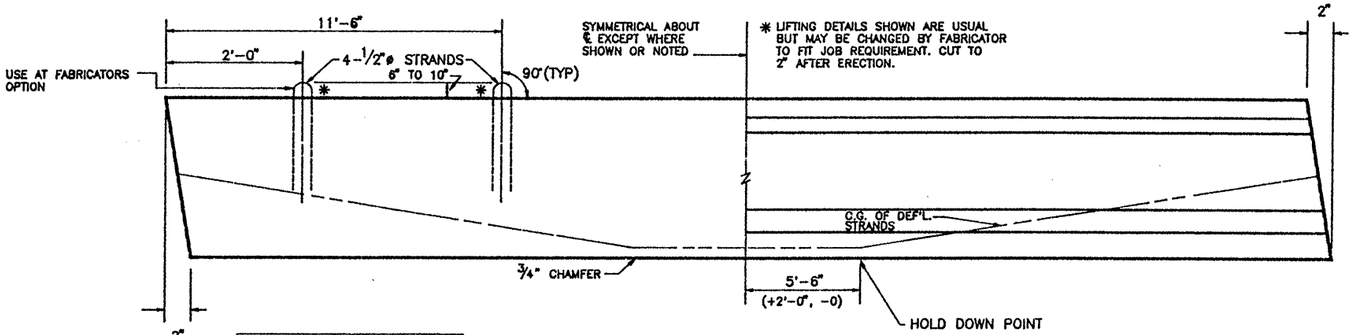

DOUBLE LIFTING LOOP DETAIL
(TYP. FOR BEAMS OVER 75')

BEAM ELEVATION
SEE PLAN VIEW FOR HOLE(S) LOCATION

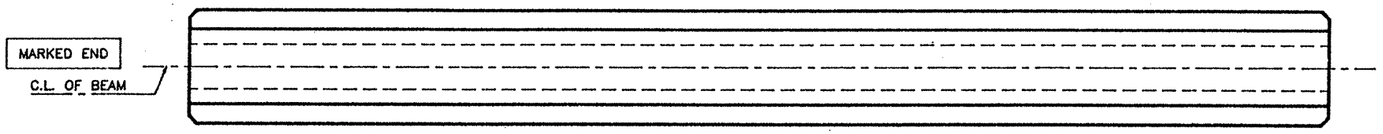

FIXED END

EXPANSION END

PLAN

TOP FINISH PANELS
SEE STANDARD SHEET S-"IV" FOR TOP FINISH AND OTHER NOTES AND DETAILS.

TEXAS DEPARTMENT OF TRANSPORTATION
APPROVED
DIVISION OF BRIDGES AND STRUCTURES

AUG 05 1992

APPROVAL OF THIS DRAWING DOES NOT RELIEVE THE CONTRACTOR OF THE RESPONSIBILITY FOR THE CORRECTNESS OF DETAIL.

REINFORCING STEEL SCHEDULE

BAR	QUANTITY PER BEAM	TOTAL QUANTITY	SIZE	LENGTH
R_{15}	113	565	#3	standard
X_{15}	109	545	#3	standard
Y_{15}	4	20	#6	standard
S_{15}	24	120	#7	standard
V_{15}	14	70	#3	standard
W_{15}	4	20	#5	standard
U_{15}	2	10	#5	105'-9"

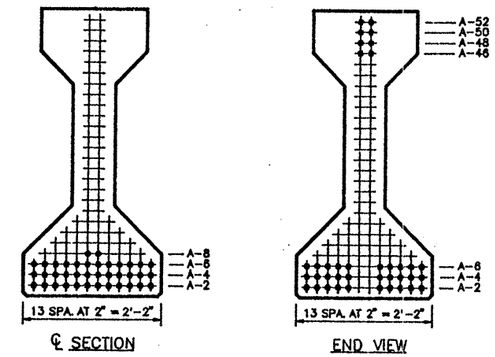

TYPE "IV" BEAM QUANTITY : 5

LO-LAX STRAND PATTERN		
NUMBER OF STRANDS : 38 ~1/2" ø 270 K @ 31.00 K EACH		
NUMBER OF STRAIGHT STRANDS	: 30	
NUMBER OF DEFLECTED STRANDS	: 8 @ A – 52	
CONCRETE RELEASE STRENGTH	: 4233	PSI
CONCRETE DESIGN STRENGTH	: 5599	PSI
ECCENTRICITY @ ℄ : 20.54"	ECCENTRICITY @ END : 11.28"	

DESIGN NO. : GpNsLR
TOTAL BEAM LENGTH OF THIS SHEET : 529.95'

MANCO PRESTRESS COMPANY

CONTRACTOR Gilbert Texas Construction

FED.RD. DIV.NO.	STATE	PROJECT NO.		HWY. NO.
6	TEXAS	NH 92(50)M		U.S. 83/281
STATE DIST.NO.	COUNTY	CONTROL NO.	SECTION NO.	JOB NO.
21	HIDALGO	0039	17	097

COPYRIGHT 1989 BY STRUCTURAL ENGINEERING ASSOCIATES, INC. CONSULTING ENGINEERS, SAN ANTONIO, TEXAS

JOB NO.	DRAWN	CHECKED	DATE	SHEET/MARK NO.
92-018	C.A.J.	D.M.P.	6-16-92	IV-49
SEA JOB NO. 92-059H	FABRICATION SHEET			

327252

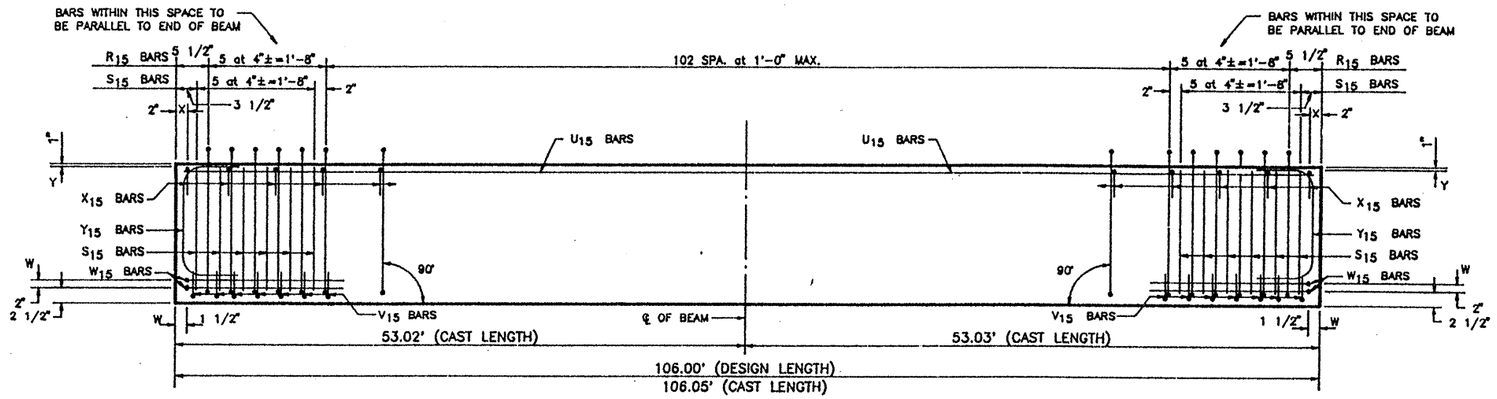

ELEVATION – REINFORCING STEEL

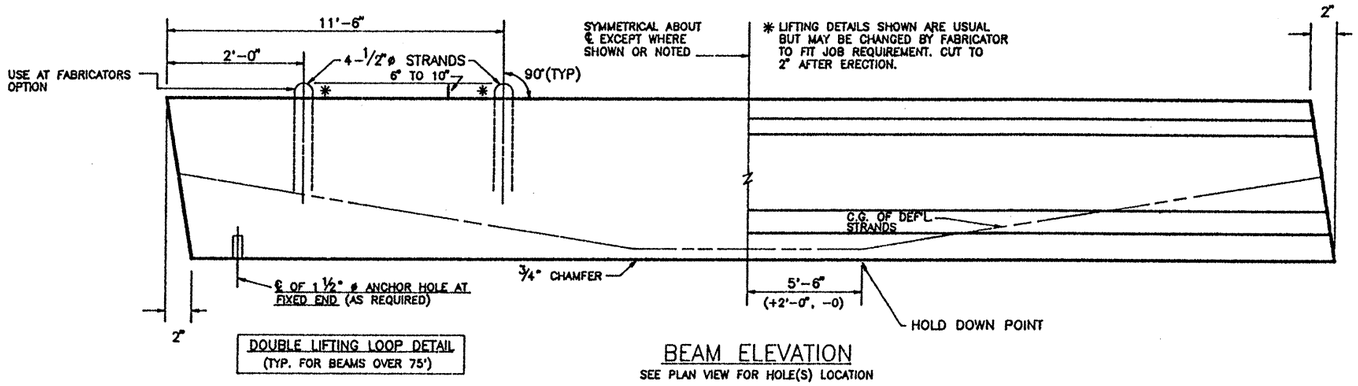

DOUBLE LIFTING LOOP DETAIL
(TYP. FOR BEAMS OVER 75')

BEAM ELEVATION
SEE PLAN VIEW FOR HOLE(S) LOCATION

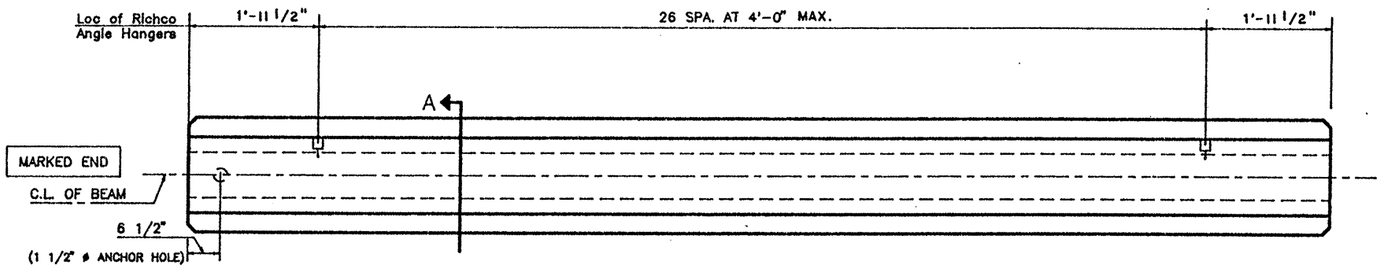

FIXED END

EXPANSION END

PLAN

TOP FINISH PANELS
SEE STANDARD SHEET S-"IV" FOR TOP FINISH AND OTHER NOTES AND DETAILS.

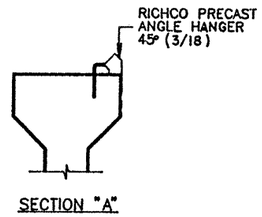

SECTION "A"

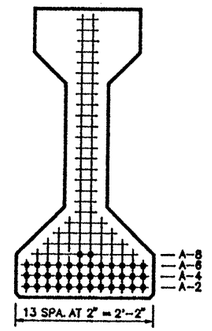

℄ SECTION

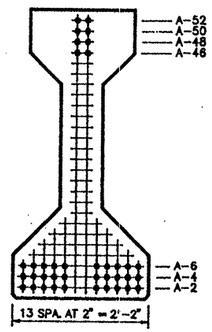

END VIEW

TYPE "IV" BEAM QUANTITY : 1

LO-LAX STRAND PATTERN		
NUMBER OF STRANDS : 38 ~1/2" ø 270 K @ 31.00 K EACH		
NUMBER OF STRAIGHT STRANDS	: 30	
NUMBER OF DEFLECTED STRANDS	: 8 @ A – 52	
CONCRETE RELEASE STRENGTH	: 4233	PSI
CONCRETE DESIGN STRENGTH	: 5599	PSI
ECCENTRICITY @ ℄ : 20.54"	ECCENTRICITY @ END : 11.28"	

DESIGN NO. : GpNsLR

TOTAL BEAM LENGTH OF THIS SHEET : 106.00'

REINFORCING STEEL SCHEDULE

BAR	QUANTITY PER BEAM	TOTAL QUANTITY	SIZE	LENGTH
R_{15}	113	113	#3	standard
X_{15}	109	109	#3	standard
Y_{15}	4	4	#6	standard
S_{15}	24	24	#7	standard
V_{15}	14	14	#3	standard
W_{15}	4	4	#5	standard
U_{15}	2	2	#5	105'-9"

TEXAS DEPARTMENT OF TRANSPORTATION
APPROVED
DIVISION OF BRIDGES AND STRUCTURES
AUG 05 1992
APPROVAL OF THIS DRAWING DOES NOT RELIEVE THE CONTRACTOR OF THE RESPONSIBILITY FOR THE CORRECTNESS OF DETAIL.

MANCO PRESTRESS COMPANY

CONTRACTOR Gilbert Texas Construction

FED.RD. DIV.NO.	STATE	PROJECT NO.			HWY. NO.
6	TEXAS	NH 92(50)M			U.S. 83/281
STATE DIST.NO.	COUNTY		CONTROL NO.	SECTION NO.	JOB NO.
21	HIDALGO		0039	17	097

COPYRIGHT 1989 BY STRUCTURAL ENGINEERING ASSOCIATES, INC. CONSULTING ENGINEERS, SAN ANTONIO, TEXAS

JOB NO.	DRAWN	CHECKED	DATE	SHEET/MARK NO.
92-018	C.A.J.	D.M.P.	6-16-92	IV-50
SEA JOB NO. 92-059H	FABRICATION SHEET			

327252

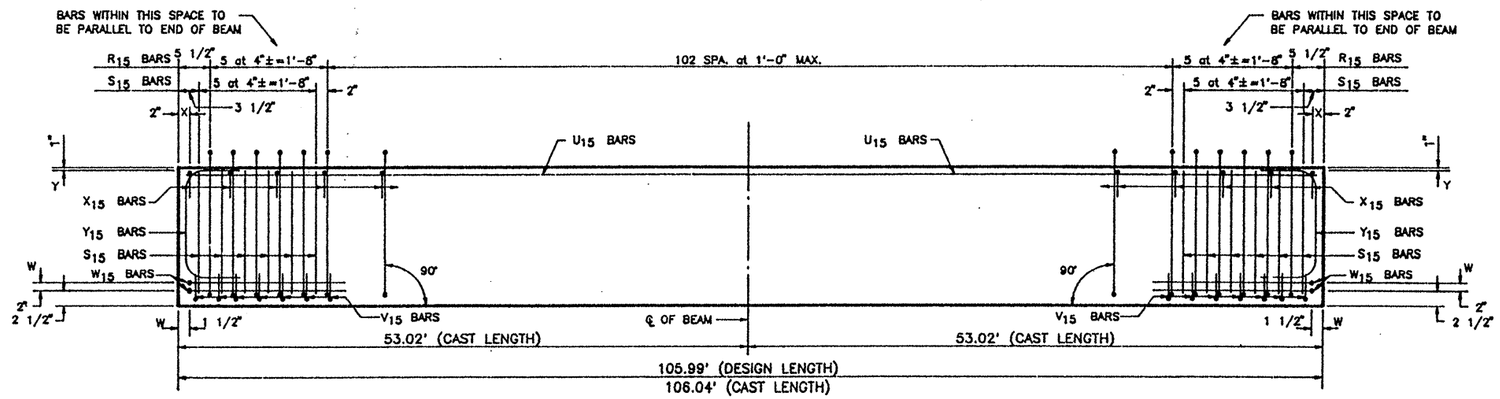

ELEVATION – REINFORCING STEEL

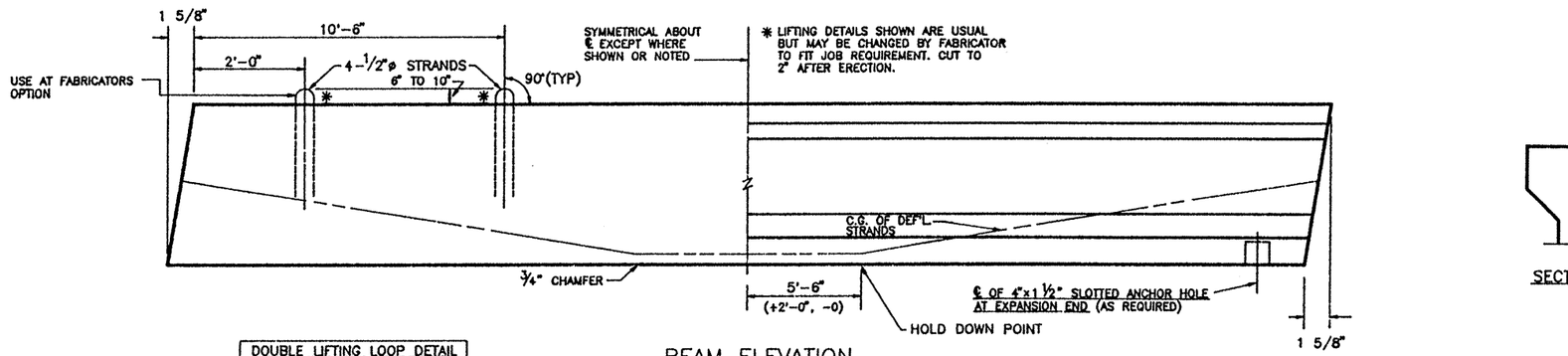

DOUBLE LIFTING LOOP DETAIL
(TYP. FOR BEAMS OVER 75')

BEAM ELEVATION
SEE PLAN VIEW FOR HOLE(S) LOCATION

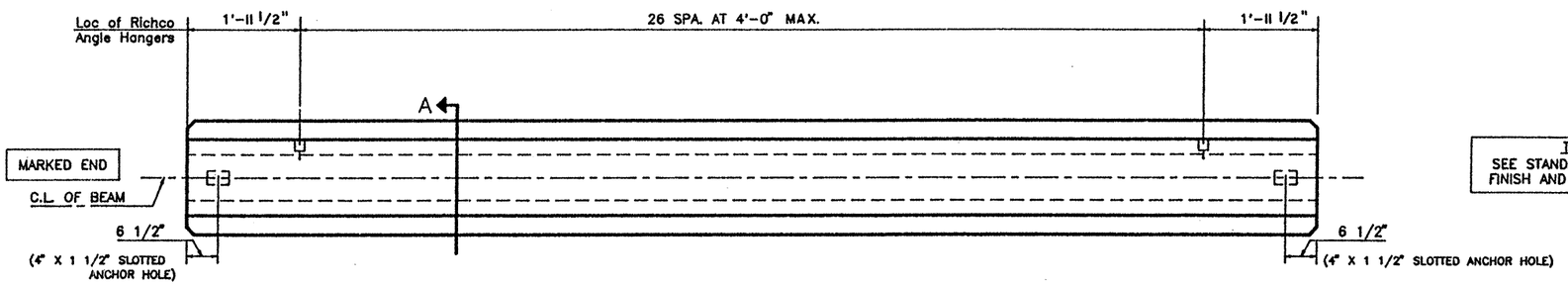

EXPANSION END

EXPANSION END

PLAN

TOP FINISH PANELS
SEE STANDARD SHEET S-"IV" FOR TOP FINISH AND OTHER NOTES AND DETAILS.

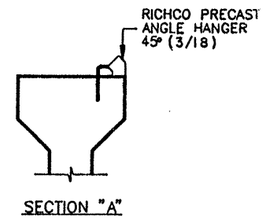

SECTION "A"

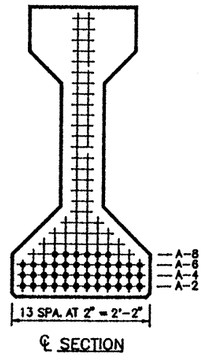

℄ SECTION

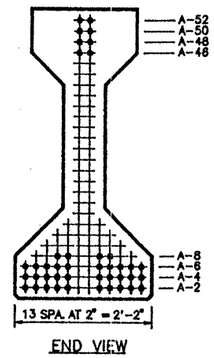

END VIEW

TYPE "IV" BEAM QUANTITY : 1

LO-LAX STRAND PATTERN		
NUMBER OF STRANDS	: 42 ~1/2" ø 270 K @ 31.00 K EACH	
NUMBER OF STRAIGHT STRANDS	: 34	
NUMBER OF DEFLECTED STRANDS	: 8 @ A – 52	
CONCRETE RELEASE STRENGTH	: 4756	PSI
CONCRETE DESIGN STRENGTH	: 5830	PSI
ECCENTRICITY @ ℄	: 20.18" ECCENTRICITY @ END	: 11.80"

DESIGN NO. : GpNsLR
TOTAL BEAM LENGTH OF THIS SHEET : 105.99'

REINFORCING STEEL SCHEDULE				
BAR	QUANTITY PER BEAM	TOTAL QUANTITY	SIZE	LENGTH
R_{15}	113	113	#3	standard
X_{15}	109	109	#3	standard
Y_{15}	4	4	#6	standard
S_{15}	24	24	#7	standard
V_{15}	14	14	#3	standard
W_{15}	4	4	#5	standard
U_{15}	2	2	#5	105'-9"

TEXAS DEPARTMENT OF TRANSPORTATION
APPROVED
DIVISION OF BRIDGES AND STRUCTURES
AUG 05 1992
APPROVAL OF THIS DRAWING DOES NOT RELIEVE THE CONTRACTOR OF THE RESPONSIBILITY FOR THE CORRECTNESS OF DETAIL.

MANCO PRESTRESS COMPANY

CONTRACTOR Gilbert Texas Construction

FED.RD. DIV.NO.	STATE	PROJECT NO.	HWY. NO.
6	TEXAS	NH 92(50)M	U.S. 83/281

STATE DIST.NO.	COUNTY	CONTROL NO.	SECTION NO.	JOB NO.
21	HIDALGO	0039	17	097

COPYRIGHT 1989 BY STRUCTURAL ENGINEERING ASSOCIATES, INC. CONSULTING ENGINEERS, SAN ANTONIO, TEXAS

JOB NO.	DRAWN	CHECKED	DATE	SHEET/MARK NO.
92-018	C.A.J.	D.M.P.	6-16-92	IV-51
SEA JOB NO. 92-059H	FABRICATION SHEET			

327252

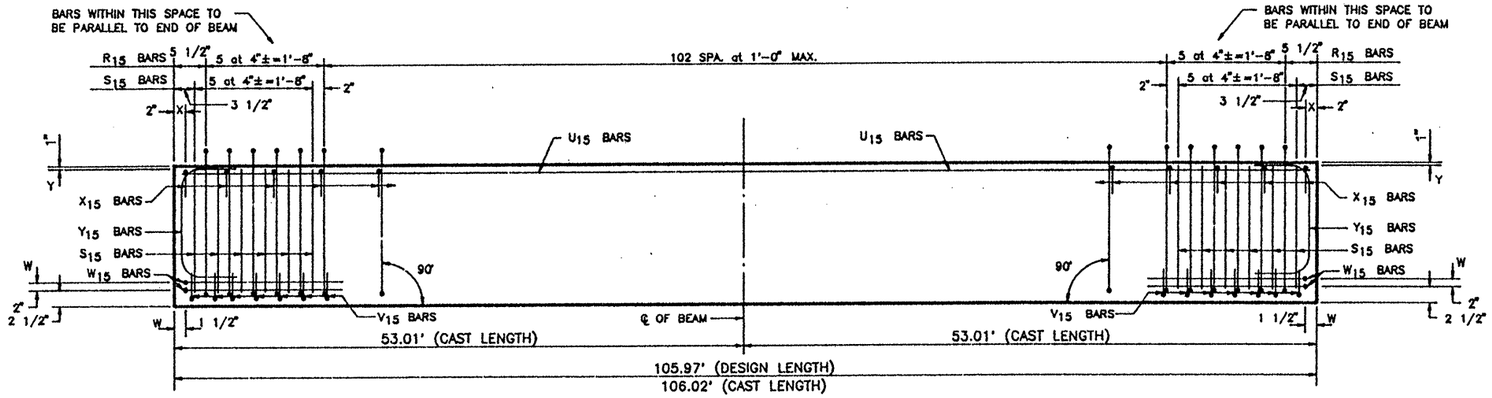

ELEVATION – REINFORCING STEEL

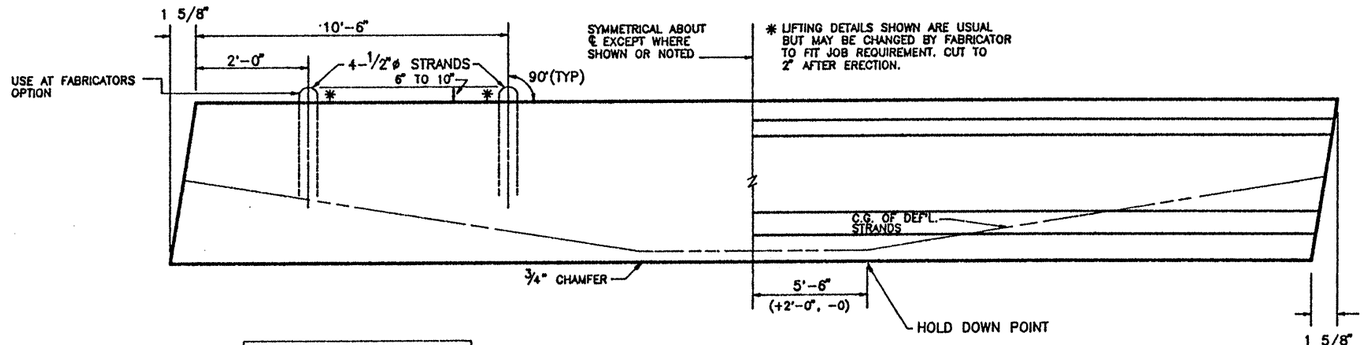

DOUBLE LIFTING LOOP DETAIL
(TYP. FOR BEAMS OVER 75')

BEAM ELEVATION
SEE PLAN VIEW FOR HOLE(S) LOCATION

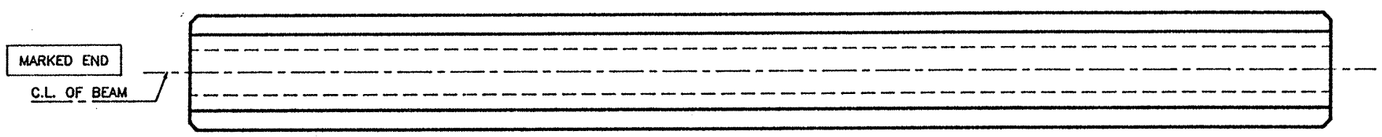

PLAN

TOP FINISH PANELS
SEE STANDARD SHEET S-"IV" FOR TOP FINISH AND OTHER NOTES AND DETAILS.

TEXAS DEPARTMENT OF TRANSPORTATION
APPROVED
DIVISION OF BRIDGES AND STRUCTURES
AUG 05 1992
APPROVAL OF THIS DRAWING DOES NOT RELIEVE THE CONTRACTOR OF THE RESPONSIBILITY FOR THE CORRECTNESS OF DETAIL.

REINFORCING STEEL SCHEDULE

BAR	QUANTITY PER BEAM	TOTAL QUANTITY	SIZE	LENGTH
R_{15}	113	565	#3	standard
X_{15}	109	545	#3	standard
Y_{15}	4	20	#6	standard
S_{15}	24	120	#7	standard
V_{15}	14	70	#3	standard
W_{15}	4	20	#5	standard
U_{15}	2	10	#5	105'-9"

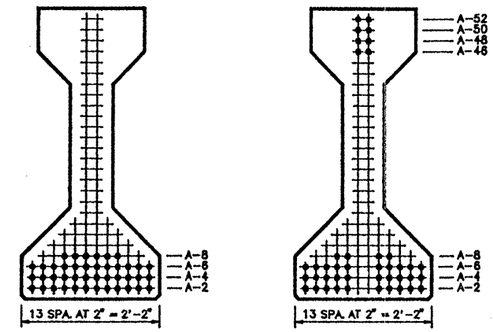

TYPE "IV" BEAM QUANTITY : 5

LO-LAX STRAND PATTERN		
NUMBER OF STRANDS	: 42 ~1/2" ø 270 K @ 31.00 K EACH	
NUMBER OF STRAIGHT STRANDS	: 34	
NUMBER OF DEFLECTED STRANDS	: 8 @ A – 52	
CONCRETE RELEASE STRENGTH	: 4756	PSI
CONCRETE DESIGN STRENGTH	: 5830	PSI
ECCENTRICITY @ ℄	: 20.18"	ECCENTRICITY @ END : 11.80"

DESIGN NO. : GpNsLR
TOTAL BEAM LENGTH OF THIS SHEET : 529.85'

MANCO PRESTRESS COMPANY

CONTRACTOR Gilbert Texas Construction

FED.RD. DIV.NO.	STATE	PROJECT NO.	HWY. NO.
6	TEXAS	NH 92(50)M	U.S. 83/281

STATE DIST.NO.	COUNTY	CONTROL NO.	SECTION NO.	JOB NO.
21	HIDALGO	0039	17	097

COPYRIGHT 1989 BY
STRUCTURAL ENGINEERING ASSOCIATES, INC.
CONSULTING ENGINEERS, SAN ANTONIO, TEXAS

JOB NO.	DRAWN	CHECKED	DATE	SHEET/MARK NO.
92-018	C.A.J.	D.M.P.	6-16-91	IV-52
SEA JOB NO. 92-059H	FABRICATION SHEET			

327252

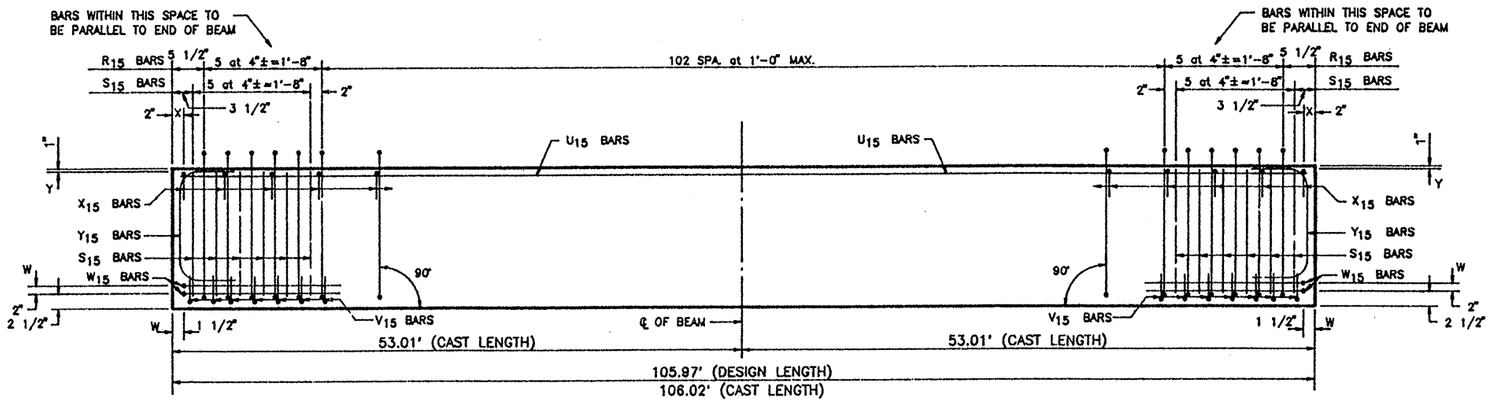

ELEVATION – REINFORCING STEEL

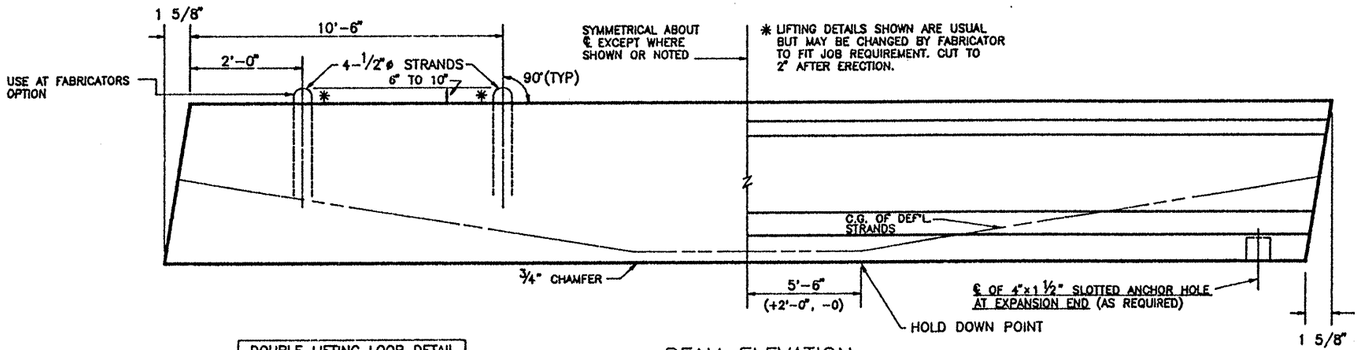

DOUBLE LIFTING LOOP DETAIL
(TYP. FOR BEAMS OVER 75')

BEAM ELEVATION
SEE PLAN VIEW FOR HOLE(S) LOCATION

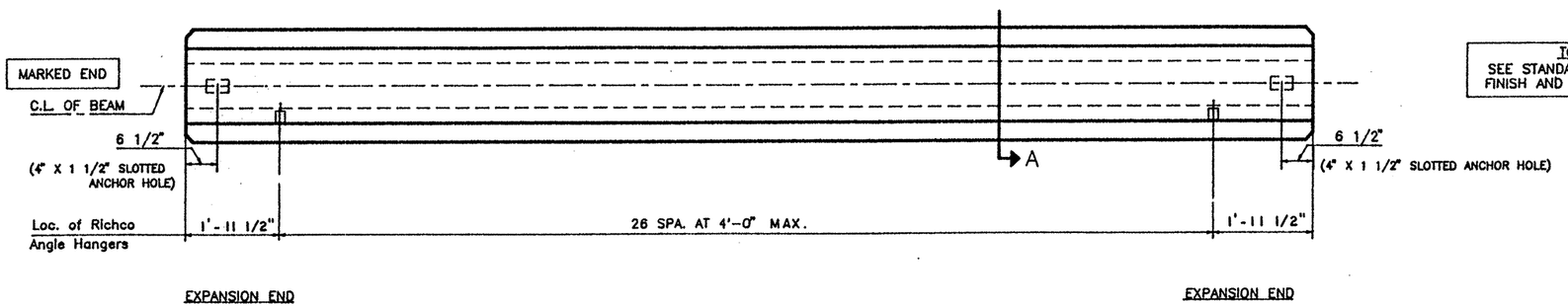

PLAN

TOP FINISH PANELS
SEE STANDARD SHEET S-"IV" FOR TOP FINISH AND OTHER NOTES AND DETAILS.

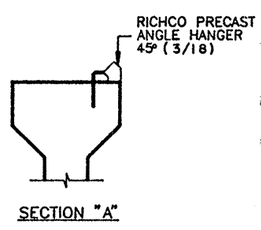

SECTION "A"

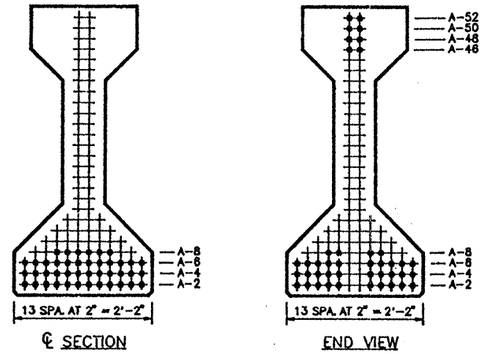

℄ SECTION

END VIEW

TYPE "IV" BEAM QUANTITY : 1

LO-LAX STRAND PATTERN		
NUMBER OF STRANDS	: 42 ~1/2" ø 270 K @ 31.00 K EACH	
NUMBER OF STRAIGHT STRANDS	: 34	
NUMBER OF DEFLECTED STRANDS	: 8 @ A – 52	
CONCRETE RELEASE STRENGTH	: 4756	PSI
CONCRETE DESIGN STRENGTH	: 5830	PSI
ECCENTRICITY @ ℄	: 20.18"	ECCENTRICITY @ END : 11.80"

DESIGN NO. : GpNsLR
TOTAL BEAM LENGTH OF THIS SHEET : 105.97'

REINFORCING STEEL SCHEDULE

BAR	QUANTITY PER BEAM	TOTAL QUANTITY	SIZE	LENGTH
R_{15}	113	113	#3	standard
X_{15}	109	109	#3	standard
Y_{15}	4	4	#6	standard
S_{15}	24	24	#7	standard
V_{15}	14	14	#3	standard
W_{15}	4	4	#5	standard
U_{15}	2	2	#5	105'-9"

TEXAS DEPARTMENT OF TRANSPORTATION
APPROVED
DIVISION OF BRIDGES AND STRUCTURES
AUG 05 1992
APPROVAL OF THIS DRAWING DOES NOT RELIEVE THE CONTRACTOR OF THE RESPONSIBILITY FOR THE CORRECTNESS OF DETAIL.

MANCO PRESTRESS COMPANY

CONTRACTOR Gilbert Texas Construction

FED.RD. DIV.NO.	STATE	PROJECT NO.	HWY. NO.
6	TEXAS	NH 92(50)M	U.S. 83/281

STATE DIST.NO.	COUNTY	CONTROL NO.	SECTION NO.	JOB NO.
21	HIDALGO	0039	17	097

COPYRIGHT 1989 BY
STRUCTURAL ENGINEERING ASSOCIATES, INC.
CONSULTING ENGINEERS, SAN ANTONIO, TEXAS

JOB NO.	DRAWN	CHECKED	DATE	SHEET/MARK NO.
92-018	C.A.J.	D.M.P.	6-16-92	IV-53
SEA JOB NO. 92-059H	FABRICATION SHEET			

327252

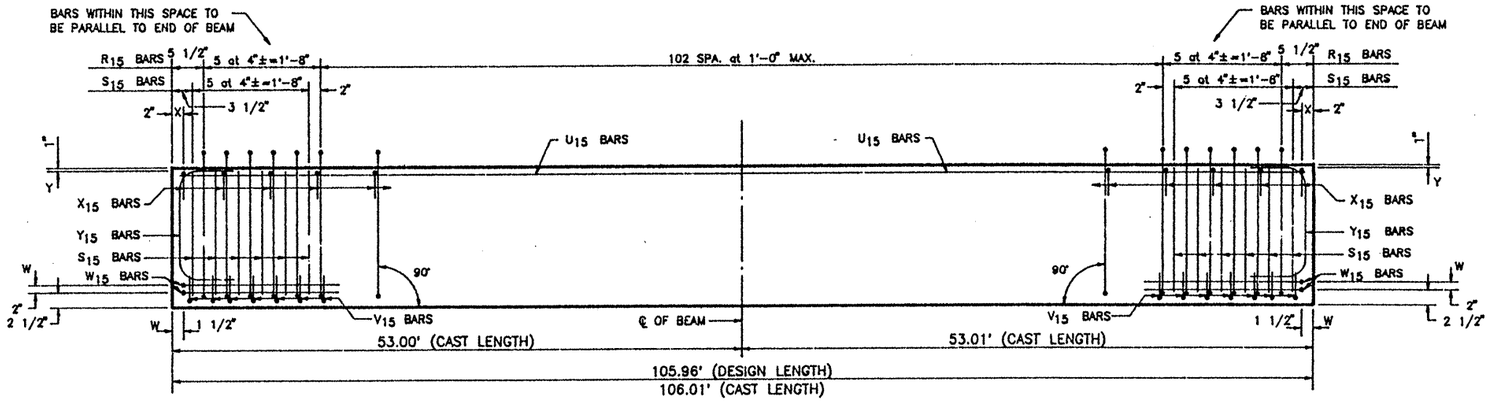

ELEVATION – REINFORCING STEEL

REINFORCING STEEL SCHEDULE				
BAR	QUANTITY PER BEAM	TOTAL QUANTITY	SIZE	LENGTH
R_{15}	113	113	#3	standard
X_{15}	109	109	#3	standard
Y_{15}	4	4	#6	standard
S_{15}	24	24	#7	standard
V_{15}	14	14	#3	standard
W_{15}	4	4	#5	standard
U_{15}	2	2	#5	105'-9"

TEXAS DEPARTMENT OF TRANSPORTATION
APPROVED
DIVISION OF BRIDGES AND STRUCTURES
AUG 05 1992
APPROVAL OF THIS DRAWING DOES NOT RELIEVE THE CONTRACTOR OF THE RESPONSIBILITY FOR THE CORRECTNESS OF DETAIL.

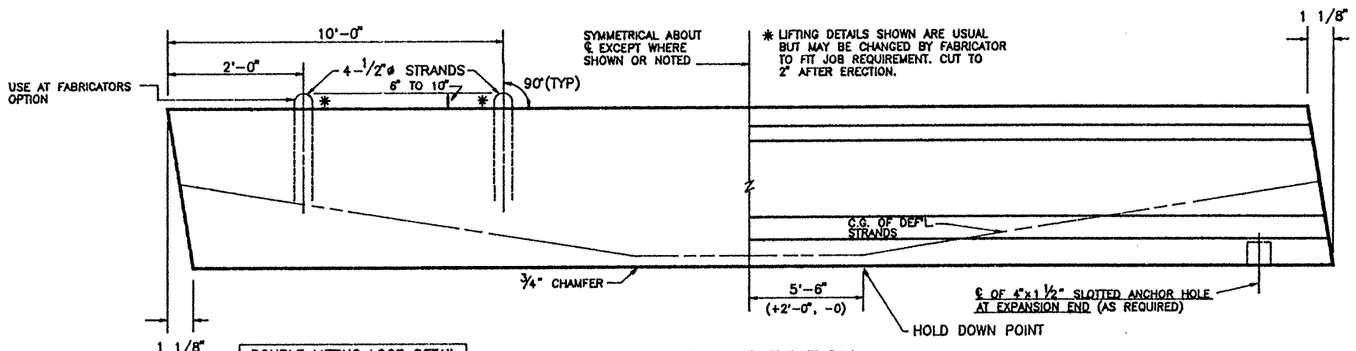

DOUBLE LIFTING LOOP DETAIL
(TYP. FOR BEAMS OVER 75')

BEAM ELEVATION
SEE PLAN VIEW FOR HOLE(S) LOCATION

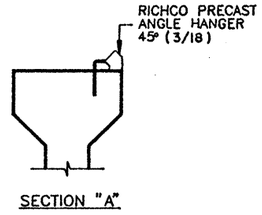

SECTION "A"

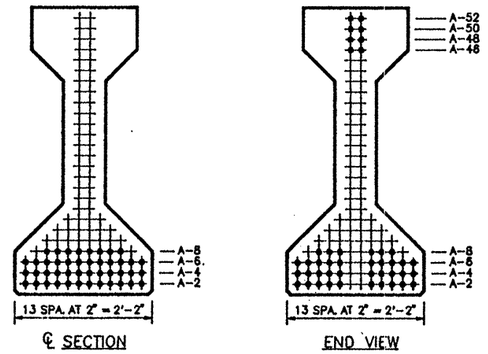

℄ SECTION

END VIEW

TYPE "IV" BEAM QUANTITY : 1

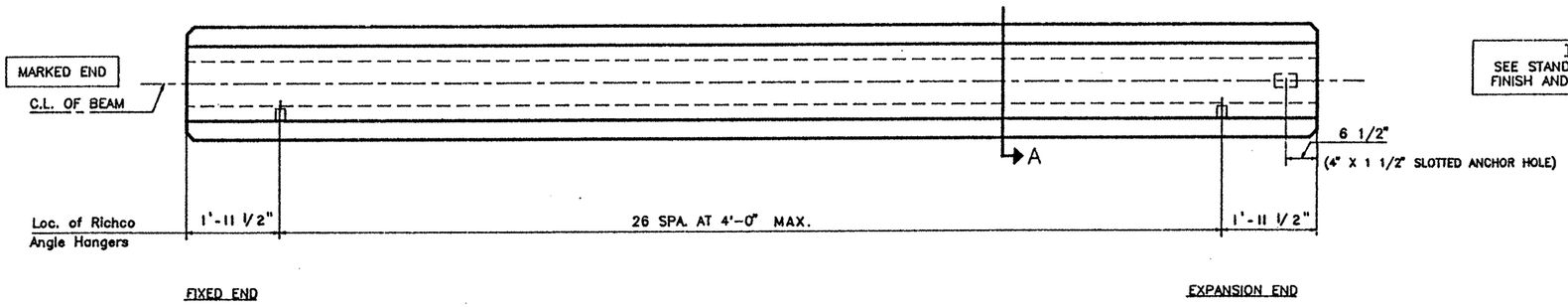

PLAN

TOP FINISH PANELS
SEE STANDARD SHEET S-"IV" FOR TOP FINISH AND OTHER NOTES AND DETAILS.

LO-LAX STRAND PATTERN		
NUMBER OF STRANDS	: 44 ~1/2" ø 270 K @ 31.00 K EACH	
NUMBER OF STRAIGHT STRANDS	: 36	
NUMBER OF DEFLECTED STRANDS	: 8 @ A – 52	
CONCRETE RELEASE STRENGTH	: 5017	PSI
CONCRETE DESIGN STRENGTH	: 5944	PSI
ECCENTRICITY @ ℄	: 20.02"	ECCENTRICITY @ END : 12.02"

DESIGN NO. : GpNsLR
TOTAL BEAM LENGTH OF THIS SHEET : 105.96'

MANCO PRESTRESS COMPANY				
CONTRACTOR Gilbert Texas Construction				
FED.RD. DIV.NO.	STATE	PROJECT NO.		HWY. NO.
6	TEXAS	NH 92(50)M		U.S. 83/281
STATE DIST.NO.	COUNTY	CONTROL NO.	SECTION NO.	JOB NO.
21	HIDALGO	0039	17	097

COPYRIGHT 1989 BY
STRUCTURAL ENGINEERING ASSOCIATES, INC.
CONSULTING ENGINEERS, SAN ANTONIO, TEXAS

JOB NO.	DRAWN	CHECKED	DATE	SHEET/MARK NO.
92-018	C.A.J.	D.M.P.	6-16-92	IV-54
SEA JOB NO. 92-059H	FABRICATION SHEET			

327252

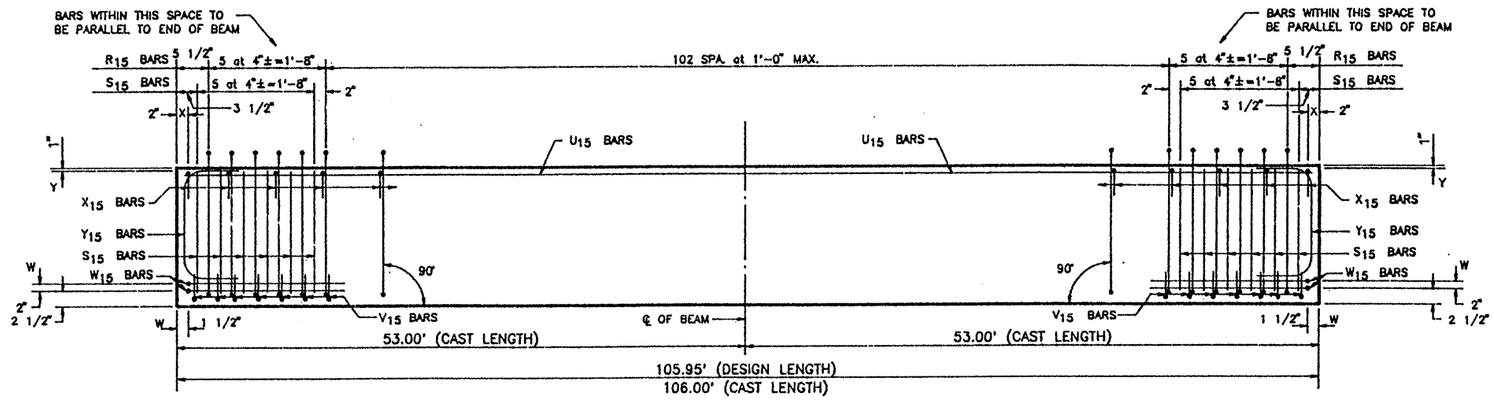

ELEVATION – REINFORCING STEEL

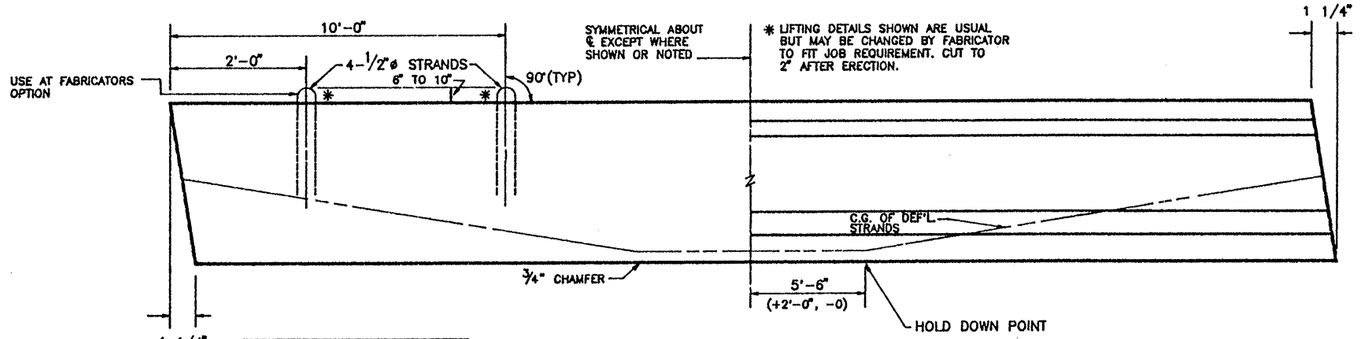

DOUBLE LIFTING LOOP DETAIL
(TYP. FOR BEAMS OVER 75')

BEAM ELEVATION
SEE PLAN VIEW FOR HOLE(S) LOCATION

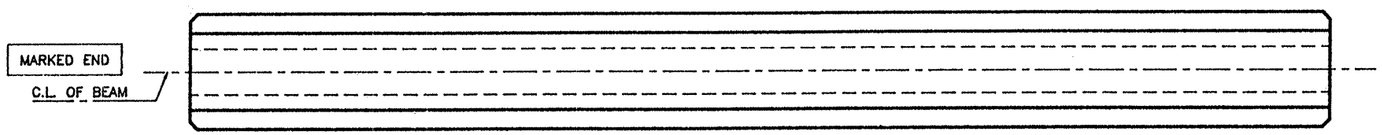

PLAN

TOP FINISH PANELS
SEE STANDARD SHEET S-"IV" FOR TOP FINISH AND OTHER NOTES AND DETAILS.

TEXAS DEPARTMENT OF TRANSPORTATION
APPROVED
DIVISION OF BRIDGES AND STRUCTURES
AUG 05 1992
APPROVAL OF THIS DRAWING DOES NOT RELIEVE THE CONTRACTOR OF THE RESPONSIBILITY FOR THE CORRECTNESS OF DETAIL.

REINFORCING STEEL SCHEDULE

BAR	QUANTITY PER BEAM	TOTAL QUANTITY	SIZE	LENGTH
R_{15}	113	565	#3	standard
X_{15}	109	545	#3	standard
Y_{15}	4	20	#6	standard
S_{15}	24	120	#7	standard
V_{15}	14	70	#3	standard
W_{15}	4	20	#5	standard
U_{15}	2	10	#5	105'-9"

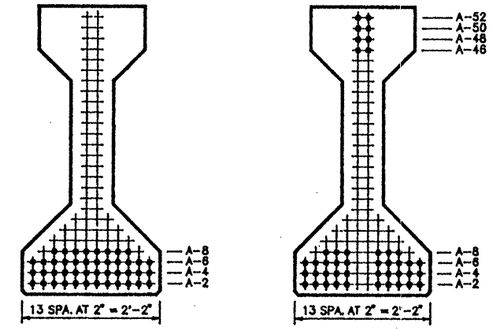

TYPE "IV" BEAM QUANTITY : 5

LO-LAX STRAND PATTERN		
NUMBER OF STRANDS : 44 ~1/2" ø 270 K @ 31.00 K EACH		
NUMBER OF STRAIGHT STRANDS	: 36	
NUMBER OF DEFLECTED STRANDS	: 8 @ A – 52	
CONCRETE RELEASE STRENGTH	: 5017	PSI
CONCRETE DESIGN STRENGTH	: 5944	PSI
ECCENTRICITY @ ℄ : 20.02"	ECCENTRICITY @ END : 12.02"	

DESIGN NO. : GpNsLR
TOTAL BEAM LENGTH OF THIS SHEET : 529.75'

MANCO PRESTRESS COMPANY

CONTRACTOR Gilbert Texas Construction

FED.RD. DIV.NO.	STATE	PROJECT NO.	HWY. NO.
6	TEXAS	NH 92(50)M	U.S. 83/281

STATE DIST.NO.	COUNTY	CONTROL NO.	SECTION NO.	JOB NO.
21	HIDALGO	0039	17	097

COPYRIGHT 1989 BY
STRUCTURAL ENGINEERING ASSOCIATES, INC.
CONSULTING ENGINEERS, SAN ANTONIO, TEXAS

JOB NO.	DRAWN	CHECKED	DATE	SHEET/MARK NO.
92-018	C.A.J.	D.M.P.	6-16-92	IV-55
SEA JOB NO. 92-059H	FABRICATION SHEET			

327252

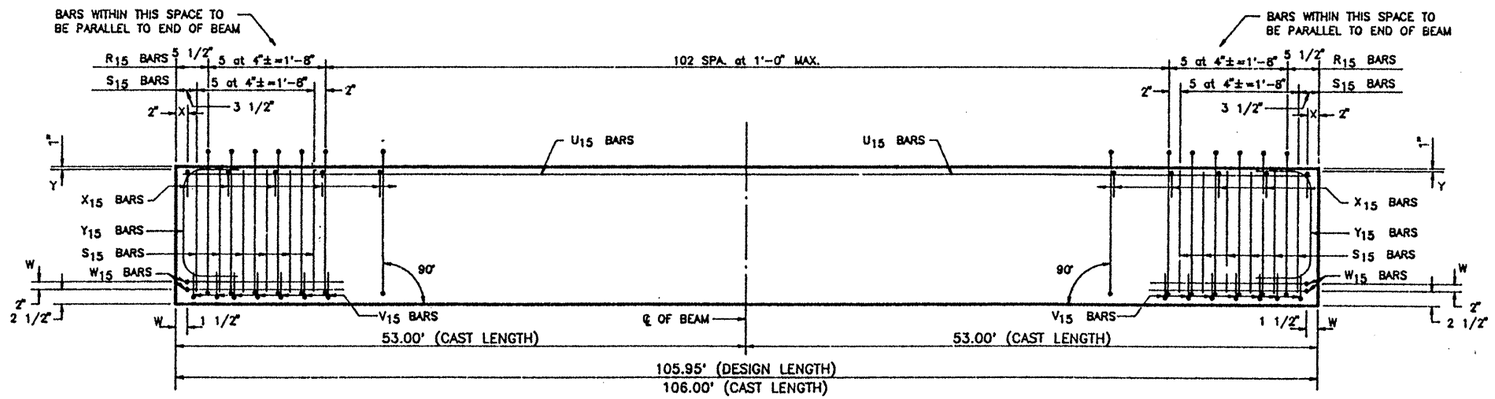

ELEVATION – REINFORCING STEEL

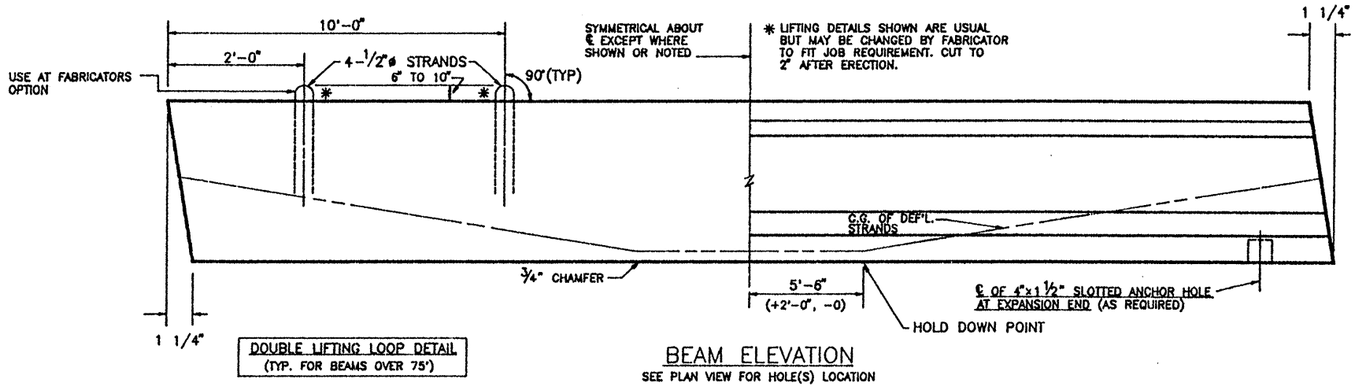

DOUBLE LIFTING LOOP DETAIL
(TYP. FOR BEAMS OVER 75')

BEAM ELEVATION
SEE PLAN VIEW FOR HOLE(S) LOCATION

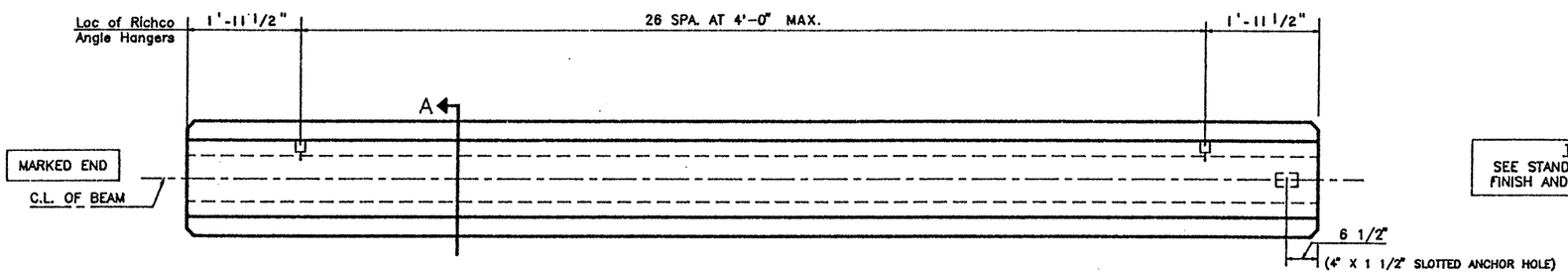

FIXED END

EXPANSION END

PLAN

TOP FINISH PANELS
SEE STANDARD SHEET S-"IV" FOR TOP FINISH AND OTHER NOTES AND DETAILS.

REINFORCING STEEL SCHEDULE

BAR	QUANTITY PER BEAM	TOTAL QUANTITY	SIZE	LENGTH
R_{15}	113	113	#3	standard
X_{15}	109	109	#3	standard
Y_{15}	4	4	#6	standard
S_{15}	24	24	#7	standard
V_{15}	14	14	#3	standard
W_{15}	4	4	#5	standard
U_{15}	2	2	#5	105'-9"

TEXAS DEPARTMENT OF TRANSPORTATION
APPROVED
DIVISION OF BRIDGES AND STRUCTURES
AUG 05 1992
APPROVAL OF THIS DRAWING DOES NOT RELIEVE THE CONTRACTOR OF THE RESPONSIBILITY FOR THE CORRECTNESS OF DETAIL.

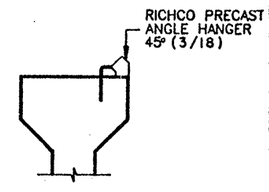

SECTION "A"

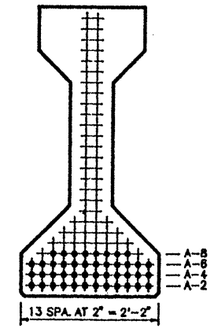

℄ SECTION

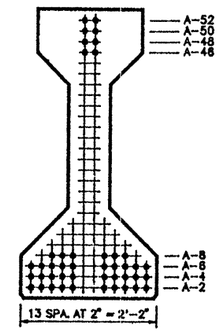

END VIEW

TYPE "IV" BEAM QUANTITY : 1

LO-LAX STRAND PATTERN		
NUMBER OF STRANDS	: 44 ~1/2" ø 270 K @ 31.00 K EACH	
NUMBER OF STRAIGHT STRANDS	: 36	
NUMBER OF DEFLECTED STRANDS	: 8 @ A – 52	
CONCRETE RELEASE STRENGTH	: 5017	PSI
CONCRETE DESIGN STRENGTH	: 5944	PSI
ECCENTRICITY @ ℄ : 20.02"	ECCENTRICITY @ END : 12.02"	

DESIGN NO. : GpNsLR
TOTAL BEAM LENGTH OF THIS SHEET : 105.95'

MANCO PRESTRESS COMPANY
CONTRACTOR Gilbert Texas Construction

FED.RD. DIV.NO.	STATE	PROJECT NO.	HWY. NO.
6	TEXAS	NH 92(50)M	U.S. 83/281

STATE DIST.NO.	COUNTY	CONTROL NO.	SECTION NO.	JOB NO.
21	HIDALGO	0039	17	097

COPYRIGHT 1989 BY STRUCTURAL ENGINEERING ASSOCIATES, INC. CONSULTING ENGINEERS, SAN ANTONIO, TEXAS

JOB NO.	DRAWN	CHECKED	DATE	SHEET/MARK NO.
92-018	C.A.J.	D.M.P.	6-16-92	IV-56
SEA JOB NO. 92-059H	FABRICATION SHEET			

327252

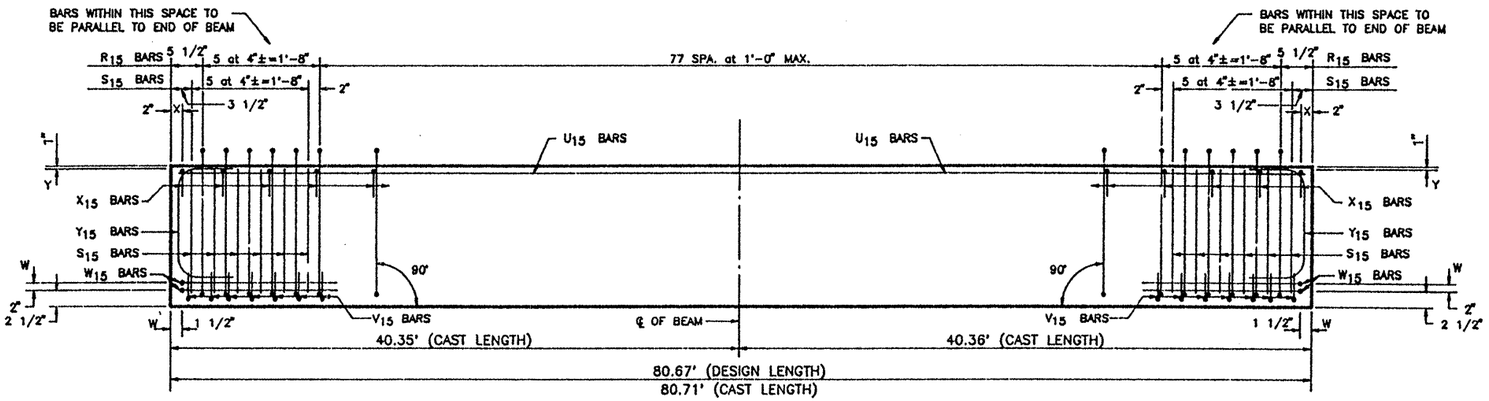

ELEVATION – REINFORCING STEEL

REINFORCING STEEL SCHEDULE				
BAR	QUANTITY PER BEAM	TOTAL QUANTITY	SIZE	LENGTH
R_{15}	88	88	#3	standard
X_{15}	84	84	#3	standard
Y_{15}	4	4	#6	standard
S_{15}	24	24	#7	standard
V_{15}	14	14	#3	standard
W_{15}	4	4	#5	standard
U_{15}	2	2	#5	80'-5"

TEXAS DEPARTMENT OF TRANSPORTATION
APPROVED
DIVISION OF BRIDGES AND STRUCTURES
AUG 05 1992
APPROVAL OF THIS DRAWING DOES NOT RELIEVE THE CONTRACTOR OF THE RESPONSIBILITY FOR THE CORRECTNESS OF DETAIL.

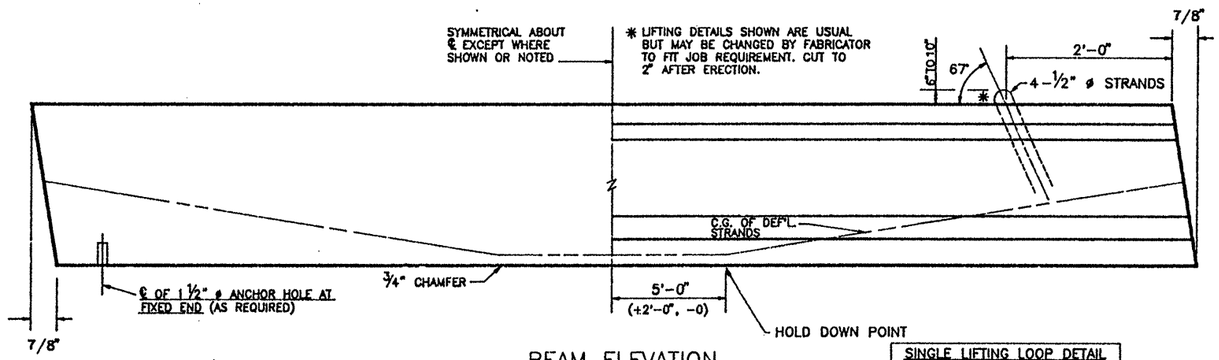

BEAM ELEVATION
SEE PLAN VIEW FOR HOLE(S) LOCATION

SINGLE LIFTING LOOP DETAIL

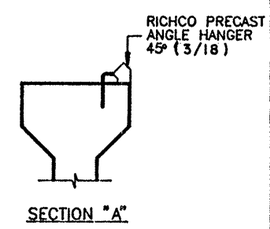

SECTION "A"

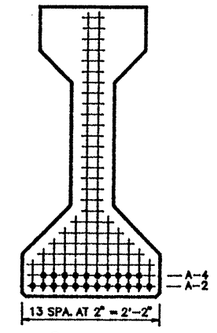

℄ SECTION

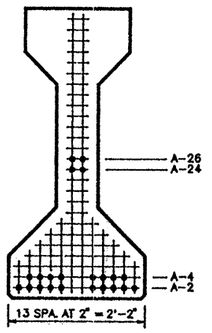

END VIEW

TYPE "IV" BEAM QUANTITY : 1

LO-LAX STRAND PATTERN		
NUMBER OF STRANDS	: 22 ~1/2" ø 270 K @ 31.00 K EACH	
NUMBER OF STRAIGHT STRANDS	: 18	
NUMBER OF DEFLECTED STRANDS	: 4 @ A – 26	
CONCRETE RELEASE STRENGTH	: 4000	PSI
CONCRETE DESIGN STRENGTH	: 5000	PSI
ECCENTRICITY @ ℄	: 21.84"	ECCENTRICITY @ END : 17.84"

DESIGN NO. : GpNsLR
TOTAL BEAM LENGTH OF THIS SHEET : 80.67'

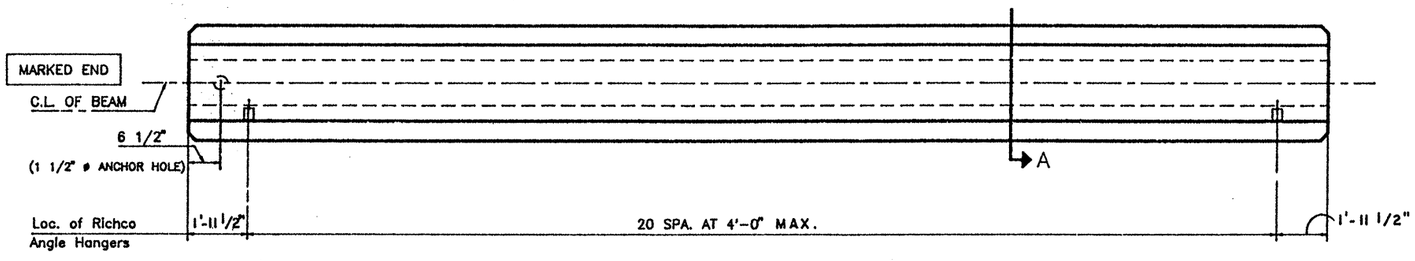

PLAN

TOP FINISH PANELS
SEE STANDARD SHEET S-"IV" FOR TOP FINISH AND OTHER NOTES AND DETAILS.

MANCO PRESTRESS COMPANY				
CONTRACTOR Gilbert Texas Construction				
FED.RD. DIV.NO.	STATE	PROJECT NO.		HWY. NO.
6	TEXAS	NH 92(50)M		U.S. 83/281
STATE DIST.NO.	COUNTY	CONTROL NO.	SECTION NO.	JOB NO.
21	HIDALGO	0039	17	097

COPYRIGHT 1989 BY
STRUCTURAL ENGINEERING ASSOCIATES, INC.
CONSULTING ENGINEERS, SAN ANTONIO, TEXAS

JOB NO.	DRAWN	CHECKED	DATE	SHEET/MARK NO.
92-018	C.A.J.	D.M.P.	6-16-92	IV-57
SEA JOB NO. 92-059H	FABRICATION SHEET			

327252

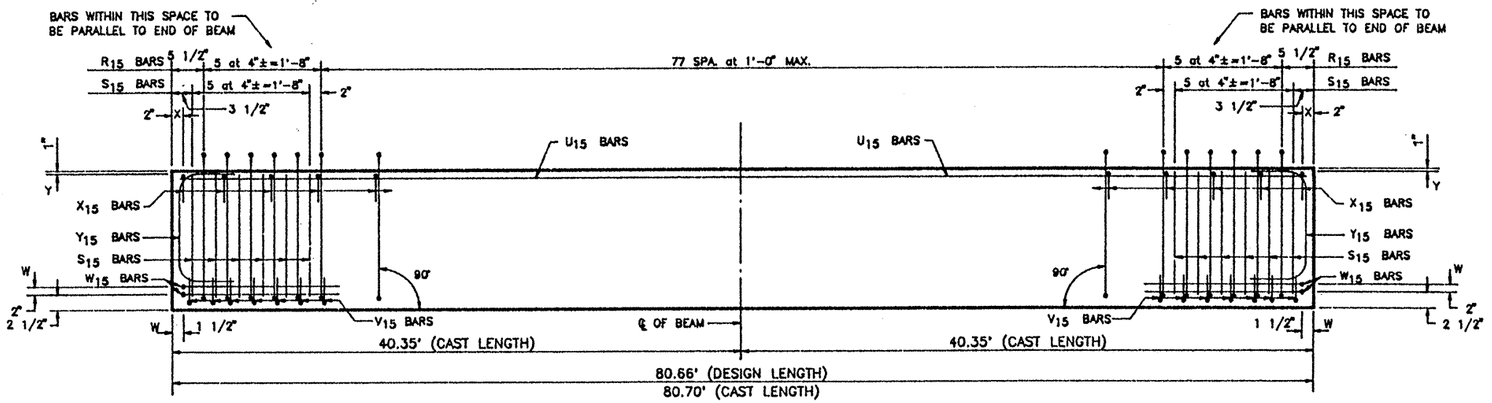

ELEVATION – REINFORCING STEEL

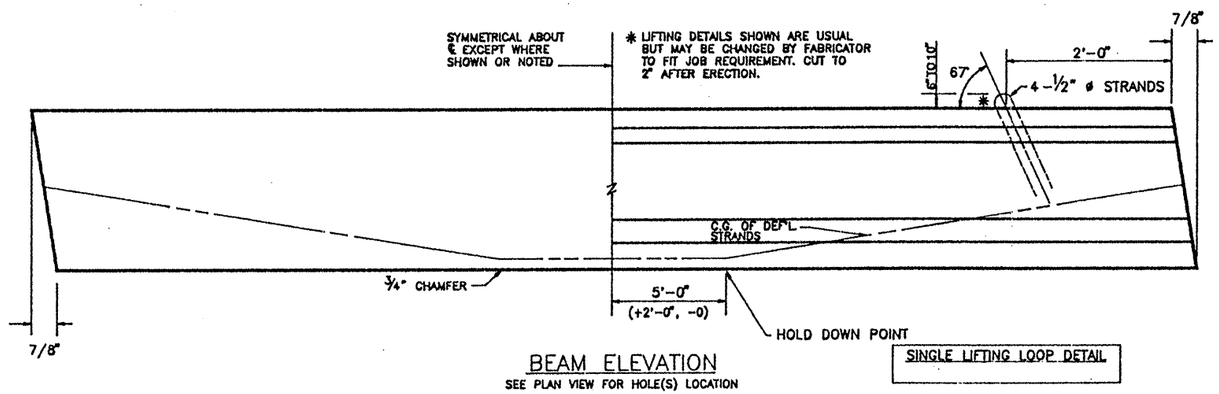

BEAM ELEVATION

SEE PLAN VIEW FOR HOLE(S) LOCATION

SINGLE LIFTING LOOP DETAIL

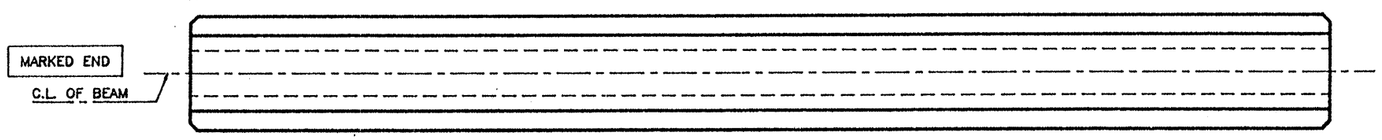

PLAN

TEXAS DEPARTMENT OF TRANSPORTATION
APPROVED
DIVISION OF BRIDGES AND STRUCTURES

AUG 05 1992

APPROVAL OF THIS DRAWING DOES NOT RELIEVE THE CONTRACTOR OF THE RESPONSIBILITY FOR THE CORRECTNESS OF DETAIL.

REINFORCING STEEL SCHEDULE

BAR	QUANTITY PER BEAM	TOTAL QUANTITY	SIZE	LENGTH
R_{15}	88	528	#3	standard
X_{15}	84	504	#3	standard
Y_{15}	4	24	#6	standard
S_{15}	24	144	#7	standard
V_{15}	14	84	#3	standard
W_{15}	4	24	#5	standard
U_{15}	2	12	#5	80'-5"

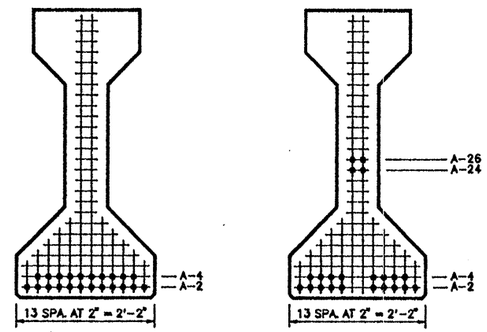

TYPE "IV" BEAM QUANTITY : 6

LO-LAX STRAND PATTERN		
NUMBER OF STRANDS	: 22 ~1/2" ø 270 K @ 31.00 K EACH	
NUMBER OF STRAIGHT STRANDS	: 18	
NUMBER OF DEFLECTED STRANDS	: 4 @ A – 26	
CONCRETE RELEASE STRENGTH	: 4000	PSI
CONCRETE DESIGN STRENGTH	: 5000	PSI
ECCENTRICITY @ ℄ : 21.84"	ECCENTRICITY @ END : 17.84"	

TOP FINISH PANELS
SEE STANDARD SHEET S--"IV" FOR TOP FINISH AND OTHER NOTES AND DETAILS.

DESIGN NO. : GpNsLR

TOTAL BEAM LENGTH OF THIS SHEET : 483.96'

MANCO PRESTRESS COMPANY

CONTRACTOR Gilbert Texas Construction

FED.RD. DIV.NO.	STATE	PROJECT NO.	HWY. NO.
6	TEXAS	NH 92(50)M	U.S. 83/281

STATE DIST.NO.	COUNTY	CONTROL NO.	SECTION NO.	JOB NO.
21	HIDALGO	0039	17	097

COPYRIGHT 1989 BY
STRUCTURAL ENGINEERING ASSOCIATES, INC.
CONSULTING ENGINEERS, SAN ANTONIO, TEXAS

JOB NO.	DRAWN	CHECKED	DATE	SHEET/MARK NO.
92-018	C.A.J.	D.M.P.	6-16-92	IV-58
SEA JOB NO. 92-059H	FABRICATION SHEET			

327252

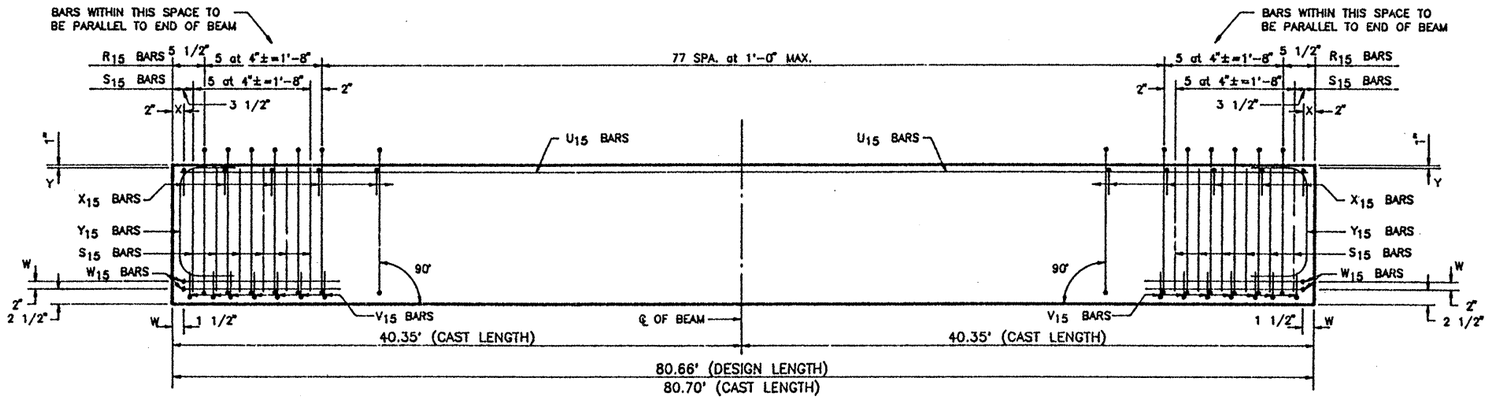

ELEVATION – REINFORCING STEEL

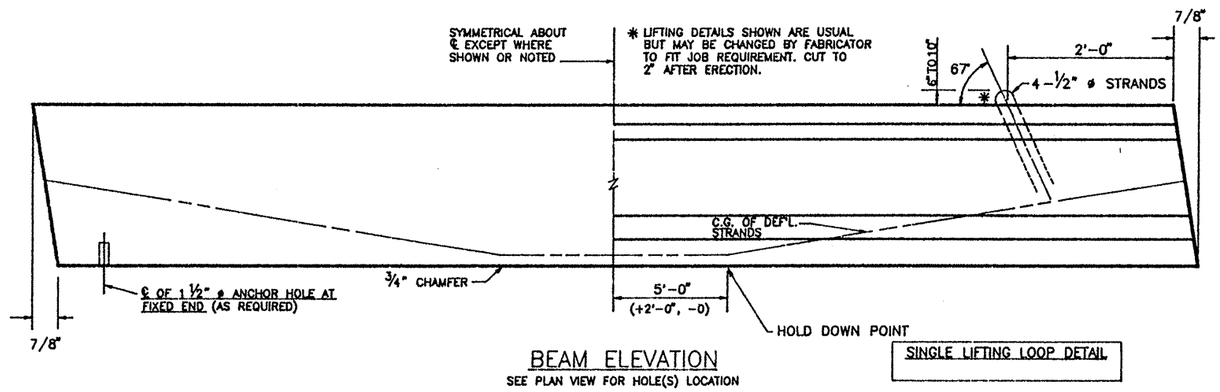

BEAM ELEVATION

SEE PLAN VIEW FOR HOLE(S) LOCATION

SINGLE LIFTING LOOP DETAIL

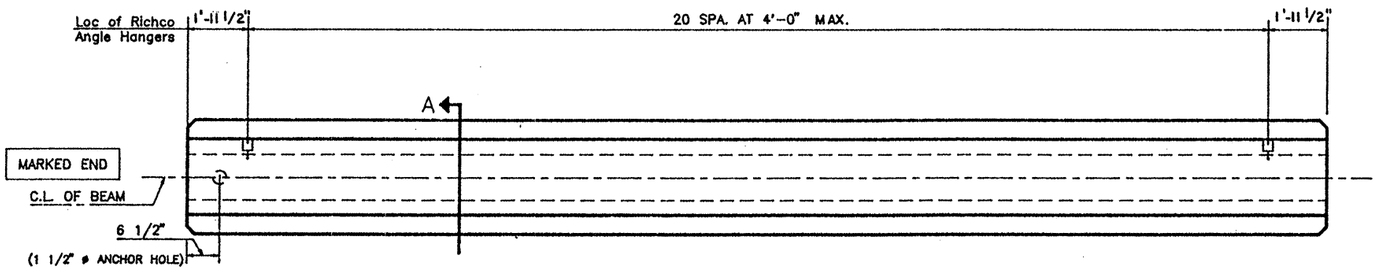

FIXED END

EXPANSION END

PLAN

TEXAS DEPARTMENT OF TRANSPORTATION
APPROVED
DIVISION OF BRIDGES AND STRUCTURES
AUG 05 1992
APPROVAL OF THIS DRAWING DOES NOT RELIEVE THE CONTRACTOR OF THE RESPONSIBILITY FOR THE CORRECTNESS OF DETAIL.

REINFORCING STEEL SCHEDULE

BAR	QUANTITY PER BEAM	TOTAL QUANTITY	SIZE	LENGTH
R_{15}	88	88	#3	standard
X_{15}	84	84	#3	standard
Y_{15}	4	4	#6	standard
S_{15}	24	24	#7	standard
V_{15}	14	14	#3	standard
W_{15}	4	4	#5	standard
U_{15}	2	2	#5	80'-5"

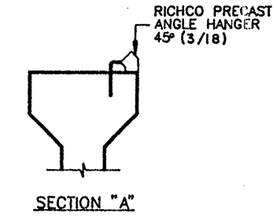

SECTION "A"

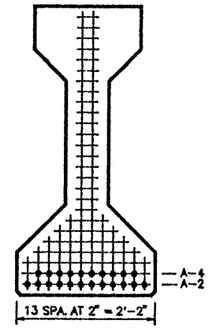

℄ SECTION

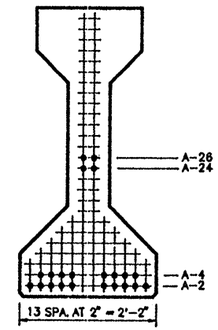

END VIEW

TYPE "IV" BEAM QUANTITY : 1

LO–LAX STRAND PATTERN		
NUMBER OF STRANDS	: 22 ~ 1/2" ø 270 K @ 31.00 K EACH	
NUMBER OF STRAIGHT STRANDS	: 18	
NUMBER OF DEFLECTED STRANDS	: 4 @ A – 26	
CONCRETE RELEASE STRENGTH	: 4000	PSI
CONCRETE DESIGN STRENGTH	: 5000	PSI
ECCENTRICITY @ ℄	: 21.84"	ECCENTRICITY @ END : 17.84"

TOP FINISH PANELS
SEE STANDARD SHEET S–"IV" FOR TOP FINISH AND OTHER NOTES AND DETAILS.

DESIGN NO. : GpNsLR
TOTAL BEAM LENGTH OF THIS SHEET : 80.66'

MANCO PRESTRESS COMPANY

CONTRACTOR Gilbert Texas Construction

FED.RD. DIV.NO.	STATE	PROJECT NO.	HWY. NO.
6	TEXAS	NH 92(50)M	U.S. 83/281

STATE DIST.NO.	COUNTY	CONTROL NO.	SECTION NO.	JOB NO.
21	HIDALGO	0039	17	097

COPYRIGHT 1989 BY
STRUCTURAL ENGINEERING ASSOCIATES, INC.
CONSULTING ENGINEERS, SAN ANTONIO, TEXAS

JOB NO.	DRAWN	CHECKED	DATE	SHEET/MARK NO.
92–018	C.A.J.	D.M.P.	6-16-92	IV–59
SEA JOB NO. 92–059H	FABRICATION SHEET			

327252

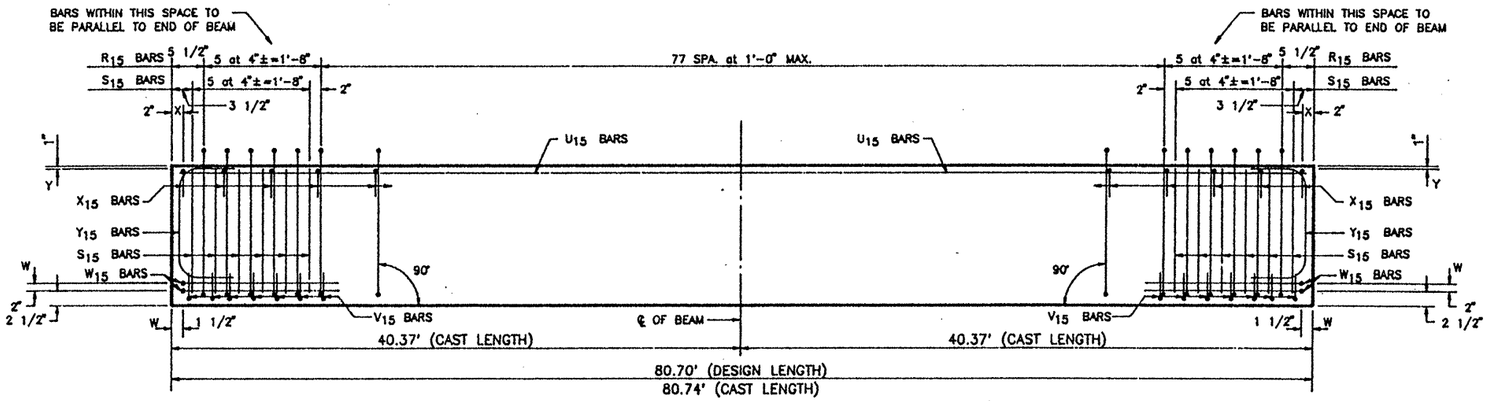

ELEVATION – REINFORCING STEEL

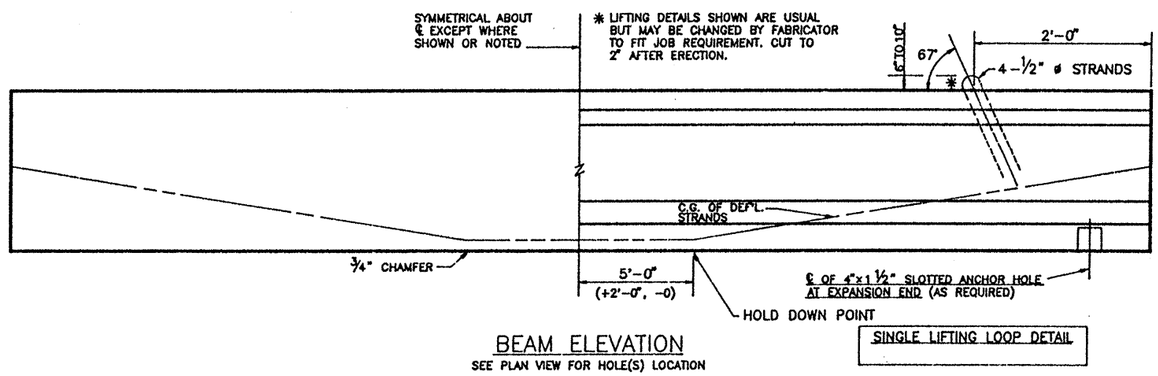

BEAM ELEVATION
SEE PLAN VIEW FOR HOLE(S) LOCATION

SINGLE LIFTING LOOP DETAIL

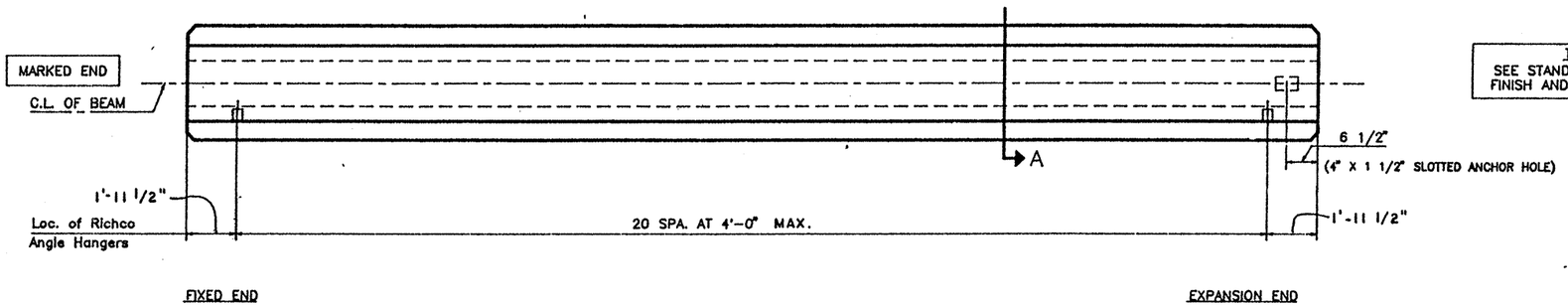

PLAN

TOP FINISH PANELS
SEE STANDARD SHEET S-"IV" FOR TOP FINISH AND OTHER NOTES AND DETAILS.

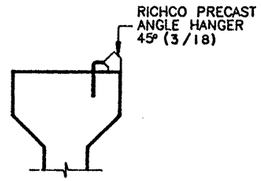

SECTION "A"

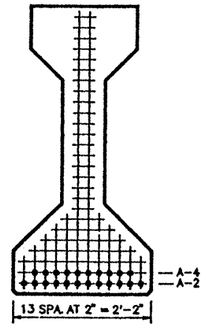

℄ SECTION

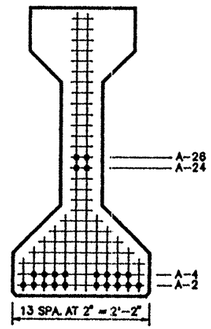

END VIEW

TYPE "IV" BEAM QUANTITY : 1

REINFORCING STEEL SCHEDULE				
BAR	QUANTITY PER BEAM	TOTAL QUANTITY	SIZE	LENGTH
R_{15}	88	88	#3	standard
X_{15}	84	84	#3	standard
Y_{15}	4	4	#6	standard
S_{15}	24	24	#7	standard
V_{15}	14	14	#3	standard
W_{15}	4	4	#5	standard
U_{15}	2	2	#5	80'-6"

TEXAS DEPARTMENT OF TRANSPORTATION
APPROVED
DIVISION OF BRIDGES AND STRUCTURES
AUG 05 1992
APPROVAL OF THIS DRAWING DOES NOT RELIEVE THE CONTRACTOR OF THE RESPONSIBILITY FOR THE CORRECTNESS OF DETAIL.

LO-LAX STRAND PATTERN		
NUMBER OF STRANDS : 22 ~1/2" ø 270 K @ 31.00 K EACH		
NUMBER OF STRAIGHT STRANDS	: 18	
NUMBER OF DEFLECTED STRANDS	: 4 @ A – 26	
CONCRETE RELEASE STRENGTH	: 4000	PSI
CONCRETE DESIGN STRENGTH	: 5000	PSI
ECCENTRICITY @ ℄ : 21.84"	ECCENTRICITY @ END : 17.84"	

DESIGN NO. : GpNsLR
TOTAL BEAM LENGTH OF THIS SHEET : 80.70'

MANCO PRESTRESS COMPANY
CONTRACTOR Gilbert Texas Construction

FED.RD. DIV.NO.	STATE	PROJECT NO.	HWY. NO.
6	TEXAS	NH 92(50)M	U.S. 83/281

STATE DIST.NO.	COUNTY	CONTROL NO.	SECTION NO.	JOB NO.
21	HIDALGO	0039	17	097

COPYRIGHT 1989 BY
STRUCTURAL ENGINEERING ASSOCIATES, INC.
CONSULTING ENGINEERS, SAN ANTONIO, TEXAS

JOB NO.	DRAWN	CHECKED	DATE	SHEET/MARK NO.
92-018	C.A.J.	D.M.P.	6-16-92	IV-60
SEA JOB NO. 92-059H	FABRICATION SHEET			

327252

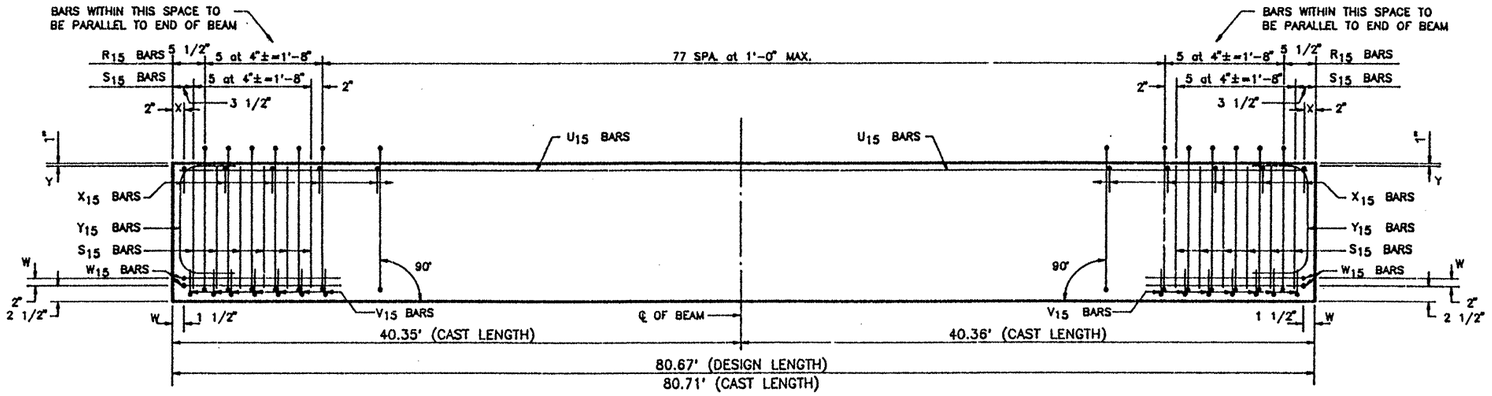

ELEVATION – REINFORCING STEEL

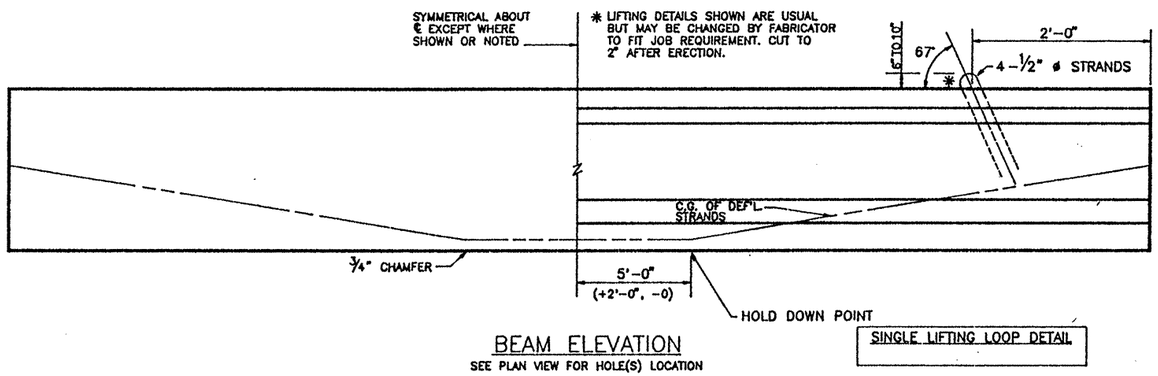

BEAM ELEVATION

SEE PLAN VIEW FOR HOLE(S) LOCATION

SINGLE LIFTING LOOP DETAIL

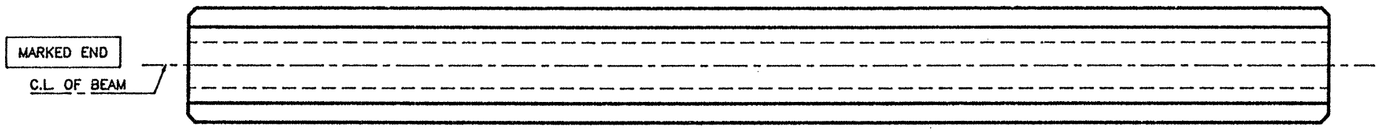

PLAN

TOP FINISH PANELS
SEE STANDARD SHEET S-"IV" FOR TOP FINISH AND OTHER NOTES AND DETAILS.

TEXAS DEPARTMENT OF TRANSPORTATION
APPROVED
DIVISION OF BRIDGES AND STRUCTURES
AUG 05 1992
APPROVAL OF THIS DRAWING DOES NOT RELIEVE THE CONTRACTOR OF THE RESPONSIBILITY FOR THE CORRECTNESS OF DETAIL.

REINFORCING STEEL SCHEDULE

BAR	QUANTITY PER BEAM	TOTAL QUANTITY	SIZE	LENGTH
R_{15}	88	528	#3	standard
X_{15}	84	504	#3	standard
Y_{15}	4	24	#6	standard
S_{15}	24	144	#7	standard
V_{15}	14	84	#3	standard
W_{15}	4	24	#5	standard
U_{15}	2	12	#5	80'-5"

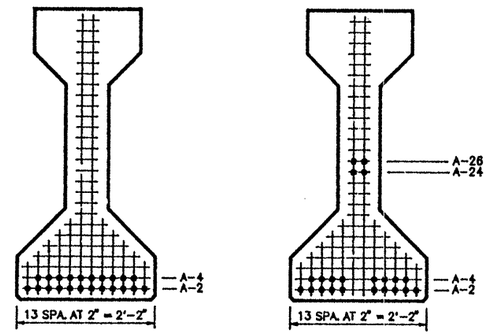

TYPE "IV" BEAM QUANTITY : 6

LO-LAX STRAND PATTERN	
NUMBER OF STRANDS : 22 ~1/2" ø 270 K @ 31.00 K EACH	
NUMBER OF STRAIGHT STRANDS	: 18
NUMBER OF DEFLECTED STRANDS	: 4 @ A – 26
CONCRETE RELEASE STRENGTH	: 4000 PSI
CONCRETE DESIGN STRENGTH	: 5000 PSI
ECCENTRICITY @ ℄ : 21.84"	ECCENTRICITY @ END : 17.84"

DESIGN NO. : GpNsLR

TOTAL BEAM LENGTH OF THIS SHEET : 484.02'

MANCO PRESTRESS COMPANY

CONTRACTOR Gilbert Texas Construction

FED.RD. DIV.NO.	STATE	PROJECT NO.		HWY. NO.
6	TEXAS	NH 92(50)M		U.S. 83/281
STATE DIST.NO.	COUNTY	CONTROL NO.	SECTION NO.	JOB NO.
21	HIDALGO	0039	17	097

COPYRIGHT 1989 BY
STRUCTURAL ENGINEERING ASSOCIATES, INC.
CONSULTING ENGINEERS, SAN ANTONIO, TEXAS

JOB NO.	DRAWN	CHECKED	DATE	SHEET/MARK NO.
92-018	C.A.J.	D.M.P.	6-16-92	IV-61
SEA JOB NO. 92-059H	FABRICATION SHEET			

327252

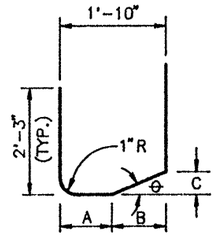

W16A THRU W16Z BARS

BAR	"A"	"B"	"C"	"θ"
W16A	10 7/8"	11 1/8"	1/2"	2 1/2°
W16B	10 7/8"	11 1/8"	1"	5°
W16C	10 7/8"	11 1/8"	1 1/2"	7 1/2°
W16D	10 7/8"	11 1/8"	2"	10°
W16E	10 3/4"	11 1/4"	2 1/2"	12 1/2°
W16F	10 3/4"	11 1/4"	3"	15°
W16G	10 3/4"	11 1/4"	3 1/2"	17 1/2°
W16H	10 3/4"	11 1/4"	4 1/8"	20°
W16I	10 5/8"	11 3/8"	4 3/4"	22 1/2°
W16J	10 5/8"	11 3/8"	5 1/4"	25°
W16K	10 5/8"	11 3/8"	5 7/8"	27 1/2°
W16L	10 5/8"	11 3/8"	6 5/8"	30°
W16M	10 1/2"	11 1/2"	7 3/8"	32 1/2°
W16N	10 1/2"	11 1/2"	8"	35°
W16O	10 1/2"	11 1/2"	8 7/8"	37 1/2°
W16P	10 3/8"	11 5/8"	9 3/4"	40°
W16Q	10 3/8"	11 5/8"	10 5/8"	42 1/2°
W16R	10 3/8"	11 5/8"	11 5/8"	45°
W16S	10 1/4"	11 3/4"	1'-0 7/8"	47 1/2°
W16T	10 1/4"	11 3/4"	1'-2"	50°
W16U	10 1/4"	11 3/4"	1'-3 3/8"	52 1/2°
W16V	10 1/4"	11 3/4"	1'-4 3/4"	55°
W16W	10 1/8"	11 7/8"	1'-6 5/8"	57 1/2°
W16X	10 1/8"	11 7/8"	1'-8 5/8"	60°
W16Y	10"	1'-0"	1'-11"	62 1/2°
W16Z	10"	1'-0"	2'-1 3/4"	65°

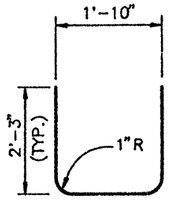

W15 BARS

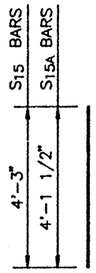

S15 or S15A BARS

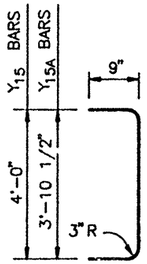

Y15 or Y15A BARS

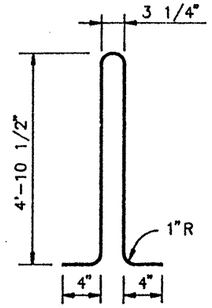

R15 BARS

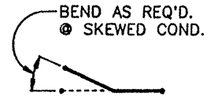

PLAN

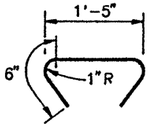

X15 BARS

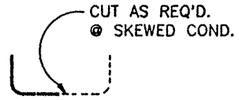

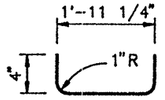

V15 BARS

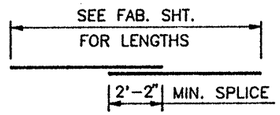

U15 BARS

U BAR SPLICES PERMITTED (40'-0" MIN. C-C SPLICES) NO PORTION OF BAR TO BE LESS THAN 10'-0" (LAP 2'-2" MIN.). U BAR LENGTH INDICATED IS OVERALL LENGTH, DOES NOT INCLUDE SPLICE.

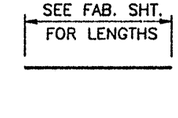

U16A, U16B, U16C, U16D, & U16E BARS

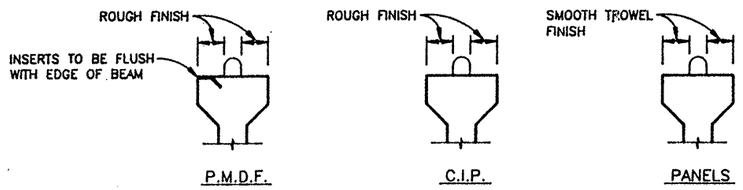

BEAM TOP FINISH

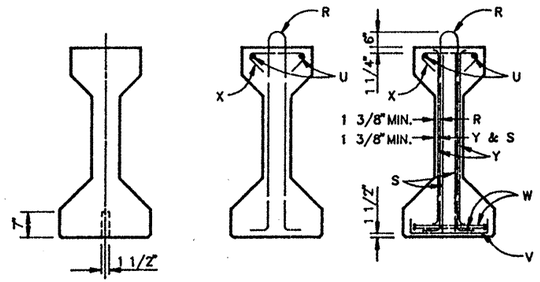

✳ NOTE : ANCHOR HOLES MAY BE TAPERED (4 3/4" x 1 5/8" EXP. END) (1 5/8" ø FIXED END) AT BASE. IF HOLES ARE FORMED WITH SHEET METAL, FORMS MAY BE LEFT IN PLACE HOLES AT FIXED END MAY EXTEND FULL DEPTH OF BEAM. PLUG TOP OR FILL WITH ASPHALT MASTIC. AT FABRICATORS OPTION, ALL BEAMS MAY BE FURNISHED WITH ANCHOR HOLES.

FOR BEAM ERECTION;
BEAMS OVER 105'-0" USE 2nd LIFTING LOOP WHEN PROVIDED.

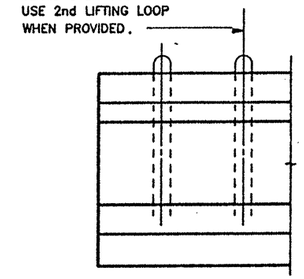

BEAM ERECTION – LIFTING LOOPS

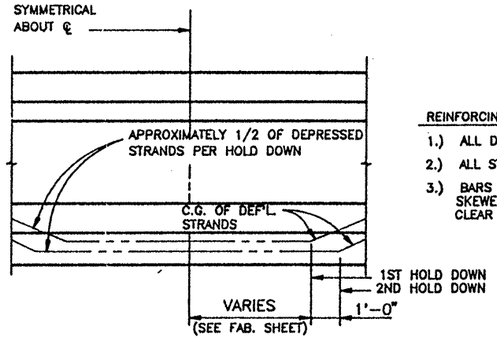

HOLD DOWN POINT DETAIL
(USED WHEN UPLIFT FORCE EXCEEDS BED CAPACITY)

REINFORCING STEEL NOTES:

1.) ALL DIMENSIONS ARE CENTER TO CENTER
2.) ALL STEEL TO BE A.S.T.M. A-615, GR. 60
3.) BARS R AND S MAY BE ADJUSTED FOR SKEWED END CONDITIONS AND ADJUSTED TO CLEAR DIAFRAM HOLE.

GENERAL NOTES

1. SPACING OF BARS R AND S MAY BE VARIED TO AVOID DIAFRAM HOLES.
2. REINFORCING BARS AND/OR STRANDS MAY COME IN CONTACT WITH MATERIALS USED IN FORMING DIAFRAM HOLES.
3. DIMENSIONS RELATING TO BARS OR STRANDS ARE CENTER TO CENTER.
4. BARS V AND X MAY BE TILTED THUS ⁄ OR SKEWED AS REQUIRED TO MAINTAIN 1" MIN. CONCRETE COVER.
5. STRANDS MAY BE SPREAD TO MISS DIAFRAM HOLES.
6. STRANDS MAY BE RECESSED 1/2" MAX. INTO END OF BEAM.
7. BEAM ENDS MAY BE FORMED WITH WOOD.
8. BOTTOM CORNERS OF ALL BEAM FLANGES AND OUTSIDE CORNERS OF EXTERIOR BEAM ENDS SHALL BE CHAMFERED OR ROUNDED TO A 3/4" RADIUS. AT FABRICATORS OPTION, ALL VERTICAL EDGES ON ALL BEAMS MAY BE CHAMFERED.
9. BEAM MARKS TO BE PLACED ON FIXED END OR AS NOTED.
10. ALL DIMENSIONS MEASURED ALONG BOTTOM OF BEAM AT ℄ UNLESS NOTED OTHERWISE.

TEXAS DEPARTMENT OF TRANSPORTATION
APPROVED
DIVISION OF BRIDGES AND STRUCTURES
AUG 05 1992
APPROVAL OF THIS DRAWING DOES NOT RELIEVE THE CONTRACTOR OF THE RESPONSIBILITY FOR THE CORRECTNESS OF DETAIL.

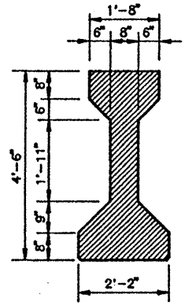

WT./FT.: 821 LBS.
C.Y.: .20

TYPE "IV" BEAM

MANCO PRESTRESS COMPANY				
CONTRACTOR Gilbert Texas Construction				
FED.RD. DIV.NO.	STATE	PROJECT NO.		HWY. NO.
6	TEXAS	NH 92(50)M		U.S. 83/281
STATE DIST.NO.	COUNTY	CONTROL NO.	SECTION NO.	JOB NO.
21	HIDALGO	0039	17	097

COPYRIGHT 1989 BY STRUCTURAL ENGINEERING ASSOCIATES, INC. *CONSULTING ENGINEERS*, SAN ANTONIO, TEXAS

JOB NO.	DRAWN	CHECKED	DATE	SHEET
92-018	C.A.J.	D.M.P.	6-16-92	S-"IV"
SEA JOB NO. 92-059H	STANDARD SHEET			

SUMMARY	
SPAN 1	
4A7.8	4
7A7.8	4
8S7.8	36
SPAN 2	
3A7.8	1
4A7.8	1
5A7.8	3
7A7.8	3
8S7.8	44
SPAN 3	
3A7.8	3
5A7.8	1
6A7.8	3
7A7.8	1
8S7.8	47
SPAN 4	
3A7.8	3
5A7.8	1
6A7.8	3
7A7.8	1
8S7.8	47
TOTAL	
3A7.8	7
4A7.8	5
5A7.8	5
6A7.8	6
7A7.8	9
8S7.8	174

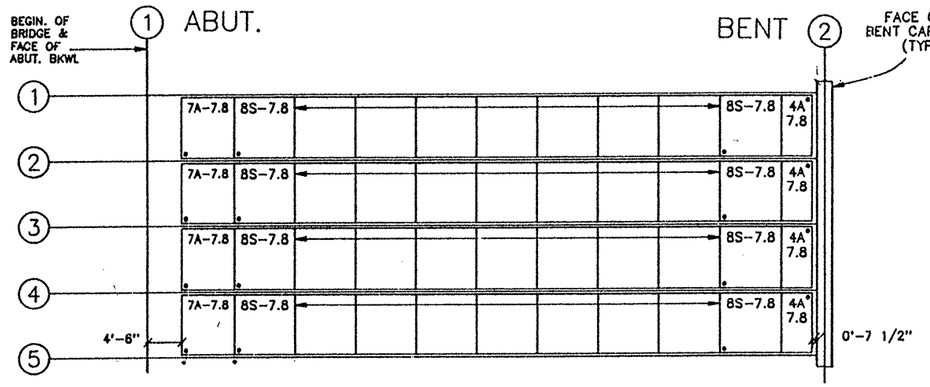

SPAN 1

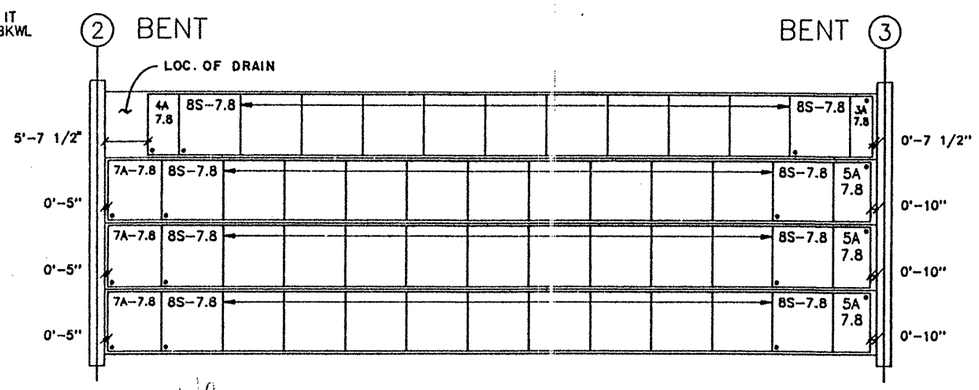

SPAN 2

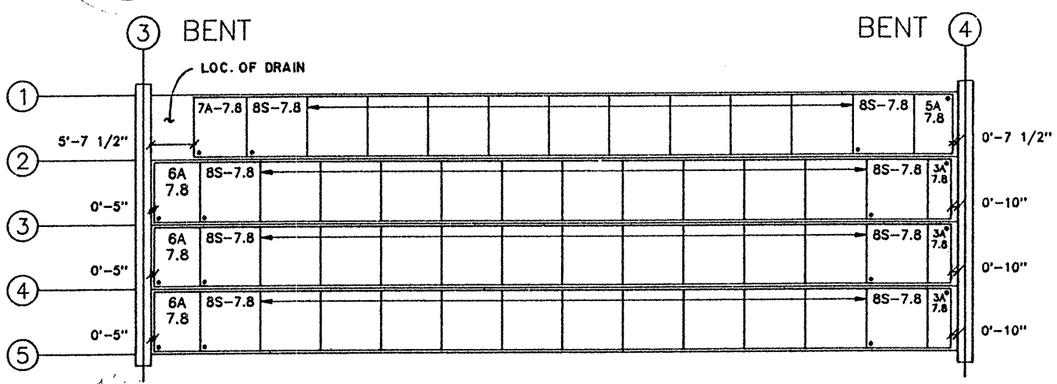

SPAN 3

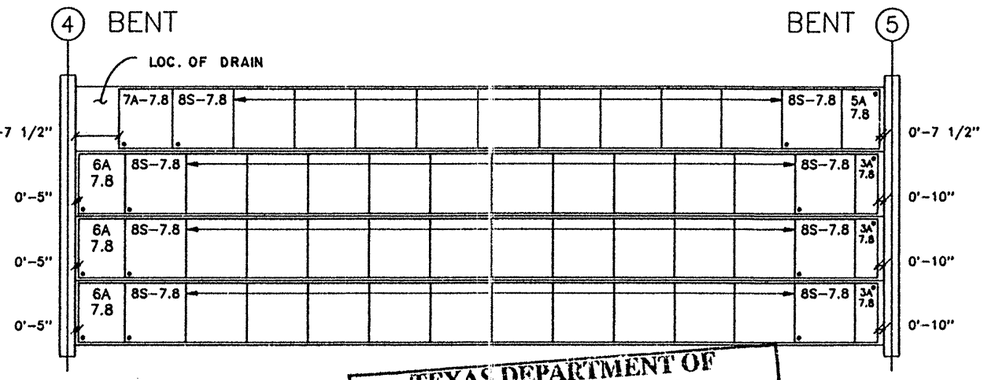

SPAN 4

U.S. 83/281 INTERCHANGE
RAMPS 1 & 2

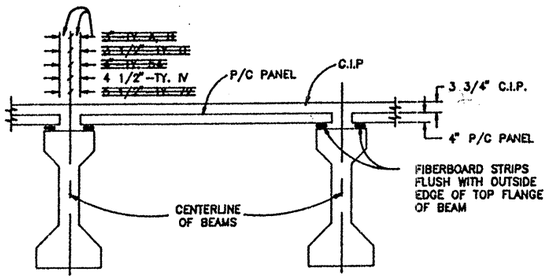

TYPICAL CROSS SECTION

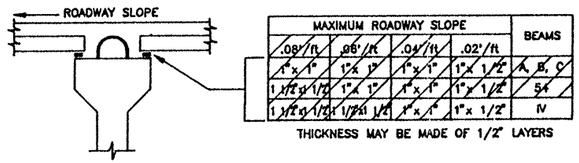

MAXIMUM ROADWAY SLOPE				BEAMS
.08'/ft	.06'/ft	.04'/ft	.02'/ft	
1"x 1"	1"x 1"	1"x 1"	1"x 1 1/2"	A, B, C
1 1/2"x 1/2"	1"x 1"	1"x 1"	1"x 1 1/2"	54
1 1/2"x 1/2"	1 1/2"x 1/2"	1"x 1"	1"x 1 1/2"	IV

THICKNESS MAY BE MADE OF 1/2" LAYERS

FIBERBOARD DIMENSIONS

NOTE

1. ALL DIMENSIONS SHOWN ARE ON A HORIZONTAL PLANE.
2. ALL DIMENSIONS SHOWN ARE MEASURED FROM CENTERLINE OF BENT OR FACE OF ABUTMENT BACKWALL OR FACE OF I.T. BENT CAP BACKWALL, ALONG CENTERLINE OF BEAM.

● DENOTES ERECTION MARK

TEXAS DEPARTMENT OF TRANSPORTATION
APPROVED
DIVISION OF BRIDGES AND STRUCTURES
AUG 04 1992
APPROVAL OF THIS DRAWING DOES NOT RELIEVE THE CONTRACTOR OF THE RESPONSIBILITY FOR THE CORRECTNESS OF DETAIL.

TOTAL PANEL AREA OF THIS PROJECT 139,701 Sq. Ft.

SAPSCO

CONTRACTOR GILBERT TEXAS CONSTR. CORP.

CONTRACTORS OPTIONS	END DIAFRAM : AS PER CONTRACT DWGS.	SLAB : PANELS
	INTERIOR DIAFRAM : N/A	

FED.RD. DIV.NO.	STATE	PROJECT NO.	HWY. NO.
6	TEXAS	NH 92(50) M	U.S. 83/281

STATE DIST.NO.	COUNTY	CONTROL NO.	SECTION NO.	JOB NO.
21	HIDALGO	0039	17	097

COPYRIGHT 1989 BY STRUCTURAL ENGINEERING ASSOCIATES, INC. *CONSULTING ENGINEERS*, SAN ANTONIO, TEXAS

JOB NO.	DRAWN	CHECKED	DATE	SHEET NO.
92-555	L.L.A.	R.S.M.	6/30/92	EP- 1
SEA JOB NO. 92-062H	ERECTION SHEET			

328071

SUMMARY

SPAN 5	
3A7.8	4
3.5A7.8	1
5A7.8	1
6A7.8	2
6.5A7.8	1
7A7.8	1
8S7.8	45
SPAN 6	
3A6.7	3
5A6.7	2
6A6.3	3
7A6.3	2
8S6.3	33
8S6.7	25
SPAN 7	
3A7.4	3
5A7.4	2
6A7.0	3
7A7.0	2
8S7.0	28
8S7.4	30
SPAN 8	
3A6.8	5
5A6.8	1
6A6.4	5
7A6.4	1
8S6.4	47
8S6.8	24

TOTAL	
3A6.7	3
3A6.8	5
3A7.4	3
3A7.8	4
3.5A7.8	1
5A6.7	2
5A6.8	1
5A7.4	2
5A7.8	1
6A6.3	3
6A6.4	5
6A7.0	3
6A7.8	2
6.5A7.8	1
7A6.3	2
7A6.4	1
7A7.0	2
7A7.8	1
8S6.3	33
8S6.4	47
8S6.7	25
8S6.8	24
8S7.0	28
8S7.4	30
8S7.8	45

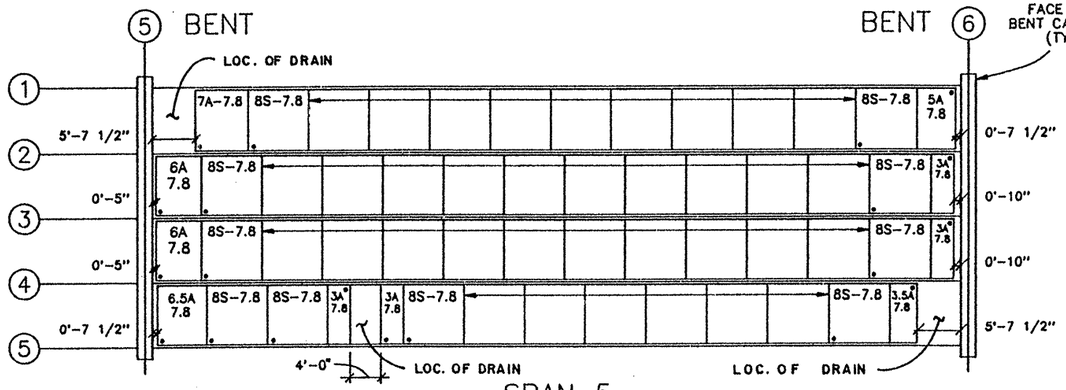

SPAN 5

110'

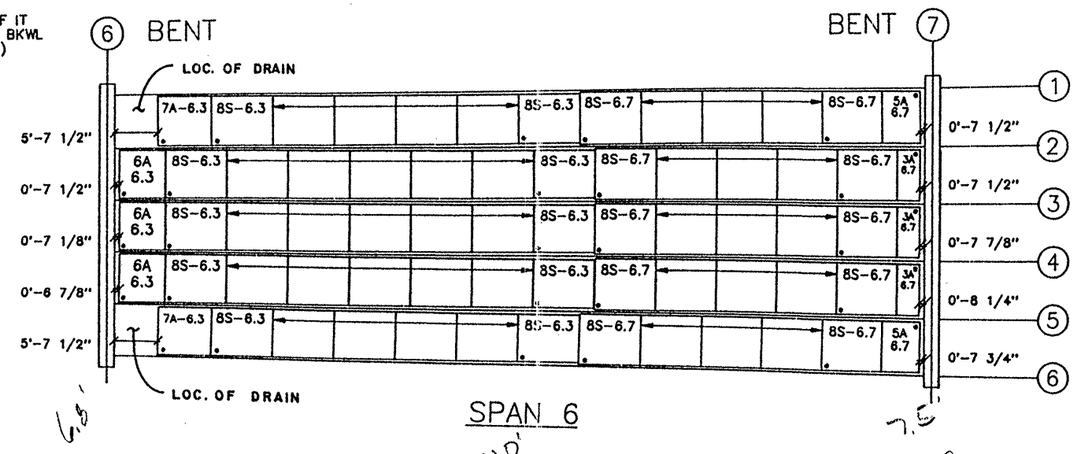

SPAN 6

110'

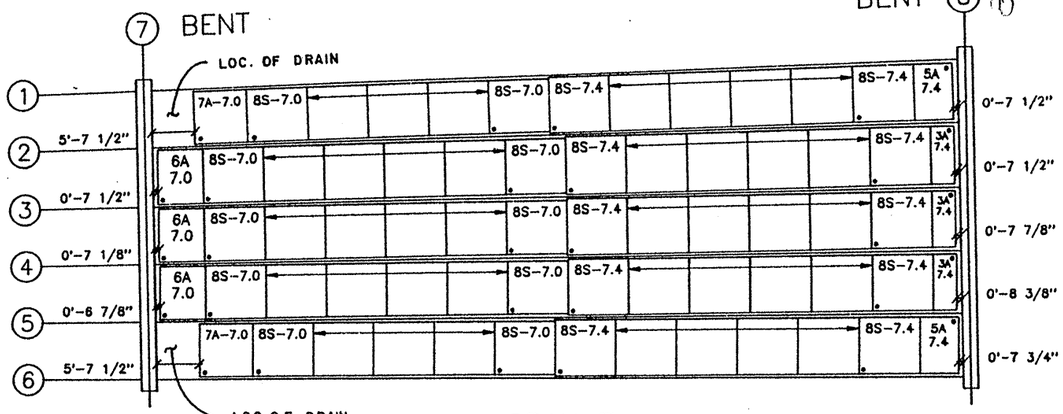

SPAN 7

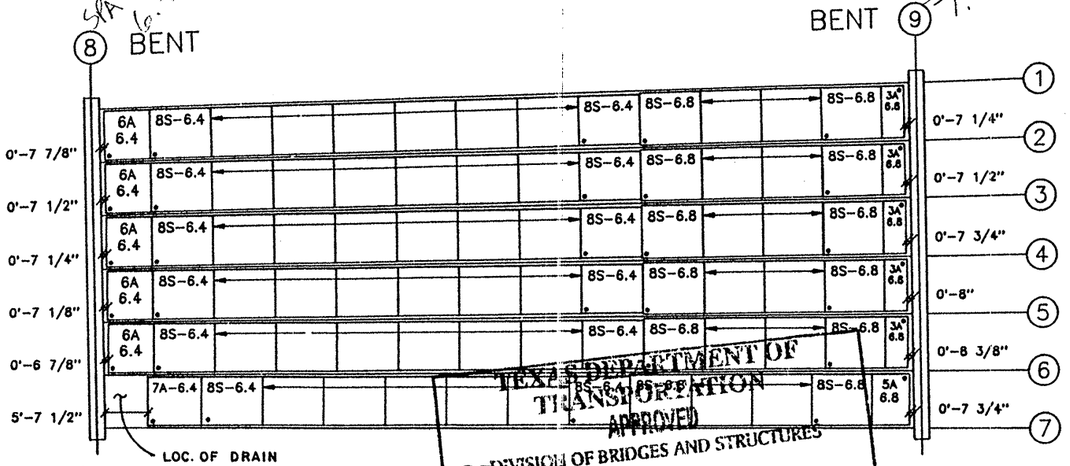

SPAN 8

110'

TEXAS DEPARTMENT OF TRANSPORTATION
APPROVED
DIVISION OF BRIDGES AND STRUCTURES
AUG 04 1992
APPROVAL OF THIS DRAWING DOES NOT RELIEVE THE CONTRACTOR OF THE RESPONSIBILITY FOR THE CORRECTNESS OF DETAIL.

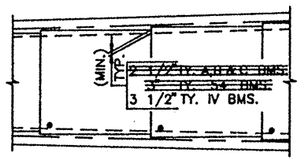

DETAIL AT FLARING BMS.

U.S. 83/281 INTERCHANGE
RAMPS 1 & 2

NOTE

1. ALL DIMENSIONS SHOWN ARE ON A HORIZONTAL PLANE.
2. ALL DIMENSIONS SHOWN ARE MEASURED FROM CENTERLINE OF BENT OR FACE OF ABUTMENT BACKWALL OR FACE OF I.T. BENT CAP BACKWALL, ALONG CENTERLINE OF BEAM.

● DENOTES ERECTION MARK

SAPSCO

CONTRACTOR GILBERT TEXAS CONSTR. CORP.

CONTRACTORS OPTIONS	END DIAFRAM : AS PER CONTRACT DWGS.	SLAB : PANELS
	INTERIOR DIAFRAM : N/A	

FED.RD. DIV.NO.	STATE	PROJECT NO.	HWY. NO.
6	TEXAS	NH 92(50) M	U.S. 83/281

STATE DIST.NO.	COUNTY	CONTROL NO.	SECTION NO.	JOB NO.
21	HIDALGO	0039	17	097

COPYRIGHT 1989 BY STRUCTURAL ENGINEERING ASSOCIATES, INC. *CONSULTING ENGINEERS*, SAN ANTONIO, TEXAS

JOB NO.	DRAWN	CHECKED	DATE	SHEET NO.
92-555	L.L.A.	R.S.M.	6/30/92	EP- 2
SEA JOB NO. 92-062H	ERECTION SHEET			

328071

SUMMARY

SPAN 9

3A7.5	4
5A7.5	2
6A7.1	4
7A7.1	2
8S7.1	52
8S7.5	18

SPAN 10

4A6.9	5
6.5A6.9	2
7A6.5	7
8S6.5	61
8S6.9	28

SPAN 11

4A7.5	7
7A7.1	7
8S7.1	63
8S7.5	28

TOTAL

3A7.5	4
4A6.9	5
4A7.5	7
5A7.5	2
6A7.1	4
6.5A6.9	2
7A6.5	7
7A7.1	9
8S6.5	61
8S6.9	28
8S7.1	115
8S7.5	46

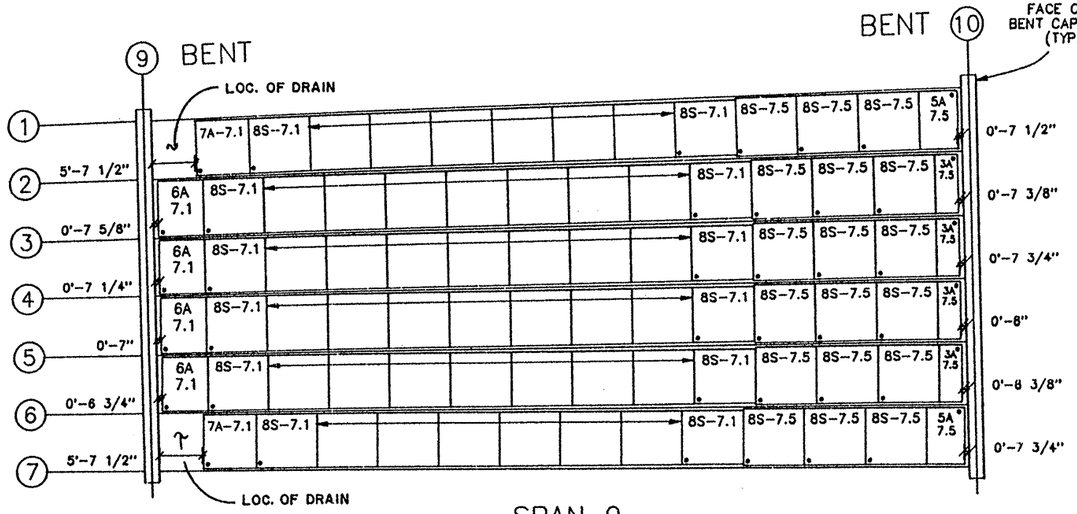

SPAN 9

110'

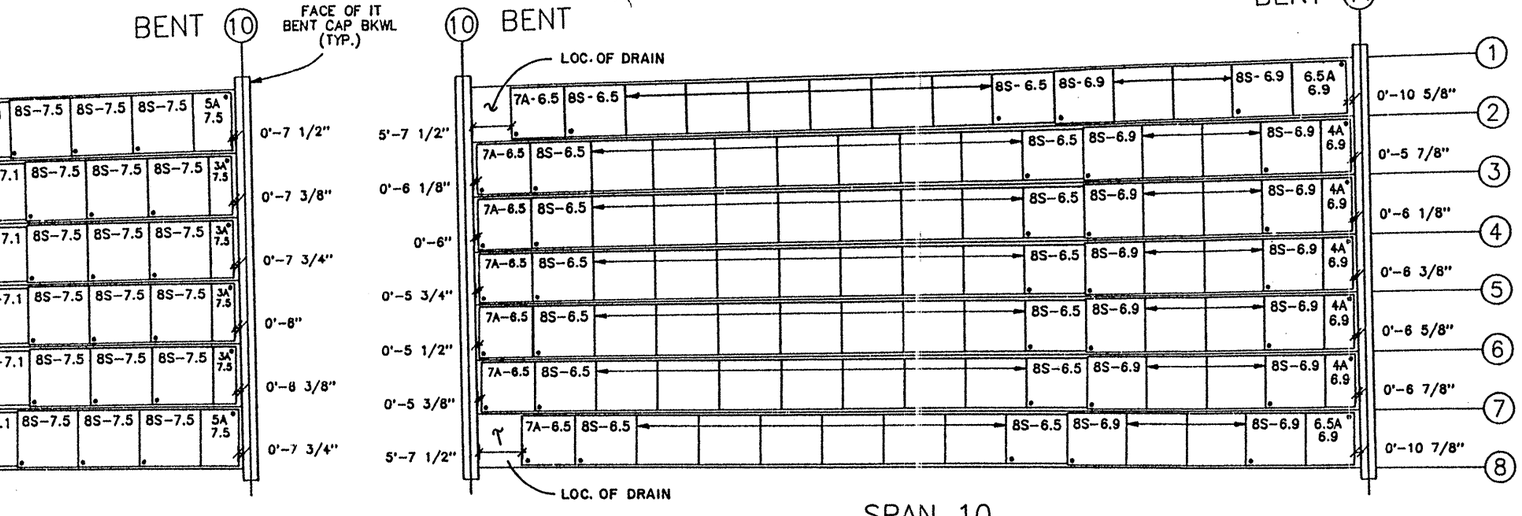

SPAN 10

114.75'

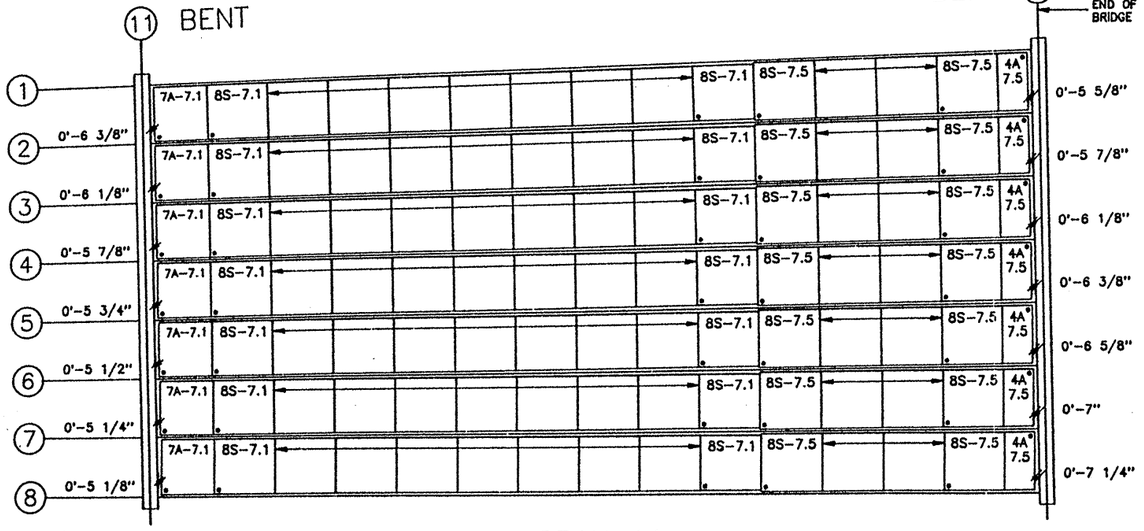

SPAN 11

119.75'

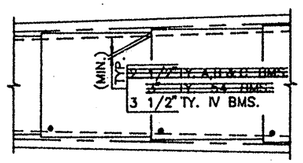

DETAIL AT FLARING BMS.

NOTE

1. ALL DIMENSIONS SHOWN ARE ON A HORIZONTAL PLANE.
2. ALL DIMENSIONS SHOWN ARE MEASURED FROM CENTERLINE OF BENT OR FACE OF ABUTMENT BACKWALL OR FACE OF I.T. BENT CAP BACKWALL, ALONG CENTERLINE OF BEAM.

● DENOTES ERECTION MARK

U.S. 83/281 INTERCHANGE RAMPS

TEXAS DEPARTMENT OF TRANSPORTATION
APPROVED
DIVISION OF BRIDGES AND STRUCTURES
AUG 04 1992

APPROVAL OF THIS DRAWING DOES NOT RELIEVE THE CONTRACTOR OF THE RESPONSIBILITY FOR THE CORRECTNESS OF DETAIL.

SAPSCO

CONTRACTOR GILBERT TEXAS CONSTR. CORP.

CONTRACTORS OPTIONS	END DIAFRAM : AS PER CONTRACT DWGS. INTERIOR DIAFRAM : N/A	SLAB : PANELS

FED.RD. DIV.NO.	STATE	PROJECT NO.	HWY. NO.
6	TEXAS	NH 92(50) M	U.S. 83/281

STATE DIST.NO.	COUNTY	CONTROL NO.	SECTION NO.	JOB NO.
21	HIDALGO	0039	17	097

COPYRIGHT 1989 BY
STRUCTURAL ENGINEERING ASSOCIATES, INC.
CONSULTING ENGINEERS, SAN ANTONIO, TEXAS

JOB NO.	DRAWN	CHECKED	DATE	SHEET NO.
92-555	L.L.A.	R.S.M.	6/30/92	EP- 3
SEA JOB NO. 92-062H	ERECTION SHEET			

328071

SUMMARY

SPAN 1	
3A7.8	2
4A7.8	3
7A7.8	3
8S7.8	36
SPAN 2	
3A7.8	1
4A7.8	1
5A7.8	3
7A7.8	3
8S7.8	44
SPAN 3	
3A7.8	3
5A7.8	1
6A7.8	3
7A7.8	1
8S7.8	47
SPAN 4	
3A7.8	4
3.5A7.8	2
5A7.8	1
6A7.8	2
7A7.8	1
8S7.8	46
TOTAL	
3A7.8	10
3.5A7.8	2
4A7.8	4
5A7.8	5
6A7.8	5
7A7.8	8
8S7.8	173

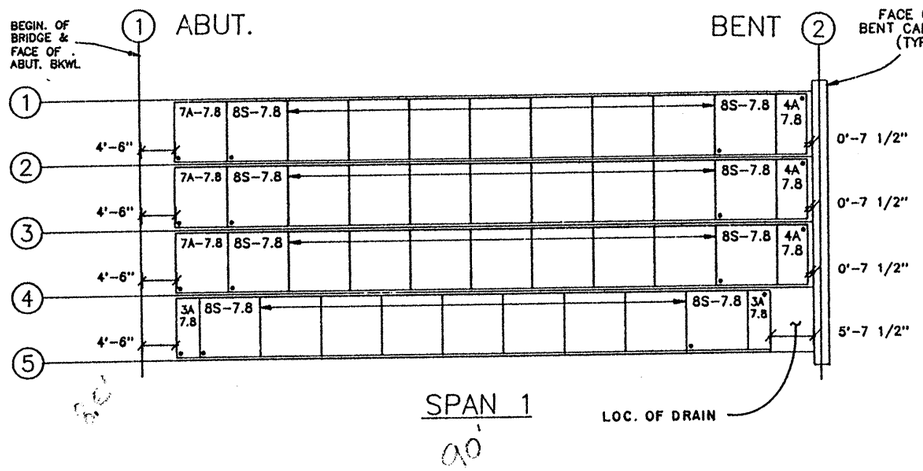

SPAN 1

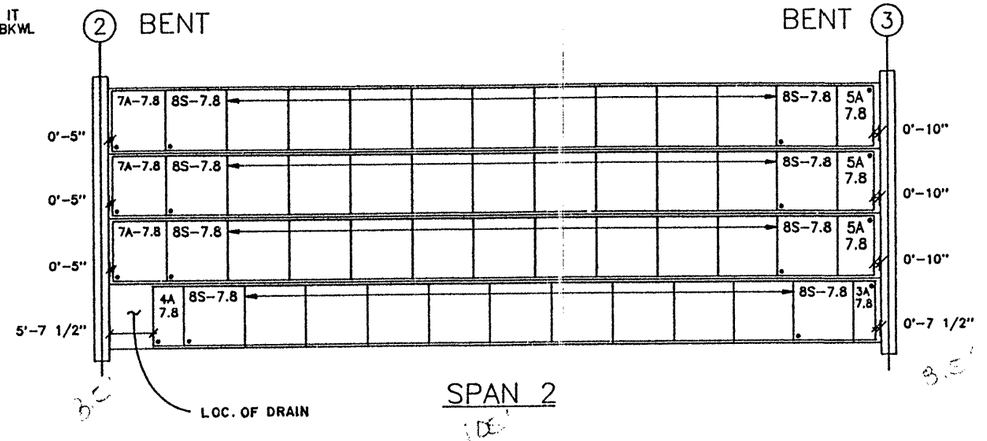

SPAN 2

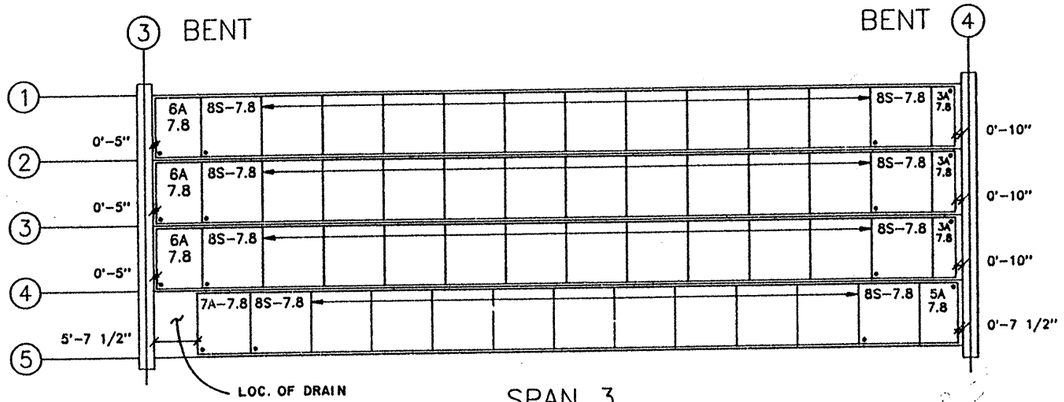

SPAN 3

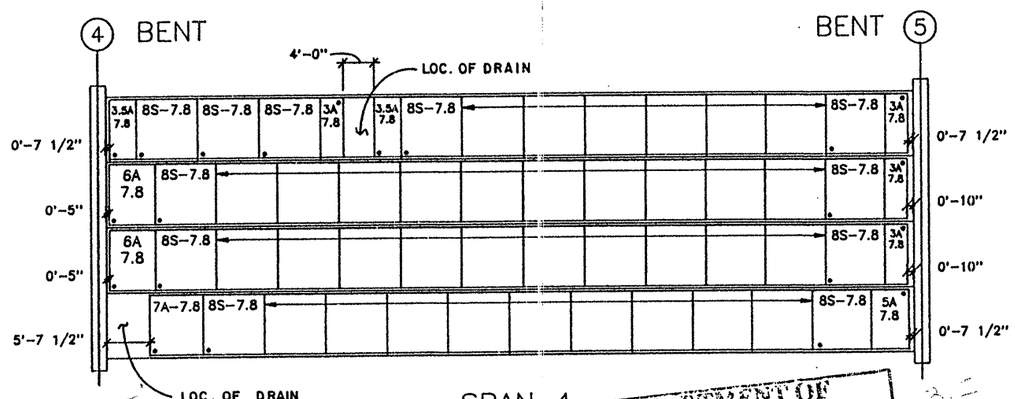

SPAN 4

U.S. 83/281 INTERCHANGE
RAMPS 3 & 4

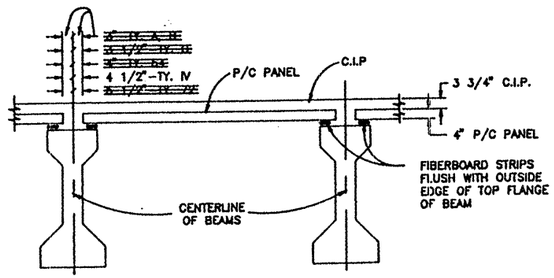

TYPICAL CROSS SECTION

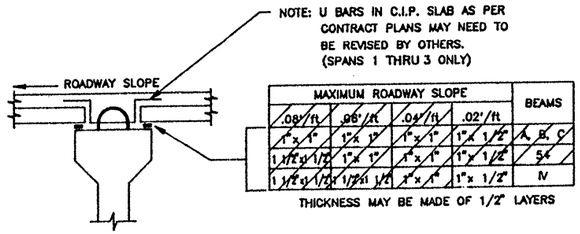

MAXIMUM ROADWAY SLOPE				BEAMS
.08"/ft	.06"/ft	.04"/ft	.02"/ft	
1"x 1"	1"x 1"	1"x 1"	1"x 1 1/2"	A, B, C
1 1/2"x 1/2"	1"x 1"	1"x 1"	1"x 1 1/2"	5A
1 1/2"x 1/2"x 1/2"	1 1/2"x 1/2"	1"x 1"	1"x 1/2"	IV

THICKNESS MAY BE MADE OF 1/2" LAYERS

FIBERBOARD DIMENSIONS

NOTE

1. ALL DIMENSIONS SHOWN ARE ON A HORIZONTAL PLANE.
2. ALL DIMENSIONS SHOWN ARE MEASURED FROM CENTERLINE OF BENT OR FACE OF ABUTMENT BACKWALL OR FACE OF I.T. BENT CAP BACKWALL, ALONG CENTERLINE OF BEAM.

● DENOTES ERECTION MARK

TEXAS DEPARTMENT OF TRANSPORTATION
APPROVED
DIVISION OF BRIDGES AND STRUCTURES
AUG 04 1992
APPROVAL OF THIS DRAWING DOES NOT RELIEVE THE CONTRACTOR OF THE RESPONSIBILITY FOR THE CORRECTNESS OF DETAIL.

SAPSCO

CONTRACTOR GILBERT TEXAS CONSTR. CORP.

CONTRACTORS OPTIONS	END DIAFRAM : AS PER CONTRACT DWGS. INTERIOR DIAFRAM : N/A			SLAB : PANELS
FED.RD. DIV.NO.	STATE	PROJECT NO.		HWY. NO.
6	TEXAS	NH 92(50) M		U.S. 83/281
STATE DIST.NO.	COUNTY	CONTROL NO.	SECTION NO.	JOB NO.
21	HIDALGO	0039	17	097

COPYRIGHT 1989 BY STRUCTURAL ENGINEERING ASSOCIATES, INC. *CONSULTING ENGINEERS*, SAN ANTONIO, TEXAS

JOB NO. 92-555	DRAWN L.L.A.	CHECKED R.S.M.	DATE 6/30/92	SHEET NO. EP- 4
SEA JOB NO. 92-062H	ERECTION SHEET			

328071

SUMMARY

SPAN 5	
3A6.7	4
5A6.7	1
6A6.3	4
7A6.3	1
8S6.3	39
8S6.7	20

SPAN 6	
3A7.4	3
5A7.4	2
6A7.0	3
7A7.0	2
8S7.0	33
8S7.4	25

SPAN 7	
3A6.8	6
6A6.4	6
8S6.4	60
8S6.8	12

SPAN 8	
3A7.4	4
5A7.4	2
6A7.0	4
7A7.0	2
8S7.0	58
8S7.4	12

TOTAL	
3A6.7	4
3A6.8	6
3A7.4	7
5A6.7	1
5A7.4	4
6A6.3	4
6A6.4	6
6A7.0	7
7A6.3	1
7A7.0	4
8S6.3	39
8S6.4	60
8S6.7	20
8S6.8	12
8S7.0	91
8S7.4	37

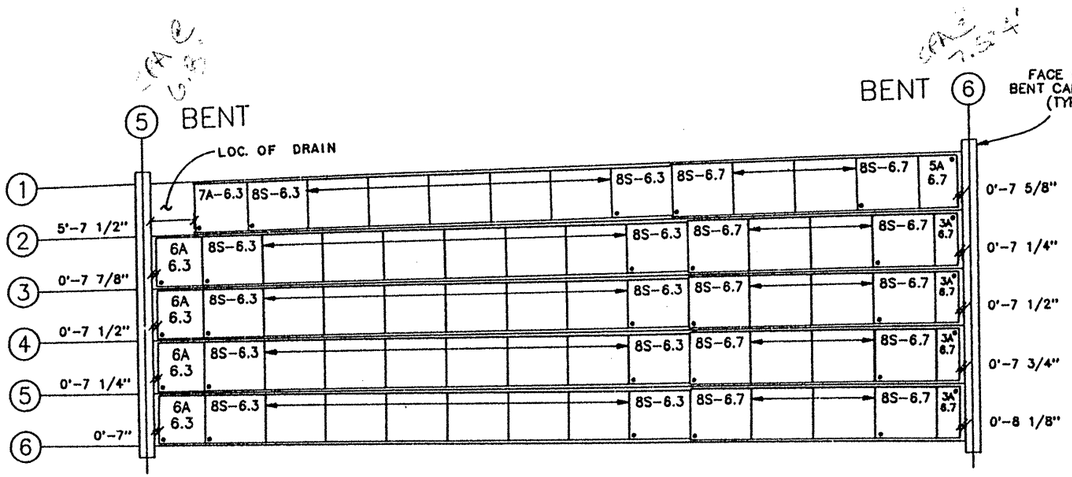

SPAN 5

110'

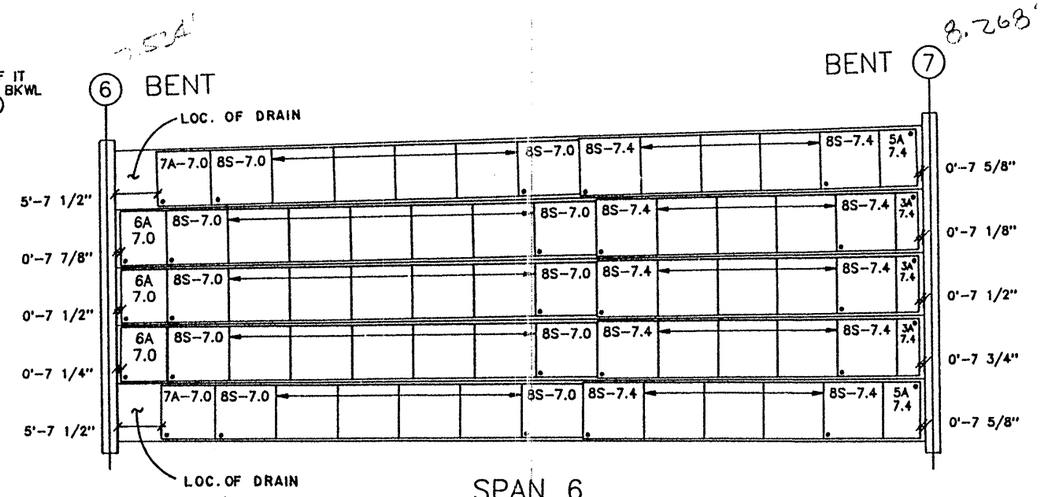

SPAN 6

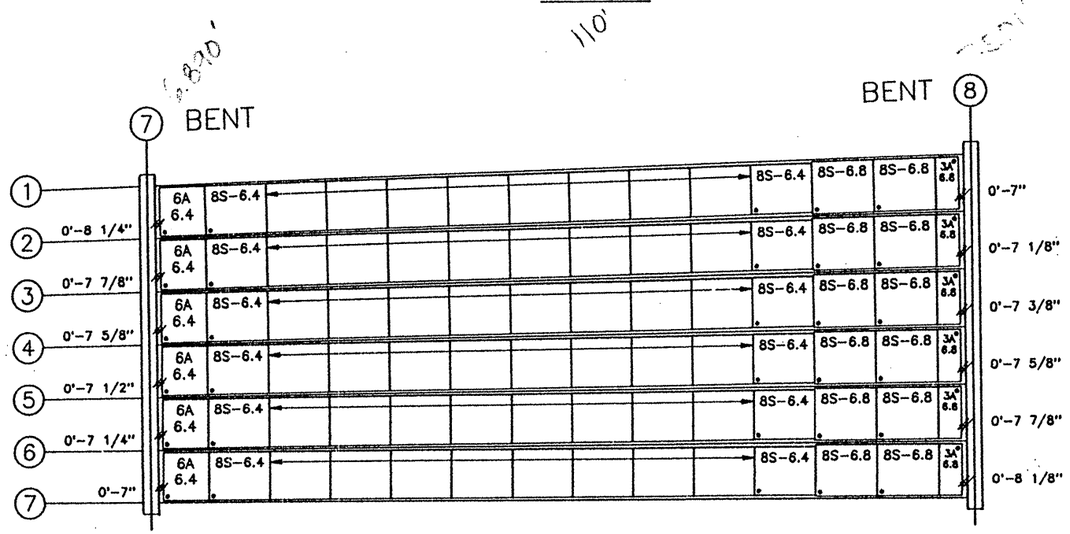

SPAN 7

110'

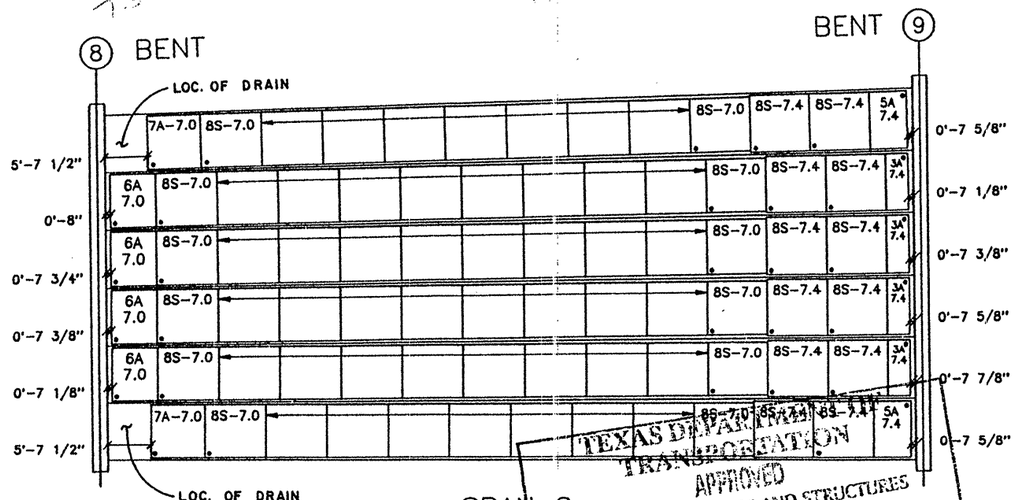

SPAN 8

110'

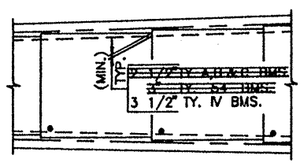

DETAIL AT FLARING BMS.

U.S. 83/281 INTERCHANGE
RAMPS 3 & 4

NOTE

1. ALL DIMENSIONS SHOWN ARE ON A HORIZONTAL PLANE.
2. ALL DIMENSIONS SHOWN ARE MEASURED FROM CENTERLINE OF BENT OR FACE OF ABUTMENT BACKWALL OR FACE OF I.T. BENT CAP BACKWALL, ALONG CENTERLINE OF BEAM.

● DENOTES ERECTION MARK

TEXAS DEPARTMENT OF TRANSPORTATION
APPROVED
DIVISION OF BRIDGES AND STRUCTURES
AUG 04 1992
APPROVAL OF THIS DRAWING DOES NOT RELIEVE THE CONTRACTOR OF THE RESPONSIBILITY FOR THE CORRECTNESS OF DETAIL.
SAPSCO

CONTRACTOR	GILBERT TEXAS CONSTR. CORP.			
CONTRACTORS OPTIONS	END DIAFRAM : AS PER CONTRACT DWGS. INTERIOR DIAFRAM : N/A			SLAB : PANELS
FED.RD. DIV.NO.	STATE	PROJECT NO.		HWY. NO.
6	TEXAS	NH 92(50) M		U.S. 83/281
STATE DIST.NO.	COUNTY	CONTROL NO.	SECTION NO.	JOB NO.
21	HIDALGO	0039	17	097

COPYRIGHT 1989 BY
STRUCTURAL ENGINEERING ASSOCIATES, INC.
CONSULTING ENGINEERS, SAN ANTONIO, TEXAS

JOB NO. 92-555	DRAWN L.L.A.	CHECKED R.S.M.	DATE 6 /30/92	SHEET NO. EP- 5
SEA JOB NO. 92-062H	ERECTION SHEET			

328071

SUMMARY	
SPAN 9	
3A8.0	6
6A7.6	6
8S7.6	54
8S8.0	18
SPAN 10	
3A6.9	5
3.5A6.9	2
5A6.9	5
7A6.9	2
8S6.9	61
SPAN 11	
3A7.3	6
3.5A7.3	1
5A7.3	6
7A7.3	1
8S7.3	62

TOTAL	
3A6.9	5
3A7.3	6
3A8.0	6
3.5A6.9	2
3.5A7.3	1
5A6.9	5
5A7.3	6
6A7.6	6
7A6.9	2
7A7.3	1
8S6.9	61
8S7.3	62
8S7.6	54
8S8.0	18

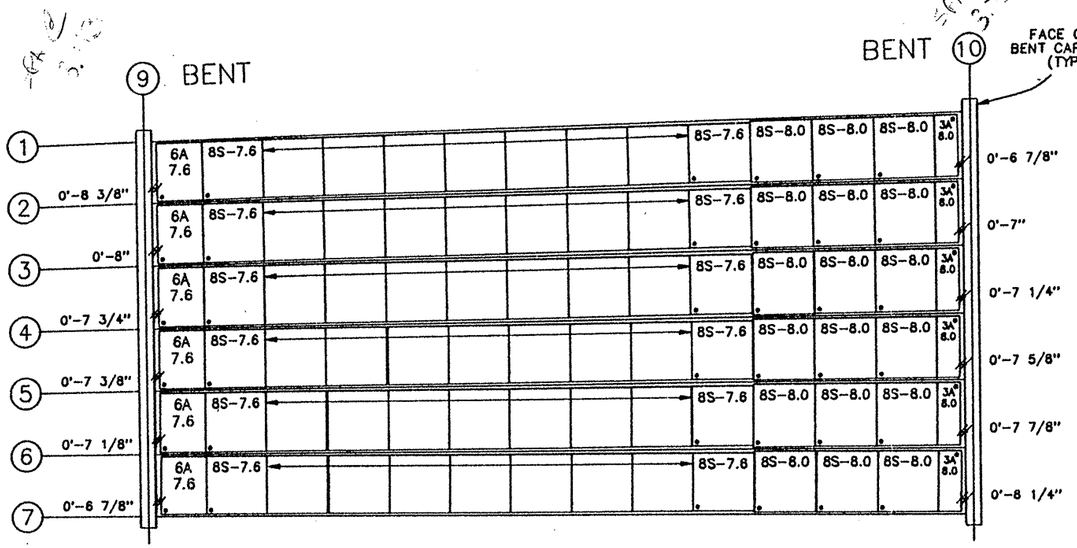

SPAN 9

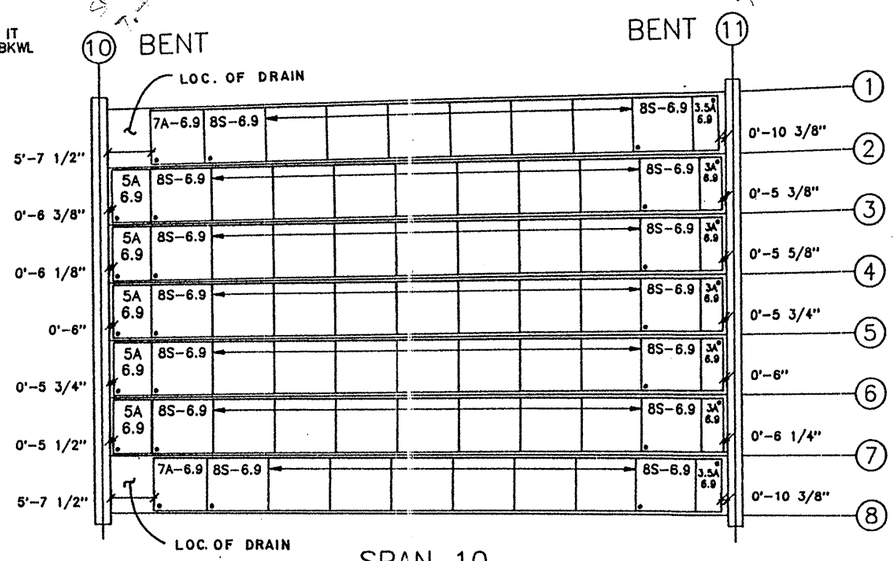

SPAN 10

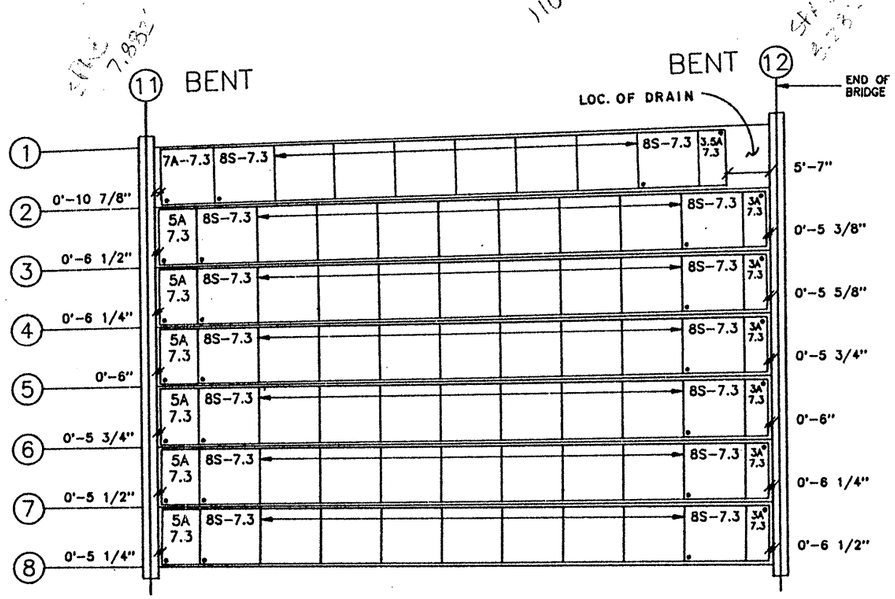

SPAN 11

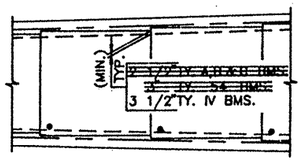

DETAIL AT FLARING BMS.

U.S. 83/281 INTERCHANGE
RAMPS 3 & 4

NOTE

1. ALL DIMENSIONS SHOWN ARE ON A HORIZONTAL PLANE.
2. ALL DIMENSIONS SHOWN ARE MEASURED FROM CENTERLINE OF BENT OR FACE OF ABUTMENT BACKWALL OR FACE OF I.T. BENT CAP BACKWALL, ALONG CENTERLINE OF BEAM.

● DENOTES ERECTION MARK

TEXAS DEPARTMENT OF TRANSPORTATION
APPROVED
DIVISION OF BRIDGES AND STRUCTURES
AUG 04 1992
APPROVAL OF THIS DRAWING DOES NOT RELIEVE THE CONTRACTOR OF THE RESPONSIBILITY FOR THE CORRECTNESS OF DETAIL

CONTRACTOR SAPSCO
~~CONTRACTOR GILBERT TEXAS CONSTR. CORP.~~

CONTRACTORS OPTIONS	END DIAFRAM : AS PER CONTRACT DWGS. INTERIOR DIAFRAM : N/A	SLAB : PANELS

FED.RD. DIV.NO.	STATE	PROJECT NO.	HWY. NO.
6	TEXAS	NH 92(50) M	U.S. 83/281

STATE DIST.NO.	COUNTY	CONTROL NO.	SECTION NO.	JOB NO.
21	HIDALGO	0039	17	097

COPYRIGHT 1989 BY STRUCTURAL ENGINEERING ASSOCIATES, INC. *CONSULTING ENGINEERS*, SAN ANTONIO, TEXAS

JOB NO.	DRAWN	CHECKED	DATE	SHEET NO.
92-555	L.L.A.	R.S.M.	6/30/92	EP- 6
SEA JOB NO. 92-062H	ERECTION SHEET			

328071

SUMMARY	
SPAN 18	
3A7.9	2
5.5A7.9	1
6.5A7.9	2
7A7.9	1
8S7.9	32
SPAN 19	
3A7.9	2
5.5A7.9	1
6.5A7.9	2
7A7.9	1
8S7.9	32
SPAN 20	
3A7.9	2
5.5A7.9	1
6.5A7.9	2
7A7.9	1
8S7.9	32
SPAN 21	
3A7.9	2
5.5A7.9	1
6.5A7.9	2
7A7.9	1
8S7.9	32
SPAN 25	
3A7.9	2
5A7.9	1
6A7.9	2
7A7.9	1
8S7.9	35
SPAN 26	
3A7.9	3
4A7.9	2
7A7.9	1
8S7.9	35
TOTAL	
3A7.9	13
4A7.9	2
5A7.9	1
5.5A7.9	4
6A7.9	2
6.5A7.9	8
7A7.9	6
8S7.9	198

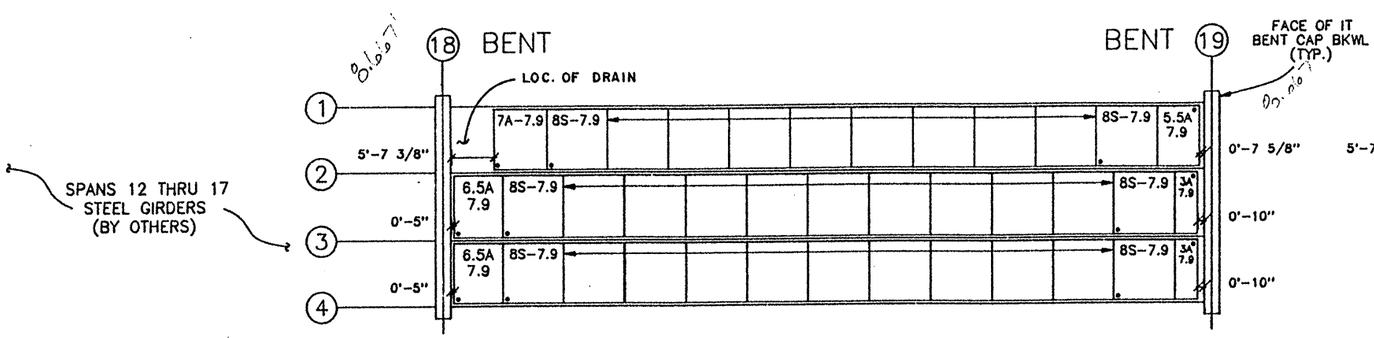

SPAN 18

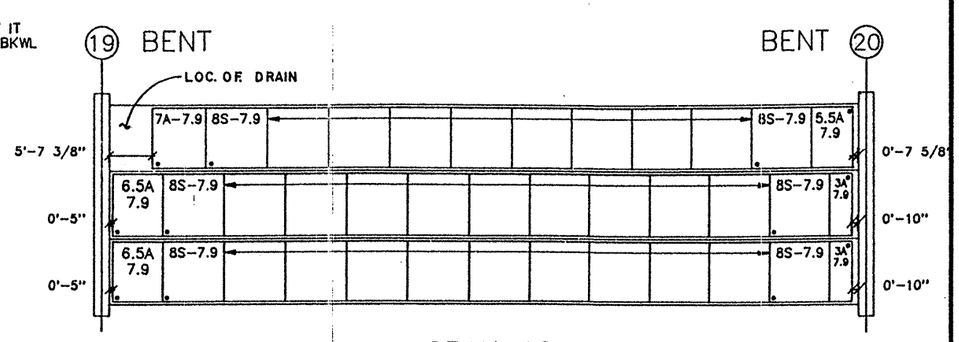

SPAN 19

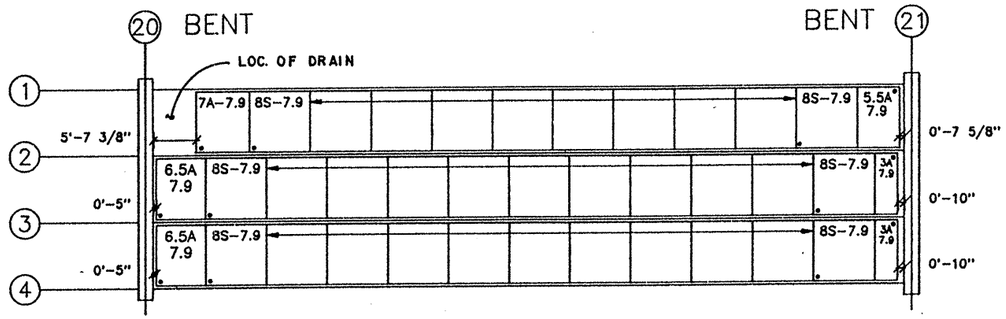

SPAN 20

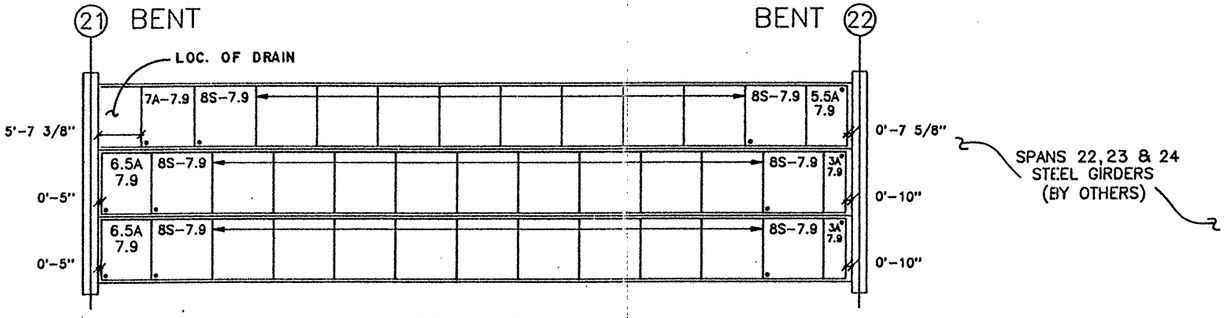

SPAN 21

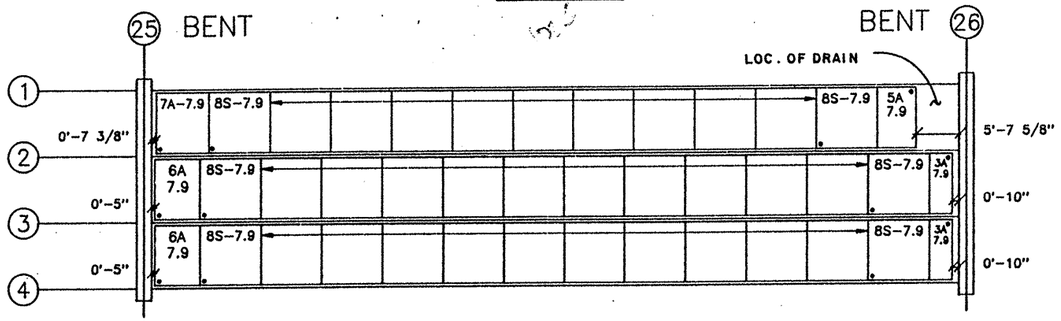

SPAN 25

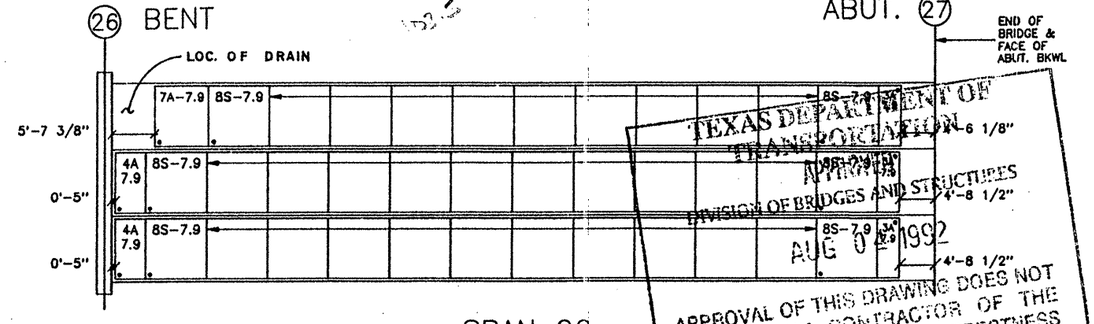

SPAN 26

TEXAS DEPARTMENT OF TRANSPORTATION
APPROVED
DIVISION OF BRIDGES AND STRUCTURES
AUG 07 1992

APPROVAL OF THIS DRAWING DOES NOT RELIEVE THE CONTRACTOR OF THE RESPONSIBILITY FOR THE CORRECTNESS OF DETAIL.

U.S. 83/281 INTERCHANGE RAMP 1

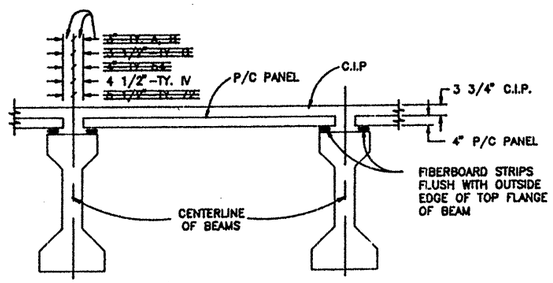

TYPICAL CROSS SECTION

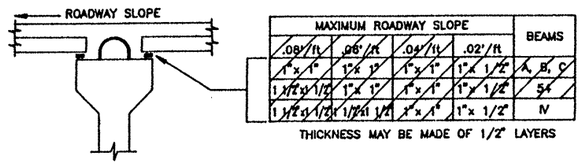

MAXIMUM ROADWAY SLOPE				BEAMS
.08"/ft	.06"/ft	.04"/ft	.02"/ft	
1"x 1"	1"x 1"	1"x 1"	1"x 1 1/2"	A, B, C
1 1/2"x 1/2"	1"x 1"	1"x 1"	1"x 1 1/2"	5A
1 1/2"x 1/2"x 1/2"	1 1/2"x 1/2"	1"x 1"	1"x 1/2"	IV

THICKNESS MAY BE MADE OF 1/2" LAYERS

FIBERBOARD DIMENSIONS

N

NOTE

1. ALL DIMENSIONS SHOWN ARE ON A HORIZONTAL PLANE.
2. ALL DIMENSIONS SHOWN ARE MEASURED FROM CENTERLINE OF BENT OR FACE OF ABUTMENT BACKWALL OR FACE OF I.T. BENT CAP BACKWALL, ALONG CENTERLINE OF BEAM.

● DENOTES ERECTION MARK

SAPSCO			
CONTRACTOR GILBERT TEXAS CONSTR. CORP.			
CONTRACTORS OPTIONS	END DIAFRAM : AS PER CONTRACT DWGS.		SLAB : PANELS
	INTERIOR DIAFRAM : N/A		
FED.RD. DIV.NO.	STATE	PROJECT NO.	HWY. NO.
6	TEXAS	NH 92(50) M	U.S. 83/281
STATE DIST.NO.	COUNTY	CONTROL NO. / SECTION NO. / JOB NO.	
21	HIDALGO	0039 / 17 / 097	

COPYRIGHT 1989 BY

STRUCTURAL ENGINEERING ASSOCIATES, INC.
CONSULTING ENGINEERS, SAN ANTONIO, TEXAS

JOB NO.	DRAWN	CHECKED	DATE	SHEET NO.
92-555	L.L.A.	R.S.M.	6 /30/92	EP- 7
SEA JOB NO. 92-062H	ERECTION SHEET			

328071

SUMMARY	
SPAN 20	
3A7.9	3
4.5A7.9	1
5A7.9	1
6A7.9	1
6.5A7.9	1
7A7.9	1
8S7.9	33
SPAN 21	
3A7.9	3
6A7.9	3
8S7.9	36
SPAN 22	
3A7.9	2
5A7.9	1
6A7.9	2
7A7.9	1
8S7.9	35
SPAN 23	
3A7.9	3
6A7.9	3
8S7.9	36
SPAN 24	
3A7.9	3
4A7.9	2
7A7.9	1
8S7.9	32
SPAN 25	
3A7.9	3
4A7.9	2
7A7.9	1
8S7.9	32
TOTAL	
3A7.9	17
4A7.9	4
4.5A7.9	1
5A7.9	2
6A7.9	9
6.5A7.9	1
7A7.9	4
8S7.9	204

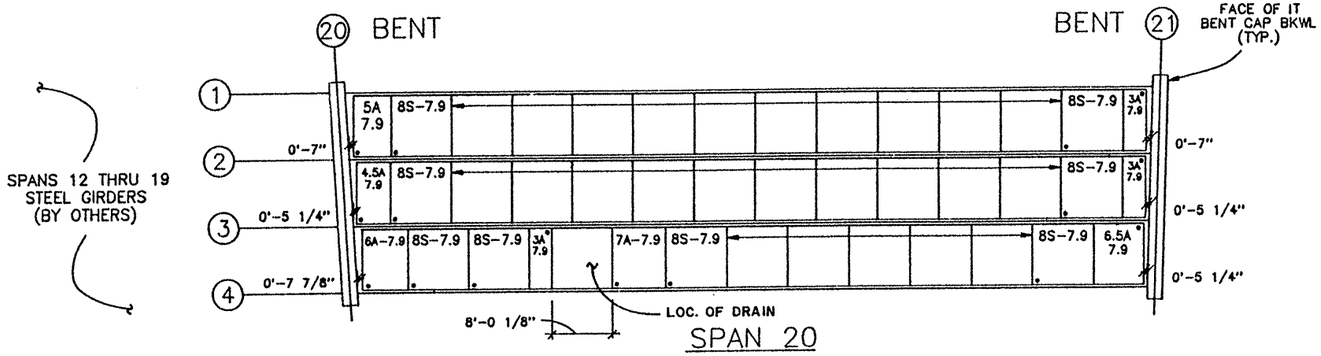

SPAN 20

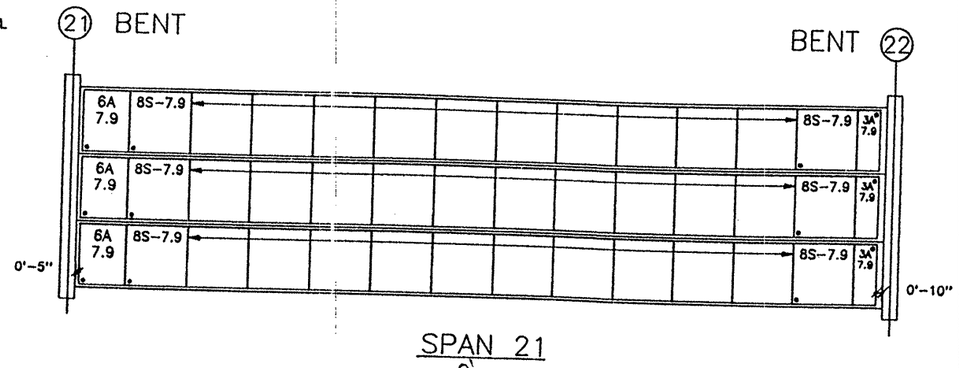

SPAN 21

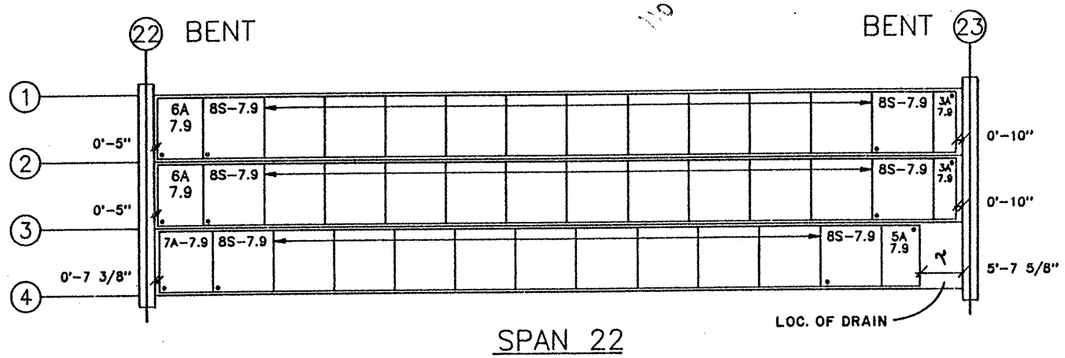

SPAN 22

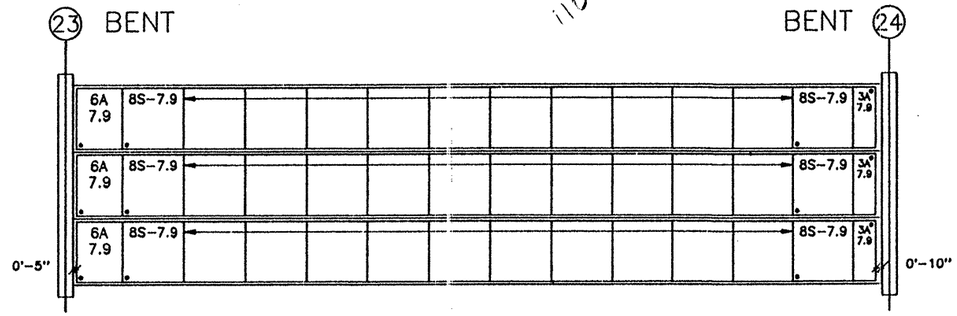

SPAN 23

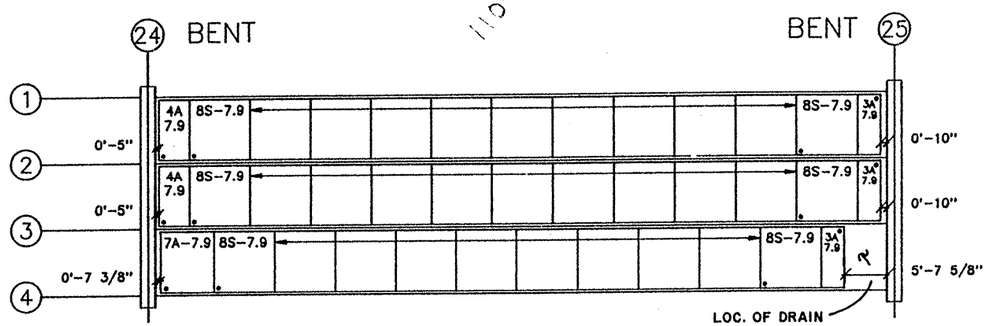

SPAN 24

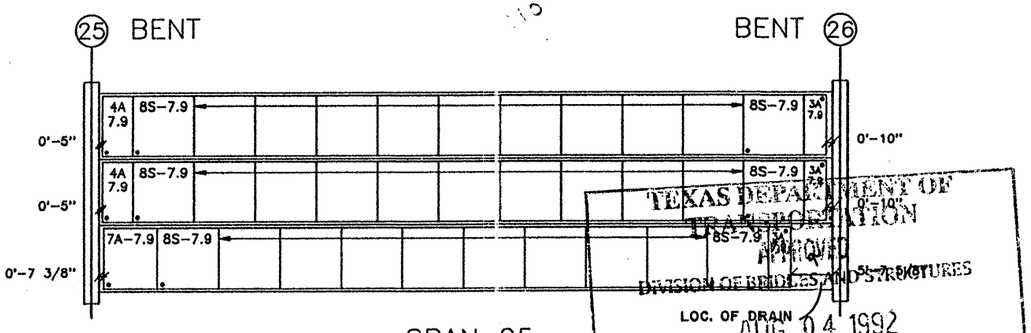

SPAN 25

U.S. 83/281 INTERCHANGE
RAMP 2

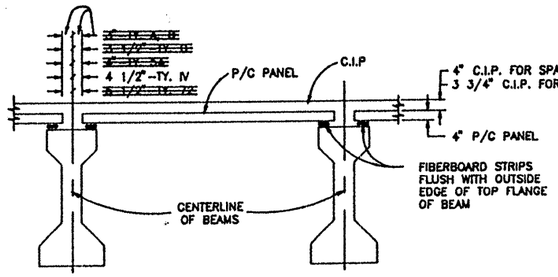

TYPICAL CROSS SECTION

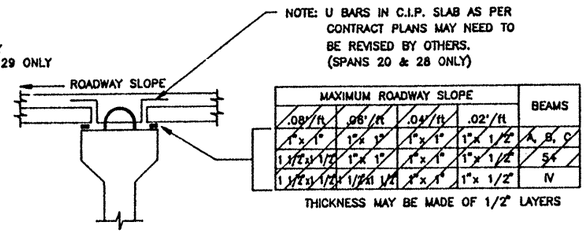

MAXIMUM ROADWAY SLOPE				BEAMS
.08'/ft.	.06'/ft.	.04'/ft.	.02'/ft.	
1"x 1"	1"x 1"	1"x 1"	1"x 1/2"	A, B, C
1 1/2"x 1 1/2"	1"x 1"	1"x 1"	1"x 1/2"	54
1 1/2"x 1 1/2"	1 1/2"x 1 1/2"	1"x 1"	1"x 1/2"	IV

THICKNESS MAY BE MADE OF 1/2" LAYERS

FIBERBOARD DIMENSIONS

NOTE

1. ALL DIMENSIONS SHOWN ARE ON A HORIZONTAL PLANE.
2. ALL DIMENSIONS SHOWN ARE MEASURED FROM CENTERLINE OF BENT OR FACE OF ABUTMENT BACKWALL OR FACE OF I.T. BENT CAP BACKWALL, ALONG CENTERLINE OF BEAM.

● DENOTES ERECTION MARK

TEXAS DEPARTMENT OF TRANSPORTATION
APPROVED
DIVISION OF BRIDGES AND STRUCTURES
AUG 04 1992
APPROVAL OF THIS DRAWING DOES NOT RELIEVE THE CONTRACTOR OF THE RESPONSIBILITY FOR THE CORRECTNESS OF DETAIL. SAPSCO

CONTRACTOR	GILBERT TEXAS CONSTR. CORP.			
CONTRACTORS OPTIONS	END DIAFRAM : AS PER CONTRACT DWGS. INTERIOR DIAFRAM : N/A			SLAB : PANELS
FED.RD. DIV.NO.	STATE	PROJECT NO.		HWY. NO.
6	TEXAS	NH 92(50) M		U.S. 83/281
STATE DIST.NO.	COUNTY	CONTROL NO.	SECTION NO.	JOB NO.
21	HIDALGO	0039	17	097

COPYRIGHT 1989 BY
STRUCTURAL ENGINEERING ASSOCIATES, INC.
CONSULTING ENGINEERS, SAN ANTONIO, TEXAS

JOB NO. 92-555	DRAWN L.L.A.	CHECKED R.S.M.	DATE 6/30/92
SEA JOB NO. 92-062H	ERECTION SHEET		SHEET NO. EP- 8

328071

SUMMARY

SPAN 26	
3A7.9	2
5A7.9	1
6A7.9	2
7A7.9	1
8S7.9	35

SPAN 27	
3A5.8	3
4A5.8	1
5A5.8	3
7A5.8	1
8S5.8	55

SPAN 28	
3A5.8	4
5A5.8	5
7A5.8	1
8S5.8	54

SPAN 29	
3A7.9	3
4A7.9	2
4.5A7.9	1
8S7.9	36

TOTAL	
3A5.8	7
3A7.9	5
4A5.8	1
4A7.9	2
4.5A7.9	1
5A5.8	8
5A7.9	1
6A7.9	2
7A5.8	2
7A7.9	1
8S5.8	109
8S7.9	71

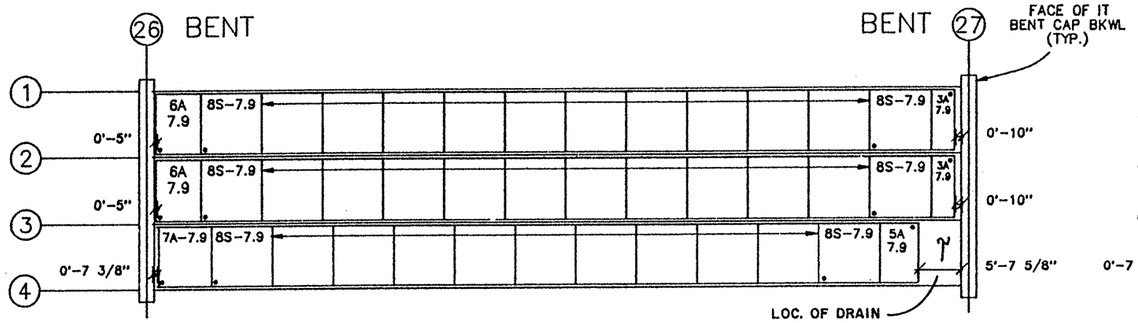

SPAN 26

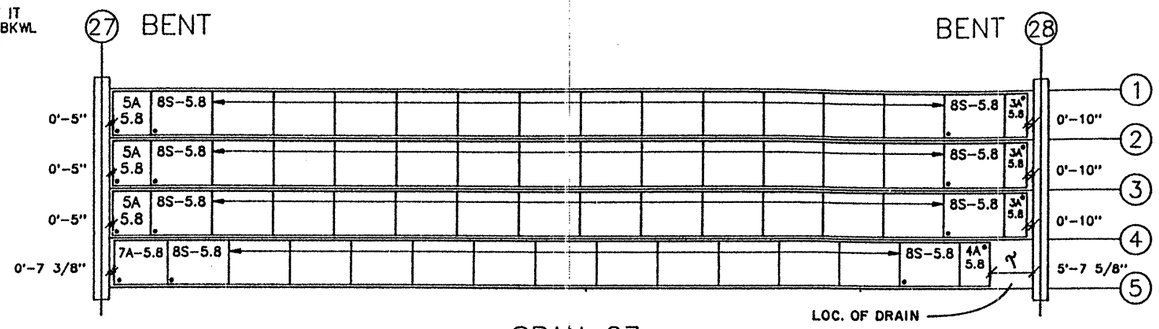

SPAN 27

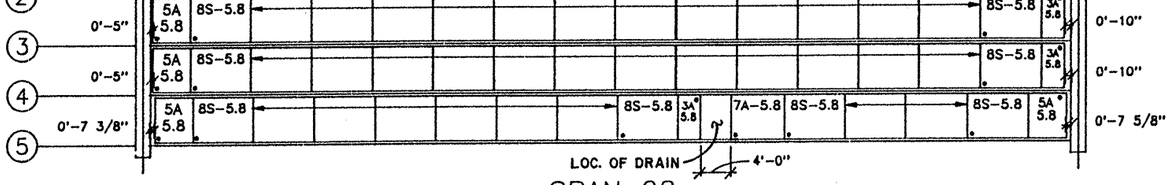

SPAN 28

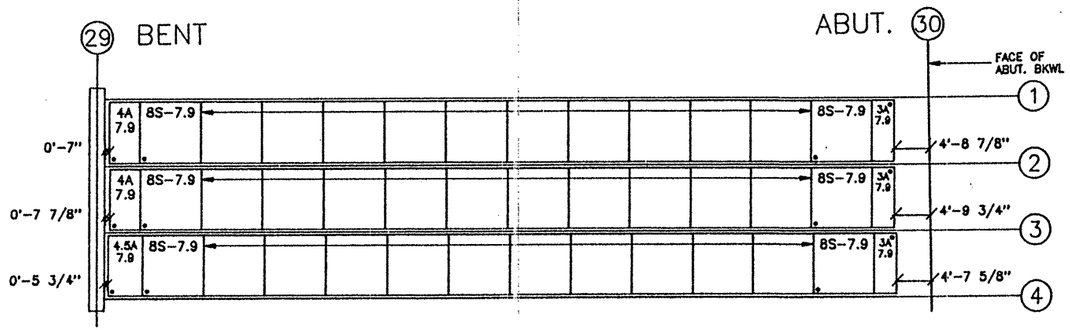

SPAN 29

TEXAS DEPARTMENT OF TRANSPORTATION
APPROVED
DIVISION OF BRIDGES AND STRUCTURES

AUG 04 1992

APPROVAL OF THIS DRAWING DOES NOT RELIEVE THE CONTRACTOR OF THE RESPONSIBILITY FOR THE CORRECTNESS OF DETAIL.

U.S. 83/281 INTERCHANGE
RAMP 2

N

NOTE

1. ALL DIMENSIONS SHOWN ARE ON A HORIZONTAL PLANE.
2. ALL DIMENSIONS SHOWN ARE MEASURED FROM CENTERLINE OF BENT OR FACE OF ABUTMENT BACKWALL OR FACE OF I.T. BENT CAP BACKWALL, ALONG CENTERLINE OF BEAM.

● DENOTES ERECTION MARK

SAPSCO

CONTRACTOR GILBERT TEXAS CONSTR. CORP.

CONTRACTORS OPTIONS	END DIAFRAM : AS PER CONTRACT DWGS.	SLAB : PANELS
	INTERIOR DIAFRAM : N/A	

FED.RD. DIV.NO.	STATE	PROJECT NO.	HWY. NO.
6	TEXAS	NH 92(50) M	U.S. 83/281

STATE DIST.NO.	COUNTY	CONTROL NO.	SECTION NO.	JOB NO.
21	HIDALGO	0039	17	097

COPYRIGHT 1989 BY STRUCTURAL ENGINEERING ASSOCIATES, INC. CONSULTING ENGINEERS, SAN ANTONIO, TEXAS

JOB NO. 92-555	DRAWN L.L.A.	CHECKED R.S.M.	DATE 6/30/92	SHEET NO. EP- 9
SEA JOB NO. 92-062H	ERECTION SHEET			

328071

SUMMARY
SPAN 20

3A7.9	1
5.5A7.9	1
6.5A7.9	2
7A7.9	2
8S7.9	33

SPAN 21

3A7.9	3
4A7.9	2
7A7.9	1
8S7.9	35

TOTAL

3A7.9	4
4A7.9	2
5.5A7.9	1
6.5A7.9	2
7A7.9	3
8S7.9	68

SPANS 12 THRU 19
STEEL GIRDERS
(BY OTHERS)

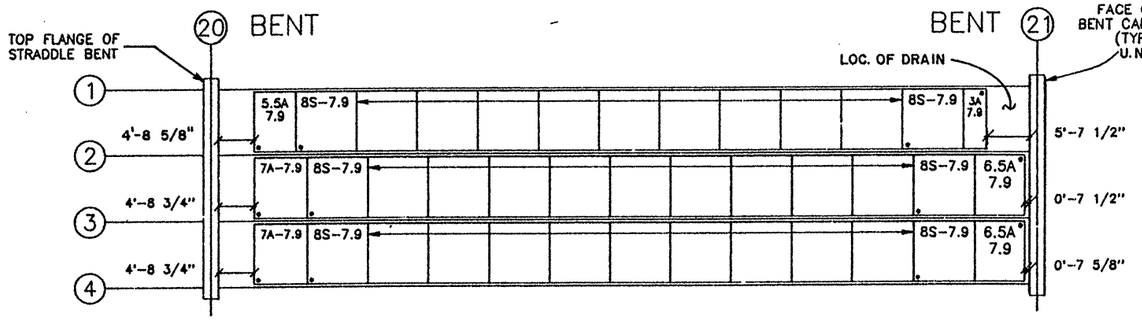

SPAN 20

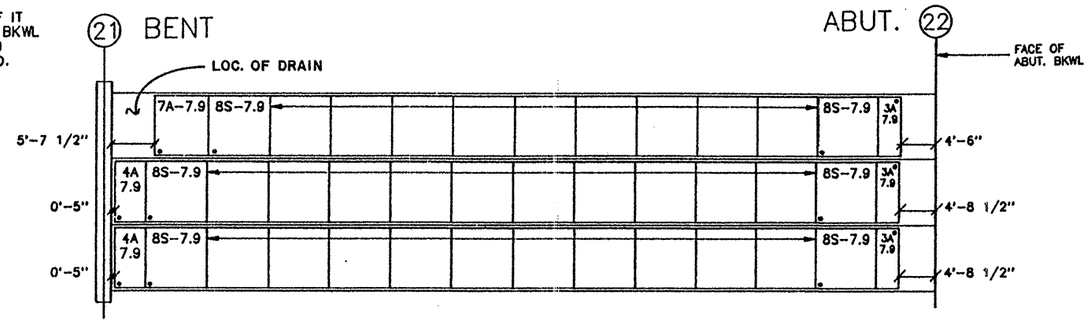

SPAN 21

U.S. 83/281 INTERCHANGE
RAMP 3

TEXAS DEPARTMENT OF TRANSPORTATION
APPROVED
DIVISION OF BRIDGES AND STRUCTURES

AUG 04 1992

APPROVAL OF THIS DRAWING DOES NOT RELIEVE THE CONTRACTOR OF THE RESPONSIBILITY FOR THE CORRECTNESS OF DETAIL.

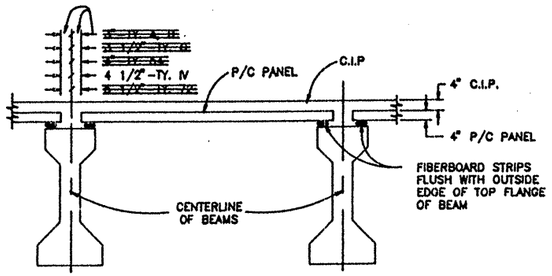

TYPICAL CROSS SECTION

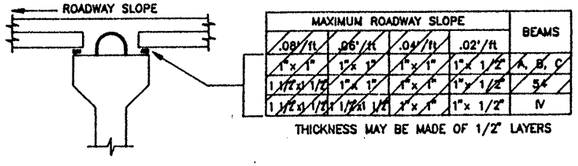

THICKNESS MAY BE MADE OF 1/2" LAYERS

FIBERBOARD DIMENSIONS

NOTE

1. ALL DIMENSIONS SHOWN ARE ON A HORIZONTAL PLANE.
2. ALL DIMENSIONS SHOWN ARE MEASURED FROM CENTERLINE OF BENT OR FACE OF ABUTMENT BACKWALL OR FACE OF I.T. BENT CAP BACKWALL, ALONG CENTERLINE OF BEAM.

● DENOTES ERECTION MARK

SAPSCO				
CONTRACTOR GILBERT TEXAS CONSTR. CORP.				
CONTRACTORS OPTIONS	END DIAFRAM : AS PER CONTRACT DWGS.			SLAB : PANELS
	INTERIOR DIAFRAM : N/A			
FED.RD. DIV.NO.	STATE	PROJECT NO.		HWY. NO.
6	TEXAS	NH 92(50) M		U.S. 83/281
STATE DIST.NO.	COUNTY	CONTROL NO.	SECTION NO.	JOB NO.
21	HIDALGO	0039	17	097

COPYRIGHT 1989 BY STRUCTURAL ENGINEERING ASSOCIATES, INC. *CONSULTING ENGINEERS*, SAN ANTONIO, TEXAS

JOB NO. 92-555	DRAWN L.L.A.	CHECKED R.S.M.	DATE 6/30/92	SHEET NO. EP- 10
SEA JOB NO. 92-062H	ERECTION SHEET			

328071

SUMMARY	
SPAN 15	
3A7.9	3
3.5A7.9	1
5A7.9	1
5.5A7.9	1
8S7.9	29
SPAN 16	
3A7.9	3
3.5A7.9	1
5A7.9	1
5.5A7.9	1
8S7.9	29
SPAN 17	
3A7.9	2
3.5A7.9	1
5A7.9	1
6.5A7.9	1
7A7.9	1
8S7.9	29
SPAN 18	
3A7.9	3
3.5A7.9	1
5A7.9	1
5.5A7.9	1
8S7.9	29
TOTAL	
3A7.9	11
3.5A7.9	4
5A7.9	4
5.5A7.9	3
6.5A7.9	1
7A7.9	1
8S7.9	116

SPANS 12 THRU 14
STEEL GIRDERS
(BY OTHERS)

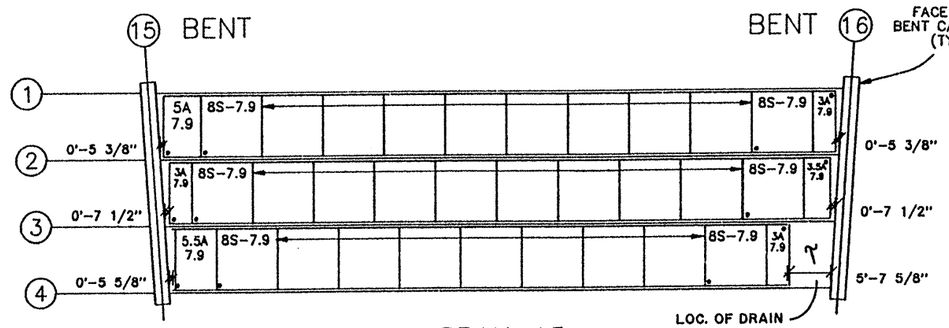

SPAN 15

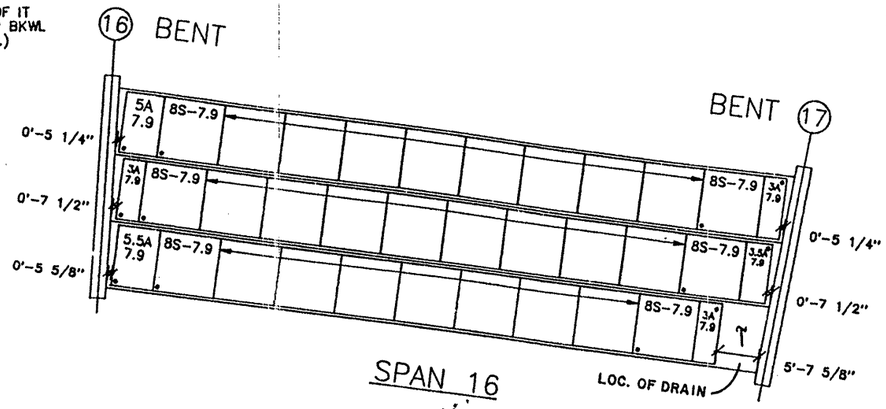

SPAN 16

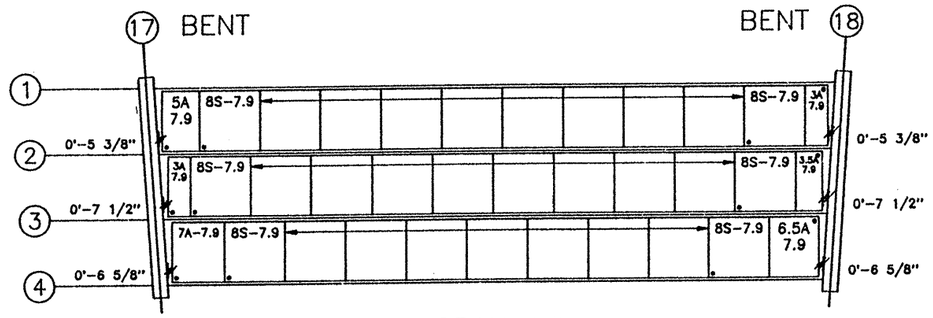

SPAN 17

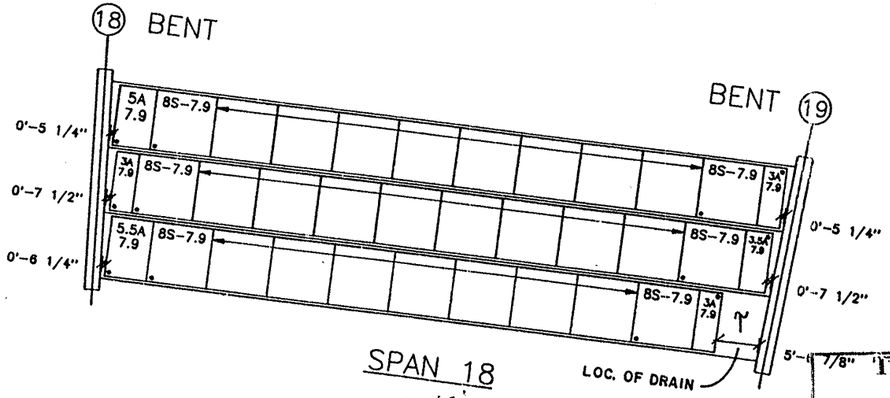

SPAN 18

SPANS 19, 20 & 21
STEEL GIRDERS
(BY OTHERS)

TEXAS DEPARTMENT OF TRANSPORTATION
APPROVED
DIVISION OF BRIDGES AND STRUCTURES
AUG 04 1992
APPROVAL OF THIS DRAWING DOES NOT RELIEVE THE CONTRACTOR OF THE RESPONSIBILITY FOR THE CORRECTNESS OF DETAIL.

U.S. 83/281 INTERCHANGE
RAMP 4

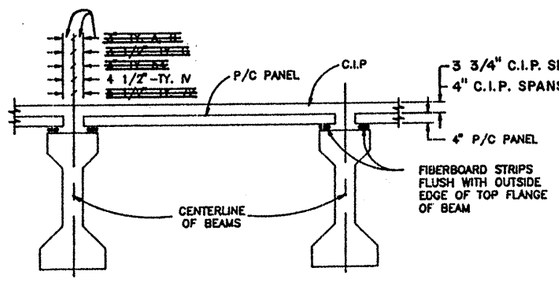

TYPICAL CROSS SECTION

NOTE: U BARS IN C.I.P. SLAB AS PER CONTRACT PLANS MAY NEED TO BE REVISED BY OTHERS. (FOR SPAN 15 ONLY)

■ FOR SPANS 15 THRU 18 ONLY
● FOR SPANS 22 THRU 24 ONLY

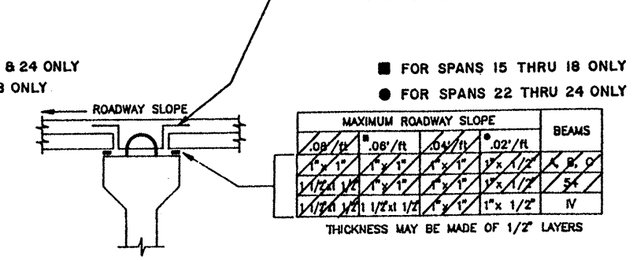

FIBERBOARD DIMENSIONS

NOTE

1. ALL DIMENSIONS SHOWN ARE ON A HORIZONTAL PLANE.
2. ALL DIMENSIONS SHOWN ARE MEASURED FROM CENTERLINE OF BENT OR FACE OF ABUTMENT BACKWALL OR FACE OF I.T. BENT CAP BACKWALL, ALONG CENTERLINE OF BEAM.

● DENOTES ERECTION MARK

SAPSCO					
CONTRACTOR GILBERT TEXAS CONSTR. CORP.					
CONTRACTORS OPTIONS	END DIAFRAM : AS PER CONTRACT DWGS.				SLAB : PANELS
	INTERIOR DIAFRAM : N/A				
FED.RD. DIV.NO.	STATE	PROJECT NO.			HWY. NO.
6	TEXAS	NH 92(50) M			U.S. 83/281
STATE DIST.NO.	COUNTY		CONTROL NO.	SECTION NO.	JOB NO.
21	HIDALGO		0039	17	097

COPYRIGHT 1989 BY STRUCTURAL ENGINEERING ASSOCIATES, INC. *CONSULTING ENGINEERS*, SAN ANTONIO, TEXAS

JOB NO.	DRAWN	CHECKED	DATE	SHEET NO.
92-555	L.L.A.	R.S.M.	6/30/92	EP- 11
SEA JOB NO. 92-062H	ERECTION SHEET			

328071

SUMMARY	
SPAN 22	
3A4.4	1
5A4.4	1
6A4.4	4
7A4.4	4
8S4.4	70
SPAN 23	
3A7.9	3
3.5A7.9	1
5.5A7.9	2
8S7.9	23
SPAN 24	
3A7.9	3
3.5A7.9	2
6.5A7.9	1
8S7.9	23

TOTAL	
3A4.4	1
3A7.9	6
3.5A7.9	3
5A4.4	1
5.5A7.9	2
6A4.4	4
6.5A7.9	1
7A4.4	4
8S4.4	70
8S7.9	46

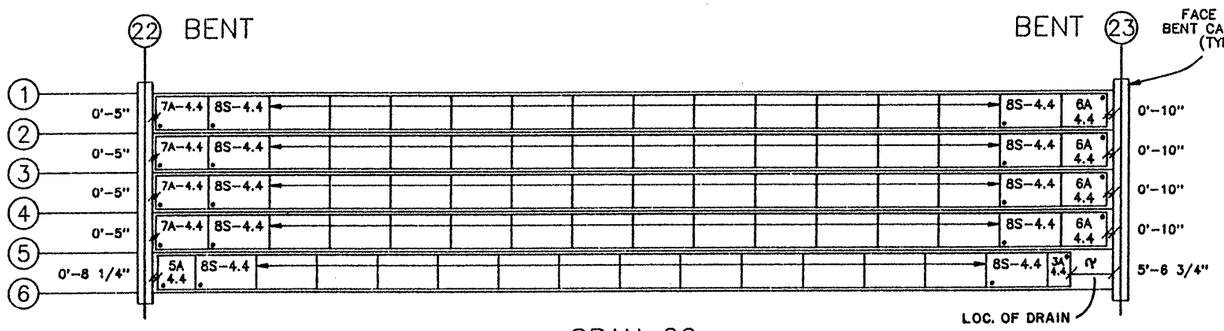

SPAN 22

130

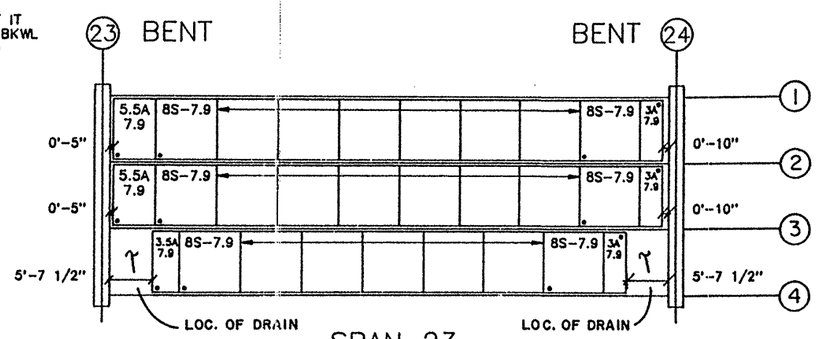

SPAN 23

77.5

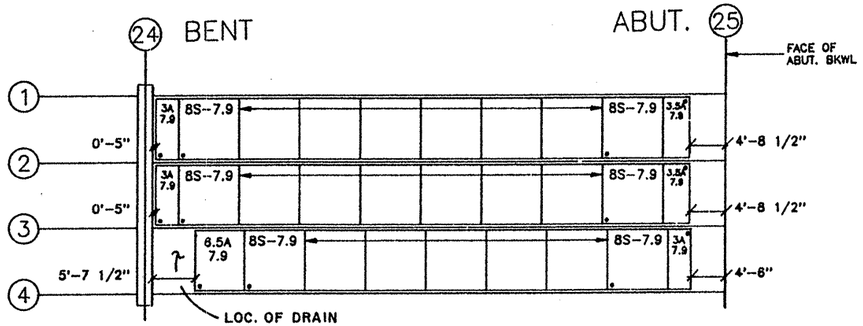

SPAN 24

77.5

U.S. 83/281 INTERCHANGE
RAMP 4

TEXAS DEPARTMENT OF TRANSPORTATION
APPROVED
DIVISION OF BRIDGES AND STRUCTURES

AUG 04 1992

APPROVAL OF THIS DRAWING DOES NOT RELIEVE THE CONTRACTOR OF THE RESPONSIBILITY FOR THE CORRECTNESS OF DETAIL.

NOTE

1. ALL DIMENSIONS SHOWN ARE ON A HORIZONTAL PLANE.
2. ALL DIMENSIONS SHOWN ARE MEASURED FROM CENTERLINE OF BENT OR FACE OF ABUTMENT BACKWALL OR FACE OF I.T. BENT CAP BACKWALL, ALONG CENTERLINE OF BEAM.

● DENOTES ERECTION MARK

SAPSCO				
CONTRACTOR GILBERT TEXAS CONSTR. CORP.				
CONTRACTORS OPTIONS	END DIAFRAM : AS PER CONTRACT DWGS. INTERIOR DIAFRAM : N/A			SLAB : PANELS
FED.RD. DIV.NO.	STATE	PROJECT NO.		HWY. NO.
6	TEXAS	NH 92(50) M		U.S. 83/281
STATE DIST.NO.	COUNTY	CONTROL NO.	SECTION NO.	JOB NO.
21	HIDALGO	0039	17	097

COPYRIGHT 1989 BY STRUCTURAL ENGINEERING ASSOCIATES, INC. *CONSULTING ENGINEERS*, SAN ANTONIO, TEXAS

JOB NO.	DRAWN	CHECKED	DATE	SHEET NO.
92-555	L.L.A.	R.S.M.	6/30/92	EP- 12
SEA JOB NO. 92-062H	ERECTION SHEET			

328071

SCHEDULE OF PANEL DIMENSIONS — TOTAL AREA THIS TABLE ____ Sq.Ft.

PANEL MARK	3A-3.0	3A-3.1	3A-3.2	3A-3.3	3A-3.4	3A-3.5	3A-3.6	3A-3.7	3A-3.8	3A-3.9
NO. REQ'D										
"W"	3.0	3.1	3.2	3.3	3.4	3.5	3.6	3.7	3.8	3.9
MIN. WWF WIDTH	2.67	2.77	2.87	2.97	3.07	3.17	3.27	3.37	3.47	3.57
BAR U TYPE	A	A	A	A	A	A	A	A	A	A
BAR A	7	7	7	7	8	8	8	8	8	9
AREA / PANEL	9.00 ϕ	9.30 ϕ	9.60 ϕ	9.90 ϕ	10.20 ϕ	10.50 ϕ	10.80 ϕ	11.10 ϕ	11.40 ϕ	11.70 ϕ
AREA (Sq.Ft.)										

SCHEDULE OF PANEL DIMENSIONS — TOTAL AREA THIS TABLE 13 Sq.Ft.

PANEL MARK					3A-4.4					
NO. REQ'D					1					
"W"	4.0	4.1	4.2	4.3	4.4	4.5	4.6	4.7	4.8	4.9
MIN. WWF WIDTH	3.67	3.77	3.87	3.97	4.07	4.17	4.27	4.37	4.47	4.57
BAR U TYPE	A	A	A	A	A	A	A	A	A	A
BAR A	9	9	9	9	10	10	10	10	10	11
AREA / PANEL	12.00 ϕ	12.30 ϕ	12.60 ϕ	12.90 ϕ	13.20 ϕ	13.50 ϕ	13.80 ϕ	14.10 ϕ	14.40 ϕ	14.70 ϕ
AREA (Sq.Ft.)					13					

SCHEDULE OF PANEL DIMENSIONS — TOTAL AREA THIS TABLE 122 Sq.Ft.

PANEL MARK									3A-5.8	
NO. REQ'D									7	
"W"	5.0	5.1	5.2	5.3	5.4	5.5	5.6	5.7	5.8	5.9
MIN. WWF WIDTH	4.67	4.77	4.87	4.97	5.07	5.17	5.27	5.37	5.47	5.57
BAR U TYPE	A	A	A	A	B	B	B	B	B	B
BAR A	11	11	11	11	12	12	12	12	12	13
AREA / PANEL	15.00 ϕ	15.30 ϕ	15.60 ϕ	15.90 ϕ	16.20 ϕ	16.50 ϕ	16.80 ϕ	17.10 ϕ	17.40 ϕ	17.70 ϕ
AREA (Sq.Ft.)									122	

SCHEDULE OF PANEL DIMENSIONS — TOTAL AREA THIS TABLE 469 Sq.Ft.

PANEL MARK								3A-6.7	3A-6.8	3A-6.9
NO. REQ'D								7	11	5
"W"	6.0	6.1	6.2	6.3	6.4	6.5	6.6	6.7	6.8	6.9
MIN. WWF WIDTH	5.67	5.77	5.87	5.97	6.07	6.17	6.27	6.37	6.47	6.57
BAR U TYPE	B	B	B	B	B	B	B	B	B	B
BAR A	13	13	13	13	14	14	14	14	14	15
AREA / PANEL	18.00 ϕ	18.30 ϕ	18.60 ϕ	18.90 ϕ	19.20 ϕ	19.50 ϕ	19.80 ϕ	20.10 ϕ	20.40 ϕ	20.70 ϕ
AREA (Sq.Ft.)								141	224	104

SCHEDULE OF PANEL DIMENSIONS — TOTAL AREA THIS TABLE 2,261 Sq.Ft.

PANEL MARK				3A-7.3	3A-7.4	3A-7.5			3A-7.8	3A-7.9
NO. REQ'D				6	10	4			21	56
"W"	7.0	7.1	7.2	7.3	7.4	7.5	7.6	7.7	7.8	7.9
MIN. WWF WIDTH	6.67	6.77	6.87	6.97	7.07	7.17	7.27	7.37	7.47	7.57
BAR U TYPE	B	B	B	B	B	B	C	C	C	C
BAR A	15	15	15	15	16	16	16	16	16	17
AREA / PANEL	21.00 ϕ	21.30 ϕ	21.60 ϕ	21.90 ϕ	22.20 ϕ	22.50 ϕ	22.80 ϕ	23.10 ϕ	23.40 ϕ	23.70 ϕ
AREA (Sq.Ft.)				131	222	90			491	1,327

SCHEDULE OF PANEL DIMENSIONS — TOTAL AREA THIS TABLE 144 Sq.Ft.

PANEL MARK	3A-8.0									
NO. REQ'D	6									
"W"	8.0	8.1	8.2	8.3	8.4	8.5	8.6	8.7	8.8	8.9
MIN. WWF WIDTH	7.67	7.77	7.87	7.97	8.07	8.17	8.27	8.37	8.47	8.57
BAR U TYPE	C	C	C	C	C	C	C	C	C	C
BAR A	17	17	17	17	18	18	18	18	18	19
AREA / PANEL	24.00 ϕ	24.30 ϕ	24.60 ϕ	24.90 ϕ	25.20 ϕ	25.50 ϕ	25.80 ϕ	26.10 ϕ	26.40 ϕ	26.70 ϕ
AREA (Sq.Ft.)	144									

SCHEDULE OF PANEL DIMENSIONS — TOTAL AREA THIS TABLE ____ Sq.Ft.

PANEL MARK	3A-9.0	3A-9.1	3A-9.2	3A-9.3	3A-9.4	3A-9.5	3A-9.6	3A-9.7	3A-9.8	3A-9.9
NO. REQ'D										
"W"	9.0	9.1	9.2	9.3	9.4	9.5	9.6	9.7	9.8	9.9
MIN. WWF WIDTH	8.67	8.77	8.87	8.97	9.07	9.17	9.27	9.37	9.47	9.57
BAR U TYPE	C	C	C	C	C	C	C	C	C	C
BAR A	19	19	19	19	20	20	20	20	20	21
AREA / PANEL	27.00 ϕ	27.30 ϕ	27.60 ϕ	27.90 ϕ	28.20 ϕ	28.50 ϕ	28.80 ϕ	29.10 ϕ	29.40 ϕ	29.70 ϕ
AREA (Sq.Ft.)										

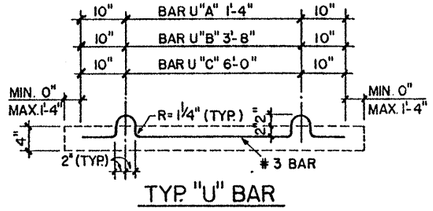

TYP. "U" BAR

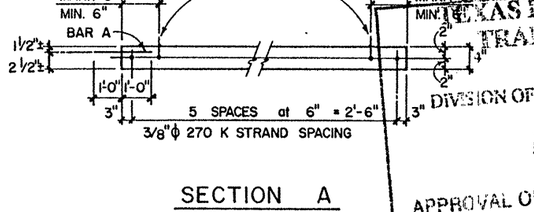

SECTION A
(SHOWING STRANDS)

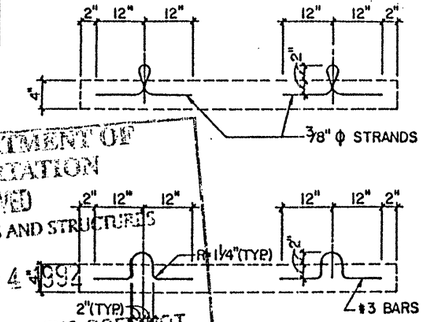

OPTIONAL "U" BAR
(AS REQUIRED PER PANEL)

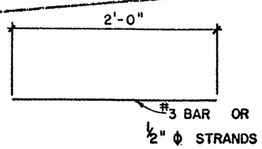

TYP. "A" BAR

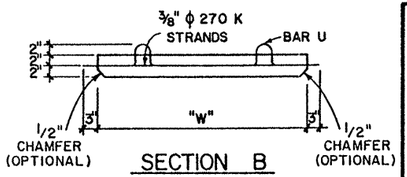

SECTION B

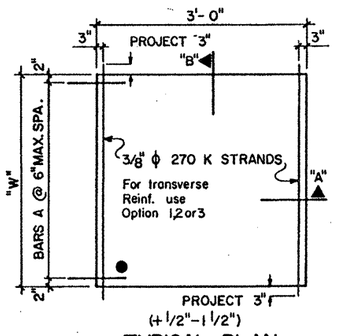

TYPICAL PLAN

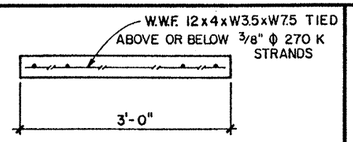

SECTION C

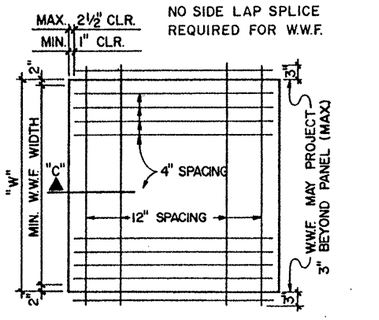

OPTION 1 (TRANSVERSE REINF.)

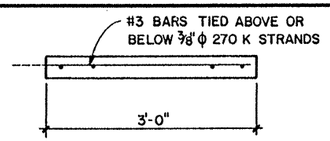

SECTION D

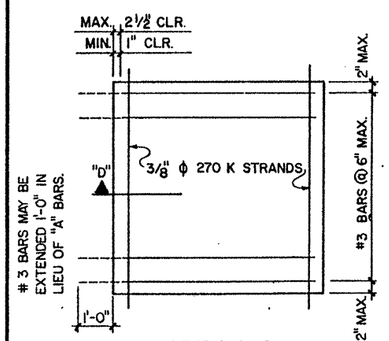

OPTION 2 (TRANSVERSE REINF.)

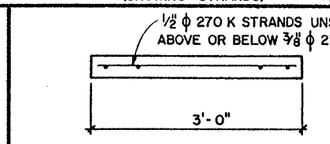

SECTION E

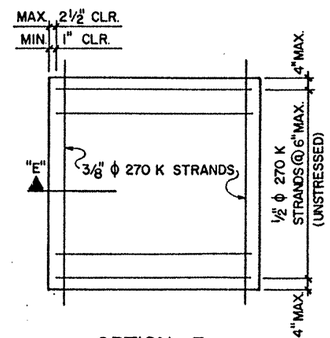

OPTION 3 (TRANSVERSE REINF.)

6 3/8" ϕ 270K STRANDS STRESS TO 161 KIPS EACH
CONCRETE CLASS: H
RELEASE STRENGTH: 4,000 p.s.i.
28 DAY STRENGTH: 5,000 p.s.i.
TOP FINISH: BROOM
● ERECTION MARK

TOTAL PANEL AREA THIS SHEET 3,009 Sq.Ft.

SAPSCO
SAN ANTONIO PRE-STRESSED CO.

CONTRACTOR GILBERT TEXAS CONSTR. CORP.

FED. RD. DIV. NO.	STATE	PROJECT NO.	HWY. NO.
6	TEXAS	NH 92(50) M	US 83/281
STATE DIST. NO.	COUNTY	CONTROL NO. / SECTION NO.	JOB NO.
21	HIDALGO	0039 / 17	097

DRAWN	CHECK	DATE	SHEET
L.L.A.	R.S.M.	6/30/92	FP-1
JOB NO. 92-555	3A-FAB. SHEET		
92-062H			

MOD. 8-16-82

TEXAS DEPARTMENT OF TRANSPORTATION
APPROVED
DIVISION OF BRIDGES AND STRUCTURES
AUG 04 1992
APPROVAL OF THIS DRAWING DOES NOT RELIEVE THE CONTRACTOR OF RESPONSIBILITY FOR THE CORRECTNESS OF DETAIL.

SCHEDULE OF PANEL DIMENSIONS

TOTAL AREA THIS TABLE ____ Sq.Ft.

PANEL MARK	3.5A-3.0	3.5A-3.1	3.5A-3.2	3.5A-3.3	3.5A-3.4	3.5A-3.5	3.5A-3.6	3.5A-3.7	3.5A-3.8	3.5A-3.9
NO. REQ'D										
"W"	3.0	3.1	3.2	3.3	3.4	3.5	3.6	3.7	3.8	3.9
MIN. WWF WIDTH	2.67	2.77	2.87	2.97	3.07	3.17	3.27	3.37	3.47	3.57
BAR U TYPE	A	A	A	A	A	A	A	A	A	A
BAR A	7	7	7	7	8	8	8	8	8	9
AREA / PANEL	10.50 ¢	10.85 ¢	11.20 ¢	11.55 ¢	11.90 ¢	12.25 ¢	12.60 ¢	12.95 ¢	13.30 ¢	13.65 ¢
AREA (Sq.Ft.)										

SCHEDULE OF PANEL DIMENSIONS

TOTAL AREA THIS TABLE ____ Sq.Ft.

PANEL MARK	3.5A-4.0	3.5A-4.1	3.5A-4.2	3.5A-4.3	3.5A-4.4	3.5A-4.5	3.5A-4.6	3.5A-4.7	3.5A-4.8	3.5A-4.9
NO. REQ'D										
"W"	4.0	4.1	4.2	4.3	4.4	4.5	4.6	4.7	4.8	4.9
MIN. WWF WIDTH	3.67	3.77	3.87	3.97	4.07	4.17	4.27	4.37	4.47	4.57
BAR U TYPE	A	A	A	A	A	A	A	A	A	A
BAR A	9	9	9	9	10	10	10	10	10	11
AREA / PANEL	14.00 ¢	14.35 ¢	14.70 ¢	15.05 ¢	15.40 ¢	15.75 ¢	16.10 ¢	16.45 ¢	16.80 ¢	17.15 ¢
AREA (Sq.Ft.)										

SCHEDULE OF PANEL DIMENSIONS

TOTAL AREA THIS TABLE ____ Sq.Ft.

PANEL MARK	3.5A-5.0	3.5A-5.1	3.5A-5.2	3.5A-5.3	3.5A-5.4	3.5A-5.5	3.5A-5.6	3.5A-5.7	3.5A-5.8	3.5A-5.9
NO. REQ'D										
"W"	5.0	5.1	5.2	5.3	5.4	5.5	5.6	5.7	5.8	5.9
MIN. WWF WIDTH	4.67	4.77	4.87	4.97	5.07	5.17	5.27	5.37	5.47	5.57
BAR U TYPE	A	A	A	A	B	B	B	B	B	B
BAR A	11	11	11	11	12	12	12	12	12	13
AREA / PANEL	17.50 ¢	17.85 ¢	18.20 ¢	18.55 ¢	18.90 ¢	19.25 ¢	19.60 ¢	19.95 ¢	20.30 ¢	20.65 ¢
AREA (Sq.Ft.)										

SCHEDULE OF PANEL DIMENSIONS

TOTAL AREA THIS TABLE ____ 48 Sq.Ft.

PANEL MARK										3.5A-6.9
NO. REQ'D										2
"W"	6.0	6.1	6.2	6.3	6.4	6.5	6.6	6.7	6.8	6.9
MIN. WWF WIDTH	5.67	5.77	5.87	5.97	6.07	6.17	6.27	6.37	6.47	6.57
BAR U TYPE	B	B	B	B	B	B	B	B	B	B
BAR A	13	13	13	13	14	14	14	14	14	15
AREA / PANEL	21.00 ¢	21.35 ¢	21.70 ¢	22.05 ¢	22.40 ¢	22.75 ¢	23.10 ¢	23.45 ¢	23.80 ¢	24.15 ¢
AREA (Sq.Ft.)										48

SCHEDULE OF PANEL DIMENSIONS

TOTAL AREA THIS TABLE ____ 302 Sq.Ft.

PANEL MARK				3.5A-7.3					3.5A-7.8	3.5A-7.9
NO. REQ'D				1					3	7
"W"	7.0	7.1	7.2	7.3	7.4	7.5	7.6	7.7	7.8	7.9
MIN. WWF WIDTH	6.67	6.77	6.87	6.97	7.07	7.17	7.27	7.37	7.47	7.57
BAR U TYPE	B	B	B	B	B	B	B	C	C	C
BAR A	15	15	15	15	16	16	16	16	16	17
AREA / PANEL	24.50 ¢	24.85 ¢	25.20 ¢	25.55 ¢	25.90 ¢	26.25 ¢	26.60 ¢	26.95 ¢	27.30 ¢	27.65 ¢
AREA (Sq.Ft.)				26					82	194

SCHEDULE OF PANEL DIMENSIONS

TOTAL AREA THIS TABLE ____ Sq.Ft.

PANEL MARK	3.5A-8.0	3.5A-8.1	3.5A-8.2	3.5A-8.3	3.5A-8.4	3.5A-8.5	3.5A-8.6	3.5A-8.7	3.5A-8.8	3.5A-8.9
NO. REQ'D										
"W"	8.0	8.1	8.2	8.3	8.4	8.5	8.6	8.7	8.8	8.9
MIN. WWF WIDTH	7.67	7.77	7.87	7.97	8.07	8.17	8.27	8.37	8.47	8.57
BAR U TYPE	C	C	C	C	C	C	C	C	C	C
BAR A	17	17	17	17	18	18	18	18	18	19
AREA / PANEL	28.00 ¢	28.35 ¢	28.70 ¢	29.05 ¢	29.40 ¢	29.75 ¢	30.10 ¢	30.45 ¢	30.80 ¢	31.15 ¢
AREA (Sq.Ft.)										

SCHEDULE OF PANEL DIMENSIONS

TOTAL AREA THIS TABLE ____ Sq.Ft.

PANEL MARK	3.5A-9.0	3.5A-9.1	3.5A-9.2	3.5A-9.3	3.5A-9.4	3.5A-9.5	3.5A-9.6	3.5A-9.7	3.5A-9.8	3.5A-9.9
NO. REQ'D										
"W"	9.0	9.1	9.2	9.3	9.4	9.5	9.6	9.7	9.8	9.9
MIN. WWF WIDTH	8.67	8.77	8.87	8.97	9.07	9.17	9.27	9.37	9.47	9.57
BAR U TYPE	C	C	C	C	C	C	C	C	C	C
BAR A	18	19	19	19	20	20	20	20	20	21
AREA / PANEL	31.50 ¢	31.85 ¢	32.20 ¢	32.55 ¢	32.90 ¢	33.25 ¢	33.60 ¢	33.95 ¢	34.30 ¢	34.65 ¢
AREA (Sq.Ft.)										

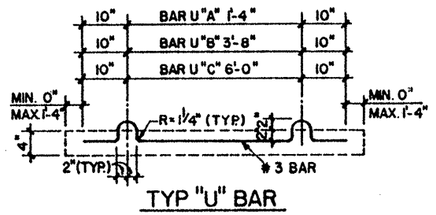

TYP "U" BAR

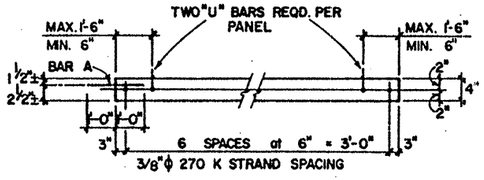

SECTION A
(SHOWING STRANDS)

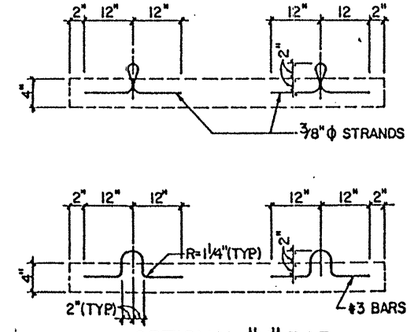

OPTIONAL "U" BAR
(4 REQUIRED PER PANEL)

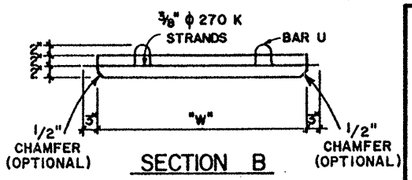

SECTION B

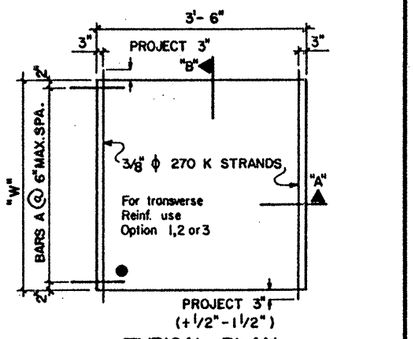

TYPICAL PLAN

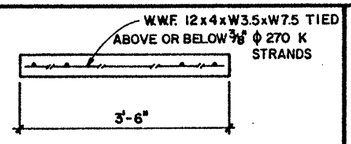

SECTION C

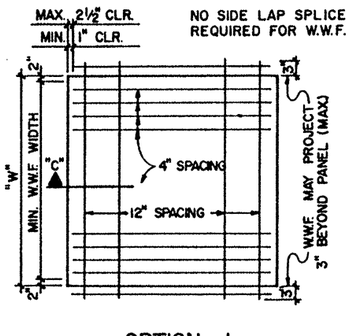

OPTION 1 (TRANSVERSE REINF)

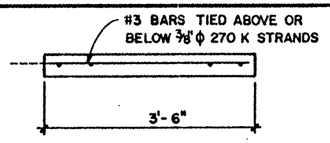

SECTION D

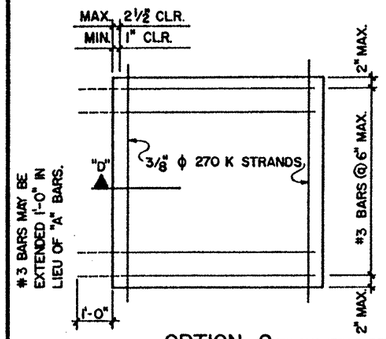

OPTION 2 (TRANSVERSE REINF)

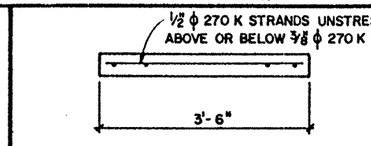

SECTION E

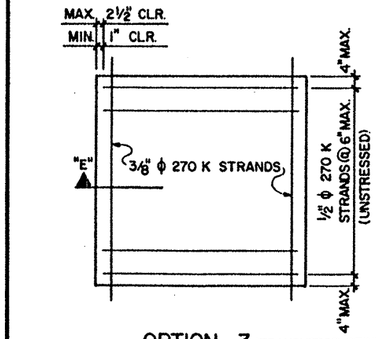

OPTION 3 (TRANSVERSE REINF)

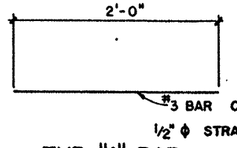

TYP. "A" BAR

7 3/8" ϕ 270K STRANDS STRESS TO 16.1 KIPS EACH
CONCRETE CLASS: H
RELEASE STRENGTH: 4,000 p.s.i.
28 DAY STRENGTH 5,000 p.s.i.
TOP FINISH: BROOM
● ERECTION MARK

TOTAL PANEL AREA THIS SHEET 350 Sq.Ft.

SAPSCO
SAN ANTONIO PRESTRESSED CO.

CONTRACTOR GILBERT TEXAS CONSTR. CORP.

FED. RD. DIV. NO.	STATE	PROJECT NO.	HWY. NO.
6	TEXAS	NH 92(50) M	US 83/281
STATE DIST. NO.	COUNTY	CONTROL NO.	SECTION NO.	JOB NO.
21	HIDALGO	0039	17	097

DRAWN	CHECK	DATE	SHEET
L.L.A.	R.S.M.	6/30/92	FP- 2
JOB NO. 92-555	3.5A-FAB. SHEET		

92-062H

MOD. 8-16-82

TEXAS DEPARTMENT OF TRANSPORTATION
APPROVED
DIVISION OF BRIDGES AND STRUCTURES
AUG 04 1992
APPROVAL OF THIS DRAWING DOES NOT RELIEVE THE CONTRACTOR OF THE RESPONSIBILITY FOR THE CORRECTNESS OF DETAIL.

SCHEDULE OF PANEL DIMENSIONS

TOTAL AREA THIS TABLE ____ Sq.Ft.

PANEL MARK	4A-3.0	4A-3.1	4A-3.2	4A-3.3	4A-3.4	4A-3.5	4A-3.6	4A-3.7	4A-3.8	4A-3.9
NO. REQ'D										
"W"	3.0	3.1	3.2	3.3	3.4	3.5	3.6	3.7	3.8	3.9
MIN. WWF WIDTH	2.67	2.77	2.87	2.97	3.07	3.17	3.27	3.37	3.47	3.57
BAR U TYPE	A	A	A	A	A	A	A	A	A	A
BAR A	7	7	7	7	8	8	8	8	8	9
AREA / PANEL	12.00ϕ	12.40ϕ	12.80ϕ	13.20ϕ	13.60ϕ	14.00ϕ	14.40ϕ	14.80ϕ	15.20ϕ	15.60ϕ
AREA (Sq.Ft.)										

SCHEDULE OF PANEL DIMENSIONS

TOTAL AREA THIS TABLE ____ Sq.Ft.

PANEL MARK	4A-4.0	4A-4.1	4A-4.2	4A-4.3	4A-4.4	4A-4.5	4A-4.6	4A-4.7	4A-4.8	4A-4.9
NO. REQ'D										
"W"	4.0	4.1	4.2	4.3	4.4	4.5	4.6	4.7	4.8	4.9
MIN. WWF WIDTH	3.67	3.77	3.87	3.97	4.07	4.17	4.27	4.37	4.47	4.57
BAR U TYPE	A	A	A	A	A	A	A	A	A	A
BAR A	9	9	9	9	10	10	10	10	10	11
AREA / PANEL	16.00ϕ	16.40ϕ	16.80ϕ	17.20ϕ	17.60ϕ	18.00ϕ	18.40ϕ	18.80ϕ	19.80ϕ	19.60ϕ
AREA (Sq.Ft.)										

SCHEDULE OF PANEL DIMENSIONS

TOTAL AREA THIS TABLE 23 Sq.Ft.

PANEL MARK									4A-5.8	
NO. REQ'D									1	
"W"	5.0	5.1	5.2	5.3	5.4	5.5	5.6	5.7	5.8	5.9
MIN. WWF WIDTH	4.67	4.77	4.87	4.97	5.07	5.17	5.27	5.37	5.47	5.57
BAR U TYPE	A	A	A	A	B	B	B	B	B	B
BAR A	11	11	11	11	12	12	12	12	12	13
AREA / PANEL	20.00ϕ	20.40ϕ	20.80ϕ	21.20ϕ	21.60ϕ	22.00ϕ	22.40ϕ	22.80ϕ	23.20ϕ	23.60ϕ
AREA (Sq.Ft.)									23	

SCHEDULE OF PANEL DIMENSIONS

TOTAL AREA THIS TABLE 138 Sq.Ft.

PANEL MARK										4A-6.9
NO. REQ'D										5
"W"	6.0	6.1	6.2	6.3	6.4	6.5	6.6	6.7	6.8	6.9
MIN. WWF WIDTH	5.67	5.77	5.87	5.97	6.07	6.17	6.27	6.37	6.47	6.57
BAR U TYPE	B	B	B	B	B	B	B	B	B	B
BAR A	13	13	13	13	14	14	14	14	14	15
AREA / PANEL	24.00ϕ	24.40ϕ	24.80ϕ	25.20ϕ	25.60ϕ	26.00ϕ	26.40ϕ	26.80ϕ	27.20ϕ	27.60ϕ
AREA (Sq.Ft.)										138

SCHEDULE OF PANEL DIMENSIONS

TOTAL AREA THIS TABLE 807 Sq.Ft.

PANEL MARK						4A-7.5			4A-7.8	4A-7.9
NO. REQ'D						7			9	10
"W"	7.0	7.1	7.2	7.3	7.4	7.5	7.6	7.7	7.8	7.9
MIN. WWF WIDTH	6.67	6.77	6.87	6.97	7.07	7.17	7.27	7.37	7.47	7.57
BAR U TYPE	B	B	B	B	B	B	B	C	C	C
BAR A	15	15	15	15	16	16	16	16	16	17
AREA / PANEL	28.00ϕ	28.40ϕ	28.80ϕ	29.20ϕ	29.60ϕ	30.00ϕ	30.40ϕ	30.80ϕ	31.20ϕ	31.60ϕ
AREA (Sq.Ft.)						210			281	316

SCHEDULE OF PANEL DIMENSIONS

TOTAL AREA THIS TABLE ____ Sq.Ft.

PANEL MARK	4A-8.0	4A-8.1	4A-8.2	4A-8.3	4A-8.4	4A-8.5	4A-8.6	4A-8.7	4A-8.8	4A-8.9
NO. REQ'D										
"W"	8.0	8.1	8.2	8.3	8.4	8.5	8.6	8.7	8.8	8.9
MIN. WWF WIDTH	7.67	7.77	7.87	7.97	8.07	8.17	8.27	8.37	8.47	8.57
BAR U TYPE	C	C	C	C	C	C	C	C	C	C
BAR A	17	17	17	17	18	18	18	18	18	19
AREA / PANEL	32.00ϕ	32.40ϕ	32.80ϕ	33.20ϕ	33.60ϕ	34.00ϕ	34.40ϕ	34.80ϕ	35.20ϕ	35.60ϕ
AREA (Sq.Ft.)										

SCHEDULE OF PANEL DIMENSIONS

TOTAL AREA THIS TABLE ____ Sq.Ft.

PANEL MARK	4A-9.0	4A-9.1	4A-9.2	4A-9.3	4A-9.4	4A-9.5	4A-9.6	4A-9.7	4A-9.8	4A-9.9
NO. REQ'D										
"W"	9.0	9.1	9.2	9.3	9.4	9.5	9.6	9.7	9.8	9.9
MIN. WWF WIDTH	8.67	8.77	8.87	8.97	9.07	9.17	9.27	9.37	9.47	9.57
BAR U TYPE	C	C	C	C	C	C	C	C	C	C
BAR A	19	19	19	19	20	20	20	20	20	21
AREA / PANEL	36.00ϕ	36.40ϕ	36.80ϕ	37.20ϕ	37.60ϕ	38.00ϕ	38.40ϕ	38.80ϕ	39.20ϕ	39.60ϕ
AREA (Sq.Ft.)										

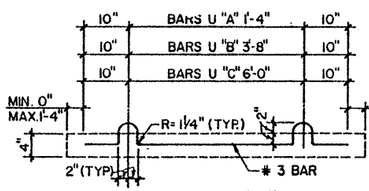

TYP. "U" BAR

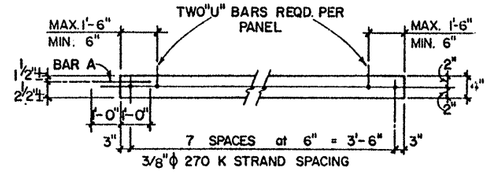

SECTION A
(SHOWING STRANDS)

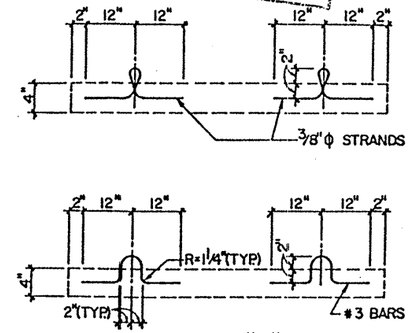

OPTIONAL "U" BAR
(4 REQUIRED PER PANEL)

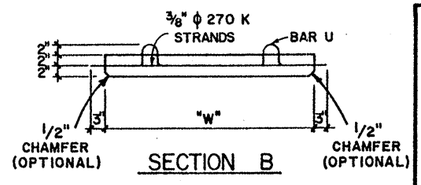

SECTION B

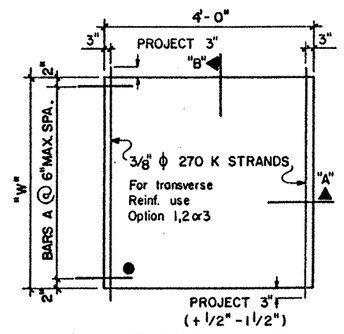

TYPICAL PLAN

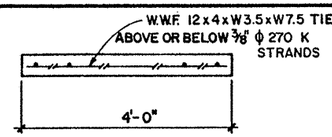

SECTION C

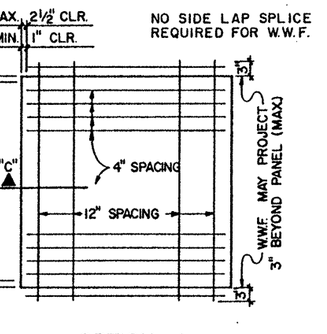

OPTION 1 (TRANSVERSE REINF.)

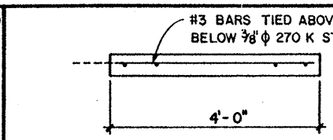

SECTION D

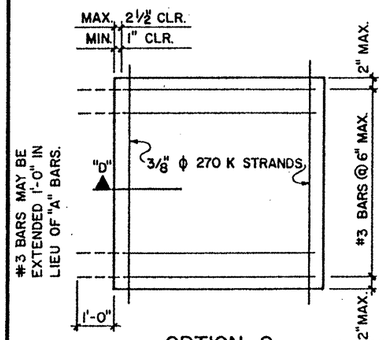

OPTION 2 (TRANSVERSE REINF.)

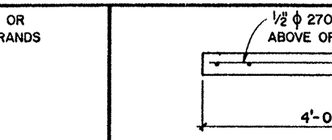

SECTION E

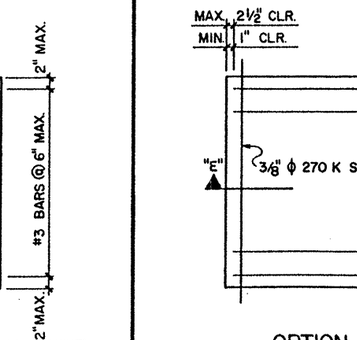

OPTION 3 (TRANSVERSE REINF.)

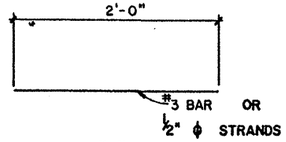

TYP. "A" BAR

TOTAL PANEL AREA THIS SHEET 968 Sq. Ft.

8 ⅜" ϕ 270K STRANDS STRESS TO 16.1 KIPS EACH
CONCRETE CLASS: H
RELEASE STRENGTH: 4,000 p.s.i.
28 DAY STRENGTH: 5,000 p.s.i.
TOP FINISH: BROOM
● ERECTION MARK

TEXAS DEPARTMENT OF TRANSPORTATION
APPROVED
DIVISION OF BRIDGES AND STRUCTURES
AUG 04 1992
APPROVAL OF THIS DRAWING DOES NOT RELIEVE THE CONTRACTOR OF THE RESPONSIBILITY FOR THE CORRECTNESS OF DETAIL.

SAPSCO
SAN ANTONIO PRE-STRESSED CO.

CONTRACTOR GILBERT TEXAS CONSTR. CORP.

FED. RD. DIV. NO.	STATE	PROJECT NO.	HWY. NO.
6	TEXAS	NH 92(50) M	US 83/281
STATE DIST. NO.	COUNTY	CONTROL NO. / SECTION NO. / JOB NO.	
21	HIDALGO	0039 / 17 / 097	

DRAWN	CHECK	DATE	SHEET
L.L.A.	R.S.M.	6/30/92	FP- 3
JOB NO. 92-555	4A-FAB. SHEET		
92-062H			

MOD. 8-16-82

SCHEDULE OF PANEL DIMENSIONS

TOTAL AREA THIS TABLE ____ Sq.Ft.

PANEL MARK	4.5A-3.0	4.5A-3.1	4.5A-3.2	4.5A-3.3	4.5A-3.4	4.5A-3.5	4.5A-3.6	4.5A-3.7	4.5A-3.8	4.5A-3.9
NO. REQ'D										
"W"	3.0	3.1	3.2	3.3	3.4	3.5	3.6	3.7	3.8	3.9
MIN. WWF WIDTH	2.67	2.77	2.87	2.97	3.07	3.17	3.27	3.37	3.47	3.57
BAR U TYPE	A	A	A	A	A	A	A	A	A	A
BAR A	7	7	7	7	8	8	8	8	8	9
AREA / PANEL	13.50ϕ	13.95ϕ	14.40ϕ	14.85ϕ	15.30ϕ	15.75ϕ	16.20ϕ	16.65ϕ	17.10ϕ	17.55ϕ
AREA (Sq.Ft.)										

SCHEDULE OF PANEL DIMENSIONS

TOTAL AREA THIS TABLE ____ Sq.Ft.

PANEL MARK	4.5A-4.0	4.5A-4.1	4.5A-4.2	4.5A-4.3	4.5A-4.4	4.5A-4.5	4.5A-4.6	4.5A-4.7	4.5A-4.8	4.5A-4.9
NO. REQ'D										
"W"	4.0	4.1	4.2	4.3	4.4	4.5	4.6	4.7	4.8	4.9
MIN. WWF WIDTH	3.67	3.77	3.87	3.97	4.07	4.17	4.27	4.37	4.47	4.57
BAR U TYPE	A	A	A	A	A	A	A	A	A	A
BAR A	9	9	9	9	10	10	10	10	10	11
AREA / PANEL	18.00ϕ	18.45ϕ	18.90ϕ	19.35ϕ	19.80ϕ	20.25ϕ	20.70ϕ	21.15ϕ	21.60ϕ	22.05ϕ
AREA (Sq.Ft.)										

SCHEDULE OF PANEL DIMENSIONS

TOTAL AREA THIS TABLE ____ Sq.Ft.

PANEL MARK	4.5A-5.0	4.5A-5.1	4.5A-5.2	4.5A-5.3	4.5A-5.4	4.5A-5.5	4.5A-5.6	4.5A-5.7	4.5A-5.8	4.5A-5.9
NO. REQ'D										
"W"	5.0	5.1	5.2	5.3	5.4	5.5	5.6	5.7	5.8	5.9
MIN. WWF WIDTH	4.67	4.77	4.87	4.97	5.07	5.17	5.27	5.37	5.47	5.57
BAR U TYPE	A	A	A	A	B	B	B	B	B	B
BAR A	11	11	11	11	12	12	12	12	12	13
AREA / PANEL	22.50ϕ	22.95ϕ	23.40ϕ	23.85ϕ	24.30ϕ	24.75ϕ	25.20ϕ	25.65ϕ	26.10ϕ	26.55ϕ
AREA (Sq.Ft.)										

SCHEDULE OF PANEL DIMENSIONS

TOTAL AREA THIS TABLE ____ Sq.Ft.

PANEL MARK	4.5A-6.0	4.5A-6.1	4.5A-6.2	4.5A-6.3	4.5A-6.4	4.5A-6.5	4.5A-6.6	4.5A-6.7	4.5A-6.8	4.5A-6.9
NO. REQ'D										
"W"	6.0	6.1	6.2	6.3	6.4	6.5	6.6	6.7	6.8	6.9
MIN. WWF WIDTH	5.67	5.77	5.87	5.97	6.07	6.17	6.27	6.37	6.47	6.57
BAR U TYPE	B	B	B	B	B	B	B	B	B	B
BAR A	13	13	13	13	14	14	14	14	14	15
AREA / PANEL	27.00ϕ	27.45ϕ	27.90ϕ	28.35ϕ	28.80ϕ	29.25ϕ	29.70ϕ	30.15ϕ	30.60ϕ	31.05ϕ
AREA (Sq.Ft.)										

SCHEDULE OF PANEL DIMENSIONS

TOTAL AREA THIS TABLE 71 Sq.Ft.

PANEL MARK										4.5A-7.9
NO. REQ'D										2
"W"	7.0	7.1	7.2	7.3	7.4	7.5	7.6	7.7	7.8	7.9
MIN. WWF WIDTH	6.67	6.77	6.87	6.97	7.07	7.17	7.27	7.37	7.47	7.57
BAR U TYPE	B	B	B	B	B	B	B	C	C	C
BAR A	15	15	15	15	16	16	16	16	16	17
AREA / PANEL	31.50ϕ	31.95ϕ	32.40ϕ	32.85ϕ	33.30ϕ	33.75ϕ	34.20ϕ	34.65ϕ	35.10ϕ	35.55ϕ
AREA (Sq.Ft.)										71

SCHEDULE OF PANEL DIMENSIONS

TOTAL AREA THIS TABLE ____ Sq.Ft.

PANEL MARK	4.5A-8.0	4.5A-8.1	4.5A-8.2	4.5A-8.3	4.5A-8.4	4.5A-8.5	4.5A-8.6	4.5A-8.7	4.5A-8.8	4.5A-8.9
NO. REQ'D										
"W"	8.0	8.1	8.2	8.3	8.4	8.5	8.6	8.7	8.8	8.9
MIN. WWF WIDTH	7.67	7.77	7.87	7.97	8.07	8.17	8.27	8.37	8.47	8.57
BAR U TYPE	C	C	C	C	C	C	C	C	C	C
BAR A	17	17	17	17	18	18	18	18	18	19
AREA / PANEL	36.00ϕ	36.45ϕ	36.90ϕ	37.35ϕ	37.80ϕ	38.25ϕ	38.70ϕ	39.15ϕ	39.60ϕ	40.05ϕ
AREA (Sq.Ft.)										

SCHEDULE OF PANEL DIMENSIONS

TOTAL AREA THIS TABLE ____ Sq.Ft.

PANEL MARK	4.5A-9.0	4.5A-9.1	4.5A-9.2	4.5A-9.3	4.5A-9.4	4.5A-9.5	4.5A-9.6	4.5A-9.7	4.5A-9.8	4.5A-9.9
NO. REQ'D										
"W"	9.0	9.1	9.2	9.3	9.4	9.5	9.6	9.7	9.8	9.9
MIN. WWF WIDTH	8.67	8.77	8.87	8.97	9.07	9.17	9.27	9.37	9.47	9.57
BAR U TYPE	C	C	C	C	C	C	C	C	C	C
BAR A	18	19	19	19	20	20	20	20	20	21
AREA / PANEL	40.50ϕ	40.95ϕ	41.40ϕ	41.85ϕ	42.30ϕ	42.75ϕ	43.20ϕ	43.65ϕ	44.10ϕ	44.55ϕ
AREA (Sq.Ft.)										

TEXAS DEPARTMENT OF TRANSPORTATION
APPROVED
DIVISION OF BRIDGES AND STRUCTURES
AUG 04 1992
APPROVAL OF THIS DRAWING DOES NOT RELIEVE THE CONTRACTOR OF THE RESPONSIBILITY FOR THE CORRECTNESS OF DETAIL.

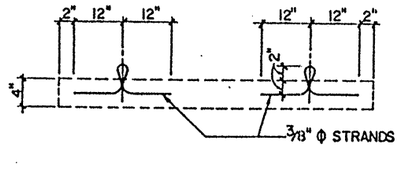

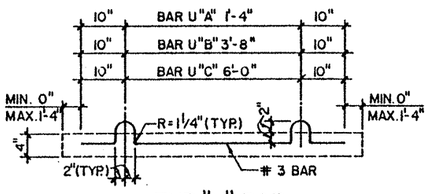

TYP. "U" BAR

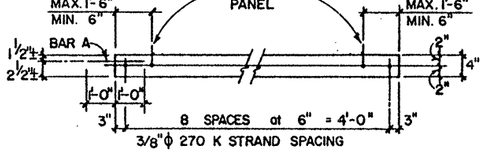

SECTION A
(SHOWING STRANDS)

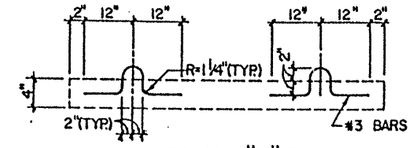

OPTIONAL "U" BAR
(4 REQUIRED PER PANEL)

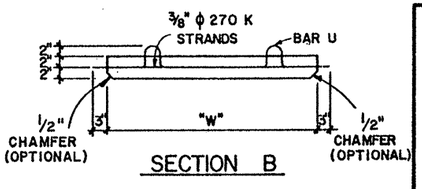

SECTION B

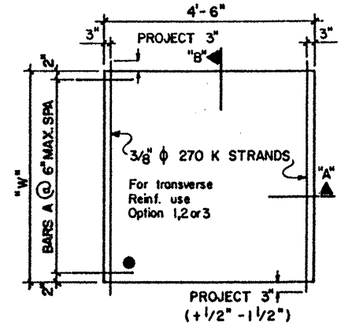

TYPICAL PLAN

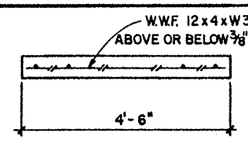

SECTION C

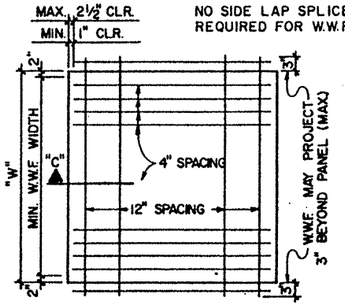

OPTION 1 (TRANSVERSE REINF.)

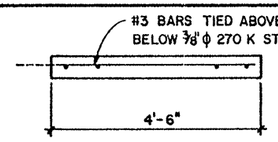

SECTION D

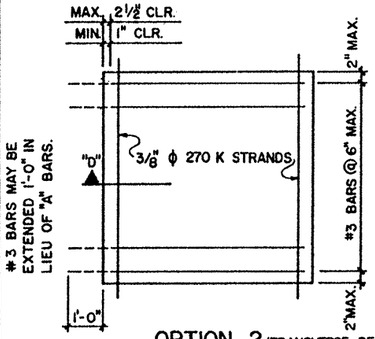

OPTION 2 (TRANSVERSE REINF.)

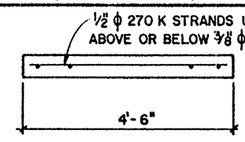

SECTION E

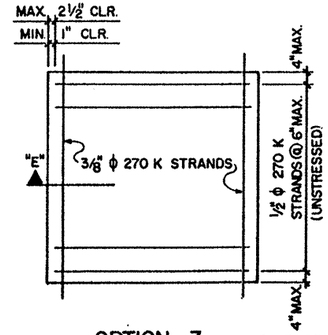

OPTION 3 (TRANSVERSE REINF.)

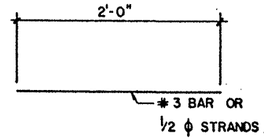

TYP. "A" BAR

9 3/8" ϕ 270K STRANDS STRESS TO 16.1 KIPS EACH
CONCRETE CLASS: H
RELEASE STRENGTH: 4,000 p.s.i.
28 DAY STRENGTH: 5,000 p.s.i.
TOP FINISH: BROOM
● ERECTION MARK

TOTAL PANEL AREA THIS SHEET 71 Sq.Ft.

SAPSCO
SAN ANTONIO PRE-STRESSED CO.

CONTRACTOR GILBERT TEXAS CONSTR. CORP.

FED. RD. DIV. NO.	STATE	PROJECT NO.	HWY. NO.
6	TEXAS	NH 92(50) M	US 83/281
STATE DIST. NO.	COUNTY	CONTROL NO.	SECTION NO.	JOB NO.
21	HIDALGO	0039	17	097

DRAWN	CHECK	DATE	SHEET
L.L.A.	R.S.M.	6/30/92	FP- 4
JOB NO. 92-555	4.5A-FAB. SHEET		
92-062H			

MOD. 8-16-82

SCHEDULE OF PANEL DIMENSIONS

TOTAL AREA THIS TABLE ____ Sq.Ft.

PANEL MARK	5A-3.0	5A-3.1	5A-3.2	5A-3.3	5A-3.4	5A-3.5	5A-3.6	5A-3.7	5A-3.8	5A-3.9
NO. REQ'D										
"W"	3.0	3.1	3.2	3.3	3.4	3.5	3.6	3.7	3.8	3.9
MIN. WWF WIDTH	2.67	2.77	2.87	2.97	3.07	3.17	3.27	3.37	3.47	3.57
BAR U TYPE	A	A	A	A	A	A	A	A	A	A
BAR A	7	7	7	7	8	8	8	8	8	9
AREA / PANEL	15.00ϕ	15.50ϕ	16.00ϕ	16.50ϕ	17.00ϕ	17.50ϕ	18.00ϕ	18.50ϕ	19.00ϕ	19.50ϕ
AREA (Sq.Ft.)										

SCHEDULE OF PANEL DIMENSIONS

TOTAL AREA THIS TABLE 22 Sq.Ft.

PANEL MARK					5A-4.4					
NO. REQ'D					1					
"W"	4.0	4.1	4.2	4.3	4.4	4.5	4.6	4.7	4.8	4.9
MIN. WWF WIDTH	3.67	3.77	3.87	3.97	4.07	4.17	4.27	4.37	4.47	4.57
BAR U TYPE	A	A	A	A	A	A	A	A	A	A
BAR A	9	9	9	9	10	10	10	10	10	11
AREA / PANEL	20.00ϕ	20.50ϕ	21.00ϕ	21.50ϕ	22.00ϕ	22.50ϕ	23.00ϕ	23.50ϕ	24.00ϕ	24.50ϕ
AREA (Sq.Ft.)					22					

SCHEDULE OF PANEL DIMENSIONS

TOTAL AREA THIS TABLE 232 Sq.Ft.

PANEL MARK									5A-5.8	
NO. REQ'D									8	
"W"	5.0	5.1	5.2	5.3	5.4	5.5	5.6	5.7	5.8	5.9
MIN. WWF WIDTH	4.67	4.77	4.87	4.97	5.07	5.17	5.27	5.37	5.47	5.57
BAR U TYPE	A	A	A	A	B	B	B	B	B	B
BAR A	11	11	11	11	12	12	12	12	12	13
AREA / PANEL	25.00ϕ	25.50ϕ	26.00ϕ	26.50ϕ	27.00ϕ	27.50ϕ	28.00ϕ	28.50ϕ	29.00ϕ	29.50ϕ
AREA (Sq.Ft.)									232	

SCHEDULE OF PANEL DIMENSIONS

TOTAL AREA THIS TABLE 308 Sq.Ft.

PANEL MARK								5A-6.7	5A-6.8	5A-6.9
NO. REQ'D								3	1	5
"W"	6.0	6.1	6.2	6.3	6.4	6.5	6.6	6.7	6.8	6.9
MIN. WWF WIDTH	5.67	5.77	5.87	5.97	6.07	6.17	6.27	6.37	6.47	6.57
BAR U TYPE	B	B	B	B	B	B	B	B	B	B
BAR A	13	13	13	13	14	14	14	14	14	15
AREA / PANEL	30.00ϕ	30.50ϕ	31.00ϕ	31.50ϕ	32.00ϕ	32.50ϕ	33.00ϕ	33.50ϕ	34.00ϕ	34.50ϕ
AREA (Sq.Ft.)								101	34	173

SCHEDULE OF PANEL DIMENSIONS

TOTAL AREA THIS TABLE 1,261 Sq.Ft.

PANEL MARK				5A-7.3	5A-7.4	5A-7.5			5A-7.8	5A-7.9
NO. REQ'D				6	6	2			11	8
"W"	7.0	7.1	7.2	7.3	7.4	7.5	7.6	7.7	7.8	7.9
MIN. WWF WIDTH	6.67	6.77	6.87	6.97	7.07	7.17	7.27	7.37	7.47	7.57
BAR U TYPE	B	B	B	B	B	B	B	C	C	C
BAR A	15	15	15	15	16	16	16	16	16	17
AREA / PANEL	35.00ϕ	35.50ϕ	36.00ϕ	36.50ϕ	37.00ϕ	37.50ϕ	38.00ϕ	38.50ϕ	39.00ϕ	39.50ϕ
AREA (Sq.Ft.)				219	222	75			429	316

SCHEDULE OF PANEL DIMENSIONS

TOTAL AREA THIS TABLE ____ Sq.Ft.

PANEL MARK	5A-8.0	5A-8.1	5A-8.2	5A-8.3	5A-8.4	5A-8.5	5A-8.6	5A-8.7	5A-8.8	5A-8.9
NO. REQ'D										
"W"	8.0	8.1	8.2	8.3	8.4	8.5	8.6	8.7	8.8	8.9
MIN. WWF WIDTH	7.67	7.77	7.87	7.97	8.07	8.17	8.27	8.37	8.47	8.57
BAR U TYPE	C	C	C	C	C	C	C	C	C	C
BAR A	17	17	17	17	18	18	18	18	18	19
AREA / PANEL	40.00ϕ	40.50ϕ	41.00ϕ	41.50ϕ	42.00ϕ	42.50ϕ	43.00ϕ	43.50ϕ	44.00ϕ	44.50ϕ
AREA (Sq.Ft.)										

SCHEDULE OF PANEL DIMENSIONS

TOTAL AREA THIS TABLE ____ Sq.Ft.

PANEL MARK	5A-9.0	5A-9.1	5A-9.2	5A-9.3	5A-9.4	5A-9.5	5A-9.6	5A-9.7	5A-9.8	5A-9.9
NO. REQ'D										
"W"	9.0	9.1	9.2	9.3	9.4	9.5	9.6	9.7	9.8	9.9
MIN. WWF WIDTH	8.67	8.77	8.87	8.97	9.07	9.17	9.27	9.37	9.47	9.57
BAR U TYPE	C	C	C	C	C	C	C	C	C	C
BAR A	19	19	19	19	20	20	20	20	20	21
AREA / PANEL	45.00ϕ	45.50ϕ	46.00ϕ	46.50ϕ	47.00ϕ	47.50ϕ	48.00ϕ	48.50ϕ	49.00ϕ	49.50ϕ
AREA (Sq.Ft.)										

TYP. "U" BAR

SECTION A
(SHOWING STRANDS)

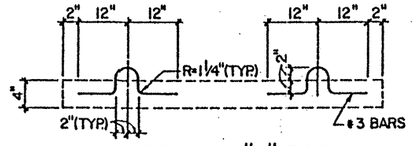

OPTIONAL "U" BAR
(4 REQUIRED PER PANEL)

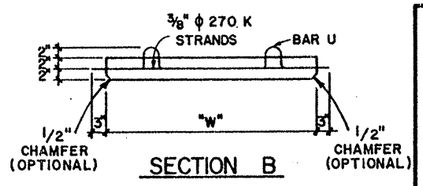

SECTION B

TYPICAL PLAN

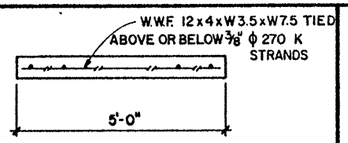

SECTION C

OPTION 1 (TRANSVERSE REINF.)

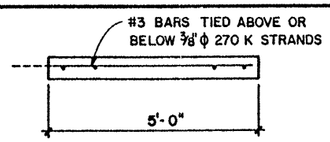

SECTION D

OPTION 2 (TRANSVERSE REINF.)

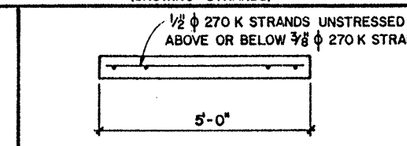

SECTION E

OPTION 3 (TRANSVERSE REINF.)

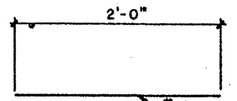

TYP. "A" BAR

TEXAS DEPARTMENT OF TRANSPORTATION
APPROVED
DIVISION OF BRIDGES AND STRUCTURES
AUG 04 1992
APPROVAL OF THIS DRAWING DOES NOT RELIEVE THE CONTRACTOR OF THE RESPONSIBILITY FOR THE CORRECTNESS OF DETAIL.

10 3/8" ϕ 270K STRANDS STRESS TO 16.1 KIPS EACH
CONCRETE CLASS: H
RELEASE STRENGTH: 4,000 p.s.i.
28 DAY STRENGTH: 5,000 p.s.i.
TOP FINISH: BROOM
● ERECTION MARK

TOTAL PANEL AREA THIS SHEET 1,823 Sq.Ft.

SAPSCO
SAN ANTONIO PRE-STRESSED CO.

CONTRACTOR GILBERT TEXAS CONSTR. CORP.

FED. ROAD DIV. NO.	STATE	PROJECT NO.	HWY. NO.
6	TEXAS	NH 92(50) M	US 83/281
STATE DIST. NO.	COUNTY	CONTROL NO.	SECTION NO.	JOB NO.
21	HIDALGO	0039	17	097
DRAWN	CHECK	DATE	SHEET
L. L. A.	R. S. M.	6/30/92	FP-5
JOB NO. 92-555	5A-FAB. SHEET		
92-062H			

MOD. 8-16-82

SCHEDULE OF PANEL DIMENSIONS

TOTAL AREA THIS TABLE ____ Sq.Ft.

PANEL MARK	5.5A-3.0	5.5A-3.1	5.5A-3.2	5.5A-3.3	5.5A-3.4	5.5A-3.5	5.5A-3.6	5.5A-3.7	5.5A-3.8	5.5A-3.9
NO. REQ'D										
"W"	3.0	3.1	3.2	3.3	3.4	3.5	3.6	3.7	3.8	3.9
MIN. WWF WIDTH	2.67	2.77	2.87	2.97	3.07	3.17	3.27	3.37	3.47	3.57
BAR U TYPE	A	A	A	A	A	A	A	A	A	A
BAR A	7	7	7	7	8	8	8	8	8	9
AREA / PANEL	16.50 ϕ	17.05 ϕ	17.60 ϕ	18.15 ϕ	18.70 ϕ	19.25 ϕ	19.80 ϕ	20.35 ϕ	20.90 ϕ	21.45 ϕ
AREA (Sq.Ft.)										

SCHEDULE OF PANEL DIMENSIONS

TOTAL AREA THIS TABLE ____ Sq.Ft.

PANEL MARK	5.5A-4.0	5.5A-4.1	5.5A-4.2	5.5A-4.3	5.5A-4.4	5.5A-4.5	5.5A-4.6	5.5A-4.7	5.5A-4.8	5.5A-4.9
NO. REQ'D										
"W"	4.0	4.1	4.2	4.3	4.4	4.5	4.6	4.7	4.8	4.9
MIN. WWF WIDTH	3.67	3.77	3.87	3.97	4.07	4.17	4.27	4.37	4.47	4.57
BAR U TYPE	A	A	A	A	A	A	A	A	A	A
BAR A	8	9	9	9	10	10	10	10	10	11
AREA / PANEL	22.00 ϕ	22.55 ϕ	23.10 ϕ	23.65 ϕ	24.20 ϕ	24.75 ϕ	25.30 ϕ	25.85 ϕ	26.40 ϕ	26.95 ϕ
AREA (Sq.Ft.)										

SCHEDULE OF PANEL DIMENSIONS

TOTAL AREA THIS TABLE ____ Sq.Ft.

PANEL MARK	5.5A-5.0	5.5A-5.1	5.5A-5.2	5.5A-5.3	5.5A-5.4	5.5A-5.5	5.5A-5.6	5.5A-5.7	5.5A-5.8	5.5A-5.9
NO. REQ'D										
"W"	5.0	5.1	5.2	5.3	5.4	5.5	5.6	5.7	5.8	5.9
MIN. WWF WIDTH	4.67	4.77	4.87	4.97	5.07	5.17	5.27	5.37	5.47	5.57
BAR U TYPE	A	A	A	A	B	B	B	B	B	B
BAR A	11	11	11	11	12	12	12	12	12	13
AREA / PANEL	27.50 ϕ	28.05 ϕ	28.60 ϕ	29.15 ϕ	29.70 ϕ	30.25 ϕ	30.80 ϕ	31.35 ϕ	31.90 ϕ	32.45 ϕ
AREA (Sq.Ft.)										

SCHEDULE OF PANEL DIMENSIONS

TOTAL AREA THIS TABLE ____ Sq.Ft.

PANEL MARK	5.5A-6.0	5.5A-6.1	5.5A-6.2	5.5A-6.3	5.5A-6.4	5.5A-6.5	5.5A-6.6	5.5A-6.7	5.5A-6.8	5.5A-6.9
NO. REQ'D										
"W"	6.0	6.1	6.2	6.3	6.4	6.5	6.6	6.7	6.8	6.9
MIN. WWF WIDTH	5.67	5.77	5.87	5.97	6.07	6.17	6.27	6.37	6.47	6.57
BAR U TYPE	B	B	B	B	B	B	B	B	B	B
BAR A	13	13	13	13	14	14	14	14	14	15
AREA / PANEL	33.00 ϕ	33.55 ϕ	34.10 ϕ	34.65 ϕ	35.20 ϕ	35.75 ϕ	36.30 ϕ	36.85 ϕ	37.40 ϕ	37.95 ϕ
AREA (Sq.Ft.)										

SCHEDULE OF PANEL DIMENSIONS

TOTAL AREA THIS TABLE 435 Sq.Ft.

PANEL MARK										5.5A-7.9
NO. REQ'D										10
"W"	7.0	7.1	7.2	7.3	7.4	7.5	7.6	7.7	7.8	7.9
MIN. WWF WIDTH	6.67	6.77	6.87	6.97	7.07	7.17	7.27	7.37	7.47	7.57
BAR U TYPE	B	B	B	B	B	B	B	C	C	C
BAR A	15	15	15	15	16	16	16	16	16	17
AREA / PANEL	38.50 ϕ	39.05 ϕ	39.60 ϕ	40.15 ϕ	40.70 ϕ	41.25 ϕ	41.80 ϕ	42.35 ϕ	42.90 ϕ	43.45 ϕ
AREA (Sq.Ft.)										435

SCHEDULE OF PANEL DIMENSIONS

TOTAL AREA THIS TABLE ____ Sq.Ft.

PANEL MARK	5.5A-8.0	5.5A-8.1	5.5A-8.2	5.5A-8.3	5.5A-8.4	5.5A-8.5	5.5A-8.6	5.5A-8.7	5.5A-8.8	5.5A-8.9
NO. REQ'D										
"W"	8.0	8.1	8.2	8.3	8.4	8.5	8.6	8.7	8.8	8.9
MIN. WWF WIDTH	7.67	7.77	7.87	7.97	8.07	8.17	8.27	8.37	8.47	8.57
BAR U TYPE	C	C	C	C	C	C	C	C	C	C
BAR A	17	17	17	17	18	18	18	18	18	19
AREA / PANEL	44.00 ϕ	44.55 ϕ	45.10 ϕ	45.65 ϕ	46.20 ϕ	46.75 ϕ	47.30 ϕ	47.85 ϕ	48.40 ϕ	48.95 ϕ
AREA (Sq.Ft.)										

SCHEDULE OF PANEL DIMENSIONS

TOTAL AREA THIS TABLE ____ Sq.Ft.

PANEL MARK	5.5A-9.0	5.5A-9.1	5.5A-9.2	5.5A-9.3	5.5A-9.4	5.5A-9.5	5.5A-9.6	5.5A-9.7	5.5A-9.8	5.5A-9.9
NO. REQ'D										
"W"	9.0	9.1	9.2	9.3	9.4	9.5	9.6	9.7	9.8	9.9
MIN. WWF WIDTH	8.67	8.77	8.87	8.97	9.07	9.17	9.27	9.37	9.47	9.57
BAR U TYPE	C	C	C	C	C	C	C	C	C	C
BAR A	19	19	19	19	20	20	20	20	20	21
AREA / PANEL	49.50 ϕ	50.05 ϕ	50.60 ϕ	51.15 ϕ	51.70 ϕ	52.25 ϕ	52.80 ϕ	53.35 ϕ	53.90 ϕ	54.45 ϕ
AREA (Sq.Ft.)										

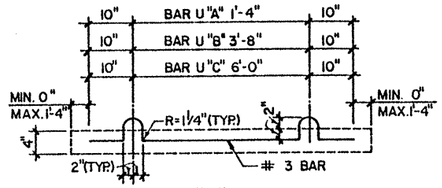

TYP. "U" BAR

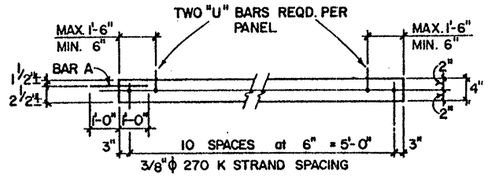

SECTION A
(SHOWING STRANDS)

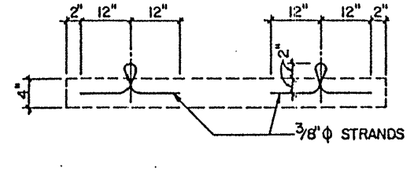

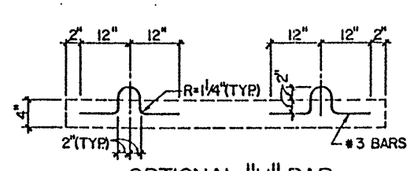

OPTIONAL "U" BAR
(4 REQUIRED PER PANEL)

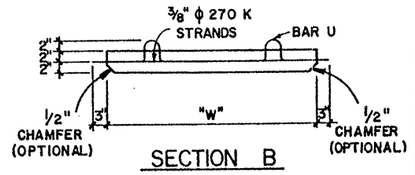

SECTION B

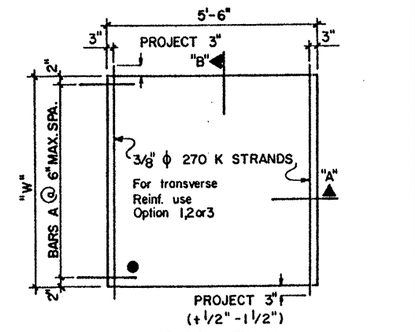

TYPICAL PLAN

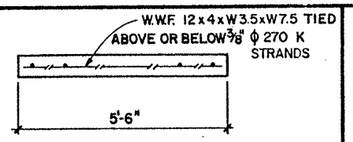

SECTION C

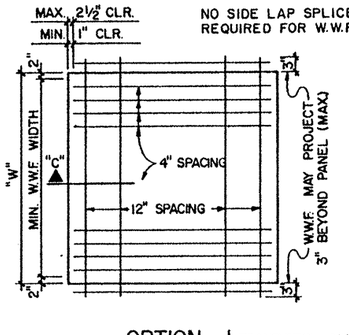

OPTION 1 (TRANSVERSE REINF.)

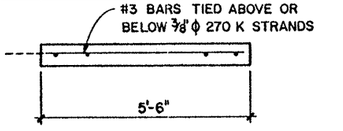

SECTION D

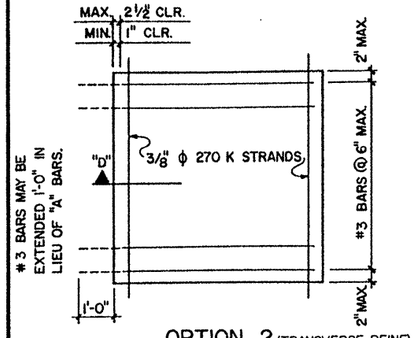

OPTION 2 (TRANSVERSE REINF.)

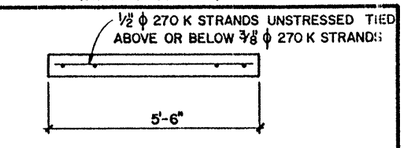

SECTION E

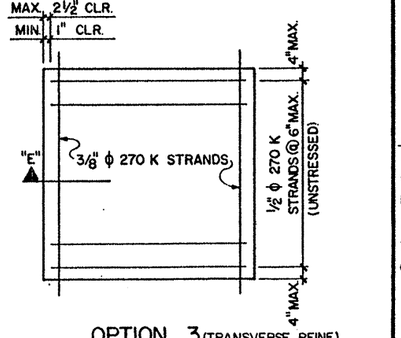

OPTION 3 (TRANSVERSE REINF.)

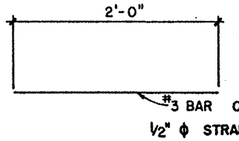

TYP. "A" BAR

TOTAL PANEL AREA THIS SHEET 435 Sq.Ft.

11 3/8" ϕ 270K STRANDS STRESS TO 16.1 KIPS EACH
CONCRETE CLASS: H
RELEASE STRENGTH: 4,000 p.s.i.
28 DAY STRENGTH: 5,000 p.s.i.
TOP FINISH: BROOM
● ERECTION MARK

TEXAS DEPARTMENT OF TRANSPORTATION
APPROVED
DIVISION OF BRIDGES AND STRUCTURES
AUG 04 1992
APPROVAL OF THIS DRAWING DOES NOT RELIEVE THE CONTRACTOR OF THE RESPONSIBILITY FOR THE CORRECTNESS OF DETAIL.

SAPSCO
SAN ANTONIO PRE-STRESSED CO.

CONTRACTOR GILBERT TEXAS CONSTR. CORP.

FED. RD. DIV. NO.	STATE	PROJECT NO.	HWY. NO.
6	TEXAS	NH 92 (50) M	US 83/281
STATE DIST. NO.	COUNTY	CONTROL NO.	SECTION NO.	JOB NO.
21	HIDALGO	0039	17	097

DRAWN	CHECK	DATE	SHEET
L.L.A.	R.S.M.	6/30/92	FP- 6
JOB NO. 92-555	5.5A-FAB. SHEET		
92-062H			MOD. 8-16-82

SCHEDULE OF PANEL DIMENSIONS

TOTAL AREA THIS TABLE _____ Sq.Ft.

PANEL MARK	6A-3.0	6A-3.1	6A-3.2	6A-3.3	6A-3.4	6A-3.5	6A-3.6	6A-3.7	6A-3.8	6A-3.9
NO. REQ'D										
"W"	3.0	3.1	3.2	3.3	3.4	3.5	3.6	3.7	3.8	3.9
MIN. WWF WIDTH	2.67	2.77	2.87	2.97	3.07	3.17	3.27	3.37	3.47	3.57
BAR U TYPE	A	A	A	A	A	A	A	A	A	A
BAR A	7	7	7	7	8	8	8	8	8	9
AREA / PANEL	18.00ϕ	18.60ϕ	19.20ϕ	19.80ϕ	20.40ϕ	21.00ϕ	21.60ϕ	22.20ϕ	22.80ϕ	23.40ϕ
AREA (Sq.Ft.)										

SCHEDULE OF PANEL DIMENSIONS

TOTAL AREA THIS TABLE 106 Sq.Ft.

PANEL MARK					6A-4.4					
NO. REQ'D					4					
"W"	4.0	4.1	4.2	4.3	4.4	4.5	4.6	4.7	4.8	4.9
MIN. WWF WIDTH	3.67	3.77	3.87	3.97	4.07	4.17	4.27	4.37	4.47	4.57
BAR U TYPE	A	A	A	A	A	A	A	A	A	A
BAR A	9	9	9	9	10	10	10	10	10	11
AREA / PANEL	24.00ϕ	24.60ϕ	25.20ϕ	25.80ϕ	26.40ϕ	27.00ϕ	27.60ϕ	28.20ϕ	28.80ϕ	29.40ϕ
AREA (Sq.Ft.)					106					

SCHEDULE OF PANEL DIMENSIONS

TOTAL AREA THIS TABLE _____ Sq.Ft.

PANEL MARK	6A-5.0	6A-5.1	6A-5.2	6A-5.3	6A-5.4	6A-5.5	6A-5.6	6A-5.7	6A-5.8	6A-5.9
NO. REQ'D										
"W"	5.0	5.1	5.2	5.3	5.4	5.5	5.6	5.7	5.8	5.9
MIN. WWF WIDTH	4.67	4.77	4.87	4.97	5.07	5.17	5.27	5.37	5.47	5.57
BAR U TYPE	A	A	A	A	B	B	B	B	B	B
BAR A	11	11	11	11	12	12	12	12	12	13
AREA / PANEL	30.00ϕ	30.60ϕ	31.20ϕ	31.80ϕ	32.40ϕ	33.00ϕ	33.60ϕ	34.20ϕ	34.80ϕ	35.40ϕ
AREA (Sq.Ft.)										

SCHEDULE OF PANEL DIMENSIONS

TOTAL AREA THIS TABLE 687 Sq.Ft.

PANEL MARK				6A-6.3	6A-6.4					
NO. REQ'D				7	11					
"W"	6.0	6.1	6.2	6.3	6.4	6.5	6.6	6.7	6.8	6.9
MIN. WWF WIDTH	5.67	5.77	5.87	5.97	6.07	6.17	6.27	6.37	6.47	6.57
BAR U TYPE	B	B	B	B	B	B	B	B	B	B
BAR A	13	13	13	13	14	14	14	14	14	15
AREA / PANEL	36.00ϕ	36.60ϕ	37.20ϕ	37.80ϕ	38.40ϕ	39.00ϕ	39.60ϕ	40.20ϕ	40.80ϕ	41.40ϕ
AREA (Sq.Ft.)				265	422					

SCHEDULE OF PANEL DIMENSIONS

TOTAL AREA THIS TABLE 2,088 Sq.Ft.

PANEL MARK	6A-7.0	6A-7.1					6A-7.6		6A-7.8	6A-7.9
NO. REQ'D	10	4					6		13	13
"W"	7.0	7.1	7.2	7.3	7.4	7.5	7.6	7.7	7.8	7.9
MIN. WWF WIDTH	6.67	6.77	6.87	6.97	7.07	7.17	7.27	7.37	7.47	7.57
BAR U TYPE	B	B	B	B	B	B	B	C	C	C
BAR A	15	15	15	15	16	16	16	16	16	17
AREA / PANEL	42.00ϕ	42.60ϕ	43.20ϕ	43.80ϕ	44.40ϕ	45.00ϕ	45.60ϕ	46.20ϕ	46.80ϕ	47.40ϕ
AREA (Sq.Ft.)	420	170					274		608	616

SCHEDULE OF PANEL DIMENSIONS

TOTAL AREA THIS TABLE _____ Sq.Ft.

PANEL MARK	6A-8.0	6A-8.1	6A-8.2	6A-8.3	6A-8.4	6A-8.5	6A-8.6	6A-8.7	6A-8.8	6A-8.9
NO. REQ'D										
"W"	8.0	8.1	8.2	8.3	8.4	8.5	8.6	8.7	8.8	8.9
MIN. WWF WIDTH	7.67	7.77	7.87	7.97	8.07	8.17	8.27	8.37	8.47	8.57
BAR U TYPE	C	C	C	C	C	C	C	C	C	C
BAR A	17	17	17	17	18	18	18	18	18	19
AREA / PANEL	48.00ϕ	48.60ϕ	49.20ϕ	49.80ϕ	50.40ϕ	51.00ϕ	51.60ϕ	52.20ϕ	52.80ϕ	53.40ϕ
AREA (Sq.Ft.)										

SCHEDULE OF PANEL DIMENSIONS

TOTAL AREA THIS TABLE _____ Sq.Ft.

PANEL MARK	6A-9.0	6A-9.1	6A-9.2	6A-9.3	6A-9.4	6A-9.5	6A-9.6	6A-9.7	6A-9.8	6A-9.9
NO. REQ'D										
"W"	9.0	9.1	9.2	9.3	9.4	9.5	9.6	9.7	9.8	9.9
MIN. WWF WIDTH	8.67	8.77	8.87	8.97	9.07	9.17	9.27	9.37	9.47	9.57
BAR U TYPE	C	C	C	C	C	C	C	C	C	C
BAR A	19	19	19	19	20	20	20	20	20	21
AREA / PANEL	54.00ϕ	54.60ϕ	55.20ϕ	55.80ϕ	56.40ϕ	57.00ϕ	57.60ϕ	58.20ϕ	58.80ϕ	59.40ϕ
AREA (Sq.Ft.)										

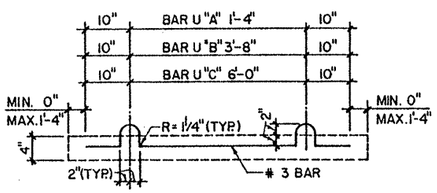

TYP. "U" BAR

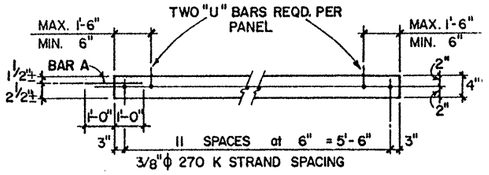

SECTION A
(SHOWING STRANDS)

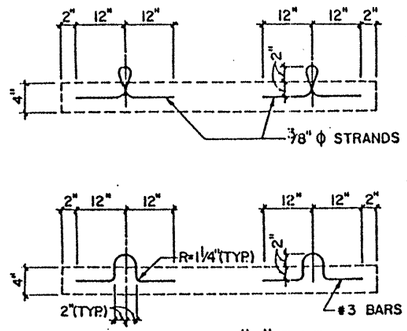

OPTIONAL "U" BAR
(4 REQUIRED PER PANEL)

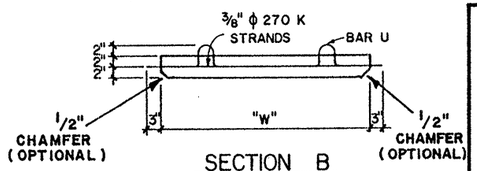

SECTION B

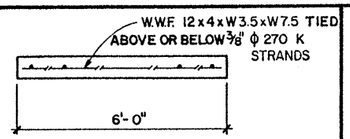

SECTION C

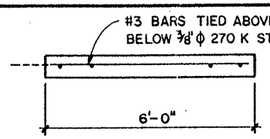

SECTION D

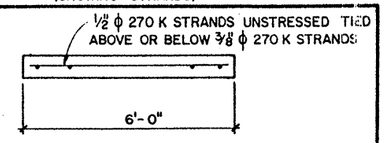

SECTION E

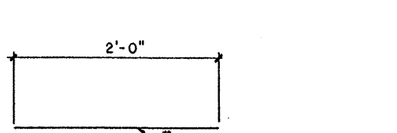

TYP. "A" BAR

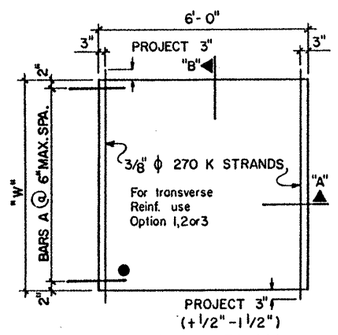

TYPICAL PLAN

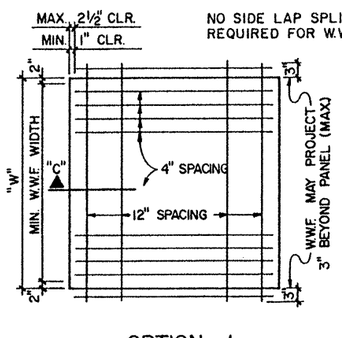

OPTION 1 (TRANSVERSE REINF.)

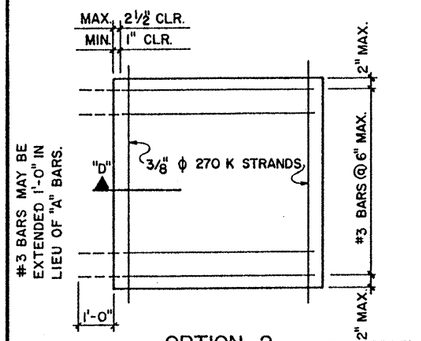

OPTION 2 (TRANSVERSE REINF.)

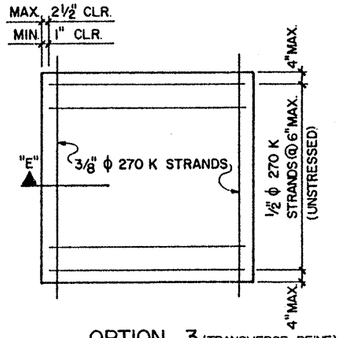

OPTION 3 (TRANSVERSE REINF.)

12 3/8" ϕ 270K STRANDS STRESS TO 161 KIPS EACH
CONCRETE CLASS: H
RELEASE STRENGTH: 4,000 p.s.i.
28 DAY STRENGTH: 5,000 p.s.i.
TOP FINISH: BROOM
● ERECTION MARK

TEXAS DEPARTMENT OF TRANSPORTATION
APPROVED
DIVISION OF BRIDGES AND STRUCTURES
AUG 04 1992
APPROVAL OF THIS DRAWING DOES NOT RELIEVE THE CONTRACTOR OF THE RESPONSIBILITY FOR THE CORRECTNESS OF DETAIL.

TOTAL PANEL AREA THIS SHEET 2,881 Sq.Ft.

SAPSCO
SAN ANTONIO PRE-STRESSED CO.

CONTRACTOR GILBERT TEXAS CONSTR. CORP.

FED.RD. DIV. NO.	STATE	PROJECT NO.	HWY. NO.
6	TEXAS	NH 92 (50) M	US 83/281
STATE DIST. NO.	COUNTY	CONTROL NO.	SECTION NO.	JOB NO.
21	HIDALGO	0039	17	097

DRAWN	CHECK	DATE	SHEET
L.L.A.	R.S.M.	6/30/92	FP- 7
JOB NO. 92-555	6A-FAB. SHEET		
92-062H			

MOD. 8-16-82

SCHEDULE OF PANEL DIMENSIONS

TOTAL AREA THIS TABLE ____ Sq.Ft.

PANEL MARK	6.5A-3.0	6.5A-3.1	6.5A-3.2	6.5A-3.3	6.5A-3.4	6.5A-3.5	6.5A-3.6	6.5A-3.7	6.5A-3.8	6.5A-3.9
NO. REQ'D										
"W"	3.0	3.1	3.2	3.3	3.4	3.5	3.6	3.7	3.8	3.9
MIN. WWF WIDTH	2.67	2.77	2.87	2.97	3.07	3.17	3.27	3.37	3.47	3.57
BAR U TYPE	A	A	A	A	A	A	A	A	A	A
BAR A	7	7	7	7	8	8	8	8	8	9
AREA / PANEL	19.50 ϕ	20.15 ϕ	20.80 ϕ	21.45 ϕ	22.10 ϕ	22.75 ϕ	23.40 ϕ	24.05 ϕ	24.70 ϕ	25.35 ϕ
AREA (Sq.Ft.)										

SCHEDULE OF PANEL DIMENSIONS

TOTAL AREA THIS TABLE ____ Sq.Ft.

PANEL MARK	6.5A-4.0	6.5A-4.1	6.5A-4.2	6.5A-4.3	6.5A-4.4	6.5A-4.5	6.5A-4.6	6.5A-4.7	6.5A-4.8	6.5A-4.9
NO. REQ'D										
"W"	4.0	4.1	4.2	4.3	4.4	4.5	4.6	4.7	4.8	4.9
MIN. WWF WIDTH	3.67	3.77	3.87	3.97	4.07	4.17	4.27	4.37	4.47	4.57
BAR U TYPE	A	A	A	A	A	A	A	A	A	A
BAR A	9	9	9	9	10	10	10	10	10	11
AREA / PANEL	26.00 ϕ	26.65 ϕ	27.30 ϕ	27.95 ϕ	28.60 ϕ	29.25 ϕ	29.90 ϕ	30.55 ϕ	31.20 ϕ	31.85 ϕ
AREA (Sq.Ft.)										

SCHEDULE OF PANEL DIMENSIONS

TOTAL AREA THIS TABLE ____ Sq.Ft.

PANEL MARK	6.5A-5.0	6.5A-5.1	6.5A-5.2	6.5A-5.3	6.5A-5.4	6.5A-5.5	6.5A-5.6	6.5A-5.7	6.5A-5.8	6.5A-5.9
NO. REQ'D										
"W"	5.0	5.1	5.2	5.3	5.4	5.5	5.6	5.7	5.8	5.9
MIN. WWF WIDTH	4.67	4.77	4.87	4.97	5.07	5.17	5.27	5.37	5.47	5.57
BAR U TYPE	A	A	A	A	B	B	B	B	B	B
BAR A	11	11	11	11	12	12	12	12	12	13
AREA / PANEL	32.50 ϕ	33.15 ϕ	33.80 ϕ	34.45 ϕ	35.10 ϕ	35.75 ϕ	36.40 ϕ	37.05 ϕ	37.70 ϕ	38.35 ϕ
AREA (Sq.Ft.)										

SCHEDULE OF PANEL DIMENSIONS

TOTAL AREA THIS TABLE 90 Sq.Ft.

PANEL MARK										6.5A-6.9
NO. REQ'D										2
"W"	6.0	6.1	6.2	6.3	6.4	6.5	6.6	6.7	6.8	6.9
MIN. WWF WIDTH	5.67	5.77	5.87	5.97	6.07	6.17	6.27	6.37	6.47	6.57
BAR U TYPE	B	B	B	B	B	B	B	B	B	B
BAR A	13	13	13	13	14	14	14	14	14	15
AREA / PANEL	39.00 ϕ	39.65 ϕ	40.30 ϕ	40.95 ϕ	41.60 ϕ	42.25 ϕ	42.90 ϕ	43.55 ϕ	44.20 ϕ	44.85 ϕ
AREA (Sq.Ft.)										90

SCHEDULE OF PANEL DIMENSIONS

TOTAL AREA THIS TABLE 719 Sq.Ft.

PANEL MARK									6.5A-7.8	6.5A-7.9
NO. REQ'D									1	13
"W"	7.0	7.1	7.2	7.3	7.4	7.5	7.6	7.7	7.8	7.9
MIN. WWF WIDTH	6.67	6.77	6.87	6.97	7.07	7.17	7.27	7.37	7.47	7.57
BAR U TYPE	B	B	B	B	B	B	B	C	C	C
BAR A	15	15	15	15	16	16	16	16	16	17
AREA / PANEL	45.50 ϕ	46.15 ϕ	46.80 ϕ	47.45 ϕ	48.10 ϕ	48.75 ϕ	49.40 ϕ	50.05 ϕ	50.70 ϕ	51.35 ϕ
AREA (Sq.Ft.)									51	668

SCHEDULE OF PANEL DIMENSIONS

TOTAL AREA THIS TABLE ____ Sq.Ft.

PANEL MARK	6.5A-8.0	6.5A-8.1	6.5A-8.2	6.5A-8.3	6.5A-8.4	6.5A-8.5	6.5A-8.6	6.5A-8.7	6.5A-8.8	6.5A-8.9
NO. REQ'D										
"W"	8.0	8.1	8.2	8.3	8.4	8.5	8.6	8.7	8.8	8.9
MIN. WWF WIDTH	7.67	7.77	7.87	7.97	8.07	8.17	8.27	8.37	8.47	8.57
BAR U TYPE	C	C	C	C	C	C	C	C	C	C
BAR A	17	17	17	17	18	18	18	18	18	19
AREA / PANEL	52.00 ϕ	52.65 ϕ	53.30 ϕ	53.95 ϕ	54.60 ϕ	55.25 ϕ	55.90 ϕ	56.55 ϕ	57.20 ϕ	57.85 ϕ
AREA (Sq.Ft.)										

SCHEDULE OF PANEL DIMENSIONS

TOTAL AREA THIS TABLE ____ Sq.Ft.

PANEL MARK	6.5A-9.0	6.5A-9.1	6.5A-9.2	6.5A-9.3	6.5A-9.4	6.5A-9.5	6.5A-9.6	6.5A-9.7	6.5A-9.8	6.5A-9.9
NO. REQ'D										
"W"	9.0	9.1	9.2	9.3	9.4	9.5	9.6	9.7	9.8	9.9
MIN. WWF WIDTH	8.67	8.77	8.87	8.97	9.07	9.17	9.27	9.37	9.47	9.57
BAR U TYPE	C	C	C	C	C	C	C	C	C	C
BAR A	19	19	19	19	20	20	20	20	20	21
AREA / PANEL	58.50 ϕ	59.15 ϕ	59.80 ϕ	60.45 ϕ	61.10 ϕ	61.75 ϕ	62.40 ϕ	63.05 ϕ	63.70 ϕ	64.35 ϕ
AREA (Sq.Ft.)										

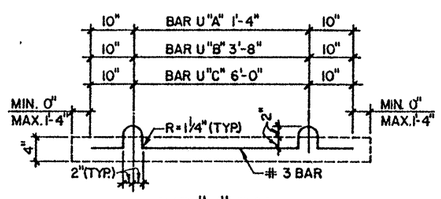

TYP. "U" BAR

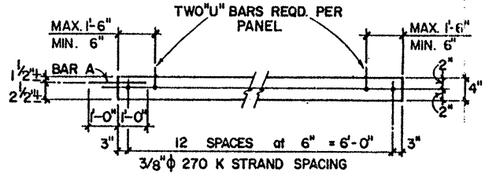

SECTION A
(SHOWING STRANDS)

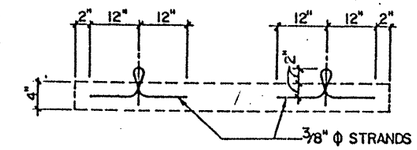

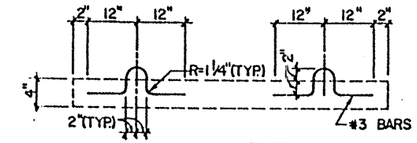

OPTIONAL "U" BAR
(4 REQUIRED PER PANEL)

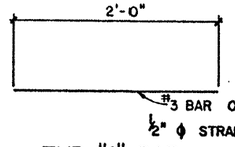

TYP. "A" BAR

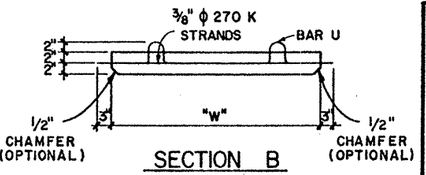

SECTION B

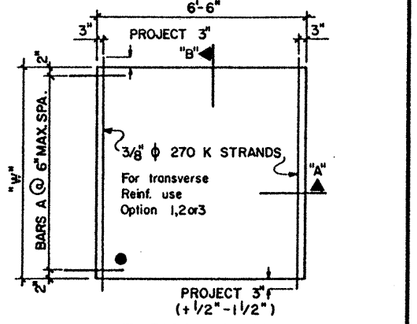

TYPICAL PLAN

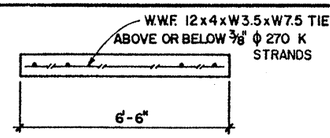

SECTION C

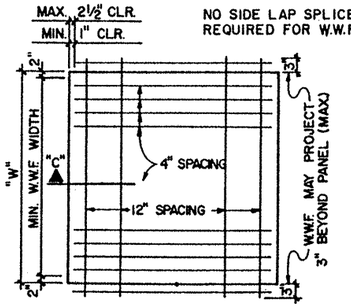

OPTION 1 (TRANSVERSE REINF.)

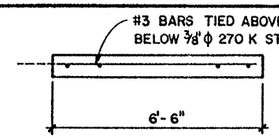

SECTION D

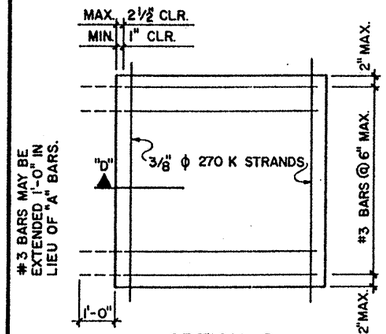

OPTION 2 (TRANSVERSE REINF.)

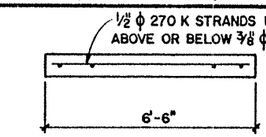

SECTION E

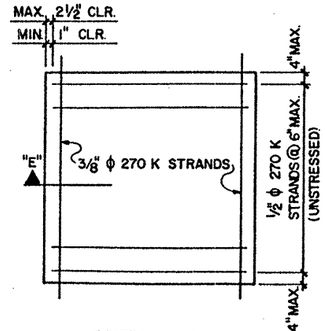

OPTION 3 (TRANSVERSE REINF.)

TEXAS DEPARTMENT OF TRANSPORTATION
APPROVED
DIVISION OF BRIDGES AND STRUCTURES
AUG 04 1992

APPROVAL OF THIS DRAWING DOES NOT RELIEVE THE CONTRACTOR OF THE RESPONSIBILITY FOR THE CORRECTNESS OF DETAIL.

TOTAL PANEL AREA THIS SHEET 809 Sq.Ft.

13 3/8" ϕ 270K STRANDS STRESS TO 16.1 KIPS EACH
CONCRETE CLASS: H
RELEASE STRENGTH 4,000 p.s.i.
28 DAY STRENGTH: 5,000 p.s.i
TOP FINISH: BROOM
● ERECTION MARK

SAPSCO
SAN ANTONIO PRE-STRESSED CO.

CONTRACTOR GILBERT TEXAS CONSTR. CORP.

FED. RD. DIST. NO.	STATE	PROJECT NO.		HWY. NO.
6	TEXAS	NH 92(50) M		US 83/281
STATE DIST. NO.	COUNTY	CONTROL NO.	SECTION NO.	JOB NO.
21	HIDALGO	0039	17	097

DRAWN	CHECK	DATE	SHEET
L.L.A.	R.S.M.	6/30/92	FP- 8
JOB NO. 92-555	6.5A-FAB. SHEET		
92-062 H			

MOD. 8-15-82

SCHEDULE OF PANEL DIMENSIONS

TOTAL AREA THIS TABLE ____ Sq.Ft.

PANEL MARK	7A-3.0	7A-3.1	7A-3.2	7A-3.3	7A-3.4	7A-3.5	7A-3.6	7A-3.7	7A-3.8	7A-3.9
NO. REQ'D										
"W"	3.0	3.1	3.2	3.3	3.4	3.5	3.6	3.7	3.8	3.9
MIN. WWF WIDTH	2.67	2.77	2.87	2.97	3.07	3.17	3.27	3.37	3.47	3.57
BAR U TYPE	A	A	A	A	A	A	A	A	A	A
BAR A	7	7	7	7	8	8	8	8	8	9
AREA / PANEL	21.00ϕ	21.70ϕ	22.40ϕ	23.10ϕ	23.80ϕ	24.50ϕ	25.20ϕ	25.90ϕ	26.60ϕ	27.30ϕ
AREA (Sq.Ft.)										

SCHEDULE OF PANEL DIMENSIONS

TOTAL AREA THIS TABLE 123 Sq.Ft.

PANEL MARK					7A-4.4					
NO. REQ'D					4					
"W"	4.0	4.1	4.2	4.3	4.4	4.5	4.6	4.7	4.8	4.9
MIN. WWF WIDTH	3.67	3.77	3.87	3.97	4.07	4.17	4.27	4.37	4.47	4.57
BAR U TYPE	A	A	A	A	A	A	A	A	A	A
BAR A	9	9	9	9	10	10	10	10	10	11
AREA / PANEL	28.00ϕ	28.70ϕ	29.40ϕ	30.10ϕ	30.80ϕ	31.50ϕ	32.20ϕ	32.90ϕ	33.60ϕ	34.30ϕ
AREA (Sq.Ft.)					123					

SCHEDULE OF PANEL DIMENSIONS

TOTAL AREA THIS TABLE 81 Sq.Ft.

PANEL MARK									7A-5.8	
NO. REQ'D									2	
"W"	5.0	5.1	5.2	5.3	5.4	5.5	5.6	5.7	5.8	5.9
MIN. WWF WIDTH	4.67	4.77	4.87	4.97	5.07	5.17	5.27	5.37	5.47	5.57
BAR U TYPE	A	A	A	A	B	B	B	B	B	B
BAR A	11	11	11	11	12	12	12	12	12	13
AREA / PANEL	35.00ϕ	35.70ϕ	36.40ϕ	37.10ϕ	37.80ϕ	38.50ϕ	39.20ϕ	39.90ϕ	40.60ϕ	41.30ϕ
AREA (Sq.Ft.)									81	

SCHEDULE OF PANEL DIMENSIONS

TOTAL AREA THIS TABLE 593 Sq.Ft.

PANEL MARK				7A-6.3	7A-6.4	7A-6.5				7A-6.9
NO. REQ'D				3	1	7				2
"W"	6.0	6.1	6.2	6.3	6.4	6.5	6.6	6.7	6.8	6.9
MIN. WWF WIDTH	5.67	5.77	5.87	5.97	6.07	6.17	6.27	6.37	6.47	6.57
BAR U TYPE	B	B	B	B	B	B	B	B	B	B
BAR A	13	13	13	13	14	14	14	14	14	15
AREA / PANEL	42.00ϕ	42.70ϕ	43.40ϕ	44.10ϕ	44.80ϕ	45.50ϕ	46.20ϕ	46.90ϕ	47.60ϕ	48.30ϕ
AREA (Sq.Ft.)				132	45	319				97

SCHEDULE OF PANEL DIMENSIONS

TOTAL AREA THIS TABLE 2,605 Sq.Ft.

PANEL MARK	7A-7.0	7A-7.1		7A-7.3					7A-7.8	7A-7.9
NO. REQ'D	6	9		1					18	15
"W"	7.0	7.1	7.2	7.3	7.4	7.5	7.6	7.7	7.8	7.9
MIN. WWF WIDTH	6.67	6.77	6.87	6.97	7.07	7.17	7.27	7.37	7.47	7.57
BAR U TYPE	B	B	B	B	B	B	B	C	C	C
BAR A	15	15	15	15	16	16	16	16	16	17
AREA / PANEL	49.00ϕ	49.70ϕ	50.40ϕ	51.10ϕ	51.80ϕ	52.50ϕ	53.20ϕ	53.90ϕ	54.60ϕ	55.30ϕ
AREA (Sq.Ft.)	294	447		51					983	830

SCHEDULE OF PANEL DIMENSIONS

TOTAL AREA THIS TABLE ____ Sq.Ft.

PANEL MARK	7A-8.0	7A-8.1	7A-8.2	7A-8.3	7A-8.4	7A-8.5	7A-8.6	7A-8.7	7A-8.8	7A-8.9
NO. REQ'D										
"W"	8.0	8.1	8.2	8.3	8.4	8.5	8.6	8.7	8.8	8.9
MIN. WWF WIDTH	7.67	7.77	7.87	7.97	8.07	8.17	8.27	8.37	8.47	8.57
BAR U TYPE	C	C	C	C	C	C	C	C	C	C
BAR A	17	17	17	17	18	18	18	18	18	19
AREA / PANEL	56.00ϕ	56.70ϕ	57.40ϕ	58.10ϕ	58.80ϕ	59.50ϕ	60.20ϕ	60.90ϕ	61.60ϕ	62.30ϕ
AREA (Sq.Ft.)										

SCHEDULE OF PANEL DIMENSIONS

TOTAL AREA THIS TABLE ____ Sq.Ft.

PANEL MARK	7A-9.0	7A-9.1	7A-9.2	7A-9.3	7A-9.4	7A-9.5	7A-9.6	7A-9.7	7A-9.8	7A-9.9
NO. REQ'D										
"W"	9.0	9.1	9.2	9.3	9.4	9.5	9.6	9.7	9.8	9.9
MIN. WWF WIDTH	8.67	8.77	8.87	8.97	9.07	9.17	9.27	9.37	9.47	9.57
BAR U TYPE	C	C	C	C	C	C	C	C	C	C
BAR A	18	19	19	19	20	20	20	20	20	21
AREA / PANEL	63.00ϕ	63.70ϕ	64.40ϕ	65.10ϕ	65.80ϕ	66.50ϕ	67.20ϕ	67.90ϕ	68.60ϕ	69.30ϕ
AREA (Sq.Ft.)										

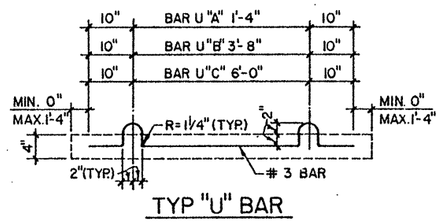

TYP "U" BAR

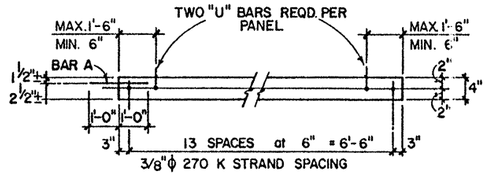

SECTION A
(SHOWING STRANDS)

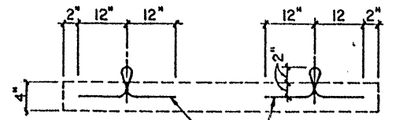

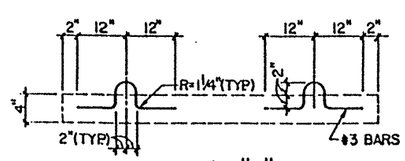

OPTIONAL "U" BAR
(4 REQUIRED PER PANEL.)

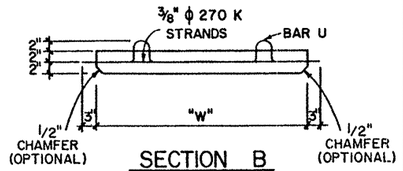

SECTION B

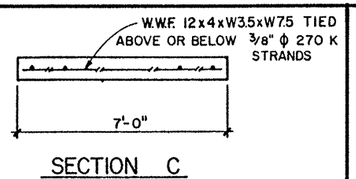

SECTION C

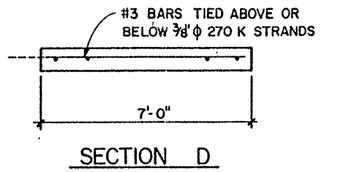

SECTION D

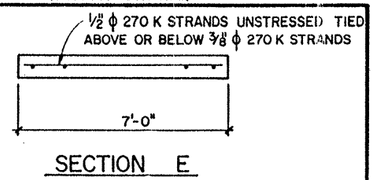

SECTION E

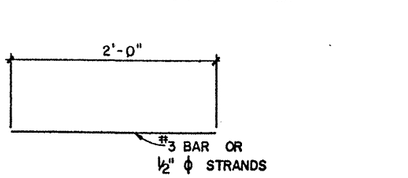

TYP. "A" BAR

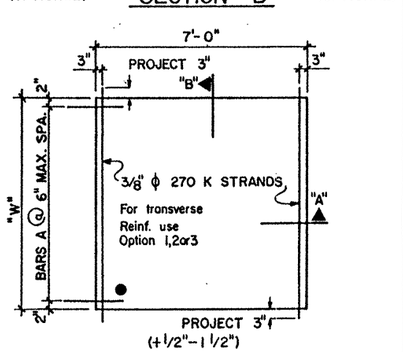

TYPICAL PLAN

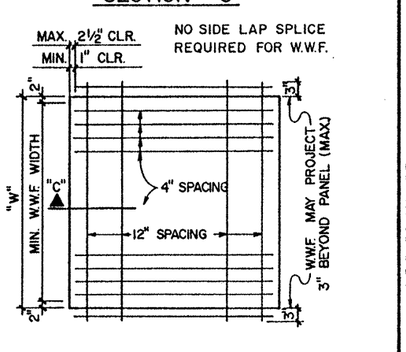

OPTION 1 (TRANSVERSE REINF.)

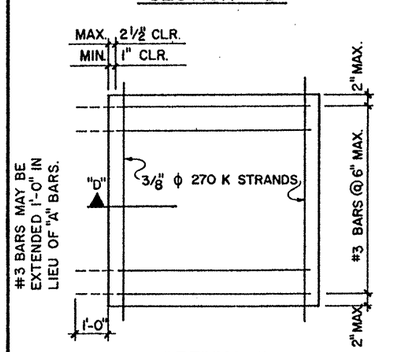

OPTION 2 (TRANSVERSE REINF.)

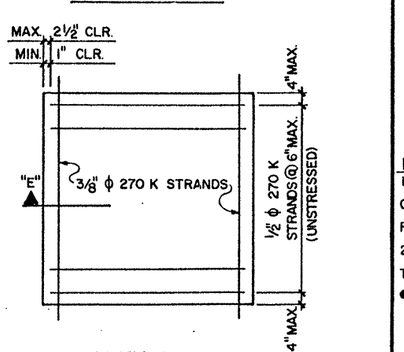

OPTION 3 (TRANSVERSE REINF.)

14 3/8" ϕ 270K STRANDS STRESS TO 161 KIPS EACH
CONCRETE CLASS: H
RELEASE STRENGTH: 4,000 p.s.i.
28 DAY STRENGTH: 5,000 p.s.i.
TOP FINISH: BROOM
● ERECTION MARK

TOTAL PANEL AREA THIS SHEET 3,402 Sq.Ft.

TEXAS DEPARTMENT OF TRANSPORTATION
APPROVED
DIVISION OF BRIDGES AND STRUCTURES
AUG 04 1992
APPROVAL OF THIS DRAWING DOES NOT RELIEVE THE CONTRACTOR OF THE RESPONSIBILITY FOR THE CORRECTNESS OF DETAIL.

SAPSCO
SAN ANTONIO PRE-STRESSED CO.

CONTRACTOR GILBERT TEXAS CONSTR. CORP.

FED. RD. DIV. NO.	STATE	PROJECT NO.	HWY. NO.
6	TEXAS	NH 92(50) M	US 83/281
STATE DIST. NO.	COUNTY	CONTROL NO.	SECTION NO.	JOB NO.
21	HIDALGO	0039	17	097

DRAWN	CHECK	DATE	SHEET
L.L.A.	R.S.M.	6/30/92	FP- 9
JOB NO. 92-555	7A-FAB. SHEET		
92-062H			

MOD. 8-16-82

SCHEDULE OF PANEL DIMENSIONS

TOTAL AREA THIS TABLE _____ Sq.Ft.

PANEL MARK	8S-3.0	8S-3.1	8S-3.2	8S-3.3	8S-3.4	8S-3.5	8S-3.6	8S-3.7	8S-3.8	8S-3.9
NO. REQ'D										
"W"	3.0	3.1	3.2	3.3	3.4	3.5	3.6	3.7	3.8	3.9
MIN. WWF WIDTH	2.67	2.77	2.87	2.97	3.07	3.17	3.27	3.37	3.47	3.57
BAR U TYPE	A	A	A	A	A	A	A	A	A	A
AREA / PANEL	24.00ϕ	24.80ϕ	25.60ϕ	26.40ϕ	27.20ϕ	28.00ϕ	28.80ϕ	29.60ϕ	30.40ϕ	31.20ϕ
AREA (Sq.Ft.)										

SCHEDULE OF PANEL DIMENSIONS

TOTAL AREA THIS TABLE 2,464 Sq.Ft.

PANEL MARK					8S-4.4					
NO. REQ'D					70					
"W"	4.0	4.1	4.2	4.3	4.4	4.5	4.6	4.7	4.8	4.9
MIN. WWF WIDTH	3.67	3.77	3.87	3.97	4.07	4.17	4.27	4.37	4.47	4.57
BAR U TYPE	A	A	A	A	A	A	A	A	A	A
AREA / PANEL	32.00ϕ	32.80ϕ	33.60ϕ	34.40ϕ	35.20ϕ	36.00ϕ	36.80ϕ	37.60ϕ	38.40ϕ	39.20ϕ
AREA (Sq.Ft.)					2,464					

SCHEDULE OF PANEL DIMENSIONS

TOTAL AREA THIS TABLE 5,058 Sq.Ft.

PANEL MARK									8S-5.8	
NO. REQ'D									109	
"W"	5.0	5.1	5.2	5.3	5.4	5.5	5.6	5.7	5.8	5.9
MIN. WWF WIDTH	4.67	4.77	4.87	4.97	5.07	5.17	5.27	5.37	5.47	5.57
BAR U TYPE	A	A	A	A	B	B	B	B	B	B
AREA / PANEL	40.00ϕ	40.80ϕ	41.60ϕ	42.40ϕ	43.20ϕ	44.00ϕ	44.80ϕ	45.60ϕ	46.40ϕ	47.20ϕ
AREA (Sq.Ft.)									5,058	

TEXAS DEPARTMENT OF TRANSPORTATION
APPROVED
DIVISION OF BRIDGES AND STRUCTURES
AUG 04 1992

APPROVAL OF THIS DRAWING DOES NOT RELIEVE THE CONTRACTOR OF THE RESPONSIBILITY FOR THE CORRECTNESS OF DETAIL.

SCHEDULE OF PANEL DIMENSIONS

TOTAL AREA THIS TABLE 21,562 Sq.Ft.

PANEL MARK				8S-6.3	8S-6.4	8S-6.5		8S-6.7	8S-6.8	8S-6.9
NO. REQ'D				72	107	61		45	36	89
"W"	6.0	6.1	6.2	6.3	6.4	6.5	6.6	6.7	6.8	6.9
MIN. WWF WIDTH	5.67	5.77	5.87	5.97	6.07	6.17	6.27	6.37	6.47	6.57
BAR U TYPE	B	B	B	B	B	B	B	B	B	B
AREA / PANEL	48.00ϕ	48.80ϕ	49.60ϕ	50.40ϕ	51.20ϕ	52.00ϕ	52.80ϕ	53.60ϕ	54.40ϕ	55.20ϕ
AREA (Sq.Ft.)				3,629	5,478	3,172		2,412	1,958	4,913

SCHEDULE OF PANEL DIMENSIONS

TOTAL AREA THIS TABLE 95,717 Sq.Ft.

PANEL MARK	8S-7.0	8S-7.1		8S-7.3	8S-7.4	8S-7.5	8S-7.6		8S-7.8	8S-7.9
NO. REQ'D	119	115		62	67	46	54		392	703
"W"	7.0	7.1	7.2	7.3	7.4	7.5	7.6	7.7	7.8	7.9
MIN. WWF WIDTH	6.67	6.77	6.87	6.97	7.07	7.17	7.27	7.37	7.47	7.57
BAR U TYPE	B	B	B	B	B	B	B	C	C	C
AREA / PANEL	56.00ϕ	56.80ϕ	57.60ϕ	58.40ϕ	59.20ϕ	60.00ϕ	60.80ϕ	61.60ϕ	62.40ϕ	63.20ϕ
AREA (Sq.Ft.)	6,664	6,532		3,621	3,966	2,760	3,283		24,461	44,430

SCHEDULE OF PANEL DIMENSIONS

TOTAL AREA THIS TABLE 1,152 Sq.Ft.

PANEL MARK	8S-8.0									
NO. REQ'D	18									
"W"	8.0	8.1	8.2	8.3	8.4	8.5	8.6	8.7	8.8	8.9
MIN. WWF WIDTH	7.67	7.77	7.87	7.97	8.07	8.17	8.27	8.37	8.47	8.57
BAR U TYPE	C	C	C	C	C	C	C	C	C	C
AREA / PANEL	64.00ϕ	64.80ϕ	65.60ϕ	66.40ϕ	67.20ϕ	68.00ϕ	68.80ϕ	69.60ϕ	70.40ϕ	71.20ϕ
AREA (Sq.Ft.)	1,152									

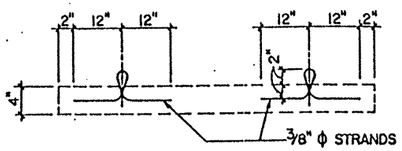

SCHEDULE OF PANEL DIMENSIONS

TOTAL AREA THIS TABLE _____ Sq.Ft.

PANEL MARK	8S-9.0	8S-9.1	8S-9.2	8S-9.3	8S-9.4	8S-9.5	8S-9.6	8S-9.7	8S-9.8	8S-9.9
NO. REQ'D										
"W"	9.0	9.1	9.2	9.3	9.4	9.5	9.6	9.7	9.8	9.9
MIN. WWF WIDTH	8.67	8.77	8.87	8.97	9.07	9.17	9.27	9.37	9.47	9.57
BAR U TYPE	C	C	C	C	C	C	C	C	C	C
AREA / PANEL	72.00ϕ	72.80ϕ	73.60ϕ	74.40ϕ	75.20ϕ	76.00ϕ	76.80ϕ	77.60ϕ	78.40ϕ	79.20ϕ
AREA (Sq.Ft.)										

TYP. "U" BAR

SECTION A
(SHOWING STRANDS)

OPTIONAL "U" BAR
(4 REQUIRED PER PANEL)

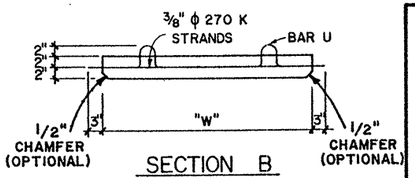

SECTION B

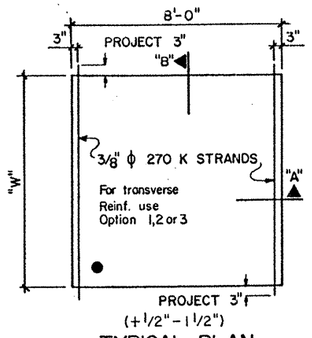

TYPICAL PLAN

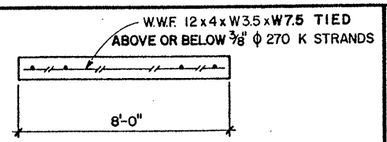

SECTION C

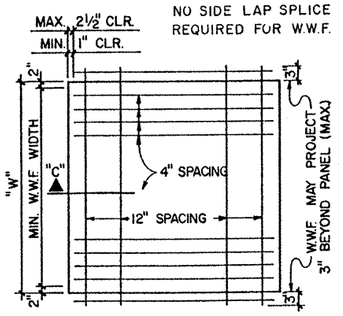

OPTION 1 (TRANSVERSE REINF.)

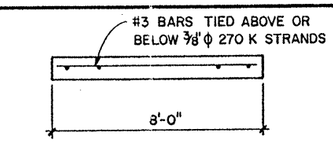

SECTION D

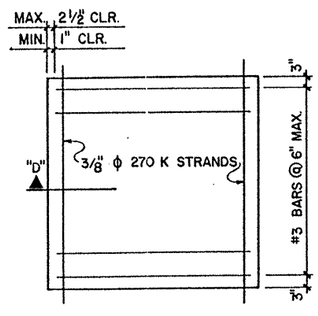

OPTION 2 (TRANSVERSE REINF.)

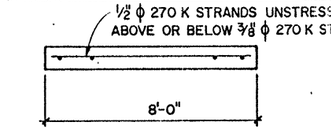

SECTION E

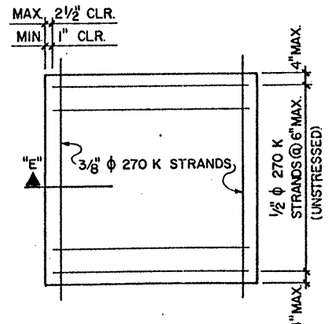

OPTION 3 (TRANSVERSE REINF.)

16 3/8" ϕ 270K STRANDS STRESS TO 16.1 KIPS EACH
CONCRETE CLASS: H
RELEASE STRENGTH: 4,000 psi.
28 DAY STRENGTH: 5,000 psi.
TOP FINISH: BROOM
● ERECTION MARK

TOTAL PANEL AREA THIS SHEET 125,953 Sq.Ft.

SAPSCO
SAN ANTONIO PRE-STRESSED CO.

CONTRACTOR GILBERT TEXAS CONSTR. CORP.

FED. RD. DIV. NO.	STATE	PROJECT NO.		HWY. NO.
6	TEXAS	NH 92(50) M		US 83/281
STATE DIST. NO.	COUNTY	CONTROL NO.	SECTION NO.	JOB NO.
21	HIDALGO	0039	17	097

DRAWN	CHECK	DATE	SHEET
L. L. A.	R. S. M.	6/30/92	FP-10
JOB NO. 92-555	8S-FAB. SHEET		

92-062H

MOD. 8-16-82

STRUCTURE	SPAN	BEAM NO.	♦ BEAM TYPE	NON-STD. STRAND PATTERN	DESIGNED BEAMS (DEPRESSED STRANDS) PRESTRESSING STRANDS TOTAL NO.	TOTAL SIZE	TOTAL STRGTH.	"e" ℄ (In.)	"e" END (In.)	DEPRESSED NO.	DEPRESSED TO (In.)	CONCRETE RELEASE STRGTH. f'ci(psi)	CONCRETE MINIMUM 28 DAY COMP. STRGTH. f'c(psi)	OPTIONAL DESIGN DN. LOAD COMP. STRESS (TOP ℄) fct(psi)	DN. LOAD TENSILE STRESS (BOTT. ℄) fcb(psi)	REQUIRED MINIMUM ULTIMATE MOMENT CAPACITY (Ft. Kips)
RAMPS 1& 2 UNITS 1-4	1	ALL	IV		28	½"Ø	270K	21.32	16.18	6	30.0	4000	5000	2346	-2717	4844
	2	ALL	IV		40	½"Ø	270K	20.35	11.55	8	52.0	4481	5305	3111	-3476	5990
	3-5	ALL	IV		44	½"Ø	270K	20.02	12.02	8	52.0	5017	5944	3415	-3784	6456
	6	ALL	IV		38	½"Ø	270K	20.54	11.28	8	52.0	4233	5599	3218	-3471	5897
	7	ALL	IV		42	½"Ø	270K	20.18	11.80	8	52.0	4756	5830	3350	-3675	6229
	8	ALL	IV		38	½"Ø	270K	20.54	11.28	8	52.0	4233	5599	3218	-3471	5897
	9	ALL	IV		42	½"Ø	270K	20.18	11.80	8	52.0	4756	5830	3350	-3675	6229
	10	ALL	IV		48	½"Ø	270K	19.67	10.92	10	52.0	5250	7143	3950	-4128	6690
	11	ALL	IV		52	½"Ø	270K	19.29	11.21	10	52.0	5717	7148	3956	-4253	7073
RAMP 1 UNITS 7, 8 & 10	18-21	ALL	IV		38	½"Ø	270K	20.54	11.28	8	52.0	4233	5599	3218	-3471	5897
	25	ALL	IV		46	½"Ø	270K	19.88	12.23	8	52.0	5278	6088	3493	-3900	6669
	26	ALL	IV		48	½"Ø	270K	19.67	10.92	10	52.0	5209	6343	3605	-4013	6839
RAMP 2 UNITS 7-10	20-23	ALL	IV		46	½"Ø	270K	19.88	12.23	8	52.0	5278	6088	3493	-3900	6669
	24&25	ALL	IV		36	½"Ø	270K	20.75	13.08	6	52.0	4300	5000	2852	-3243	5667
	26	ALL	IV		46	½"Ø	270K	19.88	12.23	8	52.0	5278	6088	3493	-3900	6669
	27&28	ALL	IV		48	½"Ø	270K	19.67	10.92	10	52.0	5250	7143	3950	-4128	6690
	29	ALL	IV		48	½"Ø	270K	19.67	10.92	10	52.0	5209	6343	3605	-4013	6839
RAMPS 3&4 UNITS 1-4	1	ALL	IV		28	½"Ø	270K	21.32	16.18	6	30.0	4000	5000	2346	-2717	4844
	2	ALL	IV		40	½"Ø	270K	20.35	11.55	8	52.0	4481	5305	3111	-3476	5990
	3&4	ALL	IV		44	½"Ø	270K	20.02	12.02	8	52.0	5017	5944	3415	-3784	6456
	5	ALL	IV		38	½"Ø	270K	20.54	11.28	8	52.0	4233	5599	3218	-3471	5897
	6	ALL	IV		42	½"Ø	270K	20.18	11.80	8	52.0	4756	5830	3350	-3675	6229
	7	ALL	IV		38	½"Ø	270K	20.54	11.28	8	52.0	4233	5599	3218	-3471	5897
	8	ALL	IV		42	½"Ø	270K	20.18	11.80	8	52.0	4756	5830	3350	-3675	6229
	9	ALL	IV		44	½"Ø	270K	20.02	12.02	8	52.0	5017	5944	3415	-3784	6456
	10&11	ALL	IV		22	½"Ø	270K	21.84	17.84	4	26.0	4000	5000	1979	-2270	4069
RAMP 3 UNIT 7	20	ALL	IV		46	½"Ø	270K	19.88	12.23	8	52.0	5278	6088	3493	-3900	6669
	21	ALL	IV		48	½"Ø	270K	19.67	10.92	10	52.0	5209	6343	3605	-4013	6839
RAMP 4 UNITS 6 & 8	15-18	1	IV		32	½"Ø	270K	21.00	13.88	6	44.0	4000	5000	2529	-2908	5144
	15-18	2-3	IV		30	½"Ø	270K	21.15	15.55	6	34.0	4000	5000	2468	-2843	5043
	15-18	4	IV		28	½"Ø	270K	21.32	16.18	6	30.0	4000	5000	2346	-2717	4844
	22	ALL	IV		46	½"Ø	270K	19.88	12.23	8	52.0	5342	7169	3965	-4034	6195
	23	ALL	IV		20	½"Ø	270K	21.95	18.35	4	22.0	4000	5000	1704	-2036	3751
	24	ALL	IV		22	½"Ø	270K	21.84	17.84	4	26.0	4000	5000	1979	-2270	4069

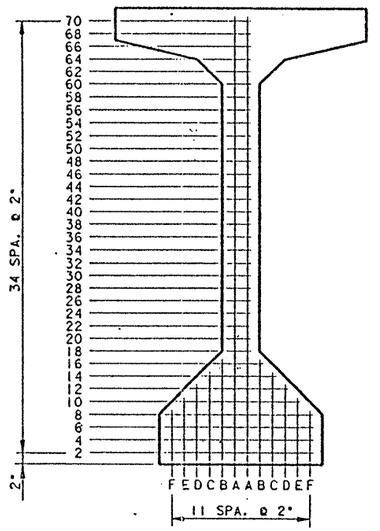

TYPE VI (MOD) BM.

♦ VIM DENOTES TYPE VI (MOD) BEAM.

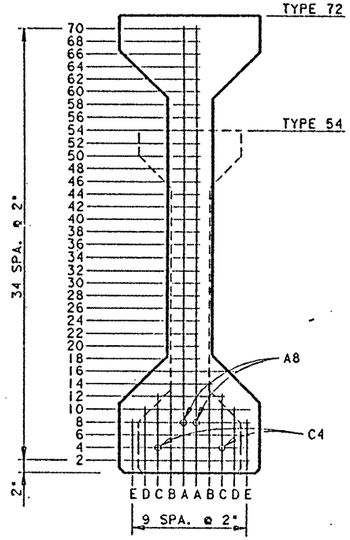

TYPES 54 & 72 BMS.

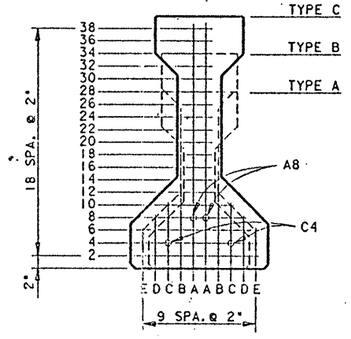

TYPES A, B, & C BMS.

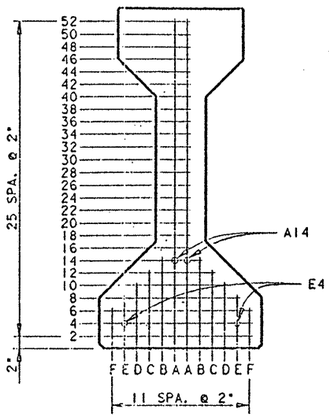

AASHTO TYPE IV BM.

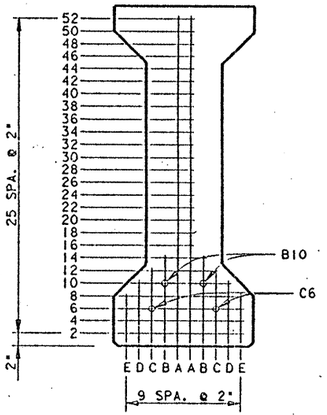

TYPE 54 (MOD) BM.

♦ 54M DENOTES TYPE 54 (MOD) BEAM.

NON-STANDARD STRAND PATTERNS

PATTERN	STRAND ARRANGEMENT AT ℄ OF BEAM

GENERAL NOTES:

Designed in accordance with current A.A.S.H.T.O. Specifications.

All concrete shall be Class H.

When shown on this sheet, the Fabricator has the option of furnishing either the designed depressed strand beam or an approved optional beam design using stress relieved or low relaxation strands. Optional designs for beams 120 foot or longer shall have a calculated residual camber equal to or greater than that of the designed beam.

Prestress losses for the designed beams have been calculated according to the current A.A.S.H.T.O. Standard and Interim Specifications for a relative humidity of 75 %. Optional designs shall likewise conform.

Certain beams with depressed strands are subject to cracking in the end of the beam. When such cracks occur, all subsequent beams of the same type and strand pattern shall have strands wrapped in the following manner:

1. Alternate rows of depressed strands shall be wrapped for 2 feet from each end of the beam.
2. One half of the straight strands, as nearly as possible, shall be wrapped for 4 feet from each end of the beam.
3. The wrapping pattern shall be symmetrical about the vertical axis of the beam for both depressed and straight strands.
4. Strands shall be wrapped so that the centers of gravity of the depressed strands and the straight strands will remain within 1 inch of their original location.
5. Strands shall be tightly wrapped with plastic tubing. Both ends and the seam of the tube shall be sealed with waterproof tape.
6. Revised shop drawings will not be required.

For depressed strand designed beams, strands shall be located as low as possible on the 2" grid system shown hereon unless a non-standard strand pattern is indicated. Fill row "2", then row "4", then row "6", etc., beginning each row in the "A" position and working outward until the required number of strands is reached. All strands in the "A" position shall be depressed, maintaining the 2" spacing so that the upper two strands are in the position shown in the table at the beam ends.

Initial pretension for 1/2" 270 K strands = 28.9 K for stress relieved strands or 31.0 K for low relaxation strands.

Design shown based on initial pretension of 31.0 K.

STATE OF TEXAS
MARK J. BLOSCHOCK
52996
REGISTERED PROFESSIONAL ENGINEER

9-24-91

STATE DEPARTMENT OF HIGHWAYS AND PUBLIC TRANSPORTATION

PRESTRESSED CONCRETE BEAMS

(NON-STANDARD SPANS)

US 83/281 DIRECT CONN.

Gp-NS-LR

D45200A1:ZFA1:(3551101431)SHDDS.DGN	PREPARED IN AND FOR USE OF TEXAS SDHPT				
ORIGINAL DRAWING DATED: FEBRUARY 1991	STATE PROJECT	FEDERAL REG. NO.	FEDERAL AID PROJECT		SHEET
DATE: 1-1-97 REVISIONS	21	6	NH92( )M		382
FILE: VOL: Original prepared Oct 1989					

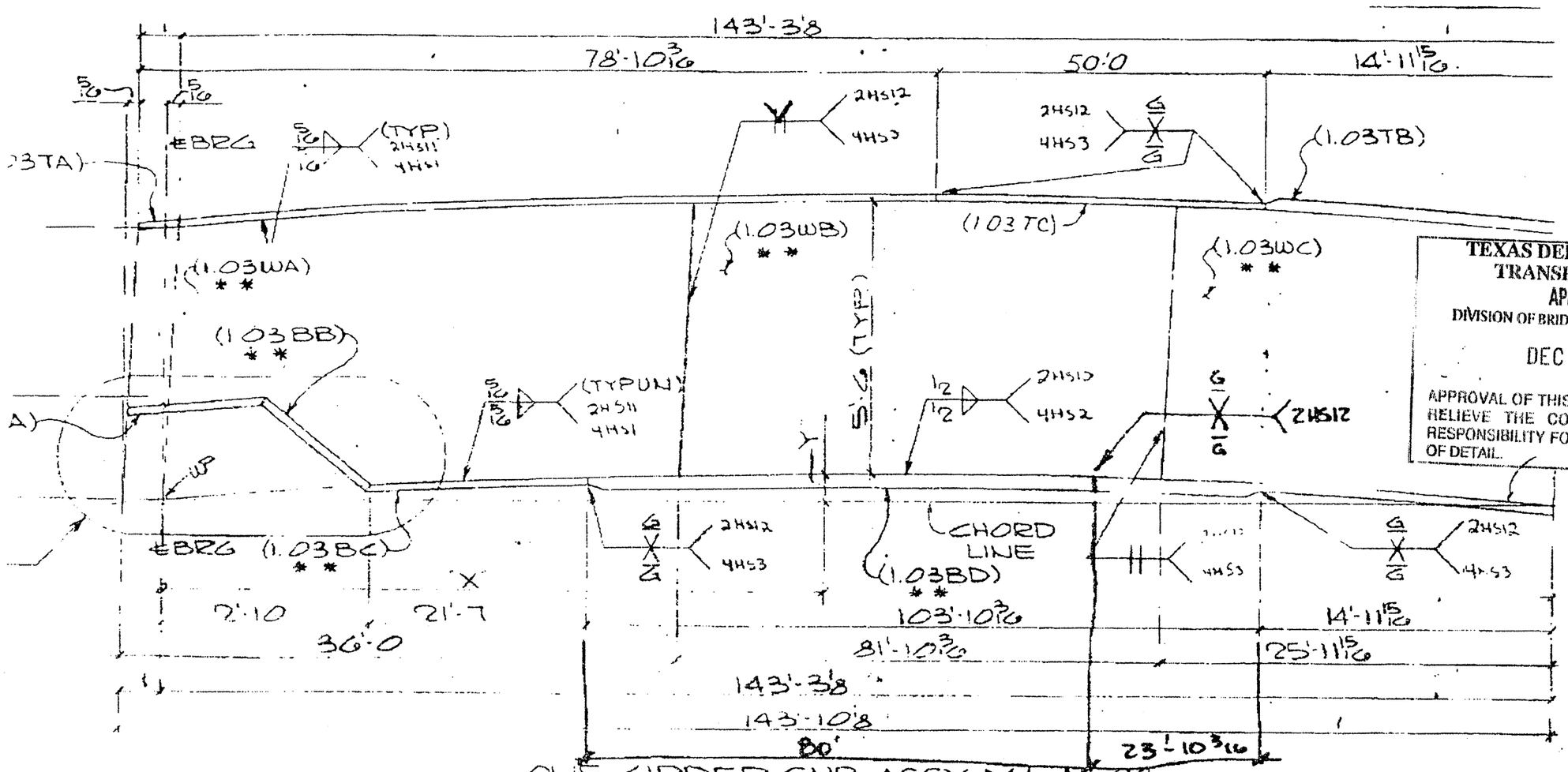

TEXAS DEPARTMENT OF TRANSPORTATION
APPROVED
DIVISION OF BRIDGES AND STRUCTURES
DEC 07 1992
APPROVAL OF THIS DRAWING DOES NOT RELIEVE THE CONTRACTOR OF THE RESPONSIBILITY FOR THE CORRECTNESS OF DETAIL.

ONE GIRDER SUB-ASSY MK-A108
(FOR GIRDER-I70PG1.03)

OK MFR

SHT # 108

MK-A108												
"X"	12'-2 3/8	26'-11 7/8	35'-5	41'-8 9/16	56'-5 5/8	71'-2 11/16	85'-11 3/4	100'-8 13/16	115'-5 7/8	117'-3 1/4	130'-2 5/16
"Y"	15/16	2 1/16	2 9/16	3"	3 13/16	4 3/16	4 3/16	3 7/16	2 5/8	2 1/16	1 5/16

12- 7-92 : 9:26 : MATERIALS & TESTS I- 1 512 371 5008:# 4/ 4
SENT BY:

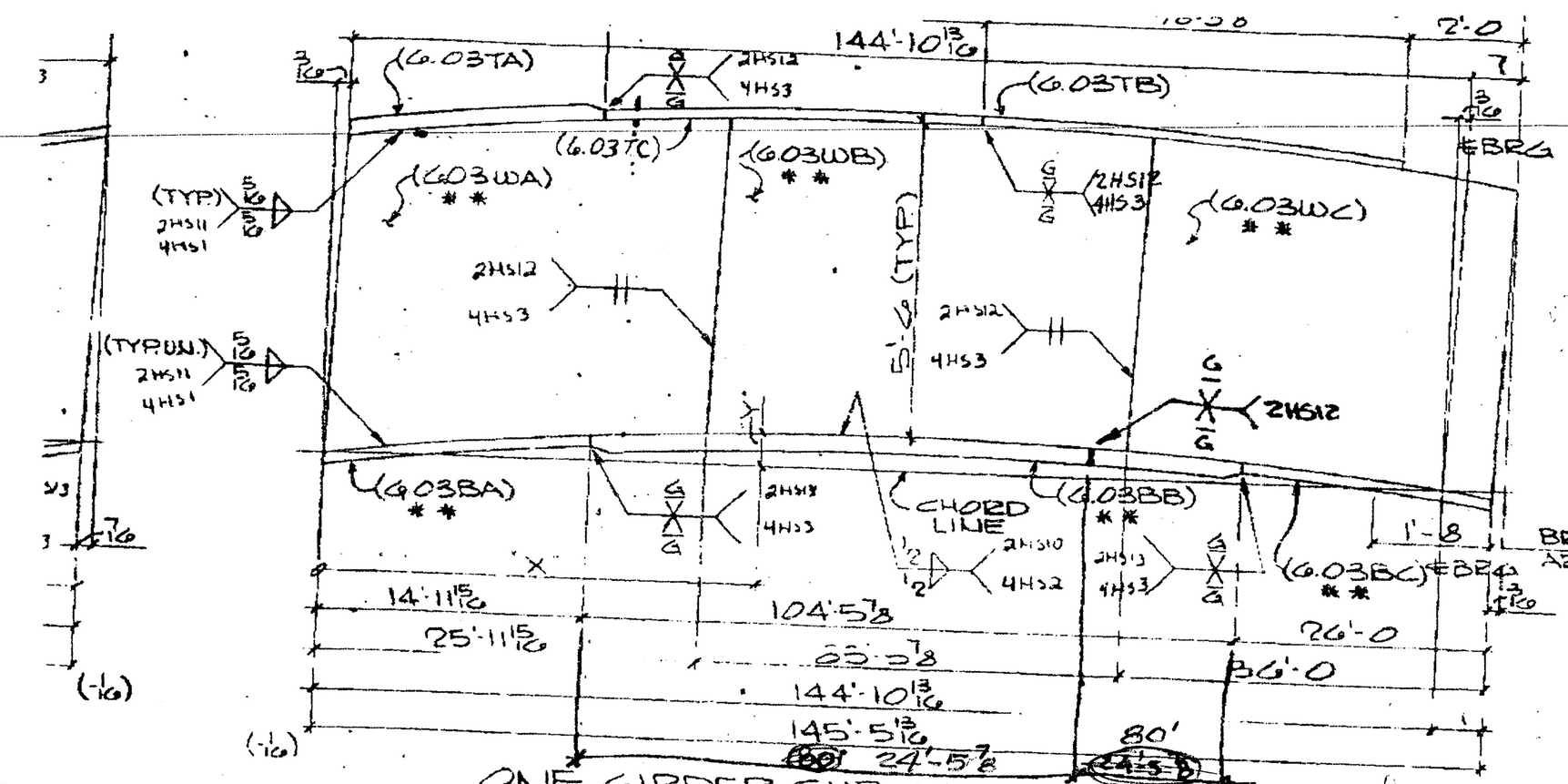

ONE GIRDER SUB-ASSY MK-B116
(FOR GIRDER - 136PG6.03)

Rejected MKL

MK-B116												
"X"	3'-0 3/16	25'-11 15/16	27'-9 5/16	42'-6 3/8	57'-3 7/16	72'-0 1/2	86'-9 9/16	101'-1 5/8	109'-E13	...'-3 11/16	131'-0 3/4
"Y"	1 9/16	2 15/16	3 1/8	4 3/8	5 3/16	5 1/2	5 1/4	4 7/16	3 13/16	3 5/16	1 11/16
		℄ WEB SPLICE							℄ WEB SPLICE		

	Qnty.	Material
1		
2		
3	1	GIRDER
4	1	PL 11/16 x
5	1	PL 1 1/2 x
6	1	PL 3 x
7	1	PL 1 1/2 x
8	1	PL 1 1/2 x
9	1	PL 3 x
10	1	PL 1 1/2 x
11		
12		
13		
14		
15	1	GIRDER
16	1	PL 9/16 x
17	1	PL 1/2 x
18	1	PL 9/16 x
19	1	PL 1 1/2 x
20	1	PL 1 1/4 x
21	1	PL 1 1/2 x
22	1	PL 2 1/2 x
23	1	PL 1 1/4 x
24	1	PL 1 1/4 x
25		
26		
27		
28		
29		
30		
31		
32		
33		
34		
35		
36		
37		
38		

SHT #116

TEXAS DEPARTMENT OF TRANSPORTATION
APPROVED EXCEPT AS NOTED
DIVISION OF BRIDGES AND STRUCTURES

DEC 0 ? 1992

APPROVAL OF THIS DRAWING DOES NOT RELIEVE THE CONTRACTOR OF THE RESPONSIBILITY FOR THE CORRECTNESS OF DETAIL.

55 50
93

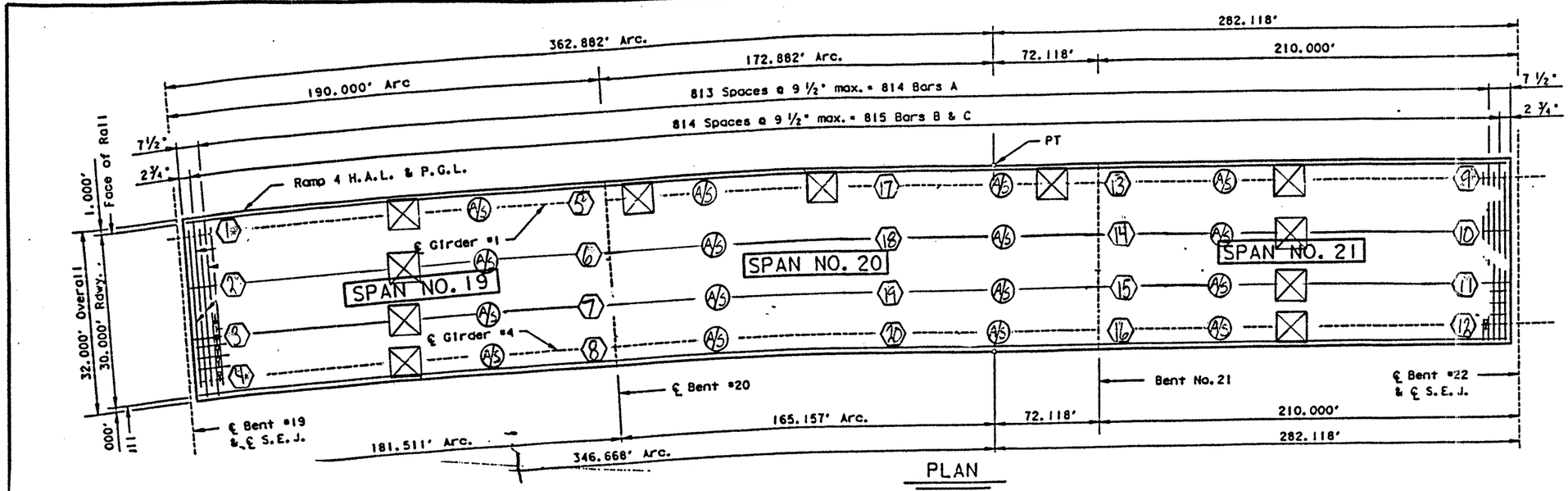

PLAN

⬡ SETTING SEQUENCE

Ⓐ/S AIR SPLICE

Ⓖ/S GROUND SPLICE

☒ TOWERS

All erection of girders will be preformed with two 100 ton cranes. Girder one on all spans will be secured with tower scaffolding. Scaffolding will be positioned approximately half way between bents. Girder one will be blocked and braced in accordance to State Standard Plan SS-MEBR. After girder two and diaphrams are in place to girder one, we will release girder two from the crane. Certain spans will require additional scaffolding to accommodate splices and traffic.

TEXAS DEPARTMENT OF TRANSPORTATION
APPROVED
DIVISION OF BRIDGES AND STRUCTURES
DEC 29 1989
APPROVAL OF THIS DRAWING DOES NOT RELIEVE THE CONTRACTOR OF THE RESPONSIBILITY FOR THE CORRECTNESS OF DETAIL

STATE OF TEXAS
55807
REGISTERED PROFESSIONAL ENGINEER

HS 20 LOADING

STATE DEPARTMENT OF HIGHWAYS AND PUBLIC TRANSPORTATION

UNIT NO. 7, RAMP 4

645.00' PLATE GIRDER UNIT
190.00'-245.00'-210.00'

US 83/281 INTERCHANGE

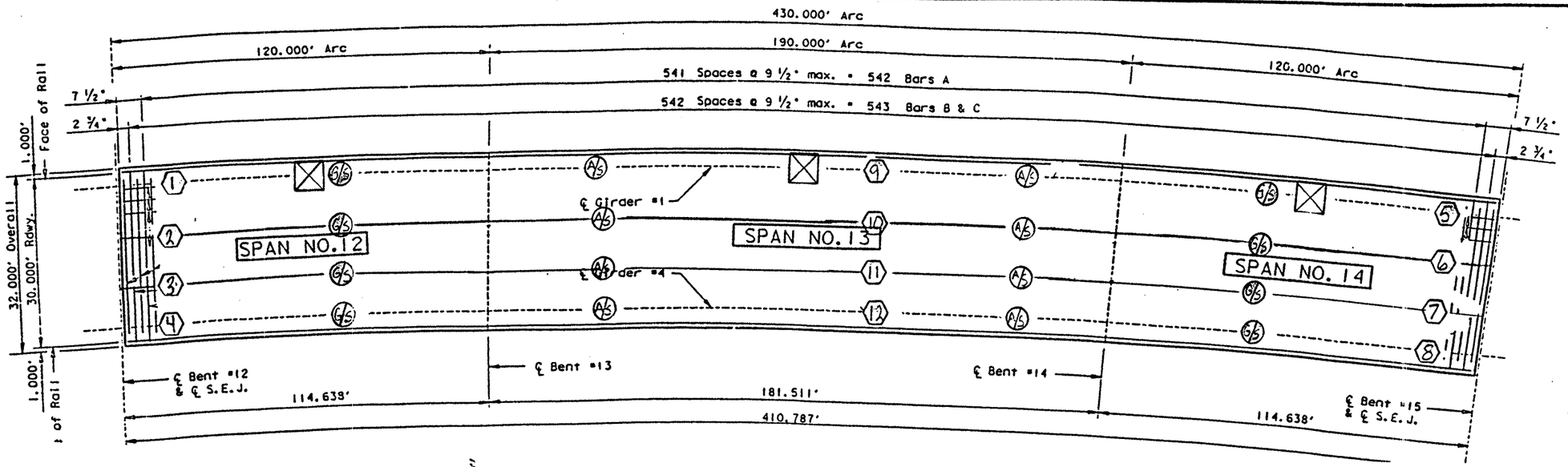

⬡ Setting Sequence

Ⓐ/S Air Splice

Ⓖ/S Ground Splice

☒ Towers

All erection of girders will be preformed with two 100 ton cranes. Girder one on all spans will be secured with tower scaffolding. Scaffolding will be positioned approximately half way between bents. Girder one will be blocked and braced in accordance to State Standard Plan SS-MEBR. After girder two and diaphrams are in place to girder one, we will release girder two from the crane. Certain spans will require additional scaffolding to accommodate splices and traffic.

TEXAS DEPARTMENT OF TRANSPORTATION
APPROVED
DIVISION OF BRIDGES AND STRUCTURES
DEC 20 1993
APPROVAL OF THIS DRAWING DOES NOT RELIEVE THE CONTRACTOR OF THE RESPONSIBILITY FOR THE CORRECTNESS OF DETAIL

HS 20 LOADING Sheet 1 of 5

STATE DEPARTMENT OF HIGHWAYS AND PUBLIC TRANSPORTATION

UNIT NO. 5, RAMP 4

430.00' PLATE GIRDER UNIT
(120.00'-190.00'-120.00')

US 83/281 INTERCHANGE

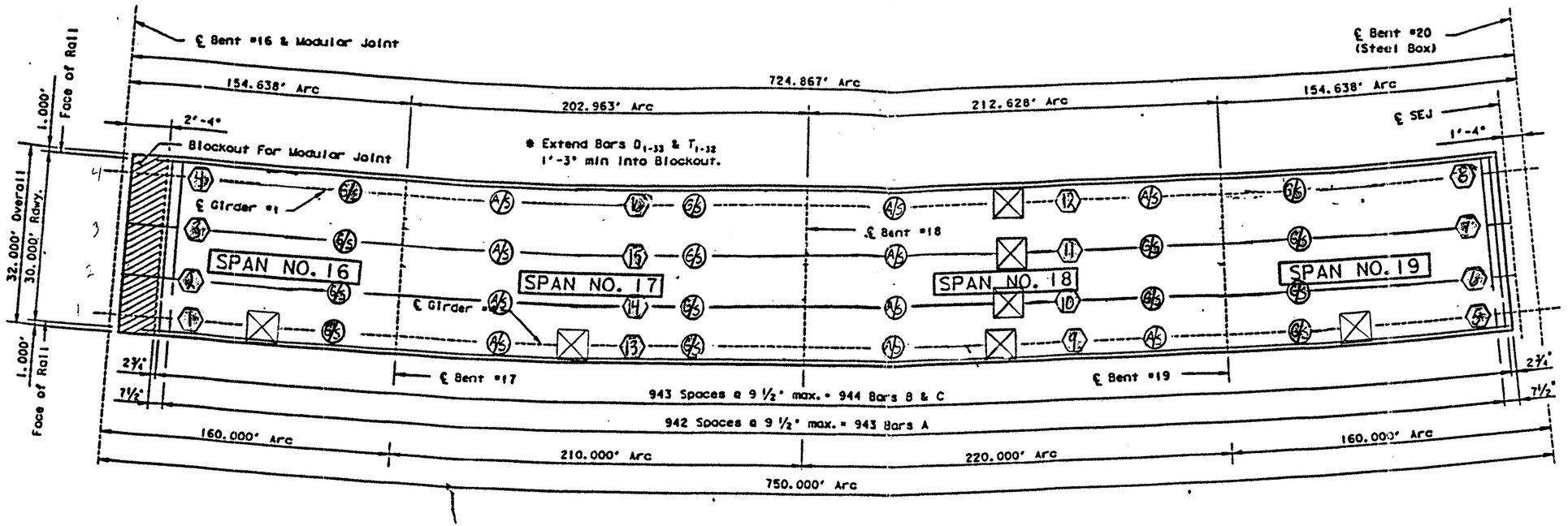

SETTING SEQUENCE

AIR SPLICE

GROUND SPLICE

TOWERS

All erection of girders will be preformed with two 100 ton cranes. Girder one on all spans will be secured with tower scaffolding. Scaffolding will be positioned approximately half way between bents. Girder one will be blocked and braced in accordance to State Standard Plan SS-MEBR. After girder two and diaphrams are in place to girder one, we will release girder two from the crane. Certain spans will require additional scaffolding to accommodate splices and traffic.

TEXAS DEPARTMENT OF TRANSPORTATION
APPROVED
DIVISION OF BRIDGES AND STRUCTURES
DEC 29 1992
APPROVAL OF THIS DRAWING DOES NOT RELIEVE THE CONTRACTOR OF THE RESPONSIBILITY FOR THE CORRECTNESS OF DETAIL.

STATE DEPARTMENT OF HIGHWAYS AND PUBLIC TRANSPORTATION

UNIT NO. 6, RAMP 3

750.00' PLATE GIRDER UNIT
(160.00'-210.00'-220.00'-160.00')

US 83/281 INTERCHANGE

45350A:\ZFA1:(35516)34378SFC01.DGN PREPARED BY AND FOR USE OF TEXAS SDHPT

GAF	REVISIONS	21	6	NH92( )M 344
CET				
TFW				
GAF				

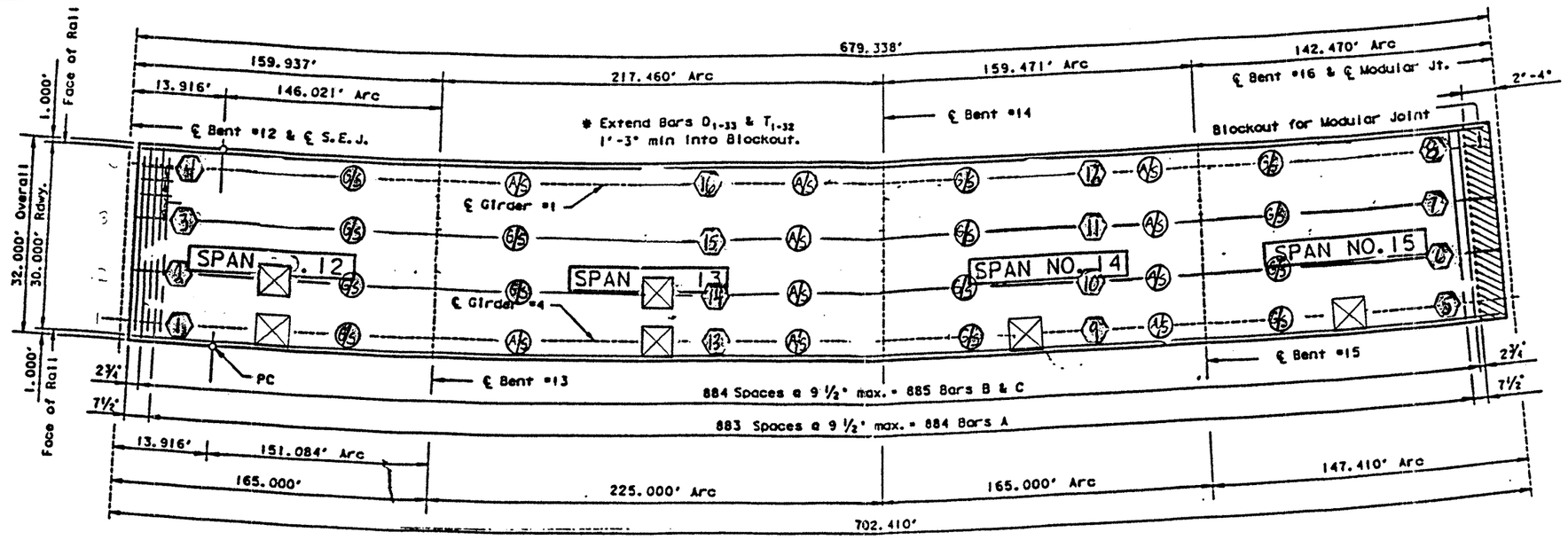

SETTING SEQUENCE

AIR SPLICE

GROUND SPLICE

TOWERS

All erection of girders will be preformed with two 100 ton cranes. Girder one on all spans will be secured with tower scaffolding. Scaffolding will be positioned approximately half way between bents. Girder one will be blocked and braced in accordance to State Standard Plan SS-MEBR. After girder two and diaphrams are in place to girder one, we will release girder two from the crane. Certain spans will require additional scaffolding to accommodate splices and traffic.

TEXAS DEPARTMENT OF TRANSPORTATION
APPROVED
DIVISION OF BRIDGES AND STRUCTURES
DEC 29 1992
APPROVAL OF THIS DRAWING DOES NOT RELIEVE THE CONTRACTOR OF THE RESPONSIBILITY FOR THE CORRECTNESS OF DETAIL

STATE DEPARTMENT OF HIGHWAYS AND PUBLIC TRANSPORTATION
UNIT NO. 5, RAMP 3
702.41' PLATE GIRDER UNI
165.00'-225.00'-165.00'-147
US 83/281 INTERCHANGE

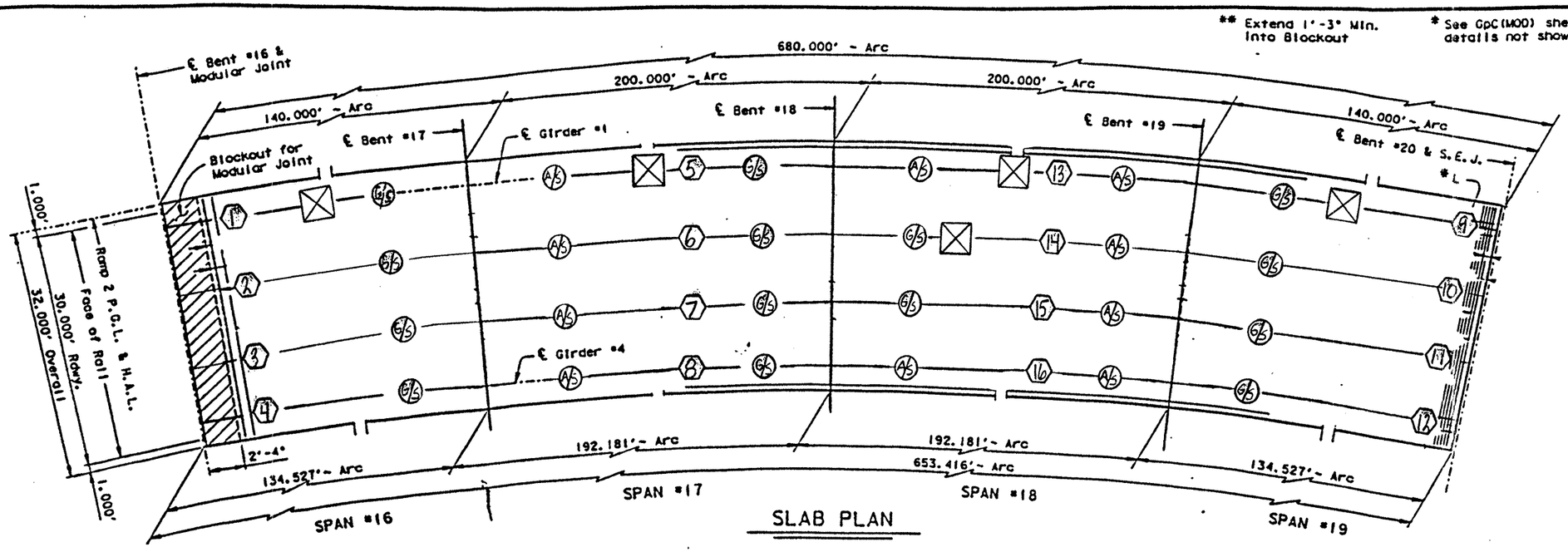

SLAB PLAN

TEXAS DEPARTMENT OF TRANSPORTATION
APPROVED
DIVISION OF BRIDGES AND STRUCTURES
DEC 19 1992
APPROVAL OF THIS DRAWING DOES NOT RELIEVE THE CONTRACTOR OF THE RESPONSIBILITY FOR THE CORRECTNESS OF DETAIL

○ SETTING SEQUENCE

Ⓐ/S AIR SPLICE

Ⓖ/S GROUND SPLICE

☒ TOWERS

All erection of girders will be preformed with two 100 ton cranes. Girder one on all spans will be secured with tower scaffolding. Scaffolding will be positioned approximately half way between bents. Girder one will be blocked and braced in accordance to State Standard Plan SS-MEBR. After girder two and diaphrams are in place to girder one, we will release girder two from the crane. Certain spans will require additional scaffolding to accommodate splices and traffic.

STATE OF TEXAS
A. FLETCHER
55857
REGISTERED PROFESSIONAL ENGINEER

STATE DEPARTMENT OF HIGHWAYS AND PUBLIC TRANSPORTATION

UNIT NO. 6, RAMP 2

680.00' PLATE GIRDER UNIT
140.00'-200.00'-200.00'-140.00'

US 83/281 INTERCHANGE

245350Bx ZFA2x 1355105 1437 75FC01.DGN PREPARED BY AND FOR USE OF TEXAS SDHPT
DECEMBER 1992
NH 927 JM 303

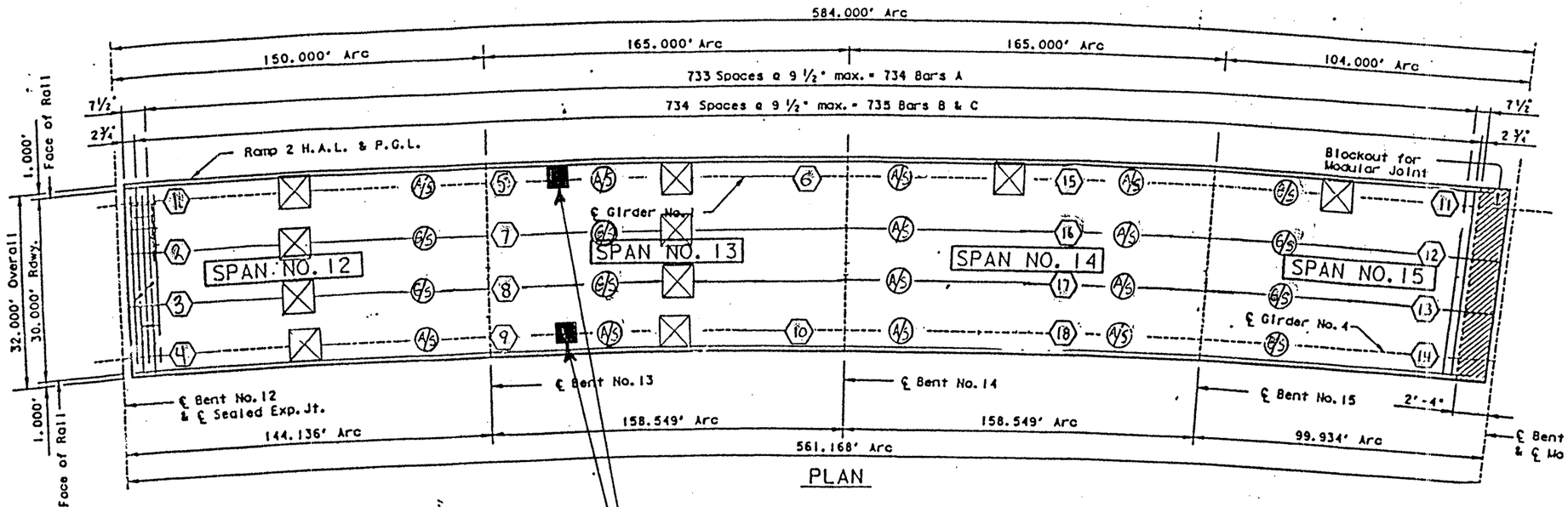

Two additional towers required.

⑥ SETTING SEQUENCE

Ⓐ/S AIR SPLICE

Ⓖ/S GROUND SPLICE

☒ TOWERS

All erection of girders will be preformed with two 100 ton cranes. Girder one on all spans will be secured with tower scaffolding. Scaffolding will be positioned approximately half way between bents. Girder one will be blocked and braced in accordance to State Standard Plan SS-MEBR. After girder two and diaphrams are in place to girder one, we will release girder two from the crane. Certain spans will require additional scaffolding to accommodate splices and traffic.

STATE OF TEXAS
A. MASTER
53007
REGISTERED
PROFESSIONAL ENGINEER

TEXAS DEPARTMENT OF TRANSPORTATION
APPROVED EXCEPT AS NOTED
DIVISION OF BRIDGES AND STRUCTURES

DEC 29 1992

APPROVAL OF THIS DRAWING DOES NOT RELIEVE THE CONTRACTOR OF THE RESPONSIBILITY FOR THE CORRECTNESS

STATE DEPARTMENT OF HIGHWAYS AND PUBLIC TRANSPORTATION

UNIT NO. 5, RAMP 2

584.00' PLATE GIRDER UNIT
150.00'-165.00'-165.00'-104.00'

US. 83/281. INTERCHANGE

0453504 | ZEAL | (355)63143275F004.DGN | PREPARED BY AND FOR USE OF TEXAS SDHPT

ORIGINAL DRAWING DATED	REVISIONS	STATE DISTRICT	COUNTY	TEXAS A-B PROJECT	SHEET
		21	NH 02( )AI		298

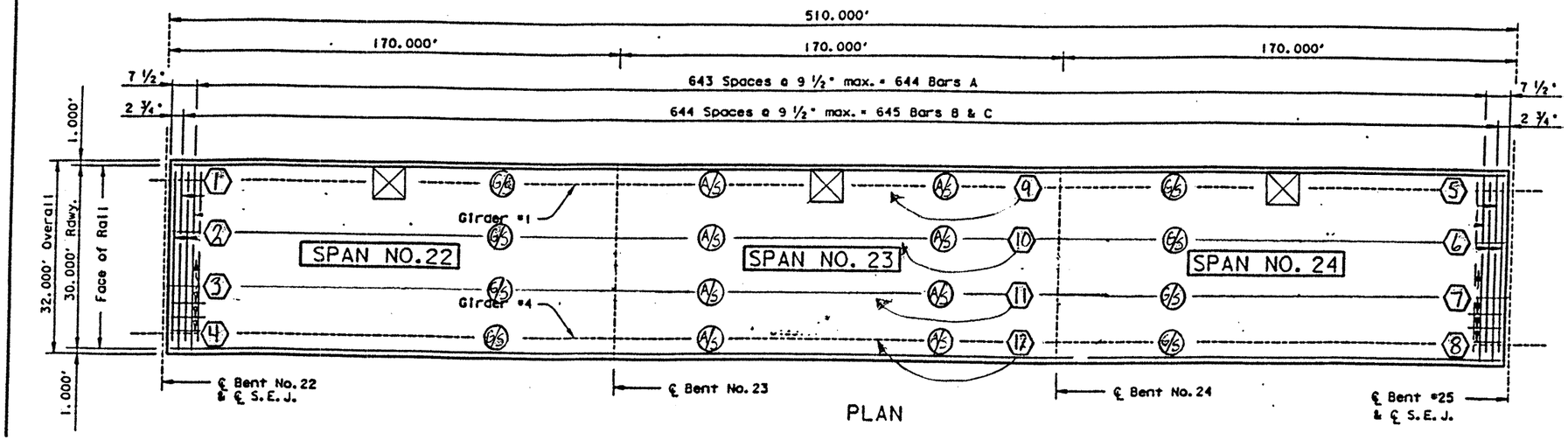

PLAN

TEXAS DEPARTMENT OF TRANSPORTATION
APPROVED
DIVISION OF BRIDGES AND STRUCTURES

DEC 20 1992

APPROVAL OF THIS DRAWING DOES NOT RELIEVE THE CONTRACTOR OF THE RESPONSIBILITY FOR THE CORRECTNESS OF DETAIL

(S) SETTING SEQUENCE

(AS) AIR SPLICE

(GS) GROUND SPLICE

☒ TOWERS

All erection of girders will be preformed with two 100 ton cranes. Girder one on all spans will be secured with tower scaffolding. Scaffolding will be positioned approximately half way between bents. Girder one will be blocked and braced in accordance to State Standard Plan SS-MEBR. After girder two and diaphrams are in place to girder one, we will release girder two from the crane. Certain spans will require additional scaffolding to accommodate splices and traffic.

STATE OF TEXAS
L. J. GLASER
83897
REGISTERED PROFESSIONAL ENGINEER

HS 20 LOADING

3

STATE DEPARTMENT OF HIGHWAYS AND PUBLIC TRANSPORTATION

UNIT NO. 9, RAMP I

510.00' PLATE GIRDER UNIT (170.00'-170.00'-170.00')

US 83/281 INTERCHANGE

045350A1x ZFA1x (355163)43765FC04.DGN	PREPARED BY AND FOR USE OF TEXAS SDH&PT		
DESIGN SPACING UNITS: Feb 1991	STATE DISTRICT: 21	FEDERAL AID PROJECT: VH 92(1)M	SHEET: 265
DW: VAS	REVISIONS		
CK: GJF			

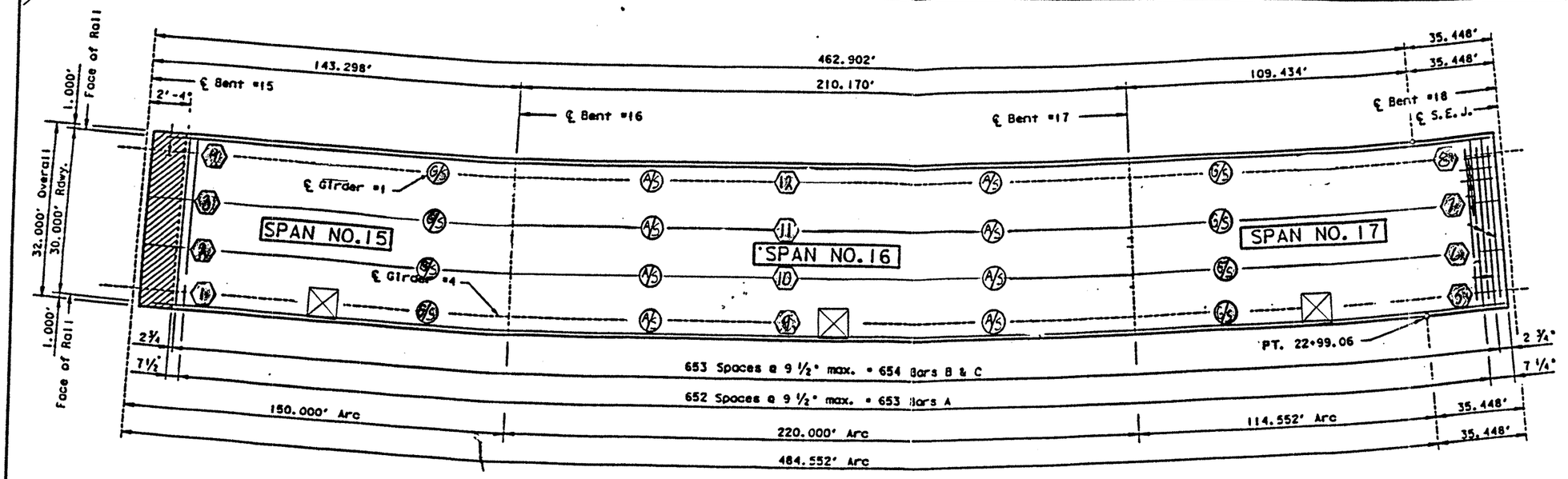

SETTING SEQUENCE

AIR SPLICE

GROUND SPLICE

TOWERS

All erection of girders will be preformed with two 100 ton cranes. Girder one on all spans will be secured with tower scaffolding. Scaffolding will be positioned approximately half way between bents. Girder one will be blocked and braced in accordance to State Standard Plan SS-MEBR. After girder two and diaphrams are in place to girder one, we will release girder two from the crane. Certain spans will require additional scaffolding to accommodate splices and traffic.

TEXAS DEPARTMENT OF TRANSPORTATION
APPROVED
DIVISION OF BRIDGES AND STRUCTURES

DEC 29 1982

APPROVAL OF THIS DRAWING DOES NOT RELIEVE THE CONTRACTOR OF THE RESPONSIBILITY FOR THE CORRECTNESS OF DETAIL

STATE DEPARTMENT OF HIGHWAYS AND PUBLIC TRANSPORTATION

UNIT NO. 6, RAMP I

520.00' PLATE GIRDER UNIT
(150.00'-220.00'-150.00')

US 83/281 INTERCHANGE

OK CTS

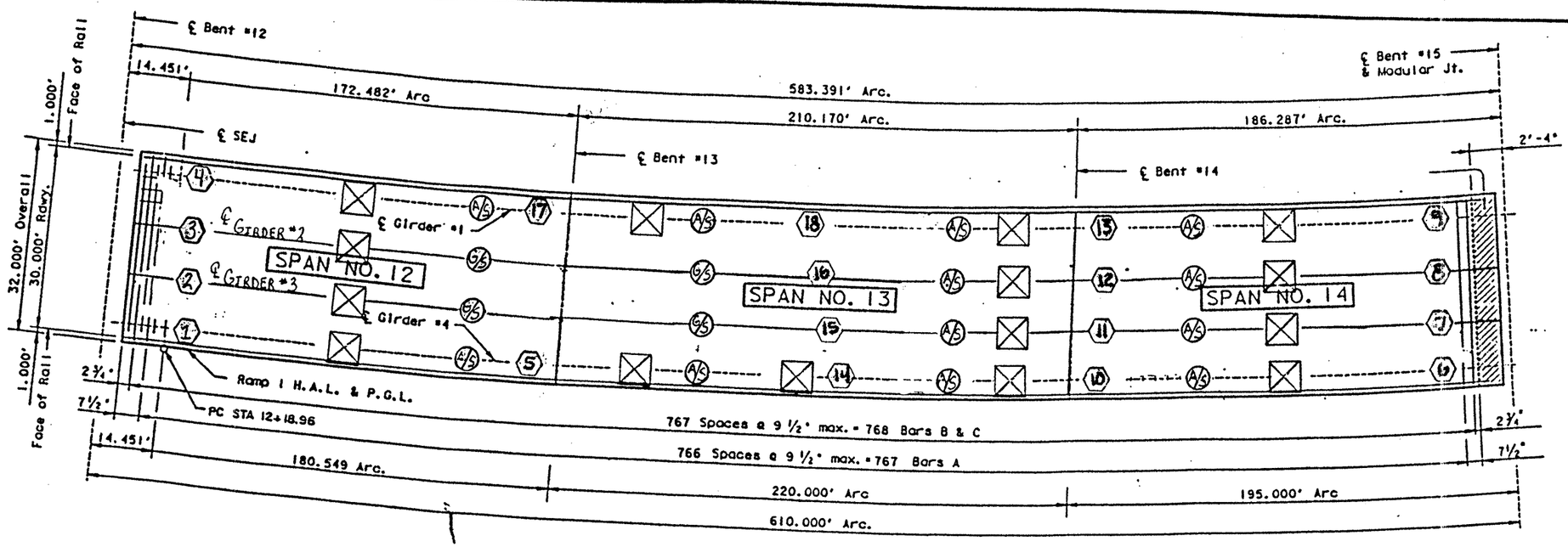

⑦ SETTING SEQUENCE

Ⓐ/S AIR SPLICE

Ⓖ/S GROUND SPLICE

☒ TOWERS

All erection of girders will be preformed with two 100 ton cranes. Girder one on all spans will be secured with tower scaffolding. Scaffolding will be positioned approximately half way between bents. Girder one will be blocked and braced in accordance to State Standard Plan SS-MEBR. After girder two and diaphrams are in place to girder one, we will release girder two from the crane. Certain spans will require additional scaffolding to accommodate splices and traffic.

STATE OF TEXAS
A. FUAT SEZER
59897
REGISTERED PROFESSIONAL ENGINEER

TEXAS DEPARTMENT OF TRANSPORTATION
APPROVED
DIVISION OF BRIDGES AND STRUCTURES

DEC 10 1992

APPROVAL OF THIS DRAWING DOES NOT RELIEVE THE CONTRACTOR OF THE RESPONSIBILITY FOR THE CORRECTNESS OF DETAIL.

STATE DEPARTMENT OF HIGHWAYS AND PUBLIC TRANSPORTATION

UNIT NO. 5, RAMP I

610.00' PLATE GIRDER UNIT
(195.00'-220.00'-195.00')

US 83/281 INTERCHANGE

WORK SHEET

Project US 83 / 281 | Estimator K. FARRIS | Item No.
Type of Work | Date 10-8-92 | Sheet No.

TORSIONAL RESTRAINT DETAIL

TORSIONAL RESTRAINTS SHALL BE PLACED AT ALL SUPPORTS FOR GIRDER SECTIONS NOT TIED IN WITH DIAFRAMS.

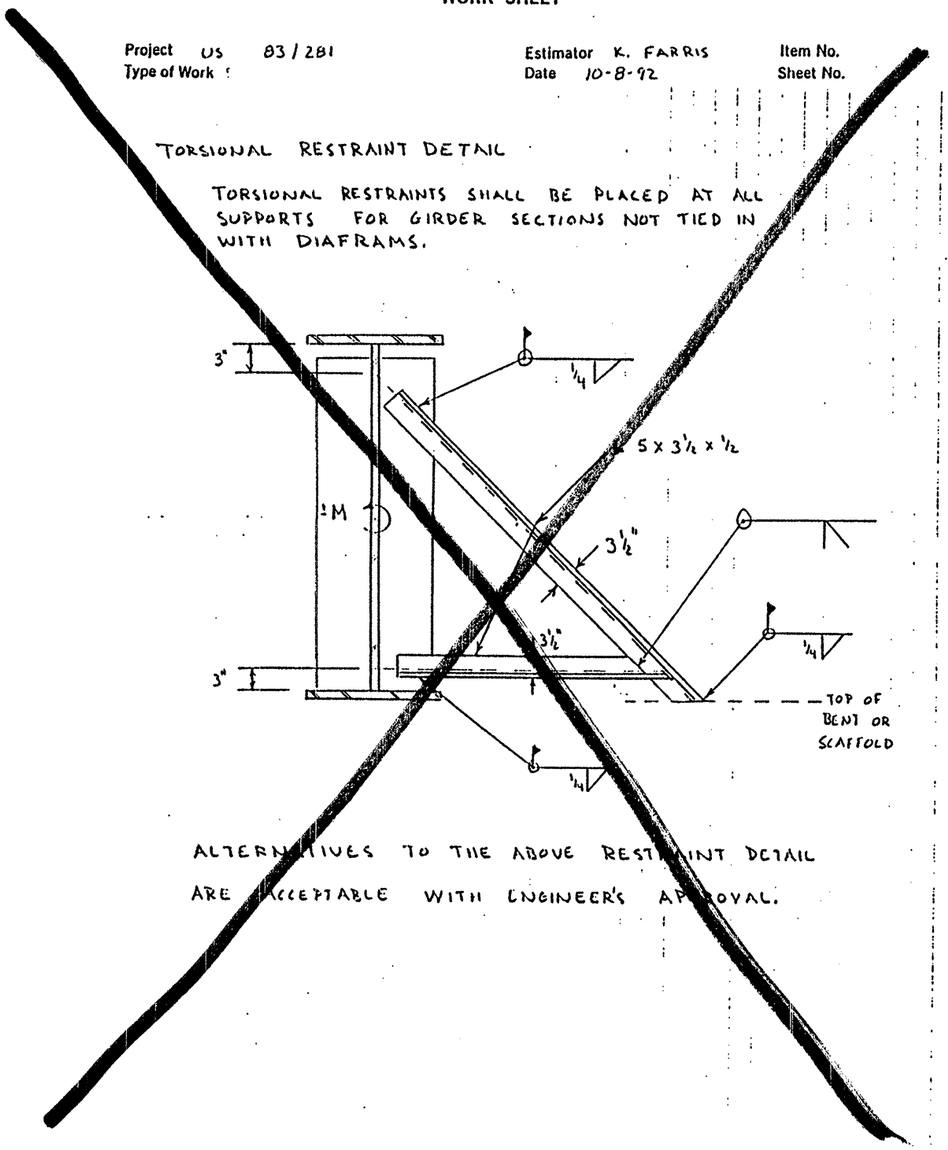

ALTERNATIVES TO THE ABOVE RESTRAINT DETAIL ARE ACCEPTABLE WITH ENGINEER'S APPROVAL.

WORK SHEET

Project US 83 / 281 | Estimator K. FARRIS | Item No.
Type of Work GIRDER LIFTS | Date | Sheet No.

ING DETAIL

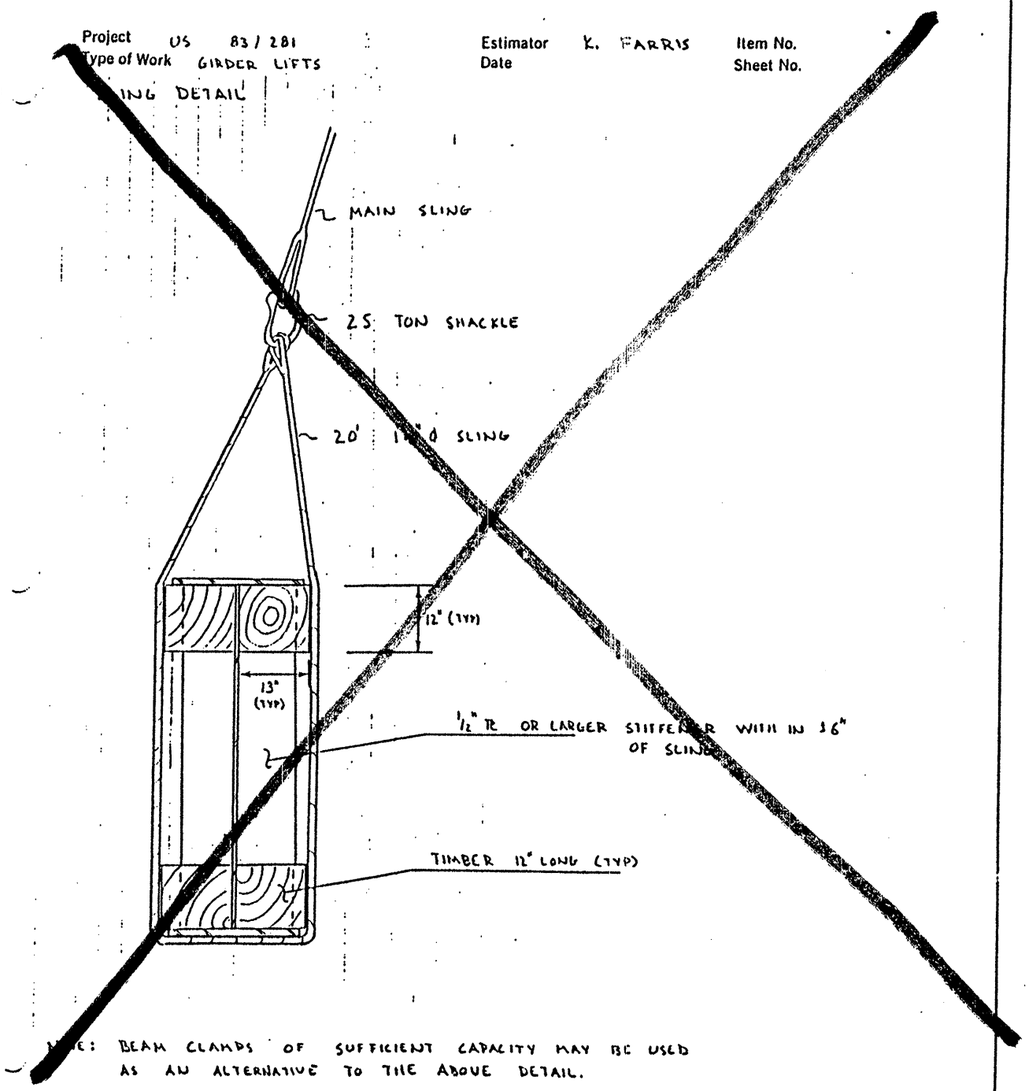

NOTE: BEAM CLAMPS OF SUFFICIENT CAPACITY MAY BE USED AS AN ALTERNATIVE TO THE ABOVE DETAIL.

NO.	REVISION	BY	APP'D	DATE
0	APPROVED FOR ERECT.	WW	F.S.	10-7

DATE: 10-6-92
SCALE: N.T.S.
CAD FILE: 88-146B6
DRAWN BY: W.C.W.
JOB #: 88-146
DWG. #AGM-146-220
APPROVED BY: Fuat Sezer

AKER GULF MARINE

GILBERT TEXAS CONSTRUCTION CORP.

RIGGING DETAILS
RAMP 1, UNIT 6

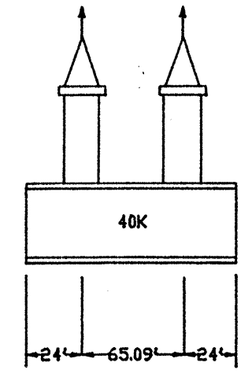

(12) GIRDER 1

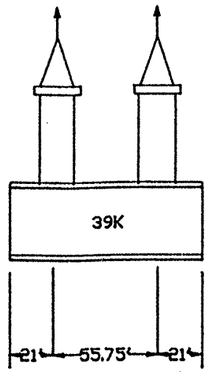

(11) GIRDER 2

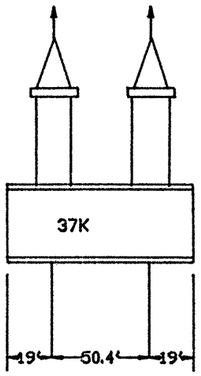

(10) GIRDER 3

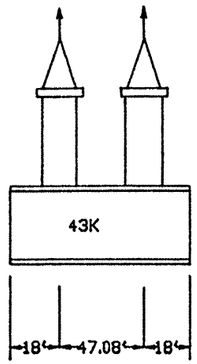

(9) GIRDER 4

TEXAS DEPARTMENT OF TRANSPORTATION
APPROVED
DIVISION OF BRIDGES AND STRUCTURES
NOV 05 1992
APPROVAL OF THIS DRAWING DOES NOT RELIEVE THE CONTRACTOR OF THE RESPONSIBILITY FOR THE CORRECTNESS OF DETAIL.

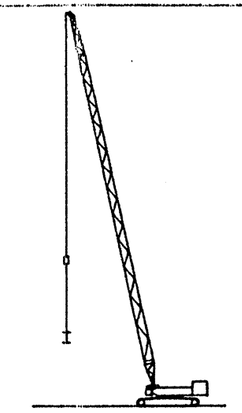

TYPICAL CRANE ELEVATION

SECTION 3

NOTE: CRANE PICK LOCATIONS MAY BE ADJUSTED WITH ENGINEERS APPROVAL.

CRANES: MANITOWOC 3900W BOOM LENGTH = 140'

RADIUS	CHART CAPACITY (KIPS)	LOAD BLOCK DEDUCT (KIPS)	NET CAPACITY (KIPS)
MIN=26'	136	-5	131
MAX=45'	64.4	-5	59.9

NO.	REVISION	BY	APP'D	DATE
0	APPROVED FOR ERECT.	WW	F.S.	10-7

DATE: 10 - 7 - 92
SCALE: N.T.S.
CAD FILE: 88-146A6
DRAWN BY: W.D.W.
JOB #: 88-146
DWG. #: AGM-146-21 | 0
APPROVED BY: Fuat Fezzi

AKER GULF MARINE

GILBERT TEXAS CONSTRUCTION CORP.

RIGGING DETAILS
RAMP 1, UNIT 6

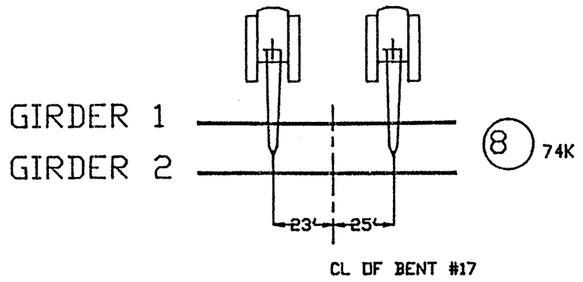

SECTION 4

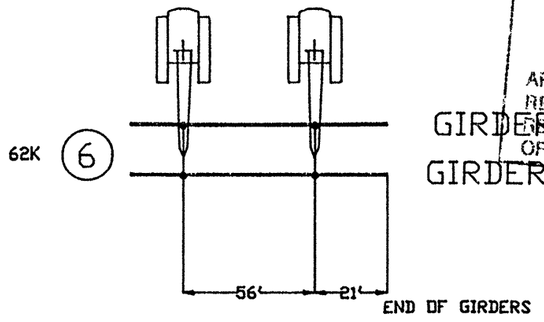

SECTION 5

TEXAS DEPARTMENT OF TRANSPORTATION
APPROVED
DIVISION OF BRIDGES AND STRUCTURES
NOV 03 1992
APPROVAL OF THIS DRAWING DOES NOT RELIEVE THE CONTRACTOR OF THE RESPONSIBILITY FOR THE CORRECTNESS OF DETAIL.

SECTION 4

SECTION 5

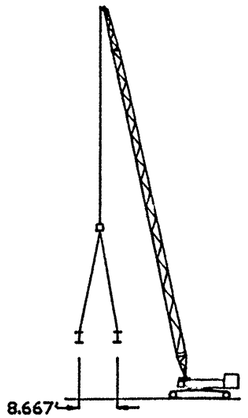

TYPICAL CRANE ELEVATION

STATE OF TEXAS
FURGESON
59897
REGISTERED
PROFESSIONAL ENGINEER

NOTE: EACH CRANE SHALL USE 2 - 60' 2"Ø SLINGS BRIDLED BETWEEN BOTH GIRDERS
CRANE PICK LOCATIONS MAY BE ADJUSTED WITH ENGINEERS APPROVAL

◯ SETTING SEQUENCE

CRANES: MANITOWOC 3900W BOOM LENGTH = 140'

RADIUS	CHART CAPACITY (KIPS)	LOAD BLOCK DEDUCT (KIPS)	NET CAPACITY (KIPS)
MIN=26'	136	-5	131
MAX=38'	81.2	-5	76.2

NO.	REVISION	BY	APP'D	DATE
0	APPROVED FOR ERECT.	VV	F.S.	10-7

DATE: 10-7-92
SCALE: N.T.S.
CAD FILE: 88-146A6
DRAWN BY: W.D.W.
JOB #: 88-146
DWG. #: AGM-146-20
APPROVED BY: Furgeson

AKER GULF MARINE

GILBERT TEXAS CONSTRUCTION CORP.

RIGGING DETAILS
RAMP 1, UNITS 6

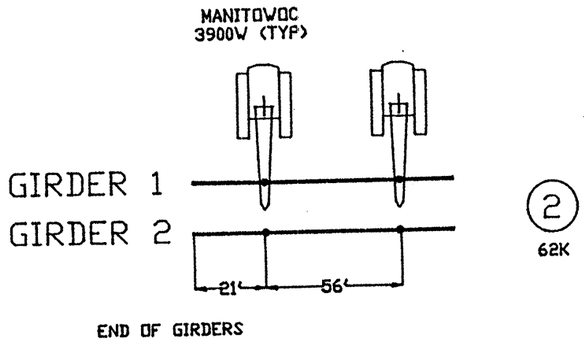

(2)
62K

SECTION 1
PLAN VIEW

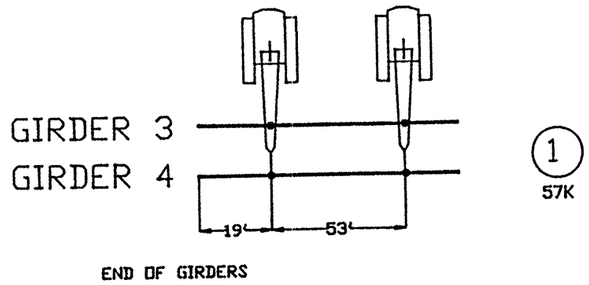

(1)
57K

SECTION 1

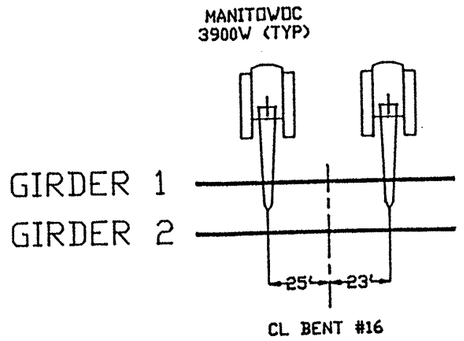

(4)
74K

SECTION 2
PLAN VIEW

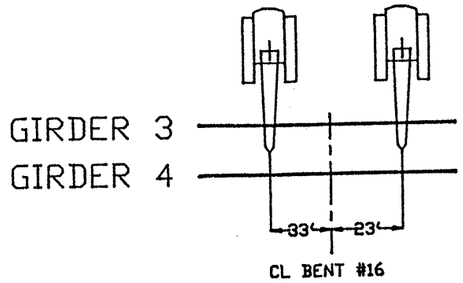

(3)
97K

SECTION 2

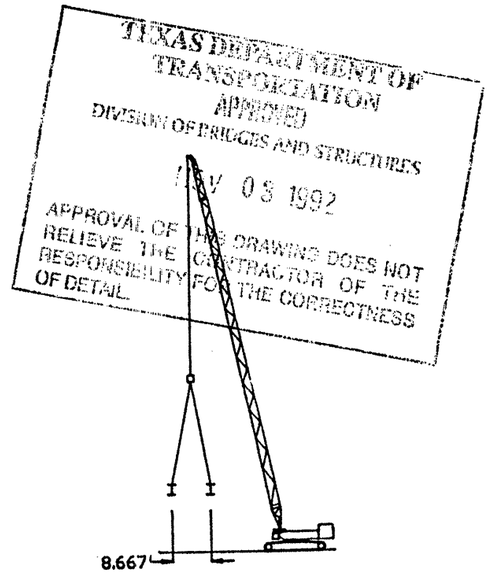

TYPICAL
CRANE
ELEVATION

PLAN VIEW

NOTE: EACH CRANE SHALL USE 2 - 60' 2"ø SLINGS BRIDLED BETWEEN BOTH GIRDERS
CRANE PICK LOCATIONS MAY BE ADJUSTED WITH ENGINEERS APPROVAL

◯ SETTING SEQUENCE

CRANES: MANITOWOC 3900W BOOM LENGTH = 140'

RADIUS	CHART CAPACITY (KIPS)	LOAD BLOCK DEDUCT (KIPS)	NET CAPACITY (KIPS)
MIN=26'	136	-5	131
MAX=45'	64.4	-5	59.9

NO.	REVISION	BY	APP'D	DATE
0	APPROVED FOR ERECT.	WW	F.S.	10-7

DATE: 10 - 23 - 92
SCALE: N.T.S.
CAD FILE: 88-146A6
DRAWN BY: W.D.W.
JOB #: 88-146
DWG. #: AGM-146-19 0
APPROVED BY: Fuat Sezer

AKER GULF MARINE

GILBERT TEXAS CONSTRUCTION CORP.

RIGGING DETAILS
RAMP 1, UNIT 6

AS AIR SPLICE

SETTING SEQUENCE

Note: All diafram connections shall be made using ASTM A-325 bolts. Married girder sections shall have all diaframs installed prior to lift. All diafram connections between each girder section(s) erected shall be made prior to release.

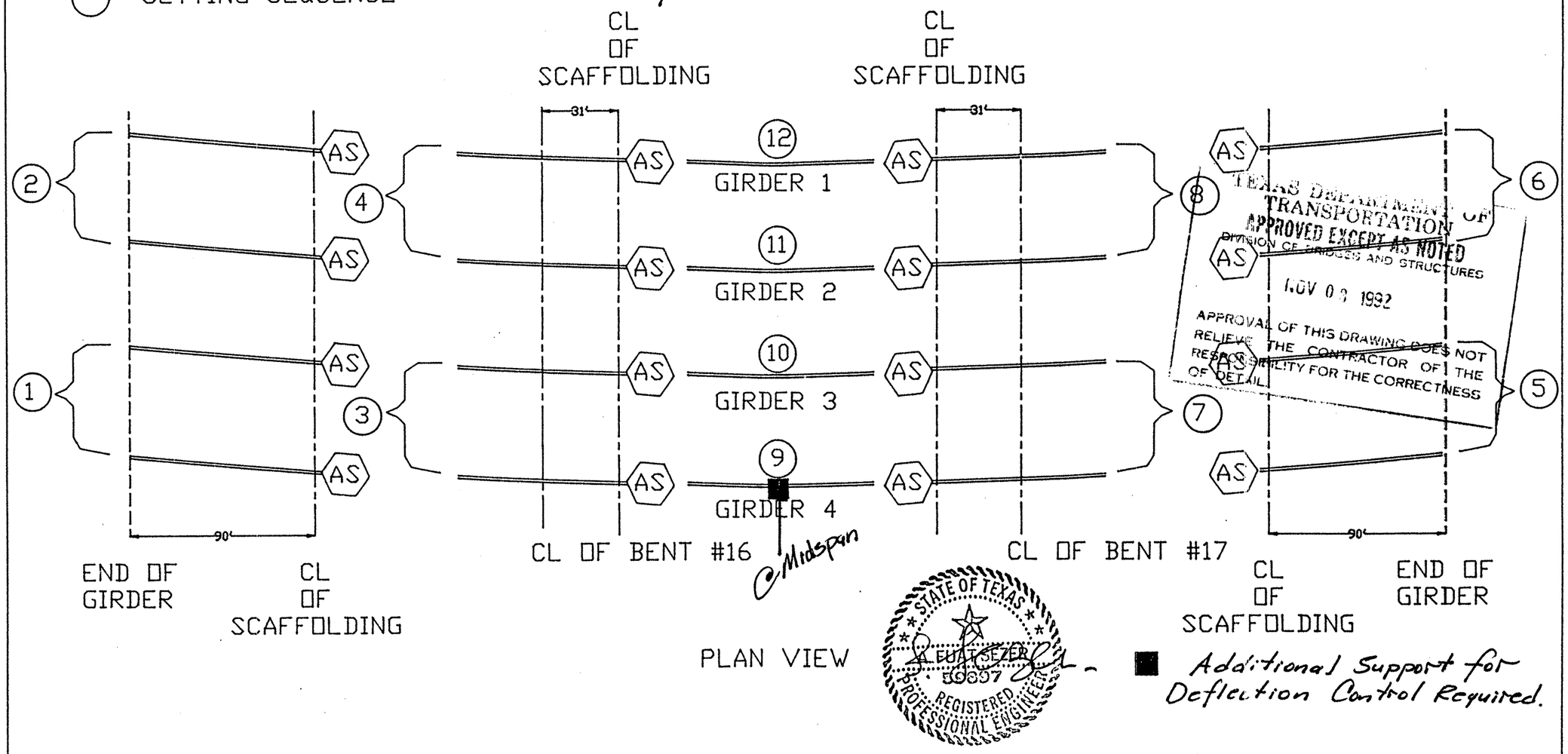

PLAN VIEW

TEXAS DEPARTMENT OF TRANSPORTATION
APPROVED EXCEPT AS NOTED
DIVISION OF BRIDGES AND STRUCTURES
NOV 02 1992
APPROVAL OF THIS DRAWING DOES NOT RELIEVE THE CONTRACTOR OF THE RESPONSIBILITY FOR THE CORRECTNESS OF DETAIL

STATE OF TEXAS
FUAT SEZEN
59897
REGISTERED PROFESSIONAL ENGINEER

■ Additional Support for Deflection Control Required.

NOTE: SCAFFOLD DIMENSION APPROXIMATE. GIRDERS SHALL BEAR ON SCAFFOLDING AT NEAREST INTERMIDIATE STIFFENER.

MAX. SCAFFOLD LOAD = 25K/GIRDER

NO.	REVISION	BY	APP'D	DATE
0	APPROVED FOR ERECT.	WW	F.S.	10-7

DATE: 10 - 23 - 92
SCALE: N.T.S.
CAD FILE: 88-146A6
DRAWN BY: W.D.W.
JOB #: 88-146
DWG. #: AGM-146-18 | 0
APPROVED BY: Fuat Sezen

AKER GULF MARINE

GILBERT TEXAS CONSTRUCTION CORP.

ERECTION SEQUENCE RAMP 1, UNIT 6

WORK SHEET

Project US 83 / 281
Type of Work :

Estimator K. FARRIS
Date 10-8-92

Item No.
Sheet No.

TORSIONAL RESTRAINT DETAIL

TORSIONAL RESTRAINTS SHALL BE PLACED AT ALL SUPPORTS FOR GIRDER SECTIONS NOT TIED IN WITH DIAFRAMS.

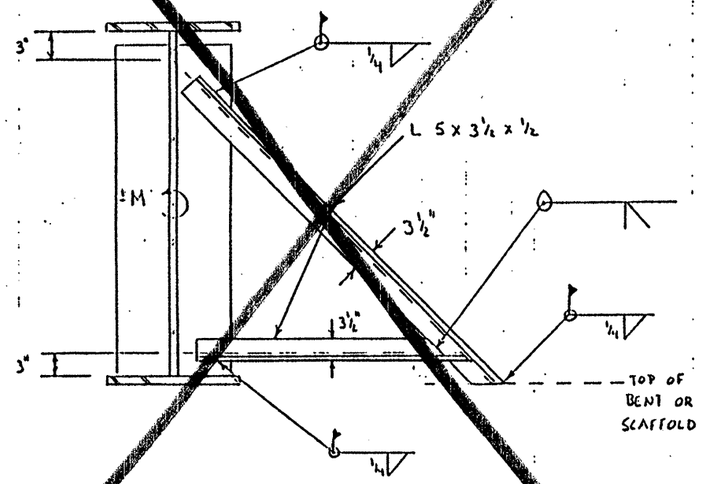

ALTERNATIVES TO THE ABOVE RESTRAINT DETAIL ARE ACCEPTABLE WITH ENGINEER'S APPROVAL.

WORK SHEET

Project US 83 / 281
Type of Work GIRDER LIFTS

Estimator K. FARRIS
Date

Item No.
Sheet No.

SLING DETAIL

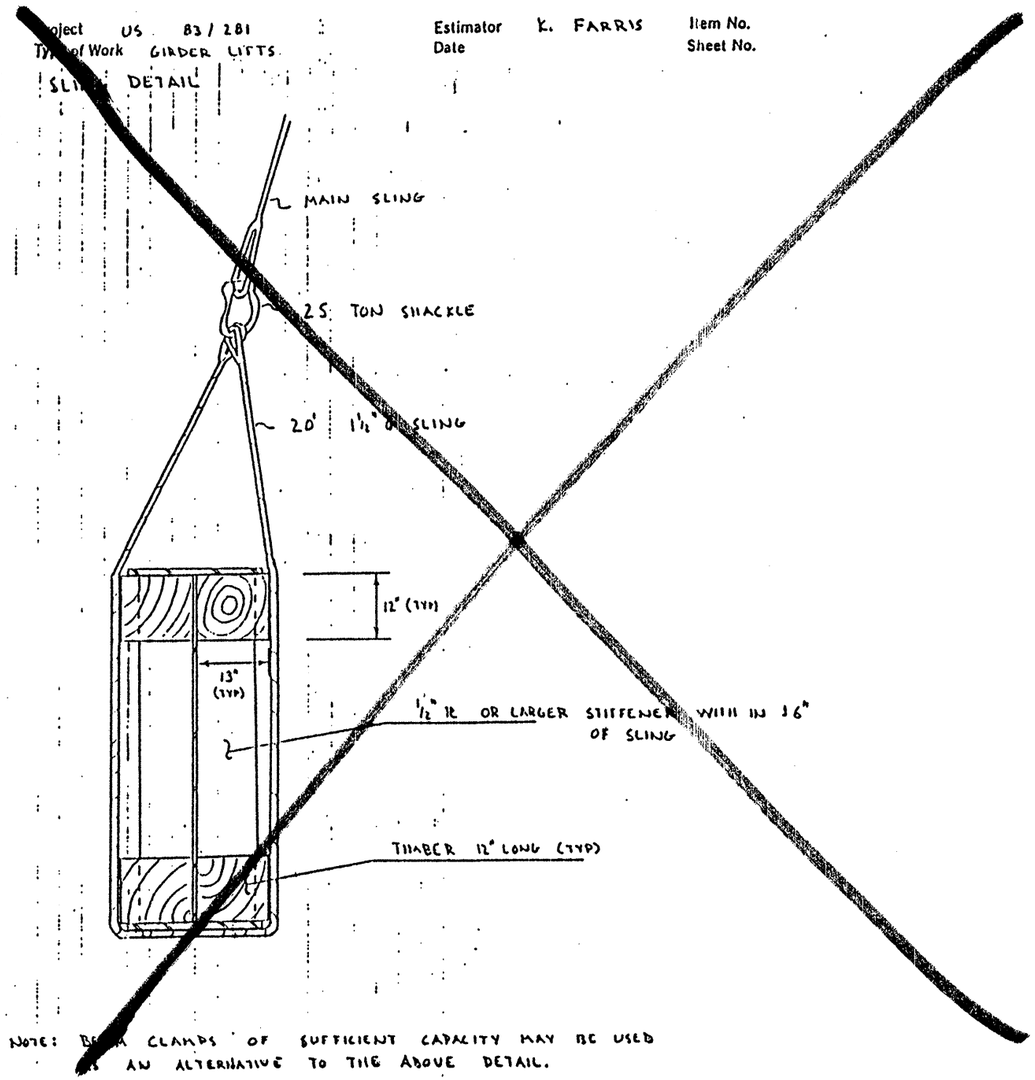

NOTE: BEAM CLAMPS OF SUFFICIENT CAPACITY MAY BE USED AS AN ALTERNATIVE TO THE ABOVE DETAIL.

NO.	REVISION	BY	APP'D	DATE
0	APPROVED FOR ERECT.	WW	F.S.	10-7

DATE: 10-6-92
SCALE: N.T.S.
CAD FILE: 88-146B6
DRAWN BY: W.D.W.
JOB #: 88-146
DWG. #: AGM-146-170
APPROVED BY: Fuat Sezer

AKER GULF MARINE

GILBERT TEXAS CONSTRUCTION CORP.

MISC. DETAILS
RAMP 1, UNIT 6

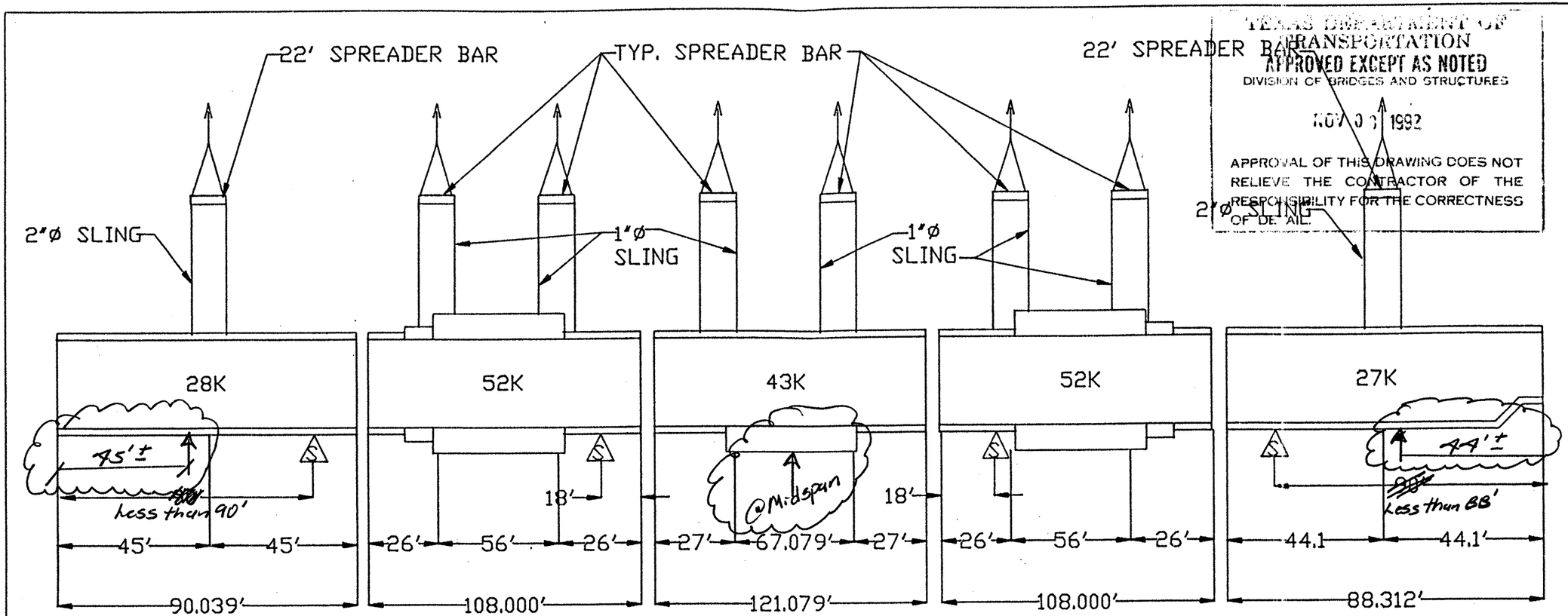

TEXAS DEPARTMENT OF TRANSPORTATION
APPROVED EXCEPT AS NOTED
DIVISION OF BRIDGES AND STRUCTURES
NOV 0 1 1992
APPROVAL OF THIS DRAWING DOES NOT RELIEVE THE CONTRACTOR OF THE RESPONSIBILITY FOR THE CORRECTNESS OF DETAIL.

RAMP #	1	1	1	1
UNIT #	6	6	6	6
GIRDER #	4	4	4	4
SECTION #	1	2	3	4	5

GIRDER 4 ELEVATION

⚠ TEMPORARY SCAFFOLD SUPPORT LOCATION

NOTE: SCAFFOLD LOCATION MAY BE ADJUSTED WITH ENGINEERS APPROVAL.
MAX. SCAFFOLD LOAD = 25K/GIRDER
MAX. BEAM ROTATION AT LIFT 8°

STATE OF TEXAS · A. FUTCHER · 58097 · REGISTERED PROFESSIONAL ENGINEER

Additional Supports Required Shown in Red

CRANE: MANITOWOC 3900W		BOOM LENGTH: 140'	
RADIUS	CHART CAPACITY (KIPS)	LOAD BLOCK DEDUCT (KIPS)	NET CAPACITY (KIPS)
MIN=26'	136	-5	131
MAX=45'	64.4	-5	59.9

NO.	REVISION	BY	APP'D	DATE
0	APPROVED FOR ERECT.	WW	F.S.	10-7

DATE: 10-23-92
SCALE: N.T.S.
CAD FILE: 88-146B6
DRAWN BY: W.O.W.
JOB #: 88-146
DWG. #:AGM-146-16 0
APPROVED BY: Fuat Fezer

AKER GULF MARINE

GILBERT TEXAS CONSTRUCTION CORP.

RIGGING DETAILS FOR GIRDER 4,RAMP 1,UNIT 6

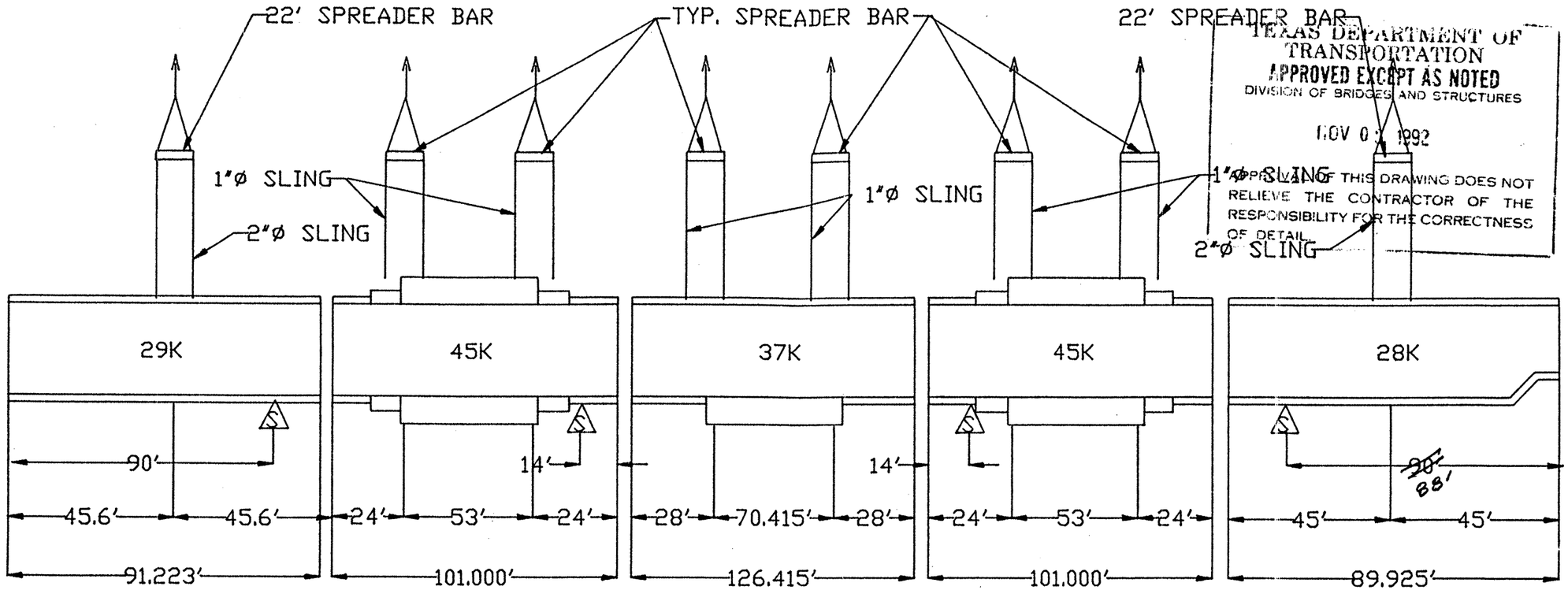

RAMP # 1	RAMP # 1	RAMP # 1	RAMP # 1	RAMP # 1
UNIT # 6	UNIT # 6	UNIT # 6	UNIT # 6	UNIT # 6
GIRDER # 3	GIRDER # 3	GIRDER # 3	GIRDER # 3	GIRDER # 3
SECTION # 1	SECTION # 2	SECTION # 3	SECTION # 4	SECTION # 5

GIRDER 3 ELEVATION

TEXAS DEPARTMENT OF TRANSPORTATION
APPROVED EXCEPT AS NOTED
DIVISION OF BRIDGES AND STRUCTURES
NOV 0 1992
APPROVAL OF THIS DRAWING DOES NOT RELIEVE THE CONTRACTOR OF THE RESPONSIBILITY FOR THE CORRECTNESS OF DETAIL.

S TEMPORARY SCAFFOLD SUPPORT LOCATION

NOTE: SCAFFOLD LOCATION MAY BE ADJUSTED WITH ENGINEERS APPROVAL.
MAX. SCAFFOLD LOAD = 25K/GIRDER
MAX. BEAM ROTATION AT LIFT 8°

STATE OF TEXAS
A. FUATSEZER
59807
REGISTERED PROFESSIONAL ENGINEER

CRANE: MANITOWOC 3900W		BOOM LENGTH: 140'	
RADIUS	CHART CAPACITY (KIPS)	LOAD BLOCK DEDUCT (KIPS)	NET CAPACITY (KIPS)
MIN=26'	136	-5	131
MAX=45'	64.4	-5	59.9

NO.	REVISION	BY	APP'D	DATE
0	APPROVED FOR ERECT.	WW	F.S.	10-7

DATE: 10-23-92
SCALE: N.T.S.
CAD FILE: 88-146B6
DRAWN BY: W.O.W.
JOB #: 88-146
DWG. #: AGM-146-15 0
APPROVED BY: Fuat Fezer

AKER GULF MARINE

GILBERT TEXAS CONSTRUCTION CORP.

RIGGING DETAILS FOR GIRDER 3, RAMP 1, UNIT 6

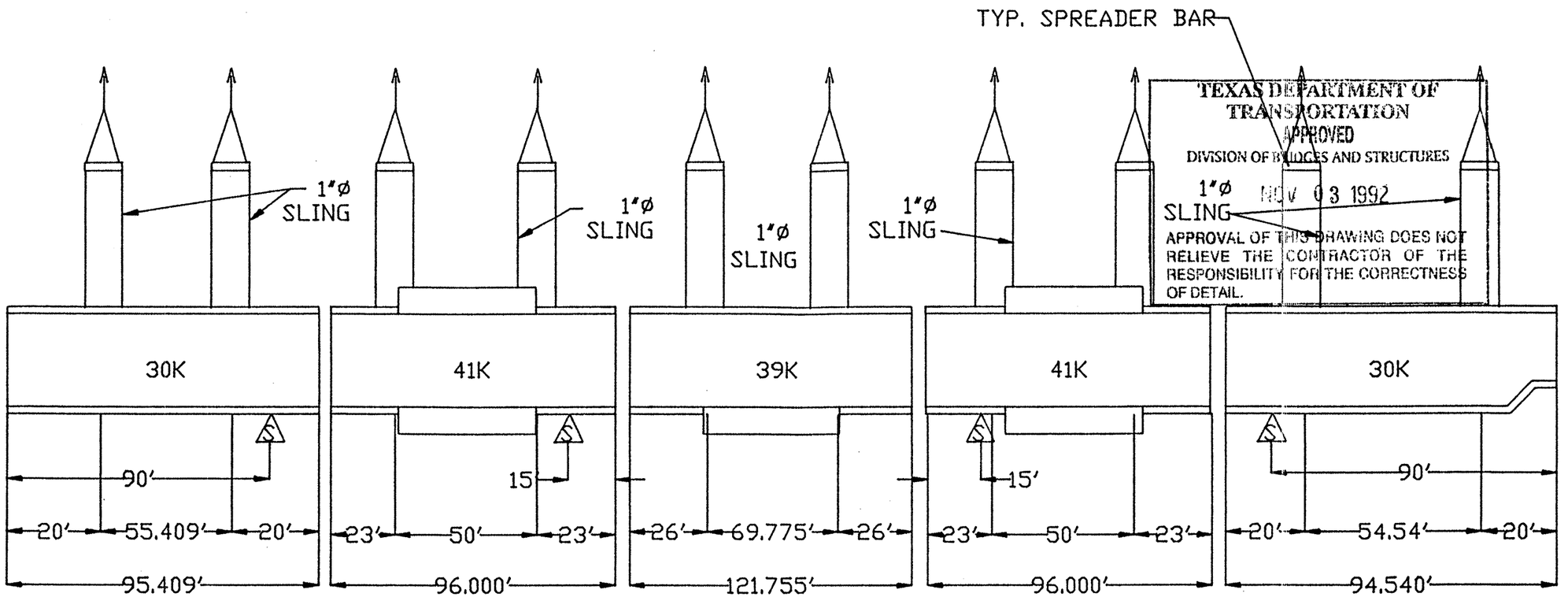

TEXAS DEPARTMENT OF TRANSPORTATION
APPROVED
DIVISION OF BRIDGES AND STRUCTURES
NOV 03 1992
APPROVAL OF THIS DRAWING DOES NOT RELIEVE THE CONTRACTOR OF THE RESPONSIBILITY FOR THE CORRECTNESS OF DETAIL.

RAMP # 1	RAMP # 1	RAMP # 1	RAMP # 1	RAMP # 1
UNIT # 6	UNIT # 6	UNIT # 6	UNIT # 6	UNIT # 6
GIRDER # 2	GIRDER # 2	GIRDER # 2	GIRDER # 2	GIRDER # 2
SECTION # 1	SECTION # 2	SECTION # 3	SECTION # 4	SECTION # 5

GIRDER 2 ELEVATION

⚠ TEMPORARY SCAFFOLD SUPPORT LOCATION

NOTE: SCAFFOLD LOCATION MAY BE ADJUSTED WITH ENGINEERS APPROVAL.
MAX. SCAFFOLD LOAD = 25K/GIRDER

STATE OF TEXAS
A. FUAT OZER
59807
REGISTERED PROFESSIONAL ENGINEER

CRANE: MANITOWOC 3900W		BOOM LENGTH: 140'	
RADIUS	CHART CAPACITY (KIPS)	LOAD BLOCK DEDUCT (KIPS)	NET CAPACITY (KIPS)
MIN=26'	136	-5	131
MAX=45'	64.4	-5	59.9

NO.	REVISION	BY	APP'D	DATE
0	APPROVED FOR ERECT.	WW	F.S.	10-7

DATE: 10-23-92
SCALE: N.T.S.
CAD FILE: 88-146B6
DRAWN BY: W.O.W.
JOB #: 88-146
DWG. #: AGM-146-140
APPROVED BY: Fuat Ozer

AKER GULF MARINE

GILBERT TEXAS CONSTRUCTION CORP.
RIGGING DETAILS FOR GIRDER 2, RAMP 1, UNIT 6

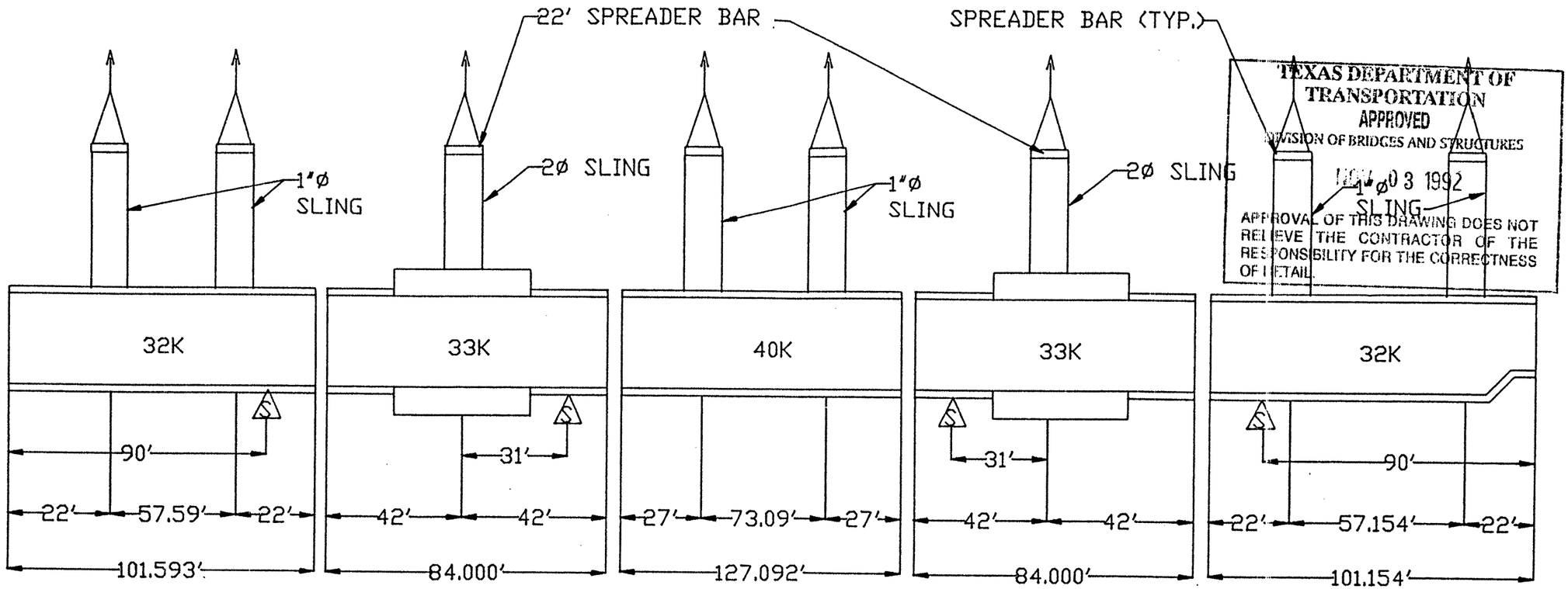

TEXAS DEPARTMENT OF TRANSPORTATION
APPROVED
DIVISION OF BRIDGES AND STRUCTURES
NOV 03 1992
APPROVAL OF THIS DRAWING DOES NOT RELIEVE THE CONTRACTOR OF THE RESPONSIBILITY FOR THE CORRECTNESS OF DETAIL

RAMP #	1	RAMP #	1	RAMP #	1	RAMP #	1	RAMP #	1
UNIT #	6	UNIT #	6	UNIT #	6	UNIT #	6	UNIT #	6
GIRDER #	1	GIRDER #	1	GIRDER #	1	GIRDER #	1	GIRDER #	1
SECTION #	1	SECTION #	2	SECTION #	3	SECTION #	4	SECTION #	5

GIRDER 1 ELEVATION

⚠5 TEMPORARY SCAFFOLD SUPPORT LOCATION

NOTE: SCAFFOLD LOCATION MAY BE ADJUSTED WITH ENGINEERS APPROVAL.
MAX. SCAFFOLD LOAD = 25K/GIRDER
MAX. BEAM ROTATION AT LIFT 8°

STATE OF TEXAS
A. FUAT SEZEN
59697
REGISTERED PROFESSIONAL ENGINEER

CRANE: MANITOWOC 3900W		BOOM LENGTH: 140'	
RADIUS	CHART CAPACITY (KIPS)	LOAD BLOCK DEDUCT (KIPS)	NET CAPACITY (KIPS)
MIN=26'	136	-5	131
MAX=45'	64.4	-5	59.9

NO.	REVISION	BY	APP'D	DATE
0	APPROVED FOR ERECT.	WW	F.S.	10-7

DATE: 10-23-92
SCALE: N.T.S.
CAD FILE: 88-146B6
DRAWN BY: W.D.W.
JOB #: 88-146
DWG. #: AGM-146-13 0
APPROVED BY: Fuat Sezen

AKER GULF MARINE

GILBERT TEXAS CONSTRUCTION CORP.

RIGGING DETAILS FOR GIRDER 1, RAMP 1, UNIT 6

Note: All diafram connections shall be made between each girder section erected using ASTM A-325 bolts prior to release.

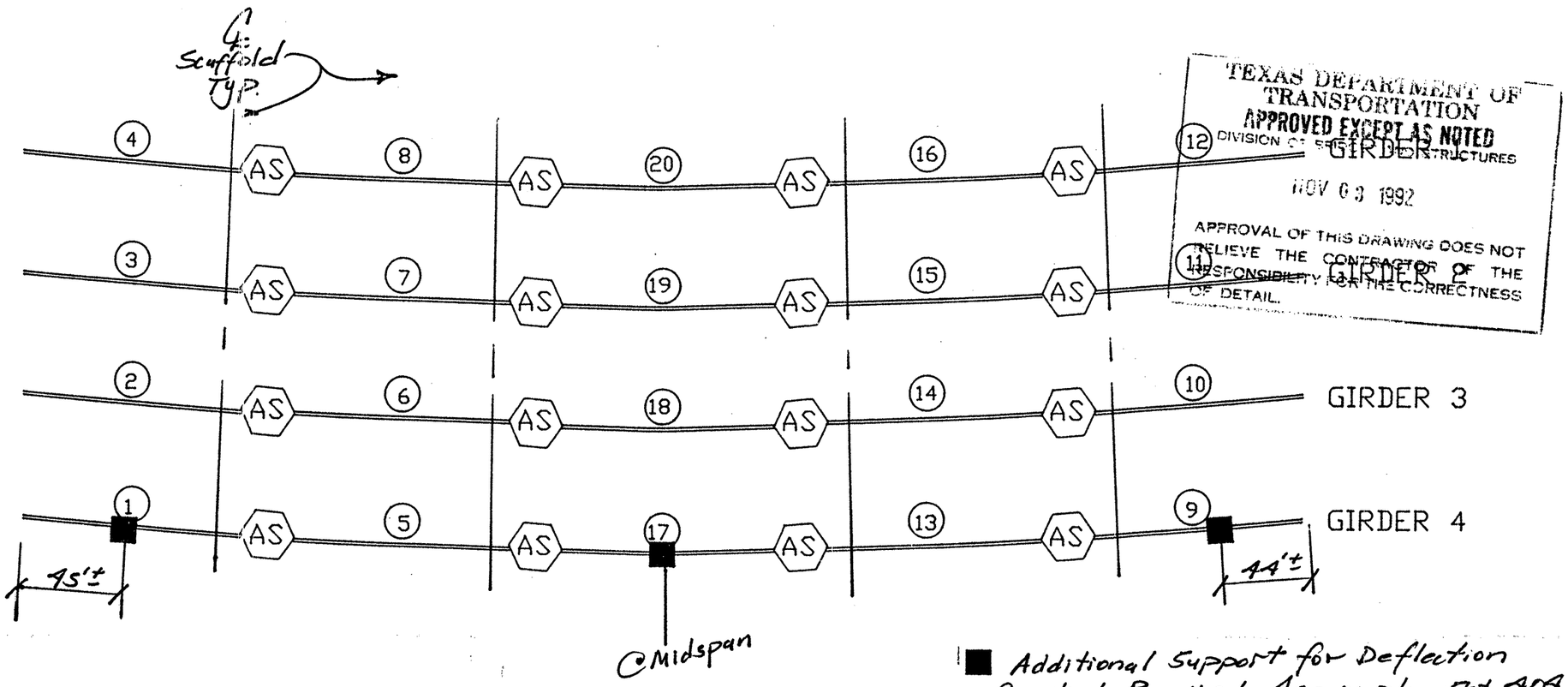

PLAN VIEW

TEXAS DEPARTMENT OF TRANSPORTATION
APPROVED EXCEPT AS NOTED
DIVISION OF BRIDGES AND STRUCTURES
NOV 03 1992
APPROVAL OF THIS DRAWING DOES NOT RELIEVE THE CONTRACTOR OF THE RESPONSIBILITY FOR THE CORRECTNESS OF DETAIL.

■ Additional support for Deflection Control Required. As per plan Sht. 404 55-MEBR Std.

$R \geq .104L^2$

AS AIR SPLICE

◯ SETTING SEQUENCE

STATE OF TEXAS
FUAT SEZER
59397
REGISTERED PROFESSIONAL ENGINEER

NO.	REVISION	BY	APP'D	DATE
0	APPROVED FOR ERECT.	W.W.	F.S.	10/8

DATE: 10 - 13 - 92
SCALE: N.T.S.
CAD FILE: 88-146A6
DRAWN BY: W.D.W.
JOB #: 88-146
DWG. #: AGM-146-12 | 0
APPROVED BY: Fuat Sezer

AKER GULF MARINE

GILBERT TEXAS CONSTRUCTION CORP.

ERECTION SEQUENCE RAMP 1, UNIT 6

ED-5 Copy

TEXAS DEPARTMENT OF TRANSPORTATION
APPROVED EXCEPT AS NOTED
DIVISION OF BRIDGES AND STRUCTURES

OCT 21 1992

APPROVAL OF THIS DRAWING DOES NOT RELIEVE THE CONTRACTOR OF THE RESPONSIBILITY FOR THE CORRECTNESS OF DETAIL.

Note: All diafram connections shall be made using ASTM A-325 bolts. ~~All~~ Married girder sections shall have all diaframs installed prior to lift. ~~with bolts.~~
All drafram connections shall be made btwn each girder section erected prior to release.

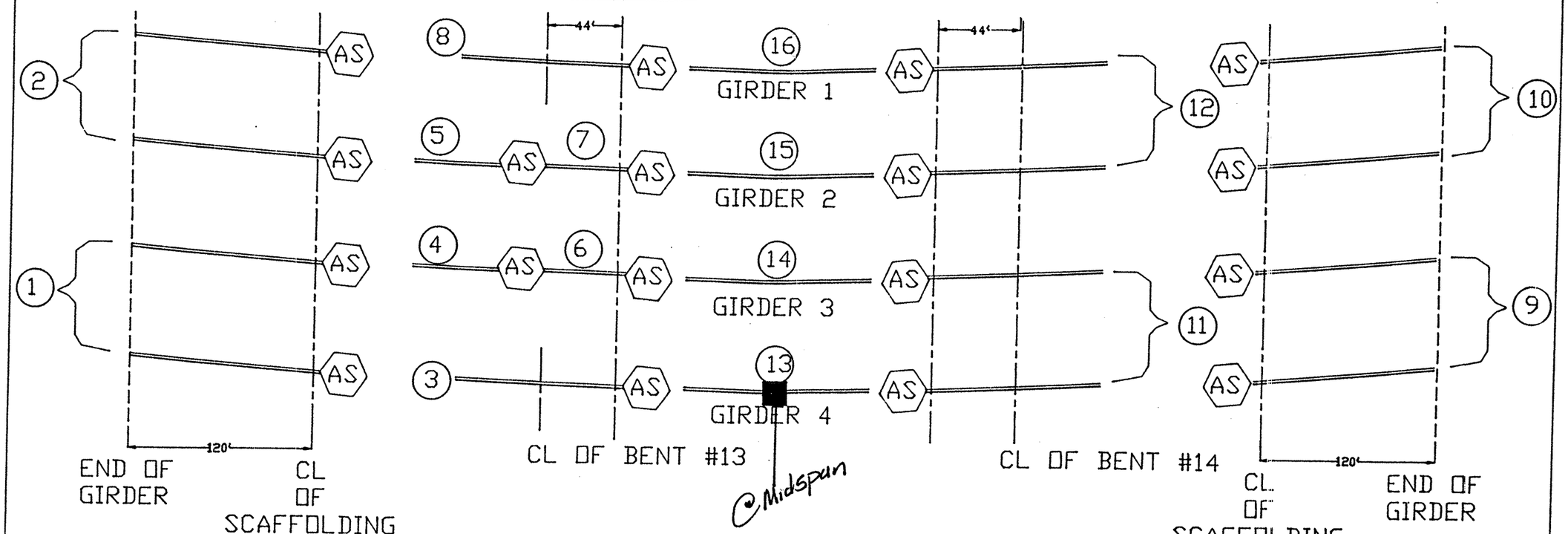

PLAN VIEW

AS AIR SPLICE

SETTING SEQUENCE

NOTE: SCAFFOLD DIMENSION APPROXIMATE. GIRDERS SHALL BEAR ON SCAFFOLDING AT NEAREST INTERMIDIATE STIFFENER.

STATE OF TEXAS — REGISTERED PROFESSIONAL ENGINEER

NO.	REVISION	BY	APP'D	DATE
0	APPROVED FOR ERECT.	VW	F.S.	10-7

DATE: 10 - 7 - 92
SCALE: N.T.S.
CAD FILE: 88-146A
DRAWN BY: V.C.V.
JOB #: 88-146
DWG. #: AGM-146-6 | 0
APPROVED BY: Fuat Sezen.

AKER GULF MARINE

GILBERT TEXAS CONSTRUCTION CORP.

ERECTION SEQUENCE
RAMP 1, UNIT 5

TEXAS DEPARTMENT OF TRANSPORTATION
APPROVED
DIVISION OF BRIDGES AND STRUCTURES
OCT 21 1992
APPROVAL OF THIS DRAWING DOES NOT RELIEVE THE CONTRACTOR OF THE RESPONSIBILITY FOR THE CORRECTNESS OF DETAIL.

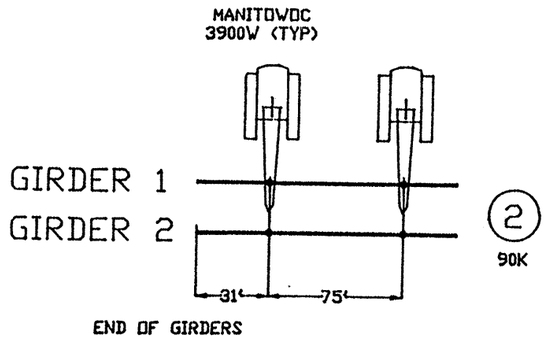

SECTION 1
PLAN VIEW

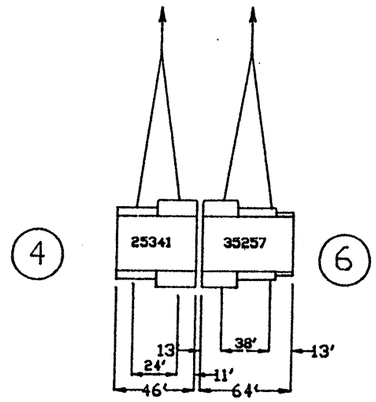

SECTION 2
GIRDER 3

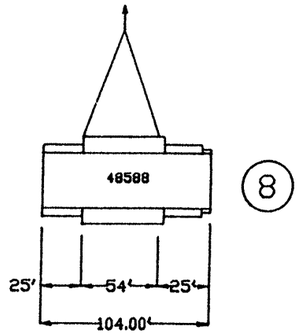

SECTION 2
GIRDER 1

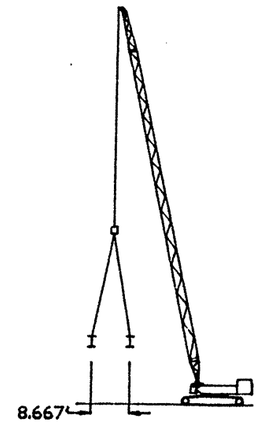

TYPICAL
CRANE
ELEVATION

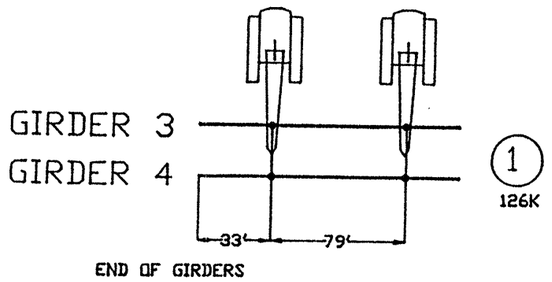

SECTION 1
PLAN VIEW

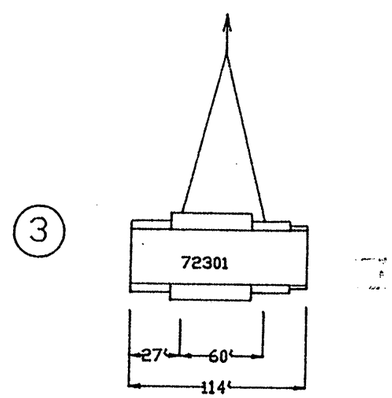

SECTION 2
GIRDER 4

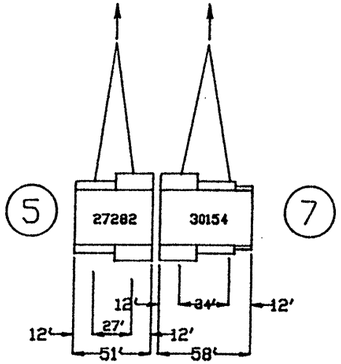

SECTION 2
GIRDER 2

NOTE: EACH CRANE SHALL USE 2 - 60' 2"Ø SLINGS BRIDLED BETWEEN BOTH GIRDERS
CRANE PICK LOCATIONS MAY BE ADJUSTED WITH ENGINEERS APPROVAL

○ SETTING SEQUENCE

CRANES: MANITOWOC 3900W BOOM LENGTH = 140'

RADIUS	CHART CAPACITY (KIPS)	LOAD BLOCK DEDUCT (KIPS)	NET CAPACITY (KIPS)
MIN=26'	136	-5	131
MAX=38'	81.2	-5	76.2

NO.	REVISION	BY	APP'D	DATE
0	APPROVED FOR ERECT.	WW	F.S.	10-7

STATE OF TEXAS
FUAT SEZER
55307
REGISTERED PROFESSIONAL ENGINEER

DATE: 10 - 7 - 92
SCALE: N.T.S.
CAD FILE: 88-146A
DRAWN BY: W.O.W.
JOB #: 88-146
DWG. #: AGM-146-7 0
APPROVED BY: Fuat Sezer

AKER GULF MARINE

GILBERT TEXAS CONSTRUCTION CORP.

RIGGING DETAILS
RAMP 1, UNITS 5

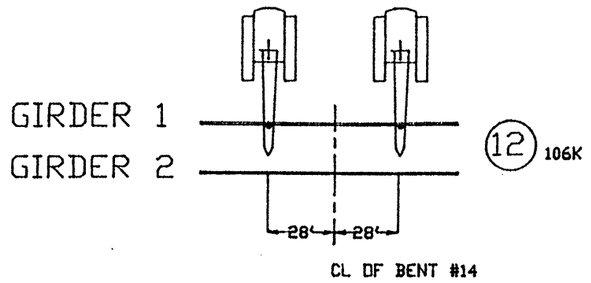

SECTION 4

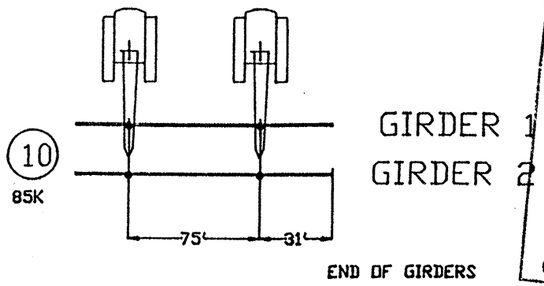

SECTION 5

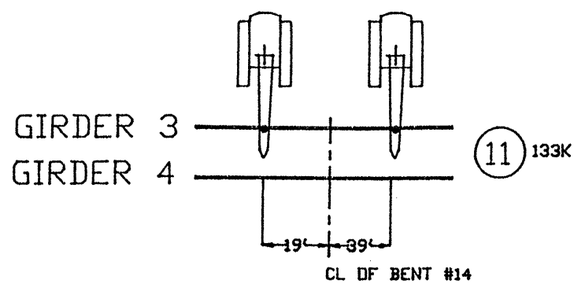

SECTION 4

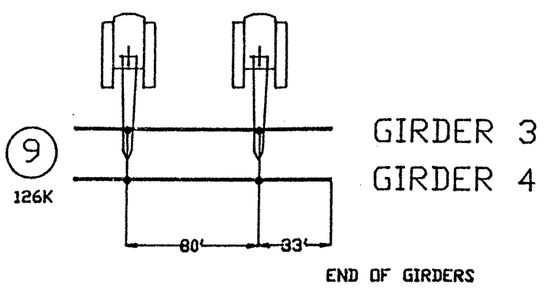

SECTION 5

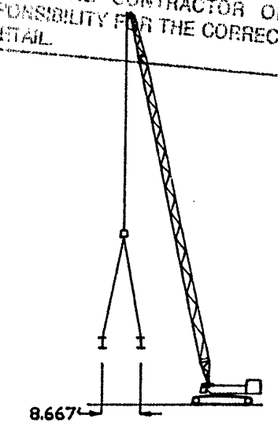

TYPICAL CRANE ELEVATION

TEXAS DEPARTMENT OF TRANSPORTATION
APPROVED
DIVISION OF BRIDGES AND STRUCTURES
OCT 21 1992
APPROVAL OF THIS DRAWING DOES NOT RELIEVE THE CONTRACTOR OF THE RESPONSIBILITY FOR THE CORRECTNESS OF DETAIL.

NOTE: EACH CRANE SHALL USE 2 - 60' 2"Ø SLINGS BRIDLED BETWEEN BOTH GIRDERS
CRANE PICK LOCATIONS MAY BE ADJUSTED WITH ENGINEER'S APPROVAL

◯ SETTING SEQUENCE

CRANES: MANITOWOC 3900W BOOM LENGTH = 140'

RADIUS	CHART CAPACITY (KIPS)	LOAD BLOCK DEDUCT (KIPS)	NET CAPACITY (KIPS)
MIN=26'	136	-5	131
MAX=38'	81.2	-5	76.2

STATE OF TEXAS
FUAT SEZER
59897
REGISTERED PROFESSIONAL ENGINEER

NO.	REVISION	BY	APP'D	DATE
0	APPROVED FOR ERECT.	WW	F.S.	10-7

DATE: 10-7-92
SCALE: N.T.S.
CAD FILE: 88-146A
DRAWN BY: W.D.W.
JOB #: 88-146
DWG. #: AGM-146-8 0
APPROVED BY: Fuat Sezer

AKER GULF MARINE

GILBERT TEXAS CONSTRUCTION CORP.

RIGGING DETAILS
RAMP 1, UNITS 5

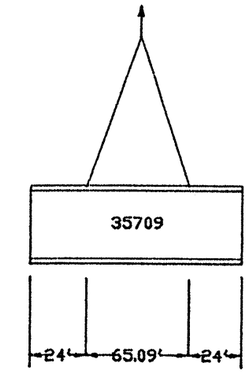

(16) GIRDER 1

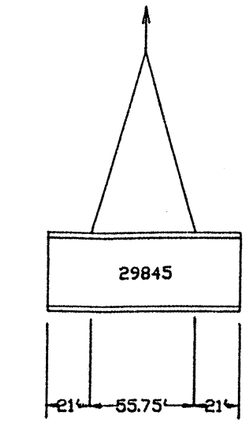

(15) GIRDER 2

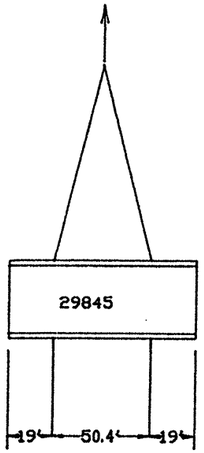

(14) GIRDER 3

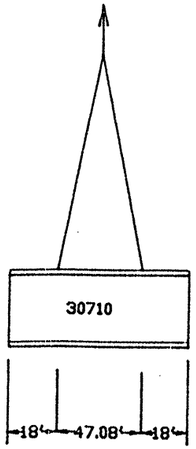

(13) GIRDER 4

SECTION 3

◯ SETTING SEQUENCE

TEXAS DEPARTMENT OF TRANSPORTATION
APPROVED
DIVISION OF BRIDGES AND STRUCTURES
OCT 21 1992
APPROVAL OF THIS DRAWING DOES NOT RELIEVE THE CONTRACTOR OF THE RESPONSIBILITY FOR THE CORRECTNESS OF DETAIL.

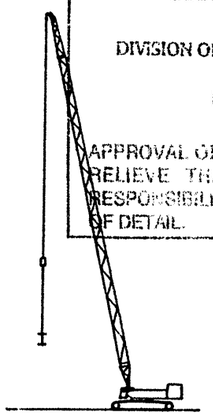

TYPICAL CRANE ELEVATION

NOTE: EACH CRANE SHALL USE 2 - 60' 2"ø SLINGS BRIDLED BETWEEN BOTH GIRDERS.
CRANE PICK LOCATIONS MAY BE ADJUSTED WITH ENGINEERS APPROVAL.

CRANES: MANITOWOC 3900W BOOM LENGTH = 140'			
RADIUS	CHART CAPACITY (KIPS)	LOAD BLOCK DEDUCT (KIPS)	NET CAPACITY (KIPS)
MIN=26'	136	-5	131
MAX=38'	81.2	-5	76.2

STATE OF TEXAS · A. FUAT SEZER · 55937 · REGISTERED PROFESSIONAL ENGINEER

NO.	REVISION	BY	APP'D	DATE
0	APPROVED FOR ERECT.	WW	F.S.	10-7

DATE: 10 - 7 - 92
SCALE: N.T.S.
CAD FILE: 88-146A
DRAWN BY: W.D.W.
JOB #: 88-146
DWG. #: AGM-146-S | 0
APPROVED BY: Fuat Sezer

AKER GULF MARINE

GILBERT TEXAS CONSTRUCTION CORP.

RIGGING DETAILS
RAMP 1, UNIT 5

Form 435—Printed in U.S.A. 10/87

WORK SHEET

Project US 83 / 281
Type of Work RAMP #1 , UNIT #5

Estimator K. FARRIS
Date 10-8-92

Item No.
Sheet No.

TORSIONAL RESTRAINT DETAIL

TORSIONAL RESTRAINTS SHALL BE PLACED AT ALL SUPPORTS FOR GIRDER SECTIONS NOT TIED IN WITH DIAFRAMS.

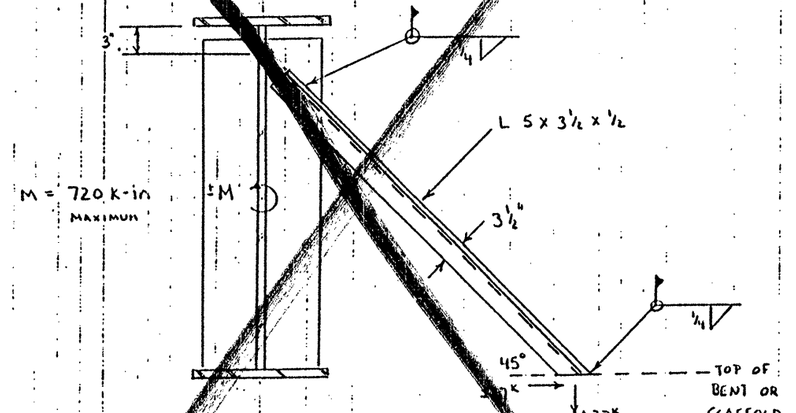

ALTERNATIVES TO THE ABOVE RESTRAINT DETAIL ARE ACCEPTABLE WITH ENGINEER'S APPROVAL.

WORK SHEET

Project US 83 / 281
Type of Work RAMP #1 UNIT #5

Estimator K. FARRIS
Date

Item No.
Sheet No.

SCAFFOLDING DESIGN LOADS

SCAFFOLDING SHALL SUPPORT THE FOLLOWING LOADS AS WELL AS LOADS APPLIED BY TORSIONAL RESTRAINTS.

GIRDER LOCATION	LOAD
#1	35
#2	35
#3	40 K
#4	50 K

TORSIONAL RESTRAINTS APPLY :

27 K VERTICAL LOAD MAXIMUM

27 K HORIZONTAL LOAD MAXIMUM

NOTE : GIRDERS SHALL BEAR ON SCAFFOLDING AT AN INTERMEDIATE STIFFENER

NO.	REVISION	BY	APP'D	DATE
0	APPROVED FOR ERECT.	WW	F.S.	10-7

DATE: 10-6-92
SCALE: N.T.S.
CAD FILE: 88-146
DRAWN BY: W.D.W.
JOB #: 88-146
DWG. #: AGM-146-100
APPROVED BY: Fuat Sezer

AKER GULF MARINE

GILBERT TEXAS CONSTRUCTION CORP.

MISC. DETAILS
RAMP 1, UNIT 5

Project US 83 / 281 Estimator K. FARRIS Item No.
Type of Work RAMP #1 UNIT #5 Date Sheet No.

SLING DETAIL

FOR LIFTS (1) (2) (9) (10)

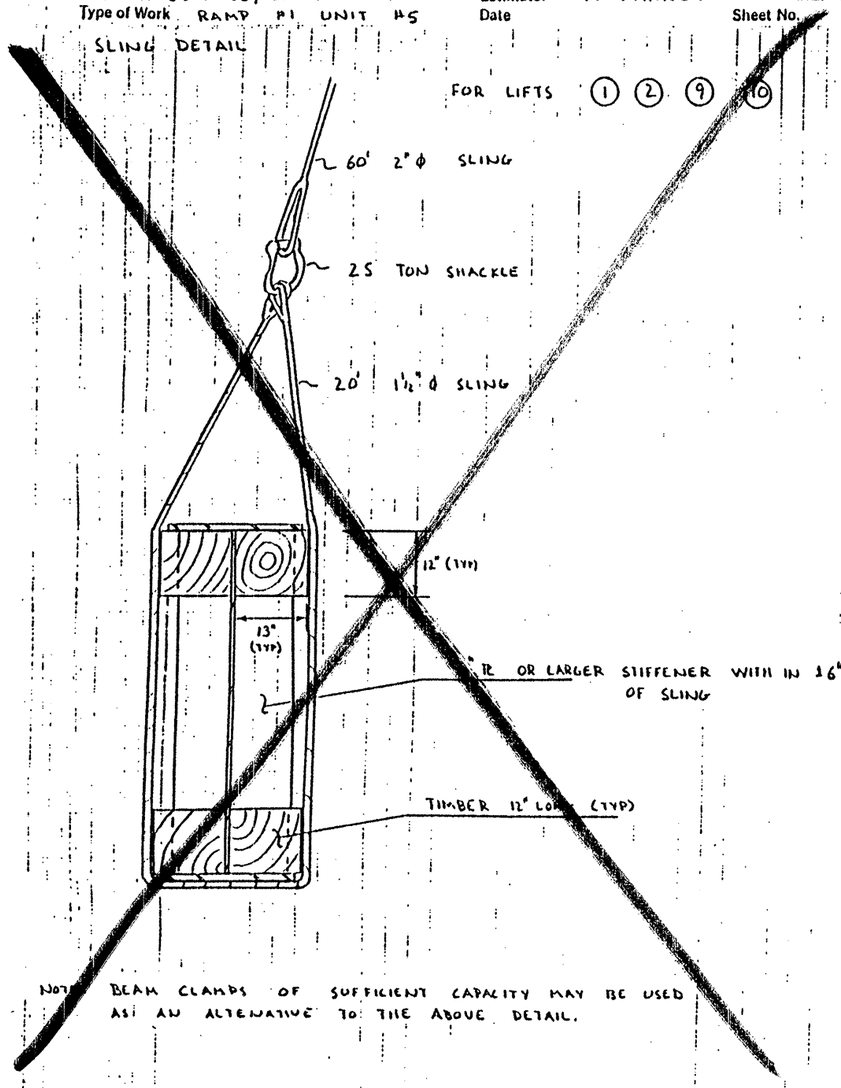

NOTE: BEAM CLAMPS OF SUFFICIENT CAPACITY MAY BE USED AS AN ALTERNATIVE TO THE ABOVE DETAIL.

Project US 83 / 281 Estimator K. FARRIS Item No.
Type of Work RAMP #1 UNIT #5 Date Sheet No.

SLING DETAIL

FOR LIFTS (3) THROUGH (8) AND (11) THROUGH (20)

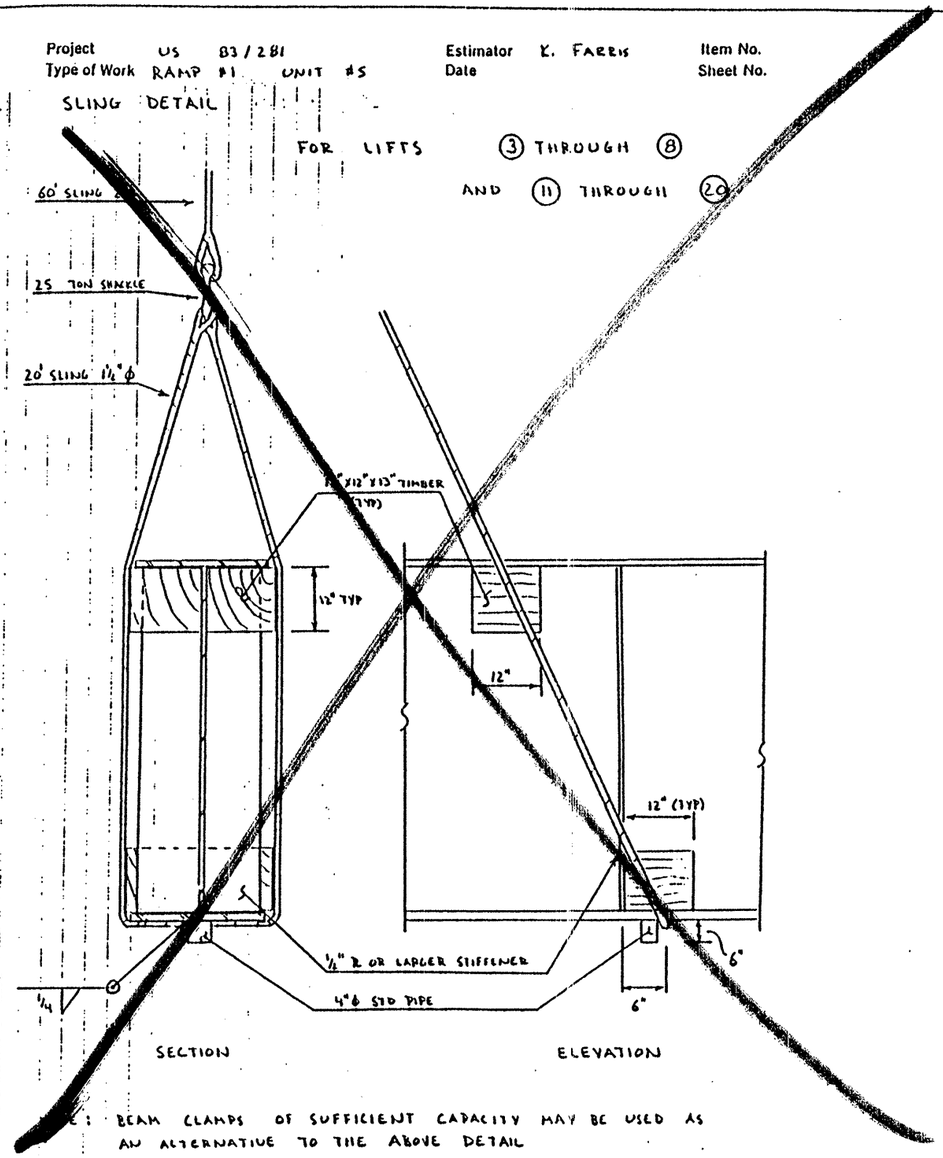

NOTE: BEAM CLAMPS OF SUFFICIENT CAPACITY MAY BE USED AS AN ALTERNATIVE TO THE ABOVE DETAIL

NO.	REVISION	BY	APP'D	DATE
0	APPROVED FOR ERECT.	WW	F.S.	10-7

DATE: 10-6-92
SCALE: N.T.S.
CAD FILE: 88-146
DRAWN BY: W.O.W.
JOB #: 88-146
DWG. #: AGM-146-11 0
APPROVED BY: Fuat Fezer

AKER GULF MARINE

GILBERT TEXAS CONSTRUCTION CORP.

RIGGING DETAILS
RAMP 1, UNIT 5

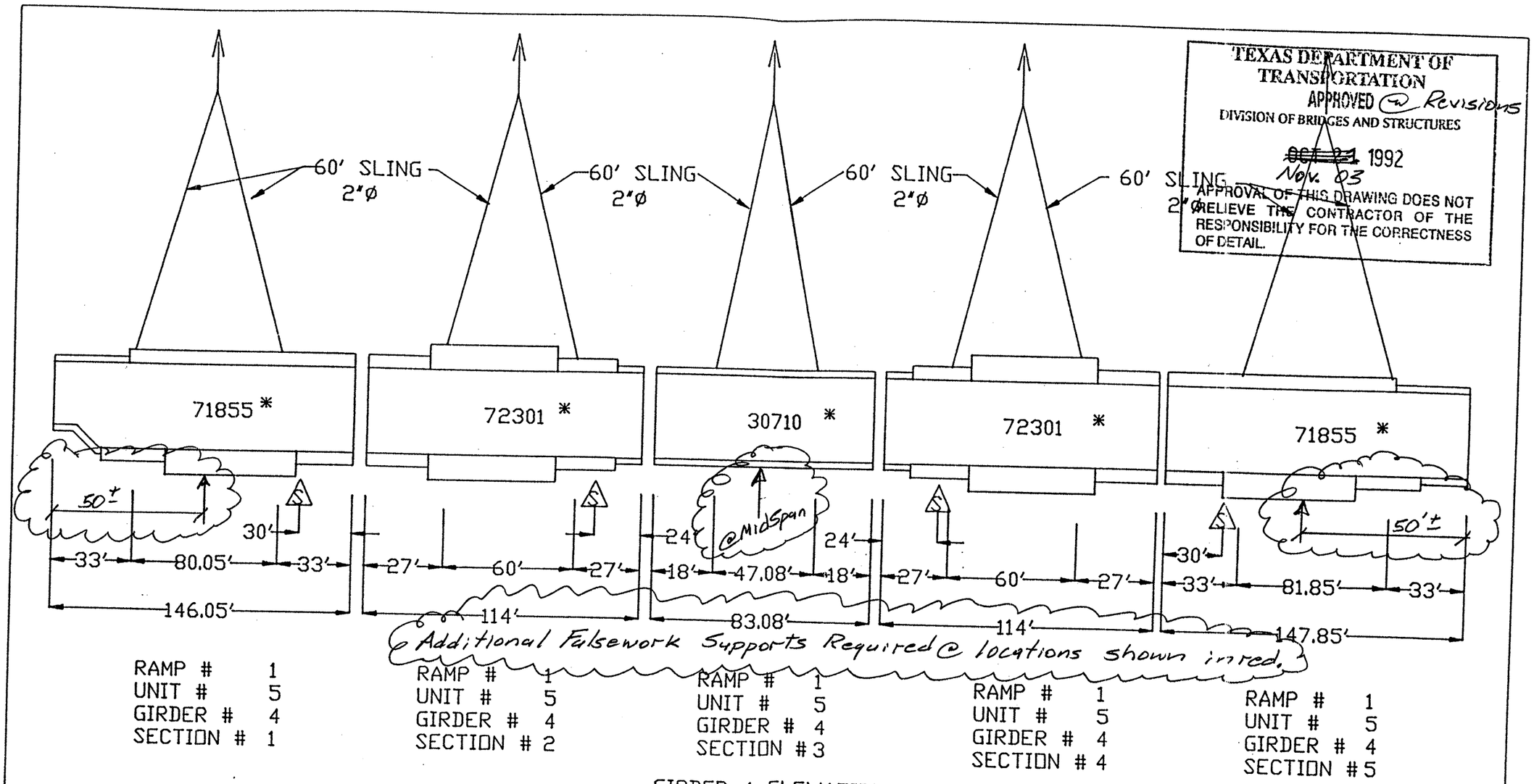

TEXAS DEPARTMENT OF TRANSPORTATION
APPROVED w/ Revisions
DIVISION OF BRIDGES AND STRUCTURES
~~OCT 21~~ 1992
Nov. 03
APPROVAL OF THIS DRAWING DOES NOT RELIEVE THE CONTRACTOR OF THE RESPONSIBILITY FOR THE CORRECTNESS OF DETAIL.

RAMP #	1
UNIT #	5
GIRDER #	4
SECTION #	1

RAMP #	1
UNIT #	5
GIRDER #	4
SECTION #	2

RAMP #	1
UNIT #	5
GIRDER #	4
SECTION #	3

RAMP #	1
UNIT #	5
GIRDER #	4
SECTION #	4

RAMP #	1
UNIT #	5
GIRDER #	4
SECTION #	5

GIRDER 4 ELEVATION

△ TEMPORARY SCAFFOLD SUPPORT LOCATION

NOTE: SCAFFOLD LOCATION MAY BE ADJUSTED WITH ENGINEERS APPROVAL

* GIRDER WEIGHT (LBS)

CRANE: MANITOWOC 3900W		BOOM LENGTH:	140'
RADIUS	CHART CAPACITY (KIPS)	LOAD BLOCK DEDUCT (KIPS)	NET CAPACITY (KIPS)
MIN=26'	136	-5	131
MAX=38'	81.2	-5	76.2

STATE OF TEXAS
A. FUAT SEZER
59897
REGISTERED PROFESSIONAL ENGINEER

NO.	REVISION	BY	APP'D	DATE
0	APPROVED FOR ERECT.	WW	F.S.	10-7

DATE: 10-6-92
SCALE: N.T.S.
CAD FILE: 88-146
DRAWN BY: W.O.W.
JOB #: 88-146
DWG. #: AGM-146-4 | 0
APPROVED BY: Fuat Sezer

AKER GULF MARINE

GILBERT TEXAS CONSTRUCTION CORP.

RIGGING DETAILS FOR GIRDER 4, RAMP 1, UNIT 5

WORK SHEET

Project
Type of Work

Estimator
Date

Item No.
Sheet No.

SLING DETAIL

FOR LIFTS

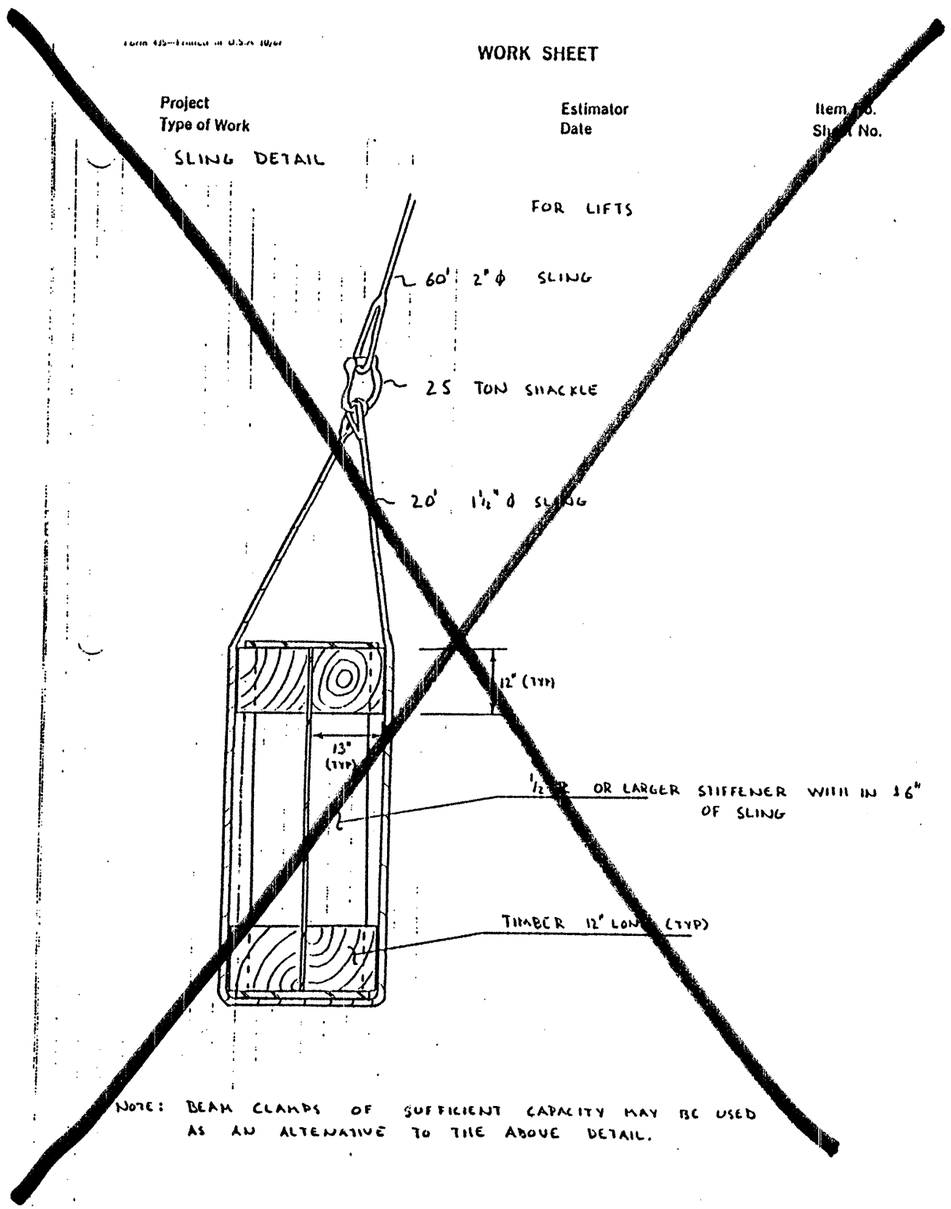

NOTE: BEAM CLAMPS OF SUFFICIENT CAPACITY MAY BE USED AS AN ALTERNATIVE TO THE ABOVE DETAIL.

NO.	REVISION	BY	APP'D	DATE
0	APPROVED FOR ERECT.	WW	F.S.	10-7

DATE: 10-6-92
SCALE: N.T.S.
CAD FILE: 88-146
DRAWN BY: W.O.W.
JOB #: 88-146
DWG. #: AGM-146-11 0
APPROVED BY: Fuat Sezer

AKER GULF MARINE

GILBERT TEXAS CONSTRUCTION CORP.

RIGGING DETAILS
RAMP 1, UNIT 5

Form 435—Printed in U.S.A. 10/67

WORK SHEET

Project US 83 / 281 | Estimator K. FARRIS | Item No.
Type of Work RAMP #1 , UNIT #5 | Date 10-8-92 | Sheet No.

RSIONAL RESTRAINT DETAIL

TORSIONAL RESTRAINTS SHALL BE PLACED AT ALL
SUPPORTS FOR GIRDER SECTIONS NOT TIED IN
WITH DIAFRAMS.

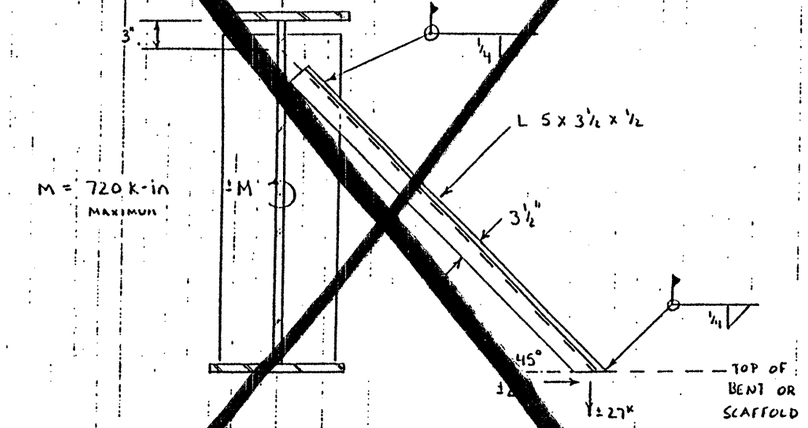

ALTERNATIVES TO THE ABOVE RESTRAINT DETAIL
ARE ACCEPTABLE WITH ENGINEER'S APPROVAL.

WORK SHEET

Project US 83 / 281 | Estimator K. FARRIS | Item No.
Type of Work RAMP #1 UNIT #5 | Date | Sheet No.

SCAFFOLDING DESIGN LOADS

SCAFFOLDING SHALL SUPPORT THE FOLLOWING
LOADS AS WELL AS LOADS APPLIED BY TORSIONAL
RESTRAINTS.

GIRDER LOCATION	LOAD
#1	35 K
#2	35 K
#3	40 K
#4	50 K

TORSIONAL RESTRAINTS APPLY :
27 K VERTICAL LOAD MAXIMUM
27 K HORIZONTAL LOAD MAXIMUM

NOTE: GIRDERS SHALL BEAR ON SCAFFOLDING
AT AN INTERMEDIATE STIFFENER

NO.	REVISION	BY	APP'D	DATE
0	APPROVED FOR ERECT.	WW	F.S.	10-7

DATE: 10-6-92
SCALE: N.T.S.
CAD FILE: 88-146
DRAWN BY: W.D.W.
JOB #: 88-146
DWG. #: AGM-146-100
APPROVED BY: Fuat Sezer

AKER GULF MARINE

GILBERT TEXAS CONSTRUCTION CORP.

MISC. DETAILS
RAMP 1, UNIT 5

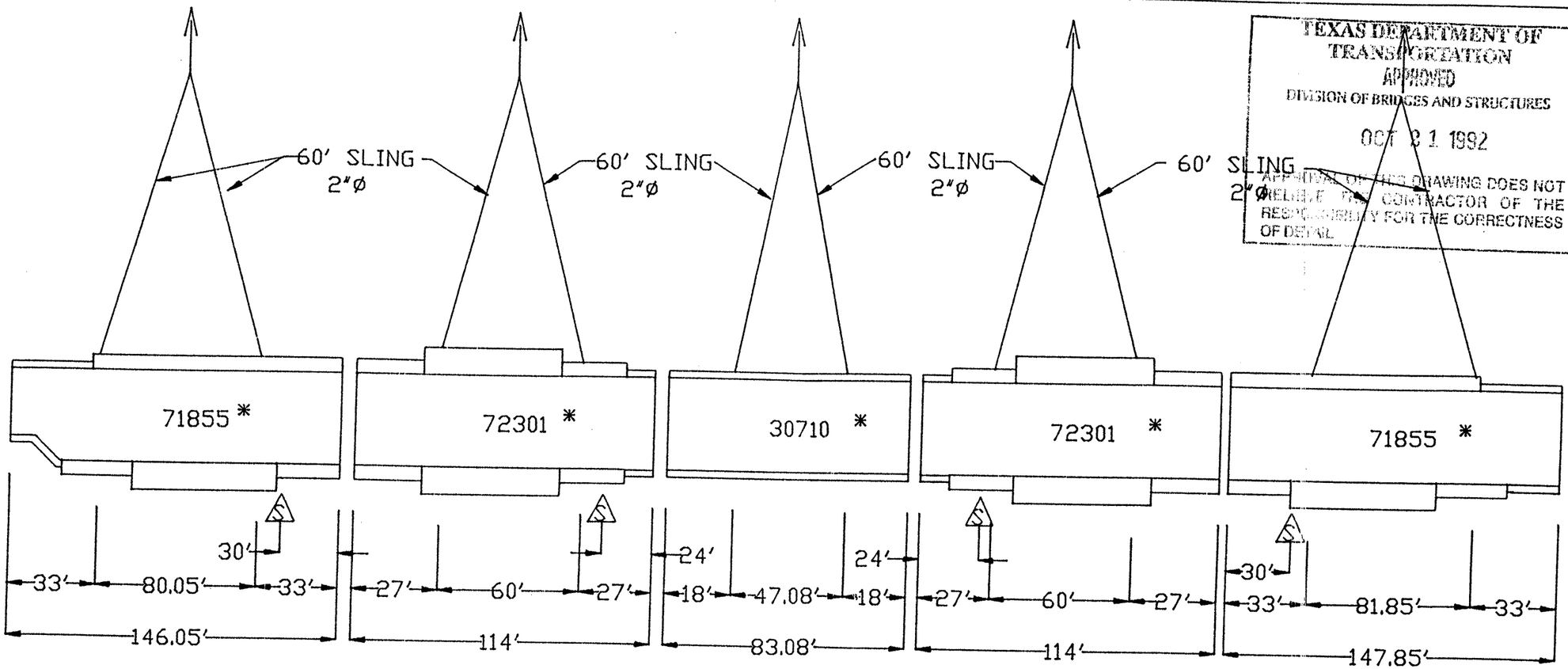

TEXAS DEPARTMENT OF TRANSPORTATION
APPROVED
DIVISION OF BRIDGES AND STRUCTURES
OCT 31 1992
APPROVAL OF THIS DRAWING DOES NOT RELIEVE THE CONTRACTOR OF THE RESPONSIBILITY FOR THE CORRECTNESS OF DETAIL

RAMP # 1
UNIT # 5
GIRDER # 4
SECTION # 1

RAMP # 1
UNIT # 5
GIRDER # 4
SECTION # 2

RAMP # 1
UNIT # 5
GIRDER # 4
SECTION # 3

RAMP # 1
UNIT # 5
GIRDER # 4
SECTION # 4

RAMP # 1
UNIT # 5
GIRDER # 4
SECTION # 5

GIRDER 4 ELEVATION

△ TEMPORARY SCAFFOLD SUPPORT LOCATION

* GIRDER WEIGHT (LBS)

NOTE: SCAFFOLD LOCATION MAY BE ADJUSTED WITH ENGINEERS APPROVAL

CRANE: MANITOWOC 3900W		BOOM LENGTH:	140'
RADIUS	CHART CAPACITY (KIPS)	LOAD BLOCK DEDUCT (KIPS)	NET CAPACITY (KIPS)
MIN=26'	136	-5	131
MAX=38'	81.2	-5	76.2

STATE OF TEXAS
FUAT SEZEN
59897
REGISTERED PROFESSIONAL ENGINEER

NO.	REVISION	BY	APP'D	DATE
0	APPROVED FOR ERECT.	WW	F.S.	10-7

DATE: 10-6-92
SCALE: N.T.S.
CAD FILE: 88-146
DRAWN BY: W.D.W.
JOB #: 88-146
DWG. #: AGM-146-4 0
APPROVED BY: Fuat Sezen

AKER GULF MARINE

GILBERT TEXAS CONSTRUCTION CORP.
RIGGING DETAILS FOR GIRDER 4, RAMP 1, UNIT 5

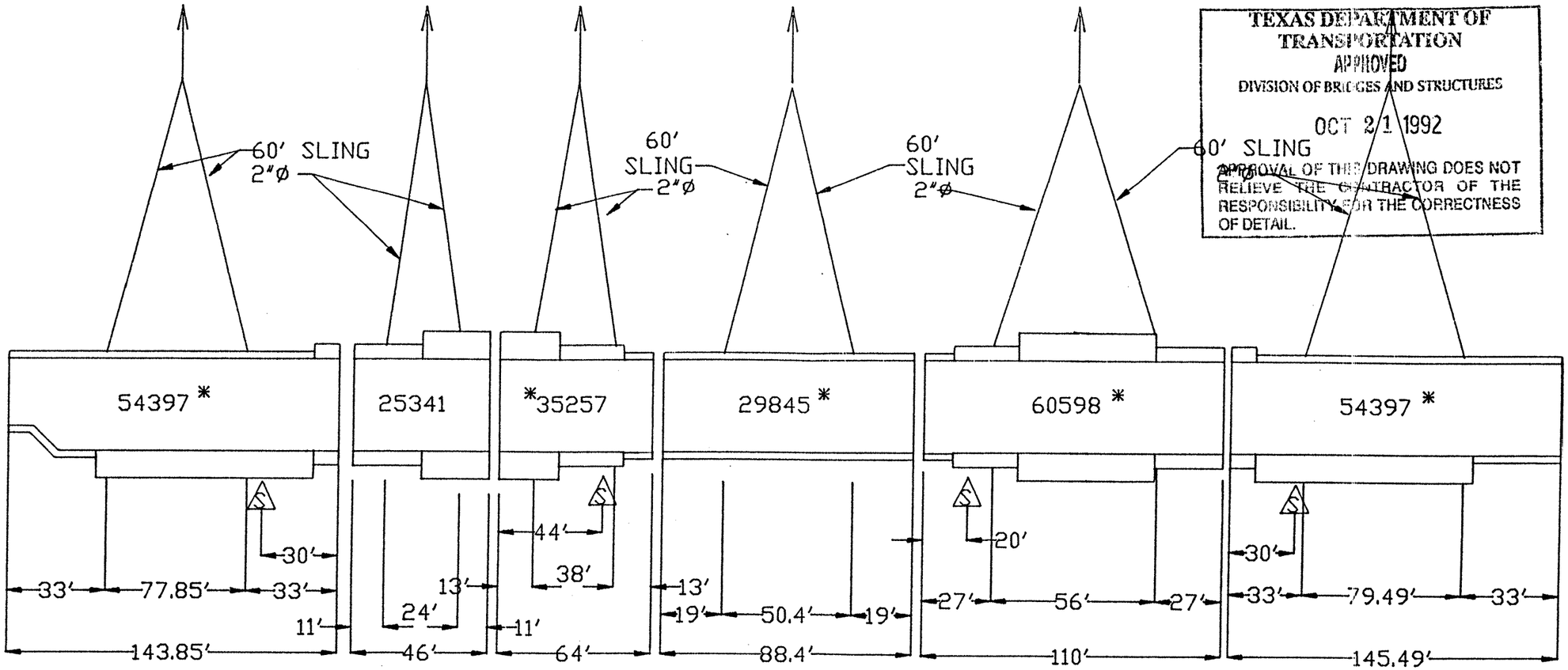

TEXAS DEPARTMENT OF TRANSPORTATION
APPROVED
DIVISION OF BRIDGES AND STRUCTURES
OCT 21 1992
APPROVAL OF THIS DRAWING DOES NOT RELIEVE THE CONTRACTOR OF THE RESPONSIBILITY FOR THE CORRECTNESS OF DETAIL.

RAMP # 1	RAMP # 1	RAMP # 1	RAMP # 1	RAMP # 1	RAMP # 1
UNIT # 5	UNIT # 5	UNIT # 5	UNIT # 5	UNIT # 5	UNIT # 5
GIRDER # 3	GIRDER # 3	GIRDER # 3	GIRDER # 3	GIRDER # 3	GIRDER # 3
SECTION # 1	SECTION # 2A	SECTION # 2B	SECTION # 3	SECTION # 4	SECTION # 5

GIRDER 3 ELEVATION

△ TEMPORARY SCAFFOLD SUPPORT LOCATION

* GIRDER WEIGHT (LBS)

NOTE: SCAFFOLD LOCATION MAY BE ADJUSTED WITH ENGINEERS APPROVAL.

CRANE: MANITOWOC 3900W		BOOM LENGTH:	140'
RADIUS	CHART CAPACITY (KIPS)	LOAD BLOCK DEDUCT (KIPS)	NET CAPACITY (KIPS)
MIN=26'	136	-5	131
MAX=40'	75.7	-5	70.7

STATE OF TEXAS — FUAT GEZER — 59857 — REGISTERED PROFESSIONAL ENGINEER

NO.	REVISION	BY	APP'D	DATE
0	APPROVED FOR ERECT.	WW	F.S.	10-7

DATE: 10-6-92
SCALE: N.T.S.
CAD FILE: 88-146
DRAWN BY: W.O.W.
JOB #: 88-146
DWG. #: AGM-146-3 | 0
APPROVED BY: Fuat Gezer

AKER GULF MARINE

GILBERT TEXAS CONSTRUCTION CORP.

RIGGING DETAILS FOR GIRDER 3, RAMP 1, UNIT 5

EDS Copy

TEXAS DEPARTMENT OF TRANSPORTATION
APPROVED EXCEPT AS NOTED
DIVISION OF BRIDGES AND STRUCTURES

OCT 21 1992

APPROVAL OF THIS DRAWING DOES NOT RELIEVE THE CONTRACTOR OF THE RESPONSIBILITY FOR THE CORRECTNESS OF DETAIL.

CRANE

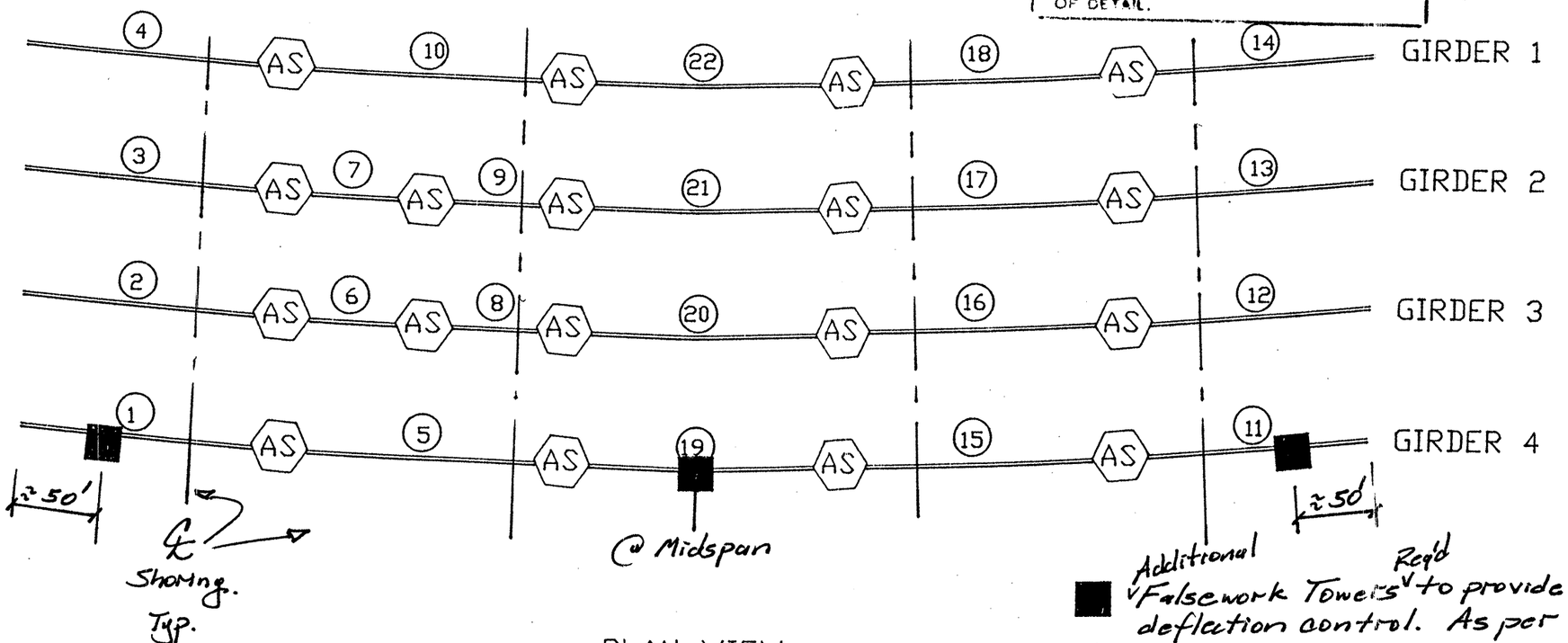

PLAN VIEW

■ Additional Falsework Towers Req'd to provide deflection control. As per erected Plan Sht. No. 404 55-MEBR

$R \geq .104L^2$

Note: All diafram connections shall be made btwn each section using high strength ASTM A-325 bolts prior to release.

AS AIR SPLICE

SETTING SEQUENCE

STATE OF TEXAS
A. FUAT SEZER
59897
REGISTERED PROFESSIONAL ENGINEER

NO.	REVISION	BY	APP'D	DATE
0	APPROVED FOR ERECT.	W.V.	F.S.	10/8

DATE: 10 - 7 - 92
SCALE: N.T.S.
CAD FILE: 88-146A
DRAWN BY: W.D.V.
JOB #: 88-146
DWG. #: AGM-146-5 | 0
APPROVED BY: Fuat Sezer

AKER GULF MARINE

GILBERT TEXAS CONSTRUCTION CORP.

ERECTION SEQUENCE
RAMP 1, UNIT 5

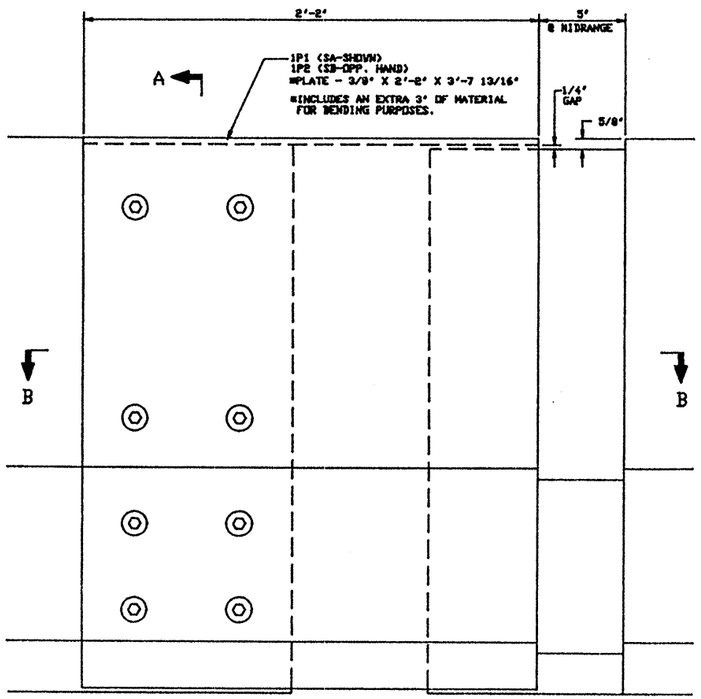

ELEVATION SLI28708SA - SHOWN (3 REQ'D)

ELEVATION SLI27808SB - OPP. HAND (3 REQ'D)

BENT 15 RAMP 1
BENT 16 RAMP 2
BENT 16 RAMP 3

SECTION B-B

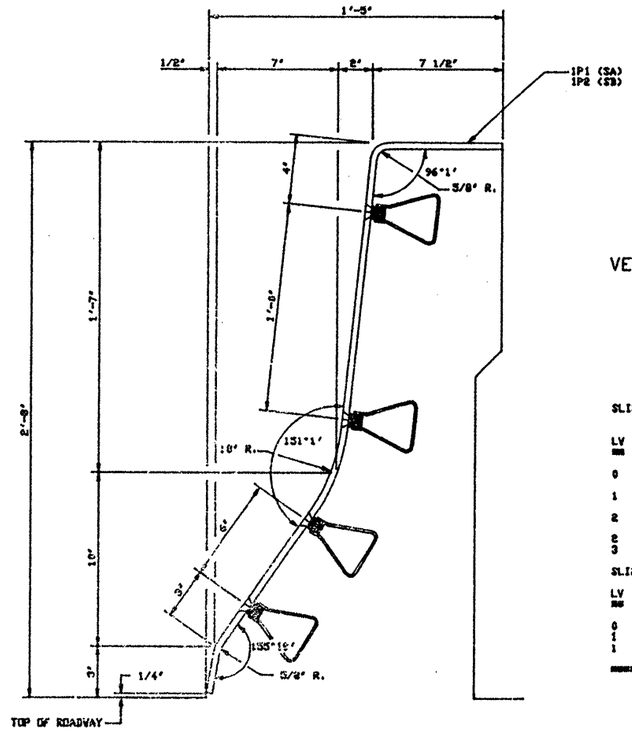

SECTION A-A

GENERAL NOTES

1. THE CONTRACTOR SHALL VERIFY ALL DIMENSIONS PRIOR TO FABRICATION OF THE COVER PLATE ASSEMBLIES.
2. FABRICATION AND MATERIALS SHALL COMPLY WITH THE 1982 STATE OF TEXAS STANDARD SPECIFICATIONS FOR CONSTRUCTION OF HIGHWAYS AND BRIDGES AS MODIFIED BY THE CONTRACT SPECIAL PROVISIONS,EXCEPT AS NOTED HEREIN.
3. ALL STEEL SHALL BE AMERICAN MADE ASTM A-588.
4. PRIOR TO PAINTING ALL STEEL SURFACES SHALL RECEIVE A CLASS 'B' BLAST CLEANING (SSPC-SP6 COMMERCIAL). ALL STEEL SURFACES SHALL BE SHOP PAINTED WITH PROTECTION SYSTEM (800 PRIME COAT) APPLIED TO A 4 MILS DRY FILM THICKNESS.

VERIFY → 5. IN HOUSE STAE SHOP INSPECTION IS NOT REQUIRED.

SLI28708SA QTY REQD: 3 EA STRUCTURED BILL OF MATERIALS DWG NO.A-14468

LV	PART NO.	QUANTITY	U/M	DESCRIPTION	MATERIAL	REV. #
0	SLI28708SA	1.000	EA	BARRIER COVER PLATE ASSMBLY	CX	
1	SLI28708SA01	1.000	PK	FAB ASSEMBLY	CX	
2	3550	113.000	LB	PLATE 3/8 A588	CX	
2	SLI28708SA02	1.000	PK	PAINT FOR SUBCONTRACT	CU AS REQUIRED	
3	3403	0.000	EA	PNT TXS PRIMER 800d SYSI SGA KIT		

SLI28708PSS QTY REQD: 1 EA. STRUCTURED BILL OF MATERIALS DWG NO.A-14468

LV	PART NO.	QUANTITY	U/M	DESCRIPTION	MATERIAL	REV. #
0	SLI28708PSS	1.000	PK	PARTS FOR SHIPPING COVER PL CV		
1	6640	48.000	EA	1/2 RICHMOND LF INSERT		
1	5615	48.000	EA	SCR 1/2 X 1 FH HSDC CSK A325 ZP		

END OF STRUCTURED BILL OF MATERIALS

SLI28708SB QTY REQD: 3 EA STRUCTURED BILL OF MATERIALS DWG NO.A-14468

LV	PART NO.	QUANTITY	U/M	DESCRIPTION	MATERIAL	REV. #
0	SLI28708SB	1.000	EA	BARRIER COVER PLATE ASSMBLY	CX	
1	SLI28708SB01	1.000	PK	FAB ASSEMBLY	CX	
2	3550	113.000	LB	PLATE 3/8 A588	CX	
2	SLI28708SB02	1.000	PK	PAINT FOR SUBCONTRACT	CU AS REQUIRED	
3	3403	0.000	EA	PNT TXS PRIMER 800d SYSI SGA KIT		

END OF STRUCTURED BILL OF MATERIALS

TEXAS DEPARTMENT OF TRANSPORTATION
APPROVED
DIVISION OF BRIDGES AND STRUCTURES
DEC 07 1992
APPROVAL OF THIS DRAWING DOES NOT RELIEVE THE CONTRACTOR OF THE RESPONSIBILITY FOR THE CORRECTNESS OF DETAIL.

PRELIMINARY

WORK W/ DWG. B-14407

STATE: TEXAS
COUNTY: HIDALGO
PROJECT NO.: NH92(50)M
PRODUCT NO.: SLI28708SA & SB
JOINT LOCATION: SEE ELEVATION VIEW

NO.	DESCRIPTION	MADE	DATE
	REVISIONS		

THESE DRAWINGS AND THE DESIGNS CONTAINED THEREIN ARE THE EXCLUSIVE PROPERTY OF WATSON ENGINEERING, INC. AND ARE NOT TO BE REPRODUCED OR USED EXCEPT FOR THE PURPOSE FOR WHICH THEY HAVE BEEN PURCHASED. ALL RIGHTS OF DESIGN AND INVENTION ARE HEREBY RESERVED.

WATSON ENGINEERING, INC. 98 PINEVIEW DRIVE AMHERST, N.Y. 14228 TEL. (716) 691-7866 FAX (716) 691-7869

DRAWN BY: JMJ	DATE: 11-20-92
CHECKED BY:	DATE:
SCALE: NTS	WEN JOB NO: 28708
SHEET NO: 1 OF 1	DRAWING NO: B-14468

PROJECT: U.S. 83 - U.S. 281 INTERCHANGE

TITLE: COVER PLATE DETAILS

NOV 2 3 1992

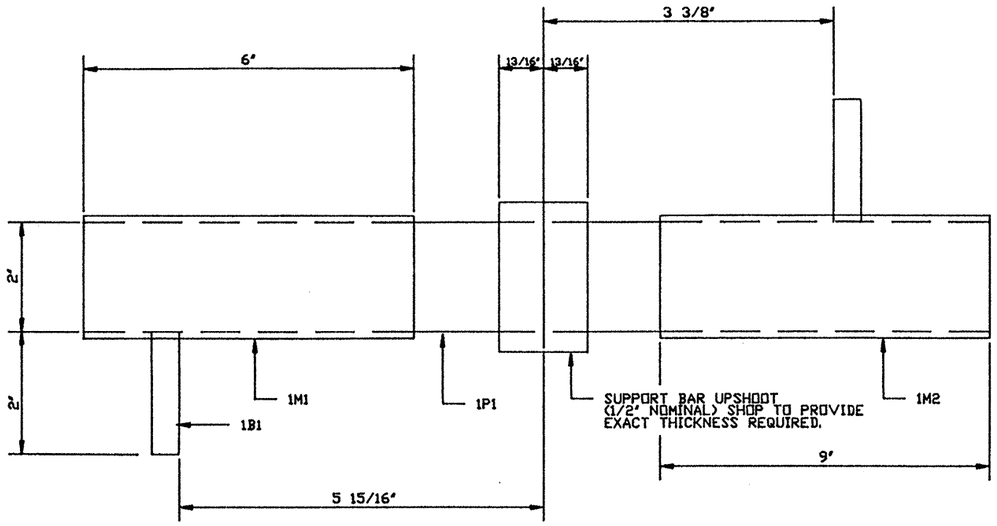

PLAN

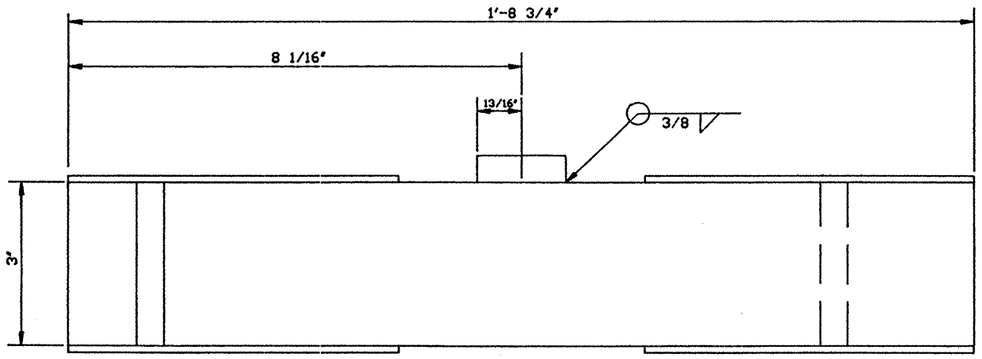

ELEVATION

SUPPORT BAR DETAIL

⚠ 11011 QTY REQD: 1 EA STRUCTURED BILL OF MATERIALS DWG NO. A-13106

LV	PART NO.	QUANTITY	U/M	DESCRIPTION	MATERIAL	REV. #
0	11011 ⚠	1.000	EA	D900 SUPPORT BAR STR.(A588)(X		
1	3730	36.000	LB	PLATE 2 A588		
1	6198	2.000	EA	FLAT BAR 12GA 2 1/4 X 6	TYPE 304, 2B FINISH	
1	6197	2.000	EA	FLAT BAR 12GA 2 1/4 X 9	TYPE 304, 2B FINISH	
1	4319	2.000	EA	HOD STOP BAR A588 C-13159		

END OF STRUCTURED BILL OF MATERIALS

⚠ 11009 QTY REQD: 1 EA STRUCTURED BILL OF MATERIALS DWG NO. A-13106

LV	PART NO.	QUANTITY	U/M	DESCRIPTION	MATERIAL	REV. #
0	11009	1.000	EA	D900 SUPPORT BAR STR.(A36) (X		
1	3732	36.000	LB	PLATE 2 A36		
1	6198	2.000	EA	FLAT BAR 12GA 2 1/4 X 6	TYPE 304, 2B FINISH	
1	6197	2.000	EA	FLAT BAR 12GA 2 1/4 X 9	TYPE 304, 2B FINISH	
1	4323	2.000	EA	HOD STOP BAR A36 C-13159		

END OF STRUCTURED BILL OF MATERIALS

TEXAS DEPARTMENT OF TRANSPORTATION
APPROVED
DIVISION OF BRIDGES AND STRUCTURES
DEC 07 1992
APPROVAL OF THIS DRAWING DOES NOT RELIEVE THE CONTRACTOR OF THE RESPONSIBILITY FOR THE CORRECTNESS OF DETAIL.

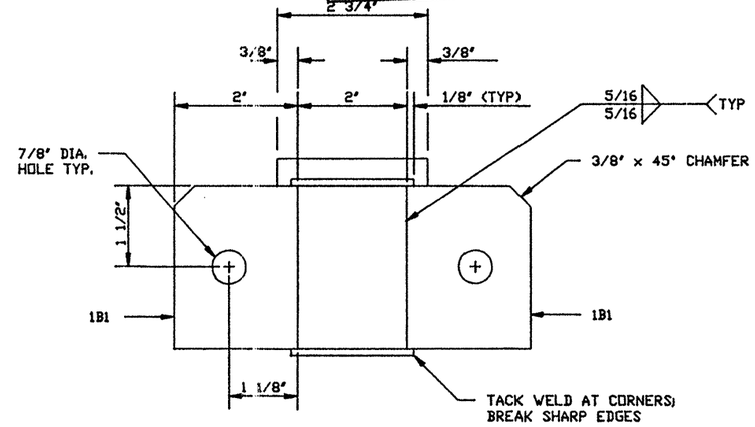

END VIEW

⚠ (AFTER GALVANIZING FOR GALVANIZED JOINT SYSTEMS)

NOV 18 1992

NO.	DESCRIPTION	NAME	DATE
4			
3			
2			
⚠	REVISED A-588 SUPPORT BAR PART NO. ADDED A-36 SUPPORT BAR AND GALVANIZING NOTE	LFK	4-20-92

REVISIONS

THIS DRAWING AND THE DESIGNS, DETAILS AND/OR ENGINEERING INFORMATION CONTAINED HEREIN ARE THE PROPRIETARY PROPERTY OF WATSON BOWMAN ACME AND ARE NOT TO BE REPRODUCED OR USED EXCEPT FOR THE PURPOSE FOR WHICH IT HAS BEEN FURNISHED. ALL RIGHTS OF DESIGN AND INVENTION ARE HEREBY RESERVED.

Watson Bowman Acme
50 Fleetview Drive Amherst, NY. 14228 TEL. (716) 691-7866 FAX (716) 691-9629

PROJECT: ⚠ A-588 D900 SUPPORT BAR DETAILS (PART NO. 11011) A-36 D900 SUPPORT BAR DETAILS (PART NO. 11009)

TITLE: D-900 SUPPORT BAR DETAILS ⚠

DETAILED BY: JMJ	DATE: 10-30-90
CHECKED BY: R.K.	DATE: 10-30-90
SIGNED: NONE	WMA JOB NO:
SHEET NO: 1 OF 1	DRAWING NO: A-13106

11012 ⚠1 QTY.REQ'D: 1 EA STRUCTURED BILL OF MATERIALS DWG.NO. A-13105

LEV	PART NO.	QUANTITY	U/M	DESCRIPTION	MATERIAL
0	⚠1 11012	1.000	EA	D900 SUPPORT BOX STRAIGHT (X	
1	3550	52.000	LB	PLATE 3/8 A588	
1	11000SP	1.000	PK	SUPPORT BOX HDWRE PARTS (U	
2	4317	2.000	EA	MOD COMP BOX LOOP ANC	
2	7010	⚠2 1.000	EA	THD STUD 5/8X1 1/2 AV NP 108	
2	8085	2.000	EA	NUT 3/4 X 2 1/4 H COUPLER ZP	A563

END OF STRUCTURED BILL OF MATERIALS

⚠3 11010 ⚠4 QTY. REQ'D 1 EA STRUCTURED BILL OF MATERIALS DWG.NO. A-13105

LEV	PART NO.	QUANTITY	U/M	DESCRIPTION	MATERIAL
⚠3 0	11010	1.000	EA	D900 SUPPORT BOX STRAIGHT (X	
1	3540	52.000	LB	PLATE 3/8 A36	
1	11000SP	1.000	PK	SUPPORT BOX HDWRE PARTS (U	
2	4317	2.000	EA	MOD COMP BOX LOOP ANC	
2	7010	⚠2 1.000	EA	THD STUD 5/8X1 1/2 AV NP 108	
2	8085	2.000	EA	NUT 3/4 X 2 1/4 H COUPLER ZP	A563

END OF STRUCTURED BILL OF MATERIALS

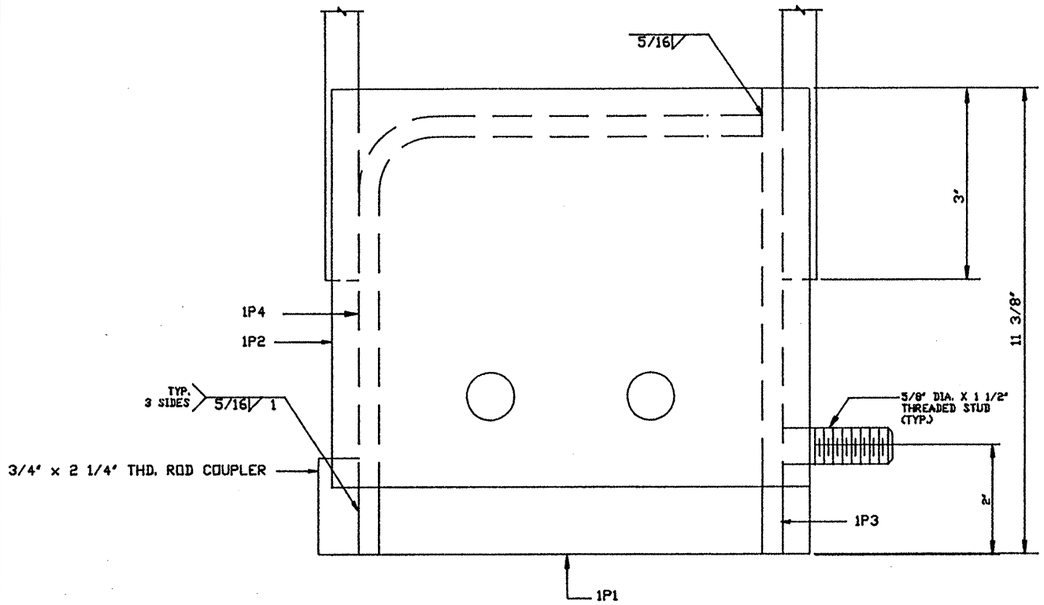

TEXAS DEPARTMENT OF TRANSPORTATION
APPROVED
DIVISION OF BRIDGES AND STRUCTURES
DEC 07 1992
APPROVAL OF THIS DRAWING DOES NOT RELIEVE THE CONTRACTOR OF THE RESPONSIBILITY FOR THE CORRECTNESS OF DETAIL.

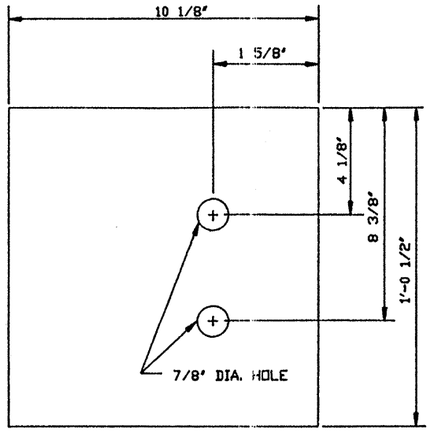

DETAIL - 1P2

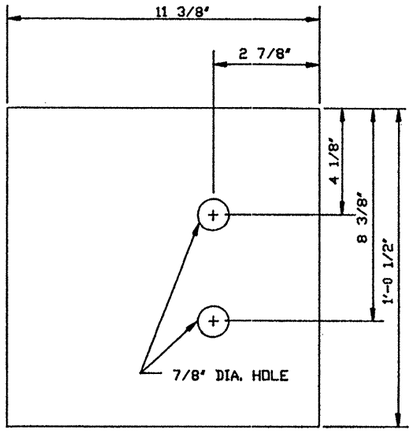

DETAIL - 1P1

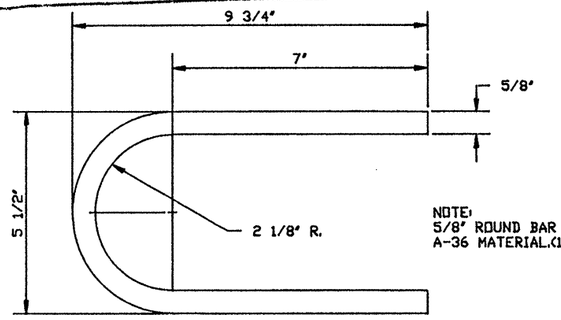

NOTE:
5/8" ROUND BAR IS MADE OF A-36 MATERIAL.(1.805 FT. REQ'D.)

MOD. COMP. BOX LOOP ANCHOR
ITEM# 4317

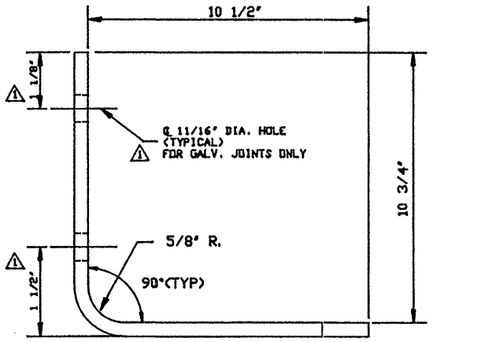

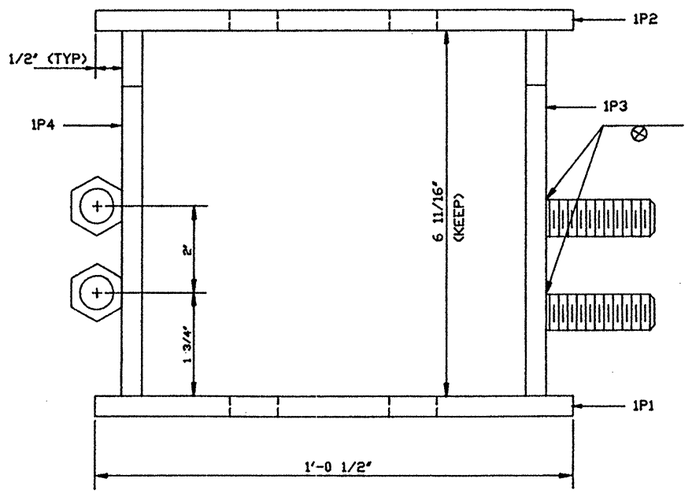

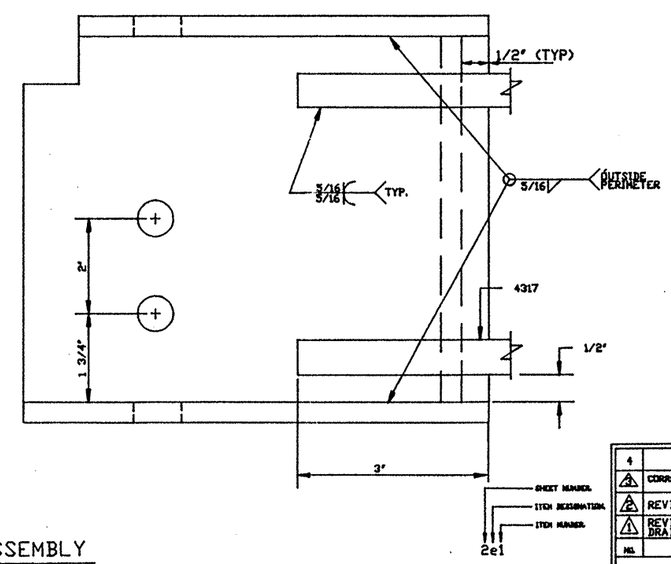

MARK SYSTEM

SUPPORT BOX ASSEMBLY

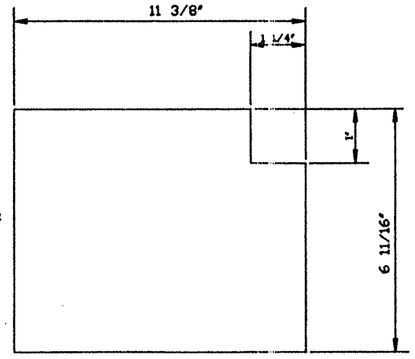

DETAIL - 1P3

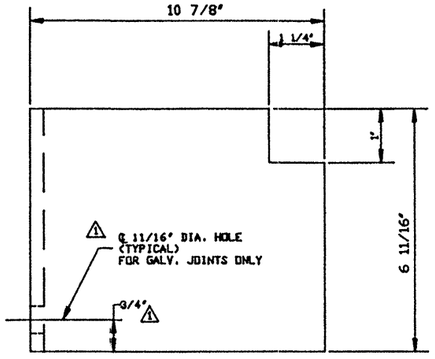

DETAIL - 1P4
DEVELOPED LENGTH = 1'-9 5/16"

NO.	DESCRIPTION	BY	DATE
4			
⚠3	CORRECT ITEM NUMBER OF 11010	JMJ	9-13-92
⚠2	REVISED STRUCTURED BILL	ASK	5-21-92
⚠1	REVISED PRODUCT NO. ADDED GALANIZING DRAIN HOLES	LFK	4-20-92

REVISIONS

THIS DRAWING AND THE DESIGNS, DETAILS AND/OR INFORMATION CONTAINED HEREON ARE THE PROPRIETARY PROPERTY OF WATSON BOWMAN ACME CORP. AND ARE NOT TO BE REPRODUCED OR USED EXCEPT FOR THE PURPOSE FOR WHICH THEY HAVE BEEN FURNISHED. ALL RIGHTS OF DESIGN AND INVENTION ARE HEREBY RESERVED.

Watson Bowman Acme
98 Fronton Drive Amherst, NY. 14228 TEL: (716) 691-7866 FAX (716) 691-9629

PROJECT: D-900 SUPPORT BOX DETAILS

TITLE: ITEM #11012 (A588) #11010 (A36) ⚠2

DETAILED BY: JMJ	DATE: 10-30-90
CHECKED BY: R.K.	DATE: 10-30-90
SCALE: NTS	WBA JOB NO:
SHEET NO: 1 OF 1	DRAWING NO: A-13105

STRUCTURED BILL OF MATERIALS FOR MOD28708AA

MOD28708AA QTY.REQ'D: 3 EA STRUCTURED BILL OF MATERIALS DWG NO. B-14407

LV	PART NO.	QUANTITY	U/M	DESCRIPTION	MATERIAL	REV. #
0	MOD28708AA	1.000	EA	MOD900,RAMPS 1,2 & 3,32.02FT(X	SHIPPING LENGTH 30.0 FT.+/-	
1	MOD28708S	3.000	EA	SEAL FOR SHOP INSTALL (1N1)(U		
2	1040	32.000	FT	MOD SEAL C5603		
1	MOD28708AA01	1.000	PK	EXTRUSION ASSEMBLIES (X		
2	4352	56.000	EA	MOD COMP LOOP ANC C13308	5/8 DIA BAR A36	
2	4277	12.000	EA	MOD BOX HOLD PLT A588 C14291		
2	4274	6.000	EA	MOD PRESTRESS ANGLE C12577	ANGLE 5X3 1/2X1/2X4 LG A36	
2	MOD28708AA02	1.000	PK	PROFILES (W		
3	1886	60.000	FT	MOD EC FM 1.25x4 A588 C12186	EDGE CHANNEL (DOMESTIC) A588	
3	1885	61.500	FT	MODSHP CS 1.63x5 A588 C12181	SUPPORT BEAM (DOMESTIC) A588	
3	1884	1.750	FT	MODSHP EA WELDED A588 C11812	EDGE BEAM (DOMESTIC) A588	
2	11012	12.000	EA	D900 SUPPORT BOX A-13105 (X		
2	11011	12.000	EA	D900 SUP BAR 1P1 DN A-13106(X		
2	MOD28708AA03	1.000	PK	PARTS FOR ASSEMBLY (U		
3	4260	24.000	EA	MODULAR BEARING (UPPER) C306	COMPRESSION SPRING,URETHANE	
3	4270	24.000	EA	MODULAR BEARING (LOWER) C307	COMPRESSION SPRING,URETHANE	
3	4320	18.000	EA	MOD CONTROL SPRING DOWEL C13746		
3	4321	18.000	EA	MOD CONTROL SPRING BUFFER C13751		
3	8090	12.000	EA	NUT 7/8 H A325 ZP		
3	7959	12.000	EA	NUT 3/8 H A563 B695-83 C50 T1 AM	ZP	
3	7549	12.000	EA	WASHER 3/8 F436 B695-83 C50 T1 AM	ZP	
3	8084	14.000	EA	NUT 3/4 H NL LAG ZP	ZP	
3	3304	38.000	EA	BOLT 3/4 X 2 1/2 A325 ZP	FULL THREAD ZP	
3	7602	26.000	EA	WASHER 3/4 F436 ZP AM	ZP	
3	4221	6.000	EA	MODULAR SEAL END PLUG C12728		
3	8021	14.000	EA	NUT 3/4 H A325 ZP AM		
2	MOD28708AA04	6.000	EA	PRESTRESS ROD 1'-6' (U		
3	7132	1.500	FT	THD ROD 3/4 LAG STUD RICHMOD		
2	MOD28708AA05	14.000	EA	SHIPPING CLAMP 2B1 (W		
3	3931	1.021	FT	FLAT BAR 3/8 X 4 A36	A36	
2	MOD28708AA06	2.000	EA	LIFTING ANGLE 2A1 (W		
3	4140	1.021	FT	ANGLE 7X4X1/2 A588	A588	
2	MOD28708AA07	1.000	PK	PAINT FOR SUBCONTRACT (U		
3	3403	0.000	EA	PNT TXS PRIMER 800d SYS1 SGA KIT	AS REQUIRED	

MOD28708PS QTY.REQ'D: 1 EA. STRUCTURED BILL OF MATERIALS DWG NO. B-14407

LV	PART NO.	QUANTITY	U/M	DESCRIPTION	MATERIAL	REV. #
0	MOD28708PS	1.000	PK	PARTS FOR SHIPPING (V		
1	8084	24.000	EA	NUT 3/4 H NL LAG ZP		
1	7602	24.000	EA	WASHER 3/4 F436 ZP		
1	4293	24.000	EA	MOD LEV ROD 1 FT P.N. 7152		

END OF STRUCTURED BILL OF MATERIALS

MATERIAL SPECIFICATION

STEEL EDGE & SUPPORT BEAMS - All beams are made of ASTM A-588 grade steel and have grooves which grip the neoprene locking seal.

NEOPRENE LOCKING SEAL - The neoprene locking seal is bonded to the steel beams with Prima-Lub Adhesive. The neoprene seal is designed to absorb all joint movements. The physical properties of the locking seal are as follows:

PHYSICAL PROPERTIES	PROCEDURE	REQUIREMENT
Tensile Strength	(D-412)	2000 PSI
Elongation at Break	(D-412)	250%
Hardness, Type A Durometer	(D-2240)	55±5
Compression Set 70 hour at 212°F (D)	(D-395) Method B Mod.	40%
Oven Aging, 70 hour at 212°F	(D-573)	
Tensile Strength, loss, max.		20%
Elongation, loss, max.		20%
Hardness, Type A Durometer (points change)		0 to +10
Oil Swell, Astm #3, 70 hour at 212, weight change max.		45%
Ozone Resistance, 20% strain 300 PPHM in air at 104°F (wiped with toluene to remove surface contamination)	(D-1149)	No Cracks

CONTROL SPRING - The control spring which is located between the support bars act to equalize the expansion of each seal. The control spring is made of URETHANE.

STAINLESS STEEL SHEETING - Stainless steel is used on the sliding surfaces of the support bar. The stainless steel contact the teflon surfaces of the bearing and compression spring. The mechanical properties of the stainless steel are as follows:

Tensile Strength	92,700 PSI
Yield	51,700 PSI
Hardness	Rb 88
Bend Test	180 TXT
Elongation	56%

PRIMA-LUB ADHESIVE - Prima-lub Adhesive is used to bond the neoprene locking seal to the steel extrusions. This adhesive shall be a one-part moisture curing polyurethane and hydrocarbon solvent mixture with the following physical properties:

Average Weight per Gallon	8.3 lbs +/- 10%
Solids Content	72% (min.)
Adhesive to remain workable	From 5-120°F
Film Strength	2000 PSI (min.)
Elongation at room temperature	350% (min.)
Flash Point (seta closed cup)	over 100°F

COMPRESSION SPRING C-306 - This compression spring is composed of urethane, epoxy and 3/64" thick teflon sheet. The compression spring sits on top of the support bar. The physical properties of the urethane are:

Shore Durometer	(ASTM D-2240)	90A
Elongation at Break	(ASTM D-412)	425%
Tensile Strength	(ASTM D-412)	6500 PSI
100% Modulus	(ASTM D-412)	1200 PSI
300% Modulus	(ASTM D-412)	2400 PSI
Tear Strength	(ASTM D-470)	110 PLI
Rebound Resilience	(ASTM D-2632)	40%

BEARING C-307 - The bearing is composed of urethane, epoxy and 3/64" thick teflon sheet on which the support bar slides on. The physical properties of the urethane are:

Shore Durometer	(ASTM D-2240)	90A
Elongation at Break	(ASTM D-412)	425%
Tensile Strength	(ASTM D-412)	6500 PSI
100% Modulus	(ASTM D-412)	1200 PSI
300% Modulus	(ASTM D-412)	2400 PSI
Tear Strength	(ASTM D-470)	110 PLI
Rebound Resilience	(ASTM D-2632)	40%

TEXAS DEPARTMENT OF TRANSPORTATION
APPROVED
DIVISION OF BRIDGES AND STRUCTURES
DEC 07 1992
APPROVAL OF THIS DRAWING DOES NOT RELIEVE THE CONTRACTOR OF THE RESPONSIBILITY FOR THE CORRECTNESS OF DETAIL.

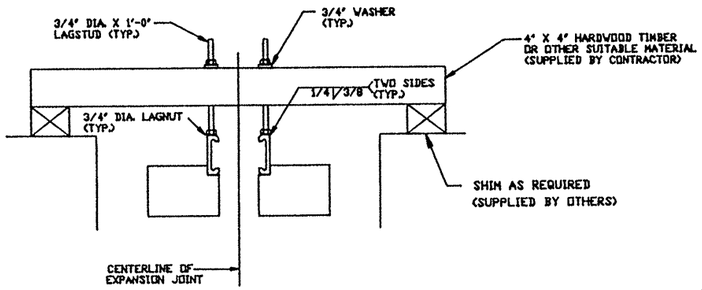

ELEVATION

LEVELING ASSEMBLY

NOTE:
1. LEVELING NUTS SHALL BE LOCATED AT EVERY OTHER SUPPORT BOX.
2. LEVELING NUTS SHALL BE SHOP INSTALLED PARALLEL TO THE EXPANSION JOINT SUPPORT BARS.
3. CONTRACTOR SHALL REMOVE LEVELING NUTS WHEN JOINT IS SET AND GRIND WELDS SMOOTH.
4. CONTRACTOR SHALL MATCH DRILL THE TIMBER WITH THE 3/4" LAG NUTS PRIOR TO SETTING THE EXPANSION DAM IN ITS FINAL POSITION.
5. CONTRACTOR SHALL TOUCH UP ANY DAMAGED PAINTED AREAS.

INSTALLATION PROCEDURE

STEP 1. Compare the dimensions of SECTION A-A on sheet #1 with the field dimensions. Correct as necessary.

STEP 2. Lift and then place expansion joint into blockout. While joint is suspended, install leveling devices and/or support brackets and adjust to proper grade and elevation. Remove lifting devices, and loosen shipping clamp nuts.

STEP 3. Preset the expansion joint opening using the ambient temperature and as determined by the Engineer in charge. Retighten nuts at shipping clamps.

STEP 4. Check joint for alignment at curbs.

STEP 5. Complete all connections to the superstructure, if necessary.

STEP 6. Prior to placement of concrete, all prestress devices shall be removed. Devices on top of the joint may remain if their location will not interfere with concrete placement or expansion joint performance.

STEP 7. Temperature and joint opening should be checked for any discrepancies from initial adjustment.

STEP 8. Contractor shall at this time have all required formwork in place.

STEP 9. All concrete placement shall be in accordance with the specifications.

STEP 10. Upon completing concrete placement operations, the Engineer shall determine when removal of the leveling devices will be permitted. (If applicable) Contractor shall repair any damaged painted areas.

⚠ STEP 11. INSTALL RAIL COVER PLATES.

NOV 24 1992

NO.	DESCRIPTION	NUMBER	DATE
4			
3			
2			
⚠	REVISED INSTALL STEP 11	JFW	11-23-1992

REVISIONS

THESE DRAWINGS AND THE DESIGNS, DETAILS AND/OR DIMENSIONING INFORMATION CONTAINED THEREIN ARE THE PROPRIETARY PROPERTY OF WATSON BOWMAN ACME AND ARE NOT TO BE REPRODUCED OR USED EXCEPT FOR THE PURPOSE FOR WHICH THEY HAVE BEEN FURNISHED. ALL RIGHTS OF DESIGN AND INVENTION ARE HEREBY RESERVED.

Watson Bowman Acme
50 Fleming Drive Amherst, NY. 14228 TEL. (716) 691-7366 FAX (716) 691-9629

PROJECT: U.S. 83 - U.S. 281 INTERCHANGE

TITLE: W.B.A. D-900 MODULAR EXP. JT. DETAILS

DETAILED BY: L.F.K.	DATE: 10-12-1992
CHECKED BY: J.F.W.	DATE: 10-16-92
SCALE: N.T.S.	WBA JOB NO: 28708
SHEET NO: 3 OF 3	DRAWING NO: B-14407

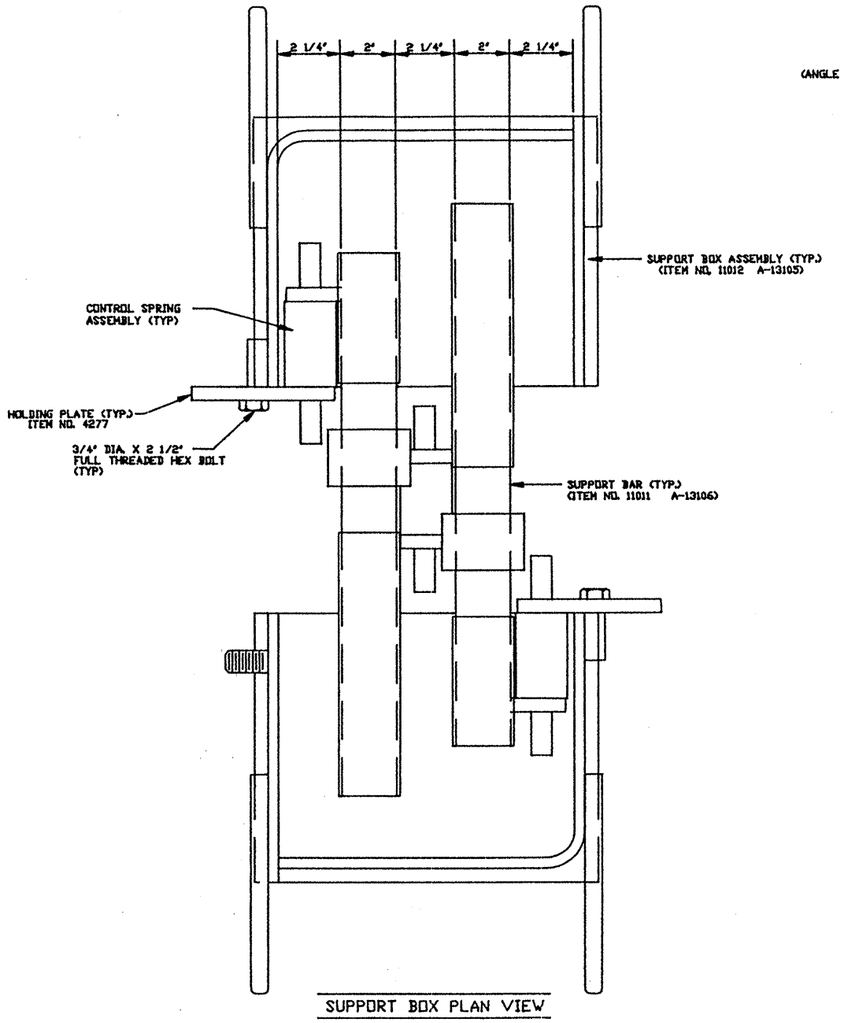

SUPPORT BOX PLAN VIEW

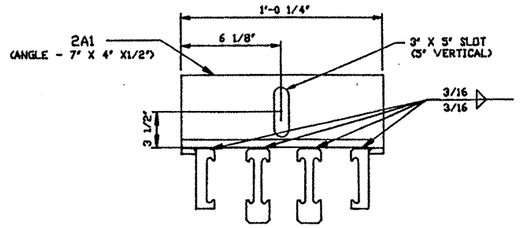

LIFTING DEVICE ASSEMBLY-2A1

(THIS IS A TEMPDARY DEVIVCE)

NOTE:

1. LIFTING ANGLES SHALL BE PLACED BY THE FABRICATOR TO ACHIEVE A LEVEL LIFT FOR PLACEMENT.
2. THE CONTRACTOR SHALL REMOVE AFTER THE JOINT IS SET IN BLOCKOUT,PRIOR TO PRESETTING OF JOINT.
3. THE CONTRACTOR SHALL REMOVE BY GRINDING WELDS SMOOTH.
4. CONTRACTOR SHALL REPAIR ANY DAMAGED PAINTED AREAS.

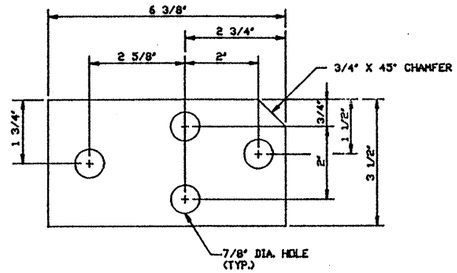

HOLDING PLATE DETAIL

(ITEM NO. 4277)

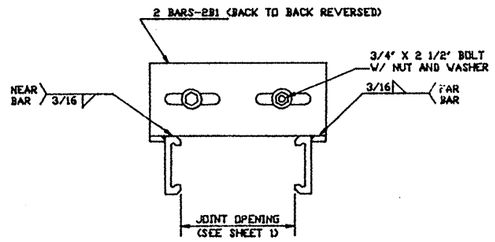

SHIPPING CLAMP ASSEMBLY

(THIS IS A TEMPDARY DEVIVCE)

NOTE:

1. SHIPPING CLAMPS SHALL BE SPACED DIRECTLY BETWEEN SUPPORT BOXES. PARALLEL TO THE CENTERLINE OF THE SUPPORT BAR. BETWEEN MITER LINE AND FIRST BOX, AND BETWEEN LAST BOX AND END OF JOINT.
2. EACH SHIPPING CLAMP ASSEMBLY SHALL INCLUDE:
   - (2) BAR - 2B1.
   - (2) 3/4" DIA. X 2 1/2" BOLT
   - (2) 3/4" STD. HEX NUT
   - (2) 3/4" STD. WASHERS
3. CONTRACTOR TO REMOVE SHIPPING CLAMPS WHEN JOINT IS SET AND GRIND WELDS SMOOTH.
4. CONTRACTOR SHALL REPAIR ANY DAMAGED PAINTED AREAS.

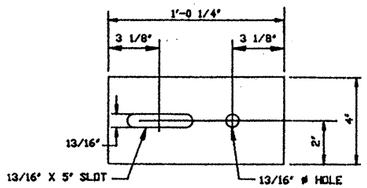

DETAIL - 2B1

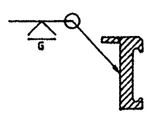

SHOP WELD

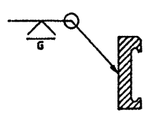

SHOP WELD

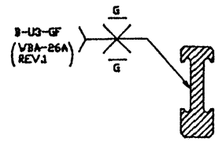

SHOP WELD

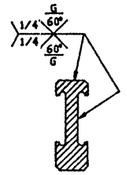

SHOP WELD
(UPTURN SPLICE)

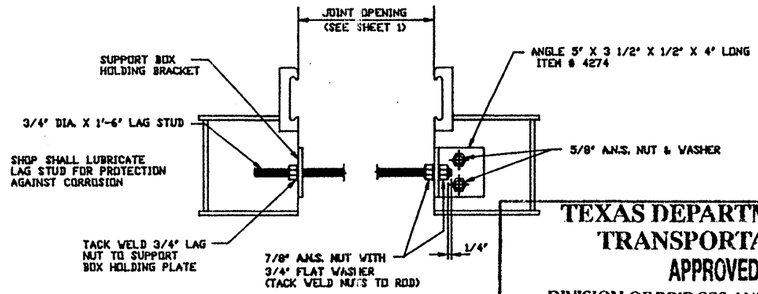

PRESTRESS DEVICE ASSEMBLY

(THIS IS A TEMPDARY DEVIVCE)

NOTE:

1. PRESTRESS DEVICES SHALL BE LOCATED AT EVERY SUPPORT.
2. PRESTRESS DEVICES SHALL BE SHOP INSTALLED.
3. THIS IS A TEMPORARY DEVICE USED FOR ADJUSTMENT. CONTRACTOR SHALL REMOVE PRESTRESS WHEN JOINT IS SET AND TOUCH UP DAMAGED PAINTED AREAS.

TEXAS DEPARTMENT OF TRANSPORTATION
APPROVED
DIVISION OF BRIDGES AND STRUCTURES
DEC 07 1992

APPROVAL OF THIS DRAWING DOES NOT RELIEVE THE CONTRACTOR OF THE RESPONSIBILITY FOR THE CORRECTNESS OF DETAIL.

PROCEDURE FOR END CAPPING NEOPRENE SEAL

(SHOP INSTALLED)

1. CLEAN SEAL ENDS WITH A SUITABLE SOLVENT CLEANER SUCH AS TOLUENE.
2. TRIM SPONGE AND/ OR COPE SEAL TO SECURE END CAP.
3. APPLY PRIMA-LUB ADHESIVE TO ADHERE END CAP IN PLACE.

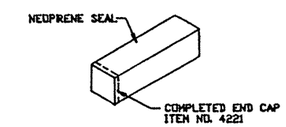

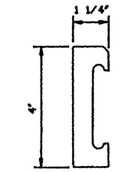

EDGE CHANNEL
(ITEM NO. 1886)

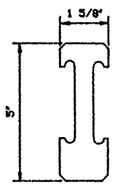

SUPPORT BEAM
(ITEM NO. 1885)

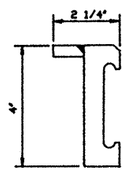

EDGE BEAM
(ITEM NO. 1884)

NOV 2 3 1992

NO.	DESCRIPTION	NAME	DATE
4			
3			
2			
1			

REVISIONS

THESE DRAWINGS AND THE DESIGNS, DETAILS AND/OR ENGINEERING INFORMATION CONTAINED HEREIN ARE THE PROPRIETARY PROPERTY OF WATSON BOWMAN ACME AND ARE NOT TO BE REPRODUCED OR USED EXCEPT FOR THE PURPOSE FOR WHICH THEY HAVE BEEN FURNISHED. ALL RIGHTS OF DESIGN AND INVENTION ARE HEREBY RESERVED.

Watson Bowman Acme

85 Pineview Drive Amherst, N.Y. 14228 TEL. (716) 691-7866 FAX (716) 691-9629

DETAILED BY: L.F.K.	DATE: 10-12-1992
CHECKED BY: J.F.V.	DATE: 10-16-92
PROJECT: U.S. 83 - U.S. 281 INTERCHANGE	SCALE: N.T.S.
	VBA JOB NO: 28708
TITLE: W.B.A. D-900 MODULAR EXP. JT. DETAILS	SHEET NO: 2 OF 3
	DRAWING NO: B-14407

NOTE:
SEE UPTURN DETAIL

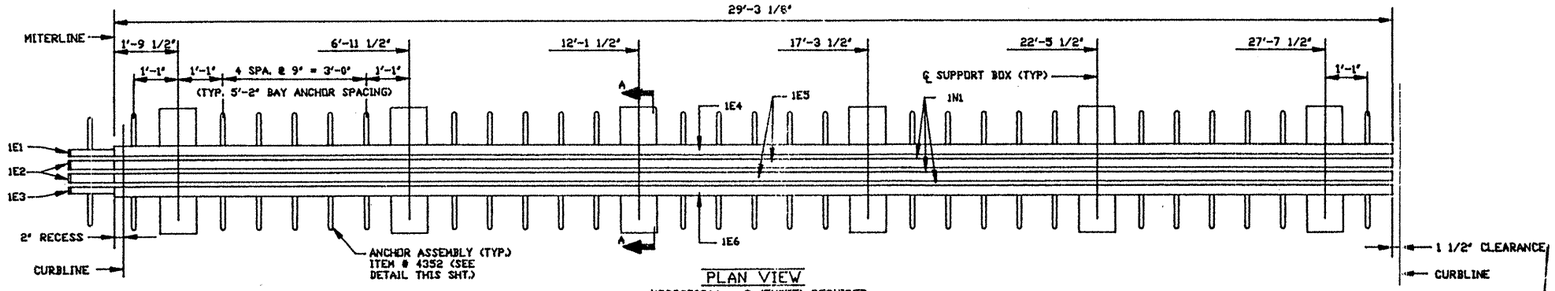

LOW SIDE

PLAN VIEW
MDD28708AA - 3 (THREE) REQUIRED
1 @ BENT 15 RAMP 1
1 @ BENT 16 RAMP 2
1 @ BENT 16 RAMP 3

HIGH SIDE

TEXAS DEPARTMENT OF TRANSPORTATION
APPROVED EXCEPT AS NOTED
DIVISION OF BRIDGES AND STRUCTURES

DEC 07 1992

APPROVAL OF THIS DRAWING DOES NOT RELIEVE THE CONTRACTOR OF THE RESPONSIBILITY FOR THE CORRECTNESS OF DETAIL.

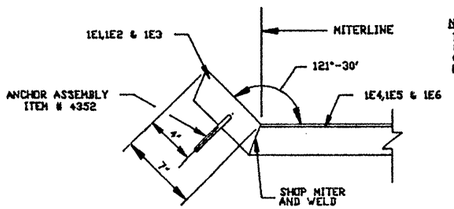

UPTURN DETAIL

NOTE:
⚠ BARRIER RAIL COVER PLATE NOT SHOWN (SEE WBA DWG A-14468 FOR DETAILS)

⚠ JOINT SHALL PROVIDE FOR 8 1/2" TOTAL MOVEMENT

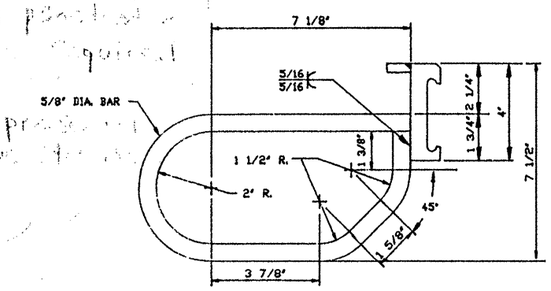

ANCHOR ASSEMBLY DETAIL
ITEM NO. 4352

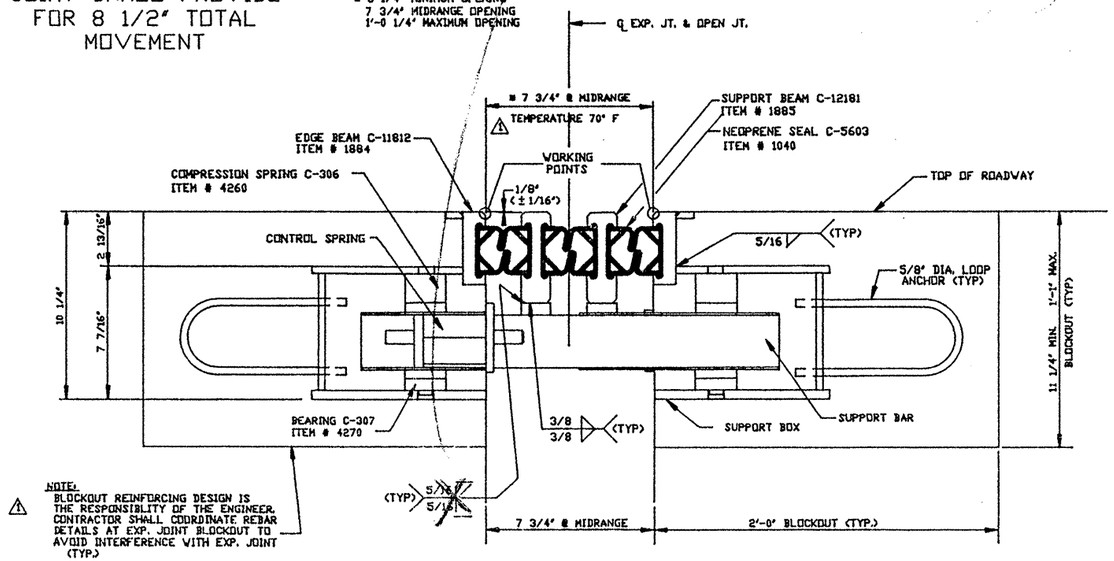

NOTE:
⚠ BLOCKOUT REINFORCING DESIGN IS THE RESPONSIBILITY OF THE ENGINEER. CONTRACTOR SHALL COORDINATE REBAR DETAILS AT EXP. JOINT BLOCKOUT TO AVOID INTERFERENCE WITH EXP. JOINT (TYP.)

SECTION A-A

STATE PLEASE SUPPLY
CHANGE PER 10° F

TEMPERATURE ADJUSTMENT

THE CHANGE PER 10°F IS MEASURED PERPENDICULAR TO THE JOINT FOR BOTH NORMAL AND SKEWED JOINTS

DIMENSIONS SPANNING THE OPEN JOINT WILL DECREASE OR INCREASE FOR EVERY 10°F RISE OR FALL RESPECTIVELY

⚠
7/16 INCHES AT BENT 15 RAMP 1
1/2 INCHES AT BENT 16 RAMP 2
9/16 INCHES AT BENT 16 RAMP 3

SUPERSEDED

GENERAL NOTES

1. THE CONTRACTOR MUST VERIFY ALL DIMENSIONS PRIOR TO FABRICATION, TO INSURE ACCURACY OF THE EXPANSION JOINT.
2. FABRICATION AND MATERIALS SHALL COMPLY WITH THE 1982 STATE OF TEXAS STANDARD SPECIFICATIONS FOR CONSTRUCTION OF HIGHWAYS AND BRIDGES AS MODIFIED BY THE CONTRACT SPECIAL PROVISIONS, EXCEPT AS NOTED HEREIN.
3. WELDING SHALL BE IN ACCORDANCE WITH SDHPT BULLETIN C-5.
4. PRIOR TO PAINTING ALL STEEL SURFACES SHALL RECEIVE A CLASS 'B' BLAST CLEANING (SSPC-SP6 COMMERCIAL). ALL STEEL SURFACES (EXCEPT STAINLESS, SURFACES IN CONTACT WITH CONCRETE AND SURFACES IN CONTACT WITH THE NEOPRENE SEALS) SHALL BE SHOP PAINTED WITH PROTECTION SYSTEM (800 PRIME COAT) APPLIED TO A 4 MILS DRY FILM THICKNESS.
5. THE NEOPRENE SEALS SHALL BE SHOP INSTALLED IN ONE CONTINUOUS PIECE, BY THE MANUFACTURER USING SEAL INSTALLATION TOOLS AND PRIMA-LUB ADHESIVE. THE ADHESIVE SHALL BE APPLIED TO THE FULL STEEL TO NEOPRENE CONTACT SURFACES. FACTORY SPLICES WILL BE PERMITTED.
6. THE ENDS OF THE NEOPRENE SEALS SHALL BE CAPPED WITH A SPONGE PLUG BONDED IN PLACE WITH PRIMA-LUB ADHESIVE.
7. THE EXPANSION DAM SHALL BE FACTORY PRESET TO 7 3/4" (EXPANSION DAM SYSTEM MIDRANGE). ANY FIELD ADJUSTMENTS TO THIS DIMENSION PRIOR TO PLACEMENT OF CONCRETE SHALL BE AS ORDERED BY THE ENGINEER. ⚠
8. IN HOUSE STATE SHOP INSPECTION IS NOT REQUIRED.
9. ALL STEEL PLATES, BARS AND SHAPES THAT WILL BE A PART OF THE PERMANENT MODULAR EXPANSION DAM EXCEPT ANCHORS AND STAINLESS STEEL APPLICATIONS SHALL MEET THE REQUIREMENTS OF ASTM A-588.

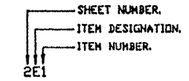

MARK SYSTEM

STATE: TEXAS
COUNTY: HIDALGO
PROJECT NO.: NH92(50)M (CSJ)39-17-97
PRODUCT NO.: MDD28708AA
JOINT LOCATION: SEE PLAN VIEW

REFERENCE DRAWING NUMBERS: A-13105 & A-13106

NOV 24 1992

NO.	DESCRIPTION	NAME	DATE
4			
3			
2			
⚠	REVISIONS PER STATE DOT	JFW	11-23 1992

REVISIONS

THIS DRAWING AND THE DESIGNS, DETAILS AND/OR ENGINEERING INFORMATION CONTAINED HEREIN ARE THE PROPRIETARY PROPERTY OF WATSON BOWMAN ACME AND ARE NOT TO BE REPRODUCED OR USED EXCEPT FOR THE PURPOSE FOR WHICH THEY HAVE BEEN FURNISHED. ALL RIGHTS OF DESIGN AND INVENTION ARE HEREBY RESERVED.

Watson Bowman Acme
85 Pineview Drive Amherst, NY. 14228 TEL. (716) 691-7366 FAX (716) 691-9239

PROJECT: U.S. 83 - U.S. 281 INTERCHANGE		DETAILED BY: L.F.K.	DATE: 10-12-1992
		CHECKED BY: J.F.W.	DATE: 10-16-92
		SCALE: N.T.S.	WBA JOB NO: 28708
TITLE: W.B.A. D-900 MODULAR EXP. JT. DETAILS		SHEET NO: 1 OF 3	DRAWING NO: B-14407

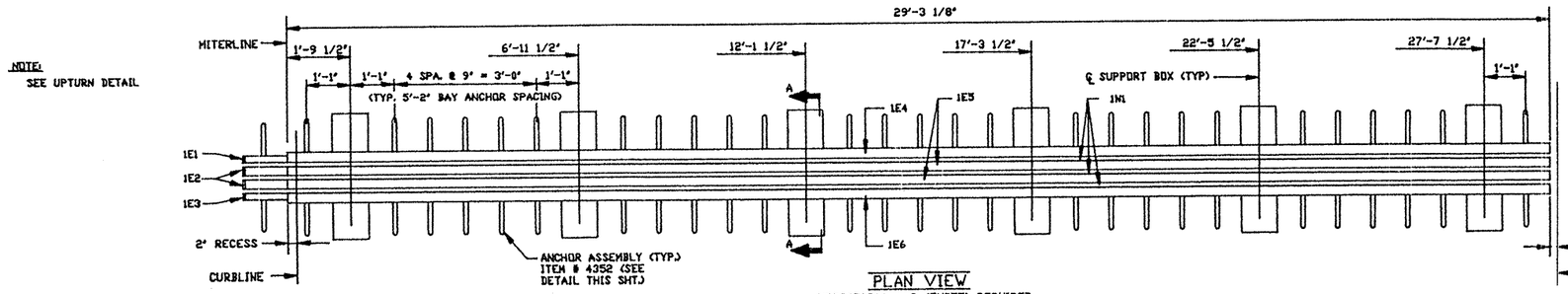

NOTE:
SEE UPTURN DETAIL

LOW SIDE

PLAN VIEW

MOD28708AA - 3 (THREE) REQUIRED
1 @ BENT 15 RAMP 1
1 @ BENT 16 RAMP 2
1 @ BENT 16 RAMP 3

HIGH SIDE

TEXAS DEPARTMENT OF TRANSPORTATION
RETURNED FOR CORRECTION
NOV 12 1992
DIVISION OF BRIDGES AND STRUCTURES

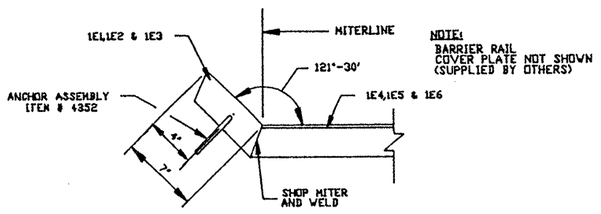

NOTE:
BARRIER RAIL
COVER PLATE NOT SHOWN
(SUPPLIED BY OTHERS)

UPTURN DETAIL

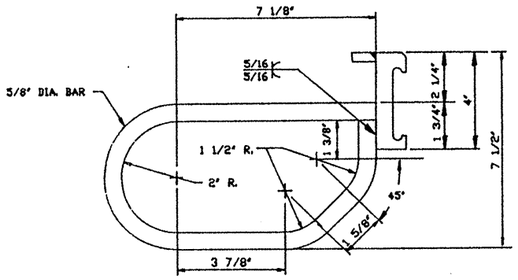

ANCHOR ASSEMBLY DETAIL
ITEM NO. 4352

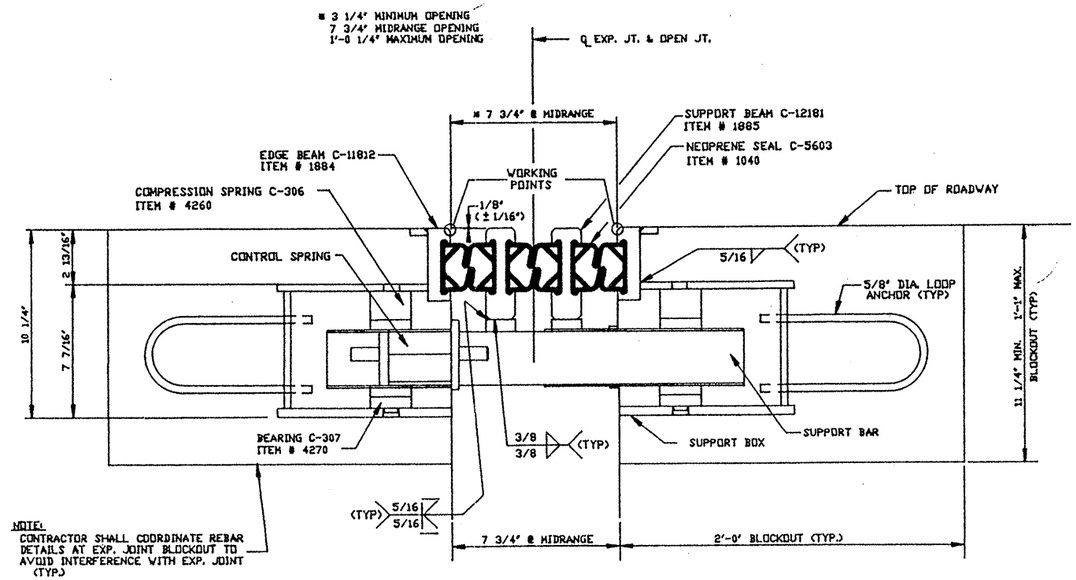

NOTE:
CONTRACTOR SHALL COORDINATE REBAR DETAILS AT EXP. JOINT BLOCKOUT TO AVOID INTERFERENCE WITH EXP. JOINT (TYP.)

SECTION A-A

TEMPERATURE ADJUSTMENT

THE CHANGE PER 10°F IS MEASURED PERPENDICULAR TO THE JOINT FOR BOTH NORMAL AND SKEWED JOINTS

DIMENSIONS SPANNING THE OPEN JOINT WILL DECREASE OR INCREASE FOR EVERY 10°F RISE OR FALL RESPECTIVELY

_____INCHES AT _____

STATE PLEASE SUPPLY !

GENERAL NOTES

1. THE CONTRACTOR MUST VERIFY ALL DIMENSIONS PRIOR TO FABRICATION, TO INSURE ACCURACY OF THE EXPANSION JOINT.
2. FABRICATION AND MATERIALS SHALL COMPLY WITH THE 1982 STATE OF TEXAS STANDARD SPECIFICATIONS FOR CONSTRUCTION OF HIGHWAYS AND BRIDGES AS MODIFIED BY THE CONTRACT SPECIAL PROVISIONS, EXCEPT AS NOTED HEREIN.
3. WELDING SHALL BE IN ACCORDANCE WITH SDHPT BULLETIN C-5.
4. PRIOR TO PAINTING ALL STEEL SURFACES SHALL RECEIVE A CLASS 'B' BLAST CLEANING (SSPC-SP6 COMMERCIAL). ALL STEEL SURFACES (EXCEPT STAINLESS, SURFACES IN CONTACT WITH CONCRETE, AND SURFACES IN CONTACT WITH THE NEOPRENE SEALS) SHALL BE SHOP PAINTED WITH PROTECTION SYSTEM (800 PRIME COAT) APPLIED TO A 4 MILS DRY FILM THICKNESS.
5. THE NEOPRENE SEALS SHALL BE SHOP INSTALLED IN ONE CONTINUOUS PIECE, BY THE MANUFACTURER USING SEAL INSTALLATION TOOLS AND PRIMA-LUB ADHESIVE. THE ADHESIVE SHALL BE APPLIED TO THE FULL STEEL TO NEOPRENE CONTACT SURFACES. FACTORY SPLICES WILL BE PERMITTED.
6. THE ENDS OF THE NEOPRENE SEALS SHALL BE CAPPED WITH A SPONGE PLUG BONDED IN PLACE WITH PRIMA-LUB ADHESIVE.
7. THE EXPANSION DAM SHALL BE FACTORY PRESET TO 7 3/4" (EXPANSION DAM SYSTEM MIDRANGE). ANY FIELD ADJUSTMENTS TO THIS DIMENSION PRIOR TO PLACEMENT OF CONCRETE SHALL BE AS ORDERED BY THE ENGINEER.

STATE: PLEASE VERIFY

8. IN HOUSE STATE SHOP INSPECTION IS NOT REQUIRED.
9. ALL STEEL PLATES, BARS AND SHAPES THAT WILL BE A PART OF THE PERMANENT MODULAR EXPANSION DAM EXCEPT ANCHORS AND STAINLESS STEEL APPLICATIONS SHALL MEET THE REQUIREMENTS OF ASTM A-588.

2E1
- SHEET NUMBER.
- ITEM DESIGNATION.
- ITEM NUMBER.

MARK SYSTEM

STATE: TEXAS
COUNTY: HIDALGO
PROJECT NO.: NH92(50)M
PRODUCT NO.: MOD28708AA
JOINT LOCATION: SEE PLAN VIEW

REFERENCE DRAWING NUMBERS: A-13105 & A-13106

NO.	DESCRIPTION	BY	DATE
4			
3			
2			
1			

REVISIONS

THESE DRAWINGS AND THE DESIGNS DETAILS AND/OR EXPRESSIONS INFORMATION CONTAINED HEREIN ARE THE PROPRIETARY PROPERTY OF WATSON BOWMAN ACME CORP. AND

Watson Bowman Acme

80 Pineview Drive Amherst, NY. 14228 TEL. (716) 691-7366 FAX (716) 691-9629

PROJECT: U.S. 83 - U.S. 281 INTERCHANGE	
TITLE:	
DETAILED BY: L.F.K.	DATE: 10-12-1992
CHECKED BY: J.F.W.	DATE: 10-16-92
SCALE: N.T.S.	WBA JOB NO: 28708
SHEET NO.: 1 OF 2	DRAWING NO: B-14407

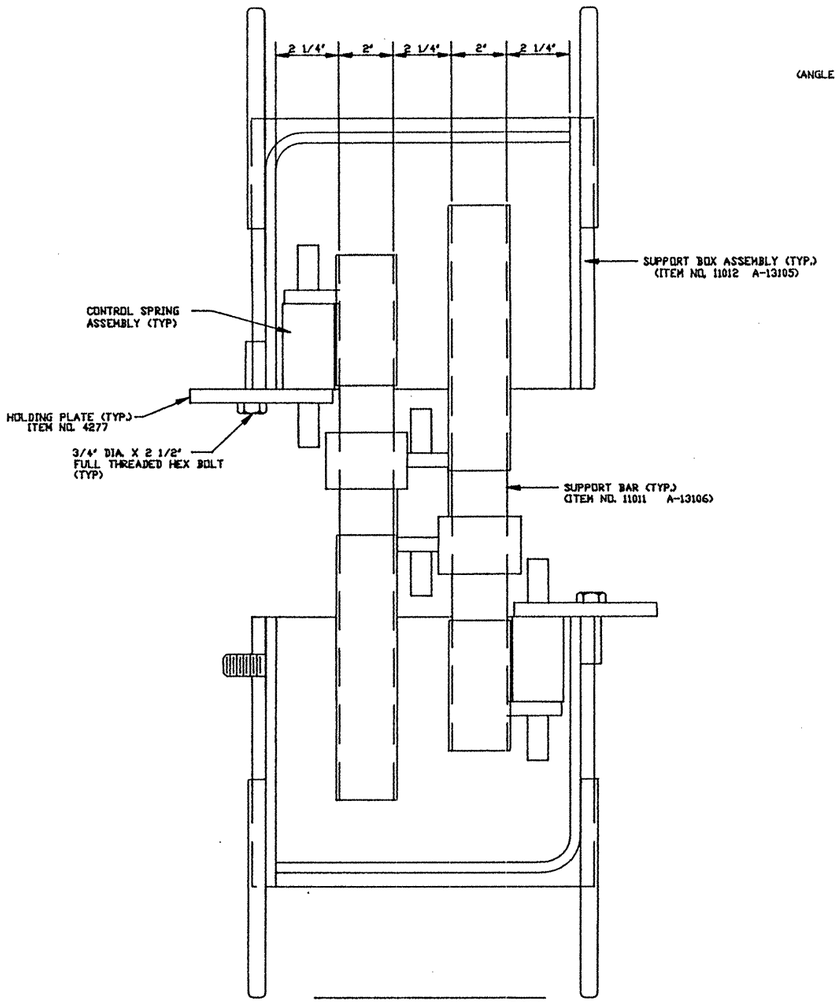

SUPPORT BOX PLAN VIEW

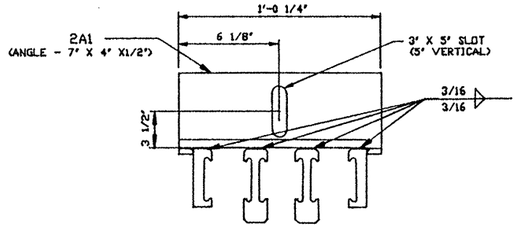

LIFTING DEVICE ASSEMBLY-2A1

(THIS IS A TEMPDARY DEVIVCE)

NOTE:

1. LIFTING ANGLES SHALL BE PLACED BY THE FABRICATOR TO ACHIEVE A LEVEL LIFT FOR PLACEMENT.
2. THE CONTRACTOR SHALL REMOVE AFTER THE JOINT IS SET IN BLOCKOUT,PRIOR TO PRESETTING OF JOINT.
3. THE CONTRACTOR SHALL REMOVE BY GRINDING WELDS SMOOTH.
4. CONTRACTOR SHALL REPAIR ANY DAMAGED PAINTED AREAS.

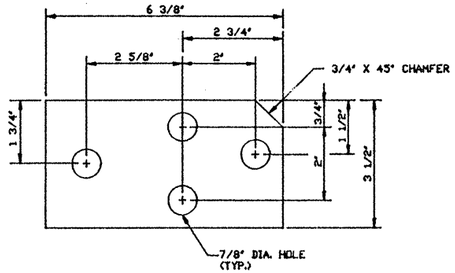

HOLDING PLATE DETAIL

(ITEM NO. 4277)

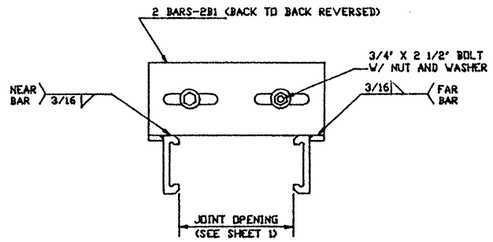

SHIPPING CLAMP ASSEMBLY

(THIS IS A TEMPDARY DEVIVCE)

NOTE:

1. SHIPPING CLAMPS SHALL BE SPACED DIRECTLY BETWEEN SUPPORT BOXES, PARALLEL TO THE CENTERLINE OF THE SUPPORT BAR, BETWEEN MITER LINE AND FIRST BOX, AND BETWEEN LAST BOX AND END OF JOINT.
2. EACH SHIPPING CLAMP ASSEMBLY SHALL INCLUDE:
   - (2) BAR - 2B1
   - (2) 3/4" DIA. X 2 1/2" BOLT
   - (2) 3/4" STD. HEX NUT
   - (2) 3/4" STD. WASHERS
3. CONTRACTOR TO REMOVE SHIPPING CLAMPS WHEN JOINT IS SET AND GRIND WELDS SMOOTH.
4. CONTRACTOR SHALL REPAIR ANY DAMAGED PAINTED AREAS.

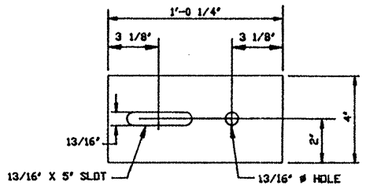

DETAIL - 2B1

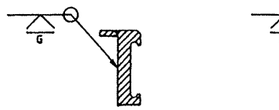

SHOP WELD

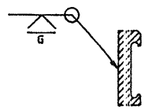

SHOP WELD

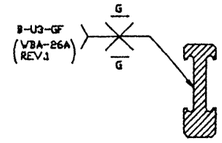

SHOP WELD

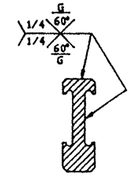

SHOP WELD
(UPTURN SPLICE)

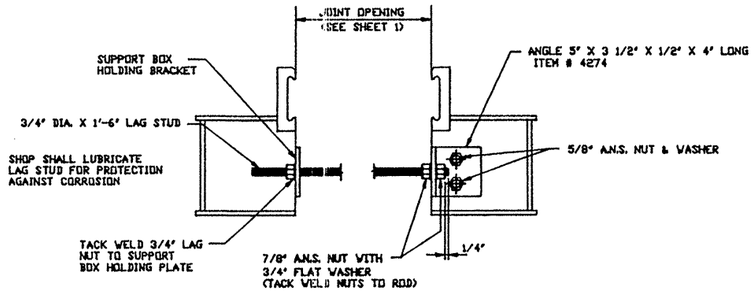

PRESTRESS DEVICE ASSEMBLY

(THIS IS A TEMPDARY DEVIVCE)

NOTE:

1. PRESTRESS DEVICES SHALL BE LOCATED AT EVERY SUPPORT BOX.
2. PRESTRESS DEVICES SHALL BE SHOP INSTALLED.
3. THIS IS A TEMPORARY DEVICE USED FOR ADJUSTMENT. CONTRACTOR SHALL REMOVE PRESTRESS WHEN JOINT IS SET AND TOUCH UP DAMAGED PAINTED AREAS.

PROCEDURE FOR END CAPPING NEOPRENE SEAL

(SHOP INSTALLED)

1. CLEAN SEAL ENDS WITH A SUITABLE SOLVENT CLEANER SUCH AS TOLUENE.
2. TRIM SPONGE AND/ OR COPE SEAL TO SECURE END CAP.
3. APPLY PRIMA-LUB ADHESIVE TO ADHERE END CAP IN PLACE.

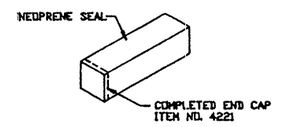

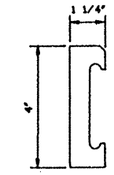

EDGE CHANNEL
(ITEM NO. 1886)

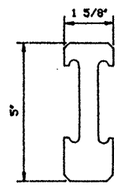

SUPPORT BEAM
(ITEM NO. 1885)

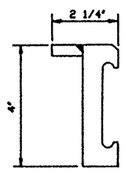

EDGE BEAM
(ITEM NO. 1884)

OCT 1 9 1992

NO.	DESCRIPTION	NAME	DATE
4			
3			
2			
1			

REVISIONS

THIS DRAWING AND THE DESIGNS, DETAILS AND/OR ENGINEERING INFORMATION CONTAINED HEREIN ARE THE PROPRIETARY PROPERTY OF WATSON BOWMAN ACME AND ARE NOT TO BE REPRODUCED OR USED EXCEPT FOR THE PURPOSE FOR WHICH THEY HAVE BEEN FURNISHED. ALL RIGHTS OF DESIGN AND INVENTION ARE HEREBY RESERVED.

Watson Bowman Acme
95 Pineview Drive Amherst, N.Y. 14228 TEL. (716) 691-7866 FAX (716) 691-9239

PROJECT: U.S. 83 - U.S. 281 INTERCHANGE

TITLE: W.B.A. D-900 MODULAR EXP. JT. DETAILS

DETAILED BY: L.F.K.	DATE: 10-12-1992
CHECKED BY: J.F.W.	DATE: 10-16-92
SCALE: N.T.S.	WBA JOB NO: 28708
SHEET NO: 2 OF 3	DRAWING NO: B-14407

STRUCTURED BILL OF MATERIALS FOR MOD28708AA

MOD28708AA QTY.REQ'D: 3 EA STRUCTURED BILL OF MATERIALS DWG NO. B-14407

LV	PART NO.	QUANTITY	U/M	DESCRIPTION	MATERIAL	REV. #
0	MOD28708AA	1.000	EA	MOD900,RAMPS 1,2 & 3,32.02FT(X	SHIPPING LENGTH 30.0 FT.+/-	
1	MOD28708S	3.000	EA	SEAL FOR SHOP INSTALL (1N1)(U		
2	1040	32.000	FT	MOD SEAL C5603		
1	MOD28708AA01	1.000	PK	EXTRUSION ASSEMBLIES (X		
2	4352	56.000	EA	MOD COMP LOOP ANC C13308	5/8 DIA BAR A36	
2	4277	12.000	EA	MOD BOX HOLD PLT A588 C14291		
2	4274	6.000	EA	MOD PRESTRESS ANGLE C12577	ANGLE 5X3 1/2X1/2X4 LG A36	
2	MOD28708AA02	1.000	PK	PROFILES (W		
3	1986	60.000	FT	MOD EC FM 1.25x4 A588 C12186	EDGE CHANNEL (DOMESTIC) A588	
3	1885	61.500	FT	MODSHP CB 1.63x3 A588 C12181	SUPPORT BEAM (DOMESTIC) A588	
3	1884	1.750	FT	MODSHP EA WELDED A588 C11812	EDGE BEAM (DOMESTIC) A588	
2	11012	12.000	EA	D900 SUPPORT BOX A-13105 (X		
2	11011	12.000	EA	D900 SUP BAR 1P1 ON A-13106(X		
2	MOD28708AA03	1.000	PK	PARTS FOR ASSEMBLY (U		
3	4260	24.000	EA	MODULAR BEARING (UPPER) C306	COMPRESSION SPRING,URETHANE	
3	4270	24.000	EA	MODULAR BEARING (LOWER) C307	COMPRESSION SPRING,URETHANE	
3	4320	18.000	EA	MOD CONTROL SPRING DOWEL C13746		
3	4321	18.000	EA	MOD CONTROL SPRING BUFFER C13751		
3	8090	12.000	EA	NUT 7/8 H A325 ZP		
3	7959	12.000	EA	NUT 5/8 H A563 B695-83 C50 T1 AM	ZP	
3	7549	12.000	EA	WASHER 5/8 F436 B695-83 C50 T1 AM	ZP	
3	8084	14.000	EA	NUT 3/4 H NL LAG ZP	ZP	
3	5304	38.000	EA	BOLT 3/4 X 2 1/2 A325 ZP	FULL THREAD ZP	
3	7602	26.000	EA	WASHER 3/4 F436 ZP AM	ZP	
3	4221	6.000	EA	MODULAR SEAL END PLUG C12728		
3	8021	14.000	EA	NUT 3/4 H A325 ZP AM		
2	MOD28708AA04	6.000	EA	PRESTRESS ROD 1'-6' (U		
3	7152	1.500	FT	THD ROD 3/4 LAG STUD RICHMOD		
2	MOD28708AA05	14.000	EA	SHIPPING CLAMP 2B1 (W		
3	5931	1.021	FT	FLAT BAR 3/8 X 4 A36	A36	
2	MOD28708AA06	2.000	EA	LIFTING ANGLE 2A1 (W		
3	4140	1.021	FT	ANGLE 7X4X1/2 A588	A588	
2	MOD28708AA07	1.000	PK	PAINT FOR SUBCONTRACT (U		
3	3403	0.000	EA	PNT TXS PRIMER 800d SYS1 3GA KIT	AS REQUIRED	

MOD28708PS QTY.REQ'D: 1 EA. STRUCTURED BILL OF MATERIALS DWG NO. B-14407

LV	PART NO.	QUANTITY	U/M	DESCRIPTION	MATERIAL	REV. #
0	MOD28708PS	1.000	PK	PARTS FOR SHIPPING (V		
1	8084	24.000	EA	NUT 3/4 H NL LAG ZP		
1	7602	24.000	EA	WASHER 3/4 F436 ZP		
1	4293	24.000	EA	MOD LEV ROD 1 FT P.N. 7152		

END OF STRUCTURED BILL OF MATERIALS

MATERIAL SPECIFICATION

STEEL EDGE & SUPPORT BEAMS - All beams are made of ASTM A-588 grade steel and have grooves which grip the neoprene locking seal.

NEOPRENE LOCKING SEAL - The neoprene locking seal is bonded to the steel beams with Prima-Lub Adhesive. The neoprene seal is designed to absorb all joint movements. The physical properties of the locking seal are as follows:

PHYSICAL PROPERTIES	PROCEDURE	REQUIREMENT
Tensile Strength	(D-412)	2000 PSI
Elongation at Break	(D-412)	250%
Hardness, Type A Durometer	(D-2240)	55±5
Compression Set 70 hour at 212°F (D)	(D-395) Method B Mod.	40%
Oven Aging, 70 hour at 212°F	(D-573)	
Tensile Strength, loss, max.		20%
Elongation, loss, max.		20%
Hardness, Type A Durometer (points change)		0 to +10
Oil Swell, Astm #3, 70 hour at 212, weight change max.		45%
Ozone Resistance, 20% strain 300 PPHM, in air at 104°F (wiped with toluene to remove surface contamination)	(D-1149)	No Cracks

COMPRESSION SPRING C-306 - This compression spring is composed of urethane, epoxy and 3/64" thick teflon sheets. The compression spring sits on top of the support bar. The physical properties of the urethane are:

Shore Durometer	(ASTM D-2240)	90A
Elongation at Break	(ASTM D-412)	425%
Tensile Strength	(ASTM D-412)	6500 PSI
100% Modulus	(ASTM D-412)	1200 PSI
300% Modulus	(ASTM D-412)	2400 PSI
Tear Strength	(ASTM D-470)	110 PLI
Rebound Resilience	(ASTM D-2632)	40%

CONTROL SPRING - The control spring which is located between the support bars act to equalize the expansion of each seal. The control spring is made of URETHANE.

STAINLESS STEEL SHEETING - Stainless steel is used on the sliding surfaces of the support bar. The stainless steel contact the teflon surfaces of the bearing and compression spring. The mechanical properties of the stainless steel are as follows:

Tensile Strength	92,700 PSI
Yield	51,700 PSI
Hardness	Rb 88
Bend Test	180 TXT
Elongation	36%

PRIMA-LUB ADHESIVE - Prima-lub Adhesive is used to bond the neoprene locking seal to the steel extrusions. This adhesive shall be a one-part moisture curing polyurethane and hydrocarbon solvent mixture with the following physical properties:

Average Weight per Gallon	8.5 lbs +/- 10%
Solids Content	72% (min.)
Adhesive to remain workable	From 5-120°F
Film Strength	2000 PSI (min.)
Elongation at room temperature	350% (min.)
Flash Point (seta closed cup)	over 100°F

BEARING C-307 - The bearing is composed of urethane, epoxy and 3/64" thick teflon sheet on which the support bar slides on. The physical properties of the urethane are:

Shore Durometer	(ASTM D-2240)	90A
Elongation at Break	(ASTM D-412)	425%
Tensile Strength	(ASTM D-412)	6500 PSI
100% Modulus	(ASTM D-412)	1200 PSI
300% Modulus	(ASTM D-412)	2400 PSI
Tear Strength	(ASTM D-470)	110 PLI
Rebound Resilience	(ASTM D-2632)	40%

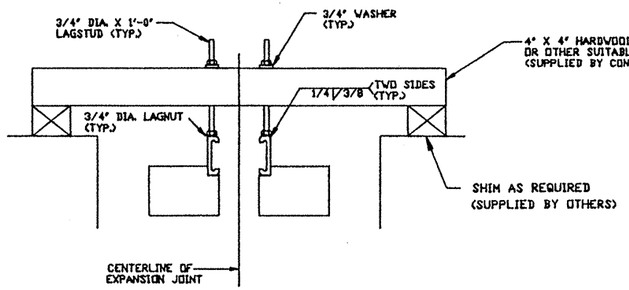

ELEVATION

LEVELING ASSEMBLY

NOTE:

1. LEVELING NUTS SHALL BE LOCATED AT EVERY OTHER SUPPORT BOX.
2. LEVELING NUTS SHALL BE SHOP INSTALLED PARALLEL TO THE EXPANSION JOINT SUPPORT BARS.
3. CONTRACTOR SHALL REMOVE LEVELING NUTS WHEN JOINT IS SET AND GRIND WELDS SMOOTH.
4. CONTRACTOR SHALL MATCH DRILL THE TIMBER WITH THE 3/4" LAG NUTS PRIOR TO SETTING THE EXPANSION DAM IN ITS FINAL POSITION.
5. CONTRACTOR SHALL TOUCH UP ANY DAMAGED PAINTED AREAS.

INSTALLATION PROCEDURE

STEP 1. Compare the dimensions of SECTION A-A on sheet #1 with the field dimensions. Correct as necessary.

STEP 2. Lift and then place expansion joint into blockout. While joint is suspended, install leveling devices and/or support brackets and adjust to proper grade and elevation. Remove lifting devices, and loosen shipping clamp nuts.

STEP 3. Preset the expansion joint opening using the ambient temperature and as determined by the Engineer in charge. Retighten nuts at shipping clamps.

STEP 4. Check joint for alignment at curbs.

STEP 5. Complete all connections to the superstructure, if necessary.

STEP 6. Prior to placement of concrete, all prestress devices shall be removed. Devices on top of the joint may remain if their location will not interfere with concrete placement or expansion joint performance.

STEP 7. Temperature and joint opening should be checked for any discrepancies from initial adjustment.

STEP 8. Contractor shall at this time have all required formwork in place.

STEP 9. All concrete placement shall be in accordance with the specifications.

STEP 10. Upon completing concrete placement operations, the Engineer shall determine when removal of the leveling devices will be permitted. (if applicable) Contractor shall repair any damaged painted areas.

STEP 11. INSTALL RAIL COVER PLATES (SUPPLIED BY OTHERS).

OCT 19 1992

NO.	DESCRIPTION	NA	DATE
4			
3			
2			
1			

REVISIONS

THIS DRAWING AND THE DESIGNS, DETAILS AND/OR ENGINEERING INFORMATION CONTAINED HEREIN ARE THE PROPRIETARY PROPERTY OF WATSON BOWMAN ACME AND ARE NOT TO BE REPRODUCED OR USED EXCEPT FOR THE PURPOSE FOR WHICH THEY HAVE BEEN FURNISHED. ALL RIGHTS OF DESIGN AND INVENTION ARE HEREBY RESERVED.

Watson Bowman Acme
95 Pineview Drive Amherst, N.Y. 14228 TEL. (716) 691-7866 FAX (716) 691-9629

PROJECT	U.S. 83 - U.S. 281 INTERCHANGE
TITLE	W.B.A. D-900 MODULAR EXP. JT. DETAILS

DETAILED BY	L.F.K.	DATE	10-12-1992
CHECKED BY	J.F.W.	DATE	10-16-92
SCALE	N.T.S.	WBA JOB NO.	28708
SHEET NO.	3 OF 3	DRAWING NO.	B-14407

11012 ⚠1 QTY.REQ'D: 1 EA — STRUCTURED BILL OF MATERIALS — DWG.NO. A-13105

LEV	PART NO.	QUANTITY	U/M	DESCRIPTION	MATERIAL
0	⚠1 11012	1.000	EA	D900 SUPPORT BOX STRAIGHT (X	
1	3550	52.000	LB	PLATE 3/8 A588	
1	11000SP	1.000	PK	SUPPORT BOX HDVRE PARTS (U	
2	4317	2.000	EA	MOD COMP BOX LOOP ANC	
2	7010	⚠2 1.000	EA	THD STUD 5/8X1 1/2 AW NP 108	
2	8085	2.000	EA	NUT 3/4 X 2 1/4 H COUPLER ZP	A563

END OF STRUCTURED BILL OF MATERIALS

⚠2 11010 ⚠2 QTY. REQ'D 1 EA — STRUCTURED BILL OF MATERIALS — DWG.NO. A-13105

LEV	PART NO.	QUANTITY	U/M	DESCRIPTION	MATERIAL
⚠2 0	11010	1.000	EA	D900 SUPPORT BOX STRAIGHT (X	
1	3540	52.000	LB	PLATE 3/8 A36	
1	11000SP	1.000	PK	SUPPORT BOX HDVRE PARTS (U	
2	4317	2.000	EA	MOD COMP BOX LOOP ANC	
2	7010	⚠2 1.000	EA	THD STUD 5/8X1 1/2 AW NP 108	
2	8085	2.000	EA	NUT 3/4 X 2 1/4 H COUPLER ZP	A563

END OF STRUCTURED BILL OF MATERIALS

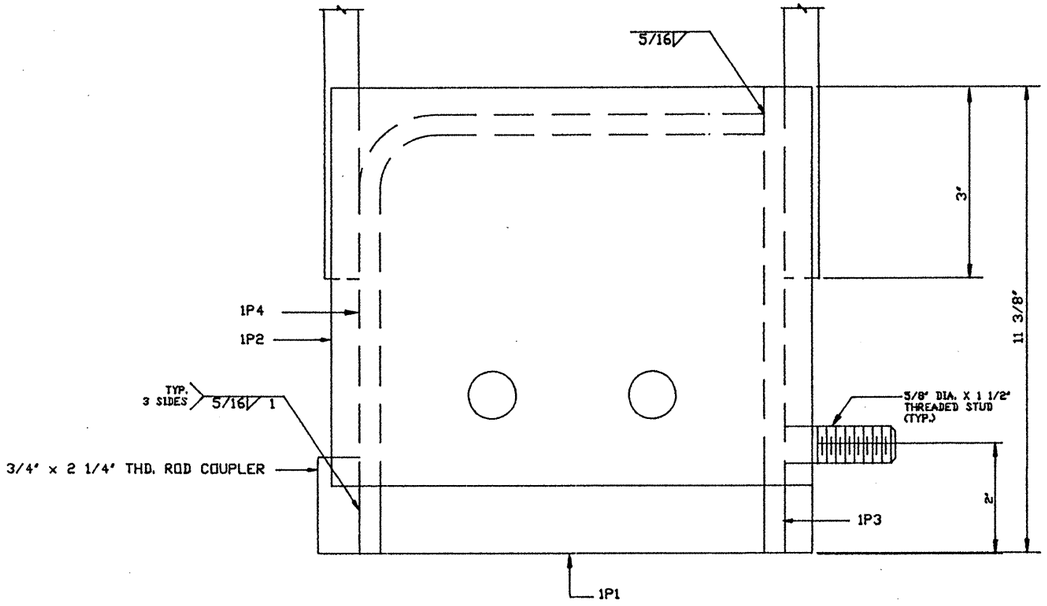

SUPPORT BOX ASSEMBLY

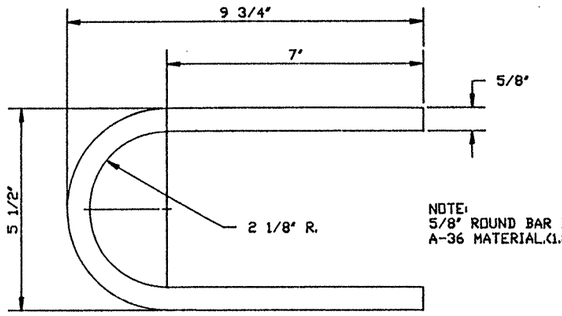

NOTE:
5/8" ROUND BAR IS MADE OF A-36 MATERIAL.(1.805 FT. REQ'D.)

MOD. COMP. BOX LOOP ANCHOR
ITEM# 4317

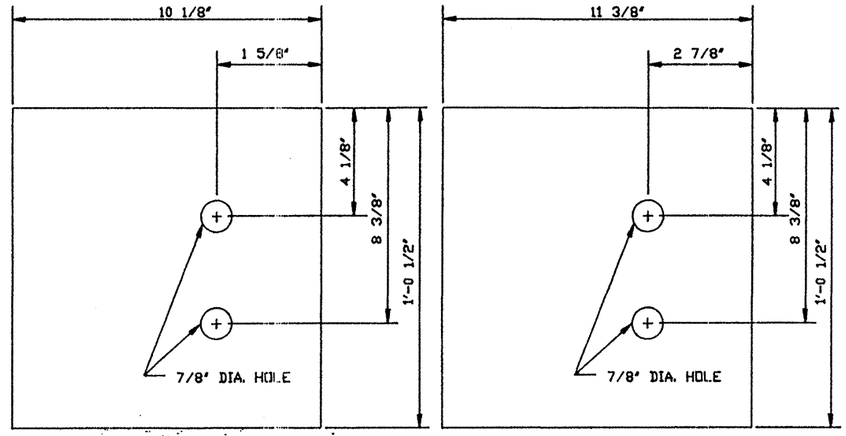

DETAIL - 1P2

DETAIL - 1P1

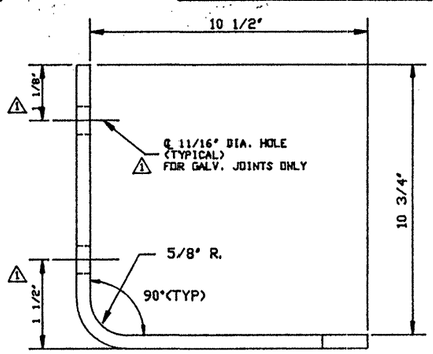

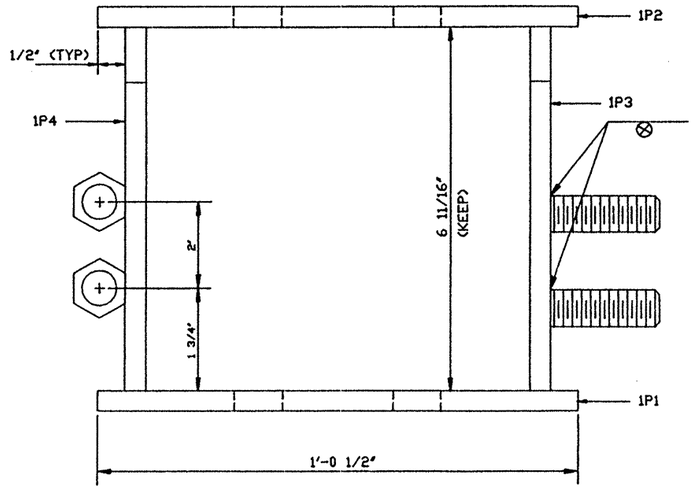

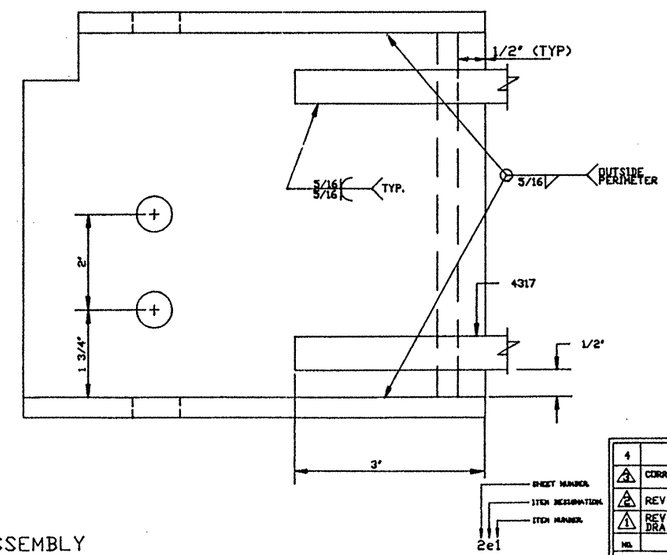

MARK SYSTEM

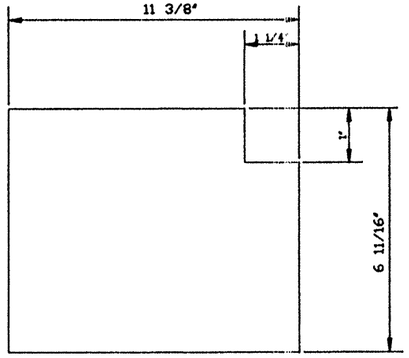

DETAIL - 1P3

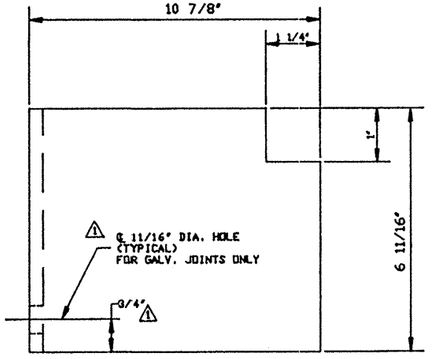

DETAIL - 1P4
DEVELOPED LENGTH = 1'-9 5/16"

OCT 19 1992

NO.	DESCRIPTION	NAME	DATE
4			
⚠3	CORRECT ITEM NUMBER OF 11010	JMJ	9-19-92
⚠2	REVISED STRUCTURED BILL	ASK	5-21-92
⚠1	REVISED PRODUCT NO. ADDED GALANIZING DRAIN HOLES	LFK	4-20-92

REVISIONS

THESE DRAWINGS AND THE DESIGNS, DETAILS AND/OR ENGINEERING INFORMATION CONTAINED HEREIN ARE THE PROPRIETARY PROPERTY OF WATSON BOWMAN ACME AND ARE NOT TO BE REPRODUCED OR USED EXCEPT FOR THE PURPOSE FOR WHICH THEY HAVE BEEN FURNISHED. ALL RIGHTS OF DESIGN AND INVENTION ARE HEREBY RESERVED.

Watson Bowman Acme
50 Fleetview Drive Amherst, N.Y. 14228 TEL. (716) 691-7866 FAX (716) 691-9239

DETAILED BY: JMJ	DATED: 10-30-90
CHECKED BY: R.K.	DATED: 10-30-90
SCALED: NTS	VBA JOB NO:
PROJECT: D-900 SUPPORT BOX DETAILS	
TITLE: ITEM #11012 (A588) #11010 (A36) ⚠2	SHEET NO: 1 OF 1
	DRAWING NO: A-13105

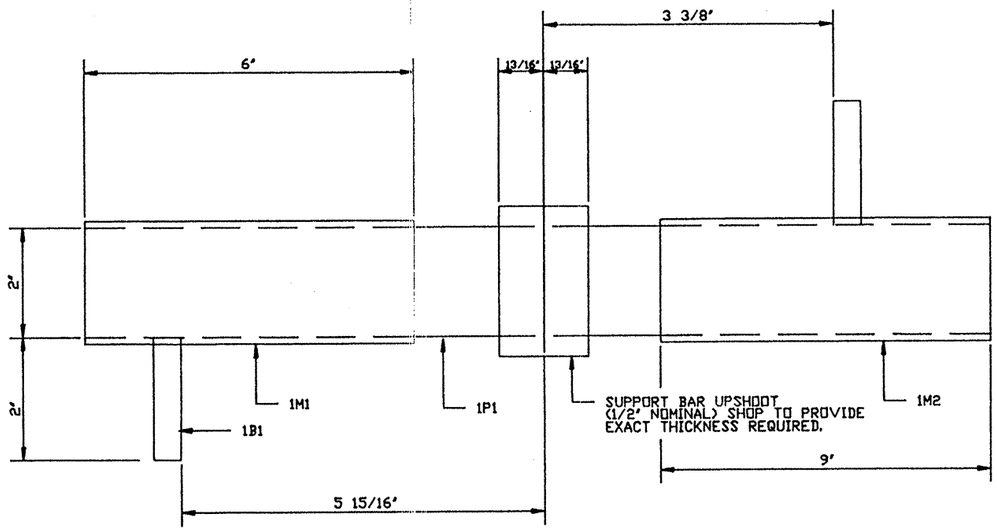

PLAN

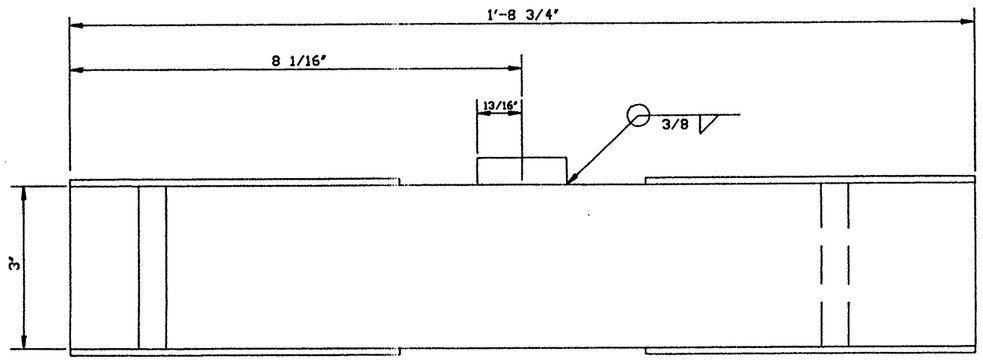

ELEVATION

SUPPORT BAR DETAIL

⚠ 11011 QTY REQD: 1 EA STRUCTURED BILL OF MATERIALS DWG NO. A-13106

LV	PART NO.	QUANTITY	U/M	DESCRIPTION	MATERIAL	REV. #
0	11011 ⚠	1.000	EA	D900 SUPPORT BAR STR.(A588)(X		
1	3730	36.000	LB	PLATE 2 A588		
1	6198	2.000	EA	FLAT BAR 12GA 2 1/4 X 6	TYPE 304, 2B FINISH	
1	6197	2.000	EA	FLAT BAR 12GA 2 1/4 X 9	TYPE 304, 2B FINISH	
1	4319	2.000	EA	MOD STOP BAR A588 C-13159		

END OF STRUCTURED BILL OF MATERIALS

⚠ 11009 QTY REQD: 1 EA STRUCTURED BILL OF MATERIALS DWG NO. A-13106

LV	PART NO.	QUANTITY	U/M	DESCRIPTION	MATERIAL	REV. #
0	11009	1.000	EA	D900 SUPPORT BAR STR.(A36) (X		
1	3732	36.000	LB	PLATE 2 A36		
1	6198	2.000	EA	FLAT BAR 12GA 2 1/4 X 6	TYPE 304, 2B FINISH	
1	6197	2.000	EA	FLAT BAR 12GA 2 1/4 X 9	TYPE 304, 2B FINISH	
1	4323	2.000	EA	MOD STOP BAR A36 C-13159		

END OF STRUCTURED BILL OF MATERIALS

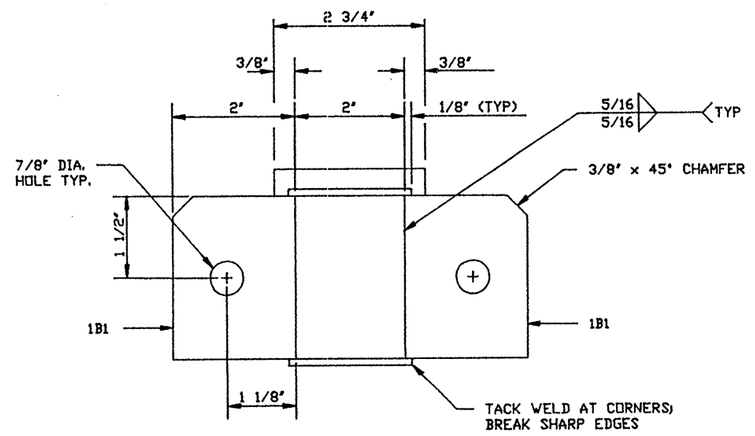

END VIEW

⚠ (AFTER GALVANIZING FOR GALVANIZED JOINT SYSTEMS)

OCT 1 9 1992

NO.	DESCRIPTION	NAME	DATE
4			
3			
2			
⚠	REVISED A-588 SUPPORT BAR PART NO. ADDED A-36 SUPPORT BAR AND GALVANIZING NOTE	LFK	4-20-92

REVISIONS

THIS DRAWING AND THE DESIGNS, DETAILS AND/OR ENGINEERING INFORMATION DISCLOSED HEREIN ARE THE PROPRIETARY PROPERTY OF WATSON BOWMAN ACME AND ARE NOT TO BE REPRODUCED OR USED EXCEPT FOR THE PURPOSE FOR WHICH THEY HAVE BEEN FURNISHED. ALL RIGHTS OF DESIGN AND INVENTION ARE HEREBY RESERVED.

Watson Bowman Acme
95 Pineview Drive Amherst, N.Y. 14228 TEL. (716) 691-7966 FAX (716) 691-9239

PROJECT: ⚠
A-588 D900 SUPPORT BAR DETAILS (PART NO. 11011)
A-36 D900 SUPPORT BAR DETAILS (PART NO. 11009)

TITLE: D-900 SUPPORT BAR DETAILS ⚠

DETAILED BY: JMJ	DATE: 10-30-90
CHECKED BY: R.K.	DATE: 10-30-90
SCALE: NONE	WBA JOB NO:
SHEET NO: 1 OF 1	DRAWING NO: A-13106

Form 1284A

TEXAS DOT
DIVISION OF BRIDGES and STRUCTURES

County HIDALGO Highway US 281 Design JMH Date 8-93
C-S-J 0039-17-097 Ck Dsn Date
Structure Ramp 2, Unit 6e US 83/281 Interchange
Design for Repair of Fabrication Error Sheet ..... of .....

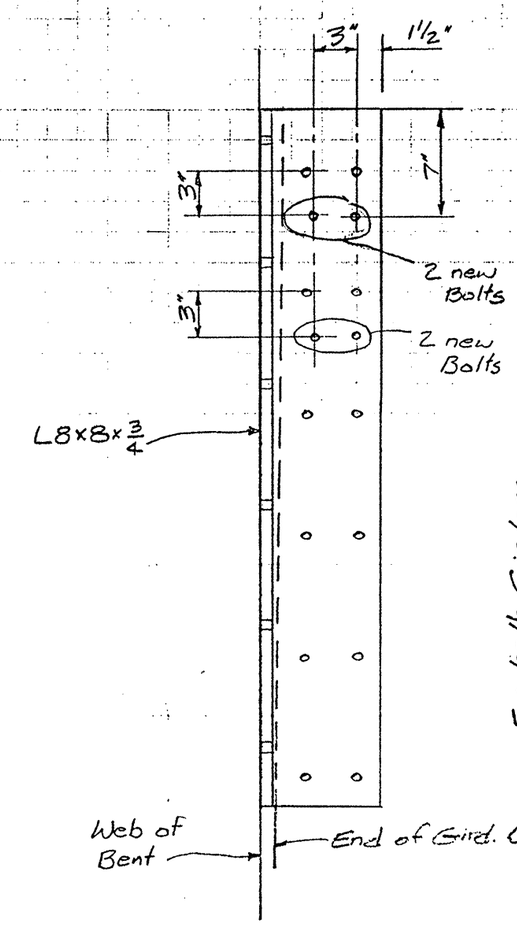

1. Follow fabricator's proposed solution

in addition,

2. Plane or grind end of Girder web (249 PGS.037) 1/32" to 1/16"

For both Girders

3. Add 4 additional 1" ϕ A325 bolts & 1⅛" ϕ holes as shown at left

4. The faying surfaces of Girder webs and angles shall be given a "Class "B" Blast Cleaning in accordance with the Item "Cleaning, Paint, and Painting"

5- 6-93 : 14:48 : MATERIALS & TESTS I-... 512 416 2286:# 2/ 2

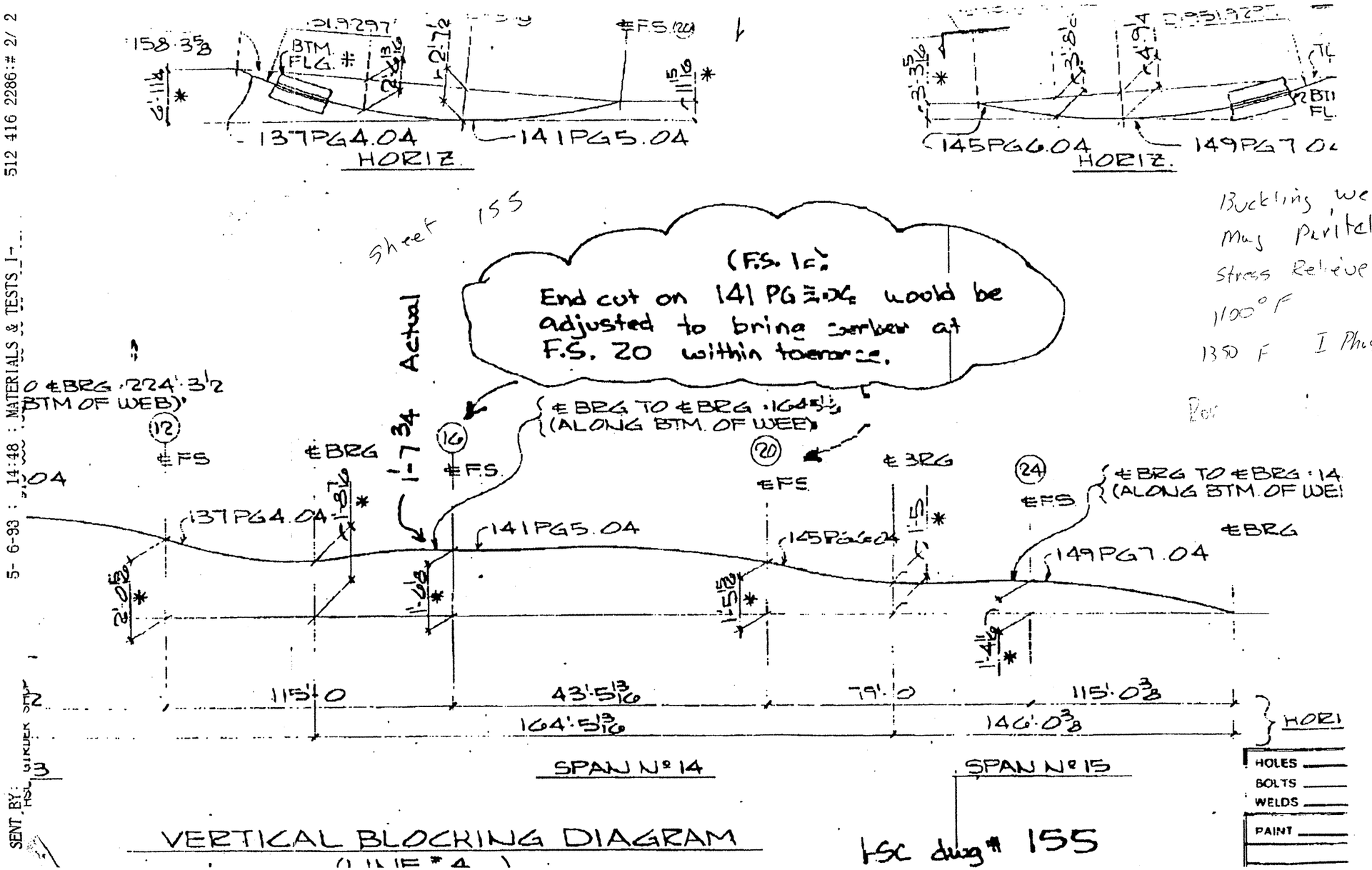

Buckling webs may particle Flow wise
Stress Relieve itself
1100° F
1350 F I Phase

VERTICAL BLOCKING DIAGRAM
(LINE # 4)

HSC dwg # 155

SENT BY: HSC GIRDER SHOP

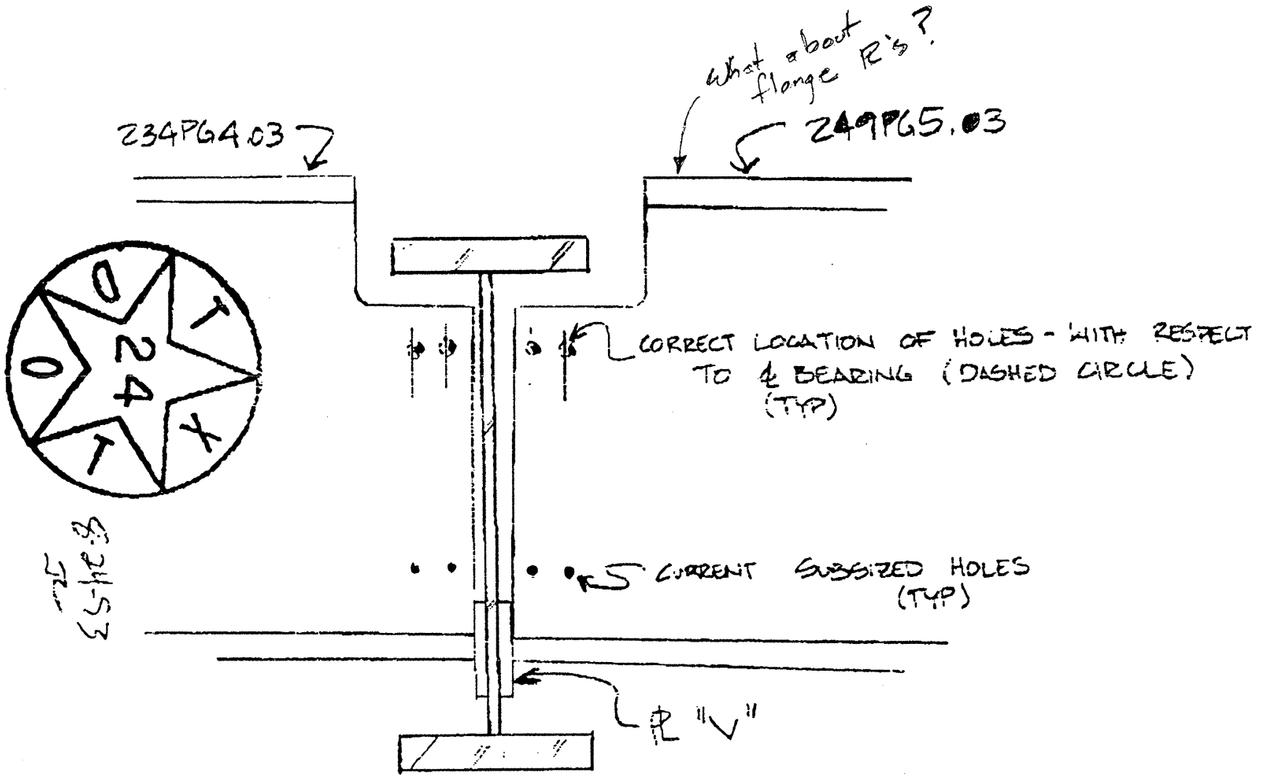

EXPANDED VIEW OF MISCUT WEBS
(ANGLES REMOVED FOR CLARITY)
(NOT TO SCALE - OFFSET EXAGERATED)

SK3

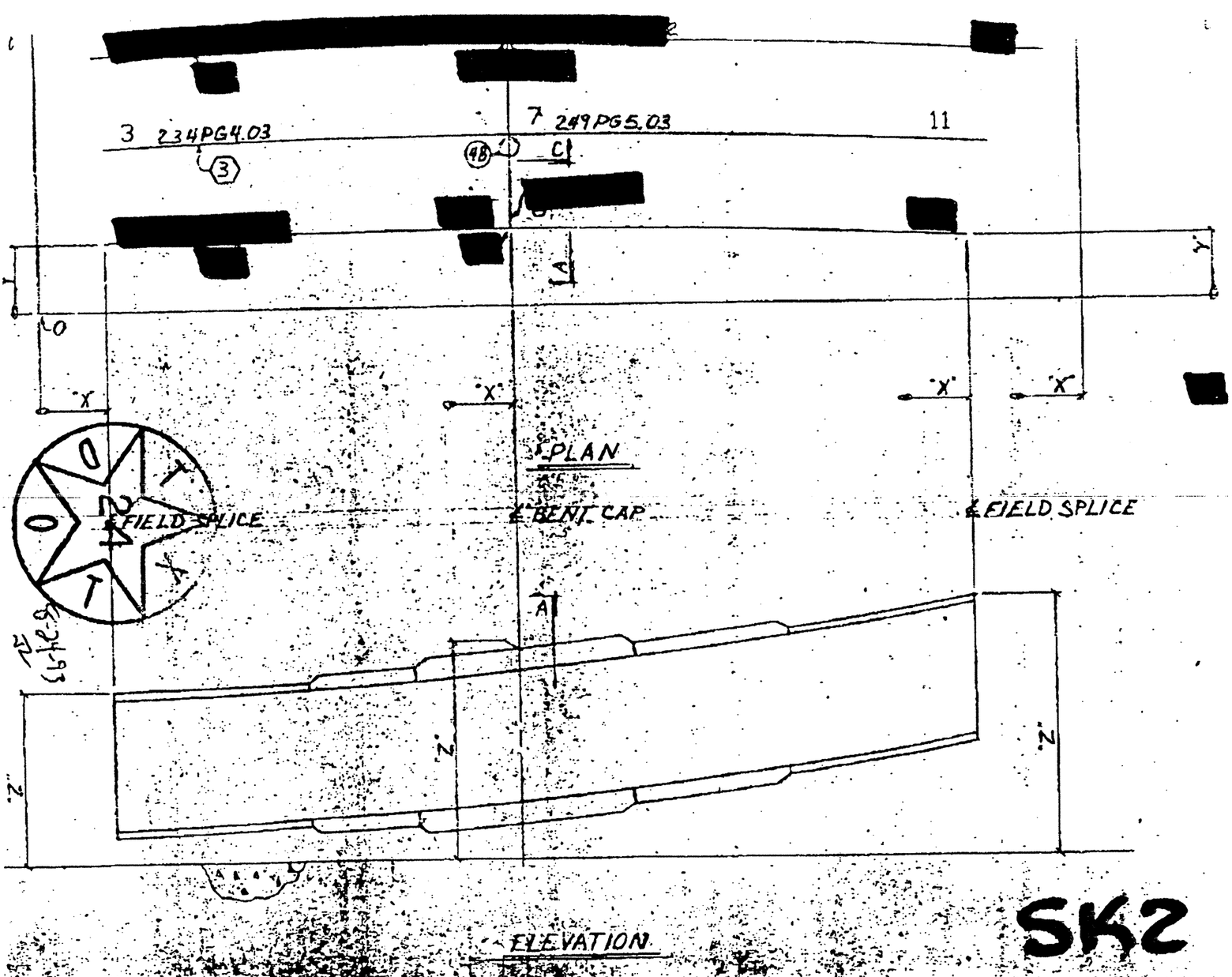

ELEVATION

SK2

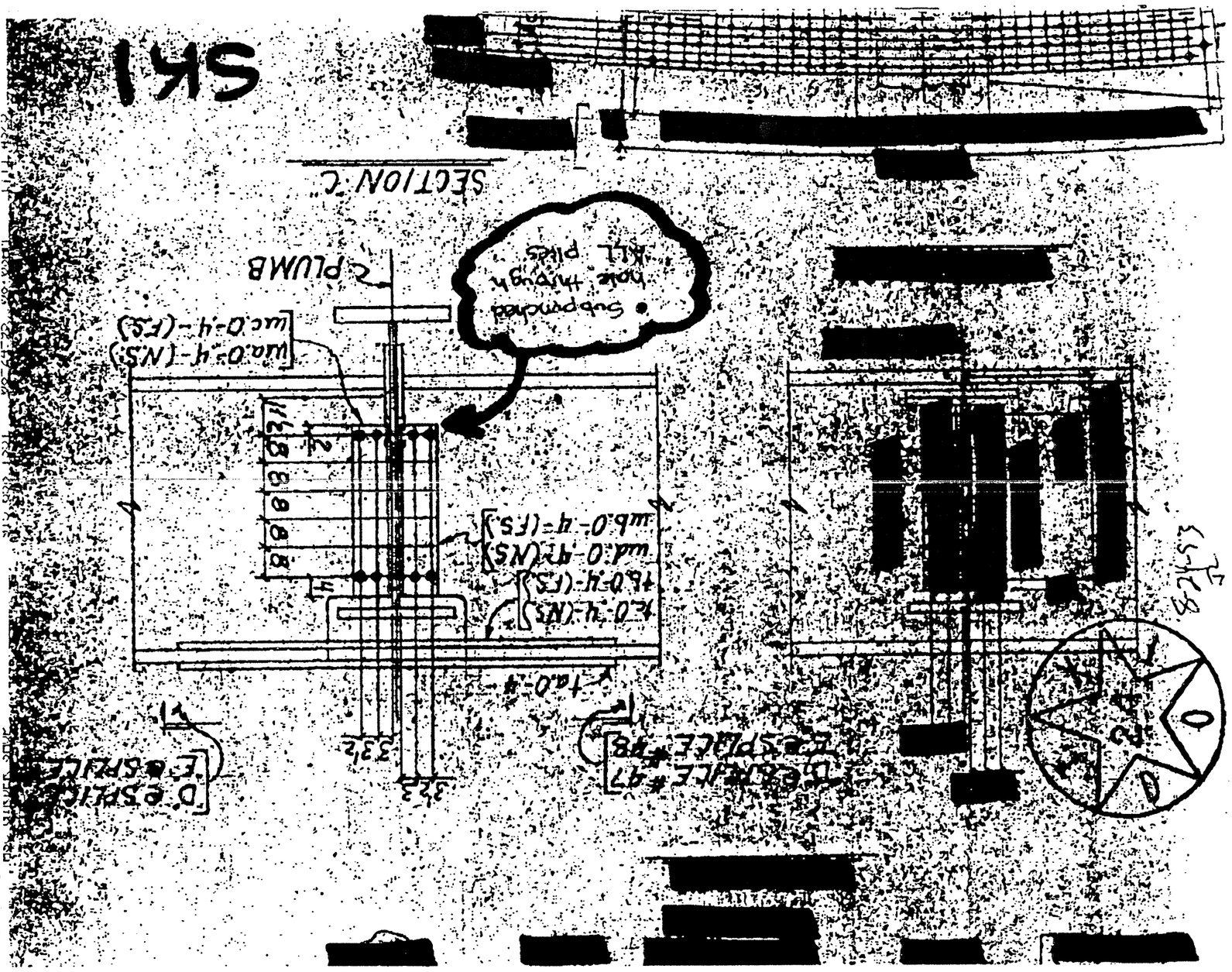
SK1
SECTION C
PLUMB
Subpunched hole through ALL plies
D ESPLICE #47
E ESPLICE #48
D ESPLICE
E ESPLICE

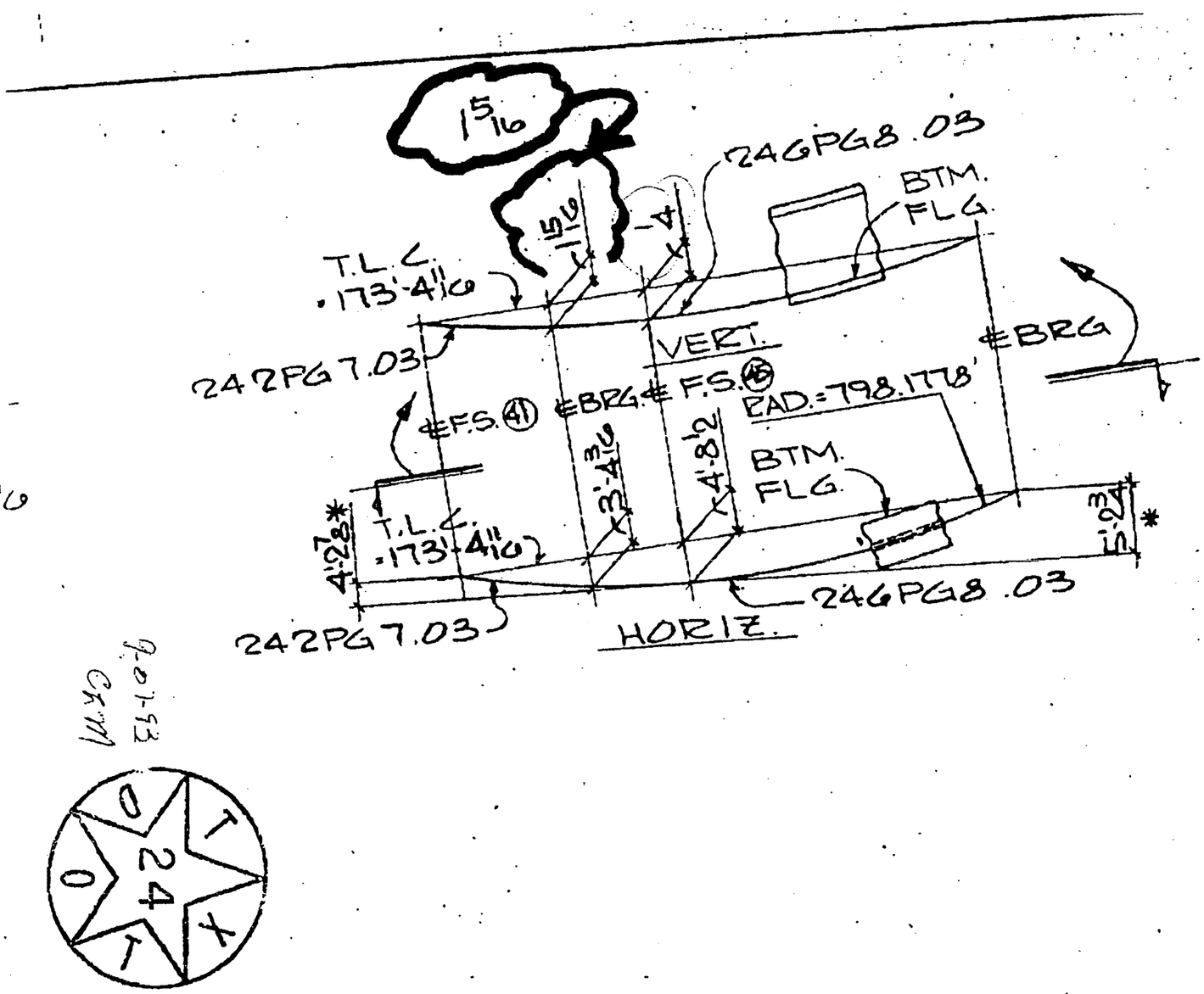
1 5/16
24GPG8.03
BTM. FLG.
T.L.C. 173'-4 11/16
VERT.
242PG7.03
℄BRG
℄F.S. 41
℄BRG
℄F.S. 45
RAD.=798.1778'
BTM. FLG.
T.L.C. 173'-4 11/16
24GPG8.03
242PG7.03
HORIZ.

9-07-93
CRM

5- 5-93 ; 15:15 ; MATERIALS & TESTS I→ 512 416 2242:# 4/ 4
SENT BY: 04-27-93 12:00PM 9:5 658 7357

L/160

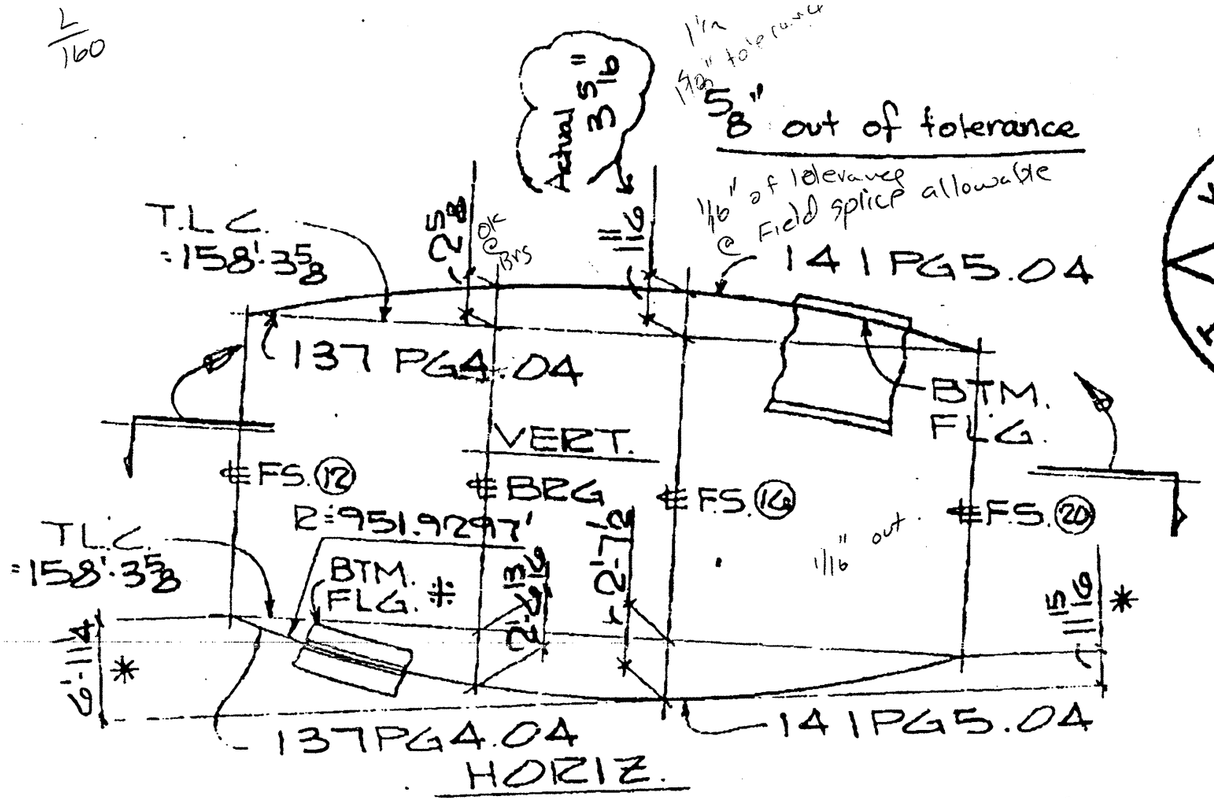

5-5-93 JL

trim to length & prepare for field

915- 655- 2896

HSC Sheet # 155
92-108
Ramp 3 unit 5

SKI

℄BRG = 224'-3 1/2 (TO BTM OF WEB)

℄BRG TO ℄BRG = 164'-5 13/16 (TO BTM OF WEB)

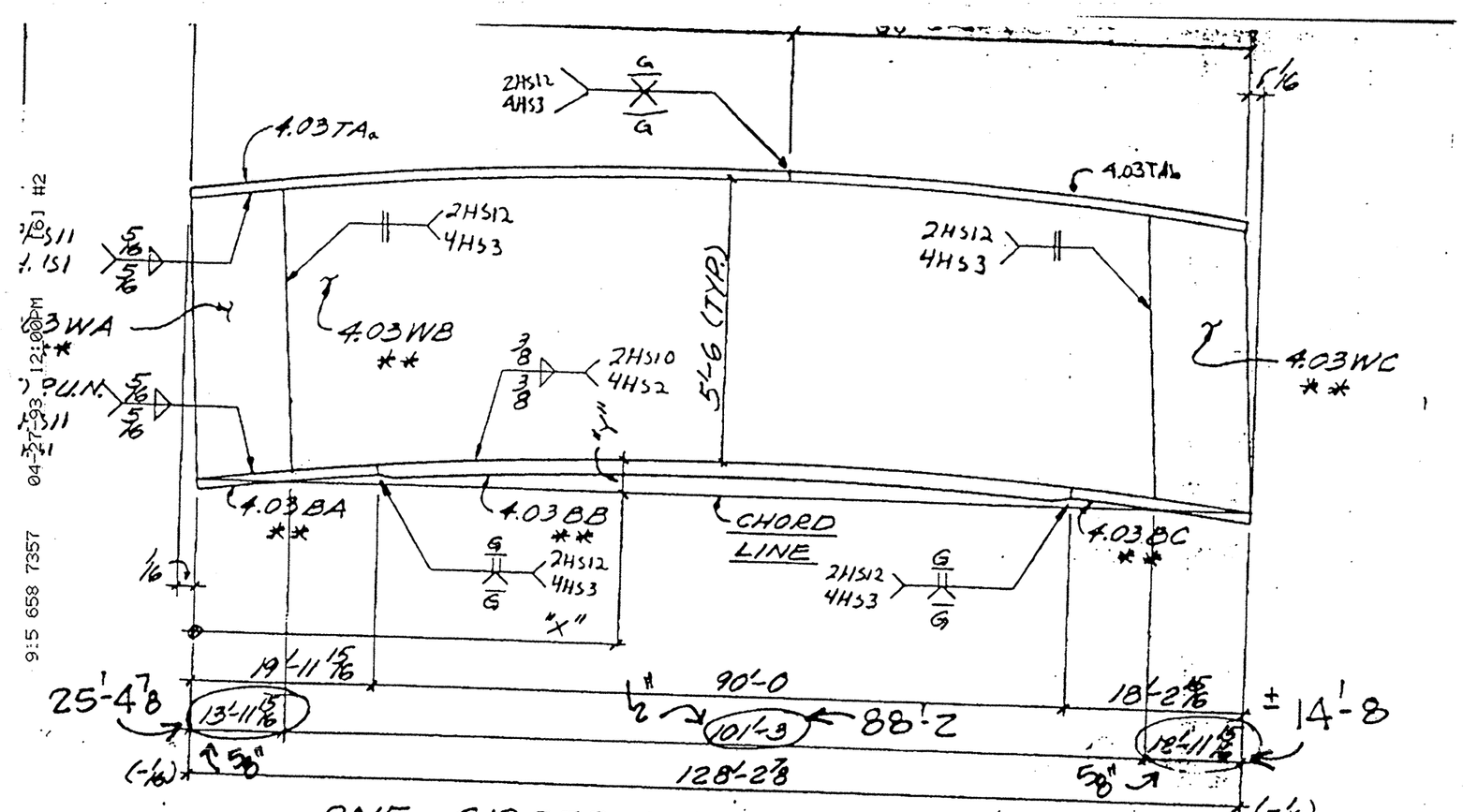

ONE ~ GIRDER SUB-ASSY. ~ MK A112
(FOR GIRDER 192 PG4.03)

MK A112

8'-3 3/8	13'-11 15/16	23'-0 15/16	37'-10 3/4	52'-8 9/16	67'-6 5/16	82'-4 1/8	97'-1 15/16	111'-11 3/4	115'-2 15/16	126'-9 9/16	128'-2 7/8
13/16	1 3/8	2 9/16	3 1/4	3 13/16	4	3 11/16	2 13/16	1 5/8	1 5/16	1/8	0"
	@ WEB SPLICE								@ WEB SPLICE		

All camber points within 1/16"

4-27-93 ; 9:59 ; MATERIALS & TESTS I→ 512 416 2242;# 2/ 3
SENT BY:

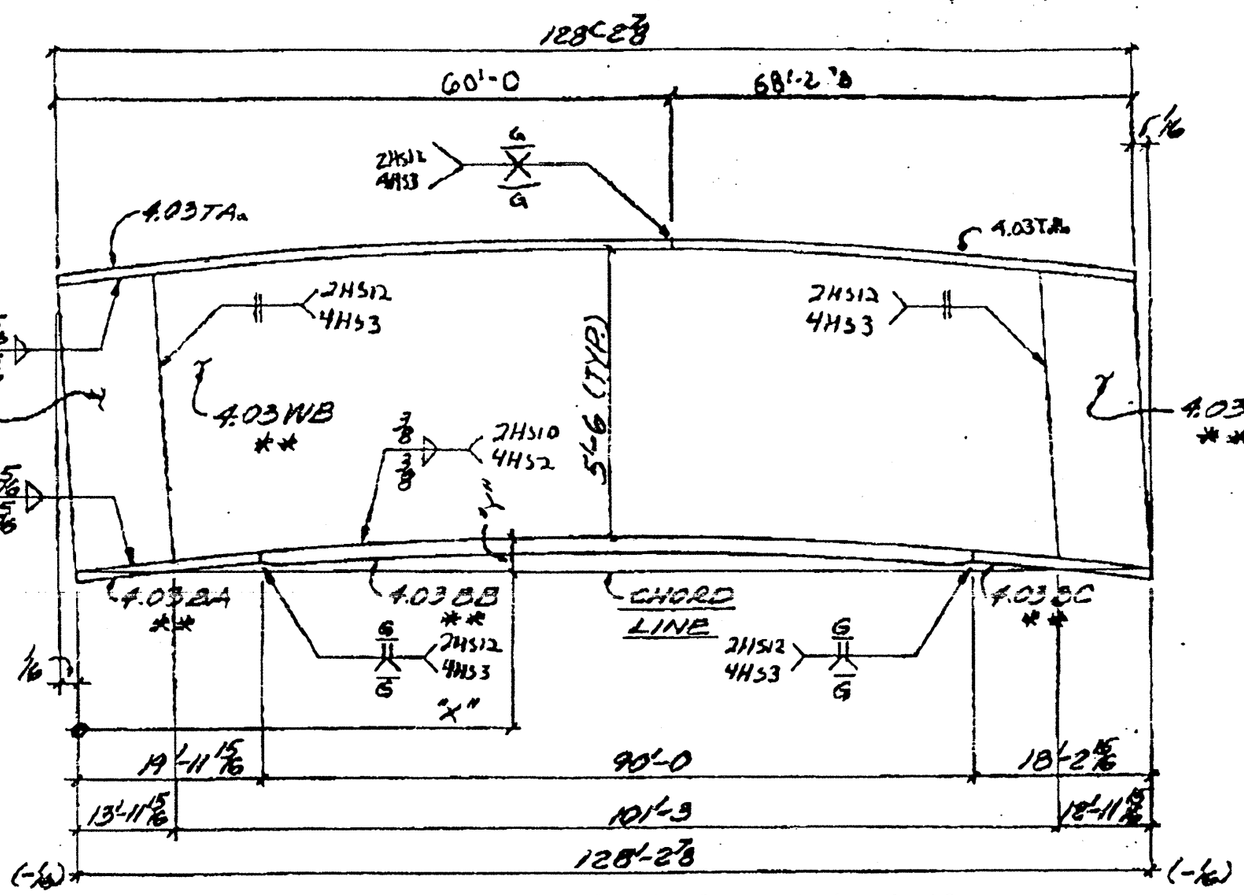

ONE ~ GIRDER SUB-ASSY. ~ MK A112

(FOR GIRDER 132 PG 4.03)

MK A112												
"X"	8'-3 3/8	13'-11 15/16	23'-0 15/16	37'-10 7/16	52'-8 9/16	67'-6 5/16	82'-4 1/8	97'-1 15/16	111'-11 3/4	115'-2 15/16	126'-9 9/16	128'-2 3/8
"Y"	13/16	1 3/8	2 3/16	3 1/4	3 13/16	4	3 11/16	2 13/16	1 5/8	1 5/16	1/8	0"
		@ WEB SPLICE								@ WEB SPLICE		

SK1

4-27-93 ; 9:59 ; MATERIALS & TESTS I→ 512 416 2242;# 3/ 3
SENT BY:

415 - 653 - 3211

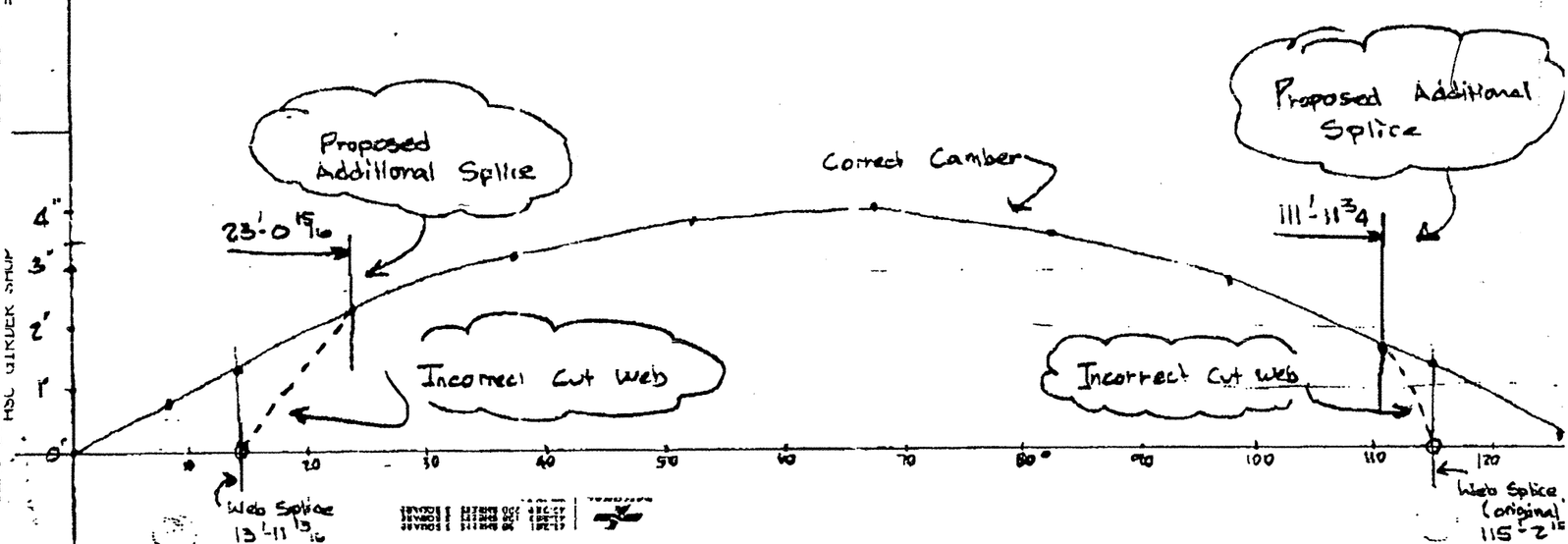

SK2

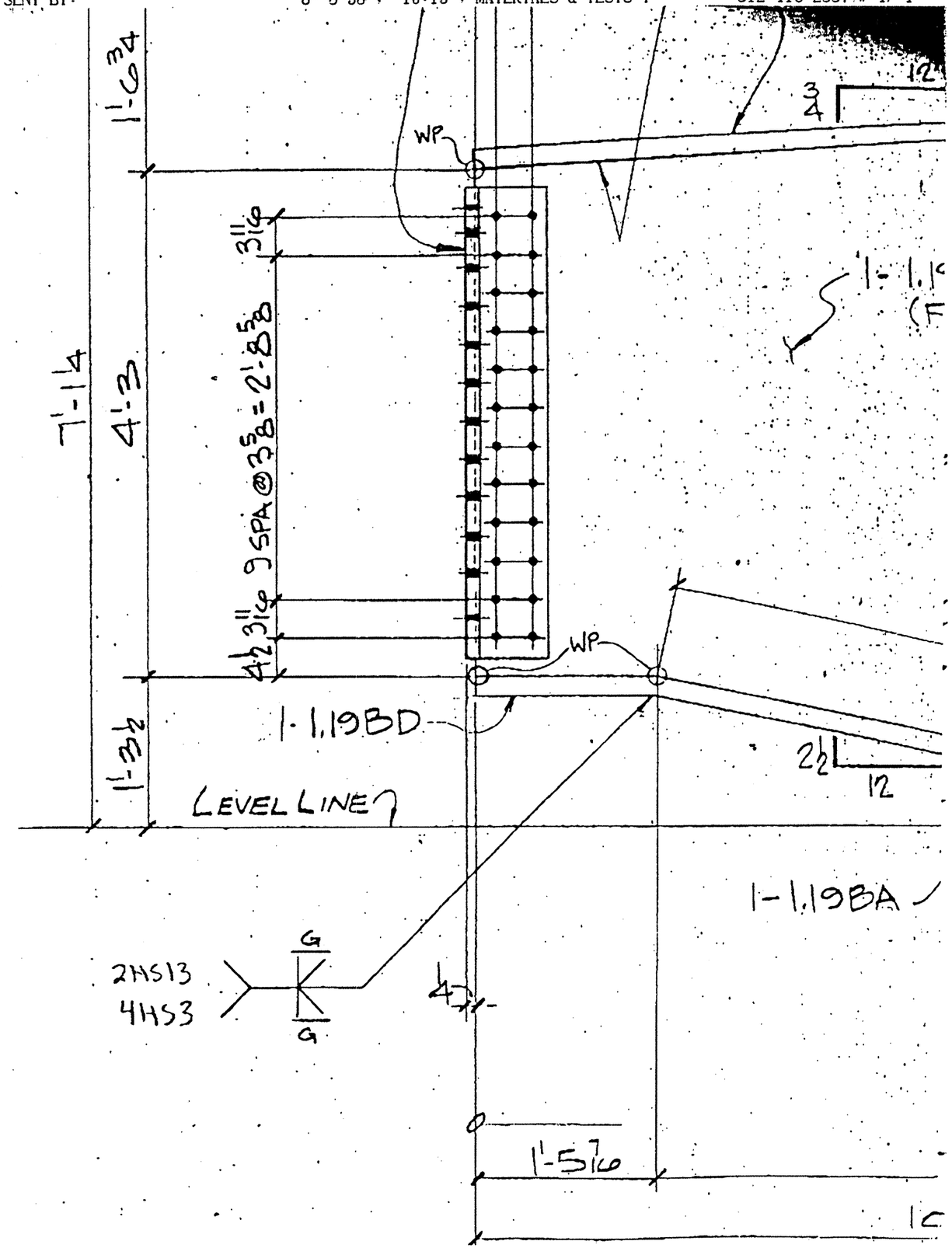

HIRSCHFELD STEEL CO., INC.

Project: Hidalgo County
H.S.C. Job no: 92107

Project no: NH 92(50)M
Control no: 39-17-97

Drawing: SK1
Date: 3-26-93

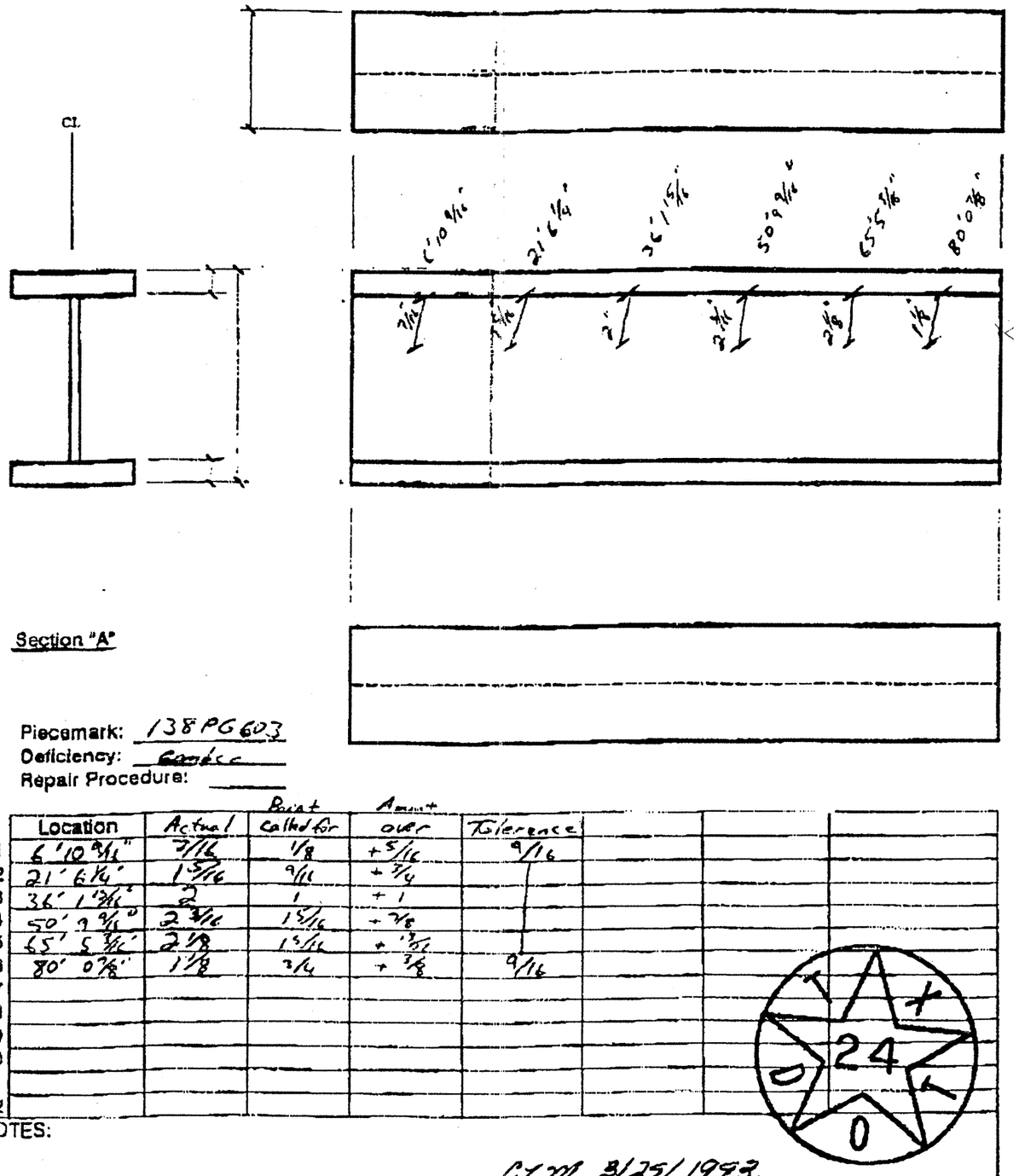

Section "A"

Piecemark: 138PG603
Deficiency: Camber
Repair Procedure:

	Location	Actual	Point called for	Amount over	Tolerance
1	6'10 9/16"	3/16	1/8	+5/16	9/16
2	21'6 1/4"	1 5/16	9/16	+3/4	
3	36'1 15/16"	2	1	+1	
4	50'9 9/16"	2 3/16	1 5/16	+7/8	
5	65'5 7/16"	2 1/8	1 5/16	+13/16	
6	80'0 7/8"	1 1/8	3/4	+3/8	9/16
7					
8					
9					
10					
11					
12					

NOTES:

CKM 3/25/1993

NS=near side, FS=far side, N=none, F=outflange, BF=bottom flange, CL=centerline

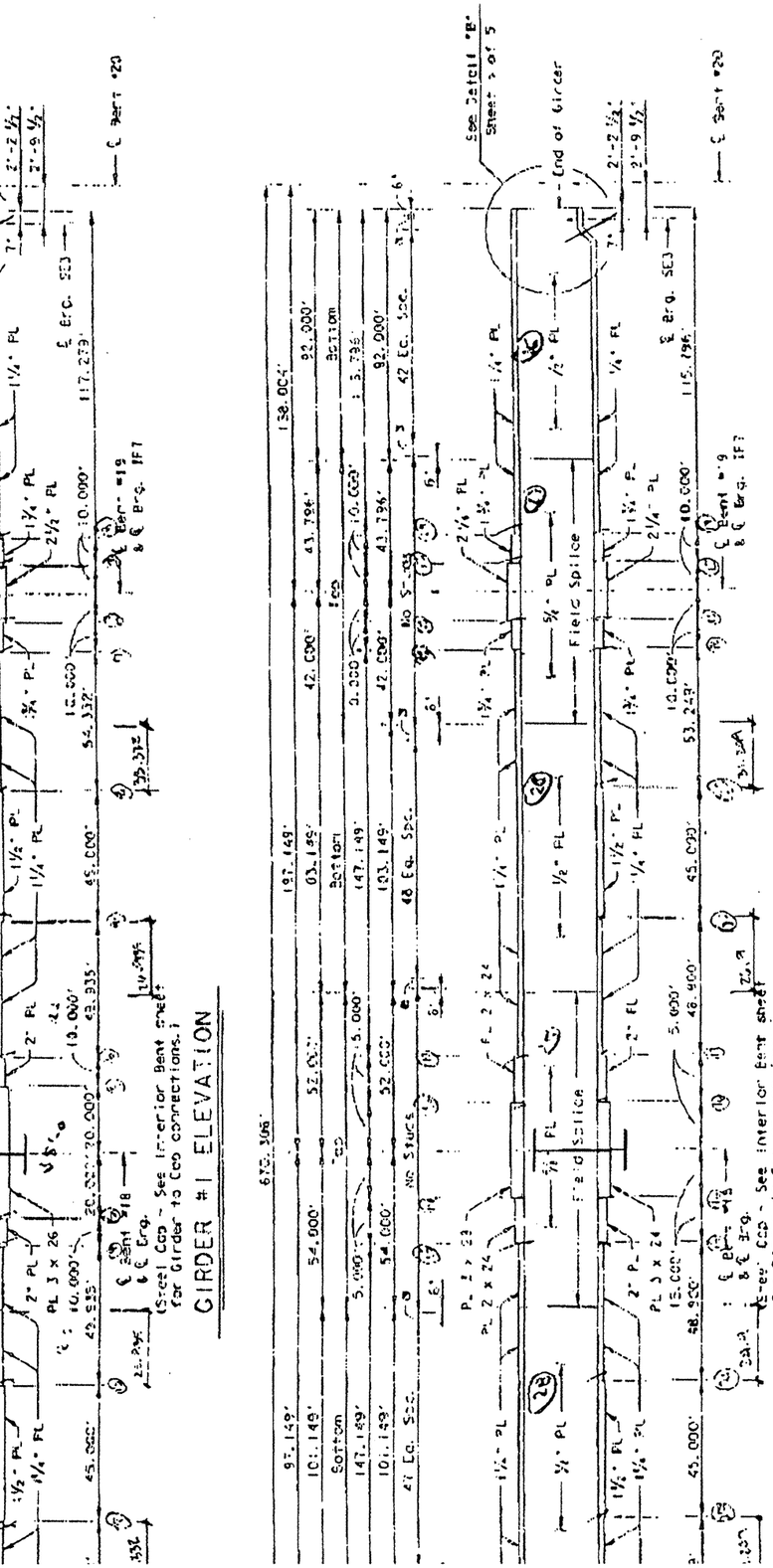

SHEET 3 OF 5

H-S 20 LOADING

STATE DEPARTMENT OF HIGHWAYS AND PUBLIC TRANSPORTATION

UNIT NO. 6, RAMP 2

680.00' PLATE GIRDER UNIT
140.00' - 200.00' - 200.00' - 140.00'

US 83/28 INTERCHANGE

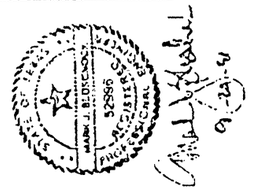

BILL OF MATERIAL

Material	Length	Mark Temp.	Mark Ship.	Wt.	Cut From	Remarks
GIRDER SUB-ASSY			A211			
PL 1/2 x 66	101'-2 1/2"	3.02WA			207-17	CVN2
PL 1/4 x 22	51'-1 3/4"	3.02TA			215-7	
PL 1/4 x 22	31'-3"	3.02BA			210-8	CVN2
PL 1/2 x 22	45'-0"	3.02BB			210-9	CVN2
PL 1/4 x 22	24'-10 3/4"	3.02BC			210-10	CVN2
PL 1/4 x 22	50'-0"	3.02TB			215-7	
GIRDER SUB-ASSY			B211			
PL 5/8 x 66	53'-10 5/8"	4.02WA			207-18	CVN2
PL 1/4 x 22	23'-11 15/16"	4.02TA			210-11	CVN2
PL 2 x 24	15'-0"	4.02TB			210-12	CVN2
PL 3 x 28	13'-10"	4.02TC			213-6	CVN3
PL 1 1/4 x 22	23'-11 15/16"	4.02BA			215-8	
PL 2 x 24	15'-0"	4.02BB			215-9	
PL 3 x 28 24	14'-10 1/2"	4.02BC			215-10	
GIRDER SUB-ASSY			C211			
PL 5/8 x 66	51'-10 3/16"	5.02WA			207-19	CVN2
PL 3 x 28	13'-10"	5.02TA			213-6	CVN3
PL 2 x 24	15'-0"	5.02TB			210-12	CVN2
PL 1 1/4 x 22	21'-11 15/16"	5.02TC			210-13	CVN2
PL 3 x 28 24	14'-10 1/2"	5.02BA			215-10	
PL 2 x 24	15'-0"	5.02BB			215-9	
PL 1 1/4 x 22	21'-11 15/16"	5.02BC			215-11	

7/29/93 czm

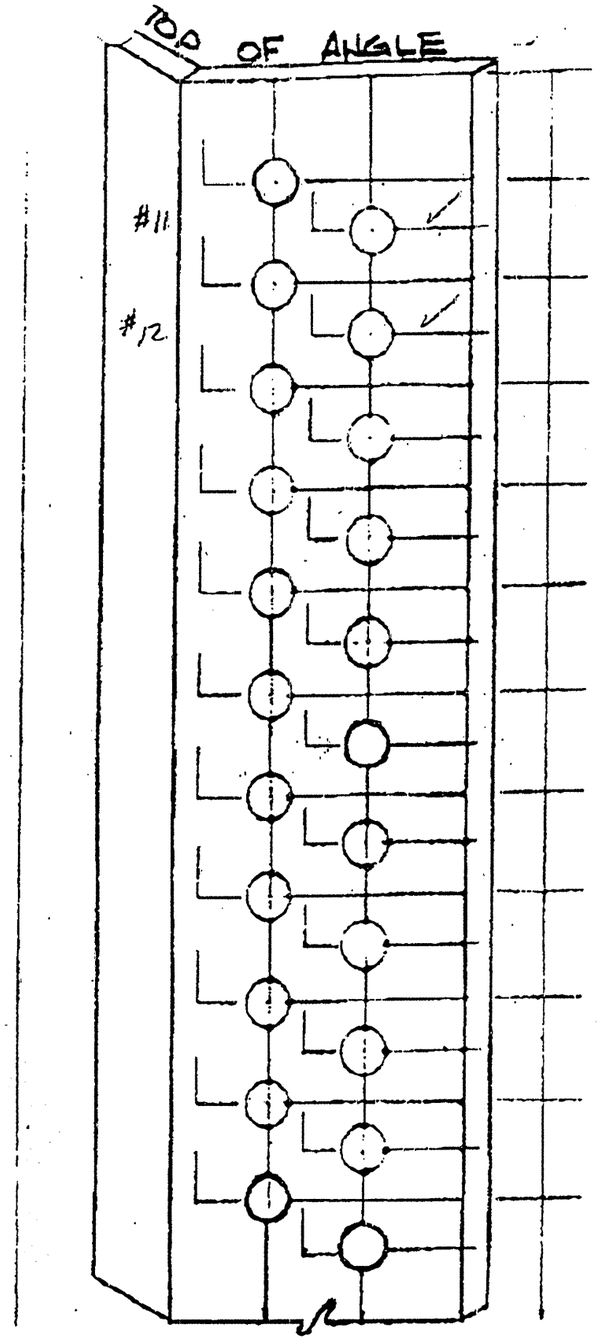

Angle Plate
#11
& Web
244PG 6.04

ANGLE
FOR
FARSIDE
CAP

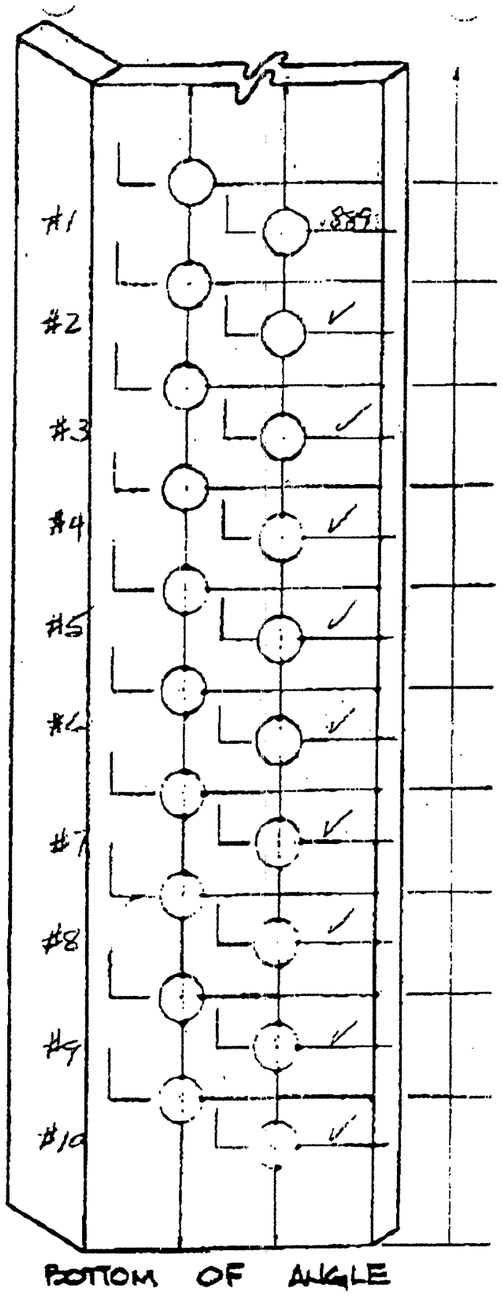

Angle plate
#11
& web
244PG 6.04

ANGLE
FOR
FARSIDE
CAP

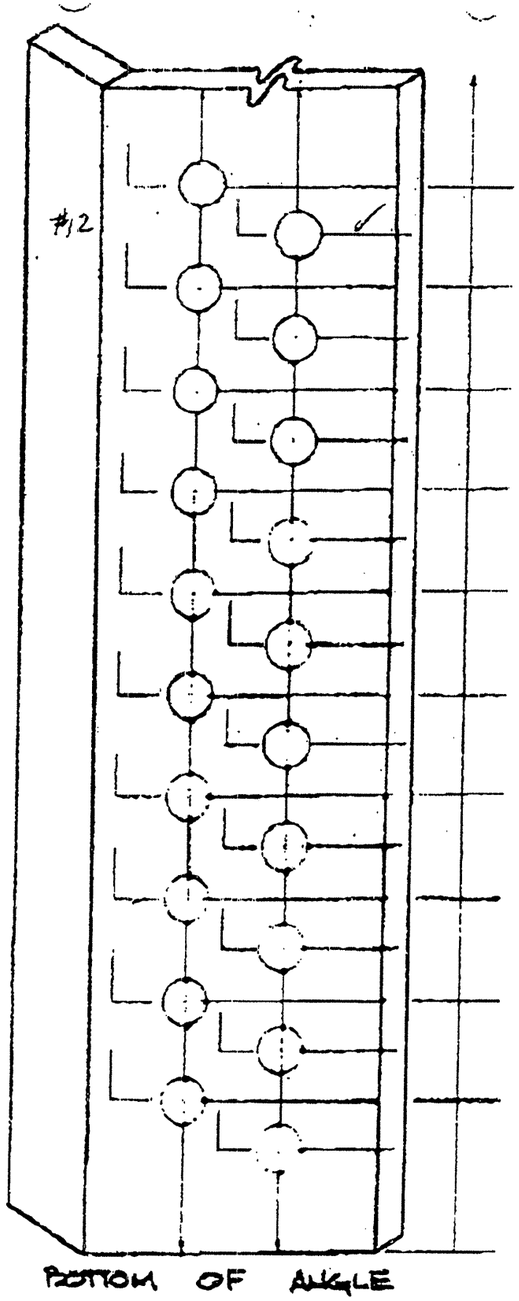

Angles Plate
#2
to web
203x81.19

ANGLE
FOR
FARSIDE
CAP

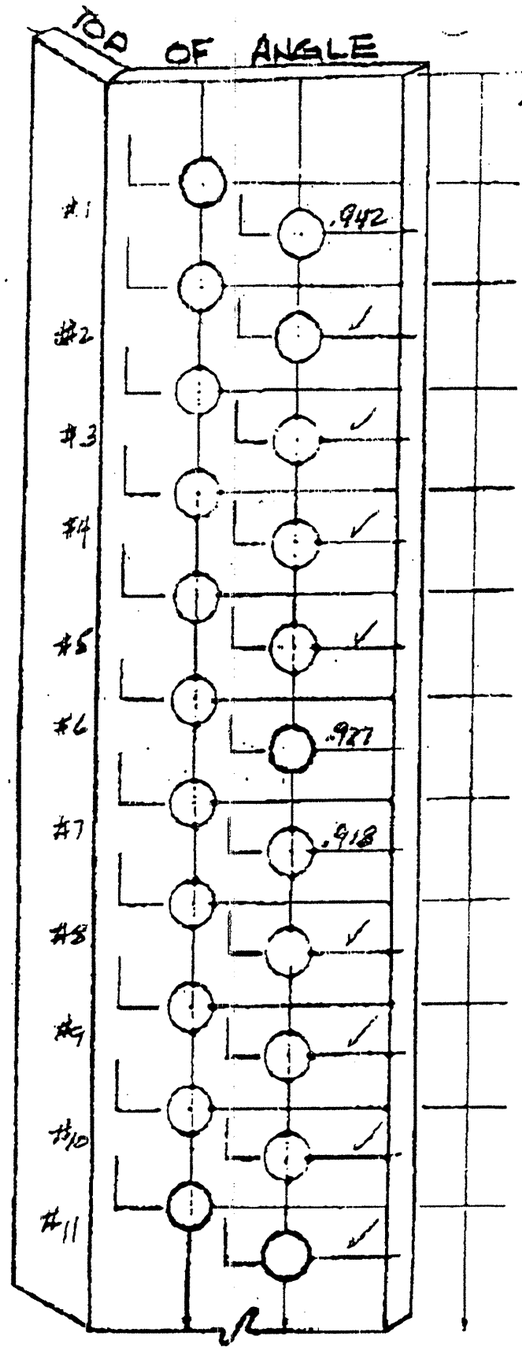

Angle Plate
#2
to web
203x81.19

ANGLE
FOR
FARSIDE
CAP

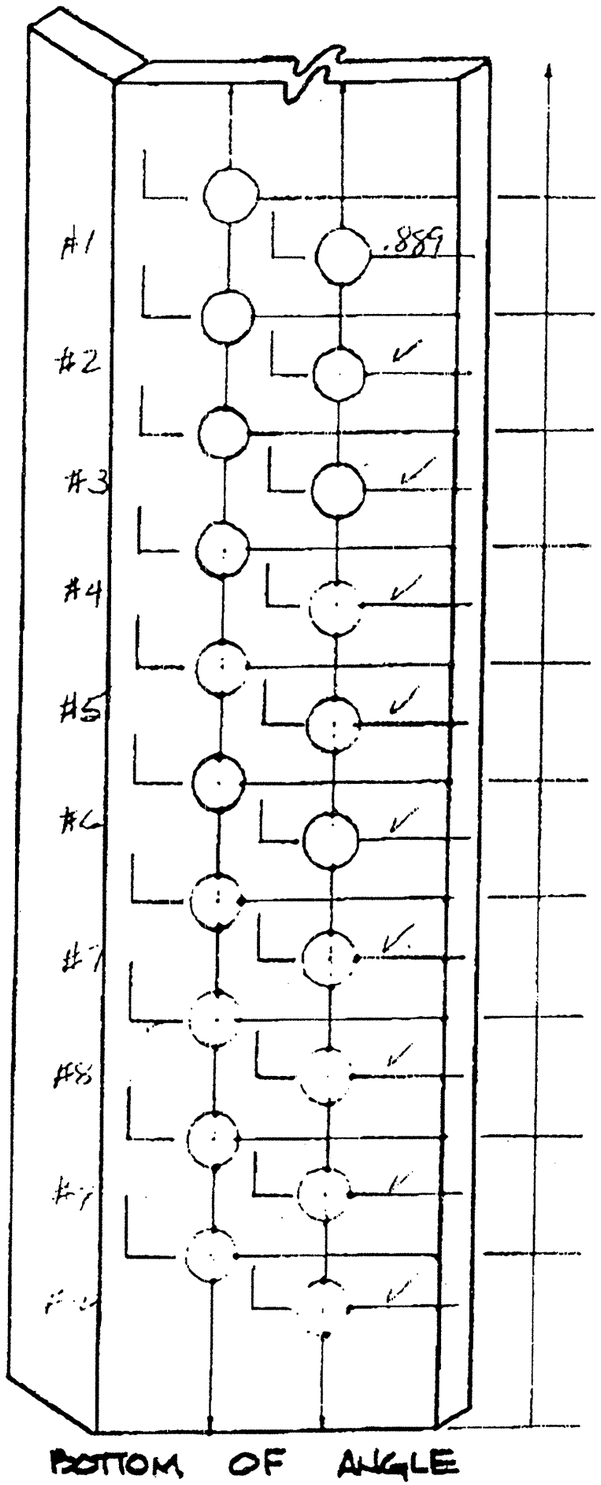

Angle plate
#11
6 web
244 PG 6.04

Aug 03 1993 CRM

ANGLE
FOR
FARSIDE
CAP

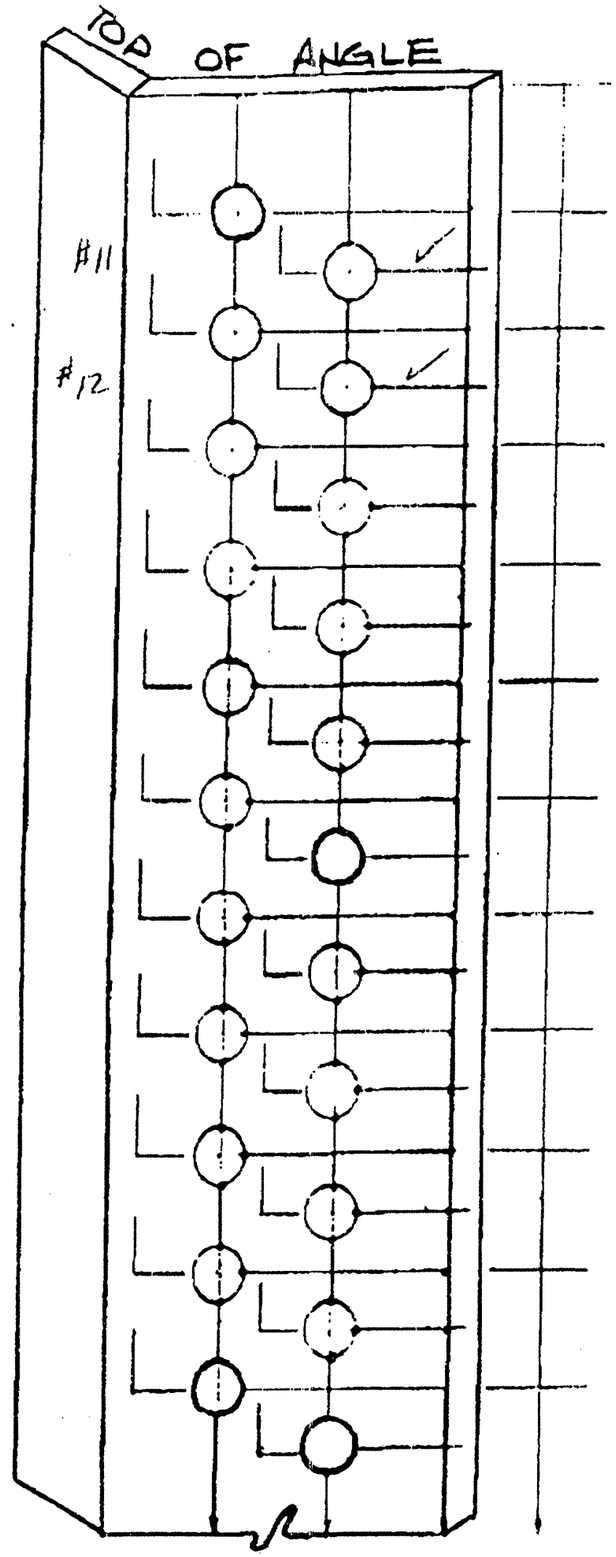

Angle plate
#11
6 web
244 PG 6.04

Aug 03 1993 CRM

ANGLE
FOR
FARSIDE
CAP

capacity of the combination (see Appendix I). However, [illegible] not apply to fillet welds reinforcing groove welds.

9.14 Welds in Combination with Rivets and Bolts

In new work, rivets or bolts in combination with welds shall not be considered as sharing the stress, and the welds shall be provided to carry the entire stress for which the connection is designed. Bolts or rivets used in assembly may be left in place if their removal is not specified. If bolts are to be removed, the plans should indicate whether holes should be filled and in what manner.

9.15 Fillet Weld Details

9.15.1 Fillet welds which support a tensile force that is not parallel to the axis of the weld shall not terminate at the corners of parts or members, but shall be returned continuously, full size, around the corner for a length equal to twice the weld size where such return can be made in the same plane. Boxing shall be indicated on design and detail drawings.[21]

9.15.2 Fillet welds deposited on the opposite sides of a common plane of contact between two parts shall be interrupted at a corner common to both welds (see Figure 9.1).

9.16 Eccentricity of Connections

9.16.1 Eccentricity between intersecting parts and members shall be avoided insofar as practical.

9.16.2 In designing welded joints, adequate provision shall be made for bending stresses due to eccentricity, if any, in the disposition and section of base metal parts and in the location and types of welded joints.

9.16.3 For members having symmetrical cross sections, the connection welds shall be arranged symmetrically about the axis of the member, or proper allowance shall be made for unsymmetrical distribution of stresses.

9.16.4 For axially stressed angle members, the center of gravity of the connecting welds shall preferably lie between the line of the center of gravity of the angle's cross section and the center line of the connected leg. If the center of gravity of the connecting weld lies outside of this zone, the total stresses, including those due to the eccentricity from the center of gravity of the angle, shall [illegible]

21. For definition of *boxing*, see Appendix VI.

9.17 Connections or Splices — Tension and Compression Members

Connections or splices of tension or compression members made by groove welds shall have complete joint penetration welds. Connections or splices made with fillet or plug welds, except as noted in 9.18, shall be designed for an average of the calculated stress and the strength of the member, but not less than 75 percent of the strength of the member, or if there is repeated application of load, the maximum stress or stress range in such connection or splice shall not exceed the fatigue stress permitted by the applicable AASHTO specification.

9.18 Connections or Splices in Compression Members with Milled Joints

If members subject only to compression are spliced and full-milled bearing is provided, the splice material and its welding shall be arranged, unless otherwise stipulated by the applicable general specifications, to hold all parts in alignment and shall be proportioned to carry 50 percent of the computed stress in the member. Where such members are in full-milled bearing on base plates, there shall be sufficient welding to hold all parts securely in place.

9.19 Connections of Components of Built-up Members

When a member is built up of two or more pieces, the pieces shall be connected along their longitudinal joints by sufficient continuous welds to make the pieces act in unison.

9.20 Transition of Thicknesses or Widths at Butt Joints

9.20.1 Butt joints between parts having unequal thicknesses and subject to tensile stress shall have a smooth transition between the offset surfaces at a slope of no more than 1 in 2-1/2 with the surface of either part. The transition may be accomplished by sloping weld surfaces, by chamfering the thicker part, or by a combination of the two methods (see Figure 9.2).

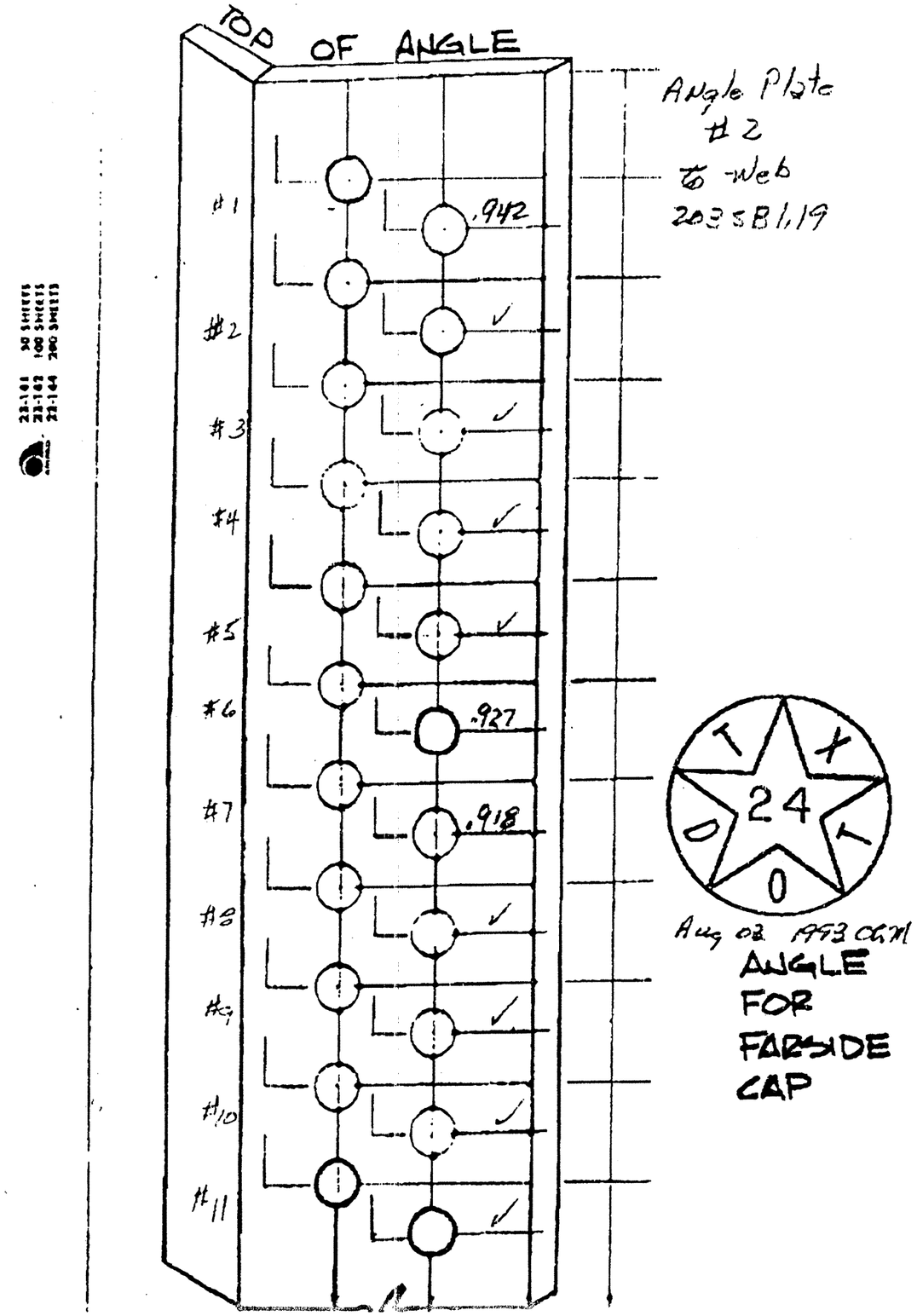

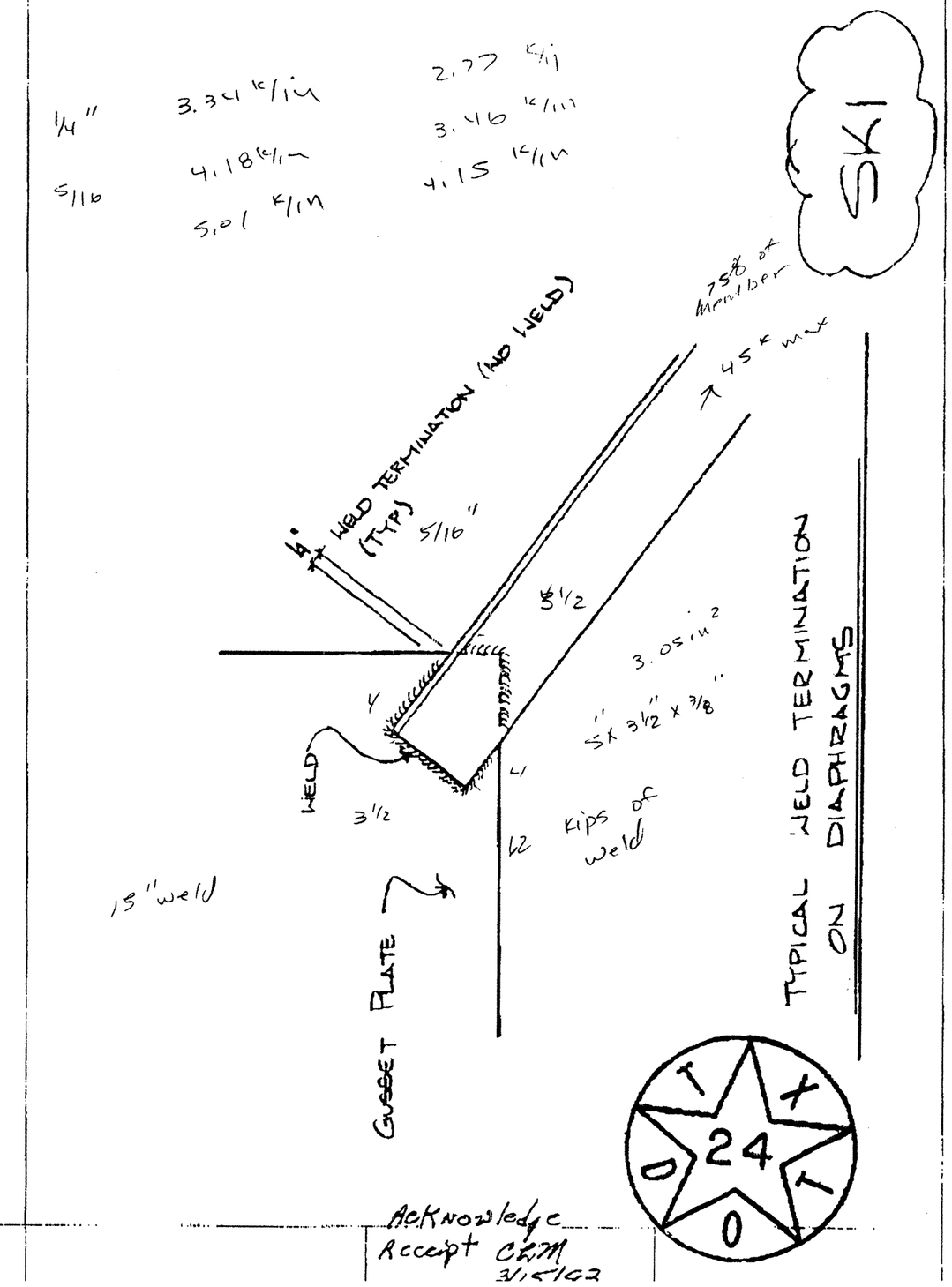

9.10 Lap Joints

9.10.1 The minimum overlap of parts in stress-carrying lap joints shall be five times the thickness of the thinner part. Unless lateral deflection of the parts is prevented, they shall be connected by at least two transverse lines of fillet, plug, or slot welds or by two or more longitudinal fillet or slot welds.

9.10.2 If longitudinal fillet welds are used alone in lap joints of end connections, the length of each fillet weld shall be no less than the perpendicular distance between the welds (shown as dotted line in Figure 9.1). The transverse spacing of the welds shall not exceed 16 times the thickness of the connected thinner part unless suitable provision is made (as by intermediate plug or slot welds) to prevent buckling or separation of the parts. The longitudinal fillet weld may be either at the edges of the member or in slots.

9.10.3 When fillet welds in holes or slots are used, the clear distance from the edge of the hole or slot to the adjacent edge of the part containing it, measured perpendicular to the direction of stress, shall be no less than five times the thickness of the part nor less than two times the width of the hole or slot. The strength of the part shall be determined from the critical net section of the base metal.

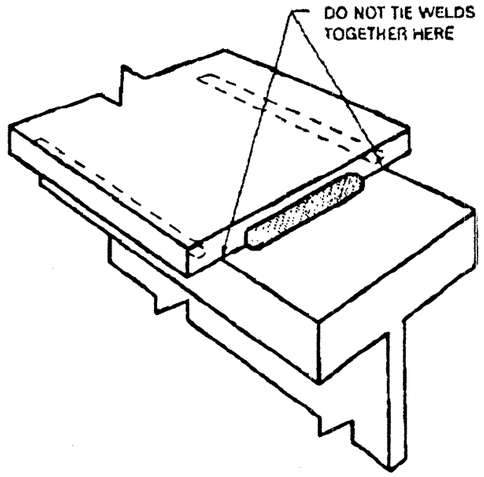

Figure 9.1 — Fillet Welds on Opposite Sides of a Common Plane of Contact (sec 9.10.2)

9.10.4 Lap joints are Category E details and should be avoided, when possible, in members subject to tension or reversal of stresses.

9.11 Corner and T-Joints

9.11.1 Corner and T-joints that are to be subjected to bending about an axis parallel to the joint shall have their welds arranged to avoid concentration of tensile stress at the root of any weld.

9.11.2 Corner and T-joints parallel to the direction of computed stress between components of built-up members designed for axial stress need not be complete joint penetration groove welds. Fillet welds or a combination of partial joint penetration welds and reinforcing fillet welds may be used.

9.12 Prohibited Types of Joints and Welds

The joints and welds listed in the following paragraphs are prohibited:

(1) Butt joints not fully welded throughout their cross section

(2) Complete joint penetration groove welds made from one side only without any backing, or with backing, other than steel, that has not been qualified in accordance with 5.7

(a) These prohibitions against complete joint penetration groove welds made from one side only shall not apply to secondary members not subject to tension or reversal stresses.

(b) They shall not apply to shoes or other non-stressed appurtenances.

(c) They shall not apply to corner joints parallel to the direction of computed stress, between components of built-up members designed primarily for axial stress.

(3) Intermittent groove welds

(4) Intermittent fillet welds, except as approved by the Engineer

(5) Bevel-grooves and J-grooves in butt joints for other than the horizontal position (see Figure 2.4)

(6) Plug and slot welds on members subject to tension and reversal of stress

9.13 Combinations of Welds

If two or more of the general types of welds (groove, fillet, plug, slot) are combined in a single joint, their allowable capacity shall be computed with reference to the axis of the group in order to determine the allowable

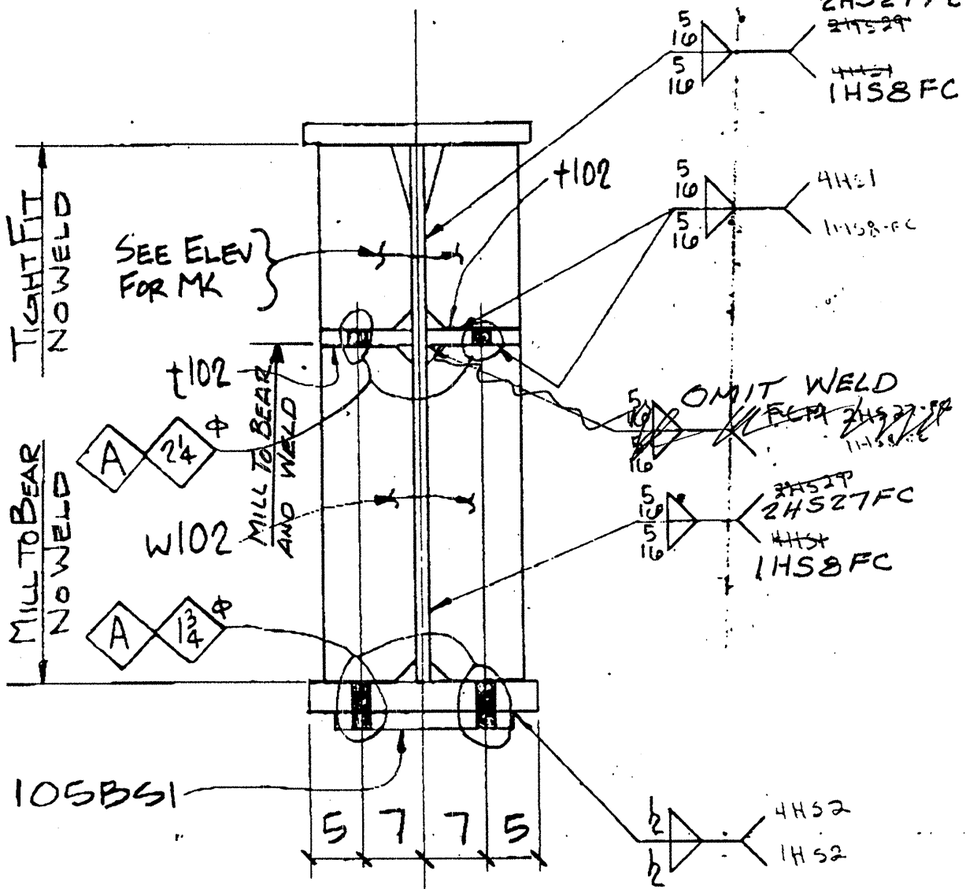

SECTION ~ A

TEXAS DEPARTMENT OF TRANSPORTATION
APPROVED EXCEPT AS NOTED
DIVISION OF BRIDGES AND STRUCTURES
FEB 10 1993
APPROVAL OF THIS DRAWING DOES NOT RELIEVE THE CONTRACTOR OF THE RESPONSIBILITY FOR THE CORRECTNESS OF DETAIL.

THIS SHEET SUPERSEDES
SHEET NO. 103B
APPROVED Oct 21, 1992

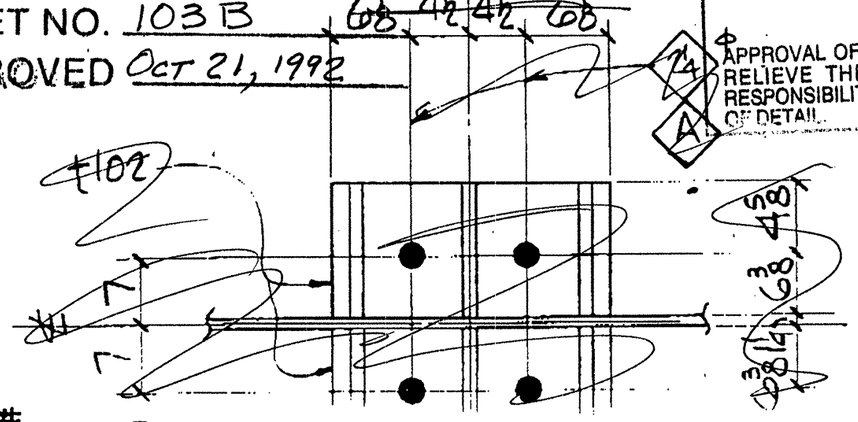

HSC
SHT # 103B

HIDALGO COUNTY

02/10/93 09:09 ☎512 416 2242 Texas DOT (D-5) ☎001

****
*** ACTIVITY REPORT ***
****

TRANSMISSION OK

TX/RX NO.	0172
CONNECTION TEL	8p9156587357
CONNECTION ID	Hirschfeld
START TIME	02/10 09:08
USAGE TIME	00'44
PAGES	1
RESULT	OK

HSC GIRDER SHOP 915 658 7357 02-10-93 08:30AM [71] #2

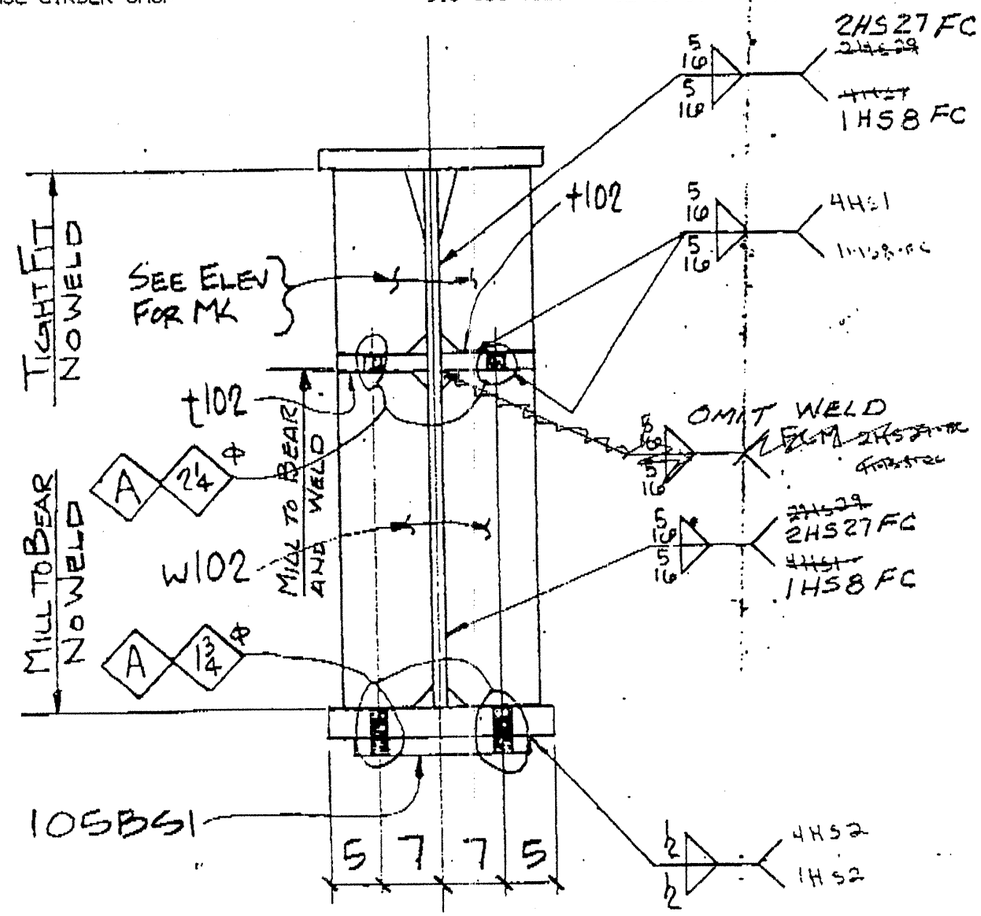

SECTION ~ A

TEXAS DEPARTMENT OF TRANSPORTATION
APPROVED EXCEPT AS NOTED
DIVISION OF BRIDGES AND STRUCTURES

SECTION
THIS ~~SHEET~~ SUPERSEDES

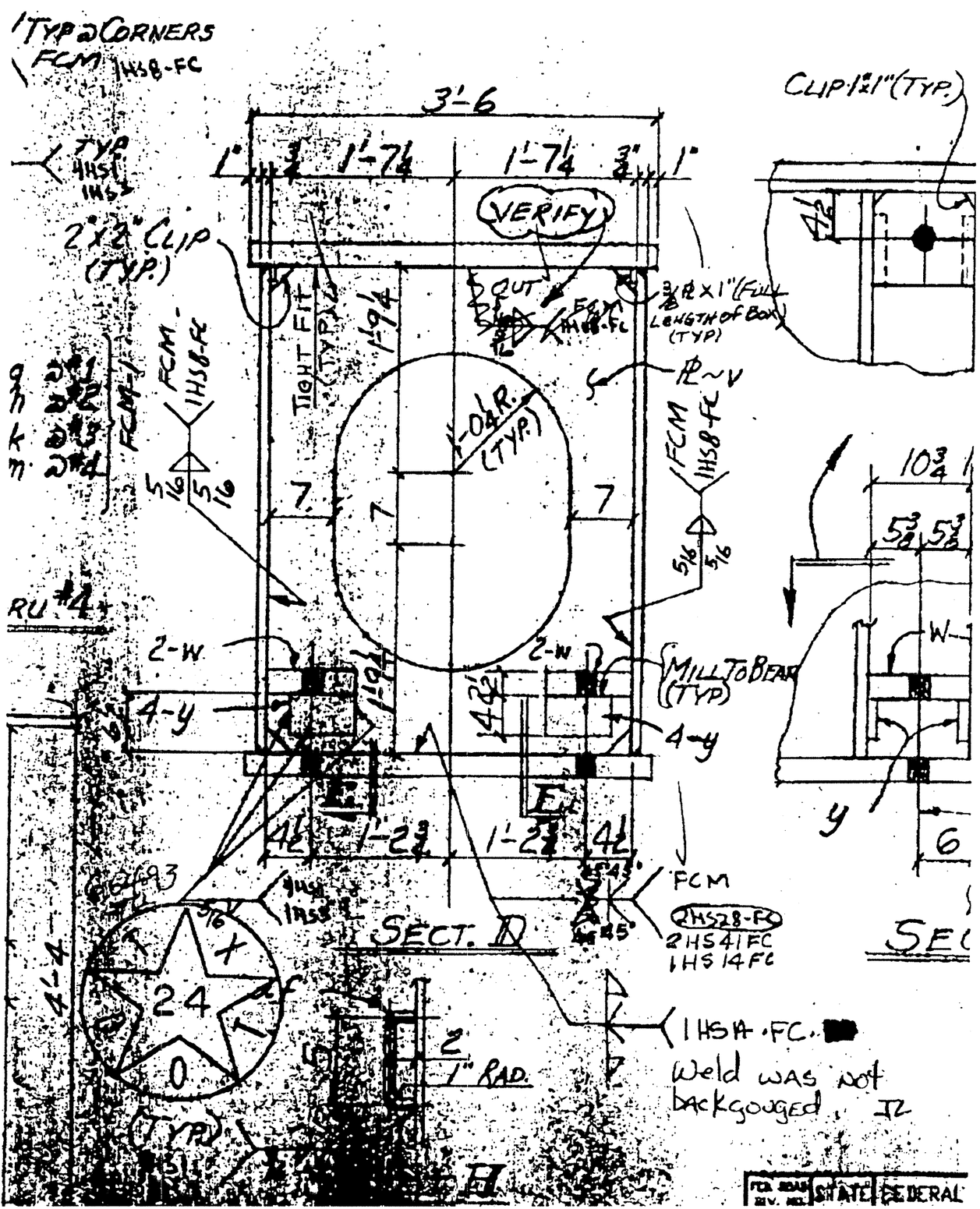
1 TYP @ CORNERS
FCM 1HS8-FC
TYP 4HS1 1HS2
2x2" CLIP (TYP.)
3'-6
1" 3" 1'-7¼ 1'-7¼ 3" 1"
VERIFY
CLIP 1"x1" (TYP.)
3/8 R x 1" (Full Length of Bar) (TYP)
FCM 1HS8-FC
TIGHT FIT (TYP.)
1'-0½" R. (TYP.)
7
10¾
5⅜ 5⅜
W
2-W
4-y
MILL TO BEAR (TYP)
42"
1'-2½"
FCM
2HS28-FC
2HS41FC
1HS14FC
SECT. D
1HS1A-FC
Weld was not backgouged. JL
2
1" RAD.
24
0
6-24-93
JL
STATE
FEDERAL

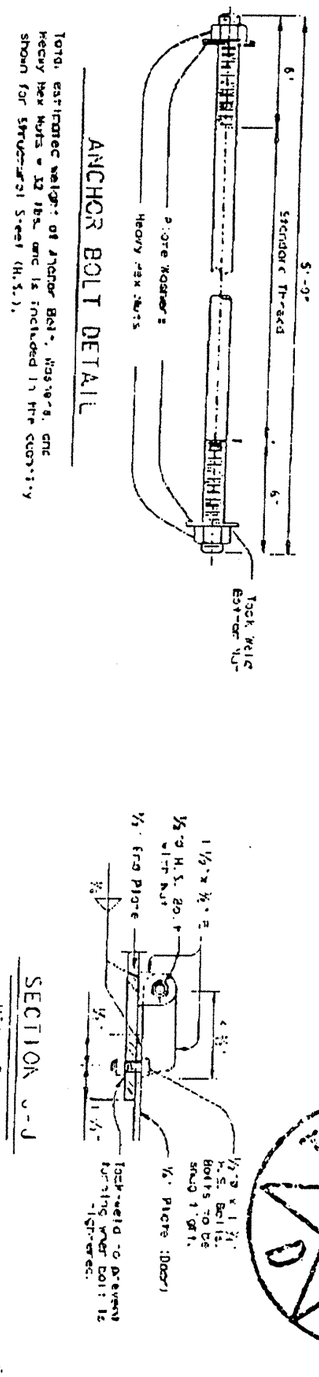
ANCHOR BOLT DETAIL
Total estimated weight of Anchor Bolts, Washers, and Heavy Hex Nuts = 32 lbs. and is included in the quantity shown for Structural Steel (W.S.).
Pipe Washer
Heavy Hex Nuts
5'-0" Standard Thread
6"
1"

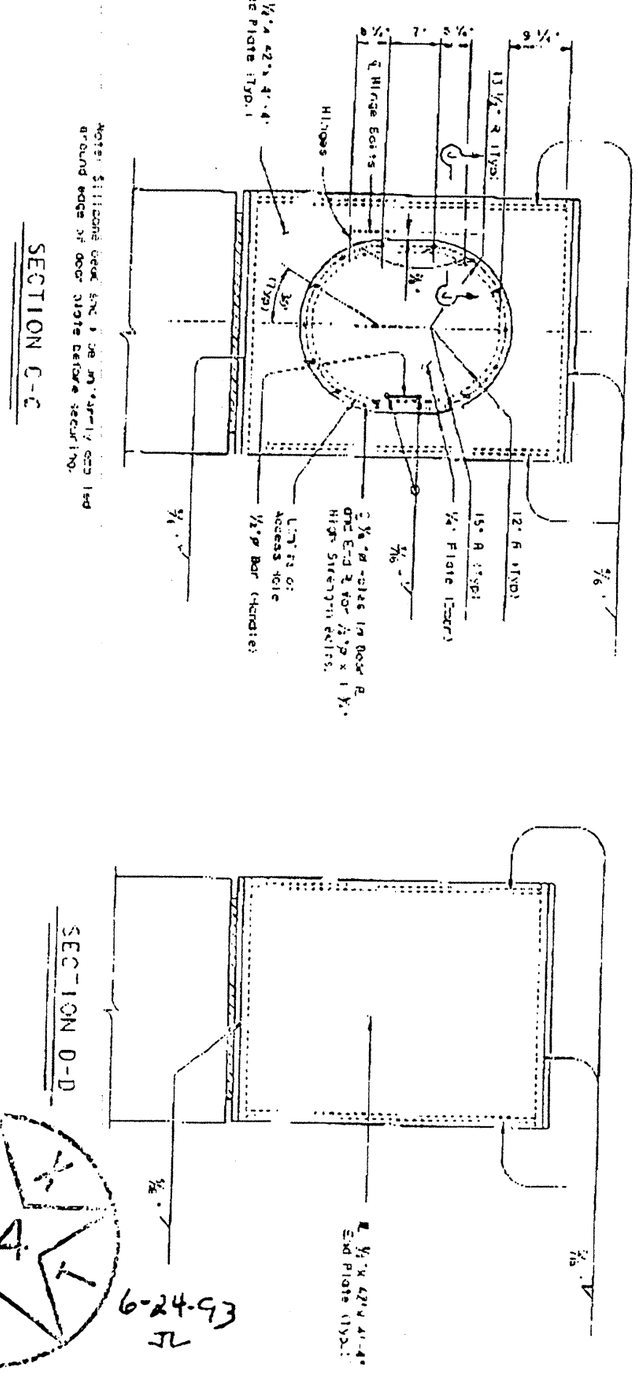
SECTION C-C
Note: Silicone caulk shall be applied around edge of door plate before securing.
Hinges
2 ½"x42"x1'-4" End Plate (Typ.)
13½" R (Typ.)
12" R (Typ.)
15" R (Typ.)
¾" Plate (Typ.)
Lifting Access Hole
1½"ø Bar (Handle)
⅝"

SECTION J-J
Hinge Detail
1½"x¾"x2" Hinge Bar
½" Plate (Door)
½" Plate

SECTION D-D
½" Plate (Typ.)
2 ½"x42"x1'-4" End Plate (Typ.)

BILL OF MATERIALS

	Qty.	Material	Length	Mark Temp.	Mark Ship.	Wt.	Cut From	Remarks
1								
2	1	GIRDER SUB-ASSY			A205			
3	1	PL 5/8 x 72	130'-1 15/16	1.01WA			205-2	CVN2
4	1	PL 1 1/2 x 26	50'-0	1.01TA			210-2	
5	1	PL 1 1/2 x 26	1'-11 7/16	1.01BA			206-11	CVN2
6	1	PL 1 1/2 x 26	2'-3 1/16	1.01BB			206-12	CVN2
7	1	PL 1 1/2 x 26	41'-4	1.01BC			207-2	CVN2
8	1	PL 1 3/4 x 26	35'-0 1/4	1.01BD			207-3	CVN2
9	1	PL 1 3/4 x 26	50'-0	1.01BE				CVN2
10	1	PL 1 1/2 x 26	80'-0 1/4	1.01TE				
11								
12								
13								
14								
15	1	GIRDER SUB-ASSY			B205			
16	1	PL 3/4 x 72	120'-2 11/16	2.01WA			205-3	CVN2
17	1	PL 1 1/2 x 26	27'-0 5/16	2.01TA			207-4	CVN2
18	1	PL 2 1/2 x 30	20'-0	2.01TB			209-2	CVN3
19	1	PL 3 x 30	20'-0	2.01TC			209-3	CVN3
20	1	PL 2 1/2 x 30	20'-0	2.01TD			209-2	CVN3
21	1	PL 1 1/2 x 26	33'-0 3/16	2.01TE			207-5	CVN2
22	1	PL 1 3/4 x 26	27'-0 5/16	2.01BA			210-3	
23	1	PL 2 1/2 x 30	20'-0	2.01BB			210-4	
24	1	PL 3 x 30	20'-0	2.01BC			210-5	
25	1	PL 2 1/2 x 30	20'-0	2.01BD			210-4	
26	1	PL 1 3/4 x 26	33'-0 3/16	2.01BE			210-6	
27								
28								
29								
30								
31								
32								
33								
34								
35								
36								
37								
38								
39								

6-24-93
JL

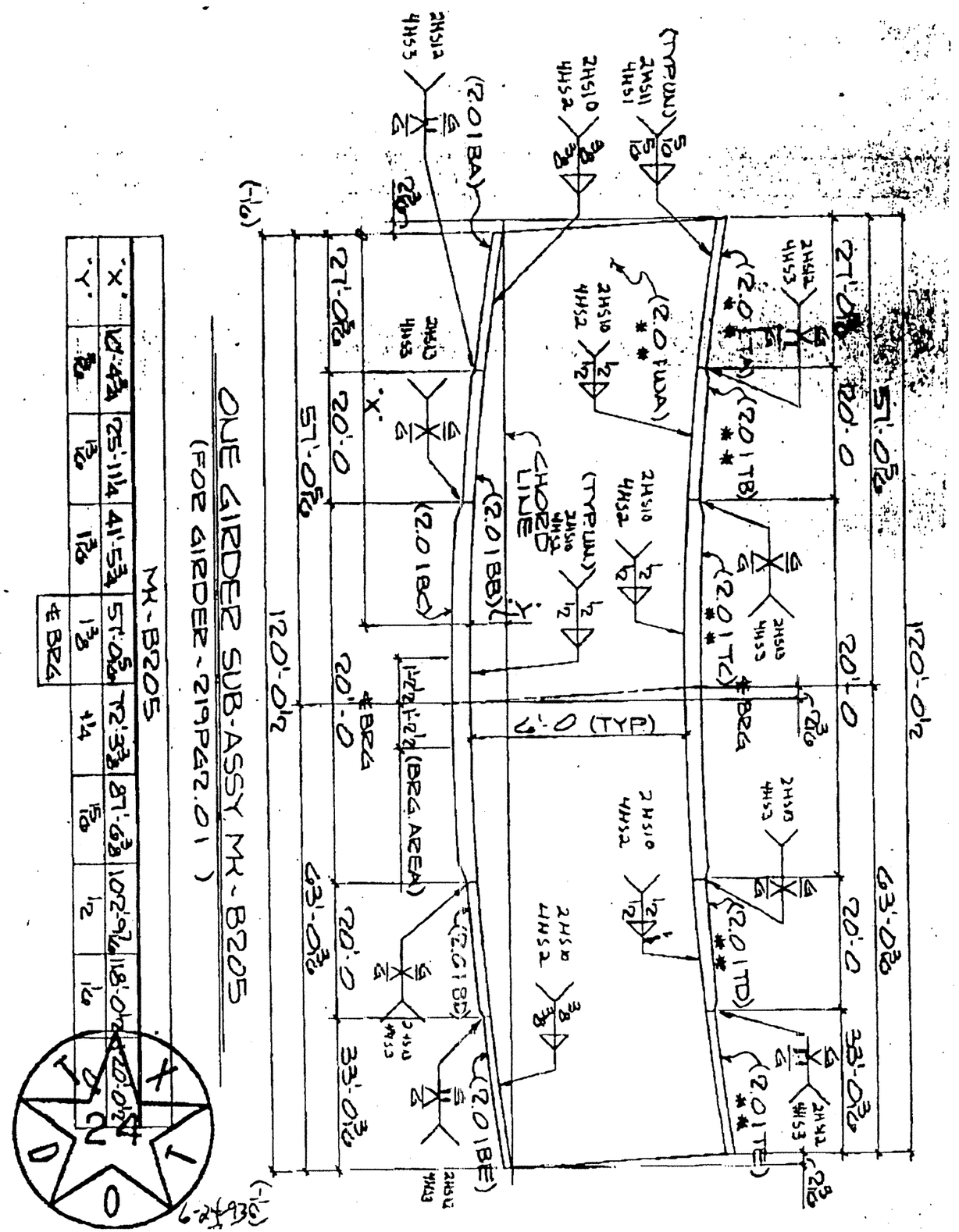
ONE GIRDER SUB-ASSY MK-B205
(FOR GIRDER-219P42.01)
MK-B205
#BZ4
#B26
#B36
#B46
#B56
#B66
#B76
#B86
#B96
#BA6
#BB6
#BC6
#BD6
#BE6
#BF6
#BG6
#BH6
#BJ6
#BK6
#BL6
#BM6
#BN6
#BP6
#BQ6
#BR6
#BS6
#BT6
#BU6
#BV6
#BW6
#BX6
#BY6
#BZ6
#CA6
#CB6
#CC6
#CD6
#CE6
#CF6
#CG6
#CH6
#CJ6
#CK6
#CL6
#CM6
#CN6
#CP6
#CQ6
#CR6
#CS6
#CT6
#CU6
#CV6
#CW6
#CX6
#CY6
#CZ6
#DA6
#DB6
#DC6
#DD6
#DE6
#DF6
#DG6
#DH6
#DJ6
#DK6
#DL6
#DM6
#DN6
#DP6
#DQ6
#DR6
#DS6
#DT6
#DU6
#DV6
#DW6
#DX6
#DY6
#DZ6
#EA6
#EB6
#EC6
#ED6
#EE6
#EF6
#EG6
#EH6
#EJ6
#EK6
#EL6
#EM6
#EN6
#EP6
#EQ6
#ER6
#ES6
#ET6
#EU6
#EV6
#EW6
#EX6
#EY6
#EZ6
#FA6
#FB6
#FC6
#FD6
#FE6
#FF6
#FG6
#FH6
#FJ6
#FK6
#FL6
#FM6
#FN6
#FP6
#FQ6
#FR6
#FS6
#FT6
#FU6
#FV6
#FW6
#FX6
#FY6
#FZ6
#GA6
#GB6
#GC6
#GD6
#GE6
#GF6
#GG6
#GH6
#GJ6
#GK6
#GL6
#GM6
#GN6
#GP6
#GQ6
#GR6
#GS6
#GT6
#GU6
#GV6
#GW6
#GX6
#GY6
#GZ6
#HA6
#HB6
#HC6
#HD6
#HE6
#HF6
#HG6
#HH6
#HJ6
#HK6
#HL6
#HM6
#HN6
#HP6
#HQ6
#HR6
#HS6
#HT6
#HU6
#HV6
#HW6
#HX6
#HY6
#HZ6
#JA6
#JB6
#JC6
#JD6
#JE6
#JF6
#JG6
#JH6
#JJ6
#JK6
#JL6
#JM6
#JN6
#JP6
#JQ6
#JR6
#JS6
#JT6
#JU6
#JV6
#JW6
#JX6
#JY6
#JZ6
#KA6
#KB6
#KC6
#KD6
#KE6
#KF6
#KG6
#KH6
#KJ6
#KK6
#KL6
#KM6
#KN6
#KP6
#KQ6
#KR6
#KS6
#KT6
#KU6
#KV6
#KW6
#KX6
#KY6
#KZ6
#LA6
#LB6
#LC6
#LD6
#LE6
#LF6
#LG6
#LH6
#LJ6
#LK6
#LL6
#LM6
#LN6
#LP6
#LQ6
#LR6
#LS6
#LT6
#LU6
#LV6
#LW6
#LX6
#LY6
#LZ6
#MA6
#MB6
#MC6
#MD6
#ME6
#MF6
#MG6
#MH6
#MJ6
#MK6
#ML6
#MM6
#MN6
#MP6
#MQ6
#MR6
#MS6
#MT6
#MU6
#MV6
#MW6
#MX6
#MY6
#MZ6
#NA6
#NB6
#NC6
#ND6
#NE6
#NF6
#NG6
#NH6
#NJ6
#NK6
#NL6
#NM6
#NN6
#NP6
#NQ6
#NR6
#NS6
#NT6
#NU6
#NV6
#NW6
#NX6
#NY6
#NZ6
#PA6
#PB6
#PC6
#PD6
#PE6
#PF6
#PG6
#PH6
#PJ6
#PK6
#PL6
#PM6
#PN6
#PP6
#PQ6
#PR6
#PS6
#PT6
#PU6
#PV6
#PW6
#PX6
#PY6
#PZ6
#QA6
#QB6
#QC6
#QD6
#QE6
#QF6
#QG6
#QH6
#QJ6
#QK6
#QL6
#QM6
#QN6
#QP6
#QQ6
#QR6
#QS6
#QT6
#QU6
#QV6
#QW6
#QX6
#QY6
#QZ6
#RA6
#RB6
#RC6
#RD6
#RE6
#RF6
#RG6
#RH6
#RJ6
#RK6
#RL6
#RM6
#RN6
#RP6
#RQ6
#RR6
#RS6
#RT6
#RU6
#RV6
#RW6
#RX6
#RY6
#RZ6
#SA6
#SB6
#SC6
#SD6
#SE6
#SF6
#SG6
#SH6
#SJ6
#SK6
#SL6
#SM6
#SN6
#SP6
#SQ6
#SR6
#SS6
#ST6
#SU6
#SV6
#SW6
#SX6
#SY6
#SZ6
#TA6
#TB6
#TC6
#TD6
#TE6
#TF6
#TG6
#TH6
#TJ6
#TK6
#TL6
#TM6
#TN6
#TP6
#TQ6
#TR6
#TS6
#TT6
#TU6
#TV6
#TW6
#TX6
#TY6
#TZ6
#UA6
#UB6
#UC6
#UD6
#UE6
#UF6
#UG6
#UH6
#UJ6
#UK6
#UL6
#UM6
#UN6
#UP6
#UQ6
#UR6
#US6
#UT6
#UU6
#UV6
#UW6
#UX6
#UY6
#UZ6
#VA6
#VB6
#VC6
#VD6
#VE6
#VF6
#VG6
#VH6
#VJ6
#VK6
#VL6
#VM6
#VN6
#VP6
#VQ6
#VR6
#VS6
#VT6
#VU6
#VV6
#VW6
#VX6
#VY6
#VZ6
#WA6
#WB6
#WC6
#WD6
#WE6
#WF6
#WG6
#WH6
#WJ6
#WK6
#WL6
#WM6
#WN6
#WP6
#WQ6
#WR6
#WS6
#WT6
#WU6
#WV6
#WW6
#WX6
#WY6
#WZ6
#XA6
#XB6
#XC6
#XD6
#XE6
#XF6
#XG6
#XH6
#XJ6
#XK6
#XL6
#XM6
#XN6
#XP6
#XQ6
#XR6
#XS6
#XT6
#XU6
#XV6
#XW6
#XX6
#XY6
#XZ6
#YA6
#YB6
#YC6
#YD6
#YE6
#YF6
#YG6
#YH6
#YJ6
#YK6
#YL6
#YM6
#YN6
#YP6
#YQ6
#YR6
#YS6
#YT6
#YU6
#YV6
#YW6
#YX6
#YY6
#YZ6
#ZA6
#ZB6
#ZC6
#ZD6
#ZE6
#ZF6
#ZG6
#ZH6
#ZJ6
#ZK6
#ZL6
#ZM6
#ZN6
#ZP6
#ZQ6
#ZR6
#ZS6
#ZT6
#ZU6
#ZV6
#ZW6
#ZX6
#ZY6
#ZZ6
#AAA6
#AAB6
#AAC6
#AAD6
#AAE6
#AAF6
#AAG6
#AAH6
#AAJ6
#AAK6
#AAL6
#AAM6
#AAN6
#AAP6
#AAQ6
#AAR6
#AAS6
#AAT6
#AAU6
#AAV6
#AAW6
#AAX6
#AAY6
#AAZ6
#ABA6
#ABB6
#ABC6
#ABD6
#ABE6
#ABF6
#ABG6
#ABH6
#ABJ6
#ABK6
#ABL6
#ABM6
#ABN6
#ABP6
#ABQ6
#ABR6
#ABS6
#ABT6
#ABU6
#ABV6
#ABW6
#ABX6
#ABY6
#ABZ6
#ACA6
#ACB6
#ACC6
#ACD6
#ACE6
#ACF6
#ACG6
#ACH6
#ACJ6
#ACK6
#ACL6
#ACM6
#ACN6
#ACP6
#ACQ6
#ACR6
#ACS6
#ACT6
#ACU6
#ACV6
#ACW6
#ACX6
#ACY6
#ACZ6
#ADA6
#ADB6
#ADC6
#ADD6
#ADE6
#ADF6
#ADG6
#ADH6
#ADJ6
#ADK6
#ADL6
#ADM6
#ADN6
#ADP6
#ADQ6
#ADR6
#ADS6
#ADT6
#ADU6
#ADV6
#ADW6
#ADX6
#ADY6
#ADZ6
#AEA6
#AEB6
#AEC6
#AED6
#AEE6
#AEF6
#AEG6
#AEH6
#AEJ6
#AEK6
#AEL6
#AEM6
#AEN6
#AEP6
#AEQ6
#AER6
#AES6
#AET6
#AEU6
#AEV6
#AEW6
#AEX6
#AEY6
#AEZ6
#AFA6
#AFB6
#AFC6
#AFD6
#AFE6
#AFF6
#AFG6
#AFH6
#AFJ6
#AFK6
#AFL6
#AFM6
#AFN6
#AFP6
#AFQ6
#AFR6
#AFS6
#AFT6
#AFU6
#AFV6
#AFW6
#AFX6
#AFY6
#AFZ6
#AGA6
#AGB6
#AGC6
#AGD6
#AGE6
#AGF6
#AGG6
#AGH6
#AGJ6
#AGK6
#AGL6
#AGM6
#AGN6
#AGP6
#AGQ6
#AGR6
#AGS6
#AGT6
#AGU6
#AGV6
#AGW6
#AGX6
#AGY6
#AGZ6
#AHA6
#AHB6
#AHC6
#AHD6
#AHE6
#AHF6
#AHG6
#AHH6
#AHJ6
#AHK6
#AHL6
#AHM6
#AHN6
#AHP6
#AHQ6
#AHR6
#AHS6
#AHT6
#AHU6
#AHV6
#AHW6
#AHX6
#AHY6
#AHZ6
#AJA6
#AJB6
#AJC6
#AJD6
#AJE6
#AJF6
#AJG6
#AJH6
#AJJ6
#AJK6
#AJL6
#AJM6
#AJN6
#AJP6
#AJQ6
#AJR6
#AJS6
#AJT6
#AJU6
#AJV6
#AJW6
#AJX6
#AJY6
#AJZ6
#AKA6
#AKB6
#AKC6
#AKD6
#AKE6
#AKF6
#AKG6
#AKH6
#AKJ6
#AKK6
#AKL6
#AKM6
#AKN6
#AKP6
#AKQ6
#AKR6
#AKS6
#AKT6
#AKU6
#AKV6
#AKW6
#AKX6
#AKY6
#AKZ6
#ALA6
#ALB6
#ALC6
#ALD6
#ALE6
#ALF6
#ALG6
#ALH6
#ALJ6
#ALK6
#ALL6
#ALM6
#ALN6
#ALP6
#ALQ6
#ALR6
#ALS6
#ALT6
#ALU6
#ALV6
#ALW6
#ALX6
#ALY6
#ALZ6
#AMA6
#AMB6
#AMC6
#AMD6
#AME6
#AMF6
#AMG6
#AMH6
#AMJ6
#AMK6
#AML6
#AMM6
#AMN6
#AMP6
#AMQ6
#AMR6
#AMS6
#AMT6
#AMU6
#AMV6
#AMW6
#AMX6
#AMY6
#AMZ6
#ANA6
#ANB6
#ANC6
#AND6
#ANE6
#ANF6
#ANG6
#ANH6
#ANJ6
#ANK6
#ANL6
#ANM6
#ANN6
#ANP6
#ANQ6
#ANR6
#ANS6
#ANT6
#ANU6
#ANV6
#ANW6
#ANX6
#ANY6
#ANZ6
#APA6
#APB6
#APC6
#APD6
#APE6
#APF6
#APG6
#APH6
#APJ6
#APK6
#APL6
#APM6
#APN6
#APP6
#APQ6
#APR6
#APS6
#APT6
#APU6
#APV6
#APW6
#APX6
#APY6
#APZ6
#AQA6
#AQB6
#AQC6
#AQD6
#AQE6
#AQF6
#AQG6
#AQH6
#AQJ6
#AQK6
#AQL6
#AQM6
#AQN6
#AQP6
#AQQ6
#AQR6
#AQS6
#AQT6
#AQU6
#AQV6
#AQW6
#AQX6
#AQY6
#AQZ6
#ARA6
#ARB6
#ARC6
#ARD6
#ARE6
#ARF6
#ARG6
#ARH6
#ARJ6
#ARK6
#ARL6
#ARM6
#ARN6
#ARP6
#ARQ6
#ARR6
#ARS6
#ART6
#ARU6
#ARV6
#ARW6
#ARX6
#ARY6
#ARZ6
#ASA6
#ASB6
#ASC6
#ASD6
#ASE6
#ASF6
#ASG6
#ASH6
#ASJ6
#ASK6
#ASL6
#ASM6
#ASN6
#ASP6
#ASQ6
#ASR6
#ASS6
#AST6
#ASU6
#ASV6
#ASW6
#ASX6
#ASY6
#ASZ6
#ATA6
#ATB6
#ATC6
#ATD6
#ATE6
#ATF6
#ATG6
#ATH6
#ATJ6
#ATK6
#ATL6
#ATM6
#ATN6
#ATP6
#ATQ6
#ATR6
#ATS6
#ATT6
#ATU6
#ATV6
#ATW6
#ATX6
#ATY6
#ATZ6
#AUA6
#AUB6
#AUC6
#AUD6
#AUE6
#AUF6
#AUG6
#AUH6
#AUJ6
#AUK6
#AUL6
#AUM6
#AUN6
#AUP6
#AUQ6
#AUR6
#AUS6
#AUT6
#AUU6
#AUV6
#AUW6
#AUX6
#AUY6
#AUZ6
#AVA6
#AVB6
#AVC6
#AVD6
#AVE6
#AVF6
#AVG6
#AVH6
#AVJ6
#AVK6
#AVL6
#AVM6
#AVN6
#AVP6
#AVQ6
#AVR6
#AVS6
#AVT6
#AVU6
#AVV6
#AVW6
#AVX6
#AVY6
#AVZ6
#AWA6
#AWB6
#AWC6
#AWD6
#AWE6
#AWF6
#AWG6
#AWH6
#AWJ6
#AWK6
#AWL6
#AWM6
#AWN6
#AWP6
#AWQ6
#AWR6
#AWS6
#AWT6
#AWU6
#AWV6
#AWW6
#AWX6
#AWY6
#AWZ6
#AXA6
#AXB6
#AXC6
#AXD6
#AXE6
#AXF6
#AXG6
#AXH6
#AXJ6
#AXK6
#AXL6
#AXM6
#AXN6
#AXP6
#AXQ6
#AXR6
#AXS6
#AXT6
#AXU6
#AXV6
#AXW6
#AXX6
#AXY6
#AXZ6
#AYA6
#AYB6
#AYC6
#AYD6
#AYE6
#AYF6
#AYG6
#AYH6
#AYJ6
#AYK6
#AYL6
#AYM6
#AYN6
#AYP6
#AYQ6
#AYR6
#AYS6
#AYT6
#AYU6
#AYV6
#AYW6
#AYX6
#AYY6
#AYZ6
#AZA6
#AZB6
#AZC6
#AZD6
#AZE6
#AZF6
#AZG6
#AZH6
#AZJ6
#AZK6
#AZL6
#AZM6
#AZN6
#AZP6
#AZQ6
#AZR6
#AZS6
#AZT6
#AZU6
#AZV6
#AZW6
#AZX6
#AZY6
#AZZ6
#BAA6
#BAB6
#BAC6
#BAD6
#BAE6
#BAF6
#BAG6
#BAH6
#BAJ6
#BAK6
#BAL6
#BAM6
#BAN6
#BAP6
#BAQ6
#BAR6
#BAS6
#BAT6
#BAU6
#BAV6
#BAW6
#BAX6
#BAY6
#BAZ6
#BBA6
#BBB6
#BBC6
#BBD6
#BBE6
#BBF6
#BBG6
#BBH6
#BBJ6
#BBK6
#BBL6
#BBM6
#BBN6
#BBP6
#BBQ6
#BBR6
#BBS6
#BBT6
#BBU6
#BBV6
#BBW6
#BBX6
#BBY6
#BBZ6
#BCA6
#BCB6
#BCC6
#BCD6
#BCE6
#BCF6
#BCG6
#BCH6
#BCJ6
#BCK6
#BCL6
#BCM6
#BCN6
#BCP6
#BCQ6
#BCR6
#BCS6
#BCT6
#BCU6
#BCV6
#BCW6
#BCX6
#BCY6
#BCZ6
#BDA6
#BDB6
#BDC6
#BDD6
#BDE6
#BDF6
#BDG6
#BDH6
#BDJ6
#BDK6
#BDL6
#BDM6
#BDN6
#BDP6
#BDQ6
#BDR6
#BDS6
#BDT6
#BDU6
#BDV6
#BDW6
#BDX6
#BDY6
#BDZ6
#BEA6
#BEB6
#BEC6
#BED6
#BEE6
#BEF6
#BEG6
#BEH6
#BEJ6
#BEK6
#BEL6
#BEM6
#BEN6
#BEP6
#BEQ6
#BER6
#BES6
#BET6
#BEU6
#BEV6
#BEW6
#BEX6
#BEY6
#BEZ6
#BFA6
#BFB6
#BFC6
#BFD6
#BFE6
#BFF6
#BFG6
#BFH6
#BFJ6
#BFK6
#BFL6
#BFM6
#BFN6
#BFP6
#BFQ6
#BFR6
#BFS6
#BFT6
#BFU6
#BFV6
#BFW6
#BFX6
#BFY6
#BFZ6
#BGA6
#BGB6
#BGC6
#BGD6
#BGE6
#BGF6
#BGG6
#BGH6
#BGJ6
#BGK6
#BGL6
#BGM6
#BGN6
#BGP6
#BGQ6
#BGR6
#BGS6
#BGT6
#BGU6
#BGV6
#BGW6
#BGX6
#BGY6
#BGZ6
#BHA6
#BHB6
#BHC6
#BHD6
#BHE6
#BHF6
#BHG6
#BHH6
#BHJ6
#BHK6
#BHL6
#BHM6
#BHN6
#BHP6
#BHQ6
#BHR6
#BHS6
#BHT6
#BHU6
#BHV6
#BHW6
#BHX6
#BHY6
#BHZ6
#BJA6
#BJB6
#BJC6
#BJD6
#BJE6
#BJF6
#BJG6
#BJH6
#BJJ6
#BJK6
#BJL6
#BJM6
#BJN6
#BJP6
#BJQ6
#BJR6
#BJS6
#BJT6
#BJU6
#BJV6
#BJW6
#BJX6
#BJY6
#BJZ6
#BKA6
#BKB6
#BKC6
#BKD6
#BKE6
#BKF6
#BKG6
#BKH6
#BKJ6
#BKK6
#BKL6
#BKM6
#BKN6
#BKP6
#BKQ6
#BKR6
#BKS6
#BKT6
#BKU6
#BKV6
#BKW6
#BKX6
#BKY6
#BKZ6
#BLA6
#BLB6
#BLC6
#BLD6
#BLE6
#BLF6
#BLG6
#BLH6
#BLJ6
#BLK6
#BLL6
#BLM6
#BLN6
#BLP6
#BLQ6
#BLR6
#BLS6
#BLT6
#BLU6
#BLV6
#BLW6
#BLX6
#BLY6
#BLZ6
#BMA6
#BMB6
#BMC6
#BMD6
#BME6
#BMF6
#BMG6
#BMH6
#BMJ6
#BMK6
#BML6
#BMM6
#BMN6
#BMP6
#BMQ6
#BMR6
#BMS6
#BMT6
#BMU6
#BMV6
#BMW6
#BMX6
#BMY6
#BMZ6
#BNA6
#BNB6
#BNC6
#BND6
#BNE6
#BNF6
#BNG6
#BNH6
#BNJ6
#BNK6
#BNL6
#BNM6
#BNN6
#BNP6
#BNQ6
#BNR6
#BNS6
#BNT6
#BNU6
#BNV6
#BNW6
#BNX6
#BNY6
#BNZ6
#BPA6
#BPB6
#BPC6
#BPD6
#BPE6
#BPF6
#BPG6
#BPH6
#BPJ6
#BPK6
#BPL6
#BPM6
#BPN6
#BPP6
#BPQ6
#BPR6
#BPS6
#BPT6
#BPU6
#BPV6
#BPW6
#BPX6
#BPY6
#BPZ6
#BQA6
#BQB6
#BQC6
#BQD6
#BQE6
#BQF6
#BQG6
#BQH6
#BQJ6
#BQK6
#BQL6
#BQM6
#BQN6
#BQP6
#BQQ6
#BQR6
#BQS6
#BQT6
#BQU6
#BQV6
#BQW6
#BQX6
#BQY6
#BQZ6
#BRA6
#BRB6
#BRC6
#BRD6
#BRE6
#BRF6
#BRG6
#BRH6
#BRJ6
#BRK6
#BRL6
#BRM6
#BRN6
#BRP6
#BRQ6
#BRR6
#BRS6
#BRT6
#BRU6
#BRV6
#BRW6
#BRX6
#BRY6
#BRZ6
#BSA6
#BSB6
#BSC6
#BSD6
#BSE6
#BSF6
#BSG6
#BSH6
#BSJ6
#BSK6
#BSL6
#BSM6
#BSN6
#BSP6
#BSQ6
#BSR6
#BSS6
#BST6
#BSU6
#BSV6
#BSW6
#BSX6
#BSY6
#BSZ6
#BTA6
#BTB6
#BTC6
#BTD6
#BTE6
#BTF6
#BTG6
#BTH6
#BTJ6
#BTK6
#BTL6
#BTM6
#BTN6
#BTP6
#BTQ6
#BTR6
#BTS6
#BTT6
#BTU6
#BTV6
#BTW6
#BTX6
#BTY6
#BTZ6
#BUA6
#BUB6
#BUC6
#BUD6
#BUE6
#BUF6
#BUG6
#BUH6
#BUJ6
#BUK6
#BUL6
#BUM6
#BUN6
#BUP6
#BUQ6
#BUR6
#BUS6
#BUT6
#BUU6
#BUV6
#BUW6
#BUX6
#BUY6
#BUZ6
#BVA6
#BVB6
#BVC6
#BVD6
#BVE6
#BVF6
#BVG6
#BVH6
#BVJ6
#BVK6
#BVL6
#BVM6
#BVN6
#BVP6
#BVQ6
#BVR6
#BVS6
#BVT6
#BVU6
#BVV6
#BVW6
#BVX6
#BVY6
#BVZ6
#BWA6
#BWB6
#BWC6
#BWD6
#BWE6
#BWF6
#BWG6
#BWH6
#BWJ6
#BWK6
#BWL6
#BWM6
#BWN6
#BWP6
#BWQ6
#BWR6
#BWS6
#BWT6
#BWU6
#BWV6
#BWW6
#BWX6
#BWY6
#BWZ6
#BXA6
#BXB6
#BXC6
#BXD6
#BXE6
#BXF6
#BXG6
#BXH6
#BXJ6
#BXK6
#BXL6
#BXM6
#BXN6
#BXP6
#BXQ6
#BXR6
#BXS6
#BXT6
#BXU6
#BXV6
#BXW6
#BXX6
#BXY6
#BXZ6
#BYA6
#BYB6
#BYC6
#BYD6
#BYE6
#BYF6
#BYG6
#BYH6
#BYJ6
#BYK6
#BYL6
#BYM6
#BYN6
#BYP6
#BYQ6
#BYR6
#BYS6
#BYT6
#BYU6
#BYV6
#BYW6
#BYX6
#BYY6
#BYZ6
#BZA6
#BZB6
#BZC6
#BZD6
#BZE6
#BZF6
#BZG6
#BZH6
#BZJ6
#BZK6
#BZL6
#BZM6
#BZN6
#BZP6
#BZQ6
#BZR6
#BZS6
#BZT6
#BZU6
#BZV6
#BZW6
#BZX6
#BZY6
#BZZ6
#CAA6
#CAB6
#CAC6
#CAD6
#CAE6
#CAF6
#CAG6
#CAH6
#CAJ6
#CAK6
#CAL6
#CAM6
#CAN6
#CAP6
#CAQ6
#CAR6
#CAS6
#CAT6
#CAU6
#CAV6
#CAW6
#CAX6
#CAY6
#CAZ6
#CBA6
#CBB6
#CBC6
#CBD6
#CBE6
#CBF6
#CBG6
#CBH6
#CBJ6
#CBK6
#CBL6
#CBM6
#CBN6
#CBP6
#CBQ6
#CBR6
#CBS6
#CBT6
#CBU6
#CBV6
#CBW6
#CBX6
#CBY6
#CBZ6
#CCA6
#CCB6
#CCC6
#CCD6
#CCE6
#CCF6
#CCG6
#CCH6
#CCJ6
#CCK6
#CCL6
#CCM6
#CCN6
#CCP6
#CCQ6
#CCR6
#CCS6
#CCT6
#CCU6
#CCV6
#CCW6
#CCX6
#CCY6
#CCZ6
#CDA6
#CDB6
#CDC6
#CDD6
#CDE6
#CDF6
#CDG6
#CDH6
#CDJ6
#CDK6
#CDL6
#CDM6
#CDN6
#CDP6
#CDQ6
#CDR6
#CDS6
#CDT6
#CDU6
#CDV6
#CDW6
#CDX6
#CDY6
#CDZ6
#CEA6
#CEB6
#CEC6
#CED6
#CEE6
#CEF6
#CEG6
#CEH6
#CEJ6
#CEK6
#CEL6
#CEM6
#CEN6
#CEP6
#CEQ6
#CER6
#CES6
#CET6
#CEU6
#CEV6
#CEW6
#CEX6
#CEY6
#CEZ6
#CFA6
#CFB6
#CFC6
#CFD6
#CFE6
#CFF6
#CFG6
#CFH6
#CFJ6
#CFK6
#CFL6
#CFM6
#CFN6
#CFP6
#CFQ6
#CFR6
#CFS6
#CFT6
#CFU6
#CFV6
#CFW6
#CFX6
#CFY6
#CFZ6
#CGA6
#CGB6
#CGC6
#CGD6
#CGE6
#CGF6
#CGG6
#CGH6
#CGJ6
#CGK6
#CGL6
#CGM6
#CGN6
#CGP6
#CGQ6
#CGR6
#CGS6
#CGT6
#CGU6
#CGV6
#CGW6
#CGX6
#CGY6
#CGZ6
#CHA6
#CHB6
#CHC6
#CHD6
#CHE6
#CHF6
#CHG6
#CHH6
#CHJ6
#CHK6
#CHL6
#CHM6
#CHN6
#CHP6
#CHQ6
#CHR6
#CHS6
#CHT6
#CHU6
#CHV6
#CHW6
#CHX6
#CHY6
#CHZ6
#CJA6
#CJB6
#CJC6
#CJD6
#CJE6
#CJF6
#CJG6
#CJH6
#CJJ6
#CJK6
#CJL6
#CJM6
#CJN6
#CJP6
#CJQ6
#CJR6
#CJS6
#CJT6
#CJU6
#CJV6
#CJW6
#CJX6
#CJY6
#CJZ6
#CKA6
#CKB6
#CKC6
#CKD6
#CKE6
#CKF6
#CKG6
#CKH6
#CKJ6
#CKK6
#CKL6
#CKM6
#CKN6
#CKP6
#CKQ6
#CKR6
#CKS6
#CKT6
#CKU6
#CKV6
#CKW6
#CKX6
#CKY6
#CKZ6
#CLA6
#CLB6
#CLC6
#CLD6
#CLE6
#CLF6
#CLG6
#CLH6
#CLJ6
#CLK6
#CLL6
#CLM6
#CLN6
#CLP6
#CLQ6
#CLR6
#CLS6
#CLT6
#CLU6
#CLV6
#CLW6
#CLX6
#CLY6
#CLZ6
#CMA6
#CMB6
#CMC6
#CMD6
#CME6
#CMF6
#CMG6
#CMH6
#CMJ6
#CMK6
#CML6
#CMM6
#CMN6
#CMP6
#CMQ6
#CMR6
#CMS6
#CMT6
#CMU6
#CMV6
#CMW6
#CMX6
#CMY6
#CMZ6
#CNA6
#CNB6
#CNC6
#CND6
#CNE6
#CNF6
#CNG6
#CNH6
#CNJ6
#CNK6
#CNL6
#CNM6
#CNN6
#CNP6
#CNQ6
#CNR6
#CNS6
#CNT6
#CNU6
#CNV6
#CNW6
#CNX6
#CNY6
#CNZ6
#CPA6
#CPB6
#CPC6
#CPD6
#CPE6
#CPF6
#CPG6
#CPH6
#CPJ6
#CPK6
#CPL6
#CPM6
#CPN6
#CPP6
#CPQ6
#CPR6
#CPS6
#CPT6
#CPU6
#CPV6
#CPW6
#CPX6
#CPY6
#CPZ6
#CQA6
#CQB6
#CQC6
#CQD6
#CQE6
#CQF6
#CQG6
#CQH6
#CQJ6
#CQK6
#CQL6
#CQM6
#CQN6
#CQP6
#CQQ6
#CQR6
#CQS6
#CQT6
#CQU6
#CQV6
#CQW6
#CQX6
#CQY6
#CQZ6
#CRA6
#CRB6
#CRC6
#CRD6
#CRE6
#CRF6
#CRG6
#CRH6
#CRJ6
#CRK6
#CRL6
#CRM6
#CRN6
#CRP6
#CRQ6
#CRR6
#CRS6
#CRT6
#CRU6
#CRV6
#CRW6
#CRX6
#CRY6
#CRZ6
#CSA6
#CSB6
#CSC6
#CSD6
#CSE6
#CSF6
#CSG6
#CSH6
#CSJ6
#CSK6
#CSL6
#CSM6
#CSN6
#CSP6
#CSQ6
#CSR6
#CSS6
#CST6
#CSU6
#CSV6
#CSW6
#CSX6
#CSY6
#CSZ6
#CTA6
#CTB6
#CTC6
#CTD6
#CTE6
#CTF6
#CTG6
#CTH6
#CTJ6
#CTK6
#CTL6
#CTM6
#CTN6
#CTP6
#CTQ6
#CTR6
#CTS6
#CTT6
#CTU6
#CTV6
#CTW6
#CTX6
#CTY6
#CTZ6
#CUA6
#CUB6
#CUC6
#CUD6
#CUE6
#CUF6
#CUG6
#CUH6
#CUJ6
#CUK6
#CUL6
#CUM6
#CUN6
#CUP6
#CUQ6
#CUR6
#CUS6
#CUT6
#CUU6
#CUV6
#CUW6
#CUX6
#CUY6
#CUZ6
#CVA6
#CVB6
#CVC6
#CVD6
#CVE6
#CVF6
#CVG6
#CVH6
#CVJ6
#CVK6
#CVL6
#CVM6
#CVN6
#CVP6
#CVQ6
#CVR6
#CVS6
#CVT6
#CVU6
#CVV6
#CVW6
#CVX6
#CVY6
#CVZ6
#CWA6
#CWB6
#CWC6
#CWD6
#CWE6
#CWF6
#CWG6
#CWH6
#CWJ6
#CWK6
#CWL6
#CWM6
#CWN6
#CWP6
#CWQ6
#CWR6
#CWS6
#CWT6
#CWU6
#CWV6
#CWW6
#CWX6
#CWY6
#CWZ6
#CXA6
#CXB6
#CXC6
#CXD6
#CXE6
#CXF6
#CXG6
#CXH6
#CXJ6
#CXK6
#CXL6
#CXM6
#CXN6
#CXP6
#CXQ6
#CXR6
#CXS6
#CXT6
#CXU6
#CXV6
#CXW6
#CXX6
#CXY6
#CXZ6
#CYA6
#CYB6
#CYC6
#CYD6
#CYE6
#CYF6
#CYG6
#CYH6
#CYJ6
#CYK6
#CYL6
#CYM6
#CYN6
#CYP6
#CYQ6
#CYR6
#CYS6
#CYT6
#CYU6
#CYV6
#CYW6
#CYX6
#CYY6
#CYZ6
#CZA6
#CZB6
#CZC6
#CZD6
#CZE6
#CZF6
#CZG6
#CZH6
#CZJ6
#CZK6
#CZL6
#CZM6
#CZN6
#CZP6
#CZQ6
#CZR6
#CZS6
#CZT6
#CZU6
#CZV6
#CZW6
#CZX6
#CZY6
#CZZ6
#DAA6
#DAB6
#DAC6
#DAD6
#DAE6
#DAF6
#DAG6
#DAH6
#DAJ6
#DAK6
#DAL6
#DAM6
#DAN6
#DAP6
#DAQ6
#DAR6
#DAS6
#DAT6
#DAU6
#DAV6
#DAW6
#DAX6
#DAY6
#DAZ6
#DBA6
#DBB6
#DBC6
#DBD6
#DBE6
#DBF6
#DBG6
#DBH6
#DBJ6
#DBK6
#DBL6
#DBM6
#DBN6
#DBP6
#DBQ6
#DBR6
#DBS6
#DBT6
#DBU6
#DBV6
#DBW6
#DBX6
#DBY6
#DBZ6
#DCA6
#DCB6
#DCC6
#DCD6
#DCE6
#DCF6
#DCG6
#DCH6
#DCJ6
#DCK6
#DCL6
#DCM6
#DCN6
#DCP6
#DCQ6
#DCR6
#DCS6
#DCT6
#DCU6
#DCV6
#DCW6
#DCX6
#DCY6
#DCZ6
#DDA6
#DDB6
#DDC6
#DDD6
#DDE6
#DDF6
#DDG6
#DDH6
#DDJ6
#DDK6
#DDL6
#DDM6
#DDN6
#DDP6
#DDQ6
#DDR6
#DDS6
#DDT6
#DDU6
#DDV6
#DDW6
#DDX6
#DDY6
#DDZ6
#DEA6
#DEB6
#DEC6
#DED6
#DEE6
#DEF6
#DEG6
#DEH6
#DEJ6
#DEK6
#DEL6
#DEM6
#DEN6
#DEP6
#DEQ6
#DER6
#DES6
#DET6
#DEU6
#DEV6
#DEW6
#DEX6
#DEY6
#DEZ6
#DFA6
#DFB6
#DFC6
#DFD6
#DFE6
#DFF6
#DFG6
#DFH6
#DFJ6
#DFK6
#DFL6
#DFM6
#DFN6
#DFP6
#DFQ6
#DFR6
#DFS6
#DFT6
#DFU6
#DFV6
#DFW6
#DFX6
#DFY6
#DFZ6
#DGA6
#DGB6
#DGC6
#DGD6
#DGE6
#DGF6
#DGG6
#DGH6
#DGJ6
#DGK6
#DGL

SK4

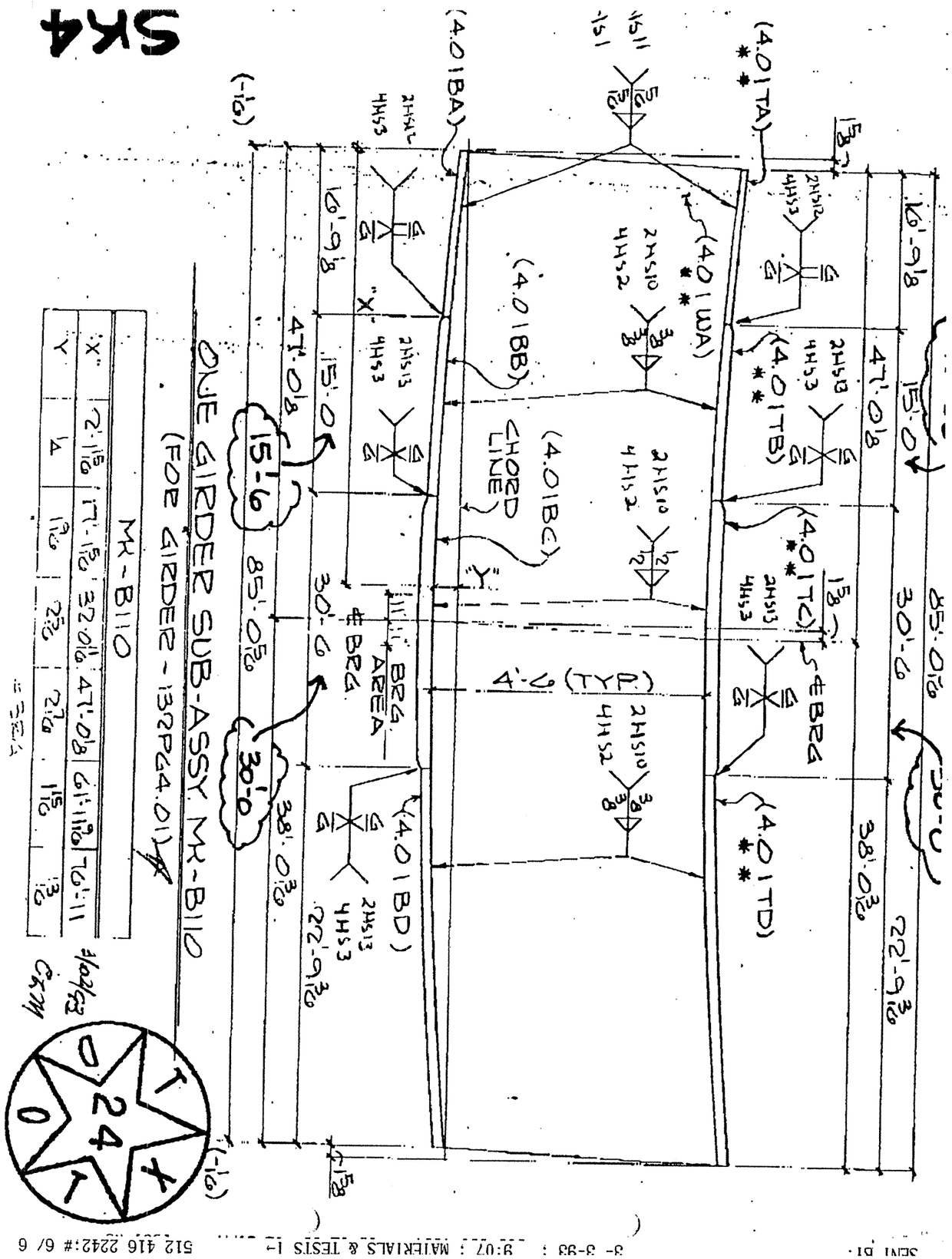

BILL OF MATERIAL

← REVISED LENGTHS

	Qnty	Material	Length	Mark Temp.	Mark Ship.	Wt.	Cut From	Remarks
1								
2	1	[redacted]						
3	1						101-4	CVN2
4	1						107-7	
5	1						103-2	CVN2
6								
7								
8								
9								
10	1	GIRDER SUB-ASSY			B110			
11	1	PL 9/16 x 54	85'-11 5/16	4.01WA			101-5	CVN2
12	1	PL 1 x 18	16'-9⅛	4.01TA			103-3	CVN2
13	1	PL 2 x 18	15'-0	4.01TB			102-19	CVN2
14	1	PL 3 x 20	30'-0	4.01TC			106-11	CVN3
15	1	PL 2 x 18	22'-9⅜	4.01TD			103-4	CVN2
16								
17	1	PL 1 x 18	16'-9⅛	4.01BA			107-8	
18	1	PL 2 x 18	15'-0	4.01BB			107-5	
19	1	PL 3 x 20	30'-6	4.01BC			109-18	
20	1	PL 2 x 18	22'-9⅜	4.01BD			107-9	
21								
22								
23								
24								
25								
26								
27								
28								
29								
30						3/03/93 CKM		
31								
32								
33								
34								
35								
36								
37								
38								

92-107
HSC sht # 110

24

SK3

245

BILL OF MATERIAL

	Qnty.	Material	Length	Mark Temp	Mark Ship.	Wt.	Cut From	Remarks
1								
2								
3		[redacted]					101-2	CVN2
4							107-2	
5							102-14	CVN2
6							102-15	CVN2
7							102-16	CVN2
8							106-4	CVN3
9								
10								
11								
12								
13								
14	1	GIRDER SUB-ASSY			B106 ✓			
15	1	PL 9/16 × 54	88'-0 3/8	2.01WA	X		101-3	CVN2
16	1	PL 1 × 18	11'-11 15/16	2.01TA	X	✓	102-17	CVN2
17	1	PL 2 × 18	10'-0	2.01TB	X	✓	102-18	CVN2
18	1	PL 3 × 20	30'-3	2.01TC	X	✓	106-2	CVN3
19	1	PL 2 × 18	15'-0	2.01TD	X	✓	102-19	CVN2
20	1	PL 1 × 18	20'-9	2.01TE	X	✓	102-20	CVN2
21	1	PL 2 1/4 × 18	21'-11 15/16	2.01BA	X	✓	107-3	
22	1	PL 3 × 20	30'-3	2.01BB	X	✓	107-4	
23	1	PL 2 × 18	15'-0	2.01BC	X	✓	107-5	
24	1	PL 1 × 18	20'-9	2.01BD	X	✓	107-6	
25								
26								
27								
28								
29								
30								
31								
32								
33								
34								
35								
36								
37								

← REVISED LENGTHS

18 → 30'-0
19 → 15'-3
22 → 30'-0
23 → 15'-3

92-107
HSC sht # 106

3/03/93 CWM

SK1

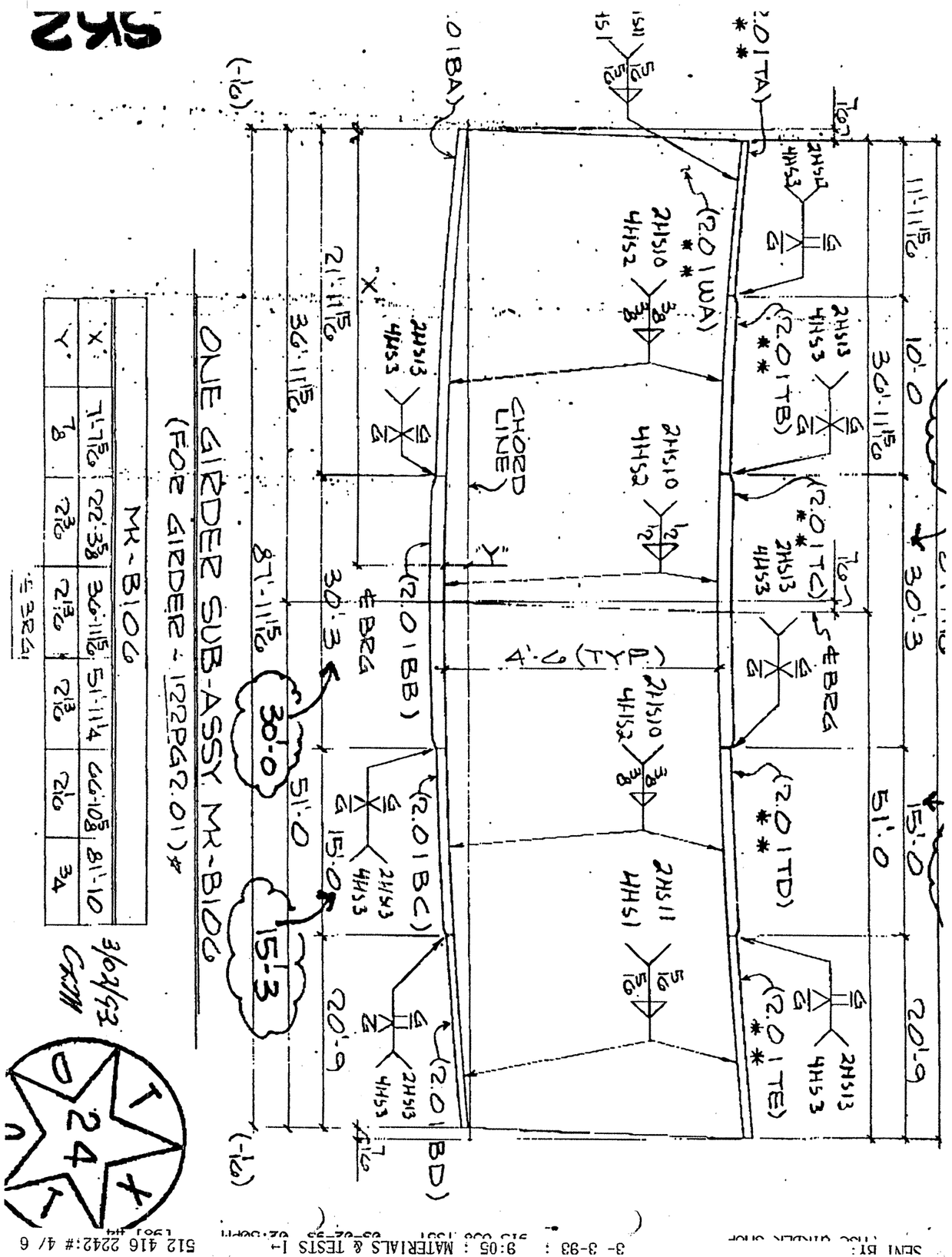

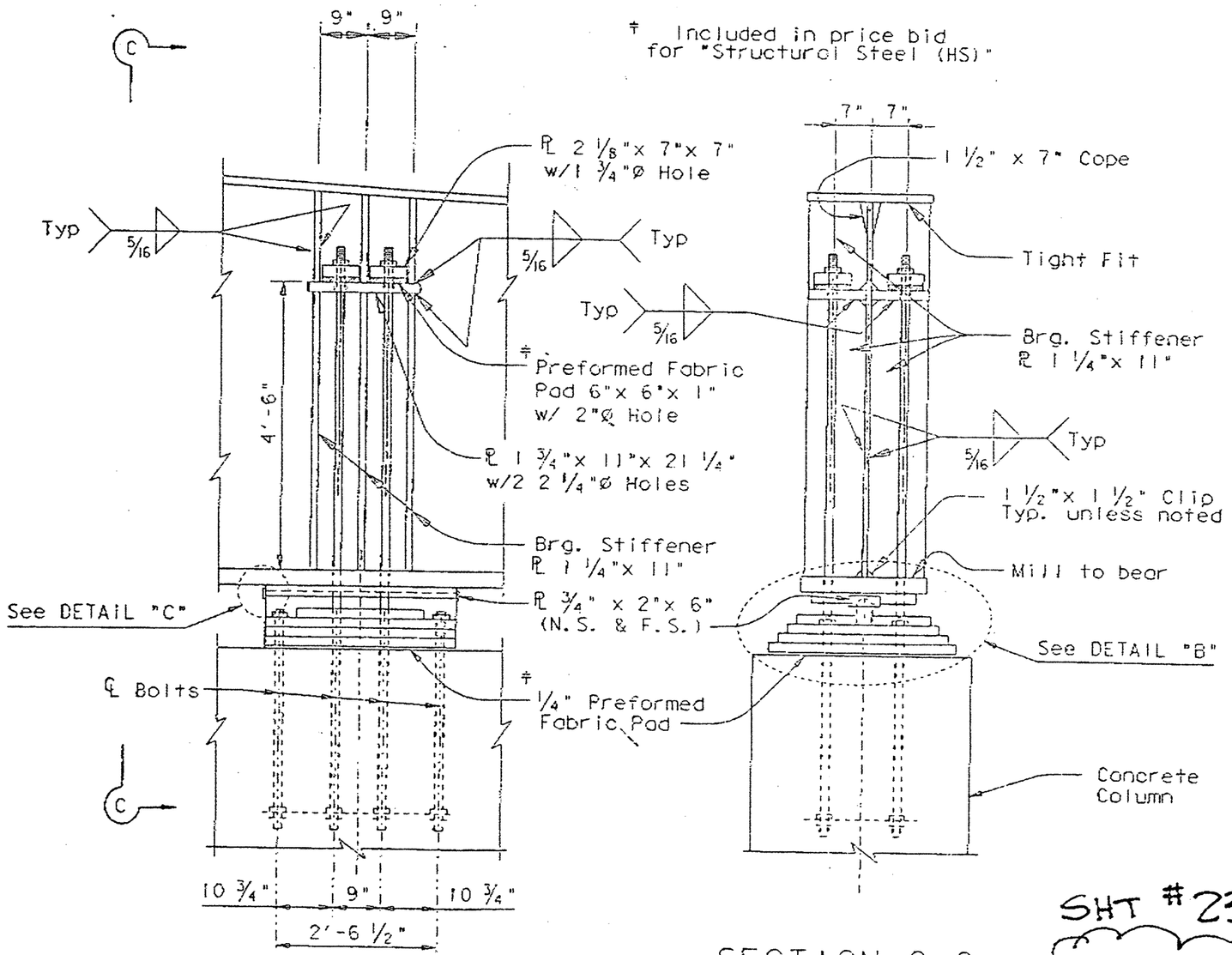

SECTION C-C

SHT #238

SK2

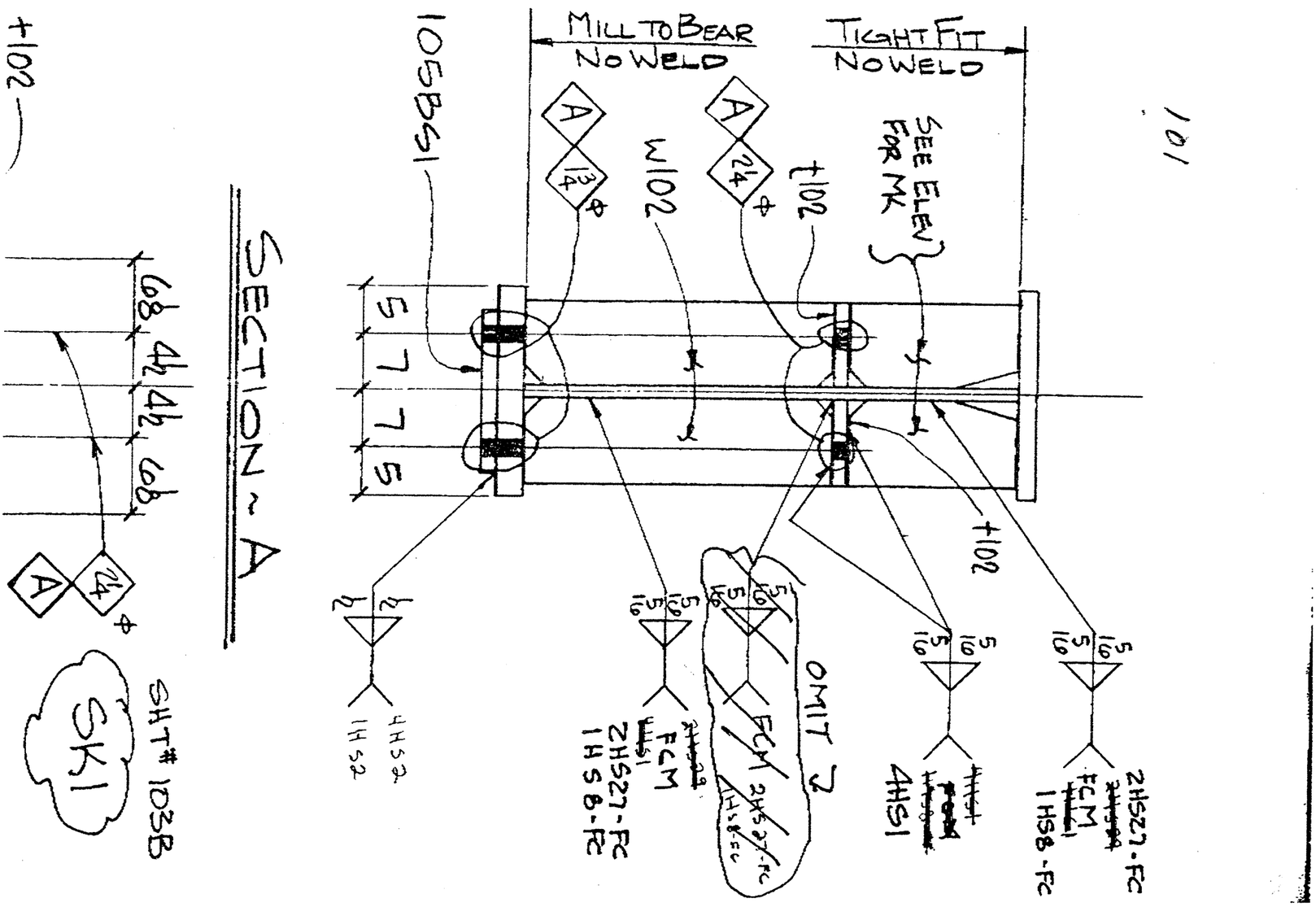

TEXAS DEPARTMENT OF TRANSPORTATION
APPROVED
DIVISION OF BRIDGES AND STRUCTURES

NOV 12 1992

APPROVAL OF THIS DRAWING DOES NOT RELIEVE THE CONTRACTOR OF THE RESPONSIBILITY FOR THE CORRECTNESS OF DETAIL.

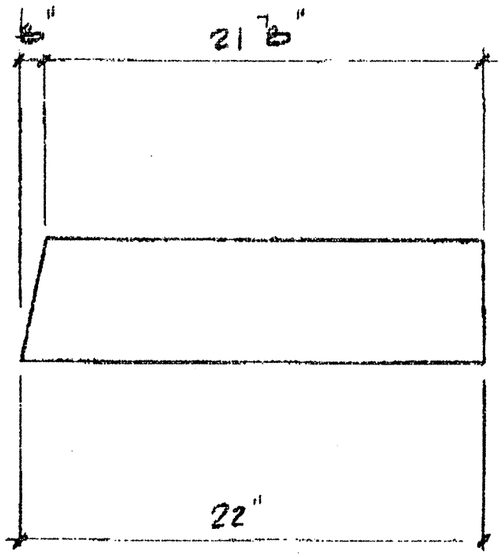

1.25 x 22 = 27.5 in² . 742.5K

.125 x 1.25 x ½ = .078 in²

= 27.42 in² x 27 = 740K

CRM
11/10/1992

SK1

HIRSCHFELD STEEL CO. INC.

CORPORATE HEADQUARTERS
112 WEST 28th STREET • P.O. BOX 3768
SAN ANGELO, TEXAS 76902-3768
(915) 653-3211
FAX (915) 658-6469

LAS COLINAS • 122 W. CARPENTER, SUITE 255
IRVING, TEXAS 75039
(214) 541-1166
FAX (214) 541-1166

730 N. POST OAK RD., SUITE 400
HOUSTON, TEXAS 77024
(713) 681-3881
FAX (713) 681-2745

SHOP PLAN FILE
No. 7020
H.S.C No 92-107

November 9, 1992

Mr. J. Jeffrey Seiders
Texas Department of Transportation
Materials and Tests Division
11th and Brazos
Austin, Texas 78701-2483

Re: Hidalgo County
Project no. NH 92 (50) M
Control no. 0039-17-097
H.S.C. Job no. 92-106
IFM SS977-14-92

Subject: Flange Width Deviation

Dear Mr. Seiders:

? RAMP I UNIT #5

During the course of fabricating girder I18PG1.01 on the above referenced project, it was discovered that the top and bottom flange were cut in error.

What has happened is the torch cutting one side of these flanges was skewed causing a slight bevel cut on the outside of the girder (see sketch SK1). The flanges shown to have a 22" flange, however due to this problem only one side of the flange is 22" while the opposite side is 21 7/8". We propose to leave these flanges as cut.

If you have any questions, please give me a call.

Sincerely,

HIRSCHFELD STEEL CO., INC.

By:

Kendall K. Hirschfeld
Project Manager

cc: Charles Moore (*D9-San Angelo*)
Dennis Balthaser (*D9-El Paso*)

TEXAS DEPARTMENT OF TRANSPORTATION
APPROVED
DIVISION OF BRIDGES AND STRUCTURES

NOV 12 1992

APPROVAL OF THIS DRAWING DOES NOT RELIEVE THE CONTRACTOR OF THE RESPONSIBILITY FOR THE CORRECTNESS OF DETAIL.

CRM
11/10/1992

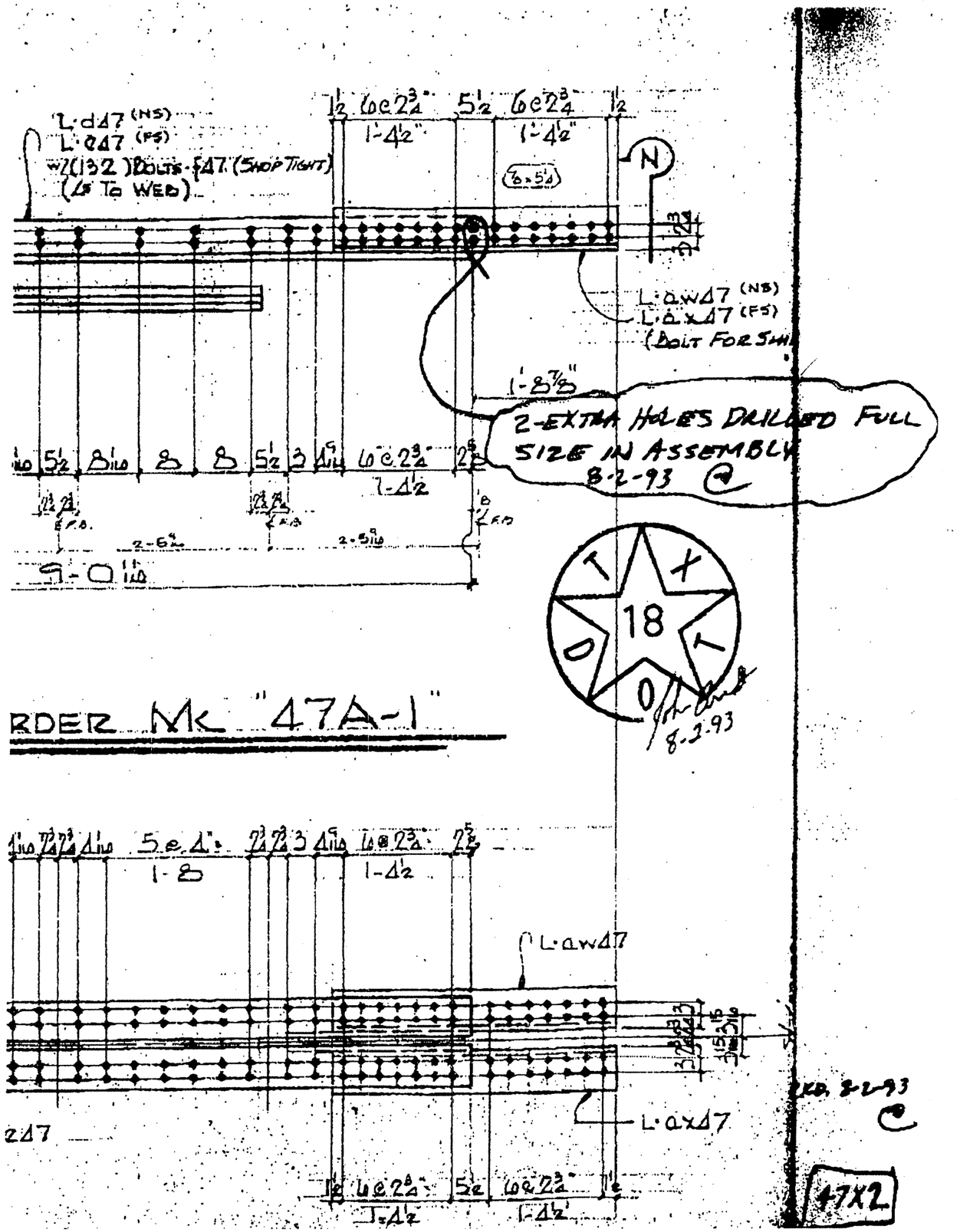
L·d47 (NS)
L·e47 (FS)
w/(132) BOLTS·f47 (SHOP TIGHT)
(∠s TO WEB)
L·aw47 (NS)
L·ax47 (FS)
(BOLT FOR SHI
2-EXTRA HOLES DRILLED FULL SIZE IN ASSEMBLY
8-2-93
9-0 11/16
RDER MK "47A-1"
L·aw47
L·ax47
47X2

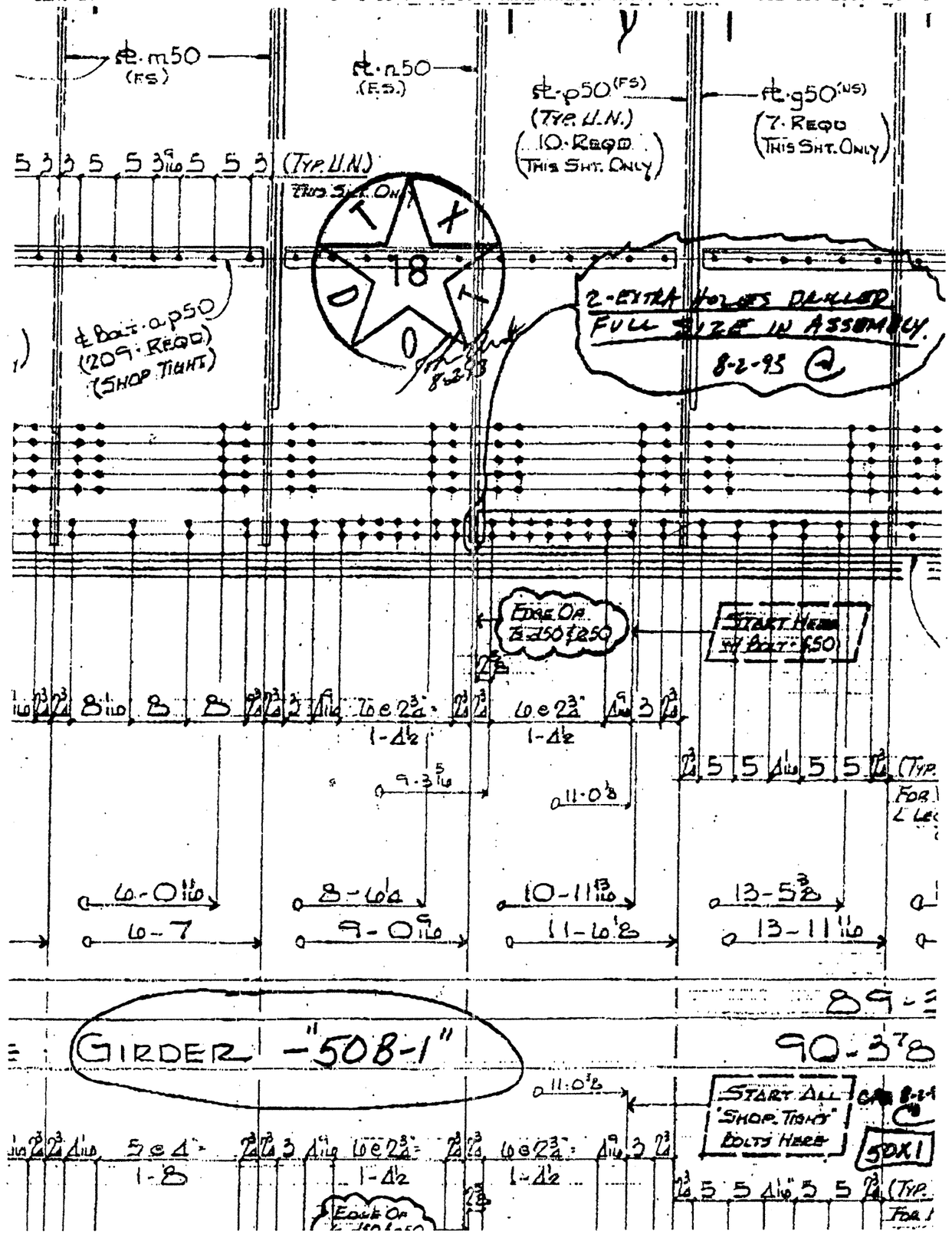
℄·m50 (FS)
℄·n50 (F.S.)
℄·p50 (FS) (TYP. U.N.) (10·REQD THIS SHT. ONLY)
℄·g50 (NS) (7·REQD THIS SHT. ONLY)
(TYP. U.N.)
℄ BOLT·ap50 (209·REQD) (SHOP TIGHT)
2-EXTRA HOLES DRILLED FULL SIZE IN ASSEMBLY
8-2-93
EDGE OF Z·d50 & e50
START HERE W/ BOLT·f50
6-0 11/16
6-7
8-6 1/4
9-0 9/16
10-11 13/16
11-6 1/8
13-5 3/8
13-11 11/16
GIRDER -"50B-1"
START ALL "SHOP TIGHT" BOLTS HERE
50X1

PSF NO	COUNTY	HIGHWAY NO	CONTROL-SECTION-JOB	CODED BY	DATE
P2887F	HIDALGO	US83/281	0039-17-097		JUN 24, 1992

RAMPS 1&2, UNITS 1-4 & RAMPS 3&3, UNITS 1-4
O.D.#4 RAMPS 3 &4; SPAN 1, BEAMS 1 & 5

---------- INPUT DATA SUBMITTED ----------

BEAM TYPE	SPAN LENGTH C-C BRNG (FT)	BEAM SPAC (FT)	SLAB THICKNESS (IN)	RELATIVE HUMIDITY (PERCENT)
IV	86.71	8.50	7.75	75.

CENTERLINE DESIGN STRESSES TOP (PSI)	BOTTOM (PSI)	REQUIRED ULTIMATE MOMENT (K-FT)	BEAM CONCRETE STRENGTHS RELEASE (PSI)	28-DAY (PSI)
2346.	-2717.	4844.	4680.	5300.

PRESTRESSING STRANDS SIZE (IN)	TYPE	STRENGTH (KSI)	MODULUS OF ELASTICITY BEAM (KSI)	SLAB (KSI)	SLAB 28-DAY CONCRETE STRENGTH (PSI)	LIVE LOAD
1/2*	LO-RLX*	270.*	5000.	5000.	3600.*	HS20*

CENTERLINE STRAND PATTERN STRANDS PER ROW / DIST. FROM BEAM BOT. (IN)

10	10	10	2	2	2	2	0	0	0	0	0	0	0
2.0	4.0	6.0	36.0	38.0	40.0	42.0	0.0	0.0	0.0	0.0	0.0	0.0	0.0

COMPUTED CL ECCENTRICITY = 13.38 IN NO. OF STRANDS = 38

END STRAND PATTERN STRANDS PER ROW / DIST. FROM BEAM BOT. (IN)

10	10	10	2	2	2	2	0	0	0	0	0	0	0
2.0	4.0	6.0	36.0	38.0	40.0	42.0	0.0	0.0	0.0	0.0	0.0	0.0	0.0

COMPUTED END ECCENTRICITY = 13.38 IN

ORIGINAL DESIGNED BEAM AS SHOWN ON CONTRACT PLANS:
NO. OF STRANDS = 28 END ECCENTRICITY = 16.18 CENTERLINE ECCENTRICITY = 21.32
STRAND SIZE = 1/2 IN* STRAND TYPE = LO-RLX STRAND STRENGTH = 270. KSI*

---------- COMPUTED RESULTS ----------

	-- RELEASE -- END	HOLD-DOWN	CL	-- FINAL -- END	CL
BEAM TOP FIBER STRESS (PSI) =	-259.	767.	781.	-226.	2120.
BEAM BOT FIBER STRESS (PSI) =	2803.	1934.	1923.	2449.	-268.
CONC STRENGTH, REQ'D. (PSI) =	4680.@	4680.	4680.		~~5300.@~~

BEAM ALLOWABLE TENSION (PSI) =	-513.	(RELEASE)	-437.	(FINAL)
BEAM ALLOWABLE COMPRESSION (PSI) =	2808.	(RELEASE)	2120.	(FINAL)
ULTIMATE MOMENT PROVIDED (K-FT) =	6009.			

"@" DENOTES CONTROLLING STRESS CASES

*** BEAM SATISFIES ALL DESIGN REQUIREMENTS ***
WARNING: RATIO OF INPUT BEAM TOP FIBER STRESS TO CALCULATED TOTAL EXTERNAL LOAD TOP FIBER STRESS = 0.99788

MAXIMUM CAMBER, ORIGINAL DESIGN (FT) = 0.142 UPWARD IS POSITIVE
MAXIMUM CAMBER, (FT) = 0.118 UPWARD IS POSITIVE

PSF NO	COUNTY	HIGHWAY NO	CONTROL-SECTION-JOB	CODED BY	DATE
P2887F	HIDALGO	US83/281	0039-17-097		JUN 24, 1992

RAMPS 1&2, UNITS 1-4 & RAMPS 3&3, UNITS 1-4
O.D.#3B RAMPS 3 & 4; SPAN 2, BEAMS 1 & 5

---------- INPUT DATA SUBMITTED ----------

BEAM TYPE	SPAN LENGTH C-C BRNG (FT)	BEAM SPAC (FT)	SLAB THICKNESS (IN)	RELATIVE HUMIDITY (PERCENT)
IV	99.85	5.75	7.75	75.

CENTERLINE DESIGN STRESSES TOP (PSI)	BOTTOM (PSI)	REQUIRED ULTIMATE MOMENT (K-FT)	BEAM CONCRETE STRENGTHS RELEASE (PSI)	28-DAY (PSI)
3111.	-3476.	5990.	4750.	~~5280.~~

PRESTRESSING STRANDS SIZE (IN)	TYPE	STRENGTH (KSI)	MODULUS OF ELASTICITY BEAM (KSI)	SLAB (KSI)	SLAB 28-DAY CONCRETE STRENGTH (PSI)	LIVE LOAD
1/2*	LO-RLX*	270.*	5000.	5000.	3600.*	HS20*

CENTERLINE STRAND PATTERN STRANDS PER ROW / DIST. FROM BEAM BOT. (IN)

12	12	12	6	0	0	0	0	0	0	0	0	0	0
2.0	4.0	6.0	8.0	0.0	0.0	0.0	0.0	0.0	0.0	0.0	0.0	0.0	0.0

COMPUTED CL ECCENTRICITY = 20.18 IN NO. OF STRANDS = 42

END STRAND PATTERN STRANDS PER ROW / DIST. FROM BEAM BOT. (IN)

10	10	10	4	2	2	2	2	0	0	0	0	0	0
2.0	4.0	6.0	8.0	46.0	48.0	50.0	52.0	0.0	0.0	0.0	0.0	0.0	0.0

COMPUTED END ECCENTRICITY = 11.80 IN

ORIGINAL DESIGNED BEAM AS SHOWN ON CONTRACT PLANS:
NO. OF STRANDS = 40 END ECCENTRICITY = 11.55 CENTERLINE ECCENTRICITY = 20.35
STRAND SIZE = 1/2 IN* STRAND TYPE = LO-RLX STRAND STRENGTH = 270. KSI*

---------- COMPUTED RESULTS ----------

	-- RELEASE -- END	HOLD-DOWN	CL	-- FINAL -- END	CL
BEAM TOP FIBER STRESS (PSI) =	-68.	177.	191.	-56.	2122.
BEAM BOT FIBER STRESS (PSI) =	2846.	2640.	2628.	2367.	-319.
CONC STRENGTH, REQ'D. (PSI) =	4750.@	4750.	4750.		5305.@

BEAM ALLOWABLE TENSION (PSI) =	-517.	(RELEASE)	-436.	(FINAL)
BEAM ALLOWABLE COMPRESSION (PSI) =	2850.	(RELEASE)	2112.	(FINAL)
ULTIMATE MOMENT PROVIDED (K-FT) =	7238.			

"@" DENOTES CONTROLLING STRESS CASES

*** BEAM DOES NOT SATISFY DESIGN REQUIREMENTS ***
1- FINAL TOP FIBER COMPRESSION AT CL IS HIGH.
2- RATIO OF INPUT F' C TO CALCULATED REQ' D. F' C = 0.99529

MAXIMUM CAMBER, ORIGINAL DESIGN (FT) = 0.223 UPWARD IS POSITIVE
MAXIMUM CAMBER, (FT) = 0.241 UPWARD IS POSITIVE

PSF NO	COUNTY	HIGHWAY NO	CONTROL-SECTION-JOB	CODED BY	DATE
P2887F	HIDALGO	US 83/281	0039-17-097		JUN 25, 1992

RAMPS 1&2, UNITS 1-4 & RAMPS 3 &4, UNITS 1-4
O.D.#2 RP 1&2,SP 2, BMS 1-5 & RP 3&4, SP 2, BMS 2-4

---------- INPUT DATA SUBMITTED ----------

BEAM TYPE	SPAN LENGTH C-C BRNG (FT)	BEAM SPAC (FT)	SLAB THICKNESS (IN)	RELATIVE HUMIDITY (PERCENT)
IV	99.85	5.75	7.75	75.

CENTERLINE DESIGN STRESSES TOP (PSI)	BOTTOM (PSI)	REQUIRED ULTIMATE MOMENT (K-FT)	BEAM CONCRETE STRENGTHS RELEASE (PSI)	28-DAY (PSI)
3111.	-3476.	5990.	5210.	~~5420.~~ 5415

PRESTRESSING STRANDS SIZE (IN)	TYPE	STRENGTH (KSI)	MODULUS OF ELASTICITY BEAM (KSI)	SLAB (KSI)	SLAB 28-DAY CONCRETE STRENGTH (PSI)	LIVE LOAD
1/2*	LO-RLX*	270.*	5000.	5000.	3600.*	HS20*

CENTERLINE STRAND PATTERN STRANDS PER ROW / DIST. FROM BEAM BOT. (IN)

10	10	12	10	2	2	2	0	0	0	0	0	0	0
2.0	4.0	6.0	8.0	10.0	12.0	14.0	0.0	0.0	0.0	0.0	0.0	0.0	0.0

COMPUTED CL ECCENTRICITY = 18.83 IN NO. OF STRANDS = 48

END STRAND PATTERN STRANDS PER ROW / DIST. FROM BEAM BOT. (IN)

10	10	10	8	2	2	2	2	0	0	0	0	0	0
2.0	4.0	6.0	8.0	44.0	46.0	48.0	50.0	52.0	0.0	0.0	0.0	0.0	0.0

COMPUTED END ECCENTRICITY = 10.92 IN

ORIGINAL DESIGNED BEAM AS SHOWN ON CONTRACT PLANS:
NO. OF STRANDS = 40 END ECCENTRICITY = 11.55 CENTERLINE ECCENTRICITY = 20.35
STRAND SIZE = 1/2 IN* STRAND TYPE = LO-RLX STRAND STRENGTH = 270. KSI*

---------- COMPUTED RESULTS ----------

	-- RELEASE -- END	HOLD-DOWN	CL	-- FINAL -- END	CL
BEAM TOP FIBER STRESS (PSI) =	57.	217.	231.	46.	2177.
BEAM BOT FIBER STRESS (PSI) =	3126.	2990.	2978.	2542.	-104.
CONC STRENGTH, REQ'D. (PSI) =	5210.@	5210.	5210.		5443.@

BEAM ALLOWABLE TENSION (PSI) =	-541.	(RELEASE)	-442.	(FINAL)
BEAM ALLOWABLE COMPRESSION (PSI) =	3126.	(RELEASE)	2168.	(FINAL)
ULTIMATE MOMENT PROVIDED (K-FT) =	7887.			

"@" DENOTES CONTROLLING STRESS CASES

*** BEAM DOES NOT SATISFY DESIGN REQUIREMENTS ***
1- FINAL TOP FIBER COMPRESSION AT CL IS HIGH.
2- RATIO OF INPUT F' C TO CALCULATED REQ' D. F' C = 0.99596

MAXIMUM CAMBER, ORIGINAL DESIGN (FT) = 0.223 UPWARD IS POSITIVE
MAXIMUM CAMBER, (FT) = 0.265 UPWARD IS POSITIVE

.042

PSF NO	COUNTY	HIGHWAY NO	CONTROL-SECTION-JOB	CODED BY	DATE
P2887F	HIDALGO	US 83/281	0039-17-097		JUL 07, 1992

SUGAR RD. OVERPASS RT. MAIN LANES (EB) WIDENING
O.D.#8 SPANS 1 & 3, BEAMS 1, 2, 8 & 9

---------- INPUT DATA SUBMITTED ----------

BEAM TYPE	SPAN LENGTH C-C BRNG (FT)	BEAM SPAC (FT)	SLAB THICKNESS (IN)	RELATIVE HUMIDITY (PERCENT)
B	43.85	7.17	7.75	75.

CENTERLINE DESIGN STRESSES TOP (PSI)	BOTTOM (PSI)	REQUIRED ULTIMATE MOMENT (K-FT)	BEAM CONCRETE STRENGTHS RELEASE (PSI)	28-DAY (PSI)
1574.	-2156.	1414.	4670.	5000.

PRESTRESSING STRANDS SIZE (IN)	TYPE	STRENGTH (KSI)	MODULUS OF ELASTICITY BEAM (KSI)	SLAB (KSI)	SLAB 28-DAY CONCRETE STRENGTH (PSI)	LIVE LOAD
1/2*	LO-RLX*	270.*	5000.	5000.	3600.*	HS20*

CENTERLINE STRAND PATTERN STRANDS PER ROW / DIST. FROM BEAM BOT. (IN)

6	6	2	2	2	0	0	0	0	0	0	0	0	0
2.0	4.0	14.0	16.0	18.0	0.0	0.0	0.0	0.0	0.0	0.0	0.0	0.0	0.0

COMPUTED CL ECCENTRICITY = 7.60 IN NO. OF STRANDS = 18

END STRAND PATTERN STRANDS PER ROW / DIST. FROM BEAM BOT. (IN)

6	6	2	2	2	0	0	0	0	0	0	0	0	0
2.0	4.0	14.0	16.0	18.0	0.0	0.0	0.0	0.0	0.0	0.0	0.0	0.0	0.0

COMPUTED END ECCENTRICITY = 7.60 IN

ORIGINAL DESIGNED BEAM AS SHOWN ON CONTRACT PLANS:
NO. OF STRANDS = 12 END ECCENTRICITY = 8.93 CENTERLINE ECCENTRICITY = 12.26
STRAND SIZE = 1/2 IN* STRAND TYPE = LO-RLX STRAND STRENGTH = 270. KSI*

---------- COMPUTED RESULTS ----------

	-- RELEASE -- END	HOLD-DOWN	CL	-- FINAL -- END	4.4 FT	CL
BEAM TOP FIBER STRESS (PSI) =	-301.	153.	178.	-256.	318.	1318.
BEAM BOT FIBER STRESS (PSI) =	2800.	2445.	2426.	2387.	1552.	231.
CONC STRENGTH, REQ'D. (PSI) =	4670.@	4670.	4670.		5000.@	5000.

BEAM ALLOWABLE TENSION (PSI) =	-513.	(RELEASE)	-424.	(FINAL)
BEAM ALLOWABLE COMPRESSION (PSI) =	2802.	(RELEASE)	2000.	(FINAL)
ULTIMATE MOMENT PROVIDED (K-FT) =	1977.			

"@" DENOTES CONTROLLING STRESS CASES

*** BEAM SATISFIES ALL DESIGN REQUIREMENTS ***

MAXIMUM CAMBER, ORIGINAL DESIGN (FT) = 0.079 UPWARD IS POSITIVE
MAXIMUM CAMBER, (FT) = 0.077 UPWARD IS POSITIVE

.002

PSF NO	COUNTY	HIGHWAY NO	CONTROL-SECTION-JOB	CODED BY	DATE
P2887F	HIDALGO	US 83/281	0039-17-097		JUL 07, 1992

US 281 OVERPASS LT. (WB) & RT. (EB) MAIN LANES WIDENING
O.D.#7 SPANS 1 & 4, BEAMS 1 & 2

---------- INPUT DATA SUBMITTED ----------

BEAM TYPE	SPAN LENGTH C-C BRNG (FT)	BEAM SPAC (FT)	SLAB THICKNESS (IN)	RELATIVE HUMIDITY (PERCENT)
B	38.87	8.25	7.75	75.

CENTERLINE DESIGN STRESSES TOP (PSI)	BOTTOM (PSI)	REQUIRED ULTIMATE MOMENT (K-FT)	BEAM CONCRETE STRENGTHS RELEASE (PSI)	28-DAY (PSI)
1261.	-1815.	1210.	4000.	5000.

PRESTRESSING STRANDS SIZE (IN)	TYPE	STRENGTH (KSI)	MODULUS OF ELASTICITY BEAM (KSI)	SLAB (KSI)	SLAB 28-DAY CONCRETE STRENGTH (PSI)	LIVE LOAD
1/2*	LO-RLX*	270.*	5000.	5000.	3600.*	HS20*

CENTERLINE STRAND PATTERN — STRANDS PER ROW / DIST. FROM BEAM BOT. (IN)

4	4	2	2	2	0	0	0	0	0	0	0	0	0
2.0	4.0	8.0	10.0	12.0	0.0	0.0	0.0	0.0	0.0	0.0	0.0	0.0	0.0

COMPUTED CL ECCENTRICITY = 8.93 IN NO. OF STRANDS = 14

END STRAND PATTERN — STRANDS PER ROW / DIST. FROM BEAM BOT. (IN)

4	4	2	2	2	0	0	0	0	0	0	0	0	0
2.0	4.0	8.0	10.0	12.0	0.0	0.0	0.0	0.0	0.0	0.0	0.0	0.0	0.0

COMPUTED END ECCENTRICITY = 8.93 IN

ORIGINAL DESIGNED BEAM AS SHOWN ON CONTRACT PLANS:
NO. OF STRANDS = 10 END ECCENTRICITY = 9.33 CENTERLINE ECCENTRICITY = 12.53
STRAND SIZE = 1/2 IN* STRAND TYPE = LO-RLX STRAND STRENGTH = 270. KSI*

---------- COMPUTED RESULTS ----------

	-- RELEASE -- END	HOLD-DOWN	CL	-- FINAL -- END	3.9 FT	CL
BEAM TOP FIBER STRESS (PSI) =	-473.	-122.	-97.	-411.	50.	850.
BEAM BOT FIBER STRESS (PSI) =	2371.	2097.	2077.	2060.	1345.	245.
CONC STRENGTH, REQ'D. (PSI) =	4000.@	4000.	4000.		5000.@	5000.

BEAM ALLOWABLE TENSION (PSI) =	-474.	(RELEASE)	-424.	(FINAL)
BEAM ALLOWABLE COMPRESSION (PSI) =	2400.	(RELEASE)	2000.	(FINAL)
ULTIMATE MOMENT PROVIDED (K-FT) =	1640.			

"@" DENOTES CONTROLLING STRESS CASES

*** BEAM SATISFIES ALL DESIGN REQUIREMENTS ***
WARNING: RATIO OF INPUT BEAM TOP FIBER STRESS TO CALCULATED TOTAL EXTERNAL LOAD TOP FIBER STRESS = 0.98950
WARNING: RATIO OF INPUT ULTIMATE MOMENT REQUIRED TO CALCULATED ULTIMATE MOMENT REQUIRED = 0.98438

MAXIMUM CAMBER, ORIGINAL DESIGN (FT) = 0.056 UPWARD IS POSITIVE
MAXIMUM CAMBER, (FT) = 0.059 UPWARD IS POSITIVE

JUL 07, 1992 TEXAS DEPARTMENT OF TRANSPORTATION (TxDOT) PAGE 1
PSTRS14 PRESTRESSED CONCRETE BEAM DESIGN/ANALYSIS IBM v3.20 DEC 1991

PSF NO	COUNTY	HIGHWAY NO	CONTROL-SECTION-JOB	CODED BY	DATE
P2887F	HIDALGO	US 83/281	0039-17-097		JUL 07, 1992

SUGAR RD. OVERPASS LT. MAIN LANES <9WB<0 WIDENING
O.D.#6 SPANS 1 & 3, BEAMS 1, 2 & 8

---------- INPUT DATA SUBMITTED ----------

BEAM TYPE	SPAN LENGTH C-C BRNG (FT)	BEAM SPAC (FT)	SLAB THICKNESS (IN)	RELATIVE HUMIDITY (PERCENT)
B	43.88	7.34	7.75	75.

CENTERLINE DESIGN STRESSES TOP (PSI)	BOTTOM (PSI)	REQUIRED ULTIMATE MOMENT (K-FT)	BEAM CONCRETE STRENGTHS RELEASE (PSI)	28-DAY (PSI)
1643.	-2457.	1614.	5020.	5020.

PRESTRESSING STRANDS SIZE (IN)	TYPE	STRENGTH (KSI)	MODULUS OF ELASTICITY BEAM (KSI)	SLAB (KSI)	SLAB 28-DAY CONCRETE STRENGTH (PSI)	LIVE LOAD
1/2*	LO-RLX*	270.*	5000.	5000.	3600.*	HS20*

CENTERLINE STRAND PATTERN — STRANDS PER ROW / DIST. FROM BEAM BOT. (IN)

6	6	2	2	2	2	0	0	0	0	0	0	0	0
2.0	4.0	6.0	16.0	18.0	20.0	0.0	0.0	0.0	0.0	0.0	0.0	0.0	0.0

COMPUTED CL ECCENTRICITY = 7.13 IN NO. OF STRANDS = 20

END STRAND PATTERN — STRANDS PER ROW / DIST. FROM BEAM BOT. (IN)

6	6	2	2	2	2	0	0	0	0	0	0	0	0
2.0	4.0	6.0	16.0	18.0	20.0	0.0	0.0	0.0	0.0	0.0	0.0	0.0	0.0

COMPUTED END ECCENTRICITY = 7.13 IN

ORIGINAL DESIGNED BEAM AS SHOWN ON CONTRACT PLANS:
NO. OF STRANDS = 14 END ECCENTRICITY = 8.93 CENTERLINE ECCENTRICITY = 11.50
STRAND SIZE = 1/2 IN* STRAND TYPE = LO-RLX STRAND STRENGTH = 270. KSI*

---------- COMPUTED RESULTS ----------

	-- RELEASE -- END	HOLD-DOWN	CL	-- FINAL -- END	4.4 FT	CL
BEAM TOP FIBER STRESS (PSI) =	-215.	239.	264.	-181.	419.	1462.
BEAM BOT FIBER STRESS (PSI) =	3011.	2656.	2636.	2536.	1585.	79.
CONC STRENGTH, REQ'D. (PSI) =	5020.@	5020.	5020.		5020.@	5020.

BEAM ALLOWABLE TENSION (PSI) =	-531.	(RELEASE)	-425.	(FINAL)
BEAM ALLOWABLE COMPRESSION (PSI) =	3012.	(RELEASE)	2008.	(FINAL)
ULTIMATE MOMENT PROVIDED (K-FT) =	2150.			

"@" DENOTES CONTROLLING STRESS CASES

*** BEAM SATISFIES ALL DESIGN REQUIREMENTS ***

MAXIMUM CAMBER, ORIGINAL DESIGN (FT) = 0.089 UPWARD IS POSITIVE
MAXIMUM CAMBER, (FT) = 0.081 UPWARD IS POSITIVE

JUL 07, 1992 TEXAS DEPARTMENT OF TRANSPORTATION (TxDOT) PAGE 1
PSTRS14 PRESTRESSED CONCRETE BEAM DESIGN/ANALYSIS IBM v3.20 DEC 1991

PSF NO	COUNTY	HIGHWAY NO	CONTROL-SECTION-JOB	CODED BY	DATE
P2887F	HIDALGO	US 83/281	0039-17-097		JUL 07, 1992

SUGAR RD. OVERPASS RT. MAIN LANES (EB) WIDENING
O.D.#5 SPAN 2, BEAMS 1 & 2

---------- INPUT DATA SUBMITTED ----------

BEAM TYPE	SPAN LENGTH C-C BRNG (FT)	BEAM SPAC (FT)	SLAB THICKNESS (IN)	RELATIVE HUMIDITY (PERCENT)
C	61.97	8.06	7.75	75.

CENTERLINE DESIGN STRESSES TOP (PSI)	BOTTOM (PSI)	REQUIRED ULTIMATE MOMENT (K-FT)	BEAM CONCRETE STRENGTHS RELEASE (PSI)	28-DAY (PSI)
2255.	-2555.	2497.	~~4090.~~	5000.

PRESTRESSING STRANDS SIZE (IN)	TYPE	STRENGTH (KSI)	MODULUS OF ELASTICITY BEAM (KSI)	SLAB (KSI)	SLAB 28-DAY CONCRETE STRENGTH (PSI)	LIVE LOAD
1/2*	LO-RLX*	270.*	5000.	5000.	3600.*	HS20*

CENTERLINE STRAND PATTERN — STRANDS PER ROW / DIST. FROM BEAM BOT. (IN)

10	10	2	0	0	0	0	0	0	0	0	0	0	0	
2.0	4.0	6.0	0.0	0.0	0.0	0.0	0.0	0.0	0.0	0.0	0.0	0.0	0.0	

COMPUTED CL ECCENTRICITY = 13.82 IN NO. OF STRANDS = 22

END STRAND PATTERN — STRANDS PER ROW / DIST. FROM BEAM BOT. (IN)

8	8	2	2	2	0	0	0	0	0	0	0	0	0	
2.0	4.0	20.0	22.0	24.0	0.0	0.0	0.0	0.0	0.0	0.0	0.0	0.0	0.0	

COMPUTED END ECCENTRICITY = 8.91 IN

ORIGINAL DESIGNED BEAM AS SHOWN ON CONTRACT PLANS:
NO. OF STRANDS = 18 / END ECCENTRICITY = 10.20 / CENTERLINE ECCENTRICITY = 14.20
STRAND SIZE = 1/2 IN* STRAND TYPE = LO-RLX STRAND STRENGTH = 270. KSI*

---------- COMPUTED RESULTS ----------

	-- RELEASE -- END	HOLD-DOWN	CL	-- FINAL -- END	CL
BEAM TOP FIBER STRESS (PSI) =	-281.	-329.	-308.	-239.	1294.
BEAM BOT FIBER STRESS (PSI) =	2413.	2448.	2432.	2049.	32.
CONC STRENGTH, REQ'D. (PSI) =	4090.	4090.@	4090.		5000.@

BEAM ALLOWABLE TENSION (PSI) = -480. (RELEASE) -424. (FINAL)
BEAM ALLOWABLE COMPRESSION (PSI) = 2454. (RELEASE) 2000. (FINAL)
ULTIMATE MOMENT PROVIDED (K-FT) = 3160.
"@" DENOTES CONTROLLING STRESS CASES

*** BEAM SATISFIES ALL DESIGN REQUIREMENTS ***
WARNING: RATIO OF INPUT BEAM TOP FIBER STRESS TO CALCULATED TOTAL EXTERNAL LOAD TOP FIBER STRESS = 0.98771
WARNING: RATIO OF INPUT BEAM BOTTOM FIBER STRESS TO CALCULATED TOTAL EXTERNAL LOAD BOTTOM FIBER STRESS = 0.98918
WARNING: RATIO OF INPUT ULTIMATE MOMENT REQUIRED TO CALCULATED ULTIMATE MOMENT REQUIRED = 0.99769,

MAXIMUM CAMBER, ORIGINAL DESIGN (FT) = 0.118 UPWARD IS POSITIVE

STATE DEPARTMENT OF HIGHWAYS AND PUBLIC TRANSPORTATION

PRESTRESSED CONCRETE OPTIONAL DESIGN
STANDARD I BEAM SECTION
(DRAPED OR STRAIGHT STRAND PATTERN)

TEXAS DEPARTMENT OF TRANSPORTATION
APPROVED
DIVISION OF BRIDGES AND STRUCTURES
JUL 09 1992
APPROVAL OF THIS DRAWING DOES NOT RELIEVE THE CONTRACTOR OF THE RESPONSIBILITY FOR THE CORRECTNESS OF DETAIL.

Optional Design No. OD- 8
Project No. : NH 92(50)M
Contractor : GILBERT TEXAS CONSTR.
Fabricator : MANCO
Plan Sheet No. : 148

RESERVE THIS SPACE FOR APPROVAL STAMP

Reason for Rejection: _____

STATE OF TEXAS — M. NATARAJAN 30603 — REGISTERED PROFESSIONAL ENGINEER
7/1/92

SHOP PLAN FILE NO.	COUNTY	HIGHWAY NO.	CONTROL-SECTION-JOB
P2887F	HIDALGO	US 83/281	0039-17-097

SUGAR RD. OVERPASS RT. MAIN LANES (EB) WID.
PROB 8 SPANS 1&3, BEAMS 1,2,8&9

Beam Card:	BEAM TYPE	SPAN LENGTH C-C BRG (ft.)	BEAM SPAC. (ft.)	SLAB THICKNESS (in.)	RELATIVE HUMIDITY
BEAMF	B	43.85	7.17	7.75	75

Analysis Card:	C.L. DESIGN STRESS (PSI) TOP (fct)	BOTTOM (fcb)	REQUIRED ULTIMATE MOMENT (kip-ft.)	FABRICATOR'S CONCRETE STRENGTH (PSI) RELEASE	28-DAY
ANLY	1574.	-2156.	1414.	4670.	5000.

Strand Card:	STRAND SIZE (in.)	L.R. (Low-Relaxation) S.R. (Stress-Relieved)	STRAND ULTIMATE STRENGTH (ksi)
STRD.	1/2	LR	270

Materials Card:	MOD. OF ELASTICITY OF BEAMS (ksi)	MOD. OF ELASTICITY OF SLAB (ksi)	SLAB 28-DAY CONC. STRENGTH (PSI)
MAT1	5000	5000	3600

KM
1&2 - 7.90
8&9 - 6.97
1 - 9.91
9 - 9.69

Specifications Card:	LIVE LOAD TYPE
SPEC	HS20

Centerline Strand Pattern Card — STRANDS PER ROW

STPR	CL	6	6	2	2	2
LOCR	(Dist. from bottom)	2	4	14	16	18

End Strand Pattern Card — STRANDS PER ROW

STPR	ED	6	6	2	2	2
LOCR	(Dist. from bottom)	2	4	14	16	18

Transformed Steel Card — AREA (sq. in.) — I (in.⁴) — C.G. FROM BOTTOM (in.)

TRNF C1

Original Beam Camber Card:	NO. OF STRANDS	END ECCENTRICITY (in.)	C.L. ECCENTRICITY (in.)	STRAND SIZE (in.)	L.R. (Low-Relaxation) S.R. (Stress-Relieved)	STRAND ULTIMATE STRENGTH (ksi)
ACAM	12	8.93	12.26	1/2	LR	270

For S.E.A. Use Only (FAST HWY 5-20-92 CPQ:) TXDOT DESIGN

Depress Strand Pattern; C.L. 2 in. Grid — Ult Moment Provided = 1975 K-Ft.
18 LOLAX Strand Total — 6 Strands To A- 18 @ End
6 Strands To A- 18 @ Midspan
e @ mid span= 7.6 in — e @ end= 7.6 in — No. Of lanes=2 Or More
Camber @ Erection = 1.05 in. — Original Design Camber = 1.16 in.
Original Release Strength = 4000 psi. — Hold-Down Distance = 10.5 ft.

OK NOTE CRW CHGS

SAVED P2887C

STATE DEPARTMENT OF HIGHWAYS AND PUBLIC TRANSPORTATION

PRESTRESSED CONCRETE OPTIONAL DESIGN
STANDARD I BEAM SECTION
(DRAPED OR STRAIGHT STRAND PATTERN)

TEXAS DEPARTMENT OF TRANSPORTATION
APPROVED
DIVISION OF BRIDGES AND STRUCTURES
JUL 09 1992
APPROVAL OF THIS DRAWING DOES NOT RELIEVE THE CONTRACTOR OF THE RESPONSIBILITY FOR THE CORRECTNESS OF DETAIL.

Optional Design No. OD- 7
Project No. : NH 92(50)M
Contractor : GILBERT TEXAS CONSTR.
Fabricator : MANCO
Plan Sheet No. : 148

RESERVE THIS SPACE FOR APPROVAL STAMP

Reason for Rejection:

SHOP PLAN FILE NO.	COUNTY	HIGHWAY NO.	CONTROL-SECTION-JOB
P2887F	HIDALGO	US 83/281	0039-17-097

US 281 O.P.LT.MAIN LANES(WB)WID. & RT.MAIN LANES(EB) WID.

PROB OD 7 SPANS 1&4,BEAMS 1&2

Beam Card: BEAM

BEAM TYPE	SPAN LENGTH C-C BRG. (ft.)	BEAM SPAC. (ft.)	SLAB THICKNESS (in.)	RELATIVE HUMIDITY
B	38.87	8.25	7.75	75

38.58 BM SPA. 5.63 BM #1

Analysis Card: ANLY

C.L. DESIGN STRESS (PSI) TOP (fct)	C.L. DESIGN STRESS (PSI) BOTTOM (fcb)	REQUIRED ULTIMATE MOMENT (kip-ft.)	FABRICATOR'S CONCRETE STRENGTH (PSI) RELEASE	FABRICATOR'S CONCRETE STRENGTH (PSI) 28-DAY
1261.	- 1815.	1210.	4000.	5000.

Strand Card: STRD

STRAND SIZE (in.)	L R (Low-Relaxation) S R (Stress-Relieved)	STRAND ULTIMATE STRENGTH (ksi)
1/2	LR	270

Materials Card: MAT1

MOD. OF ELASTICITY OF BEAM (ksi)	MOD. OF ELASTICITY OF SLAB (ksi)	SLAB 28-DAY CONC. STRENGTH (PSI)
5000.	5000.	3600

Specifications Card: SPEC — LIVE LOAD TYPE: HS20

Centerline Strand Pattern Card: STRANDS PER ROW

STPR	CL	4	4	2	2	2
LOCR	Dist. from bottom (in.)	2	4	8	10	12

End Strand Pattern Card: STRANDS PER ROW

STPR	ED	4	4	2	2	2
LOCR	Dist. from bottom (in.)	2	4	8	10	12

Temporary Strand Card: TRNF — BARS: AREA (sq. in.) / DIST. FROM BOTTOM (in.) — C1

Original Beam Camber Card: ACAM

NO. OF STRANDS	END ECCENTRICITY (in.)	C.L. ECCENTRICITY (in.)	STRAND SIZE (in.)	L R (Low-Relaxation) S R (Stress-Relieved)	STRAND ULTIMATE STRENGTH (ksi)
10	9.33	12.53	1/2	LR	270

For S.E.A. Use Only (FAST HWY 5-20-92 CPQ:) TXDOT DESIGN

Straight Strand Pattern; C.L. 2 in. Grid Ult Moment Provided = 1639 K-Ft.
14 LOLAX Strand Total e @ mid span= 8.929999 in
e @ end= 8.929999 in No. Of lanes=2 Or More
Camber @ Erection = .84 in. Original Design Camber = .8 in.
Original Release Strength = 4000 psi. Hold-Down Distance = 10.5 ft.

5 P2887FE

STATE DEPARTMENT OF HIGHWAYS AND PUBLIC TRANSPORTATION

PRESTRESSED CONCRETE OPTIONAL DESIGN
STANDARD I BEAM SECTION
(DRAPED OR STRAIGHT STRAND PATTERN)

TEXAS DEPARTMENT OF TRANSPORTATION
APPROVED
DIVISION OF BRIDGES AND STRUCTURES
JUL 09 1992
APPROVAL OF THIS DRAWING DOES NOT RELIEVE THE CONTRACTOR OF THE RESPONSIBILITY FOR THE CORRECTNESS OF DETAIL.

Optional Design No. OD- 6
Project No. : NH 92(50)M
Contractor : GILBERT TEXAS CONSTR.
Fabricator : MANCO
Plan Sheet No. : 148

RESERVE THIS SPACE FOR APPROVAL STAMP

Reason for Rejection:

SHOP PLAN FILE NO.	COUNTY	HIGHWAY NO.	CONTROL-SECTION-JOB
P2887F	HIDALGO	US 83/281	0039-17-097

SUGAR RD. OVERPASS LT.S MAIN LANES(WB) WID.

PROB OD 6 SPANS 1&3,BEAMS 1,2&8

Beam Card: BEAM

BEAM TYPE	SPAN LENGTH C-C BRG. (ft.)	BEAM SPAC. (ft.)	SLAB THICKNESS (in.)	RELATIVE HUMIDITY
B	43.88	7.34	7.75	75

43.58

Analysis Card: ANLY

C.L. DESIGN STRESS (PSI) TOP (fct)	C.L. DESIGN STRESS (PSI) BOTTOM (fcb)	REQUIRED ULTIMATE MOMENT (kip-ft.)	FABRICATOR'S CONCRETE STRENGTH (PSI) RELEASE	FABRICATOR'S CONCRETE STRENGTH (PSI) 28-DAY
1643.	- 2457.	1614.	5020.	5020.

Strand Card: STRD

STRAND SIZE (in.)	L R (Low-Relaxation) S R (Stress-Relieved)	STRAND ULTIMATE STRENGTH (ksi)
1/2	LR	270

BM SPA 1½ - 6.38, 1 - 4.69, 8 - 8.3

Materials Card: MAT1

MOD. OF ELASTICITY OF BEAM (ksi)	MOD. OF ELASTICITY OF SLAB (ksi)	SLAB 28-DAY CONC. STRENGTH (PSI)
5000.	5000.	3600

Specifications Card: SPEC — LIVE LOAD TYPE: HS20

Centerline Strand Pattern Card: STRANDS PER ROW

STPR	CL	6	6	2	2	2	2
LOCR	Dist. from bottom (in.)	2	4	6	16	18	20

End Strand Pattern Card: STRANDS PER ROW

STPR	ED	6	6	2	2	2	2
LOCR	Dist. from bottom (in.)	2	4	6	16	18	20

Temporary Strand Card: TRNF — BARS: AREA (sq. in.) / DIST. FROM BOTTOM (in.) — C1

Original Beam Camber Card: ACAM

NO. OF STRANDS	END ECCENTRICITY (in.)	C.L. ECCENTRICITY (in.)	STRAND SIZE (in.)	L R (Low-Relaxation) S R (Stress-Relieved)	STRAND ULTIMATE STRENGTH (ksi)
14	8.93	11.50	1/2	LR	270

For S.E.A. Use Only (FAST HWY 5-20-92 CPQ:) TXDOT DESIGN

Depress Strand Pattern; C.L. 2 in. Grid Ult Moment Provided = 2148 K-Ft.
20 LOLAX Strand Total 6 Strands To A- 20 @ End
6 Strands To A- 20 @ Midspan
e @ mid span= 7.13 in e @ end= 7.13 in No. Of lanes=2 Or More
Camber @ Erection = 1.07 in. Original Design Camber = 1.3 in.
Original Release Strength = 4000 psi. Hold-Down Distance = 10.5 ft.

5 P2887FD

STATE DEPARTMENT OF HIGHWAYS AND PUBLIC TRANSPORTATION

PRESTRESSED CONCRETE OPTIONAL DESIGN
STANDARD I BEAM SECTION
(DRAPED OR STRAIGHT STRAND PATTERN)

Optional Design No. OD- 5
Project No. : NH 92(50)M
Contractor : GILBERT TEXAS CONSTR.
Fabricator : MANCO
Plan Sheet No. : 148

TEXAS DEPARTMENT OF TRANSPORTATION
APPROVED EXCEPT AS NOTED
DIVISION OF BRIDGES AND STRUCTURES

JUL 09 1992

APPROVAL OF THIS DRAWING DOES NOT RELIEVE THE CONTRACTOR OF THE RESPONSIBILITY FOR THE CORRECTNESS OF DETAIL.

RESERVE THIS SPACE FOR APPROVAL STAMP

Reason for Rejection: _____

STATE OF TEXAS · M. NATARAJAN · 30603 · REGISTERED PROFESSIONAL ENGINEER

M.Natarajan
7/1/92

SHOP PLAN FILE NO.	COUNTY	HIGHWAY NO.	CONTROL-SECTION-JOB
P2887F	HIDALGO	US 83/281	0039-17-097

STRUCTURE NAME: SUGAR RD. OVERPASS RT. MAIN LANES(EB) WID.

PROB: 5 SPAN 2,BEAMS 1&2

Beam Card: BEAM F

BEAM TYPE	SPAN LENGTH C-C BRG. (ft.)	BEAM SPAC. (ft.)	SLAB THICKNESS (in.)	RELATIVE HUMIDITY
C	61.97	8.06	7.75	75

Analysis Card: ANLY

C.L. DESIGN STRESS (PSI) TOP (fct)	C.L. DESIGN STRESS (PSI) BOTTOM (fcb)	REQUIRED ULTIMATE MOMENT (kip-ft.)	FABRICATOR'S CONCRETE STRENGTH (PSI) RELEASE	FABRICATOR'S CONCRETE STRENGTH (PSI) 28-DAY
2255.	- 2555.	2497.	4090.	5000.

Strand Card: STRD

STRAND SIZE (in.)	L R (Low-Relaxation) S R (Stress-Relieved)	STRAND ULTIMATE STRENGTH (ksi)
1/2	LR	270

Materials Card: MAT1

MOD. OF ELASTICITY OF BEAM (ksi)	MOD. OF ELASTICITY OF SLAB (ksi)	SLAB 28-DAY CONC. STRENGTH (PSI)
5000.	5000.	3600

Specifications Card: SPEC — LIVE LOAD TYPE: HS20

Centerline Strand Pattern Card: STPR CL

	STRANDS PER ROW		
LOCR (Dist. from bottom in.)	2	4	6
	10	10	2

End Strand Pattern Card: STPR ED

	STRANDS PER ROW				
LOCR (Dist. from bottom in.)	2	4	20	22	24
	8	8	2	2	2

Transformed Steel Card: TRNF C1

BARS U AREA (sq. in.)	BARS U DIST. FROM BOTTOM (in.)
18	10.20

Original Beam Camber Card: ACAM

NO. OF STRANDS	END ECCENTRICITY (in.)	C.L. ECCENTRICITY (in.)	STRAND SIZE (in.)	L R (Low-Relaxation) S R (Stress-Relieved)	STRAND ULTIMATE STRENGTH (ksi)
18	10.20	14.20	1/2	LR	270

For S.E.A. Use Only (FAST HWY 5-20-92 CPQ:) TXDOT DESIGN

Depress Strand Pattern; C.L. 2 in. Grid — Ult Moment Provided = 3158 K-Ft.
22 LOLAX Strand Total — 6 Strands To A- 24 @ End
6 Strands To A- 6 @ Midspan
e @ mid span= 13.82 in — e @ end= 8.91 in — No. Of lanes=2 Or More
Camber @ Erection = 2.08 in. — Original Design Camber = 1.7 in.
Original Release Strength = 4000 psi. — Hold-Down Distance = 10.5 ft.

STATE DEPARTMENT OF HIGHWAYS AND PUBLIC TRANSPORTATION

PRESTRESSED CONCRETE OPTIONAL DESIGN
STANDARD I BEAM SECTION
(DRAPED OR STRAIGHT STRAND PATTERN)

Optional Design No. OD- 16
Project No. : NH 92(50)M
Contractor : GILBERT TEXAS CONSTR.
Fabricator : MANCO PRESTRESS
Plan Sheet No. : 388

TEXAS DEPARTMENT OF TRANSPORTATION
APPROVED
DIVISION OF BRIDGES AND STRUCTURES

SEP 17 1992

APPROVAL OF THIS DRAWING DOES NOT RELIEVE THE CONTRACTOR OF THE RESPONSIBILITY FOR THE CORRECTNESS OF DETAIL.

RESERVE THIS SPACE FOR APPROVAL STAMP

Reason for Rejection: _____

STATE OF TEXAS · M. NATARAJAN · 30603 · REGISTERED PROFESSIONAL ENGINEER

7-30-92

SHOP PLAN FILE NO.	COUNTY	HIGHWAY NO.	CONTROL-SECTION-JOB
	HIDALGO	US 83/281	0039-17-097

STRUCTURE NAME: RAMP 4,UNITS 6&8

PROB: 16 SPANS 15-18,BEAM 4

Beam Card: BEAM F

BEAM TYPE	SPAN LENGTH C-C BRG. (ft.)	BEAM SPAC. (ft.)	SLAB THICKNESS (in.)	RELATIVE HUMIDITY
IV	85.19	8.67	8.00	75

Analysis Card: ANLY

C.L. DESIGN STRESS (PSI) TOP (fct)	C.L. DESIGN STRESS (PSI) BOTTOM (fcb)	REQUIRED ULTIMATE MOMENT (kip-ft.)	FABRICATOR'S CONCRETE STRENGTH (PSI) RELEASE	FABRICATOR'S CONCRETE STRENGTH (PSI) 28-DAY
2346.	- 2717.	4844.	4000.	5000.

Strand Card: STRD

STRAND SIZE (in.)	L R (Low-Relaxation) S R (Stress-Relieved)	STRAND ULTIMATE STRENGTH (ksi)
1/2	LR	270

Materials Card: MAT1

MOD. OF ELASTICITY OF BEAM (ksi)	MOD. OF ELASTICITY OF SLAB (ksi)	SLAB 28-DAY CONC. STRENGTH (PSI)
5000	5000	3600

Specifications Card: SPEC — LIVE LOAD TYPE: HS20

Centerline Strand Pattern Card: STPR CL

	STRANDS PER ROW		
LOCR (Dist. from bottom in.)	2	4	6
	12	12	6

End Strand Pattern Card: STPR ED

	STRANDS PER ROW					
LOCR (Dist. from bottom in.)	2	4	6	30	32	34
	10	10	4	2	2	2

Transformed Steel Card: TRNF C1

BARS U AREA (sq. in.)	BARS U DIST. FROM BOTTOM (in.)
28	16.18

Original Beam Camber Card: ACAM

NO. OF STRANDS	END ECCENTRICITY (in.)	C.L. ECCENTRICITY (in.)	STRAND SIZE (in.)	L R (Low-Relaxation) S R (Stress-Relieved)	STRAND ULTIMATE STRENGTH (ksi)
28	16.18	21.32	1/2	LR	270

For S.E.A. Use Only (FAST HWY 5-20-92 CPQ:) TXDOT DESIGN

Depress Strand Pattern; C.L. 2 in. Grid — Ult Moment Provided = 5667 K-Ft.
30 LOLAX Strand Total — 6 Strands To A- 34 @ End
6 Strands To A- 6 @ Midspan
e @ mid span= 21.15 in — e @ end= 15.55 in — No. Of lanes=2 Or More
Camber @ Erection = 2.2 in. — Original Design Camber = 2.02 in.
Uplift= 11.46 K — Max. X For Cant. @ Pickup Pt.= 0 Ft @ MidSpan= 9.5 Ft
Original Release Strength = 4000 psi. — Hold-Down Distance = 10.5 ft.

(If Blank Below, No Unsatisfactory Conditions Were Sensed By Computer)

STATE DEPARTMENT OF HIGHWAYS AND PUBLIC TRANSPORTATION

PRESTRESSED CONCRETE OPTIONAL DESIGN
STANDARD I BEAM SECTION
(DRAPED OR STRAIGHT STRAND PATTERN)

TEXAS DEPARTMENT OF TRANSPORTATION
APPROVED
DIVISION OF BRIDGES AND STRUCTURES

SEP 17 1992

APPROVAL OF THIS DRAWING DOES NOT RELIEVE THE CONTRACTOR OF THE RESPONSIBILITY FOR THE CORRECTNESS OF DETAIL.

Optional Design No. OD- 15
Project No. : NH 92(50)M
Contractor : GILBERT TEXAS CONSTR.
Fabricator : MANCO PRESTRESS
Plan Sheet No. : 388

RESERVE THIS SPACE FOR APPROVAL STAMP

Reason for Rejection: _____

SHOP PLAN FILE NO.: PROB 0015

COUNTY: HIDALGO

HIGHWAY NO.: US 83/281

CONTROL-SECTION-JOB: 0039-17-097

STRUCTURE NAME: RAMP 4,UNITS 6&8 SPAN 23,BEAM 4

Beam Card: BEAMF

BEAM TYPE	SPAN LENGTH C-C BRG. (ft.)	BEAM SPAC. (ft.)	SLAB THICKNESS (in.)	RELATIVE HUMIDITY
IV	72.38	8.67	7.75	75

Analysis Card: ANLY

C.L. DESIGN STRESS (PSI) TOP (fct)	C.L. DESIGN STRESS (PSI) BOTTOM (fcb)	REQUIRED ULTIMATE MOMENT (kip-ft.)	FABRICATOR'S CONCRETE STRENGTH (PSI) RELEASE	FABRICATOR'S CONCRETE STRENGTH (PSI) 28-DAY
1704.	- 2036.	3751.	4020.	5000.

Strand Card: STRD

STRAND SIZE (in.)	L R (Low-Relaxation) S R (Stress-Relieved)	STRAND ULTIMATE STRENGTH (ksi)
1/2	LR	270

Materials Card: MAT1

MOD. OF ELASTICITY OF BEAM (ksi)	MOD. OF ELASTICITY OF SLAB (ksi)	SLAB 28-DAY CONC. STRENGTH (PSI)
5000.	5000	3600

Specifications Card: SPEC — LIVE LOAD TYPE: HS20

Centerline Strand Pattern Card: STPR CL

	STRANDS PER ROW					
LOCR (Dist. from bottom in.)	10	10	6	2	2	2
	2	4	6	40	42	44

End Strand Pattern Card: STPR ED

	STRANDS PER ROW					
LOCR (Dist. from bottom in.)	10	10	6	2	2	2
	2	4	6	40	42	44

Transformed Steel Card: TRNF C1

BARS @ AREA (sq. in.)	DIST. FROM BOTTOM (in.)
9	16

Original Beam Camber Card: ACAM

NO. OF STRANDS	END ECCENTRICITY (in.)	C.L. ECCENTRICITY (in.)	STRAND SIZE (in.)	L R (Low-Relaxation) S R (Stress-Relieved)	STRAND ULTIMATE STRENGTH (ksi)
20	18.35	21.95	1/2	LR	270

Form 1119-A

STATE OF TEXAS — M. NATARAJAN — 30603 — REGISTERED PROFESSIONAL ENGINEER

7-30-92

For S.E.A. Use Only (FAST HWY 5-20-92 CPQ:) TXDOT DESIGN

Depress Strand Pattern; C.L. 2 in. Grid
32 LOLAX Strand Total

e @ mid span= 13.88 in e @ end= 13.88 in
Camber @ Erection = 1.25 in.
Original Release Strength = 4000 psi.

Ult Moment Provided = 5193 K-Ft.
6 Strands To A- 44 @ End
6 Strands To A- 44 @ Midspan
No. Of lanes=2 Or More
Original Design Camber = 1.16 in.
Hold-Down Distance = 10.5 ft.

STATE DEPARTMENT OF HIGHWAYS AND PUBLIC TRANSPORTATION

PRESTRESSED CONCRETE OPTIONAL DESIGN
STANDARD I BEAM SECTION
(DRAPED OR STRAIGHT STRAND PATTERN)

TEXAS DEPARTMENT OF TRANSPORTATION
APPROVED
DIVISION OF BRIDGES AND STRUCTURES

SEP 17 1992

APPROVAL OF THIS DRAWING DOES NOT RELIEVE THE CONTRACTOR OF THE RESPONSIBILITY FOR THE CORRECTNESS OF DETAIL.

Optional Design No. OD- 14
Project No. : NH 92(50)M
Contractor : GILBERT TEXAS CONSTR.
Fabricator : MANCO PRESTRESS
Plan Sheet No. : 388

RESERVE THIS SPACE FOR APPROVAL STAMP

Reason for Rejection: _____

SHOP PLAN FILE NO.: PROB 0014

COUNTY: HIDALGO

HIGHWAY NO.: US 83/281

CONTROL-SECTION-JOB: 0039-17-097

STRUCTURE NAME: RAMP 4,UNITS 6&8 SPAN 15,BEAMS 2&3

Beam Card: BEAMF

BEAM TYPE	SPAN LENGTH C-C BRG. (ft.)	BEAM SPAC. (ft.)	SLAB THICKNESS (in.)	RELATIVE HUMIDITY
IV	86.90	8.67	8.00	75

Analysis Card: ANLY

C.L. DESIGN STRESS (PSI) TOP (fct)	C.L. DESIGN STRESS (PSI) BOTTOM (fcb)	REQUIRED ULTIMATE MOMENT (kip-ft.)	FABRICATOR'S CONCRETE STRENGTH (PSI) RELEASE	FABRICATOR'S CONCRETE STRENGTH (PSI) 28-DAY
2468.	- 2843.	5043.	4000.	5000.

Strand Card: STRD

STRAND SIZE (in.)	L R (Low-Relaxation) S R (Stress-Relieved)	STRAND ULTIMATE STRENGTH (ksi)
1/2	LR	270

Materials Card: MAT1

MOD. OF ELASTICITY OF BEAM (ksi)	MOD. OF ELASTICITY OF SLAB (ksi)	SLAB 28-DAY CONC. STRENGTH (PSI)
5000.	5000	3600

Specifications Card: SPEC — LIVE LOAD TYPE: HS20

Centerline Strand Pattern Card: STPR CL

	STRANDS PER ROW					
LOCR (Dist. from bottom in.)	12	12	8			
	2	4	6			

End Strand Pattern Card: STPR ED

	STRANDS PER ROW					
LOCR (Dist. from bottom in.)	10	10	6	2	2	2
	2	4	6	40	42	44

Transformed Steel Card: TRNF C1

BARS @ AREA (sq. in.)	DIST. FROM BOTTOM (in.)
9	16

Original Beam Camber Card: ACAM

NO. OF STRANDS	END ECCENTRICITY (in.)	C.L. ECCENTRICITY (in.)	STRAND SIZE (in.)	L R (Low-Relaxation) S R (Stress-Relieved)	STRAND ULTIMATE STRENGTH (ksi)
30	15.55	21.15	1/2	LR	270

Form 1119-A

STATE OF TEXAS — M. NATARAJAN — 30603 — REGISTERED PROFESSIONAL ENGINEER

7-30-92

For S.E.A. Use Only (FAST HWY 5-20-92 CPQ:) TXDOT DESIGN

Depress Strand Pattern; C.L. 2 in. Grid
32 LOLAX Strand Total

e @ mid span= 21 in e @ end= 13.88 in
Camber @ Erection = 2.34 in.
Uplift= 15.19 K Max. X For Cant. @ Pickup Pt.= 5 Ft @ MidSpan= 9 Ft
Original Release Strength = 4000 psi.

Ult Moment Provided = 6003 K-Ft.
6 Strands To A- 44 @ End
6 Strands To A- 6 @ Midspan
No. Of lanes=2 Or More
Original Design Camber = 2.2 in.
Hold-Down Distance = 10.5 ft.

STATE DEPARTMENT OF HIGHWAYS AND PUBLIC TRANSPORTATION

PRESTRESSED CONCRETE OPTIONAL DESIGN
STANDARD I BEAM SECTION
(DRAPED OR STRAIGHT STRAND PATTERN)

TEXAS DEPARTMENT OF TRANSPORTATION
APPROVED
DIVISION OF BRIDGES AND STRUCTURES
SEP 17 1992
APPROVAL OF THIS DRAWING DOES NOT RELIEVE THE CONTRACTOR OF THE RESPONSIBILITY FOR THE CORRECTNESS OF DETAIL.

Optional Design No. OD- 13
Project No. : NH 92(50)M
Contractor : GILBERT TEXAS CONSTR.
Fabricator : MANCO PRESTRESS
Plan Sheet No. : 388

RESERVE THIS SPACE FOR APPROVAL STAMP

Reason for Rejection: _____

SHOP PLAN FILE NO.	COUNTY	HIGHWAY NO.	CONTROL-SECTION-JOB
	HIDALGO	US 83/281	0039-17-097

STRUCTURE NAME: RAMP 4,UNITS 6&8

PROJ OPT: 13 SPAN 23,BEAMS 1-3

Beam Card:	BEAM TYPE	SPAN LENGTH C-C BRG. (ft.)	BEAM SPAC. (ft.)	SLAB THICKNESS (in.)	RELATIVE HUMIDITY
BEAMF	IV	72.38	8.67	7.75	75

Analysis Card:	C.L. DESIGN STRESS (PSI) TOP (fct)	BOTTOM (fcb)	REQUIRED ULTIMATE MOMENT (kip-ft.)	FABRICATOR'S CONCRETE STRENGTH (PSI) RELEASE	28-DAY
ANLY	1704.	- 2036.	3751.	5360.	5360.

Strand Card:	STRAND SIZE (in.)	L R (Low-Relaxation) S R (Stress-Relieved)	STRAND ULTIMATE STRENGTH (ksi)
STRD	1/2	LR	270

Materials Card:	MOD. OF ELASTICITY OF BEAM (ksi)	MOD. OF ELASTICITY OF SLAB (ksi)	SLAB 28-DAY CONC. STRENGTH (PSI)
MAT1	5000.	5000.	3600

Specifications Card: LIVE LOAD TYPE — SPEC: HS20

Centerline Strand Pattern Card:

		STRANDS PER ROW							
STPR	CL	10	10	10	8	2	2	2	2
LOCR	(Dist. from bottom in.)	2	4	6	8	46	48	50	52

End Strand Pattern Card:

		STRANDS PER ROW							
STPR	ED	10	10	10	8	2	2	2	2
LOCR	(Dist. from bottom in.)	2	4	6	8	46	48	50	52

Transformed Steel Card: BARS U — AREA (sq. in.) DIST. FROM BOTTOM (in.)

TRNF C1

Original Beam Camber Card:	NO. OF STRANDS	END ECCENTRICITY (in.)	C.L. ECCENTRICITY (in.)	STRAND SIZE (in.)	L R (Low-Relaxation) S R (Stress-Relieved)	STRAND ULTIMATE STRENGTH (ksi)
ACAM	20	18.35	21.95	1/2	LR	270

STATE OF TEXAS — M. NATARAJAN — 30603 — REGISTERED PROFESSIONAL ENGINEER
7-30-92

For S.E.A. Use Only (FAST HWY 5-20-92 CPQ:) TXDOT DESIGN

Depress Strand Pattern; C.L. 2 in. Grid
46 LOLAX Strand Total

e @ mid span= 12.23 in e @ end= 12.23 in
Camber @ Erection = 1.56 in.
Original Release Strength = 4000 psi. Hold-Down Distance = 10.5 ft.

Ult Moment Provided = 6960 K-Ft.
8 Strands To A- 52 @ End
8 Strands To A- 52 @ Midspan
No. Of lanes=2 Or More
Original Design Camber = 1.16 in.

STATE DEPARTMENT OF HIGHWAYS AND PUBLIC TRANSPORTATION

PRESTRESSED CONCRETE OPTIONAL DESIGN
STANDARD I BEAM SECTION
(DRAPED OR STRAIGHT STRAND PATTERN)

TEXAS DEPARTMENT OF TRANSPORTATION
APPROVED
DIVISION OF BRIDGES AND STRUCTURES
SEP 17 1992
APPROVAL OF THIS DRAWING DOES NOT RELIEVE THE CONTRACTOR OF THE RESPONSIBILITY FOR THE CORRECTNESS OF DETAIL.

Optional Design No. OD- 12
Project No. : NH 92(50)M
Contractor : GILBERT TEXAS CONSTR.
Fabricator : MANCO PRESTRESS
Plan Sheet No. : 388

RESERVE THIS SPACE FOR APPROVAL STAMP

Reason for Rejection: _____

SHOP PLAN FILE NO.	COUNTY	HIGHWAY NO.	CONTROL-SECTION-JOB
P2857	HIDALGO	US 83/281	0039-17-097

STRUCTURE NAME: RAMP 2,UNITS 7-10

PROJ OPT: 12 SPANS 24&25,BEAMS 1-4

Beam Card:	BEAM TYPE	SPAN LENGTH C-C BRG. (ft.)	BEAM SPAC. (ft.)	SLAB THICKNESS (in.)	RELATIVE HUMIDITY
BEAMF	IV	94.86	8.67	7.75	75

Analysis Card:	C.L. DESIGN STRESS (PSI) TOP (fct)	BOTTOM (fcb)	REQUIRED ULTIMATE MOMENT (kip-ft.)	FABRICATOR'S CONCRETE STRENGTH (PSI) RELEASE	28-DAY
ANLY	2852.	- 3243.	5667.	5280.	5280.

Strand Card:	STRAND SIZE (in.)	L R (Low-Relaxation) S R (Stress-Relieved)	STRAND ULTIMATE STRENGTH (ksi)
STRD	1/2	LR	270

Materials Card:	MOD. OF ELASTICITY OF BEAM (ksi)	MOD. OF ELASTICITY OF SLAB (ksi)	SLAB 28-DAY CONC. STRENGTH (PSI)
MAT1	5000.	5000.	3600

Specifications Card: LIVE LOAD TYPE — SPEC: HS20

Centerline Strand Pattern Card:

		STRANDS PER ROW							
STPR	CL	10	10	10	10	2	2	2	
LOCR	(Dist. from bottom in.)	2	4	6	8	10	12	14	

End Strand Pattern Card:

		STRANDS PER ROW							
STPR	ED	10	10	10	8	2	2	2	2
LOCR	(Dist. from bottom in.)	2	4	6	8	46	48	50	52

Transformed Steel Card: BARS U — AREA (sq. in.) DIST. FROM BOTTOM (in.)

TRNF C1

Original Beam Camber Card:	NO. OF STRANDS	END ECCENTRICITY (in.)	C.L. ECCENTRICITY (in.)	STRAND SIZE (in.)	L R (Low-Relaxation) S R (Stress-Relieved)	STRAND ULTIMATE STRENGTH (ksi)
ACAM	36	13.08	20.75	1/2	LR	270

STATE OF TEXAS — M. NATARAJAN — 30603 — REGISTERED PROFESSIONAL ENGINEER
7-30-92

For S.E.A. Use Only (FAST HWY 5-20-92 CPQ:) TXDOT DESIGN

Depress Strand Pattern; C.L. 2 in. Grid
46 LOLAX Strand Total

e @ mid span= 18.84 in e @ end= 12.23 in
Camber @ Erection = 3.25 in.
Uplift= 18.39 K Max. X For Cant. @ Pickup Pt.= 9.5 Ft @ MidSpan= 11 Ft
Original Release Strength = 4300 psi. Hold-Down Distance = 10.5 ft.

Ult Moment Provided = 8001 K-Ft.
8 Strands To A- 52 @ End
8 Strands To A- 14 @ Midspan
No. Of lanes=2 Or More
Original Design Camber = 2.75 in.

STATE DEPARTMENT OF HIGHWAYS AND PUBLIC TRANSPORTATION

PRESTRESSED CONCRETE OPTIONAL DESIGN
STANDARD I BEAM SECTION
(DRAPED OR STRAIGHT STRAND PATTERN)

Optional Design No. OD- 11
Project No. : NH 92(50)M
Contractor : GILBERT TEXAS CONSTR.
Fabricator : MANCO PRESTRESS
Plan Sheet No. : 388

TEXAS DEPARTMENT OF TRANSPORTATION
APPROVED
DIVISION OF BRIDGES AND STRUCTURES
SEP 17 1992
APPROVAL OF THIS DRAWING DOES NOT RELIEVE THE CONTRACTOR OF THE RESPONSIBILITY FOR THE CORRECTNESS OF DETAIL.

RESERVE THIS SPACE FOR APPROVAL STAMP

Reason for Rejection: _____

SHOP PLAN FILE NO.	COUNTY	HIGHWAY NO.	CONTROL-SECTION-JOB
	HIDALGO	US 83/281	0039-17-097

STRUCTURE NAME: RAMP 1,UNITS 7,8&10

PROB: 11 SPANS 20&21, BEAMS 1-4

Beam Card:	BEAM TYPE	SPAN LENGTH C-C BRG. (ft.)	BEAM SPAC. (ft.)	SLAB THICKNESS (in.)	RELATIVE HUMIDITY
BEAMF	IV	97.34	8.67	7.75	75

Analysis Card:	C.L. DESIGN STRESS (PSI) TOP (fct)	BOTTOM (fcb)	REQUIRED ULTIMATE MOMENT (kip-ft.)	FABRICATOR'S CONCRETE STRENGTH (PSI) RELEASE	28-DAY
ANLY	3218.	- 3471.	5897.	5280.	5760.

Strand Card:	STRAND SIZE (in.)	L R (Low-Relaxation) S R (Stress-Relieved)	STRAND ULTIMATE STRENGTH (ksi)
STRD	1/2	LR	270

Materials Card:	MOD. OF ELASTICITY OF BEAM (ksi)	MOD. OF ELASTICITY OF SLAB (ksi)	SLAB 28-DAY CONC. STRENGTH (PSI)
MAT1	5000.	5000.	3600

Specifications Card: LIVE LOAD TYPE — SPEC: HS20

Centerline Strand Pattern Card — STRANDS PER ROW

STPR CL	10	10	10	10	2	2	2	
LOCR (Dist. from bottom in.)	2	4	6	8	10	12	14	

End Strand Pattern Card — STRANDS PER ROW

STPR ED	10	10	10	8	2	2	2	2
LOCR (Dist. from bottom in.)	2	4	6	8	46	48	50	52

Transformed Steel Card — BARS U

	AREA (sq. in.)	DIST. FROM BOTTOM (in.)
TRNF	C1	

Original Beam Camber Card:	NO. OF STRANDS	END ECCENTRICITY (in.)	C.L. ECCENTRICITY (in.)	STRAND SIZE	L R (Low-Relaxation) S R (Stress-Relieved)	STRAND ULTIMATE STRENGTH (ksi)
ACAM	38	11.28	20.54	1/2	LR	270

For S.E.A. Use Only (FAST HWY 5-20-92 CPQ:) TXDOT DESIGN

Depress Strand Pattern; C.L. 2 in. Grid — Ult Moment Provided = 8001 K-Ft.
46 LOLAX Strand Total — 8 Strands To A- 52 @ End
8 Strands To A- 14 @ Midspan
e @ mid span= 18.84 in — e @ end= 12.23 in — No. Of lanes=2 Or More
Camber @ Erection = 3.28 in. — Original Design Camber = 2.85 in.
Uplift= 17.87 K — Max. X For Cant. @ Pickup Pt.= 10 Ft @ MidSpan= 11.5 Ft
Original Release Strength = 4233 psi. — Hold-Down Distance = 10.5 ft.

STATE DEPARTMENT OF HIGHWAYS AND PUBLIC TRANSPORTATION

PRESTRESSED CONCRETE OPTIONAL DESIGN
STANDARD I BEAM SECTION
(DRAPED OR STRAIGHT STRAND PATTERN)

Optional Design No. OD- 10
Project No. : NH 92(50)M
Contractor : GILBERT TEXAS CONSTR.
Fabricator : MANCO PRESTRESS
Plan Sheet No. : 388

TEXAS DEPARTMENT OF TRANSPORTATION
APPROVED
DIVISION OF BRIDGES AND STRUCTURES
SEP 17 1992
APPROVAL OF THIS DRAWING DOES NOT RELIEVE THE CONTRACTOR OF THE RESPONSIBILITY FOR THE CORRECTNESS OF DETAIL.

RESERVE THIS SPACE FOR APPROVAL STAMP

Reason for Rejection: _____

SHOP PLAN FILE NO.	COUNTY	HIGHWAY NO.	CONTROL-SECTION-JOB
	HIDALGO	US 83/281	0039-17-097

STRUCTURE NAME: RAMP 4,UNITS 6&8

PROB: 10 SPANS 15&16, BEAM 1

Beam Card:	BEAM TYPE	SPAN LENGTH C-C BRG. (ft.)	BEAM SPAC. (ft.)	SLAB THICKNESS (in.)	RELATIVE HUMIDITY
BEAMF	IV	88.61	8.67	8.00	75

Analysis Card:	C.L. DESIGN STRESS (PSI) TOP (fct)	BOTTOM (fcb)	REQUIRED ULTIMATE MOMENT (kip-ft.)	FABRICATOR'S CONCRETE STRENGTH (PSI) RELEASE	28-DAY
ANLY	2529.	- 2908.	5144.	5600.	6040.

Strand Card:	STRAND SIZE (in.)	L R (Low-Relaxation) S R (Stress-Relieved)	STRAND ULTIMATE STRENGTH (ksi)
STRD	1/2	LR	270

Materials Card:	MOD. OF ELASTICITY OF BEAM (ksi)	MOD. OF ELASTICITY OF SLAB (ksi)	SLAB 28-DAY CONC. STRENGTH (PSI)
MAT1	5000.	5000.	3600

Specifications Card: LIVE LOAD TYPE — SPEC: HS20

Centerline Strand Pattern Card — STRANDS PER ROW

STPR CL	10	10	10	8	2	2	2	2	2
LOCR (Dist. from bottom in.)	2	4	6	8	38	40	42	44	46

End Strand Pattern Card — STRANDS PER ROW

STPR ED	10	10	10	8	2	2	2	2	2
LOCR (Dist. from bottom in.)	2	4	6	8	38	40	42	44	46

Transformed Steel Card — BARS U

	AREA (sq. in.)	DIST. FROM BOTTOM (in.)
TRNF	C1	

Original Beam Camber Card:	NO. OF STRANDS	END ECCENTRICITY (in.)	C.L. ECCENTRICITY (in.)	STRAND SIZE (in.)	L R (Low-Relaxation) S R (Stress-Relieved)	STRAND ULTIMATE STRENGTH (ksi)
ACAM	32	13.88	21.00	1/2	LR	270

For S.E.A. Use Only (FAST HWY 5-20-92 CPQ:) TXDOT DESIGN

Depress Strand Pattern; C.L. 2 in. Grid — Ult Moment Provided = 7258 K-Ft.
48 LOLAX Strand Total — 10 Strands To A- 46 @ End
10 Strands To A- 46 @ Midspan
e @ mid span= 12.17 in — e @ end= 12.17 in — No. Of lanes=2 Or More
Camber @ Erection = 1.86 in. — Original Design Camber = 2.36 in.
Uplift= 0 K — Max. X For Cant. @ Pickup Pt.= 19.5 Ft @ MidSpan= 25 Ft
Original Release Strength = 4000 psi. — Hold-Down Distance = 10.5 ft.

PSF NO	COUNTY	HIGHWAY NO	CONTROL-SECTION-JOB	CODED BY	DATE
9	HILDALGO	US83/US281	0039-17-097		SEP 15, 1992

RAMP 1 , UNITS 7,8 & 10 ,
O.D.#16 SPANS NO. 15 THRU. 18, BEAM NO. 4

---------- INPUT DATA SUBMITTED ----------

BEAM TYPE	SPAN LENGTH C-C BRNG (FT)	BEAM SPAC (FT)	SLAB THICKNESS (IN)	RELATIVE HUMIDITY (PERCENT)
IV	85.19	8.67	8.00	75.

CENTERLINE DESIGN STRESSES TOP (PSI)	BOTTOM (PSI)	REQUIRED ULTIMATE MOMENT (K-FT)	BEAM CONCRETE STRENGTHS RELEASE (PSI)	28-DAY (PSI)
2346.	-2717.	4844.	4000.	5000.

PRESTRESSING STRANDS SIZE (IN)	TYPE	STRENGTH (KSI)	MODULUS OF ELASTICITY BEAM (KSI)	SLAB (KSI)	SLAB 28-DAY CONCRETE STRENGTH (PSI)	LIVE LOAD
1/2*	LO-RLX*	270.*	5000.	5000.	3600.*	HS20*

CENTERLINE STRAND PATTERN STRANDS PER ROW / DIST. FROM BEAM BOT. (IN)

12	12	6	0	0	0	0	0	0	0	0	0	0	0
2.0	4.0	6.0	0.0	0.0	0.0	0.0	0.0	0.0	0.0	0.0	0.0	0.0	0.0

COMPUTED CL ECCENTRICITY = 21.15 IN NO. OF STRANDS = 30

END STRAND PATTERN STRANDS PER ROW / DIST. FROM BEAM BOT. (IN)

10	10	4	2	2	2	0	0	0	0	0	0	0	0
2.0	4.0	6.0	30.0	32.0	34.0	0.0	0.0	0.0	0.0	0.0	0.0	0.0	0.0

COMPUTED END ECCENTRICITY = 15.55 IN

ORIGINAL DESIGNED BEAM AS SHOWN ON CONTRACT PLANS:
NO. OF STRANDS = 28 END ECCENTRICITY = 16.18 CENTERLINE ECCENTRICITY = 21.32
STRAND SIZE = 1/2 IN* STRAND TYPE = LO-RLX STRAND STRENGTH = 270. KSI*

---------- COMPUTED RESULTS ----------

	-- RELEASE -- END	HOLD-DOWN	CL	-- FINAL -- END	CL
BEAM TOP FIBER STRESS (PSI) =	-412.	36.	50.	-360.	1513.
BEAM BOT FIBER STRESS (PSI) =	2367.	1987.	1976.	2066.	-250.
CONC STRENGTH, REQ'D. (PSI) =	4000.@	4000.	4000.		5000.@

BEAM ALLOWABLE TENSION (PSI) = -474. (RELEASE) -424. (FINAL)
BEAM ALLOWABLE COMPRESSION (PSI) = 2400. (RELEASE) 2000. (FINAL)
ULTIMATE MOMENT PROVIDED (K-FT) = 5670.
"@" DENOTES CONTROLLING STRESS CASES

*** BEAM SATISFIES ALL DESIGN REQUIREMENTS ***

MAXIMUM CAMBER, ORIGINAL DESIGN (FT) = 0.141 UPWARD IS POSITIVE
MAXIMUM CAMBER, (FT) = 0.154 UPWARD IS POSITIVE

= .014'

= 3/16

STATE DEPARTMENT OF HIGHWAYS AND PUBLIC TRANSPORTATION

PRESTRESSED CONCRETE OPTIONAL DESIGN
STANDARD I BEAM SECTION
(DRAPED OR STRAIGHT STRAND PATTERN)

TEXAS DEPARTMENT OF TRANSPORTATION
APPROVED
DIVISION OF BRIDGES AND STRUCTURES
SEP 17 1992
APPROVAL OF THIS DRAWING DOES NOT RELIEVE THE CONTRACTOR OF THE RESPONSIBILITY FOR THE CORRECTNESS OF DETAIL.

RESERVE THIS SPACE FOR APPROVAL STAMP

Reason for Rejection: _____

STATE OF TEXAS
M. NATARAJAN
30603
REGISTERED
PROFESSIONAL ENGINEER
7-30-92

Optional Design No. OD- 9
Project No. : NH 92(50)M
Contractor : GILBERT TEXAS CONSTR.
Fabricator : MANCO PRESTRESS
Plan Sheet No. : 388

SHOP PLAN FILE NO.: P2887F
COUNTY: HIDALGO
HIGHWAY NO.: US 83/281
CONTROL-SECTION-JOB: 0039-17-097
STRUCTURE NAME: RAMP 1,UNITS 7,8&10
PROB O'D: 9 SPANS 18&19, BEAMS 1-4

Beam Card: BEAMF | BEAM TYPE: IV | SPAN LENGTH C-C BRG. (ft.): 97.34 | BEAM SPAC. (ft.): 8.67 | SLAB THICKNESS (in.): 7.75 | RELATIVE HUMIDITY: 75

Analysis Card: ANLY | C.L. DESIGN STRESS (PSI) TOP (fct): 3218. | BOTTOM (fcb): - 3471. | REQUIRED ULTIMATE MOMENT (kip-ft.): 5897. | FABRICATOR'S CONCRETE STRENGTH (PSI) RELEASE: 5220. | 28-DAY: 5810.

Strand Card: STRD | STRAND SIZE (in.): 1 / 2 | L R (Low-Relaxation) S R (Stress-Relieved): L R | STRAND ULTIMATE STRENGTH (ksi): 2 7 0

Materials Card: MAT1 | MOD. OF ELASTICITY OF BEAM (ksi): 5 0 0 0. | MOD. OF ELASTICITY OF SLAB (ksi): 5 0 0 0. | SLAB 28-DAY CONC. STRENGTH (PSI): 3 6 0 0

Specifications Card: SPEC | LIVE LOAD TYPE: H S 2 0

Centerline Strand Pattern Card: STPR C L | STRANDS PER ROW: 10 10 10 10 2 2 2 2
LOCR (Dist. from bottom in.): 2 4 6 8 10 12 14 16

Fire Strand Pattern Card: STPR E D | STRANDS PER ROW: 10 10 10 8 2 2 2 2 2
LOCR (Dist. from bottom in.): 2 4 6 8 44 46 48 50 52

Deflections Card: TRNF C 1 | BASIS U: AREA (in.²) | DIST FROM BOTTOM (in.)

Original Beam Camber Card: ACAM | NO. OF STRANDS: 38 | END ECCENTRICITY (in.) | C.L. ECCENTRICITY (in.): 11.28 | 20.54 | STRAND S CL | S R (Low-Relaxation) S R (Stress-Relieved): LR | STRAND ULTIMATE STRENGTH (ksi): 2 7 0

For S.E.A. Use Only (FAST HWY 5-20-92 CPQ:) TXDOT DESIGN

Depress Strand Pattern; C.L. 2 in. Grid
48 LOLAX Strand Total
Ult Moment Provided = 8244 K-Ft.
10 Strands To A- 52 @ End
10 Strands To A- 16 @ Midspan
e @ mid span= 18.42 in e @ end= 10.92 in
No. Of lanes=2 Or More
Camber @ Erection = 3.29 in.
Original Design Camber = 2.85 in.
Uplift= 21.15 K Max. X For Cant. @ Pickup Pt.= 13 Ft @ MidSpan= 12 Ft
Original Release Strength = 4233 psi. Hold-Down Distance = 10.5 ft.

PSF NO	COUNTY	HIGHWAY NO	CONTROL-SECTION-JOB	CODED BY	DATE
9	HILDALGO	US83/US281	0039-17-097		SEP 15, 1992

RAMP 4 , UNITS ~~7,8 & 10~~ ,6 & 9
O.D.#14 SPAN NO. 15, BMS. 2 & 3

---------- INPUT DATA SUBMITTED ----------

BEAM TYPE	SPAN LENGTH C-C BRNG (FT)	BEAM SPAC (FT)	SLAB THICKNESS (IN)	RELATIVE HUMIDITY (PERCENT)
IV	86.90	8.67	8.00	75.

CENTERLINE DESIGN STRESSES TOP (PSI)	BOTTOM (PSI)	REQUIRED ULTIMATE MOMENT (K-FT)	BEAM CONCRETE STRENGTHS RELEASE (PSI)	28-DAY (PSI)
2468.	-2843.	5043.	4000.	5000.

PRESTRESSING STRANDS SIZE (IN)	TYPE	STRENGTH (KSI)	MODULUS OF ELASTICITY BEAM (KSI)	SLAB (KSI)	SLAB 28-DAY CONCRETE STRENGTH (PSI)	LIVE LOAD
1/2*	LO-RLX*	270.*	5000.	5000.	3600.*	HS20*

CENTERLINE STRAND PATTERN — STRANDS PER ROW / DIST. FROM BEAM BOT. (IN)

12	12	8	0	0	0	0	0	0	0	0	0	0	0
2.0	4.0	6.0	0.0	0.0	0.0	0.0	0.0	0.0	0.0	0.0	0.0	0.0	0.0

COMPUTED CL ECCENTRICITY = 21.00 IN NO. OF STRANDS = 32

END STRAND PATTERN — STRANDS PER ROW / DIST. FROM BEAM BOT. (IN)

10	10	6	2	2	2	0	0	0	0	0	0	0	0
2.0	4.0	6.0	40.0	42.0	44.0	0.0	0.0	0.0	0.0	0.0	0.0	0.0	0.0

COMPUTED END ECCENTRICITY = 13.88 IN

ORIGINAL DESIGNED BEAM AS SHOWN ON CONTRACT PLANS:
NO. OF STRANDS = 30 END ECCENTRICITY = 15.55 CENTERLINE ECCENTRICITY = 21.15
STRAND SIZE = 1/2 IN* STRAND TYPE = LO-RLX STRAND STRENGTH = 270. KSI*

---------- COMPUTED RESULTS ----------

	-- RELEASE -- END	HOLD-DOWN	CL	-- FINAL -- END	CL
BEAM TOP FIBER STRESS (PSI) =	-266.	33.	47.	-230.	1603.
BEAM BOT FIBER STRESS (PSI) =	2369.	2116.	2104.	2053.	-253.
CONC STRENGTH, REQ'D. (PSI) =	4000.@	4000.	4000.		5000.@
BEAM ALLOWABLE TENSION (PSI) =		-474. (RELEASE)			-424. (FINAL)
BEAM ALLOWABLE COMPRESSION (PSI) =		2400. (RELEASE)			2000. (FINAL)
ULTIMATE MOMENT PROVIDED (K-FT) =		6007.			

"@" DENOTES CONTROLLING STRESS CASES

*** BEAM SATISFIES ALL DESIGN REQUIREMENTS ***

MAXIMUM CAMBER, ORIGINAL DESIGN (FT) = 0.155 UPWARD IS POSITIVE
MAXIMUM CAMBER, (FT) = 0.164 UPWARD IS POSITIVE

PSF NO	COUNTY	HIGHWAY NO	CONTROL-SECTION-JOB	CODED BY	DATE
9	HILDALGO	US83/US281	0039-17-097		SEP 15, 1992

RAMP 4 , UNITS ~~7,8 & 10~~ ,6 & 9
O.D.#15 SPAN NO. 23, BEAM NO. 4

---------- INPUT DATA SUBMITTED ----------

BEAM TYPE	SPAN LENGTH C-C BRNG (FT)	BEAM SPAC (FT)	SLAB THICKNESS (IN)	RELATIVE HUMIDITY (PERCENT)
IV	72.38	8.67	7.75	75.

CENTERLINE DESIGN STRESSES TOP (PSI)	BOTTOM (PSI)	REQUIRED ULTIMATE MOMENT (K-FT)	BEAM CONCRETE STRENGTHS RELEASE (PSI)	28-DAY (PSI)
1704.	-2036.	3751.	4020.	5000.

PRESTRESSING STRANDS SIZE (IN)	TYPE	STRENGTH (KSI)	MODULUS OF ELASTICITY BEAM (KSI)	SLAB (KSI)	SLAB 28-DAY CONCRETE STRENGTH (PSI)	LIVE LOAD
1/2*	LO-RLX*	270.*	5000.	5000.	3600.*	HS20*

CENTERLINE STRAND PATTERN — STRANDS PER ROW / DIST. FROM BEAM BOT. (IN)

10	10	6	2	2	2	0	0	0	0	0	0	0	0
2.0	4.0	6.0	40.0	42.0	44.0	0.0	0.0	0.0	0.0	0.0	0.0	0.0	0.0

COMPUTED CL ECCENTRICITY = 13.88 IN NO. OF STRANDS = 32

END STRAND PATTERN — STRANDS PER ROW / DIST. FROM BEAM BOT. (IN)

10	10	6	2	2	2	0	0	0	0	0	0	0	0
2.0	4.0	6.0	40.0	42.0	44.0	0.0	0.0	0.0	0.0	0.0	0.0	0.0	0.0

COMPUTED END ECCENTRICITY = 13.88 IN

ORIGINAL DESIGNED BEAM AS SHOWN ON CONTRACT PLANS:
NO. OF STRANDS = 20 END ECCENTRICITY = 18.35 CENTERLINE ECCENTRICITY = 21.95
STRAND SIZE = 1/2 IN* STRAND TYPE = LO-RLX STRAND STRENGTH = 270. KSI*

---------- COMPUTED RESULTS ----------

	-- RELEASE -- END	HOLD-DOWN	CL	-- FINAL -- END	CL
BEAM TOP FIBER STRESS (PSI) =	-270.	441.	455.	-237.	1467.
BEAM BOT FIBER STRESS (PSI) =	2407.	1805.	1793.	2116.	80.
CONC STRENGTH, REQ'D. (PSI) =	4020.@	4020.	4020.		5000.@
BEAM ALLOWABLE TENSION (PSI) =		-476. (RELEASE)			-424. (FINAL)
BEAM ALLOWABLE COMPRESSION (PSI) =		2412. (RELEASE)			2000. (FINAL)
ULTIMATE MOMENT PROVIDED (K-FT) =		5197.			

"@" DENOTES CONTROLLING STRESS CASES

*** BEAM SATISFIES ALL DESIGN REQUIREMENTS ***

MAXIMUM CAMBER, ORIGINAL DESIGN (FT) = 0.082 UPWARD IS POSITIVE
MAXIMUM CAMBER, (FT) = 0.089 UPWARD IS POSITIVE

PSF NO	COUNTY	HIGHWAY NO	CONTROL-SECTION-JOB	CODED BY	DATE
9	HILDALGO	US83/US281	0039-17-097		SEP 15, 1992

RAMP 4 , UNITS ~~7,8 & 10~~ , 6 & 8
O.D.#13 SPAN NO. 23, BEAMS 1 THRU. 3

---------- INPUT DATA SUBMITTED ----------

BEAM TYPE	SPAN LENGTH C-C BRNG (FT)	BEAM SPAC (FT)	SLAB THICKNESS (IN)	RELATIVE HUMIDITY (PERCENT)
IV	72.38	8.67	7.75	75.

CENTERLINE DESIGN STRESSES TOP (PSI)	BOTTOM (PSI)	REQUIRED ULTIMATE MOMENT (K-FT)	BEAM CONCRETE STRENGTHS RELEASE (PSI)	28-DAY (PSI)
1704.	-2036.	3751.	5360.	5360.

PRESTRESSING STRANDS SIZE (IN)	TYPE	STRENGTH (KSI)	MODULUS OF ELASTICITY BEAM (KSI)	SLAB (KSI)	SLAB 28-DAY CONCRETE STRENGTH (PSI)	LIVE LOAD
1/2*	LO-RLX*	270.*	5000.	5000.	3600.*	HS20*

CENTERLINE STRAND PATTERN — STRANDS PER ROW / DIST. FROM BEAM BOT. (IN)

10	10	10	8	2	2	2	2	0	0	0	0	0	0
2.0	4.0	6.0	8.0	46.0	48.0	50.0	52.0	0.0	0.0	0.0	0.0	0.0	0.0

COMPUTED CL ECCENTRICITY = 12.23 IN NO. OF STRANDS = 46

END STRAND PATTERN — STRANDS PER ROW / DIST. FROM BEAM BOT. (IN)

10	10	10	8	2	2	2	2	0	0	0	0	0	0
2.0	4.0	6.0	8.0	46.0	48.0	50.0	52.0	0.0	0.0	0.0	0.0	0.0	0.0

COMPUTED END ECCENTRICITY = 12.23 IN

ORIGINAL DESIGNED BEAM AS SHOWN ON CONTRACT PLANS:
NO. OF STRANDS = 20 END ECCENTRICITY = 18.35 CENTERLINE ECCENTRICITY = 21.95
STRAND SIZE = 1/2 IN* STRAND TYPE = LO-RLX STRAND STRENGTH = 270. KSI*

---------- COMPUTED RESULTS ----------

	-- RELEASE -- END	HOLD-DOWN	CL	-- FINAL -- END	7.2 FT	CL
BEAM TOP FIBER STRESS (PSI) =	-139.	572.	586.	-117.	503.	1587.
BEAM BOT FIBER STRESS (PSI) =	3215.	2613.	2602.	2697.	1941.	661.
CONC STRENGTH, REQ'D. (PSI) =	5360.@	5360.	5360.		5360.@	5360.

BEAM ALLOWABLE TENSION (PSI) = -549. (RELEASE) -439. (FINAL)
BEAM ALLOWABLE COMPRESSION (PSI) = 3216. (RELEASE) 2144. (FINAL)
ULTIMATE MOMENT PROVIDED (K-FT) = 6968.
"@" DENOTES CONTROLLING STRESS CASES

*** BEAM SATISFIES ALL DESIGN REQUIREMENTS ***
WARNING: RATIO OF INPUT ULTIMATE MOMENT REQUIRED TO CALCULATED ULTIMATE MOMENT REQUIRED = 0.79877

3751 / .79877 = 4695.970

MAXIMUM CAMBER, ORIGINAL DESIGN (FT) = 0.082 UPWARD IS POSITIVE
MAXIMUM CAMBER, (FT) = 0.123 UPWARD IS POSITIVE

= .041
= 1/2"

PSF NO	COUNTY	HIGHWAY NO	CONTROL-SECTION-JOB	CODED BY	DATE
12	HIDALGO	US 83/281	0039-17-097		SEP 17, 1992

RAMP 2, UNITS 7 THRU. 10
O.D.#12 SPANS 24 & 25, BMS. 1 THRU. 4

---------- INPUT DATA SUBMITTED ----------

BEAM TYPE	SPAN LENGTH C-C BRNG (FT)	BEAM SPAC (FT)	SLAB THICKNESS (IN)	RELATIVE HUMIDITY (PERCENT)
IV	94.86	8.67	7.75	75.

CENTERLINE DESIGN STRESSES TOP (PSI)	BOTTOM (PSI)	REQUIRED ULTIMATE MOMENT (K-FT)	BEAM CONCRETE STRENGTHS RELEASE (PSI)	28-DAY (PSI)
2852.	-3243.	5667.	5280.	5280.

PRESTRESSING STRANDS SIZE (IN)	TYPE	STRENGTH (KSI)	MODULUS OF ELASTICITY BEAM (KSI)	SLAB (KSI)	SLAB 28-DAY CONCRETE STRENGTH (PSI)	LIVE LOAD
1/2*	LO-RLX*	270.*	5000.	5000.	3600.*	HS20*

CENTERLINE STRAND PATTERN — STRANDS PER ROW / DIST. FROM BEAM BOT. (IN)

10	10	10	10	2	2	2	0	0	0	0	0	0	0
2.0	4.0	6.0	8.0	10.0	12.0	14.0	0.0	0.0	0.0	0.0	0.0	0.0	0.0

COMPUTED CL ECCENTRICITY = 18.84 IN NO. OF STRANDS = 46

END STRAND PATTERN — STRANDS PER ROW / DIST. FROM BEAM BOT. (IN)

10	10	10	8	2	2	2	2	0	0	0	0	0	0
2.0	4.0	6.0	8.0	46.0	48.0	50.0	52.0	0.0	0.0	0.0	0.0	0.0	0.0

COMPUTED END ECCENTRICITY = 12.23 IN

ORIGINAL DESIGNED BEAM AS SHOWN ON CONTRACT PLANS:
NO. OF STRANDS = 36 END ECCENTRICITY = 13.08 CENTERLINE ECCENTRICITY = 20.75
STRAND SIZE = 1/2 IN* STRAND TYPE = LO-RLX STRAND STRENGTH = 270. KSI*

---------- COMPUTED RESULTS ----------

	-- RELEASE -- END	HOLD-DOWN	CL	-- FINAL -- END	CL
BEAM TOP FIBER STRESS (PSI) =	-137.	128.	142.	-113.	1941.
BEAM BOT FIBER STRESS (PSI) =	3164.	2940.	2928.	2611.	43.
CONC STRENGTH, REQ'D. (PSI) =	5280.@	5280.	5280.		5280.@

BEAM ALLOWABLE TENSION (PSI) = -545. (RELEASE) -436. (FINAL)
BEAM ALLOWABLE COMPRESSION (PSI) = 3168. (RELEASE) 2112. (FINAL)
ULTIMATE MOMENT PROVIDED (K-FT) = 8009.
"@" DENOTES CONTROLLING STRESS CASES

*** BEAM SATISFIES ALL DESIGN REQUIREMENTS ***

MAXIMUM CAMBER, ORIGINAL DESIGN (FT) = 0.198 UPWARD IS POSITIVE
MAXIMUM CAMBER, (FT) = 0.250 UPWARD IS POSITIVE

= .052"
= 5/8"

OK CRM

PSF NO	COUNTY	HIGHWAY NO	CONTROL-SECTION-JOB	CODED BY	DATE
9	HILDALGO	US83/US281	0039-17-097		SEP 15, 1992

RAMP 4 , UNITS ~~7,8 & 10~~ 6 & 8 SPAN 1 SPN ... BEAM ... 1
O.D.#10 ~~RAMP 4,~~ ~~UNITS 6 & 8~~

---------- INPUT DATA SUBMITTED ----------

BEAM TYPE	SPAN LENGTH C-C BRNG (FT)	BEAM SPAC (FT)	SLAB THICKNESS (IN)	RELATIVE HUMIDITY (PERCENT)
IV	88.61	8.67	8.00	75.

CENTERLINE DESIGN STRESSES TOP (PSI)	BOTTOM (PSI)	REQUIRED ULTIMATE MOMENT (K-FT)	BEAM CONCRETE STRENGTHS RELEASE (PSI)	28-DAY (PSI)
2529.	-2908.	5144.	5600.	6040.

PRESTRESSING STRANDS SIZE (IN)	TYPE	STRENGTH (KSI)	MODULUS OF ELASTICITY BEAM (KSI)	SLAB (KSI)	SLAB 28-DAY CONCRETE STRENGTH (PSI)	LIVE LOAD
1/2*	LO-RLX*	270.*	5000.	5000.	3600.*	HS20*

CENTERLINE STRAND PATTERN STRANDS PER ROW / DIST. FROM BEAM BOT. (IN)

10	10	10	8	2	2	2	2	2	0	0	0	0	0
2.0	4.0	6.0	8.0	38.0	40.0	42.0	44.0	46.0	0.0	0.0	0.0	0.0	0.0

COMPUTED CL ECCENTRICITY = 12.17 IN NO. OF STRANDS = 48

END STRAND PATTERN STRANDS PER ROW / DIST. FROM BEAM BOT. (IN)

10	10	10	8	2	2	2	2	2	0	0	0	0	0
2.0	4.0	6.0	8.0	38.0	40.0	42.0	44.0	46.0	0.0	0.0	0.0	0.0	0.0

COMPUTED END ECCENTRICITY = 12.17 IN

ORIGINAL DESIGNED BEAM AS SHOWN ON CONTRACT PLANS:
NO. OF STRANDS = 32 END ECCENTRICITY = 13.88 CENTERLINE ECCENTRICITY = 21.00
STRAND SIZE = 1/2 IN* STRAND TYPE = LO-RLX STRAND STRENGTH = 270. KSI*

---------- COMPUTED RESULTS ----------

	-- RELEASE -- END	HOLD-DOWN	CL	-- FINAL -- END	CL
BEAM TOP FIBER STRESS (PSI) =	-136.	936.	950.	-115.	2414.
BEAM BOT FIBER STRESS (PSI) =	3355.	2448.	2436.	2845.	-63.
CONC STRENGTH, REQ'D. (PSI) =	5600.@	5600.	5600.		6040.@

BEAM ALLOWABLE TENSION (PSI) =	-561. (RELEASE)		-466. (FINAL)
BEAM ALLOWABLE COMPRESSION (PSI) =	3360. (RELEASE)		2416. (FINAL)
ULTIMATE MOMENT PROVIDED (K-FT) =	7267.		

"@" DENOTES CONTROLLING STRESS CASES

*** BEAM SATISFIES ALL DESIGN REQUIREMENTS ***

MAXIMUM CAMBER, ORIGINAL DESIGN (FT) = 0.165 UPWARD IS POSITIVE
MAXIMUM CAMBER, (FT) = 0.150 UPWARD IS POSITIVE

= .015' = 3/16"

OK

PSF NO	COUNTY	HIGHWAY NO	CONTROL-SECTION-JOB	CODED BY	DATE
9	HILDALGO	US83/US281	0039-17-097		SEP 15, 1992

RAMP 1 , UNITS 7,8 & 10 ,
O.D.#11 ~~RAMP 1, UNITS 7,8 & 10~~ SPANS 20 & 21 ... BEAMS ... 1 Mount

---------- INPUT DATA SUBMITTED ----------

BEAM TYPE	SPAN LENGTH C-C BRNG (FT)	BEAM SPAC (FT)	SLAB THICKNESS (IN)	RELATIVE HUMIDITY (PERCENT)
IV	97.34	8.67	7.75	75.

CENTERLINE DESIGN STRESSES TOP (PSI)	BOTTOM (PSI)	REQUIRED ULTIMATE MOMENT (K-FT)	BEAM CONCRETE STRENGTHS RELEASE (PSI)	28-DAY (PSI)
3218.	-3471.	5897.	5280.	5760.

PRESTRESSING STRANDS SIZE (IN)	TYPE	STRENGTH (KSI)	MODULUS OF ELASTICITY BEAM (KSI)	SLAB (KSI)	SLAB 28-DAY CONCRETE STRENGTH (PSI)	LIVE LOAD
1/2*	LO-RLX*	270.*	5000.	5000.	3600.*	HS20*

CENTERLINE STRAND PATTERN STRANDS PER ROW / DIST. FROM BEAM BOT. (IN)

10	10	10	10	2	2	2	0	0	0	0	0	0	0
2.0	4.0	6.0	8.0	10.0	12.0	14.0	0.0	0.0	0.0	0.0	0.0	0.0	0.0

COMPUTED CL ECCENTRICITY = 18.84 IN NO. OF STRANDS = 46

END STRAND PATTERN STRANDS PER ROW / DIST. FROM BEAM BOT. (IN)

10	10	10	8	2	2	2	2	0	0	0	0	0	0
2.0	4.0	6.0	8.0	46.0	48.0	50.0	52.0	0.0	0.0	0.0	0.0	0.0	0.0

COMPUTED END ECCENTRICITY = 12.23 IN

ORIGINAL DESIGNED BEAM AS SHOWN ON CONTRACT PLANS:
NO. OF STRANDS = 38 END ECCENTRICITY = 11.28 CENTERLINE ECCENTRICITY = 20.54
STRAND SIZE = 1/2 IN* STRAND TYPE = LO-RLX STRAND STRENGTH = 270. KSI*

---------- COMPUTED RESULTS ----------

	-- RELEASE -- END	HOLD-DOWN	CL	-- FINAL -- END	CL
BEAM TOP FIBER STRESS (PSI) =	-137.	193.	206.	-114.	2302.
BEAM BOT FIBER STRESS (PSI) =	3168.	2889.	2877.	2627.	-165.
CONC STRENGTH, REQ'D. (PSI) =	5280.@	5280.	5280.		5760.@

BEAM ALLOWABLE TENSION (PSI) =	-545. (RELEASE)		-455. (FINAL)
BEAM ALLOWABLE COMPRESSION (PSI) =	3168. (RELEASE)		2304. (FINAL)
ULTIMATE MOMENT PROVIDED (K-FT) =	8009.		

"@" DENOTES CONTROLLING STRESS CASES

*** BEAM SATISFIES ALL DESIGN REQUIREMENTS ***

MAXIMUM CAMBER, ORIGINAL DESIGN (FT) = 0.205 UPWARD IS POSITIVE
MAXIMUM CAMBER, (FT) = 0.254 UPWARD IS POSITIVE

= .049'
= 9/16"

PSF NO	COUNTY	HIGHWAY NO	CONTROL-SECTION-JOB	CODED BY	DATE
9	HILDALGO	US83/US281	0039-17-097		SEP 15, 1992

RAMP 1 , UNITS 7,8 & 10 ,
O.D.#9 SPANS 18 & 19, BEAMS 1 THRU. 4

---------- INPUT DATA SUBMITTED ----------

BEAM TYPE	SPAN LENGTH C-C BRNG (FT)	BEAM SPAC (FT)	SLAB THICKNESS (IN)	RELATIVE HUMIDITY (PERCENT)
IV	97.34	8.67	7.75	75.

CENTERLINE DESIGN STRESSES TOP (PSI)	BOTTOM (PSI)	REQUIRED ULTIMATE MOMENT (K-FT)	BEAM CONCRETE STRENGTHS RELEASE (PSI)	28-DAY (PSI)
3218.	-3471.	5897.	5220.	5810.

PRESTRESSING STRANDS SIZE (IN)	TYPE	STRENGTH (KSI)	MODULUS OF ELASTICITY BEAM (KSI)	SLAB (KSI)	SLAB 28-DAY CONCRETE STRENGTH (PSI)	LIVE LOAD
1/2*	LO-RLX*	270.*	5000.	5000.	3600.*	HS20*

CENTERLINE STRAND PATTERN STRANDS PER ROW / DIST. FROM BEAM BOT. (IN)

10	10	10	10	2	2	2	2	0	0	0	0	0	0
2.0	4.0	6.0	8.0	10.0	12.0	14.0	16.0	0.0	0.0	0.0	0.0	0.0	0.0

COMPUTED CL ECCENTRICITY = 18.42 IN NO. OF STRANDS = 48

END STRAND PATTERN STRANDS PER ROW / DIST. FROM BEAM BOT. (IN)

10	10	10	8	2	2	2	2	2	0	0	0	0	0
2.0	4.0	6.0	8.0	44.0	46.0	48.0	50.0	52.0	0.0	0.0	0.0	0.0	0.0

COMPUTED END ECCENTRICITY = 10.92 IN

ORIGINAL DESIGNED BEAM AS SHOWN ON CONTRACT PLANS:
NO. OF STRANDS = 38 END ECCENTRICITY = 11.28 CENTERLINE ECCENTRICITY = 20.54
STRAND SIZE = 1/2 IN* STRAND TYPE = LO-RLX STRAND STRENGTH = 270. KSI*

---------- COMPUTED RESULTS ----------

	-- RELEASE -- END	HOLD-DOWN	CL	-- FINAL -- END	CL
BEAM TOP FIBER STRESS (PSI) =	57.	212.	226.	47.	2324.
BEAM BOT FIBER STRESS (PSI) =	3127.	2996.	2985.	2575.	-99.
CONC STRENGTH, REQ'D. (PSI) =	5220.@	5220.	5220.		5810.@

BEAM ALLOWABLE TENSION (PSI) = -542. (RELEASE) -457. (FINAL)
BEAM ALLOWABLE COMPRESSION (PSI) = 3132. (RELEASE) 2324. (FINAL)
ULTIMATE MOMENT PROVIDED (K-FT) = 8252.
"@" DENOTES CONTROLLING STRESS CASES

*** BEAM SATISFIES ALL DESIGN REQUIREMENTS ***

MAXIMUM CAMBER, ORIGINAL DESIGN (FT) = 0.205 UPWARD IS POSITIVE
MAXIMUM CAMBER, (FT) = 0.254 UPWARD IS POSITIVE

.049
9"
16

FILE COPY

STATE DEPARTMENT OF HIGHWAYS AND PUBLIC TRANSPORTATION

PRESTRESSED CONCRETE OPTIONAL DESIGN
STANDARD I BEAM SECTION
(DRAPED OR STRAIGHT STRAND PATTERN)

TEXAS DEPARTMENT OF TRANSPORTATION
APPROVED EXCEPT AS NOTED
DIVISION OF BRIDGES AND STRUCTURES
JUN 25 1992
APPROVAL OF THIS DRAWING DOES NOT RELIEVE THE CONTRACTOR OF THE RESPONSIBILITY FOR THE CORRECTNESS OF DETAIL.

RESERVE THIS SPACE FOR APPROVAL STAMP

Optional Design No. OD- 4
Project No. : NH 92(50)M
Contractor : GILBERT TEXAS CONSTR.
Fabricator : MANCO
Plan Sheet No. : 388

Reason for Rejection: .....

SHOP PLAN FILE NO. | COUNTY | HIGHWAY NO. | CONTROL-SECTION-JOB
HIDALGO | US 83/281 | 0039-17-097
STRUCTURE NAME
RAMPS 3&4,UNITS 1=4
PROB NO. 4 SPAN 1,BEAMS 1&5

Beam Card: BEAM TYPE | SPAN LENGTH C-C BRG (ft.) | BEAM SPAC (ft.) | SLAB THICKNESS (in.) | RELATIVE HUMIDITY
BEAM F | IV | 86.71 | 8.50 | 7.75 | 75
Bmses 575

Analysis Card: C.L. DESIGN STRESS (PSI) TOP (fct) | BOTTOM (fcb) | REQUIRED ULTIMATE MOMENT (kip-ft.) | FABRICATOR'S CONCRETE STRENGTH (PSI) RELEASE | 28-DAY
ANLY | 2346. | -2717. | 4844. | 4680. | 5300.

Strand Card: STRAND SIZE (in.) | L R (Low-Relaxation) S R (Stress-Relieved) | STRAND ULTIMATE STRENGTH (ksi)
STRD | 1/2 | LR | 270

Materials Card: MOD. OF ELASTICITY OF BEAM (ksi) | MOD. OF ELASTICITY OF SLAB (ksi) | SLAB 28-DAY CONC. STRENGTH (PSI)
MAT1 | 5000. | 5000. | 3600.

Specifications Card | LIVE LOAD TYPE
SPEC | HS20

Centerline Strand Pattern Card — STRANDS PER ROW
STPR CL | 10 | 10 | 10 | 2 | 2 | 2 | 2
LOCR (Dist. from bottom in.) | 2 | 4 | 6 | 36 | 38 | 40 | 42

End Strand Pattern Card — STRANDS PER ROW
STPR ED | 10 | 10 | 10 | 2 | 2 | 2 | 2
LOCR (Dist. from bottom in.) | 2 | 4 | 6 | 36 | 38 | 40 | 42

Transformed Steel Card: BARS U | AREA (sq. in.) | DIST. FROM BOTTOM (in.)
TRNF | C 1

Original Beam Camber Card: NO. OF STRANDS | END ECCENTRICITY (in.) | C.L. ECCENTRICITY (in.) | STRAND SIZE (in.) | L R (Low-Relaxation) S R (Stress-Relieved) | STRAND ULTIMATE STRENGTH (ksi)
ACAM | 28 | 16.18 | 21.32 | 1/2 | LR | 270

STATE OF TEXAS
M. NATARAJAN
30603
REGISTERED PROFESSIONAL ENGINEER
6-16-92

For S.E.A. Use Only (FAST HWY 5-20-92 CPQ:) TXDOT DESIGN

Depress Strand Pattern; C.L. 2 in. Grid
38 LOLAX Strand Total
Ult Moment Provided = 6003 K-Ft.
8 Strands To A- 42 @ End
8 Strands To A- 42 @ Midspan
e @ mid span= 13.38 in e @ end= 13.38 in
No. Of lanes=2 Or More
Camber @ Erection = 1.54 in.
Original Design Camber = 2 in.
Uplift= 0 K Max. X For Cant. @ Pickup Pt.= 13.5 Ft @ MidSpan= 22 Ft
Original Release Strength = 4000 psi. Hold-Down Distance = 10.5 ft.

STATE DEPARTMENT OF HIGHWAYS AND PUBLIC TRANSPORTATION

PRESTRESSED CONCRETE OPTIONAL DESIGN
STANDARD I BEAM SECTION
(DRAPED OR STRAIGHT STRAND PATTERN)

TEXAS DEPARTMENT OF TRANSPORTATION
APPROVED EXCEPT AS NOTED
DIVISION OF BRIDGES AND STRUCTURES

JUN 25 1992

APPROVAL OF THIS DRAWING DOES NOT RELIEVE THE CONTRACTOR OF THE RESPONSIBILITY FOR THE CORRECTNESS OF DETAIL.

RESERVE THIS SPACE FOR APPROVAL STAMP

Optional Design No. OD- 2
Project No. : NH 92(50)M
Contractor : GILBERT TEXAS CONSTR.
Fabricator : MANCO
Plan Sheet No. : 388

SHOP PLAN FILE NO. | COUNTY: HIDALGO | HIGHWAY NO.: US 83/281 | CONTROL-SECTION-JOB: 0039-17-097

STRUCTURE NAME: RAMPS 1&2 UNITS 1-4,RAMPS 3&4 UNITS 1-4

Reason for Rejection:

PROB. NO.: 2 SPAN 2,BEAMS 1-5(RAMPS 1&2) & SPAN 2,BEAMS 2-4(RAMPS 3&4)

Beam Card:	BEAM TYPE	SPAN LENGTH C-C BRG. (ft.)	BEAM SPAC. (ft.)	SLAB THICKNESS (in.)	RELATIVE HUMIDITY
BEAMF	IV	99.85	8.50	7.75	75

BM SPA. 5.75

Analysis Card:	C.L. DESIGN STRESS (PSI) TOP (fct)	BOTTOM (fcb)	REQUIRED ULTIMATE MOMENT (kip-ft.)	FABRICATOR'S CONCRETE STRENGTH (PSI) RELEASE	28-DAY
ANLY	3111.	3476.	5990.	5210.	5420.

Strand Card:	STRAND SIZE (in.)	L R (Low-Relaxation) S R (Stress-Relieved)	STRAND ULTIMATE STRENGTH (ksi)
STRD	1/2	LR	270

Materials Card:	MOD. OF ELASTICITY OF BEAM (ksi)	MOD. OF ELASTICITY OF SLAB (ksi)	SLAB 28-DAY CONC. STRENGTH (PSI)
MAT1	5000.	5000.	3600

Specifications Card	LIVE LOAD TYPE
SPEC	HS20

Centerline Strand Pattern Card — STRANDS PER ROW

STPR	CL	10		10		12		10		2		2		2						
LOCR	(Dist. from bottom (in.))	2		4		6		8		10		12		14						

End Strand Pattern Card — STRANDS PER ROW

STPR	ED	10		10		10		8		2		2		2		2				
LOCR	(Dist. from bottom (in.))	2		4		6		8		44		46		48		50		52		

Transformed Steel Card — BARS U

	AREA (sq. in.)	DIST. FROM BOTTOM (in.)
TRNF	C1	

Original Beam Camber Card:	NO. OF STRANDS	END ECCENTRICITY (in.)	C.L. ECCENTRICITY (in.)	STRAND SIZE (in.)	L R (Low-Relaxation) S R (Stress-Relieved)	STRAND ULTIMATE STRENGTH (ksi)
ACAM	40	11.55	20.35	1/2	LR	270

M. NATARAJAN 30603 REGISTERED PROFESSIONAL ENGINEER

6-16-92

For S.E.A. Use Only (FAST HWY 5-20-92 CPQ:) TXDOT DESIGN

Depress Strand Pattern; C.L. 2 in. Grid — Ult Moment Provided = 8294 K-Ft.
48 LOLAX Strand Total — 10 Strands To A- 52 @ End
10 Strands To A- 14 @ Midspan
e @ mid span= 18.83 in — e @ end= 10.92 in — No. Of lanes=2 Or More
Camber @ Erection = 3.47 in. — Original Design Camber = 3.04 in.
Uplift= 21.93 K — Max. X For Cant. @ Pickup Pt.= 13 Ft @ MidSpan= 11.5 Ft
Original Release Strength = 4481 psi. — Hold-Down Distance = 11.5 ft.

STATE DEPARTMENT OF HIGHWAYS AND PUBLIC TRANSPORTATION

PRESTRESSED CONCRETE OPTIONAL DESIGN
STANDARD I BEAM SECTION
(DRAPED OR STRAIGHT STRAND PATTERN)

TEXAS DEPARTMENT OF TRANSPORTATION
APPROVED EXCEPT AS NOTED
DIVISION OF BRIDGES AND STRUCTURES

JUN 25 1992

APPROVAL OF THIS DRAWING DOES NOT RELIEVE THE CONTRACTOR OF THE RESPONSIBILITY FOR THE CORRECTNESS OF DETAIL.

RESERVE THIS SPACE FOR APPROVAL STAMP

Optional Design No. OD- 3
Project No. : NH 92(50)M
Contractor : GILBERT TEXAS CONSTR.
Fabricator : MANCO
Plan Sheet No. : 388

SHOP PLAN FILE NO. | COUNTY: HIDALGO | HIGHWAY NO.: US 83/281 | CONTROL-SECTION-JOB: 0039-17-097

STRUCTURE NAME: RAMPS 3&4,UNITS 1-4

Reason for Rejection:

PROB. NO.: 3 SPAN 2,BEAMS 1&5

Beam Card:	BEAM TYPE	SPAN LENGTH C-C BRG. (ft.)	BEAM SPAC. (ft.)	SLAB THICKNESS (in.)	RELATIVE HUMIDITY
BEAMF	IV	99.85	8.50	7.75	75

BM SPA 5.75

Analysis Card:	C.L. DESIGN STRESS (PSI) TOP (fct)	BOTTOM (fcb)	REQUIRED ULTIMATE MOMENT (kip-ft.)	FABRICATOR'S CONCRETE STRENGTH (PSI) RELEASE	28-DAY
ANLY	3111.	3476.	5990.	4750.	5280.

Strand Card:	STRAND SIZE (in.)	L R (Low-Relaxation) S R (Stress-Relieved)	STRAND ULTIMATE STRENGTH (ksi)
STRD	1/2	LR	270

Materials Card:	MOD. OF ELASTICITY OF BEAM (ksi)	MOD. OF ELASTICITY OF SLAB (ksi)	SLAB 28-DAY CONC. STRENGTH (PSI)
MAT1	5000.	5000.	3600

Specifications Card	LIVE LOAD TYPE
SPEC	HS20

Centerline Strand Pattern Card — STRANDS PER ROW

STPR	CL	12		12		12		6												
LOCR	(Dist. from bottom (in.))	2		4		6		8												

End Strand Pattern Card — STRANDS PER ROW

STPR	ED	10		10		10		4		2		2		2		2				
LOCR	(Dist. from bottom (in.))	2		4		6		8		46		48		50		52				

Transformed Steel Card — BARS U

	AREA (sq. in.)	DIST. FROM BOTTOM (in.)
TRNF	C1	

Original Beam Camber Card:	NO. OF STRANDS	END ECCENTRICITY (in.)	C.L. ECCENTRICITY (in.)	STRAND SIZE (in.)	L R (Low-Relaxation) S R (Stress-Relieved)	STRAND ULTIMATE STRENGTH (ksi)
ACAM	40	11.55	20.35	1/2	LR	270

M. NATARAJAN 30603 REGISTERED PROFESSIONAL ENGINEER

6-16-92

For S.E.A. Use Only (FAST HWY 5-20-92 CPQ:) TXDOT DESIGN

Depress Strand Pattern; C.L. 2 in. Grid — Ult Moment Provided = 7549 K-Ft.
42 LOLAX Strand Total — 8 Strands To A- 52 @ End
8 Strands To A- 8 @ Midspan
e @ mid span= 20.18 in — e @ end= 11.8 in — No. Of lanes=2 Or More
Camber @ Erection = 3.25 in. — Original Design Camber = 3.04 in.
Uplift= 20.33 K — Max. X For Cant. @ Pickup Pt.= 10 Ft @ MidSpan= 11 Ft
Original Release Strength = 4481 psi. — Hold-Down Distance = 11.5 ft.

PSF NO	COUNTY	HIGHWAY NO	CONTROL-SECTION-JOB	CODED BY	DATE
P2887F	HIDALGO	US83/281	0039-17-097		JUN 24, 1992

RAMPS 1&2, UNITS 1-4 & RAMPS 3&3, UNITS 1-4
O.D.#1 SPAN 1,BMS 1-5(RP 1&2); SPAN 1,BMS 2-4(RP 3&4)

---------- INPUT DATA SUBMITTED ----------

BEAM TYPE	SPAN LENGTH C-C BRNG (FT)	BEAM SPAC (FT)	SLAB THICKNESS (IN)	RELATIVE HUMIDITY (PERCENT)
IV	86.71	8.50	7.75	75.

CENTERLINE DESIGN STRESSES TOP (PSI)	BOTTOM (PSI)	REQUIRED ULTIMATE MOMENT (K-FT)	BEAM CONCRETE STRENGTHS RELEASE (PSI)	28-DAY (PSI)
2346.	-2717.	4844.	5820.	5900.

PRESTRESSING STRANDS SIZE (IN)	TYPE	STRENGTH (KSI)	MODULUS OF ELASTICITY BEAM (KSI)	SLAB (KSI)	SLAB 28-DAY CONCRETE STRENGTH (PSI)	LIVE LOAD
1/2*	LO-RLX*	270.*	5000.	5000.	3600.*	HS20*

CENTERLINE STRAND PATTERN STRANDS PER ROW / DIST. FROM BEAM BOT. (IN)

10	10	10	8	4	2	2	2	2	0	0	0	0	0
2.0	4.0	6.0	8.0	10.0	44.0	46.0	48.0	50.0	52.0	0.0	0.0	0.0	0.0

COMPUTED CL ECCENTRICITY = 11.21 IN NO. OF STRANDS = 52

END STRAND PATTERN STRANDS PER ROW / DIST. FROM BEAM BOT. (IN)

10	10	10	8	4	2	2	2	2	0	0	0	0	0
2.0	4.0	6.0	8.0	10.0	44.0	46.0	48.0	50.0	52.0	0.0	0.0	0.0	0.0

COMPUTED END ECCENTRICITY = 11.21 IN

ORIGINAL DESIGNED BEAM AS SHOWN ON CONTRACT PLANS:
NO. OF STRANDS = 28 END ECCENTRICITY = 16.18 CENTERLINE ECCENTRICITY = 21.32
STRAND SIZE = 1/2 IN* STRAND TYPE = LO-RLX STRAND STRENGTH = 270. KSI*

---------- COMPUTED RESULTS ----------

	-- RELEASE -- END	HOLD-DOWN	CL	-- FINAL -- END	CL
BEAM TOP FIBER STRESS (PSI) =	13.	1040.	1054.	11.	2357.
BEAM BOT FIBER STRESS (PSI) =	3490.	2622.	2610.	2920.	203.
CONC STRENGTH, REQ'D. (PSI) =	5820.@	5820.	5820.		5900.@

BEAM ALLOWABLE TENSION (PSI) = -572. (RELEASE) -461. (FINAL)
BEAM ALLOWABLE COMPRESSION (PSI) = 3492. (RELEASE) 2360. (FINAL)
ULTIMATE MOMENT PROVIDED (K-FT) = 7563.
"@" DENOTES CONTROLLING STRESS CASES

*** BEAM SATISFIES ALL DESIGN REQUIREMENTS ***
WARNING: RATIO OF INPUT BEAM TOP FIBER STRESS TO CALCULATED TOTAL EXTERNAL LOAD TOP FIBER STRESS = 0.99788

MAXIMUM CAMBER, ORIGINAL DESIGN (FT) = 0.142 UPWARD IS POSITIVE
MAXIMUM CAMBER, (FT) = 0.147 UPWARD IS POSITIVE

STATE DEPARTMENT OF HIGHWAYS AND PUBLIC TRANSPORTATION

PRESTRESSED CONCRETE OPTIONAL DESIGN
STANDARD I BEAM SECTION
(DRAPED OR STRAIGHT STRAND PATTERN)

TEXAS DEPARTMENT OF TRANSPORTATION
APPROVED EXCEPT AS NOTED
DIVISION OF BRIDGES AND STRUCTURES
JUN 25 1992
APPROVAL OF THIS DRAWING DOES NOT RELIEVE THE CONTRACTOR OF THE RESPONSIBILITY FOR THE CORRECTNESS OF DETAIL

RESERVE THIS SPACE FOR APPROVAL STAMP

Optional Design No. OD- 1
Project No. : NH 92(50)M
Contractor : GILBERT TEXAS CONSTR.
Fabricator : MANCO
Plan Sheet No. : 388

SHOP PLAN FILE NO. | COUNTY: HIDALGO | HIGHWAY NO.: US 83/281 | CONTROL-SECTION-JOB: 0039-17-097
STRUCTURE NAME: RAMP 1&2 UNITS 1-4 & RAMPS 3&4 UNITS 1-4
PROB NO.: 1 SPAN 1,BEAMS 1-5(RAMPS 1&2) & SPAN 1,BEAMS 2-4(RAMPS 3&4)

Reason for Rejection: _____

Beam Card: BEAM TYPE: IV | SPAN LENGTH C-C BRG. (ft): 86.71 | BEAM SPAC. (ft.): 8.50 | SLAB THICKNESS (in.): 7.75 | RELATIVE HUMIDITY: 75

Analysis Card: C.L. DESIGN STRESS (PSI) TOP (fct): 2346. | BOTTOM (fcb): -2717. | REQUIRED ULTIMATE MOMENT (kip-ft.): 4844. | FABRICATOR'S CONCRETE STRENGTH (PSI) RELEASE: 5820. | 28-DAY: 5900.

Strand Card: STRAND SIZE (in.): 1/2 | L R (Low-Relaxation) S R (Stress-Relieved): L R | STRAND ULTIMATE STRENGTH (ksi): 270

Materials Card: MOD. OF ELASTICITY OF BEAM (ksi): 5000. | MOD. OF ELASTICITY OF SLAB (ksi): 5000. | SLAB 28-DAY CONC. STRENGTH (PSI): 3600

Specifications Card: LIVE LOAD TYPE: HS20

Reference Strand Pattern Card: STRANDS PER ROW

S T P R	C L	10	10	10	8	4	2	2	2	2	2
L O C R	(Dist. from bottom in.)	2	4	6	8	10	44	46	48	50	52

End Strand Pattern Card: STRANDS PER ROW

S T P R	E D	10	10	10	8	4	2	2	2	2	2
L O C R	(Dist. from bottom in.)	2	4	6	8	10	44	46	48	50	52

Debonding Strand Card: BARS U | AREA (sq. in.) | DIST. FROM BOTTOM (in.)
T S N F | C 1 | 6 | 16

Original Beam Camber Card: NO. OF STRANDS: 28 | END ECCENTRICITY (in.): 16.18 | C.L. ECCENTRICITY (in.): 21.32
STRAND SIZE (in.): 1/2 | L R (Low-Relaxation) S R (Stress-Relieved): LR | STRAND ULTIMATE STRENGTH (ksi): 270

M. NATARAJAN 30603 REGISTERED PROFESSIONAL ENGINEER
6-16-92

For S.E.A. Use Only (FAST HWY 5-20-92 CPQ:) TXDOT DESIGN

Depress Strand Pattern; C.L. 2 in. Grid
52 LOLAX Strand Total
e @ mid span= 11.21 in e @ end= 11.21 in
Camber @ Erection = 1.77 in.
Uplift= 0 K Max. X For Cant. @ Pickup Pt.= 23.5 Ft @ MidSpan= 27 Ft
Original Release Strength = 4000 psi. Hold-Down Distance = 10.5 ft.
Ult Moment Provided = 7552 K-Ft.
10 Strands To A- 52 @ End
10 Strands To A- 52 @ Midspan
No. Of lanes=2 Or More
Original Design Camber = 2 in.

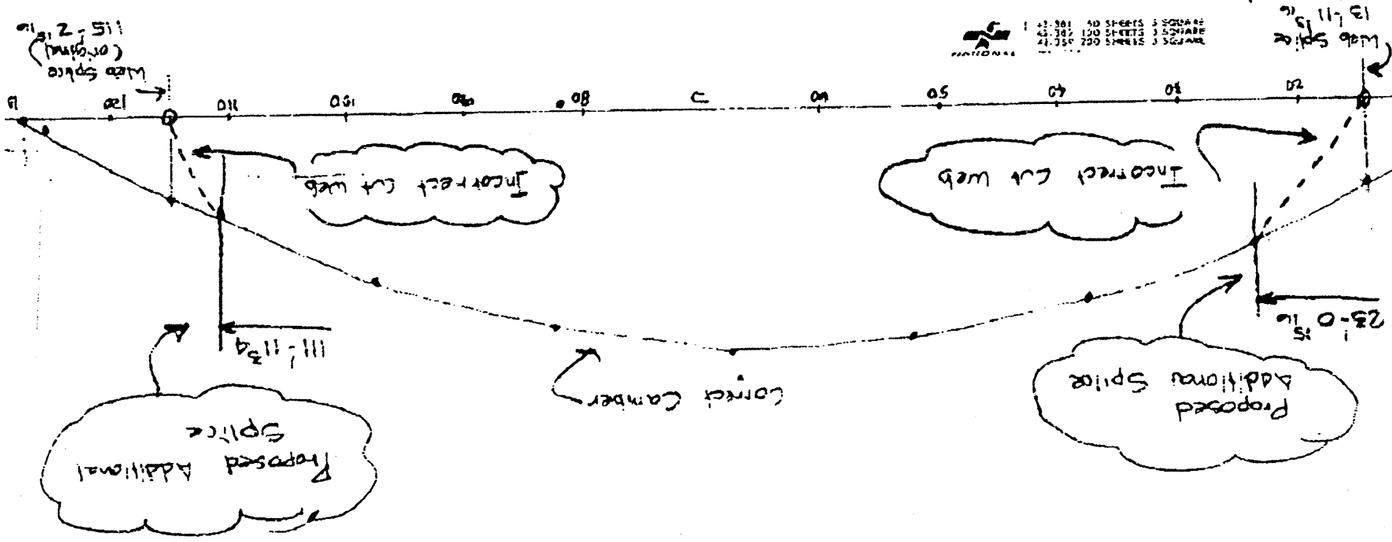

2KS

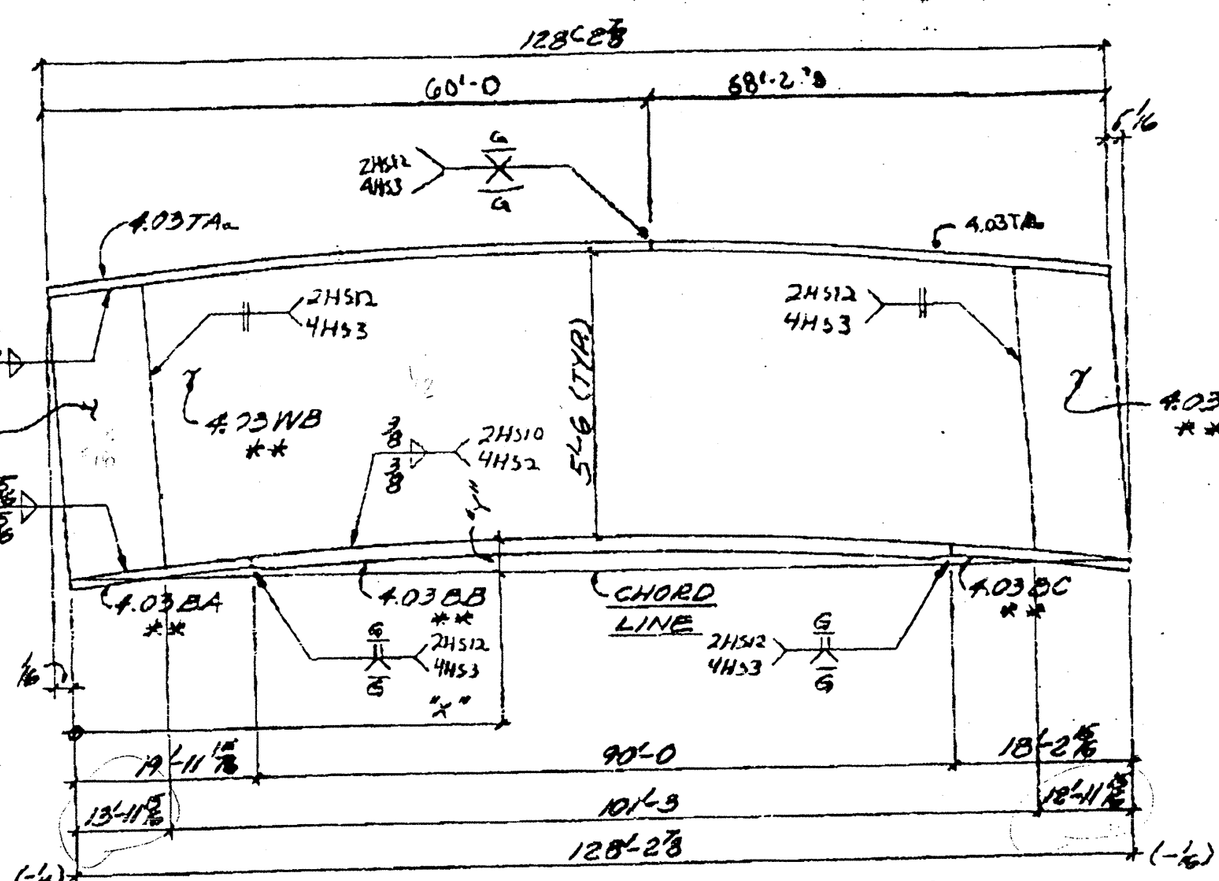

ONE ~ GIRDER SUB-ASSY. ~ MK A112

(FOR GIRDER 132 PG 4.03)

SHT 112 (SK1)

SK1

MK A112												
"x"	8'-3 3/8	13'-11 5/16	23'-0 15/16	37'-10 3/4	52'-8 3/16	67'-6 5/16	82'-4 1/8	97'-1 15/16	111'-11 3/4	115'-2 13/16	126'-9 3/16	128'-2 7/8
"y"	13/16	1 3/8	2 9/16	3/4	3 13/16	4	3 11/16	2 3/16	1 5/8	1 5/16	1/2	0"
		@ WEB SPLICE								@ WEB SPLICE		

4-20-93 : 13:15 ; MATERIALS & TESTS I→ 512 416 2242:# 4/14

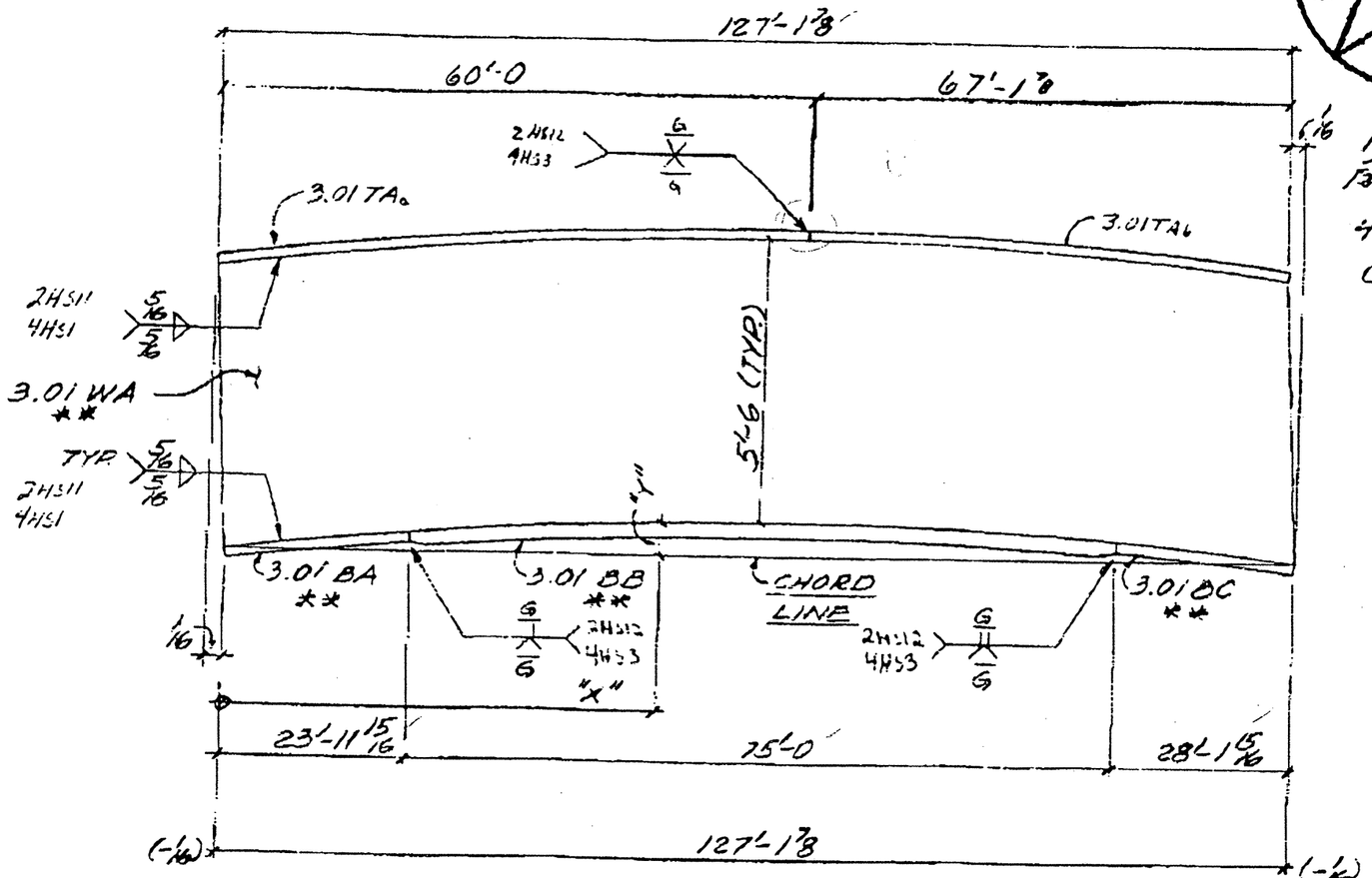

As Fabricated 4-19-93 CRM

ONE ~ GIRDER SUB-ASSY. ~ MK A110

(FOR GIRDER 130 PG 3.01)

SK2

4-20-93 : 13:16 ; MATERIALS & TESTS I→ 512 416 2242:# 6/14

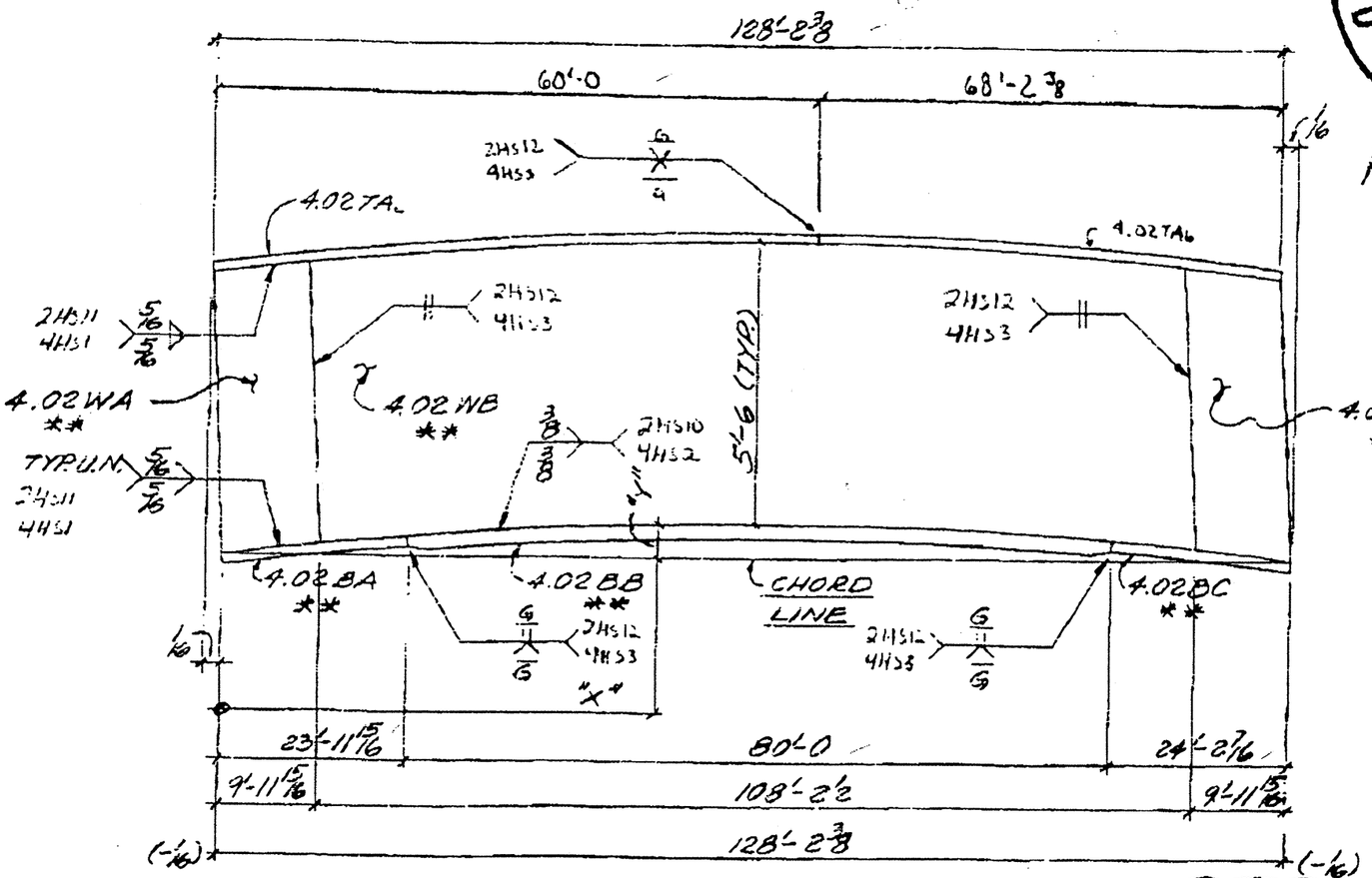

As Fabricated 4-19-93 CRM

ONE ~ GIRDER SUB-ASSY. ~ MK A111

(FOR GIRDER 131 PG 4.02)

SK4

MK A111

4-20-93 ; 13:17 ; MATERIALS & TESTS I-7 ; 512 416 2242:# 8/14

As Fabricated
4-1993
C.T.M.

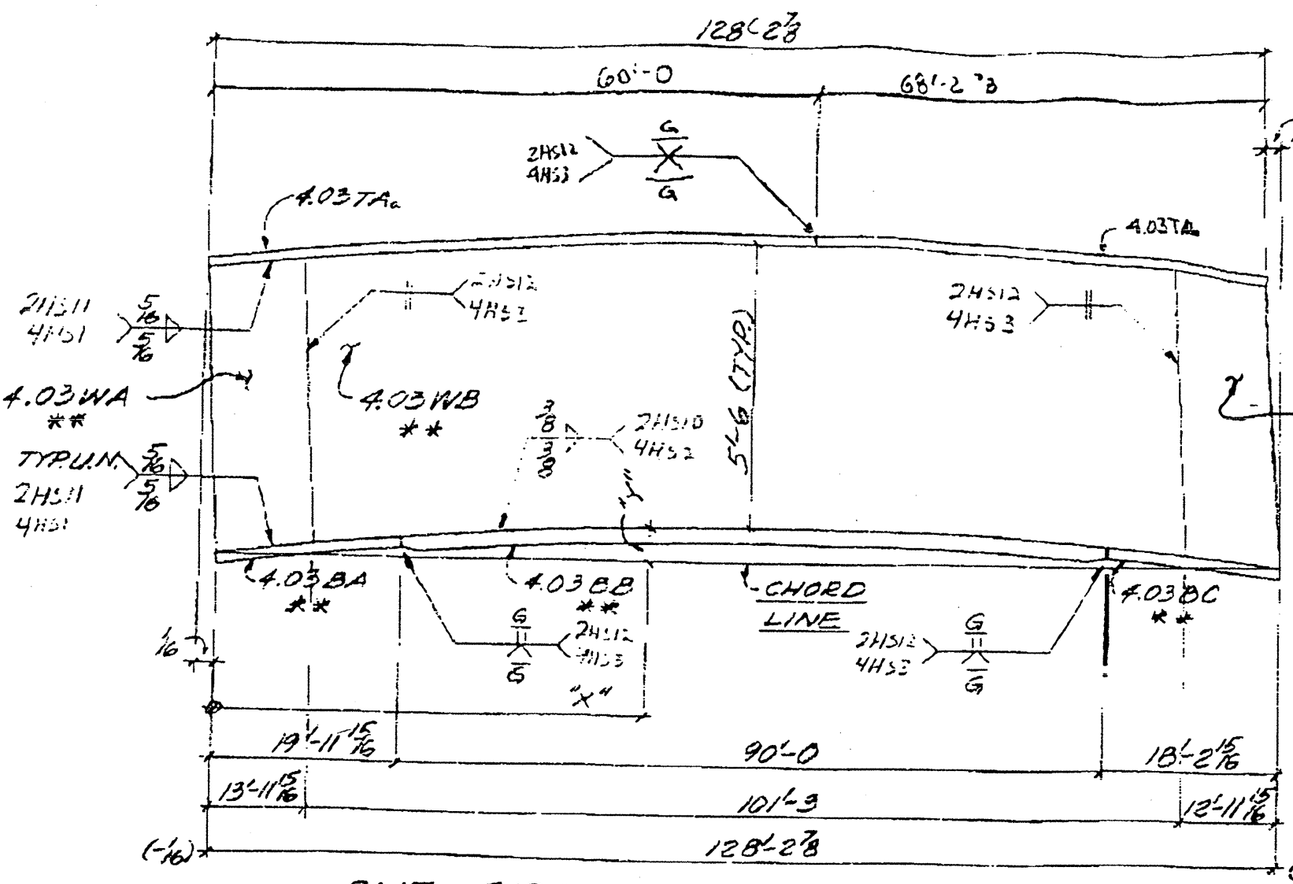

ONE ~ GIRDER SUB-ASSY. ~ MK A112

(FOR GIRDER 132 FG 4.03)

SK6

MK A112												
"X"	8'-3 3/8	13'-11 15/16	23'-0 15/16	37'-10 7/8	52'-8 9/16	67'-6 5/16	32'-4 1/8	97'-1 15/16	111'-1 7/8	115'-2 15/16	126'-9 9/16	128'-2 7/8
"Y"	13/16	1 3/8	2 3/16	3 1/4	3 13/16	4	3 1/16	2 13/16	1 5/8	1 5/16	1/8	0"

4-20-93 ; 13:18 ; MATERIALS & TESTS I-7 ; 512 416 2242:#10/1

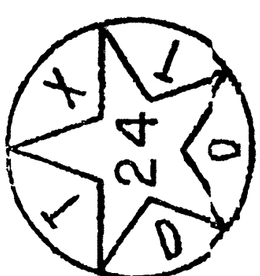

As Fabricated
1-1993
C.T.M.

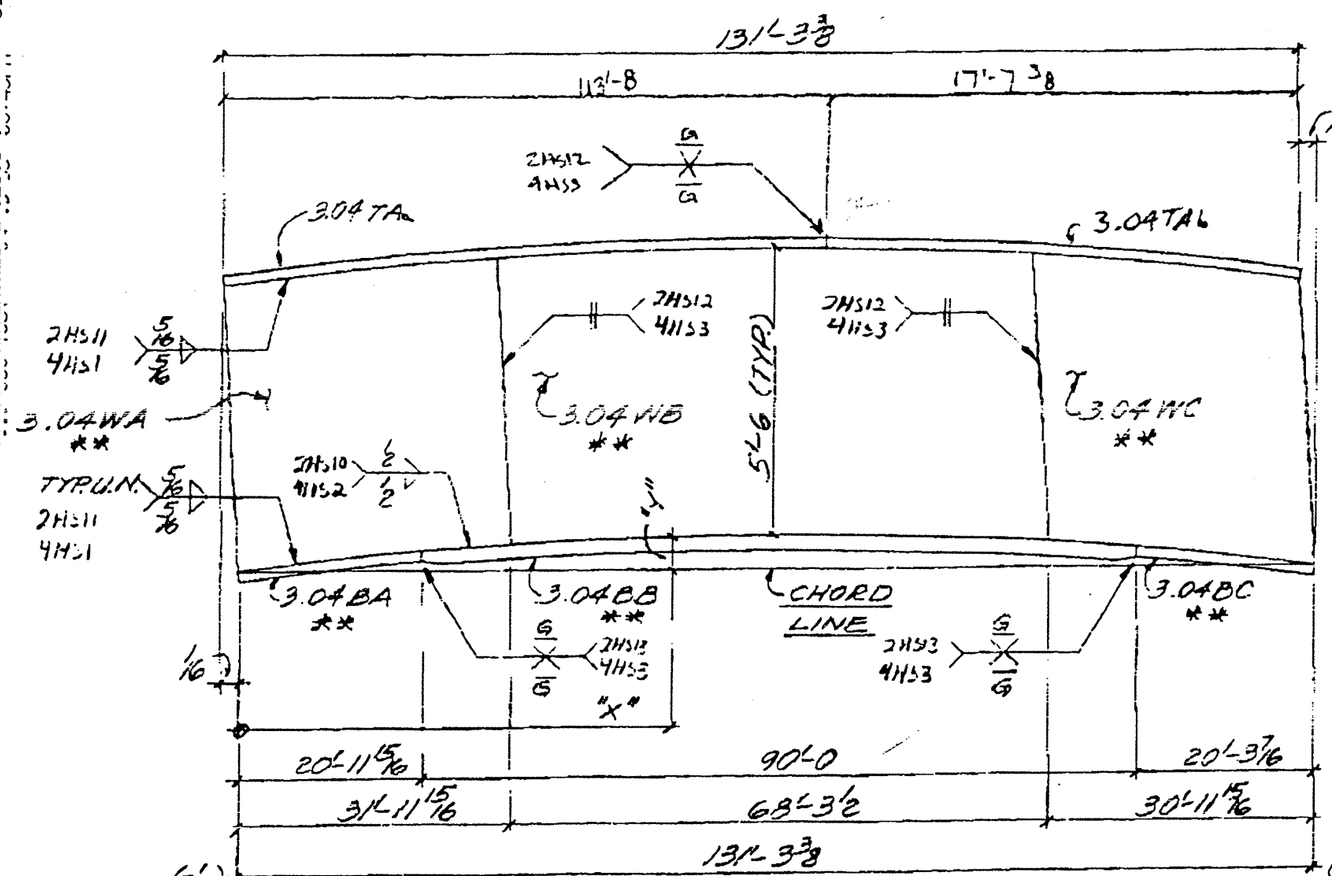

ONE ~ GIRDER SUB-ASSY. ~ MK A113

(FOR GIRDER 133 FG 3.04)

SK8

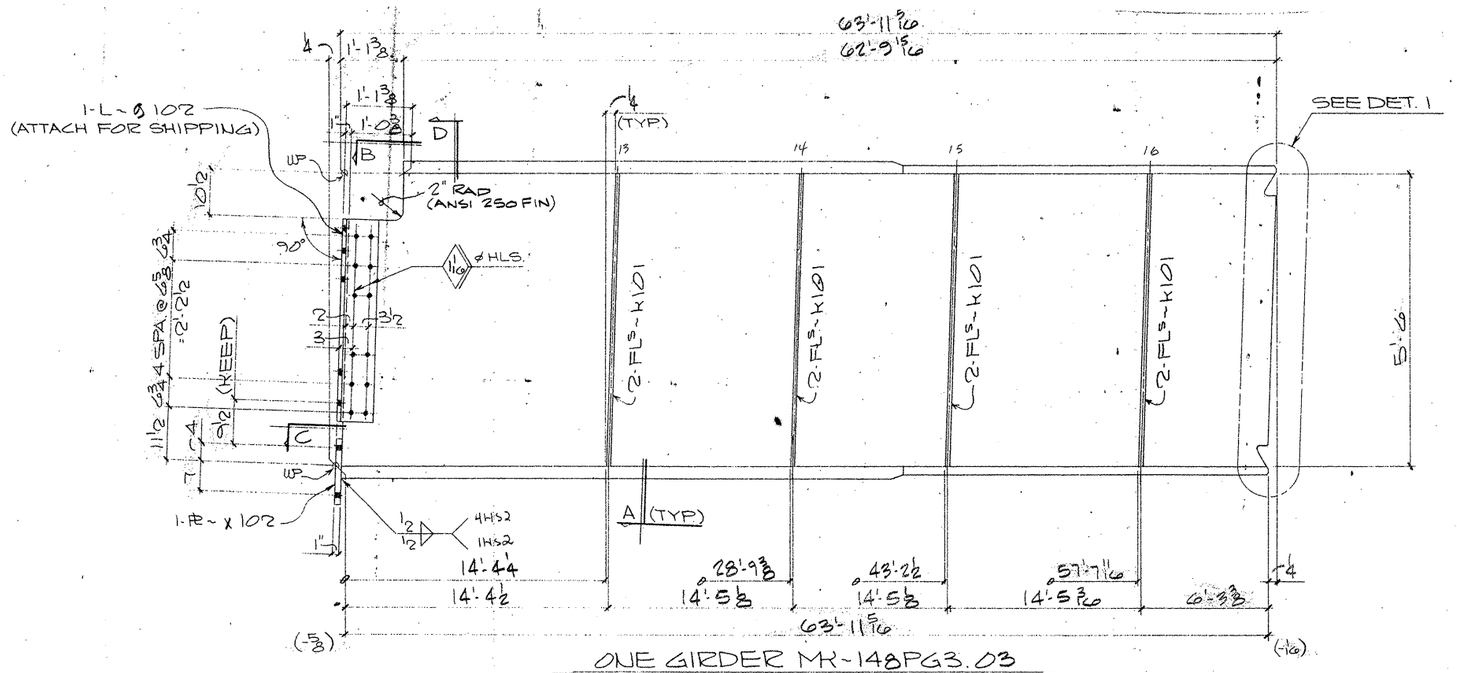

ONE GIRDER MK~148PG3.03
(APPROX. WT. = TONS)

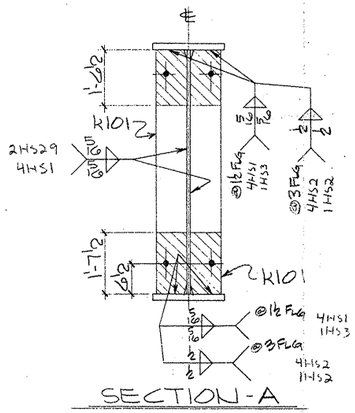

SECTION-A

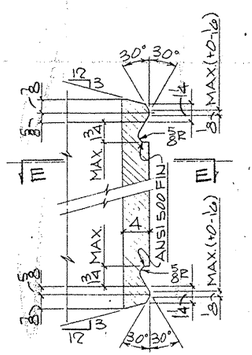

DETAIL-1

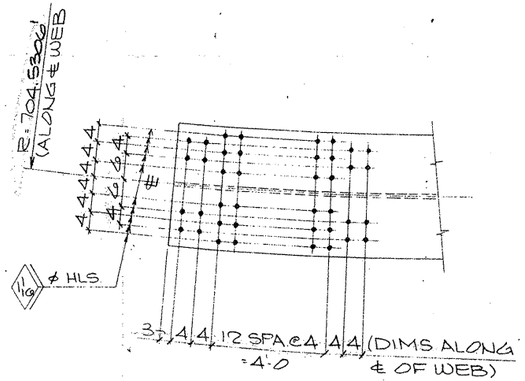

VIEW-B

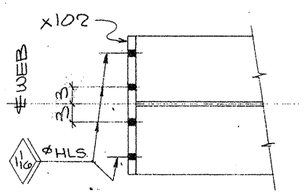

SECTION-C

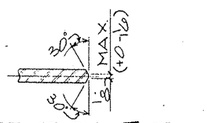

SECTION-E-E

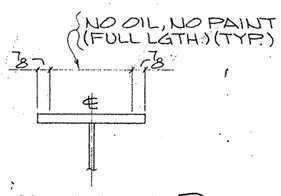

SECTION-D

SHOP NOTES:

1) FOR GENERAL NOTES SEE SHT. GN1
2) FOR GIRDER SUB-ASSEMBLY SEE SHT. 112
3) FOR STIFF. DETAILS SEE SHT. 101
4) FOR BLOCKING DIAGRAM SEE SHT. 142
5) FOR HEAT CURVE DIAGRAM SEE SHT. 138
6) FOR SPLICE ATTACHMENTS SEE SHT. 102
7) ▨ INDICATES OIL, NO PAINT (NS/FS & EDGES)

BILL OF MATERIAL

	Qnty.	Material	Length	Mark Temp	Mark Ship	Wt.	Cut From	Remarks
1								
2	1	GIRDER			148PG3.03			
3	1	GIRDER SUB-ASSY		B112				
4	8	DIAF STIFF		K101				
5	1	ANGLE		3102				
6	1	CONN PL		X102				
7–60								

FOR APPROVAL
AUG 24 '92
NOT FOR CONSTRUCTION

TEXAS DEPARTMENT OF TRANSPORTATION
APPROVED
BUREAU OF BRIDGE FACILITIES
OCT 27 1992
APPROVAL OF THIS SHEET DOES NOT RELIEVE THE FABRICATOR OF HIS RESPONSIBILITY FOR THE CORRECTNESS OF DETAILS

REVISION	DATE	DESCRIPTION OF REVISION
NO. 1		
NO. 2		
NO. 3		
NO. 4		
NO. 5		

PRINTING: Read / For / Date

Bolts: Holes: 15/16 Ø Unless Noted
Shop Paint: SEE SHT. GN1
Fab. Spec.: AS.NTP. Inspection
Architect
Erection By: Field Connections

HIRSCHFELD STEEL CO. INC.
112 WEST 29TH SAN ANGELO, TEXAS 76903
PHONE (915) 653-3211

DESCRIPTION: 610'-0 PLATE GIRDER UNIT
STRUCTURE: US 83/281 INTERCHANGE RAMP E
LOCATION: HIDALGO COUNTY
CUSTOMER: GILBERT TEXAS CONSTRUCTION
SHIP TO
Customer's Order No.
Dwg. By: JR Date: 7/92
Checked By: CRT Date: 7/92

SHEET 148 OF
JOB NO. 92-106

FED. ROAD DIV. NO.	STATE	FEDERAL AID PROJECT NO.			
6	TX.	NH (50) M			
STATE DIST. NO.	COUNTY	CONTROL NO.	SECTION NO.	JOB NO.	HIGHWAY NO.
21	HIDALGO	39	17	97	83/281

CE 92-11 (LINE # 3)

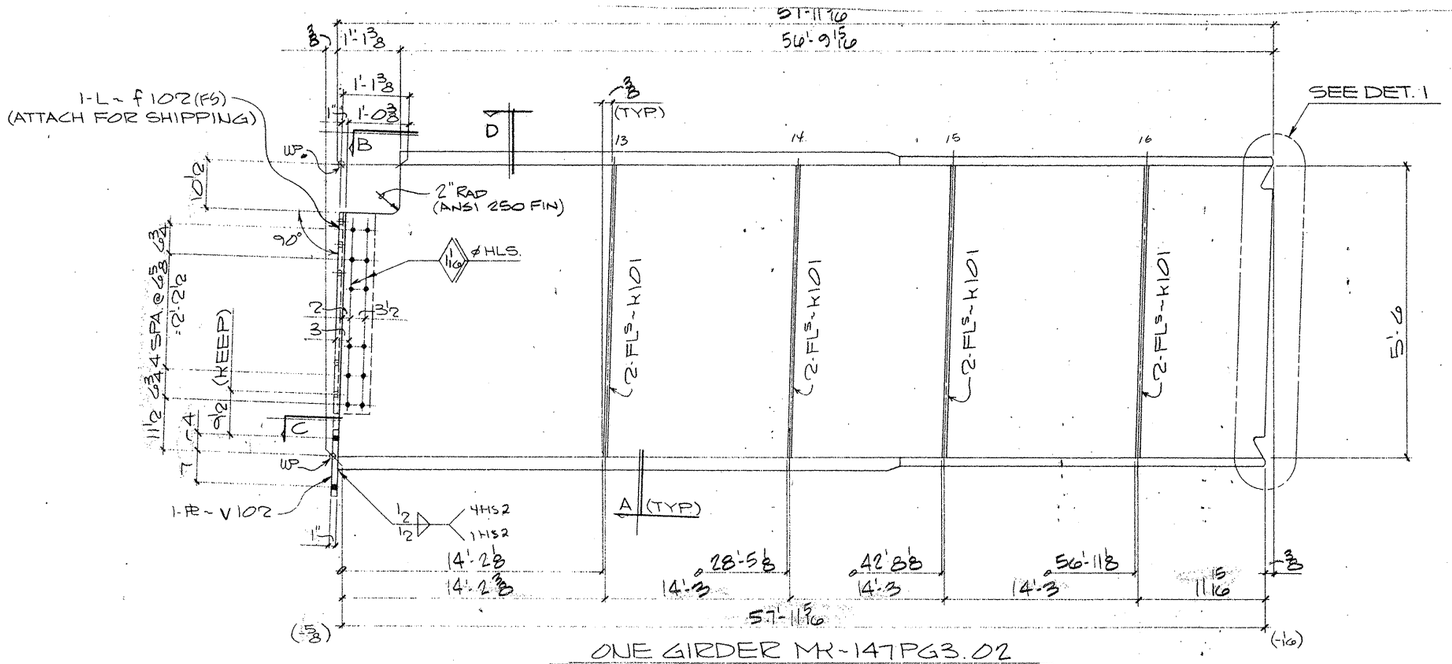

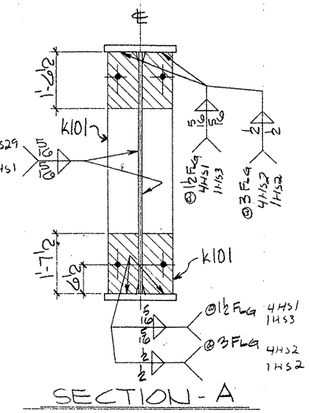

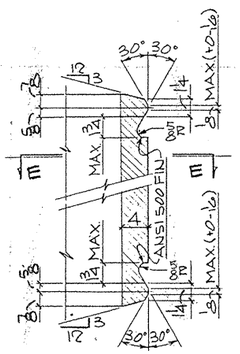

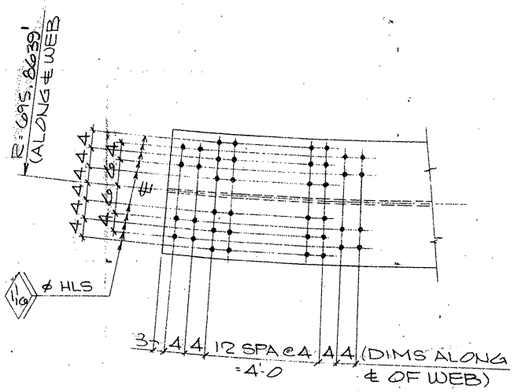

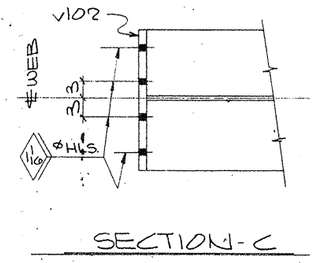

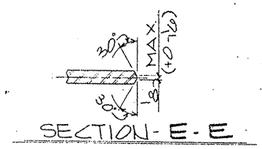

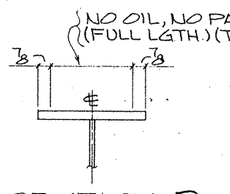

SHOP NOTES:

1) FOR GENERAL NOTES SEE SHT. GN1
2) FOR GIRDER SUB-ASSEMBLY SEE SHT. 111
3) FOR STIFF. DETAILS SEE SHT. 101
4) FOR BLOCKING DIAGRAM SEE SHT. 141
5) FOR HEAT CURVE DIAGRAM SEE SHT. 138
6) FOR SPLICE ATTACHMENTS SEE SHT. 102
7) ▨ INDICATES OIL, NO PAINT (NS/FS & EDGES)

BILL OF MATERIAL

	Qnty.	Material	Length	Mark Temp	Mark Ship	Wt	Cut From	Remarks
1								
2	1	GIRDER			147PG3.02			
3	1	GIRDER SUB-ASSY		B111				
4	8	DIAF STIFF		K101				
5	1	ANGLE		F102				
6	1	CONN PL		V102				
7								
8								
9								
10								
11								
12								
13								
14								
15								
16								
17								
18								
19								
20								
21								
22								
23								
24								
25								
26								
27								
28								
29								
30								
31								
32								
33								
34								
35								
36								
37								
38								
39								
40								
41								
42								
43								
44								
45								
46								
47								
48								
49								
50								
51								
52								
53								
54								
55								
56								
57								
58								
59								
60								

FOR APPROVAL
AUG 24 '92
NOT FOR CONSTRUCTION

REVISION	DATE	DESCRIPTION OF REVISION
NO. 1		
NO. 2		
NO. 3		
NO. 4		
NO. 5		

PRINTING Reqd	For	Date

Bolts Holes 15/16 ⌀ Unless Noted
Shop Paint SEE SHT. GN1
Fab Spec AS NTD Inspection
Architect
Erection By Field Connections

HIRSCHFELD STEEL CO. INC.
112 WEST 29TH SAN ANGELO TEXAS 76903
PHONE (915) 653-3211

DESCRIPTION	610'-0 PLATE GIRDER UNIT
STRUCTURE	US 83/281 INTERCHANGE RAMP "F"
LOCATION	HIDALGO COUNTY
CUSTOMER	GILBERT TEXAS CONSTRUCTION
SHIP TO	
Customer's Order No.	
Dwg. By JBE	Date 7/92
Checked By CRT	Date 7/92

SHEET 147 OF
JOB NO. 92-106

G01106

FED. ROAD DIV. NO.	STATE	FEDERAL AID PROJECT NO			
6	TX.	NH (50) M			
STATE DIST. NO.	COUNTY	CONTROL NO.	SECTION NO.	JOB NO.	HIGHWAY NO.
21	HIDALGO	39	17	97	83/281

CE 92-11 (LINE #2) ✓

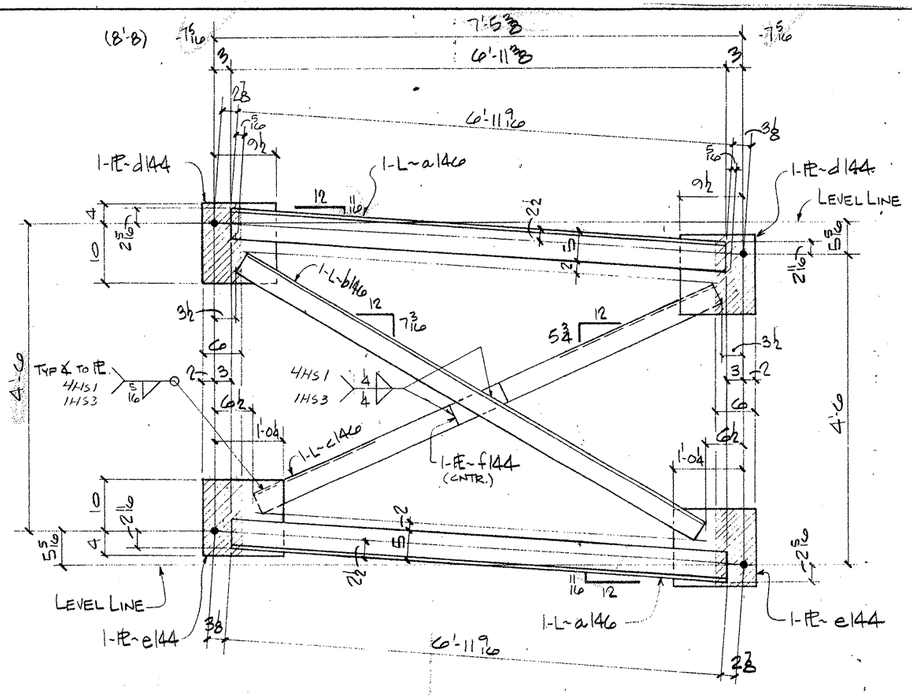

3 - DIAFRAMS~ 1460D1

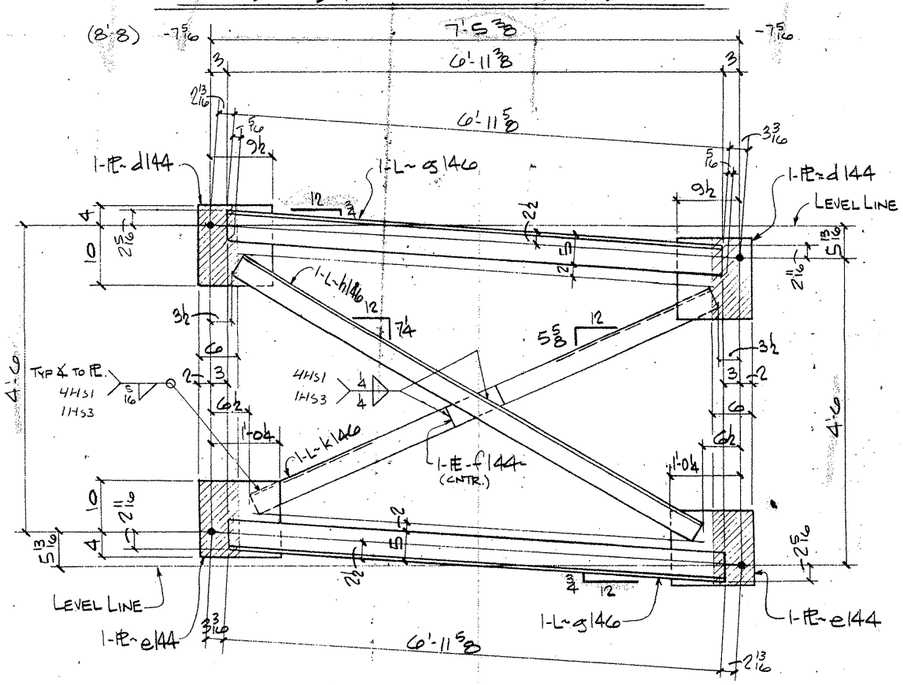

3 - DIAFRAMS~ 1460D2

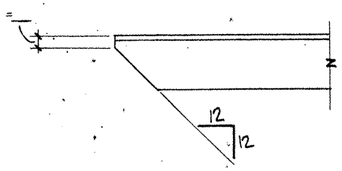

TYP. CLIP ON ALL OUTSTANDING ANGLE LEGS

NOTES:

1. FOR GENERAL NOTES SEE SHT. GN1
2. ▨ INDICATES OIL, NO PAINT (N.S./F.S. & EDGES)

BILL OF MATERIAL

	Qnty.	Material	Length	Mark Temp	Mark Ship.	Wt.	Cut From	Remarks
3	3	DIAFRAM			1460D1			
4	6	L 5x3½x½	6'-11 3/8	a146			112-12	
5	3	L 5x3½x½	7'-6 9/16	b146			112-15	
6	3	L 5x3½x½	7'-2 1/4	c146			112-15	
7	6	PL ½x11½	1'-2	d144			112-16	
8	6	PL ½x 14	1'-2 1/4	e144			112-17	
9	3	FL ½x3½	0'-9	f144			112-18	
16	3	DIAFRAMS			1460D2			
17	6	L 5x3½x½	6'-11 5/8	g146			112-12	
18	3	L 5x3½x½	7'-6 9/16	h146			112-15	
19	3	L 5x3½x½	7'-2 9/16	k146			112-15	
20	6	PL ½x11½	1'-2	d144			112-16	
21	6	PL ½x14	1'-2 1/4	e144			112-17	
22	3	FL ½x3½	0'-9	f144			112-18	

TEXAS HIGHWAY DEPARTMENT — APPROVED — DIVISION OF BRIDGES AND STRUCTURES — OCT 21 1992 — APPROVAL OF THE DIRECTOR OF THE BUREAU OF PUBLIC ROADS OF THE UNITED STATES NOT REQUIRED

FOR APPROVAL AUG 24 92 NOT FOR CONSTRUCTION

REVISION	DATE	DESCRIPTION OF REVISION
NO. 1		
NO. 2		
NO. 3		
NO. 4		
NO. 5		

PRINTING Req'd	For	Date

Bolts Holes, STD Unless Noted
Shop Paint SEE SHT GN1
Fab. Spec A36 Inspection
Architect
Erection By Field Connections

HIRSCHFELD STEEL CO. INC.
112 WEST 29TH SAN ANGELO, TEXAS 76903
PHONE (915) 653-3211

DESCRIPTION	PLATE GIRDER UNIT
STRUCTURE	US 83/281 INTERCHANGE RAMP E
LOCATION	HIDALGO COUNTY
CUSTOMER	GILBERT TEXAS CONSTRUCTION
SHIP TO	
Customer's Order No.	
Dwg. By JBL	Date 6/92
Checked By DLT	Date 6/92

SHEET 146 OF
JOB NO. 92-1006

FED. ROAD DIV. NO. 6 | STATE TX. | FEDERAL AID PROJECT NO. NH (50) M

STATE DIST. NO.	COUNTY	CONTROL NO.	SECTION NO.	JOB NO.	HIGHWAY NO.
21	HIDALGO	39	17	97	83/281

F0106

CE 92-11

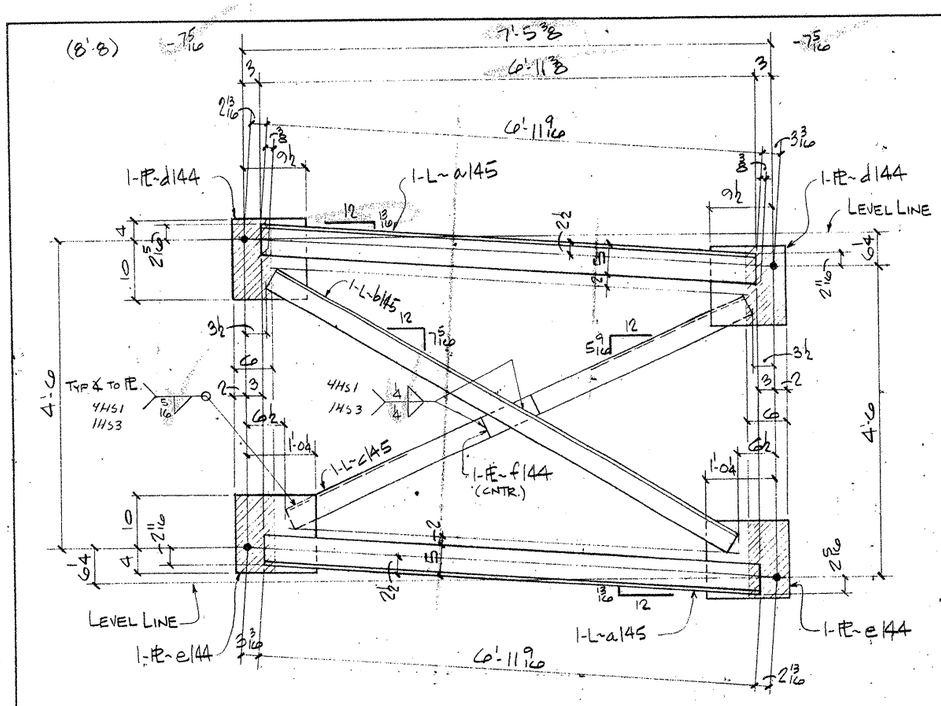

108 - DIAFRAMS~ 145D1

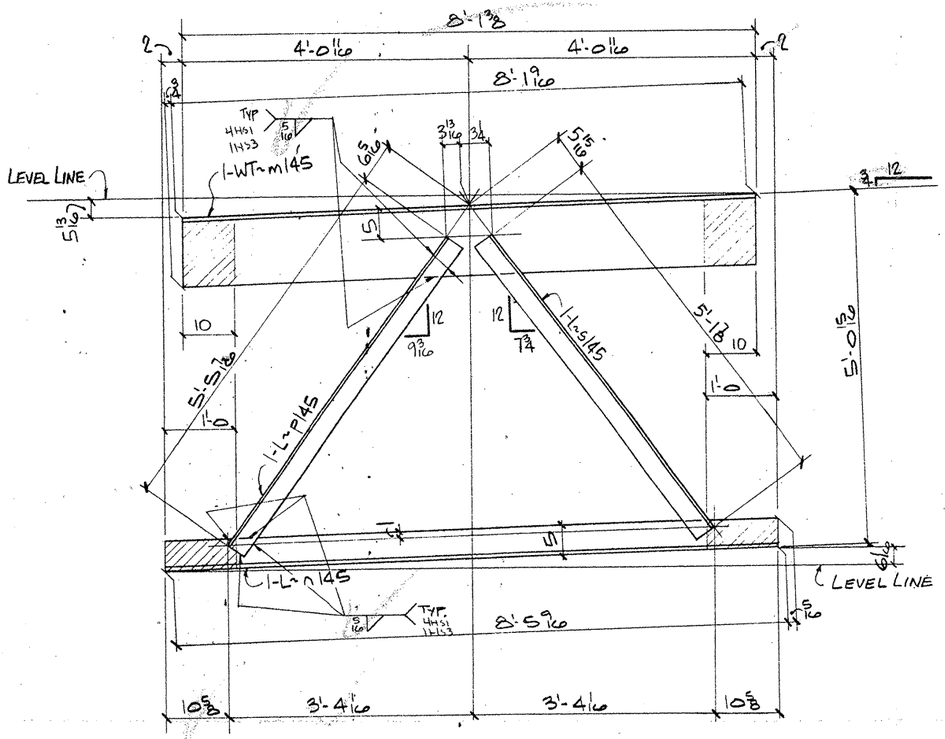

3- END DIAFRAMS~ 145D3

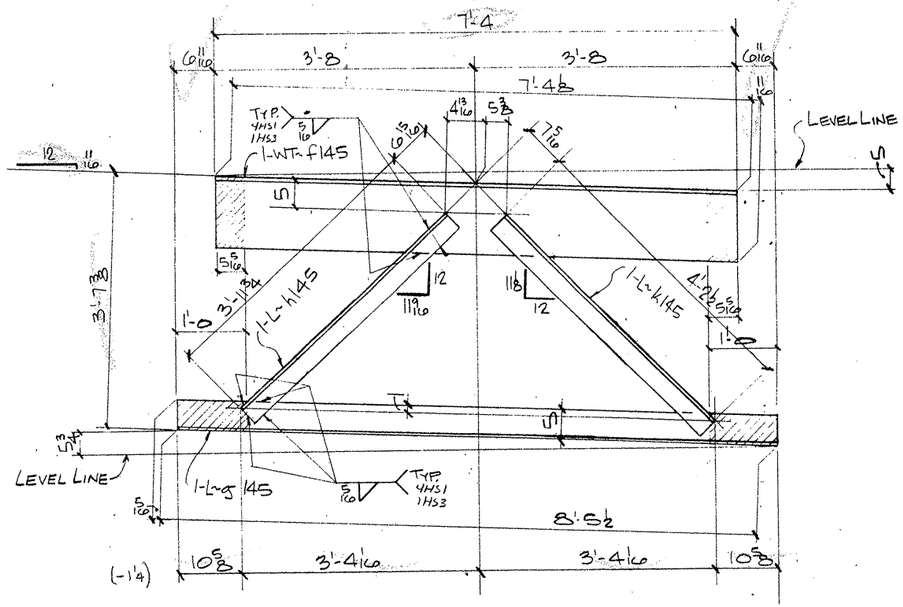

3- END DIAFRAMS ~ 145D2

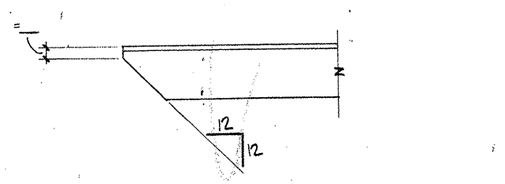

TYP CLIP ON ALL OUTSTANDING ANGLE LEGS

NOTES:

1. FOR GENERAL NOTES SEE SHT. GN1
2. ▨ INDICATES OIL, NO PAINT (N.S./F.S. & EDGES)

BILL OF MATERIAL

	Qnty	Material	Length	Mark Temp.	Mark Ship.	Wt.	Cut From	Remarks
1								
2								
3	108	DIAFRAM			14501			
4	216	L5x3½x½	6'-11 7/8	a145			112-12	
5	108	L5x3½x½	7'-6 13/16	b145			112-15	
6	108	L5x3½x½	7'-2	c145			112-15	
7	216	PL½x11½	1'-2	d144			112-16	
8	216	PL½x14	1'-2 4	e144			112-17	
9	108	FL½x3½	0'-9	f144			112-18	
10								
11								
12								
13								
14								
15	3	DIAFRAMS			14502			
16	3	WT.12x42	7'-4 3/16	f145			112-2	
17	3	L5x3½x3/8	8'-5 3/16	g145			112-4	
18	3	L3½x3½x3/8	3'-11 3/4	h145			112-5	
19	3	L3½x3½x3/8	4'-2½	k145			112-5	
20								
21								
22								
23								
24								
25								
26								
27								
28	3	DIAFRAMS			14503			
29	3	WT 12x42	8'-2 5/16	m145			112-3	
30	3	L5x3½x3/8	8'-5 3/8	n145			112-4	
31	3	L3½x3½x3/8	5'-5 7/16	p145			112-6	
32	3	L3½x3½x3/8	5'-1 7/8	s145			112-6	
33								
34								
35								
36								
37								
38								
39								
40		FIELD BOLT LIST (6% ADDED) A325 TY 1						
41	110	HS BOLT	1Φ	0'-3			105-7	
42	61	HS BOLT	1Φ	0'-3 3/4			105-8	
43	32	HS BOLT	1Φ	0'-4 4			105-9	
44	19	HS BOLT	1Φ	0'-4 3/4			105-10	
45	384	HS BOLT	1Φ	0'-8½			105-11	
46	606	HS WASH	1Φ				105-12	
47								
48	466	HS BOLT	¾Φ	0'-2½			105-2	
49	12	HS BOLT	¾Φ	0'-3			105-3	
50	4	HS BOLT	¾Φ	0'-3 4			105-4	
51	964	HS BOLT	¾Φ				105-5	
52								
53								
54								
55								
56								
57								
58								
59								
60								

TEXAS DEPARTMENT OF TRANSPORTATION — APPROVED — DIVISION OF BRIDGE AND STRUCTURES — OCT 21 1992 — APPROVAL DOES NOT RELIEVE THE CONTRACTOR OF RESPONSIBILITY FOR CORRECTNESS OF DETAILS

FOR APPROVAL AUG 28 '92

NOT FOR CONSTRUCTION

REVISION	DATE	DESCRIPTION OF REVISION
NO 1		
NO 2		
NO 3		
NO 4		
NO 5		

PRINTING

Req'd	For	Date

Bolts Holes: STD Unless Noted
Shop Paint SEE SHT GN1
Fab Spec A36
Inspection
Architect
Erection By
Field Connections

HIRSCHFELD STEEL CO. INC.
112 WEST 29TH SAN ANGELO TEXAS 76903
PHONE (915) 653-3211

DESCRIPTION 610'-0 PLATE GIRDER UNIT
STRUCTURE US 83/281 INTERCHANGE RAMP E
LOCATION HIDALGO COUNTY
CUSTOMER GILBERT TEXAS CONSTRUCTION
SHIP TO
Customer's Order No.
Dwg By JBL Date 6/92
Checked By DLT Date 6/92

SHEET 145 OF
JOB NO 92-106

CE 92-11

FOLDS

FED ROAD DIV NO	STATE	FEDERAL AID PROJECT NO				
6	TX.	NH (50) M				
STATE DIST. NO	COUNTY	CONTROL NO	SECTION NO	JOB NO	HIGHWAY NO	
21	HIDALGO	39	17	97	83/281	

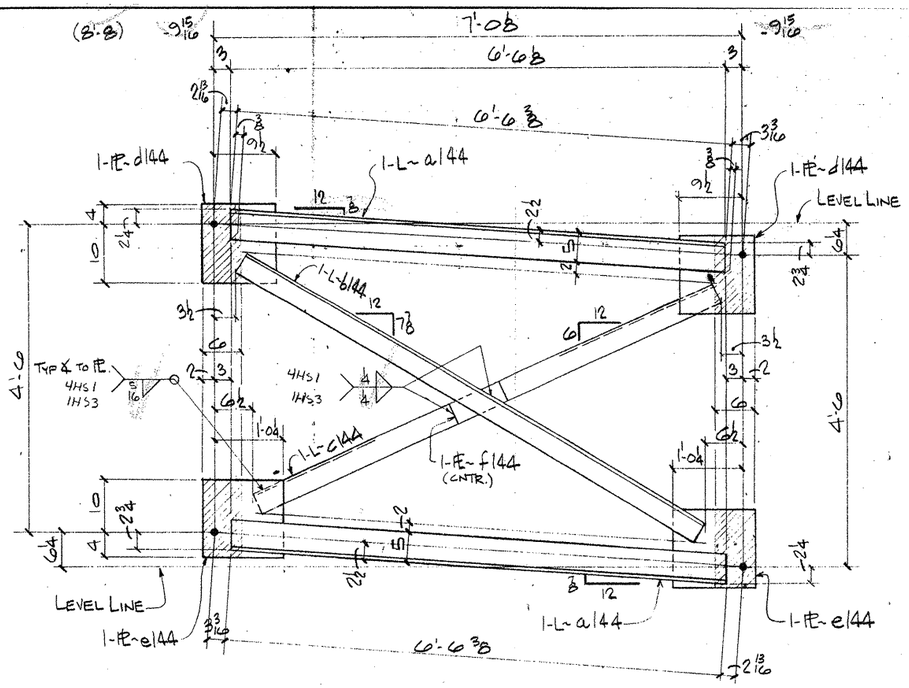

ONE - DIAFRAMS~ 144D1

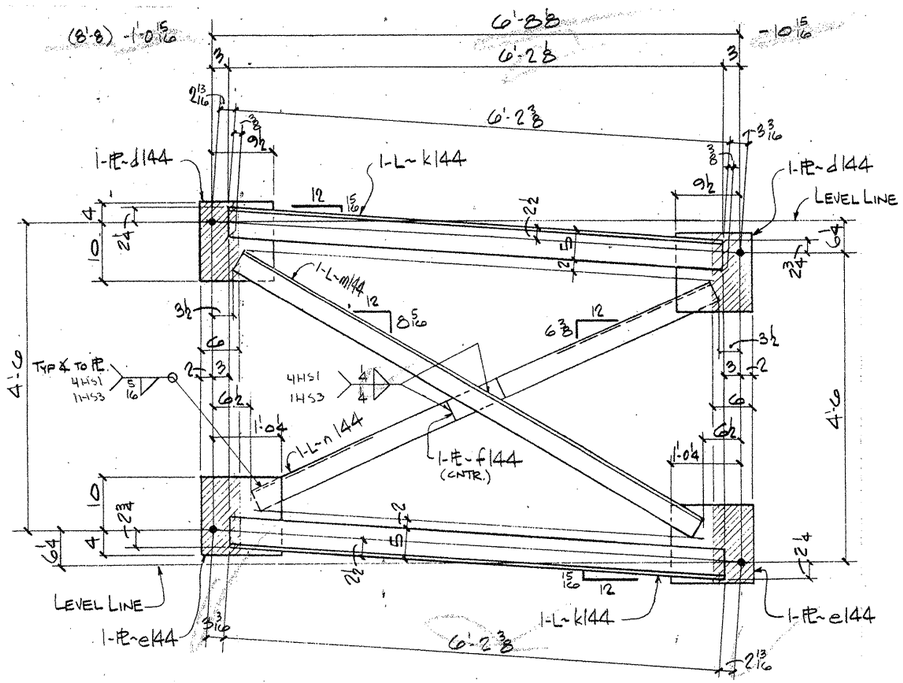

ONE - DIAFRAMS~ 144D3

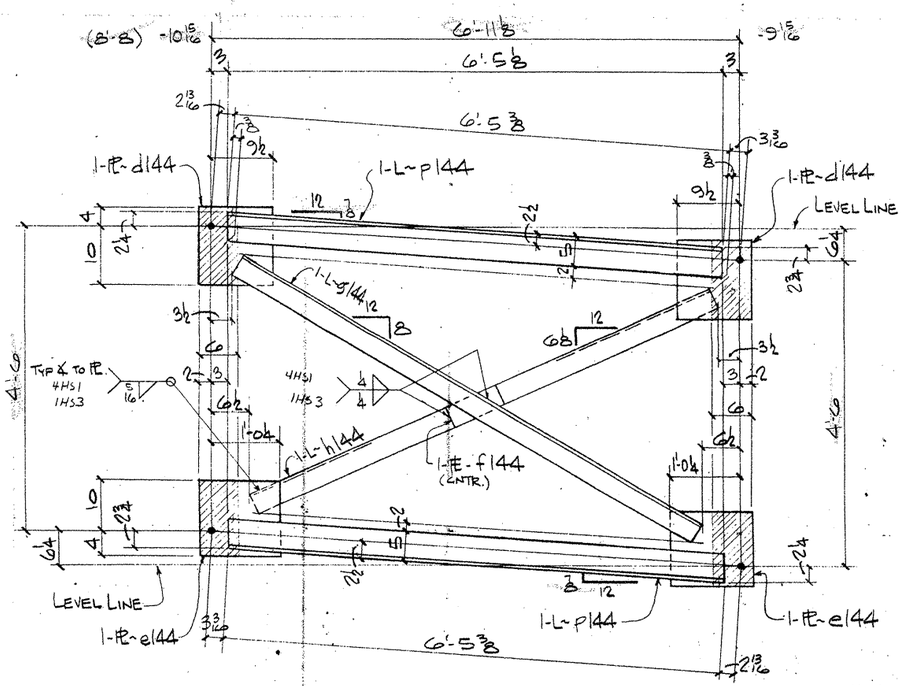

ONE - DIAFRAMS~ 144D2

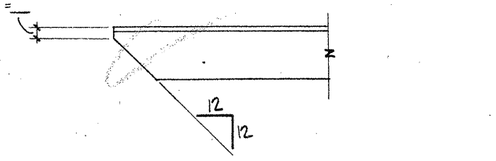

TYP. CLIP ON ALL OUTSTANDING ANGLE LEGS

NOTES:

1. FOR GENERAL NOTES SEE SHT. GN1
2. ▨ INDICATES OIL, NO PAINT (N.S./F.S. & EDGES)

BILL OF MATERIAL

	Qnty	Material	Length	Mark Temp	Mark Ship	Wt	Cut From	Remarks
3	ONE	DIAFRAM			144D1			
4	2	L 5x3½x½	6'-6 3/8	a144			112-11	
5	ONE	L 5x3½x½	7'-2 5/16	b144			112-13	
6	ONE	L 5x3½x½	6'-9 9/16	c144			112-13	
7	2	PL ½x11½	1'-2	d144			112-16	
8	2	PL ½x14	1'-2 1/4	e144			112-17	
9	ONE	FL ½x3½	0'-9	f144			112-18	
15	ONE	DIAFRAM			144D2			
16	2	L 5x3½x½	6'-5 3/4	p144			112-11	
17	ONE	L 5x3½x½	7'-1 7/16	g144			112-13	
18	ONE	L 5x3½x½	6'-8 1/4	h144			112-13	
19	2	PL ½x11½	1'-2	d144			112-16	
20	2	PL ½x14	1'-2 1/4	e144			112-17	
21	ONE	FL ½x3½	0'-9	f144			112-18	
28	ONE	DIAFRAM			144D3			
29	2	L 5x3½x½	6'-2 3/4	k144			112-10	
30	ONE	L 5x3½x½	6'-10 15/16	m144			112-14	
31	ONE	L 5x3½x½	6'-5 9/16	n144			112-14	
32	2	PL ½x11½	1'-2	d144			112-16	
33	2	PL ½x14	1'-2 1/4	e144			112-17	
34	ONE	FL ½x3½	0'-9	f144			112-18	

TRANSPORTATION PLANNING DIVISION OF BRIDGES AND STRUCTURES APPROVED OCT 21 1992

APPROVAL OF THESE PLANS DOES NOT RELIEVE THE CONTRACTOR OF THE RESPONSIBILITY FOR THE CORRECTNESS OF DETAILS

FOR APPROVAL AUG 24 '92

NOT FOR CONSTRUCTION

REVISION	DATE	DESCRIPTION OF REVISION
NO. 1		
NO. 2		
NO. 3		
NO. 4		
NO. 5		

PRINTING Reqd For Date — AN SHT

Bolts Holes: STD LGE Unless Noted
Shop Paint SEE SHT GN1
Fab. Spec A36 Inspection
Architect
Erection By Field Connections

HIRSCHFELD STEEL CO. INC.
112 WEST 29TH SAN ANGELO TEXAS 76903
PHONE (915) 653-3211

DESCRIPTION 60'-0 PLATE GIRDER UNIT
STRUCTURE US 83/281 INTERCHANGE RAMP #1
LOCATION HIDALGO COUNTY
CUSTOMER GILBERT TEXAS CONSTRUCTION
SHIP TO
Customer's Order No.
Dwg By JRL Date 6/92
Checked By DLT Date 6/92
SHEET 144 OF
JOB NO. 92-106

FED ROAD DIV NO 6 | STATE TX. | FEDERAL AID PROJECT NO NH (50) M

STATE DIST NO	COUNTY	CONTROL NO	SECTION NO	JOB NO	HIGHWAY NO
21	HIDALGO	39	17	97	83/281

F0106

CE 92-11

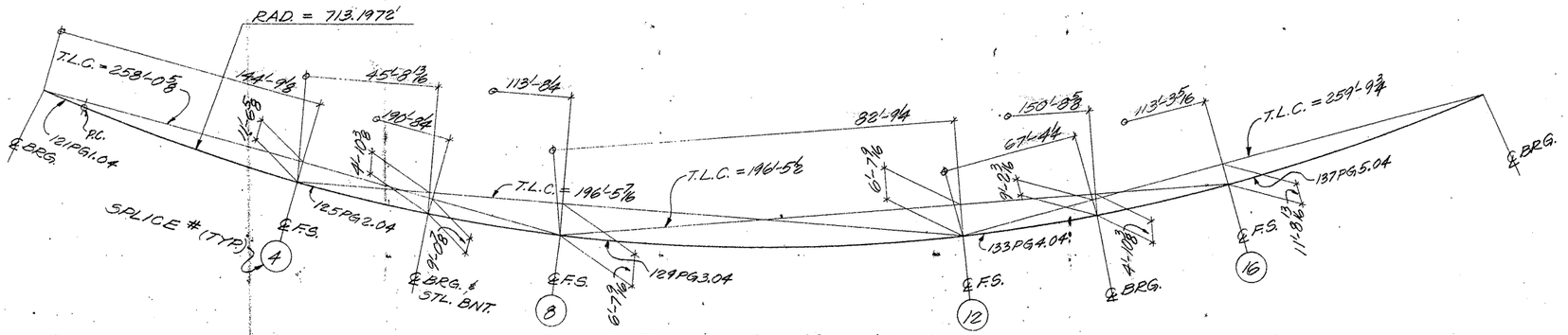

HORIZONTAL BLOCKING DIAGRAM
(SPANS 12, 13 & 14) (UNIT 5) (LINE 4)

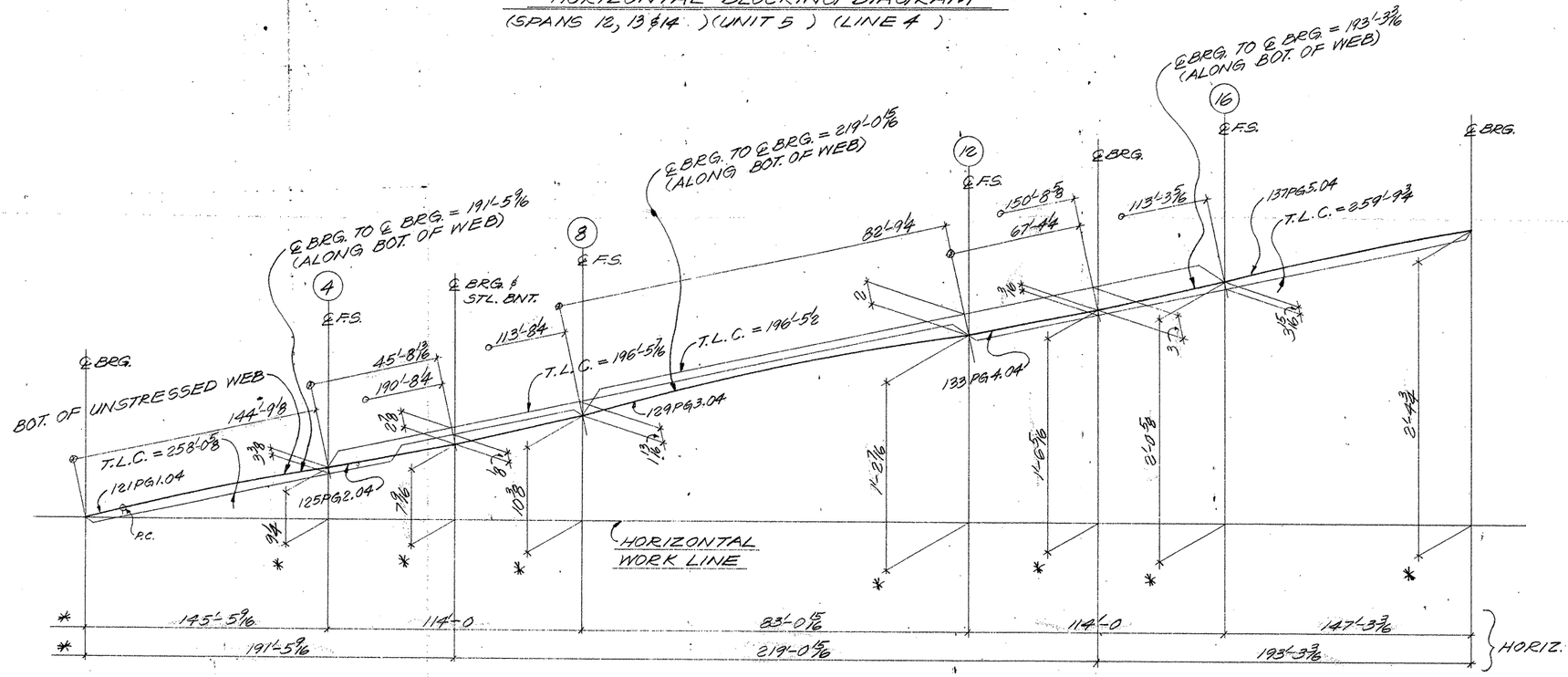

VERTICAL BLOCKING DIAGRAM
(SPANS 12, 13 & 14) (UNIT 5) (LINE 4)

TEXAS DEPARTMENT OF TRANSPORTATION
APPROVED
DIVISION OF BRIDGES AND STRUCTURES
OCT 21 1992
APPROVAL OF THIS DRAWING DOES NOT RELIEVE THE CONTRACTOR OF THE RESPONSIBILITY FOR THE CORRECTNESS OF DETAILS.

FOR APPROVAL
AUG 24 '92
NOT FOR CONSTRUCTION

NOTES:
1. T.L.C. = TRUE LENGTH CHORD.
2. DIMENSIONS ARE GIVEN ALONG OR NORMAL TO THE TRUE LENGTH CHORD UNL. NTD.
3. DIMENSIONS NOTED "*" ARE GIVEN ALONG OR NORMAL TO THE HORIZONTAL WORK LINE.
4. FOR GENERAL NOTES, SEE SHEET GN1.

FED ROAD DIV NO	STATE	FEDERAL AID PROJECT NO			
6	TX.	NH (50) M			
STATE DIST NO	COUNTY	CONTROL NO	SECTION NO	JOB NO	HIGHWAY NO
21	HIDALGO	39	17	97	83/281

HOLES ____ U.N.	FOR APVL ____
BOLTS ____ U.N.	RETURNED ____
WELDS ____ U.N.	TO SHOP ____
PAINT ____	

REVISIONS		
NO.	DATE	REMARKS
1		
2		
3		
4		

HIRSCHFELD STEEL CO. INC.
112 WEST 29TH SAN ANGELO. TEXAS 76903
PHONE (915) 653-3211

CUSTOMER GILBERT TEXAS CONSTRUCTION
ARCHITECT
PROJECT DS 83/281 INTERCHANGE RAMP #1
LOCATION HIDALGO COUNTY

DRAWN PCC DATE 7-7-92 | JOB NO 92-106 | SHEET NO 143 of ____
CHECKED [illegible] DATE 7-10-92

CE 92-11

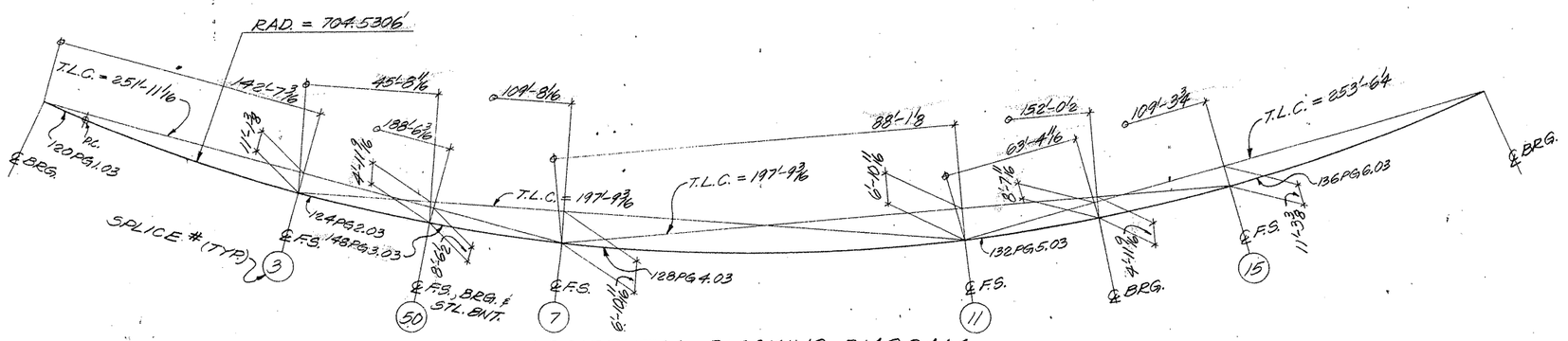

HORIZONTAL BLOCKING DIAGRAM

(SPANS 12, 13 & 14) (UNIT 5) (LINE 3)

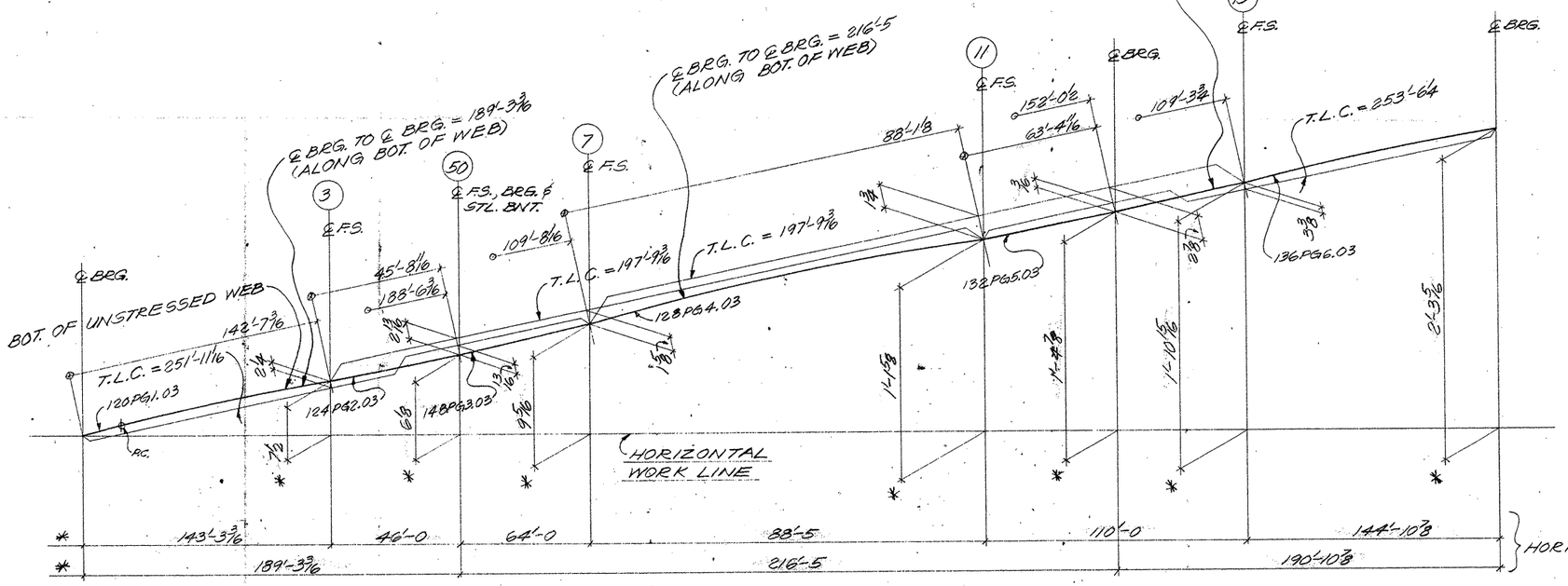

VERTICAL BLOCKING DIAGRAM

(SPANS 12, 13 & 14) (UNIT 5) (LINE 3)

TEXAS DEPARTMENT OF TRANSPORTATION
APPROVED
DIVISION OF BRIDGE AND STRUCTURES
OCT 23 1992
APPROVAL OF THIS DRAWING DOES NOT RELIEVE THE FABRICATOR OF THE RESPONSIBILITY FOR THE CORRECTNESS OF DETAIL

FOR APPROVAL
AUG 24 '92
NOT FOR CONSTRUCTION

NOTES:
1. T.L.C. = TRUE LENGTH CHORD.
2. DIMENSIONS ARE GIVEN ALONG OR NORMAL TO THE TRUE LENGTH CHORD UNL. NTD.
3. DIMENSIONS NOTED "*" ARE GIVEN ALONG OR NORMAL TO THE HORIZONTAL WORK LINE.
4. FOR GENERAL NOTES, SEE SHEET GN1.
5. FOR MATCH MARKING @ FIELD SPLICE (50), SEE SHT. 141.

FED ROAD DIV NO	STATE	FEDERAL AID PROJECT NO				
6	TX.	NH (50) M				
STATE DIST NO	COUNTY	CONTROL NO	SECTION NO	JOB NO	HIGHWAY NO	
21	HIDALGO	39	17	97	83/281	

HOLES ____ U.N.	FOR AP'VL ____		
BOLTS ____ U.N.	RETURNED ____		
WELDS ____ U.N.	TO SHOP ____		
PAINT ____			
REVISIONS			
NO.	DATE	REMARKS	
1			
2			
3			
4			

HIRSCHFELD STEEL CO. INC.
112 WEST 29TH SAN ANGELO, TEXAS 76903
PHONE (915) 653-3211

CUSTOMER GILBERT TEXAS CONSTRUCTION
ARCHITECT
PROJECT US 83/281 INTERCHANGE RAMP #1
LOCATION HIDALGO COUNTY

DRAWN PCC DATE 7-7-92
CHECKED DATE 7-10-92
JOB NO. 92-106
SHEET NO. 142 of ____

CE 92-11

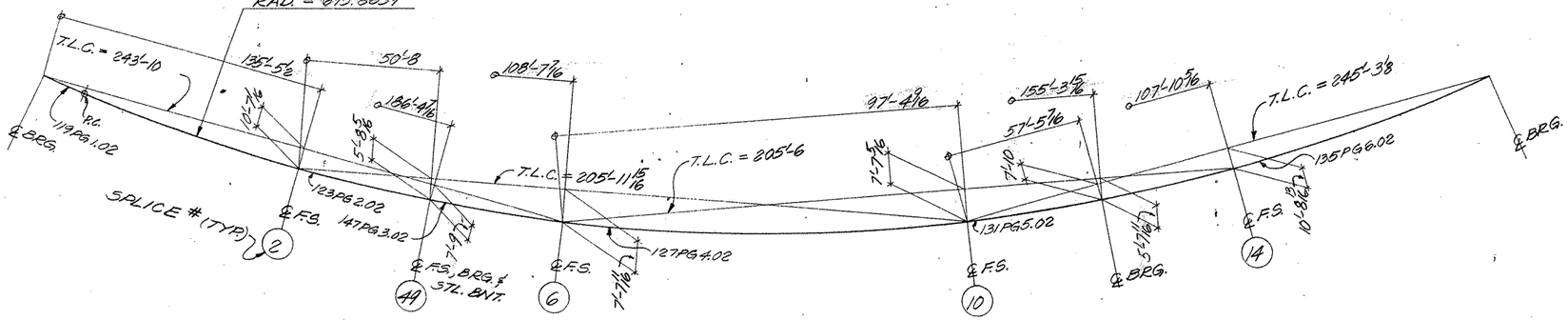

HORIZONTAL BLOCKING DIAGRAM

(SPANS 12, 13 & 14.) (UNIT 5) (LINE 2)

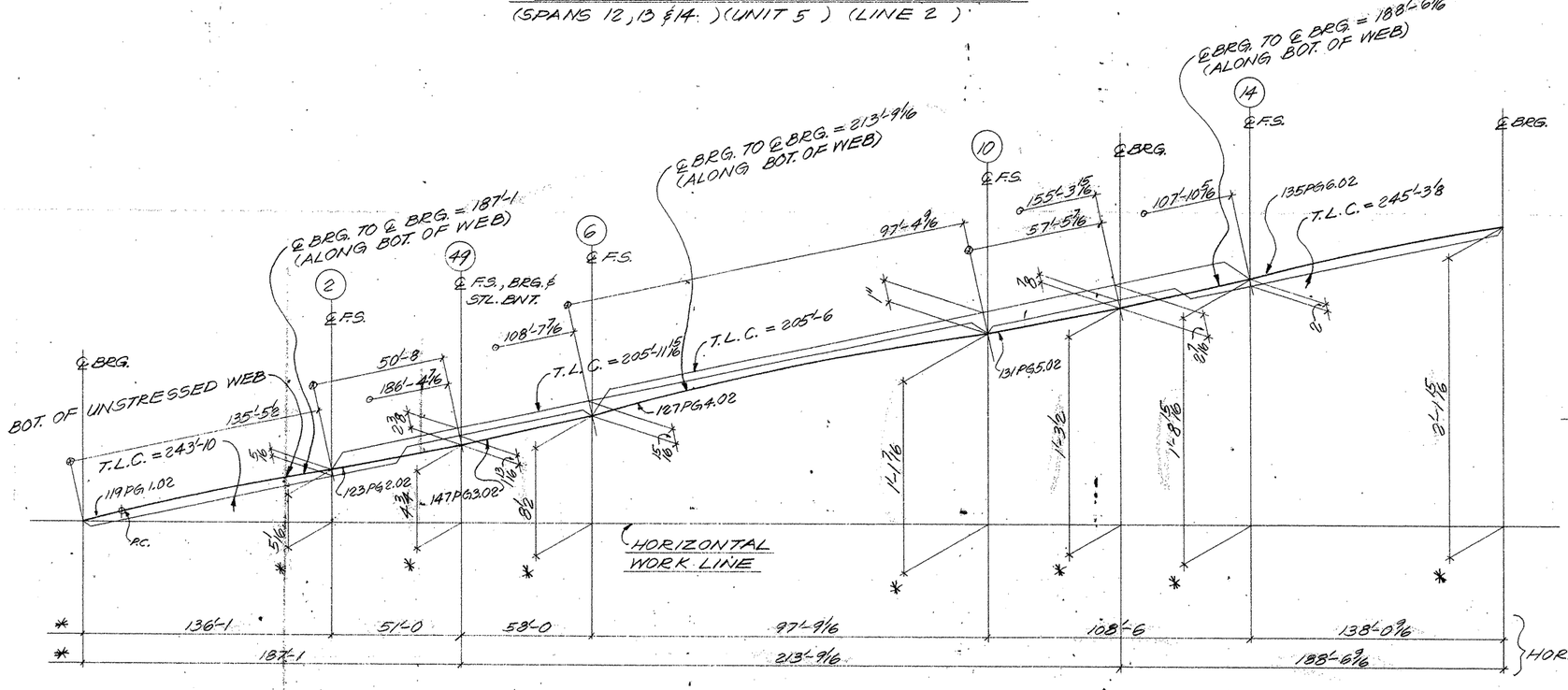

VERTICAL BLOCKING DIAGRAM

(SPANS 12, 13 & 14.) (UNIT 5) (LINE 2).

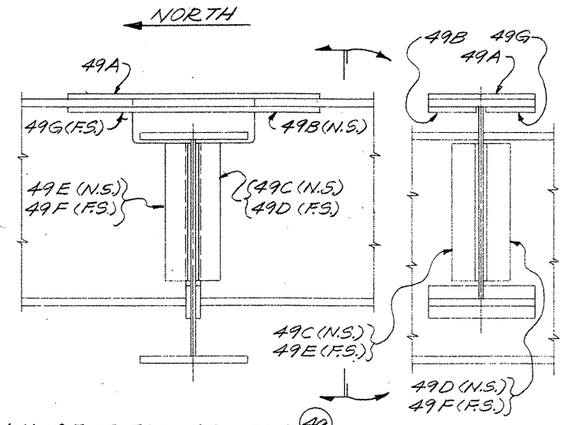

DETAIL OF FIELD SPLICE (49)

FIELD SPLICES MARKED THUS (49) ARE MATCHMARKS. ALL GIRDERS TO BE ERECTED WITH MATCHING MARKS AS SHOWN. FOR FIELD SPLICES

FOR APPROVAL

AUG 24 '92

NOT FOR CONSTRUCTION

(49) TEXAS DEPARTMENT OF TRANSPORTATION
APPROVED
DIVISION OF BRIDGES AND STRUCTURES
OCT 21 1992
APPROVAL OF THE DRAWING DOES NOT RELIEVE THE CONTRACTOR OF THE RESPONSIBILITY FOR THE CORRECTNESS OF DETAIL

NOTES:
1. T.L.C. = TRUE LENGTH CHORD.
2. DIMENSIONS ARE GIVEN ALONG OR NORMAL TO THE TRUE LENGTH CHORD. UNL. NTD.
3. DIMENSIONS NOTED "*" ARE GIVEN ALONG OR NORMAL TO THE HORIZONTAL WORK LINE.
4. FOR GENERAL NOTES, SEE SHEET GN1.

FED. ROAD DIV. NO	STATE	FEDERAL AID PROJECT NO.			
6	TX.	NH (50) M			
STATE DIST. NO	COUNTY	CONTROL NO	SECTION NO	JOB NO	HIGHWAY NO
21	HIDALGO	39	17	97	83/281

HOLES ____ U.N.	FOR AP'VL ____
BOLTS ____ U.N.	RETURNED ____
WELDS ____ U.N.	TO SHOP ____
PAINT ____	

REVISIONS		
NO.	DATE	REMARKS
1		
2		
3		
4		

APR 6 '94

HIRSCHFELD STEEL CO. INC.
112 WEST 29TH SAN ANGELO, TEXAS 76903
PHONE (915) 653-3211

CUSTOMER GILBERT TEXAS CONSTRUCTION
ARCHITECT
PROJECT US 83/281 INTERCHANGE RAMP #1
LOCATION HIDALGO COUNTY

DRAWN PCC DATE 7-7-92
CHECKED [illegible] DATE 7-9-92
JOB NO 92-106
SHEET NO 141 of ____

CE 92-11

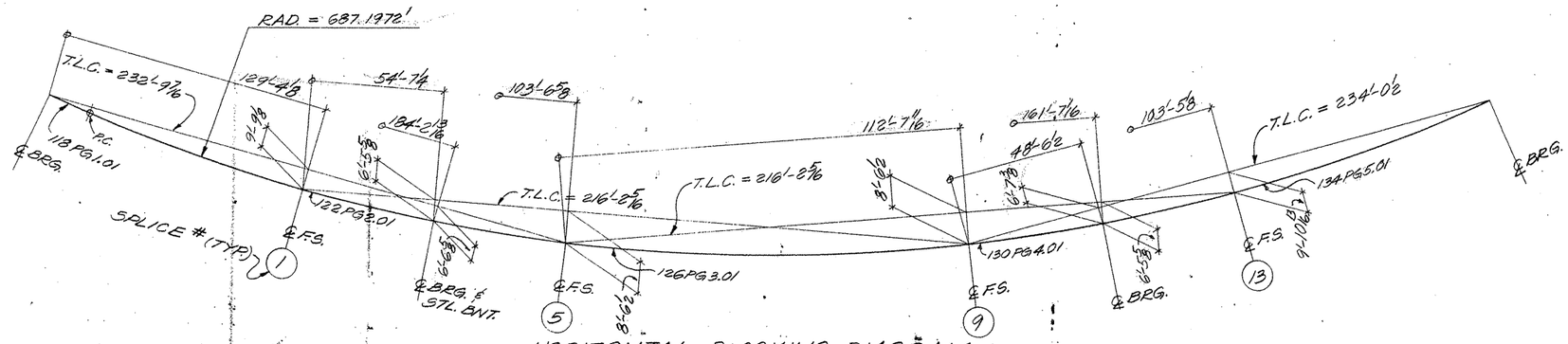

HORIZONTAL BLOCKING DIAGRAM
(SPANS 12, 13 & 14) (UNIT 5) (LINE 1)

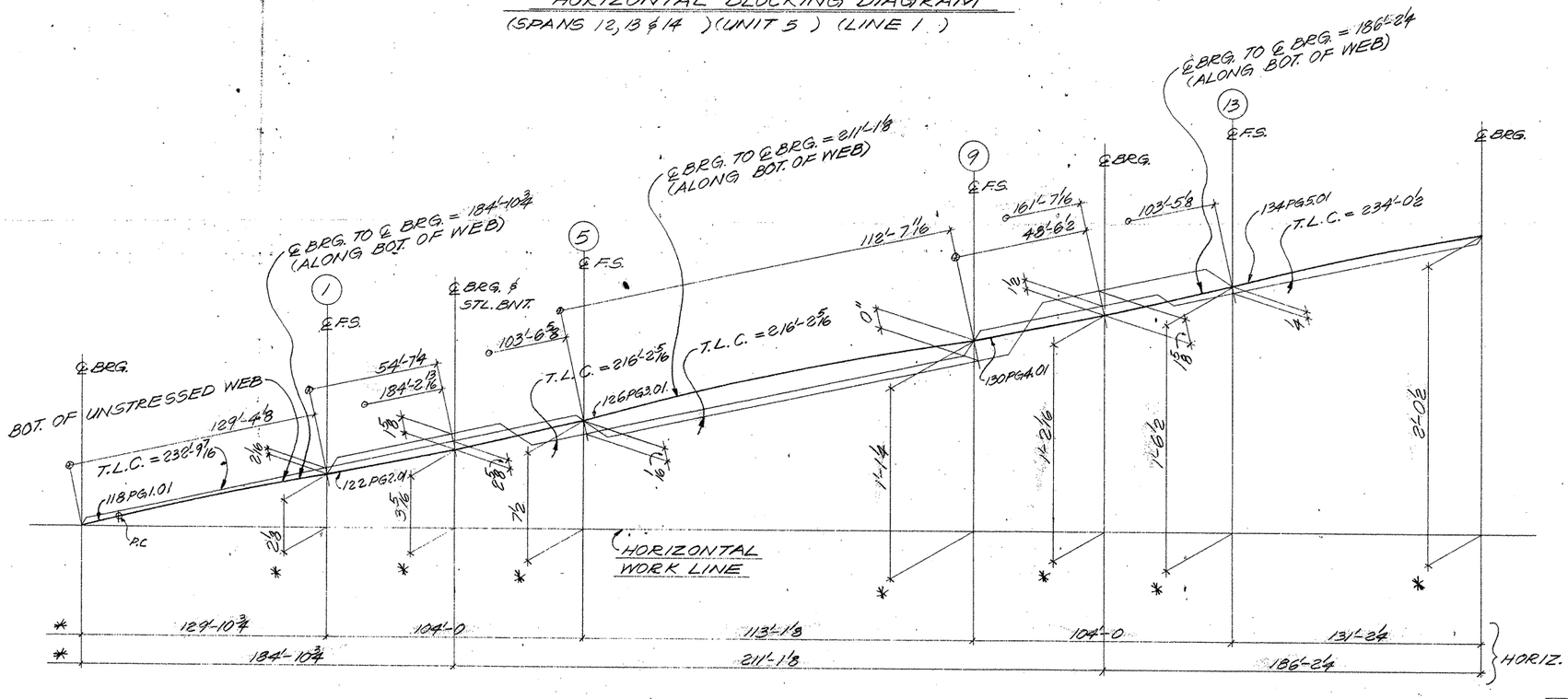

VERTICAL BLOCKING DIAGRAM
(SPANS 12, 13 & 14) (UNIT 5) (LINE 1)

TEXAS DEPARTMENT OF TRANSPORTATION
AUSTIN
DIVISION OF BRIDGE AND STRUCTURES
OCT 21 1992
APPROVAL OF THIS DRAWING DOES NOT RELIEVE THE CONTRACTOR OF THE RESPONSIBILITY FOR THE CORRECTNESS OF DETAILS

FOR APPROVAL
AUG 24 '92
NOT FOR CONSTRUCTION

NOTES:
1. T.L.C. = TRUE LENGTH CHORD.
2. DIMENSIONS ARE GIVEN ALONG OR NORMAL TO THE TRUE LENGTH CHORD UNL. NTD.
3. DIMENSIONS NOTED "*" ARE GIVEN ALONG OR NORMAL TO THE HORIZONTAL WORK LINE.
4. FOR GENERAL NOTES, SEE SHEET GN1.

FED ROAD DIV NO	STATE	FEDERAL AID PROJECT NO			
6	TX.	NH (50) M			
STATE DIST NO	COUNTY	CONTROL NO	SECTION NO	JOB NO	HIGHWAY NO
21	HIDALGO	39	17	97	83/281

AM 8/24

HOLES ____ U.N.	FOR AP'VL.
BOLTS ____ U.N.	RETURNED
WELDS ____ U.N.	TO SHOP
PAINT	

REVISIONS		
NO.	DATE	REMARKS
1		
2		
3		
4		

HIRSCHFELD STEEL CO. INC.
112 WEST 29TH SAN ANGELO, TEXAS 76903
PHONE (915) 653-3211

CUSTOMER GILBERT TEXAS CONSTRUCTION
ARCHITECT
PROJECT US 83/281 INTERCHANGE RAMP #1
LOCATION HIDALGO COUNTY

DRAWN PCC DATE 7-7-92 | JOB NO 92-106 | SHEET NO 140 of ____
CHECKED AJG DATE 7-9-92

CE 92-11

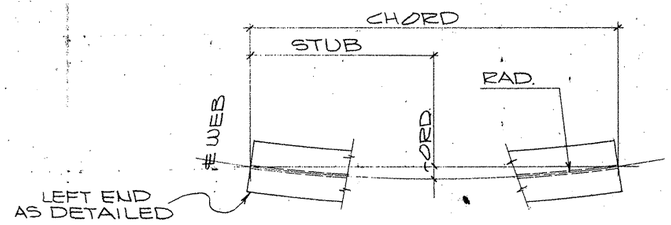

HEAT CURVE DIAGRAM
(ALONG TOP FLG.)

THIS SHEET NOT
DETAIL CHECKED

	STUB	5'-0	10'-0	15'-0	20'-0	25'-0	30'-0	35'-0	40'-0	45'-0	50'-0	55'-0	60'-0	65'-0	70'-0	75'-0	80'-0	85'-0	90'-0	95'-0	100'-0	105'-0	110'-0	CHORD	RADIUS
CORD	MK-130PG4.01	4 9/16	8 7/16	11 11/16	1'-2 11/16	1'-5 1/4	1'-7 7/8	1'-9 1/16	1'-10 3/8	1'-11 7/16	1'-11 15/16	1'-11 1/2	1'-11	1'-10 3/8	1'-8 3/4	1'-6 15/16	1'-4 1/16	1'-2 1/16	10 15/16	7 3/8	3 1/16	—	—	103'-10 1/16	687.1972'
	MK-131PG5.02	4 1/2	8 1/2	1'-0 1/8	1'-3 1/4	1'-6	1'-8 5/16	1'-10 3/8	1'-11 3/8	2'-0 5/8	2'-1 3/16	2'-1 3/8	2'-1 1/16	2'-0 3/8	1'-11 3/16	1'-9 5/8	1'-7 5/8	1'-5 3/16	1'-2 5/16	11"	7 1/4	3 1/16	—	108'-4 7/16	695.8639'
	MK-132PG5.03	4 1/2	8 1/2	1'-0 1/8	1'-3 5/16	1'-6 1/8	1'-8 7/16	1'-10 3/8	1'-11 3/8	2'-0 5/8	2'-1 9/16	2'-1 3/4	2'-1 1/2	2'-0 7/8	1'-11 13/16	1'-10 5/16	1'-8 3/8	1'-6 1/16	1'-3 1/4	1'-0 1/16	8 7/16	4 3/8	—	109'-10 5/8	704.5306'
	MK-133PG4.04	4 9/16	8 3/4	1'-0 1/2	1'-3 13/16	1'-6 3/4	1'-9 7/16	1'-11 1/4	2'-0 7/8	2'-2 1/8	2'-2 15/16	2'-3 5/16	2'-3 1/4	2'-2 3/4	2'-1 7/8	2'-0 9/16	1'-10 13/16	1'-8 11/16	1'-6 1/8	1'-3 1/8	11 11/16	7 7/8	3 5/8	113'-10 1/2	713.1972'

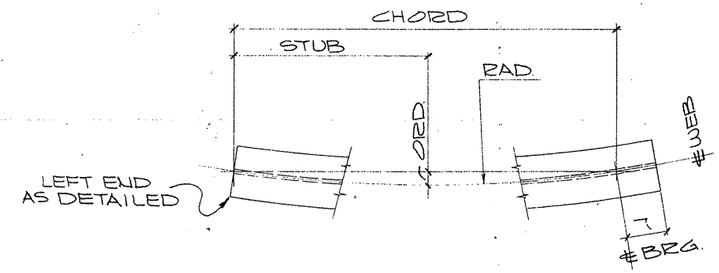

HEAT CURVE DIAGRAM
(ALONG TOP FLG.)

THIS SHEET NOT
DETAIL CHECKED

	STUB	5'-0	10'-0	15'-0	20'-0	25'-0	30'-0	35'-0	40'-0	45'-0	50'-0	55'-0	60'-0	65'-0	70'-0	75'-0	80'-0
ORD	MK-134PG5.01	5 1/2	10 5/8	1'-3 1/4	1'-7 7/16	1'-11 13/16	2'-2 1/2	2'-5 5/16	2'-7 7/8	2'-9 7/8	2'-11 7/16	3'-0 7/8	3'-1 1/4	3'-1 7/16	3'-1 3/8	3'-0 3/4	2'-11 1/16
	MK-135PG6.02	5 3/4	11 1/16	1'-3 15/16	1'-8 3/8	2'-0 3/8	2'-4	2'-7 7/8	2'-9 13/16	3'-0 1/8	3'-1 5/16	3'-3 3/8	3'-4 3/8	3'-4 15/16	3'-5 1/16	3'-4 3/4	3'-4
	MK-136PG6.03	6"	11 1/2	1'-4 5/8	1'-9 5/16	2'-1 7/16	2'-5 3/8	2'-8 7/8	2'-11 3/4	3'-2 5/16	3'-4 7/16	3'-6 1/8	3'-7 3/8	3'-8 3/16	3'-8 5/8	3'-8 5/8	3'-8 3/16
	MK-137PG5.04	6"	11 9/16	1'-4 3/4	1'-9 7/16	2'-1 3/4	2'-5 5/8	2'-9 1/16	3'-0 1/8	3'-2 3/4	3'-4 15/16	3'-6 11/16	3'-8 1/16	3'-8 15/16	3'-9 7/16	3'-9 9/16	3'-9 5/16

	STUB	85'-0	90'-0	95'-0	100'-0	105'-0	110'-0	115'-0	120'-0	125'-0	130'-0	135'-0	140'-0	145'-0	CHORD	RADIUS
ORD	MK-134PG5.01	2'-10 3/16	2'-8 5/16	2'-5 15/16	2'-3 1/8	1'-11 3/8	1'-8 1/4	1'-4 3/8	1'-0 1/16	0 9/16	1/8	—	—	—	130'-11 3/16	687.1972'
	MK-135PG6.02	3'-2 13/16	3'-1 3/16	2'-11 1/16	2'-8 1/16	2'-5 1/16	2'-2 1/2	1'-10 1/16	1'-6 1/2	1'-1 7/8	8 13/16	3 5/16	—	—	137'-9 13/16	695.8639'
	MK-136PG6.03	3'-7 5/16	3'-6	3'-4 5/8	3'-2 1/8	2'-11 9/16	2'-8 9/16	2'-5 1/8	2'-1 5/16	1'-9	1'-4 5/16	11 1/8	5 9/16	—	144'-7 3/4	704.5306'
	MK-137PG5.04	3'-8 7/16	3'-7 1/4	3'-5 1/16	3'-3 1/16	3'-1 1/16	2'-10 3/8	2'-7 1/16	2'-3 3/8	1'-11 1/4	1'-6 1/16	1'-1 1/16	8 5/16	2 1/16	147'-0	713.1972'

NOTE:
FOR GENERAL NOTES, SEE SHT. GN1.

FOR APPROVAL
AUG 24 '92
NOT FOR CONSTRUCTION

TEXAS DEPARTMENT OF TRANSPORTATION
APPROVED EXCEPT AS NOTED
DIVISION OF BRIDGES AND STRUCTURES
OCT 21 1992
APPROVAL OF THIS DRAWING DOES NOT RELIEVE THE CONTRACTOR OF THE RESPONSIBILITY FOR THE CORRECTNESS OF DETAIL.

THIS SHEET NOT
DETAIL CHECKED
AW 8/24

FED ROAD DIV NO.	STATE	FEDERAL AID PROJECT NO.			
6	TX.	NH (50) M			
STATE DIST. NO	COUNTY	CONTROL NO	SECTION NO	JOB NO	HIGHWAY NO
21	HIDALGO	39	17	97	83/281

HOLES ____ U.N.	FOR AP'VL	
BOLTS ____ U.N.	RETURNED	
WELDS ____ U.N.	TO SHOP	
PAINT SEE SHT GN 1		

REVISIONS

NO.	DATE	REMARKS
1		
2		
3		
4		

HIRSCHFELD STEEL CO. INC.
112 WEST 29TH SAN ANGELO, TEXAS 76903
PHONE (915) 653-3211

CUSTOMER GILBERT TEXAS CONSTRUCTION
ARCHITECT
PROJECT US 83/281 INTERCHANGE RAMP # 1
LOCATION HIDALGO COUNTY

DRAWN CRT DATE 6-92
CHECKED DLZ DATE 6-92
JOB NO 92-1006
SHEET NO 139 of ____

CE92-11

a b c d e f g h i j k l m n o p q r s t u v w x y z

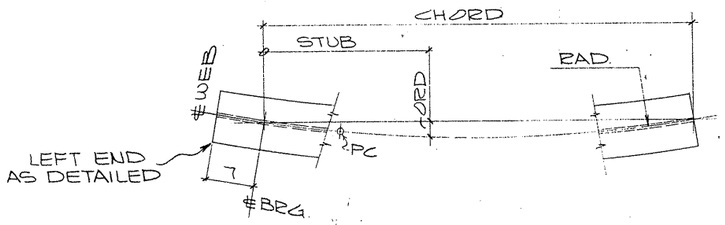

HEAT CURVE DIAGRAM
(ALONG TOP FLG.)

THIS SHEET NOT
DETAIL CHECKED

	STUB	5'-0	10'-0	15'-0	20'-0	25'-0	30'-0	35'-0	40'-0	45'-0	50'-0	55'-0	60'-0	65'-0	70'-0	75'-0	80'-0
CORD	MK-118PG1.01	4 11/16	9 1/16	1'-0	1'-6 1/4	1'-1 0	2'-1 5/16	2'-4 3/16	2'-6 9/16	2'-8 15/16	2'-10 1/8	2'-11 1/4	2'-11 15/16	3'-0 3/16	3'-0	2'-11 3/8	2'-10 3/8
	MK-119PG1.02	4 15/16	9 13/16	1'-2 5/8	1'-7 1/16	1'-11	2'-2 9/16	2'-5 11/16	2'-8 5/16	2'-10 9/16	3'-0 3/8	3'-1 3/4	3'-2 1/16	3'-3 3/16	3'-3 5/16	3'-2 15/16	3'-2 3/8
	MK-120PG1.03	5 3/16	10 5/16	1'-3 3/8	1'-8 1/16	2'-0 1/4	2'-4 1/16	2'-7 7/16	2'-10 3/8	3'-0 7/8	3'-3	3'-4 5/8	3'-5 7/8	3'-6 11/16	3'-7 1/16	3'-7	3'-6 9/16
	MK-121PG1.04	5 3/16	10 3/8	1'-3 1/2	1'-8 5/16	2'-0 7/16	2'-4 1/4	2'-7 11/16	2'-10 11/16	3'-1 1/4	3'-3 7/16	3'-5 3/8	3'-6 1/16	3'-7 3/8	3'-7 13/16	3'-7 7/8	3'-7 1/2

	STUB	85'-0	90'-0	95'-0	100'-0	105'-0	110'-0	115'-0	120'-0	125'-0	130'-0	135'-0	140'-0	145'-0	CHORD	RADIUS
CORD	MK-118PG1.01	2'-8 3/8	2'-6 15/16	2'-4 9/16	2'-1 3/4	1'-10 1/2	1'-6 13/16	1'-2 11/16	10 1/8	5 1/8	—	—	—	—	129'-8 1/2	687.1972'
	MK-119PG1.02	3'-0 15/16	2'-11 5/8	2'-9 3/16	2'-6 11/16	2'-3 3/4	2'-0 13/16	1'-8 9/16	1'-4 5/16	11 1/16	6 9/16	1"	—	—	135'-10 7/16	695.8639'
	MK-120PG1.03	3'-5 5/8	3'-4 5/16	3'-2 9/16	3'-0 3/8	2'-9 13/16	2'-6 3/4	2'-3 5/16	1'-11 7/16	1'-7 1/8	1'-2 7/8	9 3/16	3 5/8	—	143'-0 5/16	704.5306'
	MK-121PG1.04	3'-6 11/16	3'-5 1/2	3'-3 7/8	3'-1 5/16	2'-11 1/16	2'-8 1/16	2'-5 1/8	2'-1 3/8	1'-9 5/16	1'-4 1/16	11 1/16	6 1/8	1/4	145' 2 3/8	713.1972'

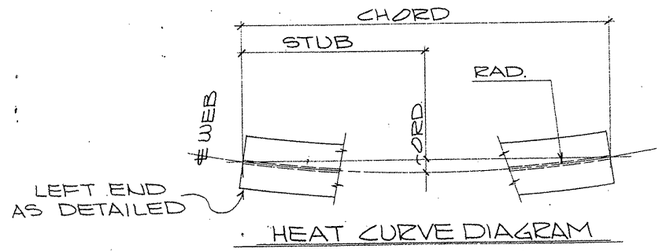

HEAT CURVE DIAGRAM
(ALONG TOP FLG.)

THIS SHEET NOT
DETAIL CHECKED

	STUB	5'-0	10'-0	15'-0	20'-0	25'-0	30'-0	35'-0	40'-0	45'-0	50'-0	55'-0	60'-0	CHORD	RADIUS
CORD	MK-123PG2.02	2	3 1/2	4 5/8	5 5/16	5 9/16	5 3/8	4 13/16	3 3/4	2 1/4	3/8	—	—	50'-10 5/16	695.8639'
	MK-124PG2.03	1 3/4	3 1/16	3 15/16	4 3/8	4 7/16	4 1/16	3 1/4	2	5/16	—	—	—	45'-10 3/16	704.5306'
	MK-147PG3.02	2 1/4	4 1/8	5 9/16	6 1/2	7 1/16	7 3/16	6 7/8	6 3/16	5	3 3/8	1 3/8	—	57'-10 1/8	695.8639'
	MK-148PG3.03	2 1/2	4 9/16	6 1/4	7 1/2	8 1/4	8 5/8	8 5/8	8 1/8	7 1/4	5 7/8	4 1/8	1 15/16	63'-10 1/16	704.5306'

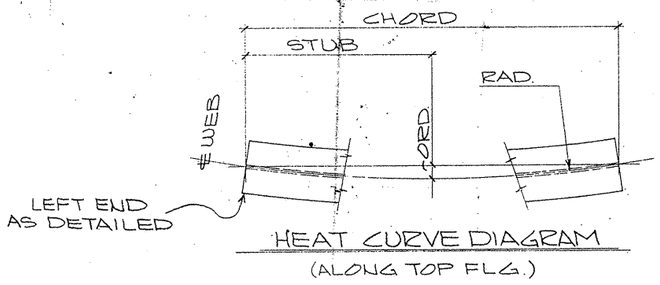

HEAT CURVE DIAGRAM
(ALONG TOP FLG.)

THIS SHEET NOT
DETAIL CHECKED

	STUB	5'-0	10'-0	15'-0	20'-0	25'-0	30'-0	35'-0	40'-0	45'-0	50'-0	55'-0	60'-0	65'-0	70'-0	75'-0	80'-0	85'-0	90'-0	95'-0	100'-0	105'-0	110'-0	CHORD	RADIUS
CORD	MK-122PG2.01	4 5/16	8 3/16	11 1/16	1'-2 1/16	1'-5 1/4	1'-7 3/8	1'-9 1/16	1'-10 3/8	1'-11 13/16	1'-11 7/16	1'-11 1/2	1'-11	1'-10 7/8	1'-8 3/4	1'-6 15/16	1'-4 11/16	1'-2 1/16	10 15/16	7 3/8	3 7/16	—	—	103'-10 11/16	687.1972'
	MK-125PG2.04	4 9/16	8 3/4	1'-0 1/2	1'-3 13/16	1'-6 3/4	1'-9 7/16	1'-11 1/4	2'-0 7/8	2'-2 3/8	2'-2 15/16	2'-3 5/16	2'-3 1/4	2'-2 3/4	2'-1 7/8	2'-0 9/16	1'-10 13/16	1'-8 11/16	1'-6 1/8	1'-3 1/8	11 11/16	7 7/8	3 9/16	113'-10 7/16	713.1972'
	MK-126PG3.01	4 3/4	9	1'-0 7/8	1'-4 1/4	1'-7 1/4	1'-9 3/4	1'-11 7/8	2'-1 1/2	2'-2 3/4	2'-3 1/2	2'-3 7/8	2'-3 13/16	2'-3 1/4	2'-2 5/8	2'-0 7/8	1'-11 1/16	1'-8 13/16	1'-6 1/16	1'-2 5/16	11 5/16	7 5/16	2 7/8	112'-11 1/2	687.1972'
	MK-127PG4.02	4	7 9/16	10 1/16	1'-1 7/16	1'-3 11/16	1'-5 1/2	1'-6 15/16	1'-7 15/16	1'-8 7/16	1'-8 9/16	1'-8 1/4	1'-7 1/2	1'-6 5/8	1'-4 3/4	1'-2 11/16	1'-0 7/16	9 5/16	5 15/16	2 3/16	—	—	—	97'-8	695.8639'
	MK-128PG4.03	3 9/16	6 11/16	9 3/8	11 11/16	1'-1 1/2	1'-2 15/16	1'-3 15/16	1'-4 1/2	1'-4 5/8	1'-4 3/8	1'-3 5/8	1'-2 1/2	1'-0 15/16	10 15/16	8 7/16	5 11/16	2 7/16	—	—	—	—	—	88'-4 3/16	704.5306'
	MK-129PG3.04	3 5/16	6 1/8	8 5/8	10 5/8	1'-0 7/16	1'-1 3/8	1'-2 1/8	1'-2 1/2	1'-2 7/16	1'-1 7/8	1'-1	11 5/8	9 7/8	7 11/16	5 1/16	2 1/16	—	—	—	—	—	—	83'-0 1/4	713.1972'

FOR APPROVAL
AUG 24 '92
NOT FOR CONSTRUCTION

TEXAS DEPARTMENT OF TRANSPORTATION
APPROVED EXCEPT AS NOTED
DIVISION OF BRIDGES AND STRUCTURES
OCT 21 1992
APPROVAL OF THIS DRAWING DOES NOT RELIEVE THE CONTRACTOR OF THE RESPONSIBILITY FOR THE CORRECTNESS OF DETAIL.

NOTE:
FOR GENERAL NOTES, SEE SHT. GN1.

THIS SHEET NOT
DETAIL CHECKED

FED ROAD DIV. NO.	STATE	FEDERAL AID PROJECT NO.			
6	TX.	NH (50) M			
STATE DIST. NO.	COUNTY	CONTROL NO.	SECTION NO.	JOB NO.	HIGHWAY NO.
21	HIDALGO	39	17	97	83/281

NO.	DATE	REMARKS
1		
2		
3		
4		

HOLES ____ U.N. FOR AP'VL ____
BOLTS ____ U.N. RETURNED ____
WELDS ____ U.N. TO SHOP ____
PAINT SEE SHT. GN1
REVISIONS

HIRSCHFELD STEEL CO. INC.
112 WEST 29TH SAN ANGELO TEXAS 76903
PHONE (915) 653-3211

CUSTOMER GILBERT TEXAS CONSTRUCTION
ARCHITECT
PROJECT US 83/281 INTERCHANGE RAMP #1
LOCATION HIDALGO COUNTY

DRAWN SBT DATE 6-92
CHECKED DCT DATE 6-92
JOB NO 92-106
SHEET NO 138 OF

CE 92-11

a b c d e f g h i j k l m n o p q r s t u v w x y z

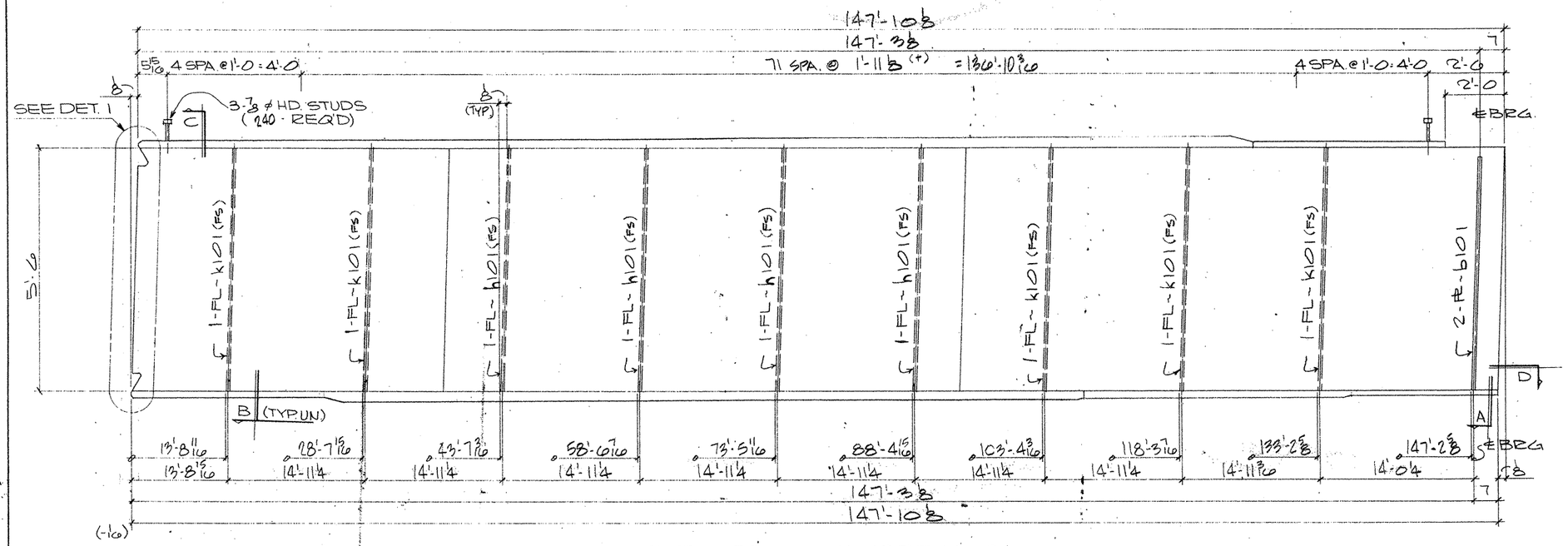

ONE GIRDER MK-137PG5.04
(APPROX. WT. = TONS)

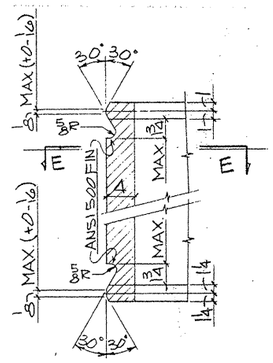

DETAIL-1

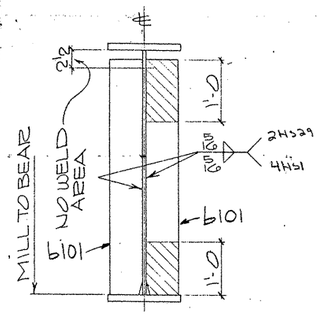

SECTION-A

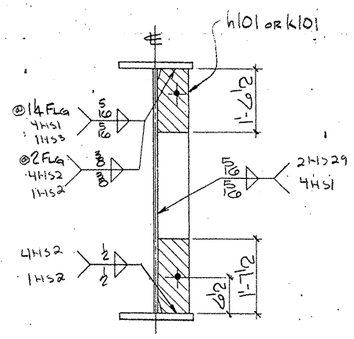

SECTION-B

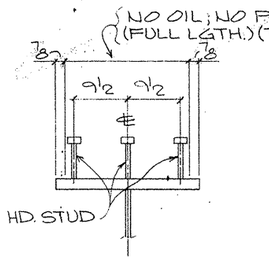

SECTION-C
(TYP. STUD SECT.)

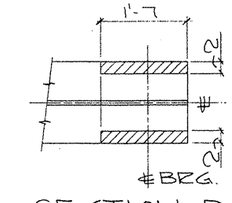

SECTION-D

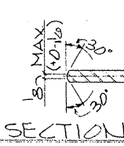

SECTION-E-E

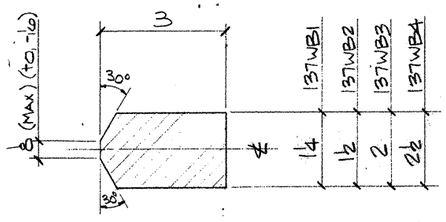

88-WELD BARS MK-137WB1
16-WELD BARS MK-137WB2
16-WELD BARS MK-137WB3
8-WELD BARS MK-137WB4

SHOP NOTES:
1) FOR GENERAL NOTES SEE SHT. GN1
2) FOR GIRDER SUB-ASSEMBLY SEE SHT. 117
3) FOR STIFF. DETAILS SEE SHT. 101
4) FOR BLOCKING DIAGRAM SEE, SHT. 143
5) FOR HEAT CURVE DIAGRAM SEE SHT. 139
6) ▨ INDICATES OIL, NO PAINT (N.S./F.S. & EDGES)

BILL OF MATERIAL

	Only	Material	Length	Mark Temp	Mark Ship	Wt	Cut From	Remarks
2	1	GIRDER			137PG5.04			
3	1	GIRDER SUB-ASSY		B117				
4	2	BRG STIFF		b101				
5	4	DIAF STIFF		h101				
6	5	DIAF STIFF		k101				
7	240	HD. STUD ⅞ø	0'-7				103-1	A108
30		WELD BARS						
31	88	PL 1¼ x 1	0'-3		137WB1		STK	
32	16	PL 1½ x 1	0'-3		137WB2		STK	
33	16	PL 2 x 1	0'-3		137WB3		STK	
34	8	PL 2½ x 1	0'-3		137WB4		STK	

FOR APPROVAL
AUG 24 '92
NOT FOR CONSTRUCTION

REVISION	DATE	DESCRIPTION OF REVISION
NO 1		
NO 2		
NO 3		
NO 4		
NO 5		

PRINTING: Req'd | For | Date

Bolts. Holes, 15/16 ø Unless Noted
Shop Paint SEE SHT GN1
Fab Spec AS NTD Inspection
Architect
Erection By Field Connections

HIRSCHFELD STEEL CO. INC.
112 WEST 29TH SAN ANGELO TEXAS 76903
PHONE (915) 653-3211

DESCRIPTION	610'-0 PLATE GIRDER UNIT
STRUCTURE	US 83/281 INTERCHANGE RAMP "I"
LOCATION	HIDALGO COUNTY
CUSTOMER	GILBERT TEXAS CONSTRUCTION
SHIP TO	
Customer's Order No	
Dwg. By JR	Date 7/92
Checked By CET	Date 7/92

SHEET 137 OF
JOB NO. 92-106

FED. ROAD DIV. NO	STATE	FEDERAL AID PROJECT NO				
6	TX.	NH (50) M				
STATE DIST. NO	COUNTY	CONTROL NO	SECTION NO	JOB NO	HIGHWAY NO	
21	HIDALGO	39	17	97	83/281	

92-106

CE 92-11 (LINE #4)

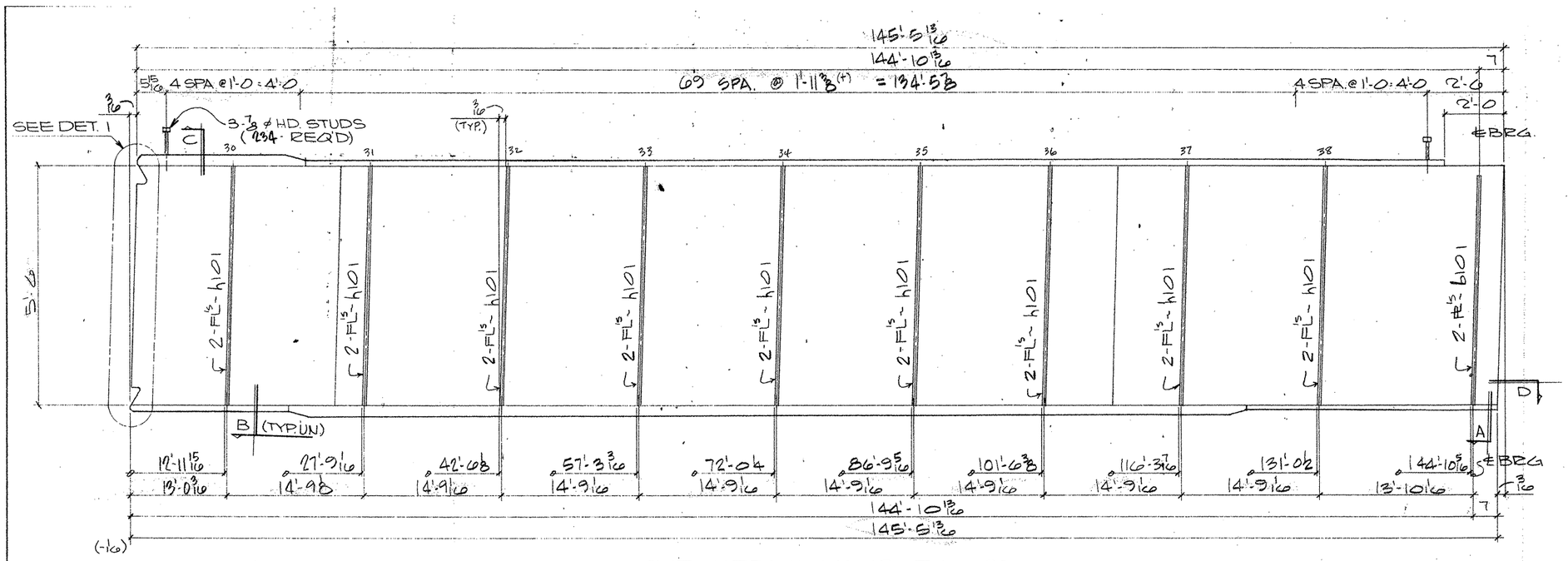

ONE GIRDER MK~ 136PG6.03
(APPROX. WT. = TONS)

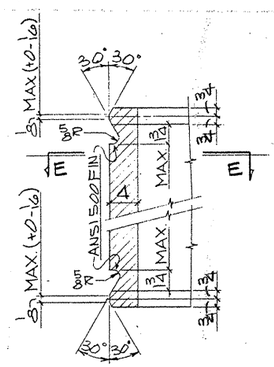

DETAIL - 1

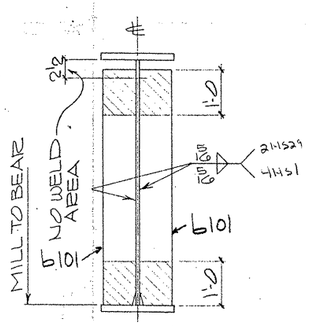

SECTION - A

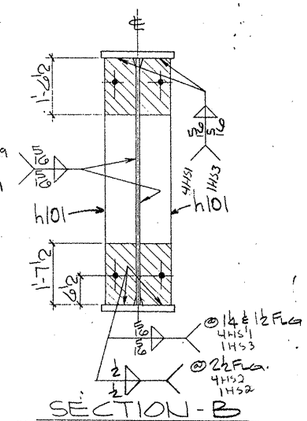

SECTION - B

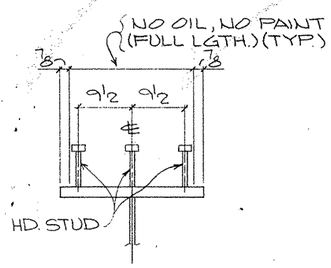

SECTION - C
(TYP STUD SECT.)

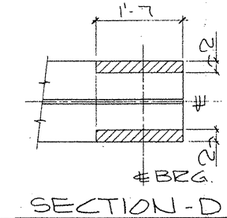

SECTION - D

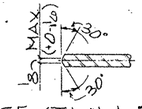

SECTION - E-E

SHOP NOTES:
1) FOR GENERAL NOTES SEE SHT. GN1
2) FOR GIRDER SUB-ASSEMBLY SEE SHT. 116
3) FOR STIFF. DETAILS SEE SHT. 121
4) FOR BLOCKING DIAGRAM SEE SHT. 142
5) FOR HEAT CURVE DIAGRAM SEE SHT. 139
6) ▨ INDICATES OIL, NO PAINT (N.S./F.S. & EDGES)

G0106

BILL OF MATERIAL

	Qnty.	Material	Length	Mark Temp.	Mark Ship.	Wt	Cut From	Remarks
1								
2	1	GIRDER			136PG6.03			
3	1	GIRDER SUB-ASSY		B116				
4	2	BRG STIFF		h101				
5	18	DIAF STIFF		h101				
6	234	HDSTUD 3/4 ⌀	0'-7				103-1	A108
7								
8								
9								
10								
11								
12								
13								
14								
15								
16								
17								
18								
19								
20								
21								
22								
23								
24								
25								
26								
27								
28								
29								
30								
31								
32								
33								
34								
35								
36								
37								
38								
39								
40								
41								
42								
43								
44								
45								
46								
47								
48								
49								
50								
51								
52								
53								
54								
55								
56								
57								
58								
59								
60								

FOR APPROVAL
AUG 24 '92
NOT FOR CONSTRUCTION

REVISION	DATE	DESCRIPTION OF REVISION
NO. 1		
NO. 2		
NO. 3		
NO. 4		
NO. 5		

PRINTING Req'd	For	Date

Bolts Holes, 15/16 ⌀ Unless Noted
Shop Paint SEE SHT GN1
Fab. Spec AS NTD. Inspection
Architect
Erection By Field Connections

HIRSCHFELD STEEL CO. INC.
112 WEST 29TH SAN ANGELO TEXAS 76903
PHONE (915) 653-3211

DESCRIPTION	610'-0 PLATE GIRDER UNIT
STRUCTURE	US 83/281 INTERCHANGE RAMP=1
LOCATION	HIDALGO COUNTY
CUSTOMER	GILBERT TEXAS CONSTRUCTION
SHIP TO	
Customer's Order No.	
Dwg. By JTF	Date 7/92
Checked By CRT	Date 7/92

SHEET 136 OF
JOB NO. 92-106

FED. ROAD DIV. NO	STATE	FEDERAL AID PROJECT NO			
6	TX.	NH (50) M			
STATE DIST. NO	COUNTY	CONTROL NO	SECTION NO	JOB NO	HIGHWAY NO.
21	HIDALGO	39	17	97	83/281

AM 8/04

CE 92-11 (LINE #3)

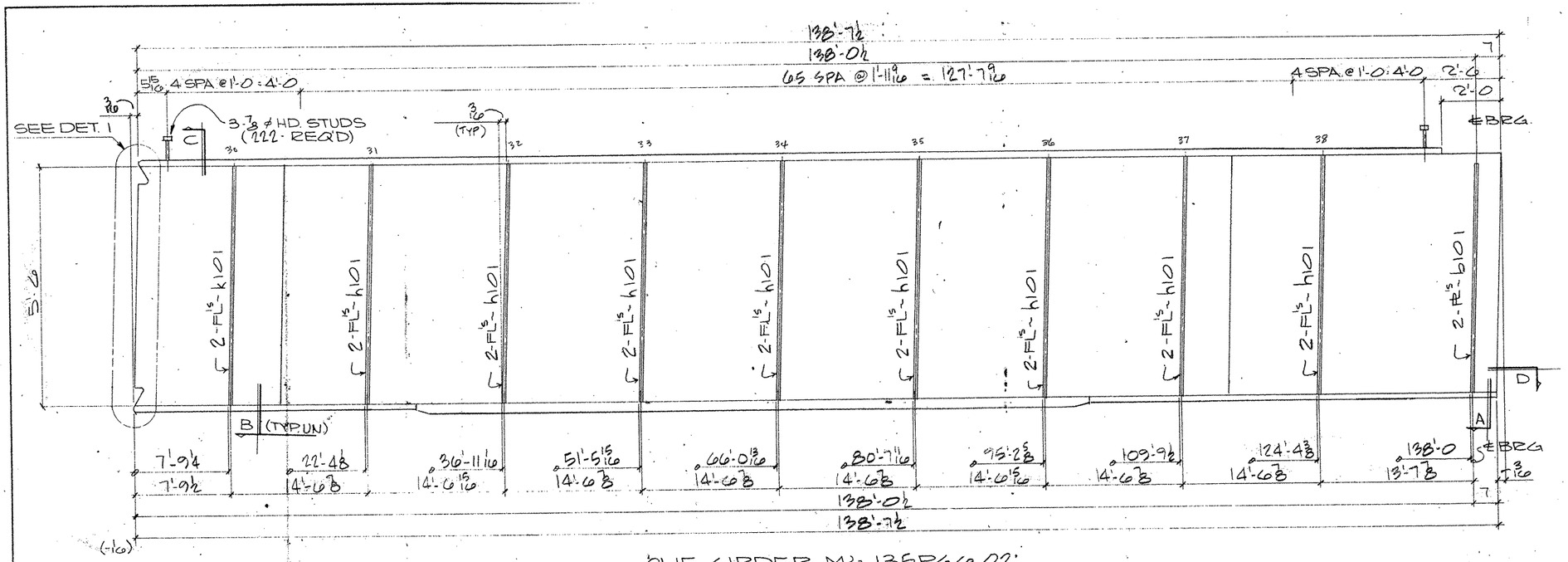

ONE GIRDER MK~ 135PG6.02'
(APPROX. WT. = TONS)

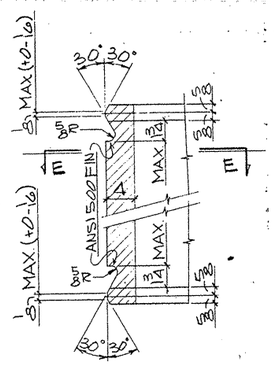

DETAIL - 1

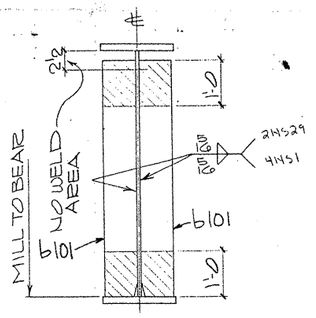

SECTION - A

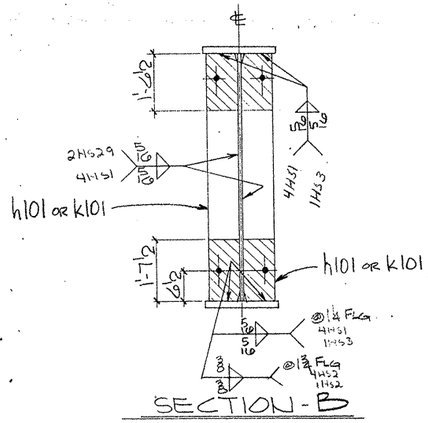

SECTION - B

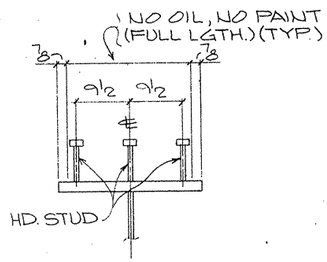

SECTION - C
(TYP. STUD SECT.)

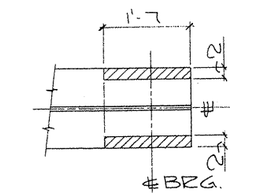

SECTION - D

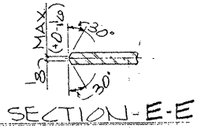

SECTION - E - E

SHOP NOTES:

1) FOR GENERAL NOTES SEE SHT. GN1
2) FOR GIRDER SUB-ASSEMBLY SEE SHT. 115
3) FOR STIFF. DETAILS SEE SHT. 101
4) FOR BLOCKING DIAGRAM SEE SHT. 141
5) FOR HEAT CURVE DIAGRAM SEE SHT. 139
6) ▨ INDICATES OIL, NO PAINT (N.S./F.S. & EDGES)

BILL OF MATERIAL

	Qnty	Material	Length	Mark Temp	Mark Ship	Wt.	Cut From	Remarks
1								
2	1	GIRDER			135PG6.02			
3	1	GIRDER SUB-ASSY		B115				
4	2	BRG STIFF		b101				
5	16	DIAF STIFF		h101				
6	2	DIAF STIFF		k101				
7	222	HD STUD ⌀	0'-7				103-1	A108

FOR APPROVAL
AUG 24 92
NOT FOR CONSTRUCTION

TEXAS DEPARTMENT OF TRANSPORTATION
APPROVED
DIVISION OF BRIDGES AND STRUCTURES
OCT 23 1992
APPROVAL OF THIS DRAWING DOES NOT RELIEVE THE CONTRACTOR OF THE RESPONSIBILITY FOR THE CORRECTNESS OF DETAILS

REVISION	DATE	DESCRIPTION OF REVISION
NO. 1		
NO. 2		
NO. 3		
NO. 4		
NO. 5		

PRINTING Req'd	For	Date

Bolts Holes 15/16 ⌀ Unless Noted
Shop Paint SEE SHT. GN1
Fab. Spec. AASHTO Inspection
Architect
Erection By Field Connections

HIRSCHFELD STEEL CO. INC.
112 WEST 29TH SAN ANGELO TEXAS 76903
PHONE (915) 653-3211

DESCRIPTION	616'-0 PLATE GIRDER UNIT
STRUCTURE	US 83/281 INTERCHANGE RAMP #
LOCATION	HIDALGO COUNTY
CUSTOMER	GILBERT TEXAS CONSTRUCTION
SHIP TO	
Customer's Order No.	
Dwg. By JBE Date 7/92	SHEET 135 OF
Checked By CRT Date 7/92	JOB NO 92-1066

G0106

FED. ROAD DIV. NO.	STATE	FEDERAL AID PROJECT NO.				
6	TX.	NH (50) M				
STATE DIST. NO.	COUNTY	CONTROL NO.	SECTION NO.	JOB NO.	HIGHWAY NO.	
21	HIDALGO	39	17	97	83/281	

CE 92-11 (LINE # 2) ✓

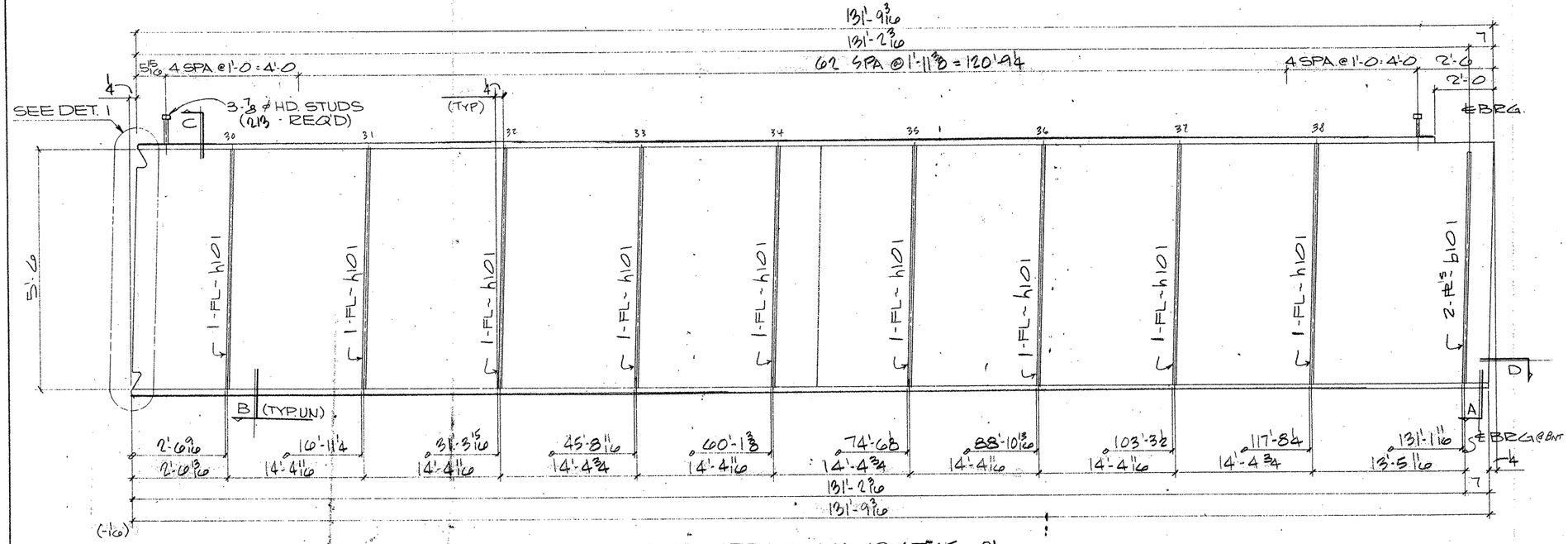

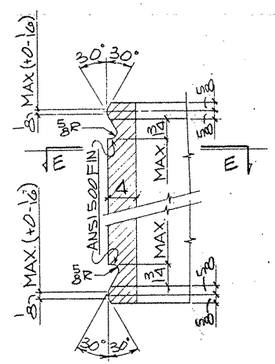

DETAIL - 1

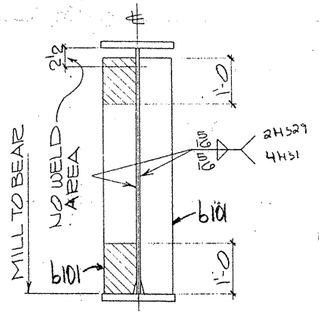

SECTION - A

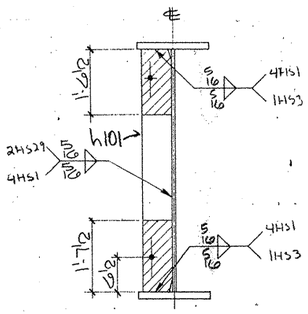

SECTION - B

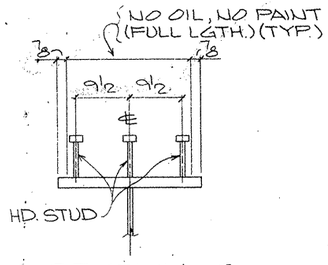

SECTION - C
(TYP. STUD SECT.)

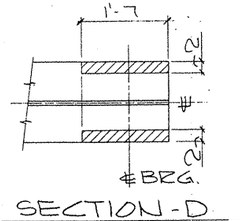

SECTION - D

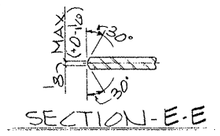

SECTION - E - E

SHOP NOTES:

1) FOR GENERAL NOTES SEE SHT. GN1
2) FOR GIRDER SUB-ASSEMBLY SEE SHT. 114
3) FOR STIFF. DETAILS SEE SHT. 121
4) FOR BLOCKING DIAGRAM SEE SHT. 140
5) FOR HEAT CURVE DIAGRAM SEE SHT. 139
6) ▨ INDICATES OIL, NO PAINT (N.S./P.S. & EDGES)

BILL OF MATERIAL

	Qnty.	Material	Length	Mark Temp.	Mark Ship	Wt.	Cut From	Remarks
1								
2	1	GIRDER			134FG5.01			
3	1	GIRDER SUB-ASSY		B114				
4	2	BRG STIFF		b101				
5	9	DIAF STIFF		h101				
6	213	HD STUD ϕ	0'-7				103-1	A108

FOR APPROVAL
AUG 24 92
NOT FOR CONSTRUCTION

TEXAS DEPARTMENT OF TRANSPORTATION
APPROVED
DIVISION OF BRIDGES AND STRUCTURES
OCT 01 1992
APPROVAL OF THESE DRAWINGS DOES NOT RELIEVE THE CONTRACTOR OF THE RESPONSIBILITY FOR CORRECTNESS OF FABRICATION

REVISION	DATE	DESCRIPTION OF REVISION
NO. 1		
NO. 2		
NO. 3		
NO. 4		
NO. 5		

PRINTING Req'd	For	Date

Bolts Holes: 15/16 ϕ Unless Noted
Shop Paint SEE SHT GN1
Fab Spec ASHTO Inspection
Architect
Erection By Field Connections

HIRSCHFELD STEEL CO. INC.
112 WEST 29TH SAN ANGELO TEXAS 76903
PHONE (915) 653-3211

DESCRIPTION	610-0 PLATE GIRDER UNIT
STRUCTURE	US 83/281 INTERCHANGE RAMP#
LOCATION	HIDALGO COUNTY
CUSTOMER	GILBERT TEXAS CONSTRUCTION
SHIP TO	
Customer's Order No	
Dwg. By JE Date 7/92	
Checked By CRT Date 7/92	

SHEET 134 OF
JOB NO. 92-106

G0106

FED. ROAD DIV. NO.	STATE	FEDERAL AID PROJECT NO.			
6	TX.	NH (50) M			
STATE DIST. NO.	COUNTY	CONTROL NO.	SECTION NO.	JOB NO.	HIGHWAY NO.
21	HIDALGO	39	17	97	83/281

CE 92-11 (LINE # 1)

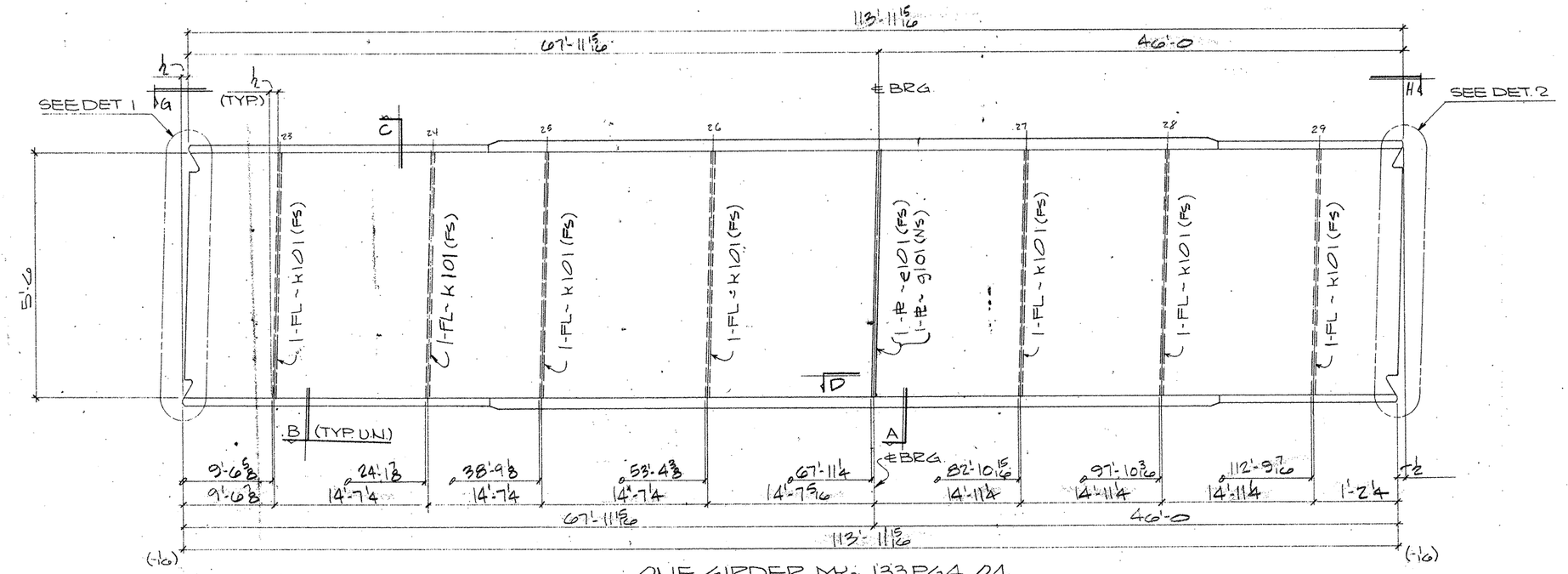

ONE GIRDER MK- 133PG4.04

(APPROX. WT. = TONS)

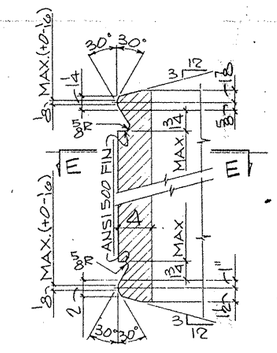

DETAIL - 1

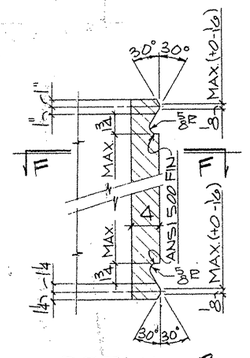

DETAIL - 2

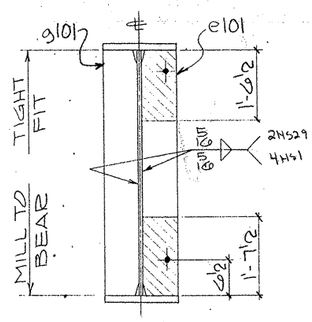

SECTION - A

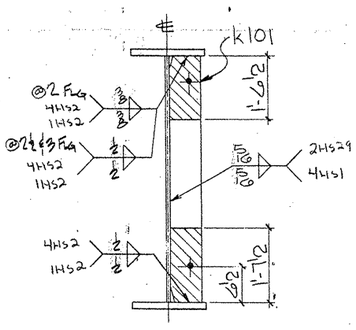

SECTION - B

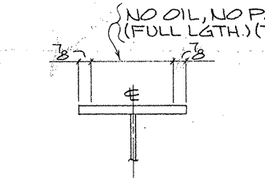

SECTION - C

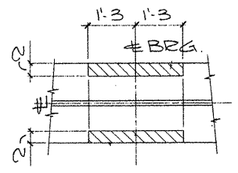

SECTION - D

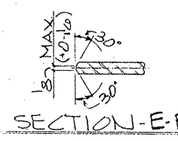

SECTION - E-E

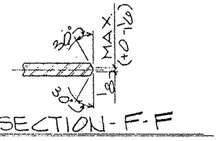

SECTION - F-F

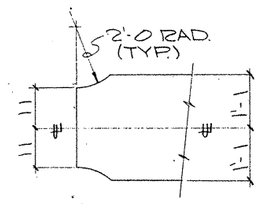

VIEW - G
(TYP. @ T & B FLGS.)

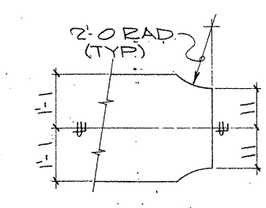

VIEW - H
(TYP. T & B FLG.)

SHOP NOTES:

1) FOR GENERAL NOTES SEE SHT. GN1
2) FOR GIRDER SUB-ASSEMBLY SEE SHT. 117
3) FOR STIFF. DETAILS SEE SHT. 101
4) FOR BLOCKING DIAGRAM SEE SHT. 143
5) FOR HEAT CURVE DIAGRAM SEE SHT. 135
6) ▨ INDICATES OIL, NO PAINT (N.S./F.S. & EDGES)

G0106

FED. ROAD DIV. NO.	STATE	FEDERAL AID PROJECT NO.			
6	TX.	NH (50) M			
STATE DIST. NO.	COUNTY	CONTROL NO.	SECTION NO.	JOB NO.	HIGHWAY NO.
21	HIDALGO	39	17	97	83/281

BILL OF MATERIAL

	Qnty	Material	Length	Mark Temp	Mark Ship	Wt.	Cut From	Remarks
2	1	GIRDER			133PG4.04			
3	1	GIRDER SUB-ASSY		A117				
4	1	INT BRG STIFF		e101				
5	1	INT BRG STIFF		g101				
6	7	DIAF STIFF		k101				

FOR APPROVAL
AUG 24 '92
NOT FOR CONSTRUCTION

TEXAS HIGHWAY DEPARTMENT
APPROVED
DIVISION OF BRIDGES AND STRUCTURES
DATE 8-31-1992
APPROVAL OF THIS DRAWING DOES NOT RELIEVE THE CONTRACTOR OF THE RESPONSIBILITY FOR THE CORRECTNESS OF DETAILS

REVISION	DATE	DESCRIPTION OF REVISION
NO. 1		
NO. 2		
NO. 3		
NO. 4		
NO. 5		

PRINTING		
Req'd	For	Date
✓		

Bolts Holes. 15/16 ø Unless Noted
Shop Paint SEE SHT. GN1
Fab Spec AASHTO Inspection
Architect
Erection By Field Connections

HIRSCHFELD STEEL CO. INC.
112 WEST 29TH SAN ANGELO TEXAS 76903
PHONE (915) 653-3211

DESCRIPTION	610'-0 PLATE GIRDER UNIT
STRUCTURE	US 83/281 INTERCHANGE RAMP #
LOCATION	HIDALGO COUNTY
CUSTOMER	GILBERT TEXAS CONSTRUCTION
SHIP TO	
Customer's Order No.	
Dwg. By JBC Date 7/92	
Checked By CRT Date 7/92	

SHEET 133 OF
JOB NO. 92-106

CE92-11 (LINE # 4)

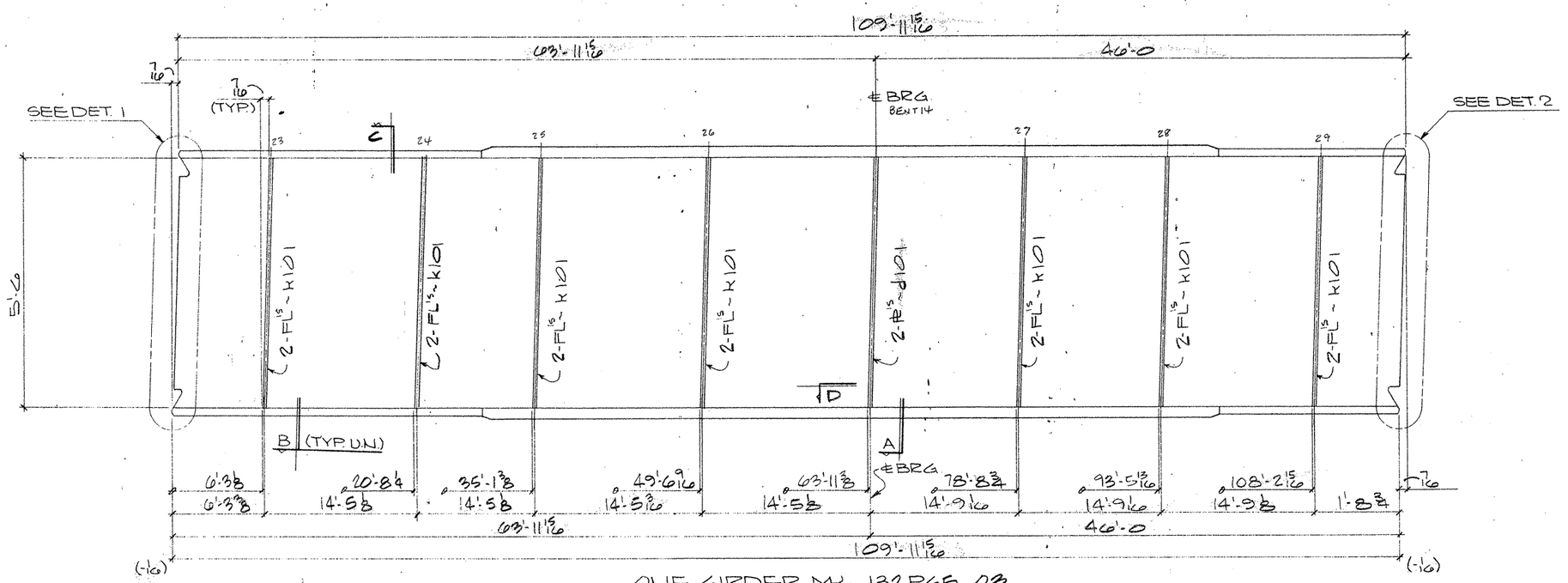

ONE GIRDER MK- 132PG5.03

(APPROX. WT. = TONS)

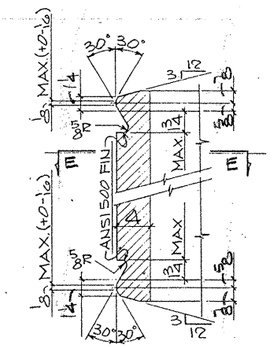

DETAIL-1

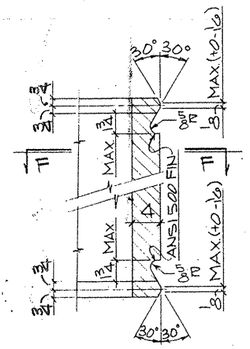

DETAIL-2

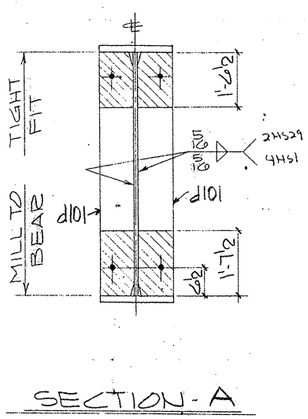

SECTION-A

SECTION-B

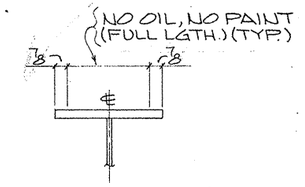

SECTION-C

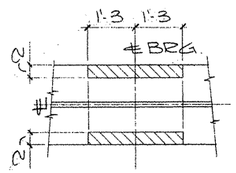

SECTION-D

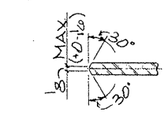

SECTION-E-E

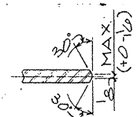

SECTION-F-F

SHOP NOTES:

1) FOR GENERAL NOTES SEE SHT. GN1
2) FOR GIRDER SUB-ASSEMBLY SEE SHT. 1A0
3) FOR STIFF. DETAILS SEE SHT. 101
4) FOR BLOCKING DIAGRAM SEE SHT. 142
5) FOR HEAT CURVE DIAGRAM SEE SHT. 139
6) ▨ INDICATES OIL, NO PAINT (N.S./F.S. & EDGES)

BILL OF MATERIAL

	Qnty.	Material	Length	Mark Temp	Mark Ship	Wt.	Cut From	Remarks
1								
2	1	GIRDER			132PG5.03			
3	1	GIRDER SUB-ASSY		A1A0				
4	2	INT BRG STIFF		d101				
5	14	DIAF STIFF		k101				
6–60								

FOR APPROVAL

AUG 24 92

NOT FOR CONSTRUCTION

TEXAS DEPARTMENT OF TRANSPORTATION APPROVED DIVISION OF BRIDGES AND STRUCTURES OCT 27 1992

APPROVAL OF THE DRAWING DOES NOT RELIEVE THE CONTRACTOR OF THE RESPONSIBILITY FOR THE CORRECTNESS OF DETAILS

REVISION	DATE	DESCRIPTION OF REVISION
NO 1		
NO 2		
NO 3		
NO 4		
NO 5		

PRINTING

Rec'd	For	Date

Bolts Holes 15/16 Unless Noted

Shop Paint SEE SHT. GN1

Fab Spec. AASHTO Inspection

Architect

Erection By Field Connections

HIRSCHFELD STEEL CO. INC.

112 WEST 29TH SAN ANGELO, TEXAS 76903

PHONE (915) 653-3211

DESCRIPTION	610'-0 PLATE GIRDER UNIT
STRUCTURE	US 83/281 INTERCHANGE RAMP #1
LOCATION	HIDALGO COUNTY
CUSTOMER	GILBERT TEXAS CONSTRUCTION
SHIP TO	
Customer's Order No.	
Dwg. By JRL Date 7/92	SHEET 132 OF
Checked By CRT Date 7/92	JOB NO. 92-106

G0106

FED ROAD DIV. NO	STATE	FEDERAL AID PROJECT NO			
6	TX.	NH (50) M			
STATE DIST. NO	COUNTY	CONTROL NO	SECTION NO	JOB NO	HIGHWAY NO
21	HIDALGO	39	17	97	83/281

CE92-11 (LINE # 3)

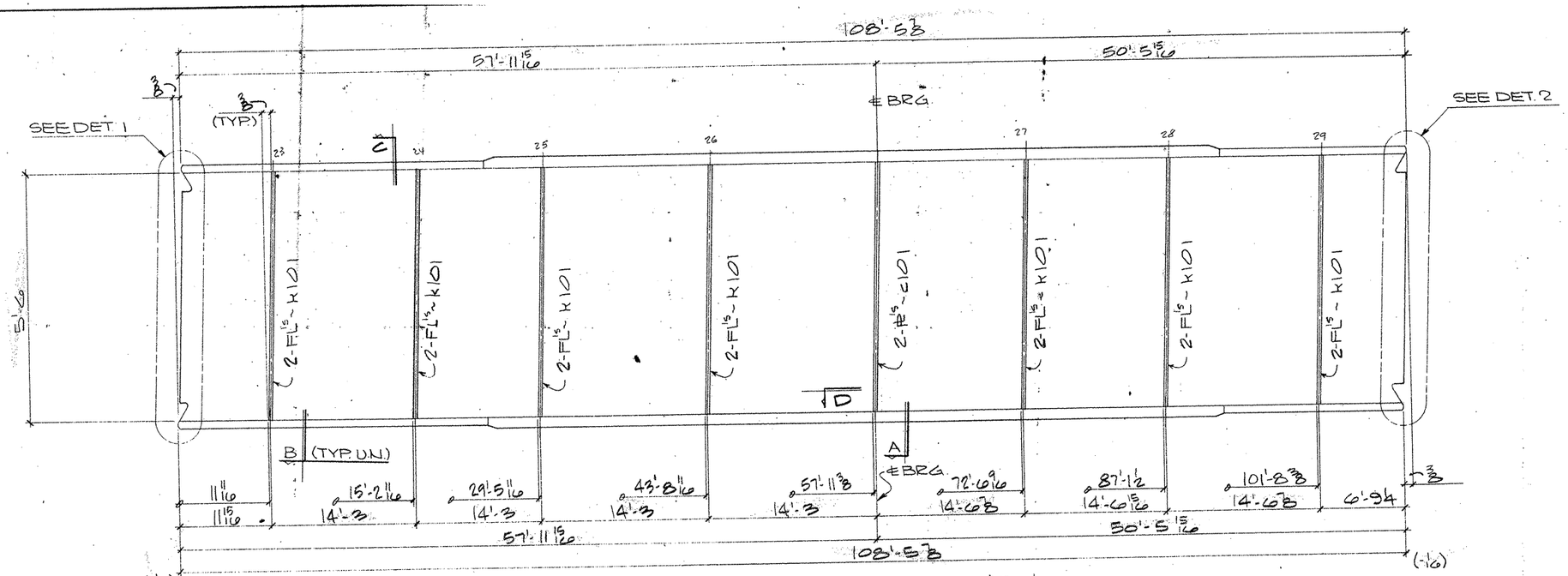

ONE GIRDER MK- 131 PG5 .02

(APPROX. WT. = TONS)

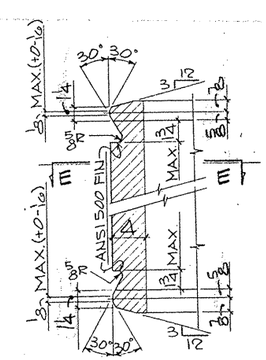

DETAIL - 1

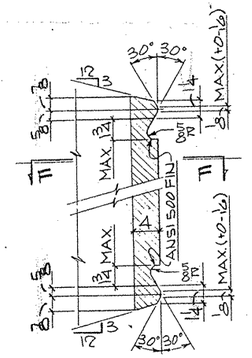

DETAIL - 2

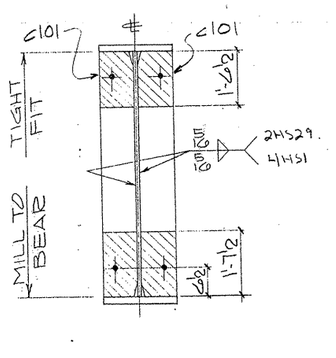

SECTION - A

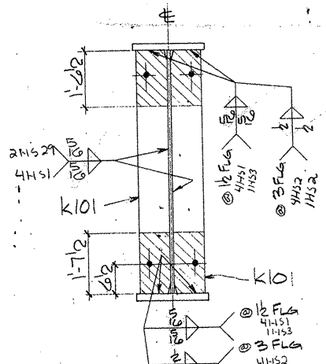

SECTION - B

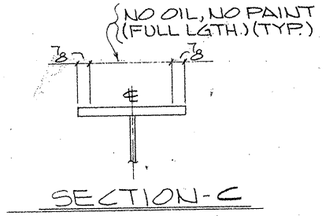

SECTION - C

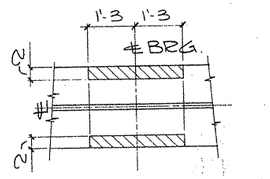

SECTION - D

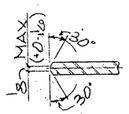

SECTION - E-E

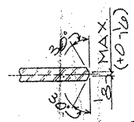

SECTION - F-F

SHOP NOTES:

1) FOR GENERAL NOTES SEE SHT. GN1
2) FOR GIRDER SUB-ASSEMBLY SEE SHT. 115
3) FOR STIFF. DETAILS SEE SHT. 101
4) FOR BLOCKING DIAGRAM SEE SHT. 141
5) FOR HEAT CURVE DIAGRAM SEE SHT. 139
6) ▨ INDICATES OIL, NO PAINT (N.S./F.S. & EDGES)

	Qnty.	Material	Length	Mark Temp.	Mark Ship.	Wt	Cut From	Remarks
1								
2	1	GIRDER			131 PG5.02			
3	1	GIRDER SUB-ASSY		A115				
4	2	INT BRG. STIFF		C101				
5	14	DIAF STIFF		K101				

FOR APPROVAL
AUG 24 '92

TEXAS DEPARTMENT OF TRANSPORTATION
DESIGN
DIVISION OF BRIDGES AND STRUCTURES
OCT 21 1992
APPROVAL OF THIS PLANSHEET DOES NOT RELIEVE ANY PARTICIPANT OF THE RESPONSIBILITY FOR THE CORRECTNESS
NOT FOR CONSTRUCTION

REVISION	DATE	DESCRIPTION OF REVISION
NO 1		
NO 2		
NO 3		
NO 4		
NO 5		

PRINTING: Read For Date

Bolts: Holes, 15/16 ⌀ Unless Noted
Shop Paint: SEE SHT. GN1
Fab Spec: ASNTD Inspection
Architect
Erection By: Field Connections

HIRSCHFELD STEEL CO. INC.
112 WEST 29TH SAN ANGELO TEXAS 76903
PHONE (915) 653-3211

DESCRIPTION	610-0 PLATE GIRDER UNIT
STRUCTURE	US 83/281 INTERCHANGE RAMP #
LOCATION	HIDALGO COUNTY
CUSTOMER	GILBERT TEXAS CONSTRUCTION
SHIP TO	
Customer's Order No	
Dwg By JJZ	Date 7/92
Checked By CBT	Date 7/92

SHEET 131 OF
JOB NO 92-106

G0106

FED. ROAD DIV. NO	STATE	FEDERAL AID PROJECT NO				
6	TX.	NH (50) M				
STATE DIST. NO	COUNTY	CONTROL NO	SECTION NO	JOB NO	HIGHWAY NO	
21	HIDALGO	39	17	97	83/281	

CE 92-11 (LINE # 2)

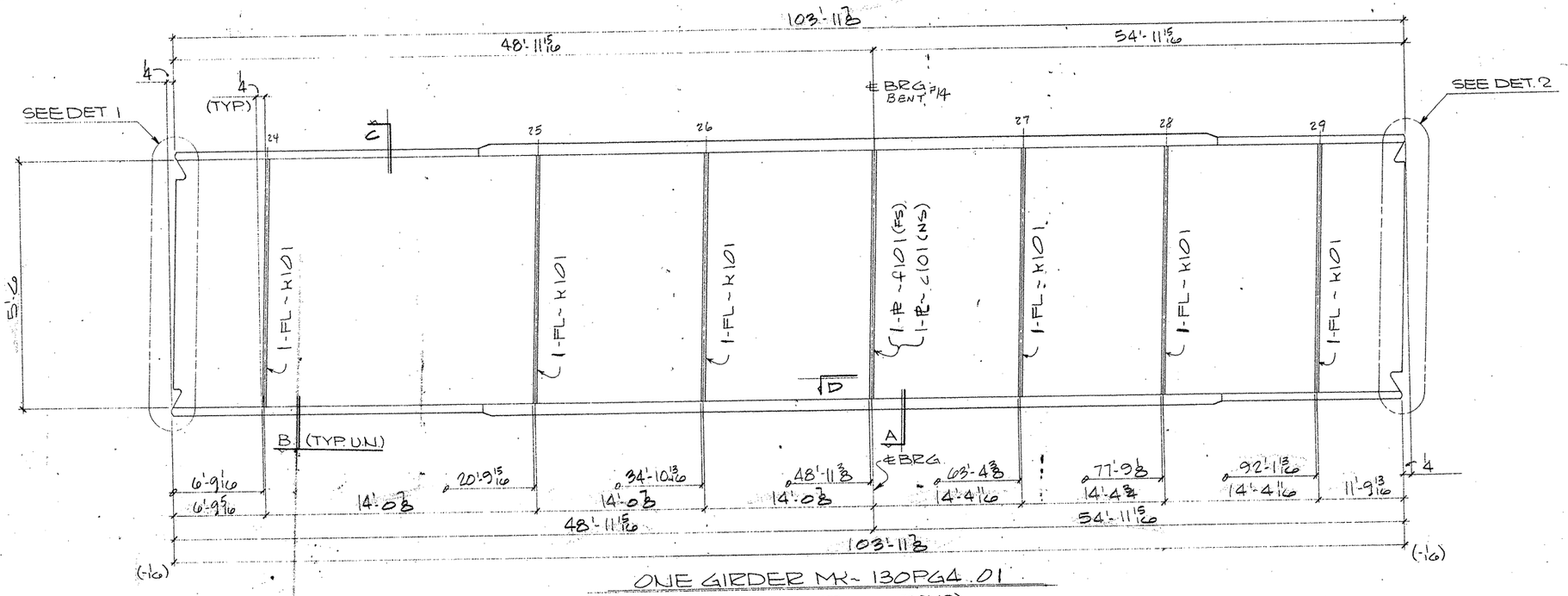

ONE GIRDER MK- 130PG4.01
(APPROX. WT. = TONS)

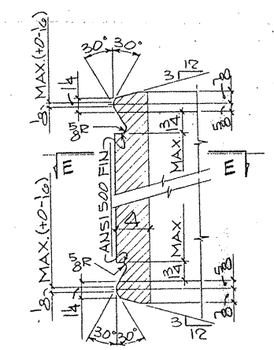

DETAIL-1

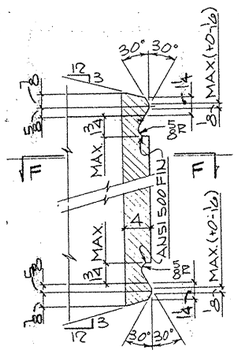

DETAIL-2

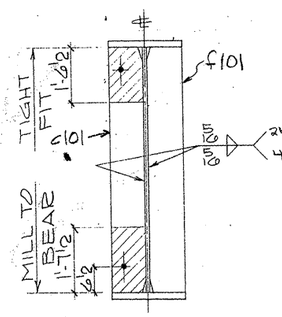

SECTION-A

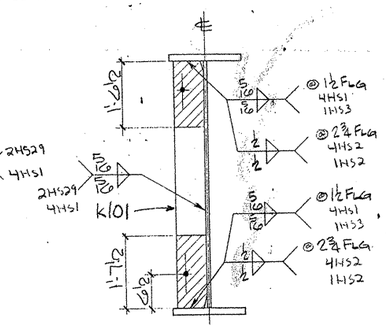

SECTION-B

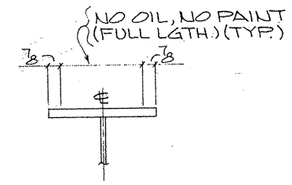

SECTION-C

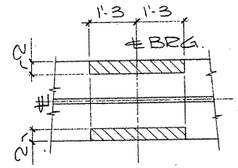

SECTION-D

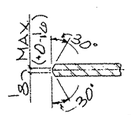

SECTION-E-E

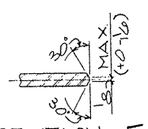

SECTION-F-F

SHOP NOTES:
1) FOR GENERAL NOTES SEE SHT. GN1
2) FOR GIRDER SUB-ASSEMBLY SEE SHT. 114
3) FOR STIFF. DETAILS SEE SHT. 101
4) FOR BLOCKING DIAGRAM SEE SHT. 140
5) FOR HEAT CURVE DIAGRAM SEE SHT. 139
6) ▨ INDICATES OIL, NO PAINT (N.S./F.S. & EDGES)

G0106

FED. ROAD DIV. NO.	STATE	FEDERAL AID PROJECT NO.			
6	TX.	NH (50) M			
STATE DIST. NO.	COUNTY	CONTROL NO.	SECTION NO.	JOB NO.	HIGHWAY NO.
21	HIDALGO	39	17	97	83/281

	Qnty	Material	Length	Mark Temp	Mark Ship	Wt.	Cut From	Remarks
1								
2	1	GIRDER			130PG4.01			
3	1	GIRDER SUB-ASSY		A114				
4	1	INT BRG STIFF		f101				
5	1	INT BRG STIFF		c101				
6	6	DIAF STIFF		k101				

TEXAS DEPARTMENT OF TRANSPORTATION
APPROVED
DIVISION OF BRIDGES AND STRUCTURES
OCT 23 1992
APPROVAL OF THIS DRAWING DOES NOT RELIEVE THE CONTRACTOR OF THE RESPONSIBILITY FOR THE CORRECTNESS OF DESIGN

FOR APPROVAL
AUG 24 '92
NOT FOR CONSTRUCTION

REVISION	DATE	DESCRIPTION OF REVISION
NO. 1		
NO. 2		
NO. 3		
NO. 4		
NO. 5		

PRINTING: Req'd | For | Date

Bolts Holes 15/16 ø Unless Noted
Shop Paint SEE SHT. GN1
Fab. Spec. ASNTD. Inspection
Architect
Erection By Field Connections

HIRSCHFELD STEEL CO. INC.
112 WEST 29TH SAN ANGELO, TEXAS 76903
PHONE (915) 653-3211

DESCRIPTION 610'-0 PLATE GIRDER UNIT
STRUCTURE US 83/281 INTERCHANGE RAMP #1
LOCATION HIDALGO COUNTY
CUSTOMER GILBERT TEXAS CONSTRUCTION
SHIP TO
Customer's Order No.
Dwg. By [signature] Date 7/92
Checked By CRT Date 7/92
SHEET 130 OF
JOB NO. 92-106

CE 92-11 (LINE # 1)

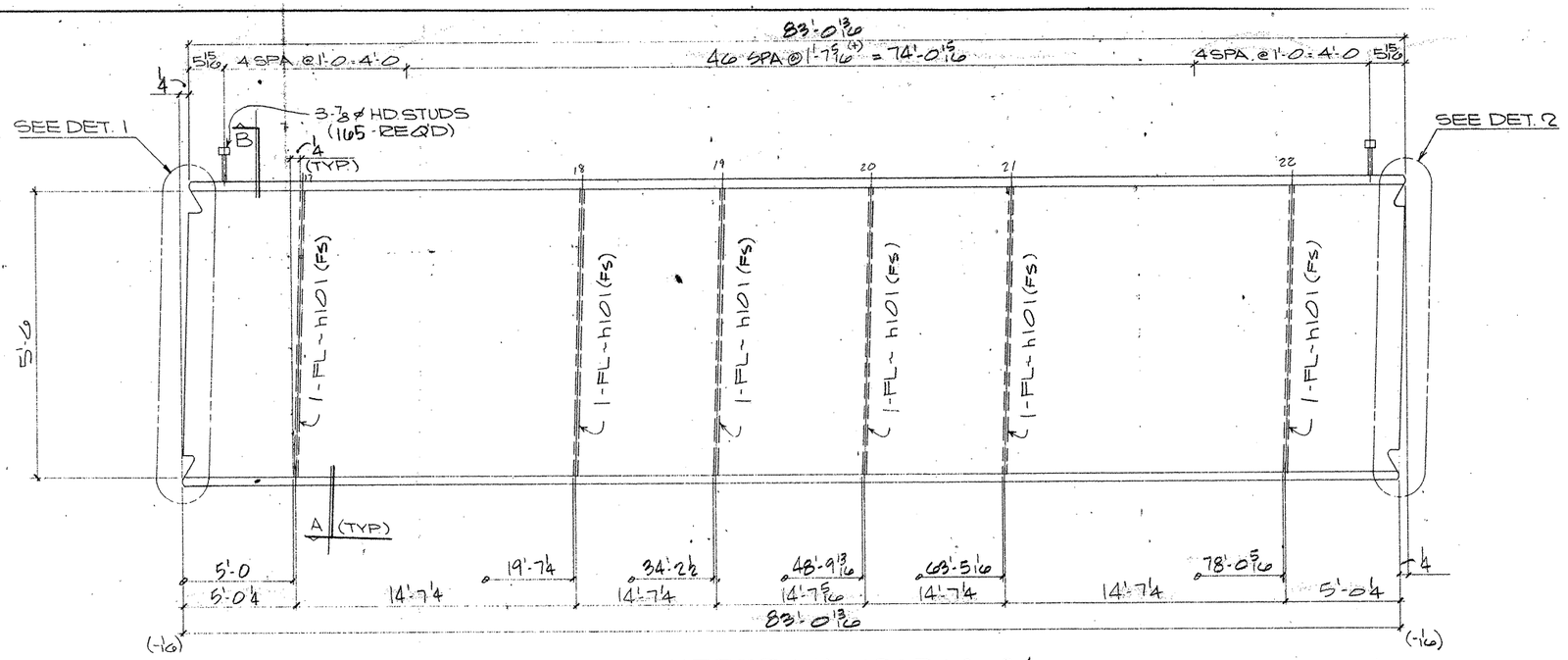

ONE GIRDER MK~129PG3.04

(APPROX. WT. = TONS)

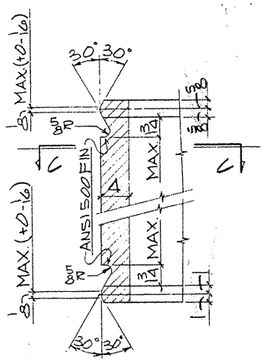

DETAIL-1

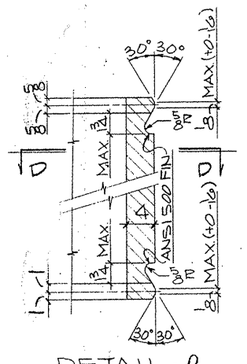

DETAIL-2

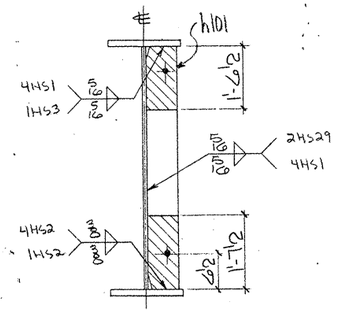

SECTION-A

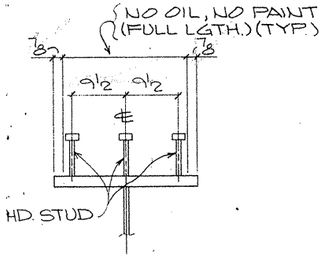

SECTION-B

(TYP. STUD SECT.)

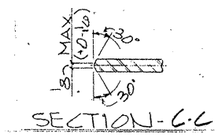

SECTION-C-C

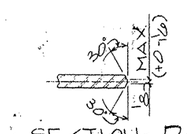

SECTION-D-D

SHOP NOTES:

1) FOR GENERAL NOTES SEE SHT. GN1
2) FOR GIRDER SUB-ASSEMBLY SEE SHT. 113
3) FOR STIFF. DETAILS SEE SHT. 101
4) FOR BLOCKING DIAGRAM SEE SHT. 143
5) FOR HEAT CURVE DIAGRAM SEE SHT. 138
6) ▨ INDICATES OIL, NO PAINT (N.S./F.S. & EDGES)

BILL OF MATERIAL

	Qnty.	Material	Length	Mark Temp	Mark Ship	Wt	Cut From	Remarks
2	1	GIRDER			129PG3.04			
3	1	GIRDER SUB-ASSY		B113				
4	60	DIAF. STIFF		h101				
5	165	HD STUDS 7/8	0'-7				103-1	A108

TEXAS HIGHWAY DEPT. OF TRANSPORTATION — APPROVED — DIVISION OF BRIDGES AND STRUCTURES — DATE 2 1 1992 — APPROVAL OF THIS SHEET DOES NOT RELIEVE THE CONTRACTOR OF THE RESPONSIBILITY FOR THE CORRECTNESS OF DETAILS

FOR APPROVAL AUG 24 '92

NOT FOR CONSTRUCTION

REVISION	DATE	DESCRIPTION OF REVISION
NO. 1		
NO. 2		
NO. 3		
NO. 4		
NO. 5		

PRINTING: Req'd | For | Date

Bolts Holes 15/16 ø Unless Noted
Shop Paint SEE SHT. GN1
Fab Spec. AS NTD. Inspection
Architect
Erection By Field Connections

HIRSCHFELD STEEL CO. INC.
112 WEST 29TH SAN ANGELO, TEXAS 76903
PHONE (915) 653-3211

DESCRIPTION	610'-0 PLATE GIRDER UNIT
STRUCTURE	US 83/281 INTERCHANGE RAMP #1
LOCATION	HIDALGO COUNTY
CUSTOMER	GILBERT TEXAS CONSTRUCTION
SHIP TO	
Customer's Order No.	
Dwg By JP	Date 7/92
Checked By CRT	Date 7/92

SHEET 129 OF
JOB NO 92-106

G0106

FED ROAD DIV NO	STATE	FEDERAL AID PROJECT NO.			
6	TX.	NH (50) M			
STATE DIST NO	COUNTY	CONTROL NO	SECTION NO	JOB NO	HIGHWAY NO
21	HIDALGO	39	17	97	83/281

CE92-11 (LINE # 4) ✓

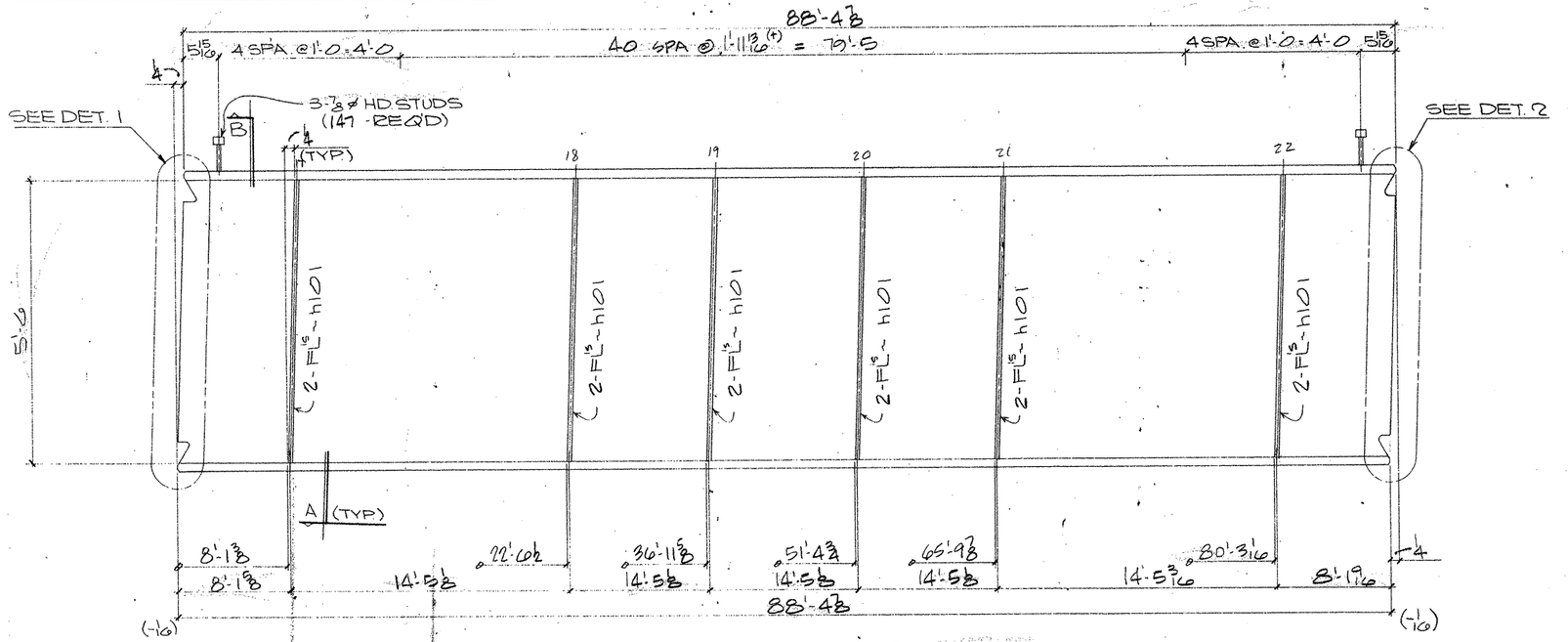

ONE GIRDER MK ~ 128PG4.03
(APPROX. WT. = TONS)

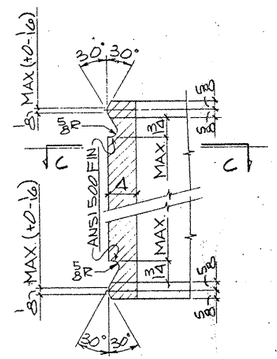

DETAIL - 1

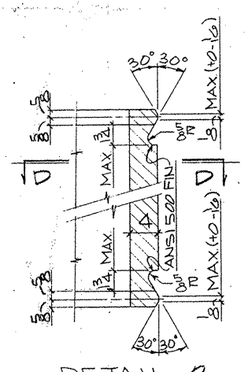

DETAIL - 2

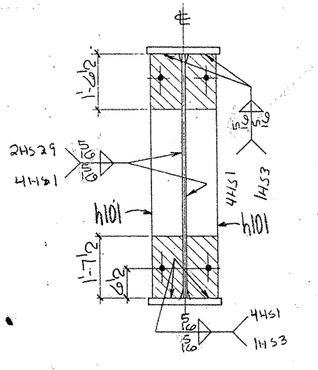

SECTION - A

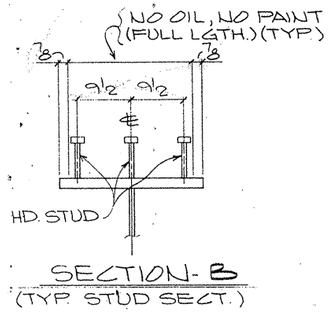

SECTION - B
(TYP. STUD SECT.)

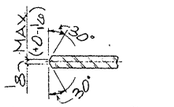

SECTION - C-C

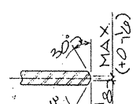

SECTION - D-D

SHOP NOTES:

1) FOR GENERAL NOTES SEE SHT. GN1
2) FOR GIRDER SUB-ASSEMBLY SEE SHT. 112
3) FOR STIFF. DETAILS SEE SHT. 101
4) FOR BLOCKING DIAGRAM SEE SHT. 142
5) FOR HEAT CURVE DIAGRAM SEE SHT. 138
6) ▨ INDICATES OIL, NO PAINT (N.S./F.S, & EDGES)

BILL OF MATERIAL

	Qnty.	Material	Length	Mark Temp	Mark Ship	Wt.	Cut From	Remarks
1								
2	1	GIRDER			128PG4.03			
3	1	GIRDER SUB-ASSY		112				
4	12	DIAF. STIFF		h101				
5	147	HD STUDS 7/8	0'-7				103-1	A108
6								
7								
8								
9								
10								
11								
12								
13								
14								
15								
16								
17								
18								
19								
20								
21								
22								
23								
24								
25								
26								
27								
28								
29								
30								
31								
32								
33								
34								
35								
36								
37								
38								
39								
40								
41								
42								
43								
44								
45								
46								
47								
48								
49								
50								
51								
52								
53								
54								
55								
56								
57								
58								
59								
60								

FOR APPROVAL
AUG 24 '92
NOT FOR CONSTRUCTION

TEXAS HIGHWAY DEPARTMENT
TRANSPORTATION PLANNING DIVISION
APPROVED
DIVISION OF TRANSPORTATION PLANNING
OCT 21 1992
APPROVAL DOES NOT RELIEVE THE CONTRACTOR OF THE RESPONSIBILITY FOR THE CORRECTNESS OF DETAILS

REVISION	DATE	DESCRIPTION OF REVISION
NO 1		
NO 2		
NO 3		
NO 4		
NO 5		

PRINTING

Req'd	For	Date

Bolts Holes 15/16 ø Unless Noted
Shop Paint SEE SHT. GN1
Fab Spec AASHTO Inspection
Architect
Erection By Field Connections

HIRSCHFELD STEEL CO. INC.
112 WEST 29TH SAN ANGELO, TEXAS 76903
PHONE (915) 653-3211

DESCRIPTION 610'-0 PLATE GIRDER UNIT
STRUCTURE US 83/281 INTERCHANGE RAMP#1
LOCATION HIDALGO COUNTY
CUSTOMER GILBERT TEXAS CONSTRUCTION
SHIP TO
Customer's Order No.
Dwg. By JRL Date 7/92
Checked By CRT Date 7/92

SHEET 128 OF
JOB NO. 92-106

G0106

FED. ROAD DIV. NO.	STATE	FEDERAL AID PROJECT NO.			
6	TX.	NH (50) M			
STATE DIST. NO	COUNTY	CONTROL NO	SECTION NO	JOB NO	HIGHWAY NO
21	HIDALGO	39	17	97	83/281

CE92-11 (LINE # 3)

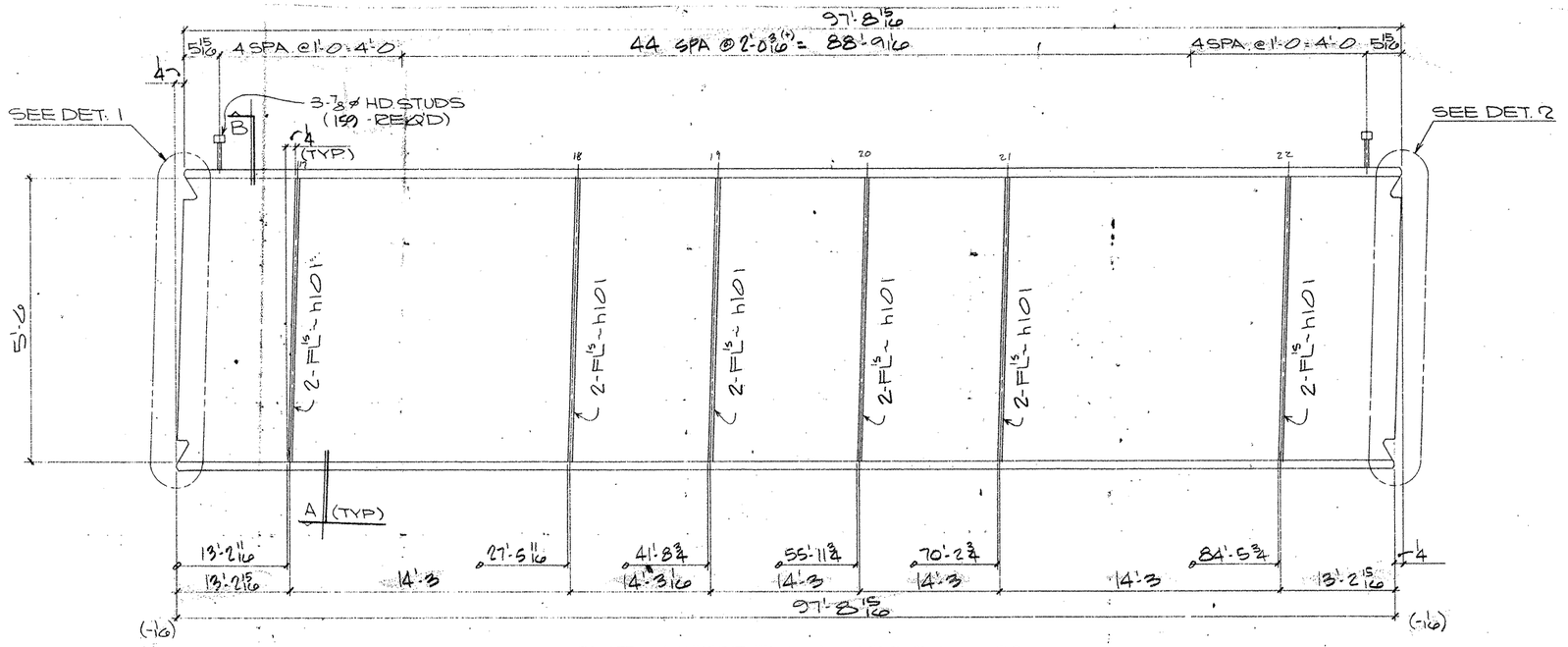

ONE GIRDER MK ~ 127PG4.02

(APPROX. WT. = TONS)

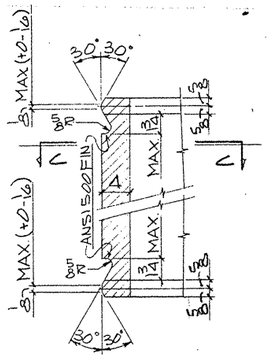

DETAIL - 1

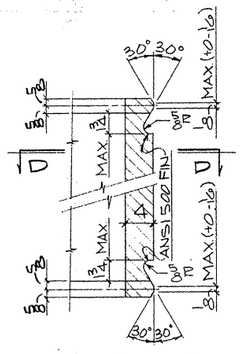

DETAIL - 2

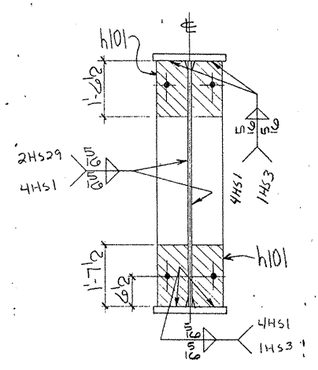

SECTION - A

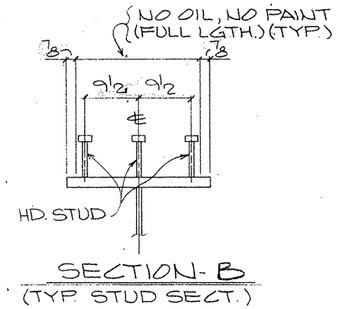

SECTION - B

(TYP. STUD SECT.)

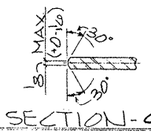

SECTION - C-C

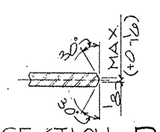

SECTION - D-D

SHOP NOTES:

1) FOR GENERAL NOTES SEE SHT. GN1
2) FOR GIRDER SUB-ASSEMBLY SEE SHT. 111
3) FOR STIFF. DETAILS SEE SHT. 101
4) FOR BLOCKING DIAGRAM SEE SHT. 141
5) FOR HEAT CURVE DIAGRAM SEE SHT. 138
6) ▨ INDICATES OIL, NO PAINT (N.S./F.S. & EDGES)

G0106

FED. ROAD DIV. NO	STATE	FEDERAL AID PROJECT NO.			
6	TX.	NH (50) M			
STATE DIST. NO	COUNTY	CONTROL NO	SECTION NO	JOB NO	HIGHWAY NO
21	HIDALGO	39	17	97	83/281

BILL OF MATERIAL

	Qnty	Material	Length	Mark Temp	Mark Ship	Wt.	Cut From	Remarks
1								
2	1	GIRDER			127PG4.02			
3	1	GIRDER SUB-ASSY		C111				
4	12	DIAF. STIFF		h101				
5	159	HD STUDS 7/8	0'-7				103-1	A108
6								
7								
8								
9								
10								
11								
12								
13								
14								
15								
16								
17								
18								
19								
20								
21								
22								
23								
24								
25								
26								
27								
28								
29								
30								
31								
32								
33								
34								
35								
36								
37								
38								
39								
40								
41								
42								
43								
44								
45								
46								
47								
48								
49								
50								
51								
52								
53								
54								
55								
56								
57								
58								
59								
60								

FOR APPROVAL

AUG 24 '92

NOT FOR CONSTRUCTION

TEXAS DEPARTMENT OF TRANSPORTATION APPROVED DIVISION OF BRIDGES AND STRUCTURES DATE 8-24-1992

APPROVAL OF PLANS, DRAWINGS DOES NOT RELIEVE THE FABRICATOR OF THE RESPONSIBILITY FOR THE CORRECTNESS OF DETAILS

REVISION	DATE	DESCRIPTION OF REVISION
NO. 1		
NO. 2		
NO. 3		
NO. 4		
NO. 5		

PRINTING Read	For	Date

Bolts Holes. 15/16 ø Unless Noted

Shop Paint SEE SHT. GN1

Fab. Spec. AS NTED. Inspection

Architect

Erection By Field Connections

HIRSCHFELD STEEL CO. INC.

112 WEST 29TH SAN ANGELO TEXAS 76903

PHONE (915) 653-3211

DESCRIPTION	60'-0 PLATE GIRDER UNIT
STRUCTURE	US 83/281 INTERCHANGE RAMP #1
LOCATION	HIDALGO COUNTY
CUSTOMER	GILBERT TEXAS CONSTRUCTION
SHIP TO	
Customer's Order No.	
Dwg By JR	Date 7/92
Checked By CRT	Date 7/92

SHEET 127 OF

JOB NO. 92-1006

CE92-11 (LINE # 2)

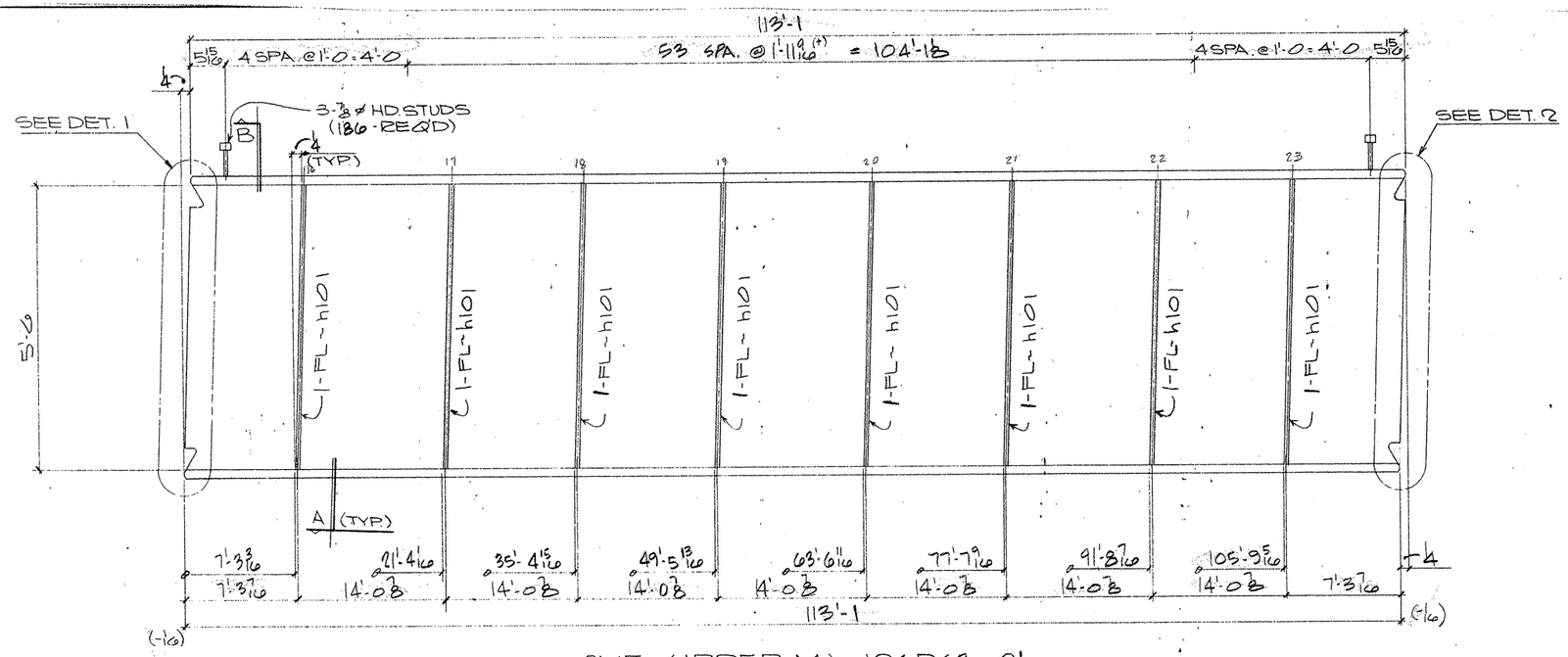

ONE GIRDER MK~126PG3.01

(APPROX. WT. = TONS)

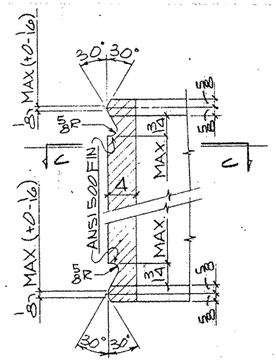

DETAIL - 1

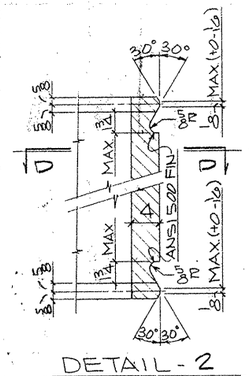

DETAIL - 2

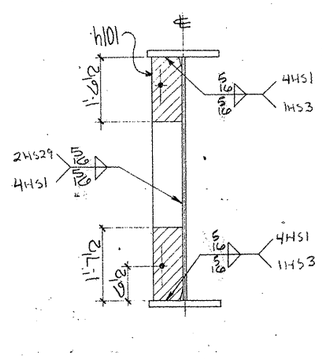

SECTION - A

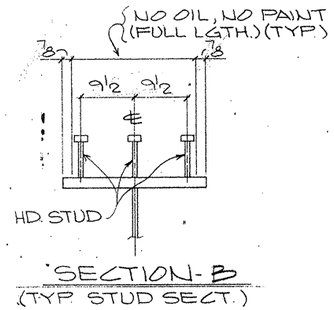

SECTION - B

(TYP. STUD SECT.)

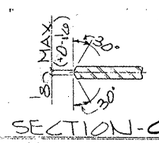

SECTION - C-C

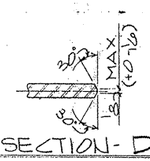

SECTION - D-D

SHOP NOTES:

1) FOR GENERAL NOTES SEE SHT. GN1
2) FOR GIRDER SUB-ASSEMBLY SEE SHT. 110
3) FOR STIFF. DETAILS SEE SHT. 101
4) FOR BLOCKING DIAGRAM SEE SHT. 140
5) FOR HEAT CURVE DIAGRAM SEE SHT. 138
6) ////// INDICATES OIL, NO PAINT (N.S./F.S. & EDGES)

BILL OF MATERIAL

	Qnty	Material	Length	Mark Temp	Mark Ship	Wt.	Cut From	Remarks
1								
2	1	GIRDER			126PG3.01			
3	1	GIRDER SUB-ASSY		B110				
4	8	DIAF. STIFF		h101				
5	186	HD STUDS 7/8"	0'-7				103-1	A108
6								
7								
8								
9								
10								
11								
12								
13								
14								
15								
16								
17								
18								
19								
20								
21								
22								
23								
24								
25								
26								
27								
28								
29								
30								
31								
32								
33								
34								
35								
36								
37								
38								
39								
40								
41								
42								
43								
44								
45								
46								
47								
48								
49								
50								
51								
52								
53								
54								
55								
56								
57								
58								
59								
60								

TEXAS DEPARTMENT OF TRANSPORTATION — DIVISION OF BRIDGE ANALYSIS AND DESIGN — OCT 21 1992 — APPROVAL OF THIS DRAWING DOES NOT RELIEVE CONTRACTOR OF THE RESPONSIBILITY FOR THE CORRECTNESS OF HIS WORK

FOR APPROVAL AUG 24 '92

NOT FOR CONSTRUCTION

REVISION	DATE	DESCRIPTION OF REVISION
NO. 1		
NO. 2		
NO. 3		
NO. 4		
NO. 5		

PRINTING

Req'd	For	Date

Bolts — Holes: 15/16 ø Unless Noted
Shop Paint: SEE SHT. GN1
Fab. Spec: ASHTO
Inspection
Architect
Erection By
Field Connections

HIRSCHFELD STEEL CO. INC.
112 WEST 29TH SAN ANGELO TEXAS 76903
PHONE (915) 653-3211

DESCRIPTION	6106 PLATE GIRDER UNIT
STRUCTURE	US 83/281 INTERCHANGE RAMP F
LOCATION	HIDALGO COUNTY
CUSTOMER	GILBERT TEXAS CONSTRUCTION
SHIP TO	
Customer's Order No.	
Dwg. By JRL	Date 6/92
Checked By CRT	Date 7/92

SHEET 126 OF
JOB NO. 92-106

G0106

FED. ROAD DIV. NO.	STATE	FEDERAL AID PROJECT NO.				
6	TX:	NH (50) M				
STATE DIST. NO.	COUNTY	CONTROL NO.	SECTION NO.	JOB NO.	HIGHWAY NO.	
21	HIDALGO	39	17	97	83/281	

CE92-11 (LINE # 1)

332640

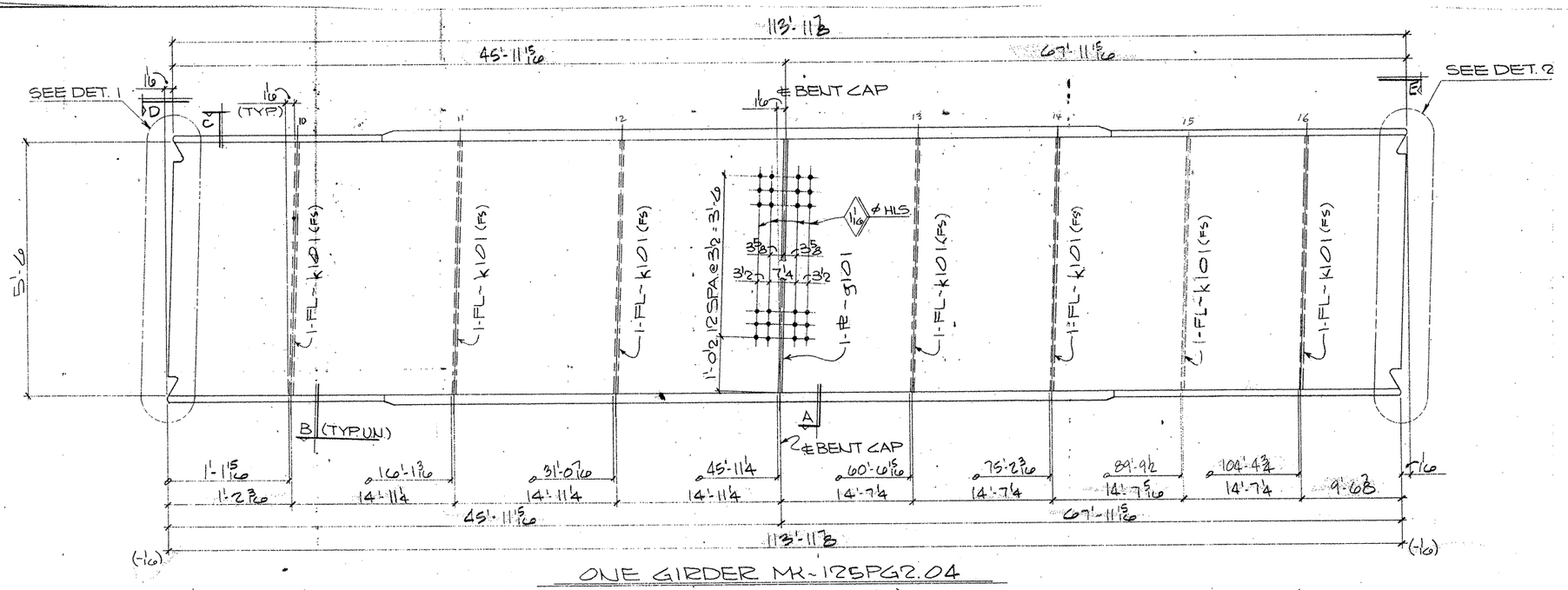

ONE GIRDER MK~125PG2.04

(APPROX. WT. = TONS)

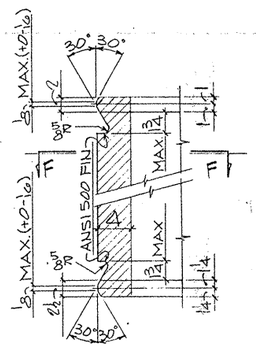

DETAIL~1

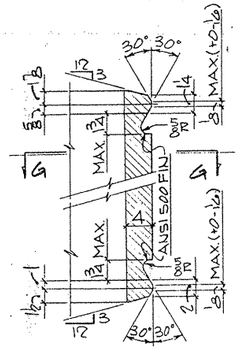

DETAIL~2

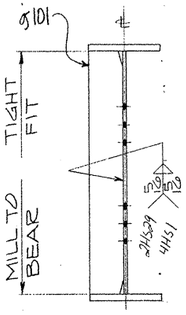

SECTION~A

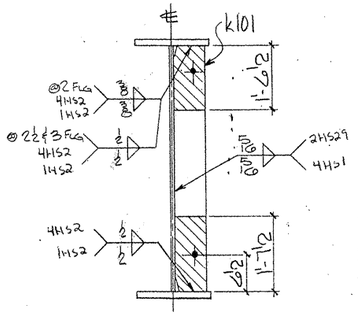

SECTION~B

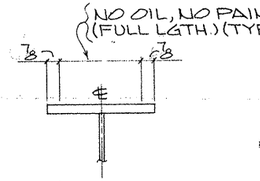

SECTION~C

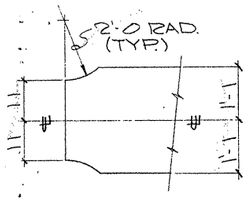

VIEW~D

(TYP. @ T & B FLGS.)

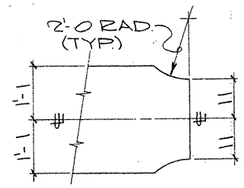

VIEW~E

(TYP. T & B FLG.)

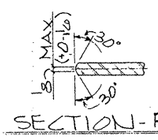

SECTION~F-F

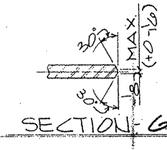

SECTION~G-G

SHOP NOTES:

1) FOR GENERAL NOTES SEE SHT. GN1
2) FOR GIRDER SUB-ASSEMBLY SEE SHT. 113
3) FOR STIFF. DETAILS SEE SHT. 101
4) FOR BLOCKING DIAGRAM SEE SHT. 143
5) FOR HEAT CURVE DIAGRAM SEE SHT. 138
6) ▨ INDICATES OIL, NO PAINT (N.S./F.S. & EDGES)

BILL OF MATERIAL

	Qnty	Material	Length	Mark Temp.	Mark Ship.	Wt.	Cut From	Remarks
1								
2								
3	1	GIRDER			125PG2.04			
4	1	GIRDER SUB-ASSY			A113			
5	1	INT. BRG STIFF			g101			
6	7	DIAF STIFF			k101			
7								
8								
9								
10								
11								
12								
13								
14								
15								
16								
17								
18								
19								
20								
21								
22								
23								
24								
25								
26								
27								
28								
29								
30								
31								
32								
33								
34								
35								
36								
37								
38								
39								
40								
41								
42								
43								
44								
45								
46								
47								
48								
49								
50								
51								
52								
53								
54								
55								
56								
57								
58								
59								
60								

TEXAS DEPARTMENT OF TRANSPORTATION — APPROVED FOR SHOP DRAWING FABRICATION — DATE OCT 27 '92 — APPROVAL OF THE SHOP DRAWINGS DOES NOT RELIEVE THE CONTRACTOR OF THE RESPONSIBILITY FOR THE CORRECTNESS OF DETAILS

FOR APPROVAL
AUG 24 '92
NOT FOR CONSTRUCTION

REVISION	DATE	DESCRIPTION OF REVISION
NO. 1		
NO. 2		
NO. 3		
NO. 4		
NO. 5		

PRINTING: Req'd | For | Date

Bolts — Holes: 15/16 ø — Unless Noted
Shop Paint SEE SHT GN1
Fab. Spec A5 NTD — Inspection
Architect
Erection By — Field Connections

HIRSCHFELD STEEL CO. INC.
112 WEST 29TH SAN ANGELO TEXAS 76903
PHONE (915) 653-3211

DESCRIPTION	610'-0 PLATE GIRDER UNIT
STRUCTURE	US 83/281 INTERCHANGE RAMP #1
LOCATION	HIDALGO COUNTY
CUSTOMER	GILBERT TEXAS CONSTRUCTION
SHIP TO	
Customer's Order No	
Dwg. By JE — Date 7/92	SHEET 125 OF
Checked By CRT — Date 7/92	JOB NO. 92-106

G0106

FED. ROAD DIV. NO	STATE	FEDERAL AID PROJECT NO.			
6	TX.	NH (50) M			
STATE DIST. NO	COUNTY	CONTROL NO	SECTION NO	JOB NO	HIGHWAY NO
21	HIDALGO	39	17	97	83/281

CE92-11 (LINE "4")

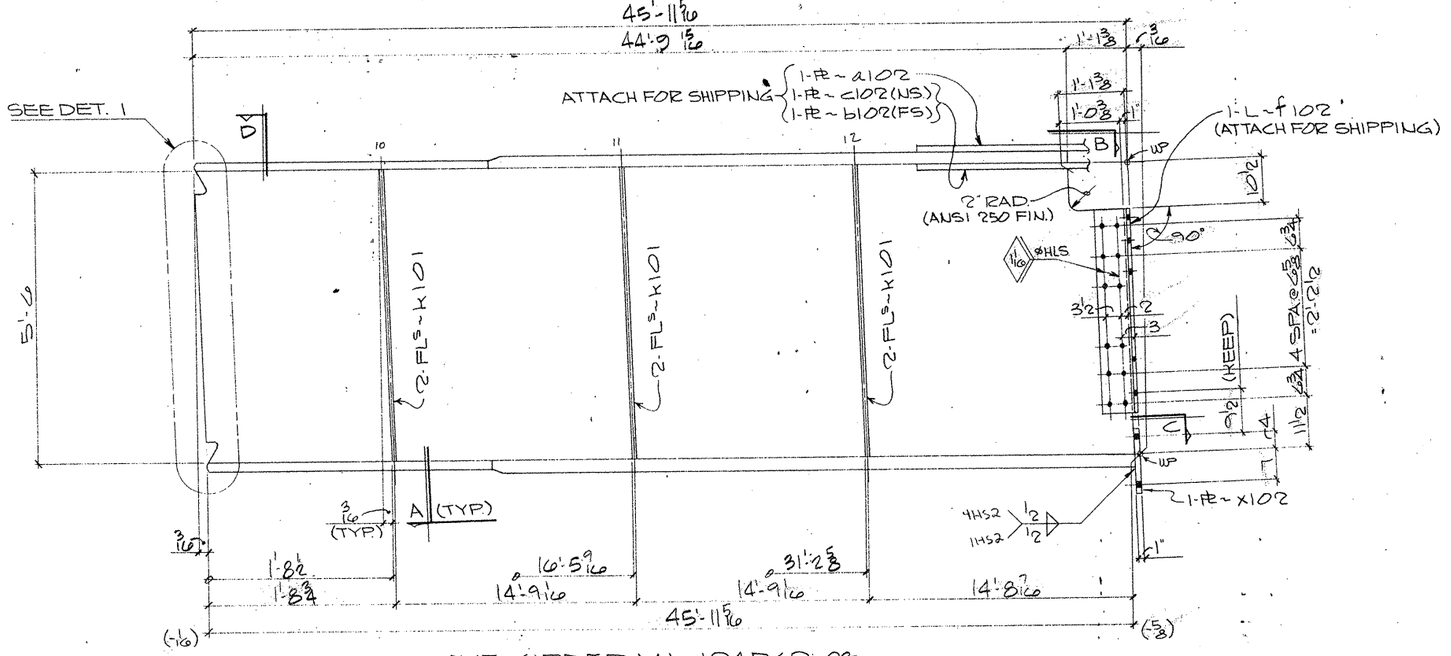

ONE GIRDER MK ~ 124PG2.03
(APPROX. WT. = TONS)

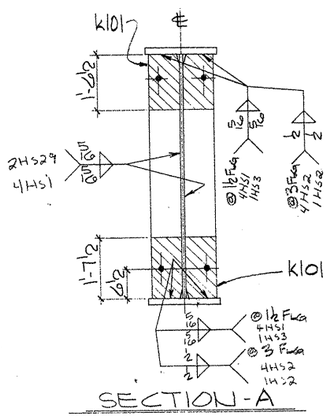

SECTION-A

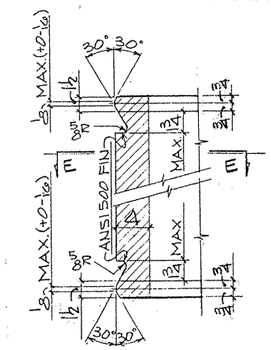

DETAIL-1

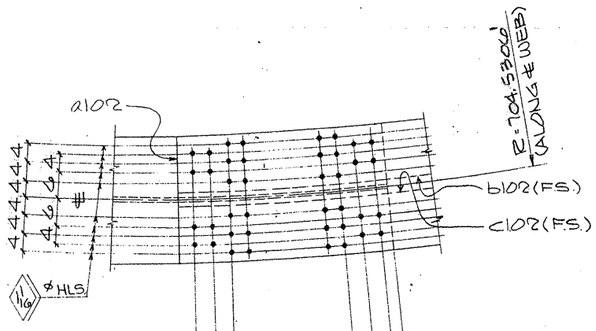

DIMS. ALONG ℄ OF WEB 4 4 12 SPA @ 4 = 4'-0 4 4 13

VIEW-B

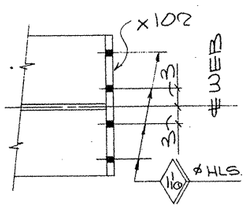

SECTION-C

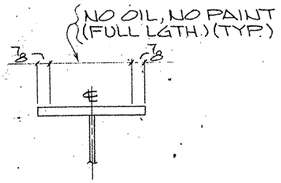

SECTION-D

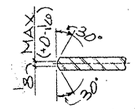

SECTION-E

SHOP NOTES:
1) FOR GENERAL NOTES SEE SHT. GN1
2) FOR GIRDER SUB-ASSEMBLY SEE SHT.112
3) FOR STIFF. DETAILS SEE SHT.101
4) FOR BLOCKING DIAGRAM SEE SHT.142
5) FOR HEAT CURVE DIAGRAM SEE SHT.138
6) FOR SPLICE ATTACHMENTS SEE SHT.102
7) ▨ INDICATES OIL, NO PAINT (N.S./F.S. & EDGES)

BILL OF MATERIAL

	Qnty.	Material	Length	Mark Temp.	Mark Ship.	Wt.	Cut From	Remarks
1								
2								
3	1	GIRDER			124PG2.03			
4	1	GIRDER SUB-ASSY	A112					
5	1	SPLICE PL		a102				
6	1	SPLICE PL		b102				
7	1	SPLICE PL		c102				
8	6	DIAF STIFF		k101				
9	1	ANGLE		f102				
10	1	CONN. PL		x102				
11								
12								
13								
14								
15								
16								
17								
18								
19								
20								
21								
22								
23								
24								
25								
26								
27								
28								
29								
30								
31								
32								
33								
34								
35								
36								
37								
38								
39								
40								
41								
42								
43								
44								
45								
46								
47								
48								
49								
50								
51								
52								
53								
54								
55								
56								
57								
58								
59								
60								

TEXAS DEPARTMENT OF TRANSPORTATION APPROVED OCT 3 1997 DIVISION OF BRIDGES AND STRUCTURES
APPROVAL OF THIS DRAWING DOES NOT RELIEVE THE CONTRACTOR OF THE RESPONSIBILITY FOR THE CORRECTNESS OF THE DETAILS.

FOR APPROVAL
AUG 26 '97
NOT FOR CONSTRUCTION

REVISION	DATE	DESCRIPTION OF REVISION
NO. 1		
NO. 2		
NO. 3		
NO. 4		
NO. 5		

PRINTING

Req'd	For	Date

Bolts Holes 15/16ø Unless Noted
Shop Paint SEE SHT. GN1
Fab Spec A.S.N.T.D. Inspection
Architect
Erection By Field Connections

HIRSCHFELD STEEL CO. INC.
112 WEST 29TH SAN ANGELO TEXAS 76903
PHONE (915) 653-3211

DESCRIPTION	610'-0 PLATE GIRDER UNIT
STRUCTURE	US 83/281 INTERCHANGE RAMP "F"
LOCATION	HIDALGO COUNTY
CUSTOMER	GILBERT TEXAS CONSTRUCTION
SHIP TO	
Customer's Order No.	
Dwg. By JDE Date 7/97	SHEET 124 OF
Checked By CRT Date 7/97	JOB NO 92-1060

G0106

FED ROAD DIV. NO.	STATE	FEDERAL AID PROJECT NO.				
6	TX.	NH (50) M				
STATE DIST. NO.	COUNTY	CONTROL NO.	SECTION NO.	JOB NO.	HIGHWAY NO.	
21	HIDALGO	39	17	97	83/281	

CE 92-11 (LINE # 3)

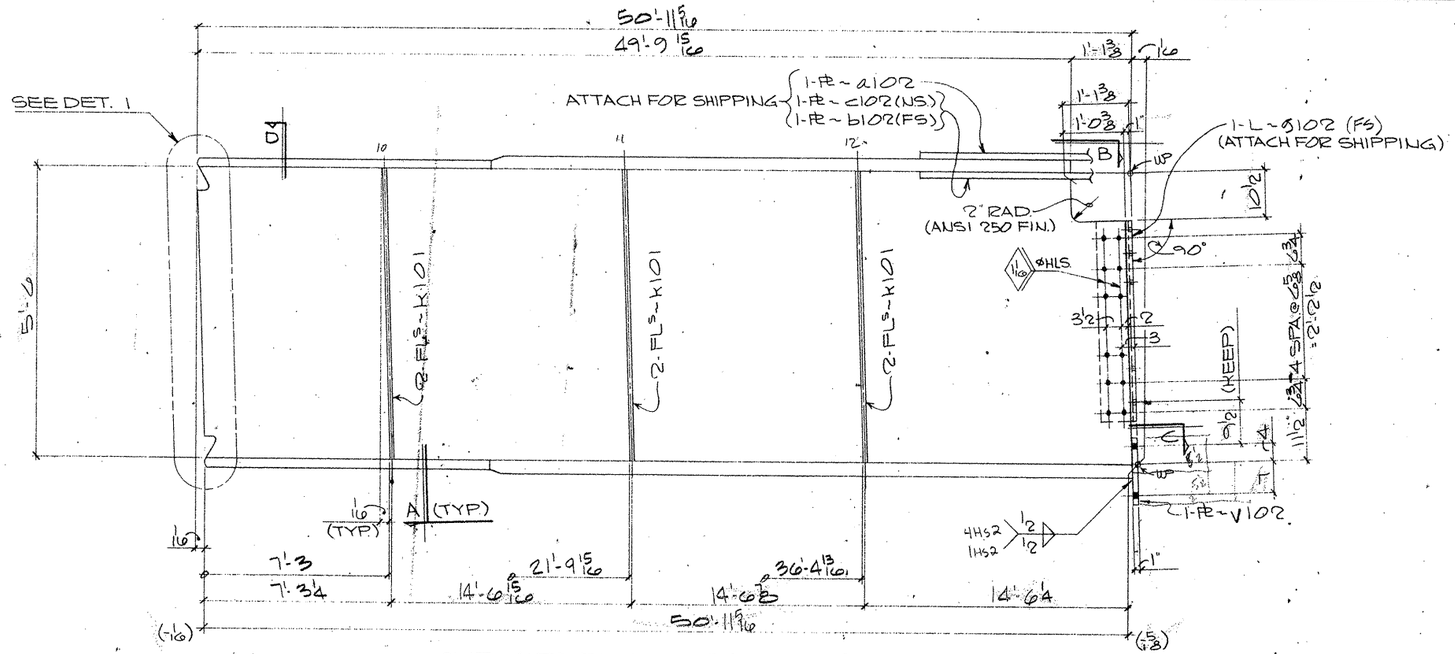

ONE GIRDER MK ~ 123PG2.02
(APPROX. WT. = TONS)

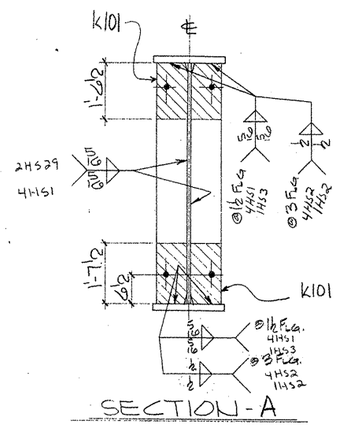

SECTION - A

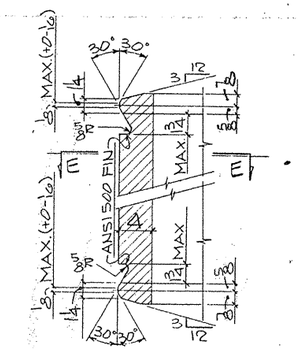

DETAIL - 1

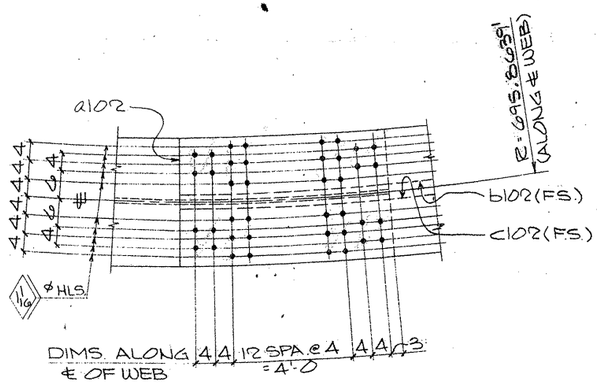

VIEW - B

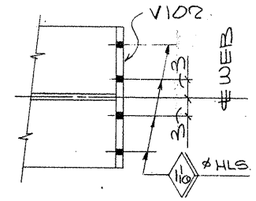

SECTION - C

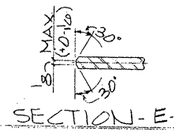

SECTION - E-E

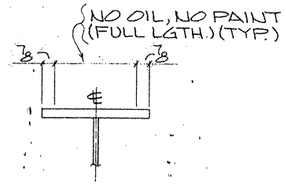

SECTION - D

SHOP NOTES:

1) FOR GENERAL NOTES SEE SHT. GN1
2) FOR GIRDER SUB-ASSEMBLY SEE SHT. 111
3) FOR STIFF. DETAILS SEE SHT. 101
4) FOR BLOCKING DIAGRAM SEE SHT. 141
5) FOR HEAT CURVE DIAGRAM SEE SHT. 138
6) FOR SPLICE ATTACHMENTS SEE SHT. 102
7) ▨ INDICATES OIL, NO PAINT (N.S./F.S. & EDGES)

BILL OF MATERIAL

	Qnty	Material	Length	Mark Temp.	Mark Ship.	Wt	Cut From	Remarks
3	1	GIRDER			123PG2.02			
4	1	GIRDER SUB-ASSY		A111				
5	1	SPLICE PL		a102				
6	1	SPLICE PL		b102				
7	1	SPLICE PL		c102				
8	6	DIAF STIFF		K101				
9	1	ANGLE		g102				
10	1	CONN. PL		v102				

TEXAS DEPARTMENT OF TRANSPORTATION APPROVED DIVISION OF BRIDGES AND STRUCTURES OCT 2 1992
APPROVAL OF THIS DRAWING DOES NOT RELIEVE THE FABRICATOR OF THE RESPONSIBILITY FOR THE CORRECTNESS OF DETAILS

FOR APPROVAL
AUG 24 '92
NOT FOR CONSTRUCTION

REVISION	DATE	DESCRIPTION OF REVISION
NO. 1		
NO. 2		
NO. 3		
NO. 4		
NO. 5		

PRINTING

Req'd	For	Date

Bolts Holes. 15/16ϕ Unless Noted
Shop Paint SEE SHT. GN1
Fab Spec. ASNTB Inspection
Architect
Erection By Field Connections

HIRSCHFELD STEEL CO. INC.
112 WEST 29TH SAN ANGELO TEXAS 76903
PHONE (915) 653-3211

DESCRIPTION	610'-0" PLATE GIRDER UNIT
STRUCTURE	US 83/281 INTERCHANGE RAMP "C"
LOCATION	HIDALGO COUNTY
CUSTOMER	GILBERT TEXAS CONSTRUCTION
SHIP TO	
Customer's Order No.	
Dwg. By JZ	Date 6/92
Checked By CRT	Date 7/92

SHEET 123 OF
JOB NO 92-106

FED. ROAD DIV. NO	STATE	FEDERAL AID PROJECT NO.				
6	TX.	NH (50) M				
STATE DIST. NO	COUNTY	CONTROL NO	SECTION NO	JOB NO	HIGHWAY NO	
21	HIDALGO	39	17	97	83/281	

G1016

CE 92-11 (LINE #2)

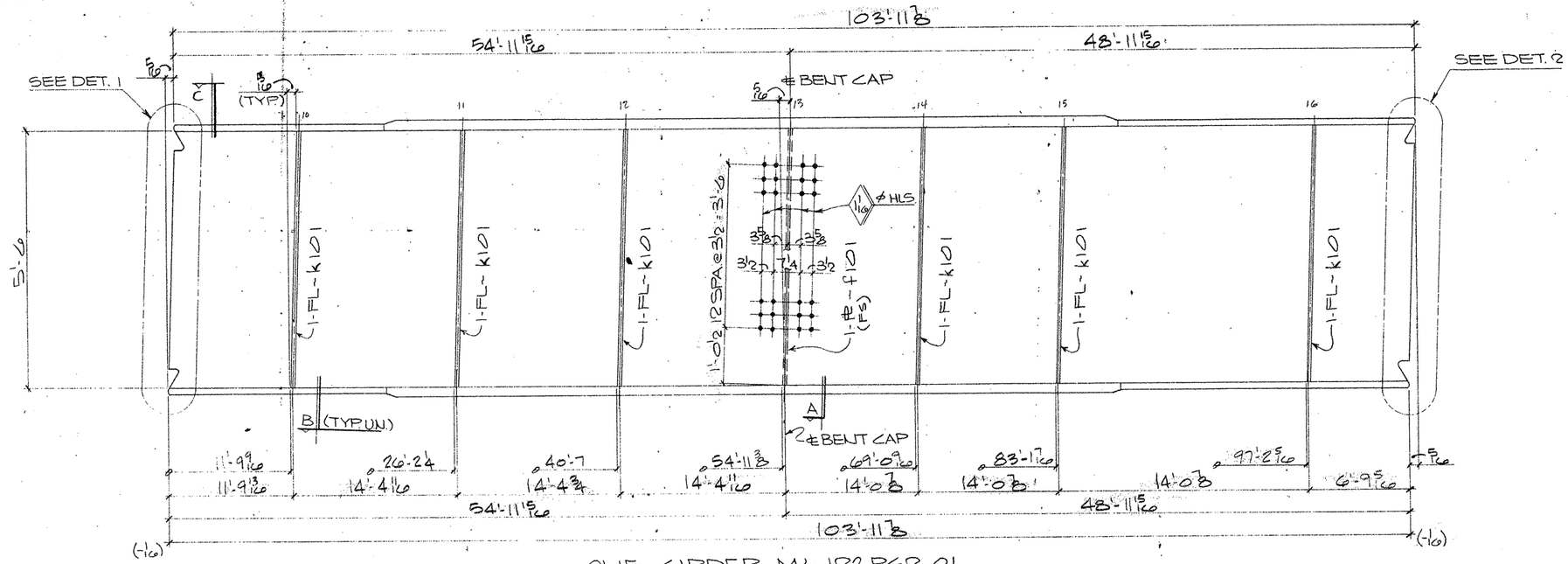

ONE GIRDER MK-122PG2.01

(APPROX. WT. = TONS)

	Only	Material	Length	Mark Temp	Mark Ship	Wt.	Cut From	Remarks
1								
2								
3	1	GIRDER			122PG2.01			
4	1	GIRDER SUB-ASSY		A110				
5	1	INT. BRG STIFF.		f101				
6	60	DIAF. STIFF		k101				
7								
8								
9								
10								
11								
12								
13								
14								
15								
16								
17								
18								
19								
20								
21								
22								
23								
24								
25								
26								
27								
28								
29								
30								
31								
32								
33								
34								
35								
36								
37								
38								
39								
40								
41								
42								
43								
44								
45								
46								
47								
48								
49								
50								
51								
52								
53								
54								
55								
56								
57								
58								
59								
60								

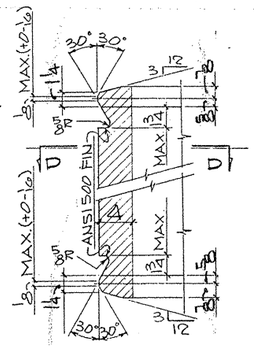

DETAIL-1

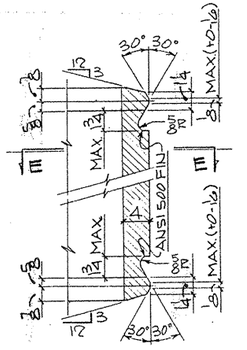

DETAIL-2

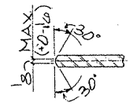

SECTION-D-D

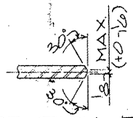

SECTION-E-E

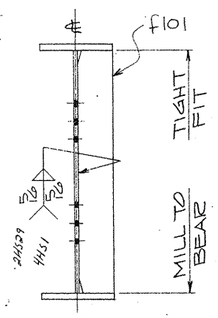

SECTION-A

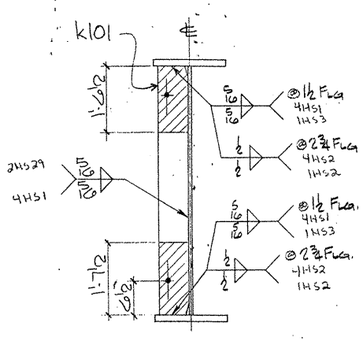

SECTION-B

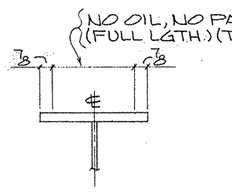

SECTION-C

SHOP NOTES:

1) FOR GENERAL NOTES SEE SHT. GN1
2) FOR GIRDER SUB-ASSEMBLY SEE SHT. 110
3) FOR STIFF. DETAILS SEE SHT. 101
4) FOR BLOCKING DIAGRAM SEE SHT. 140
5) FOR HEAT CURVE DIAGRAM SEE SHT. 138
6) [ ] INDICATES GRIND, NO PAINT (N.S., F.S., & EDGES)

G010 6

FED ROAD DIV NO	STATE	FEDERAL AID PROJECT NO.			
6	TX.	NH (50) M			
STATE DIST NO	COUNTY	CONTROL NO	SECTION NO	JOB NO	HIGHWAY NO
21	HIDALGO	39	17	97	83/281

FOR APPROVAL
AUG 24 '92
NOT FOR CONSTRUCTION

STATE OF TEXAS DEPARTMENT OF TRANSPORTATION
APPROVED
DIVISION OF BRIDGES AND STRUCTURES
OCT 21 1992
APPROVAL OF THESE DRAWINGS DOES NOT RELIEVE THE ENGINEER OF RECORD FOR THE CONTRACT OF ANY RESPONSIBILITY FOR THE CORRECTNESS OF SAME

REVISION	DATE	DESCRIPTION OF REVISION
NO. 1		
NO. 2		
NO. 3		
NO. 4		
NO. 5		

PRINTING Req'd	For	Date

Bolts Holes, 15/16 ø Unless Noted
Shop Paint SEE SHT GN1
Fab Spec AASHTO Inspection
Architect
Erection By Field Connections

HIRSCHFELD STEEL CO. INC.
112 WEST 29TH SAN ANGELO TEXAS 76903
PHONE (915) 653-3211

DESCRIPTION	610'-0 PLATE GIRDER UNIT
STRUCTURE	US 83/281 INTERCHANGE RAMP #5
LOCATION	HIDALGO COUNTY
CUSTOMER	GILBERT TEXAS CONSTRUCTION
SHIP TO	
Customer's Order No.	
Dwg. By JDR	Date 6/92
Checked By CRT	Date 7/92

SHEET 122 OF
JOB NO. 92-100

CE92-11 (LINE # 1)

328640

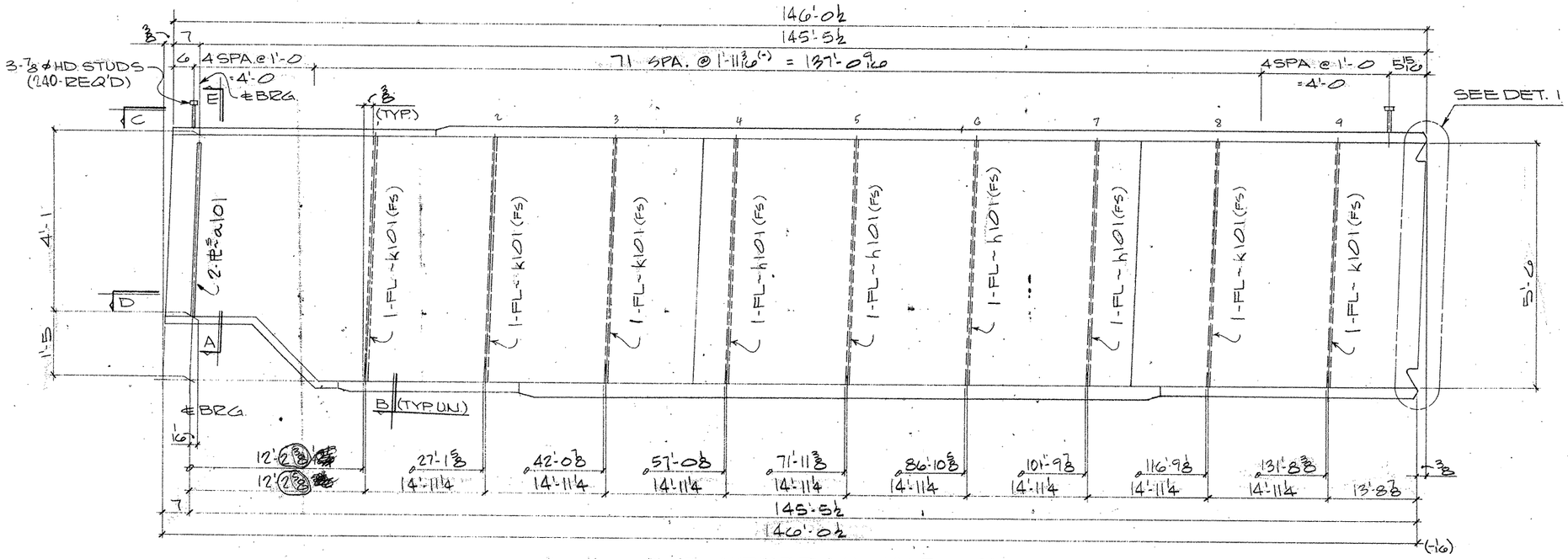

ONE GIRDER MK ~ 121 PG1.04
(APPROX. WT. = TONS)

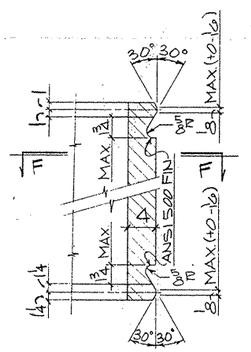

DETAIL-1

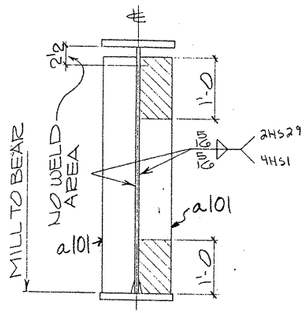

SECTION-A

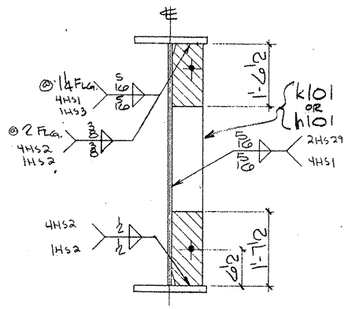

SECTION-B

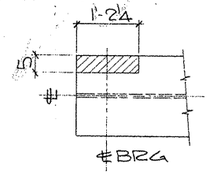

VIEW-C

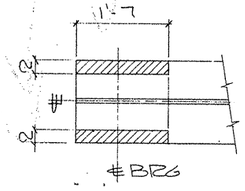

SECTION-D

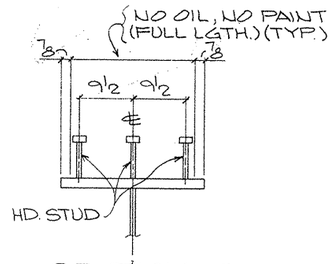

SECTION-E
(TYP. STUD SECT.)

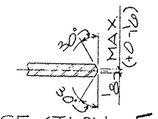

SECTION-F-F

SHOP NOTES:
1) FOR GENERAL NOTES SEE SHT. GN1
2) FOR GIRDER SUB-ASSEMBLY SEE SHT. 109
3) FOR STIFF. DETAILS SEE SHT. 101
4) FOR BLOCKING DIAGRAM SEE SHT. 143
5) FOR HEAT CURVE DIAGRAM SEE SHT. 138
6) INDICATES OIL, NO PAINT (N.S./F.S. & EDGES)

G0106

FED. ROAD DIV. NO	STATE	FEDERAL AID PROJECT NO			
6	TX.	NH (50) M			
STATE DIST. NO	COUNTY	CONTROL NO	SECTION NO	JOB NO	HIGHWAY NO
21	HIDALGO	39	17	97	83/281

BILL OF MATERIAL

Qnty	Material	Length	Mark Temp	Mark Ship	Wt	Cut From	Remarks
1	GIRDER			121PG	1.04		
1	GIRDER SUB-ASSY		A109				
2	BRG STIFF		a101				
5	DIAF. STIFF		k101				
4	DIAF. STIFF		h101				
240	HD STUD 7/8⌀	0'-7				103-1	A108

FOR APPROVAL
AUG 24 '92
NOT FOR CONSTRUCTION

TEXAS DEPARTMENT OF TRANSPORTATION
APPROVED
DIVISION OF BRIDGES AND STRUCTURES
OCT 21 1992
APPROVAL OF THIS DRAWING DOES NOT RELIEVE THE CONTRACTOR OF THE RESPONSIBILITY FOR THE CORRECTIONS OF DETAILS

REVISION	DATE	DESCRIPTION OF REVISION
NO. 1		
NO. 2		
NO. 3		
NO. 4		
NO. 5		

PRINTING: Req'd | For | Date

Bolts Holes: 15/16 ⌀ Unless Noted
Shop Paint SEE SHT GN1
Fab Spec AS NTD. Inspection
Architect
Erection By Field Connections

HIRSCHFELD STEEL CO. INC.
112 WEST 29TH SAN ANGELO, TEXAS 76903
PHONE (915) 653-3211

DESCRIPTION 610'-0 PLATE GIRDER UNIT
STRUCTURE US 83/281 INTERCHANGE RAMP #1
LOCATION HIDALGO COUNTY
CUSTOMER GILBERT TEXAS CONSTRUCTION
SHIP TO
Customer's Order No.
Dwg By JRC Date 6/92
Checked By CRT Date 7/92
SHEET 121 OF
JOB NO 92-106

CE 92-11 (LINE #4)

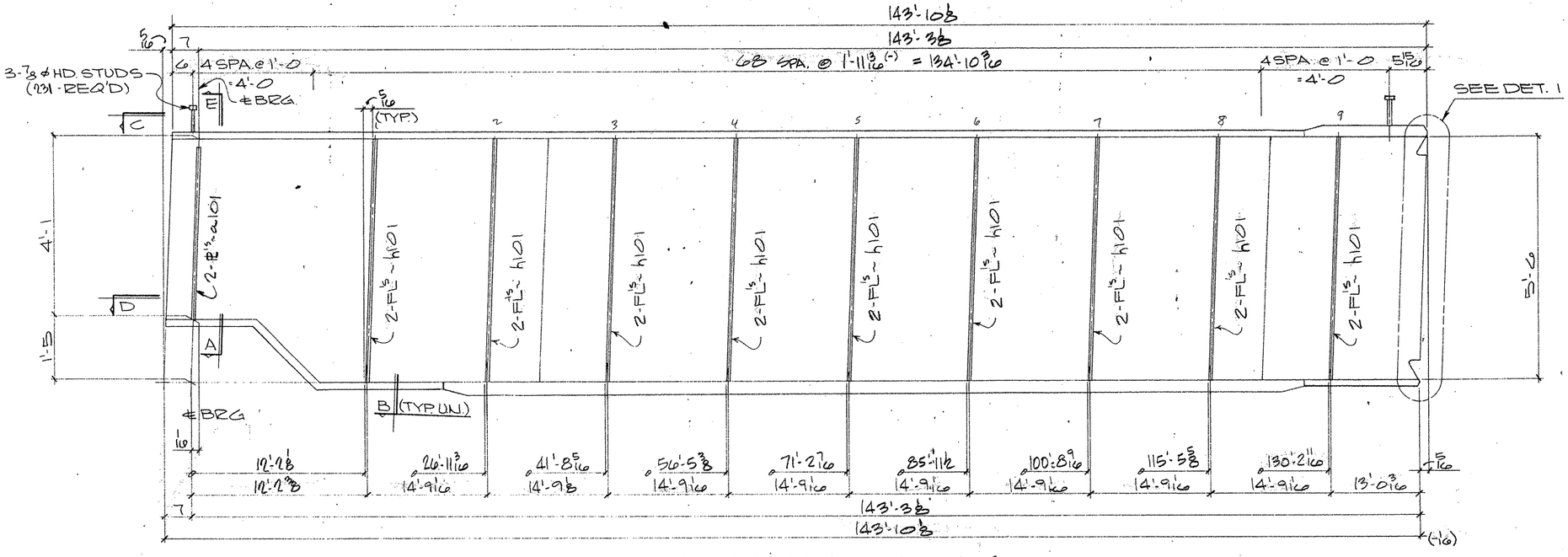

ONE GIRDER MK - 120PG1.03
(APPROX. WT. = TONS)

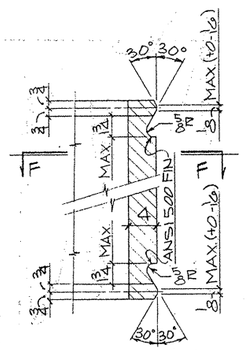

DETAIL - 1

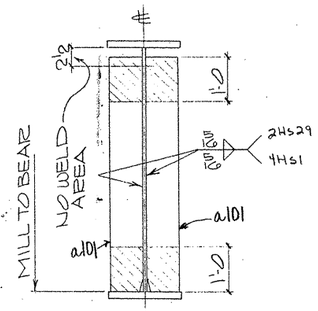

SECTION - A

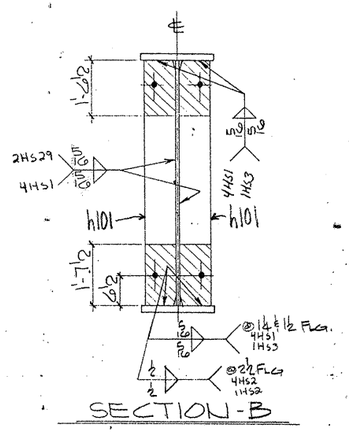

SECTION - B

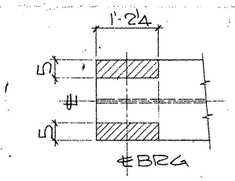

VIEW - C

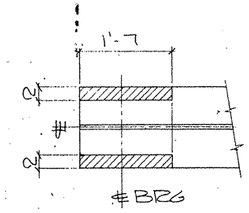

SECTION - D

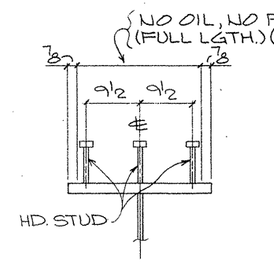

SECTION - E
(TYP. STUD SECT.)

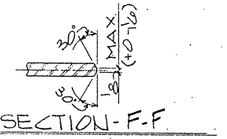

SECTION - F-F

SHOP NOTES:

1) FOR GENERAL NOTES SEE SHT. GN1
2) FOR GIRDER SUB-ASSEMBLY SEE SHT. 108
3) FOR STIFF. DETAILS SEE SHT. 101
4) FOR BLOCKING DIAGRAM SEE SHT. 142
5) FOR HEAT CURVE DIAGRAM SEE SHT. 138
6) ▨ INDICATES OIL, NO PAINT (N.S./F.S. & EDGES)

BILL OF MATERIAL

	Qnty.	Material	Length	Mark Temp.	Mark Ship.	Wt.	Cut From	Remarks
1								
2								
3	1	GIRDER			120PG1.03			
4	1	GIRDER SUB-ASSY		A108				
5	2	BRG STIFF		a101				
6	18	DIAF STIFF		h101				
7	231	HD STUD ⅞ø	0'-7				103-1	A108
8								
9								
10								
11								
12								
13								
14								
15								
16								
17								
18								
19								
20								
21								
22								
23								
24								
25								
26								
27								
28								
29								
30								
31								
32								
33	-							
34								
35								
36								
37								
38								
39								
40								
41								
42								
43								
44								
45								
46								
47								
48								
49								
50								
51								
52								
53								
54								
55								
56								
57								
58								
59								
60								

TEXAS DEPARTMENT OF TRANSPORTATION
APPROVED
OCT 21 1992
APPROVAL OF SHOP DRAWINGS DOES NOT RELIEVE THE FABRICATOR OF THE RESPONSIBILITY FOR THE CORRECTNESS OF DETAILS

FOR APPROVAL
AUG 24 92
NOT FOR CONSTRUCTION

REVISION	DATE	DESCRIPTION OF REVISION
NO 1		
NO 2		
NO 3		
NO 4		
NO 5		

PRINTING

Regd	For	Date

Bolts Holes, 15/16 ø Unless Noted
Shop Paint SEE SHT GN1
Fab Spec. ASNTD. Inspection
Architect
Erection By Field Connections

HIRSCHFELD STEEL CO. INC.
112 WEST 29TH SAN ANGELO TEXAS 76903
PHONE (915) 653-3211

DESCRIPTION 610'-0 PLATE GIRDER UNIT
STRUCTURE US 83/281 INTERCHANGE RAMP #1
LOCATION HIDALGO COUNTY
CUSTOMER GILBERT TEXAS CONSTRUCTION
SHIP TO
Customer's Order No.
Dwg. By JBR Date 6/92
Checked By CRT Date 7/92
SHEET 120 OF
JOB NO 92-106

G0106

FED. ROAD DIV. NO.	STATE	FEDERAL AID PROJECT NO.			
6	TX.	NH (50) M			
STATE DIST. NO.	COUNTY	CONTROL NO.	SECTION NO.	JOB NO.	HIGHWAY NO.
21	HIDALGO	39	17	97	83/281

CE 92-11 (LINE #3)

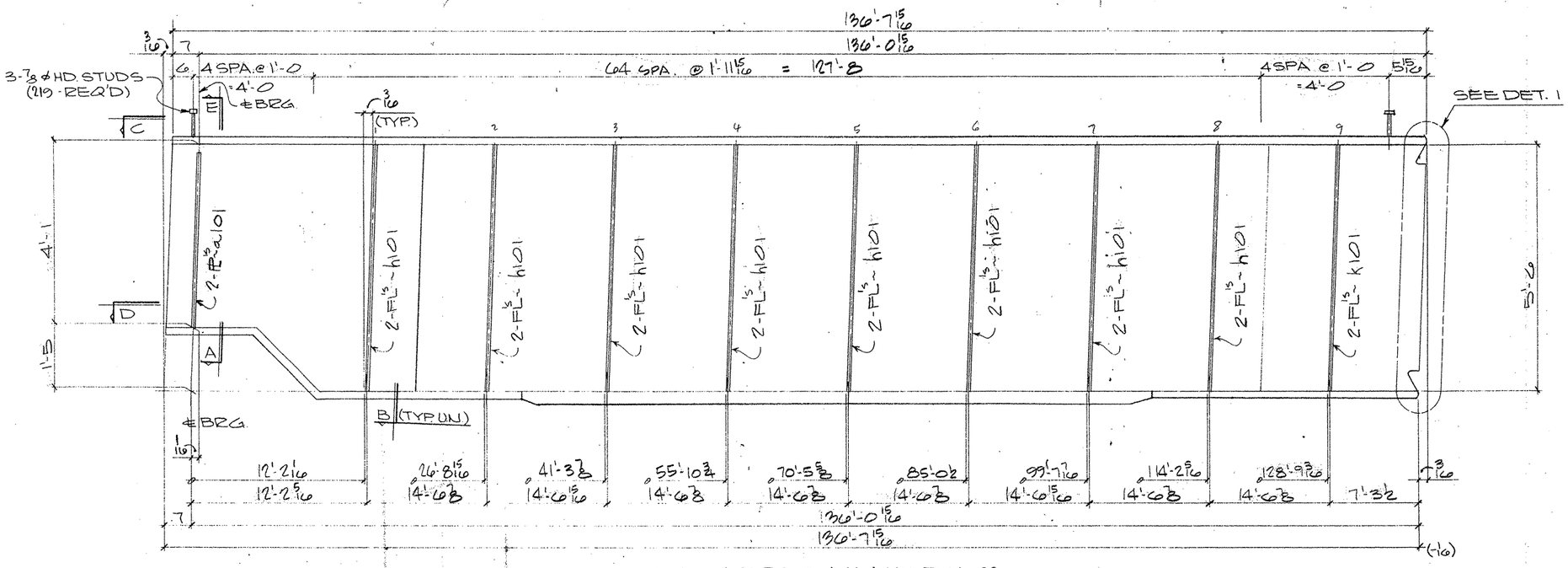

ONE GIRDER MK = 119PG1.02
(APPROX. WT. = TONS)

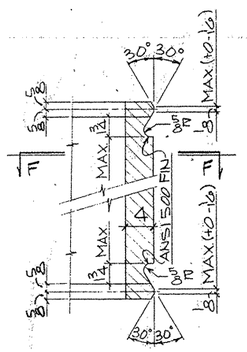

DETAIL - 1

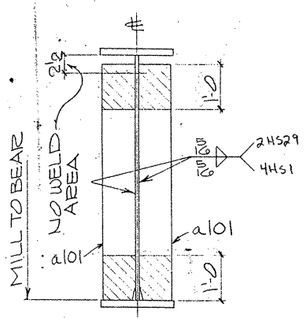

SECTION - A

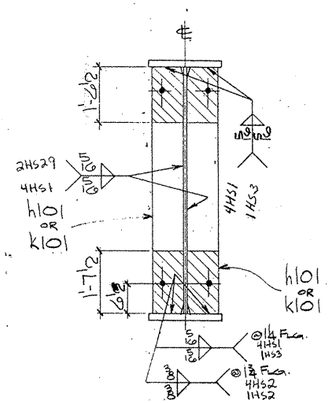

SECTION - B

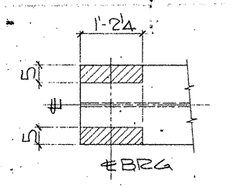

VIEW - G

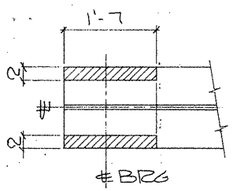

SECTION - D

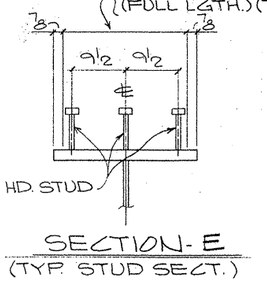

SECTION - E
(TYP. STUD SECT.)

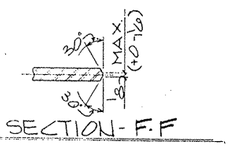

SECTION - F.F

SHOP NOTES:

1) FOR GENERAL NOTES SEE SHT. GN1
2) FOR GIRDER SUB-ASSEMBLY SEE SHT. 107
3) FOR STIFF. DETAILS SEE SHT. 101
4) FOR BLOCKING DIAGRAM SEE SHT. 141
5) FOR HEAT CURVE DIAGRAM SEE SHT. 138
6) ▨ INDICATES OIL, NO PAINT (N.S./F.S. & EDGES.)

G01016

FED ROAD DIV. NO.	STATE	FEDERAL AID PROJECT NO.			
6	TX.	NH; (50) M			
STATE DIST. NO	COUNTY	CONTROL NO	SECTION NO	JOB NO	HIGHWAY NO
21	HIDALGO	39	17	97	83/281

BILL OF MATERIAL

	Qnty	Material	Length	Mark Temp.	Mark Ship	Wt.	Cut From	Remarks
1								
2								
3	1	GIRDER			119PG1.02			
4	1	GIRDER SUB-ASSY		A107				
5	2	BRG STIFF		a101				
6	16	DIAF. STIFF		h101				
7	2	DIAF. STIFF		k101				
8	219	HD STUD 3/4	0'-7				103-1	A108
9								
10								
11								
12								
13								
14								
15								
16								
17								
18								
19								
20								
21								
22								
23								
24								
25								
26								
27								
28								
29								
30								
31								
32								
33								
34								
35								
36								
37								
38								
39								
40								
41								
42								
43								
44								
45								
46								
47								
48								
49								
50								
51								FOR APPROVAL AUG 24 92
52								
53		THOMAS G. [illegible] TEXAS REGISTERED ENGINEER 54 [illegible] OCT 8 1992						NOT FOR CONSTRUCTION
54								
55								
56								
57								
58		APPROVAL OF THIS DRAWING DOES NOT RELIEVE THE MANUFACTURER OF THE RESPONSIBILITY FOR THE CORRECTNESS OF DETAILS						
59								
60								

REVISION	DATE	DESCRIPTION OF REVISION
NO. 1		
NO. 2		
NO. 3		
NO. 4		
NO. 5		

PRINTING		
Reg'd	For	Date

Bolts Holes: 15/16 ø Unless Noted
Shop Paint SEE SHT GN1
Fab Spec AS NTD. Inspection
Architect
Erection By Field Connections

HIRSCHFELD STEEL CO. INC.
112 WEST 29TH SAN ANGELO, TEXAS 76903
PHONE (915) 653-3211

DESCRIPTION	610'-0 PLATE GIRDER UNIT
STRUCTURE	US 83/281 INTERCHANGE RAMP "I"
LOCATION	HIDALGO COUNTY
CUSTOMER	GILBERT TEXAS CONSTRUCTION
SHIP TO	
Customer's Order No.	
Dwg. By JRE	Date 6/92
Checked By CRT	Date 7/92

SHEET 119 OF
JOB NO. 92-106

CF 92-11 (LINE #2)

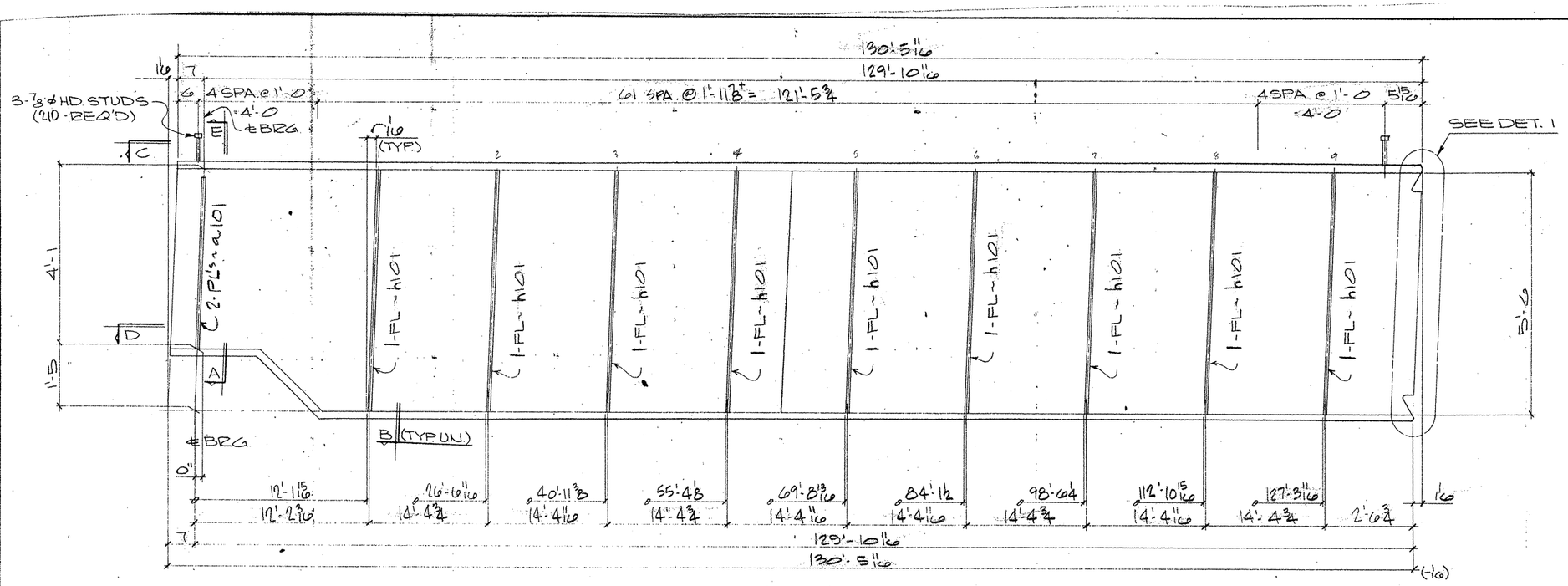

ONE GIRDER MK~ 118 PG1.01
(APPROX. WT. = TONS)

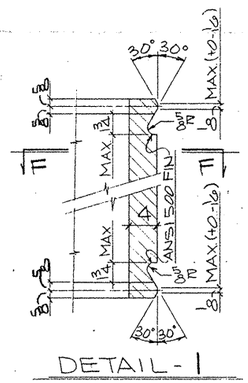

DETAIL - 1

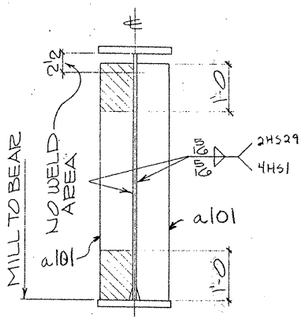

SECTION - A

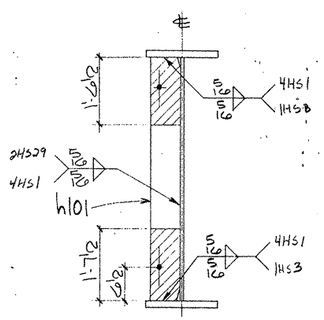

SECTION - B

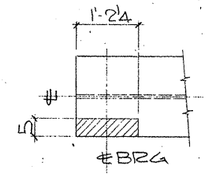

VIEW - C

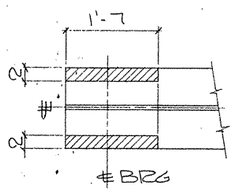

SECTION - D

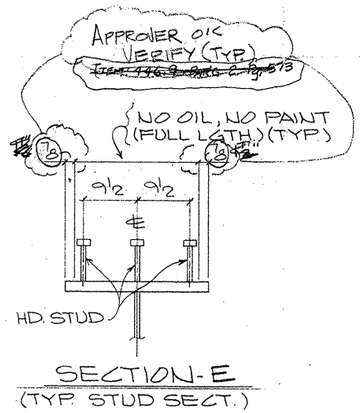

SECTION - E
(TYP. STUD SECT.)

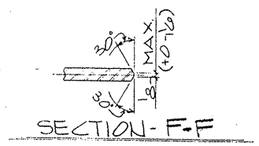

SECTION - F-F

SHOP NOTES:

1) FOR GENERAL NOTES SEE SHT. GN1
2) FOR GIRDER SUB-ASSEMBLY SEE SHT. 1060
3) FOR STIFF. DETAILS SEE SHT. 101
4) FOR BLOCKING DIAGRAM SEE SHT. 140
5) FOR HEAT CURVE DIAGRAM SEE SHT. 138
6) ▨ INDICATES OIL, NO PAINT (N.S./F.S. & EDGES)

G0106

FED ROAD DIV. NO.	STATE	FEDERAL AID PROJECT NO.				
6	TX.	NH (50) M				
STATE DIST. NO.	COUNTY	CONTROL NO.	SECTION NO.	JOB NO.	HIGHWAY NO.	
21	HIDALGO	39	17	97	83/281	

BILL OF MATERIAL

	Qnty	Material	Length	Mark Temp	Mark Ship	Wt.	Cut From	Remarks
3	1	GIRDER			118PG1.01			
4	1	GIRDER SUB-ASSY		A1060				
5	2	BRG STIFF		a101				
6	9	DIAF STIFF		h101				
7	210	HD STUD 3/8ø	0'-7				103-1	A108

FOR APPROVAL
AUG 24 '92
NOT FOR CONSTRUCTION

TEXAS DEPARTMENT OF TRANSPORTATION
APPROVED
DIVISION OF BRIDGES AND STRUCTURES
OCT 29 1992
APPROVAL OF THIS DRAWING DOES NOT RELIEVE THE FABRICATOR OF THE RESPONSIBILITY FOR THE CORRECTNESS OF DETAILS

REVISION	DATE	DESCRIPTION OF REVISION
NO. 1		
NO. 2		
NO. 3		
NO. 4		
NO. 5		

PRINTING: Reqd | For | Date

Bolts — Holes, 15/16 ø Unless Noted
Shop Paint SEE SHT GN1
Fab. Spec. AS NTD. Inspection
Architect
Erection By — Field Connections

HIRSCHFELD STEEL CO. INC.
112 WEST 29TH SAN ANGELO, TEXAS 76903
PHONE (915) 653-3211

DESCRIPTION	610'-0 PLATE GIRDER UNIT #5
STRUCTURE	US 83/281 INTERCHANGE RAMP #1
LOCATION	HIDALGO COUNTY
CUSTOMER	GILBERT TEXAS CONSTRUCTION
SHIP TO	
Customer's Order No.	
Dwg. By JRL	Date 6/92
Checked By CRT	Date 7/92

SHEET 118 OF
JOB NO. 92-106

CF: 92-11 (LINE # 1)

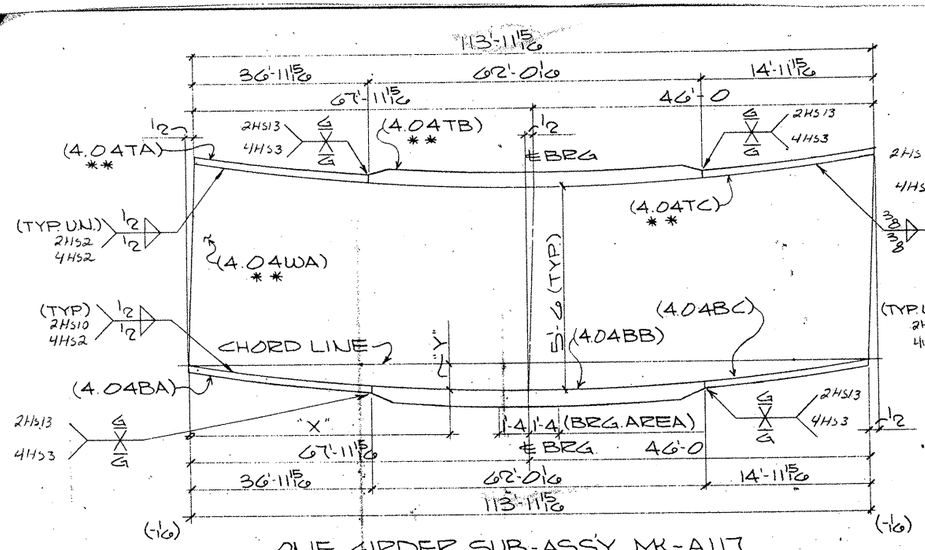

ONE GIRDER SUB-ASSY. MK-A117
(FOR GIRDER - 133PG4.04)

MK-A117									
"X"	9'-6 7/8	24'-2 1/8	38'-9 3/8	53'-4 5/8	67'-11 15/16	82'-11 3/16	97'-10 1/2	112'-9 11/16
"Y"	5/8	1 1/16	1 15/16	2 3/16	2 3/16 ℄ BRG	1 3/4	1"	1/4

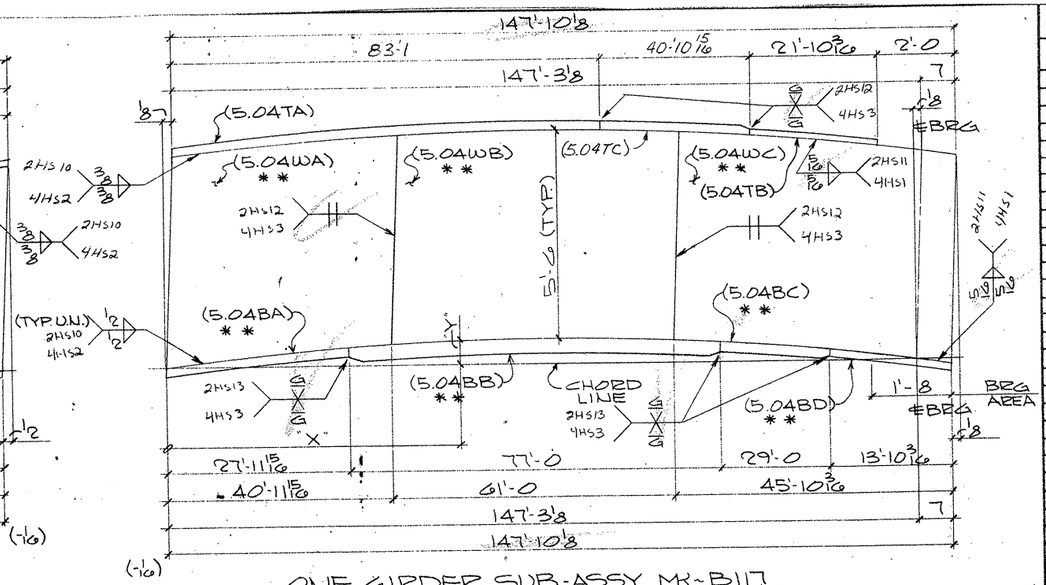

ONE GIRDER SUB-ASSY. MK-B117
(FOR GIRDER - 137PG5.04)

MK-B117											
"X"	13'-8 15/16	28'-8 3/16	40'-11 15/16	43'-7 7/16	58'-6 11/16	73'-5 15/16	88'-5 3/16	101'-11 15/16	103'-4 7/16	118'-3 11/16	133'-2 7/8
"Y"	1 11/16	3 5/8	4 5/16 ℄ WEB SPLICE	4 1/2	5 5/16	5 5/8	5 3/8	4 11/16 ℄ WEB SPLICE	4 5/8	3 3/8	1 3/4

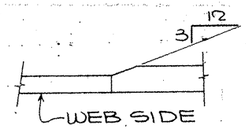

TYP. FLG. THKNESS TRANSITION

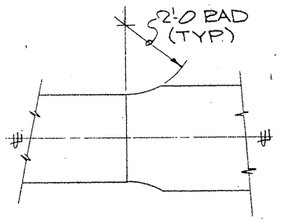

TYP. FLG. WIDTH TRANSITION

SHOP NOTES:

1) FOR GENERAL NOTES SEE SHT. GN1
2) MATERAL NOTED "* *" MUST MEET CHARPY V-NOTCH REQUIREMENTS
3) FOR HEAT CURVE DIAGRAM SEE SHT. #139

BILL OF MATERIAL

	Qnty	Material	Length	Mark Temp.	Mark Ship.	Wt.	Cut From	Remarks
3	1	GIRDER SUB-ASSY			A117			
4	1	PL 1/16 x 66	114'-0 1/16	4.04WA			107-5	CVN2
5	1	PL 2 1/2 x 26	36'-11 15/16	4.04TA			109-12	CVN3
6	1	PL 3 x 30	62'-0 1/16	4.04TB			109-11	CVN3
7	1	PL 2 x 26	14'-11 15/16	4.04TC			108-13	CVN2
8	1	PL 2 1/2 x 26	36'-11 15/16	4.04BA			111-9	
9	1	PL 3 x 30	62'-0 1/16	4.04BB			111-8	
10	1	PL 2 1/2 x 26	14'-11 15/16	4.04BC			111-7	
15	1	GIRDER SUB-ASSY			B117			
16	1	PL 5/8 x 66	41'-0 3/16	5.04WA			107-4	CVN2
17	1	PL 1/2 x 66	61'-0 1/16	5.04WB			107-7	CVN2
18	1	PL 5/8 x 66	45'-10 1/2	5.04WC			107-8	CVN2
19	1	PL 2 x 22	83'-1	5.04TA			111-5	
20	1	PL 1 1/4 x 22	21'-10 3/16	5.04TB			111-6	
21	1	PL 2 1/2 x 22	27'-11 15/16	5.04BA			109-13	CVN3
22	1	PL 3 x 26	77'-0	5.04BB			109-14	CVN3
23	1	PL 2 1/2 x 22	29'-0	5.04BC			109-15	CVN3
24	1	PL 1 1/4 x 22	13'-10 3/16	5.04BD			108-15	CVN2
25	1	PL 2 x 22	40'-10 15/16	5.04TC			111-5	

FOR APPROVAL
AUG 24 '92
NOT FOR CONSTRUCTION

TEXAS DEPARTMENT OF TRANSPORTATION
APPROVED
DIVISION OF PROFESSIONAL SERVICES
OCT 2 1992
APPROVAL OF THIS DRAWING DOES NOT RELIEVE CONTRACTOR OF RESPONSIBILITY FOR ERRORS IN DIMENSIONS

REVISION	DATE	DESCRIPTION OF REVISION
NO. 1		
NO. 2		
NO. 3		
NO. 4		
NO. 5		

PRINTING Req'd	For	Date

Bolts Holes: Unless Noted
Shop Paint SEE SHT. GN1
Fab. Spec. A572-50 U.N. Inspection
Architect
Erection By Field Connections

HIRSCHFELD STEEL CO. INC.
112 WEST 29TH SAN ANGELO TEXAS 76903
PHONE (915) 653-3211

DESCRIPTION	210'-0 PLATE GIRDER UNIT
STRUCTURE	US 83/281 INTERCHANGE RAMP # 1
LOCATION	HIDALGO COUNTY
CUSTOMER	GILBERT TEXAS CONSTRUCTION
SHIP TO	
Customer's Order No.	
Dwg. By CET Date 6-92	SHEET 117 OF
Checked By DLT Date 6-92	JOB NO. 92-1006

CE 92-11 (LINE # 4)

G0106

FED. ROAD DIV. NO.	STATE	FEDERAL AID PROJECT NO.			
6	TX.	NH (50) M			
STATE DIST. NO.	COUNTY	CONTROL NO.	SECTION NO.	JOB NO.	HIGHWAY NO.
21	HIDALGO	39	17	97	83/281

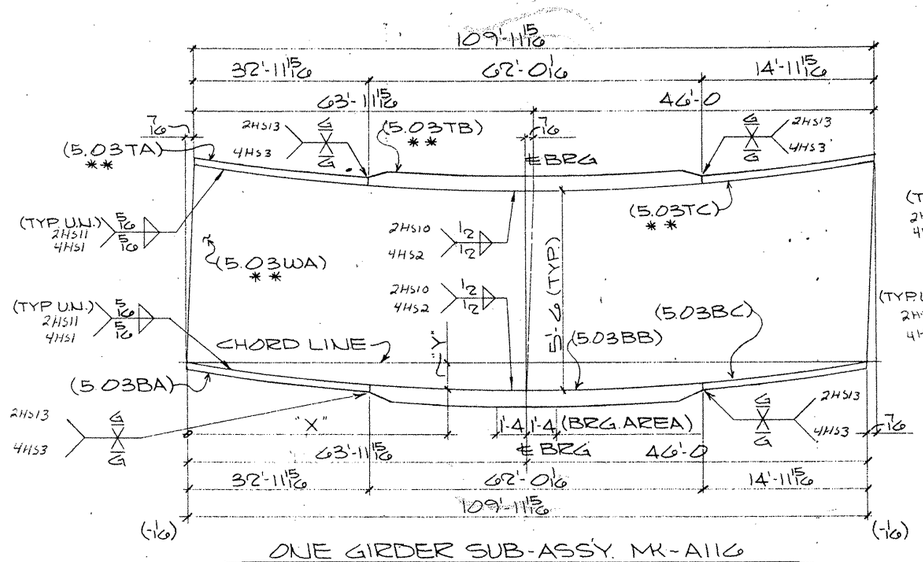

ONE GIRDER SUB-ASSY. MK-A116
(FOR GIRDER-132PG5.03)

MK-A116									
"X"	6'-3 3/8	20'-8 1/2	35'-1 5/8	49'-6 3/8	63'-11 15/16	78'-9	93'-6 1/16	108'-3 3/16
"Y"	3/8	1 1/4	1 7/8	2 1/8	2 1/8	1 3/4	1"	1/8
					℄ BRG			

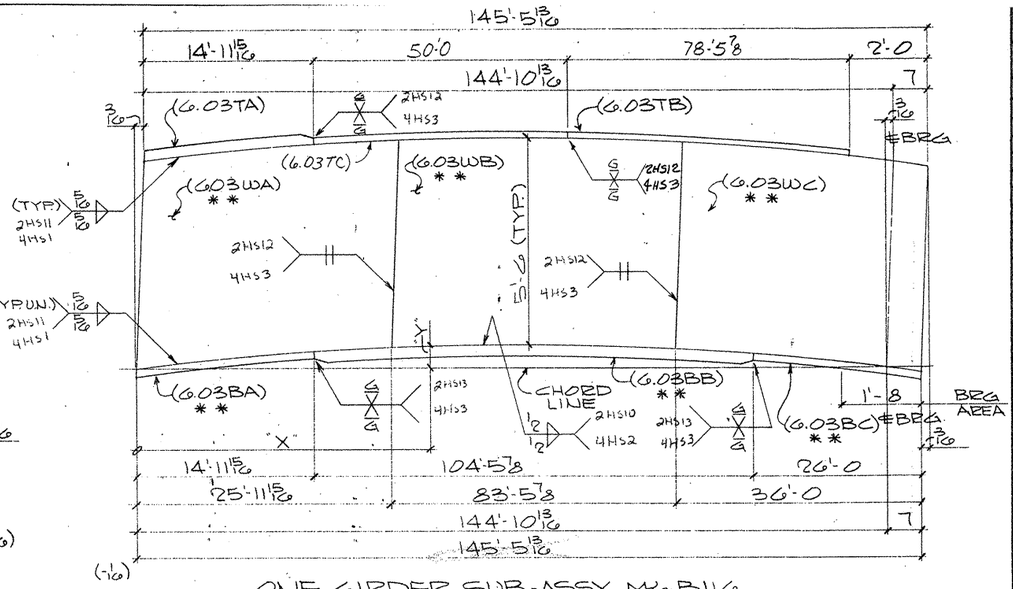

ONE GIRDER SUB-ASSY. MK-B116
(FOR GIRDER-136PG6.03)

MK-B116											
"X"	13'-0 3/16	25'-11 15/16	27'-9 5/16	42'-6 3/8	57'-3 1/16	72'-0 1/2	86'-9 9/16	101'-6 3/8	109'-5 13/16	116'-3 11/16	131'-0 3/4
"Y"	1 9/16	2 15/16	3/8	4 3/8	5 1/16	5 1/2	5 1/4	4 7/16	3 13/16	3 5/16	1 11/16
		℄ WEB SPLICE							℄ WEB SPLICE		

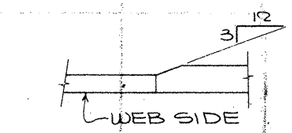

TYP. FLG. THKNESS TRANSITION

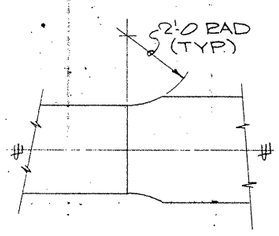

TYP. FLG. WIDTH TRANSITION

SHOP NOTES:
1) FOR GENERAL NOTES SEE SHT. GN1
2) MATERAL NOTED " * * " MUST MEET CHARPY V-NOTCH REQUIREMENTS
3) FOR HEAT CURVE DIAGRAM SEE SHT. 139

BILL OF MATERIAL

	Qnty.	Material	Length	Mark Temp	Mark Ship.	Wt	Cut From	Remarks
1								
2								
3	1	GIRDER SUB-ASSY			A116			
4	1	PL 11/16 x 66	110'-03/8	5.03WA			106-18	CVN2
5	1	PL 1 1/2 x 22	32'-11 15/16	5.03TA			108-9	CVN2
6	1	PL 3 x 26	62'-0 1/16	5.03TB			109-0	CVN3
7	1	PL 1 1/2 x 22	14'-11 15/16	5.03TC			108-8	CVN2
8	1	PL 1 1/2 x 22	32'-11 15/16	5.03BA			110-17	
9	1	PL 3 x 26	62'-0 1/16	5.03BB			110-16	
10	1	PL 1 1/2 x 22	14'-11 15/16	5.03BC			110-15	
11								
12								
13								
14								
15	1	GIRDER SUB-ASSY			B116			
16	1	PL 9/16 x 66	226-03/16	6.03WA			106-17	CVN2
17	1	PL 1/2 x 66	83'-6 1/16	6.03WB			106-20	CVN2
18	1	PL 9/16 x 66	36'-0 3/16	6.03WC			106-15	CVN2
19	1	PL 1 1/2 x 22	14'-11 15/16	6.03TA			110-15	
20	1	PL 1 1/4 x 22	78'-5 7/8	6.03TB			110-19	
21	1	PL 1 1/2 x 22	14'-11 15/16	6.03BA			108-8	CVN2
22	1	PL 2 1/2 x 22	104'-5 7/8	6.03BB			109-8	CVN3
23	1	PL 1 1/4 x 22	26'-0	6.03BC			108-11	CVN2
24	1	PL 1 1/4 x 22	50'-0	6.03TC			110-19	
25								
26								
27								
28								
29								
30								
31								
32								
33								
34								
35								
36								
37								
38								
39								
40								
41								
42								
43								
44								
45								
46								
47								
48								
49								
50								
51								
52								
53								
54								
55								
56								
57								
58								
59								
60								

FOR APPROVAL
AUG 24 19
NOT FOR CONSTRUCTION

TEXAS HIGHWAY DEPARTMENT
PLANS APPROVED
DIVISION OF PLANS AND STANDARDS
OCT 21 1992
APPROVAL OF PLANS DOES NOT RELIEVE THE CONTRACTOR OF ANY RESPONSIBILITY IN THE CONTRACT

REVISION	DATE	DESCRIPTION OF REVISION
NO. 1		
NO. 2		
NO. 3		
NO. 4		
NO. 5		

PRINTING Req'd	For	Date

Bolts Holes, Unless Noted
Shop Paint SEE SHT. GN1
Fab. Spec. A572-50 UN Inspection
Architect
Erection By Field Connections

HIRSCHFELD STEEL CO. INC.
112 WEST 29TH SAN ANGELO TEXAS 76903
PHONE (915) 653-3211

DESCRIPTION	610'-0 PLATE GIRDER UNIT
STRUCTURE	DS 83/281 INTERCHANGE RAMP * 1
LOCATION	HIDALGO COUNTY
CUSTOMER	GILBERT TEXAS CONSTRUCTION
SHIP TO	
Customer's Order No.	SHEET 116 OF
Dwg By CRT Date 6-92	JOB NO 92-106
Checked By DLT Date 6-92	

G0106

FED. ROAD DIV. NO.	STATE	FEDERAL AID PROJECT NO.				
6	TX.	NH (50) M				
STATE DIST. NO.	COUNTY	CONTROL NO.	SECTION NO.	JOB NO.	HIGHWAY NO.	
21	HIDALGO	39	17	97	83/281	

CE 92-11 (LINE # 3)

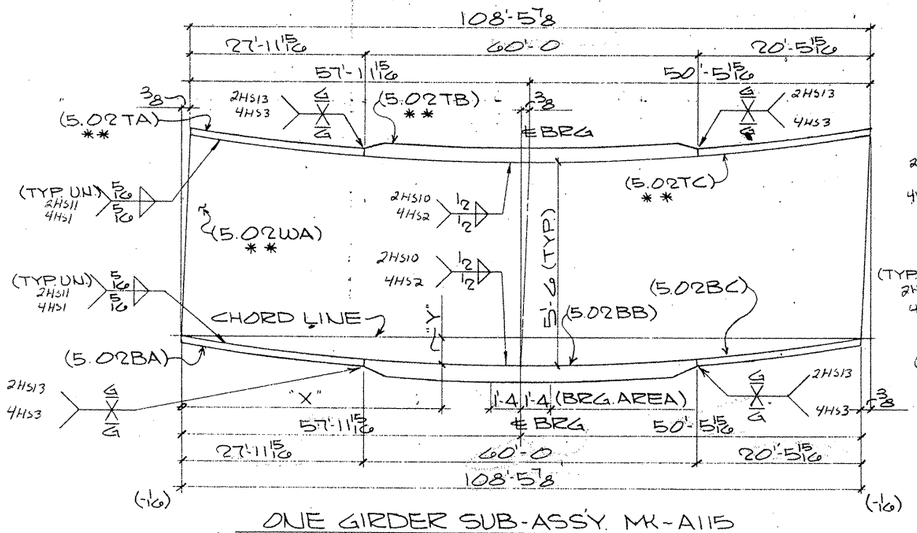

ONE GIRDER SUB-ASSY. MK-A115
(FOR GIRDER - 131PG5.02)

MK - A115								
"X"	11'-15/16	15'-2 15/16	29'-5 15/16	43'-8 15/16	57'-11 15/16	72'-6 13/16	87'-1 3/4	101'-8 5/8
"Y"	1/16	13/16	1 7/16	1 13/16	1 15/16 ℄ BRG	1 11/16	1 1/8	3/8

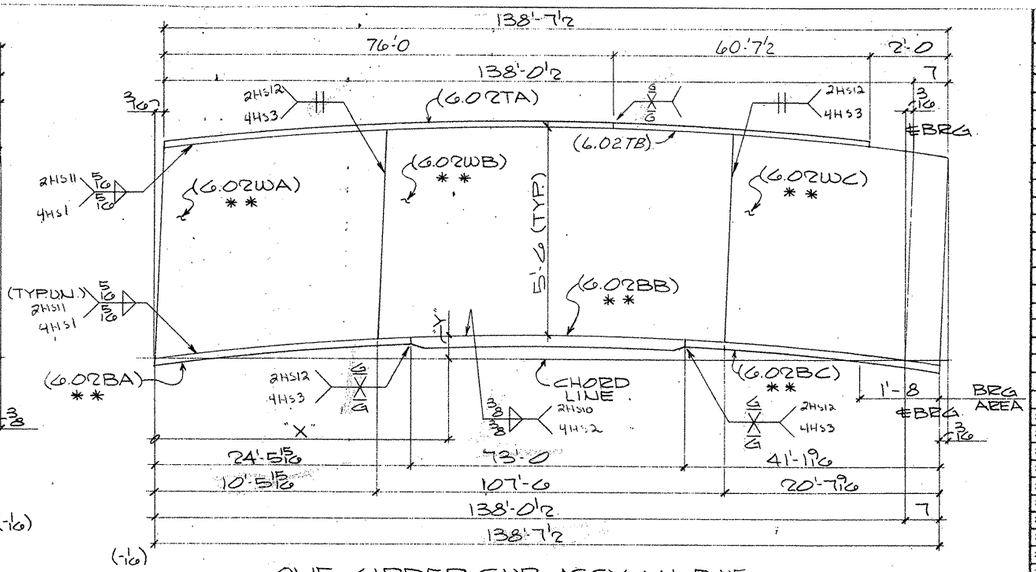

ONE GIRDER SUB-ASSY. MK-B115
(FOR GIRDER - 135PG6.02)

MK - B115											
"X"	7'-9 1/2	10'-5 15/16	22'-4 3/8	36'-11 7/16	51'-6 3/16	66'-1/16	80'-7 15/16	95'-2 7/8	109'-9 3/4	117'-11 15/16	124'-4 5/8
"Y"	11/16	15/16 ℄ WEB SPLICE	1 15/16	2 15/16	3 9/16	3 7/8	3 3/4	3 1/4	2 7/16	1 3/4 ℄ WEB SPLICE	1 1/4

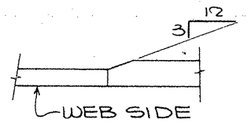

TYP. FLG. THKNESS TRANSITION

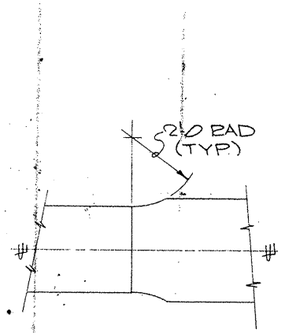

TYP. FLG. WIDTH TRANSITION

SHOP NOTES:

1) FOR GENERAL NOTES SEE SHT. GN1
2) MATERAL NOTED "* *" MUST MEET CHARPY V-NOTCH REQUIREMENTS
3) FOR HEAT CURVE DIAGRAM SEE SHT. 139

BILL OF MATERIAL

	Qnty.	Material	Length	Mark Temp.	Mark Ship	Wt	Cut From	Remarks
3	-1	GIRDER SUB-ASSY.			A115			
4	1	PL 5/8 x 66	108'-6 1/4	5.02WA			106-12	CVN2
5	1	PL 1 1/2 x 22	27'-11 15/16	5.02TA			107-20	CVN2
6	1	PL 3 x 24	60'-0	5.02TB			109-3	CVN3
7	1	PL 1 1/2 x 22	20'-5 15/16	5.02TC			108-3	CVN2
8	1	PL 1 1/2 x 22	27'-11 15/16	5.02BA			110-12	
9	1	PL 3 x 24	60'-0	5.02BB			110-10	
10	1	PL 1 1/2 x 22	20'-5 15/16	5.02BC			110-13	
11								
12								
13								
14								
15	1	GIRDER SUB-ASSY.			B115			
16	1	PL 5/8 x 66	10'-6 7/16	6.02WA			106-13	CVN2
17	1	PL 1/2 x 66	107'-6 1/2	6.02WB			106-14	CVN2
18	1	PL 9/16 x 66	20'-7 9/16	6.02WC			106-7	CVN2
19	1	PL 1 1/4 x 22	76'-0	6.02TA			110-8	
20	1	PL 1 1/4 x 22	24'-5 15/16	6.02BA			108-5	CVN2
21	1	PL 1 3/4 x 22	73'-0	6.02BB			108-4	CVN2
22	1	PL 1 1/4 x 22	41'-1 7/16	6.02BC			108-6	CVN2
23	1	PL 1 1/4 x 22	60'-7 1/2	6.02TB			110-8	
24								
25								
26								
27								
28								
29								
30								
31								
32								
33								
34								
35								
36								
37								
38								
39								
40								
41								
42								
43								
44								
45								
46								
47								
48								
49								
50								
51								
52								
53								
54								
55								
56								
57								
58								
59								
60								

FOR APPROVAL
AUG 24 '92
NOT FOR CONSTRUCTION

DISAPPROVED BY THE TEXAS DEPARTMENT OF TRANSPORTATION
DIVISION OF BRIDGES AND STRUCTURES
OCT 21 1992
APPROVAL OF THE SHOP DRAWINGS DOES NOT RELIEVE THE CONTRACTOR OF THE RESPONSIBILITY FOR THE CORRECTNESS OF THESE DRAWINGS

REVISION	DATE	DESCRIPTION OF REVISION
NO. 1		
NO. 2		
NO. 3		
NO. 4		
NO. 5		

PRINTING Req'd	For	Date

Bolts Holes: Unless Noted
Shop Paint SEE SHT. GN1
Fab Spec A572-50 U.N. Inspection
Architect:
Erection By Field Connections

HIRSCHFELD STEEL CO. INC.
112 WEST 29TH SAN ANGELO TEXAS-76903
PHONE (915) 653-3211

DESCRIPTION 610'-0 PLATE GIRDER UNIT
STRUCTURE US 83/281 INTERCHANGE RAMP # 1
LOCATION HIDALGO COUNTY
CUSTOMER GILBERT TEXAS CONSTRUCTION
SHIP TO
Customer's Order No.
Dwg. By CRT Date 8-92
Checked By DLT Date 8-92
SHEET 115 OF
JOB NO. 92-1060

FED. ROAD DIV. NO.	STATE	FEDERAL AID PROJECT NO.			
6	TX.	NH (50) M			
STATE DIST. NO.	COUNTY	CONTROL NO.	SECTION NO.	JOB NO.	HIGHWAY NO.
21	HIDALGO	39	17	97	83/281

G1016

CE 92-11 (LINE # 2)

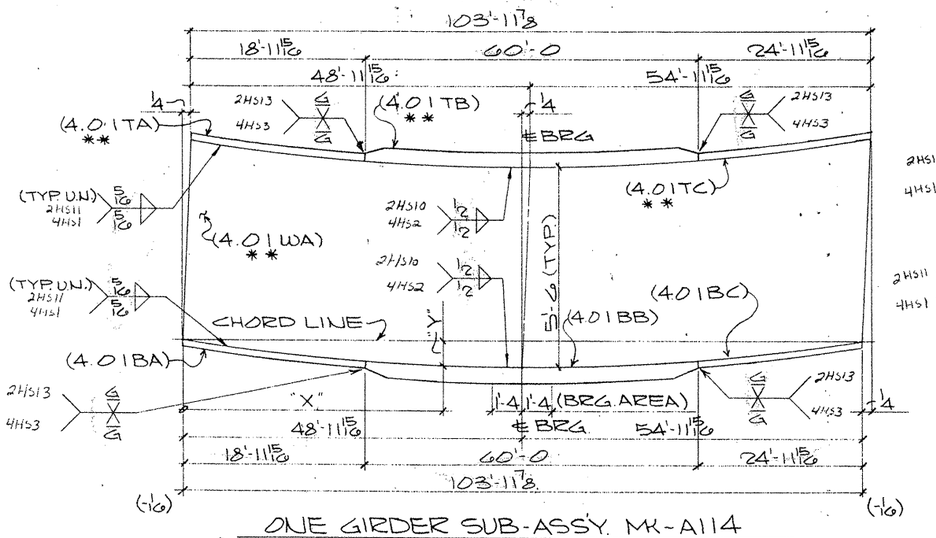

ONE GIRDER SUB-ASSY. MK-A114
(FOR GIRDER-130PG4.01)

MK-A114.								
"X"	6'-9 5/16	20'-10 3/16	34'-11 1/16	48'-11 15/16	63'-4 5/8	77'-9 3/8	92'-2 1/16
"Y"	5/16	15/16	1 1/16	1 5/8	1 1/2	1 1/8	9/16
				℄ BRG			

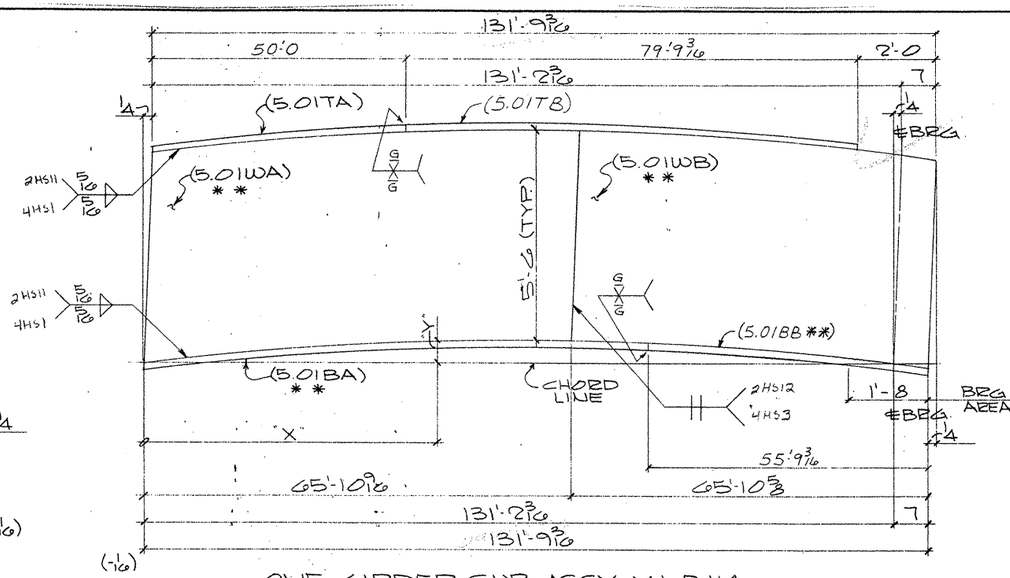

ONE GIRDER SUB-ASSY. MK-B114
(FOR GIRDER-134PG5.01)

MK-B114										
"X"	2'-6 13/16	16'-11 1/2	31'-4 3/16	45'-8 5/16	60'-1 3/8	65'-10 9/16	74'-6 3/8	88'-11 1/16	103'-3 3/4	117'-8 1/2
"Y"	1/8	7/8	1 1/2	1 15/16	2 3/16	2'8	2'8	1 7/8	1 3/8	11/16
						℄ WEB SPLICE				

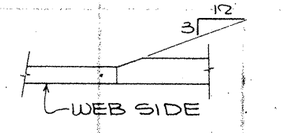

TYP. FLG. THKNESS TRANSITION

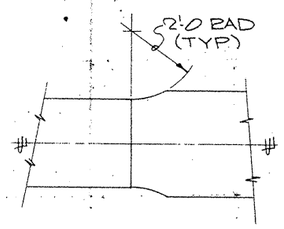

TYP. FLG. WIDTH TRANSITION

SHOP NOTES:

1) FOR GENERAL NOTES SEE SHT. GN1
2) MATERAL NOTED * * MUST MEET CHARPY V-NOTCH REQUIREMENTS
3) FOR HEAT CURVE DIAGRAM SEE SHT. 139

BILL OF MATERIAL

	Qnty.	Material	Length	Mark Temp.	Mark Ship	Wt.	Cut From	Comments
3	1	GIRDER SUB-ASSY			A114	*		
4	1	PL 5/8 x 66	104'-0 1/8	4.01WA			106-4	CVN 2
5	1	PL 1 1/2 x 22	18'-11 15/16	4.01TA			107-14	CVN 2
6	1	PL 2 3/4 x 24	60'-0	4.01TB			109-2	CVN 3
7	1	PL 1 1/2 x 22	24'-11 15/16	4.01TC			107-13	CVN 2
8	1	PL 1 1/2 x 22	18'-11 15/16	4.01BA			110-7	
9	1	PL 2 3/4 x 24	60'-0	4.01BB			110-5	
10	1	PL 1 1/2 x 22	24'-11 15/16	4.01BC			110-6	
15	1	GIRDER SUB-ASSY			B114			
16	1	PL 1/2 x 66	65'-10 3/4	5.01WA			106-6	CVN 2
17	1	PL 1/2 x 66	65'-10 7/8	5.01WB			106-6	CVN 2
18	1	PL 1 1/4 x 22	50'-0	5.01TA			110-4	
19	1	PL 1 1/4 x 22	76'-0	5.01BA			107-16	CVN 2
20	1	PL 1 1/4 x 22	55'-9 3/16	5.01BB			107-16	CVN 2
21	1	PL 1 1/4 x 22	79'-9 3/16	5.01TB			110-9	

FOR APPROVAL
AUG 84 92
NOT FOR CONSTRUCTION

APPROVED FOR THE DIRECTOR
TRANSPORTATION
PLANNING
DIVISION OF PLANS, PROGRAMS AND PROJECTS
OCT 23 1992
APPROVAL OF THIS DRAWING DOES NOT RELIEVE THE CONTRACTOR OF THE RESPONSIBILITY FOR THE SATISFACTORY PERFORMANCE OF THE WORK

REVISION	DATE	DESCRIPTION OF REVISION
NO. 1		
NO. 2		
NO. 3		
NO. 4		
NO. 5		

PRINTING Req'd	For	Date

Bolts Holes. Unless Noted
Shop Paint SEE SHT. GN1
Fab Spec AST2-50 U.N. Inspection
Architect
Erection By Field Connections

HIRSCHFELD STEEL CO. INC.
112 WEST 29TH SAN ANGELO TEXAS 76903
PHONE (915) 653-3211

DESCRIPTION	610'-0 PLATE GIRDER UNIT
STRUCTURE	US 83/281 INTERCHANGE RAMP # 1
LOCATION	HIDALGO COUNTY
CUSTOMER	GILBERT TEXAS CONSTRUCTION
SHIP TO	
Customer's Order No.	
Dwg. By CRT	Date 6-92
Checked By DLT	Date 6-92

SHEET 114 OF
JOB NO 92-106

G10106

FED. ROAD DIV. NO.	STATE	FEDERAL AID PROJECT NO.				
6	TX.	NH (50) M				
STATE DIST. NO.	COUNTY	CONTROL NO.	SECTION NO.	JOB NO.	HIGHWAY NO.
21	HIDALGO	39	17	97	83/281

CE 92-11 (LINE # 1)

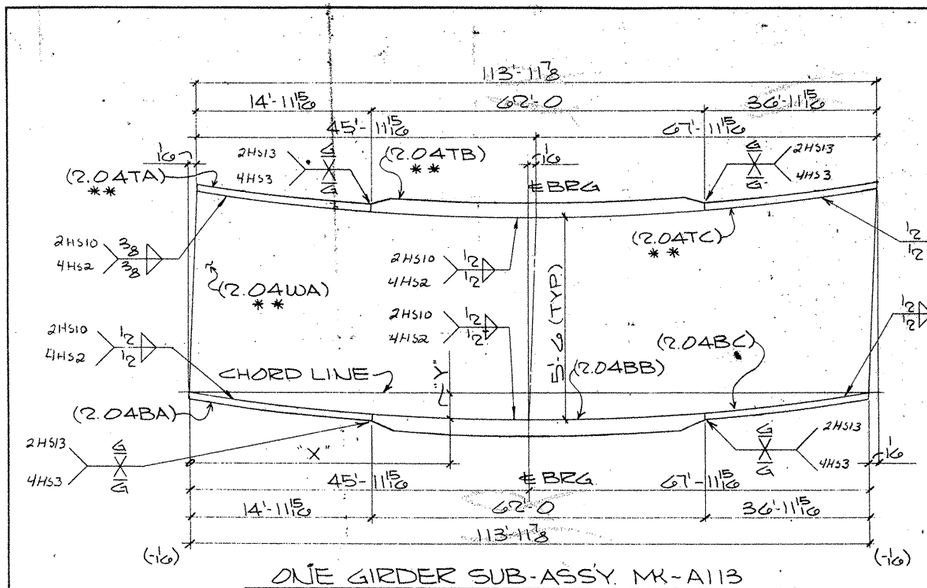

ONE GIRDER SUB-ASSY. MK-A113
(FOR GIRDER - 129PG2.04)

MK-A113								
"X"	1'-2 3/16	16'-1 7/16	31'-0 1/16	45'-11 15/16	60'-7 3/16	75'-2 7/16	89'-9 3/4	104'-5
"Y"	1/16	1"	1 1/16	2 1/8	2 5/16	1 7/8	1 3/8	9/16
				℄ BRG				

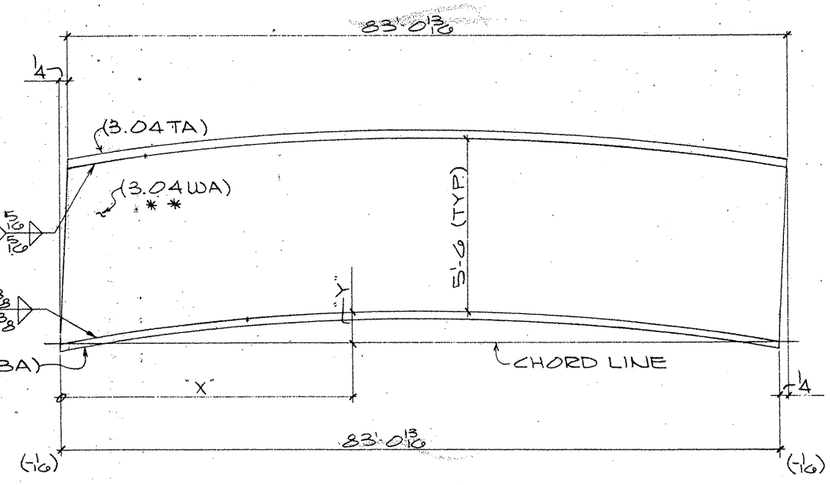

ONE GIRDER SUB-ASSY. MK-B113
(FOR GIRDER - 129PG3.04)

MK-B113								
"X"	5'-0 1/4	19'-7 1/2	34'-2 3/4	48'-10 1/16	63'-5 5/16	78'-0 9/16		
"Y"	1/8	7/16	9/16	9/16	3/8	1/8		

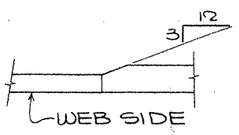

TYP. FLG. THKNESS TRANSITION

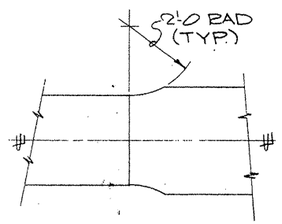

TYP. FLG. WIDTH TRANSITION

SHOP NOTES:

1) FOR GENERAL NOTES SEE SHT. GN1
2) MATERAL NOTED "* *" MUST MEET CHARPY V-NOTCH REQUIREMENTS
3) FOR HEAT CURVE DIAGRAM SEE SHT. 138

BILL OF MATERIAL

	Qnty	Material	Length	Mark Temp	Mark Ship	Wt.	Cut From	Remarks
1								
2								
3	1	GIRDER SUB-ASSY			A113			
4	1	PL 1/16 x 66	113'-11 15/16	2.04WA			107-5	CVN2
5	1	PL 2 x 26	14'-11 15/16	2.04TA			108-13	CVN2
6	1	PL 3 x 30	68'-0	2.04TB			109-11	CVN3
7	1	PL 2 1/2 x 26	36'-11 15/16	2.04TC			109-12	CVN3
8	1	PL 2 1/2 x 26	14'-11 15/16	2.04BA			111-7	
9	1	PL 3 x 30	68'-0	2.04BB			111-8	
10	1	PL 2 1/2 x 26	36'-11 15/16	2.04BC			111-9	
11								
12								
13								
14	1	GIRDER SUB-ASSY			B113			
15	1	PL 9/16 x 66	83'-1 1/16	3.04WA			107-6	CVN2
16	1	PL 1/4 x 22	83'-0 13/16	3.04TA			111-4	
17	1	PL 2 x 22	83'-0 13/16	3.04BA			108-14	CVN2
18								
19								
20								
21								
22								
23								
24								
25								
26								
27								
28								
29								
30								
31								
32								
33								
34								
35								
36								
37								
38								
39								
40								
41								
42								
43								
44								
45								
46								
47								
48								
49								
50								
51								
52								
53								
54								
55								
56								
57								
58								
59								
60								

FOR APPROVAL

AUG 24 '92

NOT FOR CONSTRUCTION

TEXAS DEPARTMENT OF TRANSPORTATION
APPROVED
DIVISION OF BRIDGES AND STRUCTURES
OCT 23 1992
APPROVAL OF THIS DRAWING DOES NOT RELIEVE THE FABRICATOR OF THE RESPONSIBILITY FOR THE CORRECTNESS OF DETAILS

REVISION	DATE	DESCRIPTION OF REVISION
NO. 1		
NO. 2		
NO. 3		
NO. 4		
NO. 5		

PRINTING		
Req'd	For	Date

Bolts Holes, Unless Noted
Shop Paint SEE SHT. GN1
Fab. Spec. A572-50 D.N. Inspection
Architect
Erection By Field Connections

HIRSCHFELD STEEL CO. INC.
112 WEST 29TH SAN ANGELO TEXAS 76903
PHONE (915) 653-3211

DESCRIPTION	210'-0 PLATE GIRDER UNIT
STRUCTURE	US 83/281 INTERCHANGE RAMP # 1
LOCATION	HIDALGO COUNTY
CUSTOMER	GILBERT TEXAS CONSTRUCTION
SHIP TO	
Customer's Order No.	
Dwg. By CBT	Date 8-92
Checked By DLT	Date 6-92

SHEET 113 OF
JOB NO 92-106

FED. ROAD DIV. NO.	STATE	FEDERAL AID PROJECT NO.				
6	TX.	NH (50) M				
STATE DIST. NO.	COUNTY	CONTROL NO.	SECTION NO.	JOB NO.	HIGHWAY NO.	
21	HIDALGO	39	17	97	83/281	

G0106

CE 92-11 (LINE # 4)

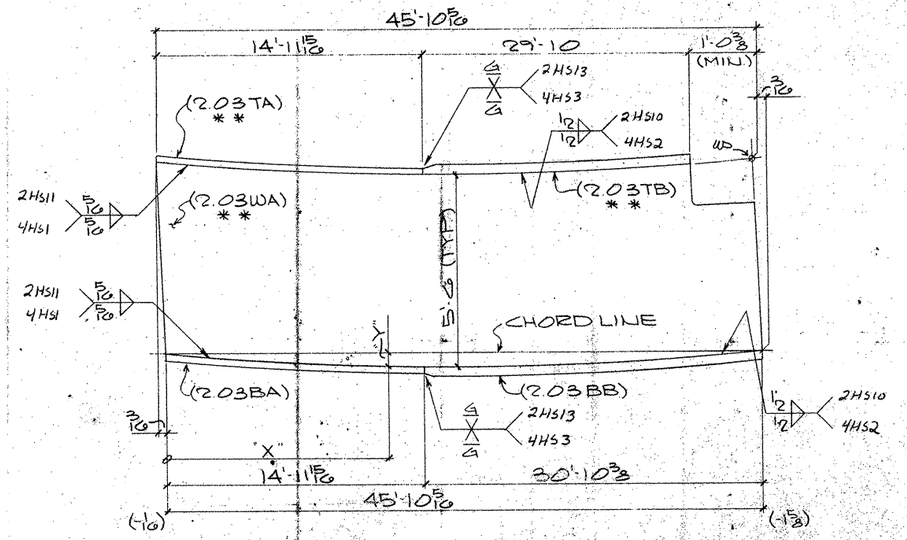

ONE GIRDER SUB-ASSY MK-A112
(FOR GIRDER-124PG2.03)

MK-A112				
"X"	1'-8 3/4	16'-5 5/16	31'-2 7/8	
"Y"	0"	1/4	1/4	

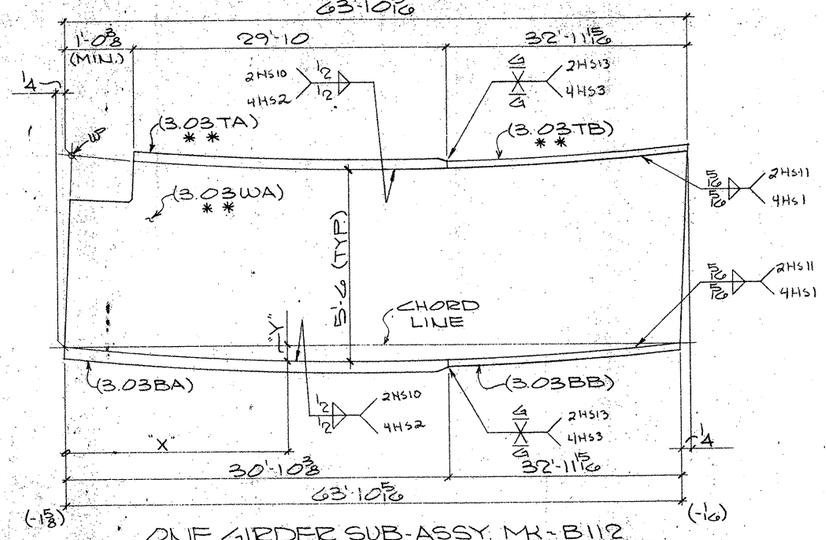

ONE GIRDER SUB-ASSY MK-B112
(FOR GIRDER-148PG3.03)

MK-B112					
"X"	14'-3 1/2	28'-8 5/8	43'-1 3/4	57'-6 15/16	
"Y"	7/16	5/8	9/16	3/16	

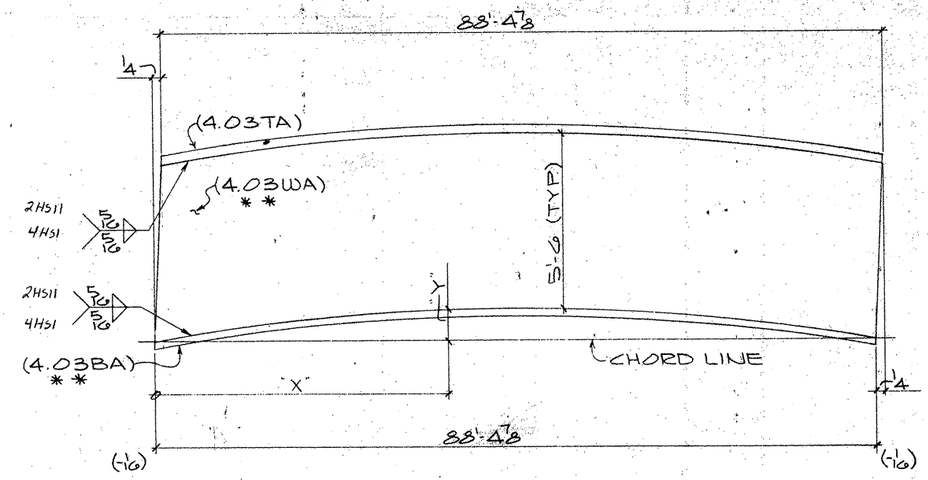

ONE GIRDER SUB-ASSY MK-C112
(FOR GIRDER-128PG4.03)

MK-C112								
"X"	8'-1 5/8	22'-6 3/4	36'-11 7/8	51'-5	65'-10 3/8	80'-3 5/16		
"Y"	1/4	5/8	13/16	13/16	5/8	1/4		

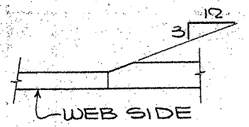

TYP. FLG. THKNESS TRANSITION

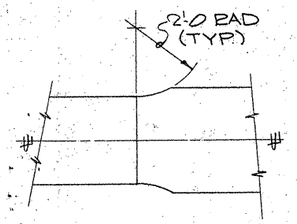

TYP. FLG. WIDTH TRANSITION

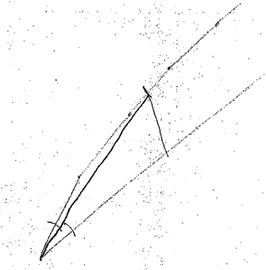

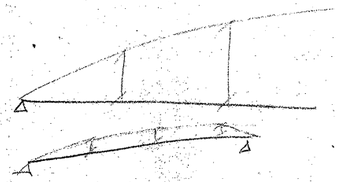

SHOP NOTES:

1) FOR GENERAL NOTES SEE SHT. GN1
2) MATERAL NOTED " * * " MUST MEET CHARPY V-NOTCH REQUIREMENTS
3) FOR HEAT CURVE DIAGRAM SEE SHT. 138

BILL OF MATERIAL

	Qnty.	Material	Length	Mark Temp.	Mark Ship.	Wt.	Cut From	Remarks
3	1	GIRDER SUB-ASSY			A112			
4	1	PL 11/16 x 66	45'-10 5/16	2.03WA			108-19	CVN2
5	1	PL 1 1/2 x 22	14'-11 15/16	2.03TA			108-8	CVN2
6	1	PL 3 x 28	29'-10	2.03TB			109-7	CVN3
7	1	PL 1 1/2 x 22	14'-11 15/16	2.03BA			110-15	
8	1	PL 3 x 26	30'-10 3/8	2.03BB			111-11	
12	1	GIRDER SUB-ASSY			B112			
13	1	PL 11/16 x 66	63'-10 5/16	3.03WA			108-20	CVN2
14	1	PL 3 x 28	29'-10	3.03TA			109-7	CVN3
15	1	PL 1 1/2 x 22	32'-11 15/16	3.03TB			108-9	CVN2
16	1	PL 3 x 26	30'-10 3/8	3.03BA			111-11	
17	1	PL 1 1/2 x 22	32'-11 15/16	3.03BB			110-17	
21	1	GIRDER SUB-ASSY			C112			
22	1	PL 1 1/2 x 66	88'-5 1/8	4.03WA			106-19	CVN2
23	1	PL 1 1/4 x 22	88'-4 7/8	4.03TA			110-18	
24	1	PL 1 1/4 x 22	88'-4 7/8	4.03BA			108-10	CVN2

FOR APPROVAL
AUG 24 '92
NOT FOR CONSTRUCTION
OCT 21 1992

REVISION	DATE	DESCRIPTION OF REVISION
NO. 1		
NO. 2		
NO. 3		
NO. 4		
NO. 5		

PRINTING: Reqd | For | Date

Bolts: Holes: Unless Noted
Shop Paint SEE SHT. GN1
Fab Spec A572-50 UN. Inspection
Architect
Erection By Field Connections

HIRSCHFELD STEEL CO. INC.
112 WEST 29TH SAN ANGELO TEXAS 76903
PHONE (915) 653-3211

DESCRIPTION	610'-0 PLATE GIRDER UNIT
STRUCTURE	US 83/281 INTERCHANGE RAMP "I"
LOCATION	HIDALGO COUNTY
CUSTOMER	GILBERT TEXAS CONSTRUCTION
SHIP TO	
Customer's Order No.	
Dwg. By CRT	Date 6-92
Checked By DLT	Date 6-92

SHEET 112 OF
JOB NO 92-100

G0106

FED. ROAD DIV. NO	STATE	FEDERAL AID PROJECT NO.			
6	TX.	NH (50) M			
STATE DIST. NO	COUNTY	CONTROL NO.	SECTION NO	JOB NO	HIGHWAY NO
21	HIDALGO	39	17	97	83/281

CE 92:11 (LINE # 3)

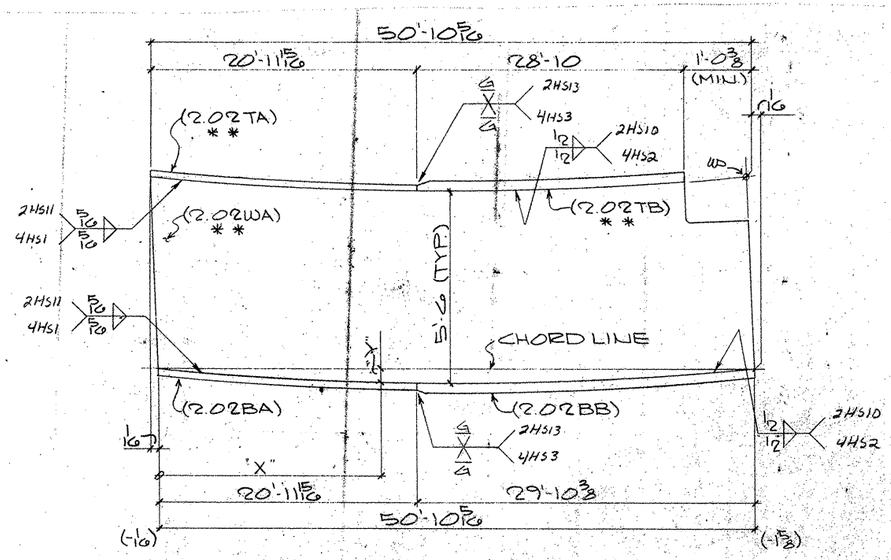

ONE GIRDER SUB-ASSY MK~A111

(FOR GIRDER ~ 123PG2.02)

MK ~ A111			
"X"	7'-3 1/4	21'-10 3/16	36'-5 1/16
"Y"	1/8	5/16	5/16

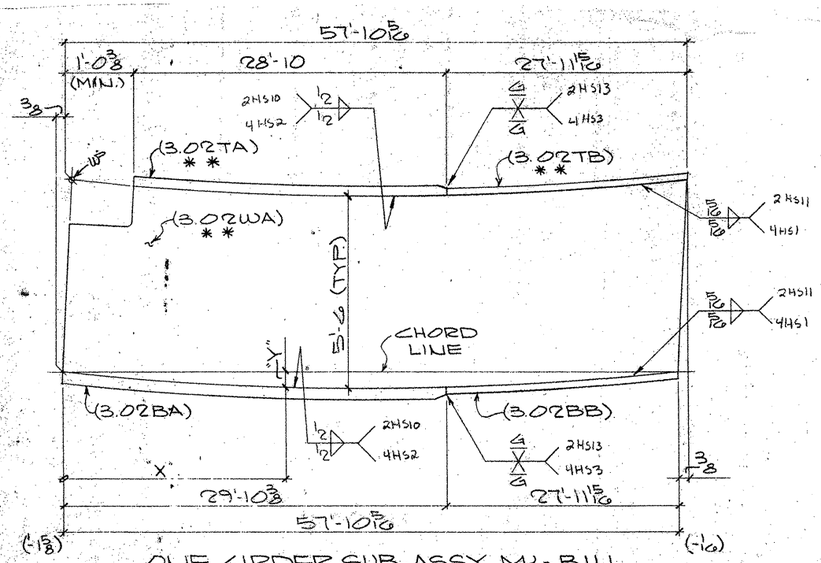

ONE GIRDER SUB-ASSY. MK~B111

(FOR GIRDER ~ 147PG3.02)

MK ~ B111				
"X"	14'-1 3/8	28'-4 3/8	42'-7 3/8	56'-10 3/8
"Y"	3/8	7/16	5/16	0"

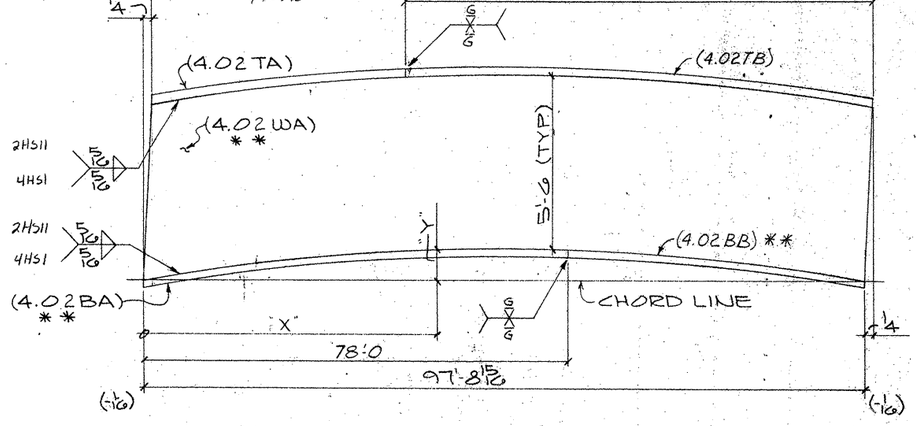

ONE GIRDER SUB-ASSY. MK~C111

(FOR GIRDER ~ 127PG4.02)

MK ~ C111								
"X"	13'-2 15/16	27'-5 15/16	41'-9	56'-0	70'-3	84'-6		
"Y"	1/2	5/16	1 1/8	1 1/8	15/16	1/2		

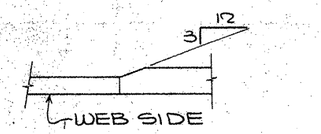

TYP. FLG. THKNESS TRANSITION

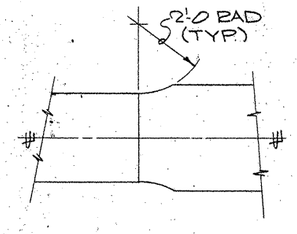

TYP FLG. WIDTH TRANSITION

SHOP NOTES:

1) FOR GENERAL NOTES SEE SHT. GN1
2) MATERAL NOTED * * MUST MEET CHARPY V-NOTCH REQUIREMENTS
3) FOR HEAT CURVE DIAGRAM SEE SHT. 138

BILL OF MATERIAL

	Qnty.	Material	Length	Mark Temp	Mark Ship.	Wt.	Cut From	Remarks
1								
2								
3	1	GIRDER SUB-ASSY			A111			
4	1	PL 5/8 x 66	50'-10 3/8	2.02WA			106-10	CVN2
5	1	PL 1 1/2 x 22	20'-11 15/16	2.02TA			107-19	CVN2
6	1	PL 3 x 28	28'-10	2.02TB			109-4	CVN3
7	1	PL 1 1/2 x 22	20'-11 15/16	2.02BA			110-11	
8	1	PL 3 x 24	29'-10 3/8	2.02BB			111-10	
9								
10								
11								
12	1	GIRDER SUB-ASSY			B111			
13	1	PL 5/8 x 66	57'-10 5/16	3.02WA			108-18	CVN2
14	1	PL 3 x 28	28'-10	3.02TA			109-4	CVN3
15	1	PL 1 1/2 x 22	27'-11 15/16	3.02TB			107-20	CVN2
16	1	PL 3 x 24	29'-10 3/8	3.02BA			111-10	
17	1	PL 1 1/2 x 22	27'-11 15/16	3.02BB			110-12	
18								
19								
20								
21	1	GIRDER SUB-ASSY			C111			
22	1	PL 1 1/2 x 66	97'-9 15/16	4.02WA			106-11	CVN2
23	1	PL 1 1/4 x 22	19'-8 15/16	4.02TA			110-9	
24	1	PL 1 1/4 x 22	78'-0	4.02BA			108-2	CVN2
25	1	PL 1 1/4 x 22	19'-8 15/16	4.02BB			108-2	CVN2
26	1	PL 1 1/4 x 22	78'-0	4.02TB			110-9	
27								
28								
29								
30								
31								
32								
33								
34								
35								
36								
37								
38								
39								
40								
41								
42								
43								
44								
45								
46								
47								
48								
49								
50								
51								
52								
53								
54								
55								
56								
57								
58								
59								
60								

FOR APPROVAL

NOT FOR CONSTRUCTION

REVISION	DATE	DESCRIPTION OF REVISION
NO. 1		
NO. 2		
NO. 3		
NO. 4		
NO. 5		

PRINTING: Req'd | For | Date

Bolts: Holes: Unless Noted

Shop Paint: SEE SHT. GN1

Fab Spec: A572-50 UN. Inspection

Architect

Erection By: Field Connections

HIRSCHFELD STEEL CO. INC.

112 WEST 29TH SAN ANGELO TEXAS 76903

PHONE (915) 653-3211

DESCRIPTION: 210'-0 PLATE GIRDER UNIT

STRUCTURE: US 83/281 INTERCHANGE RAMP # 1

LOCATION: HIDALGO COUNTY

CUSTOMER: GILBERT TEXAS CONSTRUCTION

SHIP TO

Customer's Order No.

Dwg. By CRT Date 6-92

Checked By DLT Date 6-92

SHEET 111 OF

JOB NO 92-100

G01010

FED. ROAD DIV. NO.	STATE	FEDERAL AID PROJECT NO.			
6	TX.	NH (50) M			
STATE DIST. NO.	COUNTY	CONTROL NO.	SECTION NO.	JOB NO.	HIGHWAY NO.
21	HIDALGO	39	17	97	83/281

CE 92-11 (LINE # 2)

225640

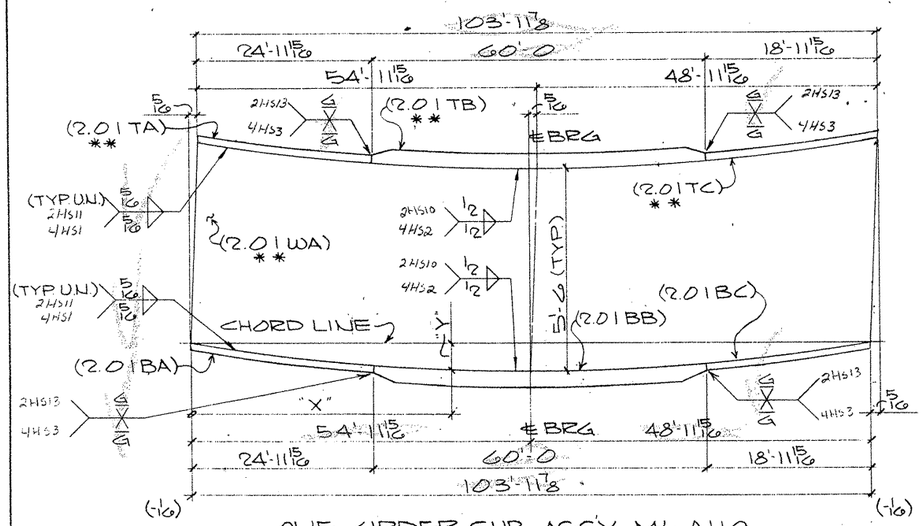

ONE GIRDER SUB-ASSY. MK-A110
(FOR GIRDER - 122PG2.01)

MK-A110							
"X"	11'-9 15/16	26'-7 1/2	40'-7 1/4	54'-11 15/16	69'-0 13/16	83'-11 1/16	97'-2 9/16
"Y"	9/16	1 1/8	1 1/2	1 5/8	1 3/8	1 5/16	5/16

℄ BRG

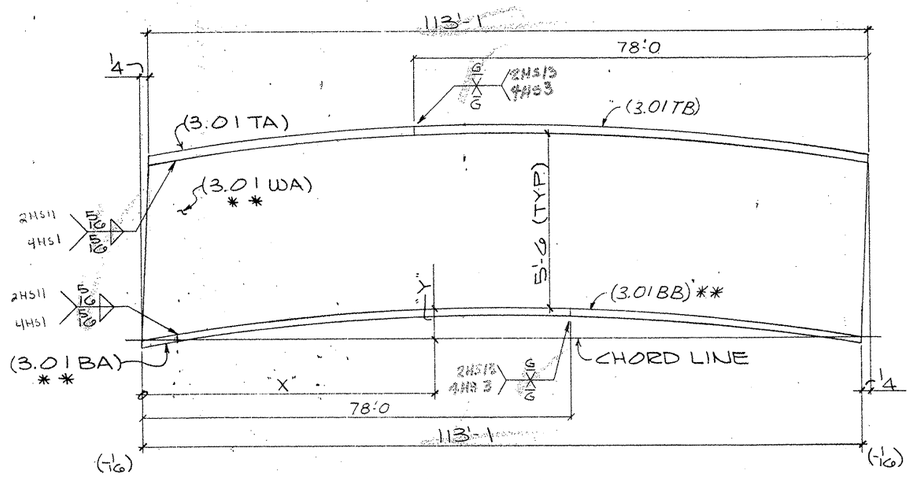

ONE GIRDER SUB-ASSY. MK-B110
(FOR GIRDER - 122PG3.01)

MK-B110								
"X"	7'-3 7/16	21'-4 5/16	35'-5 3/16	49'-6 1/16	63'-6 15/16	77'-7 13/16	91'-8 11/16	105'-9 9/16
"Y"	1 3/8	1"	1 1/2	1 11/16	1 3/4	1 1/2	1"	3/8

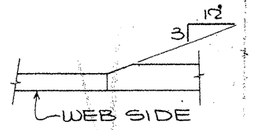

TYP. FLG. THKNESS TRANSITION

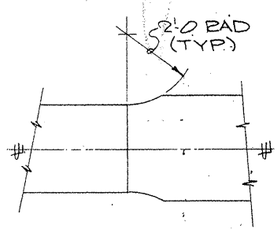

TYP. FLG. WIDTH TRANSITION

SHOP NOTES:

1) FOR GENERAL NOTES SEE SHT. GN1
2) MATERAL NOTED "*" MUST MEET CHARPY V-NOTCH REQUIREMENTS
3) FOR HEAT CURVE DIAGRAM SEE SHT. 138

G0106

FED ROAD DIV. NO	STATE	FEDERAL AID PROJECT NO.			
6	TX.	NH (50) M			
STATE DIST NO	COUNTY	CONTROL NO.	SECTION NO	JOB NO	HIGHWAY NO
21	HIDALGO	39	17	97	83/281

BILL OF MATERIAL

	Qnty	Material	Length	Mark Temp	Mark Ship	Wt	Cut From	Remarks
1								
2								
3	1	GIRDER SUB-ASSY			A110			
4	1	PL 5/8 x 66	104'-0 5/16	2.01 WA			106-4	CVN 2
5	1	PL 1 1/2 x 22	24'-11 15/16	2.01 TA			107-13	CVN 2
6	1	PL 2 3/4 x 24	60'-0	2.01 TB			109-2	CVN 3
7	1	PL 1 1/2 x 22	18'-11 15/16	2.01 TC			107-14	CVN 2
8	1	PL 1 1/2 x 22	24'-11 15/16	2.01 BA			110-6	
9	1	PL 2 3/4 x 24	60'-0	2.01 BB			110-5	
10	1	PL 1 1/2 x 22	18'-11 15/16	2.01 BC			110-7	
11								
12								
13								
14	1	GIRDER SUB-ASSY			B110			
15	1	PL 1/2 x 66	113'-1 1/4	3.01 WA			106-5	CVN 2
16	1	PL 1 1/4 x 22	35'-1	3.01 TA			110-3	
17	1	PL 1 1/4 x 22	78'-0	3.01 BA			107-15	CVN 2
18	1	PL 1 1/4 x 22	35'-1	3.01 BB			107-15	CVN 2
19	1	PL 1 1/4 x 22	78'-0	3.01 TB			110-3	
20								
21								
22								
23								
24								
25								
26								
27								
28								
29								
30								
31								
32								
33								
34								
35								
36								
37								
38								
39								
40								
41								
42								
43								
44								
45								
46								
47								
48								
49								
50								
51								
52								
53								
54								
55								
56								
57								
58								
59								
60								

FOR APPROVAL

TEXAS DEPARTMENT OF TRANSPORTATION
APPROVED EXCEPT AS NOTED
DIVISION OF BRIDGES AND STRUCTURES
OCT 21 1992
AUG 24 '92
NOT FOR CONSTRUCTION
APPROVAL OF THIS DRAWING DOES NOT RELIEVE THE CONTRACTOR OF THE RESPONSIBILITY FOR THE CORRECTNESS OF DETAIL

REVISION	DATE	DESCRIPTION OF REVISION
NO. 1		
NO. 2		
NO. 3		
NO. 4		
NO. 6		

PRINTING Regid	For	Date

Bolts Holes. Unless Noted
Shop Paint SEE SHT. GN1
Fab Spec A572-50 D.N. Inspection
Architect
Erection By Field Connections

HIRSCHFELD STEEL CO. INC.
112 WEST 29TH SAN ANGELO. TEXAS 76903
PHONE (915) 653-3211

DESCRIPTION	010'-0 PLATE GIRDER UNIT
STRUCTURE	US 83/281 INTERCHANGE RAMP #1
LOCATION	HIDALGO COUNTY
CUSTOMER	GILBERT TEXAS CONSTRUCTION
SHIP TO	
Customer's Order No.	SHEET 110 OF
Dwg. By CRT	Date 6-92 JOB NO 92-1066
Checked By DLT	Date

CE 92-11 (LINE # 1)

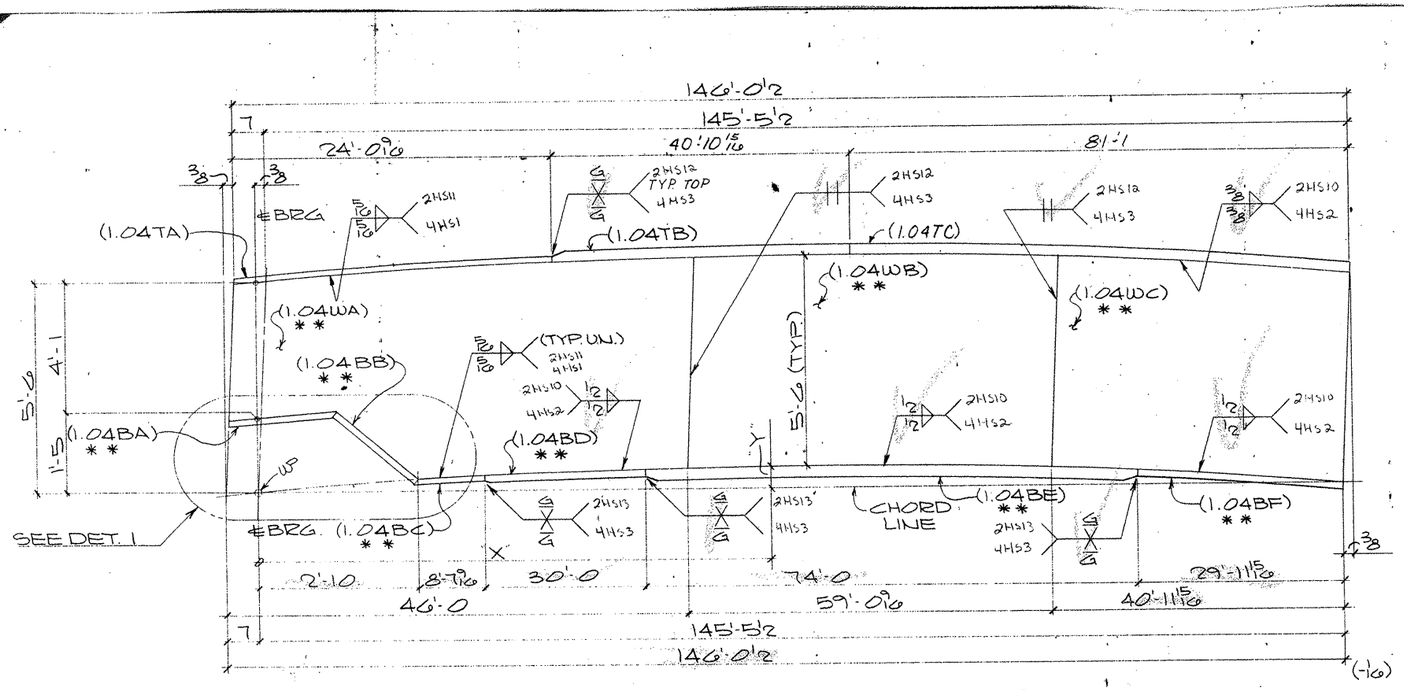

ONE GIRDER SUB-ASSY MK-A109
(FOR GIRDER-121PG1.04)

MK-A109

"X"	12'-2 5/8	27'-1 3/8	42'-1 3/8	45'-5	57'-0 3/8	71'-11 3/8	86'-10 3/8	101'-10 3/8	104'-5 9/16	116'-9 3/8	131'-8 5/8
"Y"	1 5/16	2 13/16	3 15/16	4 1/16	4 11/16	5	4 13/16	4 3/8	3 15/16	3	1 9/16
				℄ WEB SPLICE					℄ WEB SPLICE		

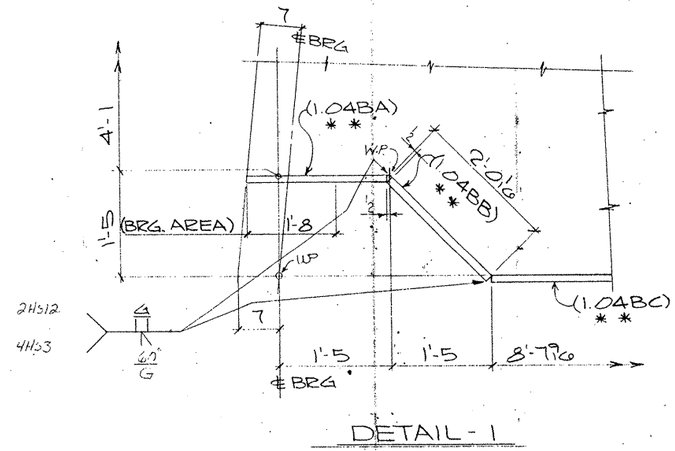

DETAIL-1

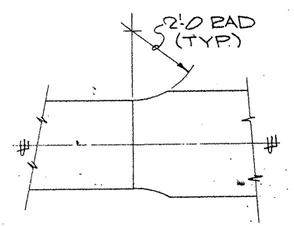

TYP FLG. WIDTH TRANSITION

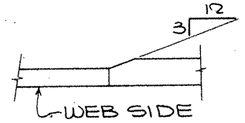

TYP. FLG. THKNESS TRANSITION

SHOP NOTES:

1) FOR GENERAL NOTES SEE SHT. GN1
2) MATERAL NOTED "* *" MUST MEET CHARPY V-NOTCH REQUIREMENTS
3) FOR HEAT CURVE DIAGRAM SEE SHT. 138

BILL OF MATERIAL

	Qnty.	Material	Length	Mark Temp	Mark Ship	Wt.	Cut From	Remarks
1								
2								
3	1	GIRDER SUB-ASSY			A109			
4	1	PL 5/8 x 66	46'-0 5/16	1.04WA			107-2	CVN2
5	1	PL 1/2 x 66	59'-1 1/16	1.04WB			107-3	CVN2
6	1	PL 5/8 x 66	41'-0 3/16	1.04WC			107-4	CVN2
7	1	PL 1 1/4 x 22	24'-0 9/16	1.04TA			111-2	
8	1	PL 2 x 22	40'-10 15/16	1.04TB			111-3	
9	1	PL 1 1/4 x 22	1'-11 1/2	1.04BA			108-16	CVN2
10	1	PL 1 1/4 x 22	1'-11 9/16	1.04BB			108-16	CVN2
11	1	PL 1 1/4 x 22	8'-7 9/16	1.04BC			108-12	CVN2
12	1	PL 2 1/2 x 22	30'-0	1.04BD			109-9	CVN3
13	1	PL 3 x 26	74'-0	1.04BE			109-10	CVN3
14	1	PL 2 1/2 x 22	29'-11 15/16	1.04BF			109-9	CVN3
15	1	PL 2 x 22	81'-1	1.04TC			111-3	
16								
17								
18								
19								
20								
21								
22								
23								
24								
25								
26								
27								
28								
29								
30								
31								
32								
33								
34								
35								
36								
37								
38								
39								
40								
41								
42								
43								
44								
45								
46								
47								
48								
49								
50								
51								
52								
53								
54								
55								
56								
57								
58								
59								
60								

FOR APPROVAL
AUG 24 '92
NOT FOR CONSTRUCTION

TEXAS DEPARTMENT OF TRANSPORTATION
APPROVED
DIVISION OF BRIDGES AND STRUCTURES
OCT 21 1992
APPROVAL OF THIS DRAWING DOES NOT RELIEVE THE CONTRACTOR OF THE RESPONSIBILITY FOR THE CORRECTNESS OF DETAILS, DIMENSIONS, ETC. SHOWN ON THIS DRAWING.

REVISION	DATE	DESCRIPTION OF REVISION
NO. 1		
NO. 2		
NO. 3		
NO. 4		
NO. 5		

PRINTING: Reqd | For | Date

Bolts Holes Unless Noted
Shop Paint SEE SHT GN1
Fab Spec A572-50 U.N. Inspection
Architect
Erection By Field Connections

HIRSCHFELD STEEL CO. INC.
112 WEST 29TH SAN ANGELO, TEXAS 76903
PHONE (915) 653-3211

DESCRIPTION	210'-0 PLATE GIRDER UNIT
STRUCTURE	US 83/281 INTERCHANGE RAMP "1"
LOCATION	HIDALGO COUNTY
CUSTOMER	GILBERT TEXAS CONSTRUCTION
SHIP TO	
Customer's Order No.	
Dwg By CRT	Date 6-92
Checked By DLT	Date 6-92

SHEET 109 OF
JOB NO 92-106

CE92-11 (LINE #4)

G0106

FED ROAD DIV NO	STATE	FEDERAL AID PROJECT NO			
6	TX.	NH (50) M			
STATE DIST. NO	COUNTY	CONTROL NO	SECTION NO	JOB NO	HIGHWAY NO
21	HIDALGO	39	17	97	83/281

332640

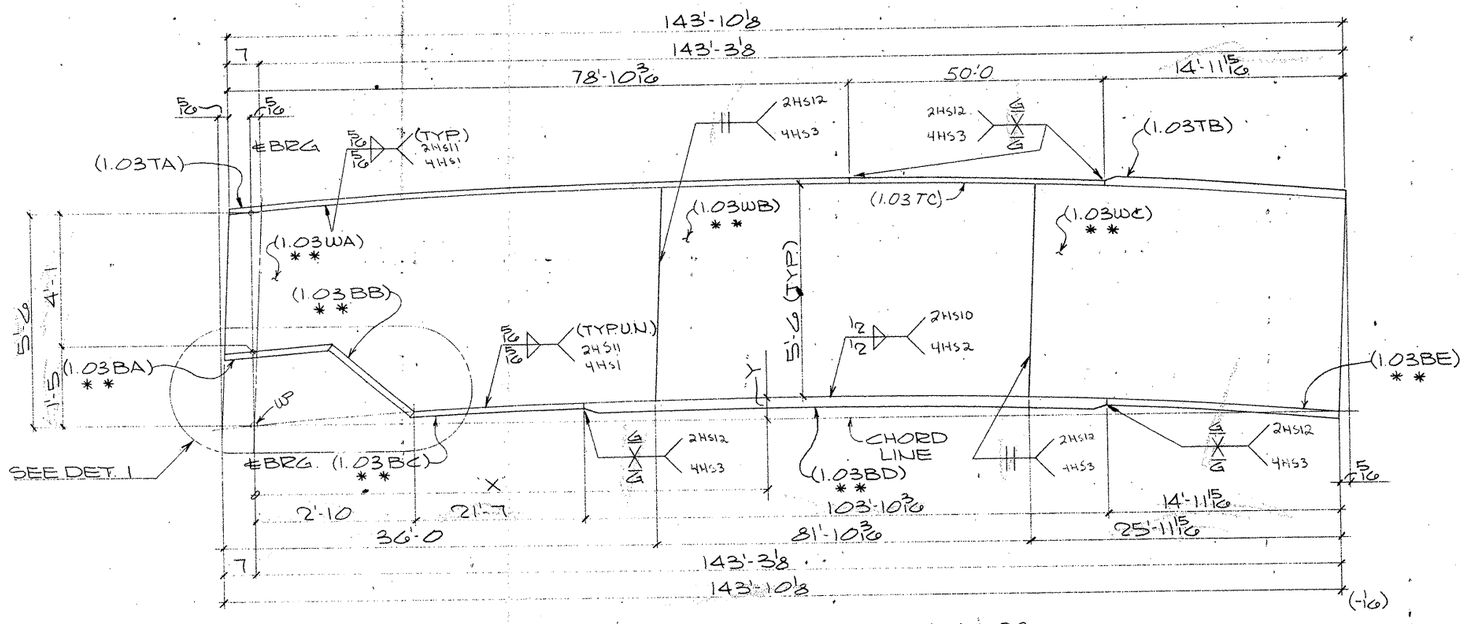

ONE GIRDER SUB-ASSY MK-A108
(FOR GIRDER-120PG1.03)

MK-A108											
"X"	12'-8 3/8	26'-11 1/16	35'-5	41'-8 9/16	56'-5 5/8	71'-8 11/16	85'-11 3/4	100'-8 13/16	115'-5 7/8	117'-3 1/4	130'-2 15/16
"Y"	15/16	2 1/16	2 9/16 ℄ WEB SPLICE	3"	3 3/16	4 3/16	4 3/16	3 9/16	2 5/8	2 7/16 ℄ WEB SPLICE	1 15/16

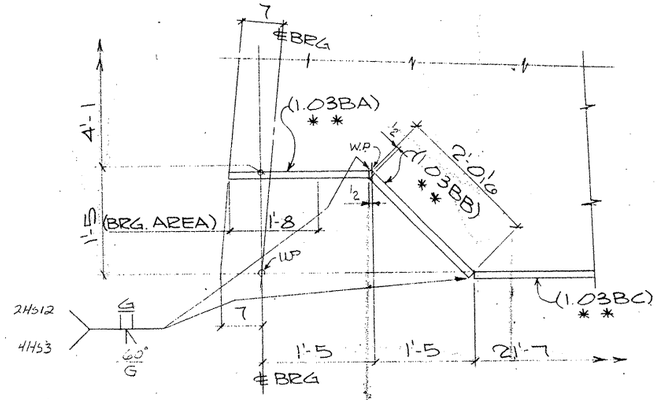

DETAIL-1

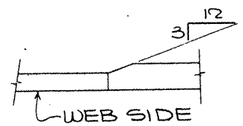

TYP. FLG. THKNESS TRANSITION

SHOP NOTES:

1) FOR GENERAL NOTES SEE SHT. GN1
2) MATERAL NOTED * * MUST MEET CHARPY V-NOTCH REQUIREMENTS
3) FOR HEAT CURVE DIAGRAM SEE SHT. 138

BILL OF MATERIAL

	Qnty	Material	Length	Mark Temp.	Mark Ship.	Wt	Cut From	Remarks
1								
2								
3	1	GIRDER SUB-ASSY			A108			
4	1	PL 9/16 × 66	36'-03/16	1.03WA			106-15	CVN2
5	1	PL 1/2 × 66	81'-10 5/8	1.03WB			106-16	CVN2
6	1	PL 9/16 × 66	126'-03/16	1.03WC			106-17	CVN2
7	1	PL 1 1/4 × 22	78'-10 3/16	1.03TA			110-14	
8	1	PL 1 1/2 × 22	14'-11 5/16	1.03TB			110-15	
9	1	PL 1 1/4 × 22	1'-11 1/2	1.03BA			108-16	CVN2
10	1	PL 1 1/4 × 22	1'-11 9/16	1.03BB			108-16	CVN2
11	1	PL 1 1/4 × 22	21'-7	1.03BC			108-7	CVN2
12	1	PL 2 1/2 × 22	103'-10 3/16	1.03BD			109-5	CVN3
13	1	PL 1 1/2 × 22	14'-11 5/16	1.03BE			108-8	CVN2
14	1	PL 1 1/4 × 22	50'-0	1.03TC			110-14	

FOR APPROVAL
THIS DRAWING IS FOR DESIGN AND DETAILS ONLY. APPROVED AUG 24 '92
FABRICATION METHODS AND PROCEDURES ARE THE RESPONSIBILITY OF THE FABRICATOR. OCT 01 1992
ANY MATERIAL OR ITEM SHOWN ON THIS DRAWING DOES NOT RELIEVE THE FABRICATOR OF THE RESPONSIBILITY OF FURNISHING ALL MATERIAL AND ITEMS REQUIRED FOR A COMPLETE AND FUNCTIONING STRUCTURE.
NOT FOR CONSTRUCTION

REVISION	DATE	DESCRIPTION OF REVISION
NO. 1		
NO. 2		
NO. 3		
NO. 4		
NO. 5		

PRINTING Req'd	For	Date

Bolts Holes. Unless Noted
Shop Paint SEE SHT GN1
Fab Spec A572-50 U.N. Inspection
Architect
Erection By Field Connections

HIRSCHFELD STEEL CO. INC.
112 WEST 29TH SAN ANGELO TEXAS 76903
PHONE (915) 653-3211

DESCRIPTION 610'-0 PLATE GIRDER UNIT
STRUCTURE US 83/281 INTERCHANGE RAMP #1
LOCATION HIDALGO COUNTY
CUSTOMER GILBERT TEXAS CONSTRUCTION
SHIP TO
Customer's Order No.
Dwg. By CRT Date 6-92
Checked By DLT Date 6-92
CE92-11 (LINE #3)

SHEET 108 OF
JOB NO 92-106

G0106

FED ROAD DIV NO	STATE	FEDERAL AID PROJECT NO.			
6	TX.	NH (50) M			
STATE DIST. NO	COUNTY	CONTROL NO	SECTION NO	JOB NO	HIGHWAY NO
21	HIDALGO	39	17	97	83/281

APV 6/1

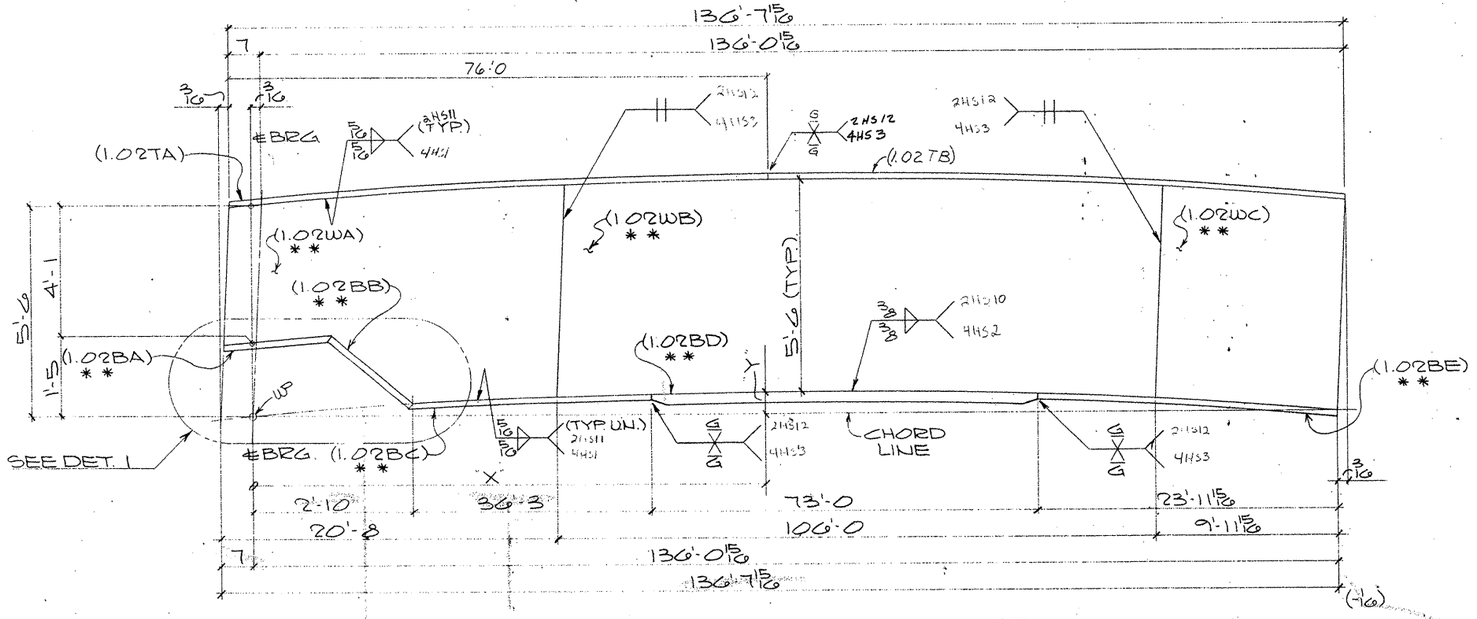

ONE GIRDER SUB-ASSY MK-A107
(FOR GIRDER-119PG1.02)

MK-A107											8
"X"	12'-2 5/16	20'-1	26'-9 3/16	41'-4 1/8	55'-11	70'-5 7/8	85'-0 3/4	99'-7 11/16	114'-2 9/16	126'-①	128'-9 7/16
"Y"	3/16	3/8 ℄ WEB SPLICE	9/16	1"	1 9/16	2"	2 1/8	1 13/16	1 1/4	5/8 ℄ WEB SPLICE	7/16

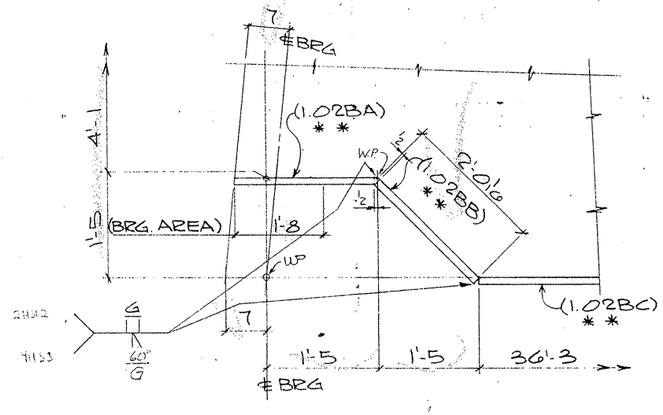

DETAIL-1

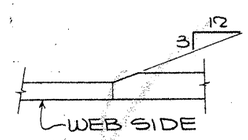

TYP. FLG. THKNESS TRANSITION

SHOP NOTES:
1) FOR GENERAL NOTES SEE SHT. GN1
2) MATERAL NOTED "* *" MUST MEET CHARPY V-NOTCH REQUIREMENTS
3) FOR HEAT CURVE DIAGRAM SEE SHT. 138

G0106

FED. ROAD DIV. NO.	STATE	FEDERAL AID PROJECT NO			
6	TX.	NH (50) M			
STATE DIST. NO.	COUNTY	CONTROL NO.	SECTION NO.	JOB NO.	HIGHWAY NO.
21	HIDALGO	39	17	97	83/281

BILL OF MATERIAL

	Qnty	Material	Length	Mark Temp	Mark Ship.	Wt	Cut From	Remarks
3	1	GIRDER SUB-ASSY			A107			
4	1	PL 9/16 x 66	20'-8 1/16	1.02WA			106-7	CVN2
5	1	PL 1/2 x 66	106'-0 1/4	1.02WB			106-8	CVN2
6	1	PL 5/8 x 66	10'-0 1/8	1.02WC			106-9	CVN2
7	1	PL 1 1/4 x 22	76'-0	1.02TA			110-8	
8	1	PL 1 1/4 x 22	1'-11 1/2	1.02BA			108-16	CVN2
9	1	PL 1 1/4 x 22	1'-11 9/16	1.02BB			108-16	CVN2
10	1	PL 1 1/4 x 22	36'-3	1.02BC			107-17	CVN2
11	1	PL 1 3/4 x 22	73'-0	1.02BD			108-4	CVN2
12	1	PL 1 1/4 x 22	23'-11 15/16	1.02BE			107-18	CVN2
13	1	PL 1 1/4 x 22	60'-7 15/16	1.02TB			110-8	

TEXAS DEPARTMENT OF TRANSPORTATION
APPROVED
OCT 2 1 1992
APPROVAL OF THIS DRAWING DOES NOT RELIEVE THE CONTRACTOR OF THE RESPONSIBILITY FOR THE CORRECTNESS OF DETAILS

FOR APPROVAL
AUG 24 92
NOT FOR CONSTRUCTION

REVISION	DATE	DESCRIPTION OF REVISION
NO. 1		
NO. 2		
NO. 3		
NO. 4		
NO. 5		

PRINTING: Req'd | For | Date

Bolts Holes Unless Noted
Shop Paint SEE SHT GN1
Fab Spec A572-50 UN. Inspection
Architect
Erection By Field Connections

HIRSCHFELD STEEL CO. INC.
112 WEST 29TH SAN ANGELO, TEXAS 76903
PHONE (915) 653-3211

DESCRIPTION 610'-0 PLATE GIRDER UNIT #5
STRUCTURE US 83/281 INTERCHANGE RAMP #1
LOCATION HIDALGO COUNTY
CUSTOMER GILBERT TEXAS CONSTRUCTION
SHIP TO
Customer's Order No
Dwg By CRT Date 6-92
Checked By DLT Date 6/92
SHEET 107 OF
JOB NO 92-106

CE 92-11 (LINE #2)

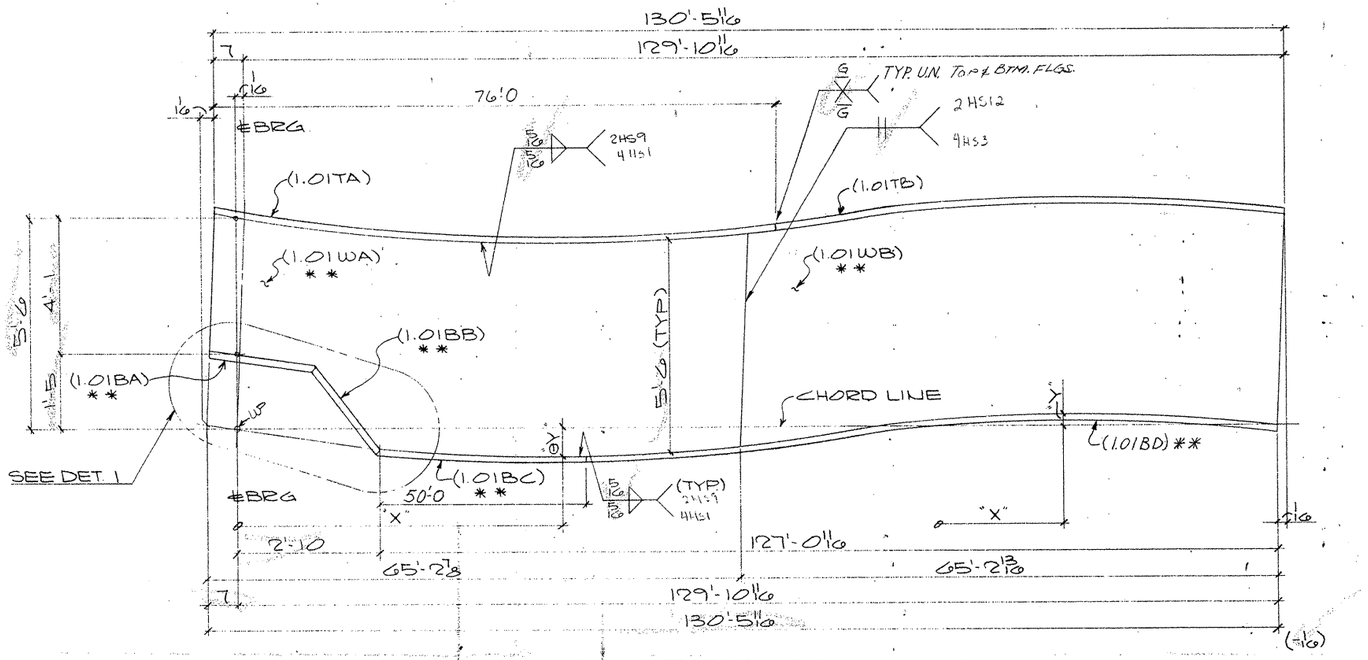

ONE GIRDER SUB-ASSY. MK-A106

(FOR GIRDER - 118PG1.01)

MK - A106

"X"	12'-7 13/16	26'-6 15/16	40'-1 13/16	55'-4 3/8	64'-7 3/8 ℄ WEB SPLICE	69'-9 1/16	84'-1 3/4	98'-6 1/2	112'-11 3/16	127'-3 15/16
"Y"	0 3/8	0 1"	0 1"	0 11/16	0 3/8	0 3/16	3/16	1/4	3/16	1/16

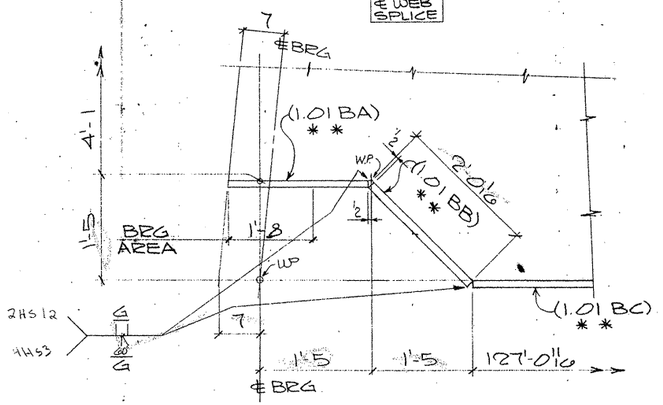

DETAIL - 1

SHOP NOTES:

1) FOR GENERAL NOTES SEE SHT. GN1
2) MATERAL NOTED "* *" MUST MEET CHARPY V-NOTCH REQUIREMENTS
3) FOR HEAT CURVE DIAGRAM SEE SHT. #138

G0106

FED ROAD DIV NO	STATE	FEDERAL AID PROJECT NO			
6	TX.	NH (50) M			
STATE DIST. NO	COUNTY	CONTROL NO	SECTION NO	JOB NO	HIGHWAY NO
21	HIDALGO	39	17	97	83/281

BILL OF MATERIAL

	Qnty	Material	Length	Mark Temp	Mark Ship.	Wt	Cut From	Remarks
1								
2								
3	1	GIRDER SUB-ASSY			A106			
4	1	PL 1/2 x 66	65'-2 7/8	1.01WA			106-2	CVN 2
5	1	PL 1/2 x 66	65'-2 13/16	1.01WB			106-3	CVN 2
6	1	PL 1 1/4 x 22	76'-0	1.01TA			110-2	
7	1	PL 1 1/4 x 22	1'-11 1/2	1.01BA			108-16	CVN 2
8	1	PL 1 1/4 x 22	1'-11 9/16	1.01BB			108-16	CVN 2
9	1	PL 1 1/4 x 22	50'-0	1.01BC			107-12	CVN 2
10	1	PL 1 1/4 x 22	54'-5 11/16	1.01TB			110-2	
11	1	PL 1 1/4 x 22	77'-0 11/16	1.01BD			107-12	CVN 2
12								
13								
14								
15								
16								
17								
18								
19								
20								
21								
22								
23								
24								
25								
26								
27								
28								
29								
30								
31								
32								
33								
34								
35								
36								
37								
38								
39								
40								
41								
42								
43								
44								
45								
46								
47								
48								
49								
50								
51								
52								
53								
54								
55								
56								
57								
58								
59								
60								

FOR APPROVAL

TEXAS HIGHWAY DEPARTMENT
APPROVED
DIVISION OF BRIDGES AND STRUCTURES
DEC 21 1992
APPROVAL OF THIS DRAWING DOES NOT RELIEVE THE CONTRACTOR OF THE RESPONSIBILITY FOR THE CORRECTNESS

AUG 14 '92

NOT FOR CONSTRUCTION

REVISION	DATE	DESCRIPTION OF REVISION
NO. 1		
NO. 2		
NO. 3		
NO. 4		
NO. 5		

PRINTING Regd	For	Date

Bolts Holes Unless Noted
Shop Paint SEE SHT GN1
Fab Spec A572-50 DW Inspection
Architect
Erection By Field Connections

HIRSCHFELD STEEL CO. INC.
112 WEST 29TH SAN ANGELO, TEXAS 76903
PHONE (915) 653-3211

DESCRIPTION	60'-0 PLATE GIRDER UNIT
STRUCTURE	US 83/281 INTERCHANGE RAMP "I"
LOCATION	HIDALGO COUNTY
CUSTOMER	GILBERT TEXAS CONSTRUCTION
SHIP TO	
Customer's Order No.	
Dwg. By CRT	Date 6-92
Checked By DCT	Date 6-92

SHEET 106 OF
JOB NO 92-106

CE92-11 (LINE # 1)

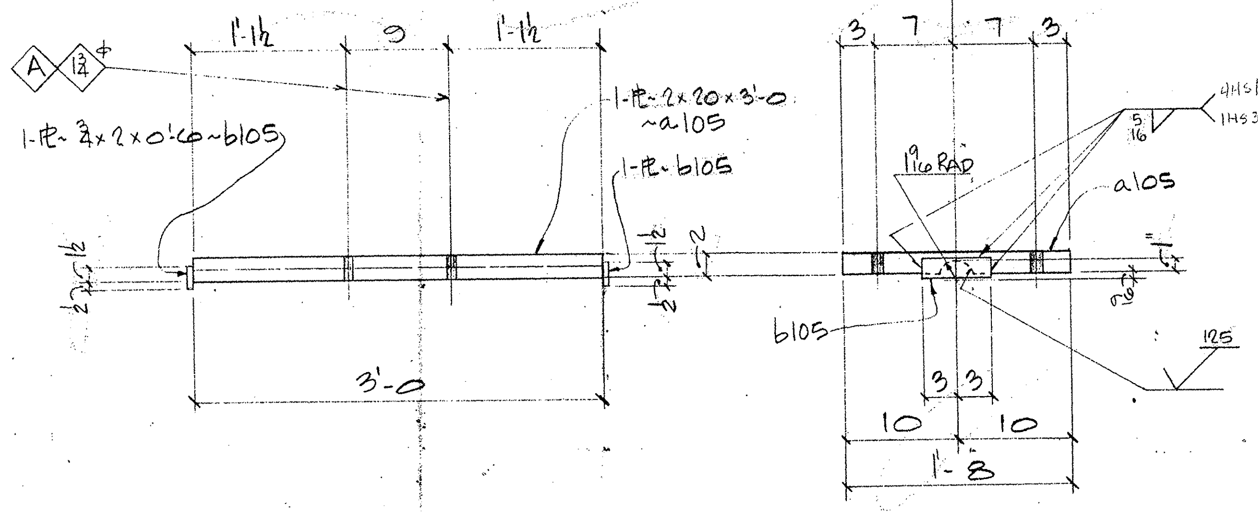

2- SOLE PLATES~105BS1
(SHOP WELD TO BENT CAP 103SB1.13)

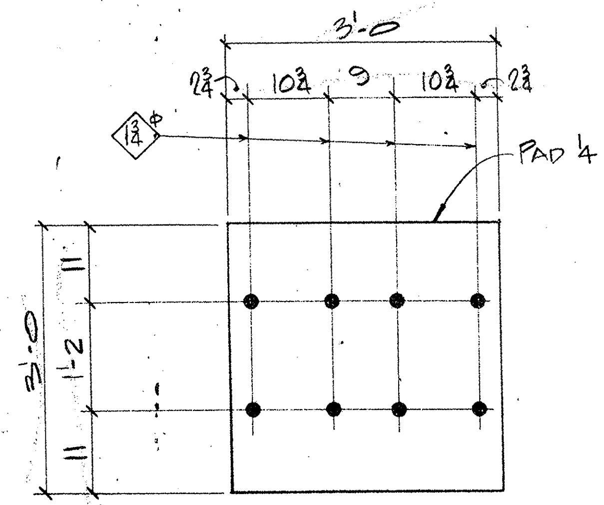

2- PREFORMED FABRIC PAD~105BS3
(PER SDH & PT ITEM 441.33)

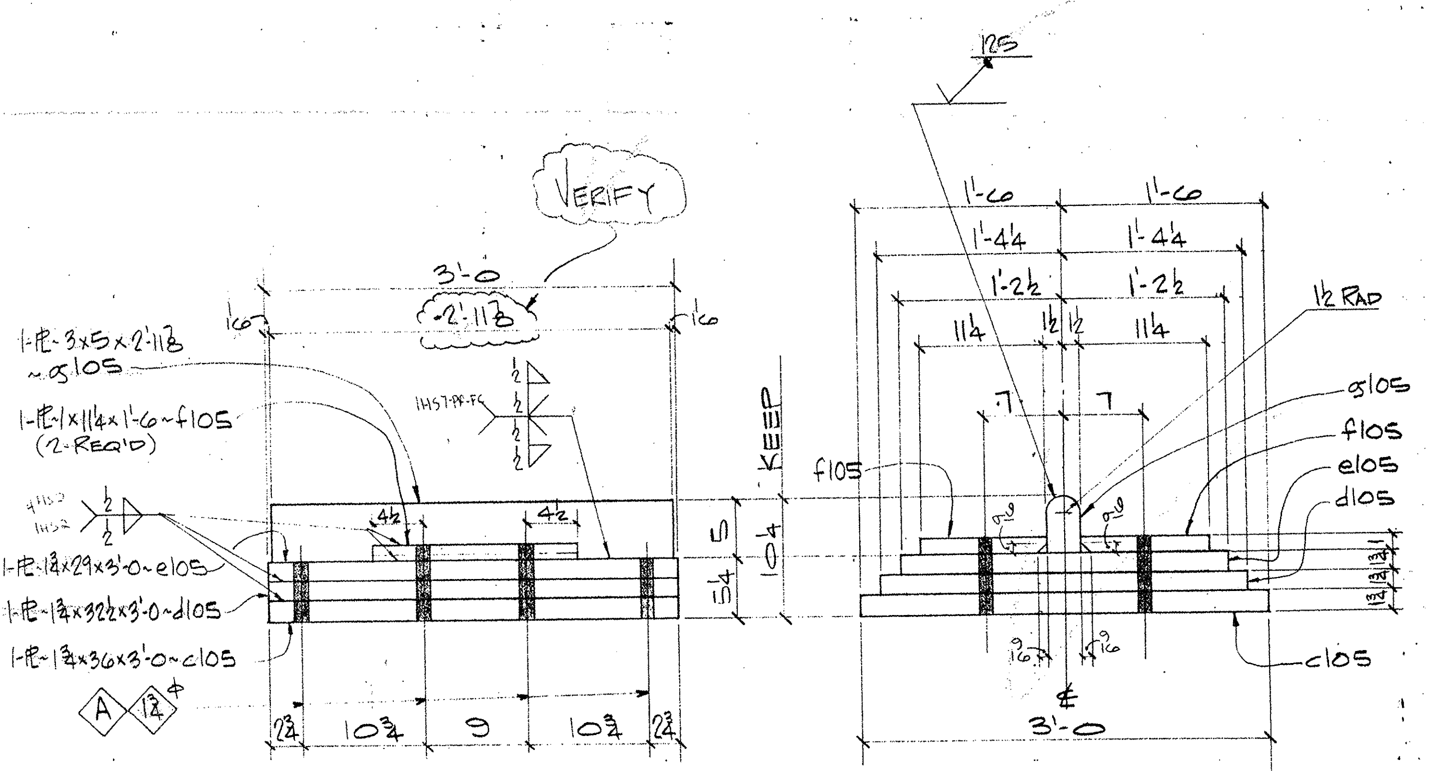

2- MASONRY PLATES~105BS2

NOTE:
FOR GENERAL NOTES, SEE SHT. GN1.

	Qnty.	Material	Length	Mark Temp	Mark Ship	Wt	Cut From	Remarks
4	2	SOLE PLATES			105BS1			
5	2	PL 2×20	3'-0	a105			104-6	
6	4	PL ¾×2	0'-6	b105			104-7	
10	2	MASONRY PLATES			105BS2			
11	2	PL 1¾×36	3'-0	c105			104-1	
12	2	PL 1¾×32½	3'-0	d105			104-2	
13	2	PL 1¾×29	3'-0	e105			104-3	
14	4	PL 1×11¼	1'-6	f105			104-4	
15	2	PL 3×5	2'-11⅞	g105			104-5	
24	2	PREFORMED FABRIC PAD			105BS3			
25	2	PAD ¼×36	3'-0				103-10	
26		(PER SDH & PT ITEM 441.33)						

FOR APPROVAL
AUG 24 92
NOT FOR CONSTRUCTION
TEXAS DEPARTMENT OF TRANSPORTATION
APPROVED
OCT 21 1992
APPROVAL OF THE DRAWING DOES NOT RELIEVE THE CONTRACTOR OF THE RESPONSIBILITY FOR THE CORRECTNESS OF DETAIL

REVISION	DATE	DESCRIPTION OF REVISION
NO 1		
NO 2		
NO 3		
NO 4		
NO 5		

PRINTING: Req'd / For / Date

Bolts — Holes: NTD. ~~Unless Noted~~
Shop Paint: SEE SHT GN1
Fab Spec: A572-50 — Inspection
Architect
Erection By — Field Connections

HIRSCHFELD STEEL CO. INC.
112 WEST 29TH SAN ANGELO TEXAS 76903
PHONE (915) 653-3211

DESCRIPTION: 610'-0 PLATE GIRDER UNIT
STRUCTURE: US 83/281 INTERCHANGE RAMP
LOCATION: HIDALGO COUNTY
CUSTOMER: GILBERT TEXAS CONSTRUCTION
SHIP TO
Customer's Order No.
Dwg. By JPC — Date 5/92
Checked By JC — Date 7-9-92
SHEET 105 OF
JOB NO 92-106
CE 92-11
APV 8/21

FED. ROAD DIV. NO.	STATE	FEDERAL AID PROJECT NO.			HIGHWAY NO.
6	TX.	NH (50) M			
STATE DIST. NO.	COUNTY	CONTROL NO.	SECTION NO.	JOB NO.	HIGHWAY NO.
21	HIDALGO	39	17	97	83/281

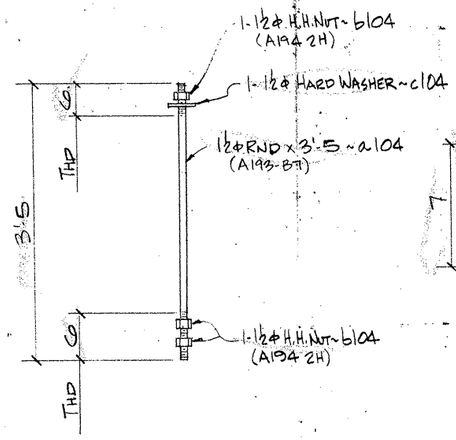

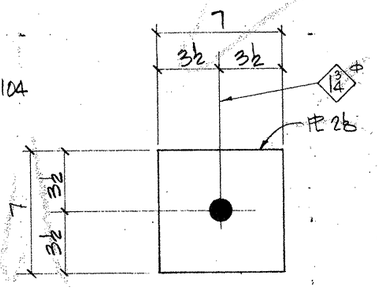

8- PLATE WASHER~104P1
(GALV.)

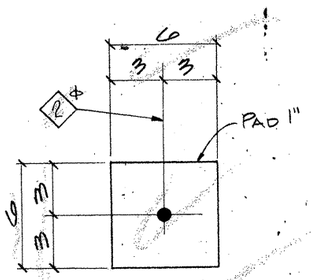

8-(PREFORMED FABRIC PAD~104P3
(PER SDH & PT ITEM 441.33)

8- ANCHOR BOLTS~104AB1
(GALV. SEE GALV. NOTE)

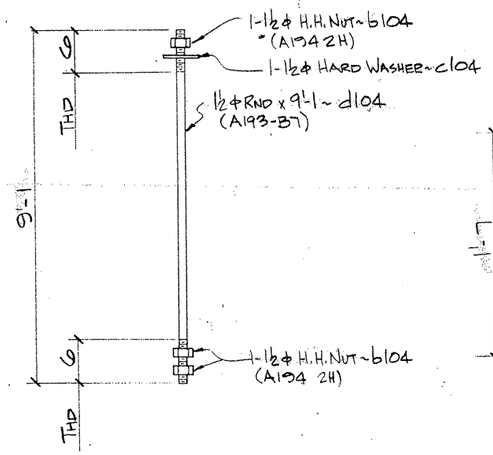

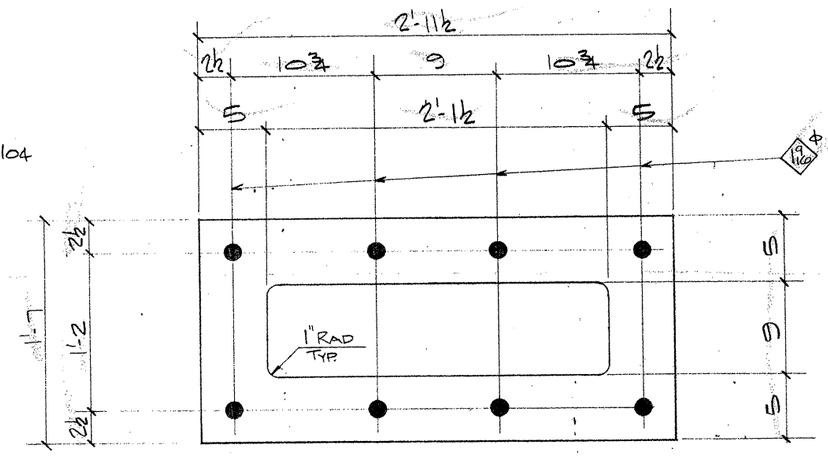

2- BOLT TEMPLATE~104P2
(NO PAINT)

8- HOLD DOWN BOLTS~104AB2
(GALV. SEE GALV. NOTE)

GALV. NOTE:
HOT DIP GALVANIZE AFTER FABRICATION. ALL NUTS SHALL BE RETAPPED AFTER GALVANIZING FOR CLASS 2B FIT.

NOTE:
FOR GENERAL NOTES, SEE SHT. GN1.

BILL OF MATERIAL

	Qnty	Material	Length	Mark Temp	Mark Ship	Wt	Cut From	Remarks
1								
2								
3								
4	8	ANCHOR BOLTS			104AB1			
5	8	1½øRND	3'-5	a104			103-5	A193-B7
6	24	1½ø H.H.NUT		b104			103-6	A194 2H
7	8	1½ø HARD WASH.		c104			103-7	A325
8								
9								
10								
11								
12	8	ANCHOR BOLTS			104AB2			
13	8	1½ø RND	9'-1	d104			103-4	A193-B7
14	24	1½ø H.H.NUT		b104			103-6	A194 2H
15	8	1½ø HARD WASH		c104			103-7	A325
16								
17								
18								
19	8	PLATE WASHER			104P1			
20	8	PL 2ø x 7	0'-7				104-8	A572 50
21								
22								
23								
24	2	BOLT TEMPLATE			104P2			
25	2	PL ⅜ x 19	2'-11½				104-9	A572 50
26								
27								
28								
29	8	(PREFORMED PAD)			104P3			
30	8	PAD 1 x 6	0'-6				103-11	
31		(PER SDH & PT ITEM 441.33)						
32								
33								
34								
35								
36								
37								
38								
39								
40								
41								
42								
43								
44								
45								
46								
47								
48								
49								
50								
51								
52								
53								
54								
55								
56								
57								
58								
59								
60								

FOR APPROVAL
AUG 24 '92
NOT FOR CONSTRUCTION

TEXAS DEPARTMENT OF TRANSPORTATION
APPROVED
DIVISION OF PLANS AND STANDARDS
OCT 21 1992
APPROVAL OF THIS DRAWING DOES NOT RELIEVE THE CONTRACTOR OF RESPONSIBILITY FOR CORRECTNESS OF DETAILS

REVISION	DATE	DESCRIPTION OF REVISION
NO. 1		
NO. 2		
NO. 3		
NO. 4		
NO. 5		

PRINTING

Read	For	Date

Bolts Holes NTP
Shop Paint NO PAINT
Fab Spec A572 50 U.N. Inspection
Architect
Erection By Field Connections

HIRSCHFELD STEEL CO. INC.
112 WEST 29TH SAN ANGELO TEXAS 76903
PHONE (915) 653-3211

DESCRIPTION	610'-0 PLATE GIRDER UNIT
STRUCTURE	US 83/281 INTERCHANGE RAMP I
LOCATION	HIDALGO COUNTY
CUSTOMER	GILBERT TEXAS CONSTRUCTION
SHIP TO	
Customer's Order No	
Dwg By JK Date 5/92	SHEET 104 OF
Checked By JC Date 7-9-92	JOB NO. 92-106

CE 92-11

M.0106

FED. ROAD DIV. NO.	STATE	FEDERAL AID PROJECT NO				
6	TX.	NH (50) M				
STATE DIST. NO.	COUNTY	CONTROL NO.	SECTION NO.	JOB NO.	HIGHWAY NO.	
21	HIDALGO	39	17	97	83/281	

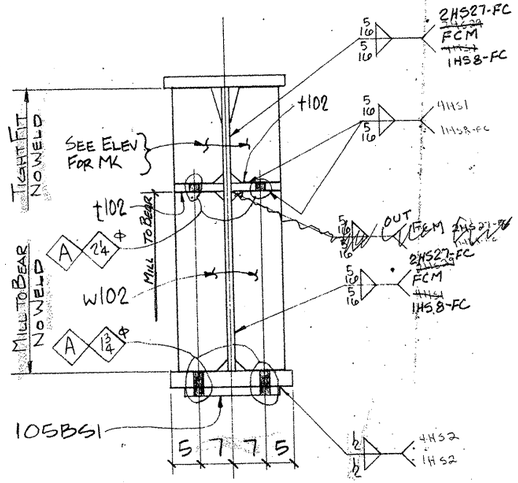

SECTION ~ A

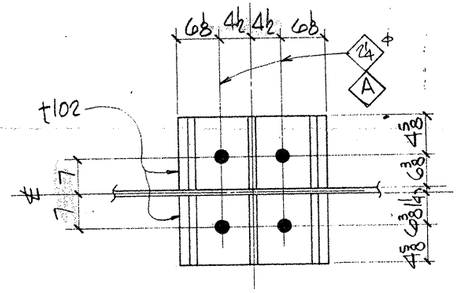

SECTION ~ B

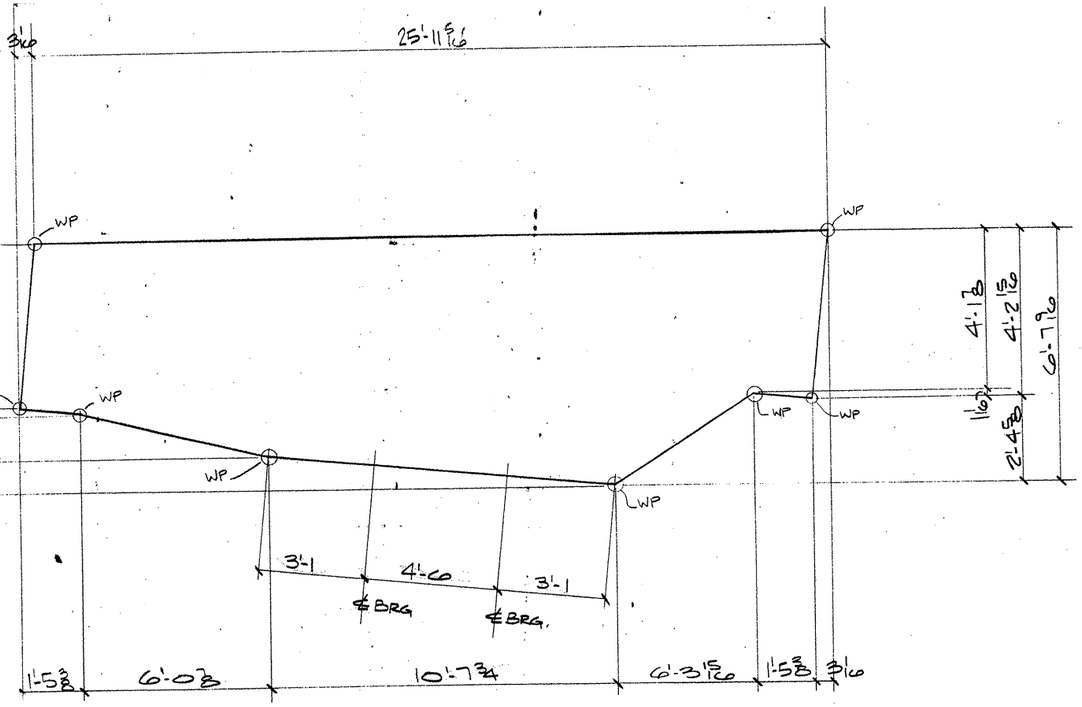

DETAIL WEB ℄ ~ 1.13WA

1								
2								
3					105BS1.13			
4	ONE	STEEL BENT CAP		1.13WA			102-1	FCM1
5	ONE	PL 1 1/4 x 79 9/16	26'-2 3/8	1.13TA			102-2	FCM1
6	ONE	PL 2 x 24	25'-11 5/16	1.13BA			102-3	CVN2
7	ONE	PL 2 x 24	6'-3 5/8	1.13BB			102-5	CVN3
8	ONE	PL 3 x 24	10'-8	1.13BC			102-4	CVN2
9	ONE	PL 2 x 24	6'-9 9/16	d102				
10	2	ANGLE		e102				
11	2			f102				
12	2			g102				
13	2			h102R				
14	ONE	STIFF		h102L				
15	ONE			k102R				
16	ONE			k102L				
17	ONE			m102R				
18	ONE			m102L				
19	ONE			n102R				
20	ONE			n102L				
21	ONE			P102R				
22	ONE			P102L				
23	ONE			s102R				
24	ONE			s102L				
25	ONE			t102				
26	4	BRG PLATE		w102				
27	12	STIFF		105BS1				
28	2	SOLE PLATE						
29	80	HS BOLT 1℄	0'-4 4				105-15	A325
30	80	HS WASH 1℄					105-16	A325
31	ONE	PL 2 x 24	1'-5 3/8	1.13BD			102-16	CVN2
32	ONE	PL 2 x 24	1'-5 3/8	1.13BE			102-16	CVN2
33								
34								
35								
36								
37								
38								
39								
40								
41								
42								
43								
44								
45								
46								
47								
48								
49								
50								
51								
52								
53								
54								
55								
56								
57								
58								
59								
60								

TRANSPORTATION PLANNING DIVISION
DESIGN SECTION
BUREAU OF PUBLIC ROADWAYS
OCT 21 1992
APPROVAL OF THE PLANNING DIVISION DOES NOT RELIEVE THE RESPONSIBILITY OF THE ENGINEER OF RECORD FOR THE DESIGN OF THE PLANS.

FOR APPROVAL
AUG 24 '92
NOT FOR CONSTRUCTION

SHOP NOTES:
1. FOR GENERAL NOTES SEE SHT GN1
2. WORK THIS SHT. WITH SHT 103A/B.

REVISION	DATE	DESCRIPTION OF REVISION
NO. 1		
NO. 2		
NO. 3		
NO. 4		
NO. 5		

PRINTING		
Req'd	For	Date

Bolts A325 TY1 Holes: 1 1/16 ⌀ Unless Noted
Shop Paint SEE SHT GN1
Fab Spec A572 50 U.N. Inspection
Architect
Erection By Field Connections

HIRSCHFELD STEEL CO. INC.
112 WEST 29TH SAN ANGELO, TEXAS 76903
PHONE (915) 653-3211

DESCRIPTION 610-0 PLATE GIRDER UNIT
STRUCTURE US 83/281 INTERCHANGE RAMP I
LOCATION HIDALGO COUNTY
CUSTOMER GILBERT TEXAS CONSTRUCTION
SHIP TO
Customer's Order No.
Dwg. By JTR Date 5/92
Checked By JC Date 7-9-92
SHEET 038 OF
JOB NO 92-106

AMV 11/2

BG 106

FED. ROAD DIV. NO.	STATE	FEDERAL AID PROJECT NO.			
6	TX.	NII (50) M			
STATE DIST. NO.	COUNTY	CONTROL NO.	SECTION NO.	JOB NO.	HIGHWAY NO.
21	HIDALGO	39	17	97	83/281

CE92-11

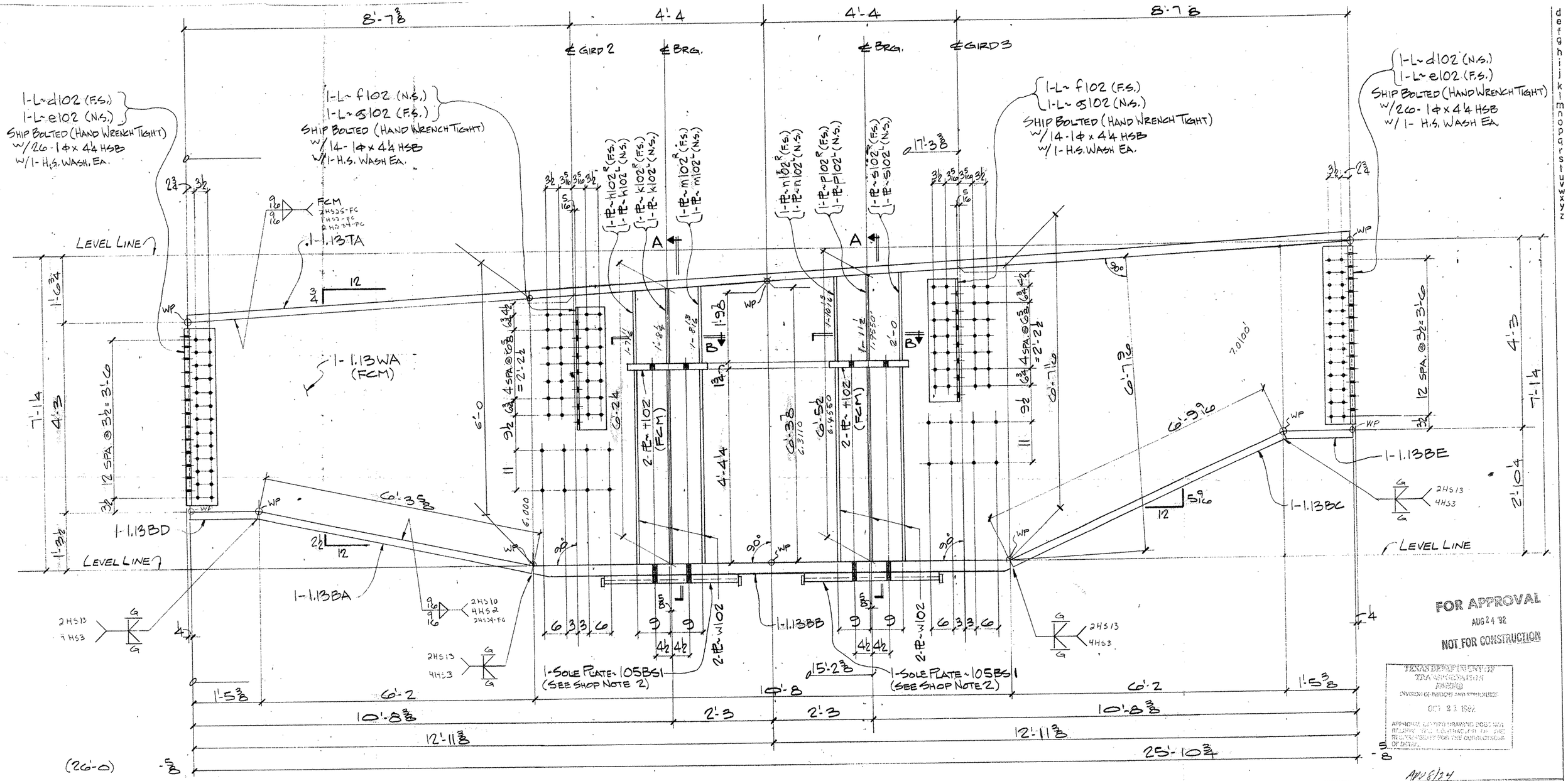

Shop Notes:

1. Work this sht. w/sht. 103B.
2. Spacing & alignment of sole plates 105BS1 is critical & must be exact.
3. For general notes see sht. GN1.

One - Steel Bent Cap ~ 103SB1.13

(Approx. Wt. = Tons)

B4106

FED. ROAD DIV. NO.	STATE	FEDERAL AID PROJECT NO.			
6	TX.	NH (50) M			
STATE DIST. NO.	COUNTY	CONTROL NO.	SECTION NO.	JOB NO.	HIGHWAY NO.
21	HIDALGO	39	17	97	83/281

HOLES 1"ϕ	U.N.	FOR AP'VL	
BOLTS	U.N.	RETURNED	
WELDS	U.N.	TO SHOP	
PAINT			

REVISIONS		
NO.	DATE	REMARKS
1		
2		
3		
4		

HIRSCHFELD STEEL CO. INC.
112 WEST 29TH SAN ANGELO, TEXAS 76903
PHONE (915) 653-3211

CUSTOMER GILBERT TEXAS CONSTRUCTION
ARCHITECT
PROJECT US 83/281 INTERCHANGE RAMP
LOCATION HIDALGO COUNTY

DRAWN JC DATE 5/92 · JOB NO 92-106 · SHEET NO 103A/B OF
CHECKED JC DATE 7-9-92

CE 92-11

Texas Department of Transportation Approved Division of Bridges and Structures Oct 23 1992
Approval of this drawing does not relieve the contractor of the responsibility for the correctness of detail.

AUG 24

d e f g h i j k l m n o p q r s t u v w x y z

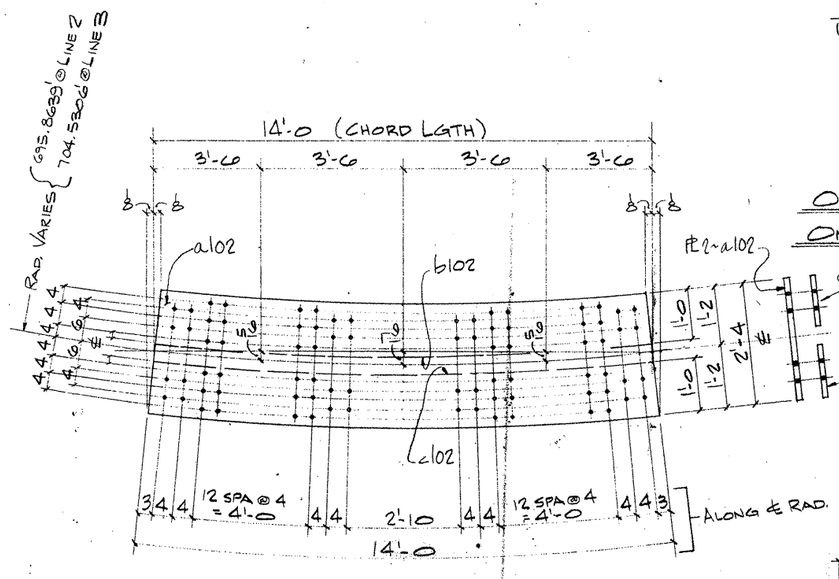

2 - PLATES ~ a102

2 - PLATES ~ b102

2 - PLATES ~ c102

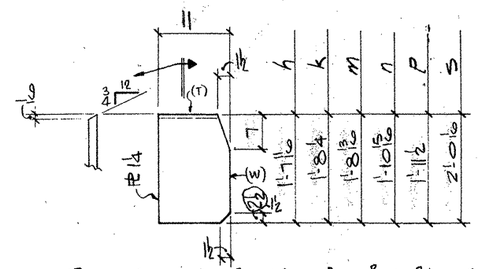

ONE - PLATE (EA.) ~ $h102^L$, $k102^R$, $m102^R$, $n102^R$, $P102^R$ & $s102^R$ (AS SHN & NTD.)

ONE - PLATE (EA.) ~ $h102^L$, $k102^L$, $m102^L$, $n102^L$, $P102^L$ & $s102^L$ (OPP. HD.)

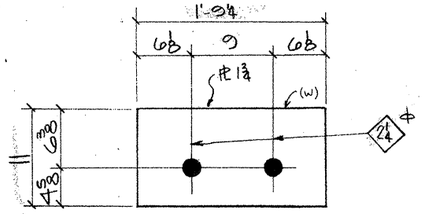

4 - PLATES ~ t102

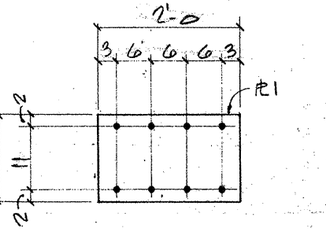

2 - PLATES ~ v102

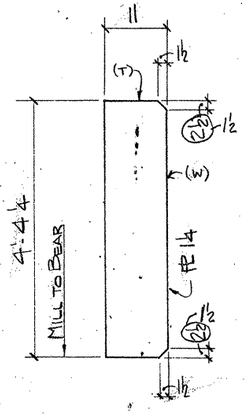

12 - PLATES ~ w102

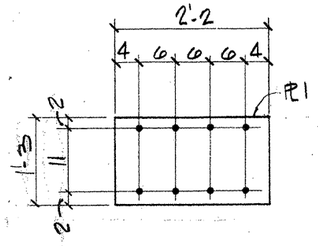

2 - PLATES ~ x102

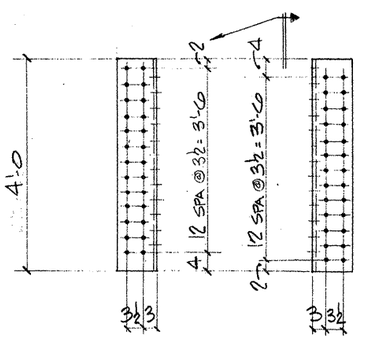

2 - ANGLES ~ d102

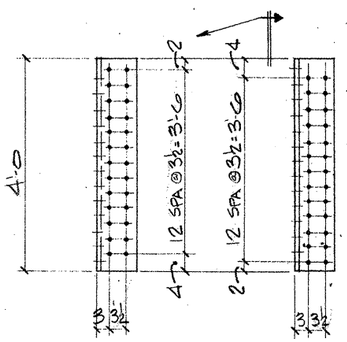

2 - ANGLES ~ e102

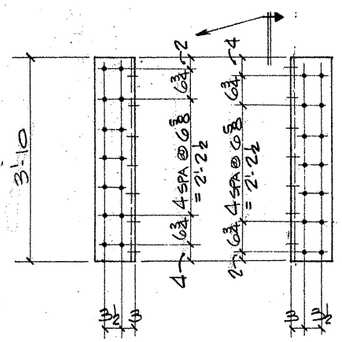

4 - ANGLES ~ f102

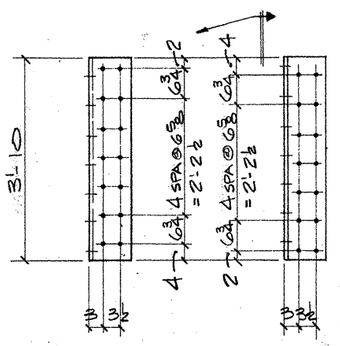

4 - ANGLES ~ g102

NOTE:
FOR GENERAL NOTES, SEE SHT. GN1.

Q0106

FED ROAD DIV NO	STATE	FEDERAL AID PROJECT NO.				
6	TX.	NH (50) M				
STATE DIST NO	COUNTY	CONTROL NO	SECTION NO	JOB NO	HIGHWAY NO	
21	HIDALGO	39	17	97	83/281	

BILL OF MATERIAL

	Qnty	Material	Length	Mark Temp	Mark Ship	Wt.	Cut From	Remarks
1								
2								
3								
4	2	PL 2 x 28 3/16	14'-0 1/4	a102			102-9	CVN 2
5	2	PL 2 x 12 3/16	14'-0 1/4	b102			102-10	CVN 2
6	2	PL 2 x 12 3/16	14'-0 1/4	c102			102-10	CVN 2
7	2	L 8 x 8 x 3/4	4'-0	d102			102-7	CVN 2
8	2	L 8 x 8 x 3/4	4'-0	e102			102-7	CVN 2
9	4	L 8 x 8 x 3/4	3'-10	f102			102-8	CVN 2
10	4	L 8 x 8 x 3/4	3'-10	g102			102-8	CVN 2
11	ONE	PL 1/4 x 11	1'-7 11/16	$h102^R$			102-14	
12	ONE	PL 1/4 x 11	1'-7 11/16	$h102^L$			102-14	
13	ONE	PL 1/4 x 11	1'-8 1/4	$k102^R$			102-14	
14	ONE	PL 1/4 x 11	1'-8 1/4	$k102^L$			102-14	
15	ONE	PL 1/4 x 11	1'-8 13/16	$m102^R$			102-14	
16	ONE	PL 1/4 x 11	1'-8 13/16	$m102^L$			102-14	
17	ONE	PL 1/4 x 11	1'-10 15/16	$n102^R$			102-13	
18	ONE	PL 1/4 x 11	1'-10 15/16	$n102^L$			102-13	
19	ONE	PL 1/4 x 11	1'-11 1/2	$P102^R$			102-13	
20	ONE	PL 1/4 x 11	1'-11 1/2	$P102^L$			102-13	
21	ONE	PL 1/4 x 11	2'-0 1/16	$s102^R$			102-13	
22	ONE	PL 1/4 x 11	2'-0 1/16	$s102^L$			102-13	
23	4	PL 3/4 x 11	1'-9 1/4	t102			102-6	FCM
24	2	PL 1 x 15	2'-0	v102			102-11	CVN 2
25	12	PL 1/4 x 11	4'-4 4	w102			102-12	
26	2	PL 1 x 15	2'-2	x102			102-15	
27								
28								
29								
30								
31								
32								
33								
34								
35								
36								
37								
38								
39								
40								
41								
42								
43								
44								
45								
46								
47								
48								
49								
50								
51								
52								
53								
54								
55								
56								
57								
58								
59								
60								

FOR APPROVAL
AUG 24 '92
NOT FOR CONSTRUCTION

TEXAS DEPARTMENT OF TRANSPORTATION
APPROVED
DISTRICT OF PROJECTS AND PROGRAMS
OCT 21 1992
APPROVAL DOES NOT RELIEVE CONTRACTOR OF RESPONSIBILITY FOR CORRECTNESS OF DETAILS

REVISION	DATE	DESCRIPTION OF REVISION
NO. 1		
NO. 2		
NO. 3		
NO. 4		
NO. 5		

PRINTING Req'd	For	Date

Bolts Holes. Ticked Unless Noted
Shop Paint SEE SHT. GN1
Fab. Spec A572-50 Inspection
Architect
Erection By Field Connections

HIRSCHFELD STEEL CO. INC.
112 WEST 29TH SAN ANGELO, TEXAS 76903
PHONE (915) 653-3211

DESCRIPTION	610'-0 PLATE GIRDER UNIT
STRUCTURE	US 83/281 INTERCHANGE RAMP I
LOCATION	HIDALGO COUNTY
CUSTOMER	GILBERT TEXAS CONSTRUCTION
SHIP TO	
Customer's Order No.	
Dwg. By JDC	Date 5/92
Checked By JC	Date 7-9-92

SHEET 102 OF
JOB NO. 92-106

CE 92-11

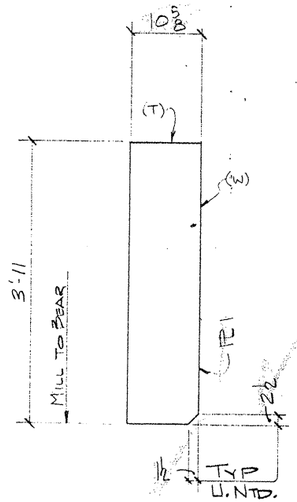

8 - PLATES ~ a101
(END BRG.)

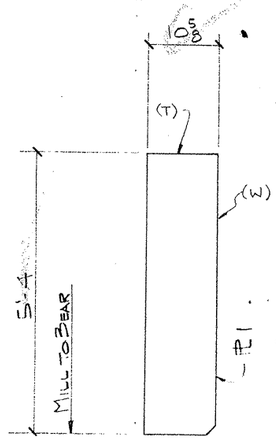

8 - PLATES ~ b101
(END BRG.) BENT #15

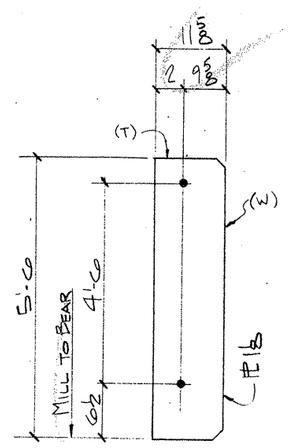

3 - PLATES ~ c101
(INT. BRG. BNT 14

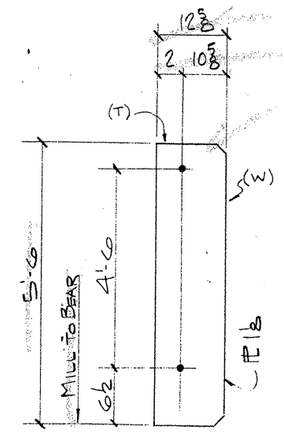

2 - PLATES ~ d101
(INT. BRG. BNT 14)

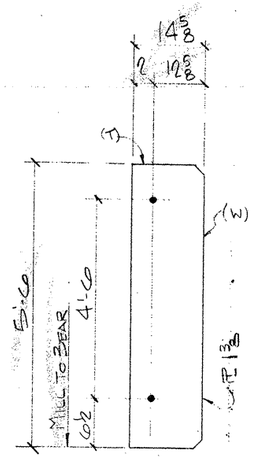

ONE - PLATE ~ e101
(INT. BRG. BNT 14)

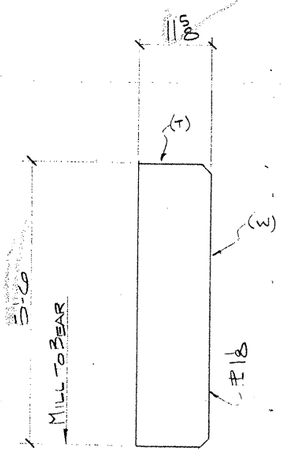

2 - PLATES ~ f101
(INT. BRG. BNT 13 & 14)

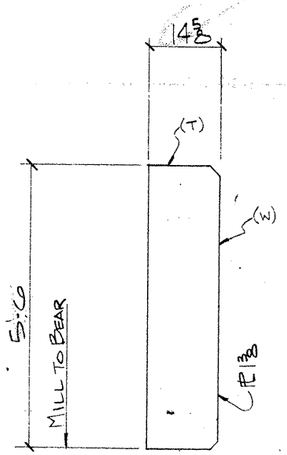

2 - PLATES ~ g101
(INT. BRG. BNT 13 & 14)

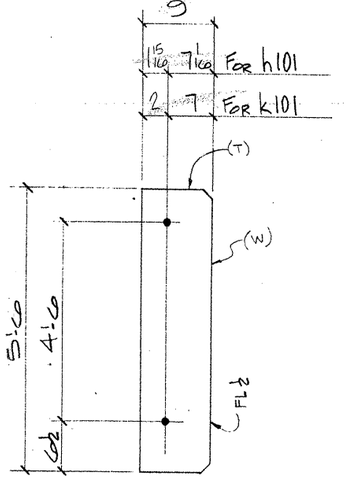

132 - PLATE ~ h101 "As Ntd."
(INT. STIFF)

96 - PLATE ~ k101 "As Ntd."
(INT. STIFF)

SHOP NOTES:

1. FOR GENERAL NOTES: SEE SHT GN1.
2. (T) INDICATES "TOP"
3. (W) INDICATES "WEB"

Q0106

FED. ROAD DIV. NO.	STATE	FEDERAL AID PROJECT NO.			
6	TX.	NH 12(50) M			
STATE DIST. NO.	COUNTY	CONTROL NO.	SECTION NO.	JOB NO.	HIGHWAY NO.
21	HIDALGO	39	17	97	83/281

BILL OF MATERIAL

	Qnty	Material	Length	Mark Temp	Mark Ship	Wt.	Cut From	Remarks
6	8	PL 1 x 10 5/8	3'-11	a101			101-1	
7	8	PL 1 x 10 5/8	5'-4	b101			101-5	
8	3	PL 1 1/8 x 11 5/8	5'-6	c101			101-2	
9	2	PL 1 1/8 x 12 5/8	5'-6	d101			101-3	
10	ONE	PL 1 3/8 x 14 5/8	5'-6	e101			101-4	
11	2	PL 1 1/8 x 11 5/8	5'-6	f101			101-2	
12	2	PL 1 3/8 x 14 5/8	5'-6	g101			101-4	
13	132	FL 1/2 x 9	5'-6	h101			101-7	
14	96	FL 1/2 x 9	5'-6	k101			101-7	

FOR APPROVAL
AUG 24 '92
NOT FOR CONSTRUCTION

TEXAS DEPARTMENT OF TRANSPORTATION
DIVISION OF BRIDGES AND STRUCTURES
APPROVAL OF THIS DRAWING DOES NOT RELIEVE THE CONTRACTOR OF THE RESPONSIBILITY FOR THE CORRECTNESS OF DETAILS

REVISION	DATE	DESCRIPTION OF REVISION
NO. 1		
NO. 2		
NO. 3		
NO. 4		
NO. 5		

PRINTING: Req'd | For | Date

Bolts Holes 15/16 ⌀ Unless Noted
Shop Paint SEE SHT. GN1
Fab Spec A36 Inspection
Architect
Erection By Field Connections

HIRSCHFELD STEEL CO. INC.
112 WEST 29TH SAN ANGELO TEXAS 76903
PHONE (915) 653-3211

DESCRIPTION 610'-0 PLATE GIRDER UNIT
STRUCTURE US. 83/281 INTERCHANGE RAMP 1
LOCATION HIDALGO COUNTY
CUSTOMER GILBERT TEXAS CONSTRUCTION
SHIP TO
Customer's Order No.
Dwg By JPC Date 5/92
Checked By DLT Date 7-7-92
SHEET 101 OF
JOB NO 92-106

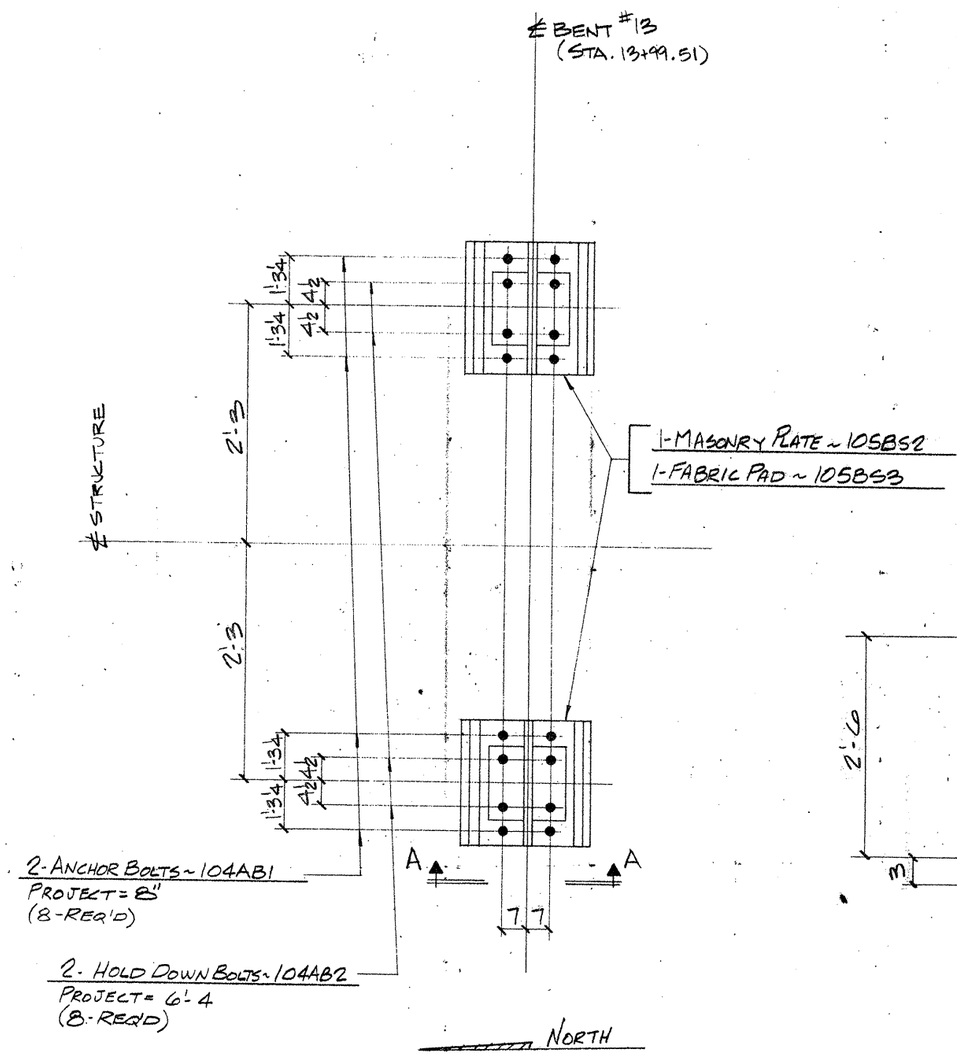

ANCHOR BOLT SETTING PLAN @ BENT #13

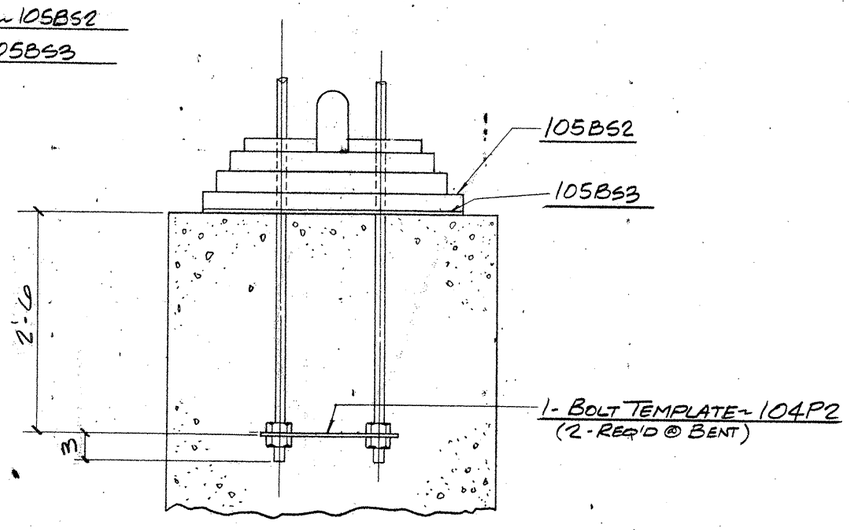

SECTION-A-A

TEXAS DEPARTMENT OF TRANSPORTATION
APPROVED
RECOMMENDED FOR PUBLIC RELEASE
OCT 21 1992
APPROVAL OF THIS DRAWING DOES NOT RELIEVE THE FABRICATOR OF THE RESPONSIBILITY FOR THE CORRECTNESS OF DETAILS

FOR APPROVAL
AUG 25 '92
NOT FOR CONSTRUCTION

APVD

HOLES ____ U.N.	FOR AP'VL
BOLTS ____ U.N.	RETURNED
WELDS ____ U.N.	TO SHOP
PAINT	

REVISIONS		
NO.	DATE	REMARKS
1		
2		
3		
4		

FED. ROAD DIV. NO	STATE	FEDERAL AID PROJECT NO			
6	TX.	NH (50) M			
STATE DIST. NO	COUNTY	CONTROL NO	SECTION NO	JOB NO	HIGHWAY NO
21	HIDALGO	39	17	97	83/281

HIRSCHFELD STEEL CO. INC.
112 WEST 29TH SAN ANGELO, TEXAS 76903
PHONE (915) 653-3211

CUSTOMER GILBERT TEXAS CONSTRUCTION
ARCHITECT
PROJECT US 83/281 INTERCHANGE RAMP
LOCATION HIDALGO COUNTY

DRAWN JW DATE 5/92
CHECKED JC DATE 7-9-92
JOB NO. 92-106
SHEET NO. ____ of E103

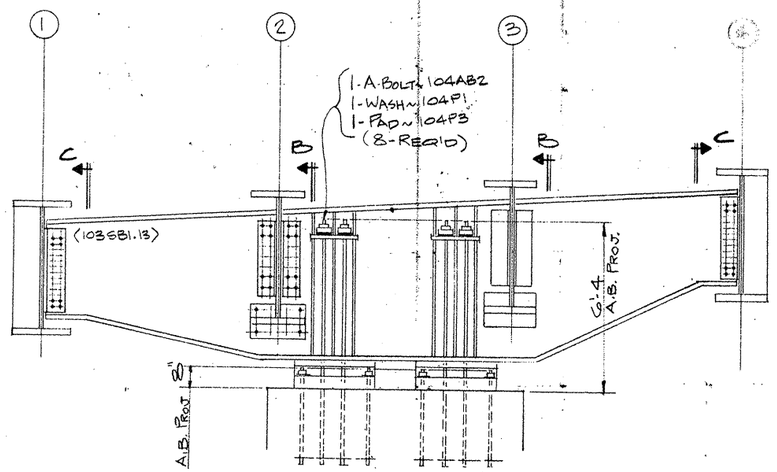

SECTION~A-A

GENERAL NOTES:

THE STEEL BENT CAP SHALL BE ERECTED WITH THE WEB SET VERTICAL AND ALL ANCHOR BOLTS UNIFORMLY TIGHTENED. ADJUSTMENT OF GIRDERS FOR PROPER SPLICE ALIGNMENT CAN BE MADE BY LOOSENING NUTS ON ONE SIDE OF THE CAP WHILE TIGHTENING NUTS ON THE OTHER SIDE BY AN EQUAL AMOUNT. AFTER THE SLAB AND RAIL HAVE BEEN PLACED AND DEAD LOAD DEFLECTION HAS OCCURRED, ALL ANCHOR BOLTS SHALL BE LOOSENED AND UNIFORMLY RETIGHTENED TO A SNUG FIT PLUS 1/4 TURN CONDITION.

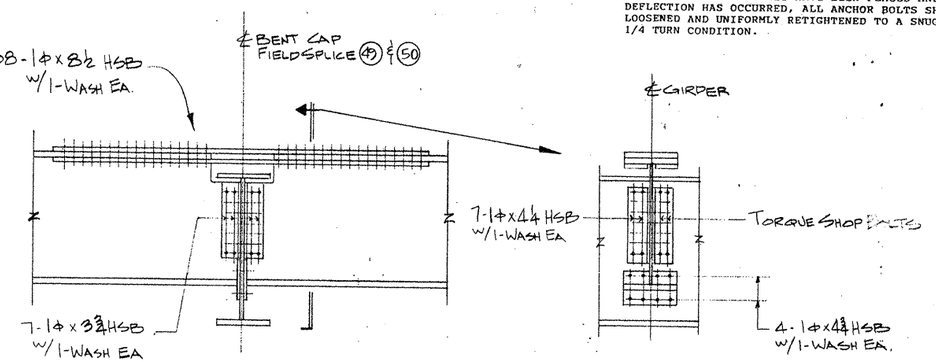

SECTION~B

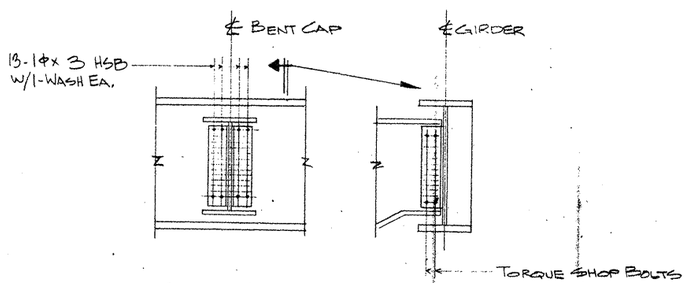

SECTION~C

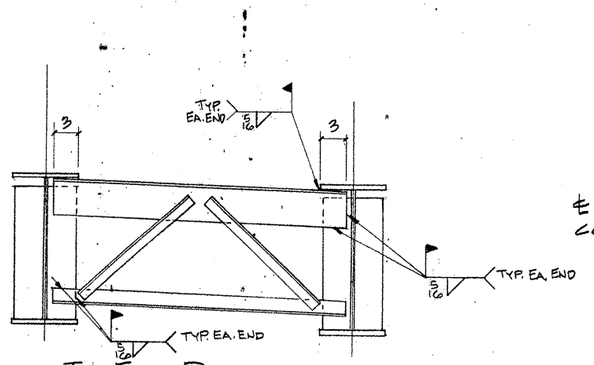

TYP. END DIAFRAMS (TYPE B) @ BENT 12

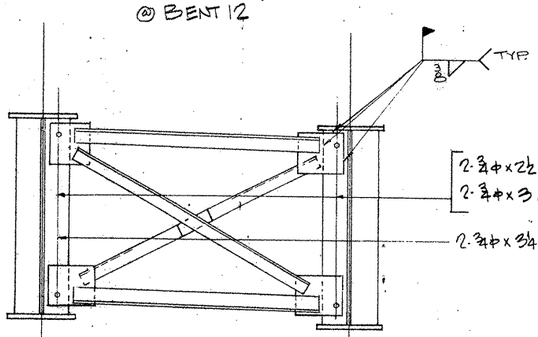

TYP. INT. DIAFRAMS

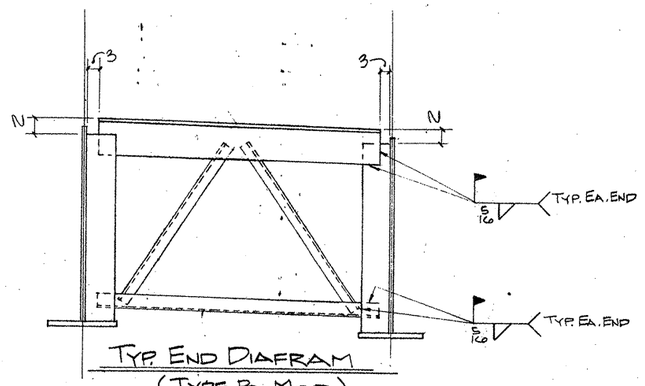

TYP. END DIAFRAM (TYPE B MOD.) @ BENT 15

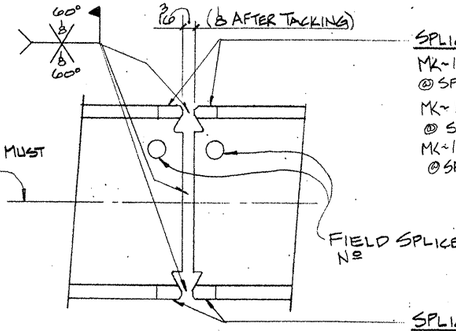

SPLICE EXT. BARS
MK~137WB1 (1-REQ'D PER SPLICE) @ SPLICE'S (1), (2) & (5) THRU (14)
MK~137WB2 (4-REQ'D PER SPLICE) @ SPLICE (3) & (15)
MK~137WB3 (4-REQ'D PER SPLICE) @ SPLICE'S (4) & (16)

SPLICE EXT. BARS
MK~137WB1 (4-REQ'D PER SPLICE) @ SPLICE'S (1) (2) (5) (6) (7) (9) (10) (11) (13) (14)
MK~137WB2 (4-REQ'D PER SPLICE) @ SPLICE'S (3) & (15)
MK~137WB3 (4-REQ'D PER SPLICE) @ SPLICES (8) & (12)
MK~137WB4 (4-REQ'D PER SPLICE) @ SPLICES (4) & (16)

TYP. FIELD SPLICE DETAIL

NOTE: WORK THIS SHEET W/SHEET E101

TEXAS DEPARTMENT OF TRANSPORTATION
AUSTIN
DIVISION OF TRAFFIC OPERATIONS
OCT 21 1992
APPROVAL OF THIS DRAWING DOES NOT RELIEVE THE CONTRACTOR OF THE RESPONSIBILITY FOR THE CORRECTNESS OF DETAILS

FOR APPROVAL
AUG 25 '92
NOT FOR CONSTRUCTION

FED. ROAD DIV. NO.	STATE	FEDERAL AID PROJECT NO.			
6	TX.	NH (50) M			
STATE DIST. NO.	COUNTY	CONTROL NO.	SECTION NO.	JOB NO.	HIGHWAY NO.
21	HIDALGO	39	17	97	83/281

HOLES ____ U.N.	FOR AP'VL ____
BOLTS ____ U.N.	RETURNED ____
WELDS ____ U.N.	TO SHOP ____
PAINT ____	

REVISIONS

NO.	DATE	REMARKS
1		
2		
3		
4		

HIRSCHFELD STEEL CO. INC.
112 WEST 29TH SAN ANGELO, TEXAS 76903
PHONE (915) 653-3211

CUSTOMER GILBERT TEXAS CONSTRUCTION
ARCHITECT
PROJECT US 83/281 INTERCHANGE RAMP #1
LOCATION HIDALGO COUNTY

DRAWN JDL DATE 5/92 | JOB NO. 92-1066 | SHEET NO. E102 of
CHECKED DLZ DATE 6/92

CE 92-11

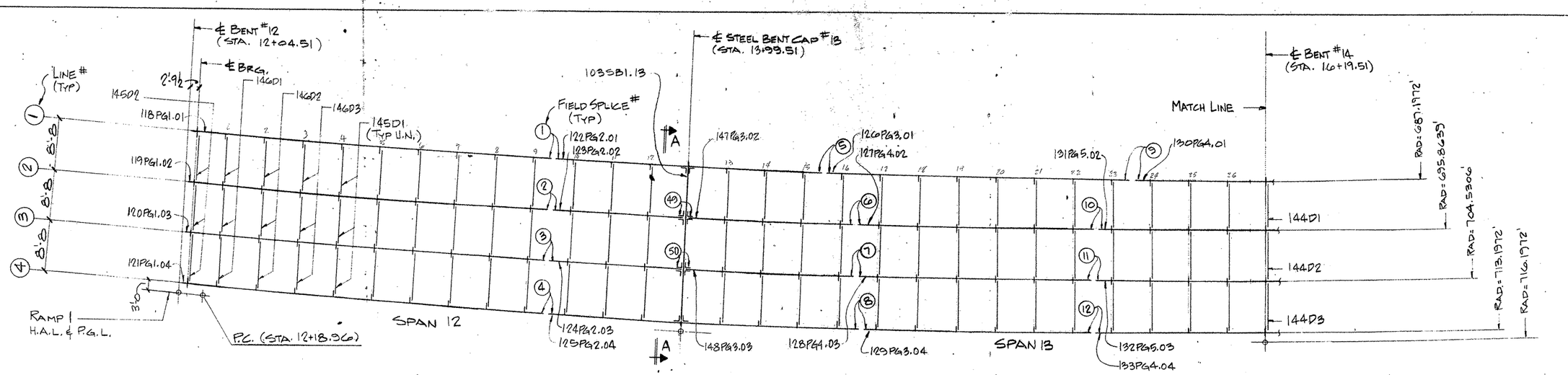

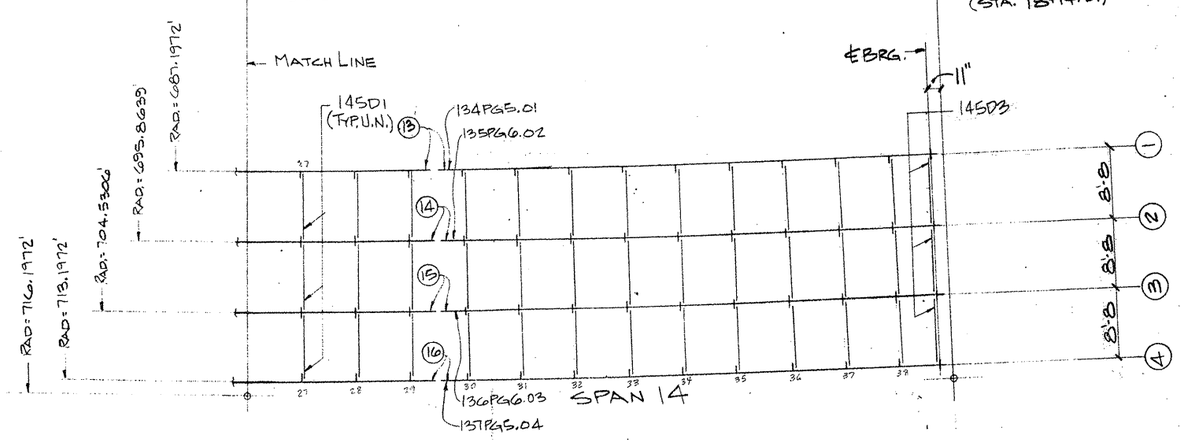

NORTH

FRAMING PLAN
(UNIT Nº 5 RAMP 1)

SHEET # 118 PG 1 .01 — LINE # OR BENT # / GIRDER #
PLATE GIRDER OR STEEL BENT (SB)

GIRDER SHIPPING MARK LEGEND

NOTE: WORK THIS SHEET W/SHEET E102.

TEXAS DEPARTMENT OF TRANSPORTATION AUSTIN — DEVELOPMENT APPROVAL — OCT 21 1992 — APPROVAL OF THIS DRAWING DOES NOT RELIEVE THE CONTRACTOR OF THE RESPONSIBILITY FOR THE CORRECTNESS OF DETAILS

FOR APPROVAL
AUG 25 '92
NOT FOR CONSTRUCTION

APV'D

FED ROAD DIV NO	STATE	FEDERAL AID PROJECT NO.			
6	TX.	NH (50) M			
STATE DIST NO	COUNTY	CONTROL NO	SECTION NO	JOB NO	HIGHWAY NO
21	HIDALGO	39	17	97	83/281

HOLES ____ U.N	FOR AP'VL ____	HIRSCHFELD STEEL CO. INC.	
BOLTS ____ U.N	RETURNED ____	112 WEST 29TH SAN ANGELO, TEXAS 76903	
WELDS ____ U.N	TO SHOP ____	PHONE (915) 653-3211	
PAINT ____		CUSTOMER GILBERT TEXAS CONSTRUCTION	
REVISIONS		ARCHITECT ____	
NO. DATE REMARKS		PROJECT US 83/281 INTERCHANGE RAMP #1	
1		LOCATION HIDALGO COUNTY	
2		DRAWN JBC DATE 5/92	JOB NO 92-1060
3		CHECKED DLT DATE 6/92	SHEET NO E101 of ____
4			

CE 92-11

GENERAL NOTES

1. SPECIFICATIONS

   A. 1982 STANDARD SPECIFICATIONS FOR CONSTRUCTION OF HIGHWAYS, STREETS AND BRIDGES - TEXAS S.D.H. & P.T.
      ITEM 441 STEEL STRUCTURES
      ITEM 442 METAL FOR STRUCTURES
      ITEM 446 PAINT AND PAINTING
      ITEM 448 STRUCTURAL WELDING

   B. TEXAS S.D.H. & P.T. CONSTRUCTION BULLETIN C-5.

   C. AMERICAN RAILWAY ENGINEERING ASSOC. SPEC. PART #3 "FABRICATING" STRUCTURES (WHERE APPLICABLE).

   D. SPECIAL PROVISIONS TO STANDARD SPECIFICATIONS OF TEXAS S.D.H. & P.T.

      CONTROL: 39-17-97
      PROJECT: NH (50) M
      HIGHWAY: 83/281
      COUNTY: HIDALGO

2. MATERIAL - DOMESTIC ONLY:

A36 - (HYC - CARBON STEEL).

A572-50 - (HS - HIGH STRENGTH STEEL).

A108 GRADES 1010, 1015, 1018, OR 1020 - (STUDS).

C. V. N. WHEN STATED, PERTAINS TO ANY SPECIFICATION OF STEEL (FOR MAIN MEMBERS ONLY) AND CONFORMS TO LONGITUDINAL CHARPY V NOTCH REQUIREMENTS OF THE SPECIAL PROVISIONS OF THE TEXAS S.D.H. & P.T. SPECIFICATIONS FOR IMPACT REQUIREMENTS.

CVN 2 - 15 FT. LBS. @ 70 DEGREES FAHRENHEIT H FREQ. FOR MATERIAL 2 INCHES THICK AND LESS.

CVN 3 - 20 FT. LBS. @ 70 DEGREES FAHRENHEIT H FREQ. FOR MATERIAL OVER 2 INCHES TO 4 INCHES THICK.

F. C. M. WHEN STATED, PERTAINS TO ANY SPECIFICATION OF STEEL AND CONFORMS TO TEXAS S.D.H. & P.T. SPECIAL SPECIFICATION ITEM 4853 FRACTURE CONTROL PLAN.

FCM 1 - 25 FT. LBS. @ 40 DEGREES FAHRENHEIT F FREQ. FOR MATERIAL 2 INCHES THICK AND LESS.

FCM 2 - 30 FT. LBS. @ 40 DEGREES FAHRENHEIT F FREQ. FOR MATERIAL OVER 2 INCHES TO 4 INCHES THICK.

MAIN MEMBERS - (GIRDER WEBS, FLANGES AND SPLICE MATERIAL)

MISCELLANEOUS STEEL - (ITEMS NOT LISTED AS MAIN MEMBERS SHALL NOT BE SUBJECT TO IMPACT REQUIREMENTS).

CURVED FLANGE PLATES SHALL BE HEAT CURVED PER ITEM 441.9 "HEAT CURVING" OF STANDARD TEXAS S.D.H. & P.T. SPECIFICATIONS.

3. CLEANING AND PAINTING:

   A. PROTECTION SYSTEM II. (SSPC #10)
      CLASS "A" BLAST CLEANING WITH MINIMUM 3.5 MILS DRY FILM THICKNESS OR MAXIMUM 10 MILS DRY FILM THICKNESS OF ORGANIC ZINC RICH TYPE PAINT. NO PAINT, AS NOTED AND DIMENSIONED ON DETAILS, I.E. WITHIN 4 INCHES OF FIELD GROOVE WELD ON MAIN MEMBERS AND 2 INCHES OF FILLET WELDS JOINING DIAFRAMS OR BRACING TO STIFFENERS OR GUSSET PLATES. AREAS SHOWN ▨ SHALL BE SAND BLAST CLEANED AND COATED WITH LINSEED OIL, N.S., F.S. AND EDGES. AREAS MARKED "NO PAINT" RECEIVE NO OIL AND NO PAINT. THE ENTIRE SURFACE OF THE TOP OF THE TOP FLANGE SHALL BE CLEANED AND THE OUTSIDE EDGES FOR A MINIMUM OF 7/8" SHALL BE PAINTED. THE SIDES OF ARMOR JOINTS WHICH WILL BE IN CONTACT WITH CONCRETE SHALL BE CLEANED BUT NEED NOT BE PAINTED.

   B. OPEN HOLES ARE FOR HIGH STRENGTH BOLTS UNLESS NOTED (A). NO PAINT WITHIN 3" OF HOLES FOR HIGH STRENGTH BOLTS. REMOVE DIRT, GREASE, AND BURRS FROM HIGH STRENGTH BOLT HOLES. FIELD TOUCH-UP IS REQUIRED.

   C. SHOP CONTACT SURFACES TO BE CLEANED AND NO PAINT.

   D. GALVANIZING, WHERE SHOWN ON DETAILS SHALL BE ASTM A123 FOR PIPES, PLATES AND BARS AND ASTM A153, CLASS C OR D FOR BOLTS NUTS AND WASHERS.

   E. PLACE SHIPPING MARKS ON LEFT END OF MEMBER AS DETAILED.

   F. SHOP MARKING WILL NOT BE PERMITTED ON THE OUTSIDE FACE OF ANY FACIA BEAM.

4. WELDING:

   A. OPERATIONS, PROGESSES, EQUIPMENT, QUALIFICATION OF WELDERS, WORKMANSHIP AND INSPECTION SHALL BE IN ACCORDANCE WITH THE TEXAS S.D.H. & P.T. BULLETIN C-5.

   B. STUDS SHALL BE ELECTRIC ARC END WELDED TO FLANGES WITH COMPLETE FUSION.

   C. WELD PROCEDURE NUMBERS ARE INCLUDED IN EACH APPROPRIATE WELDING SYMBOL AND SHOWN ON DETAIL DRAWINGS.

5. INSPECTION:

   A. TEXAS S.D.H. & P.T. STANDARD SPECS.

   B. TEXAS S.D.H. & P.T. BULLETIN C-5

6. GENERAL:

   A. ENDS OF BEAMS OR GIRDERS TO BE FIELD WELDED, SHALL BE PREPARED IN THE SHOP, TAKING INTO ACCOUNT THEIR RELATIVE POSITIONS IN THE FINISHED STRUCTURE DUE TO GRADE, CAMBER AND CURVATURE. EACH SPLICE SHALL BE COMPLETELY ASSEMBLED CHECKED AND MATCH MARKED WHILE ASSEMBLED BY STAMPING THE SPLICE NUMBER IN THE METAL.

   B. RE-ENTRANT CUTS SHALL BE FILLETED TO A MIN. 3/4 IN. RADIUS.

   C. EDGES THAT ARE SHEARED OR OXYGEN CUT ARE TO BE ROUNDED OR CHAMFERED TO AN APPROXIMATE 1/16 INCH DIMENSION BY GRINDING:
      1. ALL MAIN MEMBERS.

   D. EDGES NOT REQUIRED TO BE ROUNDED OR CHAMFERED:
      1. SHEARED OR OXYGEN CUT EDGES OF SECONDARY MEMBERS OF GALVANIZED STEEL.
      2. ROLLED MILL EDGES.

   E. MEMBERS WEIGHING MORE THAN THREE TONS ARE NOTED ON SKETCHES.

   F. HOLES FOR ANCHOR BOLTS ARE TO BE LOCATED EXACT TO MATCH ACCURATELY SET ANCHOR BOLTS.

   G. THE PLANE OF THE BEARING AREA OF BEAMS AND GIRDERS SHALL BE PERPENDICULAR TO THE VERTICAL AXIS OF THE BEAM WITHIN 1/16 OF AN INCH.

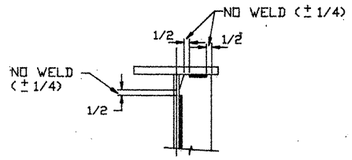

TYPICAL STIFFENER
WELDING DETAIL UNL. NTD.

APPROVED
AUG 25 '92
FOR APPROVAL
AUG 25 '92
NOT FOR CONSTRUCTION

APV 8/25

Drawings Prepared by: CARLSON ENGINEERING, INC.
3815 McCart Ave. (817) 926-9861
Job No: CE 92-11 Fort Worth, TX 76110-4668

FED ROAD DIV NO	STATE	FEDERAL AID PROJECT NO			
6	TX.	NH (50) M			
STATE DIST NO	COUNTY	CONTROL NO	SECTION NO	JOB NO	HIGHWAY NO
21	HIDALGO	39	17	97	83/281

HOLES ____ U.N. FOR AP'VL ____
BOLTS ____ U.N. RETURNED ____
WELDS ____ U.N. TO SHOP ____
PAINT ____

REVISIONS		
NO.	DATE	REMARKS
1		
2		
3		
4		

HIRSCHFELD STEEL CO. INC.
112 WEST 29TH SAN ANGELO, TEXAS 76903
PHONE (915) 653-3211

CUSTOMER GILBERT TEXAS CONSTRUCTION
ARCHITECT
PROJECT US 83/281 INTERCHANGE RAMP #1
LOCATION HIDALGO COUNTY

DRAWN MSG DATE 7-11-92 | JOB NO 92-106 | SHEET NO GN1 of ____
CHECKED DLT DATE 7-92

CE 92-11

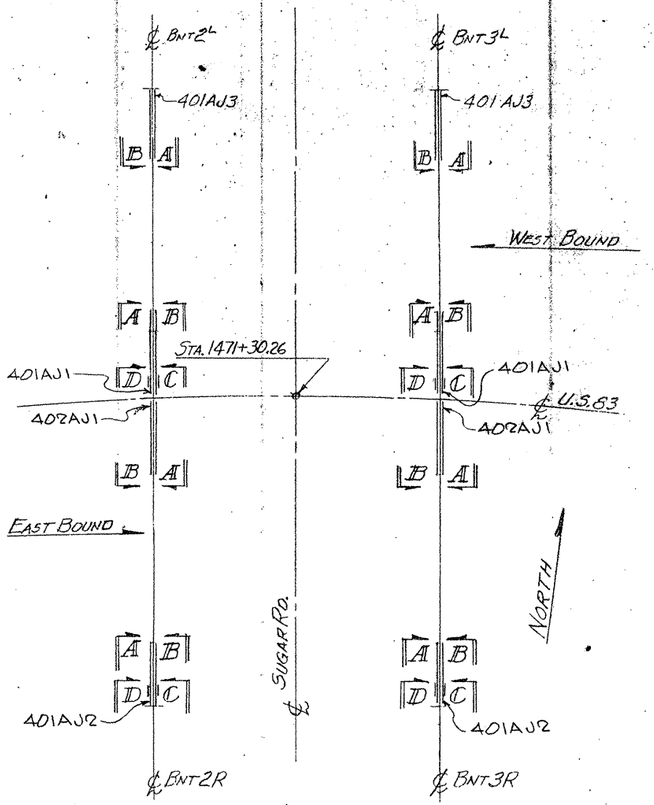

SUGAR ROAD OVERPASS (PLAN)

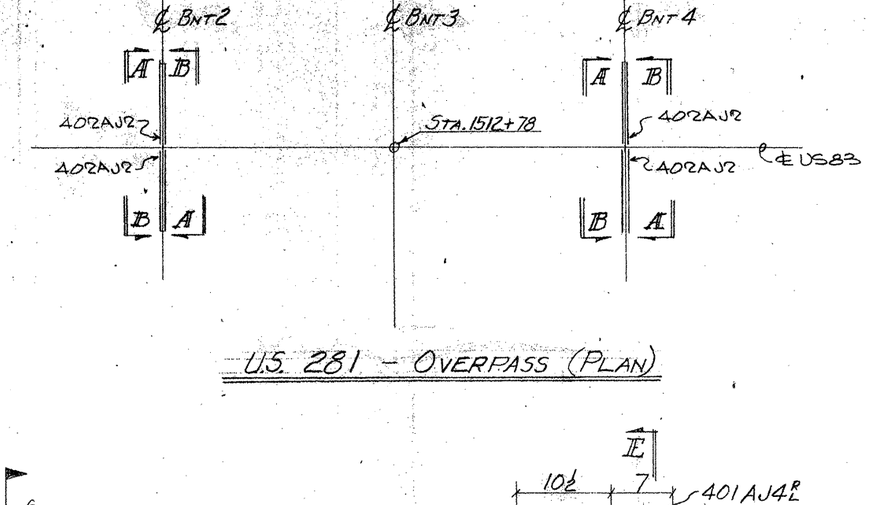

U.S. 281 - OVERPASS (PLAN)

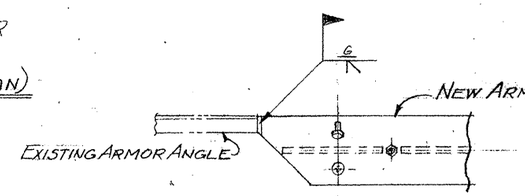

VIEW A AS SHOWN
VIEW B OPP. HAND

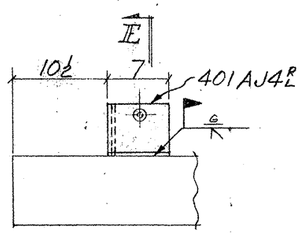

VIEW C AS SHOWN
VIEW D OPP. HAND

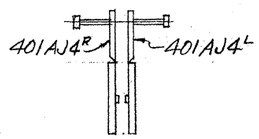

SECTION E

TEXAS DEPARTMENT OF TRANSPORTATION
APPROVED EXCEPT AS NOTED
DIVISION OF BRIDGES AND STRUCTURES
JUL 30 1992
APPROVAL OF THIS DRAWING DOES NOT RELIEVE THE CONTRACTOR OF THE RESPONSIBILITY FOR THE CORRECTNESS OF DETAIL.

FOR APPROVAL
JULY 92
NOT FOR CONSTRUCTION

APV 7/20

FED ROAD DIV NO	STATE	FEDERAL AID PROJECT NO.			
6	TX.	NHPP(50) M			
STATE DIST NO	COUNTY	CONTROL NO	SECTION NO	JOB NO	HIGHWAY NO
21	HIDALGO	39	17	97	83/281

HOLES ___ U.N.	FOR AP'VL ___		
BOLTS ___ U.N.	RETURNED ___		
WELDS ___ U.N.	TO SHOP ___		
PAINT ___			
REVISIONS			
NO.	DATE	REMARKS	
1			
2			
3			
4			

HIRSCHFELD STEEL CO. INC.
112 WEST 29TH SAN ANGELO, TEXAS 76903
PHONE (915) 653-3211

CUSTOMER GILBERT TEXAS CONSTRUCTION
ARCHITECT
PROJECT US83/281 INTERCHANGE RAMP
LOCATION HILDALGO COUNTY

DRAWN	DATE	JOB NO	SHEET NO
JC	6/92	92-106	E401 of ___
CHECKED DLT	DATE 7/92		

CE 92-11

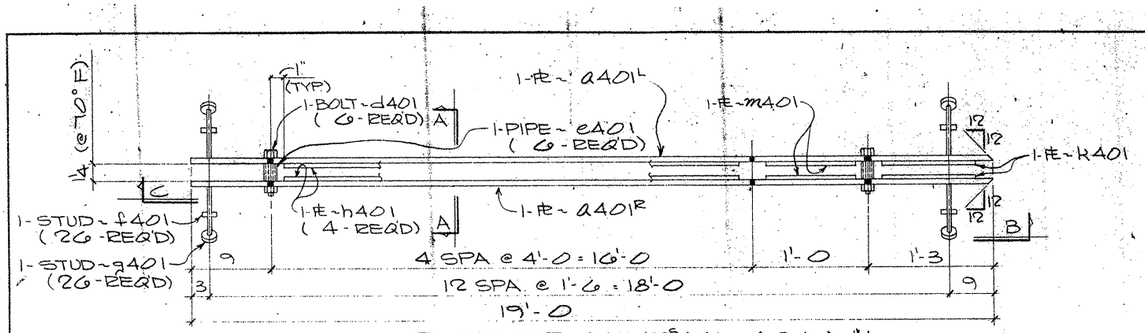

2-ARMOR JOINTS MK-401AJ1

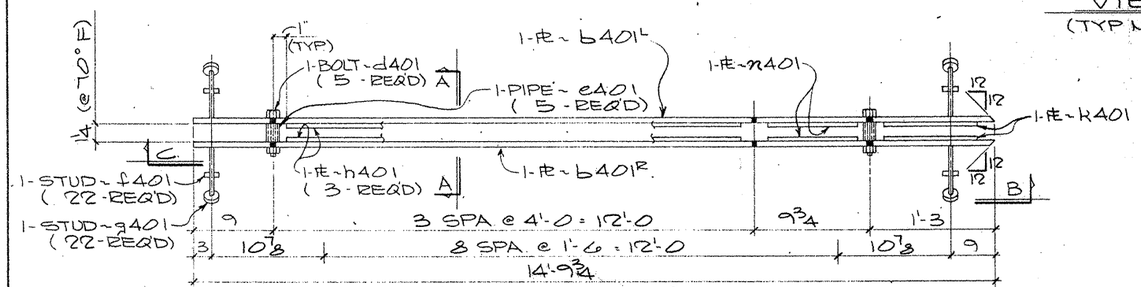

2-ARMOR JOINTS MK-401AJ2

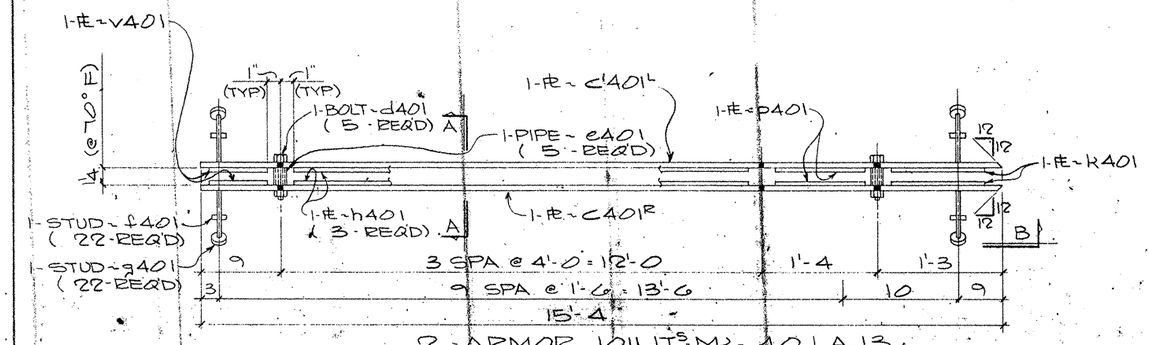

2-ARMOR JOINTS MK-401AJ3

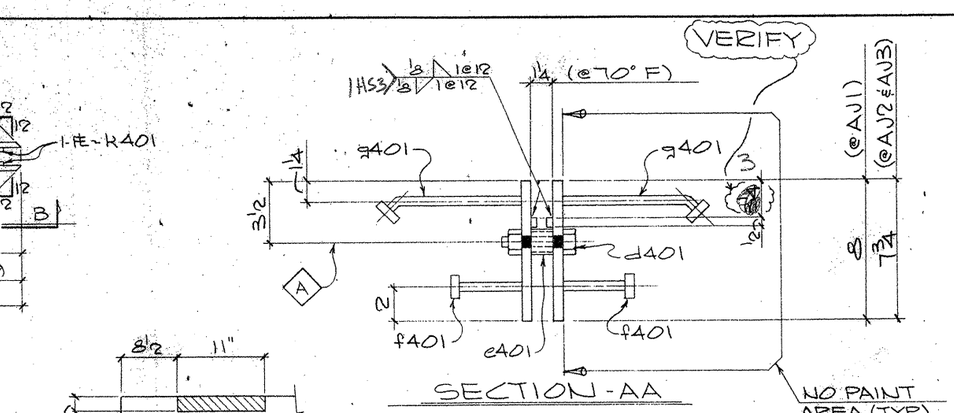

SECTION-AA

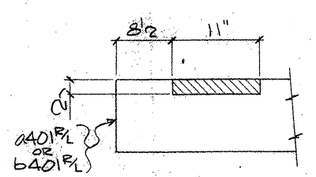

VIEW-C
(TYP N.S. & F.S. PL'S)

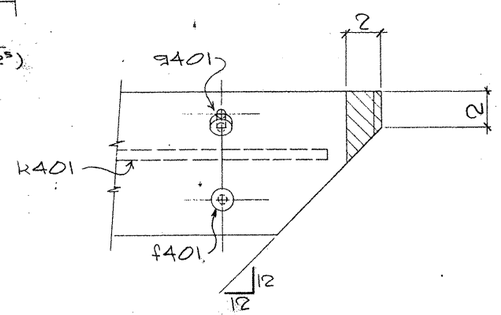

VIEW-B
(TYP N.S. & F.S. PL'S)

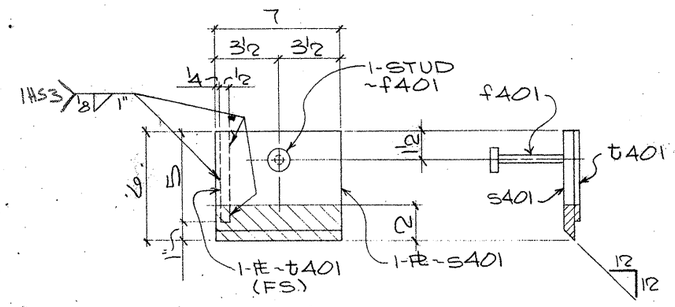

4-ARMOR JTS-MK-401AJ4R (AS SHN.)
4-ARMOR JTS-MK-401AJ4L (OPP. HND)

SHOP NOTES:

1) FOR GENERAL NOTES SEE SHT. GN1
2) ▨ INDICATES OIL, NO PAINT (N.S./F.S. & EDGES)

BILL OF MATERIAL

	Qnty.	Material	Length	Mark Temp.	Mark Ship.	Wt	Cut From	Remarks
2	2	ARMOR JOINTS			401AJ1			
3	2	PL 1/2 x 8	19'-0	a401R			401-2	
4	2	PL 1/2 x 8	19'-0	a401L			401-2	
5	12	M. BOLT 5/8 ϕ	0'-3	d401			401-16	A307
6	12	STD. PIPE 3/4 ϕ	0'-1 1/4	e401			401-17	A53 TYPE F
7	52	HD. STUD 1/2 ϕ	0'-4	f401			401-15	A108
8	52	HD. STUD 1/2 ϕ	0'-8	g401			401-14	BENT A108
9	16	FL 1/4 x 1/2	3'-10	h401			401-7	
10	4	FL 1/4 x 1/2	0'-11	k401			401-7	
11	4	FL 1/4 x 1/2	0'-10	m401			401-7	
12								
13								
14	2	ARMOR JOINTS			401AJ2			
15	2	PL 1/2 x 7 3/4	14'-9 3/4	b401R			401-5	
16	2	PL 1/2 x 7 3/4	14'-9 3/4	b401L			401-5	
17	10	M. BOLT		d401			401-16	A307
18	10	STD. PIPE		e401			401-17	A53 TYPE F
19	44	HD. STUD		f401			401-15	A108
20	44	HD. STUD		g401			401-14	BENT A108
21	12	FL		h401			401-10	
22	4	FL		k401			401-10	
23	4	FL 1/4 x 1/2	0'-7 3/4	m401			401-10	
24								
25								
26	2	ARMOR JOINTS			401AJ3			
27	2	PL 1/2 x 7 3/4	15'-4	c401R			401-3	
28	2	PL 1/2 x 7 3/4	15'-4	c401L			401-3	
29	10	M. BOLT		d401			401-16	A307
30	10	STD. PIPE		e401			401-17	A53 TYPE F
31	44	HD. STUD		f401			401-15	A108
32	44	HD. STUD		g401			401-14	BENT A108
33	12	FL		h401			401-8	
34	4	FL		k401			401-8	
35	4	FL 1/4 x 1/2	1'-2	p401			401-8	
36	4	FL 1/4 x 1/2	0'-6	y401			401-8	
37								
38	4	ARMOR JOINTS			401AJ4R			
39	4	ARMOR JOINTS			401AJ4L			
40	8	PL 3/8 x 6	0'-7	s401			401-6	
41	8	FL 1/4 x 1/2	0'-5	t401			401-11	
42	8	HD. STUD		f401			401-15	
43								
44								
45								
46								
47								
48								
49								
50								
51								
52								
53								
54								
55								
56								
57								
58								
59								
60								

TEXAS DEPARTMENT OF TRANSPORTATION
APPROVED EXCEPT AS NOTED
DIVISION OF BRIDGES AND STRUCTURES
JUL 30 1992

APPROVAL OF THIS DRAWING DOES NOT RELIEVE THE CONTRACTOR OF THE RESPONSIBILITY FOR THE CORRECTNESS OF DETAIL.

REVISION	DATE	DESCRIPTION OF REVISION
NO 1		
NO 2		
NO 3		
NO 4		
NO 5		

PRINTING Req'd	For	Date

Bolts A.S.N.T.D. Holes 1 1/16 ϕ Unless Noted
Shop Paint SEE SHT. GN1 Inspection
Fab Spec A36 ON
Architect
Erection By Field Connections

HIRSCHFELD STEEL CO. INC.
112 WEST 29TH SAN ANGELO, TEXAS 76903
PHONE (915) 653-3211

DESCRIPTION	ARMOR JOINTS
STRUCTURE	US 83/281 MAIN LANES WIDENING
LOCATION	HIDALGO COUNTY
CUSTOMER	GILBERT TEXAS CONSTRUCTION
SHIP TO	
Customer's Order No.	
Dwg. By CRT	Date 7/92
Checked By DLT	Date 7/92

SHEET 40 OF
JOB NO 92-106

FED ROAD DIV NO	STATE	FEDERAL AID PROJECT NO				
6	TX.	NH (50) M				
STATE DIST NO	COUNTY	CONTROL NO	SECTION NO	JOB NO	HIGHWAY NO	
21	HIDALGO	39	17	97	83/281	

CE 92-11

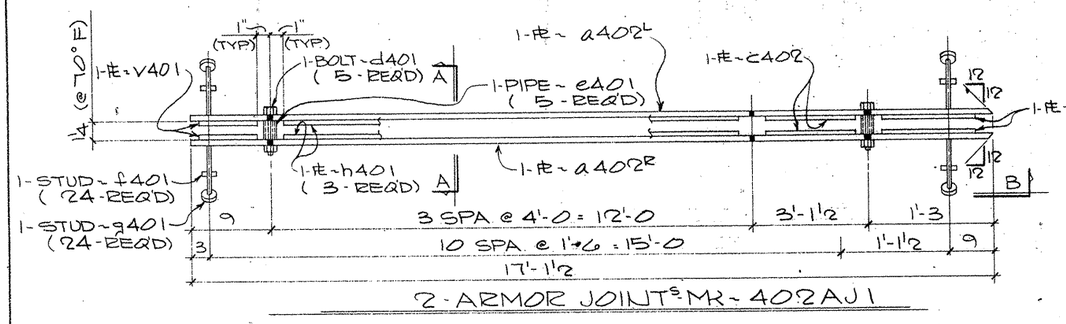

2 - ARMOR JOINTS MK ~ 402AJ1

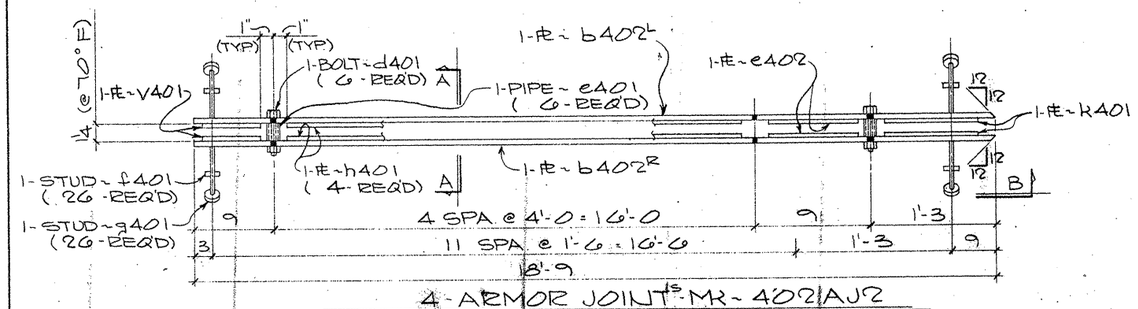

4 - ARMOR JOINTS MK ~ 402AJ2

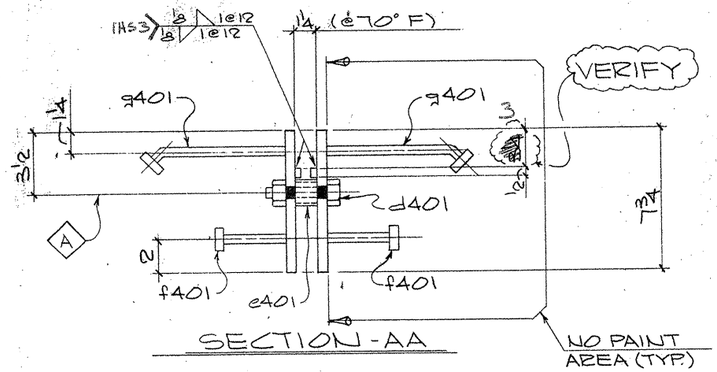

SECTION - AA

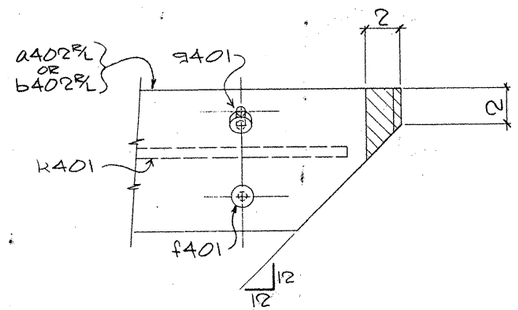

VIEW - B
(TYP. N.S. & F.S. PL's)

SHOP NOTES:

1) FOR GENERAL NOTES SEE SHT GN1
2) ▨ INDICATES OIL, NO PAINT (N.S./F.S. & EDGES)

SHEET IS OK PER GEB.

BILL OF MATERIAL

	Qnty.	Material	Length	Mark Temp.	Mark Ship.	Wt.	Cut From	Remarks
2	2	ARMOR JOINTS			402AJ1			
3	2	PL 1/2 x 7 3/4	17'-1 1/2	a402R			401-4	
4	2	PL 1/2 x 7 3/4	17'-1 1/2	a402L			401-4	
5	10	M. BOLT 5/8 ϕ	0'-3	d401			401-16	A307
6	10	STD. PIPE 3/4 ϕ	0'-1 1/4	e401			401-17	A53 TYPE F
7	48	HD. STUD 1/2 ϕ	0'-4	f401			401-15	A108
8	48	HD. STUD 1/2 ϕ	0'-8	g401			401-14	BENT A108
9	12	FL 1/4 x 1/2	3'-10	h401			401-9	
10	4	FL 1/4 x 1/2	0'-11	k401			401-9	
11	4	FL 1/4 x 1/2	2'-1 1/2	c402			401-9	
12	4	FL 1/4 x 1/2	0'-6	v401			401-9	
13								
14								
15								
16	4	ARMOR JOINTS			402AJ2			
17	4	PL 1/2 x 7 3/4	18'-9	b402R			401-20	
18	4	PL 1/2 x 7 3/4	18'-9	b402L			401-20	
19	24	M. BOLT		d401			401-16	A307
20	24	STD. PIPE		e401			401-17	A53 TYPE F
21	104	HD. STUD		f401			401-15	A108
22	104	HD. STUD		g401			401-14	BENT A108
23	32	FL		h401			401-19	
24	8	FL		k401			401-19	
25	8	FL		v401			401-19	
26	8	FL 1/4 x 1/2	0'-7	c402			401-19	
27–60								

TEXAS DEPARTMENT OF TRANSPORTATION
APPROVED EXCEPT AS NOTED
DIVISION OF BRIDGES AND STRUCTURES
JUL 31 1992

APPROVAL OF THIS DRAWING DOES NOT RELIEVE THE CONTRACTOR OF THE RESPONSIBILITY FOR THE CORRECTNESS OF DETAIL.

FOR APPROVAL
NOT FOR CONSTRUCTION

REVISION	DATE	DESCRIPTION OF REVISION
NO. 1		
NO. 2		
NO. 3		
NO. 4		
NO. 5		

PRINTING: Req'd | For | Date

Bolts A325N Holes. 1 1/16 ϕ Unless Noted
Shop Paint SEE SHT GN1
Fab Spec A36 UN. Inspection
Architect
Erection By Field Connections

HIRSCHFELD STEEL CO. INC.
112 WEST 29TH SAN ANGELO. TEXAS 76903
PHONE (915) 653-3211

DESCRIPTION	ARMOR JOINTS
STRUCTURE	US 83/281 MAIN LANES WIDENING
LOCATION	HIDALGO COUNTY
CUSTOMER	GILBERT TEXAS CONSTRUCTION
SHIP TO	
Customer's Order No.	
Dwg. By CRT	Date 7/92
Checked By D.C.T	Date 7/92

SHEET 402 OF
JOB NO. 92-106

FED. ROAD DIV. NO	STATE	FEDERAL AID PROJECT NO.			
6	TX.	NH (50) M			
STATE DIST. NO	COUNTY	CONTROL NO	SECTION NO	JOB NO	HIGHWAY NO
21	HIDALGO	39	17	97	83/281

CE 92-11

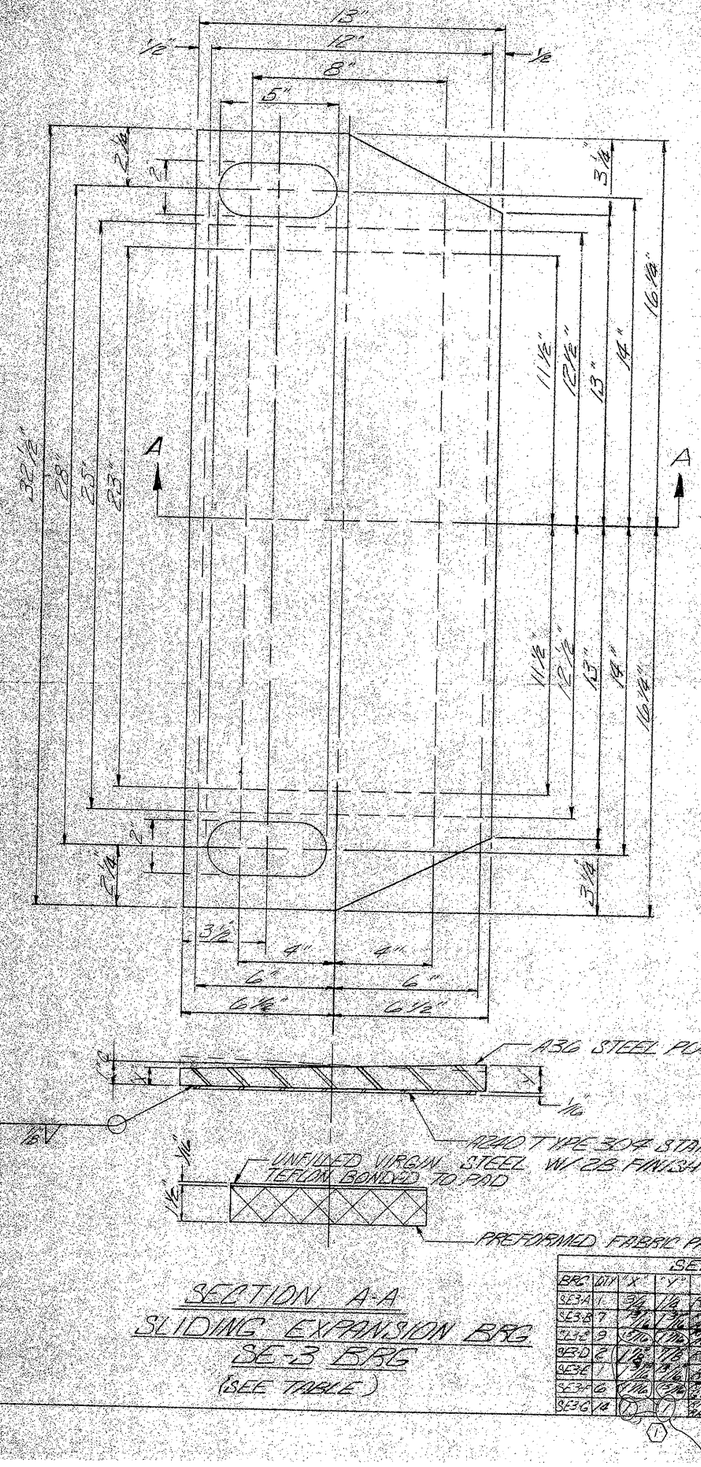

SECTION A-A
SLIDING EXPANSION BRG
SE3 BRG
(SEE TABLE)

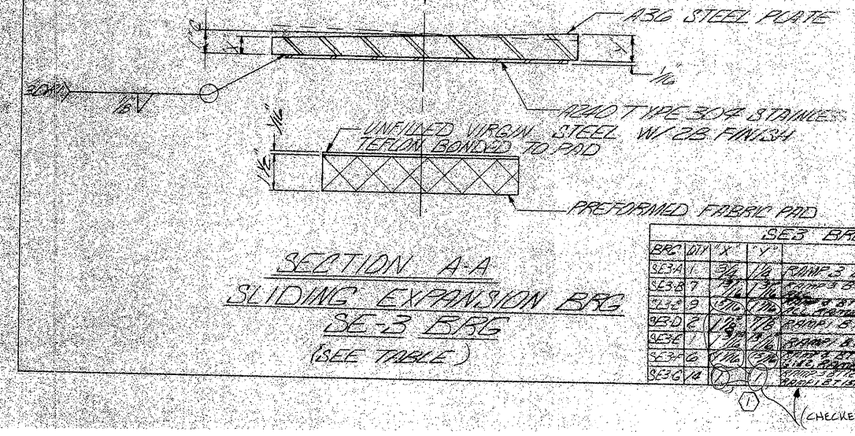

SE3 BRG TABLE				
BRG	QTY	"X"	"Y"	LOCATION
SE3A	1	3/4	1/16	RAMP 3 BENT 2 G3A
SE3B	7	1/4	1/16	RAMP 3 BENT 2 G3A & RAMP 3 BENT 3 G3A
SE3C	9	1/16	1/16	RAMP 3 BENT 3 G3A & RAMP 3 BENT 4 G3A
SE3D	2	1/8	1/16	RAMP 3 BENT 4 G3A
SE3E	1	3/4	1/16	RAMP 3 BENT 4 G3A
SE3F	6	1/16	1/16	RAMP 3 BENT 4 G3A & RAMP 3 BENT TAIL
SE3G	18	1/16	1/16	RAMP 3 BENT TAIL

(1) (CHECKED ON JUL. OK.)

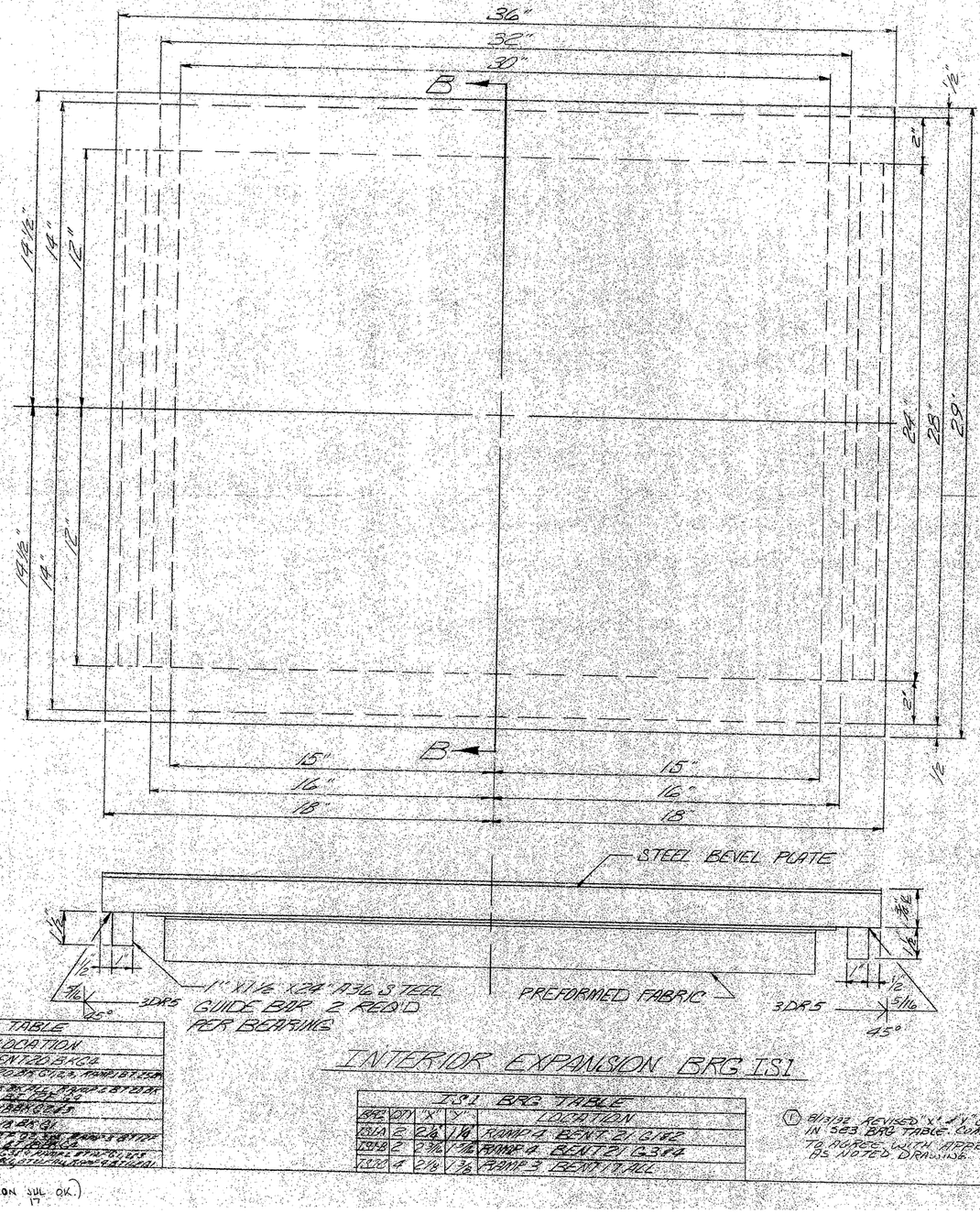

INTERIOR EXPANSION BRG ISI

ISI BRG TABLE				
BRG	QTY	"X"	"Y"	LOCATION
ISI A	2	2 1/8	1/4	RAMP 4 BENT 2 G3A2
ISI B	2	2 1/16	1/16	RAMP 4 BENT 2 G3A
ISI C	1	2 1/16	1/16	RAMP 3 BENT TAIL

(1) 8/3/92 REVISED 'X' & 'Y' COLUMNS IN SB3 BRG TABLE CORRECTED TO AGREE WITH APPROVED AS NOTED DRAWING.

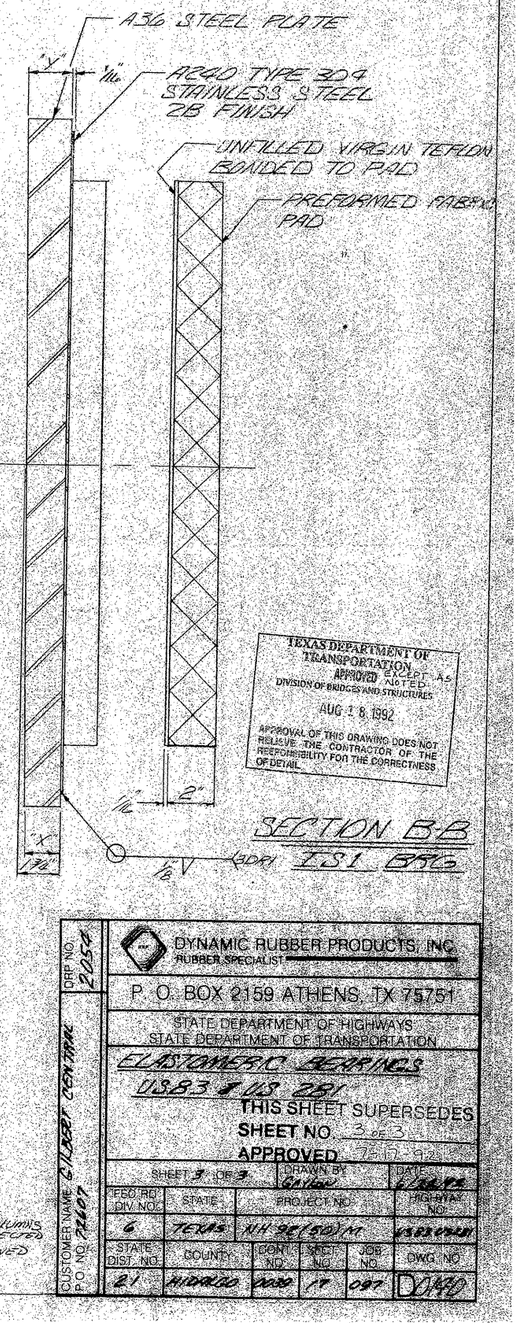

SECTION B-B
ISI BRG

TEXAS DEPARTMENT OF TRANSPORTATION
APPROVED EXCEPT AS NOTED
DIVISION OF BRIDGES AND STRUCTURES
AUG 18 1992
APPROVAL OF THIS DRAWING DOES NOT RELIEVE THE CONTRACTOR OF THE RESPONSIBILITY FOR THE CORRECTNESS OF DETAIL.

DRP NO. 8502
CUSTOMER NAME TEXAS
P.O. NO. 78227

DYNAMIC RUBBER PRODUCTS, INC.
RUBBER SPECIALISTS
P. O. BOX 2159 ATHENS, TX 75751

STATE DEPARTMENT OF HIGHWAYS
STATE DEPARTMENT OF TRANSPORTATION

ELASTOMERIC BEARINGS
US 83 & US 281
THIS SHEET SUPERSEDES
SHEET NO. 3 OF 3
APPROVED 7-10-92

SHEET 3 OF 3		DRAWN BY Gilliam		DATE 6-24-92
FED. RD. DIV. NO.	STATE	PROJECT NO.		HIGHWAY NO.
6	TEXAS	NH 32(50) M		VARIOUS
STATE DIST. NO.	COUNTY	CONT. NO.	SECT. NO.	JOB NO.	DWG. NO.
21	HUDSPETH	0080	17	097	D-1470

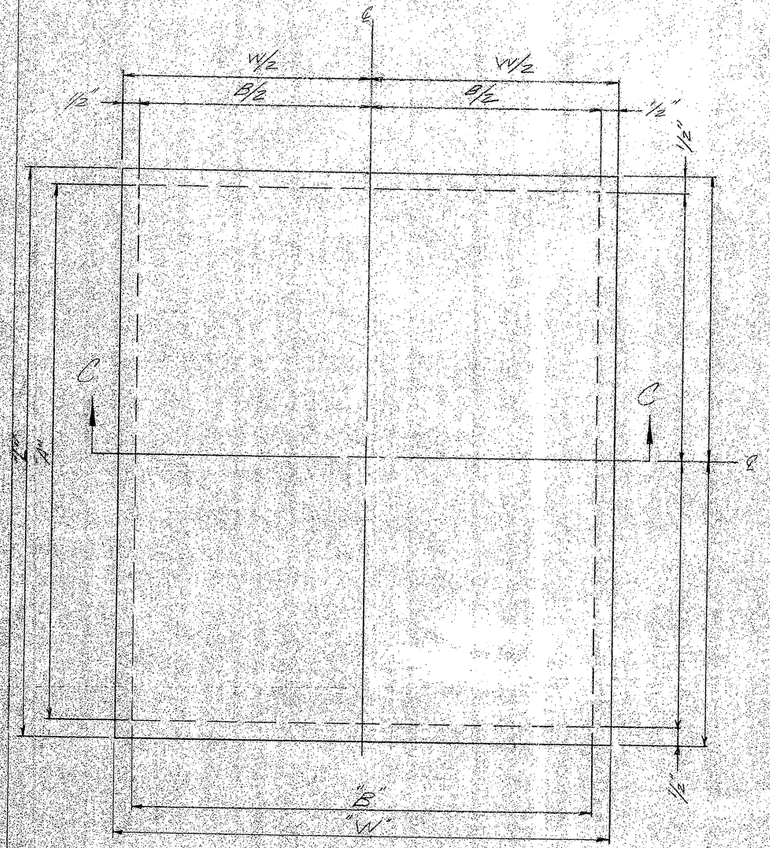

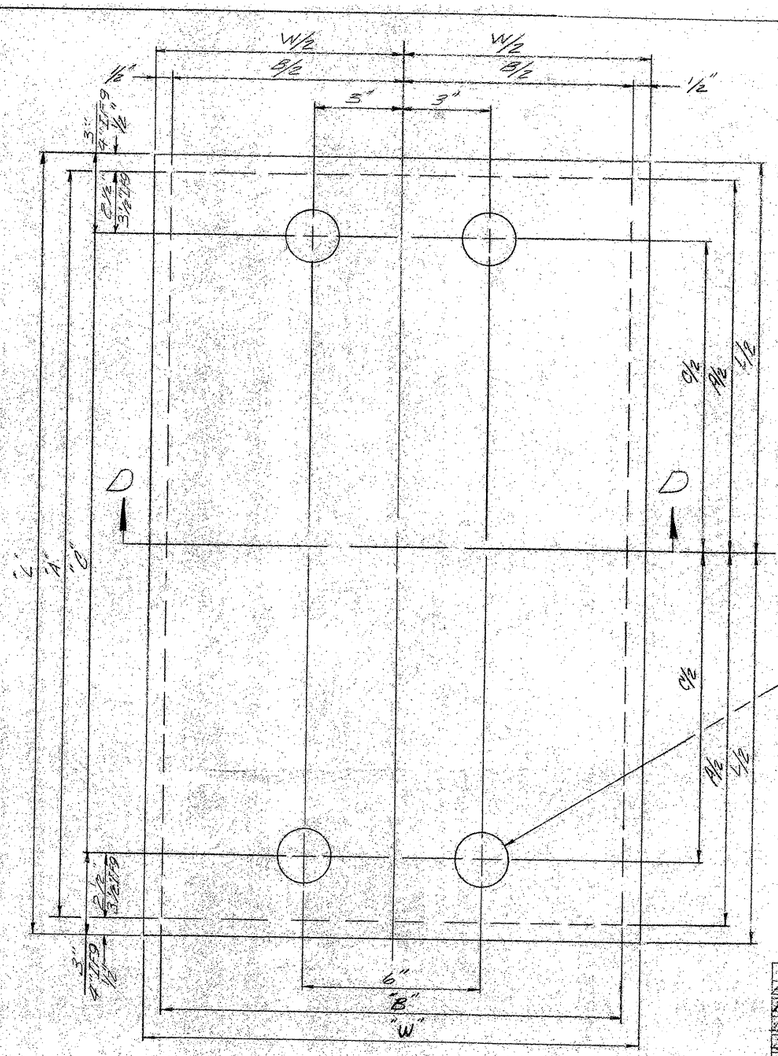

IC BRG TABLE

BRG	QTY	"A"	"B"	"L"	"W"	"X"	"Y"	"T"	"n"	"t"	"S"	LOCATION
IC1	4	25"	21"	26"	22"	7/8	1 1/8	4 1/4	5	.675	5	RAMP 1 AT 23 M.C.
IC2A	2	27"	23"	28"	24"	15/16	1 1/16	5 3/8	6	.790	6	RAMP 3 AT 15 GUIDE
IC2B	11	"	"	"	"	"	"	1"	1"	"	"	RAMP 3 AT 15 GUIDE RAMP 1 AT 10 & 15 M.C. RAMP 2 AT 15 GUIDE RAMP 4 AT 15 M.C.
IC2C	3	"	"	"	"	15/16	1 1/16	"	"	"	"	RAMP 2 AT 15 GUIDE
IC2D	4	"	"	"	"	7/8	1 1/8	"	"	"	"	RAMP 2 AT 15 M.C.
IC3A	2	31"	25"	32"	26"	15/16	1 1/16	5 3/8	6	.790	6	RAMP 1 AT 10 & 15 GD
IC3B	2	"	"	"	"	7/8	1 1/8	"	"	"	"	RAMP 1 AT 15 GUIDE

1 2/13/92 CORRECTED DRAWING TO AGREE WITH APPROVED AS NOTED

TEXAS DEPARTMENT OF TRANSPORTATION
APPROVED EXCEPT AS NOTED
DIVISION OF BRIDGES AND STRUCTURES
AUG 18 1992
APPROVAL OF THIS DRAWING DOES NOT RELIEVE THE CONTRACTOR OF THE RESPONSIBILITY FOR THE CORRECTNESS OF DETAIL

IF BRG TABLE

BRG	QTY	"A"	"B"	"C"	"L"	"W"	"X"	"Y"	"T"	"n"	"t"	"S"	LOCATION
IF5A	4	34"	15"	29"	35"	16"	1 15/16	1 3/16	4"	4	.714	5	RAMP 1 AT 10 M.C.
IF5B	4	"	"	"	"	"	1 7/8	1 1/8	"	"	"	"	RAMP 2 AT 10 M.C.
IF7A	6	34"	18"	29"	35"	19"	1 15/16	1 3/16	4"	4	.714	5	RAMP 3 AT 10 M.C.
IF7B	6	"	"	"	"	"	1 7/8	1 1/8	"	"	"	"	RAMP 4 AT 10 M.C.
IF8	4	36"	18"	31"	37"	13"	1 15/16	1 3/16	4"	4	.714	5	RAMP 3 AT 10 GD
IF9	4	38"	18"	31"	39"	19"	1 15/16	1 3/16	4"	4	.714	5	RAMP 3 AT 10 GD
IF10	4	36"	22"	31"	37"	23"	1 15/16	1 3/16	"	"	"	"	RAMP 4 AT 10 GD

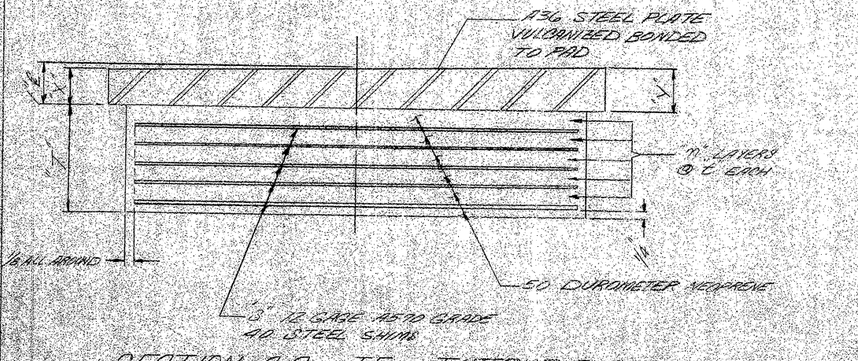

SECTION C-C IF INTERIOR EXP BRG (SEE TABLE)

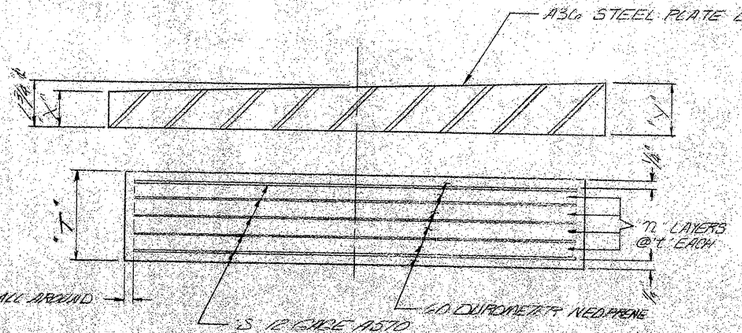

SECTION D-D IF INTERIOR FIXED BRG (SEE TABLE)

DRP NO. 2254

DYNAMIC RUBBER PRODUCTS, INC.
RUBBER SPECIALIST
P. O. BOX 2159 ATHENS, TX 75751

STATE DEPARTMENT OF HIGHWAYS
STATE DEPARTMENT OF TRANSPORTATION

ELASTOMERIC BEARINGS

US 83 & US 281

THIS SHEET SUPERSEDES
SHEET NO. 2 OF 3
APPROVED 12-17-91

SHEET 2 OF 3	DRAWN BY Gaylon	DATE 6-26-91

FED. RD. DIV. NO.	STATE	PROJECT NO.	HIGHWAY NO.
6	TEXAS	NH 92 (50) M	US 83 US 281

STATE DIST. NO.	COUNTY	CONT. NO.	SECT. NO.	JOB NO.	DWG. NO.
21	HIDALGO	2088	17	097	DOMD

CUSTOMER NAME: ROBERT LEVINE
P.O. NO.: 21777

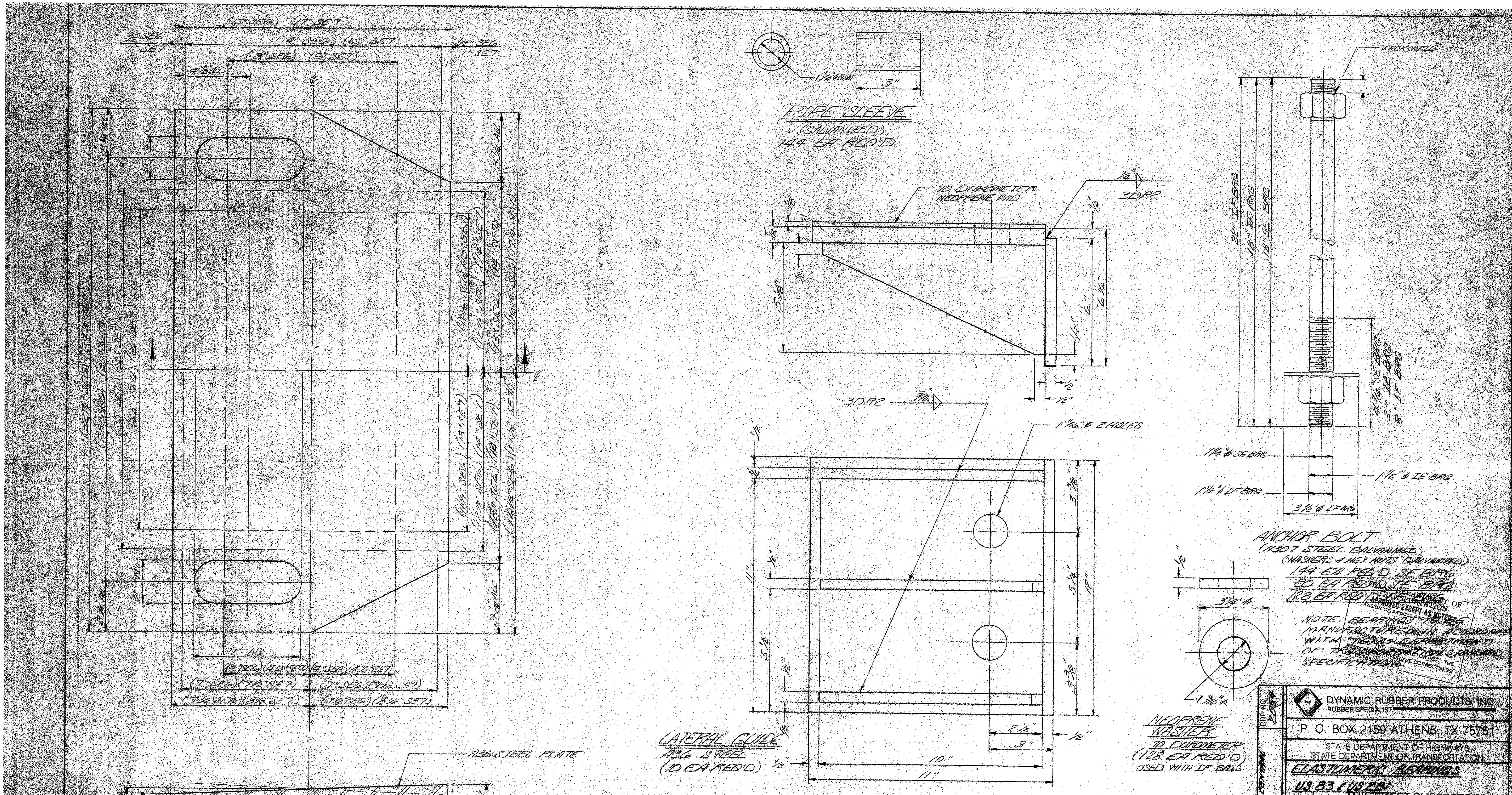

TEXAS DEPARTMENT OF TRANSPORTATION
DIVISION OF BRIDGES AND STRUCTURES
APPROVED EXCEPT AS NOTED
AUG 1 ...
APPROVAL OF THIS DRAWING DOES NOT RELIEVE THE CONTRACTOR OF THE RESPONSIBILITY FOR THE CORRECTNESS OF DETAILS

SE BRG TABLE

BRG	QTY	"X"	"Y"	"LOCATION USED"	BRG	QTY	"X"	"Y"	"LOCATION USED"
SE6-A	4	13/16	1 1/16	RAMP 3 BT 16 BK ALL	SE7E	4	1 3/16	13/16	RAMP 4 BENT 19F ALL
SE6-B	4	1 1/4	3/4	RAMP 2 BT 16 BK ALL	SE7F	1	7/8	1 1/8	RAMP 1 BENT 12 F G4
SE6-C	4	1 1/8	7/8	RAMP 3 BENT 16 F ALL	SE7G	1	15/16	1 1/16	RAMP 1 BENT 12 F G3
SE6-D	4	[illegible]	1 1/16	RAMP 2 BENT 16 F ALL	SE7H	2	1"	1"	RAMP 1 BENT 12 F G1 & G2
SE7A	2	1 1/16	1 3/16	RAMP 4 BENT 22 BK G3 & G4					
SE7B	2	3/4	1 1/4	RAMP 4 BENT 22 BK G1 & G2 5/16					
SE7C	2	1"	1"	RAMP 1 BENT 15 BK G3 & G4					
SE7D	2	15/16	3/4	RAMP 1 BENT 15 BK G1 & G2					

(1) 8/13/92 REVISED "X" & "Y" COLUMNS ON SE BRG TABLE & CORRECTED DRAWINGS TO APPR AS NOTED DRAWINGS

DYNAMIC RUBBER PRODUCTS, INC.
RUBBER SPECIALIST
P. O. BOX 2159 ATHENS, TX 75751

STATE DEPARTMENT OF HIGHWAYS
STATE DEPARTMENT OF TRANSPORTATION

ELASTOMERIC BEARINGS
US 83 & US 281

THIS SHEET SUPERSEDES
SHEET NO. 1 of 3
APPROVED 7-17-92

DRP NO. 2054
CUSTOMER NAME GILBERT CENTRAL
P.O. NO. 72067

SHEET 1 OF 3		DRAWN BY Gaylon			DATE 6/22/92
FED RD DIV. NO.	STATE	PROJECT NO.			HIGHWAY NO.
6	TEXAS	NH 92 (50) M			US 83 MAIN
STATE DIST. NO.	COUNTY	CONT NO.	SECT NO.	JOB NO.	DWG NO.
21	HIDALGO	0039	17	097	D0190

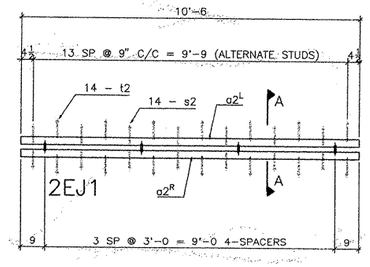

2 – EXP JOINT MK–2EJ1

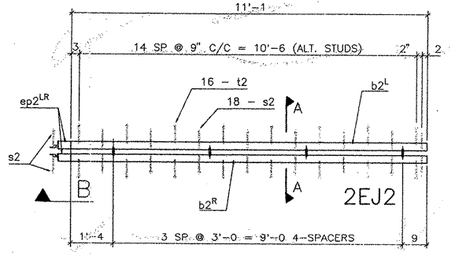

1 – EXP JOINT MK–2EJ2

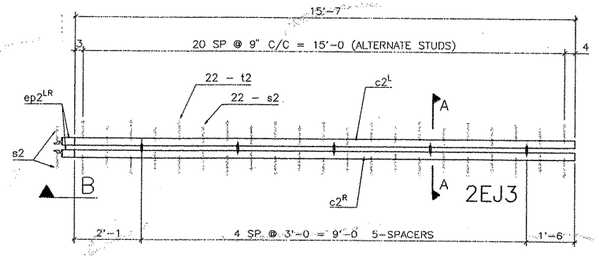

1 – EXP JOINT MK–2EJ3

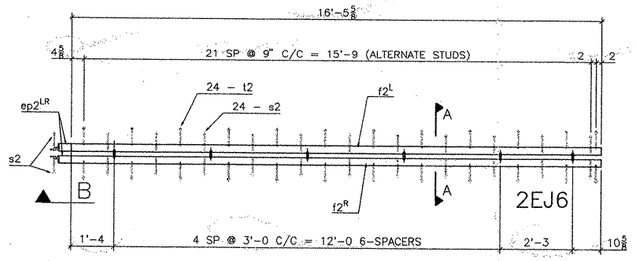

1 – EXP JOINT MK–2EJ6

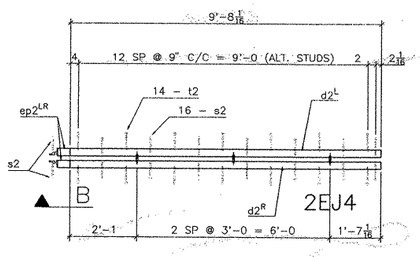

1 – EXP JOINT MK–2EJ4

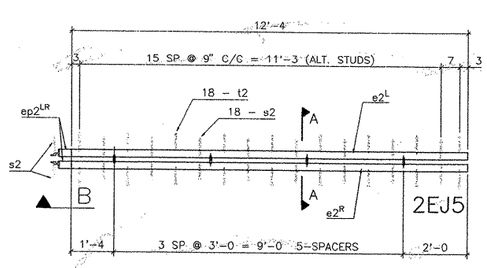

1 – EXP JOINT MK–2EJ5

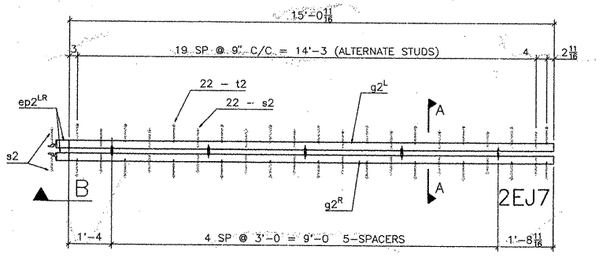

1 – EXP JOINT MK–2EJ7

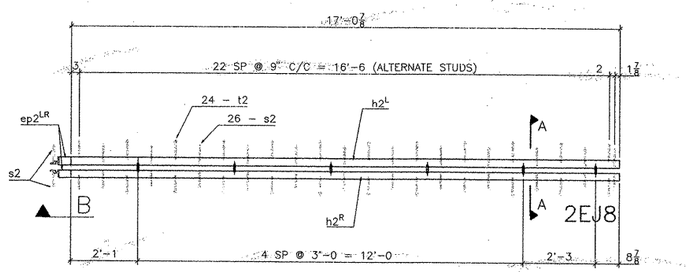

2 – EXP JOINT MK–2EJ8

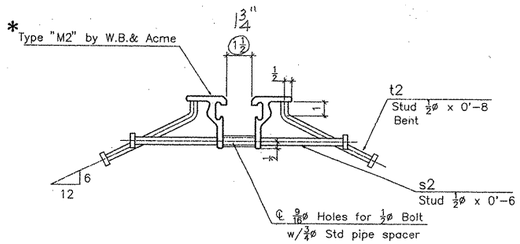

SECTION A–A

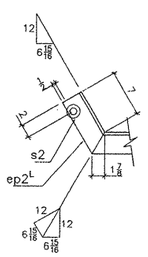

SECTION B

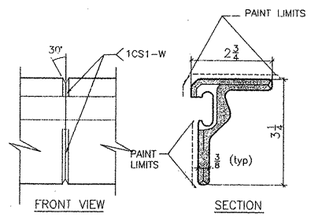

WELD DETAIL

Bill of Material

Detail Mark	#	SECTION	LENGTH	SHIPPING #	SHIPPING Mark	REMARKS	
		SEALED EXP JOINT	10'–6	2	2EJ1	10.50'	95
o2RL	4	TYPE M2 EXT.	10'–6			* 2R & 2L	72
s2	28	1/2ø HD STUD	0'–6				72
t2	28	1/2ø HD STUD	0'–8			BENT	72
		SEALED EXP JOINT	11'–1	1	1EJ2	11.08'	95
b2LR	2	TYPE M2 EXT.	11'–2 7/8			* 1R & 1L	72
ep2RL	2	TYPE M2 EXT.	0'–8 7/8			* 1R & 1L	72
s2	18	1/2ø HD STUD	0'–6				72
t2	16	1/2ø HD STUD	0'–8			BENT	72
		SEALED EXP JOINT	15'–7	1	1EJ3	15.58'	95
c2RL	2	TYPE M2 EXT.	15'–8 7/8			* 1R & 1L	72
ep2RL	2	TYPE M2 EXT.	0'–8 7/8			* 1R & 1L	72
s2	22	1/2ø HD STUD	0'–6				72
t2	22	1/2ø HD STUD	0'–8			BENT	72
		SEALED EXP JOINT	9'–8 15/16	1	2EJ4	9.67'	95
d2RL	2	TYPE M2 EXT.	9'–9 15/16			* 1R & 1L	72
ep2RL	2	TYPE M2 EXT.	0'–8 7/8			* 1R & 1L	72
s2	16	1/2ø HD STUD	0'–6				72
t2	14	1/2ø HD STUD	0'–8			BENT	72
		SEALED EXP JOINT	12'–4	1	2EJ5	12.33'	95
e2RL	2	TYPE M2 EXT.	12'–5 5/8			* 1R & 1L	72
ep2RL	2	TYPE M2 EXT.	0'–8 7/8			* 1R & 1L	72
s2	18	1/2ø HD STUD	0'–6				72
t2	18	1/2ø HD STUD	0'–8			BENT	72
		SEALED EXP JOINT	16'–5 5/8	1	2EJ6	16.47'	95
f2RL	2	TYPE M2 EXT.	16'–7 1/2			* 1R & 1L	72
ep2RL	2	TYPE M2 EXT.	0'–8 7/8			* 1R & 1L	72
s2	24	1/2ø HD STUD	0'–6				72
t2	24	1/2ø HD STUD	0'–8			BENT	72
		SEALED EXP JOINT	15'–0 11/16	1	2EJ7	15.06'	95
g2RL	2	TYPE M2 EXT.	15'–2 15/16			* 1R & 1L	72
ep2RL	2	TYPE M2 EXT.	0'–8 7/8			* 1R & 1L	72
s2	22	1/2ø HD STUD	0'–6				72
t2	22	1/2ø HD STUD	0'–8			BENT	72
		SEALED EXP JOINT	17'–0 7/8	2	2EJ8	17.07'	95
h2RL	4	TYPE M2 EXT.	17'–2 3/4			* 2R & 2L	72
ep2RL	4	TYPE M2 EXT.	0'–8 7/8			* 2R & 2L	72
s2	52	1/2ø HD STUD	0'–6				72
t2	48	1/2ø HD STUD	0'–8			BENT	72
		SHIP LOOSE SV400					
		NEOPRENE SEAL	46'–0	4	1N2	*	95
		NEOPRENE SEAL	57'–0	1	2N2	*	95
		NEOPRENE SEAL	30'–0	1	2N3	*	95
za1	47	1/2ø BOLT	0'–3 1/2			FOR SPACER	
zb1	47	1/2ø NUT & WASHER				FOR SPACER	
zc1	47	3/4ø STD PIPE	0'–2 1/4			SPACER	

GENERAL NOTES:

1– Studs are to be elec. arc welded with complete fusion.
2– All steel to be A588 or A36 and DOMESTIC.
3– Material for studs shall conform to ASTM–A108, grades 1015, 1018, or 1020.
4– One shop splice will be permitted in each shipping length provided no piece is less than 2'–0 in length and sufficient studs are added to limit the stud to shop splice distance to 6" maximum.
5– Shop and field splices shall be made by butt welding with areas in contact with preformed joint sealer to be ground smooth.
6– Corresponding sections shall be match marked and bolted together for shipment.
7– Surfaces embedded in concrete are not to receive paint.

* = BY W.B. & Acme

HOLES (U.N.) / 9/16ø SHOP PAINT / SYS ~~ONE~~ II

TEXAS DEPARTMENT OF TRANSPORTATION
APPROVED EXCEPT AS NOTED
DIVISION OF BRIDGES AND STRUCTURES
OCT 19 1992
APPROVAL OF THIS DRAWING DOES NOT RELIEVE THE CONTRACTOR OF THE RESPONSIBILITY FOR THE CORRECTNESS OF DETAIL.

APPROVAL/REVIEW AUTHORITY: PLEASE REVIEW THIS DRAWING CAREFULLY
This drawing represents the Seller's interpretation of the intent of the contract documents. However, the Seller assumes no responsibility for the design of the information shown on this drawing. This is the responsibility of the Buyer upon the drawing.
Unless noted to the contrary, upon the drawings return from approval, it will be assumed that all information shown herein has the affirmation of the Buyer.
Subsequent changes to information shown on this drawing after the first submission will be considered as contract changes.

ERECTION NOTES:
All dimensions & elevations must be strictly adhered to or steel will not fit. Report any discrepancies to Seller immediately.

BACKCHARGES:
Back charges of any nature for corrective work or replacement material will not be accepted unless authorized by Seller. Costs that are incurred without the Seller's prior approval will be for the Buyer's account.

Rev.	Date	Description
1		
2		
3		
4		

Print Record #	To	Date
7	Appv	10/9/92
	Appv	
	Appv	
	Check	
	Back ✓	
	Shop	
	Shop	
1	Purch	10/9/92
	Purch	
	Const	
	Const	
	Plotted	

Oct 09, 1992 – 07:34:53

FOR APPROVAL ONLY

CAPITOL CITY STEEL COMPANY INC.
REINFORCING & STRUCTURAL STEEL FABRICATORS
SUPPLIER OF CONSTRUCTION MATERIALS
P.O. BOX 3195 AUSTIN TX 78764 512-282-8820 FAX: 512-295-2500

CUSTOMER: GILBERT TEXAS — JOB # 92–856
PROJECT: NH 92(50)M CSJ 0039 17 097 — DATE: 10–7–92
LOCATION: HILDAGO CO. US 83 US 281 DIST 21 — DWN: PC CHK:
ARCH/ENG: Texas DOT SHOP PLAN #: — SHEET # 2

SEJ–S(1) SHOP DETAILS

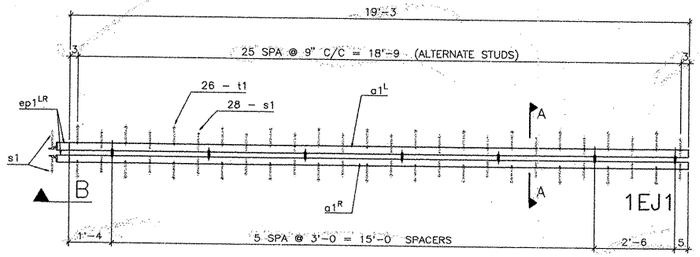

3 – EXP JOINT MK–1EJ1

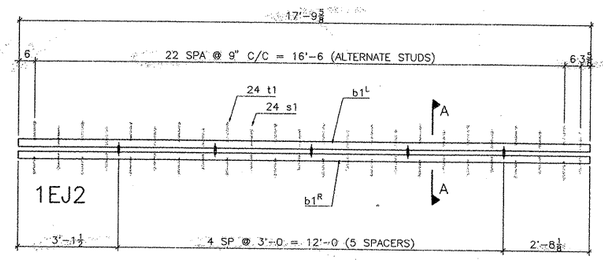

3 – EXP JOINT MK–1EJ2

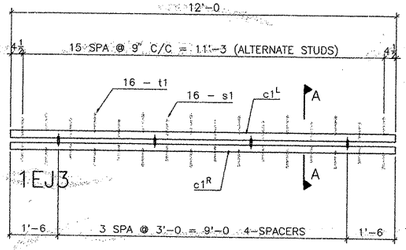

10 – EXP JOINT MK–1EJ3

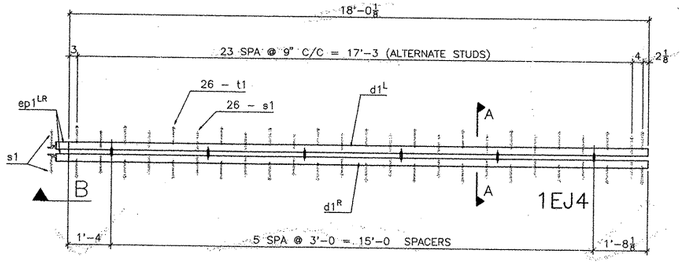

1 – EXP JOINT MK–1EJ4

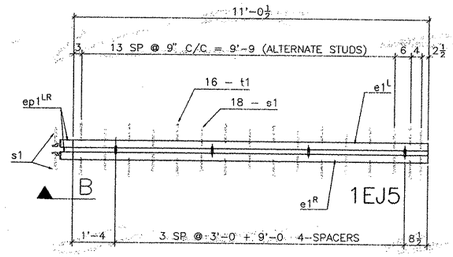

1 – EXP JOINT MK–1EJ5

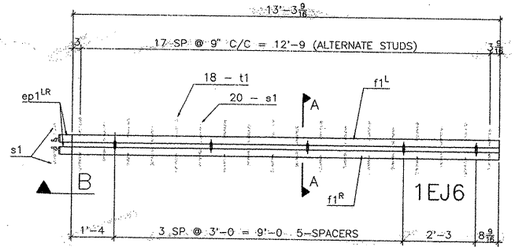

1 – EXP JOINT MK–1EJ6

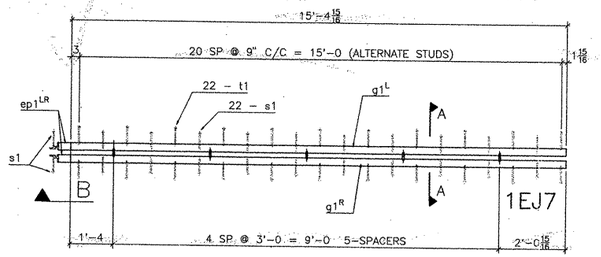

1 – EXP JOINT MK–1EJ7

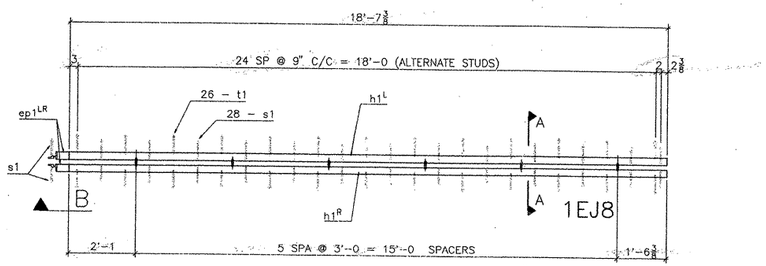

1 – EXP JOINT MK–1EJ8

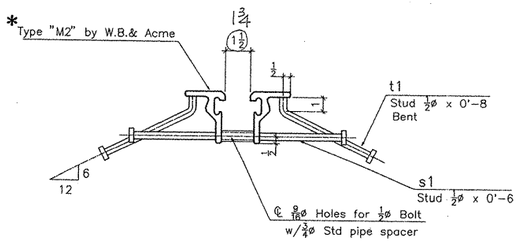

SECTION A–A

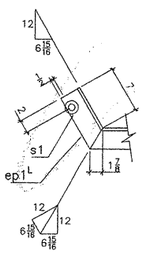

SECTION B

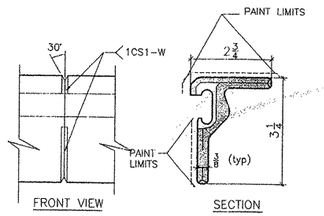

WELD DETAIL

Bill of Material

Detail Mark	#	SECTION	LENGTH	SHIPPING #	SHIPPING Mark	REMARKS	
		SEALED EXP JOINT	19'-3	3	1EJ1	19.25'	95
g1 RL	6	TYPE M2 EXT.	19'-4 7/8			* 3R & 3L	72
ep1 RL	6	TYPE M2 EXT.	0'-8 7/8			* 3R & 3L	72
s1	78	1/2ø HD STUD	0'-6				72
t1	84	1/2ø HD STUD	0'-8			BENT	72
		SEALED EXP JOINT	17'-9 5/8	3	1EJ2	17.80'	95
b1 LR	6	TYPE M2 EXT.	17'-9 5/8			* 3R & 3L	72
s1	72	1/2ø HD STUD	0'-6				72
t1	72	1/2ø HD STUD	0'-8			BENT	72
		SEALED EXP JOINT	12'-0	10	1EJ3	12.00'	95
c1 RL	20	TYPE M2 EXT.	12'-0			* 10R & 10L	72
s1	160	1/2ø HD STUD	0'-6				72
t1	160	1/2ø HD STUD	0'-8			BENT	72
		SEALED EXP JOINT	18'-0 1/8	1	1EJ4	18.01'	95
d1 RL	2	TYPE M2 EXT.	18'-2			* 1R & 1L	72
ep1 RL	2	TYPE M2 EXT.	0'-8 7/8			* 1R & 1L	72
s1	26	1/2ø HD STUD	0'-6				72
t1	26	1/2ø HD STUD	0'-8			BENT	72
		SEALED EXP JOINT	11'-0 1/2	1	1EJ5	11.04'	95
e1 RL	2	TYPE M2 EXT.	11'-2 5/8			* 1R & 1L	72
ep1 RL	2	TYPE M2 EXT.	0'-8 7/8			* 1R & 1L	72
s1	18	1/2ø HD STUD	0'-6				72
t1	16	1/2ø HD STUD	0'-8			BENT	72
		SEALED EXP JOINT	13'-3 9/16	1	1EJ6	13.30'	95
f1 RL	2	TYPE M2 EXT.	13'-5 9/16			* 1R & 1L	72
ep1 RL	2	TYPE M2 EXT.	0'-8 7/8			* 1R & 1L	72
s1	20	1/2ø HD STUD	0'-6				72
t1	18	1/2ø HD STUD	0'-8			BENT	72
		SEALED EXP JOINT	15'-4 15/16	1	1EJ7	15.41'	95
g1 RL	2	TYPE M2 EXT.	15'-6 15/16			* 1R & 1L	72
ep1 RL	2	TYPE M2 EXT.	0'-8 7/8			* 1R & 1L	72
s1	22	1/2ø HD STUD	0'-6				72
t1	22	1/2ø HD STUD	0'-8			BENT	72
		SEALED EXP JOINT	18'-7 3/8	2	1EJ8	18.61'	95
h1 RL	4	TYPE M2 EXT.	18'-9 3/4			* 2R & 2L	72
ep1 RL	4	TYPE M2 EXT.	0'-8 7/8			* 2R & 2L	72
s1	52	1/2ø HD STUD	0'-6				72
t1	52	1/2ø HD STUD	0'-8			BENT	72
		SHIP LOOSE SV400					
		NEOPRENE SEAL	39'-0	4	1N1	*	95
		NEOPRENE SEAL	43'-0	1	2N1	*	95
		NEOPRENE SEAL	54'-0	1	3N1	*	95
		NEOPRENE SEAL	63'-0	1	4N1	*	95
za1	105	1/2ø BOLT	0'-3 1/2			FOR SPACER	
zb1	105	1/2ø NUT & WASHER				FOR SPACER	
zc1	105	3/4ø STD PIPE	0'-2 1/4			SPACER	

GENERAL NOTES:

1– Studs are to be elec. arc welded with complete fusion.
2– All steel to be A588 or A36 and DOMESTIC.
3– Material for studs shall conform to ASTM–A108, grades 1015, 1018, or 1020.
4– One shop splice will be permitted in each shipping length provided no piece is less than 2'–0 in length and sufficient studs are added to limit the stud to shop splice distance to 6" maximum.
5– Shop and field splices shall be made by butt welding with areas in contact with preformed joint sealer to be ground smooth.
6– Corresponding sections shall be match marked and bolted together for shipment.

* = BY W.B. & Acme

HOLES (U.N.) / 9 / 16ø SHOP PAINT / SYS II ~~ONE~~

TEXAS DEPARTMENT OF TRANSPORTATION
APPROVED EXCEPT AS NOTED
DIVISION OF BRIDGE AND STRUCTURES
OCT 19 1992
APPROVAL OF THIS DRAWING DOES NOT RELIEVE THE CONTRACTOR OF THE RESPONSIBILITY FOR THE CORRECTNESS OF DETAIL.

APPROVAL/REVIEW AUTHORITY: PLEASE REVIEW THIS DRAWING CAREFULLY
This drawing represents the Seller's interpretation of the intent of the contract documents. However, the Seller assumes no responsibility for the design of the information shown on this drawing. This is the responsibility of the Buyer upon the drawing.
Unless noted to the contrary, upon the drawings return from approval, it will be assumed that all information shown herein has the affirmation of the Buyer.
Subsequent changes to information shown on this drawing after the first submission will be considered as contract changes.

ERECTION NOTES:
All dimensions & elevations must be strictly adhered to or steel will not fit. Report any discrepancies to Seller immediately.

BACKCHARGES:
Back charges of any nature for corrective work or replacement material will not be accepted unless authorized by Seller. Costs that are incurred without the Seller's prior approval will be for the Buyer's account.

Rev.	Date	Description
1		
2		
3		
4		

Print Record

#	To	Date
7	Appv	10/9/92
	Appv	
	Appv	
	Check	
	Back ✓	
	Shop	
	Shop	
1	Purch	10/9/92
	Purch	
	Const	
	Const	
	Plotted	

Oct 09, 1992 – 08:20:32

FOR APPROVAL ONLY

CAPITOL CITY STEEL COMPANY INC.
REINFORCING & STRUCTURAL STEEL FABRICATORS
SUPPLIER OF CONSTRUCTION MATERIALS
P.O. BOX 3195 AUSTIN TX 78764 512-282-8820
FAX: 512-295-2500

CRSI PLANT 1061 — CERTIFIED STEEL FABRICATOR — ISI

CUSTOMER: GILBERT TEXAS	JOB # 92–856
PROJECT: NH 92(50)M CSJ 0039 17 097	DATE: 10–7–92
LOCATION: HILDAGO CO. US 83 US 281 DIST 21	DWN: PC CHK:
ARCH/ENG: Texas DOT SHOP PLAN #:	SHEET # 1

SEJ–S(1) SHOP DETAILS

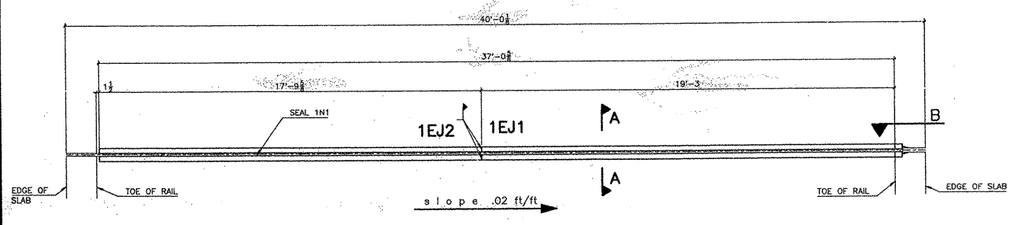

ABUT 1

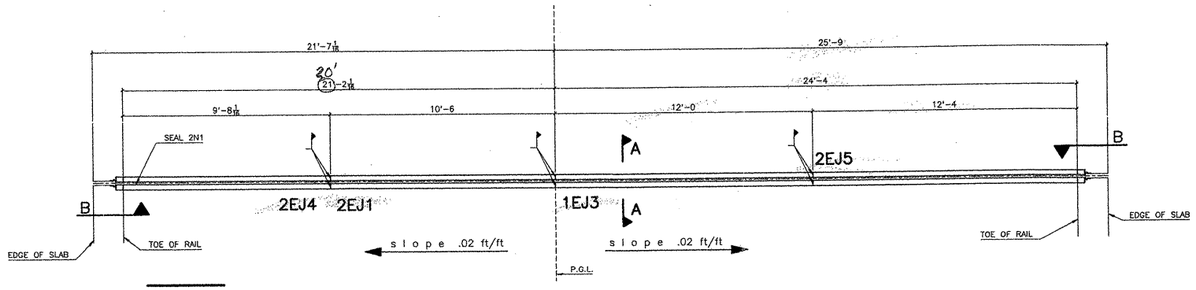

BENT 7

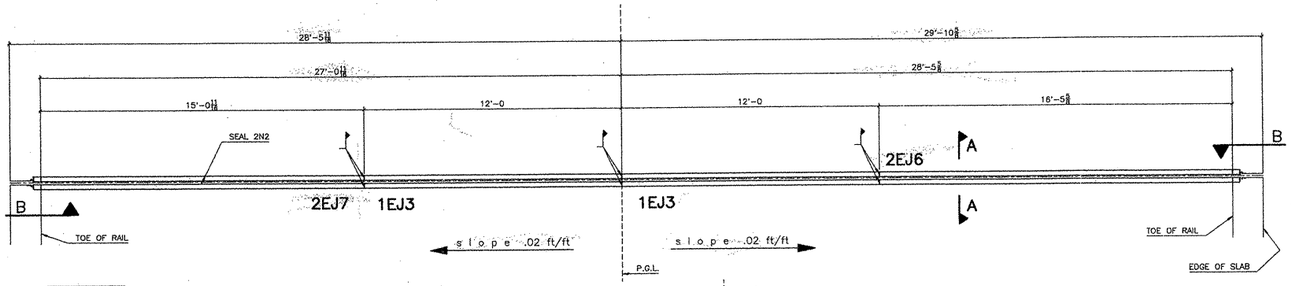

BENT 10

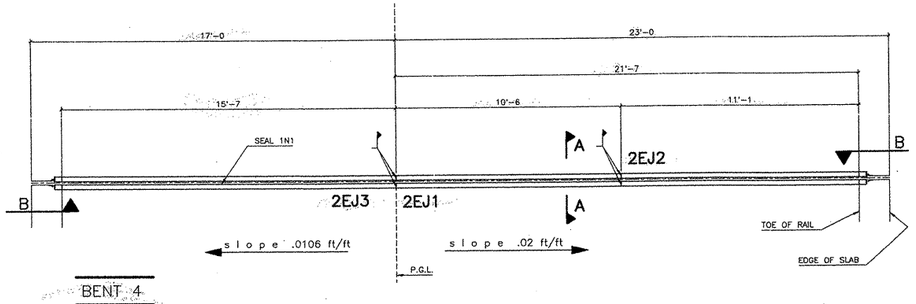

BENT 4

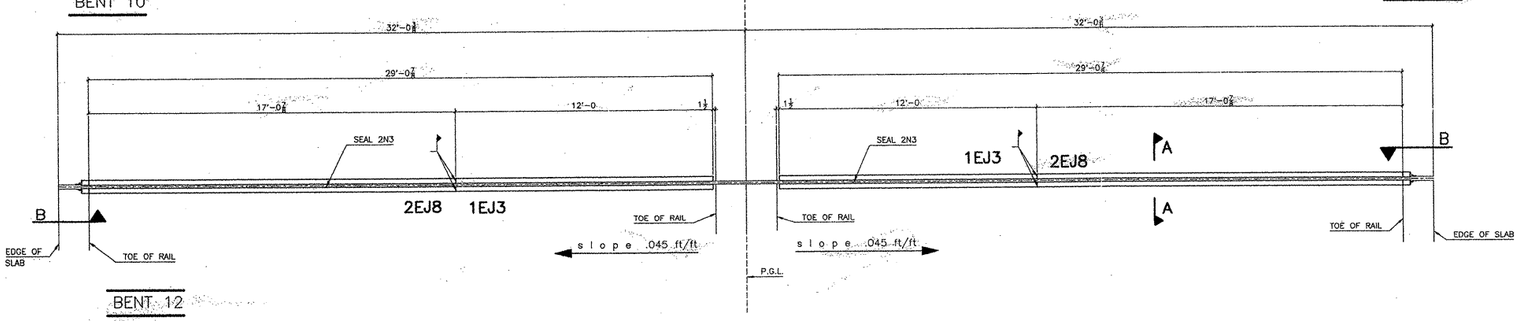

BENT 12

US 83/281 INTERCHANGE RAMPS 3 & 4

S E J P L A C E M E N T G U I D E

SEAL SCHEDULE

SEAL 2N1 X 46'-0"
SEAL 2N2 X 57'-0"
SEAL 2N3 X 30'-0"

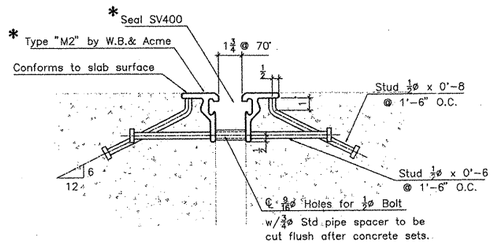

SECTION A–A

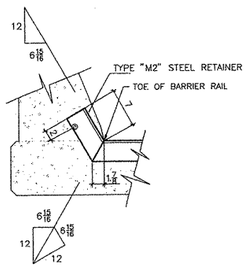

SECTION B

GENERAL NOTES:

1– Studs are to be elec. arc welded with complete fusion.
2– All steel to be A36 or A588 and DOMESTIC.
3– Material for studs shall conform to ASTM–A108, grades 1015, 1018, or 1020.
4– One shop splice will be permitted in each shipping length provided no piece is less than 2'–0 in length and sufficient studs are added to limit the stud to shop splice distance to 6" maximum.
5– Shop and field splices shall be made by butt welding with areas in contact with preformed joint sealer to be ground smooth.
6– Corresponding sections shall be match marked and bolted together for shipment.
7– Painting of System I or II will cover only surfaces not embeded in concrete when painting is required.

FOR APPROVAL ONLY

* = BY Watson Bowman & Acme

FIELD PAINT/none

TEXAS DEPARTMENT OF TRANSPORTATION
APPROVED EXCEPT AS NOTED
DIVISION OF BRIDGES AND STRUCTURES
OCT 19 1992
APPROVAL OF THIS DRAWING DOES NOT RELIEVE THE CONTRACTOR OF THE RESPONSIBILITY FOR THE CORRECTNESS OF DETAIL.

APPROVAL/REVIEW AUTHORITY: PLEASE REVIEW THIS DRAWING CAREFULLY

This drawing represents the Seller's interpretation of the intent of the contract documents. However, the Seller assumes no responsibility for the design of the information shown on this drawing. This is the responsibility of the Buyer upon the drawing.

Unless noted to the contrary upon the drawings returned from approval, it will be assumed that all information shown hereon has the affirmation of the Buyer.

After the first submission, changes to information shown on this drawing will be considered as contract changes.

ERECTION NOTES:

All dimensions & elevations must be strictly adhered to or steel will not fit. Report any discrepancies to Seller immediately.

BACKCHARGES:

Back charges of any nature for corrective work or replacement material will not be accepted unless authorized by Seller. Costs that are incurred without the Seller's prior approval will be for the Buyer's account.

Rev.	Date	Description
1		
2		
3		
4		

Print Record

#	To	Date
7	Appv	10/9/92
	Appv	
	Appv	
	Check	
	Back ✓	
	Shop	
	Shop	
1	Purch	10/9/92
	Purch	
	Const	
	Const	
	Plotted	

Oct 09, 1992 – 08:40:08

CAPITOL CITY STEEL COMPANY INC.
REINFORCING & STRUCTURAL STEEL FABRICATORS
SUPPLIER OF CONSTRUCTION MATERIALS
P.O. BOX 3195 AUSTIN TX 78764 512-282-8820
FAX: 512-295-2500

CRSI TOWER 1982 — TSI CERTIFIED

CUSTOMER: GILBERT TEXAS	JOB # 92-856
PROJECT: NH 92(50)M CSJ: 0039 17 097	DATE: 10-6-92
LOCATION: HILDAGO CO. US 83 US 281 DIST 21	DWN: PC CHK:
ARCH/ENG: Texas DOT SHOP PLAN #: XXXX	SHEET # E2

SEJ-S(1) @ US 82/281 INTERCHANGE RAMPS 3 & 4

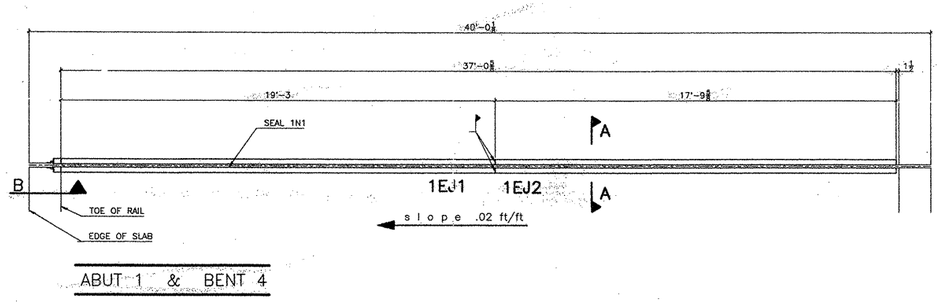

ABUT 1 & BENT 4

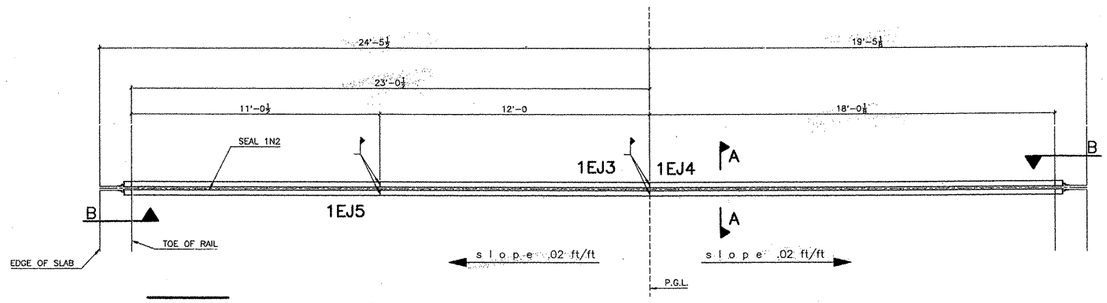

BENT 7

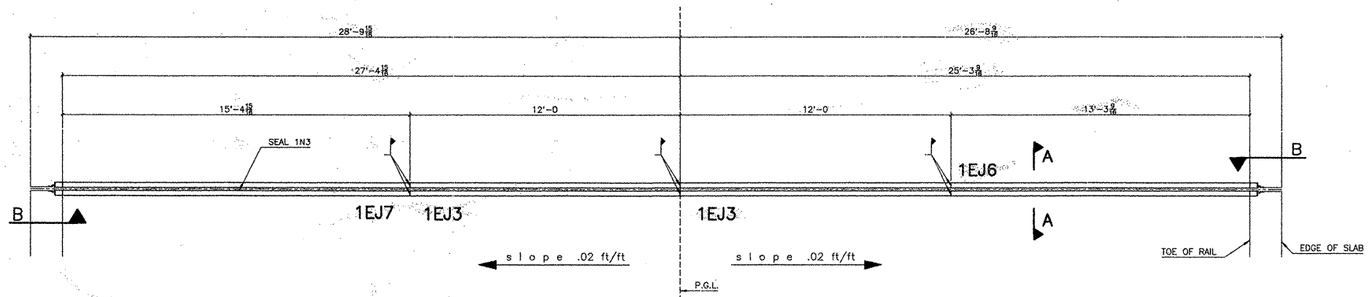

BENT 10

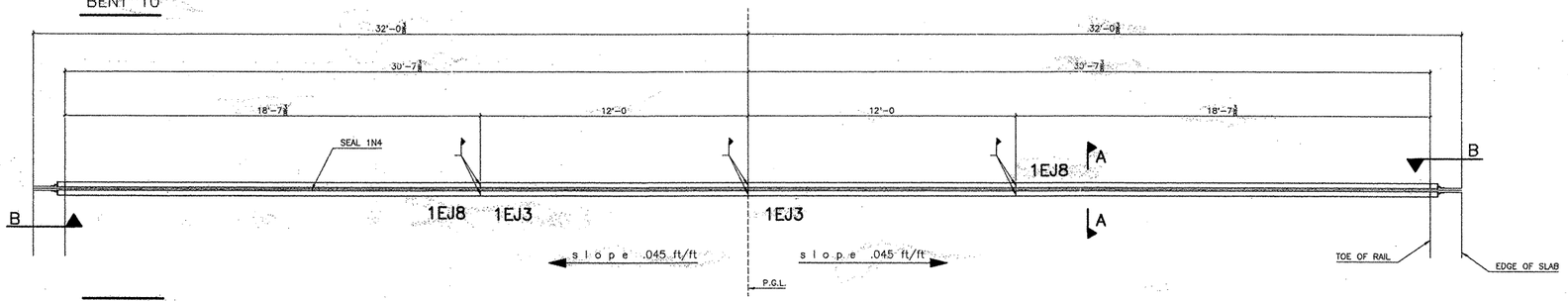

BENT 12

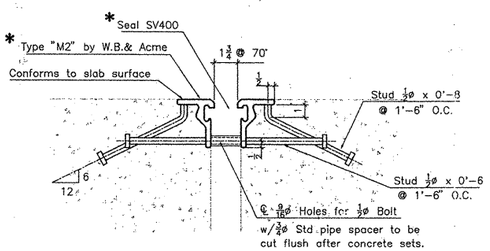

SECTION A–A

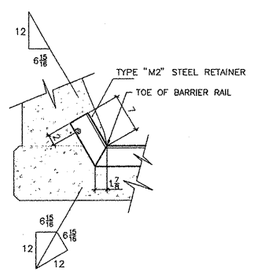

SECTION B

US 83/281 INTERCHANGE RAMPS 1 & 2

SEJ PLACEMENT GUIDE

SEAL SCHEDULE
SEAL 1N1 X 39'-0"
SEAL 1N2 X 43'-0"
SEAL 1N3 X 54'-0"
SEAL 1N4 X 63'-0"

TEXAS DEPARTMENT OF TRANSPORTATION
APPROVED
DIVISION OF BRIDGES AND STRUCTURES
OCT 19 1992
APPROVAL OF THIS DRAWING DOES NOT RELIEVE THE CONTRACTOR OF THE RESPONSIBILITY FOR THE CORRECTNESS OF DETAIL.

GENERAL NOTES:
1-- Studs are to be elec. arc welded with complete fusion.
2-- All steel to be A36 or A588 and DOMESTIC.
3-- Material for studs shall conform to ASTM-A108, grades 1015, 1018, or 1020.
4-- One shop splice will be permitted in each shipping length provided no piece is less than 2'-0 in length and sufficient studs are added to limit the stud to shop splice distance to 6" maximum.
5-- Shop and field splices shall be made by butt welding with areas in contact with preformed joint sealer to be ground smooth.
6-- Corresponding sections shall be match marked and bolted together for shipment.
7-- Painting of System I or II will cover only surfaces not embeded in concrete when painting is required.

FOR APPROVAL ONLY

* = BY Watson Bowman & Acme

FIELD PAINT/none

APPROVAL/REVIEW AUTHORITY: PLEASE REVIEW THIS DRAWING CAREFULLY
This drawing represents the Seller's interpretation of the intent of the contract documents. However, the Seller assumes no responsibility for the design of the information shown on this drawing. This is the responsibility of the Buyer upon the drawing.
Unless noted to the contrary upon the drawings returned from approval, it will be assumed that all information shown hereon has the affirmation of the Buyer.
After the first submission, changes to information shown on this drawing will be considered as contract changes.

ERECTION NOTES:
All dimensions & elevations must be strictly adhered to or steel will not fit. Report any discrepancies to Seller immediately.

BACKCHARGES:
Back charges of any nature for corrective work or replacement material will not be accepted unless authorized by Seller. Costs that are incurred without the Seller's prior approval will be for the Buyer's account.

Rev.	Date	Description
1		
2		
3		
4		

Print Record

#	To	Date
7	Appv	10/9/92
	Appv	
	Appv	
	Check	
	Back ✓	
	Shop	
	Shop	
1	Purch	10/9/92
	Purch	
	Const	
	Const	
	Plotted	

Oct 09, 1992 - 08:33:13

CAPITOL CITY STEEL COMPANY INC.
REINFORCING & STRUCTURAL STEEL FABRICATORS
SUPPLIER OF CONSTRUCTION MATERIALS
P.O. BOX 3195 AUSTIN TX 78764 512-282-8820
FAX: 512-295-2500

CRSI 63729 PLANT 1993

CUSTOMER: GILBERT TEXAS	JOB # 92-856
PROJECT: NH 92(50)M CSJ: 0039 17 097	DATE: 10-6-92
LOCATION: HILDAGO CO. US 83 US 281 DIST 21	DWN: PC CHK:
ARCH/ENG: Texas DOT SHOP PLAN #: XXXX	SHEET # E1

SEJ-S(1) @ US 82/281 INTERCHANGE RAMPS 1 & 2

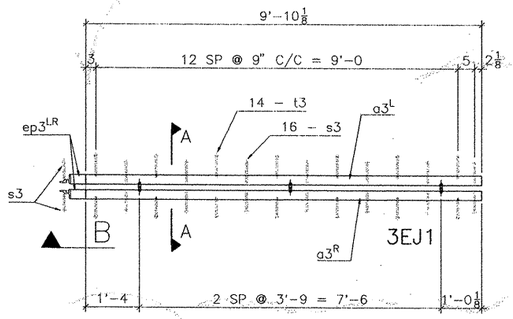

16 – EXP JOINT MK–3EJ1

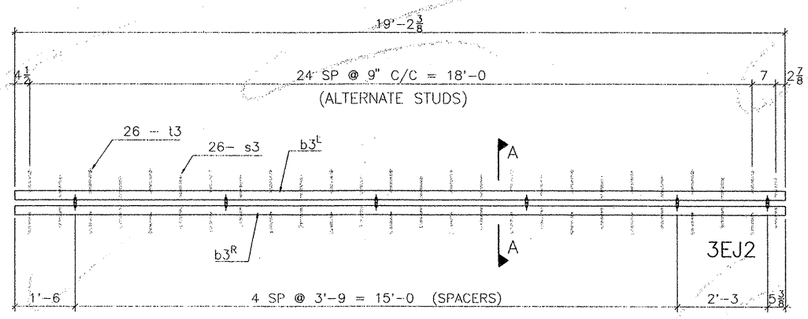

10 – EXP JOINT MK–3EJ2

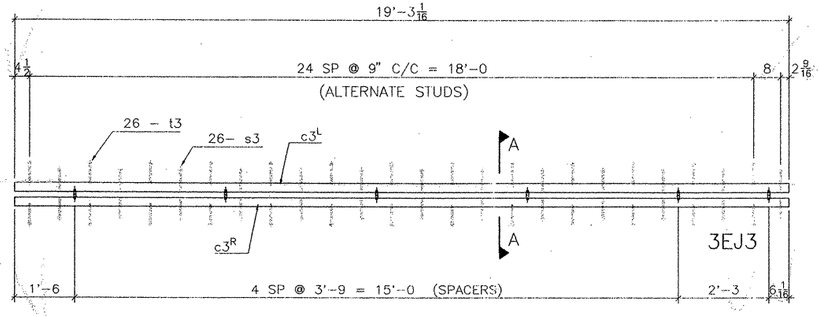

3 – EXP JOINT MK–3EJ3

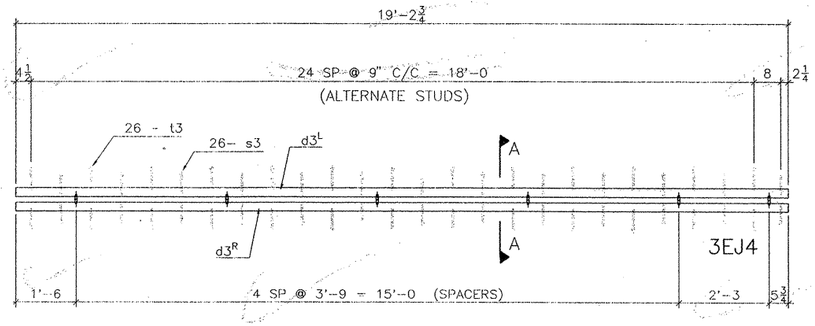

3 – EXP JOINT MK–3EJ4

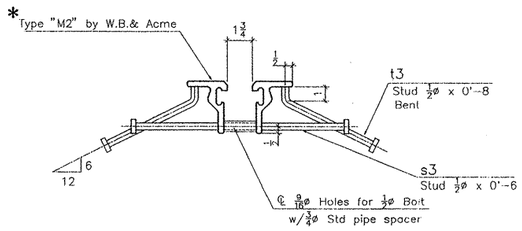

SECTION A–A

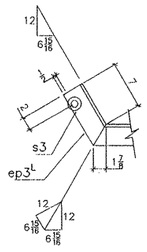

SECTION B

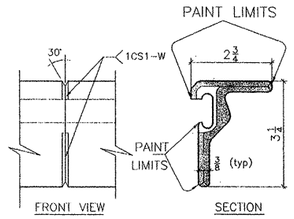

WELD DETAIL

Bill of Material

Detail Mark	#	SECTION	LENGTH	SHIPPING #	SHIPPING Mark	REMARKS	
		SEALED EXP JOINT	10'-5 1/8	16	3EJ1	10.43	95
a3RL	32	TYPE M2 EXT.	15'-0			* 16R & 16L	72
ep3RL	32	TYPE M2 EXT.	0'-8 7/8			* 16R & 16L	72
s3	256	1/2ø HD STUD	0'-6				72
t3	224	1/2ø HD STUD	0'-8			BENT	72
		SEALED EXP JOINT	19'-2 3/8	10	3EJ2	19.20'	95
b3LR	20	TYPE M2 EXT.	19'-2 3/8			* 10R & 10L	72
s3	260	1/2ø HD STUD	0'-6				72
t3	260	1/2ø HD STUD	0'-8			BENT	72
		SEALED EXP JOINT	19'-3 1/16	3	3EJ3	19.26'	95
c3RL	6	TYPE M2 EXT.	19'-3 1/16			* 3R & 3L	72
s3	78	1/2ø HD STUD	0'-6				72
t3	78	1/2ø HD STUD	0'-8			BENT	72
		SEALED EXP JOINT	15'-2 3/4	3	3EJ4	19.23'	95
d3RL	6	TYPE M2 EXT.	15'-2 3/4			* 3R & 3L	72
s3	78	1/2ø HD STUD	0'-6				72
t3	78	1/2ø HD STUD	0'-8			BENT	72
		SHIP LOOSE SV400					
		NEOPRENE SEAL	30'-0	16	3N1	*	95
za1	144	1/2ø BOLT	0'-3 1/2			FOR SPACER	
zb1	144	1/2ø NUT & WASHER				FOR SPACER	
zc1	144	1/2ø STD PIPE	0'-2 1/4			SPACER	

TEXAS DEPARTMENT OF TRANSPORTATION
APPROVED
DIVISION OF BRIDGES AND STRUCTURES
Jan 27 1993
APPROVAL OF THIS DRAWING DOES NOT RELIEVE THE CONTRACTOR OF THE RESPONSIBILITY FOR THE CORRECTNESS OF DETAIL

FOR FINAL PLANS

GENERAL NOTES:

1– Studs are to be elec. arc welded with complete fusion.
2– All steel to be A588 or A36 and DOMESTIC.
3– Material for studs shall conform to ASTM–A108, grades 1015, 1018, or 1020.
4– One shop splice will be permitted in each shipping length provided no piece is less than 2'–0 in length and sufficient studs are added to limit the stud to shop splice distance to 6" maximum.
5– Shop and field splices shall be made by butt welding with areas in contact with preformed joint sealer to be ground smooth.
6– Corresponding sections shall be match marked and bolted together for shipment.
7– PAINT ONLY THOSE SURFACES N O T E M B E D D E D IN CONC. DO NOT PAINT SEAL CAVITY (SEE WELD DETAIL FOR PAINT LIMITS).

* = BY W.B. & Acme

HOLES (U.N.)/ 9/16ø SHOP PAINT/ SYS TWO

APPROVAL/REVIEW AUTHORITY: PLEASE REVIEW THIS DRAWING CAREFULLY

This drawing represents the Seller's interpretation of the intent of the contract documents. However, the Seller assumes no responsibility for the design of the information shown on this drawing. This is the responsibility of the Buyer upon the drawing.

Unless noted to the contrary, upon the drawings return from approval, it will be assumed that all information shown herein has the affirmation of the Buyer.

Subsequent changes to information shown on this drawing after the first submission will be considered as contract changes.

ERECTION NOTES:

All dimensions & elevations must be strictly adhered to or steel will not fit. Report any discrepancies to Seller immediately.

BACKCHARGES:

Back charges of any nature for corrective work or replacement material will not be accepted unless authorized by Seller. Costs that are incurred without the Seller's prior approval will be for the Buyer's account.

Rev.	Date	Description
1		
2		
3		
4		

Print Record

#	To	Date
7	Appv	1/19/93
	Appv	
	Appv	
	Check	
	Back ✓	
	Shop	
	Shop	
1	Purch	1/19/93
	Purch	
	Const	
	Const	
	Plotted	

Jan 16, 1993 – 09:59:52

CAPITOL CITY STEEL COMPANY INC.
REINFORCING & STRUCTURAL STEEL FABRICATORS
SUPPLIER OF CONSTRUCTION MATERIALS
P.O. BOX 3195 AUSTIN TX 78764 512-282-8820
FAX: 512-295-2500

CUSTOMER: GILBERT TEXAS
PROJECT: NH 92(50)M CSJ 0039 17 097
LOCATION: HILDAGO CO. US 83 US 281 DIST 21
ARCH/ENG: Texas DOT SHOP PLAN #:

JOB # 92-856
DATE: 10-30-92
DWN: PC CHK: DM
SHEET # 3

4" SEJ-S(1) SHOP DETAILS

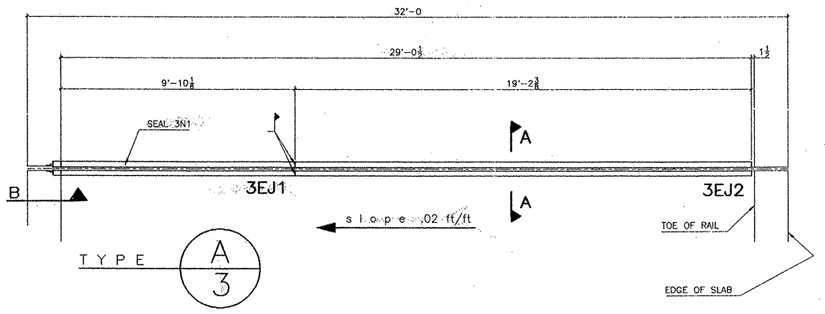

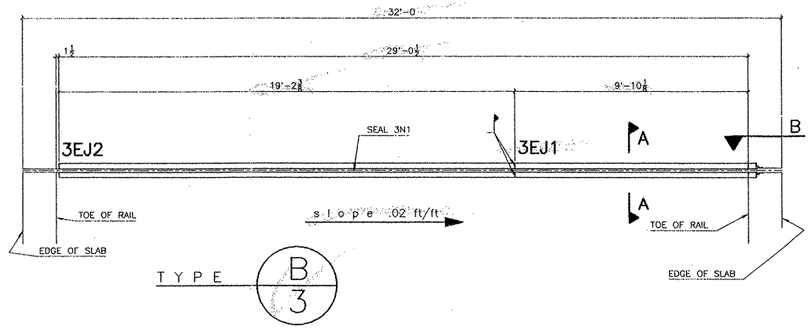

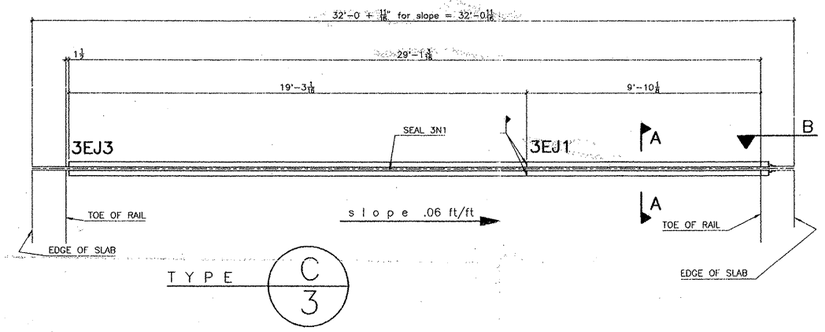

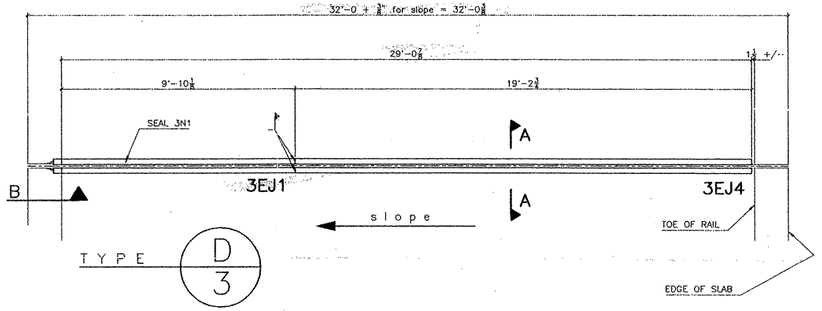

J O I N T S C H E D U L E

RAMP 1		TYPE	SEAL
BENT 18	SEJ(4")	D/3	3N1
BENT 20	SEJ(4")	A/3	3N1
BENT 22	SEJ(4")	A/3	3N1
BENT 25	SEJ(4")	A/3	3N1
ABUT 27	SEJ(4")	A/3	3N1
RAMP 2			
BENT 20	SEJ(4")	C/3	3N1
BENT 22	SEJ(4")	B/3	3N1
BENT 24	SEJ(4")	B/3	3N1
BENT 27	SEJ(4")	B/3	3N1
ABUT 30	SEJ(4")	D/3	3N1

RAMP 3		TYPE	SEAL
BENT 20	SEJ(4")	D/3	3N1
ABUT 22	SEJ(4")	A/3	3N1
RAMP 4			
BENT 15	SEJ(4")	C/3	3N1
BENT 19	SEJ(4")	C/3	3N1
BENT 22	SEJ(4")	B/3	3N1
ABUT 25	SEJ(4")	B/3	3N1

FOR REVIEW

TEXAS DEPARTMENT OF TRANSPORTATION
APPROVED
DIVISION OF BRIDGES AND STRUCTURES
JAN

APPROVAL OF THIS DRAWING DOES NOT RELIEVE THE CONTRACTOR OF THE RESPONSIBILITY FOR THE CORRECTNESS OF THE DETAILS

US 83/US 281 INTERCHANGE RAMPS 1, 2, 3, & 4

S E J P L A C E M E N T G U I D E (PLAN LAYOUT)

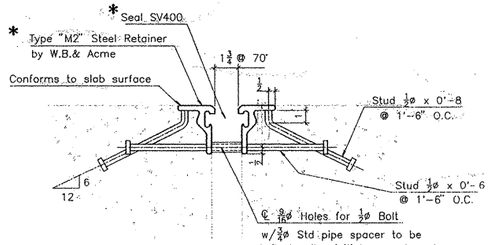

SECTION A–A

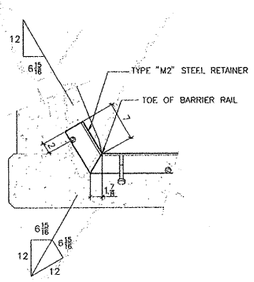

SECTION B

SEAL SCHEDULE

SEAL 3N1 X 30'-0"

GENERAL NOTES:

1– Studs are to be elec. arc welded with complete fusion.
2– All steel to be A36 or A588 and DOMESTIC.
3– Material for studs shall conform to ASTM–A108, grades 1015, 1018, or 1020.
4– One shop splice will be permitted in each shipping length provided no piece is less than 2'–0 in length and sufficient studs are added to limit the stud to shop splice distance to 6" maximum.
5– Shop and field splices shall be made by butt welding with areas in contact with preformed joint sealer to be ground smooth.
6– Corresponding sections shall be match marked and bolted together for shipment.

* = BY Watson Bowman & Acme

FIELD PAINT / none

APPROVAL/REVIEW AUTHORITY: PLEASE REVIEW THIS DRAWING CAREFULLY

This drawing represents the Seller's interpretation of the intent of the contract documents. However, the Seller assumes no responsibility for the design of the information shown on this drawing. This is the responsibility of the Buyer upon the drawing.

Unless noted to the contrary upon the drawings returned from approval, it will be assumed that all information shown thereon has the affirmation of the Buyer.

After the first submission, changes to information shown on this drawing will be considered as contract changes.

ERECTION NOTES:

All dimensions & elevations must be strictly adhered to or steel will not fit. Report any discrepancies to Seller immediately.

BACKCHARGES:

Back charges of any nature for corrective work or replacement material will not be accepted unless authorized by Seller. Costs that are incurred without the Seller's prior approval will be for the Buyer's account.

Rev.	Date	Description
1		
2		
3		
4		

Print Record

#	To	Date
7	Appv	1/19/93
	Appv	
	Appv	
	Check	
	Back ✓	
	Shop	
	Shop	
1	Purch	1/19/93
	Purch	
	Const	
	Const	
	Plotted	

Jan 15, 1993 – 17:49:33

CAPITOL CITY STEEL
COMPANY INC.
REINFORCING & STRUCTURAL STEEL FABRICATORS
SUPPLIER OF CONSTRUCTION MATERIALS
P.O. BOX 3195 AUSTIN TX 78764 512-282-8820
FAX: 512-295-2500

CUSTOMER: GILBERT TEXAS — JOB # 92-856
PROJECT: NH 92(50)M CSJ: 0039 17 097 — DATE: 10-30-92
LOCATION: HILDAGO CO US 83 US 281 DIST 21 — DWN: PC CHK: DM
ARCH/ENG: Texas DOT SHOP PLAN #: XXXX — SHEET # E3

4" SEJ–S(1) @ US 83/281 INTERCHANCE RAMPS 1, 2, 3, & 4

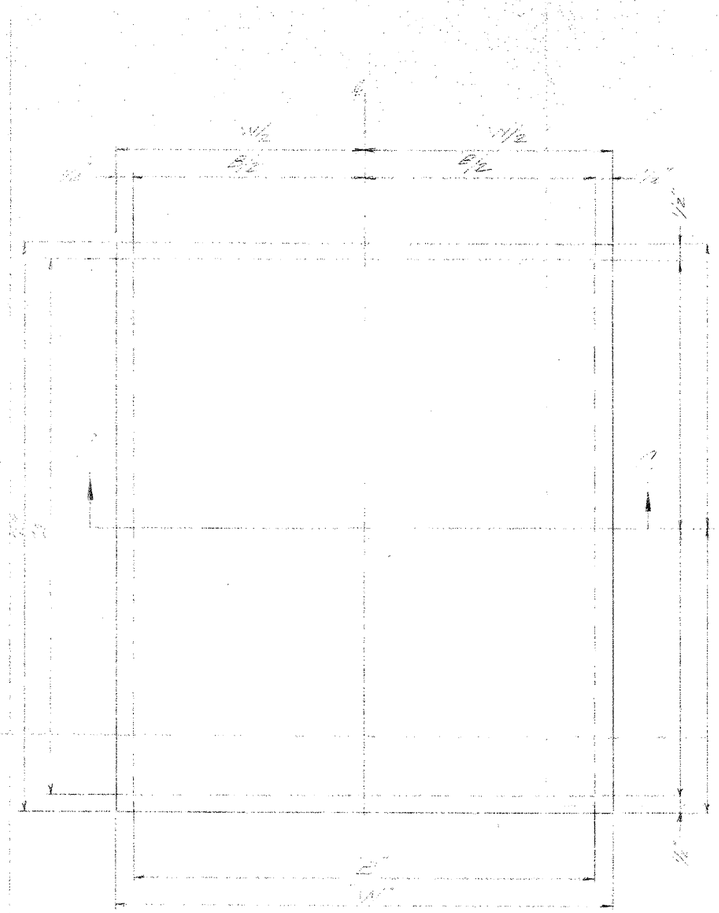

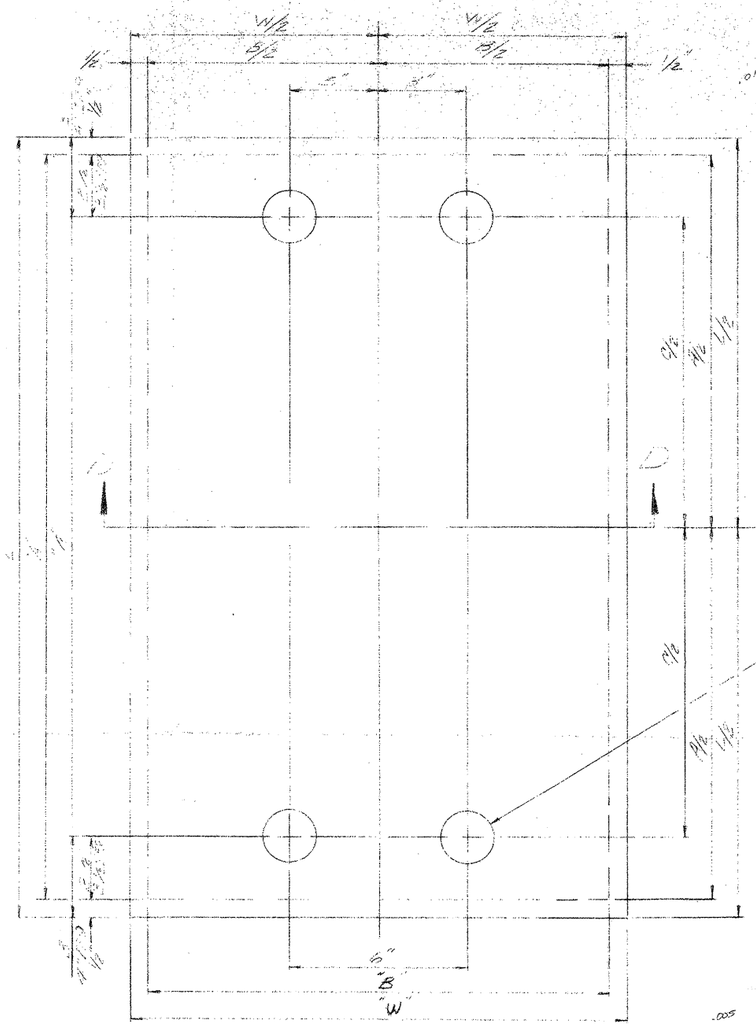

EF EXP TABLE												
MARK	QTY	A	B	C	W	L	H	T	#	∅		
EFE	4	24"	15"	29"	35"	16"	1 3/16	1 1/16	4"	4	.749	5
EFEA	4	"	"	"	"	"	1 1/16	1"	"	"	"	"
EFA	2	20"	16"	29"	35"	19"	1 1/16	1"	4"	4	.749	5
EFAA	2	"	"	"	"	"	1 1/16	1"	"	"	"	"
EFB	4	24"	18"	31"	39"	19"	1 1/16	1 1/16	4"	4	.749	5
EFD	4	26"	22"	31"	39"	23"	1 3/16	1 1/16	"	"	"	"

TOTAL = 32

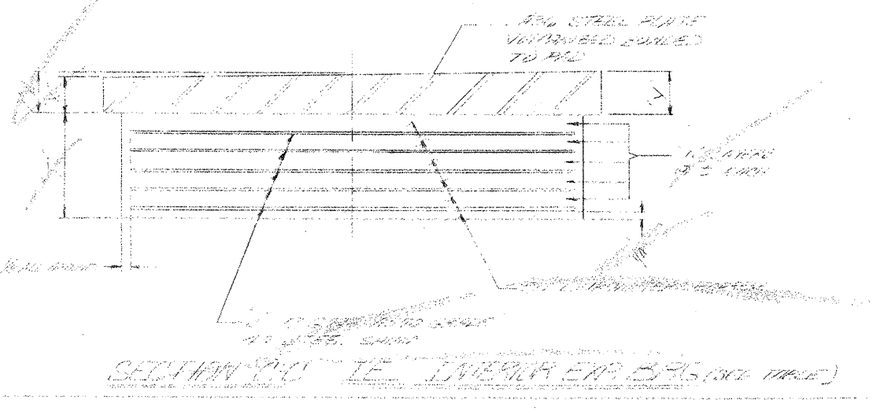

SECTION "C" - "E" EXPANSION BRG (SEE TABLE)

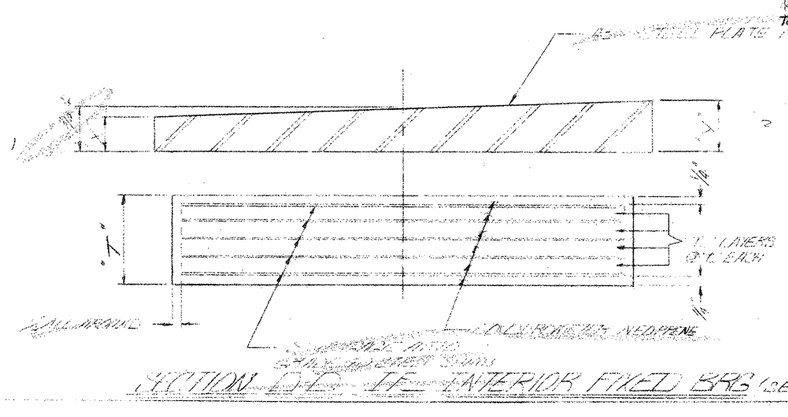

SECTION "D" - "E" INTERIOR FIXED BRG (SEE TABLE)

TC EXP TABLE												
MARK	R	E	L	W			T	#	∅		
TC	4	25"	26"	32"	7 1/16	1 1/16	9 1/16	5	.95	5		
TCA	2	24"	23"	28"	6 3/16	1 1/16	5 7/8	6	.790	6		
TCB	4	"	"	"	1"	1"	"	"	"	"		
TCC	4	"	"	"	1 1/16	1 1/16	"	"	"	"		
TCD	4	"	"	"	1 1/16	1 1/16	"	"	"	"		
TCDA	4	25"	25"	32"	6 3/16	1 1/16	5 7/8	6	.790	6		
TCE	4	"	"	"	1 1/16	1 1/16	"	"	"	"		

TOTAL = 28

SUPERSEDED

Rev. 4-17-92

TEXAS DEPARTMENT OF TRANSPORTATION
APPROVED EXCEPT AS NOTED
DIVISION OF BRIDGES AND STRUCTURES
JUL 17 1992
APPROVAL OF THIS DRAWING DOES NOT RELIEVE THE CONTRACTOR OF THE RESPONSIBILITY FOR THE CORRECTNESS OF DETAIL.

DYNAMIC RUBBER PRODUCTS, INC.
RUBBER SPECIALIST
P. O. BOX 2159 ATHENS, TX 75751

STATE DEPARTMENT OF HIGHWAYS
STATE DEPARTMENT OF TRANSPORTATION

ELASTOMERIC BEARINGS
US 83 & US 281
RAMP 1, 2, 3 & 4

DRP NO. 22514
CUSTOMER NAME ORIGINAL CONTRACT
P.O. NO. 78007

SHEET 2 OF 3		DRAWN BY Gaylon		DATE 6/22/92
FED RD DIV NO	STATE	PROJECT NO		HIGHWAY NO
6	TEXAS	NH 92 (50) M		US 83 US 281
STATE DIST. NO.	COUNTY	CONT. NO.	SECT. NO.	JOB NO.	DWG. NO.
21	HIDALGO	0028	17	097	D0497

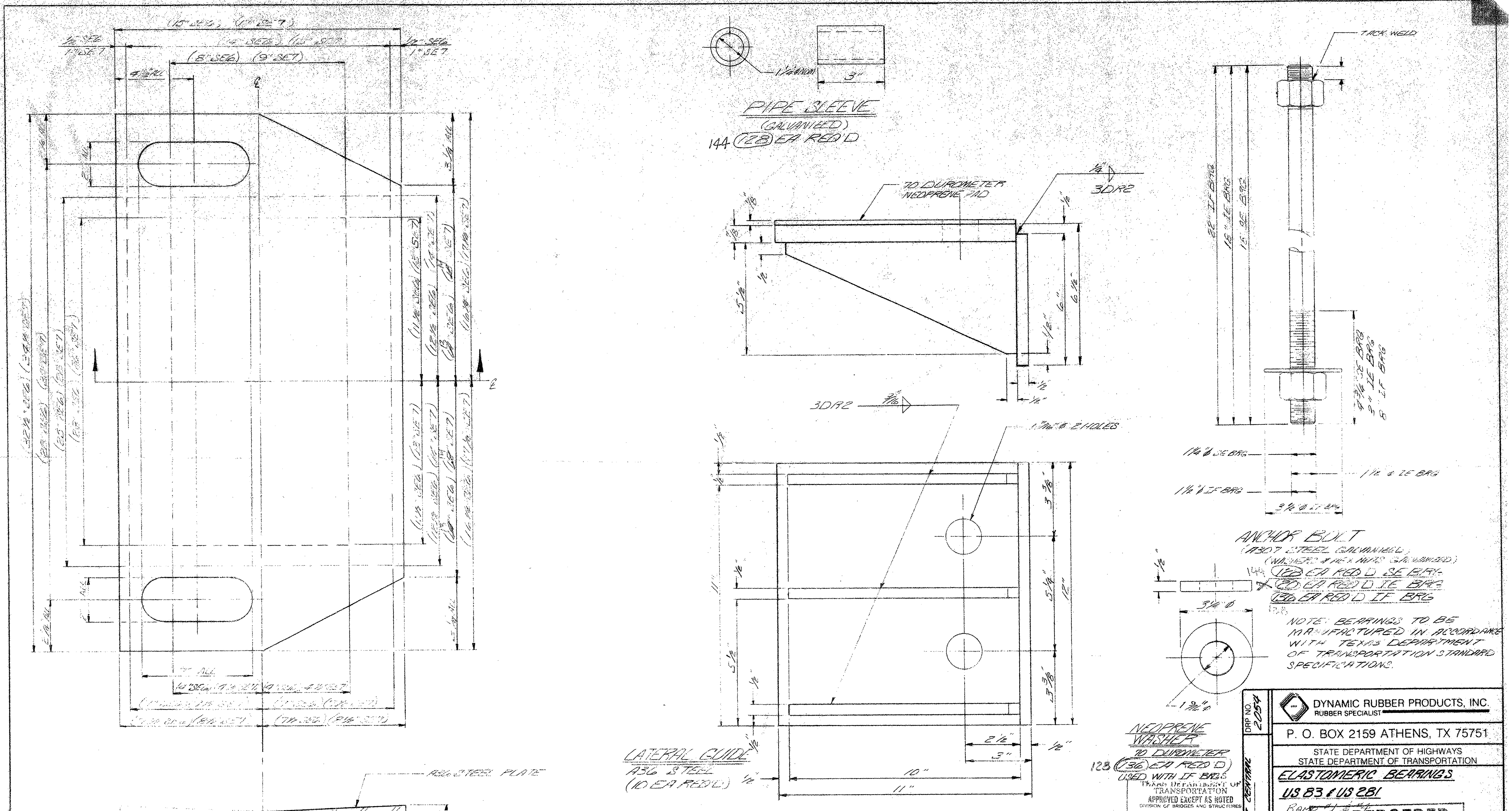

NOTE: BEARINGS TO BE MANUFACTURED IN ACCORDANCE WITH TEXAS DEPARTMENT OF TRANSPORTATION STANDARD SPECIFICATIONS.

TEXAS DEPARTMENT OF TRANSPORTATION
APPROVED EXCEPT AS NOTED
DIVISION OF BRIDGES AND STRUCTURES
JUL 17 1992
APPROVAL OF THIS DRAWING DOES NOT RELIEVE THE CONTRACTOR OF THE RESPONSIBILITY FOR THE CORRECTNESS OF DETAIL.

SE BRG TABLE

BRG	QTY	X	Y	"LOCATION USED"	BRG	QTY	X	Y	"LOCATION USED"
SE6-A	4	1 1/16	[illegible]	RAMP [illegible] BENT 16 BK ALL	SE9E	4	1 3/16	13/16	RAMP 4 BENT 19F ALL
SE6-B	4	3/4	1 1/4	RAMP 2 BT 16 BK ALL	SE7F	1	1 1/8	3/4	RAMP 1 BENT 12 F G1 .07
SE6-C	4	1 1/16	[illegible]	RAMP 2 BENT 16 F ALL	SE7G	1	1 1/16	[illegible]	RAMP 1 BENT 12 F G2 .006
SE6-D	4	1 1/16	[illegible]	RAMP 2 BENT 16 F ALL	SE7H	2	1	1	RAMP 1 BENT 12 F G3 G4 .009
SE7-A	2	[illegible]	[illegible]	RAMP 2 BENT 22 BK G3 G4 .04					
SE7-B	2	1 1/4	[illegible]	RAMP 2 BENT 22 BK G1 G2 .06	TOTAL = 8				
SE7-C	2	[illegible]	[illegible]	RAMP 1 BENT 15 BK G3 G4 .004					
SE7-D	2	[illegible]	[illegible]	RAMP 1 BENT 15 BK G1 G2 .00					

TOTAL = 24

DYNAMIC RUBBER PRODUCTS, INC.
RUBBER SPECIALIST
P. O. BOX 2159 ATHENS, TX 75751

DRP NO. 2054

STATE DEPARTMENT OF HIGHWAYS
STATE DEPARTMENT OF TRANSPORTATION

ELASTOMERIC BEARINGS
US 83 & US 281
Ramp [illegible]

SUPERSEDED

CUSTOMER NAME GILBERT CENTRAL
P.O. NO. 72067

SHEET 1 OF 3		DRAWN BY Gaylon			DATE 6/22/92
FED RD DIV NO	STATE	PROJECT NO.			HIGHWAY NO
6	TEXAS	NH 92 (50)M			US83 US281
STATE DIST. NO.	COUNTY	CONT. NO.	SECT. NO.	JOB NO.	DWG. NO.
21	HIDALGO	0039	17	097	D0140

D-5 File 7020

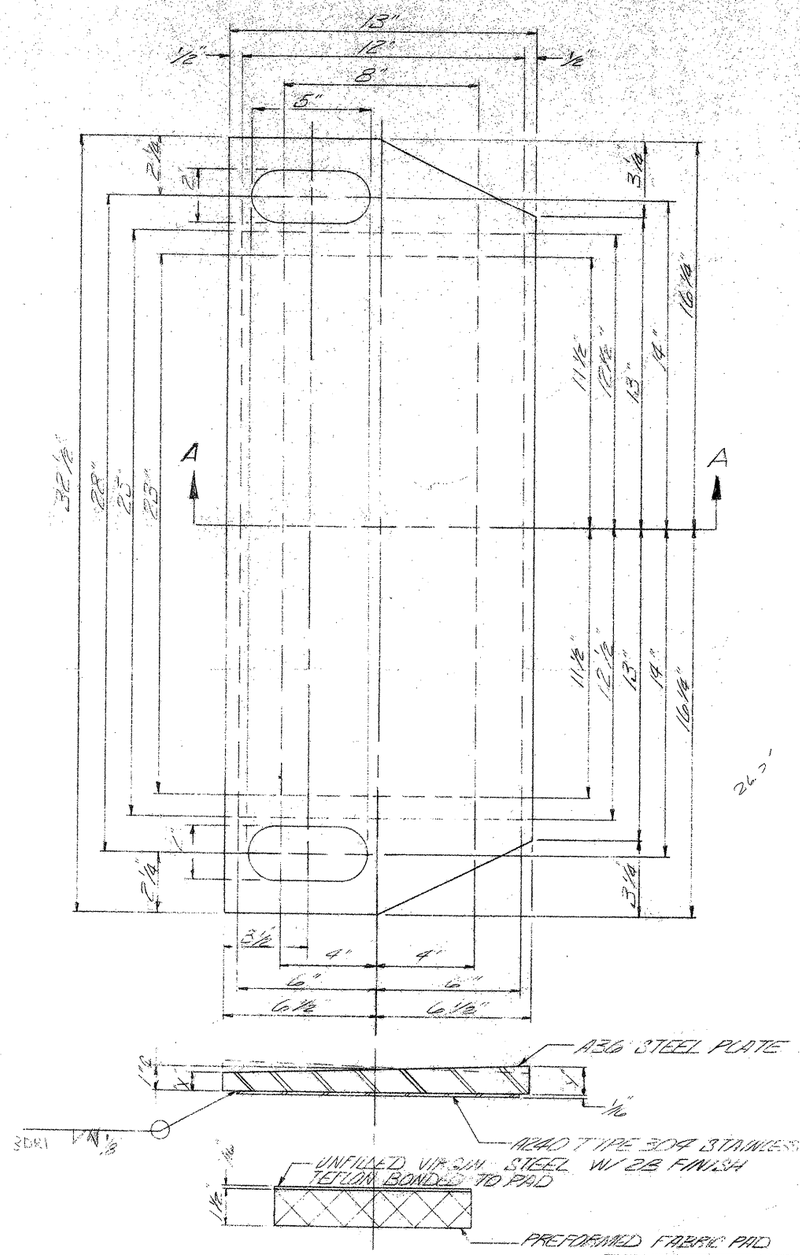

SECTION A-A
SLIDING EXPANSION BRG
SE-3 BRG
(SEE TABLE)

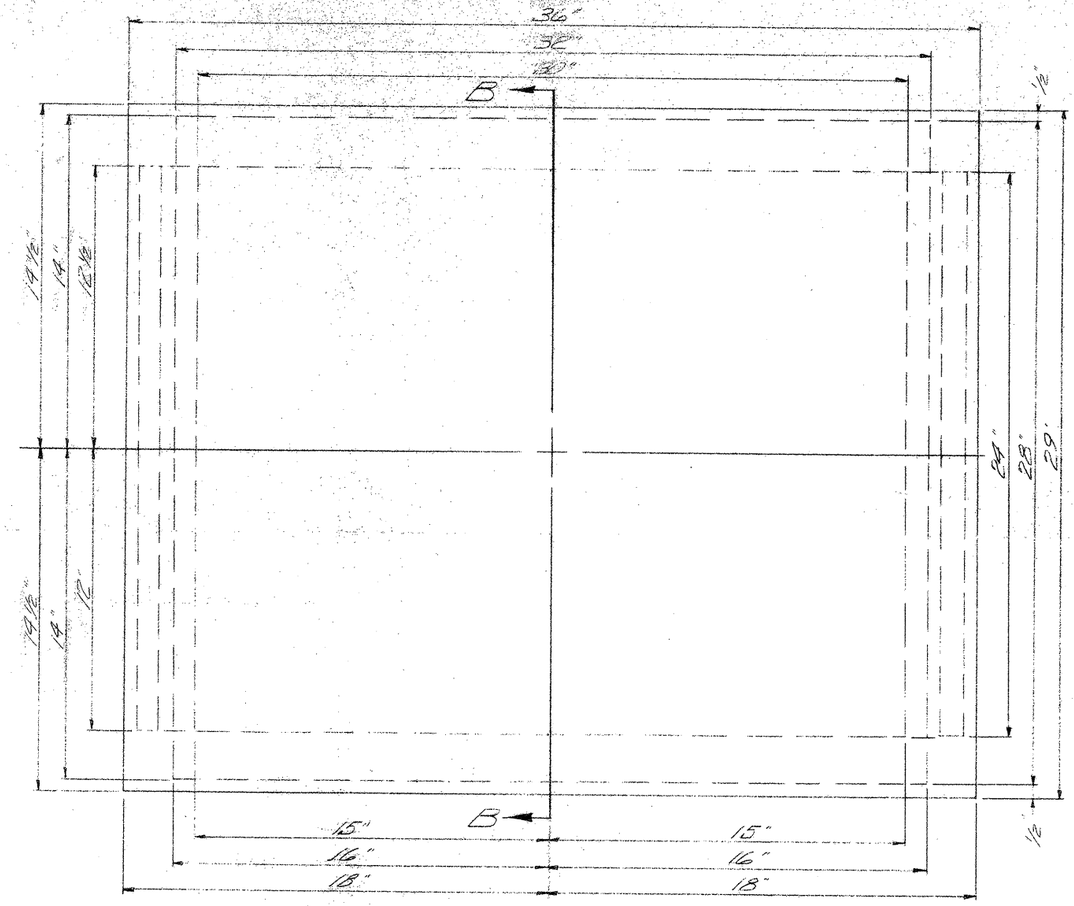

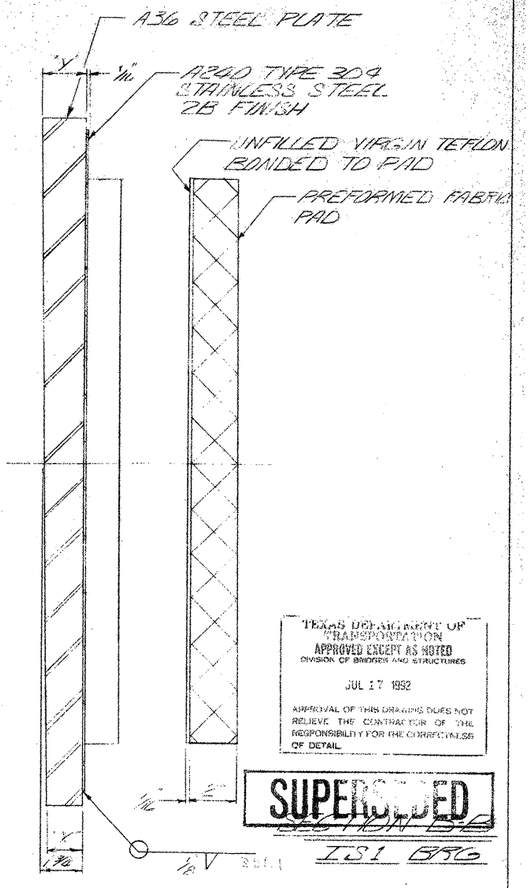

TEXAS DEPARTMENT OF TRANSPORTATION
APPROVED EXCEPT AS NOTED
DIVISION OF BRIDGES AND STRUCTURES
JUL 17 1992
APPROVAL OF THIS DRAWING DOES NOT RELIEVE THE CONTRACTOR OF THE RESPONSIBILITY FOR THE CORRECTNESS OF DETAIL.

SUPERSEDED
SECTION B-B
IS1 BRG

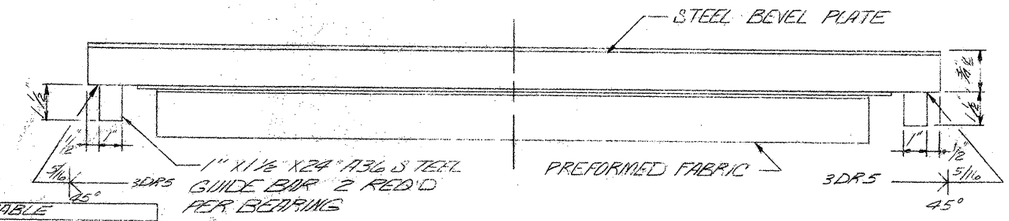

INTERIOR EXPANSION BRG IS1

SE3 BRG TABLE

BRG	QTY	X	Y	LOCATION
SE3-A	1	1 1/4"	3/4"	RAMP 3 BENT 20 BK G4
SE3-B	7	1 3/16"	13/16"	RAMP 3 BT 20 BK G1, 2, 3, RAMP 1 BT 25 BK G4
SE3-C	9	5/16"	1 1/16"	RAMP 3 BT 20 BK G4, RAMP 2 BT 20 BK G4, RAMP 1 BT 18 BK G4
SE3-D	2	7/8"	1 1/8"	RAMP 1 BT 18 BK G2 & 3
SE3-E	1	13/16"	1 3/16"	RAMP 1 BT 18 BK G1
SE3-F	6	1 1/16"	15/16"	RAMP 4 BT 12 F G2, 3 & 4, RAMP 3 BT 12 F G1 & 2, RAMP 2 BT 12 F G4
SE3-G	14	1	1	RAMP 3 BT 12 F G3 & 4, RAMP 2 BT 12 F G1, 2 & 3, RAMP 1 BT 15 F G4, BT 12 F ALL, RAMP 4 BT 11 F G1

TOTAL = 40

IS1 BRG TABLE

BRG	QTY	X	Y	LOCATION
IS1-A	2	2 1/4"	1 1/4"	RAMP 4 BENT 21 G1 & 2
IS1-B	2	2 3/16"	1 3/16"	RAMP 4 BENT 21 G3 & 4
IS1-C	4	2 1/8"	1 3/8"	RAMP 3 BENT 17 ALL

TOTAL = 8

DYNAMIC RUBBER PRODUCTS, INC.
RUBBER SPECIALIST
P. O. BOX 2159 ATHENS, TX 75751

STATE DEPARTMENT OF HIGHWAYS
STATE DEPARTMENT OF TRANSPORTATION

ELASTOMERIC BEARINGS
US83 & US 281
RAMP 1, 3 & 4

DRP NO. 2054
CUSTOMER NAME GILBERT CENTRAL
P.O. NO. 72607

SHEET 3 OF 3		DRAWN BY GAYLON			DATE 6/22/92
FED RD DIV NO	STATE	PROJECT NO.			HIGHWAY NO
6	TEXAS	NH 92(50)M			US83 US281
STATE DIST. NO.	COUNTY	CONT. NO.	SECT. NO.	JOB NO.	DWG. NO.
21	HIDALGO	0039	17	097	D0140

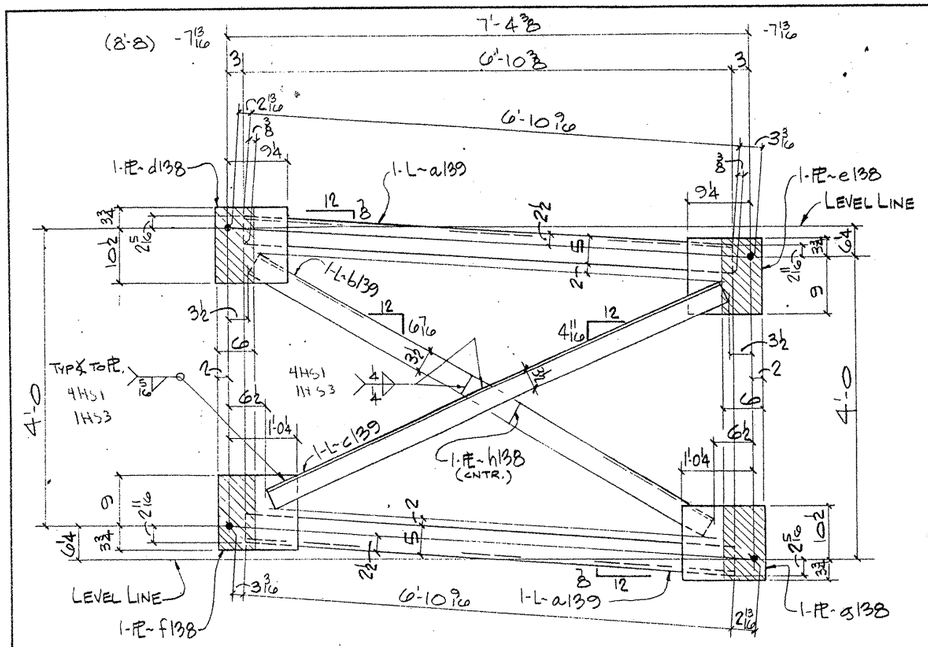

6 - DIAFRAMS ~ 139D1

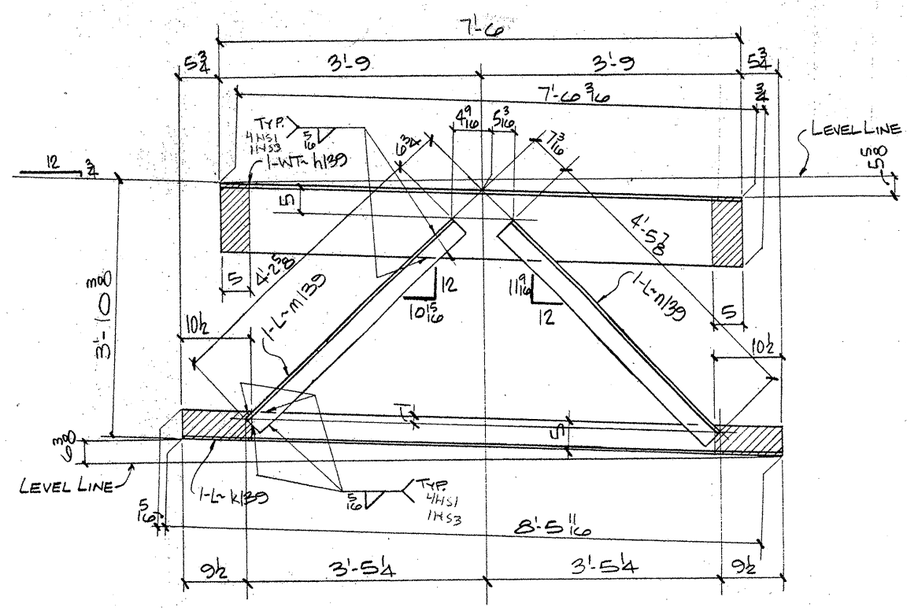

3 - END DIAFRAMS ~ 139D3

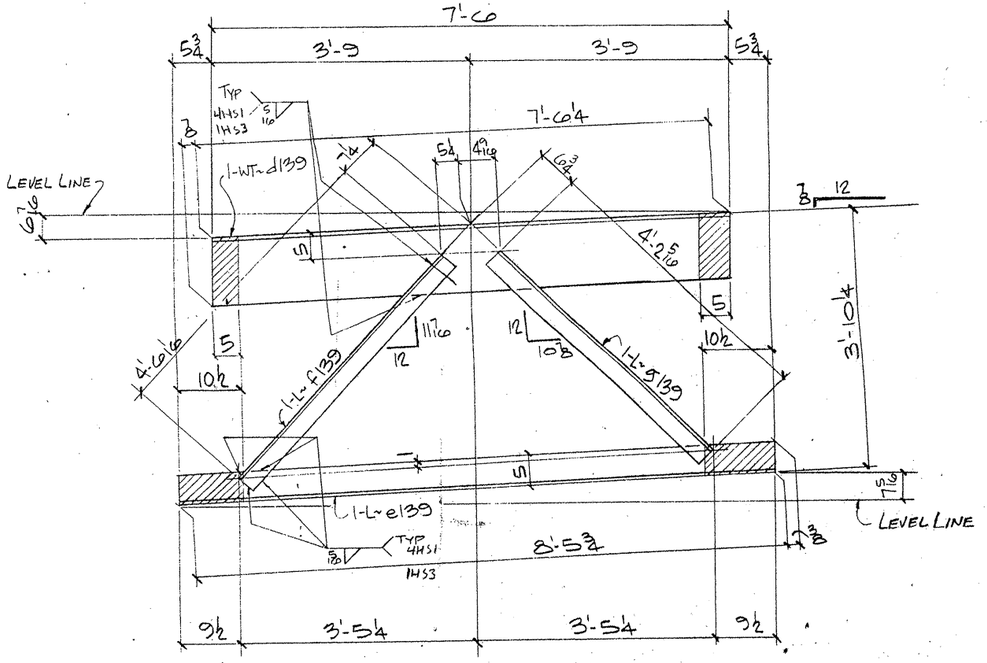

3 - END DIAFRAMS ~ 139D2

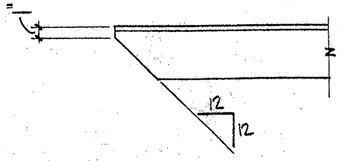

TYP. CLIP ON ALL OUTSTANDING ANGLE LEGS

NOTES:
1. FOR GENERAL NOTES SEE SHT. GN1
2. ▨ INDICATES OIL, NO PAINT (N.S./F.S. & EDGES)

F0109

FED. ROAD DIV. NO.	STATE	FEDERAL AID PROJECT NO.			
6	TX.	NH 92(50)M			
STATE DIST. NO.	COUNTY	CONTROL NO.	SECTION NO.	JOB NO.	HIGHWAY NO.
21	HIDALGO	39	17	97	83/281

BILL OF MATERIAL

	Qnty.	Material	Length	Mark Temp	Mark Ship	Wt.	Cut From	Remarks
4	6	DIAFRAMS			139D1			
5	12	L 5x3½x½	6'-10 15/16	a139			109-3	
6	6	L 5x3½x½	7'-3 1/16	b139			109-5	
7	6	L 5x3½x½	6'-10 15/16	c139			109-5	
8	6	PL ½x11¼	1'-2¼	d138			109-6	
9	6	PL ½x11¼	1'-0¾	e138			109-7	
10	6	PL ½x12¾	1'-2¼	f138			109-8	
11	6	PL ½x14¼	1'-2¼	g138			109-9	
12	6	FL ½x3½	0'-9	h138			109-10	
17	3	DIAFRAMS			139D2			
18	3	WT 12x42	7'-7⅛	d139			109-13	
19	3	L 5x3½x⅜	8'-6 3/8	e139			109-15	
20	3	L 3½x3½x⅜	4'-6 1/16	f139			109-16	
21	3	L 3½x3½x⅜	4'-2 5/16	g139			109-16	
30	3	DIAFRAMS			139D3			
31	3	WT 12x42	7'-6 15/16	h139			109-14	
32	3	L 5x3½x⅜	8'-6	k139			109-15	
33	3	L 3½x3½x⅜	4'-2 5/8	m139			109-16	
34	3	L 3½x3½x⅜	4'-5 7/8	n139			109-16	
45		FIELD BOLT LIST (6% ADDED) A325 TY I						
46	28	HS BOLT ¾Φ	0'-3½				108-5	
47	282	HS BOLT ¾Φ	0'-2½				108-6	
48	1020	HS WASH ¾Φ					108-7	

TEXAS DEPARTMENT OF TRANSPORTATION
APPROVED
DIVISION OF BRIDGES AND STRUCTURES
JAN 07 1993
APPROVAL OF THIS DRAWING DOES NOT RELIEVE THE CONTRACTOR OF THE RESPONSIBILITY FOR THE CORRECTNESS OF DETAIL

FOR APPROVAL
NOV 12 '92
NOT FOR CONSTRUCTION

REVISION	DATE	DESCRIPTION OF REVISION
NO. 1		
NO. 2		
NO. 3		
NO. 4		
NO. 5		

PRINTING Rec'd / For / Date

Bolts: Holes: 15/16Φ Unless Noted
Shop Paint SEE SHT GN1 Inspection
Fab Spec. A36
Architect
Erection By Field Connections

HIRSCHFELD STEEL CO. INC.
112 WEST 29TH SAN ANGELO, TEXAS 76903
PHONE (915) 653-3211

DESCRIPTION 430'-0 PLATE GIRDER UNIT
STRUCTURE US 83/281 INTERCHANGE RAMP #4
LOCATION HIDALGO COUNTY
CUSTOMER GILBERT TEXAS CONSTRUCTION
SHIP TO
Customer's Order No.
Dwg. By JRE Date 9/92
Checked By JC Date 10-92
APV 11-12

SHEET 139 OF
JOB NO. 92-109

CE 92-14

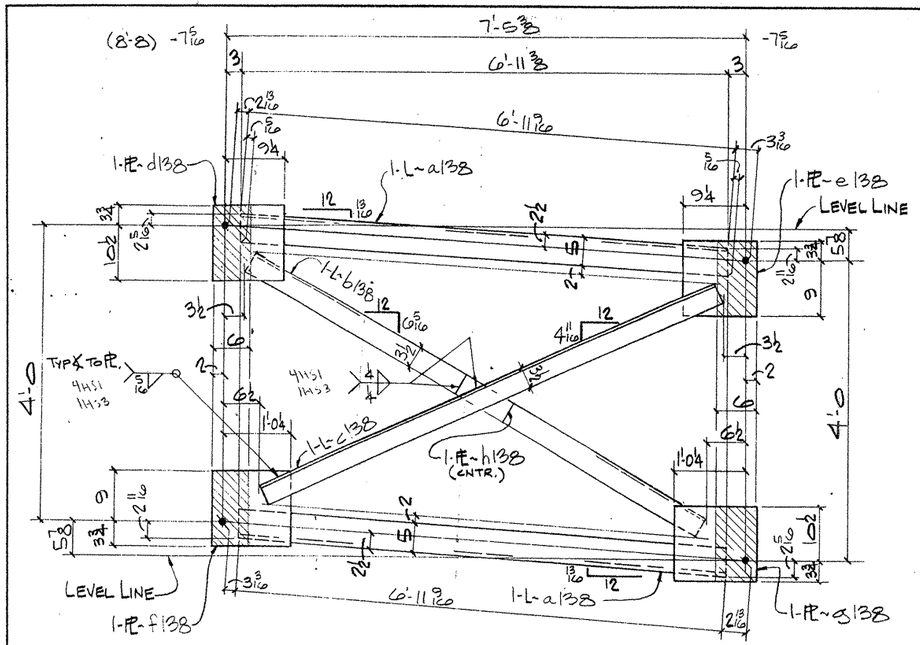

3 - DIAFRAMS~ 138D1

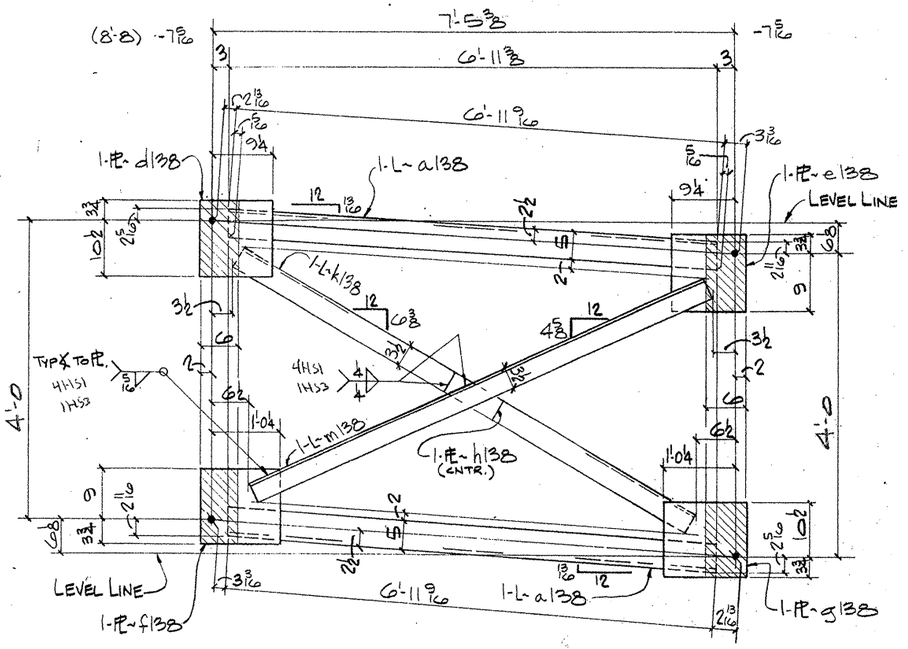

3 - DIAFRAMS~ 138D2

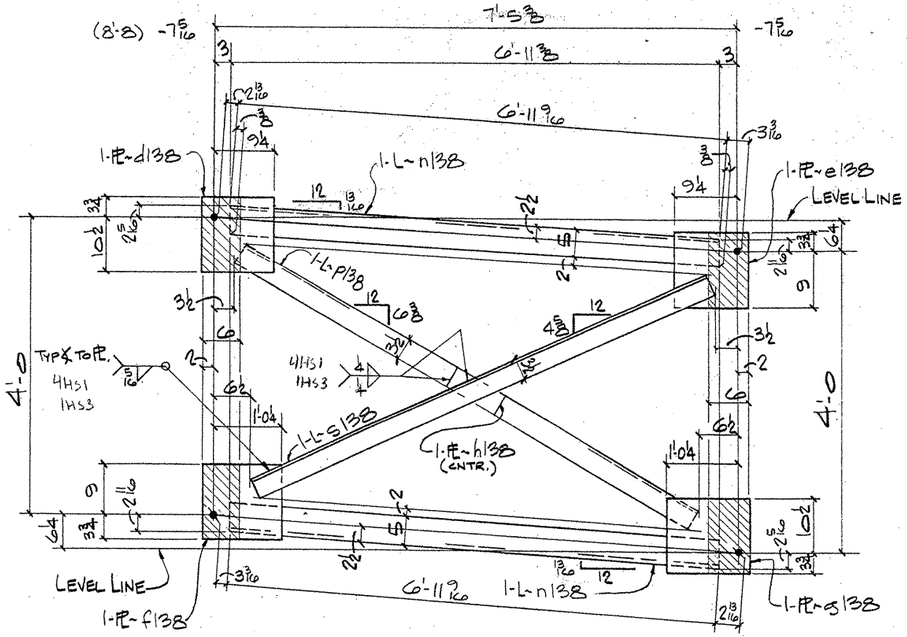

63 - DIAFRAMS~ 138D3

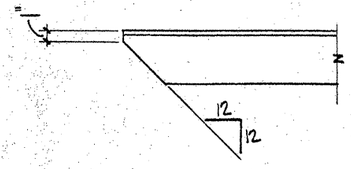

TYP. CLIP ON ALL OUTSTANDING ANGLE LEGS

NOTES:
1. FOR GENERAL NOTES SEE SHT. GN1
2. ▨ INDICATES OIL, NO PAINT (N.S./F.S. & EDGES)

F0109

FED. ROAD DIV. NO.	STATE	FEDERAL AID PROJECT NO.				
6	TX.	NH 92(50)H				
STATE DIST. NO.	COUNTY	CONTROL NO.	SECTION NO.	JOB NO.	HIGHWAY NO.	
21	HIDALGO	39	17	97	83/281	

BILL OF MATERIAL

	Qnty.	Material	Length	Mark Temp.	Mark Ship.	Wt.	Cut From	Remarks
1								
2								
3								
4	3	DIAFRAMS			138D1			
5	6	L 5x3½x½	6'-11⅜	a138			109-2	
6	3	L 5x3½x½	7'-3⅜	b138			109-4	
7	3	L 5x3½x½	6'-11⅜	c138			109-4	
8	3	PL ½x11¼	1'-2¼	d138			109-6	
9	3	PL ½x11¼	1'-0¾	e138			109-7	
10	3	PL ½x12¾	1'-2¼	f138			109-8	
11	3	PL ½x14¼	1'-2¼	g138			109-9	
12	3	FL ½x3½	0'-9	h138			109-10	
13								
14								
15								
16								
17								
18	22	DIAFRAMS			138D2			
19	6	L		a138			109-2	
20	3	L 5x3½x½	7'-3 15/16	k138			109-4	
21	3	L 5x3½x½	6'-11¾	m138			109-4	
22	3	PL		d138				
23	3	PL		e138				
24	3	PL		f138				
25	3	PL		g138				
26	3	FL		h138				
27								
28								
29								
30								
31	63	DIAFRAMS			138D3			
32	126	L 5x3½x½	6'-11 9/16	n138			109-2	
33	63	L 5x3½x½	7'-4	p138			109-4	
34	63	L 5x3½x½	6'-11 11/16	s138			109-4	
35	63	PL		d138				
36	63	PL		e138				
37	63	PL		f138				
38	63	PL		g138				
39	63	FL		h138				
40								
41								
42								
43								
44								
45								
46								
47								
48								
49								
50								
51								
52								
53								
54								
55								
56								
57								
58								
59								
60								

TEXAS DEPARTMENT OF TRANSPORTATION
APPROVED
DIVISION OF BRIDGES AND STRUCTURES
JAN 07 1993
APPROVAL OF THIS DRAWING DOES NOT RELIEVE THE CONTRACTOR OF THE RESPONSIBILITY FOR THE CORRECTNESS OF DETAIL.

FOR APPROVAL
NOV 12 92

REVISION	DATE	DESCRIPTION OF REVISION
NO. 1		NOT FOR CONSTRUCTION
NO. 2		
NO. 3		
NO. 4		
NO. 5		

PRINTING Req'd	For	Date

Bolts: Holes: 15/16ø Unless Noted
Shop Paint SEE SHT GN1 Inspection
Fab. Spec. A36
Architect
Erection By Field Connections

HIRSCHFELD STEEL CO. INC.
112 WEST 29TH SAN ANGELO, TEXAS 76903
PHONE (915) 653-3211

DESCRIPTION	430'-0 PLATE GIRDER UNIT
STRUCTURE	US 83/281 INTERCHANGE RAMP #4
LOCATION	HIDALGO COUNTY
CUSTOMER	GILBERT TEXAS CONSTRUCTION
SHIP TO	
Customer's Order No.	SHEET 138 OF
Dwg. By JBC Date 9/92	
Checked By JC Date 10-92	JOB NO. 92-109

APV 11-16

CE92-14

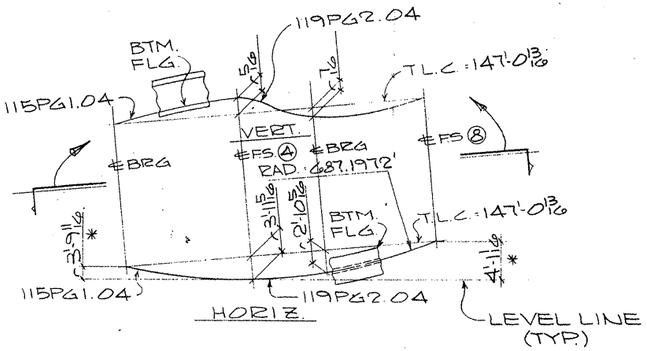

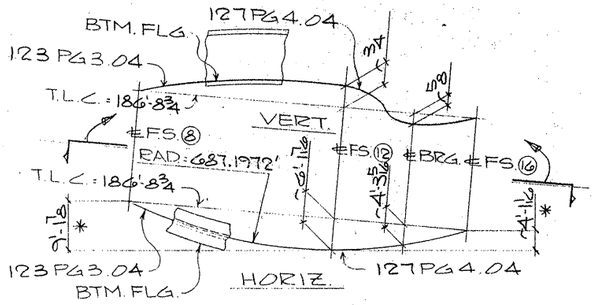

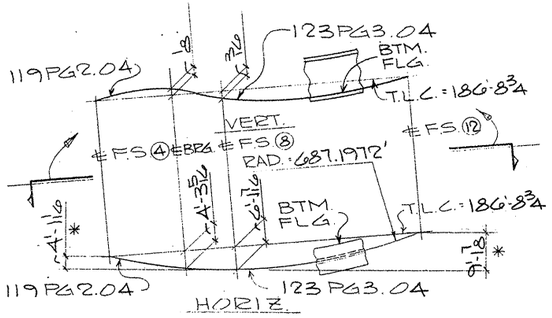

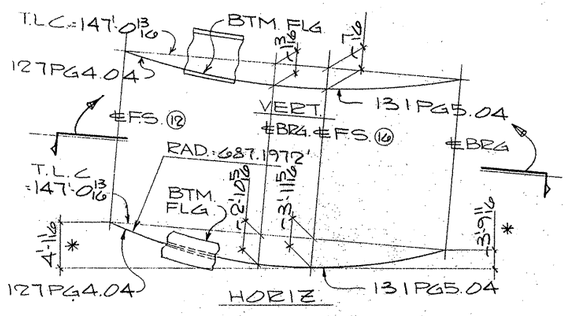

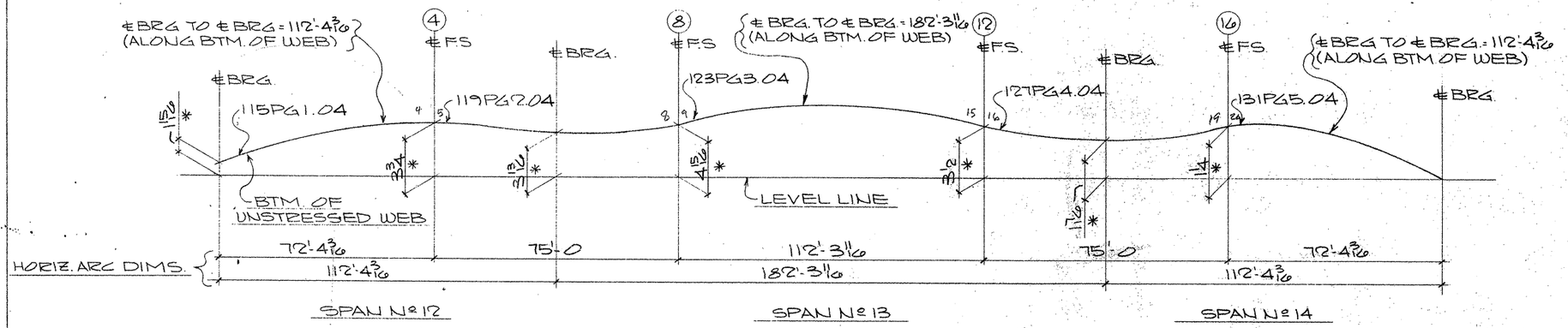

VERTICAL BLOCKING DIAGRAM
(LINE* 4)

TEXAS DEPARTMENT OF TRANSPORTATION
APPROVED
DIVISION OF BRIDGES AND STRUCTURES
JAN 07 1993
APPROVAL OF THIS DRAWING DOES NOT RELIEVE THE CONTRACTOR OF THE RESPONSIBILITY FOR THE CORRECTNESS OF DETAIL.

FOR APPROVAL
NOV 12 '92
NOT FOR CONSTRUCTION

NOTES:
1. T.L.C.= TRUE LENGTH CHORD.
2. DIMENSIONS ARE GIVEN ALONG OR NORMAL TO THE TRUE LENGTH CHORD UNL. NTD.
3. DIMENSIONS NOTED * ARE GIVEN ALONG OR NORMAL TO THE LEVEL LINE.
4. FOR GENERAL NOTES SEE SHT. GN1.

APV 11-12

HOLES ____ U.N.	FOR AP'VL ____
BOLTS ____ U.N.	RETURNED ____
WELDS ____ U.N.	TO SHOP ____
PAINT ____	

REVISIONS

NO.	DATE	REMARKS
1		
2		
3		
4		

HIRSCHFELD STEEL CO. INC.
112 WEST 29TH SAN ANGELO, TEXAS 76903
PHONE (915) 653-3211

CUSTOMER GILBERT TEXAS CONSTRUCTION
ARCHITECT
PROJECT US 83/281 INTERCHANGE RAMP *4
LOCATION HIDALGO COUNTY

DRAWN CRT DATE 10-92 | JOB NO 92-109 | SHEET NO. 137 of ____
CHECKED VC DATE 10-92

FCR ROAD DIV. NO.	STATE	FEDERAL AID PROJECT NO.			
6	TX.	NH 92(50)M			
STATE DIST. NO.	COUNTY	CONTROL NO.	SECTION NO.	JOB NO.	HIGHWAY NO.
21	HIDALGO	39	17	97	83/281

CE92-14 (LINE* 4)

a b c d e f g h i j k l m n o p q r s t u v w x y z

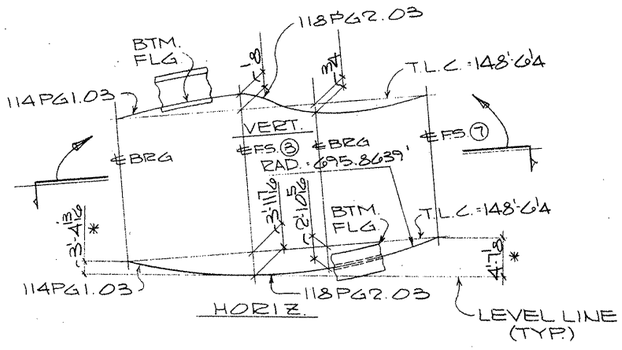

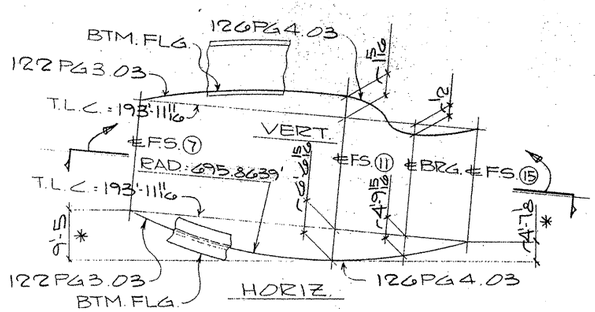

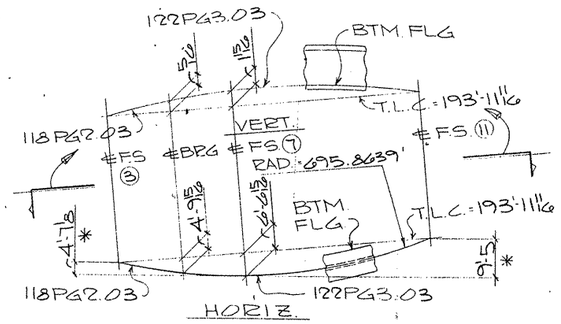

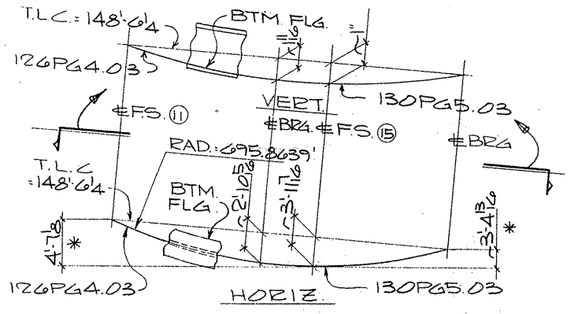

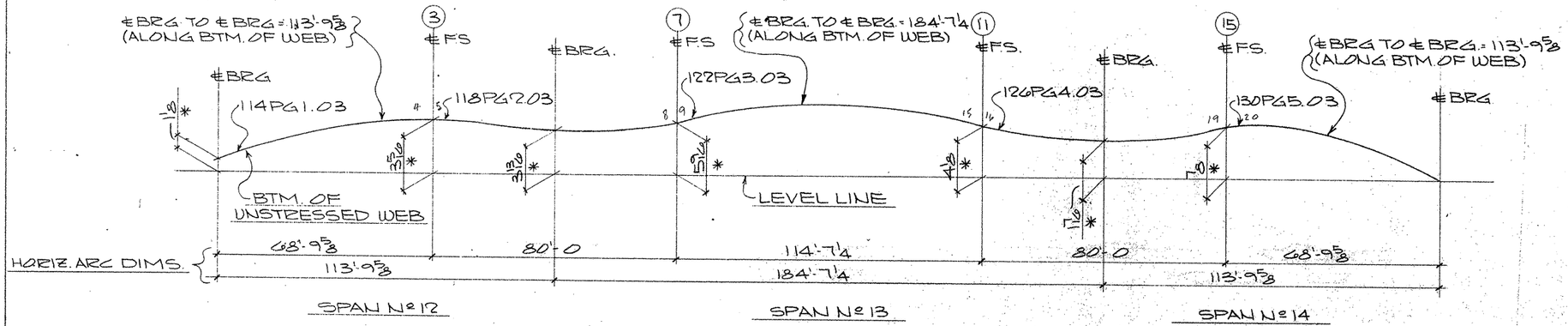

VERTICAL BLOCKING DIAGRAM
(LINE * 3)

TEXAS DEPARTMENT OF TRANSPORTATION
APPROVED
DIVISION OF BRIDGES AND STRUCTURES
JAN 07 1993
APPROVAL OF THIS DRAWING DOES NOT RELIEVE THE CONTRACTOR OF THE RESPONSIBILITY FOR THE CORRECTNESS OF DETAIL

FOR APPROVAL
NOV 12 '92
NOT FOR CONSTRUCTION

NOTES:
1. T.L.C.= TRUE LENGTH CHORD.
2. DIMENSIONS ARE GIVEN ALONG OR NORMAL TO THE TRUE LENGTH CHORD UNL. NTD.
3. DIMENSIONS NOTED * ARE GIVEN ALONG OR NORMAL TO THE LEVEL LINE.
4. FOR GENERAL NOTES SEE SHT. GN1.

APV 11-12

FED. ROAD DIV. NO.	STATE	FEDERAL AID PROJECT NO:				
6	TX.	NH 92(50)M				
STATE DIST. NO.	COUNTY	CONTROL NO.	SECTION NO.	JOB NO.	HIGHWAY NO.	
21	HIDALGO	39	17	97	83/281	

HOLES ____ U.N.	FOR AP'VL ____
BOLTS ____ U.N.	RETURNED ____
WELDS ____ U.N.	TO SHOP ____
PAINT ____	

REVISIONS		
NO.	DATE	REMARKS
1		
2		
3		
4		

HIRSCHFELD STEEL CO. INC.
112 WEST 29TH SAN ANGELO, TEXAS 76903
PHONE (915) 653-3211

CUSTOMER GILBERT TEXAS CONSTRUCTION
ARCHITECT
PROJECT US 83/281 INTERCHANGE RAMP *4
LOCATION HIDALGO COUNTY

DRAWN CRT DATE 10/92 | JOB NO 92-109 | SHEET NO. 136 of ____
CHECKED JC DATE 10-92

CE92-14 (LINE * 3)

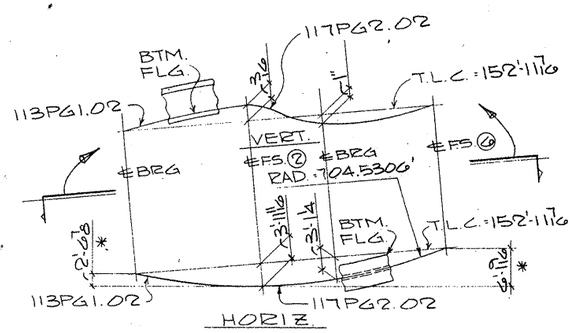

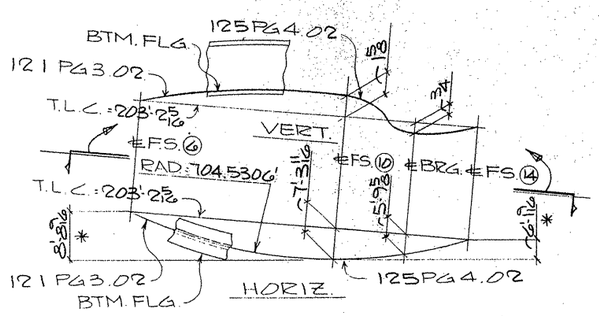

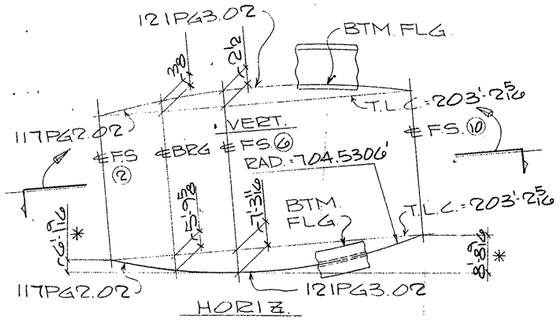

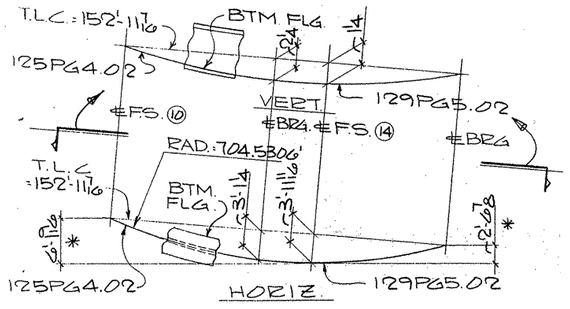

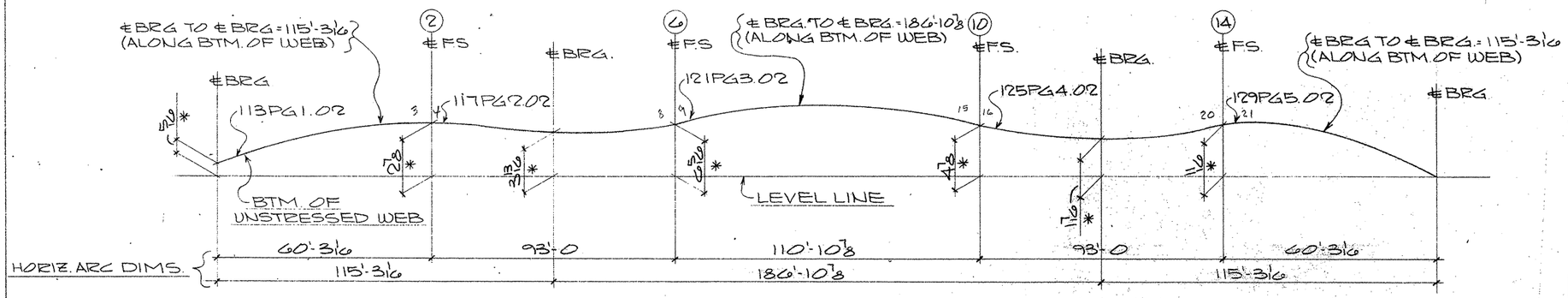

VERTICAL BLOCKING DIAGRAM
(LINE * 2)

TEXAS DEPARTMENT OF TRANSPORTATION
APPROVED
DIVISION OF BRIDGES AND STRUCTURES
JAN 07 1993
APPROVAL OF THIS DRAWING DOES NOT RELIEVE THE CONTRACTOR OF THE RESPONSIBILITY FOR THE CORRECTNESS OF SAME.

FOR APPROVAL
NOV 12 '92
NOT FOR CONSTRUCTION

NOTES:
1. T.L.C.= TRUE LENGTH CHORD.
2. DIMENSIONS ARE GIVEN ALONG OR NORMAL TO THE TRUE LENGTH CHORD UNL. NTD.
3. DIMENSIONS NOTED * ARE GIVEN ALONG OR NORMAL TO THE LEVEL LINE.
4. FOR GENERAL NOTES SEE SHT. GN1.

APV 11-12

FED. ROAD DIV. NO.	STATE	FEDERAL AID PROJECT NO.			
6	TX.	NH 92(50)M			
STATE DIST. NO.	COUNTY	CONTROL NO.	SECTION NO.	JOB NO.	HIGHWAY NO.
21	HIDALGO	39	17	97	83/281

HOLES ____ U.N.	FOR AP'VL. ____		
BOLTS ____ U.N.	RETURNED ____		
WELDS ____ U.N.	TO SHOP ____		
PAINT ____			

REVISIONS

NO.	DATE	REMARKS
1		
2		
3		
4		

HIRSCHFELD STEEL CO. INC.
112 WEST 29TH SAN ANGELO, TEXAS 76903
PHONE (915) 653-3211

CUSTOMER GILBERT TEXAS CONSTRUCTION
ARCHITECT
PROJECT US 83/281 INTERCHANGE RAMP *4
LOCATION HIDALGO COUNTY

DRAWN CRT DATE 10/92 | JOB NO 92-109 | SHEET NO 135 of ____
CHECKED JC DATE 10-92

CE92-14 (LINE * 2)

a b c d e f g h i j k l m n o p q r s t u v w x y z

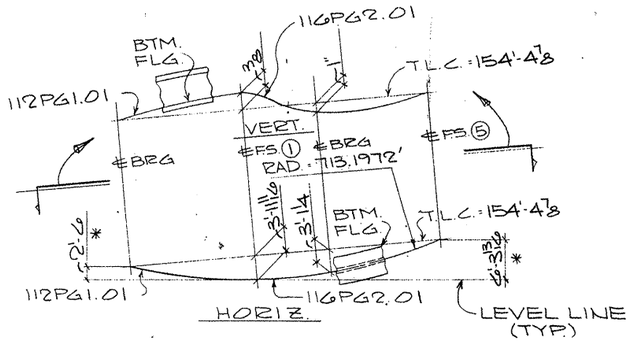

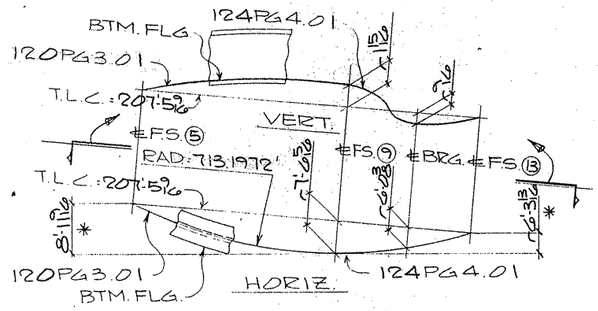

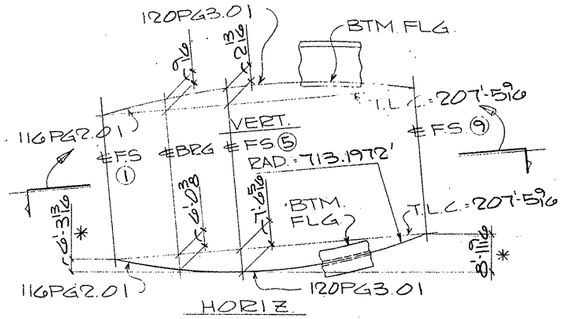

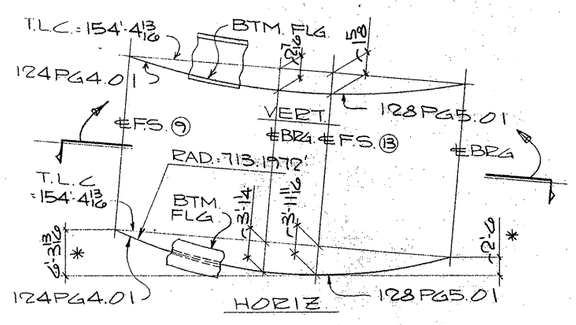

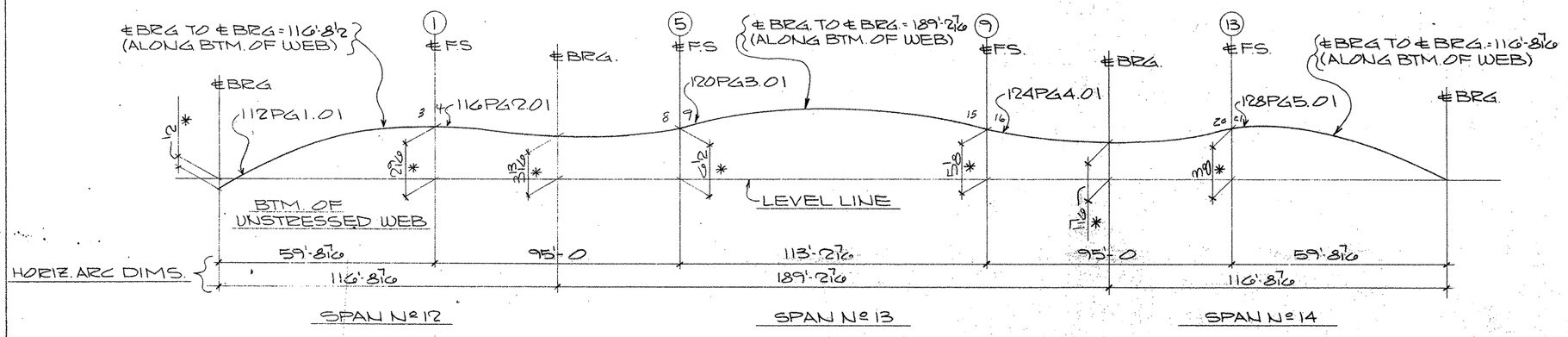

VERTICAL BLOCKING DIAGRAM
(LINE* 1)

TEXAS DEPARTMENT OF TRANSPORTATION
APPROVED
DIVISION OF BRIDGES AND STRUCTURES
JAN 07 1993
APPROVAL OF THIS DRAWING DOES NOT RELIEVE THE CONTRACTOR OF THE RESPONSIBILITY FOR THE CORRECTNESS OF DETAIL

FOR APPROVAL
NOV 12 '92
NOT FOR CONSTRUCTION

NOTES:
1. T.L.C.= TRUE LENGTH CHORD.
2. DIMENSIONS ARE GIVEN ALONG OR NORMAL TO THE TRUE LENGTH CHORD UNL. NTD.
3. DIMENSIONS NOTED * ARE GIVEN ALONG OR NORMAL TO THE LEVEL LINE.
4. FOR GENERAL NOTES SEE SHT. GN1.

APV 11-12

FED. ROAD DIV. NO.	STATE	FEDERAL AID PROJECT NO.			
6	TX.	NH 92(50)M			
STATE DIST. NO.	COUNTY	CONTROL NO.	SECTION NO.	JOB NO.	HIGHWAY NO.
21	HIDALGO	39	17	97	83/281

HOLES ____ U.N.	FOR AP'VL:
BOLTS ____ U.N.	RETURNED
WELDS ____ U.N.	TO SHOP
PAINT	

REVISIONS		
NO.	DATE	REMARKS
1		
2		
3		
4		

HIRSCHFELD STEEL CO. INC.
112 WEST 29TH SAN ANGELO, TEXAS 76903
PHONE (915) 653-3211

CUSTOMER GILBERT TEXAS CONSTRUCTION
ARCHITECT
PROJECT US 83/281 INTERCHANGE RAMP *4
LOCATION HIDALGO COUNTY

DRAWN CBT DATE 10-92 | JOB NO 92-109 | SHEET NO 134 of ____
CHECKED JC DATE 10-92

CE92-14 (LINE* 1)

a b c d e f g h i j k l m n o p q r s t u v w x y z

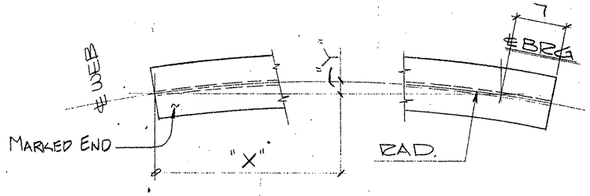

HEAT CURVE DIAGRAM

(ALONG TOP FLG.)

THIS SHEET NOT DETAIL CHECKED

GIRDER MK		VARIABLES								RADIUS
	"X"	9'-10 1/16	19'-10 1/16	29'-10 1/16	39'-10 1/16	49'-10 1/16			59'-8 3/16	
128PG5.01	"Y"	4 1/8	6 5/8	7 1/2	6 5/8	4 1/8			0"	713.1972'
	"X"	10'-1 3/8	20'-1 3/8	30'-1 3/8	40'-1 3/8	50'-1 3/8			60'-2 3/4	
129PG5.02	"Y"	4 5/16	6 3/8	7 3/4	6 3/8	4 5/16			0"	704.5306'
	"X"	4'-4 5/8	14'-4 5/8	24'-4 5/8	34'-4 5/8	44'-4 5/8	54'-4 5/8	64'-4 5/8	68'-9 1/4	
130PG5.03	"Y"	2 7/16	6 3/4	9 5/16	10 7/16	9 5/16	6 3/4	2 7/16	0"	695.8639'
	"X"	6'-1 7/8	16'-1 7/8	26'-1 7/8	36'-1 7/8	46'-1 7/8	56'-1 7/8	66'-1 7/8	72'-3 3/4	
131PG5.04	"Y"	3 9/16	7 15/16	10 9/16	11 7/16	10 9/16	7 15/16	3 9/16	0"	687.1972'

TEXAS DEPARTMENT OF TRANSPORTATION
APPROVED EXCEPT AS NOTED
DIVISION OF BRIDGES AND STRUCTURES
JAN 07 1993
APPROVAL OF THIS DRAWING DOES NOT RELIEVE THE CONTRACTOR OF THE RESPONSIBILITY FOR THE CORRECTNESS OF DETAIL

FOR APPROVAL
NOV 12 '92
NOT FOR CONSTRUCTION

NOTE: FOR GENERAL NOTES, SEE SHT. GN1.

THIS SHEET NOT DETAIL CHECKED

APV 11-12

FED. ROAD DIV. NO.	STATE	FEDERAL AID PROJECT NO.			
6	TX.	NH 92(50)M			
STATE DIST. NO.	COUNTY	CONTROL NO.	SECTION NO.	JOB NO.	HIGHWAY NO.
21	HIDALGO	39	17	97	83/281

NO.	DATE	REMARKS
1		
2		
3		
4		

HOLES ____ U.N. FOR AP'VL ____
BOLTS ____ U.N. RETURNED ____
WELDS ____ U.N. TO SHOP ____
PAINT ____

HIRSCHFELD STEEL CO. INC.
112 WEST 29TH SAN ANGELO, TEXAS 76903
PHONE (915) 653-3211

CUSTOMER GILBERT TEXAS CONSTRUCTION
ARCHITECT
PROJECT US 83/281 INTERCHANGE RAMP #4
LOCATION HIDALGO COUNTY

DRAWN JK DATE 10/92
CHECKED JC DATE 10-92
JOB NO. 92-109
SHEET NO. 33

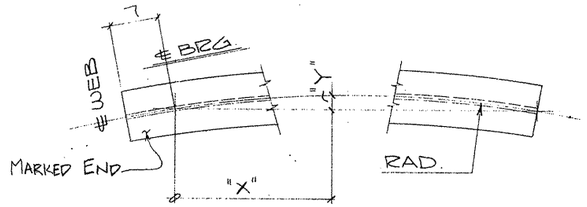

HEAT CURVE DIAGRAM
(ALONG TOP FLG.)

THIS SHEET NOT DETAIL CHECKED

GIRDER MK		VARIABLES									RADIUS
112PG1.01	"X"	9'-10⅜	19'-10⅜	29'-10⅜	39'-10⅜	49'-10⅜			59'-8¼		
	"Y"	4⅛	6⅝	7½	6⅝	4⅛			0"		713.1972'
113PG1.02	"X"	10'-1⅜	20'-1⅜	30'-1⅜	40'-1⅜	50'-1⅜			60'-2¾		
	"Y"	4⁵⁄₁₆	6⅞	7¾	6⅞	4⁵⁄₁₆			0"		704.5306'
114PG1.03	"X"	4'-4⅝	14'-4⅝	24'-4⅝	34'-4⅝	44'-4⅝	54'-4⅝	64'-4⅝	68'-9¼		
	"Y"	2⁷⁄₁₆	6¾	9⁵⁄₁₆	10⅜	9⁵⁄₁₆	6¾	2⁷⁄₁₆	0"		695.8639'
115PG1.04	"X"	6'-1⅞	16'-1⅞	26'-1⅞	36'-1⅞	46'-1⅞	56'-1⅞	66'-1⅞	72'-3¾		
	"Y"	3⁹⁄₁₆	7¹⁵⁄₁₆	10⁹⁄₁₆	11⅞	10⁹⁄₁₆	7¹⁵⁄₁₆	3⁹⁄₁₆	0"		687.1972'

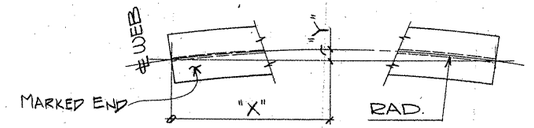

HEAT CURVE DIAGRAM
(ALONG TOP FLG.)

THIS SHEET NOT DETAIL CHECKED

GIRDER MK		VARIABLES											RADIUS
116PG2.01 124PG4.01	"X"	7'-5½	17'-5½	27'-5½	37'-5½	47'-5½	57'-5½	67'-5½	77'-5½	87'-5½			94'-11⅛
	"Y"	5½	11⅜	1'-3⅝	1'-6⅞	1'-7	1'-6⅞	1'-3⅝	11⅜	5½			0" 713.1972'
117PG2.02 125PG4.02	"X"	6'-5⁹⁄₁₆	16'-5⁹⁄₁₆	26'-5⁹⁄₁₆	36'-5⁹⁄₁₆	46'-5⁹⁄₁₆	56'-5⁹⁄₁₆	66'-5⁹⁄₁₆	76'-5⁹⁄₁₆	86'-5⁹⁄₁₆			92'-11⅛
	"Y"	4¾	10¾	1'-3	1'-5⁹⁄₁₆	1'-6⅜	1'-5⁹⁄₁₆	1'-3	10¾	4¾			0" 704.5306'
118PG2.03 126PG4.03	"X"	9'-11⅛	19'-11⅛	29'-11⅛	39'-11⅛	49'-11⅛	59'-11⅛	69'-11⅛					79'-11⅜
	"Y"	6	10⁵⁄₁₆	1'-0¹⁵⁄₁₆	1'-1⅜	1'-0¹⁵⁄₁₆	10⁵⁄₁₆	6					0" 695.8639'
119PG2.04 127PG4.04	"X"	7'-5¹¹⁄₁₆	17'-5¹¹⁄₁₆	27'-5¹¹⁄₁₆	37'-5¹¹⁄₁₆	47'-5¹¹⁄₁₆	57'-5¹¹⁄₁₆	67'-5¹¹⁄₁₆					74'-11⅞
	"Y"	4⁷⁄₁₆	8¾	11⅜	1'-0¼	11⅜	8¾	4⁷⁄₁₆					0" 687.1972'
120PG3.01	"X"	6'-6⅞	16'-6⅞	26'-6⅞	36'-6⅞	46'-6⅞	56'-6⅞	66'-6⅞	76'-6⅞	86'-6⅞	96'-6⅞	106'-6⅞	113'-0⅜
	"Y"	5⅜	1'-1⅞	1'-7⅜	1'-11⁹⁄₁₆	2'-2⅛	2'-2¹⁵⁄₁₆	2'-2⅛	1'-11¹³⁄₁₆	1'-7⅜	1'-1⅞	5⅜	0" 713.1972'
121PG3.02	"X"	5'-4¹¹⁄₁₆	15'-4¹¹⁄₁₆	25'-4¹¹⁄₁₆	35'-4¹¹⁄₁₆	45'-4¹¹⁄₁₆	55'-4¹¹⁄₁₆	65'-4¹¹⁄₁₆	75'-4¹¹⁄₁₆	85'-4¹¹⁄₁₆	95'-4¹¹⁄₁₆	105'-4¹¹⁄₁₆	110'-9⅜
	"Y"	4⅞	1'-0⁹⁄₁₆	1'-6½	1'-10¾	2'-1⁵⁄₁₆	2'-2⁹⁄₁₆	2'-1⁵⁄₁₆	1'-10¾	1'-6½	1'-0⁹⁄₁₆	4⅞	0" 704.5306'
122PG3.03	"X"	7'-2¹³⁄₁₆	17'-2¹³⁄₁₆	27'-2¹³⁄₁₆	37'-2¹³⁄₁₆	47'-2¹³⁄₁₆	57'-2¹³⁄₁₆	67'-2¹³⁄₁₆	77'-2¹³⁄₁₆	87'-2¹³⁄₁₆	97'-2¹³⁄₁₆	107'-2¹³⁄₁₆	114'-5⁹⁄₁₆
	"Y"	6¹¹⁄₁₆	1'-2½	1'-8½	2'-0¹³⁄₁₆	2'-3⅞	2'-4⅝	2'-3⅞	2'-0¹³⁄₁₆	1'-8½	1'-2½	6¹¹⁄₁₆	0" 695.8639'
123PG3.04	"X"	6'-1¹⁄₁₆	16'-1¹⁄₁₆	26'-1¹⁄₁₆	36'-1¹⁄₁₆	46'-1¹⁄₁₆	56'-1¹⁄₁₆	66'-1¹⁄₁₆	76'-1¹⁄₁₆	86'-1¹⁄₁₆	96'-1¹⁄₁₆	106'-1¹⁄₁₆	112'-2¹⁄₁₆
	"Y"	5⅝	1'-1½	1'-7⅝	2'-0	2'-2⅝	2'-3½	2'-2⅝	2'-0	1'-7⅝	1'-1½	5⅝	0" 687.1972'

TEXAS DEPARTMENT OF TRANSPORTATION
APPROVED EXCEPT AS NOTED
DIVISION OF BRIDGES AND STRUCTURES
JAN 07 1993
APPROVAL OF THIS DRAWING DOES NOT RELIEVE THE CONTRACTOR OF THE RESPONSIBILITY FOR THE CORRECTNESS OF DETAILS

FOR APPROVAL
NOV 12 '92
NOT FOR CONSTRUCTION

NOTE: FOR GENERAL NOTES, SEE SHT. GN1.

THIS SHEET NOT DETAIL CHECKED

APV 11-12

FED. ROAD DIV. NO.	STATE	FEDERAL AID PROJECT NO.			
6	TX.	NH 92(50)M			
STATE DIST. NO.	COUNTY	CONTROL NO.	SECTION NO.	JOB NO.	HIGHWAY NO.
21	HIDALGO	39	17	97	83/281

HOLES ____ U.N. FOR AP'VL ____
BOLTS ____ U.N. RETURNED ____
WELDS ____ U.N. TO SHOP ____
PAINT ____

REVISIONS		
NO.	DATE	REMARKS
1		
2		
3		
4		

HIRSCHFELD STEEL CO. INC.
112 WEST 29TH SAN ANGELO, TEXAS 76903
PHONE (915) 653-3211

CUSTOMER GILBERT TEXAS CONSTRUCTION
ARCHITECT
PROJECT US 83/281 INTERCHANGE RAMP #4
LOCATION HIDALGO COUNTY

DRAWN JRL DATE 10/92 | JOB NO. 92-109 | SHEET NO. 132 of
CHECKED JC DATE 10-92

CE92-14

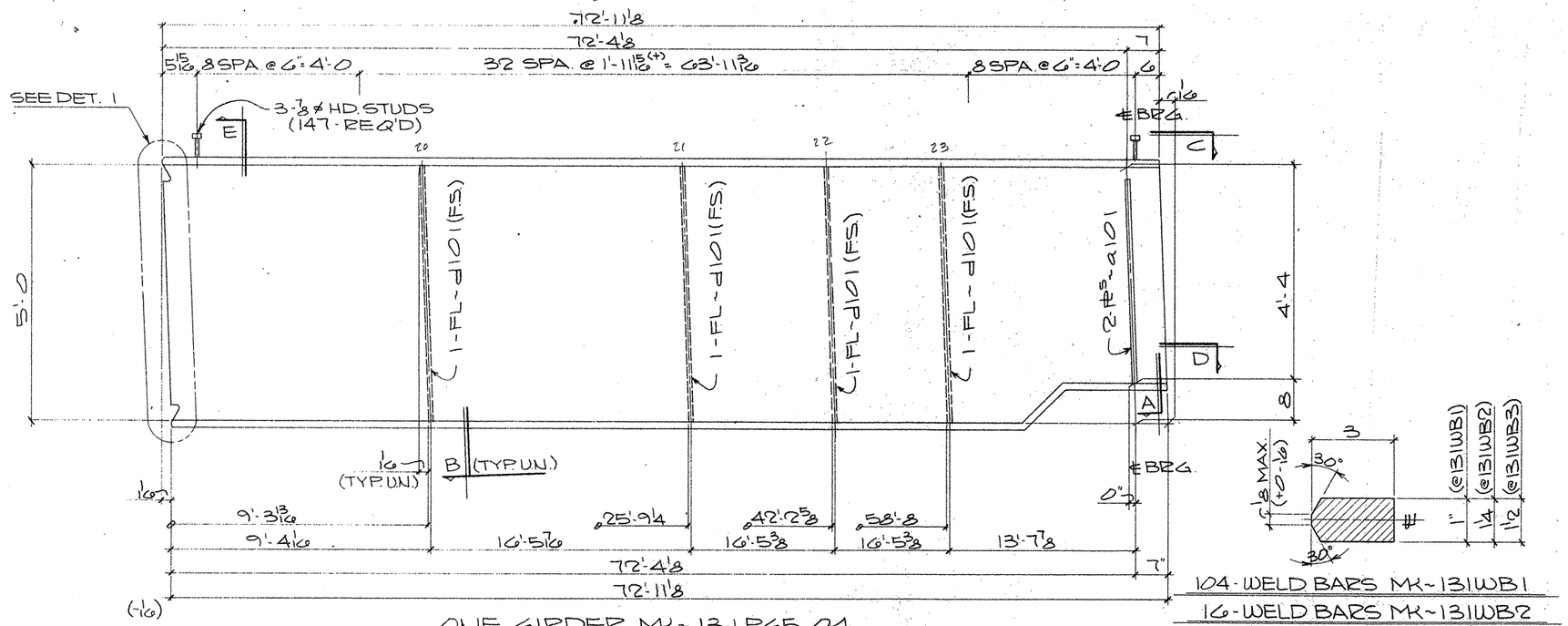

104 - WELD BARS MK-131WB1
16 - WELD BARS MK-131WB2
8 - WELD BARS MK-131WB3

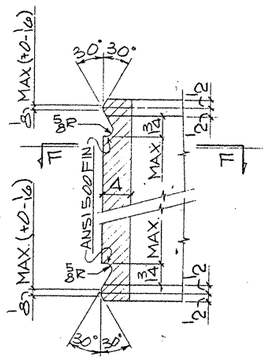

DETAIL - 1

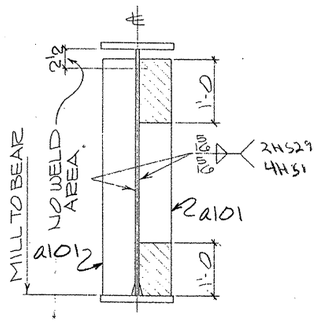

SECTION - A

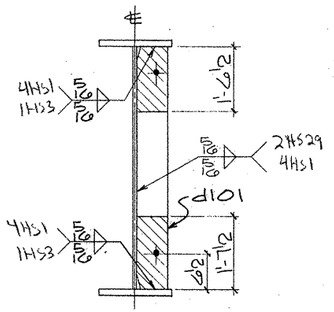

SECTION - B

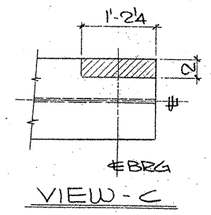

VIEW - C

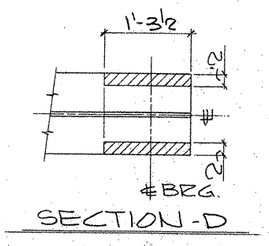

SECTION - D

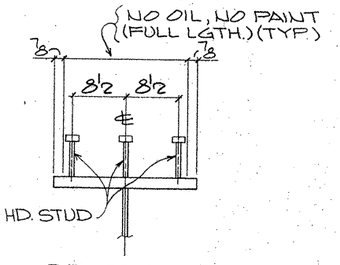

SECTION - E
(TYP. STUD SECT.)

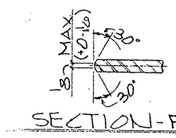

SECTION - FF

SHOP NOTES:

1) FOR GENERAL NOTES SEE SHT. GN1
2) FOR GIRDER SUB-ASSEMBLY SEE SHT. 111
3) FOR STIFF. DETAILS SEE SHT. 101
4) FOR BLOCKING DIAGRAM SEE SHT. 137
5) FOR HEAT CURVE DIAGRAM SEE SHT. 133
6) ▨ INDICATES OIL, NO PAINT (N.S./F.S. & EDGES)

BILL OF MATERIAL

	Qnty.	Material	Length	Mark Temp.	Mark Ship.	Wt.	Cut From	Remarks
3	1	GIRDER		131PG5.04				
4	1	GIRDER SUB-ASSY		B111				
5	2	BRG. STIFF		d101				
7	4	DIAF STIFF		d101				
9	147	HD STUD 7/8	0'-7				108-1	A108
29		WELD BARS						
30	104	PL 1 x 1	0'-3	131WB1			STR	
31	16	PL 1 1/4 x 1	0'-3	131WB2			STR	
32	8	PL 1 1/2 x 1	0'-3	131WB3			STR	

TEXAS DEPARTMENT OF TRANSPORTATION
APPROVED
DIVISION OF BRIDGES AND STRUCTURES
JAN 07 1993
APPROVAL OF THIS DRAWING DOES NOT RELIEVE THE CONTRACTOR OF THE RESPONSIBILITY FOR THE CORRECTNESS OF THE...

FOR APPROVAL
NOV 12 '92
NOT FOR CONSTRUCTION

REVISION	DATE	DESCRIPTION OF REVISION
NO. 1		
NO. 2		
NO. 3		
NO. 4		
NO. 5		

PRINTING: Req'd | For | Date

Bolts: Holes: 15/16 ø Unless Noted
Shop Paint: SEE SHT. GN1
Fab Spec: ASNTD Inspection
Architect
Erection By: Field Connections

HIRSCHFELD STEEL CO. INC.
112 WEST 29TH SAN ANGELO, TEXAS 76903
PHONE (915) 653-3211

DESCRIPTION: 430'-0 PLATE GIRDER UNIT
STRUCTURE: US 83/281 INTERCHANGE RAMP #4
LOCATION: HIDALGO COUNTY
CUSTOMER: GILBERT TEXAS CONSTRUCTION
SHIP TO:
Customer's Order No.
Dwg. By: CRT Date: 10/92
Checked By: JC Date: 10-92

SHEET 131 OF
JOB NO. 92-109

G0109

FED. ROAD DIV. NO.	STATE	FEDERAL AID PROJECT NO.			
6	TX.	NH 92(50)M			
STATE DIST. NO.	COUNTY	CONTROL NO.	SECTION NO.	JOB NO.	HIGHWAY NO.
21	HIDALGO	39	17	97	83/281

— APV 11-12

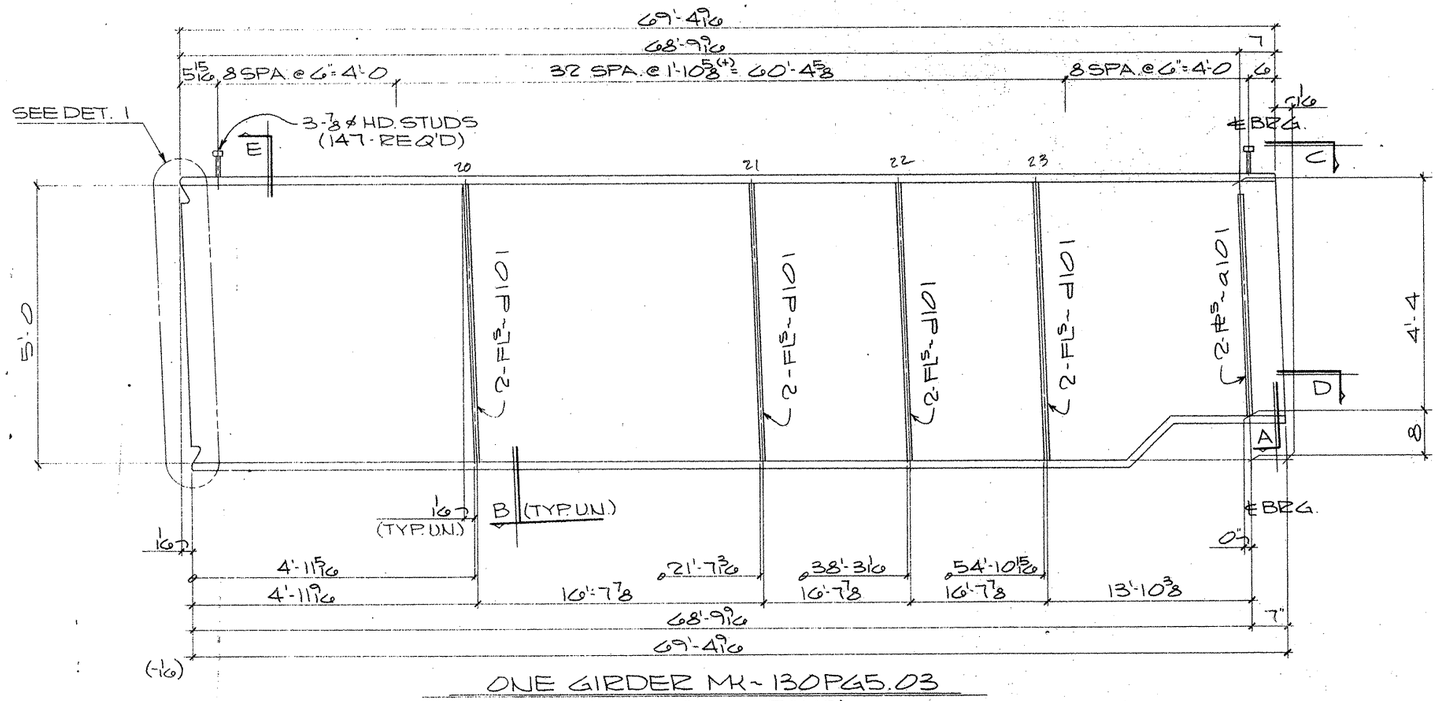

ONE GIRDER MK~130PG5.03

(APPROX. WT.= TONS)

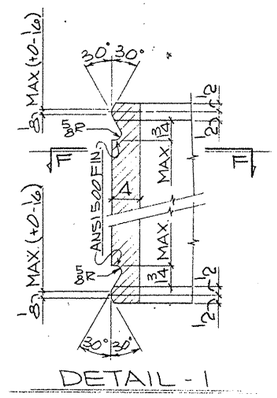

DETAIL-1

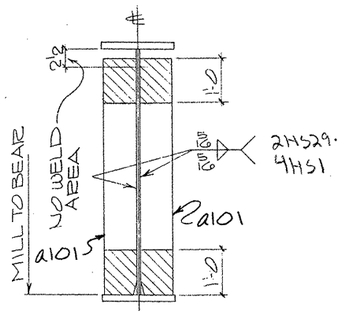

SECTION-A

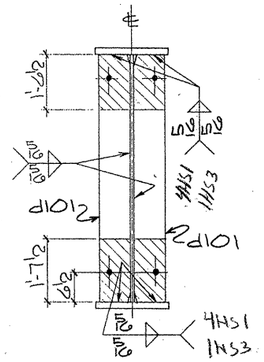

SECTION-B

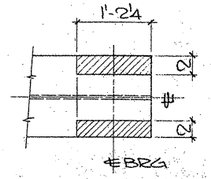

VIEW-C

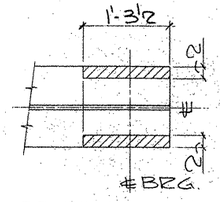

SECTION-D

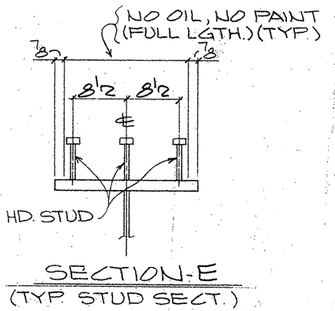

SECTION-E

(TYP. STUD SECT.)

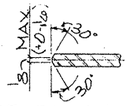

SECTION-FF

SHOP NOTES:

1) FOR GENERAL NOTES SEE SHT. GN1
2) FOR GIRDER SUB-ASSEMBLY SEE SHT. 111
3) FOR STIFF. DETAILS SEE SHT. 101
4) FOR BLOCKING DIAGRAM SEE SHT. 136
5) FOR HEAT CURVE DIAGRAM SEE SHT. 133
6) ▨ INDICATES OIL, NO PAINT (N.S./F.S. & EDGES)

BILL OF MATERIAL

	Qnty	Material	Length	Mark Temp.	Mark Ship.	Wt	Cut From	Remarks
3	1	GIRDER		130PG5.03				
4	1	GIRDER SUB-ASSY		A111				
5	2	BRG STIFF		d101				
7	8	DIAF STIFF		d101				
9	147	HD STUD 7/8	0'-7				108-1	A108

TEXAS DEPARTMENT OF TRANSPORTATION
APPROVED
DIVISION OF BRIDGES AND STRUCTURES
JAN 07 1993

APPROVAL OF THIS DRAWING DOES NOT RELIEVE THE CONTRACTOR OF THE RESPONSIBILITY FOR THE CORRECTNESS OF DETAIL.

FOR APPROVAL
NOV 12 '92
NOT FOR CONSTRUCTION

REVISION	DATE	DESCRIPTION OF REVISION
NO. 1		
NO. 2		
NO. 3		
NO. 4		
NO. 5		

PRINTING Req'd / For / Date

Bolts Holes 15/16 ø Unless Noted
Shop Paint SEE SHT. GN1
Fab. Spec. AASHTO Inspection
Architect
Erection By Field Connections

HIRSCHFELD STEEL CO. INC.
112 WEST 29TH SAN ANGELO TEXAS 76903
PHONE (915) 653-3211

DESCRIPTION 430'-0 PLATE GIRDER UNIT
STRUCTURE US-83/281 INTERCHANGE RAMP #4
LOCATION HIDALGO COUNTY
CUSTOMER GILBERT TEXAS CONSTRUCTION
SHIP TO
Customer's Order No.
Dwg. By CRT Date 10/92
Checked By JC Date 10-92

SHEET 130 OF
JOB NO. 92-109

60109

FED. ROAD DIV. NO.	STATE	FEDERAL AID PROJECT NO.				
6	TX.	NH 92(50)M				
STATE DIST. NO.	COUNTY	CONTROL NO.	SECTION NO.	JOB NO.	HIGHWAY NO.	
21	HIDALGO	39	17	97	83/281	

— APV 11-92

(CE 90-14) (LINE #3)

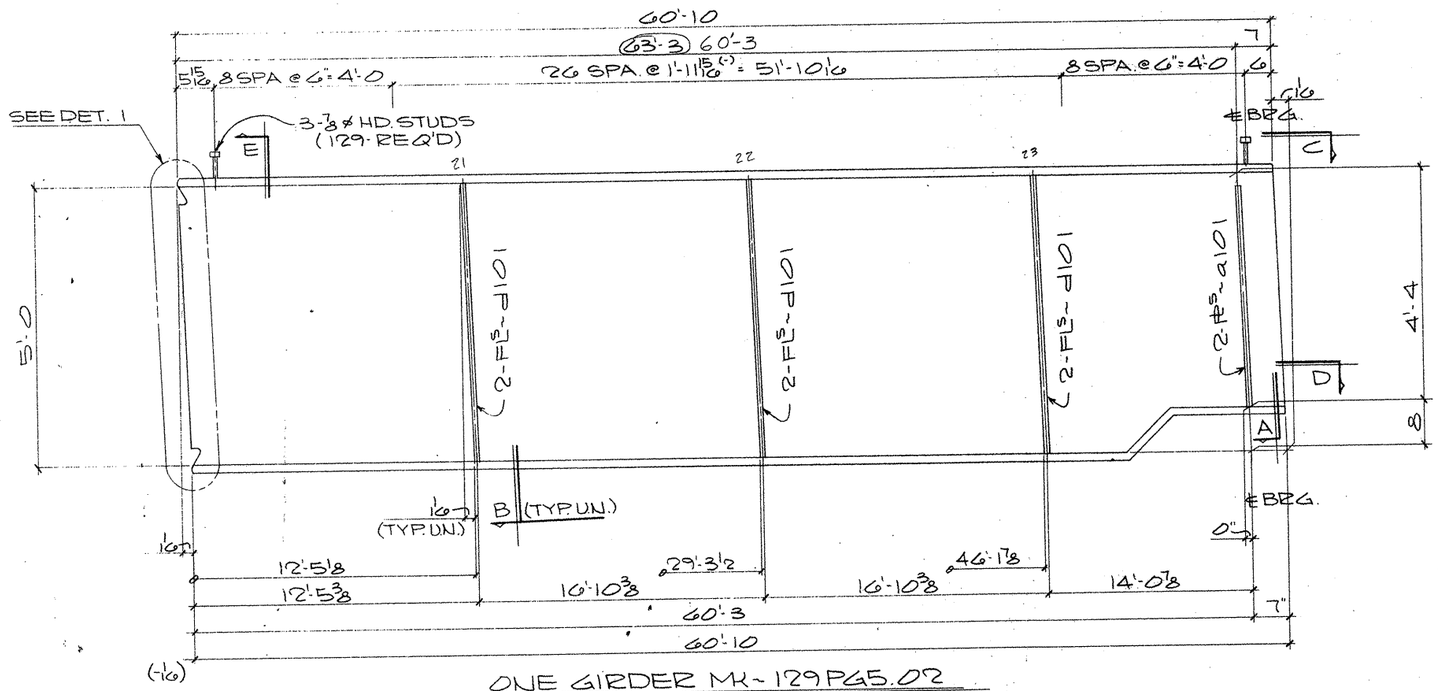

ONE GIRDER MK-129PG5.02
(APPROX. WT. = TONS)

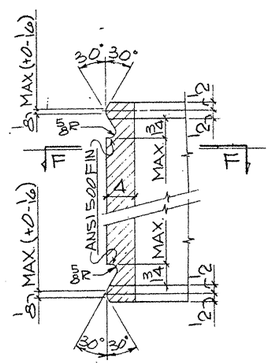

DETAIL - 1

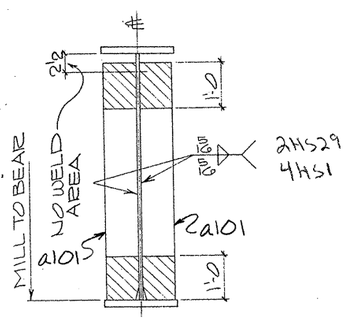

SECTION - A

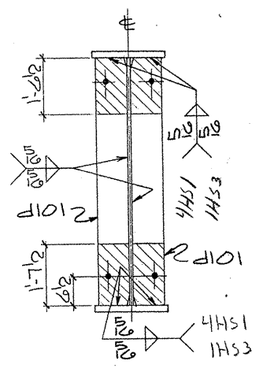

SECTION - B

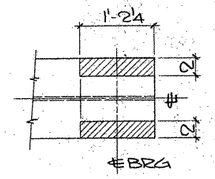

VIEW - C

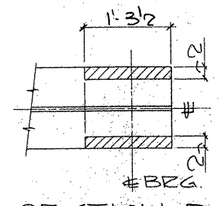

SECTION - D

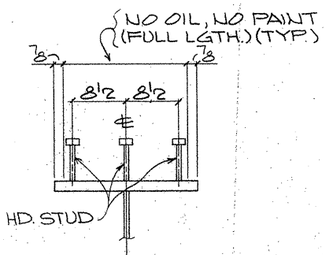

SECTION - E
(TYP. STUD SECT.)

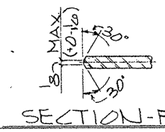

SECTION - FF

SHOP NOTES:
1) FOR GENERAL NOTES SEE SHT. GN1
2) FOR GIRDER SUB-ASSEMBLY SEE SHT. 110
3) FOR STIFF. DETAILS SEE SHT. 101
4) FOR BLOCKING DIAGRAM SEE SHT. 135
5) FOR HEAT CURVE DIAGRAM SEE SHT. 133
6) ▨ INDICATES OIL, NO PAINT (N.S./F.S. & EDGES)

BILL OF MATERIAL

	Qnty.	Material	Length	Mark Temp	Mark Ship	Wt	Cut From	Remarks
3	1	GIRDER		129PG5.02				
4	1	GIRDER SUB-ASSY		B110				
5	2	BRG. STIFF		d101				
7	6	DIAF STIFF		d101				
9	129	HD STUD 7/8	0'-7				108-1	A108

TEXAS DEPARTMENT OF TRANSPORTATION
APPROVED EXCEPT AS NOTED
DIVISION OF BRIDGES AND STRUCTURES
JAN 07 1993
APPROVAL OF THIS DRAWING DOES NOT RELIEVE THE CONTRACTOR OF THE RESPONSIBILITY FOR THE CORRECTNESS OF DETAIL

FOR APPROVAL
NOV 12 92
NOT FOR CONSTRUCTION

REVISION	DATE	DESCRIPTION OF REVISION
NO. 1		
NO. 2		
NO. 3		
NO. 4		
NO. 5		

PRINTING Req'd	For	Date

Bolts: Holes: 15/16 ϕ Unless Noted
Shop Paint: SEE SHT. GN1
Fab Spec: AS NTD Inspection
Architect:
Erection By: Field Connections

HIRSCHFELD STEEL CO. INC.
112 WEST 29TH SAN ANGELO, TEXAS 76903
PHONE (915) 653-3211

DESCRIPTION: 430'-0 PLATE GIRDER UNIT
STRUCTURE: US 83/281 INTERCHANGE RAMP "A"
LOCATION: HIDALGO COUNTY
CUSTOMER: GILBERT TEXAS CONSTRUCTION
SHIP TO:
Customer's Order No:
Dwg. By: CRT Date: 10/92
Checked By: JC Date: 10-92
SHEET 129 OF
JOB NO. 92-109

60109

FED. ROAD DIV. NO.	STATE	FEDERAL AID PROJECT NO.				
6	TX.	NH 92(50)M				
STATE DIST. NO.	COUNTY	CONTROL NO.	SECTION NO.	JOB NO.	HIGHWAY NO.	
21	HIDALGO	39	17	97	83/281	

APV 11-12

(CE 92-14) (LINE # 2)

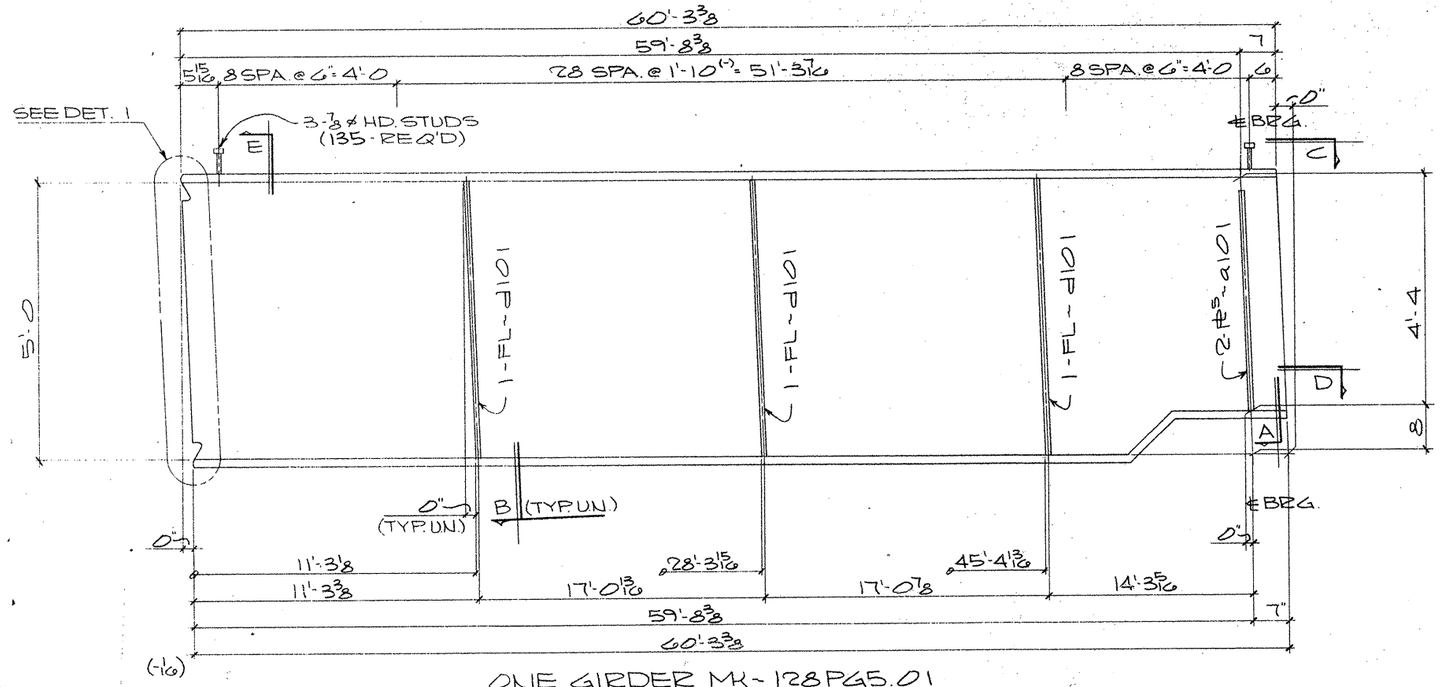

ONE GIRDER MK-128PG5.01

(APPROX. WT.= TONS)

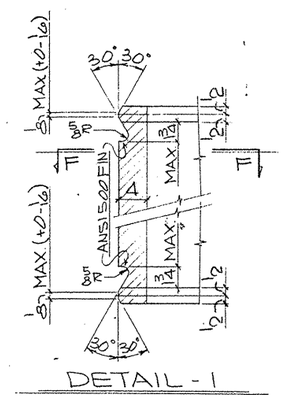

DETAIL - 1

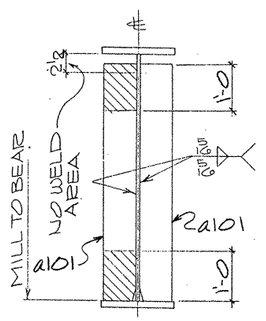

SECTION-A

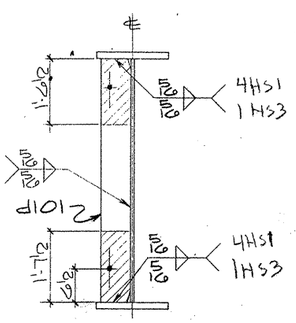

SECTION-B

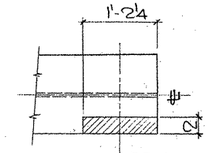

VIEW-C

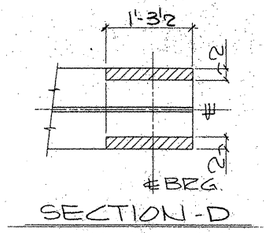

SECTION-D

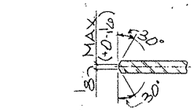

SECTION-FF

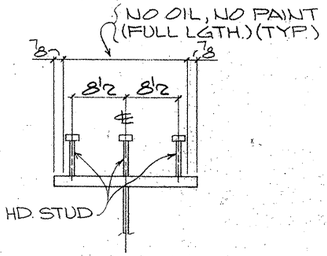

SECTION-E

(TYP. STUD SECT.)

SHOP NOTES:

1) FOR GENERAL NOTES SEE SHT. GN1
2) FOR GIRDER SUB-ASSEMBLY SEE SHT. 110
3) FOR STIFF. DETAILS SEE SHT. 101
4) FOR BLOCKING DIAGRAM SEE SHT. 134
5) FOR HEAT CURVE DIAGRAM SEE SHT. 133
6) ▨ INDICATES OIL, NO PAINT (N.S./F.S. & EDGES)

BILL OF MATERIAL

	Qnty.	Material	Length	Mark Temp	Mark Ship.	Wt	Cut From	Remarks
3	1	GIRDER		128PG5.01				
4	1	GIRDER SUB-ASSY		A110				
5	2	BRG. STIFF		d101				
7	3	DIAF. STIFF		d101				
9	135	HD STUD 7/8	0'-7				108-1	A108

TEXAS DEPARTMENT OF TRANSPORTATION
APPROVED
~~DIVISION OF BRIDGES AND STRUCTURES~~
JAN 07 1993

APPROVAL OF THIS DRAWING DOES NOT RELIEVE THE CONTRACTOR OF THE RESPONSIBILITY FOR THE CORRECTNESS OF DETAIL

FOR APPROVAL
NOV 12 '92
NOT FOR CONSTRUCTION

REVISION	DATE	DESCRIPTION OF REVISION
NO. 1		
NO. 2		
NO. 3		
NO. 4		
NO. 5		

PRINTING Req'd	For	Date

Bolts Holes, 15/16 ø Unless Noted
Shop Paint SEE SHT. GN1
Fab. Spec AS NTD Inspection
Architect
Erection By Field Connections

HIRSCHFELD STEEL CO. INC.
112 WEST-29TH SAN ANGELO, TEXAS 76903
PHONE (915) 653-3211

DESCRIPTION 430'-0 PLATE GIRDER UNIT
STRUCTURE US 83/281 INTERCHANGE RAMP #4
LOCATION HIDALGO COUNTY
CUSTOMER GILBERT TEXAS CONSTRUCTION
SHIP TO
Customer's Order No.
Dwg. By CRT Date 10/92
Checked By JC Date 10-92

SHEET 128 OF
JOB NO. 92-109

FED. ROAD DIV. NO.	STATE	FEDERAL AID PROJECT NO.			
6	TX.	NH 92(50)M			
STATE DIST. NO.	COUNTY	CONTROL NO.	SECTION NO.	JOB NO.	HIGHWAY NO.
21	HIDALGO	39	17	97	83/281

G0109

— ARV 11-12

(CE 92-14) (LINE # 1)

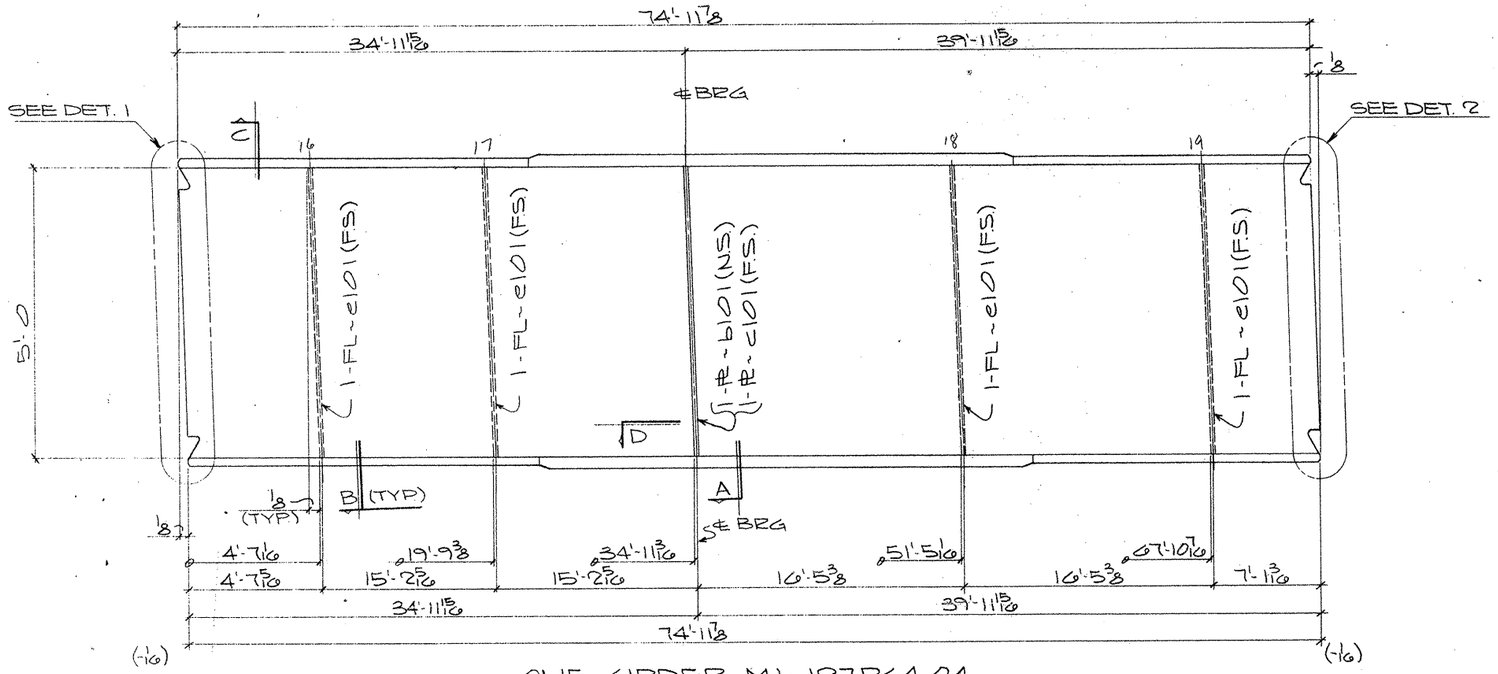

ONE GIRDER MK~127PG4.04

(APPROX. WT. = TONS)

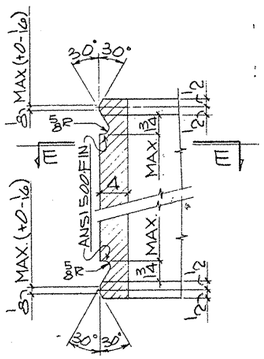

DETAIL-1

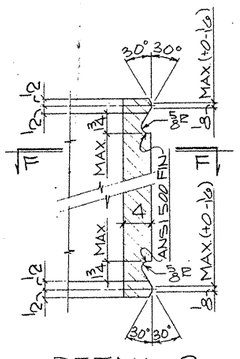

DETAIL-2

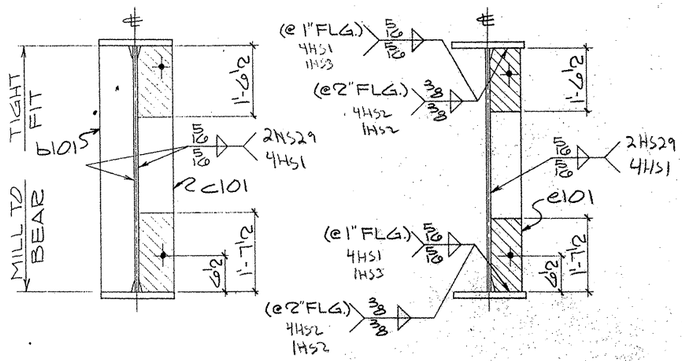

SECTION-A

SECTION-B

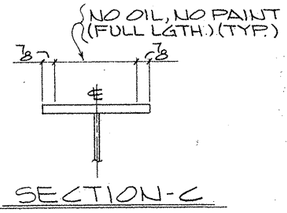

SECTION-C

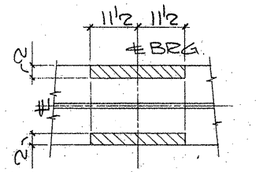

SECTION-D

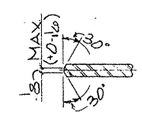

SECTION-EE

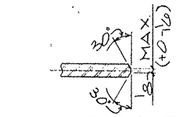

SECTION-FF

SHOP NOTES:

1) FOR GENERAL NOTES SEE SHT. GN1
2) FOR GIRDER SUB-ASSEMBLY SEE SHT. 109
3) FOR STIFF. DETAILS SEE SHT. 101
4) FOR BLOCKING DIAGRAM SEE SHT. 137
5) FOR HEAT CURVE DIAGRAM SEE SHT. 132
6) ▨ INDICATES OIL, NO PAINT (N.S./F.S. & EDGES)

BILL OF MATERIAL

	Qnty.	Material	Length	Mark Temp.	Mark Ship.	Wt.	Cut From	Remarks
2	1	GIRDER			127PG4.04			
3	1	GIRDER SUB-ASSY		B109				
4	1	BRG STIFF		b101				
5	1	BRG STIFF		c101				
6	4	DIAF STIFF		e101				

TEXAS DEPARTMENT OF TRANSPORTATION
APPROVED
DIVISION OF BRIDGES AND STRUCTURES
JAN 07 1993

APPROVAL OF THIS DRAWING DOES NOT RELIEVE THE CONTRACTOR OF THE RESPONSIBILITY FOR THE CORRECTNESS OF DETAILS

FOR APPROVAL
NOV 12 '92
NOT FOR CONSTRUCTION

REVISION	DATE	DESCRIPTION OF REVISION
NO. 1		
NO. 2		
NO. 3		
NO. 4		
NO. 5		

PRINTING: Reg'd | For | Date

Bolts. Holes, 15/16 ø Unless Noted
Shop Paint SEE SHT. GN1
Fab Spec. AS NTD. Inspection
Architect
Erection By Field Connections

HIRSCHFELD STEEL CO. INC.
112 WEST 29TH. SAN ANGELO, TEXAS 76903
PHONE (915) 653-3211

DESCRIPTION 430'-0 PLATE GIRDER UNIT
STRUCTURE US 83/281 INTERCHANGE RAMP #4
LOCATION HIDALGO COUNTY
CUSTOMER GILBERT TEXAS CONSTRUCTION
SHIP TO
Customer's Order No.
Dwg. By CRT Date 10/92
Checked By JC Date 10-92

SHEET 127 OF
JOB NO. 92-109

G0109

FED. ROAD DIV. NO.	STATE	FEDERAL AID PROJECT NO.				
6	TX.	NH 92(50)M				
STATE DIST. NO.	COUNTY	CONTROL NO.	SECTION NO.	JOB NO.	HIGHWAY NO.	
21	HIDALGO	39	17	97	83/281	

— APV 11-12

CE 92-14 (LINE #4)

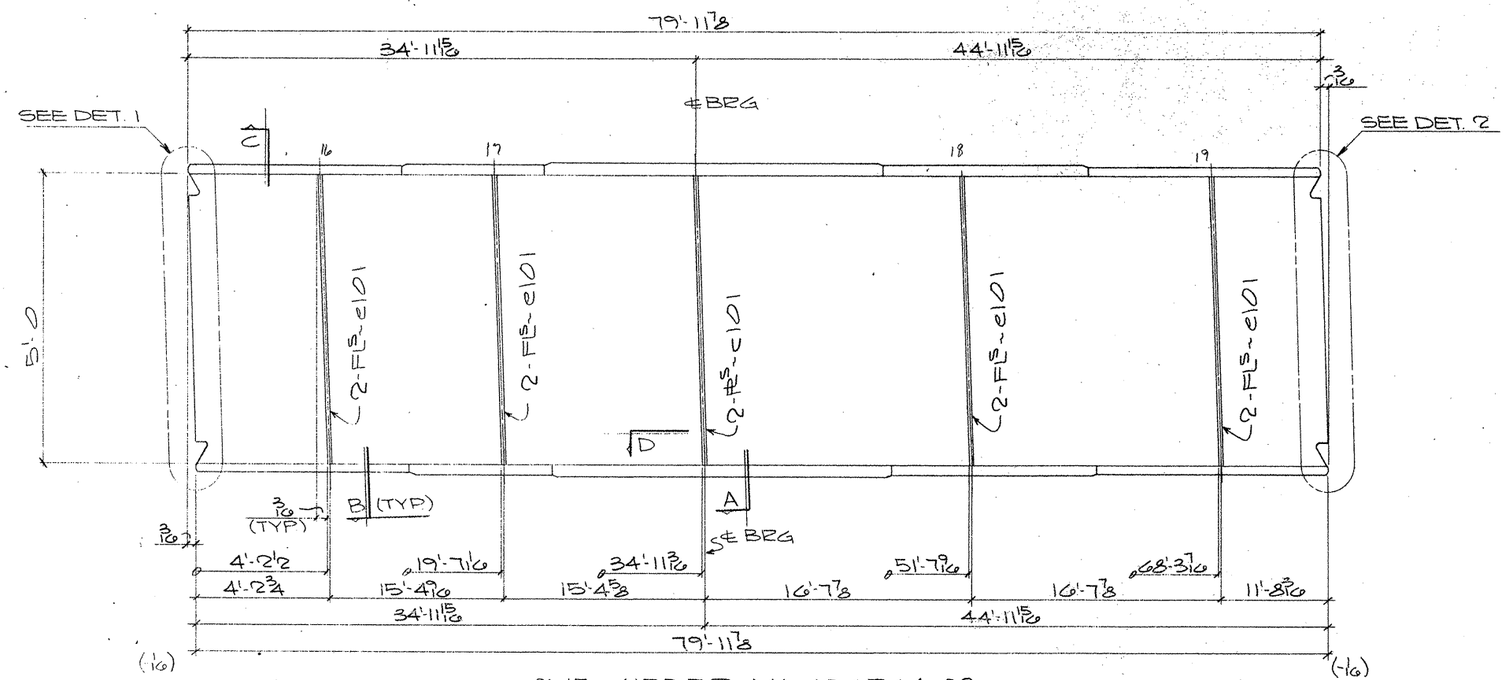

ONE GIRDER MK~126PG4.03

(APPROX. WT. = TONS)

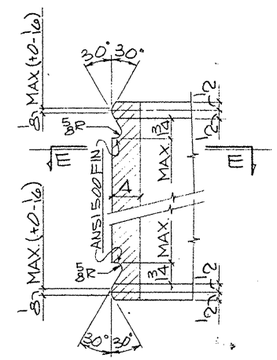

DETAIL-1

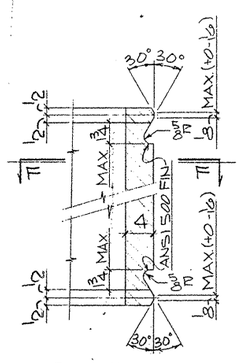

DETAIL-2

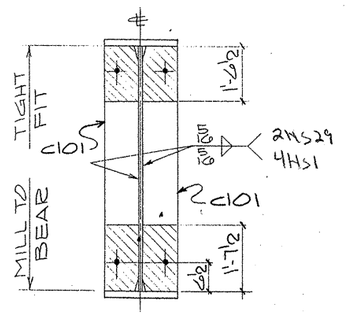

SECTION-A

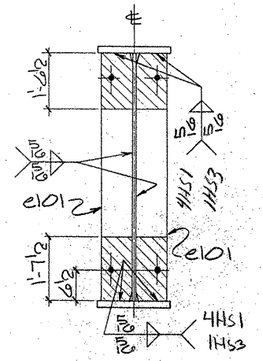

SECTION-B

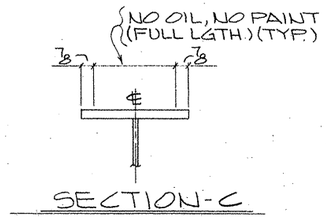

SECTION-C

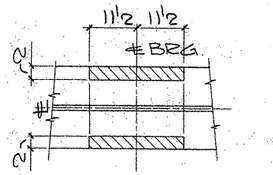

SECTION-D

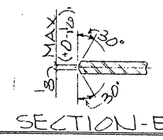

SECTION-EE

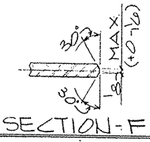

SECTION-FF

SHOP NOTES:

1) FOR GENERAL NOTES SEE SHT. GN1
2) FOR GIRDER SUB-ASSEMBLY SEE SHT. 108
3) FOR STIFF. DETAILS SEE SHT. 101
4) FOR BLOCKING DIAGRAM SEE SHT. 136
5) FOR HEAT CURVE DIAGRAM SEE SHT. 132
6) ////// INDICATES OIL, NO PAINT (N.S./F.S. & EDGES)

BILL OF MATERIAL

	Qnty.	Material	Length	Mark Temp.	Mark Ship.	Wt.	Cut From	Remarks
2	1	GIRDER			126PG4.03			
3	1	GIRDER SUB-ASSY		B108				
4	2	BRG STIFF		c101				
6	8	DIAF STIFF		e101				

TEXAS DEPARTMENT OF TRANSPORTATION
APPROVED
DIVISION OF BRIDGES AND STRUCTURES
JAN 07 1993

APPROVAL OF THIS DRAWING DOES NOT RELIEVE THE CONTRACTOR OF THE RESPONSIBILITY FOR THE CORRECTNESS OF DETAIL

FOR APPROVAL
NOV 12 '92
NOT FOR CONSTRUCTION

REVISION	DATE	DESCRIPTION OF REVISION
NO. 1		
NO. 2		
NO. 3		
NO. 4		
NO. 5		

PRINTING

Req'd	For	Date

Bolts Holes: 15/16 ø Unless Noted
Shop Paint SEE SHT. GN1
Fab. Spec. AS NTD. Inspection
Architect
Erection By Field Connections

HIRSCHFELD STEEL CO. INC.
112 WEST 29TH SAN ANGELO. TEXAS 76903
PHONE (915) 653-3211

DESCRIPTION 430'-0 PLATE GIRDER UNIT
STRUCTURE US 83/281 INTERCHANGE RAMP "4"
LOCATION HIDALGO COUNTY
CUSTOMER GILBERT TEXAS CONSTRUCTION
SHIP TO
Customer's Order No.
Dwg. By CRT Date 10/92
Checked By JC Date 10-92

SHEET 126 OF
JOB NO. 92-109

G0109

FED. ROAD DIV. NO.	STATE	FEDERAL AID PROJECT NO.			
6	TX.	NH 92(50)M			
STATE DIST. NO.	COUNTY	CONTROL NO.	SECTION NO.	JOB NO.	HIGHWAY NO.
21	HIDALGO	39	17	97	83/281

APV 11-92

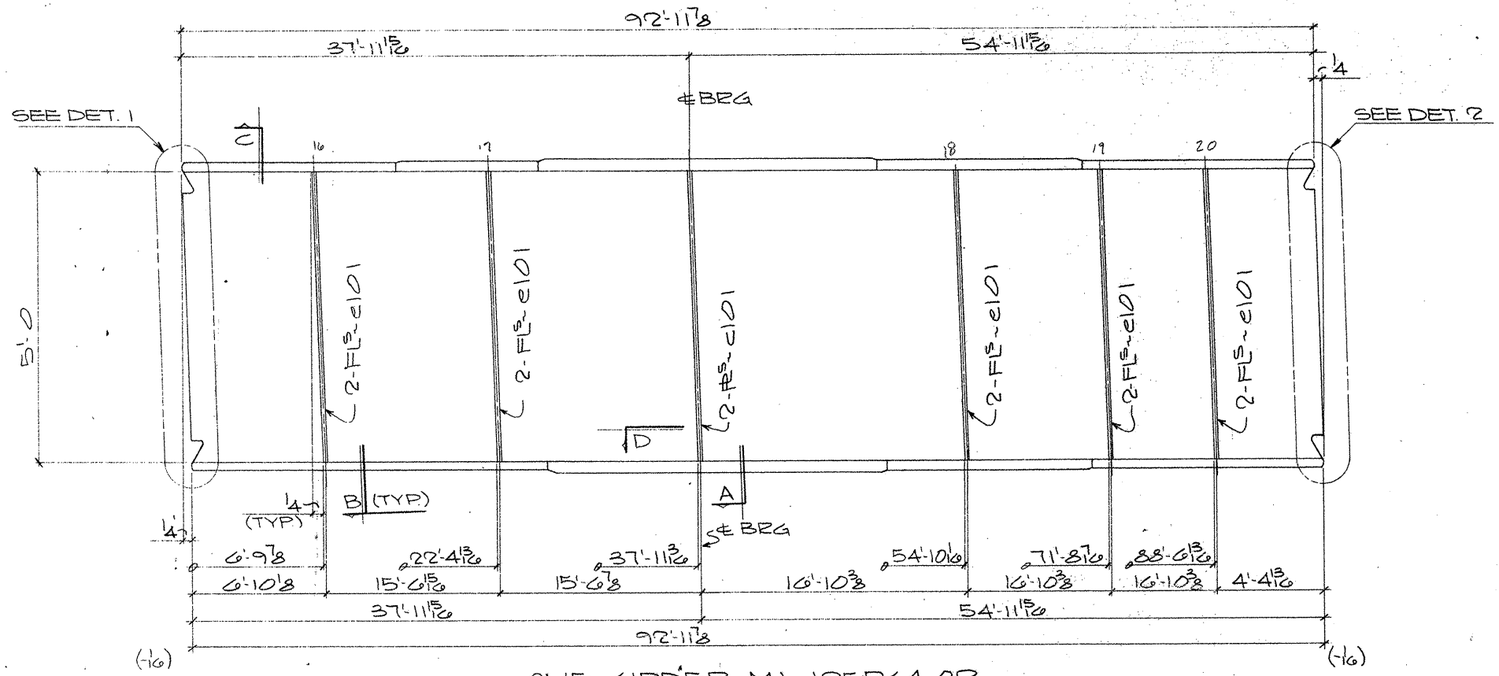

ONE GIRDER MK-125PG4.02

(APPROX. WT. = TONS)

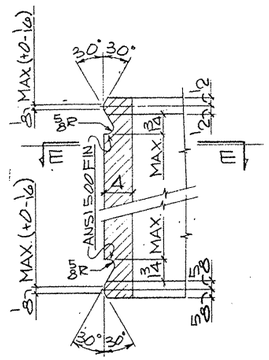

DETAIL-1

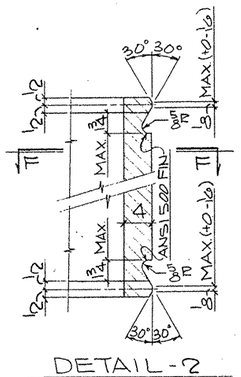

DETAIL-2

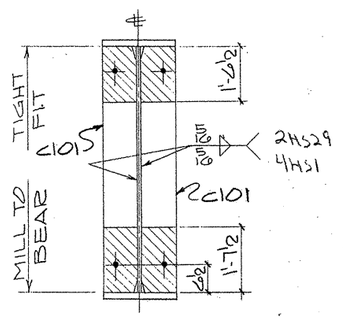

SECTION-A

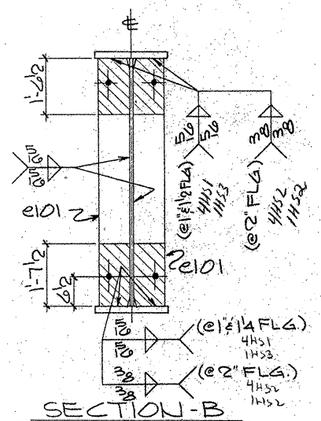

SECTION-B

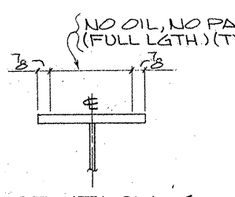

SECTION-C

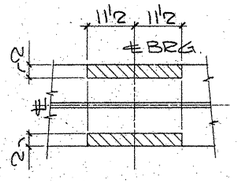

SECTION-D

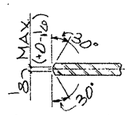

SECTION-EE

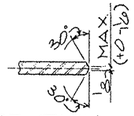

SECTION-FF

SHOP NOTES:

1) FOR GENERAL NOTES SEE SHT. GN1
2) FOR GIRDER SUB-ASSEMBLY SEE SHT. 107
3) FOR STIFF. DETAILS SEE SHT. 101
4) FOR BLOCKING DIAGRAM SEE SHT. 135
5) FOR HEAT CURVE DIAGRAM SEE SHT. 132
6) ▨ INDICATES OIL, NO PAINT (N.S./F.S. & EDGES)

BILL OF MATERIAL

	Qnty	Material	Length	Mark Temp.	Mark Ship.	Wt.	Cut From	Remarks
2	1	GIRDER			125PG4.02			
3	1	GIRDER SUB-ASSY		B107				
4	2	BRG STIFF		c101				
6	10	DIAF STIFF		e101				

TEXAS DEPARTMENT OF TRANSPORTATION
APPROVED
DIVISION OF BRIDGES AND STRUCTURES
JAN 07 1993

APPROVAL OF THIS DRAWING DOES NOT RELIEVE THE CONTRACTOR OF THE RESPONSIBILITY FOR THE CORRECTNESS OF DETAIL.

FOR APPROVAL NOV 12 92

NOT FOR CONSTRUCTION

REVISION	DATE	DESCRIPTION OF REVISION
NO. 1		
NO. 2		
NO. 3		
NO. 4		
NO. 5		

PRINTING: Reqd | For | Date

Bolts: Holes: 15/16ø Unless Noted
Shop Paint SEE SHT. GN1
Fab Spec A3 NTD. Inspection
Architect
Erection By Field Connections

HIRSCHFELD STEEL CO. INC.
112 WEST 29TH SAN ANGELO, TEXAS 76903
PHONE (915) 653-3211

DESCRIPTION	430'-0 PLATE GIRDER UNIT
STRUCTURE	US 83/281 INTERCHANGE RAMP #4
LOCATION	HIDALGO COUNTY
CUSTOMER	GILBERT TEXAS CONSTRUCTION
SHIP TO	
Customer's Order No.	
Dwg. By CRT Date 10/19/92	SHEET 125 OF
Checked By JC Date 10-92	JOB NO. 92-109

G0109

FED. ROAD DIV. NO.	STATE	FEDERAL AID PROJECT NO.			
6	TX.	NH 92(50)M			
STATE DIST. NO.	COUNTY	CONTROL NO.	SECTION NO.	JOB NO.	HIGHWAY NO.
21	HIDALGO	39	17	97	83/281

— APV 11-12

CE92-14 (LINE #2)

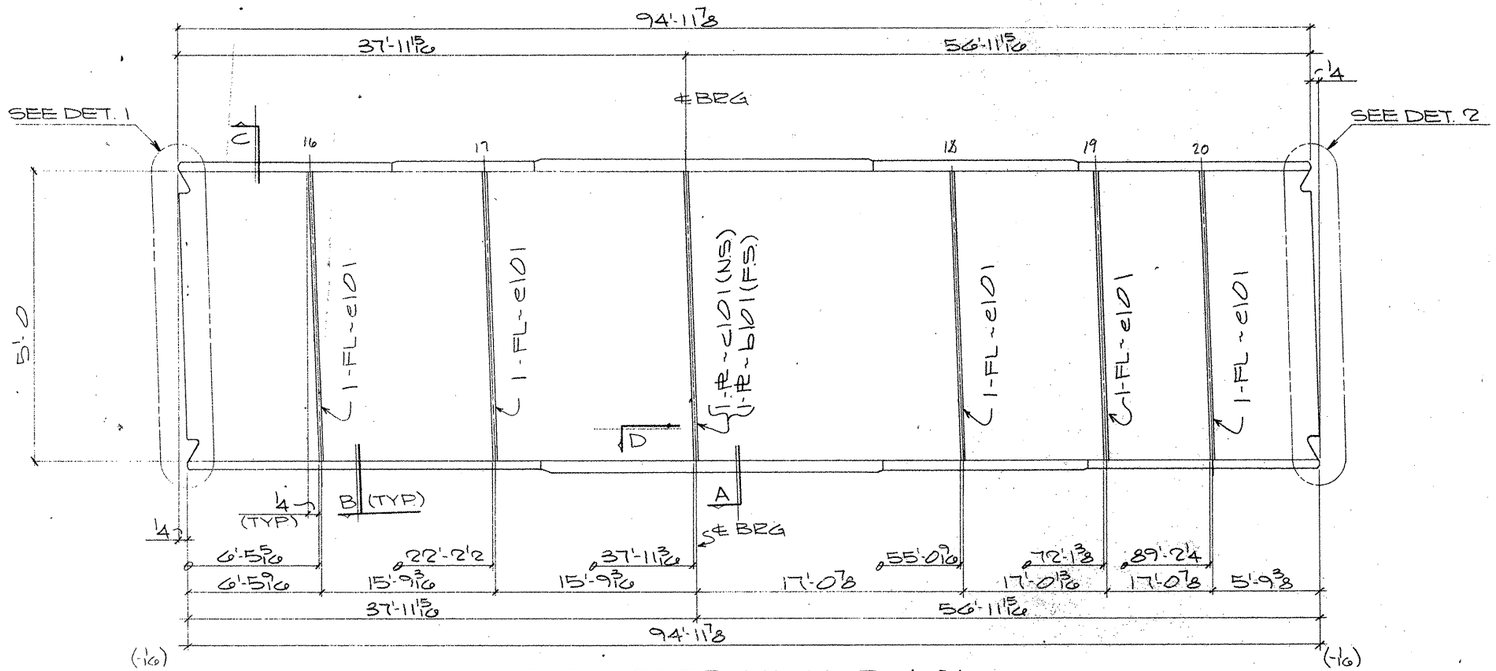

ONE GIRDER MK~124PG4.01

(APPROX. WT = TONS)

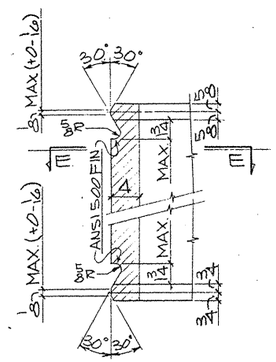

DETAIL - 1

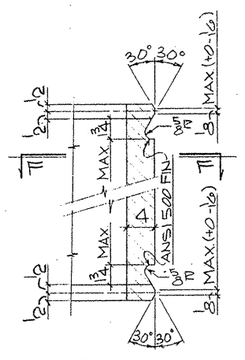

DETAIL - 2

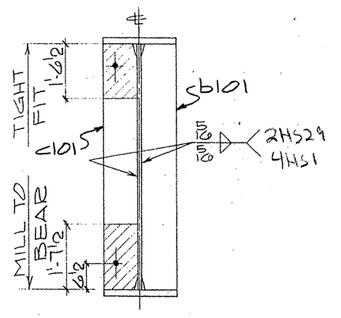

SECTION - A

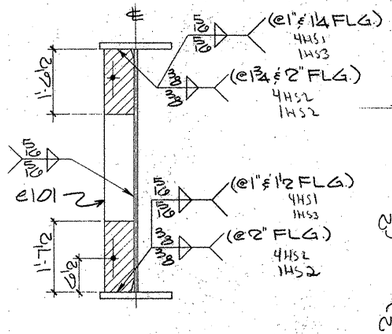

SECTION - B

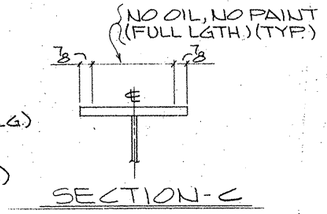

SECTION - C

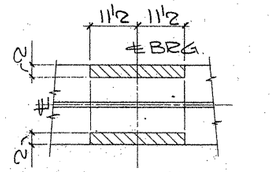

SECTION - D

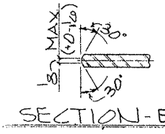

SECTION - EE

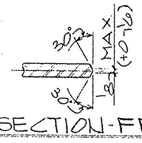

SECTION - FF

SHOP NOTES:

1) FOR GENERAL NOTES SEE SHT. GN1
2) FOR GIRDER SUB-ASSEMBLY SEE SHT. 106
3) FOR STIFF. DETAILS SEE SHT. 101
4) FOR BLOCKING DIAGRAM SEE SHT. 134
5) FOR HEAT CURVE DIAGRAM SEE SHT. 132
6) ▨ INDICATES OIL, NO PAINT (N.S./F.S. & EDGES)

BILL OF MATERIAL

	Qnty	Material	Length	Mark Temp	Mark Ship.	Wt.	Cut From	Remarks
2	1	GIRDER			124PG4.01			
3	1	GIRDER SUB-ASSY		B106				
4	1	BRG STIFF		b101				
5	1	BRG STIFF		c101				
6	5	DIAF STIFF		e101				

TEXAS DEPARTMENT OF TRANSPORTATION
APPROVED
DIVISION OF BRIDGES AND STRUCTURES
JAN 07 1993
APPROVAL OF THIS DRAWING DOES NOT RELIEVE THE CONTRACTOR OF THE RESPONSIBILITY FOR THE CORRECTNESS THEREOF

FOR APPROVAL
NOV 12 '92
NOT FOR CONSTRUCTION

REVISION	DATE	DESCRIPTION OF REVISION
NO. 1		
NO. 2		
NO. 3		
NO. 4		
NO. 5		

PRINTING

Req'd	For	Date

Bolts Holes. 15/16 ø Unless Noted
Shop Paint SEE SHT. GN1
Fab Spec. AS NTD Inspection
Architect
Erection By Field Connections

HIRSCHFELD STEEL CO. INC.
112 WEST 29TH SAN ANGELO. TEXAS 76903
PHONE (915) 653-3211

DESCRIPTION	430'-0 PLATE GIRDER UNIT
STRUCTURE	US 83/281 INTERCHANGE RAMP #4
LOCATION	HIDALGO COUNTY
CUSTOMER	GILBERT TEXAS CONSTRUCTION
SHIP TO	
Customer's Order No.	
Dwg. By CRT	Date 10/92
Checked By JC	Date 10-92

SHEET 124 OF
JOB NO. 92-109

G0109

FED. ROAD DIV. NO.	STATE	FEDERAL AID PROJECT NO.		
6	TX.	NH 92(50)M		
STATE DIST. NO.	COUNTY	CONTROL NO.	SECTION NO.	JOB NO.	HIGHWAY NO.
21	HIDALGO	39	17	97	83/281

APV 11-12

CE92-14 (LINE # 1)

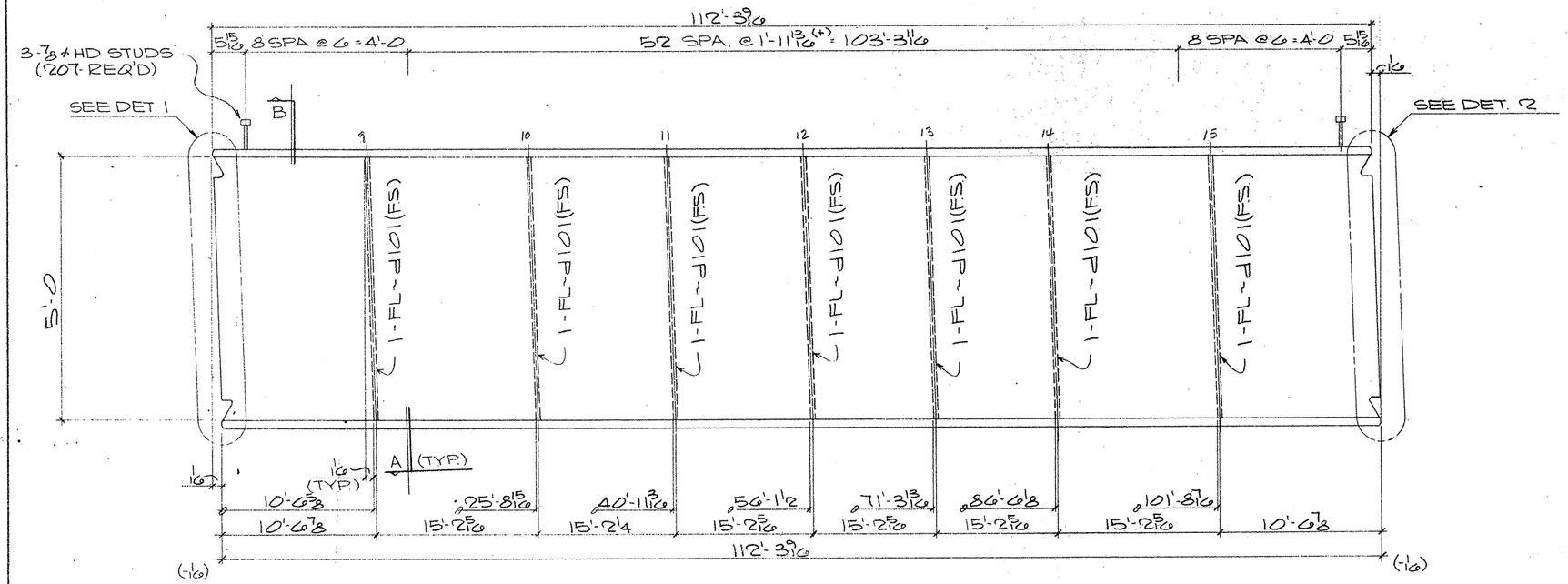

ONE GIRDER MK- 123PG3.04

(APPROX. WT. = TONS)

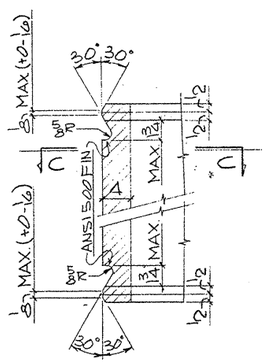

DETAIL-1

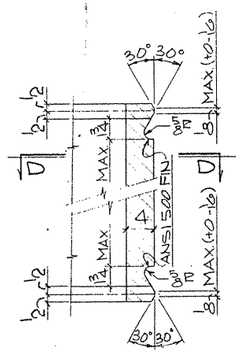

DETAIL-2

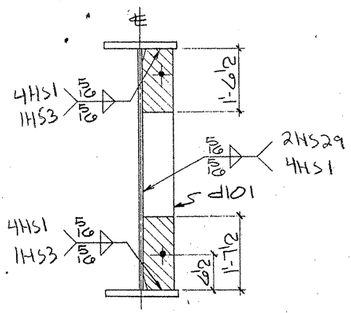

SECTION-A

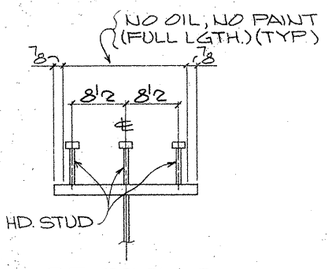

SECTION-B

(TYP. STUD SECT.)

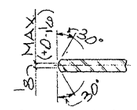

SECTION-CC

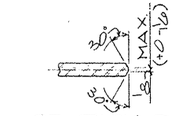

SECTION-DD

SHOP NOTES:

1) FOR GENERAL NOTES SEE SHT. GN1
2) FOR GIRDER SUB-ASSEMBLY SEE SHT. 109
3) FOR STIFF. DETAILS SEE SHT. 101
4) FOR BLOCKING DIAGRAM SEE SHT. 137
5) FOR HEAT CURVE DIAGRAM SEE SHT. 132
6) ▨ INDICATES OIL, NO PAINT (N.S./F.S. & EDGES)

BILL OF MATERIAL

	Qnty	Material	Length	Mark Temp	Mark Ship	Wt.	Cut From	Remarks
1								
2	1	GIRDER		123PG3.04				
3	1	GIRDER SUB-ASSY		A109				
4	7	DIAF STIFF		d101				
5								
6	207	HD STUDS 7/8	0'-7				108-1	A108
7								
8								
9								
10								
11								
12								
13								
14								
15								
16								
17								
18								
19								
20								
21								
22								
23								
24								
25								
26								
27								
28								
29								
30								
31								
32								
33								
34								
35								
36								
37								
38								
39								
40								
41								
42								
43								
44								
45								
46								
47								
48								
49								
50								
51								
52								
53								
54								
55								
56								
57								
58								
59								
60								

TEXAS DEPARTMENT OF TRANSPORTATION
APPROVED
DIVISION OF BRIDGES AND STRUCTURES
JAN 07 1993

APPROVAL OF THIS DRAWING DOES NOT RELIEVE THE CONTRACTOR OF THE RESPONSIBILITY FOR THE CORRECTNESS OF DETAIL

FOR APPROVAL
NOV 12 '92
NOT FOR CONSTRUCTION

REVISION	DATE	DESCRIPTION OF REVISION
NO. 1		
NO. 2		
NO. 3		
NO. 4		
NO. 5		

PRINTING Reqd	For	Date

Bolts. Holes: 15/16 ø Unless Noted
Shop Paint SEE SHT. GN1
Fab Spec AS NTD Inspection
Architect
Erection By Field Connections

HIRSCHFELD STEEL CO. INC.
112 WEST 29TH SAN ANGELO TEXAS 76903
PHONE (915) 653-3211

DESCRIPTION	430'-0 PLATE GIRDER UNIT
STRUCTURE	US 83/281 INTERCHANGE RAMP #4
LOCATION	HIDALGO COUNTY
CUSTOMER	GILBERT TEXAS CONSTRUCTION
SHIP TO	
Customer's Order No	
Dwg. By CRT Date	10/92
Checked By JC Date	10-92

SHEET 123 OF
JOB NO. 92-109

G0109

FED. ROAD DIV. NO.	STATE	FEDERAL AID PROJECT NO.				
6	TX.	NH 92(50)M				
STATE DIST. NO.	COUNTY	CONTROL NO.	SECTION NO.	JOB NO.		HIGHWAY NO.
21	HIDALGO	39	17	97		83/281

APVD 1-7-93

CE 92-14 (LINE #4)

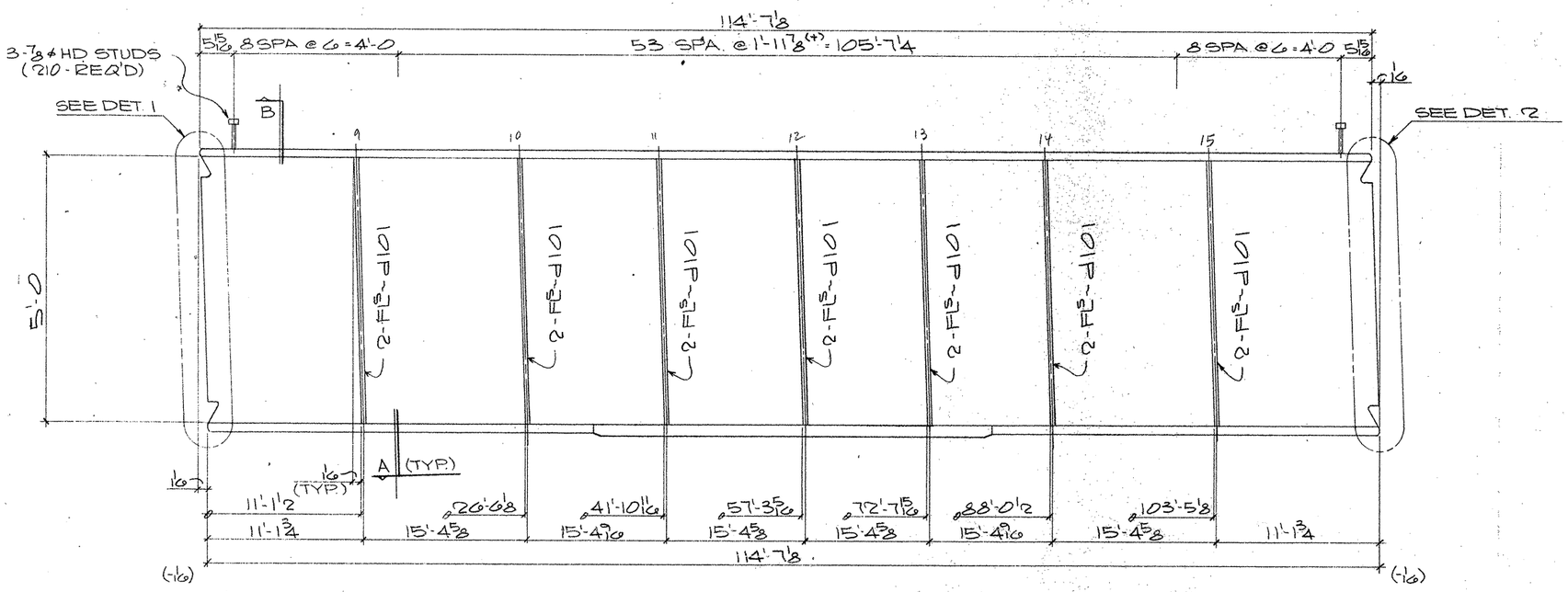

ONE GIRDER MK- 122PG3.03

(APPROX. WT. = TONS)

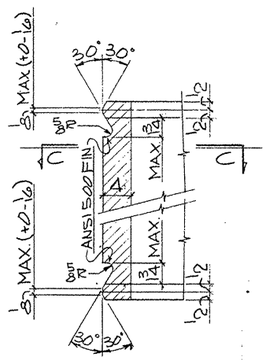

DETAIL - 1

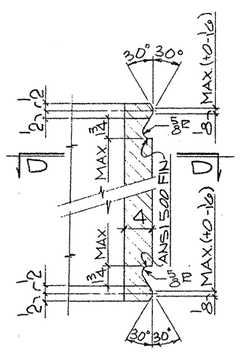

DETAIL - 2

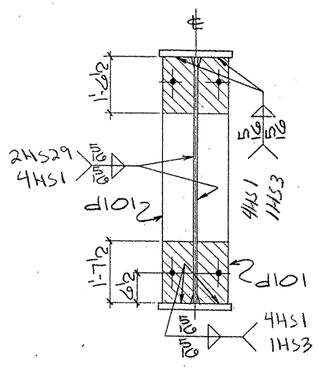

SECTION - A

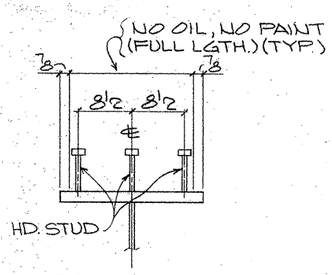

SECTION - B

(TYP. STUD SECT.)

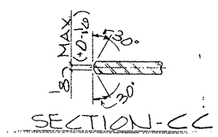

SECTION - CC

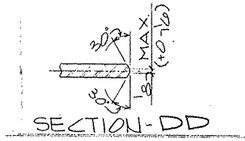

SECTION - DD

SHOP NOTES:

1) FOR GENERAL NOTES SEE SHT. GN1
2) FOR GIRDER SUB-ASSEMBLY SEE SHT. 108
3) FOR STIFF. DETAILS SEE SHT. 101
4) FOR BLOCKING DIAGRAM SEE SHT. 136
5) FOR HEAT CURVE DIAGRAM SEE SHT. 132
6) ▨ INDICATES OIL, NO PAINT (N.S./F.S. & EDGES)

BILL OF MATERIAL

	Qnty.	Material	Length	Mark Temp.	Mark Ship	Wt.	Cut From	Remarks
2	1	GIRDER		122PG3.03				
3	1	GIRDER SUB-ASSY		A108				
4	14	DIAF STIFF		d101				
6	210	HD STUDS 7/8	0'-7				108-1	A108

TEXAS DEPARTMENT OF TRANSPORTATION
~~APPROVED~~
DIVISION OF BRIDGES AND STRUCTURES
~~JAN 07 1993~~

FOR APPROVAL
NOV 12 '92
~~NOT FOR CONSTRUCTION~~

~~APPROVAL OF THIS DRAWING DOES NOT RELIEVE THE CONTRACTOR OF THE RESPONSIBILITY FOR THE CORRECTNESS OF DETAIL~~

REVISION	DATE	DESCRIPTION OF REVISION
NO. 1		
NO. 2		
NO. 3		
NO. 4		
NO. 5		

PRINTING: Req'd | For | Date

Bolts Holes: 15/16 ø Unless Noted
Shop Paint SEE SHT GN1
Fab Spec AS NTD Inspection
Architect
Erection By Field Connections

HIRSCHFELD STEEL CO. INC.
112 WEST 29TH SAN ANGELO, TEXAS 76903
PHONE (915) 653-3211

DESCRIPTION 430'-0 PLATE GIRDER UNIT
STRUCTURE US 83/281 INTERCHANGE RAMP #4
LOCATION HIDALGO COUNTY
CUSTOMER GILBERT TEXAS CONSTRUCTION
SHIP TO
Customer's Order No.
Dwg. By CRT Date 10/92
Checked By JC Date 10-92

SHEET 122 OF
JOB NO. 92-109

G0109

FED. ROAD DIV. NO.	STATE	FEDERAL AID PROJECT NO.				
6	TX.	NH 92(50)M				
STATE DIST. NO.	COUNTY	CONTROL NO.	SECTION NO.	JOB NO.	HIGHWAY NO.	
21	HIDALGO	39	17	97	83/281	

APV 11-12

CE 92-14 (LINE # 3)

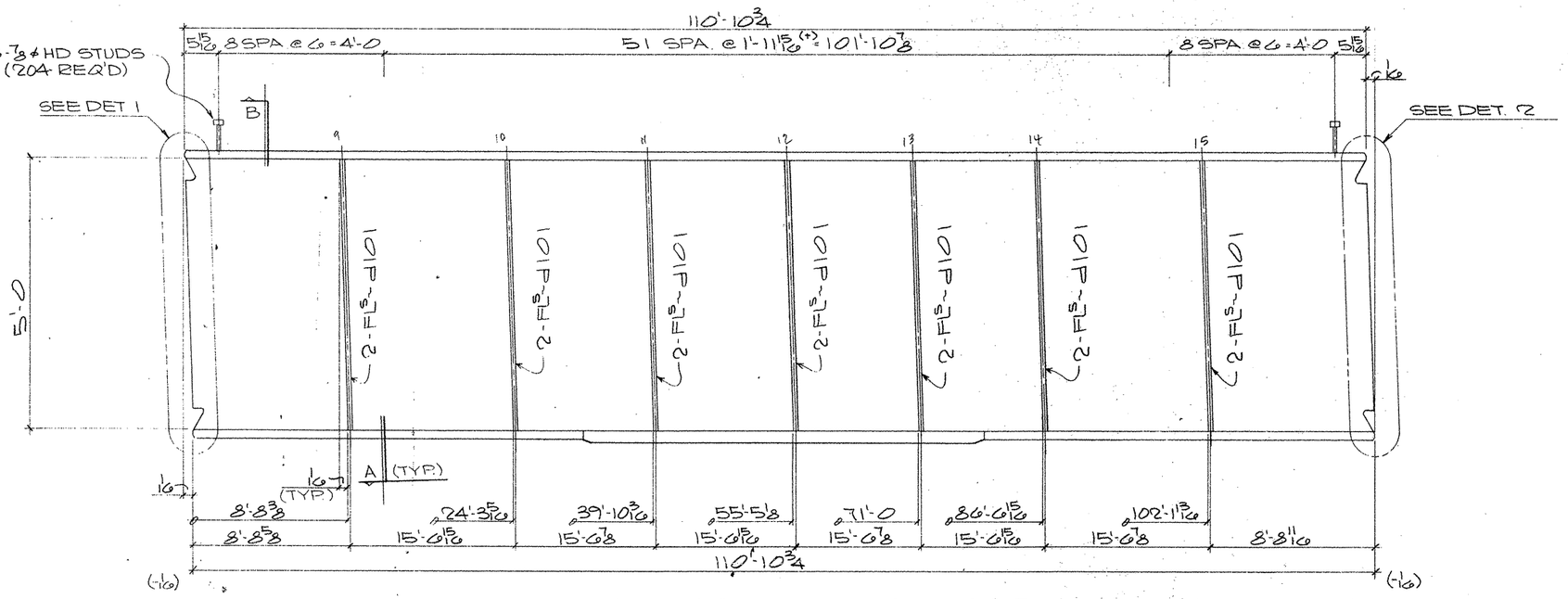

ONE GIRDER MK- 121PG3.02

(APPROX. WT. = TONS)

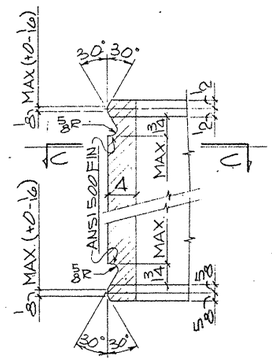

DETAIL - 1

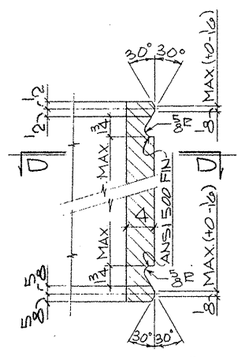

DETAIL - 2

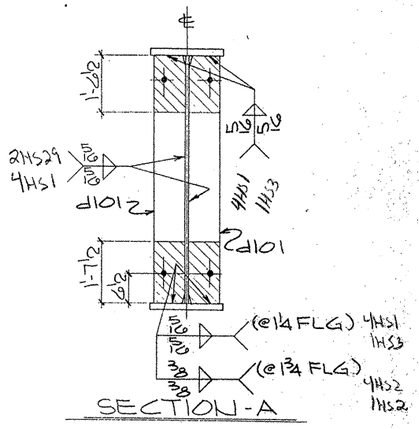

SECTION - A

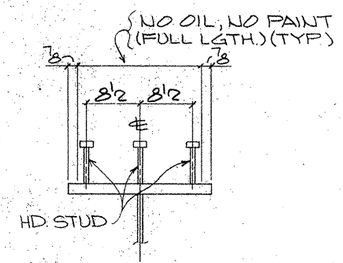

SECTION - B
(TYP STUD SECT.)

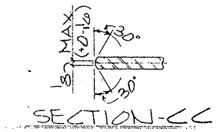

SECTION - CC

SECTION - DD

SHOP NOTES:

1) FOR GENERAL NOTES SEE SHT. GN1
2) FOR GIRDER SUB-ASSEMBLY SEE SHT. 107
3) FOR STIFF. DETAILS SEE SHT. 101
4) FOR BLOCKING DIAGRAM SEE SHT. 135
5) FOR HEAT CURVE DIAGRAM SEE SHT. 132
6) ////// INDICATES OIL, NO PAINT (N.S./F.S. & EDGES)

BILL OF MATERIAL

	Qnty	Material	Length	Mark Temp	Mark Ship.	Wt	Cut From	Remarks
1								
2	1	GIRDER		121PG3.02				
3	1	GIRDER SUB-ASSY		A107				
4	14	DIAF STIFF		d101				
5								
6	204	HD STUDS 7/8	0'-7				108-1	A108
7								
8								
9								
10								
11								
12								
13								
14								
15								
16								
17								
18								
19								
20								
21								
22								
23								
24								
25								
26								
27								
28								
29								
30								
31								
32								
33								
34								
35								
36								
37								
38								
39								
40								
41								
42								
43								
44								
45								
46								
47								
48								
49								
50								
51								
52								
53								
54								
55								
56								
57								
58								
59								
60								

TEXAS DEPARTMENT OF TRANSPORTATION
APPROVED
DIVISION OF BRIDGES AND STRUCTURES
JAN 07 1993
APPROVAL OF THIS DRAWING DOES NOT RELIEVE THE CONTRACTOR OF THE RESPONSIBILITY FOR THE CORRECTNESS OF DETAIL

FOR APPROVAL
NOV 12 '92
NOT FOR CONSTRUCTION

REVISION	DATE	DESCRIPTION OF REVISION
NO. 1		
NO. 2		
NO. 3		
NO. 4		
NO. 5		

PRINTING Req'd	For	Date

Bolts Holes 15/16 ø Unless Noted
Shop Paint SEE SHT. GN1
Fab Spec AS NTD Inspection
Architect
Erection By Field Connections

HIRSCHFELD STEEL CO. INC.
112 WEST 29TH SAN ANGELO. TEXAS 76903
PHONE (915) 653-3211

DESCRIPTION	430'-0 PLATE GIRDER UNIT
STRUCTURE	US 83/281 INTERCHANGE RAMP "A"
LOCATION	HIDALGO COUNTY
CUSTOMER	GILBERT TEXAS CONSTRUCTION
SHIP TO	
Customer's Order No.	
Dwg. By CRT	Date 10/92
Checked By JC	Date 10-92

SHEET 121 OF
JOB NO. 92-109

G0109

FED. ROAD DIV. NO.	STATE	FEDERAL AID PROJECT NO.				
6	TX.	NH 92(50)M				
STATE DIST. NO.	COUNTY	CONTROL NO.	SECTION NO.	JOB NO.	HIGHWAY NO.	
21	HIDALGO	39	17	97	83/281	

APV 11-12

CE 92-14 (LINE # 7)

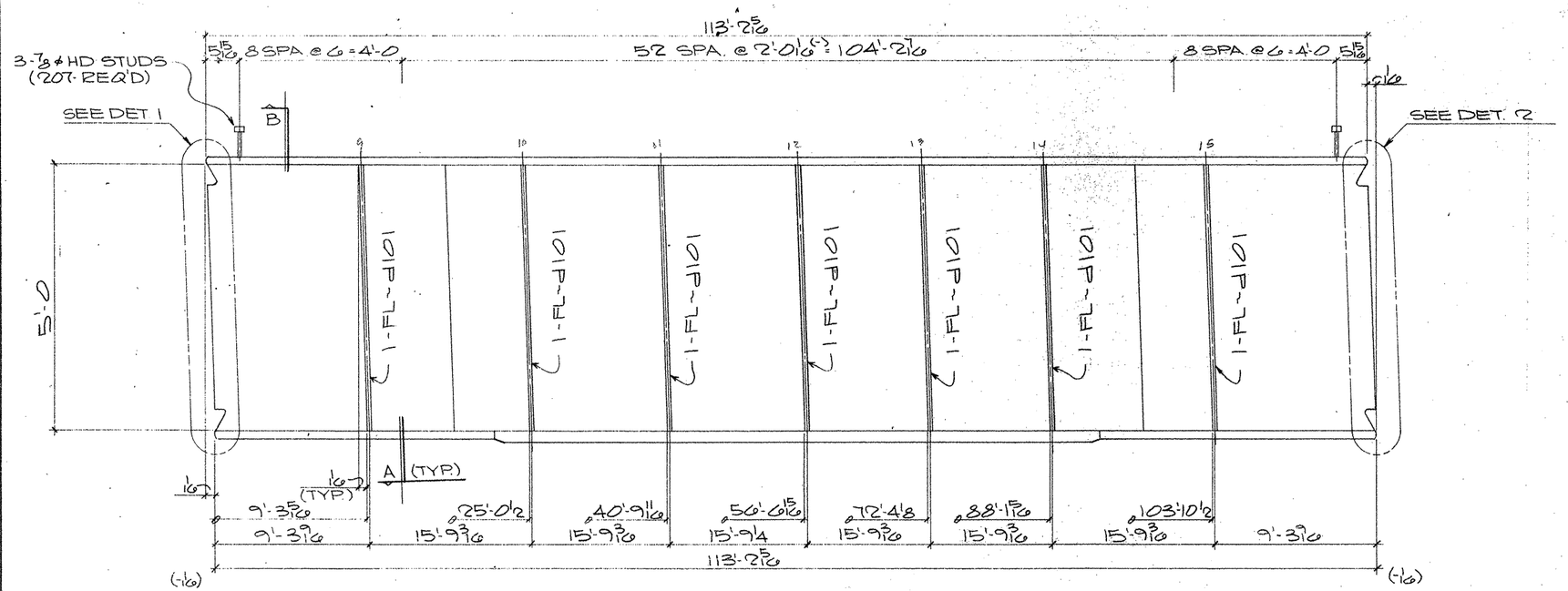

ONE GIRDER MK- 120PG3.01

(APPROX. WT. = TONS)

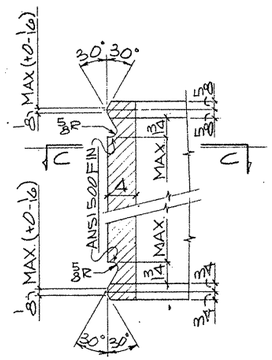

DETAIL - 1

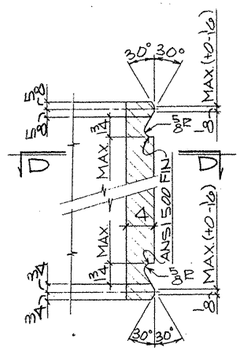

DETAIL - 2

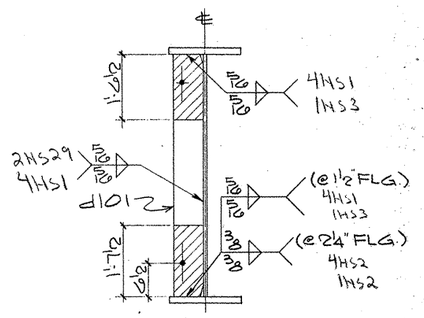

SECTION - A

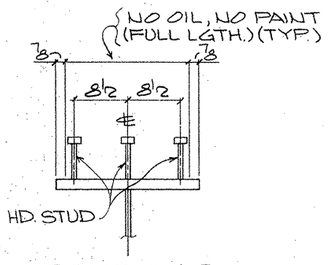

SECTION-B

(TYP. STUD SECT.)

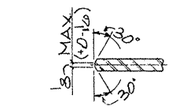

SECTION - CC

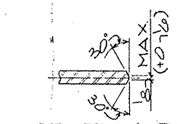

SECTION - DD

SHOP NOTES:

1) FOR GENERAL NOTES SEE SHT. GN1
2) FOR GIRDER SUB-ASSEMBLY SEE SHT. 106
3) FOR STIFF. DETAILS SEE SHT. 101
4) FOR BLOCKING DIAGRAM SEE SHT. 134
5) FOR HEAT CURVE DIAGRAM SEE SHT. 132
6) ▨ INDICATES OIL, NO PAINT (N.S./F.S. & EDGES)

BILL OF MATERIAL

	Qnty.	Material	Length	Mark Temp	Mark Ship.	Wt.	Cut From	Remarks
2	1	GIRDER		120PG3.01				
3	1	GIRDER SUB-ASSY		A106				
4	7	DIAF STIFF		d101				
6	207	HD STUDS 7/8	0'-7				108-1	A108

TEXAS DEPARTMENT OF TRANSPORTATION
APPROVED
DIVISION OF BRIDGES AND STRUCTURES
JAN 07 1993

APPROVAL OF THIS DRAWING DOES NOT RELIEVE THE CONTRACTOR OF THE RESPONSIBILITY FOR THE CORRECTNESS OF DETAIL.

FOR APPROVAL
NOV 12 '92
NOT FOR CONSTRUCTION

REVISION	DATE	DESCRIPTION OF REVISION
NO. 1		
NO. 2		
NO. 3		
NO. 4		
NO. 5		

PRINTING: Req'd | For | Date

Bolts: Holes. 15/16 ø Unless Noted
Shop Paint SEE SHT. GN1
Fab. Spec. AS NTD Inspection
Architect
Erection By Field Connections

HIRSCHFELD STEEL CO. INC.
112 WEST 29TH SAN ANGELO, TEXAS 76903
PHONE (915) 653-3211

DESCRIPTION 430'-0 PLATE GIRDER UNIT
STRUCTURE US 83/281 INTERCHANGE RAMP "A"
LOCATION HIDALGO COUNTY
CUSTOMER GILBERT TEXAS CONSTRUCTION
SHIP TO
Customer's Order No.
Dwg. By CRT Date 10/9/92
Checked By JC Date 10-92
SHEET 120 OF
JOB NO. 92-109

FED. ROAD DIV. NO.	STATE	FEDERAL AID PROJECT NO.			
6	TX.	NH 92(50)M			
STATE DIST. NO.	COUNTY	CONTROL NO.	SECTION NO.	JOB NO.	HIGHWAY NO.
21	HIDALGO	39	17	97	83/281

G0109

— APV 11-12

CE 92-14 (LINE # 1)

225469

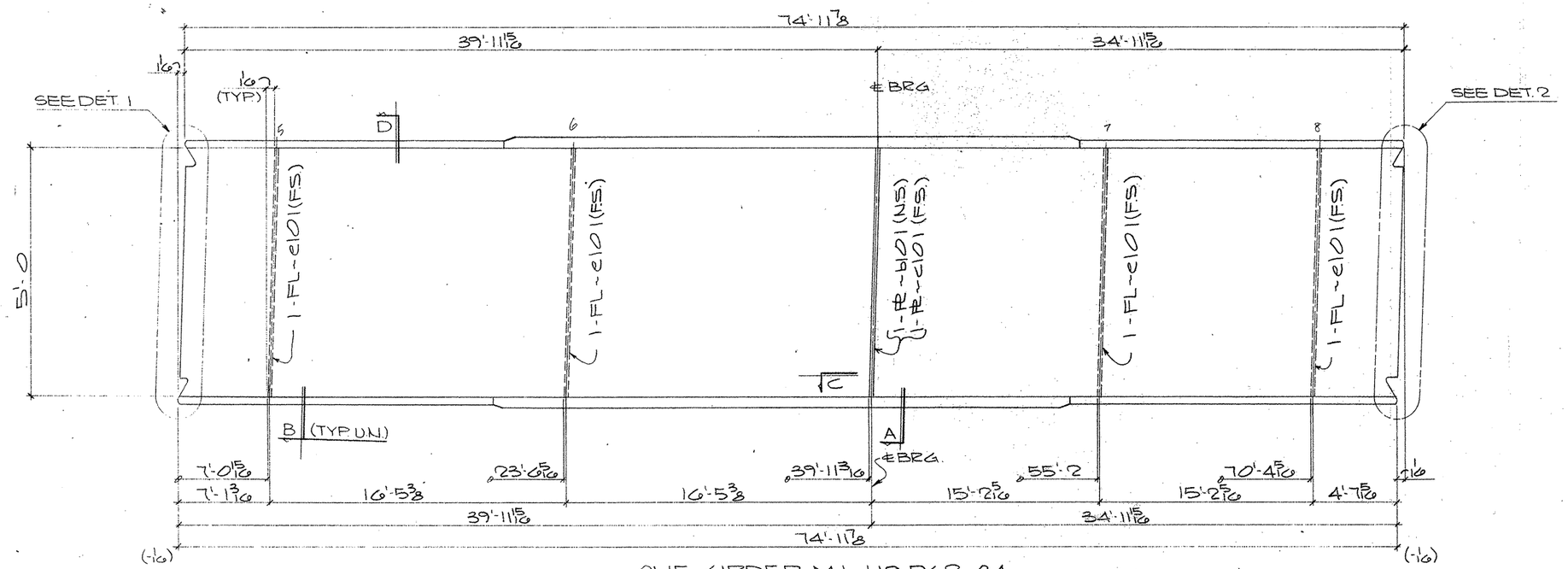

ONE GIRDER MK~119 PG2.04

(APPROX. WT. = TONS)

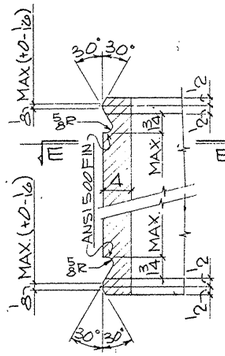

DETAIL-1

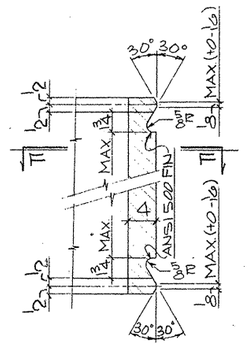

DETAIL-2

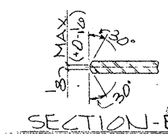

SECTION-E'E

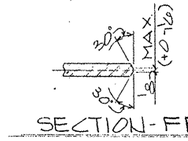

SECTION-F'F

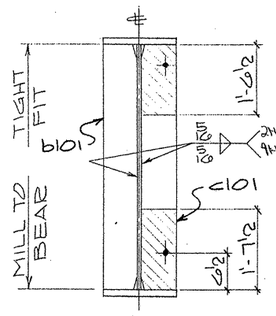

SECTION-A

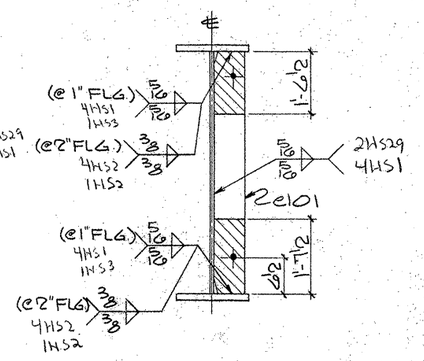

SECTION-B

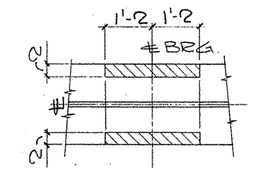

SECTION-C

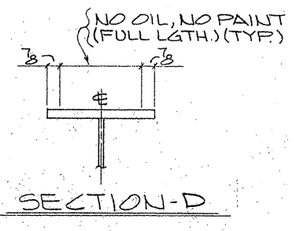

SECTION-D

SHOP NOTES:

1) FOR GENERAL NOTES SEE SHT. GN1
2) FOR GIRDER SUB-ASSEMBLY SEE SHT. 105
3) FOR STIFF. DETAILS SEE SHT. 101
4) FOR BLOCKING DIAGRAM SEE SHT. 137
5) FOR HEAT CURVE DIAGRAM SEE SHT. 133
6) ▨ INDICATES OIL, NO PAINT (N.S./F.S. & EDGES)

BILL OF MATERIAL

	Qnty	Material	Length	Mark Temp	Mark Ship	Wt.	Cut From	Remarks
1								
2	1	GIRDER			119PG2.04			
3	1	GIRDER SUB-ASSY		B105				
4	1	BRG STIFF		b101				
5	1	BRG STIFF		c101				
6	4	DIAF STIFF		e101				
7–60								

TEXAS DEPARTMENT OF TRANSPORTATION
APPROVED
DIVISION OF BRIDGES AND STRUCTURES
JAN 07 1993

APPROVAL OF THIS DRAWING DOES NOT RELIEVE THE CONTRACTOR OF THE RESPONSIBILITY FOR THE CORRECTNESS OF DETAIL.

FOR APPROVAL
NOV 12 '92
NOT FOR CONSTRUCTION

REVISION	DATE	DESCRIPTION OF REVISION
NO. 1		
NO. 2		
NO. 3		
NO. 4		
NO. 5		

PRINTING: Req'd | For | Date

Bolts Holes 15/16 ø Unless Noted
Shop Paint SEE SHT. GN1
Fab. Spec. AS NTD Inspection
Architect
Erection By Field Connections

HIRSCHFELD STEEL CO. INC.
112 WEST 29TH SAN ANGELO, TEXAS 76903
PHONE (915) 653-3211

DESCRIPTION 430'-0" PLATE GIRDER UNIT
STRUCTURE US 83/281 INTERCHANGE RAMP "A"
LOCATION HIDALGO COUNTY
CUSTOMER GILBERT TEXAS CONSTRUCTION
SHIP TO
Customer's Order No.
Dwg. By CRT Date 10/92
Checked By JC Date 10-92
SHEET 119 OF
JOB NO 92-109

G0109

FED. ROAD DIV. NO.	STATE	FEDERAL AID PROJECT NO.			
6	TX.	NH 92(50)M			
STATE DIST. NO.	COUNTY	CONTROL NO.	SECTION NO.	JOB NO.	HIGHWAY NO.
21	HIDALGO	39	17	97	83/281

APV 11-12

CE92-14 (LINE #4)

322640

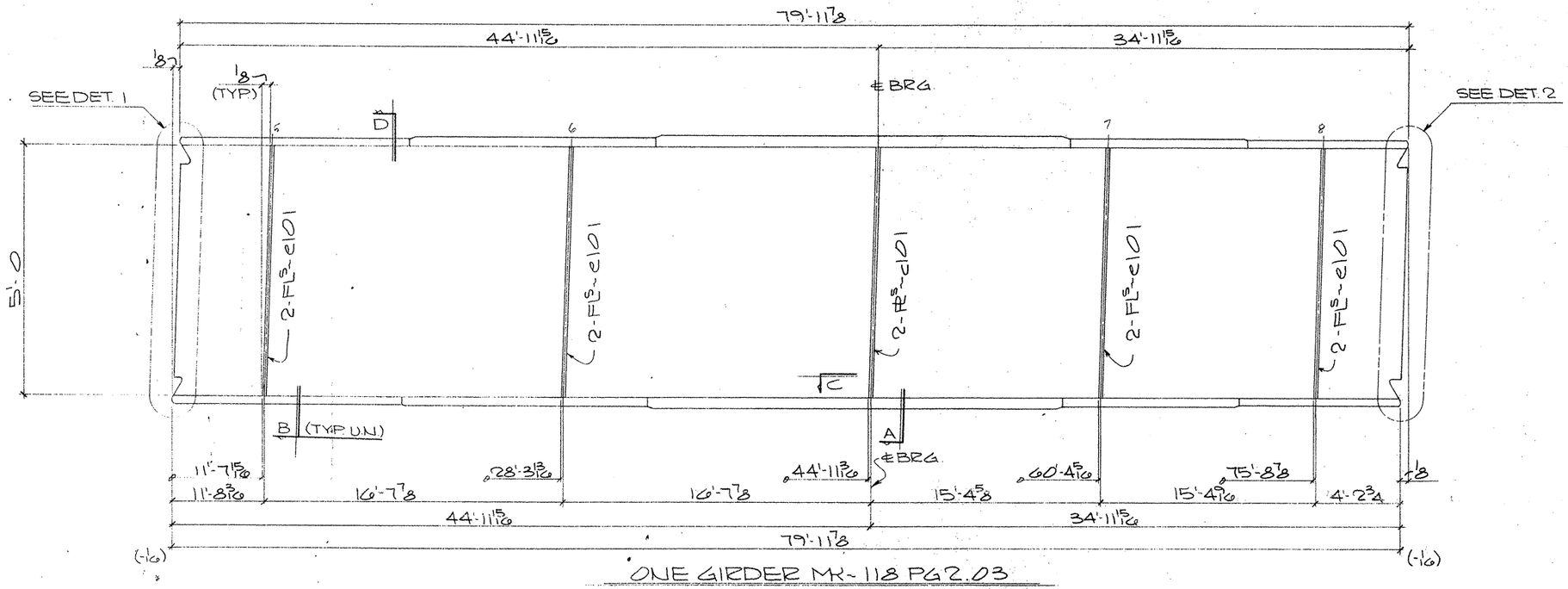

ONE GIRDER MK-118 PG2.03

(APPROX. WT. = TONS)

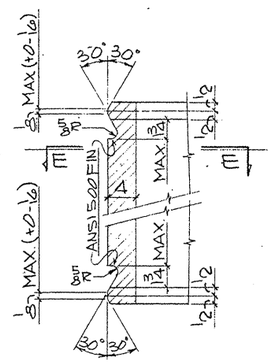

DETAIL-1

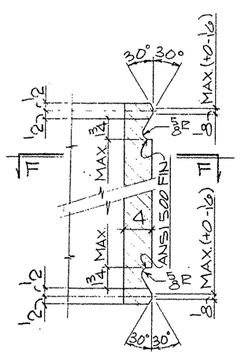

DETAIL-2

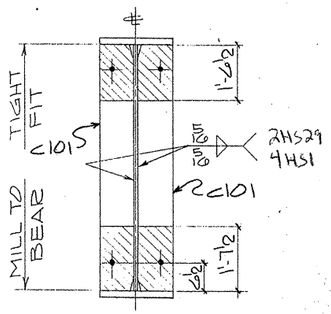

SECTION-A

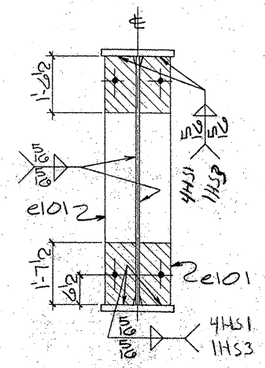

SECTION-B

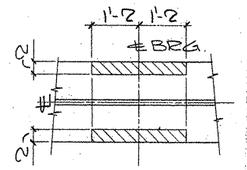

SECTION-C

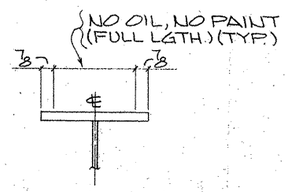

SECTION-D

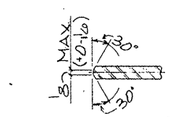

SECTION-EE

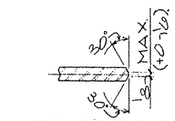

SECTION-FF

SHOP NOTES:

1) FOR GENERAL NOTES SEE SHT. GN1
2) FOR GIRDER SUB-ASSEMBLY SEE SHT. 104
3) FOR STIFF. DETAILS SEE SHT. 101
4) FOR BLOCKING DIAGRAM SEE SHT. 136
5) FOR HEAT CURVE DIAGRAM SEE SHT. 132
6) ▨ INDICATES OIL, NO PAINT (N.S./F.S. & EDGES)

BILL OF MATERIAL

	Qnty.	Material	Length	Mark Temp.	Mark Ship.	Wt.	Cut From	Remarks
2	1	GIRDER			118PG2.03			
3	1	GIRDER SUB-ASSY		B104				
4	2	BRG STIFF		e101				
6	8	DIAF STIFF		e101				

TEXAS DEPARTMENT OF TRANSPORTATION
APPROVED
DIVISION OF BRIDGES AND STRUCTURES
JAN 07 1993

APPROVAL OF THIS DRAWING DOES NOT RELIEVE THE CONTRACTOR OF THE RESPONSIBILITY FOR THE CORRECTNESS OF DETAIL

FOR APPROVAL
NOV 12 '92
NOT FOR CONSTRUCTION

REVISION	DATE	DESCRIPTION OF REVISION
NO. 1		
NO. 2		
NO. 3		
NO. 4		
NO. 5		

PRINTING Reqd	For	Date

Bolts Holes: STD Unless Noted
Shop Paint SEE SHT GN1
Fab. Spec AS.N.T.D. Inspection
Architect
Erection By Field Connections

HIRSCHFELD STEEL CO. INC.
112 WEST 29TH SAN ANGELO, TEXAS 76903
PHONE (915) 653-3211

DESCRIPTION 430'-0 PLATE GIRDER UNIT
STRUCTURE US 83/281 INTERCHANGE RAMP "A"
LOCATION HIDALGO COUNTY
CUSTOMER GILBERT TEXAS CONSTRUCTION
SHIP TO
Customer's Order No.
Dwg. By CBT Date 10/92
Checked By JC Date 10-92
SHEET 118 OF
JOB NO. 92-109

90109

FED. ROAD DIV. NO.	STATE	FEDERAL AID PROJECT NO.			
6	TX.	NH 92(50)M			
STATE DIST. NO.	COUNTY	CONTROL NO.	SECTION NO.	JOB NO.	HIGHWAY NO.
21	HIDALGO	39	17	97	83/281

APV 11-12

CE92-14 (LINE # 3)

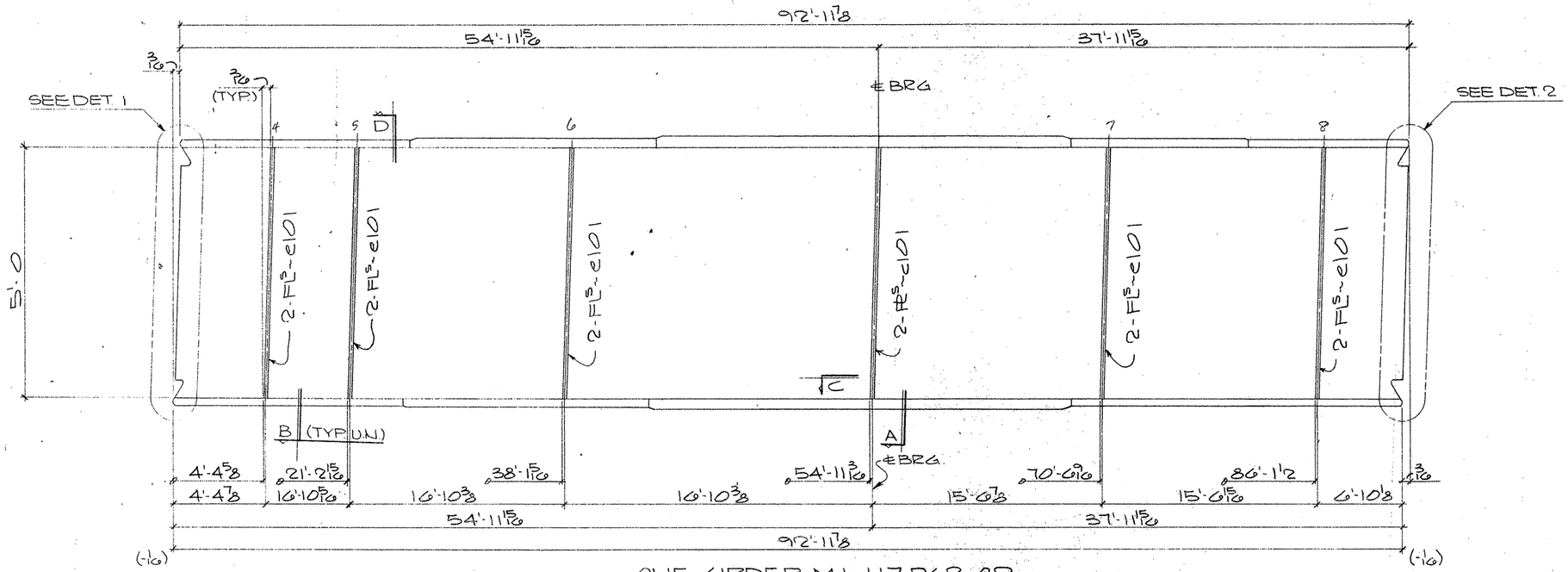

ONE GIRDER MK-117PG2.02
(APPROX. WT. = TONS)

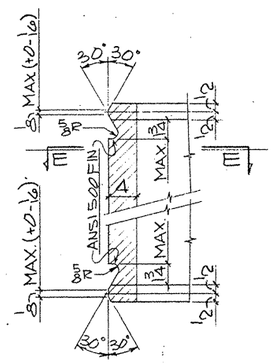

DETAIL-1

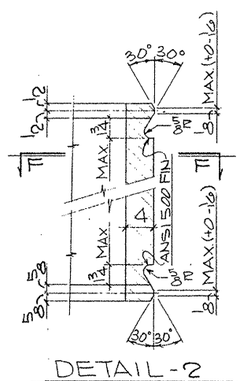

DETAIL-2

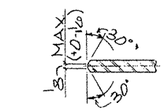

SECTION-EE

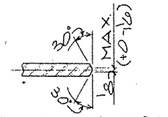

SECTION-FF

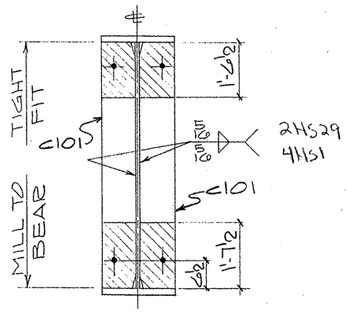

SECTION-A

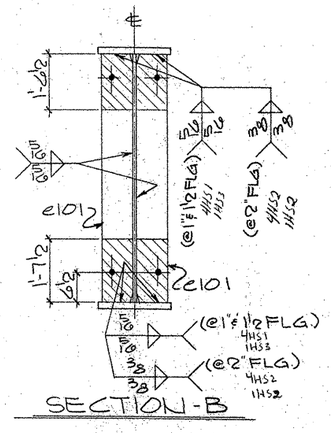

SECTION-B

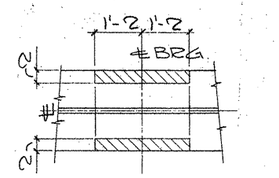

SECTION-C

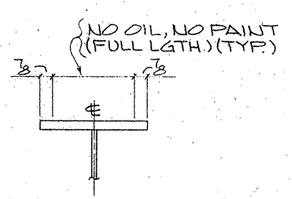

SECTION-D

SHOP NOTES:

1) FOR GENERAL NOTES SEE SHT. GN1
2) FOR GIRDER SUB-ASSEMBLY SEE SHT. 103
3) FOR STIFF. DETAILS SEE SHT. 101
4) FOR BLOCKING DIAGRAM SEE SHT. 135
5) FOR HEAT CURVE DIAGRAM SEE SHT. 132
6) ▨ INDICATES OIL, NO PAINT (N.S./F.S. & EDGES)

BILL OF MATERIAL

	Qnty.	Material	Length	Mark Temp.	Mark Ship.	Wt.	Cut From	Remarks
1								
2	1	GIRDER			117PG2.02			
3	1	GIRDER SUB-ASSY		B103				
4	2	BRG STIFF		e101				
5								
6	10	DIAF STIFF		e101				
7–60								

TEXAS DEPARTMENT OF TRANSPORTATION
APPROVED
DIVISION OF BRIDGES AND STRUCTURES
JAN 07 1993
APPROVAL OF THIS DRAWING DOES NOT RELIEVE THE CONTRACTOR OF THE RESPONSIBILITY FOR THE CORRECTNESS THEREOF

FOR APPROVAL
NOV 12 '92
NOT FOR CONSTRUCTION

REVISION	DATE	DESCRIPTION OF REVISION
NO. 1		
NO. 2		
NO. 3		
NO. 4		
NO. 5		

PRINTING

Req'd	For	Date

Bolts Holes 15/16 ⌀ Unless Noted
Shop Paint SEE SHT. GN1
Fab Spec AS MTD Inspection
Architect
Erection By Field Connections

HIRSCHFELD STEEL CO. INC.
112 WEST 29TH SAN ANGELO, TEXAS 76903
PHONE (915) 653-3211

DESCRIPTION 430'-0 PLATE GIRDER UNIT
STRUCTURE US 83/281 INTERCHANGE RAMP "A"
LOCATION HIDALGO COUNTY
CUSTOMER GILBERT TEXAS CONSTRUCTION
SHIP TO
Customer's Order No.
Dwg. By CRT Date 10/92
Checked By JC Date 10-92
SHEET 117 OF
JOB NO 92-109

G0109

FED. ROAD DIV. NO.	STATE	FEDERAL AID PROJECT NO.			
6	TX.	NH 92(50)M			
STATE DIST. NO.	COUNTY	CONTROL NO.	SECTION NO.	JOB NO.	HIGHWAY NO.
21	HIDALGO	39	17	97	83/281

APV 11-12

CE 92-14 (LINE # 2)

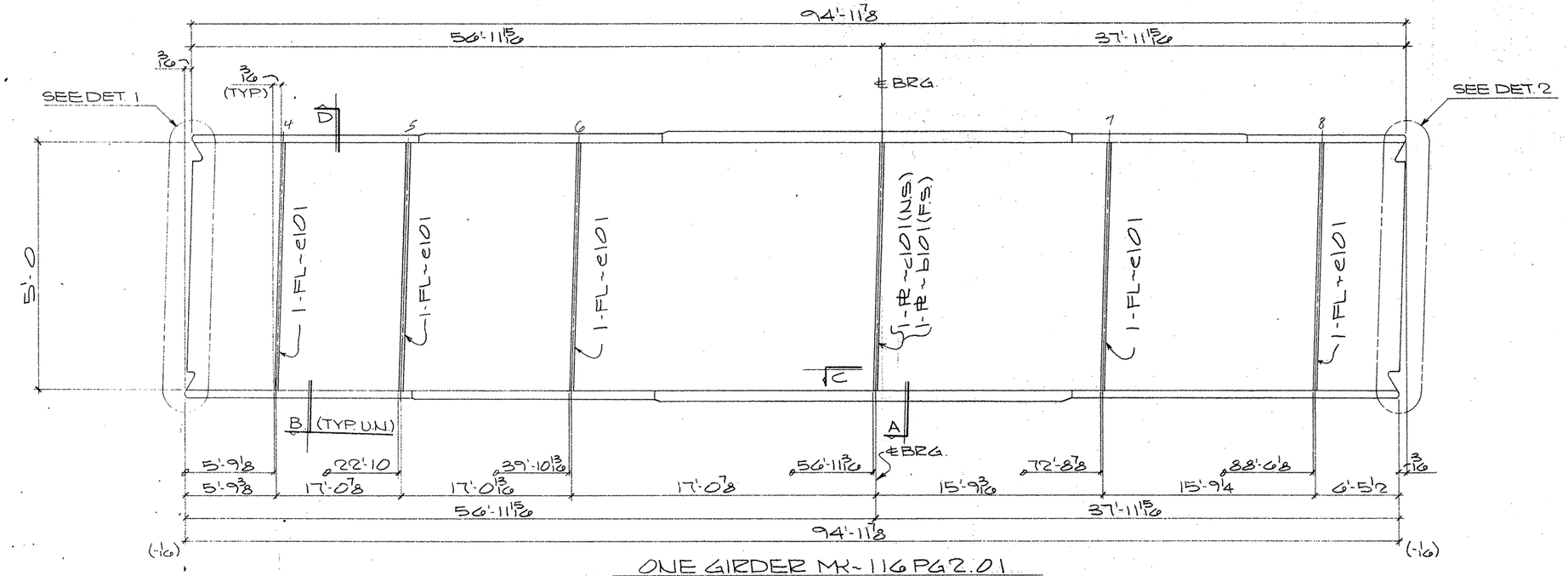

ONE GIRDER MK~116PG2.01

(APPROX. WT. = TONS)

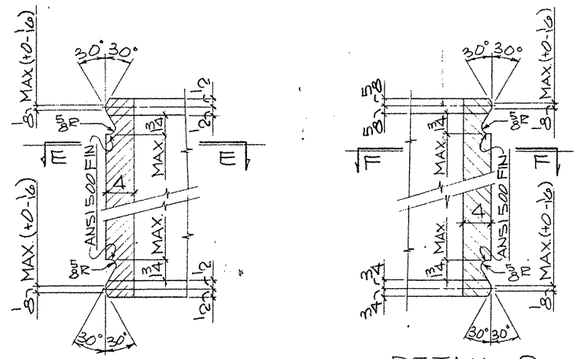

DETAIL-1

DETAIL-2

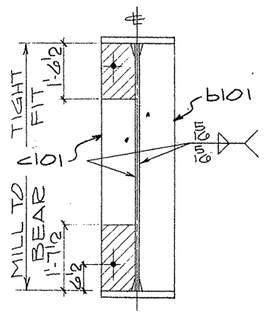

SECTION-A

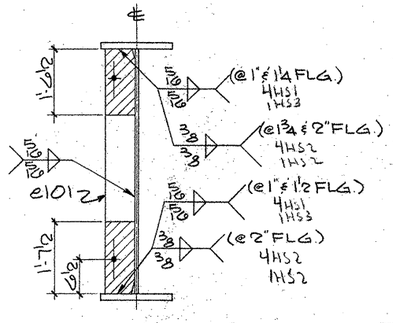

SECTION-B

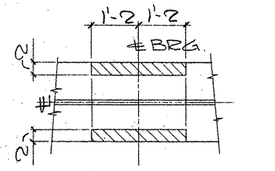

SECTION-C

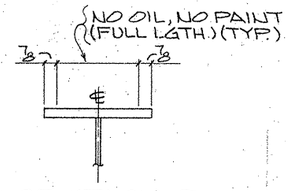

SECTION-D

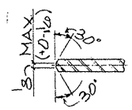

SECTION-EE

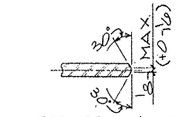

SECTION-FF

SHOP NOTES:

1) FOR GENERAL NOTES SEE SHT. GN1
2) FOR GIRDER SUB-ASSEMBLY SEE SHT. 102
3) FOR STIFF. DETAILS SEE SHT. 101
4) FOR BLOCKING DIAGRAM SEE SHT. 134
5) FOR HEAT CURVE DIAGRAM SEE SHT. 132
6) ▨ INDICATES OIL, NO PAINT (N.S./F.S. & EDGES)

BILL OF MATERIAL

	Qnty.	Material	Length	Mark Temp.	Mark Ship.	Wt.	Cut From	Remarks
1								
2	1	GIRDER			116PG2.01			
3	1	GIRDER SUB-ASSY		B102				
4	1	BRG STIFF		b101				
5	1	BRG STIFF		c101				
6	5	DIAF STIFF		e101				
7–60								

TEXAS DEPARTMENT OF TRANSPORTATION
APPROVED
DIVISION OF BRIDGES AND STRUCTURES
JAN 07 1993

APPROVAL OF THIS DRAWING DOES NOT RELIEVE THE CONTRACTOR OF THE RESPONSIBILITY FOR THE CORRECTNESS OF DETAIL.

FOR APPROVAL
NOV 12 92
NOT FOR CONSTRUCTION

REVISION	DATE	DESCRIPTION OF REVISION
NO. 1		
NO. 2		
NO. 3		
NO. 4		
NO. 5		

PRINTING	Reqd	For	Date

Bolts Holes, 15/16 ϕ Unless Noted
Shop Paint SEE SHT. GN1
Fab Spec ASTD Inspection
Architect
Erection By Field Connections

HIRSCHFELD STEEL CO. INC.
112 WEST 29TH SAN ANGELO, TEXAS 76903
PHONE (915) 653-3211

DESCRIPTION 430'-0 PLATE GIRDER UNIT
STRUCTURE US 83/281 INTERCHANGE RAMP #4
LOCATION HIDALGO COUNTY
CUSTOMER GILBERT TEXAS CONSTRUCTION
SHIP TO
Customer's Order No.
Dwg. By CRT Date 10/92
Checked By JC Date 10-92

SHEET 116 OF
JOB NO 92-109

60109

FED. ROAD DIV. NO.	STATE	FEDERAL AID PROJECT NO.			
6	TX.	NH 92(50)M			
STATE DIST. NO.	COUNTY	CONTROL NO.	SECTION NO.	JOB NO.	HIGHWAY NO.
21	HIDALGO	39	17	97	83/281

APV 11-12

CE92-14 (LINE # 1)

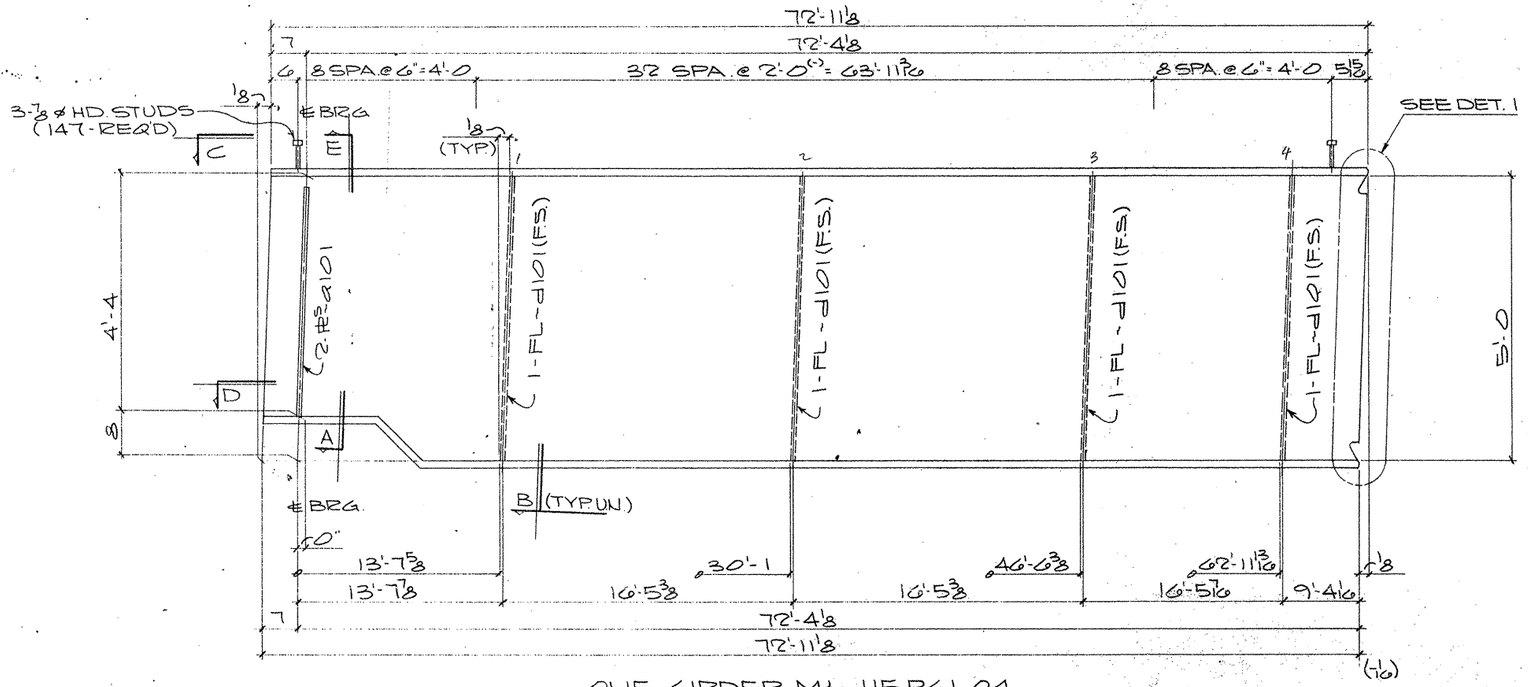

ONE GIRDER MK-115PG1.04
(APPROX. WT. = TONS)

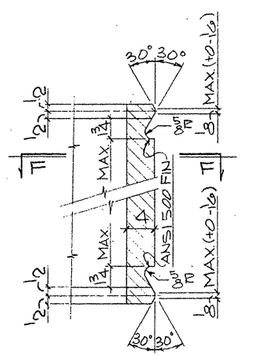

DETAIL-1

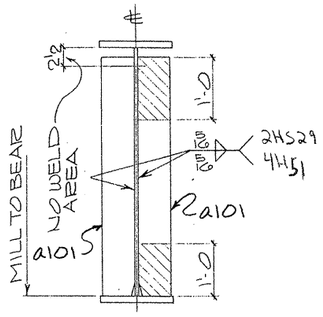

SECTION-A

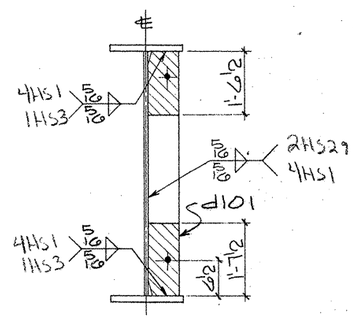

SECTION-B

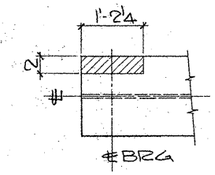

VIEW-C

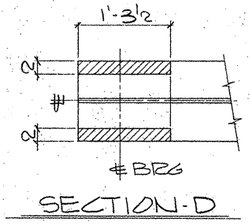

SECTION-D

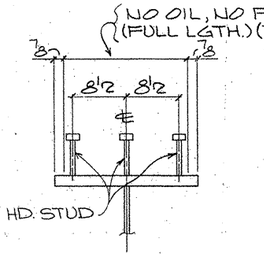

SECTION-E
(TYP. STUD SECT.)

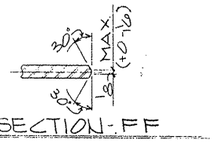

SECTION-FF

SHOP NOTES:

1) FOR GENERAL NOTES SEE SHT. GN1
2) FOR GIRDER SUB-ASSEMBLY SEE SHT. 105
3) FOR STIFF. DETAILS SEE SHT. 101
4) FOR BLOCKING DIAGRAM SEE SHT. 137
5) FOR HEAT CURVE DIAGRAM SEE SHT. 132
6) ▨ INDICATES OIL, NO PAINT (N.S./F.S. & EDGES)

BILL OF MATERIAL

	Qnty	Material	Length	Mark Temp	Mark Ship.	Wt	Cut From	Remarks
1								
2								
3	1	GIRDER		115PG1.04				
4	1	GIRDER SUB-ASSY		A105				
5	2	BRG STIFF		d101				
6	4	DIAF STIFF		d101				
7								
8	147	HD STUD 7/8	0'-7				108-1	A108
9								
10								
11								
12								
13								
14								
15								
16								
17								
18								
19								
20								
21								
22								
23								
24								
25								
26								
27								
28								
29								
30								
31								
32								
33								
34								
35								
36								
37								
38								
39								
40								
41								
42								
43								
44								
45								
46								
47								
48								
49								
50								
51								
52								
53								
54								
55								
56								
57								
58								
59								
60								

TEXAS DEPARTMENT OF TRANSPORTATION
APPROVED
DIVISION OF BRIDGES AND STRUCTURES
JAN 07 1993

APPROVAL OF THIS DRAWING DOES NOT RELIEVE THE CONTRACTOR OF THE RESPONSIBILITY FOR THE CORRECTNESS OF DETAILS

FOR APPROVAL
NOV 12 '92
NOT FOR CONSTRUCTION

REVISION	DATE	DESCRIPTION OF REVISION
NO. 1		
NO. 2		
NO. 3		
NO. 4		
NO. 5		

PRINTING Req'd	For	Date

Bolts Holes: 15/16 ø Unless Noted
Shop Paint SEE SHT. GN1
Fab. Spec. AS NTD Inspection
Architect
Erection By Field Connections

HIRSCHFELD STEEL CO. INC.
112 WEST 29TH SAN ANGELO, TEXAS 76903
PHONE (915) 653-3211

DESCRIPTION	430'-0 PLATE GIRDER UNIT
STRUCTURE	US 83/281 INTERCHANGE RAMP #4
LOCATION	HIDALGO COUNTY
CUSTOMER	GILBERT TEXAS CONSTRUCTION
SHIP TO	
Customer's Order No.	
Dwg. By CET Date	10/92
Checked By JC Date	10-92

SHEET 115 OF
JOB NO. 92-109

G0109

FED. ROAD DIV. NO.	STATE	FEDERAL AID PROJECT NO.				
6	TX.	NH 92(50)M				
STATE DIST. NO.	COUNTY	CONTROL NO.	SECTION NO.	JOB NO.	HIGHWAY NO.	
21	HIDALGO	39	17	97	83/281	

APV 11-12

CE92-14 (LINE #4)

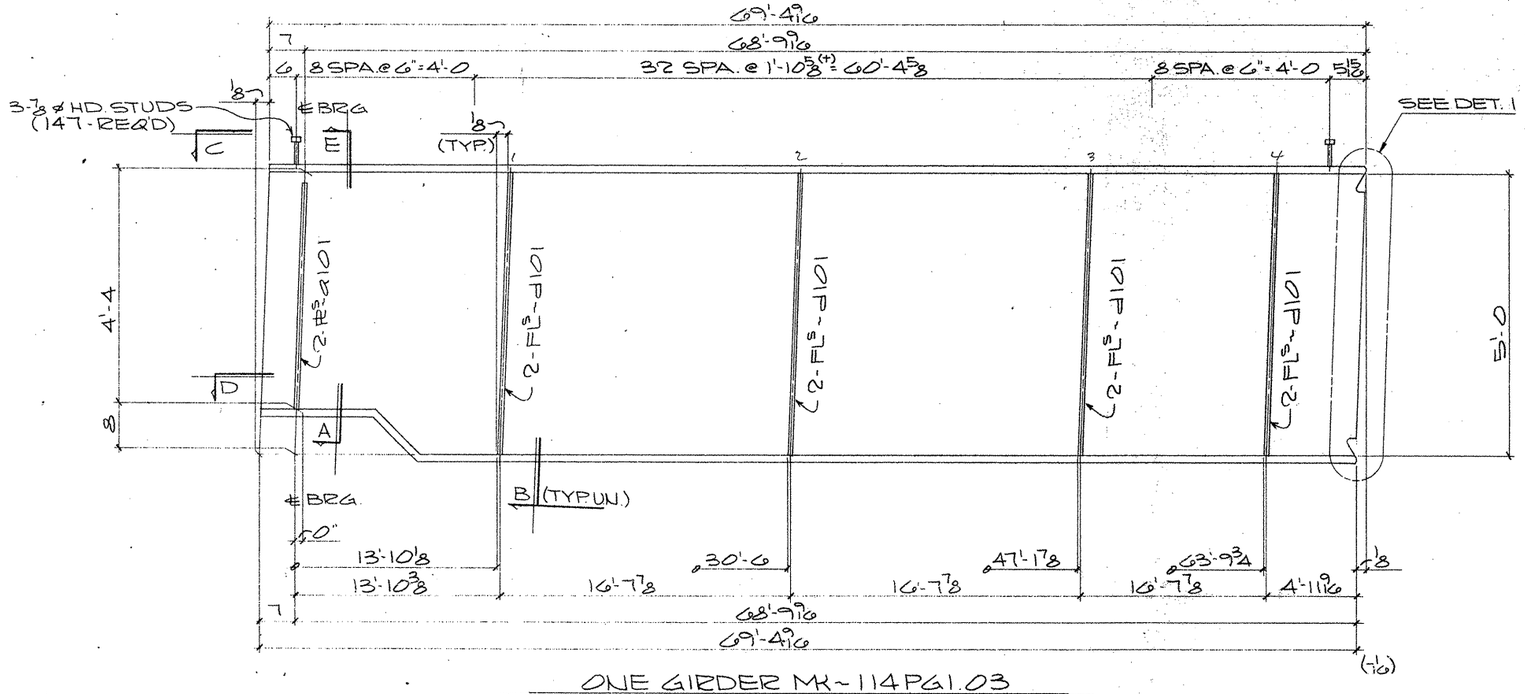

ONE GIRDER MK-114PG1.03
(APPROX. WT. = TONS)

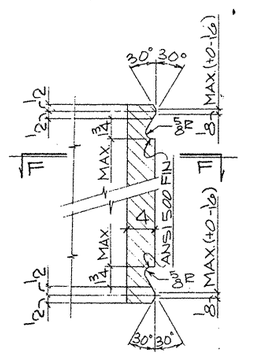

DETAIL-1

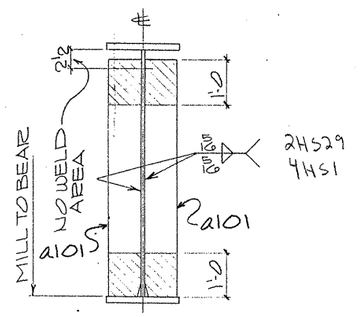

SECTION-A

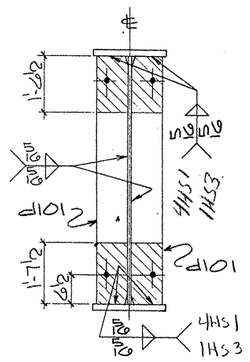

SECTION-B

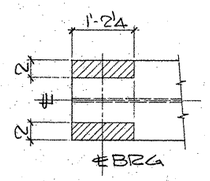

VIEW-C

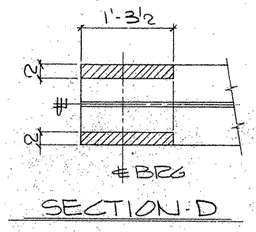

SECTION-D

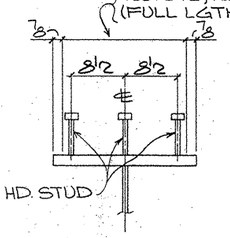

SECTION-E
(TYP. STUD SECT.)

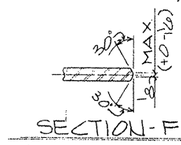

SECTION-FF

SHOP NOTES:

1) FOR GENERAL NOTES SEE SHT. GN1
2) FOR GIRDER SUB-ASSEMBLY SEE SHT. 104
3) FOR STIFF. DETAILS SEE SHT. 101
4) FOR BLOCKING DIAGRAM SEE SHT. 136
5) FOR HEAT CURVE DIAGRAM SEE SHT. 132
6) ▨ INDICATES OIL, NO PAINT (N.S./F.S. & EDGES)

G0109

FED. ROAD DIV. NO.	STATE	FEDERAL AID PROJECT NO.				
6	TX.	NH 92(50)M				
STATE DIST. NO.	COUNTY	CONTROL NO.	SECTION NO.	JOB NO.	HIGHWAY NO.	
21	HIDALGO	39	17	97	83/281	

BILL OF MATERIAL

	Qnty.	Material	Length	Mark Temp.	Mark Ship.	Wt.	Cut From	Remarks
1								
2								
3	1	GIRDER		114PG1.03				
4	1	GIRDER SUB-ASSY		A104				
5	2	BRG STIFF		d101				
6	8	DIAF STIFF		d101				
7								
8	147	HD STUD 7/8	0'-7				108-1	A108
9								
10								
11								
12								
13								
14								
15								
16								
17								
18								
19								
20								
21								
22								
23								
24								
25								
26								
27								
28								
29								
30								
31								
32								
33								
34								
35								
36								
37								
38								
39								
40								
41								
42								
43								
44								
45								
46								
47								
48								
49								
50								
51								
52								
53								
54								
55								
56								
57								
58								
59								
60								

TEXAS DEPARTMENT OF TRANSPORTATION
APPROVED
DIVISION OF BRIDGES AND STRUCTURES
JAN 07 1993

FOR APPROVAL
NOV 12 92

APPROVAL OF THIS DRAWING DOES NOT RELIEVE THE CONTRACTOR OF THE RESPONSIBILITY FOR THE CORRECTNESS

NOT FOR CONSTRUCTION

REVISION	DATE	DESCRIPTION OF REVISION
NO. 1		
NO. 2		
NO. 3		
NO. 4		
NO. 5		

PRINTING Req'd	For	Date

Bolts Holes: 15/16 ø Unless Noted
Shop Paint SEE SHT. GN1
Fab. Spec AS NTD Inspection
Architect
Erection By Field Connections

HIRSCHFELD STEEL CO. INC.
112 WEST 29TH SAN ANGELO, TEXAS 76903
PHONE (915) 653-3211

DESCRIPTION 430'-0 PLATE GIRDER UNIT
STRUCTURE US 83/281 INTERCHANGE RAMP #4
LOCATION HIDALGO COUNTY
CUSTOMER GILBERT TEXAS CONSTRUCTION
SHIP TO
Customer's Order No.
Dwg. By CRJ Date 10/92
Checked By JC Date 10-92

SHEET 114 OF
JOB NO. 92-109

APV 11-12

CE 92-14 (NHF*2)

322460

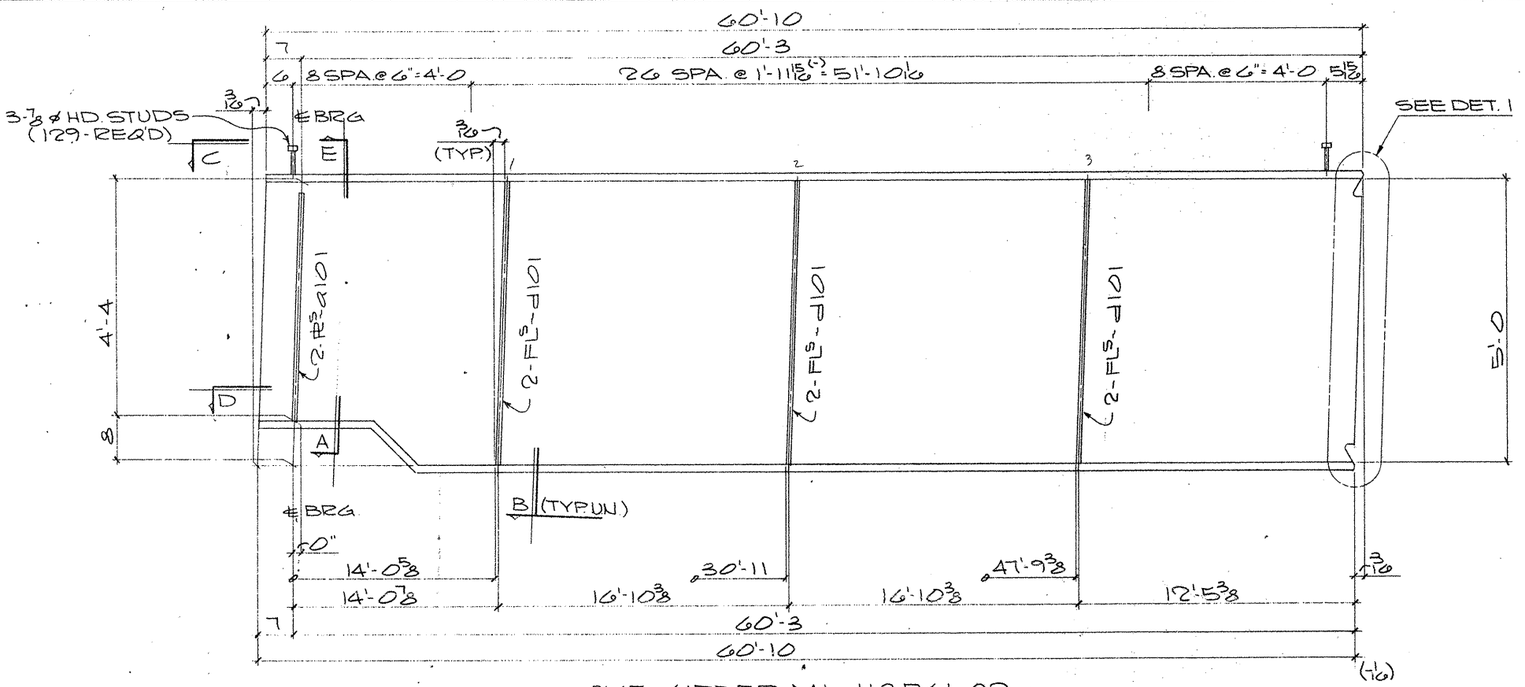

ONE GIRDER MK-113PG1.02

(APPROX. WT. = TONS)

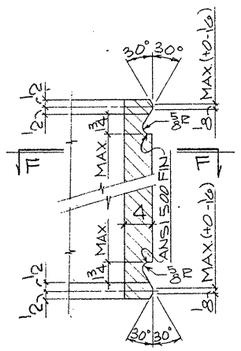

DETAIL-1

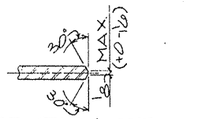

SECTION-FF

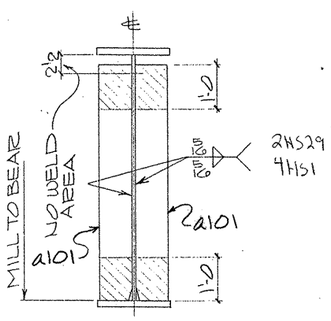

SECTION-A

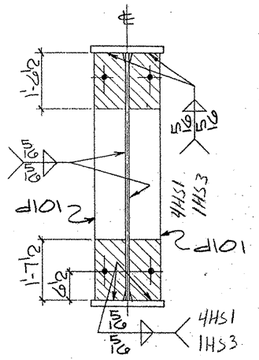

SECTION-B

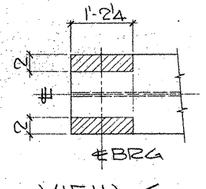

VIEW-C

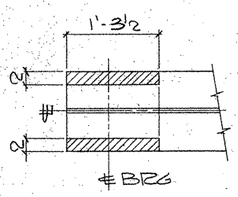

SECTION-D

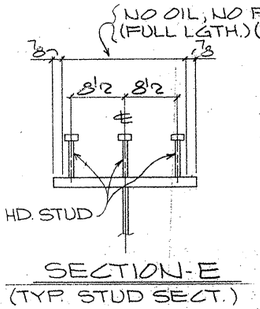

SECTION-E

(TYP. STUD SECT.)

SHOP NOTES:

1) FOR GENERAL NOTES SEE SHT. G1.1
2) FOR GIRDER SUB-ASSEMBLY SEE SHT. 103
3) FOR STIFF. DETAILS SEE SHT. 101
4) FOR BLOCKING DIAGRAM SEE SHT. 135
5) FOR HEAT CURVE DIAGRAM SEE SHT. 132
6) ▨ INDICATES OIL, NO PAINT (N.S./F.S. & EDGES)

BILL OF MATERIAL

	Qnty	Material	Length	Mark Temp	Mark Ship	Wt.	Cut From	Remarks
3	1	GIRDER		113PG1.02				
4	1	GIRDER SUB-ASSY		A103				
5	2	BRG STIFF		d101				
6	6	DIAF STIFF		d101				
8	129	HD STUD 7/8	0'-7				108-1	A108

TEXAS DEPARTMENT OF TRANSPORTATION
APPROVED
DIVISION OF BRIDGES AND STRUCTURES
JAN 07 1993

APPROVAL OF THIS DRAWING DOES NOT RELIEVE THE CONTRACTOR OF THE RESPONSIBILITY FOR THE CORRECTNESS OF DETAILS

FOR APPROVAL
NOV 12 '92
NOT FOR CONSTRUCTION

REVISION	DATE	DESCRIPTION OF REVISION
NO. 1		
NO. 2		
NO. 3		
NO. 4		
NO. 5		

PRINTING Req'd For Date

Bolts Holes. 15/16ø Unless Noted
Shop Paint SEE SHT G1.1
Fab. Spec. AS NTD Inspection
Architect
Erection By Field Connections

HIRSCHFELD STEEL CO. INC.
112 WEST 29TH SAN ANGELO, TEXAS 76903
PHONE (915) 653-3211

DESCRIPTION 120'-0 PLATE GIRDER UNIT
STRUCTURE US 83/281 INTERCHANGE RAMP "A"
LOCATION HIDALGO COUNTY
CUSTOMER GILBERT TEXAS CONSTRUCTION
SHIP TO
Customer's Order No.
Dwg. By CRT Date 10/92
Checked By JC Date 10-92

SHEET 113 OF
JOB NO. 92-109

CE92-14 (LINE #2)

G0109

FED. ROAD DIV. NO.	STATE	FEDERAL AID PROJECT NO.			
6	TX.	NH 92(50)M			
STATE DIST. NO.	COUNTY	CONTROL NO.	SECTION NO.	JOB NO.	HIGHWAY NO.
21	HIDALGO	39	17	97	83/281

– APV 11-12

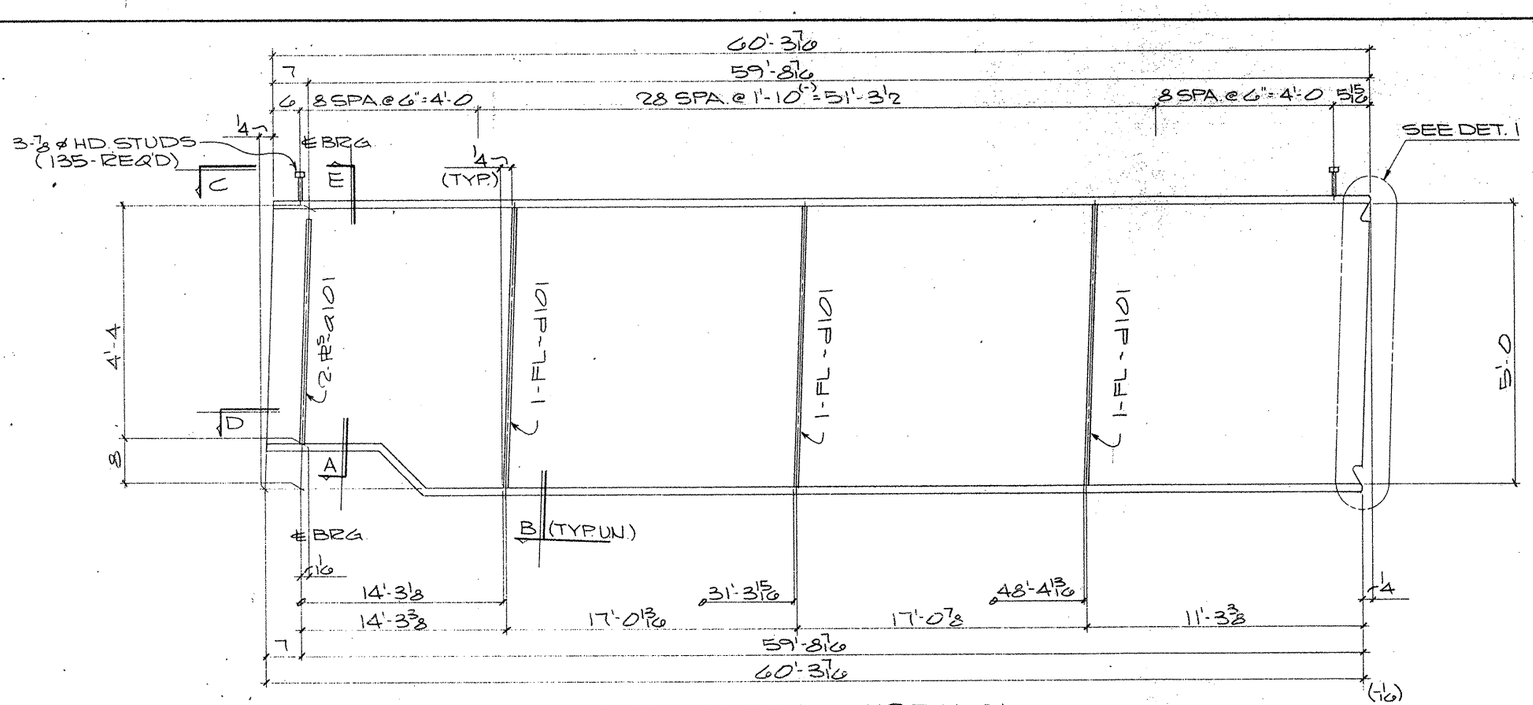

ONE GIRDER MK-112PG1.01

(APPROX. WT. = TONS)

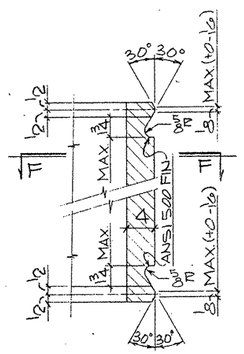

DETAIL-1

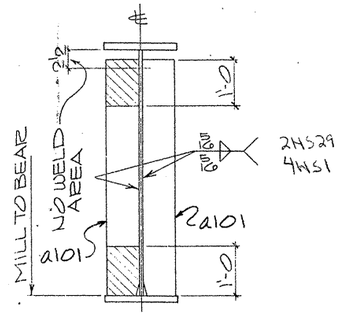

SECTION-A

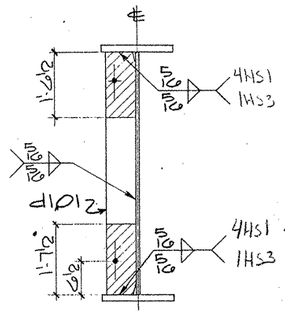

SECTION-B

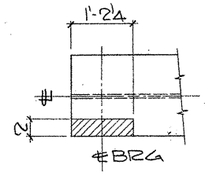

VIEW-C

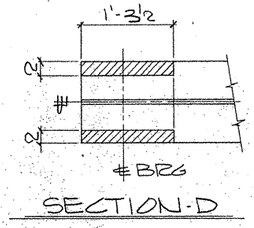

SECTION-D

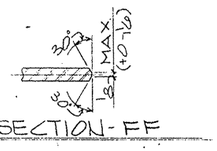

SECTION-FF

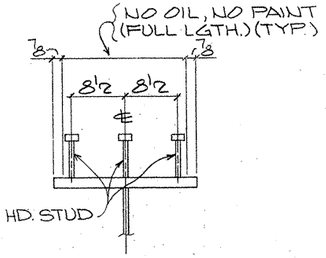

SECTION-E

(TYP. STUD SECT.)

SHOP NOTES:

1) FOR GENERAL NOTES SEE SHT. GN1
2) FOR GIRDER SUB-ASSEMBLY SEE SHT. 102
3) FOR STIFF. DETAILS SEE SHT. 101
4) FOR BLOCKING DIAGRAM SEE SHT. 124
5) FOR HEAT CURVE DIAGRAM SEE SHT. 132
6) ▨ INDICATES OIL, NO PAINT (N.S./F.S. & EDGES)

BILL OF MATERIAL

	Qnty.	Material	Length	Mark Temp	Mark Ship.	Wt.	Cut From	Remarks
1								
2								
3	1	GIRDER		112PG1.01				
4	1	GIRDER SUB-ASSY		A102				
5	2	BRG STIFF		d101				
6	3	DIAF STIFF		d101				
7								
8	135	HD STUD 7/8	0'-7				108-1	A108
9–60								

TEXAS DEPARTMENT OF TRANSPORTATION
APPROVED
DIVISION OF BRIDGES AND STRUCTURES
JAN 07 1993

APPROVAL OF THIS DRAWING DOES NOT RELIEVE THE CONTRACTOR OF THE RESPONSIBILITY FOR THE CORRECTNESS OF DETAIL

FOR APPROVAL
NOV 12 '92
NOT FOR CONSTRUCTION

REVISION	DATE	DESCRIPTION OF REVISION
NO. 1		
NO. 2		
NO. 3		
NO. 4		
NO. 5		

PRINTING Recd | For | Date

Bolts Holes: 15/16 ø Unless Noted
Shop Paint SEE SHT. GN1
Fab Spec. AS.NTD Inspection
Architect
Erection By Field Connections

HIRSCHFELD STEEL CO. INC.
112 WEST 29TH SAN ANGELO, TEXAS 76903
PHONE (915) 653-3211

DESCRIPTION 430'-0 PLATE GIRDER UNIT
STRUCTURE US 83/281 INTERCHANGE RAMP # 4
LOCATION HIDALGO COUNTY
CUSTOMER GILBERT TEXAS CONSTRUCTION
SHIP TO
Customer's Order No.
Dwg. By CRT Date 10/92
Checked By JC Date 10-92
SHEET 112 OF
JOB NO. 92-109

G0109

FED. ROAD DIV. NO.	STATE	FEDERAL AID PROJECT NO.				
6	TX.	NH 92(50)M				
STATE DIST. NO.	COUNTY	CONTROL NO.	SECTION NO.	JOB NO.	HIGHWAY NO.	
21	HIDALGO	39	17	97	83/281	

CE92-14 (LINE # 1)

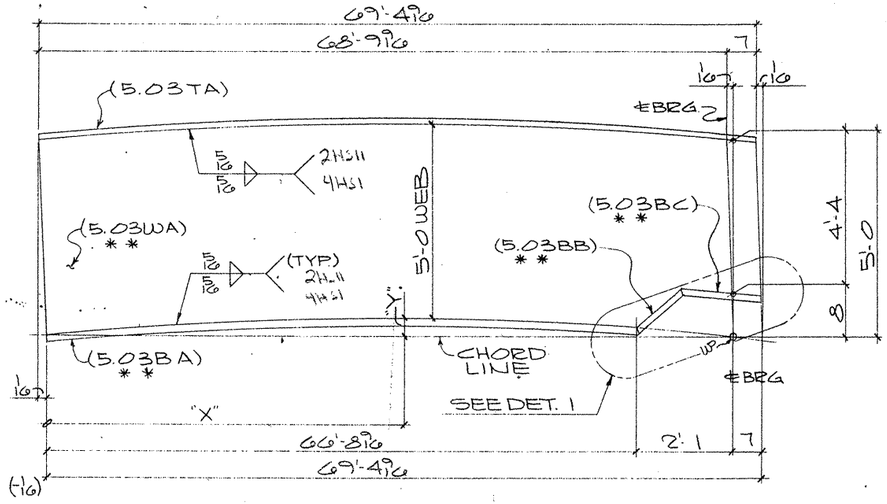

ONE GIRDER SUB-ASSY MK-A111
(FOR GIRDER - 130PG5.03)

MK - A111							
"X"	4'-11 9/16	21'-7 7/16	38'-3 5/16	54'-11 3/16	68'-9 9/16		
"Y"	1/8	3/8	7/16	1/4	0"		

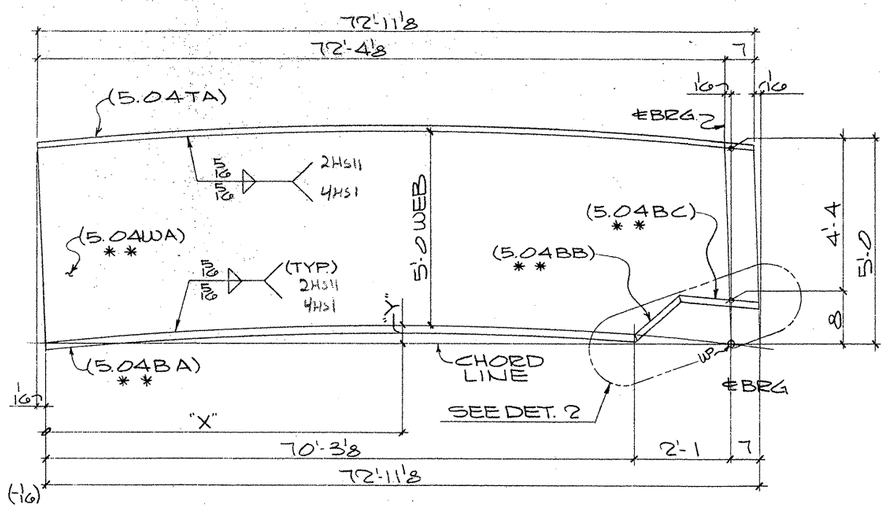

ONE GIRDER SUB-ASSY MK-B111
(FOR GIRDER - 131PG5.04)

MK - B111								
"X"	9'-4 1/16	25'-9 1/2	42'-2 3/8	58'-8 1/4	72'-4 1/8			
"Y"	1/4	9/16	9/16	5/16	0			

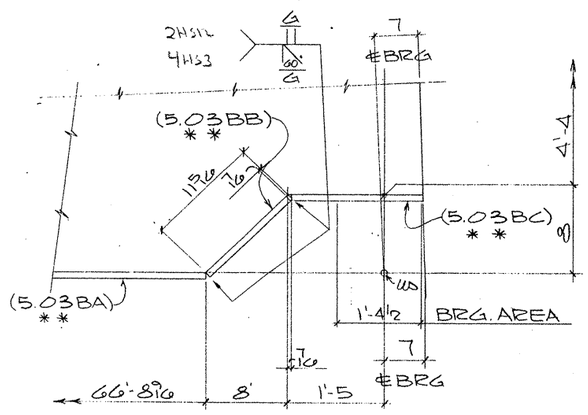

DETAIL - 1

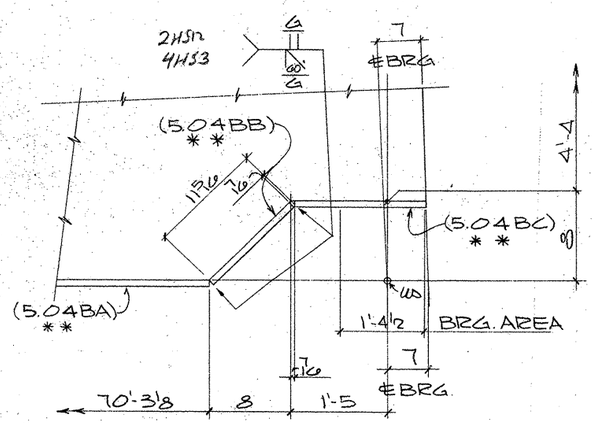

DETAIL - 2

SHOP NOTES:

1) FOR GENERAL NOTES, SEE SHT. GN1
2) MATERIAL NOTED "**" MUST MEET CHARPY V-NOTCH REQUIREMENTS
3) FOR HEAT CURVE DIAGRAM, SEE SHT. 133

BILL OF MATERIAL

	Qnty.	Material	Length	Mark Temp	Mark Ship	Wt	Cut From	Remarks
1								
2								
3	1	GIRDER SUB-ASSY			A111			
4	1	PL 1/2 x 60	69'-4 5/8	5.03WA			101-18	CVN2
5	1	PL 1 x 20	69'-4 9/16	5.03TA			105-14	
6	1	PL 1 x 20	66'-8 9/16	5.03BA			103-6	CVN2
7	1	PL 1 x 20	0'-10 7/8	5.03BB			102-11	CVN2
8	1	PL 1 x 20	1'-11 9/16	5.03BC			102-10	CVN2
9								
10								
11								
12								
13								
14								
15								
16								
17								
18	1	GIRDER SUB-ASSY			B111			
19	1	PL 1/2 x 60	72'-11 3/16	5.04WA			102-6	CVN2
20	1	PL 1 x 20	72'-11 1/8	5.04TA			106-2	
21	1	PL 1 x 20	70'-3 3/8	5.04BA			103-12	CVN2
22	1	PL 1 x 20	0'-10 7/8	5.04BB			102-11	CVN2
23	1	PL 1 x 20	1'-11 9/16	5.04BC			102-10	CVN2
24								
25								
26								
27								
28								
29								
30								
31								
32								
33								
34								
35								
36								
37								
38								
39								
40								
41								
42								
43								
44								
45								
46								
47								
48								
49								
50								
51								
52								
53								
54								
55								
56								
57								
58								
59								
60								

TEXAS DEPARTMENT OF TRANSPORTATION
APPROVED
DIVISION OF BRIDGES AND STRUCTURES
JAN 07 1993
APPROVAL OF THIS DRAWING DOES NOT RELIEVE THE CONTRACTOR OF THE RESPONSIBILITY FOR THE CORRECTNESS OF DETAIL.

FOR APPROVAL
NOV 12 '92
NOT FOR CONSTRUCTION

REVISION	DATE	DESCRIPTION OF REVISION
NO. 1		
NO. 2		
NO. 3		
NO. 4		
NO. 5		

PRINTING Req'd	For	Date

Bolts: Holes: Unless Noted
Shop Paint SEE SHT GN1
Fab. Spec. A572-50 UN Inspection
Architect
Erection By Field Connections

HIRSCHFELD STEEL CO. INC.
112 WEST 29TH SAN ANGELO, TEXAS 76903
PHONE (915) 653-3211

DESCRIPTION	430'-0 PLATE GIRDER UNIT
STRUCTURE	US 83/281 INTERCHANGE RAMP *4
LOCATION	HIDALGO COUNTY
CUSTOMER	GILBERT TEXAS CONSTRUCTION
SHIP TO	
Customer's Order No.	
Dwg. By CBT	Date 10-92
Checked By JC	Date 10-92

SHEET 111 OF
JOB NO. 92-109

40109

FED. ROAD DIV. NO.	STATE	FEDERAL AID PROJECT NO.				
6	TX.	NH 92(50)M				
STATE DIST. NO.	COUNTY	CONTROL NO.	SECTION NO.	JOB NO.	HIGHWAY NO.	
21	HIDALGO	39	17	97	83/281	

APV 11-12

CE92-14 (LINE #3&4)

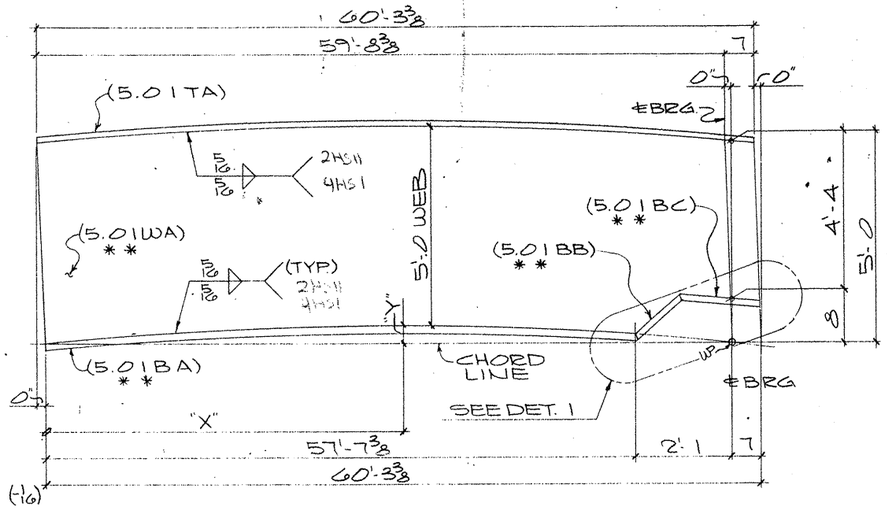

ONE GIRDER SUB-ASSY. MK-A110
(FOR GIRDER-128PG5.01)

MK-A110							
"X"	11'-3 3/8	28'-4 3/16	45'-5 1/16	59'-8 3/8			
"Y"	3/16	5/16	3/16	0"			

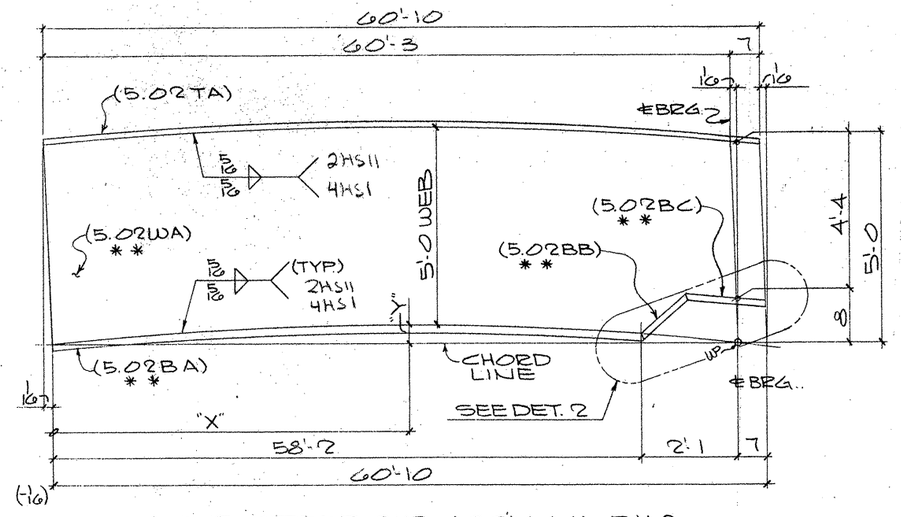

ONE GIRDER SUB-ASSY. MK-B110
(FOR GIRDER-129PG5.02)

MK-B110								
"X"	12'-5 3/8	29'-3 3/4	46'-2 1/8	60'-3				
"Y"	1/4	3/8	1/4	0"				

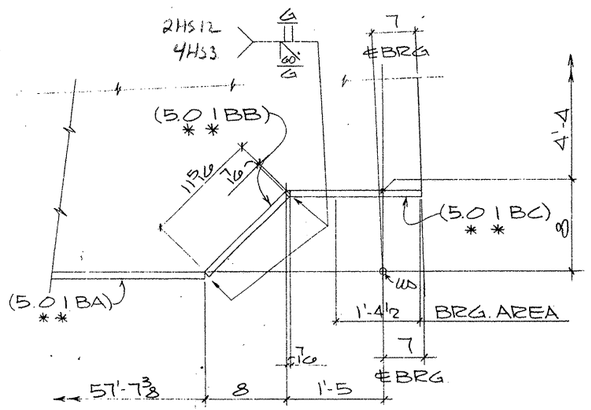

DETAIL-1

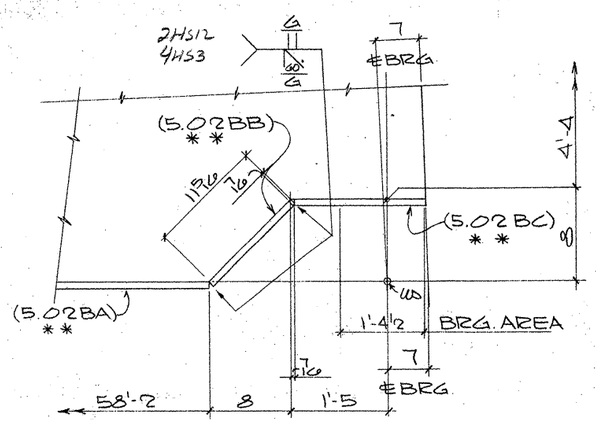

DETAIL-2

SHOP NOTES:
1) FOR GENERAL NOTES, SEE SHT. GN1
2) MAT'L NOTED "**" MUST MEET CHARPY V-NOTCH REQUIREMENTS.
3) FOR HEAT CURVE DIAGRAM, SEE SHT. 133

G0109

BILL OF MATERIAL

	Qnty.	Material	Length	Mark Temp.	Mark Ship.	Wt	Cut From	Remarks
1								
2								
3	1	GIRDER SUB-ASSY			A110			
4	1	PL 1/2 x 60	60'-3 3/8	5.01WA			101-8	CVN2
5	1	PL 1 x 20	60'-3 3/8	5.01TA			105-2	
6	1	PL 1 x 20	57'-7 3/8	5.01BA			102-12	CVN2
7	1	PL 1 x 20	0'-10 1/8	5.01BB			102-11	CVN2
8	1	PL 1 x 20	1'-11 9/16	5.01BC			102-10	CVN2
9								
10								
11								
12								
13								
14								
15								
16								
17								
18	1	GIRDER SUB-ASSY			B110			
19	1	PL 1/2 x 60	60'-10 9/16	5.02WA			101-13	CVN2
20	1	PL 1 x 20	60'-10	5.02TA			105-8	
21	1	PL 1 x 20	58'-2	5.02BA			102-18	CVN2
22	1	PL 1 x 20	0'-10 1/8	5.02BB			102-11	CVN2
23	1	PL 1 x 20	1'-11 9/16	5.02BC			102-10	CVN2
24								
25								
26								
27								
28								
29								
30								
31								
32								
33								
34								
35								
36								
37								
38								
39								
40								
41								
42								
43								
44								
45								
46								
47								
48								
49								
50								
51								
52								
53								
54								
55								
56								
57								
58								
59								
60								

TEXAS DEPARTMENT OF TRANSPORTATION
APPROVED
DIVISION OF BRIDGES AND STRUCTURES
JAN 07 1993

APPROVAL OF THIS DRAWING DOES NOT RELIEVE THE CONTRACTOR OF THE RESPONSIBILITY FOR THE CORRECTNESS OF DETAIL

FOR APPROVAL
NOV 12 92
NOT FOR CONSTRUCTION

REVISION	DATE	DESCRIPTION OF REVISION
NO. 1		
NO. 2		
NO. 3		
NO. 4		
NO. 5		

PRINTING Req'd	For	Date

Bolts: Holes: Unless Noted
Shop Paint SEE SHT GN1
Fab. Spec. A572-50 UN Inspection
Architect:
Erection By: Field Connections

HIRSCHFELD STEEL CO. INC.
112 WEST 29TH SAN ANGELO, TEXAS 76903
PHONE (915) 653-3211

DESCRIPTION	430'-0 PLATE GIRDER UNIT
STRUCTURE	US 83/281 INTERCHANGE RAMP "A"
LOCATION	HIDALGO COUNTY
CUSTOMER	GILBERT TEXAS CONSTRUCTION
SHIP TO	
Customer's Order No.	
Dwg. By. CRT	Date 10/92
Checked By JC	Date 10-92

SHEET 110 OF
JOB NO 92-109

FED. ROAD DIV. NO.	STATE	FEDERAL AID PROJECT NO.			
6	TX.	NH 92(50)M			
STATE DIST. NO.	COUNTY	CONTROL NO.	SECTION NO.	JOB NO.	HIGHWAY NO.
21	HIDALGO	39	17	97	83/281

APV. 11-12

CE92-14 (LINE #15)

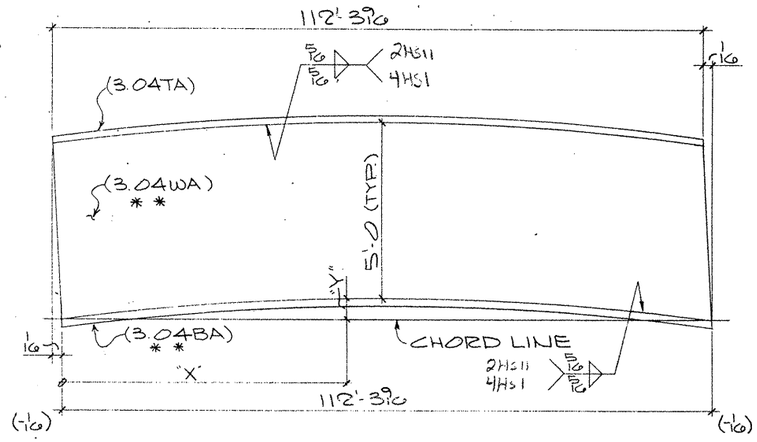

ONE GIRDER SUB-ASSY. MK-A109
(FOR GIRDER - 123PG3.04)

MK-A109								
"X"	10'-6 3/8"	25'-9 3/16"	40'-11 7/16"	56'-1 3/4"	71'-4 1/16"	86'-6 3/8"	101'-8 11/16"	112'-3 9/16"
"Y"	5/8"	11/16"	11/16"	2 3/16"	1 15/16"	1 7/16"	5/8"	0"

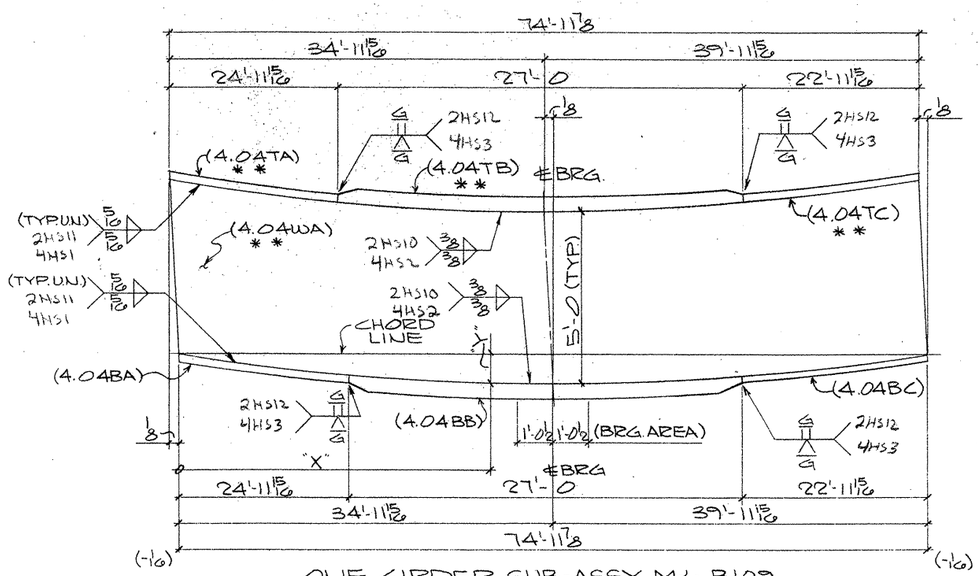

ONE GIRDER SUB-ASSY. MK-B109
(FOR GIRDER - 127PG4.04)

MK-B109							
"X"	4'-7 5/16"	19'-9 5/8"	34'-11 15/16"	51'-5 5/16"	67'-10 11/16"	74'-11 7/8"	
"Y"	3/16"	3/4"	1"	13/16"	1/4"	0"	

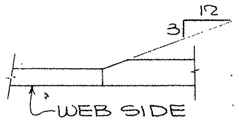

TYP. FLG. THKNESS TRANSITION

SHOP NOTES:
1) FOR GENERAL NOTES, SEE SHT. GN1
2) MATERIAL NOTED "* *" MUST MEET CHARPY V-NOTCH REQUIREMENTS
3) FOR HEAT CURVE DIAGRAM, SEE SHT. 133

BILL OF MATERIAL

	Qnty.	Material	Length	Mark Temp.	Mark Ship.	Wt.	Cut From	Remarks
1								
2								
3	1	GIRDER SUB-ASSY			A109			
4	1	PL 1/2 x 60	112'-3 5/8"	3.04WA			102-4	CVN2
5	1	PL 1 x 20	112'-3 9/16"	3.04TA			106-6	
6	1	PL 1 x 20	112'-3 9/16"	3.04BA			103-16	CVN2
7								
8								
9								
10								
11								
12								
13								
14								
15	1	GIRDER SUB-ASSY			B109			
16	1	PL 9/16 x 60	75'-0	4.04WA			102-5	CVN2
17	1	PL 1 x 20	24'-11 15/16"	4.04TA			103-15	CVN2
18	1	PL 2 x 20	27'-0	4.04TB			103-14	CVN2
19	1	PL 1 x 20	22'-11 15/16"	4.04TC			103-13	CVN2
20	1	PL 1 x 20	24'-11 15/16"	4.04BA			106-5	
21	1	PL 2 x 20	27'-0	4.04BB			106-4	
22	1	PL 1 x 20	22'-11 15/16"	4.04BC			106-3	
23								
24								
25								
26								
27								
28								
29								
30								
31								
32								
33								
34								
35								
36								
37								
38								
39								
40								
41								
42								
43								
44								
45								
46								
47								
48								
49								
50								
51								
52								
53								
54								
55								
56								
57								
58								
59								
60								

TEXAS DEPARTMENT OF TRANSPORTATION
~~APPROVED~~
DIVISION OF BRIDGES AND STRUCTURES
JAN 07 1993
APPROVAL OF THIS DRAWING DOES NOT RELIEVE THE CONTRACTOR OF THE RESPONSIBILITY FOR THE CORRECTNESS OF DETAIL.

FOR APPROVAL
NOV 12 '92
NOT FOR CONSTRUCTION

REVISION	DATE	DESCRIPTION OF REVISION
NO. 1		
NO. 2		
NO. 3		
NO. 4		
NO. 5		

PRINTING Req'd	For	Date

Bolts. Holes. Unless Noted
Shop Paint SEE SHT. GN1
Fab Spec. A572-50 UN. Inspection
Architect
Erection By Field Connections

HIRSCHFELD STEEL CO. INC.
112 WEST 29TH SAN ANGELO TEXAS 76903
PHONE (915) 653-3211

DESCRIPTION 430'-0 PLATE GIRDER UNIT
STRUCTURE US 83/281 INTERCHANGE RAMP "A"
LOCATION HIDALGO COUNTY
CUSTOMER GILBERT TEXAS CONSTRUCTION
SHIP TO
Customer's Order No.
Dwg. By CRT Date 10/93
Checked By JC Date 10-92
SHEET 109 OF
JOB NO. 92-109

G0109

FCD. ROAD DIV. NO.	STATE	FEDERAL AID PROJECT NO.			
6	TX.	NH 92(50)M			
STATE DIST. NO.	COUNTY	CONTROL NO.	SECTION NO.	JOB NO.	HIGHWAY NO.
21	HIDALGO	39	17	97	83/281

APV 11-92

CE 92-14 (LINE # 4)

225640

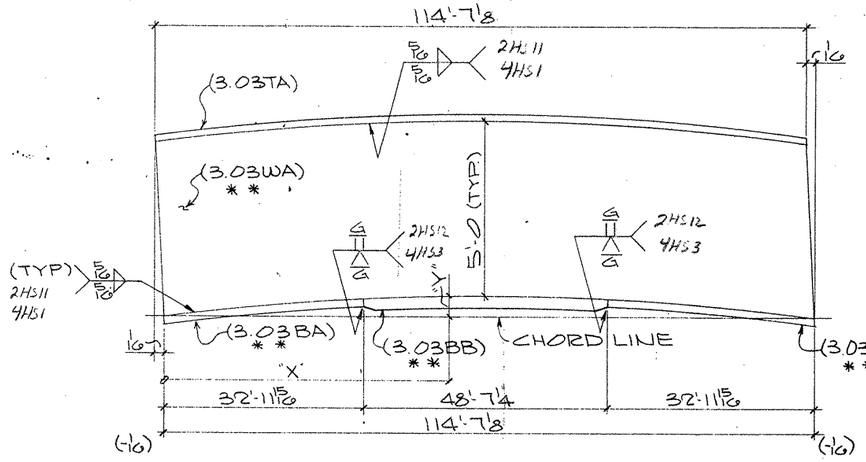

ONE GIRDER SUB-ASSY. MK-A108
(FOR GIRDER-122PG3.03)

MK-A108								
"X"	11'-1 3/4	26'-6 3/8	41'-10 15/16	57'-3 7/16	72'-8 3/16	88'-0 3/4	103'-5 3/8	114'-7 1/8
"Y"	7/8	1 7/8	2 9/16	2 13/16	2 9/16	1 7/8	7/8	0"

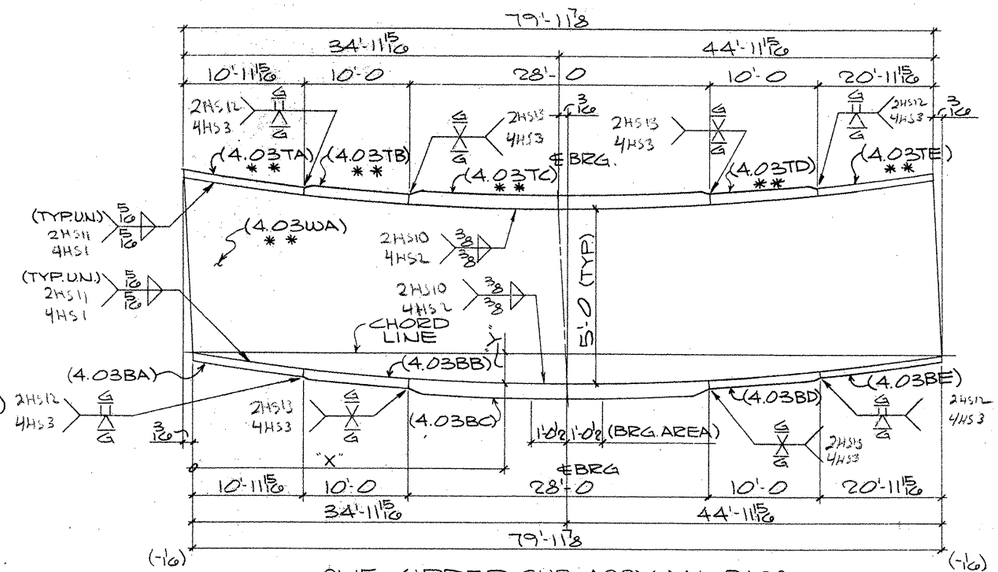

ONE GIRDER SUB-ASSY. MK-B108
(FOR GIRDER-126PG4.03)

MK-B108							
"X"	4'-2 3/4	19'-7 15/16	34'-11 15/16	51'-7 13/16	68'-3 11/16	79'-11 7/8	
"Y"	3/16	7/8	1 1/4	1 1/8	9/16	0"	

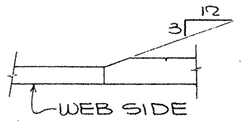

TYP. FLG. THKNESS TRANSITION

SHOP NOTES:
1) FOR GENERAL NOTES, SEE SHT. GN1
2) MATERIAL NOTED "**" MUST MEET CHARPY V-NOTCH REQUIREMENTS
3) FOR HEAT CURVE DIAGRAM, SEE SHT. 133

BILL OF MATERIAL

	Qnty.	Material	Length	Mark Temp.	Mark Ship.	Wt.	Cut From	Remarks
1								
2								
3	1	GIRDER SUB-ASSY			A108			
4	1	PL 1/2 x 60	114'-7 7/8	3.03WA			101-16	CVN2
5	1	PL 1 x 20	114'-7 1/8	3.03TA			105-19	
6	1	PL 1 x 20	32'-11 15/16	3.03BA			103-10	CVN2
7	1	PL 1 1/2 x 20	48'-7 1/4	3.03BB			103-11	CVN2
8	1	PL 1 x 20	32'-11 15/16	3.03BC			103-10	CVN2
9								
10								
11								
12								
13								
14								
15	1	GIRDER SUB-ASSY			B108			
16	1	PL 9/16 x 60	80'-0 1/16	4.03WA			101-17	CVN2
17	1	PL 1 x 20	10'-11 15/16	4.03TA			103-9	CVN2
18	1	PL 1 1/4 x 20	10'-0	4.03TB			103-8	CVN2
19	1	PL 2 1/4 x 20	28'-0	4.03TC			104-5	CVN3
20	1	PL 1 1/4 x 20	10'-0	4.03TD			103-8	CVN2
21	1	PL 1 x 20	20'-11 15/16	4.03TE			103-7	CVN2
22	1	PL 1 x 20	10'-11 15/16	4.03BA			105-18	
23	1	PL 1 1/4 x 20	10'-0	4.03BB			105-16	
24	1	PL 2 1/4 x 20	28'-0	4.03BC			105-17	
25	1	PL 1 1/4 x 20	10'-0	4.03BD			105-16	
26	1	PL 1 x 20	20'-11 15/16	4.03BE			105-15	
27								
28								
29								
30								
31								
32								
33								
34								
35								
36								
37								
38								
39								
40								
41								
42								
43								
44								
45								
46								
47								
48								
49								
50								
51								
52								
53								
54								
55								
56								
57								
58								
59								
60								

TEXAS DEPARTMENT OF TRANSPORTATION
APPROVED
DIVISION OF BRIDGES AND STRUCTURES
JAN 07 1993
APPROVAL OF THIS DRAWING DOES NOT RELIEVE THE CONTRACTOR OF THE RESPONSIBILITY FOR THE CORRECTNESS OF DETAIL.

FOR APPROVAL
NOV 12 '92
NOT FOR CONSTRUCTION

REVISION	DATE	DESCRIPTION OF REVISION
NO. 1		
NO. 2		
NO. 3		
NO. 4		
NO. 5		

PRINTING: Req'd | For | Date

Bolts Holes Unless Noted
Shop Paint SEE SHT. GN1
Fab. Spec. A572-50 DN. Inspection
Architect
Erection By Field Connections

HIRSCHFELD STEEL CO. INC.
112 WEST 29TH SAN ANGELO, TEXAS 76903
PHONE (915) 653-3211

DESCRIPTION 430'-0 PLATE GIRDER UNIT
STRUCTURE US 83/281 INTERCHANGE RAMP "A"
LOCATION HIDALGO COUNTY
CUSTOMER GILBERT TEXAS CONSTRUCTION
SHIP TO
Customer's Order No.
Dwg. By CRT Date 10/92
Checked By JC Date 10-92
SHEET 108 OF
JOB NO. 92-109

G0109

FED. ROAD DIV. NO.	STATE	FEDERAL AID PROJECT NO.				
6	TX.	NH 92(50)M				
STATE DIST. NO.	COUNTY	CONTROL NO.	SECTION NO.	JOB NO.	HIGHWAY NO.	
21	HIDALGO	39	17	97	83/281	

APV 1142

CE92-14 (LINE #3)

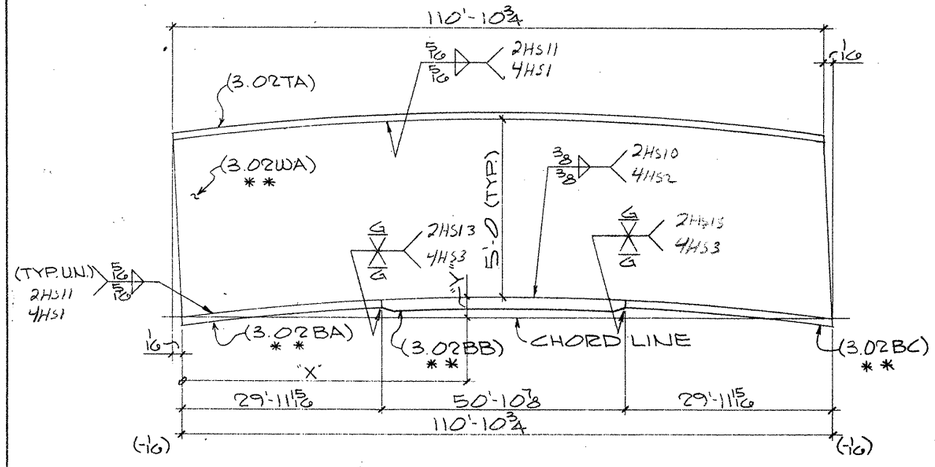

ONE GIRDER SUB-ASSY. MK-A107
(FOR GIRDER-121PG3.02)

MK-A107								
"X"	8'-8 5/8	24'-3 9/16	39'-10 7/16	55'-5 3/8	71'-0 1/4	86'-7 3/16	102'-2 1/16	110'-10 3/4
"Y"	13/16	2 1/16	2 15/16	3 1/4	2 7/8	2 1/16	13/16	0"

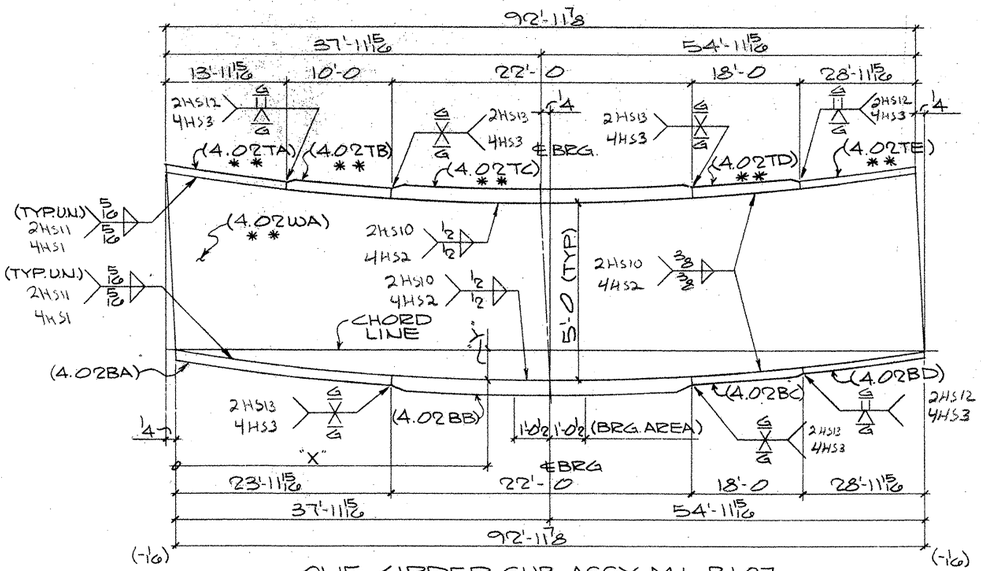

ONE GIRDER SUB-ASSY. MK-B107
(FOR GIRDER-125PG4.02)

MK-B107								
"X"	6'-10 1/8	22'-5 1/16	37'-11 15/16	54'-10 5/16	71'-8 11/16	88'-7 1/16	92'-11 7/8	
"Y"	7/16	1 1/4	1 11/16	1 5/8	1 1/16	1/4	0"	

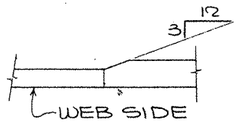

TYP. FLG. THKNESS TRANSITION

SHOP NOTES:

1) FOR GENERAL NOTES, SEE SHT. GN1
2) MATERIAL NOTED "*" MUST MEET CHARPY V-NOTCH REQUIREMENTS
3) FOR HEAT CURVE DIAGRAM, SEE SHT. 132 & 133

BILL OF MATERIAL

	Qnty.	Material	Length	Mark Temp.	Mark Ship.	Wt.	Cut From	Remarks
1								
2								
3	1	GIRDER SUB-ASSY			A107			
4	1	PL 1/2 x 60	110'-10 3/4	3.02WA			101-11	CVN2
5	1	PL 1 x 20	110'-10 3/4	3.02TA			105-13	
6	1	PL 1/4 x 20	29'-11 15/16	3.02BA			103-4	CVN2
7	1	PL 1 3/4 x 20	50'-10 3/8	3.02BB			103-5	CVN2
8	1	PL 1/4 x 20	29'-11 15/16	3.02BC			103-4	CVN2
9								
10								
11								
12								
13								
14								
15	1	GIRDER SUB-ASSY			B107			
16	1	PL 5/8 x 60	93'-0 1/8	4.02WA			101-12	CVN2
17	1	PL 1 x 20	13'-11 15/16	4.02TA			103-3	CVN2
18	1	PL 1 1/2 x 20	10'-0	4.02TB			103-2	CVN2
19	1	PL 2 1/2 x 20	22'-0	4.02TC			104-4	CVN3
20	1	PL 2 x 20	18'-0	4.02TD			102-20	CVN2
21	1	PL 1 x 20	28'-11 15/16	4.02TE			102-19	CVN2
22	1	PL 1/4 x 20	23'-11 15/16	4.02BA			105-12	
23	1	PL 2 1/2 x 20	22'-0	4.02BB			105-11	
24	1	PL 2 x 20	18'-0	4.02BC			105-10	
25	1	PL 1 x 20	28'-11 15/16	4.02BD			105-9	
26								
27								
28								
29								
30								
31								
32								
33								
34								
35								
36								
37								
38								
39								
40								
41								
42								
43								
44								
45								
46								
47								
48								
49								
50								
51								
52								
53								
54								
55								
56								
57								
58								
59								
60								

TEXAS DEPARTMENT OF TRANSPORTATION
APPROVED
DIVISION OF BRIDGES AND STRUCTURES
JAN 07 1993
APPROVAL OF THIS DRAWING DOES NOT RELIEVE THE CONTRACTOR OF THE RESPONSIBILITY FOR THE CORRECTNESS OF DETAIL.

FOR APPROVAL
NOV 12 '92
NOT FOR CONSTRUCTION

REVISION	DATE	DESCRIPTION OF REVISION
NO. 1		
NO. 2		
NO. 3		
NO. 4		
NO. 5		

PRINTING Req'd	For	Date

Bolts. Holes. Unless Noted
Shop Paint SEE SHT. GN1
Fab Spec. A572-50 DN. Inspection
Architect
Erection By
Field Connections

HIRSCHFELD STEEL CO. INC.
112 WEST 29TH SAN ANGELO. TEXAS 76903
PHONE (915) 653-3211

DESCRIPTION	430'-0 PLATE GIRDER UNIT
STRUCTURE	US 83/281 INTERCHANGE RAMP "A"
LOCATION	HIDALGO COUNTY
CUSTOMER	GILBERT TEXAS CONSTRUCTION
SHIP TO	
Customer's Order No.	
Dwg. By CRT	Date 10/92
Checked By JC	Date 10-92
SHEET 107 OF	
JOB NO. 92-109	

G0109

FED. ROAD DIV. NO.	STATE	FEDERAL AID PROJECT NO.			
6	TX.	NH 92(50)M			
STATE DIST. NO.	COUNTY	CONTROL NO.	SECTION NO.	JOB NO.	HIGHWAY NO.
21	HIDALGO	39	17	97	83/281

APV 11-12

CE92-14 (LINE #2)

332649

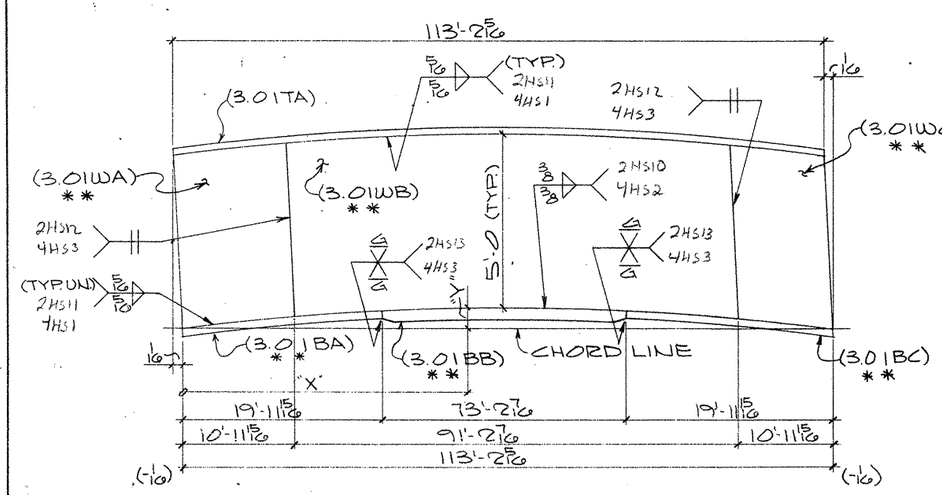

ONE GIRDER SUB-ASSY. MK-A106
(FOR GIRDER-120PG3.01)

MK-A106											
"X"	9'-3 3/16	10'-11 15/16	25'-0 3/4	40'-9 15/16	56'-7 3/16	72'-4 3/8	88'-1 3/16	102'-2 3/8	103'-10 3/4	113'-2 5/16	
"Y"	15/16	1 1/16	2 1/4	3 1/8	3 3/16	3 1/8	2 1/4	1 1/16	15/16	0"	
		℄ WEB SPLICE						℄ WEB SPLICE			

TYP. FLG THKNESS TRANSITION

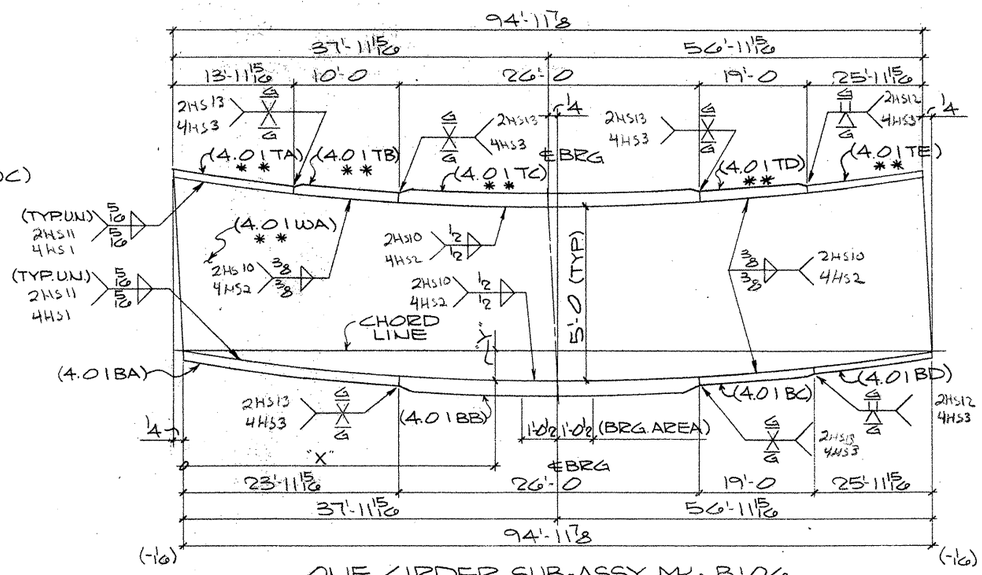

ONE GIRDER SUB-ASSY. MK-B106
(FOR GIRDER-124PG4.01)

MK-B106							
"X"	6'-5 9/16	22'-2 3/4	37'-11 15/16	55'-0 13/16	72'-1 5/8	89'-2 1/2	94'-11 7/8
"Y"	3/8	1 1/4	1 3/4	1 3/4	1 1/4	3/8	0"
			℄ BRG				

SHOP NOTES:

1) FOR GENERAL NOTES, SEE SHT. GN1
2) MATERIAL NOTED "* *" MUST MEET CHARPY V-NOTCH REQUIREMENTS
3) FOR HEAT CURVE DIAGRAM, SEE SHT. 132 & 133

BILL OF MATERIAL

	Qnty.	Material	Length	Mark Temp.	Mark Ship.	Wt.	Cut From	Remarks
1								
2								
3	1	GIRDER SUB-ASSY			A106			
4	1	PL 5/8 x 60	111'-0 3/16	3.01WA			101-4	CVN2
5	1	PL 1/2 x 60	91'-2 15/16	3.01WB			101-5	CVN2
6	1	PL 5/8 x 60	113'-2 5/16	3.01WC			101-6	CVN2
7	1	PL 1 1/4 x 20	113'-2 5/16	3.01TA			105-7	
8	1	PL 1 1/2 x 20	19'-11 15/16	3.01BA			102-17	CVN2
9	1	PL 2 1/4 x 20	73'-2 7/16	3.01BB			104-3	CVN3
10	1	PL 1 1/2 x 20	19'-11 15/16	3.01BC			102-17	CVN2
11								
12								
13								
14								
15	1	GIRDER SUB-ASSY			B106			
16	1	PL 5/8 x 60	95'-0 1/8	4.01WA			101-7	CVN2
17	1	PL 1 1/4 x 20	13'-11 15/16	4.01TA			102-16	CVN2
18	1	PL 1 3/4 x 20	10'-0	4.01TB			102-15	CVN2
19	1	PL 2 3/4 x 20	26'-0	4.01TC			104-2	CVN3
20	1	PL 2 x 20	19'-0	4.01TD			102-14	CVN2
21	1	PL 1 x 20	25'-11 15/16	4.01TE			102-13	CVN2
22	1	PL 1 1/2 x 20	23'-11 15/16	4.01BA			105-6	
23	1	PL 3 x 20	26'-0	4.01BB			105-5	
24	1	PL 2 x 20	19'-0	4.01BC			105-4	
25	1	PL 1 x 20	25'-11 15/16	4.01BD			105-3	
26								
27								
28								
29								
30								
31								
32								
33								
34								
35								
36								
37								
38								
39								
40								
41								
42								
43								
44								
45								
46								
47								
48								
49								
50								
51								
52								
53								
54								
55								
56								
57								
58								
59								
60								

TEXAS DEPARTMENT OF TRANSPORTATION
APPROVED
DIVISION OF BRIDGES AND STRUCTURES
JAN 07 1993

APPROVAL OF THIS DRAWING DOES NOT RELIEVE THE CONTRACTOR OF THE RESPONSIBILITY FOR THE CORRECTNESS OF DETAIL.

FOR APPROVAL
NOV 12 '92
NOT FOR CONSTRUCTION

REVISION	DATE	DESCRIPTION OF REVISION
NO. 1		
NO. 2		
NO. 3		
NO. 4		
NO. 5		

PRINTING Req'd	For	Date

Bolts: Holes: Unless Noted
Shop Paint SEE SHT. GN-1
Fab. Spec. A572-50 U.N. Inspection
Architect
Erection By Field Connections

HIRSCHFELD STEEL CO. INC.
112 WEST 29TH SAN ANGELO, TEXAS 76903
PHONE (915) 653-3211

DESCRIPTION 430'-0 PLATE GIRDER UNIT
STRUCTURE US 83/281 INTERCHANGE RAMP "A"
LOCATION HIDALGO COUNTY
CUSTOMER GILBERT TEXAS CONSTRUCTION
SHIP TO
Customer's Order No.
Dwg. By CRT Date 10-92
Checked By JC Date 10-92
SHEET 100 OF
JOB NO. 92-109

FED. ROAD DIV. NO.	STATE	FEDERAL AID PROJECT NO.			
6	TX.	NH 92(50)M			
STATE DIST. NO.	COUNTY	CONTROL NO.	SECTION NO.	JOB NO.	HIGHWAY NO.
21	HIDALGO	39	17	97	83/281

G0109

APV 11-12

CE 92-14 (LINE # 1)

322460

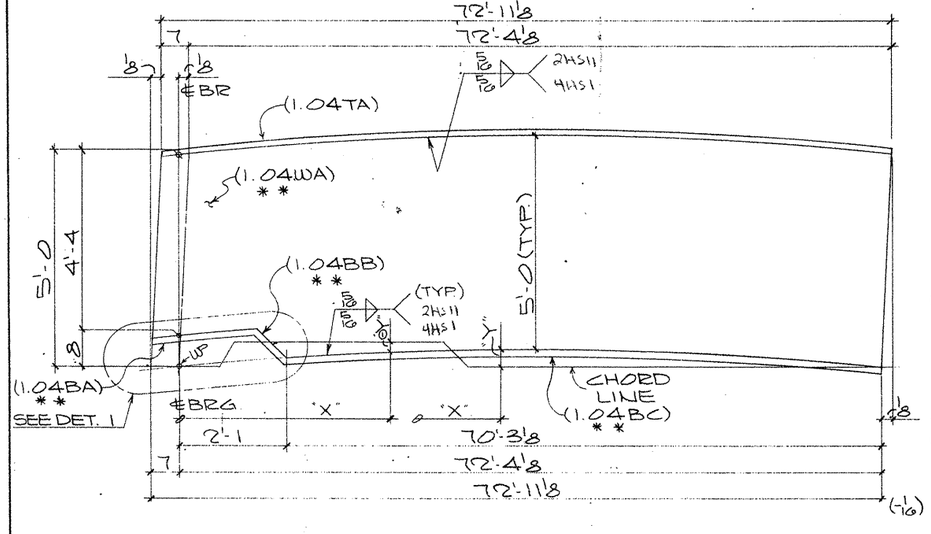

ONE GIRDER SUB-ASSY. MK-A105
(FOR GIRDER-115PG1.04

MK-A105								
"X"	13'-7 1/8	30'-1 1/4	46'-6 5/8	63'-0 1/16	72'-4 1/8			
"Y"	0 3/16	0 3/16	1/8	3/16	0"			

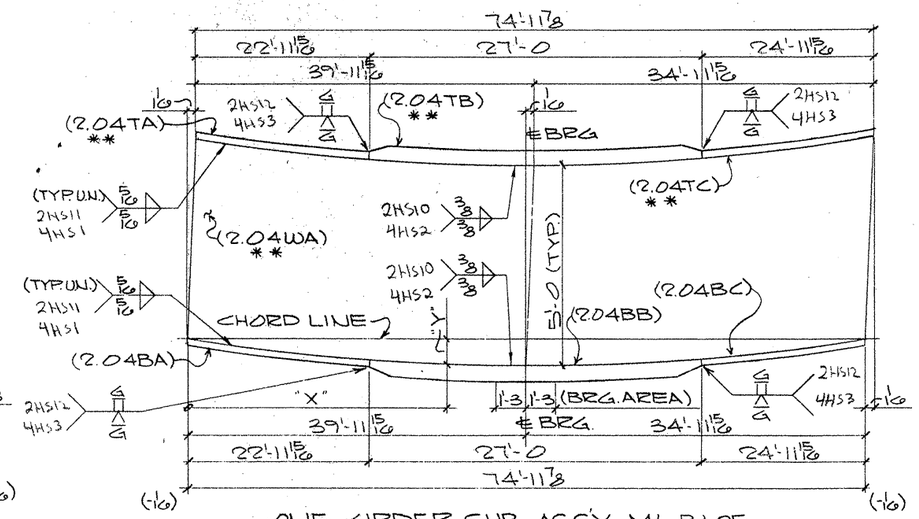

ONE GIRDER SUB-ASSY. MK-B105
(FOR GIRDER-119PG2.04)

MK-B105							
"X"	7'-1 3/16	23'-6 9/16	39'-11 15/16 ℄BRG	55'-2 4	70'-4 9/16	74'-11 7/8	
"Y"	1/16	3/8	5/8	9/16	1/8	0"	

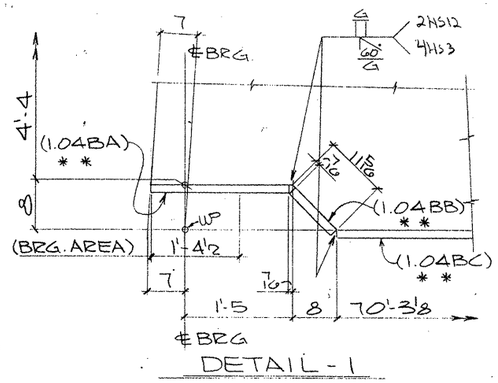

DETAIL-1

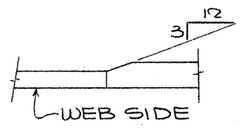

TYP. FLG. THKNESS TRANSITION

BILL OF MATERIAL

	Qnty.	Material	Length	Mark Temp.	Mark Ship	Wt.	Cut From	Remarks
1								
2	1	GIRDER SUB-ASSY			A105			
3	1	PL 1/2 x 60	72'-11 1/4	1.04WA			102-2	CVN2
4								
5	1	PL 1 x 20	72'-11 1/8	1.04TA			106-2	
6	1	PL 1 x 20	1'-1 19/16	1.04BA			102-10	CVN2
7	1	PL 1 x 20	0'-11 7/8	1.04BB			102-11	CVN2
8	1	PL 1 x 20	70'-3 1/8	1.04BC			103-12	CVN2
9								
10								
11								
12								
13								
14	1	GIRDER SUB-ASSY			B105			
15	1	PL 9/16 x 60	74'-11 15/16	2.04WA			102-3	CVN2
16	1	PL 1 x 20	22'-11 15/16	2.04TA			103-13	CVN2
17	1	PL 2 x 20	27'-0	2.04TB			103-14	CVN2
18	1	PL 1 x 20	24'-11 15/16	2.04TC			103-15	CVN2
19	1	PL 1 x 20	22'-11 15/16	2.04BA			106-3	
20	1	PL 2 x 20	27'-0	2.04BB			106-4	
21	1	PL 1 x 20	24'-11 15/16	2.04BC			106-5	
22								
23								
24								
25								
26								
27								
28								
29								
30								
31								
32								
33								
34								
35								
36								
37								
38								
39								
40								
41								
42								
43								
44								
45								
46								
47								
48								
49								
50								
51								
52								
53		TEXAS DEPARTMENT OF TRANSPORTATION APPROVED DIVISION OF BRIDGES AND STRUCTURES JAN 07 1993 APPROVAL OF THIS DRAWING DOES NOT RELIEVE THE CONTRACTOR OF THE RESPONSIBILITY FOR THE CORRECTNESS OF DETAIL.						
54								
55								
56								
57								
58								
59								
60								

FOR APPROVAL
NOV 12 '92
NOT FOR CONSTRUCTION

REVISION	DATE	DESCRIPTION OF REVISION
NO. 1		
NO. 2		
NO. 3		
NO. 4		
NO. 5		

PRINTING Req'd	For	Date

Bolts: Holes: Unless Noted
Shop Paint SEE SHT. GN1
Fab. Spec A572-50 UN. Inspection
Architect
Erection By Field Connections

HIRSCHFELD STEEL CO. INC.
112 WEST 29TH SAN ANGELO. TEXAS 76903
PHONE (915) 653-3211

DESCRIPTION 430'-0 PLATE GIRDER UNIT
STRUCTURE US 83/281 INTERCHANGE RAMP "A"
LOCATION HIDALGO COUNTY
CUSTOMER GILBERT TEXAS CONSTRUCTION
SHIP TO
Customer's Order No.
Dwg. By CRT Date 10/92
Checked By JC Date 10-92
SHEET 105 OF
JOB NO. 92-109

SHOP NOTES:
1) FOR GENERAL NOTES, SEE SHT. GN1
2) MATERIAL NOTED "**" MUST MEET CHARPY V-NOTCH REQUIREMENTS
3) FOR HEAT CURVE DIAGRAM, SEE SHT. 132

G010.9

FED. ROAD DIV. NO.	STATE	FEDERAL AID PROJECT NO.			
6	TX.	NH 92(50)M			
STATE DIST. NO.	COUNTY	CONTROL NO.	SECTION NO.	JOB NO.	HIGHWAY NO.
21	HIDALGO	39	17	97	83/281

APV 11-12

CE 92-14 (LINE # 4)

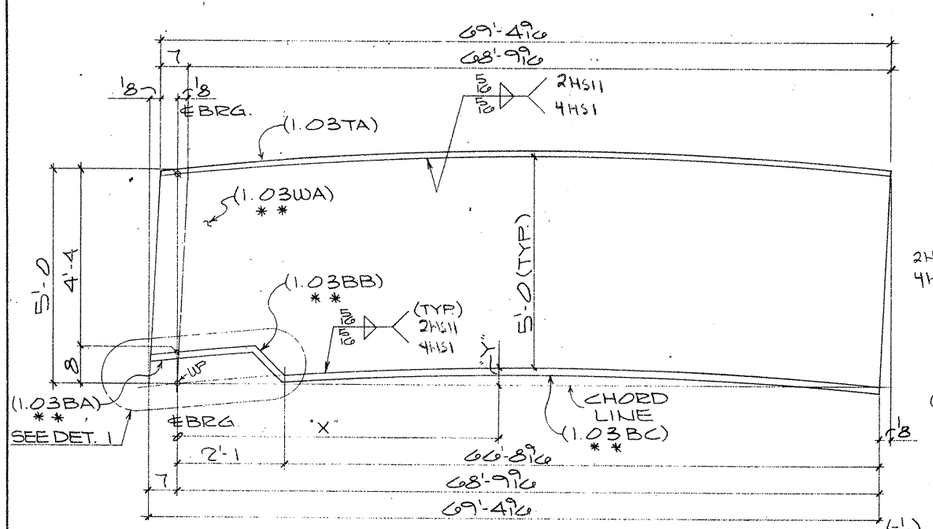

ONE GIRDER SUB-ASSY. MK-A104

(FOR GIRDER-114PG1.03)

MK-A104								
"X"	13'-10 3/8	30'-6 4	47'-2 3/8	63'-10	68'-9 9/16			
"Y"	0"	1/8	1/4	1/8	0"			

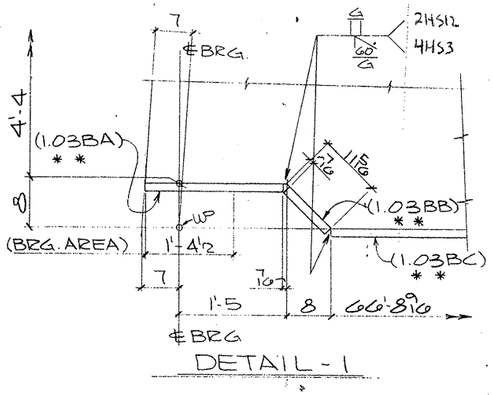

DETAIL-1

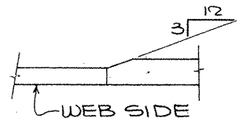

TYP. FLG. THKNESS TRANSITION

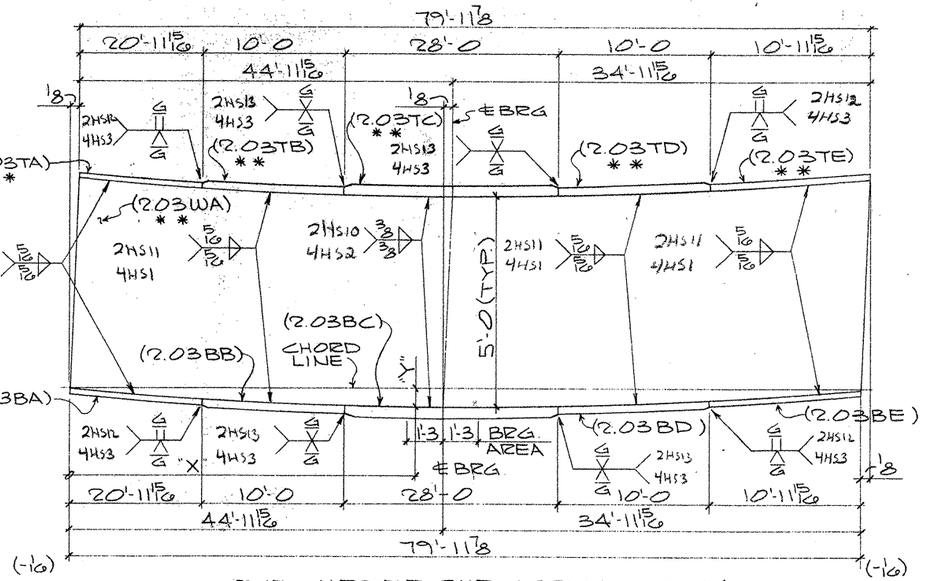

ONE GIRDER SUB-ASSY. MK-B104

(FOR GIRDER-118PG2.03)

MK-B104						
"X"	11'-8 3/16	28'-4 1/16	44'-11 15/16	60'-4 9/16	75'-9 1/8	79'-11 7/8
"Y"	1/4	5/8	3/4 ℄BRG.	5/8	3/16	0"

BILL OF MATERIAL								
	Qnty.	Material	Length	Mark Temp.	Mark Ship.	Wt.	Cut From	Remarks
1								
2	1	GIRDER SUB-ASSY			A104			
3	1	PL 1/2 × 60	69'-4 11/16	1.03WA			101-14	CVN2
4								
5	1	PL 1 × 20	69'-4 9/16	1.03TA			105-14	
6	1	PL 1 × 20	1'-11 9/16	1.03BA			102-10	CVN2
7	1	PL 1 × 20	0'-10 3/8	1.03BB			102-11	CVN2
8	1	PL 1 × 20	66'-8 9/16	1.03BC			103-6	CVN2
9								
10								
11								
12								
13								
14	1	GIRDER SUB-ASSY			B104			
15	1	PL 9/16 × 60	80'-0	2.03WA			101-15	CVN2
16	1	PL 1 × 20	20'-11 15/16	2.03TA			103-7	CVN2
17	1	PL 1 1/4 × 20	10'-0	2.03TB			103-8	CVN2
18	1	PL 2 1/4 × 20	28'-0	2.03TC			104-5	CVN3
19	1	PL 1 1/4 × 20	10'-0	2.03TD			103-8	CVN2
20	1	PL 1 × 20	10'-11 15/16	2.03TE			103-9	CVN2
21	1	PL 1 × 20	20'-11 15/16	2.03BA			105-15	
22	1	PL 1 1/4 × 20	10'-0	2.03BB			105-16	
23	1	PL 2 1/4 × 20	28'-0	2.03BC			105-17	
24	1	PL 1 1/4 × 20	10'-0	2.03BD			105-16	
25	1	PL 1 × 20	10'-11 15/16	2.03BE			105-18	
26								
27								
28								
29								
30								
31								
32								
33								
34								
35								
36								
37								
38								
39								
40								
41								
42								
43								
44								
45								
46								
47								
48								
49								
50								
51								
52		TEXAS DEPARTMENT OF TRANSPORTATION APPROVED DIVISION OF BRIDGES AND STRUCTURES JAN 07 1993						
53								
54								
55								
56								
57		APPROVAL OF THIS DRAWING DOES NOT RELIEVE THE CONTRACTOR OF THE RESPONSIBILITY FOR THE CORRECTNESS OF DETAIL.						
58								
59								
60								

FOR CONSTRUCTION NOV 12 '92 NOT FOR CONSTRUCTION

SHOP NOTES:

1) FOR GENERAL NOTES, SEE SHT. GN1
2) MATERIAL NOTED "* *" MUST MEET CHARPY V-NOTCH REQUIREMENTS
3) FOR HEAT CURVE DIAGRAM, SEE SHT. 132

REVISION	DATE	DESCRIPTION OF REVISION
NO. 1		
NO. 2		
NO. 3		
NO. 4		
NO. 5		

PRINTING Req'd	For	Date

Bolts Holes. Unless Noted
Shop Paint SEE SHT. GN1
Fab Spec. A572-50 UN. Inspection
Architect
Erection By Field Connections

HIRSCHFELD STEEL CO. INC.
112 WEST 29TH SAN ANGELO. TEXAS 76903
PHONE (915) 653-3211

DESCRIPTION 430'-0 PLATE GIRDER UNIT
STRUCTURE US 83/281 INTERCHANGE RAMP "A"
LOCATION HIDALGO COUNTY
CUSTOMER GILBERT TEXAS CONSTRUCTION
SHIP TO
Customer's Order No.
Dwg. By CBT Date 10/92
Checked By JC Date 10-92
SHEET 104 OF
JOB NO. 92-109

G0109

FED. ROAD DIV. NO.	STATE	FEDERAL AID PROJECT NO.			
6	TX.	NH 92(50)M			
STATE DIST. NO.	COUNTY	CONTROL NO.	SECTION NO.	JOB NO.	HIGHWAY NO.
21	HIDALGO	39	17	97	83/281

— APV 11-12

CE 92-14 (LINE #3)

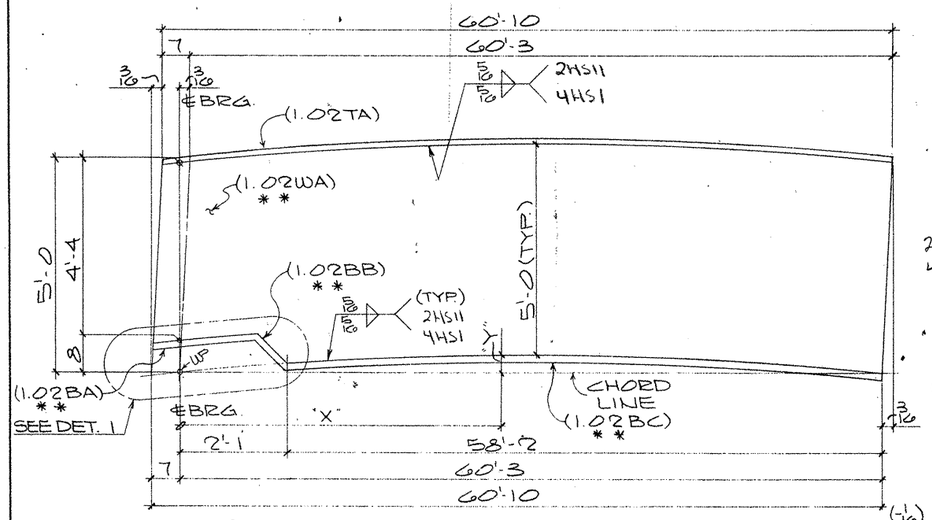

ONE GIRDER SUB-ASSY. MK-A103

(FOR GIRDER-113PG1.02)

MK-A103								
"X"	14'-0 3/8	30'-11 1/4	47'-9 5/8	60'-3				
"Y"	3/16	5/16	1/4	"0"				

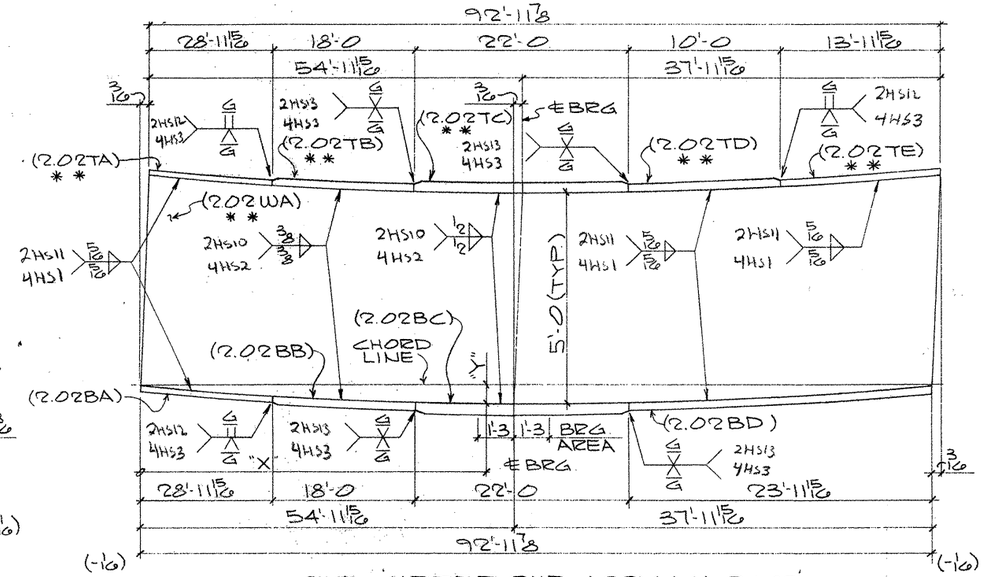

ONE GIRDER SUB-ASSY. MK-B103

(FOR GIRDER-117PG2.02)

MK-B103							
"X"	4'-4 7/8	21'-3 3/16	38'-1 9/16	54'-11 15/16	70'-6 13/16	86'-1 3/4	92'-11 7/8
"Y"	1/16	9/16	1"	1 1/8	7/8	5/16	"0"
				℄BRG			

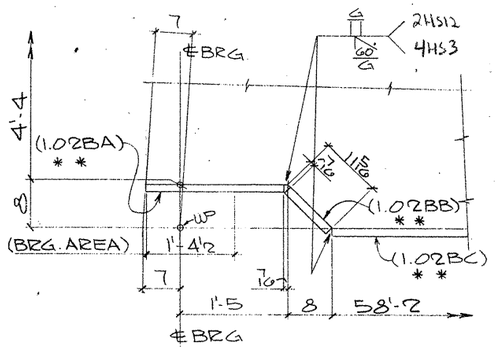

DETAIL-1

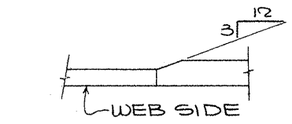

TYP. FLG. THKNESS TRANSITION

BILL OF MATERIAL

	Qnty.	Material	Length	Mark Temp	Mark Ship	Wt.	Cut From	Remarks
1								
2	1	GIRDER SUB-ASSY			A103			
3	1	PL 1 1/2 x 60	60'-10 3/16	1.02WA			101-9	CVN2
4								
5	1	PL 1 x 20	60'-10	1.02TA			105-8	
6	1	PL 1 x 20	1'-11 9/16	1.02BA			102-10	CVN2
7	1	PL 1 x 20	0'-10 7/8	1.02BB			102-11	CVN2
8	1	PL 1 x 20	58'-2	1.02BC			102-18	CVN2
9								
10								
11								
12								
13								
14	1	GIRDER SUB-ASSY			B103			
15	1	PL 5/8 x 60	93'-0 1/16	2.02WA			101-10	CVN2
16	1	PL 1 x 20	28'-11 15/16	2.02TA			102-19	CVN2
17	1	PL 2 x 20	18'-0	2.02TB			102-20	CVN2
18	1	PL 2 1/2 x 20	22'-0	2.02TC			104-4	CVN3
19	1	PL 1 1/2 x 20	10'-0	2.02TD			103-2	CVN2
20	1	PL 1 x 20	13'-11 15/16	2.02TE			103-3	CVN2
21	1	PL 1 x 20	28'-11 15/16	2.02BA			105-9	
22	1	PL 2 x 20	18'-0	2.02BB			105-10	
23	1	PL 2 1/2 x 20	22'-0	2.02BC			105-11	
24	1	PL 1 1/4 x 20	23'-11 15/16	2.02BD			105-12	
25								
26								
27								
28								
29								
30								
31								
32								
33								
34								
35								
36								
37								
38								
39								
40								
41								
42								
43								
44								
45								
46								
47								
48								
49								
50								
51								
52								
53								
54								
55								
56								
57								
58								
59								
60								

TEXAS DEPARTMENT OF TRANSPORTATION
APPROVED
DIVISION OF BRIDGES AND STRUCTURES
JAN 07 1993

APPROVAL OF THIS DRAWING DOES NOT RELIEVE THE CONTRACTOR OF THE RESPONSIBILITY FOR THE CORRECTNESS OF DETAILS

FOR APPROVAL
NOV 12 '92
NOT FOR CONSTRUCTION

REVISION	DATE	DESCRIPTION OF REVISION
NO. 1		
NO. 2		
NO. 3		
NO. 4		
NO. 5		

PRINTING Req'd	For	Date

Bolts Holes: Unless Noted
Shop Paint SEE SHT. GN1
Fab. Spec A572-50 UN Inspection
Architect
Erection By Field Connections

HIRSCHFELD STEEL CO. INC.
112 WEST 29TH SAN ANGELO, TEXAS 76903
PHONE (915) 653-3211

DESCRIPTION 430'-0 PLATE GIRDER UNIT
STRUCTURE US 83/281 INTERCHANGE RAMP #4
LOCATION HIDALGO COUNTY
CUSTOMER GILBERT TEXAS CONSTRUCTION
SHIP TO
Customer's Order No.
Dwg. By CET Date 10/92
Checked By JC Date 10-92
SHEET 103 OF
JOB NO. 92-109

SHOP NOTES:

1) FOR GENERAL NOTES, SEE SHT. GN1
2) MATERIAL NOTED "* *" MUST MEET CHARPY V-NOTCH REQUIREMENTS
3) FOR HEAT CURVE DIAGRAM, SEE SHT. 132

60109

FED. ROAD DIV. NO.	STATE	FEDERAL AID PROJECT NO.				
6	TX.	NH 92(50)M				
STATE DIST. NO.	COUNTY	CONTROL NO.	SECTION NO.	JOB NO.	HIGHWAY NO.	
21	HIDALGO	39	17	97	83/281	— APV 11-12

CE 92-14 (LINE #2)

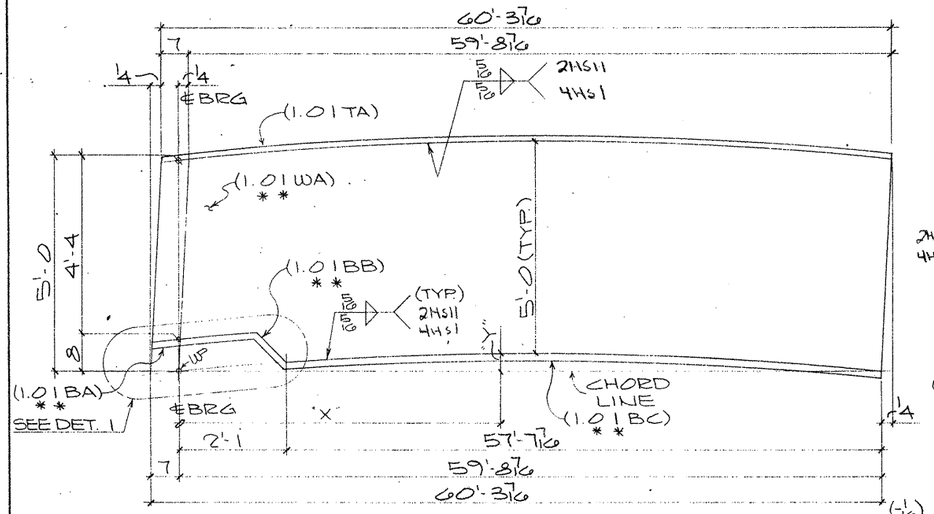

ONE GIRDER SUB-ASSY. MK-A102
(FOR GIRDER-112PG1.01)

MK-A102							
"X"	14'-3 3/8	31'-4 3/16	48'-5 1/16	59'-8 7/16			
"Y"	7/16	9/16	3/8	0"			

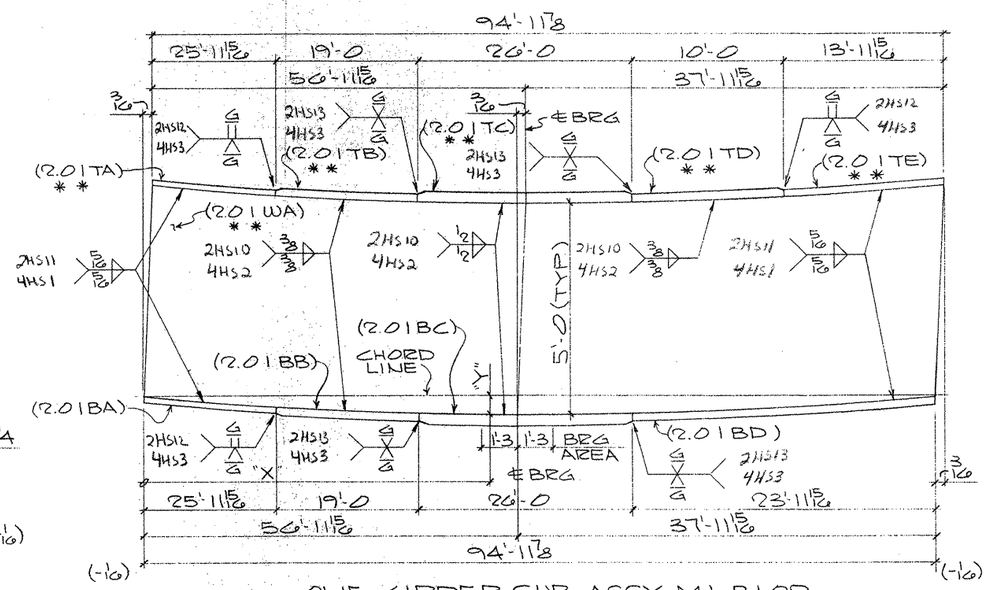

ONE GIRDER SUB-ASSY. MK-B102
(FOR GIRDER-116PG2.01)

MK-B102								
"X"	5'-9 3/8	22'-10 1/4	39'-11 1/16	56'-11 15/16	72'-9 1/8	88'-6 3/8	94'-11 7/8
"Y"	1/8	1/16	1/16	1/8	15/16	5/16	0"
				℄BRG.			

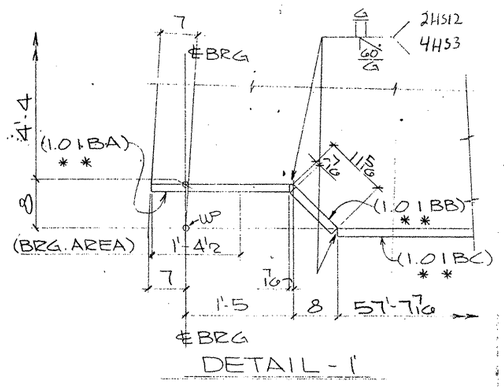

DETAIL-1'

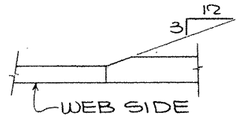

TYP. FLG. THKNESS TRANSITION

SHOP NOTES:

1) FOR GENERAL NOTES, SEE SHT. GN1
2) MATERIAL NOTED "**" MUST MEET CHARPY V-NOTCH REQUIREMENTS
3) FOR HEAT CURVE DIAGRAM, SEE SHT. 132

BILL OF MATERIAL

	Qnty.	Material	Length	Mark Temp.	Mark Ship.	Wt.	Cut From	Remarks
1								
2	1	GIRDER SUB-ASSY			A102			
3	1	PL 1/2 x 60	60'-3 11/16	1.01WA			101-2	CVN2
4								
5	1	PL 1 x 20	60'-3 7/16	1.01TA			105-2	
6	1	PL 1 x 20	1'-1 9/16	1.01BA			102-10	CVN2
7	1	PL 1 x 20	0'-10 3/8	1.01BB			102-11	CVN2
8	1	PL 1 x 20	57'-7 7/16	1.01BC			102-12	CVN2
9								
10								
11								
12								
13								
14	1	GIRDER SUB-ASSY			B102			
15	1	PL 5/8 x 60	95'-0 1/16	2.01WA			101-3	CVN2
16	1	PL 1 x 20	25'-11 15/16	2.01TA			102-13	CVN2
17	1	PL 2 x 20	19'-0	2.01TB			102-14	CVN2
18	1	PL 2 3/4 x 20	26'-0	2.01TC			104-2	CVN3
19	1	PL 1 3/4 x 20	10'-0	2.01TD			102-15	CVN2
20	1	PL 1 1/4 x 20	13'-11 15/16	2.01TE			102-16	CVN2
21	1	PL 1 x 20	25'-11 15/16	2.01BA			105-3	
22	1	PL 2 x 20	19'-0	2.01BB			105-4	
23	1	PL 3 x 20	26'-0	2.01BC			105-5	
24	1	PL 1 1/2 x 20	23'-11 15/16	2.01BD			105-6	
25								
26								
27								
28								
29								
30								
31								
32								
33								
34								
35								
36								
37								
38								
39								
40								
41								
42								
43								
44								
45								
46								
47								
48								
49								
50								
51								
52								
53								
54								
55								
56								
57								
58								
59								
60								

TEXAS DEPARTMENT OF TRANSPORTATION
APPROVED
DIVISION OF BRIDGES AND STRUCTURES
JAN 07 1993
APPROVAL OF THIS DRAWING DOES NOT RELIEVE THE CONTRACTOR OF THE RESPONSIBILITY FOR THE CORRECTNESS OF DETAILS

FOR APPROVAL
NOV 12 92
NOT FOR CONSTRUCTION

REVISION	DATE	DESCRIPTION OF REVISION
NO. 1		
NO. 2		
NO. 3		
NO. 4		
NO. 5		

PRINTING: Reqd | For | Date

Bolts Holes: Unless Noted
Shop Paint SEE SHT. GN1
Fab. Spec. A572-50 U.N. Inspection
Architect
Erection By Field Connections

HIRSCHFELD STEEL CO. INC.
112 WEST 29TH SAN ANGELO, TEXAS 76903
PHONE (915) 653-3211

DESCRIPTION 430'-0 PLATE GIRDER UNIT
STRUCTURE US 83/281 INTERCHANGE RAMP #4
LOCATION HIDALGO COUNTY
CUSTOMER GILBERT TEXAS CONSTRUCTION
SHIP TO
Customer's Order No.
Dwg. By CET Date 10-92
Checked By JC Date 10-92
SHEET 102 OF
JOB NO. 92-109

FED. ROAD DIV. NO.	STATE	FEDERAL AID PROJECT NO.			
6	TX.	NH 92(50)M			
STATE DIST. NO.	COUNTY	CONTROL NO.	SECTION NO.	JOB NO.	HIGHWAY NO.
21	HIDALGO	39	17	97	83/281

G0109

APV 11-12

CE92-14 (LINE # 1)

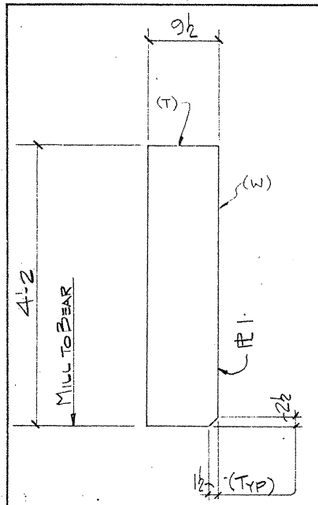

16 - PLATES ~ a101
(END BRG.)

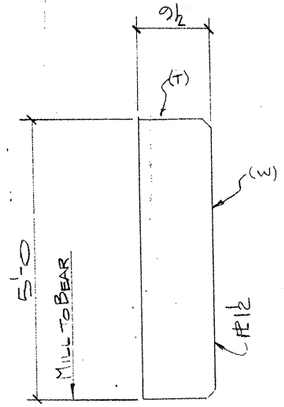

4 - PLATE ~ b101
(INT BRG.)

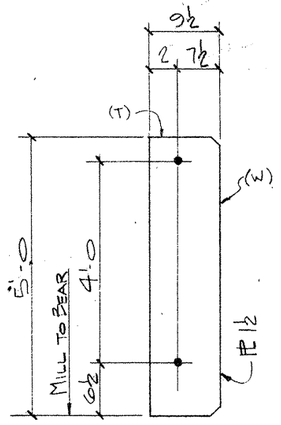

12 - PLATE ~ c101
(INT BRG.)

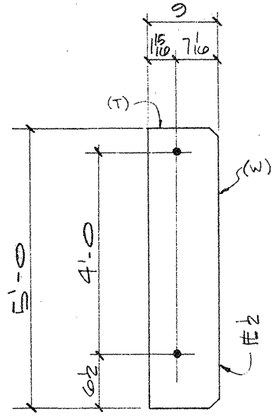

84 - PLATE ~ d101
(INT STIFF)

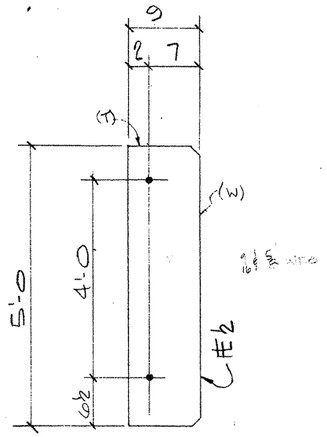

54 - PLATE ~ e101
(INT STIFF)

SHOP NOTES:
1. FOR GENERAL NOTES: SEE SHT GN1.
2. (T) INDICATES "TOP"
3. (W) INDICATES "WEB"

BILL OF MATERIAL

	Qnty.	Material	Length	Mark Temp	Mark Ship	Wt.	Cut From	Remarks
3	16	PL 1 x 9½	4'-2	a101				
4	4	PL 1½ x 9½	5'-0	b101				
5	12	PL 1½ x 9½	5'-0	c101				
6	84	PL ½ x 9	5'-0	d101				
7	54	PL ½ x 9	5'-0	e101				

TEXAS DEPARTMENT OF TRANSPORTATION
APPROVED
DIVISION OF BRIDGES AND STRUCTURES
JAN 07 1993
APPROVAL OF THIS DRAWING DOES NOT RELIEVE THE CONTRACTOR OF THE RESPONSIBILITY FOR THE CORRECTNESS OF DETAIL

NOV 12 '92
NOT FOR CONSTRUCTION

REVISION	DATE	DESCRIPTION OF REVISION
NO. 1		
NO. 2		
NO. 3		
NO. 4		
NO. 5		

PRINTING: Req'd | For | Date

Bolts Holes 15/16ø Unless Noted
Shop Paint SEE SHT GN1
Fab. Spec A36 Inspection
Architect
Erection By Field Connections

HIRSCHFELD STEEL CO. INC.
112 WEST 29TH SAN ANGELO, TEXAS 76903
PHONE (915) 653-3211

DESCRIPTION 430'-0 PLATE GIRDER UNIT
STRUCTURE US 83/281 INTERCHANGE RAMP #4
LOCATION HIDALGO COUNTY
CUSTOMER GILBERT TEXAS CONSTRUCTION
SHIP TO
Customer's Order No.
Dwg. By JRL Date 9/92
Checked By JC Date 10-92

SHEET 101 OF
JOB NO 92-109

FED. ROAD DIV. NO.	STATE	FEDERAL AID PROJECT NO.				
6	TX.	NH 92(50)M				
STATE DIST. NO.	COUNTY	CONTROL NO.	SECTION NO.	JOB NO.	HIGHWAY NO.	
21	HIDALGO	39	17	97	83/281	

Q0109

— APV 1142

CE 92-K

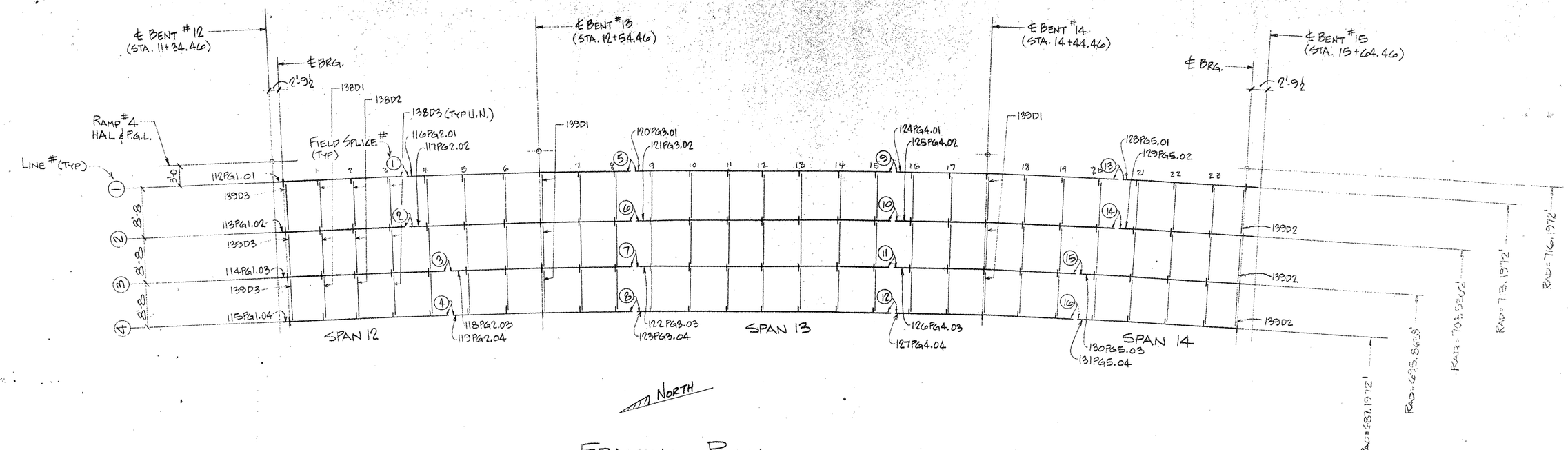

FRAMING PLAN
(UNIT Nº 5 RAMP 4)

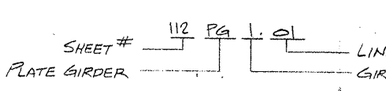

GIRDER SHIPPING MARK LEGEND

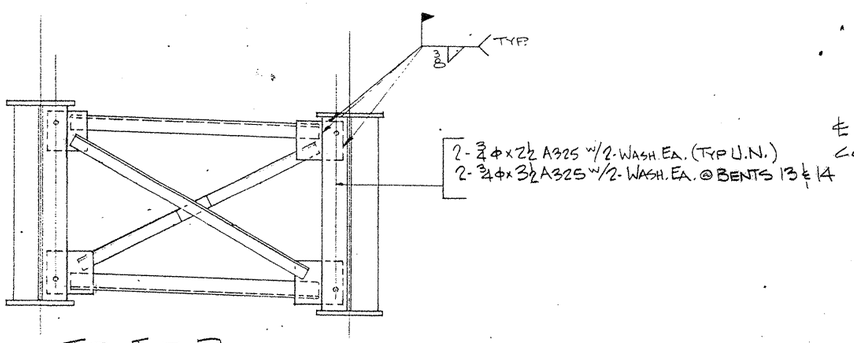

TYP. INT. DIAFRAMS

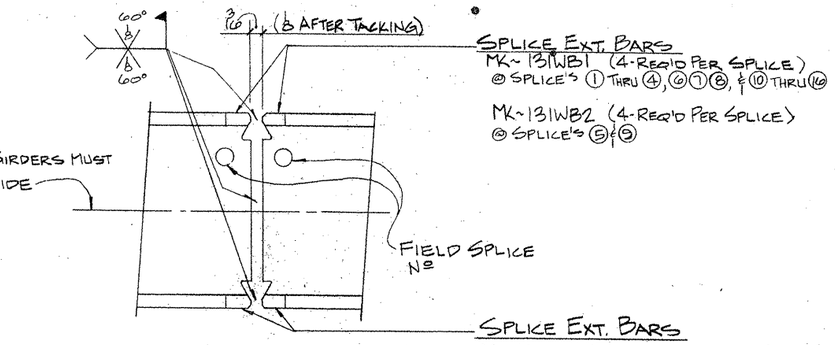

SPLICE EXT. BARS
MK-131WB1 (4-REQ'D PER SPLICE)
@ SPLICE'S ① THRU ④, ⑥ ⑦ ⑧, & ⑩ THRU ⑯

MK-131WB2 (4-REQ'D PER SPLICE)
@ SPLICE'S ⑤ & ⑨

SPLICE EXT. BARS
MK-131WB1 (4-REQ'D PER SPLICE)
@ SPLICE'S ① THRU ④, ⑦, ⑧ & ⑪ THRU ⑯

MK-131WB2 (4-REQ'D PER SPLICE)
@ SPLICE'S ⑥ & ⑩

MK-131WB3 (4-REQ'D PER SPLICE)
@ SPLICE'S ⑤ & ⑨

TYP FIELD SPLICE DETAIL

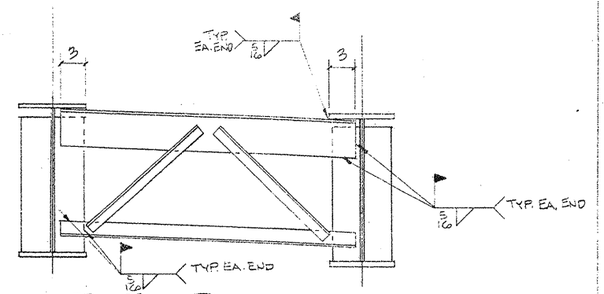

TYP. END DIAFRAMS
(TYPE B)

FED. ROAD DIV. NO.	STATE	FEDERAL AID PROJECT NO.				
6	TX.	NH 92(50)M				
STATE DIST. NO.	COUNTY	CONTROL NO.	SECTION NO.	JOB NO.	HIGHWAY NO.	
21	HIDALGO	39	17	97	83/281	

TEXAS DEPARTMENT OF TRANSPORTATION
APPROVED
DIVISION OF BRIDGES AND STRUCTURES
JAN 07 1993
APPROVAL OF THIS DRAWING DOES NOT RELIEVE THE CONTRACTOR OF THE RESPONSIBILITY FOR THE CORRECTNESS OF DETAILS.

FOR APPROVAL
NOV 12 '92
NOT FOR CONSTRUCTION

APV 11-12

HOLES ____ U.N.	FOR AP'VL ____		
BOLTS ____ U.N.	RETURNED ____		
WELDS ____ U.N.	TO SHOP ____		
PAINT ____			

REVISIONS

NO.	DATE	REMARKS
1		
2		
3		
4		

HIRSCHFELD STEEL CO. INC.
112 WEST 29TH SAN ANGELO, TEXAS 76903
PHONE (915) 653-3211

CUSTOMER GILBERT TEXAS CONSTRUCTION
ARCHITECT
PROJECT US 83/281 INTERCHANGE RAMP #4
LOCATION HIDALGO COUNTY
DRAWN JPE DATE 10/92
CHECKED JC DATE 10-92
JOB NO 92-109
SHEET NO E101 of

CE 92-14

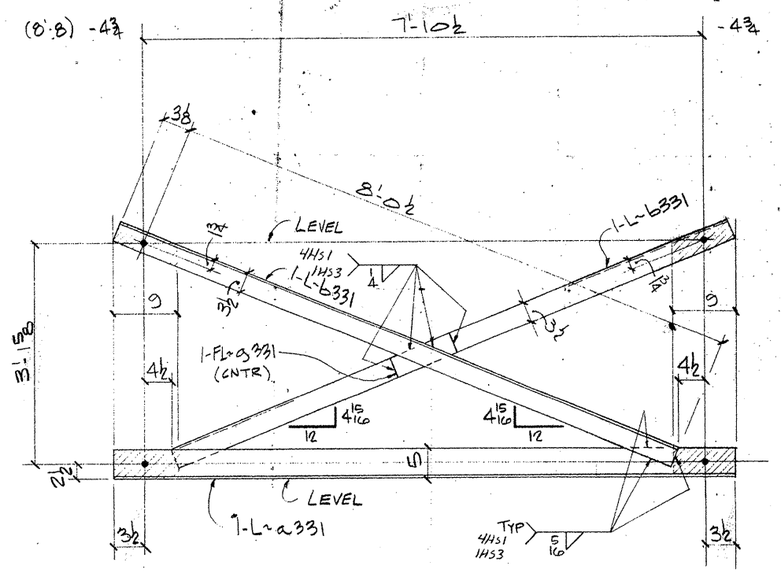

60 - DIAFRAMS ~ 331D1

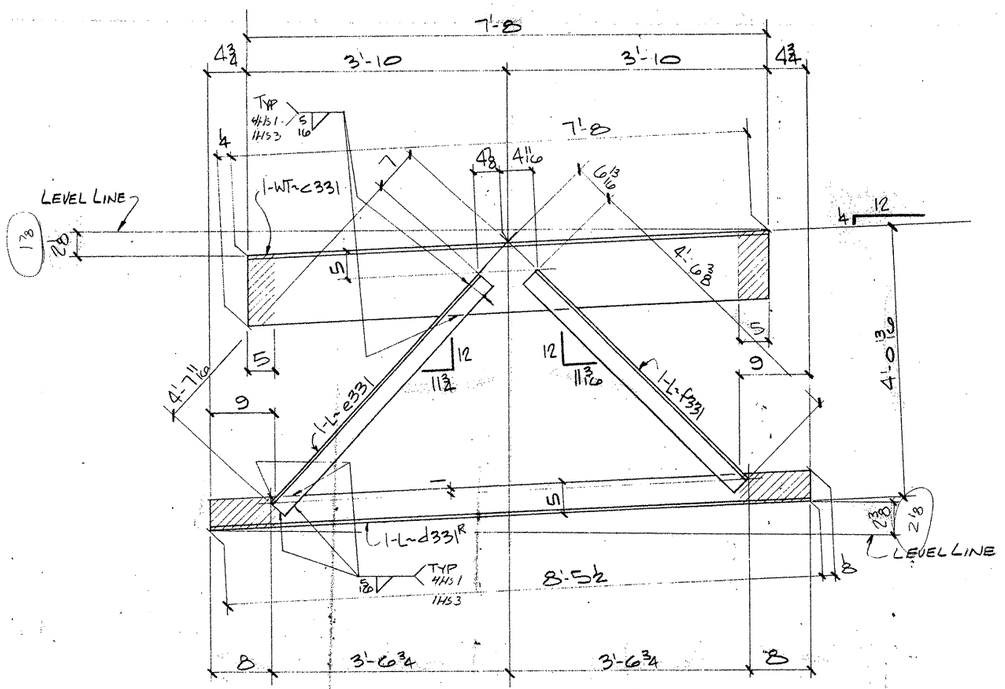

3- DIAFRAMS ~ 331D2 "ASSHN"

3- DIAFRAMS ~ 331D3 "OPP. HD."

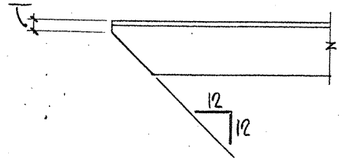

TYP. CLIP ON ALL OUTSTANDING ANGLE LEGS

NOTES:

1. FOR GENERAL NOTES SEE SHT. GN1
2. ▨ INDICATES OIL, NO PAINT (N.S./F.S. & EDGES)

BILL OF MATERIAL

	Qnty	Material	Length	Mark Temp	Mark Ship	Wt	Cut From	Remarks
4	60	DIAFRAMS			331D1			
5	60	L 5 x 3½ x 3/8	8'-5½	a331			305-8	
6	120	L 5 x 3½ x 3/8	8'-3 5/8	b331			305-9	
7	60	FL 2 x 3½	0'-11	g331			305-10	
10	3	DIAFRAMS			331D2			
11	3	WT 12 x 42	7'-8¼	c331			305-2	
12	3	L 5 x 3½ x 3/8	8'-5 5/8	d331R			305-3	
13	3	L 3½ x 3½ x 3/8	4'-6 3/8	f331			305-4	
14	3	L 3½ x 3½ x 3/8	4'-7 11/16	e331			305-4	
17	3	DIAFRAMS			331D3			
18	3	WT 12 x 42	7'-8¼	c331			305-2	
19	3	L 5 x 3½ x 3/8	8'-5 5/8	d331L			305-3	
20	3	L 3½ x 3½ x 3/8	4'-6 3/8	f331			305-4	
21	3	L 3½ x 3½ x 3/8	4'-7 11/16	e331			305-4	
44		FIELD BOLT LIST (0% ADDED)					A325 TYP	
45	222	HS BOLT 3/4 @	0'-2 4				302-4	
46	28	HS BOLT 3/4 @	0'-3				302-5	
47	500	HS WASH 3/4 @					302-6	

TEXAS DEPARTMENT OF TRANSPORTATION
APPROVED
DIVISION OF BRIDGES AND STRUCTURES
DEC 29 1992
APPROVAL OF THIS DRAWING DOES NOT RELIEVE THE CONTRACTOR OF THE RESPONSIBILITY FOR THE CORRECTNESS OF DETAIL.

FOR APPROVAL
AUG 24 '92
NOT FOR CONSTRUCTION

REVISION	DATE	DESCRIPTION OF REVISION
NO. 1		
NO. 2		
NO. 3		
NO. 4		
NO. 5		

PRINTING: Reqd | For | Date

Bolts: Holes. 15/16 ⌀ Unless Noted
Shop Paint: SEE SHT GN1
Fab Spec: A36 — Inspection
Architect
Erection By — Field Connections

HIRSCHFELD STEEL CO. INC.
112 WEST 29TH SAN ANGELO, TEXAS 76903
PHONE (915) 653-3211

DESCRIPTION	510'-0 PLATE GIRDER UNIT
STRUCTURE	US 83/281 INTERCHANGE RAMP #1
LOCATION	HIDALGO COUNTY
CUSTOMER	GILBERT TEXAS CONSTRUCTION
SHIP TO	
Customer's Order No.	
Dwg. By JDL — Date 6/92	SHEET 331 OF
Checked By DCT — Date 6/92	JOB NO 92-106

F0306

FED ROAD DIV NO	STATE	FEDERAL AID PROJECT NO				
6	TX.	NH (50) M				
STATE DIST NO	COUNTY	FOLDER NO	SECTION NO	JOB NO	HIGHWAY NO	
21	HIDALGO	39	17	97	83/281	

CE 92-11

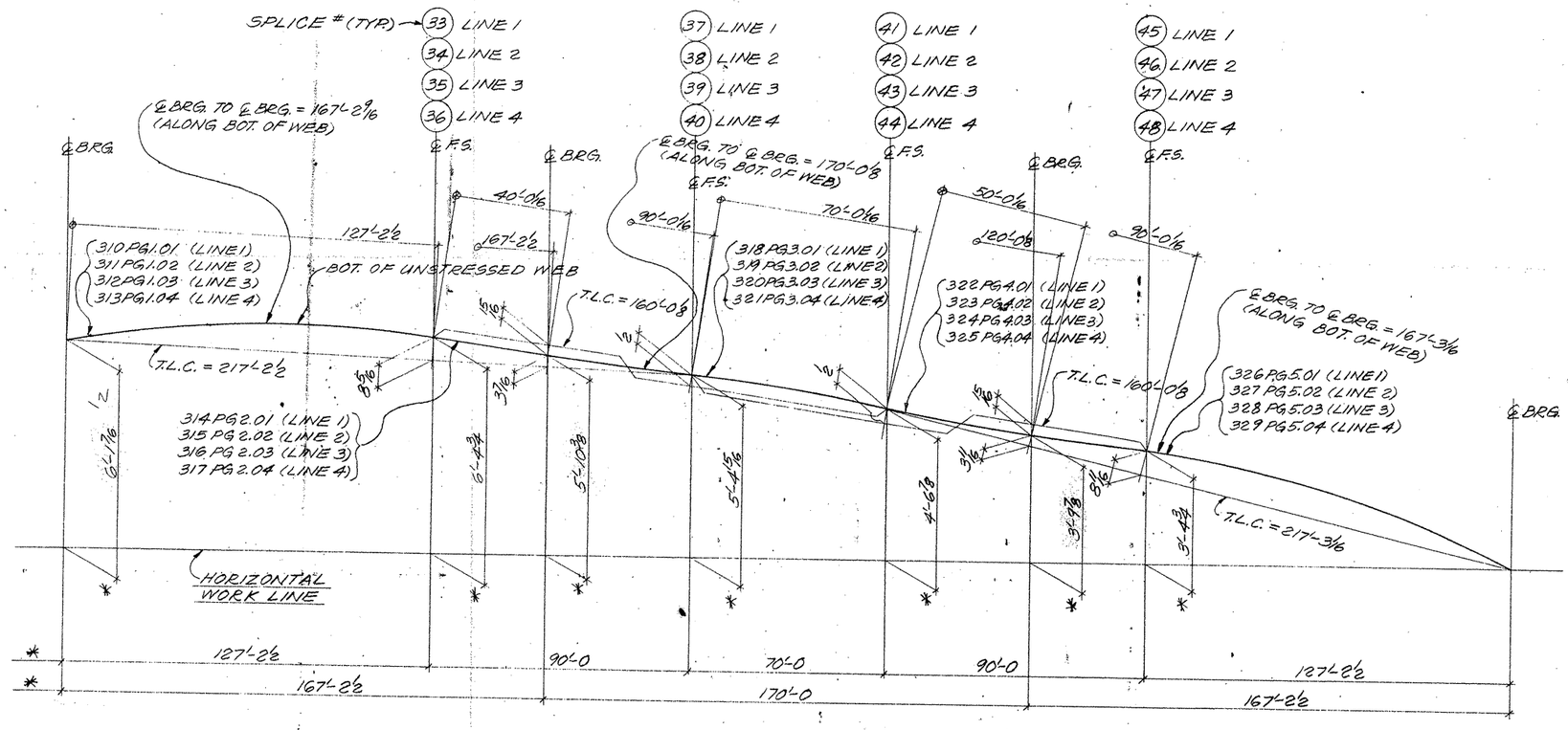

VERTICAL BLOCKING DIAGRAM
(SPANS 22, 23 & 24) (UNIT 9) (LINES 1 THRU 4)

FOR APPROVAL
AUG 24 '92
NOT FOR CONSTRUCTION

TEXAS DEPARTMENT OF TRANSPORTATION
APPROVED
DIVISION OF BRIDGES AND STRUCTURES
DEC 29 1992
APPROVAL OF THIS DRAWING DOES NOT RELIEVE THE CONTRACTOR OF THE RESPONSIBILITY FOR THE CORRECTNESS OF DETAIL.

NOTES:
1. T.L.C. = TRUE LENGTH CHORD.
2. DIMENSIONS ARE GIVEN ALONG OR NORMAL TO THE TRUE LENGTH CHORD UNL. NTD.
3. DIMENSIONS NOTED "*" ARE GIVEN ALONG OR NORMAL TO THE HORIZONTAL WORK LINE.
4. FOR GENERAL NOTES, SEE SHEET GN1.

FED. ROAD DIV. NO	STATE	FEDERAL AID PROJECT NO				
6	TX.	NH (50) N				
STATE DIST. NO	COUNTY	CONTROL NO	SECTION NO	JOB NO	HIGHWAY NO
21	HIDALGO	39	17	97	83/281

HOLES ___ U.N.	FOR APV'L		
BOLTS ___ U.N.	RETURNED		
WELDS ___ U.N.	TO SHOP		
PAINT			

REVISIONS		
NO.	DATE	REMARKS
1		
2		
3		
4		

HIRSCHFELD STEEL CO. INC.
112 WEST 29TH SAN ANGELO, TEXAS 76903
PHONE (915) 653-3211

CUSTOMER GILBERT TEXAS CONSTRUCTION
ARCHITECT
PROJECT US 83/281 INTERCHANGE RAMP #1
LOCATION HIDALGO COUNTY

DRAWN ACC DATE 7-7-92
CHECKED CRT DATE 7-92
JOB NO 92-106
SHEET NO 330 of

CE 92-11

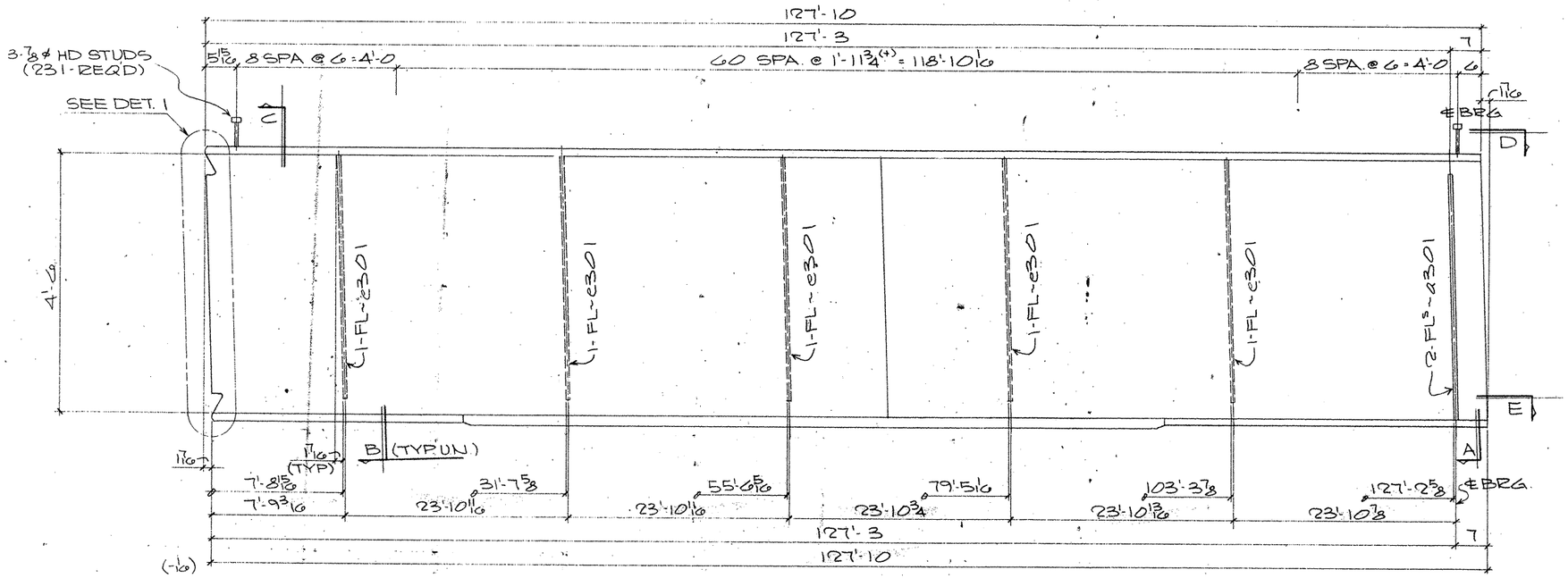

ONE GIRDER MK~329PG5.04

(APPROX. WT= TONS)

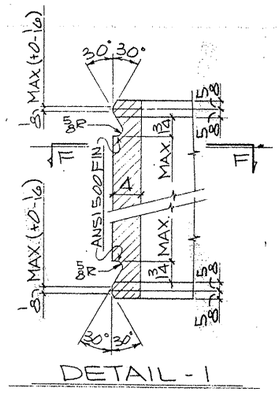

DETAIL - 1

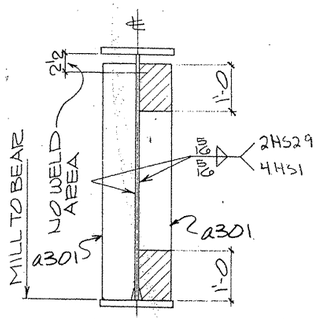

SECTION - A

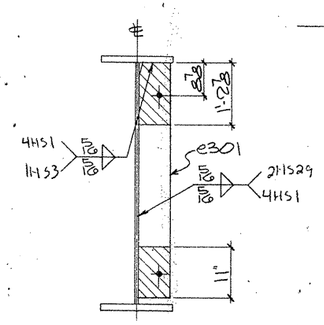

SECTION - B

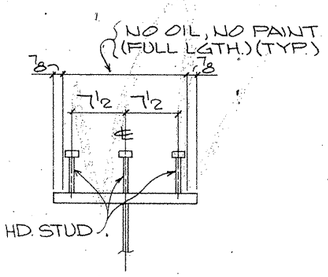

SECTION - C
(TYP. STUD SECT.)

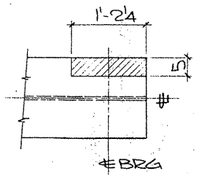

VIEW - D

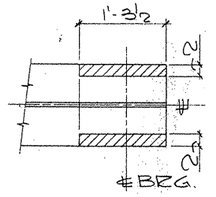

SECTION - E

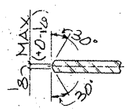

SECTION - FF

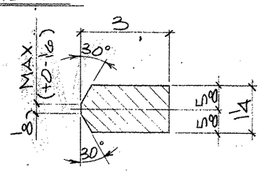

128 - WELD BARS MK~329WB1

SHOP NOTES:

1) FOR GENERAL NOTES SEE SHT. GN1
2) FOR GIRDER SUB-ASSEMBLY SEE SHT. 309
3) FOR STIFF. DETAILS SEE SHT. 301
4) FOR BLOCKING DIAGRAM SEE SHT. 330
5) ▨ INDICATES OIL, NO PAINT (N.S./F.S. & EDGES)

BILL OF MATERIAL

	Qnty.	Material	Length	Mark Temp	Mark Ship	Wt.	Cut From	Remarks
2	1	GIRDER			329PG5.04			
3	1	GIRDER SUB-ASSY		B309				
4	2	BRG STIFF		a301				
5	5	DIAF STIFF		e301				
7	231	HD STUD 7/8	0'-7				302-1	A108
19	128	WELD BARS			329WB1			
20	128	PL 1/4 x 1	0'-3				STR.	

TEXAS DEPARTMENT OF TRANSPORTATION
APPROVED
DIVISION OF BRIDGES AND STRUCTURES
DEC 29 1992

APPROVAL OF THIS DRAWING DOES NOT RELIEVE THE CONTRACTOR OF THE RESPONSIBILITY FOR THE CORRECTNESS OF DETAILS.

FOR APPROVAL
AUG 24 '92
NOT FOR CONSTRUCTION

REVISION	DATE	DESCRIPTION OF REVISION
NO. 1		
NO. 2		
NO. 3		
NO. 4		
NO. 5		

PRINTING Req'd	For	Date

Bolts: Holes: 5/8 UN Unless Noted
Shop Paint: SEE SHT GN1
Fab Spec: AS NTD Inspection
Architect
Erection By: Field Connections

HIRSCHFELD STEEL CO. INC.
112 WEST 29TH SAN ANGELO TEXAS 76903
PHONE (915) 653-3211

DESCRIPTION: 510'-0 PLATE GIRDER UNIT
STRUCTURE: US 83/281 INTERCHANGE RAMP "
LOCATION: HIDALGO COUNTY
CUSTOMER: GILBERT TEXAS CONSTRUCTION
SHIP TO
Customer's Order No.
Dwg By: CRT Date: 7-92
Checked By: JC Date: 7-9-92

SHEET 329 OF
JOB NO. 92-1066

6U306

FED. ROAD DIV. NO.	STATE	FEDERAL AID PROJECT NO.			
6	TX.	NH (50) M			
STATE DIST. NO.	COUNTY	CONTROL NO.	SECTION NO.	JOB NO.	HIGHWAY NO.
21	HIDALGO	39	17	97	83/281

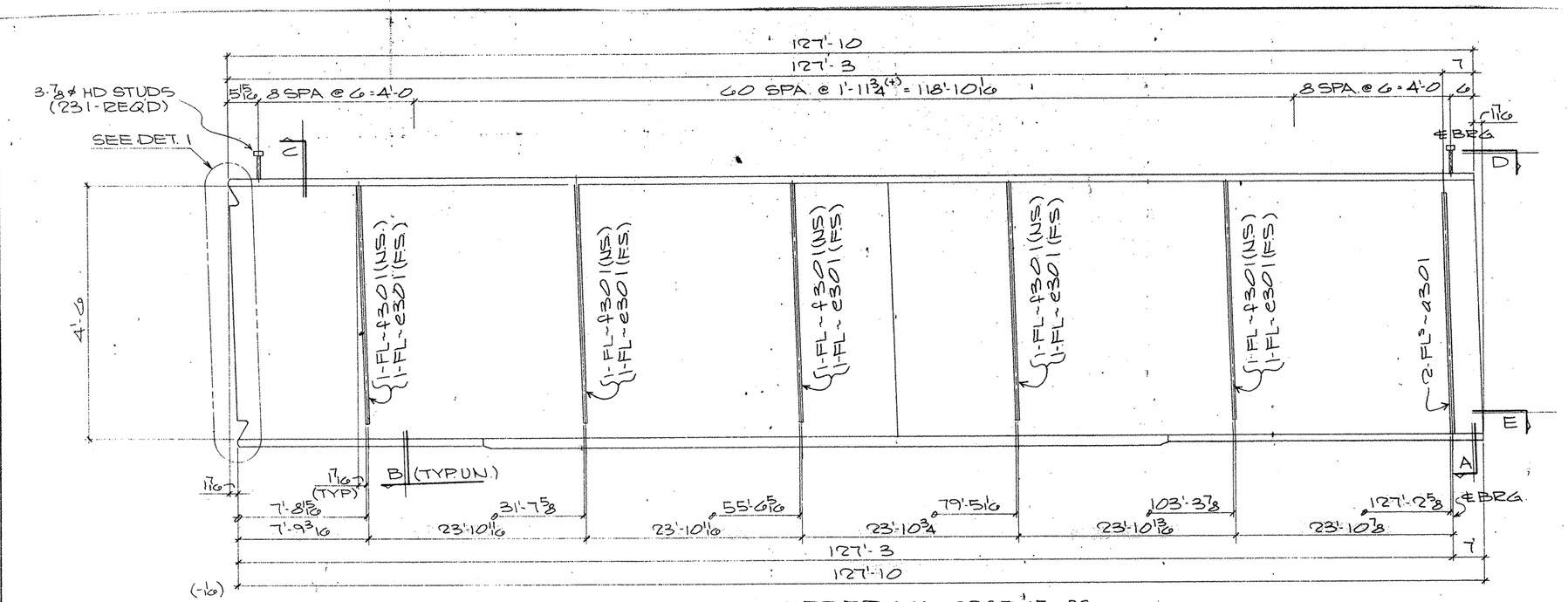

ONE GIRDER MK~ 328P65.03

(APPROX. WT= TONS)

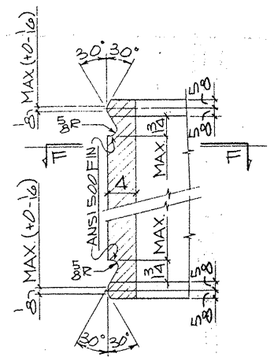

DETAIL - 1

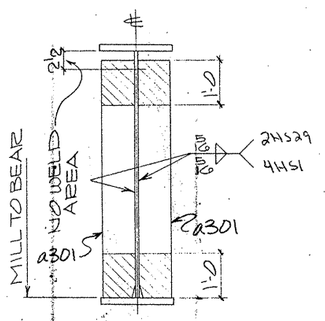

SECTION-A

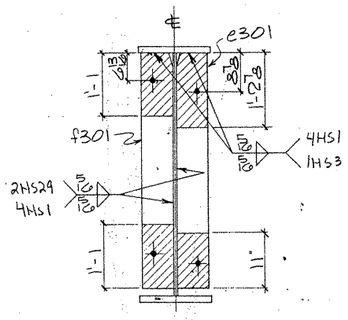

SECTION-B

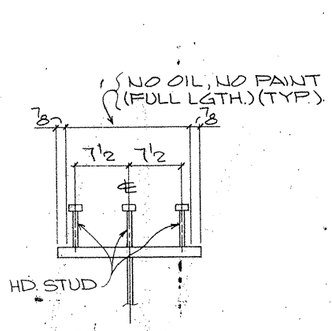

SECTION-C

(TYP STUD SECT.)

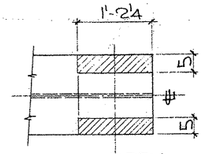

VIEW-D

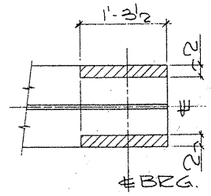

SECTION-E

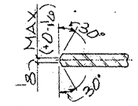

SECTION-FF

SHOP NOTES:

1) FOR GENERAL NOTES SEE SHT. GN1
2) FOR GIRDER SUB-ASSEMBLY SEE SHT. 308
3) FOR STIFF. DETAILS SEE SHT. 301
4) FOR BLOCKING DIAGRAM SEE SHT. 330
5) ▨ INDICATES OIL, NO PAINT (N.S./F.S. & EDGES)

BILL OF MATERIAL

	Only.	Material	Length	Mark Temp	Mark Ship	Wt	Cut From	Remarks
1								
2	1	GIRDER			328P65.03			
3	1	GIRDER SUB-ASSY		B308				
4	2	BRG STIFF		ø301				
5	5	DIAF STIFF		e301				
6	5	DIAF STIFF		f301				
7	231	HD STUD 7/8	0'-7				302-1	A108
8–60								

TEXAS DEPARTMENT OF TRANSPORTATION
APPROVED
DIVISION OF BRIDGES AND STRUCTURES
DEC 29 1992
APPROVAL OF THIS DRAWING DOES NOT RELIEVE THE CONTRACTOR OF THE RESPONSIBILITY FOR THE CORRECTNESS OF DETAILS

FOR APPROVAL
AUG 14 '92
NOT FOR CONSTRUCTION

REVISION	DATE	DESCRIPTION OF REVISION
NO. 1		
NO. 2		
NO. 3		
NO. 4		
NO. 5		

PRINTING Req'd	For	Date

Bolts Holes 5/16 UN Unless Noted
Shop Paint SEE SHT GN1
Fab Spec AS NTD Inspection
Architect
Erection By Field Connections

HIRSCHFELD STEEL CO. INC.
112 WEST 29TH SAN ANGELO, TEXAS 76903
PHONE (915) 653-3211

DESCRIPTION 510'-0 PLATE GIRDER UNIT
STRUCTURE US 83/281 INTERCHANGE RAMP "
LOCATION HIDALGO COUNTY
CUSTOMER GILBERT TEXAS CONSTRUCTION
SHIP TO
Customer's Order No.
Dwg By CRT Date 7-92
Checked By JC Date 7-9-92

SHEET 328 OF
JOB NO. 92-1066

G0306

FED ROAD DIV. NO	STATE	FEDERAL AID PROJECT NO.				
6	TX.	NH (50) M				
STATE DIST. NO.	COUNTY	CONTROL NO.	SECTION NO.	JOB NO.	HIGHWAY NO.	
21	HIDALGO	39	17	97	83/281	

CE 92-11 (LINE # 3)

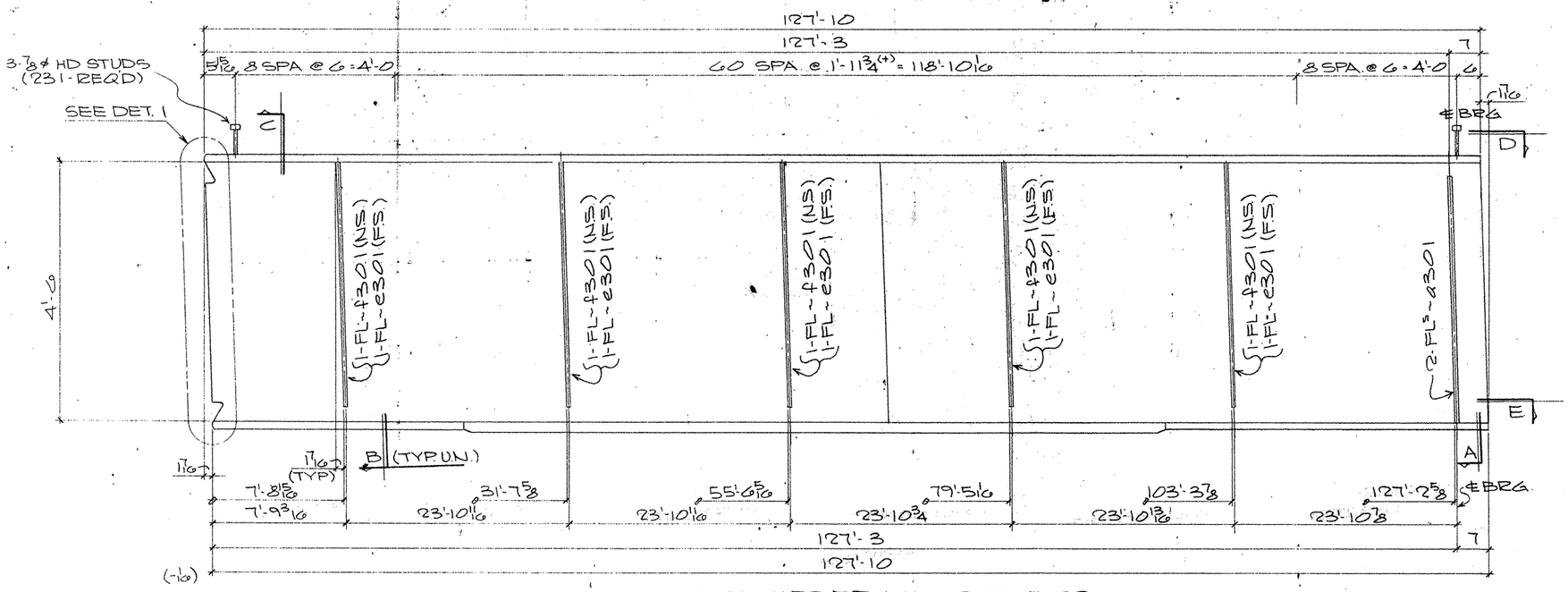

ONE GIRDER MR~ 327PG5.02

(APPROX. WT: TONS)

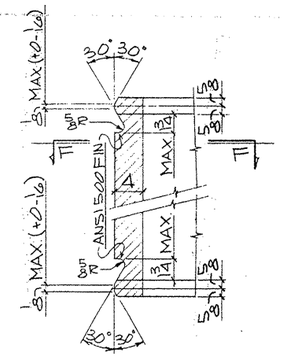

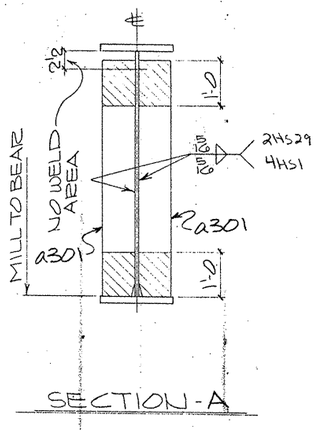

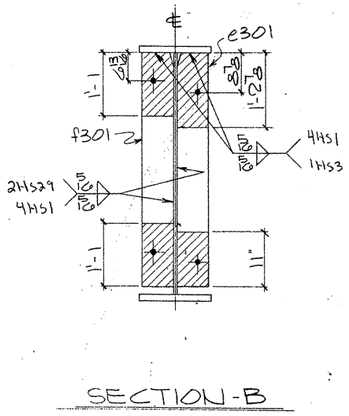

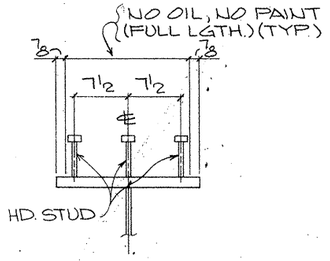

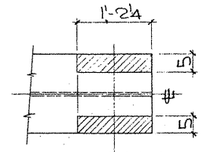

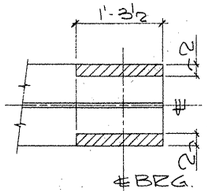

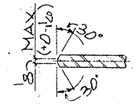

SHOP NOTES:

1) FOR GENERAL NOTES SEE SHT. GN1
2) FOR GIRDER SUB-ASSEMBLY SEE SHT. 307
3) FOR STIFF. DETAILS SEE SHT. 301
4) FOR BLOCKING DIAGRAM SEE SHT. 330
5) ▨ INDICATES OIL, NO PAINT (N.S./F.S. & EDGES)

BILL OF MATERIAL

	Qnty.	Material	Length	Mark Temp.	Mark Ship	Wt.	Cut From	Remarks
2	1	GIRDER			327PG5.02			
3	1	GIRDER SUB-ASSY		B307				
4	2	BRG STIFF		a301				
5	5	DIAF STIFF		e301				
6	5	DIAF STIFF		f301				
7	231	HD STUD 7/8"	0'-7				302-1	A108

FOR APPROVAL
AUG 24 92
NOT FOR CONSTRUCTION

TEXAS DEPARTMENT OF TRANSPORTATION
APPROVED
DIVISION OF BRIDGES AND STRUCTURES
DEC 29 1992
APPROVAL OF THIS DRAWING DOES NOT RELIEVE THE CONTRACTOR OF THE RESPONSIBILITY FOR THE CORRECTNESS OF DETAIL

REVISION	DATE	DESCRIPTION OF REVISION
NO. 1		
NO. 2		
NO. 3		
NO. 4		
NO. 5		

PRINTING Req'd	For	Date

Bolts Holes. 5/16 ON Unless Noted
Shop Paint SEE SHT GN1
Fab Spec AS UTD Inspection
Architect
Erection By Field Connections

HIRSCHFELD STEEL CO. INC.
112 WEST 29TH SAN ANGELO TEXAS 76903
PHONE (915) 653-3211

DESCRIPTION	510'-0 PLATE GIRDER UNIT
STRUCTURE	US 83/281 INTERCHANGE RAMP "L"
LOCATION	HIDALGO COUNTY
CUSTOMER	GILBERT TEXAS CONSTRUCTION
SHIP TO	
Customer's Order No.	
Dwg. By CRT	Date 7-92
Checked By JC	Date 7-9-92

SHEET 327 OF
JOB NO. 92-1064.

G0306

FED. ROAD DIV. NO.	STATE	FEDERAL AID PROJECT NO.			
6	TX.	NH (50) M			
STATE DIST. NO.	COUNTY	CONTROL NO.	SECTION NO.	JOB NO.	HIGHWAY NO.
21	HIDALGO	39	17	97	83/281

AM 8/17

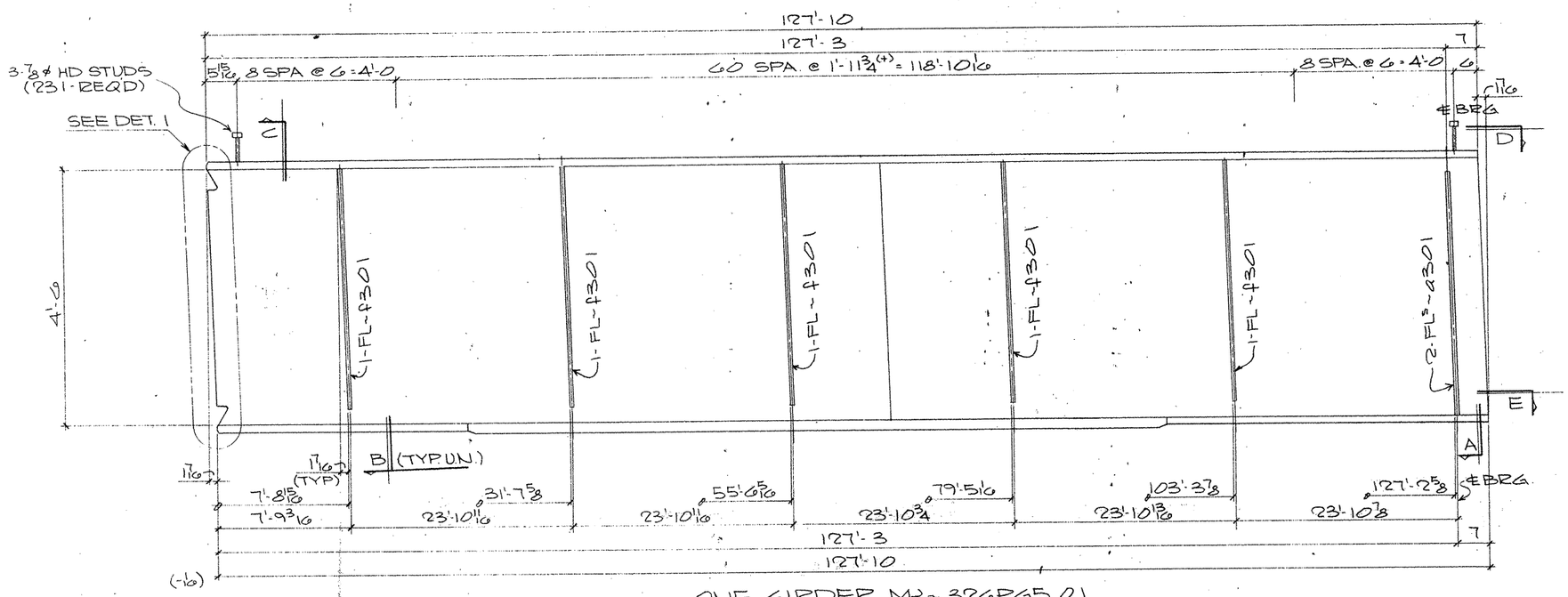

ONE GIRDER MK~ 326PG5.01

(APPROX. WT: TONS)

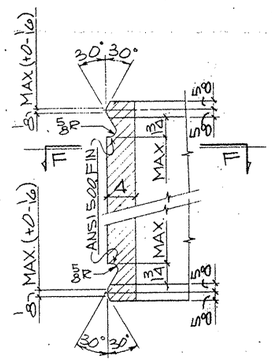

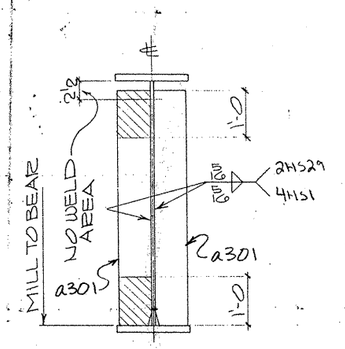

SECTION-A

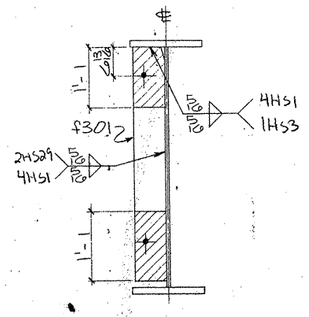

SECTION-B

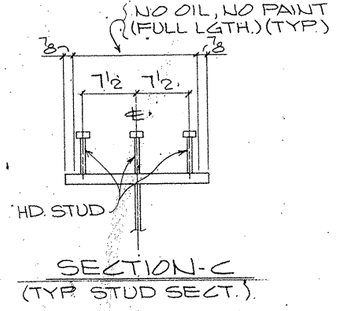

SECTION-C (TYP STUD SECT.)

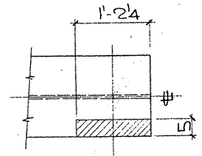

VIEW-D

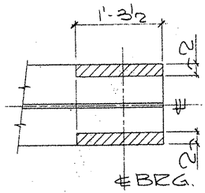

SECTION-E

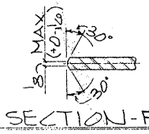

SECTION-FF

SHOP NOTES:

1) FOR GENERAL NOTES SEE SHT. GN1
2) FOR GIRDER SUB-ASSEMBLY SEE SHT. 306
3) FOR STIFF. DETAILS SEE SHT. 301
4) FOR BLOCKING DIAGRAM SEE SHT. 330
5) ////// INDICATES OIL, NO PAINT (N.S./F.S. & EDGES)

BILL OF MATERIAL

	Qnty.	Material	Length	Mark Temp.	Mark Ship	Wt	Cut From	Remarks
2	1	GIRDER			326PG5.01			
3	1	GIRDER SUB-ASSY		B306				
4	2	BRG STIFF		ø301				
5	5	DIAF STIFF		ø301				
7	231	HD STUD 7/8	0'-7				302-1	A108

TEXAS DEPARTMENT OF TRANSPORTATION
APPROVED
DIVISION OF BRIDGES AND STRUCTURES
DEC 29 1992
APPROVAL OF THIS DRAWING DOES NOT RELIEVE THE CONTRACTOR OF THE RESPONSIBILITY FOR THE CORRECTNESS OF DETAILS

FOR APPROVAL
AUG 24 '92
NOT FOR CONSTRUCTION

REVISION	DATE	DESCRIPTION OF REVISION
NO. 1		
NO. 2		
NO. 3		
NO. 4		
NO. 5		

PRINTING Req'd	For	Date

Bolts: Holes: 5/16ø UN Unless Noted
Shop Paint: SEE SHT GN1
Fab Spec: AS NTD Inspection
Architect
Erection By: Field Connections

HIRSCHFELD STEEL CO. INC.
112 WEST 29TH SAN ANGELO, TEXAS 76903
PHONE (915) 653-3211

DESCRIPTION	510'-0 PLATE GIRDER UNIT
STRUCTURE	US 83/281 INTERCHANGE RAMP "E"
LOCATION	HIDALGO COUNTY
CUSTOMER	GILBERT TEXAS CONSTRUCTION
SHIP TO	
Customer's Order No.	
Dwg. By CRT	Date 7-9-92
Checked By JC	Date 7-9-92

SHEET 326 OF
JOB NO. 92-106

GO206

FED. ROAD DIV. NO.	STATE	FEDERAL AID PROJECT NO.			
6	TX.	NH (50) M			
STATE DIST. NO.	COUNTY	CONTROL NO.	SECTION NO.	JOB NO.	HIGHWAY NO.
21	HIDALGO	39	17	97	83/281

8/24

CE 92-11 (LINE # 1)

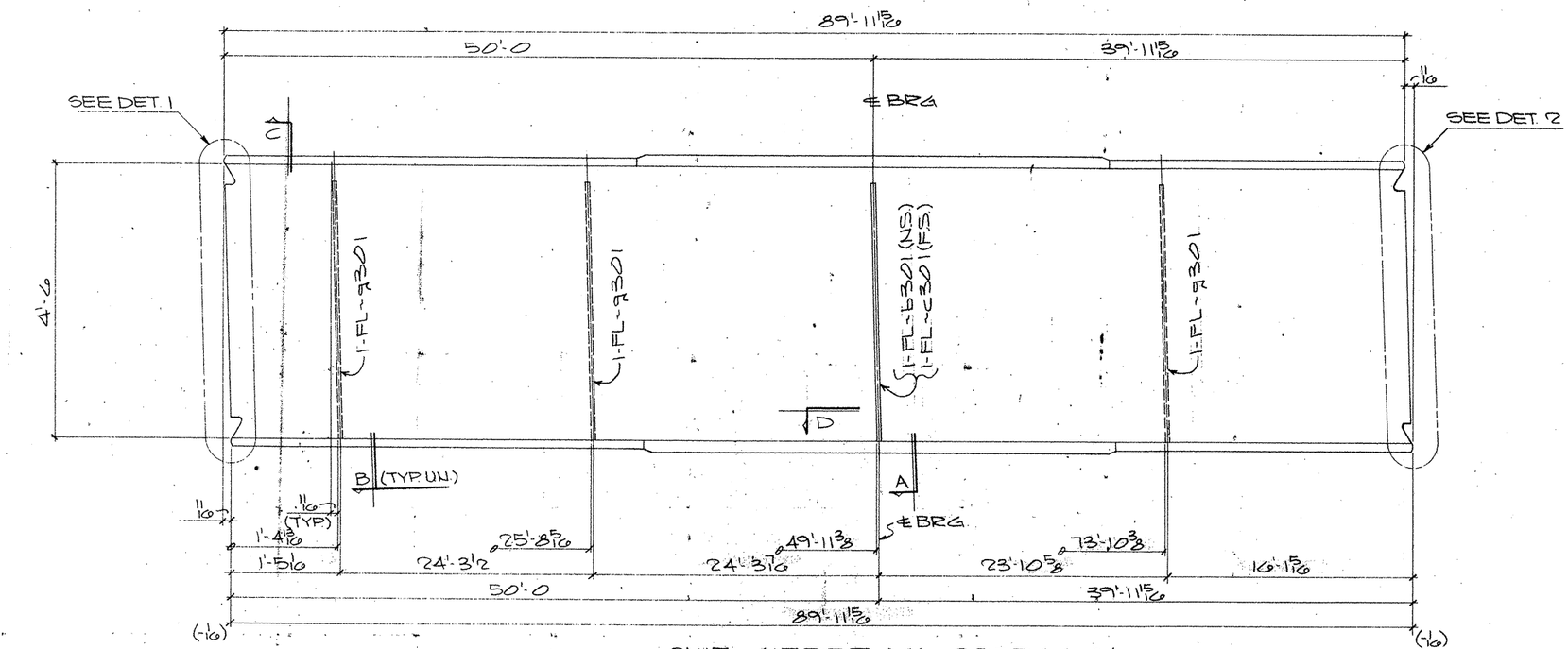

ONE GIRDER MK- 325PG4.04

(APPROX. WT. = TONS)

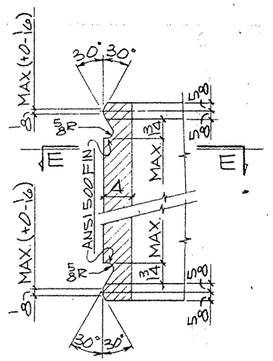

DETAIL-1

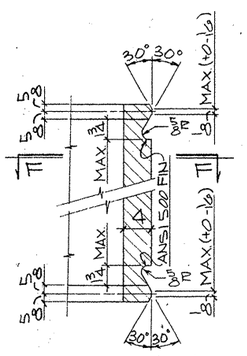

DETAIL-2

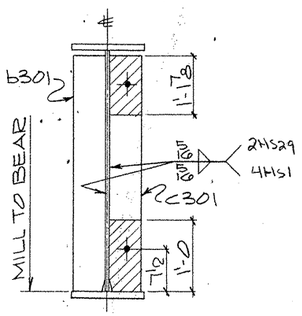

SECTION-A

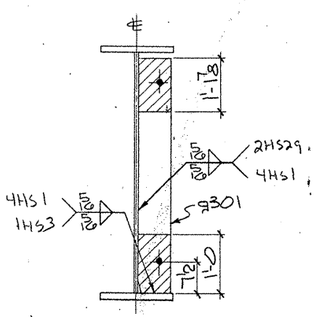

SECTION-B

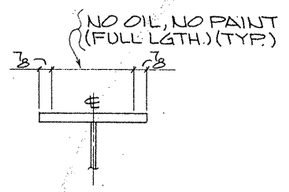

SECTION-C

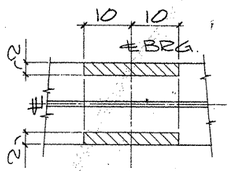

SECTION-D

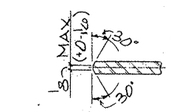

SECTION-EE

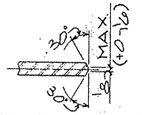

SECTION-FF

SHOP NOTES:

1) FOR GENERAL NOTES SEE SHT. GN1
2) FOR GIRDER SUB-ASSEMBLY SEE SHT. 309
3) FOR STIFF. DETAILS SEE SHT. 301
4) FOR BLOCKING DIAGRAM SEE SHT. 330
5) ZZZZZ INDICATES OIL, NO PAINT (N.S./F.S. & EDGES)

BILL OF MATERIAL

	Qnty.	Material	Length	Mark Temp	Mark Ship.	Wt	Cut From	Remarks
1								
2	1	GIRDER			325PG4.04			
3	1	GIRDER SUB-ASSY		A309				
4	1	BRG STIFF		B301				
5	1	BRG STIFF		C301				
6	3	DIAF STIFF		9301				
7–60								

TEXAS DEPARTMENT OF TRANSPORTATION
APPROVED
DIVISION OF BRIDGES AND STRUCTURES
DEC 29 1992

APPROVAL OF THIS DRAWING DOES NOT RELIEVE THE CONTRACTOR OF THE RESPONSIBILITY FOR THE CORRECTNESS OF DETAIL

FOR APPROVAL
AUG 24 '92
NOT FOR CONSTRUCTION

REVISION	DATE	DESCRIPTION OF REVISION
NO. 1		
NO. 2		
NO. 3		
NO. 4		
NO. 5		

PRINTING Req'd	For	Date

Bolts Holes. 15/16ø Unless Noted
Shop Paint SEE SHT GN1
Fab Spec AS NTD Inspection
Architect
Erection By Field Connections

HIRSCHFELD STEEL CO. INC.
112 WEST 29TH SAN ANGELO, TEXAS 76903
PHONE (915) 653-3211

DESCRIPTION	510'-0 PLATE GIRDER UNIT
STRUCTURE	US 83/281 INTERCHANGE RAMP "R" 1
LOCATION	HIDALGO COUNTY
CUSTOMER	GILBERT TEXAS CONSTRUCTION
SHIP TO	
Customer's Order No.	
Dwg. By CRT Date 7-92	SHEET 325 OF
Checked By JC Date 7-9-92	JOB NO 92-100

G0206

FED ROAD DIV NO	STATE	FEDERAL AID PROJECT NO			
6	TX.	NH (50) M			
STATE DIST NO	COUNTY	CONTROL NO	SECTION NO	JOB NO	HIGHWAY NO
21	HIDALGO	39	17	97	83/281

CE 92-11 (LINE #4)

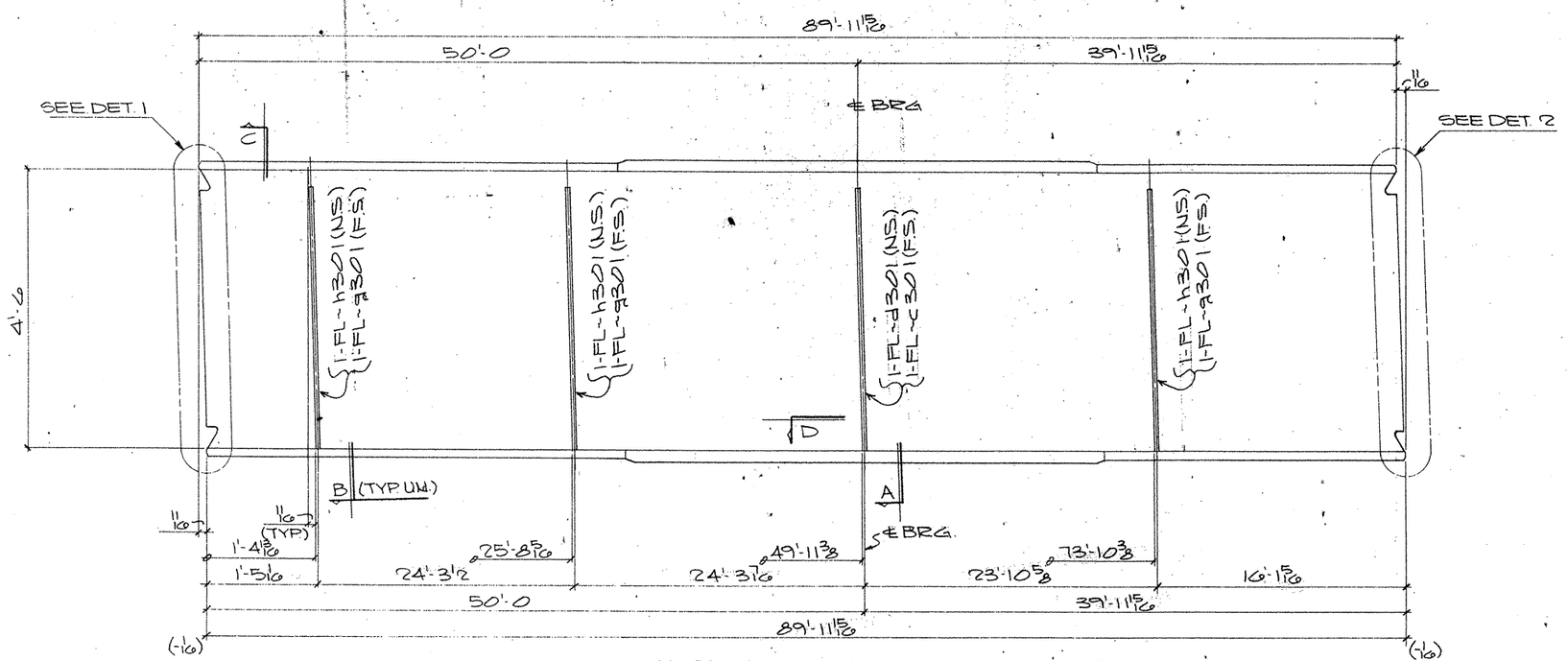

ONE GIRDER MK- 324PG4.03

(APPROX. WT. = TONS)

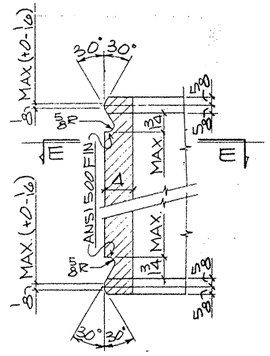

DETAIL - 1

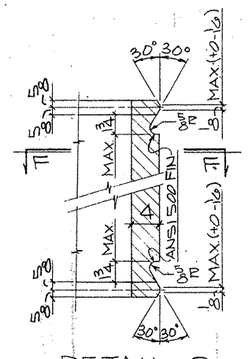

DETAIL - 2

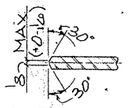

SECTION - EE

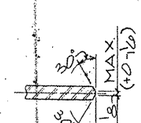

SECTION - FF

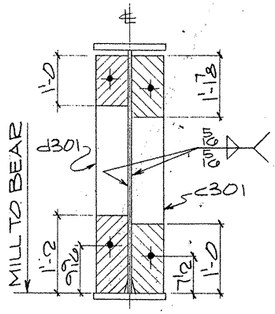

SECTION - A

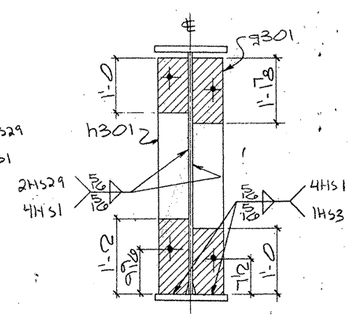

SECTION - B

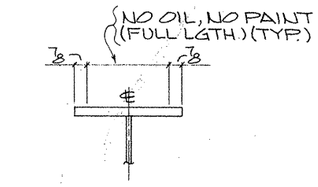

SECTION - C

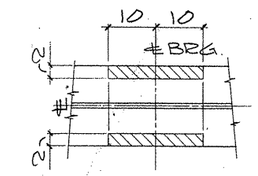

SECTION - D

SHOP NOTES:

1) FOR GENERAL NOTES SEE SHT. GN1
2) FOR GIRDER SUB-ASSEMBLY SEE SHT. 308
3) FOR STIFF. DETAILS SEE SHT. 301
4) FOR BLOCKING DIAGRAM SEE SHT. 330
5) ////// INDICATES OIL, NO PAINT (N.S./F.S. & EDGES)

G0306

FED. ROAD DIV. NO	STATE	FEDERAL AID PROJECT NO.			
6	TX.	NH (50) M			
STATE DIST. NO	COUNTY	CONTROL NO	SECTION NO	JOB NO	HIGHWAY NO
21	HIDALGO	39	17	97	83/281

BILL OF MATERIAL

	Qnty	Material	Length	Mark Temp.	Mark Ship.	Wt	Cut From	Remarks
1								
2	1	GIRDER			324PG4.03			
3	1	GIRDER SUB-ASSY		A308				
4	1	BRG STIFF		c301				
5	1	BRG STIFF		d301				
6	3	DIAF STIFF		g301				
7	3	DIAF STIFF		h301				
8–60								

FOR APPROVAL
AUG 28 '92
NOT FOR CONSTRUCTION

TEXAS DEPARTMENT OF TRANSPORTATION
ACCEPTED
DIVISION OF BRIDGES AND STRUCTURES
DEC 29 1992

APPROVAL OF THIS DRAWING DOES NOT RELIEVE THE CONTRACTOR OF THE RESPONSIBILITY FOR THE CORRECTNESS OF DETAIL

REVISION	DATE	DESCRIPTION OF REVISION
NO. 1		
NO. 2		
NO. 3		
NO. 4		
NO. 5		

PRINTING Req'd	For	Date

Bolts Holes 15/16 ø Unless Noted
Shop Paint SEE SHT GN1
Fab. Spec. AS NTD Inspection
Architect
Erection By Field Connections

HIRSCHFELD STEEL CO. INC.
112 WEST 29TH SAN ANGELO, TEXAS 76903
PHONE (915) 653-3211

DESCRIPTION	510'-0 PLATE GIRDER UNIT
STRUCTURE	US 83/281 INTERCHANGE RAMP "I"
LOCATION	HIDALGO COUNTY
CUSTOMER	GILBERT TEXAS CONSTRUCTION
SHIP TO	
Customer's Order No.	
Dwg. By CRT Date 7-92	
Checked By JC Date 7-9-92	

SHEET 324 OF
JOB NO. 92-100

Apv 8/24

CE 92-11 (LINE # 3)

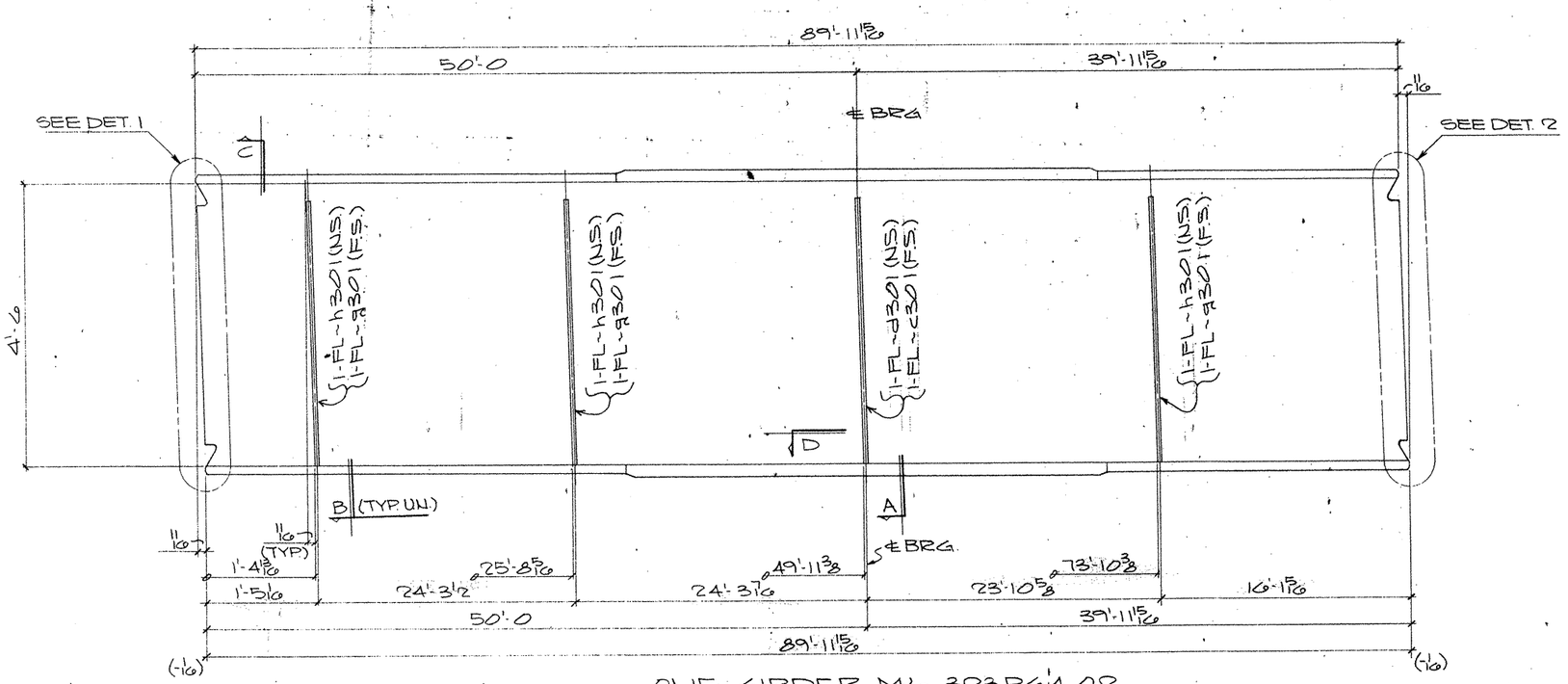

ONE GIRDER MK- 323PG4.02

(APPROX. WT. = TONS)

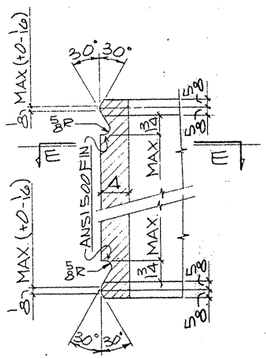

DETAIL - 1

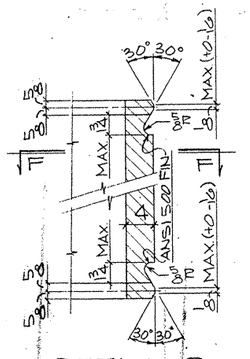

DETAIL - 2

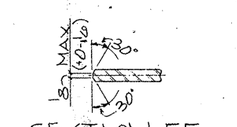

SECTION-EE

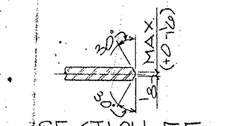

SECTION-FF

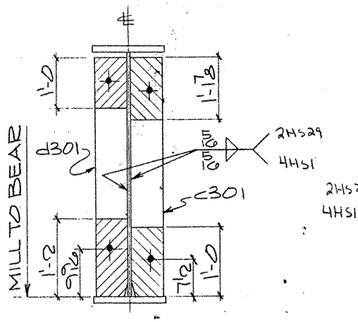

SECTION-A

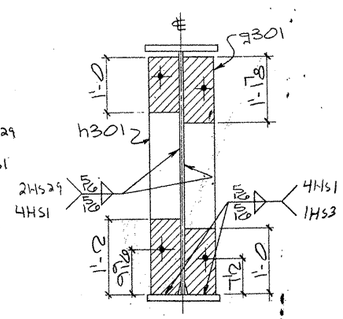

SECTION-B

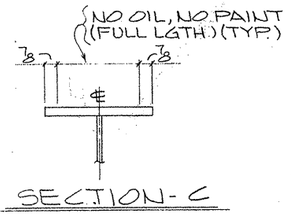

SECTION-C

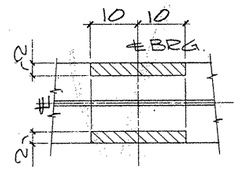

SECTION-D

SHOP NOTES:
1) FOR GENERAL NOTES SEE SHT. GN1
2) FOR GIRDER SUB-ASSEMBLY SEE SHT. 307
3) FOR STIFF. DETAILS SEE SHT. 301
4) FOR BLOCKING DIAGRAM SEE SHT. 330
5) ▨ INDICATES OIL, NO PAINT (N.S./F.S. & EDGES)

BILL OF MATERIAL

	Qnty.	Material	Length	Mark Temp.	Mark Ship	Wt.	Cut From	Remarks
1								
2	1	GIRDER			323PG4.02			
3	1	GIRDER SUB-ASSY		A307				
4	1	BRG STIFF		c301				
5	1	BRG STIFF		d301				
6	3	DIAF STIFF		g301				
7	3	DIAF STIFF		h301				
8–60								

TEXAS DEPARTMENT OF TRANSPORTATION
APPROVED
DIVISION OF BRIDGES AND STRUCTURES
DEC 29 1992
APPROVAL OF THIS DRAWING DOES NOT RELIEVE THE CONTRACTOR OF THE RESPONSIBILITY FOR THE CORRECTNESS OF DETAIL

FOR APPROVAL
AUG 28 '92
NOT FOR CONSTRUCTION

REVISION	DATE	DESCRIPTION OF REVISION
NO. 1		
NO. 2		
NO. 3		
NO. 4		
NO. 5		

PRINTING

Req'd For	Date

Bolts Holes: 15/16 ø Unless Noted
Shop Paint SEE SHT GN1
Fab. Spec AS NTD Inspection
Architect
Erection By Field Connections

HIRSCHFELD STEEL CO. INC.
112 WEST 29TH SAN ANGELO, TEXAS 76903
PHONE (915) 653-3211

DESCRIPTION 510'-0 PLATE GIRDER UNIT
STRUCTURE US 83/281 INTERCHANGE RAMP # 1
LOCATION HIDALGO COUNTY
CUSTOMER GILBERT TEXAS CONSTRUCTION
SHIP TO
Customer's Order No.
Dwg. By CRJ Date 7-92
Checked By JC Date 7-9-92
SHEET 323 OF
JOB NO. 92-100

G0206

FED. ROAD DIV. NO.	STATE	FEDERAL AID PROJECT NO.			
6	TX.	NH (50) M			
STATE DIST. NO.	COUNTY	CONTROL NO.	SECTION NO.	JOB NO.	HIGHWAY NO.
21	HIDALGO	39	17	97	83/281

CE 92-11 (LINE # 2)

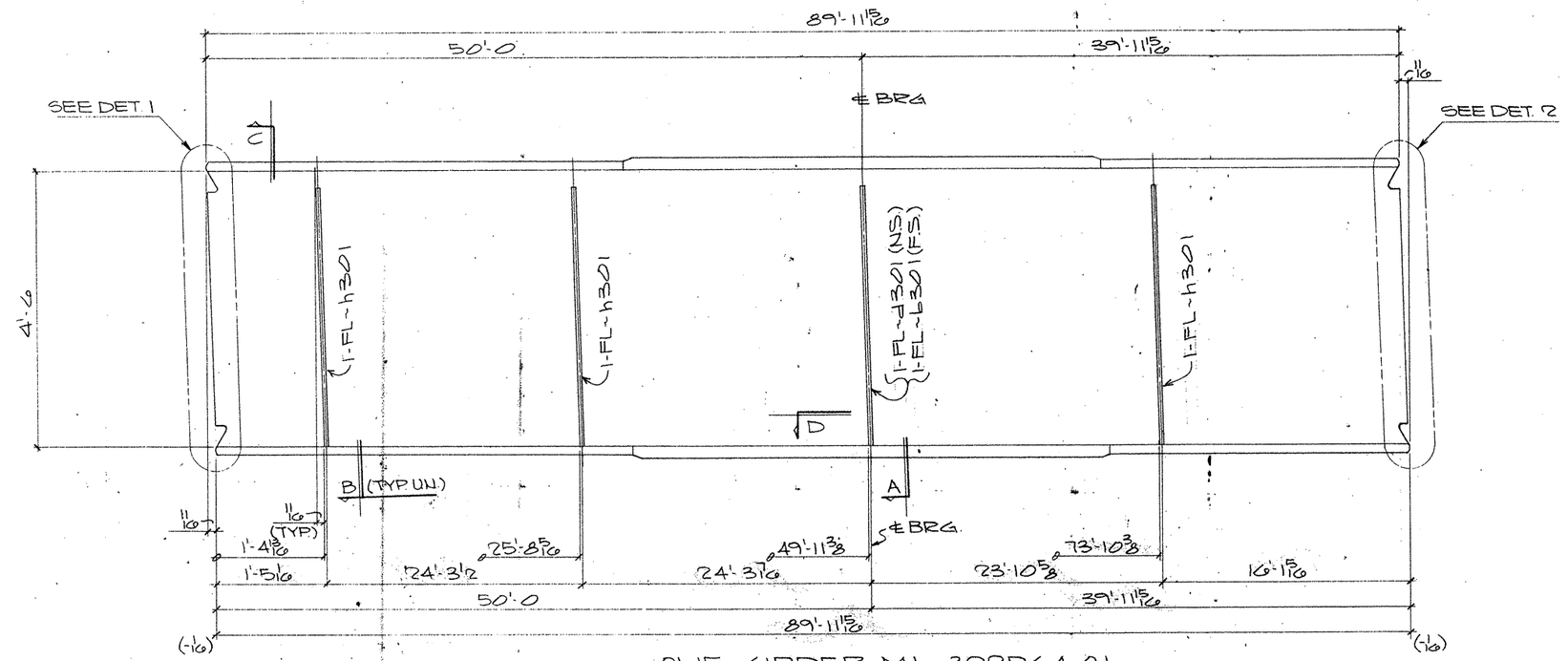

ONE GIRDER MK~ 322PG4.01

(APPROX. WT. = TONS)

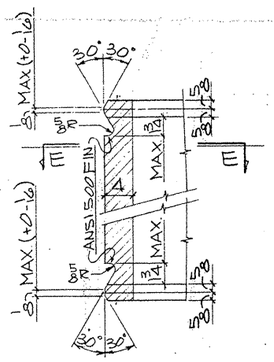

DETAIL-1

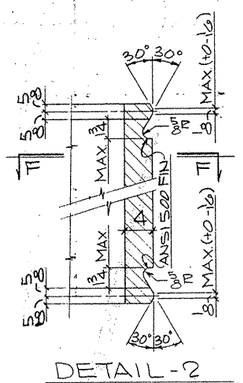

DETAIL-2

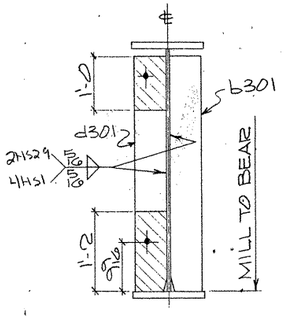

SECTION-A

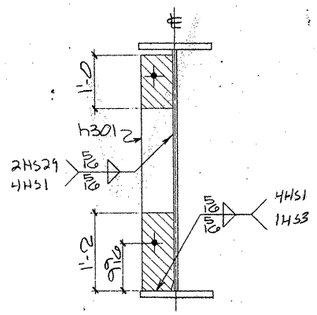

SECTION-B

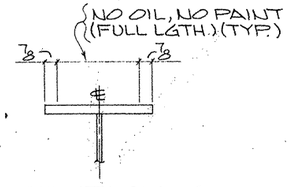

SECTION-C

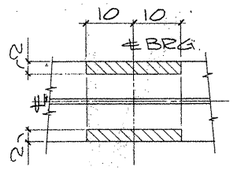

SECTION-D

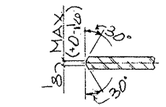

SECTION-EE

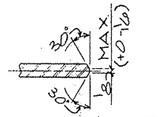

SECTION-FF

SHOP NOTES:

1) FOR GENERAL NOTES SEE SHT. GN1
2) FOR GIRDER SUB-ASSEMBLY SEE SHT.306
3) FOR STIFF. DETAILS SEE SHT. 301
4) FOR BLOCKING DIAGRAM SEE SHT. 330
5) ▨ INDICATES OIL, NO PAINT (N.S./F.S. & EDGES)

BILL OF MATERIAL

	Qnty	Material	Length	Mark Temp	Mark Ship	Wt.	Cut From	Remarks
1								
2	1	GIRDER			322PG4.01			
3	1	GIRDER SUB-ASSY		A306				
4	1	BRG STIFF		b301				
5	1	BRG STIFF		d301				
6	3	DIAF STIFF		h301				
7–60								

TEXAS DEPARTMENT OF TRANSPORTATION
APPROVED
DIVISION OF BRIDGES AND STRUCTURES
DEC 29 1992

APPROVAL OF THIS DRAWING DOES NOT RELIEVE THE CONTRACTOR OF THE RESPONSIBILITY FOR THE CORRECTNESS OF DETAIL.

FOR APPROVAL
AUG 24 '92
NOT FOR CONSTRUCTION

REVISION	DATE	DESCRIPTION OF REVISION
NO. 1		
NO. 2		
NO. 3		
NO. 4		
NO. 5		

PRINTING Req'd	For	Date

Bolts Holes 15/16 ø Unless Noted
Shop Paint SEE SHT GN1
Fab Spec AS NTD Inspection
Architect
Erection By Field Connections

HIRSCHFELD STEEL CO. INC.
112 WEST 29TH SAN ANGELO TEXAS 76903
PHONE (915) 653-3211

DESCRIPTION	510'-0 PLATE GIRDER UNIT
STRUCTURE	US 83/281 INTERCHANGE RAMP # 1
LOCATION	HIDALGO COUNTY
CUSTOMER	GILBERT TEXAS CONSTRUCTION
SHIP TO	
Customer's Order No.	
Dwg By CRT	Date 7-92
Checked By VC	Date 7-9-92

SHEET 322 OF
JOB NO 92-100

G0306

FED. ROAD DIV. NO.	STATE	FEDERAL AID PROJECT NO.				
6	TX.	NH (50) M				
STATE DIST. NO.	COUNTY	CONTROL NO.	SECTION NO.	JOB NO.	HIGHWAY NO.	
21	HIDALGO	39	17	97	83/281	

CE 92-11 (LINE # 1)

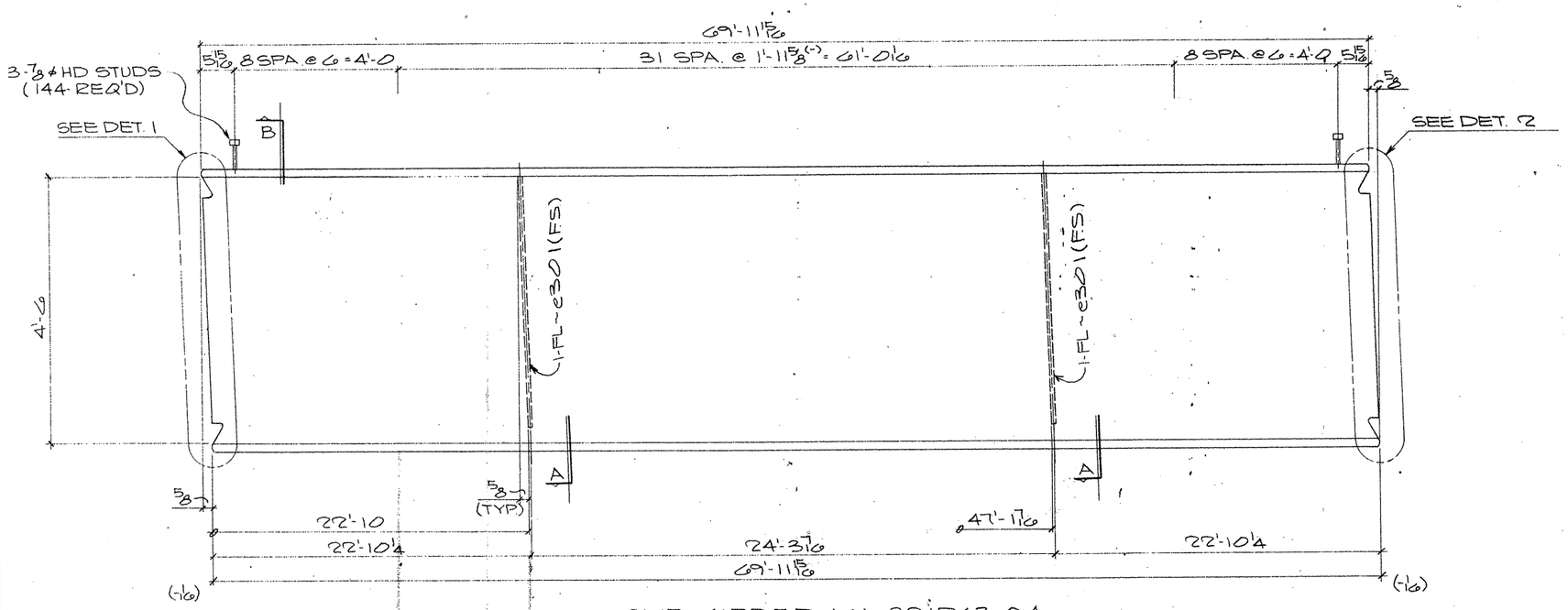

ONE GIRDER MK~321PG3.04

(APPROX. WT. = TONS)

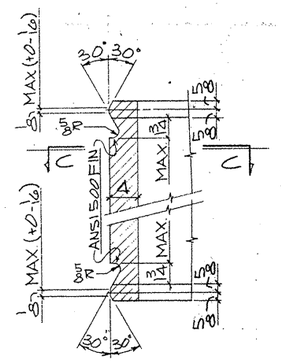

DETAIL-1

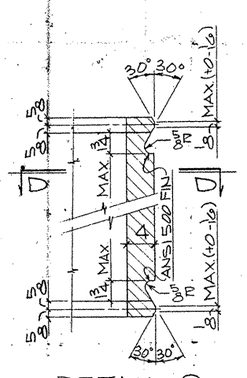

DETAIL-2

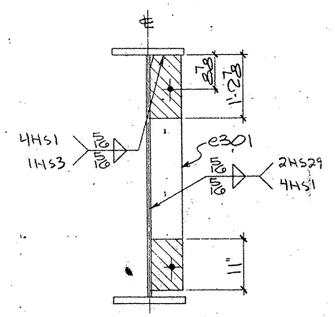

SECTION-A

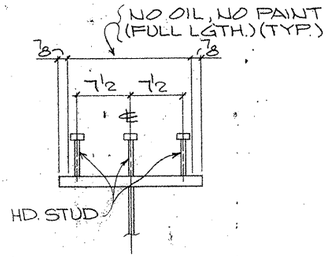

SECTION-B

(TYP. STUD SECT.)

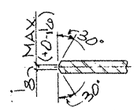

SECTION-CC

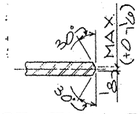

SECTION-DD

SHOP NOTES:

1) FOR GENERAL NOTES SEE SHT. GN1
2) FOR GIRDER SUB-ASSEMBLY SEE SHT. 305
3) FOR STIFF. DETAILS SEE SHT. 301
4) FOR BLOCKING DIAGRAM SEE SHT. 330
5) ▨ INDICATES OIL, NO PAINT (N.S./F.S., & EDGES)

BILL OF MATERIAL

	Only.	Material	Length	Mark Temp	Mark Ship.	Wt.	Cut From	Remarks
1								
2	1	GIRDER			321PG3.04			
3	1	GIRDER SUB-ASSY		E305				
4	2	DIAF STIFF		E301				
5								
6	144	HD STUDS 7/8	0'-7				302-1	A108
7								
8								
9								
10								
11								
12								
13								
14								
15								
16								
17								
18								
19								
20								
21								
22								
23								
24								
25								
26								
27								
28								
29								
30								
31								
32								
33								
34								
35								
36								
37								
38								
39								
40								
41								
42								
43								
44								
45								
46								
47								
48								
49								
50								
51								
52								
53								
54								
55								
56								
57								
58								
59								
60								

FOR APPROVAL
AUG 24 '92
NOT FOR CONSTRUCTION

TEXAS DEPARTMENT OF TRANSPORTATION
APPROVED
~~DIVISION OF BRIDGES AND STRUCTURES~~
DEC 29 1992
APPROVAL OF THIS DRAWING DOES NOT RELIEVE THE CONTRACTOR OF THE RESPONSIBILITY FOR THE CORRECTNESS OF DETAIL

REVISION	DATE	DESCRIPTION OF REVISION
NO 1		
NO 2		
NO 3		
NO 4		
NO 5		

PRINTING

Req'd	For	Date

Bolts Holes 15/16 ϕ Unless Noted
Shop Paint SEE SHT. GN1
Fab Spec. AS NTD Inspection
Architect
Erection By Field Connections

HIRSCHFELD STEEL CO. INC.
112 WEST 29TH SAN ANGELO, TEXAS 76903
PHONE (915) 653-3211

DESCRIPTION	510'-0 PLATE GIRDER UNIT
STRUCTURE	US 83/281 INTERCHANGE RAMP # 1
LOCATION	HIDALGO COUNTY
CUSTOMER	GILBERT TEXAS CONSTRUCTION
SHIP TO	
Customer's Order No.	
Dwg. By CBT	Date 7-9-92
Checked By JC	Date 7-9-92

SHEET 321. OF
JOB NO. 92-106

FED ROAD DIV. NO	STATE	FEDERAL AID PROJECT NO.				
6	TX.	NH (50) M				
STATE DIST. NO	COUNTY	CONTROL NO	SECTION NO	JOB NO	HIGHWAY NO.	
21	HIDALGO	39	17	97	83/281	

G0306

CE 92-11 (LINE # 1)

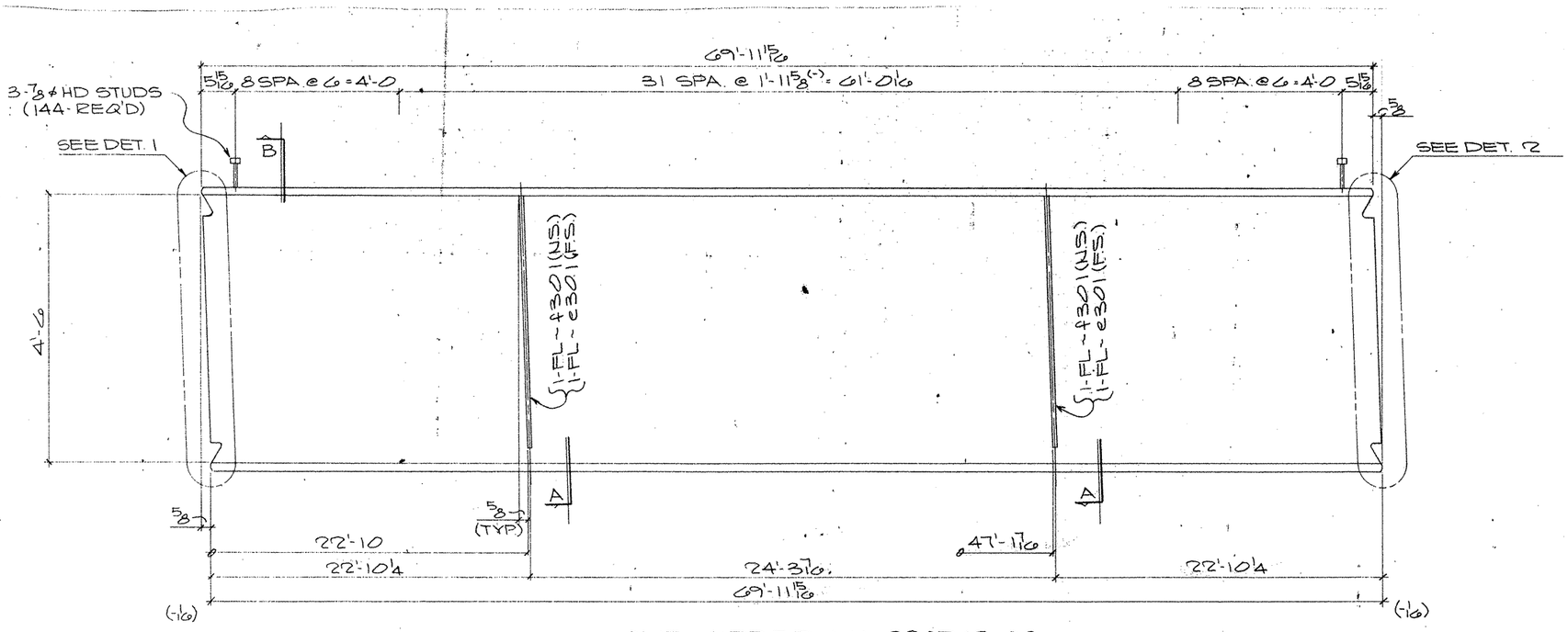

ONE GIRDER MK-320PG3.03

(APPROX. WT. = TONS)

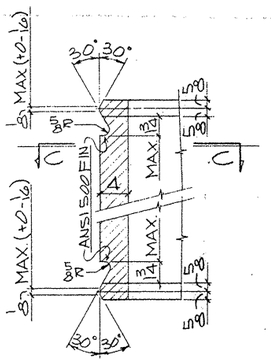

DETAIL-1

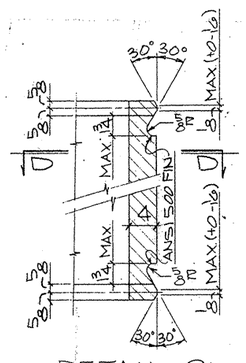

DETAIL-2

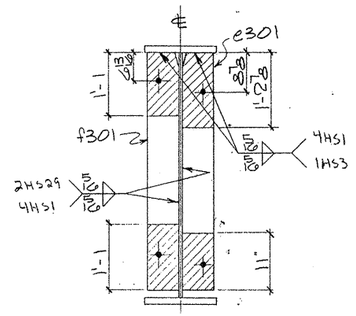

SECTION-A

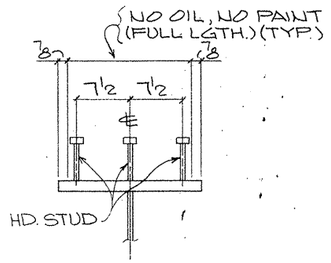

SECTION-B

(TYP. STUD SECT.)

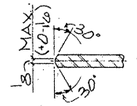

SECTION-CC

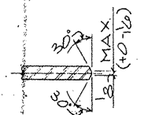

SECTION-DD

SHOP NOTES:

1) FOR GENERAL NOTES SEE SHT. GN1
2) FOR GIRDER SUB-ASSEMBLY SEE SHT. 304
3) FOR STIFF. DETAILS SEE SHT. 301
4) FOR BLOCKING DIAGRAM SEE SHT. 330
5) ▨ INDICATES OIL, NO PAINT (N.S./F.S. & EDGES)

BILL OF MATERIAL

	Qnty.	Material	Length	Mark Temp.	Mark Ship.	Wt.	Cut From	Remarks
1								
2	1	GIRDER			320PG3.03			
3	1	GIRDER SUB-ASSY		C304				
4	2	DIAF STIFF		e301				
5	2	DIAF STIFF		f301				
6	144	HD STUDS 7/8	0'-7				302-1	A108
7–60								

FOR APPROVAL

AUG 24 '92

NOT FOR CONSTRUCTION

TEXAS DEPARTMENT OF TRANSPORTATION
APPROVED
DIVISION OF BRIDGES AND STRUCTURES
DEC 29 1992

APPROVAL OF THIS DRAWING DOES NOT RELIEVE THE CONTRACTOR OF THE RESPONSIBILITY FOR THE CORRECTNESS OF DETAIL

REVISION	DATE	DESCRIPTION OF REVISION
NO. 1		
NO. 2		
NO. 3		
NO. 4		
NO. 5		

PRINTING Read	For	Date

Bolts Holes: 15/16 ϕ Unless Noted
Shop Paint SEE SHT. GN1
Fab Spec. AS NTD Inspection
Architect
Erection By Field Connections

HIRSCHFELD STEEL CO. INC.
112 WEST 29TH SAN ANGELO, TEXAS 76903
PHONE (915) 653-3211

DESCRIPTION	510'-0 PLATE GIRDER UNIT
STRUCTURE	US 83/281 INTERCHANGE RAMP "C"
LOCATION	HIDALGO COUNTY
CUSTOMER	GILBERT TEXAS CONSTRUCTION
SHIP TO	
Customer's Order No.	
Dwg. By CRT	Date 7-92
Checked By JC	Date 7-9-92

SHEET 320 OF
JOB NO. 92-106

G0306

FED. ROAD DIV. NO.	STATE	FEDERAL AID PROJECT NO.				
6	TX.	NH (50) M				
STATE DIST. NO.	COUNTY	CONTROL NO.	SECTION NO.	JOB NO.	HIGHWAY NO.	
21	HIDALGO	39	17	97	83/281	

CE 92-11 (LINE #3)

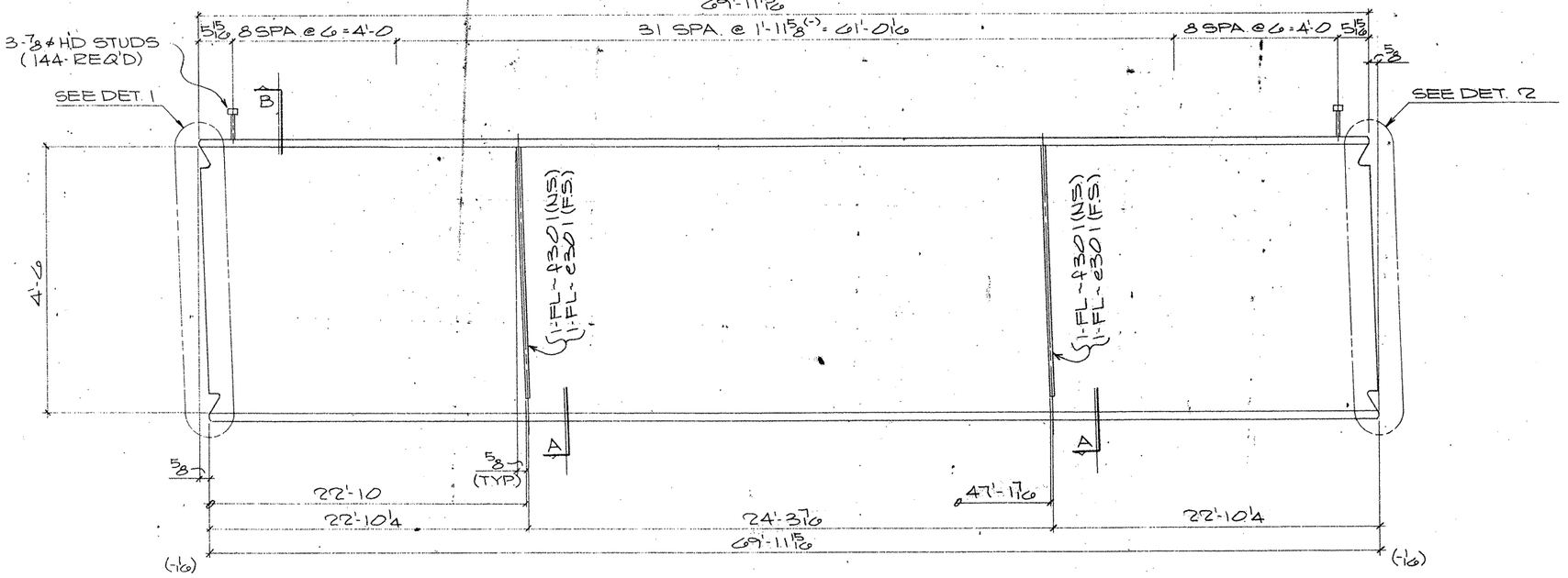

ONE GIRDER MK-319PG3.02

(APPROX. WT. = TONS)

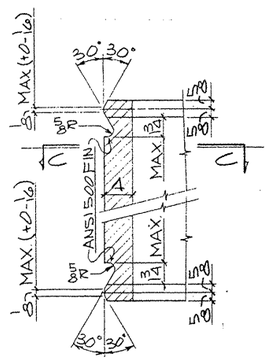

DETAIL-1

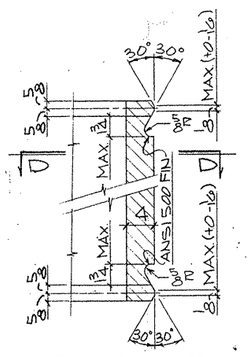

DETAIL-2

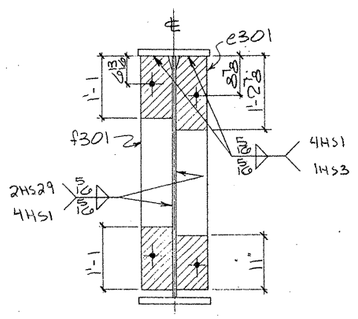

SECTION-A

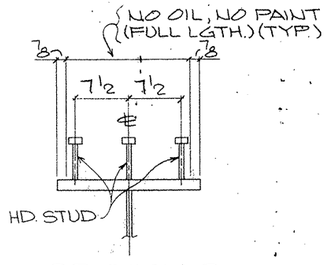

SECTION-B

(TYP. STUD SECT.)

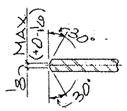

SECTION-CC

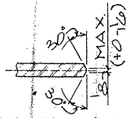

SECTION-DD

SHOP NOTES:

1) FOR GENERAL NOTES SEE SHT. GN1
2) FOR GIRDER SUB-ASSEMBLY SEE SHT. 303
3) FOR STIFF. DETAILS SEE SHT. 301
4) FOR BLOCKING DIAGRAM SEE SHT. 330
5) ▨ INDICATES OIL, NO PAINT (N.S./F.S. & EDGES)

BILL OF MATERIAL

	Only	Material	Length	Mark Temp	Mark Ship	Wt.	Cut From	Remarks
1								
2	1	GIRDER			319PG3.02			
3	1	GIRDER SUB-ASSY		C303				
4	2	DIAF STIFF		ø301				
5	2	DIAF STIFF		f301				
6	144	HD STUDS 7/8	0'-7				302-1	A108
7–60								

TEXAS DEPARTMENT OF TRANSPORTATION
APPROVED
DIVISION OF BRIDGES AND STRUCTURES
DEC 19 1992
APPROVAL OF THIS DRAWING DOES NOT RELIEVE THE CONTRACTOR OF THE RESPONSIBILITY FOR THE CORRECTNESS

FOR APPROVAL
AUG 24 '92
NOT FOR CONSTRUCTION

REVISION	DATE	DESCRIPTION OF REVISION
NO 1		
NO 2		
NO 3		
NO 4		
NO 5		

PRINTING		
Req'd	For	Date

Bolts Holes 15/16 ø Unless Noted
Shop Paint SEE SHT. GN1
Fab Spec. AS NTD Inspection
Architect
Erection By Field Connections

HIRSCHFELD STEEL CO. INC.
112 WEST 29TH SAN ANGELO TEXAS 76903
PHONE (915) 653-3211

DESCRIPTION	510'-0 PLATE GIRDER UNIT
STRUCTURE	US 83/281 INTERCHANGE RAMP "I"
LOCATION	HIDALGO COUNTY
CUSTOMER	GILBERT TEXAS CONSTRUCTION
SHIP TO	
Customer's Order No.	
Dwg. By CBJ	Date 7-9-92
Checked By JC	Date 7-9-92

SHEET 319 OF
JOB NO. 92-106

FED. ROAD DIV. NO.	STATE	FEDERAL AID PROJECT NO.				
6	TX.	NH (50) M				
STATE DIST. NO.	COUNTY	CONTROL NO.	SECTION NO.	JOB NO.	HIGHWAY NO.	
21	HIDALGO	39	17	97	83/281	

G0306

CE 92-11 (LINE # 7)

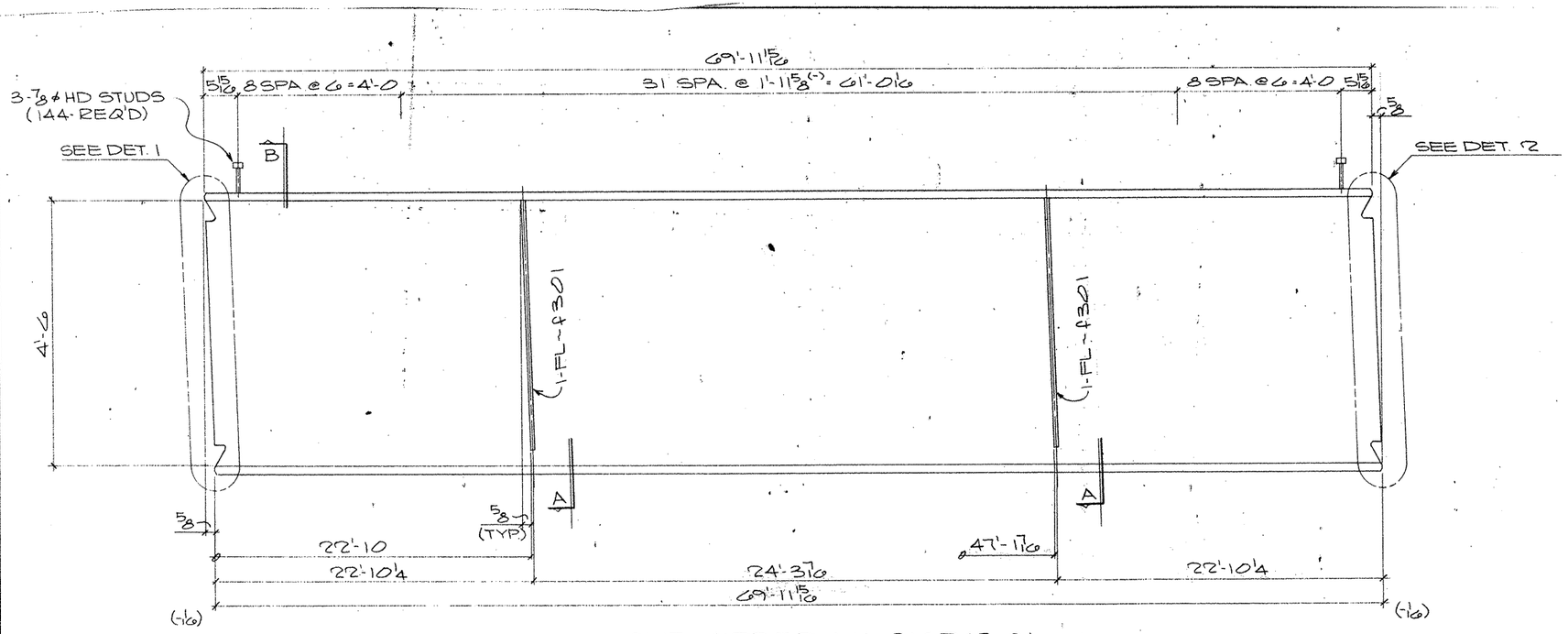

ONE GIRDER MK-318PG3.01

(APPROX. WT. = TONS)

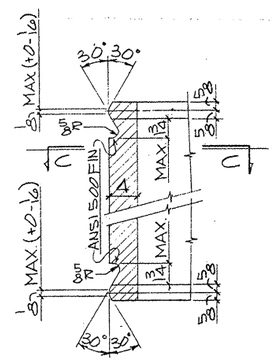

DETAIL-1

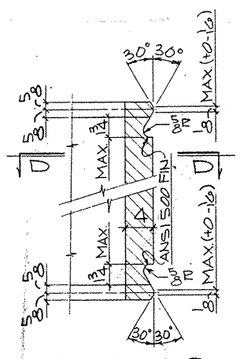

DETAIL-2

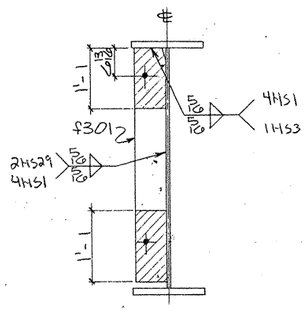

SECTION-A

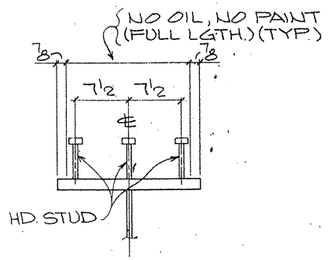

SECTION-B

(TYP. STUD SECT.)

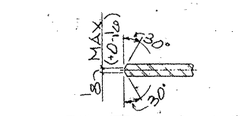

SECTION-CC

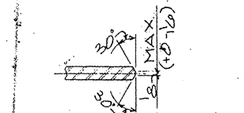

SECTION-DD

SHOP NOTES:

1) FOR GENERAL NOTES SEE SHT. GN1
2) FOR GIRDER SUB-ASSEMBLY SEE SHT. 302
3) FOR STIFF. DETAILS SEE SHT. 301
4) FOR BLOCKING DIAGRAM SEE SHT. 330
5) ▨ INDICATES OIL, NO PAINT (N.S./F.S. & EDGES)

BILL OF MATERIAL

	Qnty.	Material	Length	Mark Temp	Mark Ship	Wt	Cut From	Remarks
2	1	GIRDER			318PG3.01			
3	1	GIRDER SUB-ASSY		C302				
4	2	DIAF STIFF		ϕ301				
6	144	HD STUDS 7/8	0'-7				302-1	A108

TEXAS DEPARTMENT OF TRANSPORTATION
APPROVED
DIVISION OF BRIDGES AND STRUCTURES
DEC 29 1992
APPROVAL OF THIS DRAWING DOES NOT RELIEVE THE CONTRACTOR OF THE RESPONSIBILITY FOR THE CORRECTNESS OF DETAIL.

FOR APPROVAL
AUG 24 '92
NOT FOR CONSTRUCTION

REVISION	DATE	DESCRIPTION OF REVISION
NO. 1		
NO. 2		
NO. 3		
NO. 4		
NO. 5		

PRINTING

Req'd	For	Date

Bolts Holes: 15/16 ϕ Unless Noted
Shop Paint SEE SHT. GN1
Fab Spec AS NTD Inspection
Architect
Erection By Field Connections

HIRSCHFELD STEEL CO. INC.
112 WEST 29TH SAN ANGELO TEXAS 76903
PHONE (915) 653-3211

DESCRIPTION 510'-0 PLATE GIRDER UNIT
STRUCTURE US 83/281 INTERCHANGE RAMP # 1
LOCATION HIDALGO COUNTY
CUSTOMER GILBERT TEXAS CONSTRUCTION
SHIP TO
Customer's Order No.
Dwg. By CRT Date 7-92
Checked By JC Date 7-9-92
SHEET 318 OF
JOB NO. 92-106

G03016

FED. ROAD DIV. NO.	STATE	FEDERAL AID PROJECT NO.			
6	TX.	NH (50) M			
STATE DIST. NO.	COUNTY	CONTROL NO.	SECTION NO.	JOB NO.	HIGHWAY NO.
21	HIDALGO	39	17	97	83/281

CE 92-11 (LINE # 1)

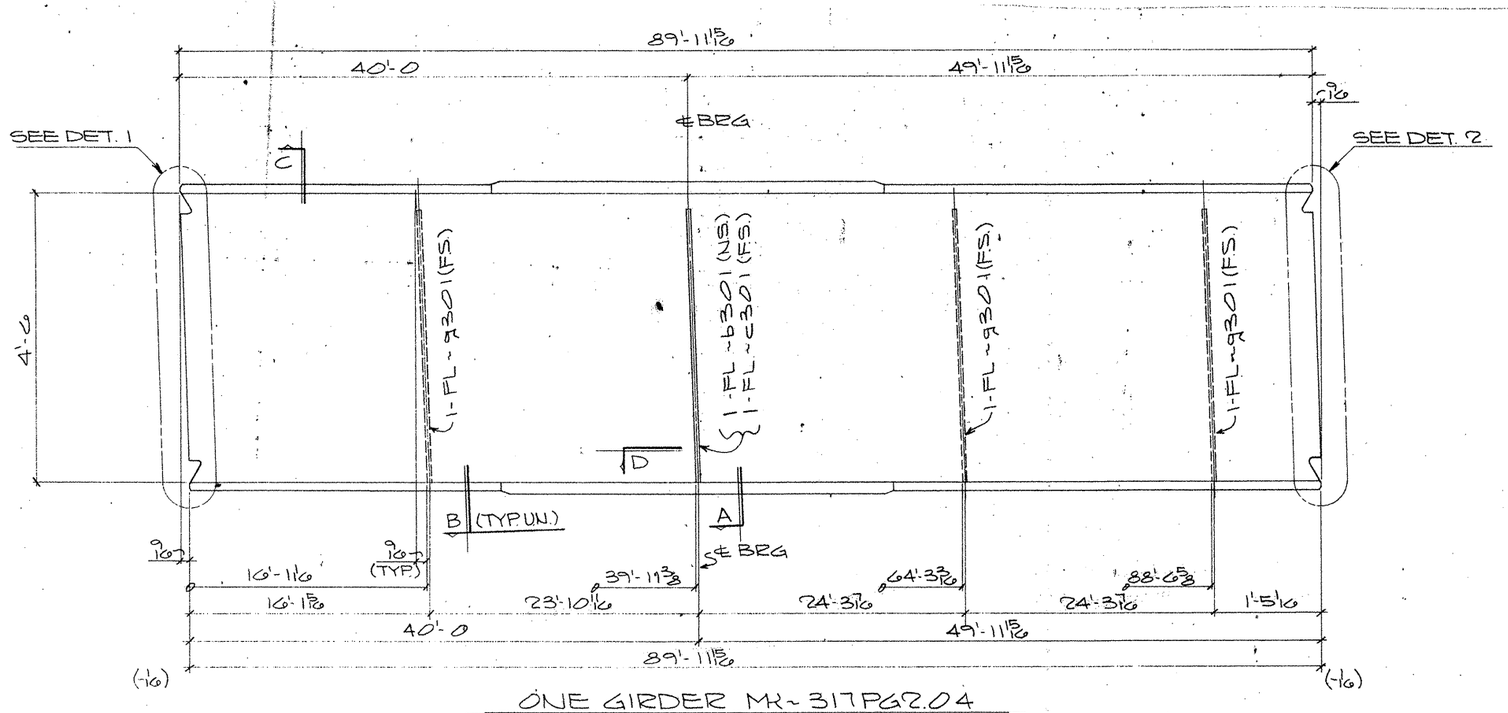

ONE GIRDER MK~ 317PG2.04

(APPROX. WT. = TONS)

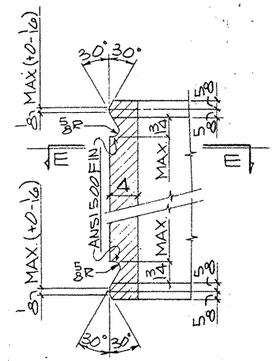

DETAIL-1

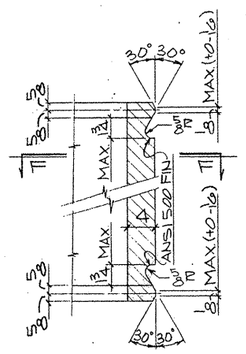

DETAIL-2

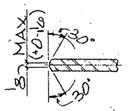

SECTION-EE

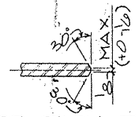

SECTION-FF

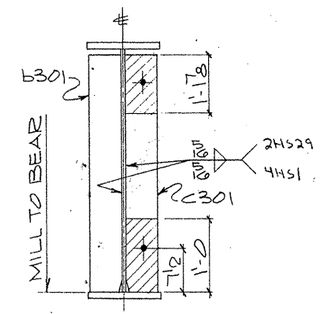

SECTION-A

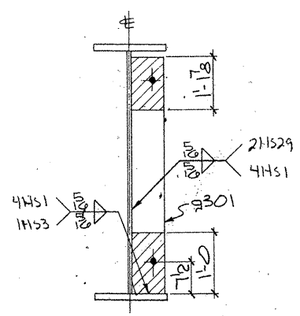

SECTION-B

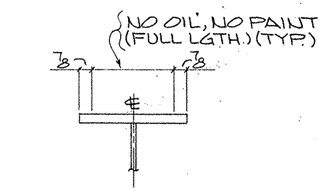

SECTION-C

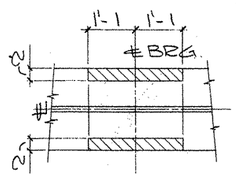

SECTION-D

SHOP NOTES:

1) FOR GENERAL NOTES SEE SHT. GN1
2) FOR GIRDER SUB-ASSEMBLY SEE SHT. 305
3) FOR STIFF. DETAILS SEE SHT. 301
4) FOR BLOCKING DIAGRAM SEE SHT. 330
5) ////// INDICATES OIL, NO PAINT (N.S./F.S. & EDGES)

	Qnty	Material	Length	Mark Temp	Mark Ship	Wt	Cut From	Remarks
1								
2	1	GIRDER			317PG2.04			
3	1	GIRDER SUB-ASSY		B305				
4	1	BRG STIFF		b301				
5	1	BRG STIFF		c301				
6	3	DIAF STIFF		g301				
7								
8								
9								
10								
11								
12								
13								
14								
15								
16								
17								
18								
19								
20								
21								
22								
23								
24								
25								
26								
27								
28								
29								
30								
31								
32								
33								
34								
35								
36								
37								
38								
39								
40								
41								
42								
43								
44								
45								
46								
47								
48								
49								
50								
51								
52								
53								
54								
55								
56								
57								
58								
59								
60								

TEXAS DEPARTMENT OF TRANSPORTATION — APPROVED — DIVISION OF BRIDGES AND STRUCTURES — DEC 29 1992

APPROVAL — AUG 24 '92 — FOR CONSTRUCTION

APPROVAL OF THIS DRAWING DOES NOT RELIEVE THE CONTRACTOR OF THE RESPONSIBILITY FOR THE CORRECTNESS OF DETAIL

REVISION	DATE	DESCRIPTION OF REVISION
NO. 1		
NO. 2		
NO. 3		
NO. 4		
NO. 5		

PRINTING

Req'd	For	Date

Bolts Holes. 15/16 ø Unless Noted
Shop Paint SEE SHT. GN1
Fab Spec AS NTD. Inspection
Architect
Erection By Field Connections

HIRSCHFELD STEEL CO. INC.
112 WEST 29TH SAN ANGELO TEXAS 76903
PHONE (915) 653-3211

DESCRIPTION 510'-0 PLATE GIRDER UNIT
STRUCTURE US 83/281 INTERCHANGE RAMP "A"
LOCATION HIDALGO COUNTY
CUSTOMER GILBERT TEXAS CONSTRUCTION
SHIP TO
Customer's Order No.
Dwg. By CRT Date 7-92
Checked By JC Date 7-9-92

SHEET 317 OF
JOB NO 92-1066

FED. ROAD DIV. NO.	STATE	FEDERAL AID PROJECT NO				
6	TX.	NH (50) M				
STATE DIST. NO	COUNTY	CONTROL NO	SECTION NO	JOB NO	HIGHWAY NO	
21	HIDALGO	39	17	97	83/281	

G.O. 306

CE 92-11 (LINE #4)

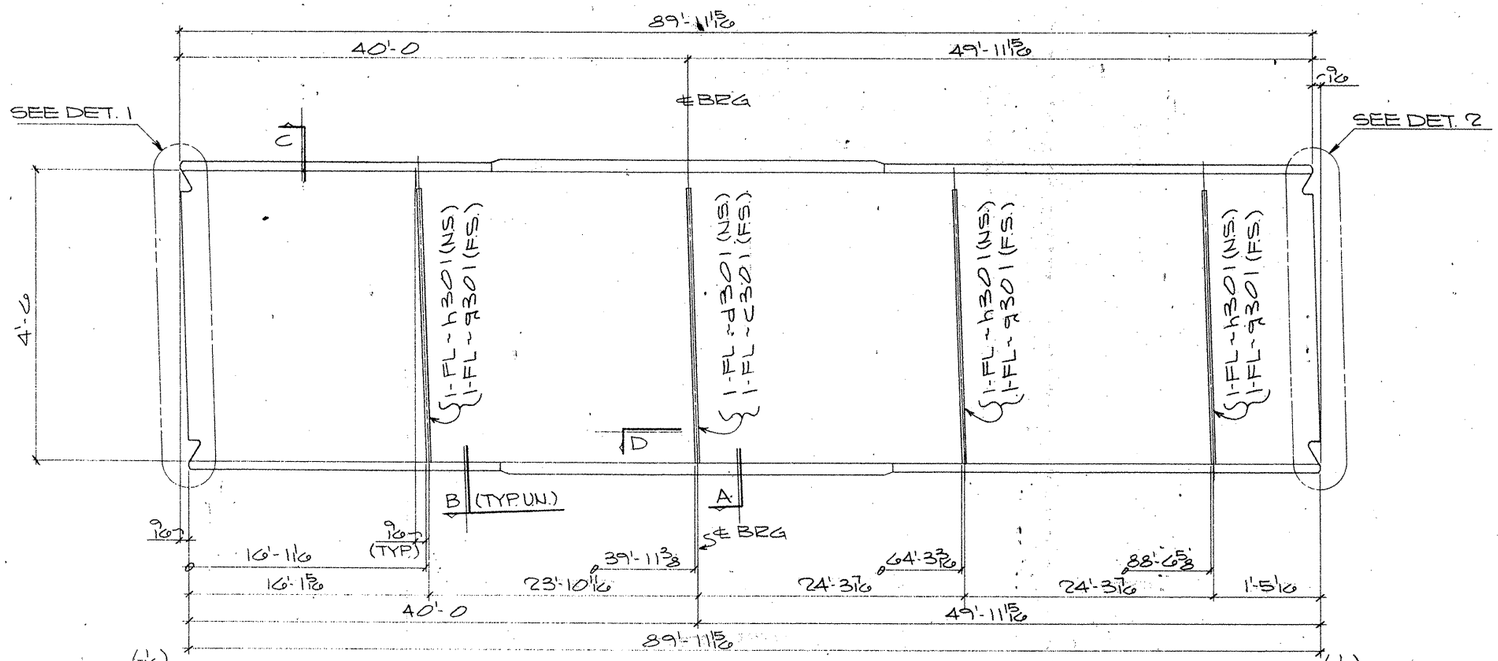

ONE GIRDER MK~316PG2.03

(APPROX. WT. = TONS)

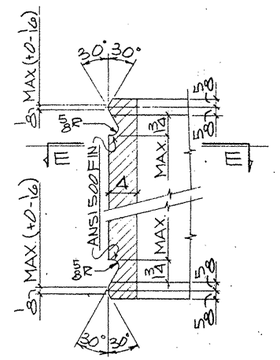

DETAIL-1

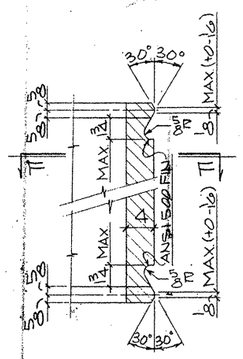

DETAIL-2

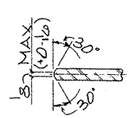

SECTION-EE

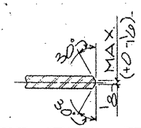

SECTION-FF

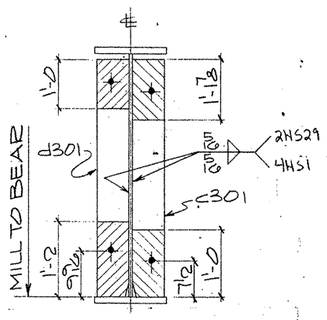

SECTION-A

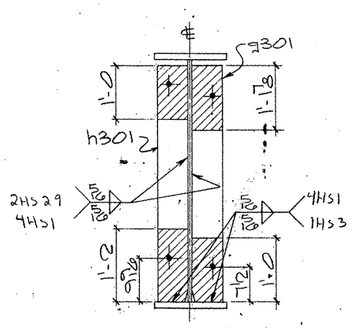

SECTION-B

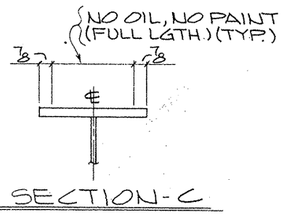

SECTION-C

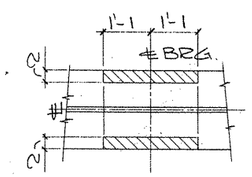

SECTION-D

SHOP NOTES:

1) FOR GENERAL NOTES SEE SHT. GN1
2) FOR GIRDER SUB-ASSEMBLY SEE SHT. 304
3) FOR STIFF. DETAILS SEE SHT. 301
4) FOR BLOCKING DIAGRAM SEE SHT. 330
5) ▨ INDICATES OIL, NO PAINT (N.S./F.S. & EDGES)

G0206

FED. ROAD DIV. NO.	STATE	FEDERAL AID PROJECT NO			
6	TX.	NH (50) M			
STATE DIST. NO	COUNTY	CONTROL NO	SECTION NO	JOB NO	HIGHWAY NO
21	HIDALGO	39	17	97	83/281

BILL OF MATERIAL

	Only.	Material	Length	Mark Temp.	Mark Ship.	Wt.	Cut From	Remarks
1								
2	1	GIRDER			316PG2.03			
3	1	GIRDER SUB-ASSY		B304				
4	1	BRG STIFF		c301				
5	1	BRG STIFF		d301				
6	3	DIAF STIFF		g301				
7	3	DIAF STIFF		h301				

TEXAS DEPARTMENT OF TRANSPORTATION
APPROVED
DIVISION OF BRIDGES AND STRUCTURES
DEC 29 1992

FOR APPROVAL
AUG 24 '92
NOT FOR CONSTRUCTION

APPROVAL OF THIS DRAWING DOES NOT RELIEVE THE CONTRACTOR OF THE RESPONSIBILITY FOR THE CORRECTNESS OF DETAIL

REVISION	DATE	DESCRIPTION OF REVISION
NO. 1		
NO. 2		
NO. 3		
NO. 4		
NO. 5		

PRINTING		
Req'd	For	Date

Bolts Holes, 15/16 ø Unless Noted
Shop Paint SEE SHT. GN1
Fab Spec. AS NTD Inspection
Architect
Erection By Field Connections

HIRSCHFELD STEEL CO. INC.
112 WEST 29TH SAN ANGELO, TEXAS 76903
PHONE (915) 653-3211

DESCRIPTION	51'-0 PLATE GIRDER UNIT
STRUCTURE	US 83/281 INTERCHANGE RAMP "C"
LOCATION	HIDALGO COUNTY
CUSTOMER	GILBERT TEXAS CONSTRUCTION
SHIP TO	
Customer's Order No.	SHEET 316 OF
Dwg. By CRT Date 7-92	JOB NO. 92-1006
Checked By JC Date 7-9-92	

CE92-11 (LINE #3)

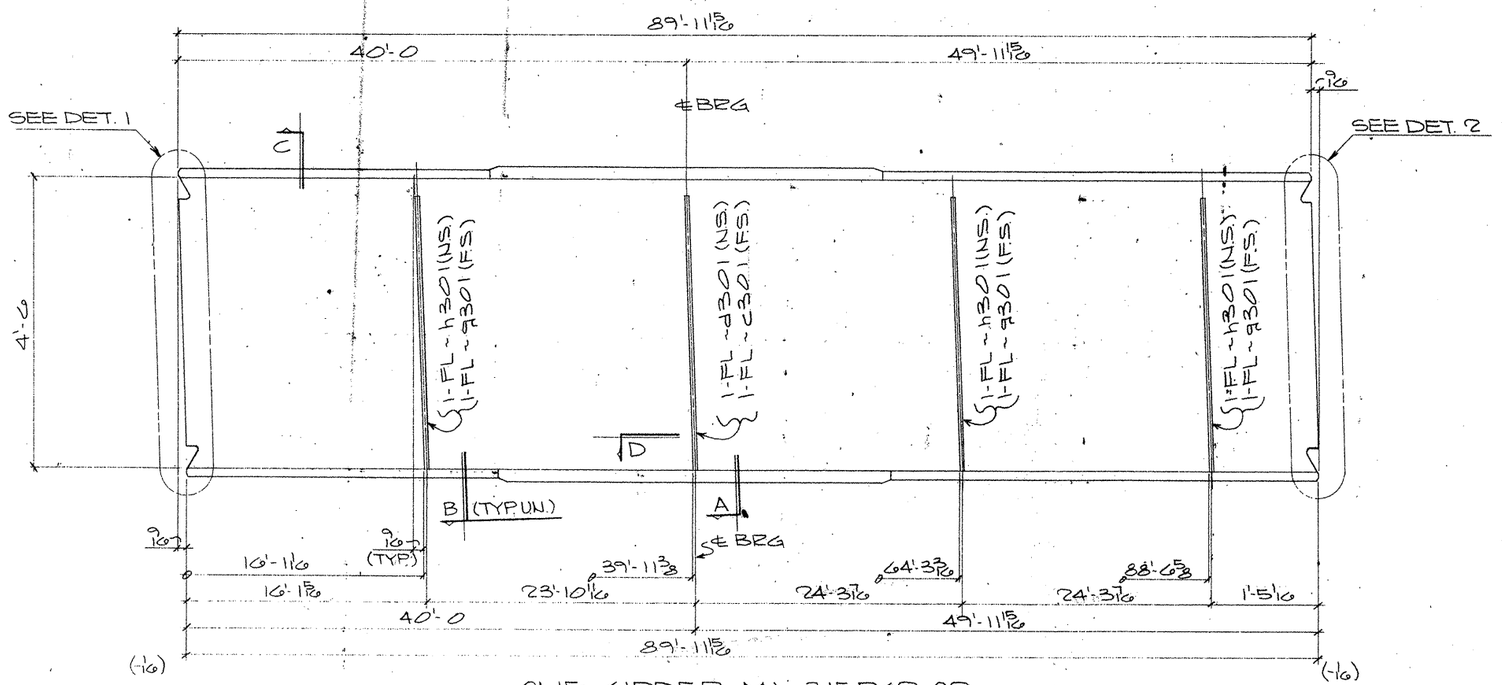

ONE GIRDER MK~ 315PG2.02

(APPROX. WT. = TONS)

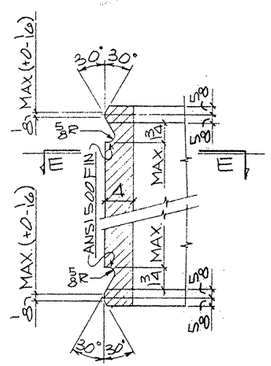

DETAIL - 1

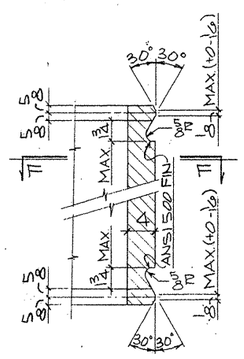

DETAIL - 2

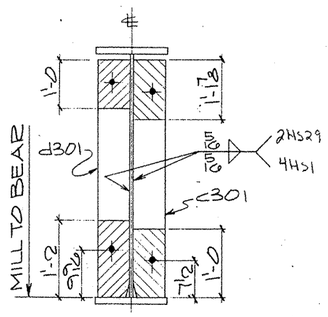

SECTION - A

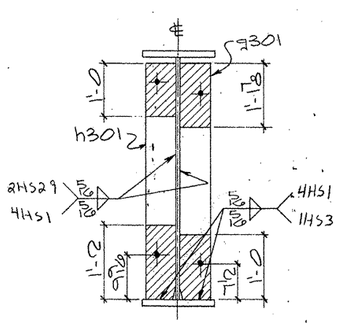

SECTION - B

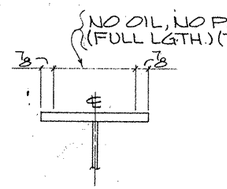

SECTION - C

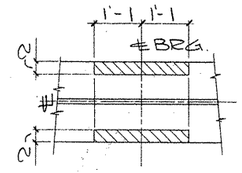

SECTION - D

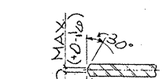

SECTION - EE

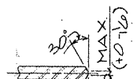

SECTION - FF

SHOP NOTES:

1) FOR GENERAL NOTES SEE SHT. GN1
2) FOR GIRDER SUB-ASSEMBLY SEE SHT. 303
3) FOR STIFF. DETAILS SEE SHT. 301
4) FOR BLOCKING DIAGRAM SEE SHT. 330
5) ▨ INDICATES OIL, NO PAINT (N.S./F.S. & EDGES)

BILL OF MATERIAL

	Qnty.	Material	Length	Mark Temp	Mark Ship	Wt.	Cut From	Remarks
2	1	GIRDER			315PG2.02			
3	1	GIRDER SUB-ASSY		B303				
4	1	BRG STIFF		c301				
5	1	BRG STIFF		d301				
6	3	DIAF STIFF		g301				
7	3	DIAF STIFF		h301				

FOR APPROVAL
AUG 24 92
NOT FOR CONSTRUCTION

TEXAS DEPARTMENT OF TRANSPORTATION
APPROVED
DIVISION OF BRIDGES AND STRUCTURES
DEC 29 1992
APPROVAL OF THIS DRAWING DOES NOT RELIEVE THE CONTRACTOR OF THE RESPONSIBILITY FOR THE CORRECTNESS OF DETAILS

REVISION	DATE	DESCRIPTION OF REVISION
NO. 1		
NO. 2		
NO. 3		
NO. 4		
NO. 5		

PRINTING		
Req'd	For	Date

Bolts — Holes 15/16 ø — Unless Noted
Shop Paint SEE SHT. GN1
Fab Spec AS NTD. Inspection
Architect
Erection By — Field Connections

HIRSCHFELD STEEL CO. INC.
112 WEST 29TH SAN ANGELO, TEXAS 76903
PHONE (915) 653-3211

DESCRIPTION	510'-0 PLATE GIRDER UNIT
STRUCTURE	US 83/281 INTERCHANGE RAMP "I"
LOCATION	HIDALGO COUNTY
CUSTOMER	GILBERT TEXAS CONSTRUCTION
SHIP TO	
Customer's Order No.	
Dwg. By CRT	Date 7-9-92
Checked By JC	Date 7-9-92

SHEET 315 OF
JOB NO. 92-1000

FED. ROAD DIV. NO.	STATE	FEDERAL AID PROJECT NO.				
6	TX.	NH (50) M				
STATE DIST. NO.	COUNTY	CONTROL NO.	SECTION NO.	JOB NO.	HIGHWAY NO.	
21	HIDALGO	39	17	97	83/281	

G02.06

CE92-11 (LINE #2)

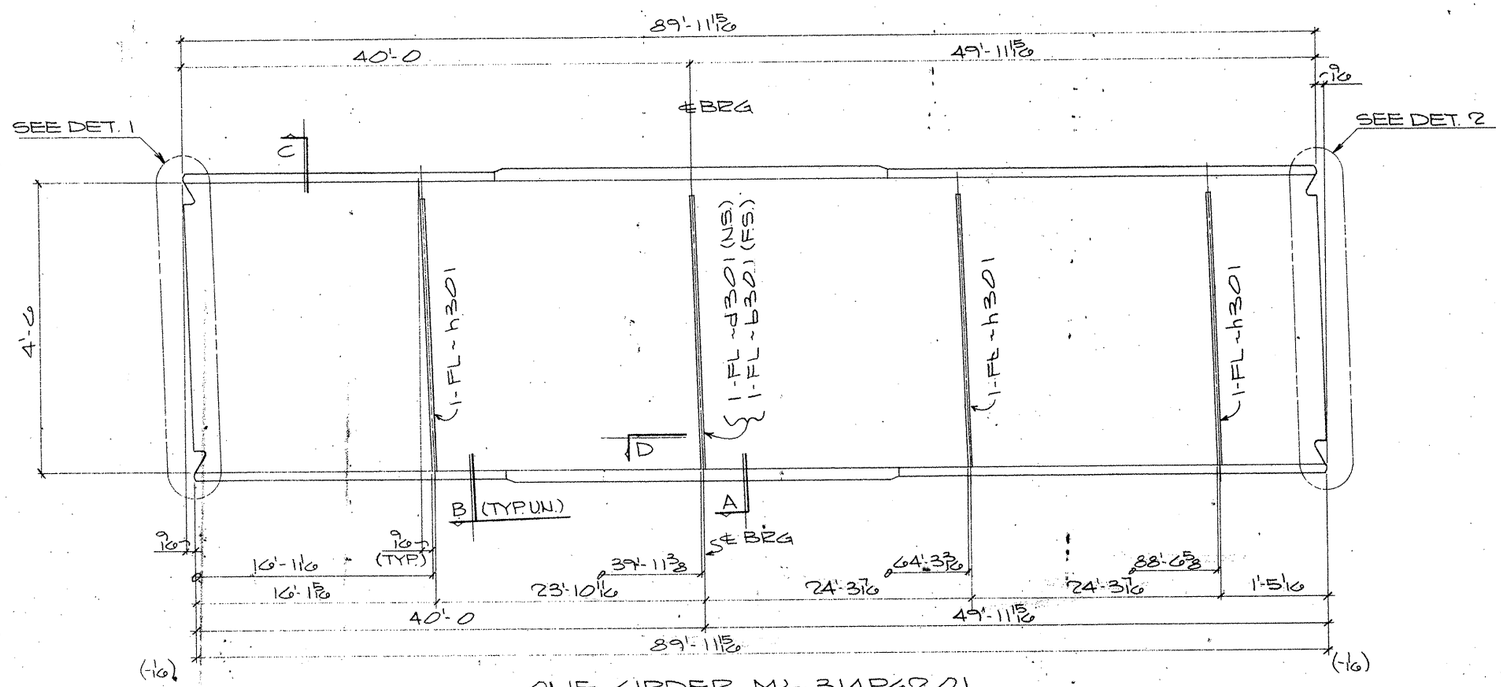

ONE GIRDER MK ~ 314PG2.01
(APPROX. WT. = TONS)

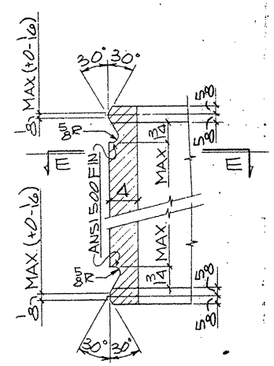

DETAIL - 1

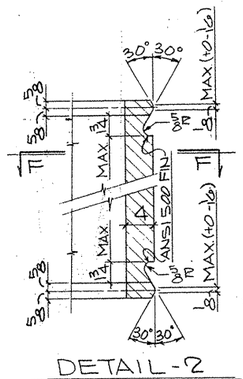

DETAIL - 2

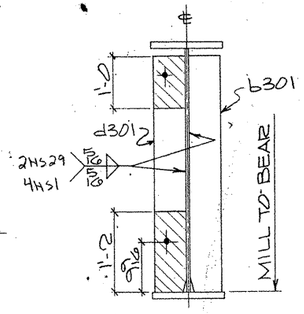

SECTION - A

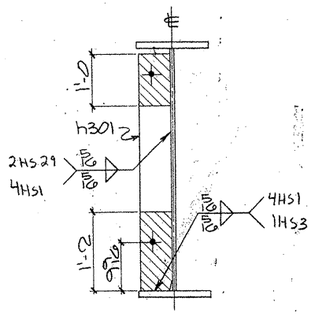

SECTION - B

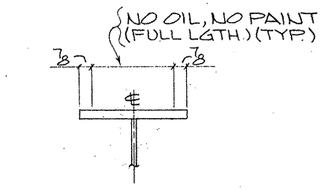

SECTION - C

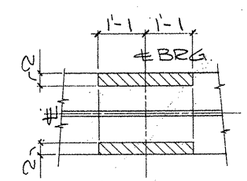

SECTION - D

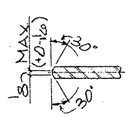

SECTION - EE

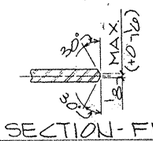

SECTION - FF

SHOP NOTES:
1) FOR GENERAL NOTES SEE SHT. GN1
2) FOR GIRDER SUB-ASSEMBLY SEE SHT. 302
3) FOR STIFF. DETAILS SEE SHT. 301
4) FOR BLOCKING DIAGRAM SEE SHT. 330
5) ▨ INDICATES OIL, NO PAINT (N.S./F.S. & EDGES)

G0306

FED. ROAD DIV. NO.	STATE	FEDERAL AID PROJECT NO			
6	TX.	NH (50) M			
STATE DIST. NO.	COUNTY	CONTROL NO.	SECTION NO.	JOB NO.	HIGHWAY NO.
21	HIDALGO	39	17	97	83/281

BILL OF MATERIAL

	Qnty.	Material	Length	Mark Temp	Mark Ship.	Wt.	Cut From	Remarks
1								
2	1	GIRDER			314PG2.01			
3	1	GIRDER SUB-	ASSY	B302				
4	1	BRG STIFF		b301				
5	1	BRG STIFF		d301				
6	3	DIAF STIFF		h301				

TEXAS DEPARTMENT OF TRANSPORTATION
APPROVED
DIVISION OF BRIDGES AND STRUCTURES
DEC 29 1992
APPROVAL OF THIS DRAWING DOES NOT RELIEVE THE CONTRACTOR OF THE RESPONSIBILITY FOR THE CORRECTNESS OF DETAIL.

FOR APPROVAL
AUG 24 92
NOT FOR CONSTRUCTION

REVISION	DATE	DESCRIPTION OF REVISION
NO. 1		
NO. 2		
NO. 3		
NO. 4		
NO. 5		

PRINTING

Req'd	For	Date

Bolts Holes: 15/16 ø Unless Noted
Shop Paint SEE SHT. GN1
Fab Spec AS NTD. Inspection
Architect
Erection By Field Connections

HIRSCHFELD STEEL CO. INC.
112 WEST 29TH SAN ANGELO, TEXAS 76903
PHONE (915) 653-3211

DESCRIPTION 510'-0 PLATE GIRDER UNIT
STRUCTURE US 83/281 INTERCHANGE RAMP # 1
LOCATION HIDALGO COUNTY
CUSTOMER GILBERT TEXAS CONSTRUCTION
SHIP TO
Customer's Order No.
Dwg. By CRT Date 7-92
Checked By JC Date 7-9-92
SHEET 314 OF
JOB NO. 92-106

AAV 8/24

CE 92-11 (LINE # 1)

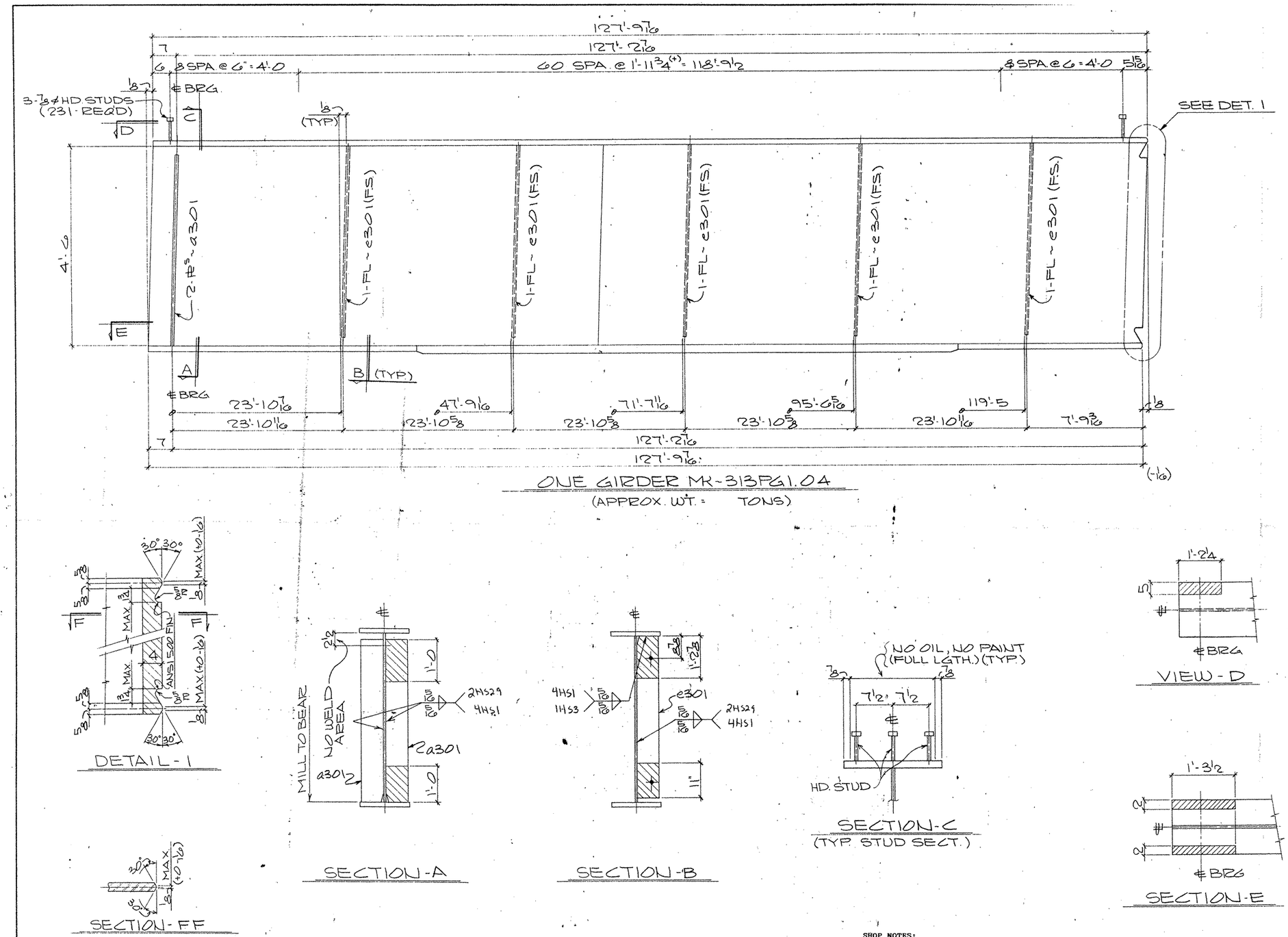

SHOP NOTES:
1) FOR GENERAL NOTES SEE SHT. GN1
2) FOR GIRDER SUB-ASSEMBLY SEE SHT. 305
3) FOR STIFF. DETAILS SEE SHT. 301
4) FOR BLOCKING DIAGRAM SEE SHT. 330
5) ▨ INDICATES OIL / NO PAINT (N.S./F.S. & EDGES)

G0306

FED. ROAD DIV. NO.	STATE	FEDERAL AID PROJECT NO.			
6	TX.	NH (50) M			
STATE DIST. NO.	COUNTY	CONTROL NO.	SECTION NO.	JOB NO.	HIGHWAY NO.
21	HIDALGO	39	17	97	83/281

BILL OF MATERIAL

	Qnty	Material	Length	Mark Temp	Mark Ship.	Wt	Cut From	Remarks
1								
2	1	GIRDER			313PG1.04			
3	1	GIRDER SUB-ASSY		A305				
4	2	BRG STIFF		a301				
5	5	DIAF STIFF		e301				
6								
7	231	HD STUD 7/8	0'-7				302-1	A108

TEXAS DEPARTMENT OF TRANSPORTATION
APPROVED
DIVISION OF BRIDGES AND STRUCTURES
DEC 29 1992
APPROVAL OF THIS DRAWING DOES NOT RELIEVE THE CONTRACTOR OF THE RESPONSIBILITY FOR THE CORRECTNESS OF DETAIL.

FOR APPROVAL
AUG 24 '92
NOT FOR CONSTRUCTION

REVISION	DATE	DESCRIPTION OF REVISION
NO. 1		
NO. 2		
NO. 3		
NO. 4		
NO. 5		

PRINTING

Req'd	For	Date

Bolts Holes 15/16 ϕ Unless Noted
Shop Paint SEE SHT. GN1
Fab. Spec. AS NTD. Inspection
Architect
Erection By Field Connections

HIRSCHFELD STEEL CO. INC.
112 WEST 29TH SAN ANGELO, TEXAS 76903
PHONE (915) 653-3211

DESCRIPTION 510'-0 PLATE GIRDER UNIT
STRUCTURE US 83/281 INTERCHANGE RAMP # 1
LOCATION HIDALGO COUNTY
CUSTOMER GILBERT TEXAS CONSTRUCTION
SHIP TO
Customer's Order No.
Dwg. By CRT Date 7-92
Checked By JC Date 7-9-92
SHEET 313 OF
JOB NO. 92-106

CE 92-11 (LINE #4)

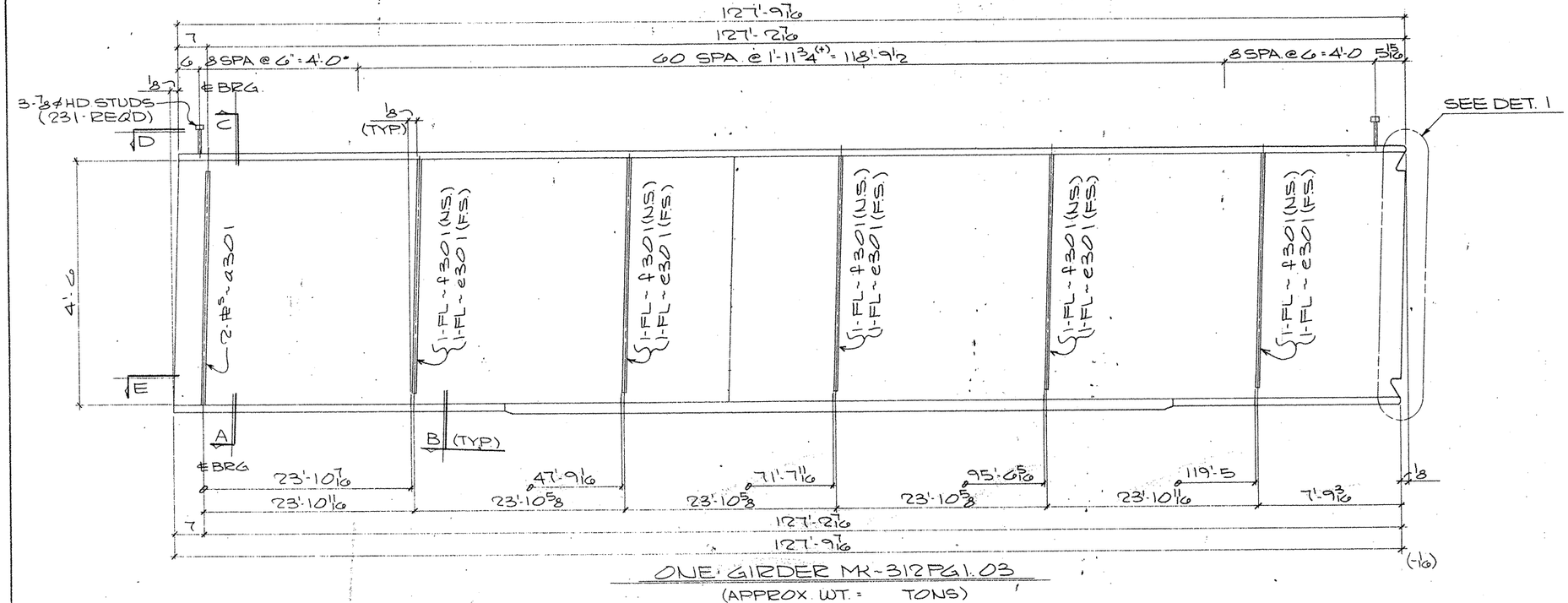

ONE GIRDER MK-312PG1.03

(APPROX. WT. = TONS)

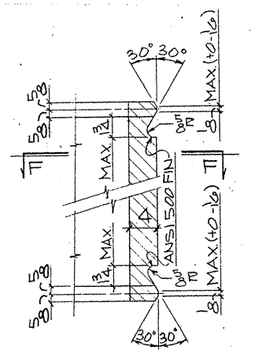

DETAIL-1

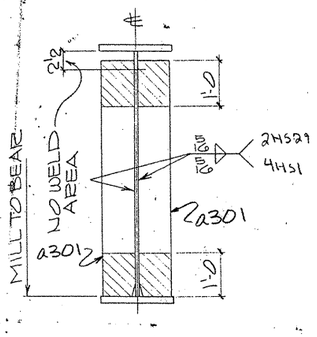

SECTION-A

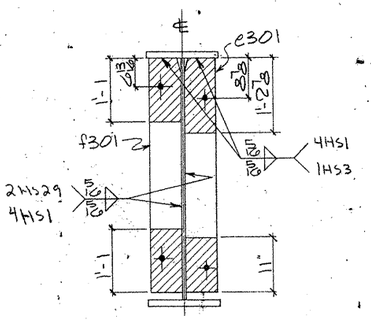

SECTION-B

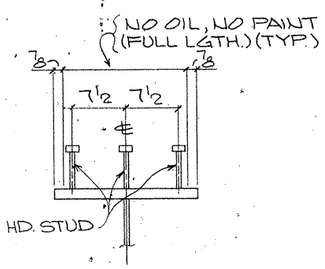

SECTION-C

(TYP. STUD SECT.)

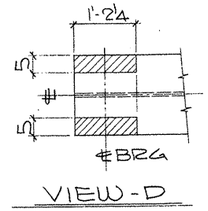

VIEW-D

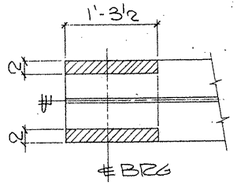

SECTION-E

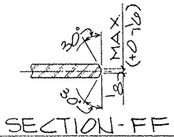

SECTION-FF

SHOP NOTES:

1) FOR GENERAL NOTES SEE SHT. GN1
2) FOR GIRDER SUB-ASSEMBLY SEE SHT. 304
3) FOR STIFF. DETAILS SEE SHT. 301
4) FOR BLOCKING DIAGRAM SEE SHT. 330
5) ////// INDICATES OIL, NO PAINT (N.S./F.S. & EDGES)

BILL OF MATERIAL

	Only.	Material	Length	Mark Temp	Mark Ship	Wt.	Cut From	Remarks
1								
2	1	GIRDER			312PG1.03			
3	1	GIRDER SUB-ASSY		A304				
4	2	BRG STIFF		a301				
5	5	DIAF STIFF		e301				
6	5	DIAF STIFF		f301				
7	231	HD STUD 7/8	0'-7				302-1	A108
8–60								

FOR APPROVAL
AUG 24 '92
NOT FOR CONSTRUCTION

TEXAS DEPARTMENT OF TRANSPORTATION
APPROVED
DIVISION OF BRIDGES AND STRUCTURES
DEC 29 1992

APPROVAL OF THIS DRAWING DOES NOT RELIEVE THE CONTRACTOR OF THE RESPONSIBILITY FOR THE CORRECTNESS OF DETAILS

REVISION	DATE	DESCRIPTION OF REVISION
NO. 1		
NO. 2		
NO. 3		
NO. 4		
NO. 5		

PRINTING Req'd	For	Date

Bolts — Holes 15/16 ø Unless Noted
Shop Paint SEE SHT. GN1
Fab Spec AS NTD. Inspection
Architect
Erection By Field Connections

HIRSCHFELD STEEL CO. INC.
112 WEST 29TH SAN ANGELO, TEXAS 76903
PHONE (915) 653-3211

DESCRIPTION	510'-0 PLATE GIRDER UNIT
STRUCTURE	US 83/281 INTERCHANGE RAMP M
LOCATION	HIDALGO COUNTY
CUSTOMER	GILBERT TEXAS CONSTRUCTION
SHIP TO	
Customer's Order No.	
Dwg. By CRT Date 7-9-92	SHEET 312 OF
Checked By JC Date 7-9-92	JOB NO. 92-1060

G0306

FILE ROAD DIV NO	STATE	FEDERAL AID PROJECT NO.				
6	TX.	NH (50) M				
STATE DIST. NO	COUNTY	CONTROL NO	SECTION NO	JOB NO	HIGHWAY NO.	
21	HIDALGO	39	17	97	83/281	

CE 92-11 (LINE # 3)

332440

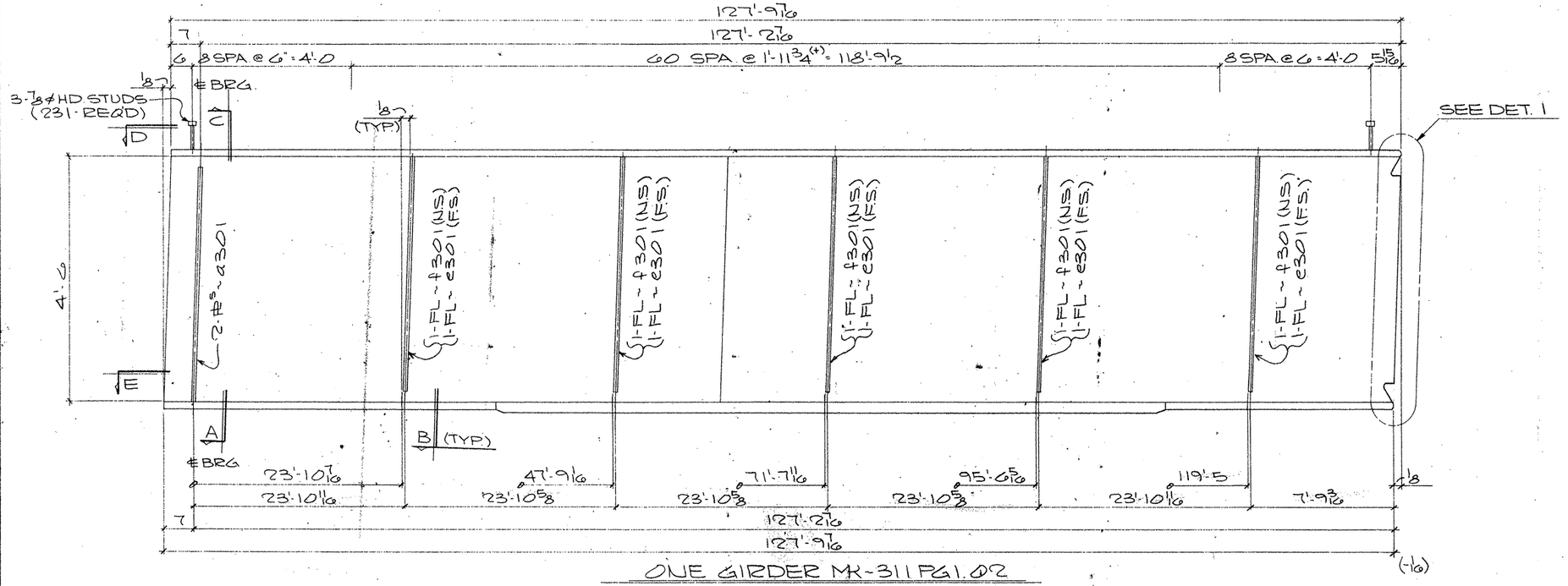

ONE GIRDER MK-311PG1.02

(APPROX. WT. = TONS)

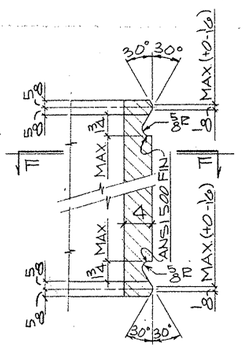

DETAIL - 1

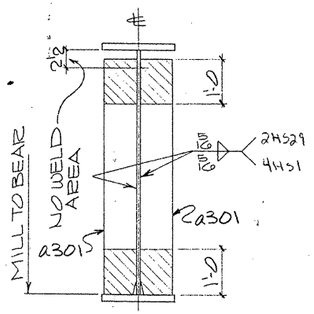

SECTION - A

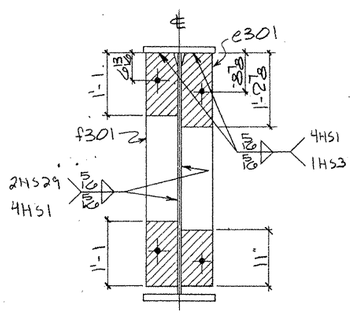

SECTION - B

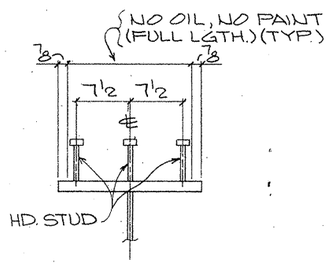

SECTION - C

(TYP. STUD SECT.)

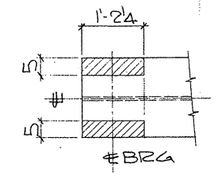

VIEW - D

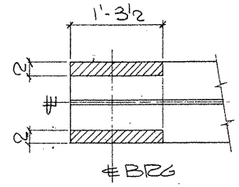

SECTION - E

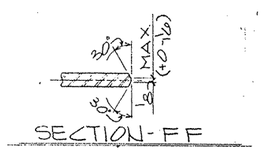

SECTION - FF

SHOP NOTES:

1) FOR GENERAL NOTES SEE SHT. GN1
2) FOR GIRDER SUB-ASSEMBLY SEE SHT. 303
3) FOR STIFF. DETAILS SEE SHT. 301
4) FOR BLOCKING DIAGRAM SEE SHT. 330
5) ▨ INDICATES OIL, NO PAINT (N.S./P.S. & EDGES)

BILL OF MATERIAL

	Qnty.	Material	Length	Mark Temp.	Mark Ship.	Wt.	Cut From	Remarks
2	1	GIRDER			311PG1.02			
3	1	GIRDER SUB-ASSY		A303				
4	2	BRG STIFF		a301				
5	5	DIAF STIFF		e301				
6	5	DIAF STIFF		f301				
7	231	HD STUD 7/8	0'-7				302-1	A108

TEXAS DEPARTMENT OF TRANSPORTATION
APPROVED
DIVISION OF BRIDGES AND STRUCTURES
DEC 28 1992

APPROVAL OF THIS DRAWING DOES NOT RELIEVE THE CONTRACTOR OF THE RESPONSIBILITY FOR THE CORRECTNESS OF DETAIL.

FOR APPROVAL
NOV 24 92
NOT FOR CONSTRUCTION

REVISION	DATE	DESCRIPTION OF REVISION
NO 1		
NO 2		
NO 3		
NO 4		
NO 5		

PRINTING Req'd	For	Date

Bolts Holes, 15/16 ϕ Unless Noted
Shop Paint SEE SHT GN1
Fab Spec AS NTD. Inspection
Architect
Erection By Field Connections

HIRSCHFELD STEEL CO. INC.
112 WEST 29TH SAN ANGELO, TEXAS 76903
PHONE (915) 653-3211

DESCRIPTION	510'-0 PLATE GIRDER UNIT
STRUCTURE	US 83/281 INTERCHANGE RAMP # 1
LOCATION	HIDALGO COUNTY
CUSTOMER	GILBERT TEXAS CONSTRUCTION
SHIP TO	
Customer's Order No.	
Dwg By CRT	Date 7-92
Checked By JC	Date 7-9-92

SHEET 311 OF
JOB NO 92-1006

G0206

FED ROAD DIV NO	STATE	FEDERAL AID PROJECT NO.			
6	TX.	NH (50) M			
STATE DIST NO	COUNTY	CONTROL NO	SECTION NO	JOB NO	HIGHWAY NO
21	HIDALGO	39	17	97	83/281

CE 92-11 (LINE #2)

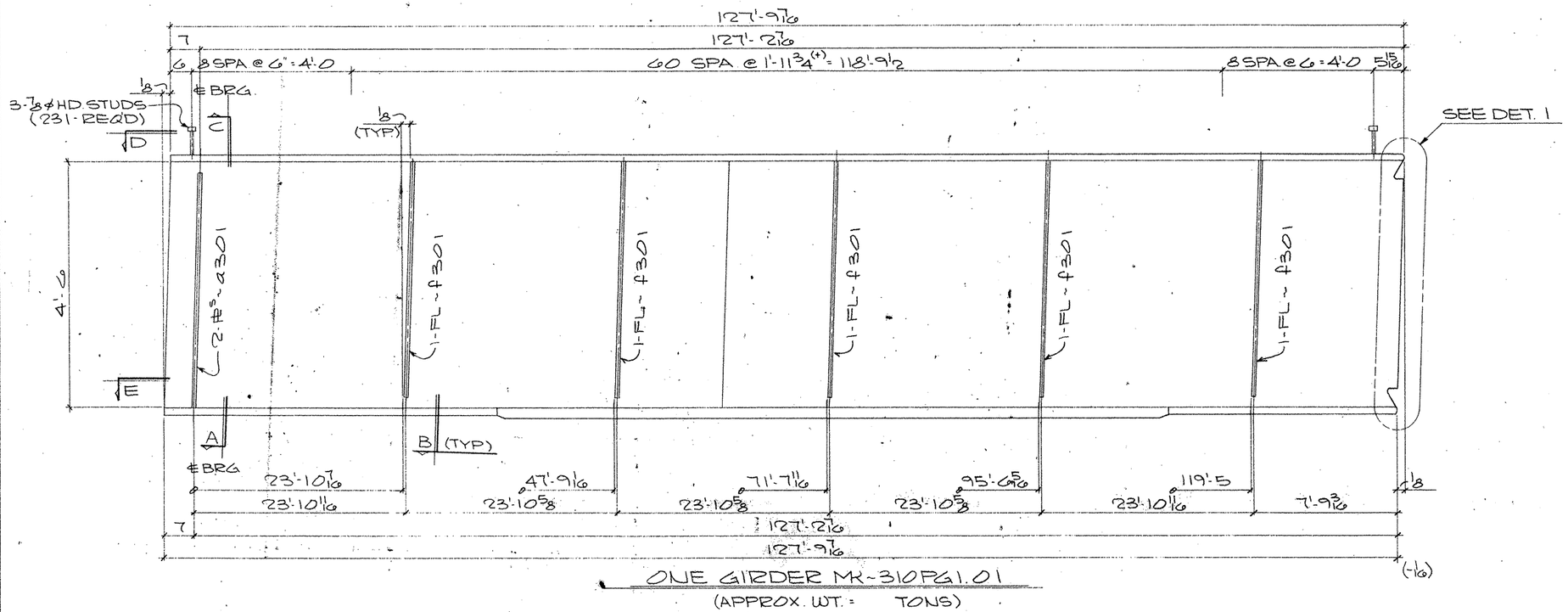

ONE GIRDER MK-310PG1.01

(APPROX. WT. = TONS)

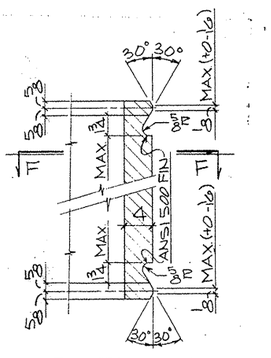

DETAIL-1

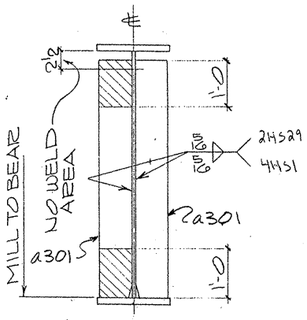

SECTION-A

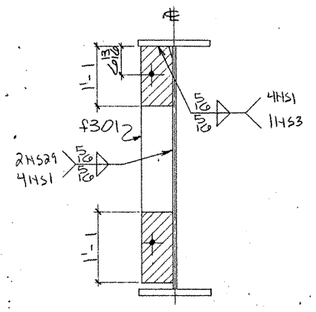

SECTION-B

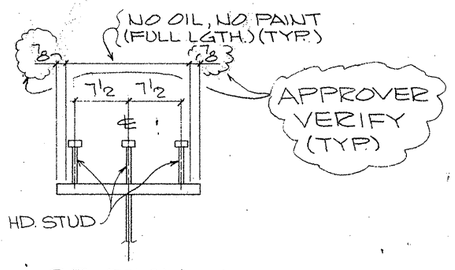

SECTION-C

(TYP. STUD SECT.)

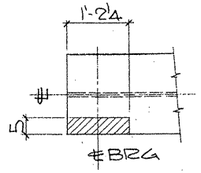

VIEW-D

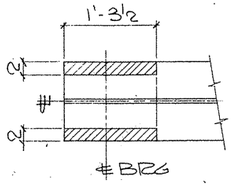

SECTION-E

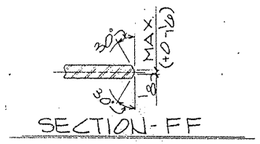

SECTION-FF

SHOP NOTES:

1) FOR GENERAL NOTES SEE SHT. GN1
2) FOR GIRDER SUB-ASSEMBLY SEE SHT. 302
3) FOR STIFF. DETAILS SEE SHT. 301
4) FOR BLOCKING DIAGRAM SEE SHT. 330
5) ▨ INDICATES OIL, NO PAINT (N.S./F.S. & EDGES)

BILL OF MATERIAL

	Qnty.	Material	Length	Mark Temp	Mark Ship.	Wt.	Cut From	Remarks
1								
2	1	GIRDER			310PG1.01			
3	1	GIRDER SUB-ASSY		A302				
4	2	BRG STIFF		a301				
5	5	DIAF STIFF		f301				
6								
7	231	HD STUD 7/8	0'-7				302-1	A108
8								
9								
10								
11								
12								
13								
14								
15								
16								
17								
18								
19								
20								
21								
22								
23								
24								
25								
26								
27								
28								
29								
30								
31								
32								
33								
34								
35								
36								
37								
38								
39								
40								
41								
42								
43								
44								
45								
46								
47								
48								
49								
50								
51								
52								
53								
54								
55								
56								
57								
58								
59								
60								

FOR APPROVAL

AUG 24 '92

NOT FOR CONSTRUCTION

TEXAS DEPARTMENT OF TRANSPORTATION
APPROVED
~~DIVISION OF BRIDGES AND STRUCTURES~~
DEC 29 1992

APPROVAL OF THIS DRAWING DOES NOT RELIEVE THE CONTRACTOR OF THE RESPONSIBILITY FOR THE CORRECTNESS OF DETAIL

REVISION	DATE	DESCRIPTION OF REVISION
NO. 1		
NO. 2		
NO. 3		
NO. 4		
NO. 5		

PRINTING

Req'd	For	Date

Bolts Holes 15/16 ø Unless Noted
Shop Paint SEE SHT. GN1
Fab. Spec AS NTD. Inspection
Architect
Erection By Field Connections

HIRSCHFELD STEEL CO. INC.
112 WEST 29TH SAN ANGELO, TEXAS 76903
PHONE (915) 653-3211

DESCRIPTION 510'-0 PLATE GIRDER UNIT
STRUCTURE US 83/281 INTERCHANGE RAMP * 1
LOCATION HIDALGO COUNTY
CUSTOMER GILBERT TEXAS CONSTRUCTION
SHIP TO
Customer's Order No.
Dwg. By CRT Date 7-9-92
Checked By JC Date 7-9-92
SHEET 310 OF
JOB NO. 92-1066

G0306

FED. ROAD DIV. NO.	STATE	FEDERAL AID PROJECT NO.				
6	TX.	NH (50) M				
STATE DIST. NO.	COUNTY	CONTROL NO.	SECTION NO.	JOB NO.	HIGHWAY NO.	
21	HIDALGO	39	17	97	83/281	

CE 92-11 (LINE * 1)

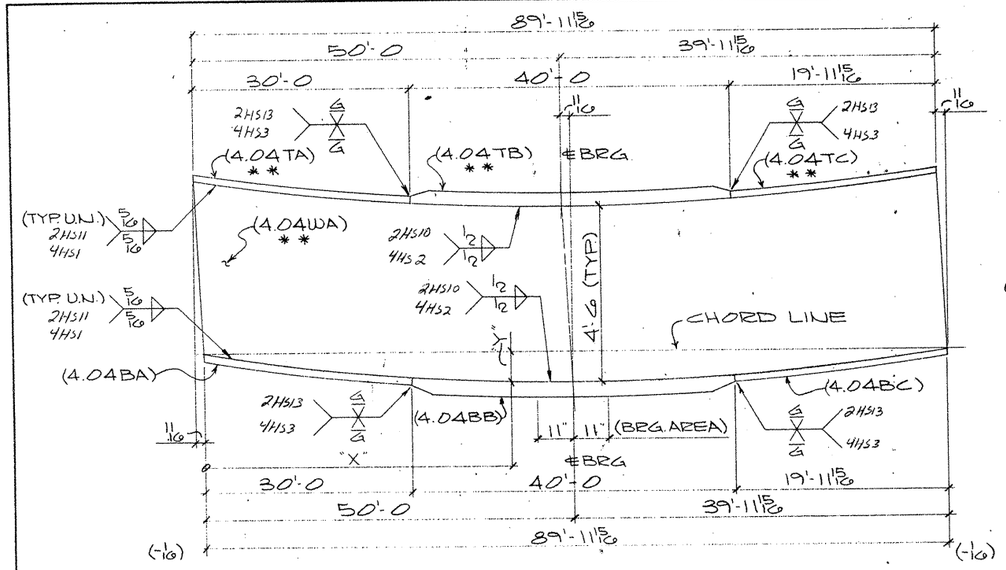

ONE GIRDER SUB-ASSY MK-A309

(FOR GIRDER - 325PG4.04)

MK-A309				
"X"	1'-5 1/16	25'-8 9/16	50'-0	73'-10 3/8
"Y"	1/16	15/16	1'-1/8	9/16
			℄BRG	

TYP. FLG. THKNESS TRANSITION

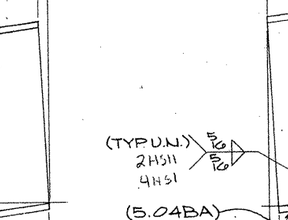

TYP. FLG. WIDTH TRANSITION

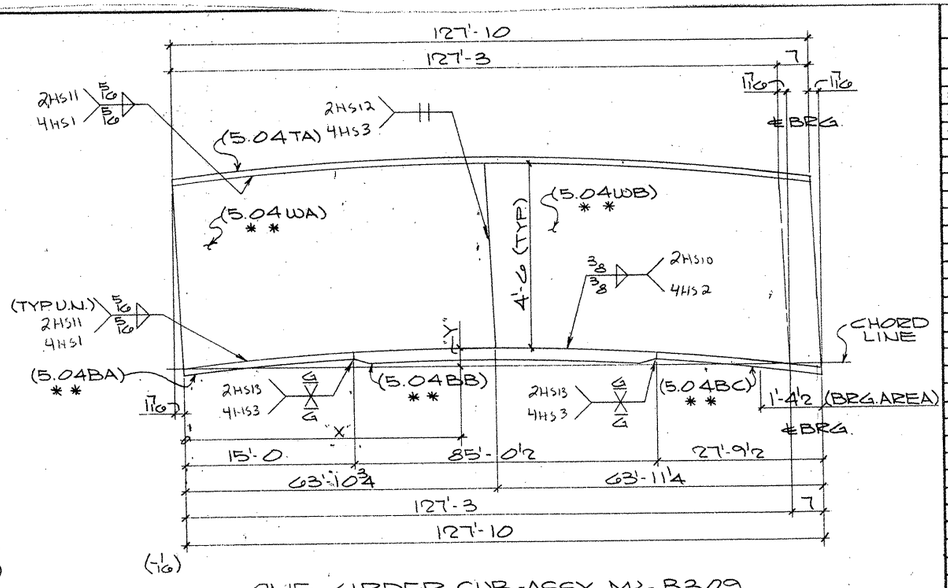

ONE GIRDER SUB-ASSY MK-B309

(FOR GIRDER - 329PG5.04)

MK-B309						
"X"	7'-9 3/16	31'-7 1/8	55'-6 1/16	63'-10 3/4	79'-5 5/16	103'-4 1/8
"Y"	1 1/16	5 3/16	6 1/8	6 1/2	6 9/16	4 1/8
				℄ WEB SPLICE		

SHOP NOTES:

1) FOR GENERAL NOTES SEE SHT. GN1
2) MATERIAL NOTED " * * " MUST MEET CHARPY V-NOTCH REQUIREMENTS

BILL OF MATERIAL

	Qnty.	Material	Length	Mark Temp	Mark Ship.	Wt.	Cut From	Remarks
1								
2								
3	1	GIRDER SUB-ASSY.			A309			
4	1	PL 9/16 x 54	90'-0 5/8	4.04WA			303-3	CVN 2
5	1	PL 1 1/4 x 18	30'-0	4.04TA			303-13	CVN 2
6	1	PL 2 1/2 x 20	40'-0	4.04TB			304-3	CVN 3
7	1	PL 1 1/4 x 18	19'-11 15/16	4.04TC			303-11	CVN 2
8	1	PL 1 1/4 x 18	30'-0	4.04BA			304-9	
9	1	PL 2 1/2 x 20	40'-0	4.04BB			304-8	
10	1	PL 1 1/4 x 18	19'-11 15/16	4.04BC			304-7	
11								
12								
13								
14	1	GIRDER SUB-ASSY.			B309			
15	1	PL 1/2 x 54	64'-0 3/8	5.04WA			303-5	CVN 2
16	1	PL 1/2 x 54	63'-11 15/16	5.04WB			303-5	CVN 2
17	1	PL 1 1/4 x 18	127'-10	5.04TA			304-6	
18	1	PL 1 1/4 x 18	15'-0	5.04BA			303-10	CVN 2
19	1	PL 2 1/4 x 18	85'-0 1/2	5.04BB			304-2	CVN 3
20	1	PL 1 1/4 x 18	27'-9 1/2	5.04BC			303-8	CVN 2
21								
22								
23								
24								
25								
26								
27								
28								
29								
30								
31								
32								
33								
34								
35								
36								
37								
38								
39								
40								
41								
42								
43								
44								
45								
46								
47								
48								
49								
50								
51								
52								
53								
54								
55								
56								
57								
58								
59								
60								

FOR APPROVAL
AUG 28 '92
NOT FOR CONSTRUCTION

TEXAS DEPARTMENT OF TRANSPORTATION
APPROVED
DIVISION OF BRIDGES AND STRUCTURES
DEC 28 1992
APPROVAL OF THIS DRAWING DOES NOT RELIEVE THE CONTRACTOR OF THE RESPONSIBILITY FOR THE CORRECTNESS OF DETAIL.

REVISION	DATE	DESCRIPTION OF REVISION
NO. 1		
NO. 2		
NO. 3		
NO. 4		
NO. 5		

PRINTING Req'd	For	Date

Bolts: Holes: Unless Noted
Shop Paint: SEE SHT. GN1
Fab. Spec.: A572-50 U.N. Inspection
Architect:
Erection By: Field Connections

HIRSCHFELD STEEL CO. INC.
112 WEST 29TH SAN ANGELO, TEXAS 76903
PHONE (915) 653-3211

DESCRIPTION	510'-0 PLATE GIRDER UNIT
STRUCTURE	US 83/281 INTERCHANGE RAMP # 1
LOCATION	HIDALGO COUNTY
CUSTOMER	GILBERT TEXAS CONSTRUCTION
SHIP TO	
Customer's Order No.	
Dwg. By: CRT Date: 10-92	SHEET 309 OF
Checked By: DLT Date: 6-92	JOB NO. 92-106

APN 8/14

FED. ROAD DIV. NO.	STATE	FEDERAL AID PROJECT NO			
6	TX.	NH (50) M			
STATE DIST. NO.	COUNTY	CONTROL NO.	SECTION NO.	JOB NO.	HIGHWAY NO.
21	HIDALGO	39	17	97	83/281

G6306

CE 92-11 (LINE # 4)

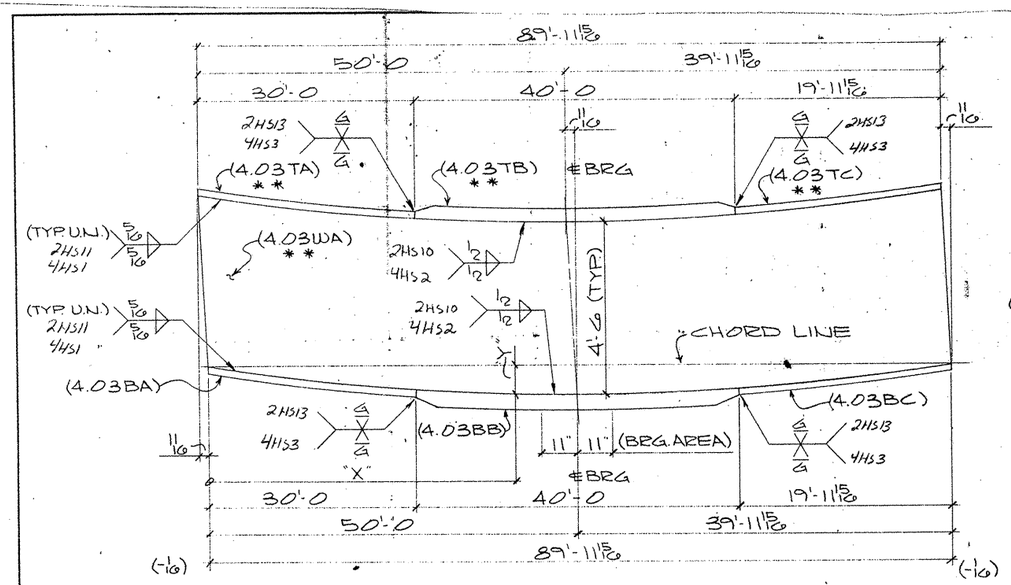

ONE GIRDER SUB-ASSY MK~A308

(FOR GIRDER ~ 324 PG 4.03)

MK ~ A308				
"X"	1'-5 1/16	25'-8 9/16	50'-0	73'-10 3/8
"Y"	1/16	15/16	1 1/8 ℄BRG	9/16

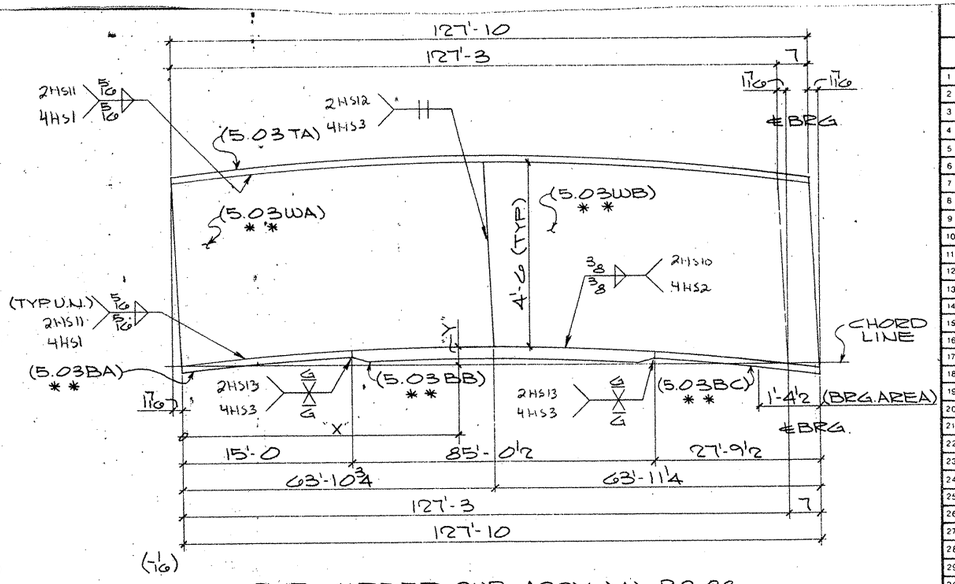

ONE GIRDER SUB-ASSY MK~B308

(FOR GIRDER ~ 328 PG 5.03)

MK ~ B308						
"X"	7'-9 7/16	31'-7 1/8	55'-6 9/16	63'-10 3/4	79'-5 5/16	103'-4 1/8
"Y"	9/16	5 3/16	6 1/8	6 1/2 ℄WEB SPLICE	6 9/16	4 1/8

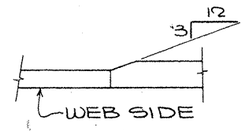

TYP. FLG. THKNESS TRANSITION

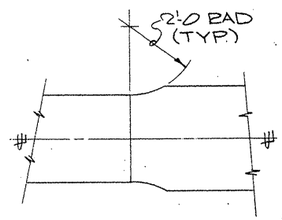

TYP. FLG. WIDTH TRANSITION

SHOP NOTES:

1) FOR GENERAL NOTES SEE SHT. GN1
2) MATERAL NOTED " * * " MUST MEET CHARPY V-NOTCH REQUIREMENTS

BILL OF MATERIAL

	Qnty.	Material	Length	Mark Temp.	Mark Ship	Wt.	Cut From	Remarks
1								
2								
3	1	GIRDER SUB-ASSY.			A308			
4	1	PL 9/16 x 54	90'-0 3/8	4.03WA			303-3	CVN 2
5	1	PL 1 1/4 x 18	30'-0	4.03TA			303-13	CVN 2
6	1	PL 2 1/2 x 20	40'-0	4.03TB			304-3	CVN 3
7	1	PL 1 1/4 x 18	19'-11 15/16	4.03TC			303-11	CVN 2
8	1	PL 1 1/4 x 18	30'-0	4.03BA			304-9	
9	1	PL 2 1/2 x 20	40'-0	4.03BB			304-8	
10	1	PL 1 1/4 x 18	19'-11 15/16	4.03BC			304-7	
11								
12								
13								
14	1	GIRDER SUB-ASSY.			B308			
15	1	PL 1/2 x 54	64'-0 3/8	5.03WA			303-5	CVN 2
16	1	PL 1/2 x 54	63'-11 15/16	5.03WB			303-5	CVN 2
17	1	PL 1 1/4 x 18	127'-10	5.03TA			304-6	
18	1	PL 1 1/4 x 18	15'-0	5.03BA			303-10	CVN 2
19	1	PL 2 1/4 x 18	85'-0 1/2	5.03BB			304-2	CVN 3
20	1	PL 1 1/4 x 18	27'-9 1/2	5.03BC			303-8	CVN 2
21								
22								
23								
24								
25								
26								
27								
28								
29								
30								
31								
32								
33								
34								
35								
36								
37								
38								
39								
40								
41								
42								
43								
44								
45								
46								
47								
48								
49								
50								
51								
52								
53								
54								
55								
56								
57								
58								
59								
60								

TEXAS DEPARTMENT OF TRANSPORTATION
APPROVED
DIVISION OF BRIDGES AND STRUCTURES
DEC 29 1992

APPROVAL OF THIS DRAWING DOES NOT RELIEVE THE CONTRACTOR OF THE RESPONSIBILITY FOR THE CORRECTNESS OF DETAIL

FOR APPROVAL
AUG 24 '92
NOT FOR CONSTRUCTION

REVISION	DATE	DESCRIPTION OF REVISION
NO. 1		
NO. 2		
NO. 3		
NO. 4		
NO. 5		

PRINTING

Req'd	For	Date

Bolts Holes Unless Noted
Shop Paint SEE SHT. GN1
Fab. Spec. A572-50 U.N. Inspection
Architect
Erection By Field Connections

HIRSCHFELD STEEL CO. INC.
112 WEST 29TH SAN ANGELO, TEXAS 76903
PHONE (915) 653-3211

DESCRIPTION	510'-0 PLATE GIRDER UNIT
STRUCTURE	US 83/281 INTERCHANGE RAMP "I"
LOCATION	HIDALGO COUNTY
CUSTOMER	GILBERT TEXAS CONSTRUCTION
SHIP TO	
Customer's Order No.	
Dwg. By CRT	Date 6-92
Checked By DLT	Date 6-92

SHEET 308 OF
JOB NO. 92-106

G0306

FED. ROAD DIV. NO.	STATE	FEDERAL AID PROJECT NO			
6	TX.	NH (50) M			
STATE DIST. NO.	COUNTY	CONTROL NO	SECTION NO	JOB NO	HIGHWAY NO.
21	HIDALGO	39	17	97	83/281

CE 92-11 (LINE #3)

a b c d e f g h k m n p q s t v w x z 1 2 3 4 5 6 7 8 9 10

322640

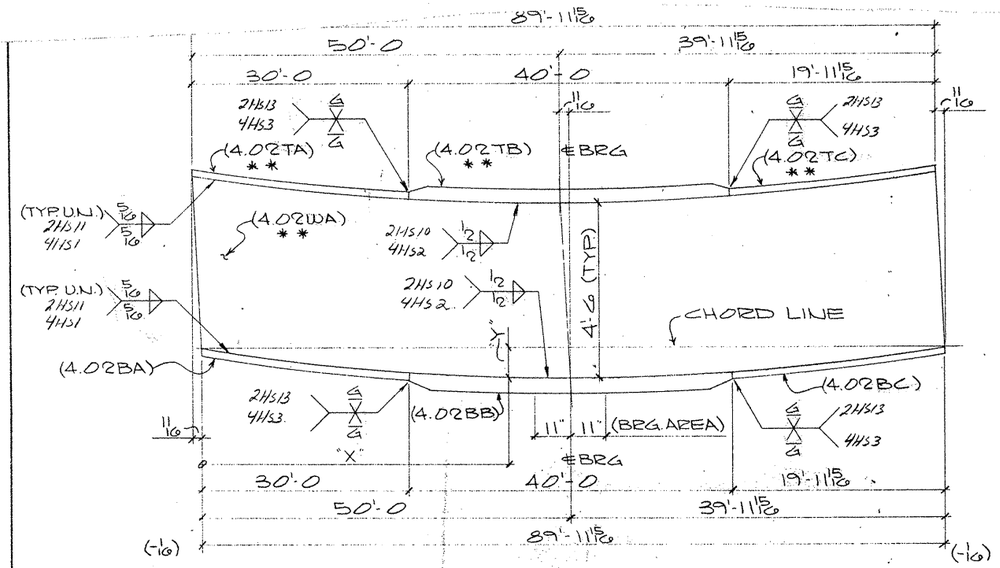

ONE GIRDER SUB-ASSY MK-A307

(FOR GIRDER - 323PG4.02)

MK-A307				
"X"	1'-5 1/16	25'-8 3/16	50'-0	73'-10 3/8
"Y"	1/16	15/16	1 1/8 ℄BRG	9/16

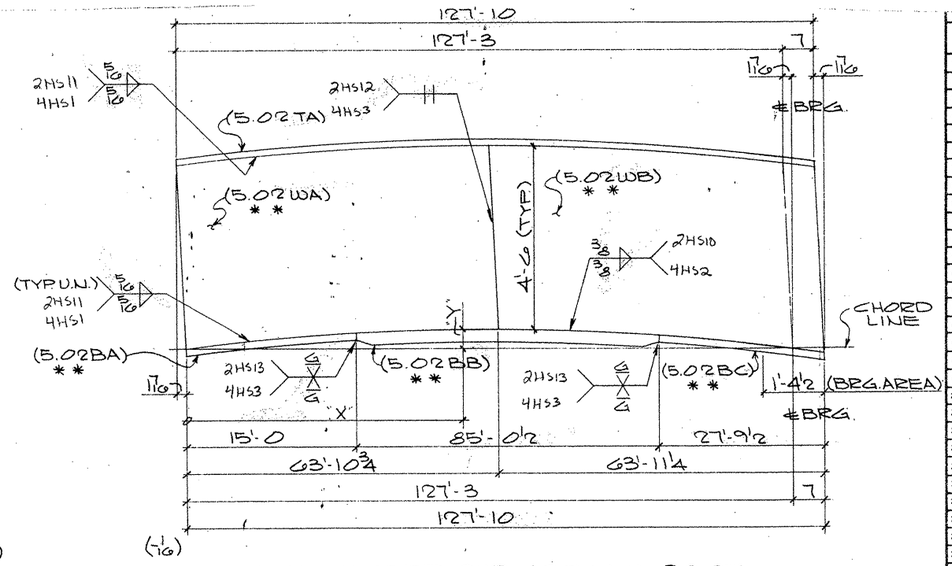

ONE GIRDER SUB-ASSY MK-B307

(FOR GIRDER - 327PG5.02)

MK-B307						
"X"	7'-9 7/16	31'-7 3/8	55'-5 9/16	63'-10 3/4	79'-5 7/16	103'-4 1/8
"Y"	1 7/16	5 3/16	6 15/16	6 13/16 ℄WEB SPLICE	6 9/16	4 1/8

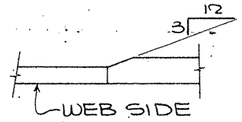

TYP. FLG. THKNESS TRANSITION

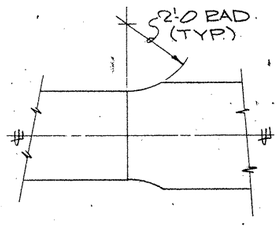

TYP. FLG. WIDTH TRANSITION

SHOP NOTES:

1) FOR GENERAL NOTES SEE SHT. GN1
2) MATERAL NOTED * & * MUST MEET CHARPY V-NOTCH REQUIREMENTS

	Qnty.	Material	Length	Mark Temp	Mark Ship.	Wt	Cut From	Remarks
3	1	GIRDER SUB-ASSY.			A307			
4	1	PL 9/16 x 54	90'-0 3/8	4.02WA			303-3	CVN 2
5	1	PL 1 1/4 x 18	30'-0	4.02TA			303-13	CVN 2
6	1	PL 2 1/2 x 20	40'-0	4.02TB			304-3	CVN 3
7	1	PL 1 1/4 x 18	19'-11 15/16	4.02TC			303-11	CVN 2
8	1	PL 1 1/4 x 18	30'-0	4.02BA			304-9	
9	1	PL 2 1/2 x 20	40'-0	4.02BB			304-8	
10	1	PL 1 1/4 x 18	19'-11 15/16	4.02BC			304-7	
11								
12								
13								
14	1	GIRDER SUB-ASSY.			B307			
15	1	PL 1/2 x 54	64'-0 3/8	5.02WA			303-5	CVN 2
16	1	PL 1/2 x 54	63'-11 15/16	5.02WB			303-5	CVN 2
17	1	PL 1 1/4 x 18	127'-10	5.02TA			304-6	
18	1	PL 1 1/4 x 18	15'-0	5.02BA			303-10	CVN 2
19	1	PL 2 1/4 x 18	85'-0 1/2	5.02BB			304-2	CVN 3
20	1	PL 1 1/4 x 18	27'-9 1/2	5.02BC			303-8	CVN 2
21								
22								
23								
24								
25								
26								
27								
28								
29								
30								
31								
32								
33								
34								
35								
36								
37								
38								
39								
40								
41								
42								
43								
44								
45								
46								
47								
48								
49								
50								
51								
52								
53								
54								
55								
56								
57								
58								
59								
60								

TEXAS DEPARTMENT OF TRANSPORTATION
APPROVED
DIVISION OF BRIDGES AND STRUCTURES
DEC 29 1992
APPROVAL OF THIS DRAWING DOES NOT RELIEVE THE CONTRACTOR OF THE RESPONSIBILITY FOR THE CORRECTNESS OF DETAIL.

FOR APPROVAL
AUG 24 92
NOT FOR CONSTRUCTION

REVISION	DATE	DESCRIPTION OF REVISION
NO. 1		
NO. 2		
NO. 3		
NO. 4		
NO. 5		

PRINTING Req'd	For	Date

Bolts Holes. Unless Noted
Shop Paint SEE SHT. GN1
Fab. Spec. A572-50 U.N. Inspection
Architect
Erection By Field Connections

HIRSCHFELD STEEL CO. INC.
112 WEST 29TH SAN ANGELO TEXAS 76903
PHONE (915) 653-3211

DESCRIPTION	510'-0 PLATE GIRDER UNIT
STRUCTURE	US 83/281 INTERCHANGE RAMP # 1
LOCATION	HIDALGO COUNTY
CUSTOMER	GILBERT TEXAS CONSTRUCTION
SHIP TO	
Customer's Order No.	
Dwg. By ERT	Date 6-92
Checked By DLT	Date 6-92

SHEET 307 OF
JOB NO. 92-1006

G0306

FED ROAD DIV NO	STATE	FEDERAL AID PROJECT NO.			
6	TX.	NH (50) M			
STATE DIST NO	COUNTY	CONTROL NO	SECTION NO	JOB NO	HIGHWAY NO
21	HIDALGO	39	17	97	83/281

CE 92-11 (LINE #2)

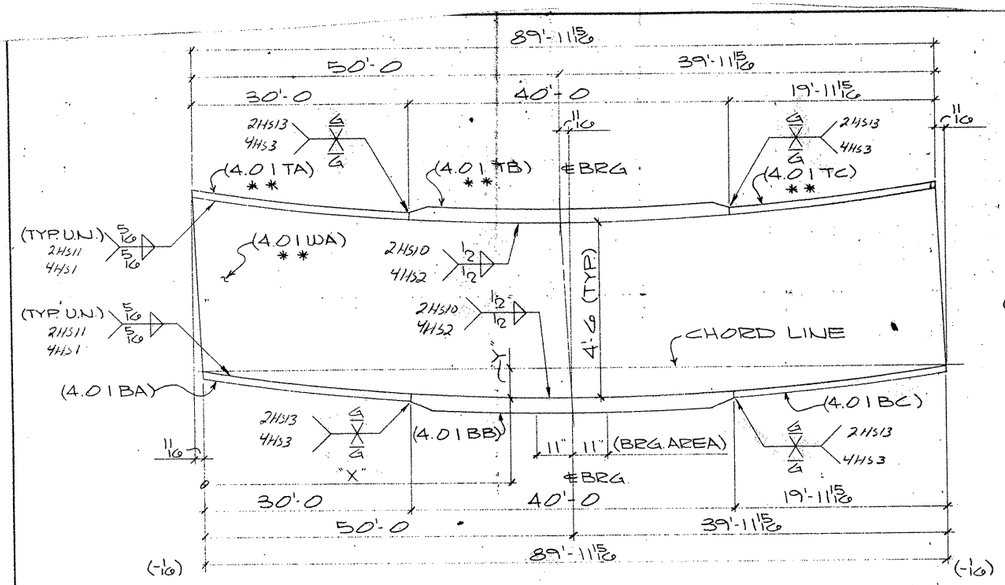

ONE GIRDER SUB-ASSY MK-A306

(FOR GIRDER - 322PG4.01)

MK - A306				
"X"	1'-5 1/16	25'-8 9/16	50'-0	73'-10 3/8
"Y"	1/16	15/16	1 1/8 ℄BRG	9/16

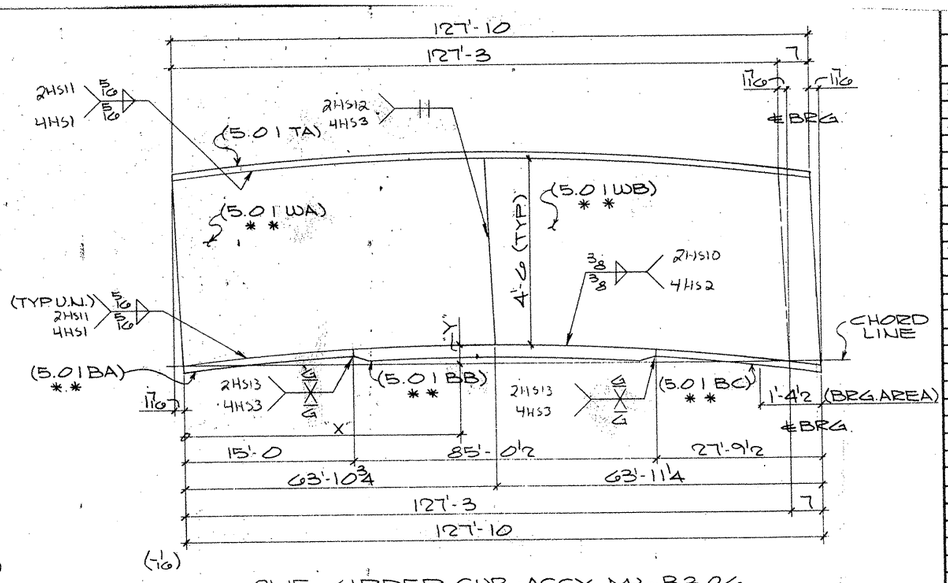

ONE GIRDER SUB-ASSY MK-B306

(FOR GIRDER - 326PG5.01)

MK - B306						
"X"	7'-9 3/16	31'-7 1/8	55'-6 9/16	63'-10 3/4	79'-5 9/16	103'-4 1/8
"Y"	1 9/16	5 3/16	6 15/16	6 1/16 ℄WEB SPLICE	6 9/16	4 1/8

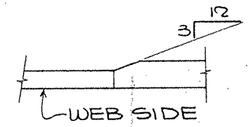

TYP. FLG. THKNESS TRANSITION

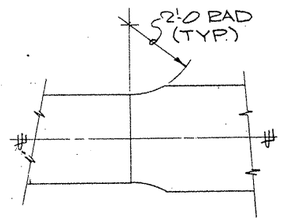

TYP. FLG. WIDTH TRANSITION

SHOP NOTES:

1) FOR GENERAL NOTES SEE SHT. GN1
2) MATERAL NOTED " * * " MUST MEET CHARPY V-NOTCH REQUIREMENTS

BILL OF MATERIAL

	Only.	Material	Length	Mark Temp.	Mark Ship.	Wt.	Cut From	Remarks
1								
2								
3	1	GIRDER SUB-ASSY.			A306			
4	1	PL 9/16 x 54	90'-0 5/8	4.01 WA			303-3	CVN 2
5	1	PL 1 1/4 x 18	30'-0	4.01 TA			303-13	CVN 2
6	1	PL 2 1/2 x 20	40'-0	4.01 TB			304-3	CVN 3
7	1	PL 1 1/4 x 18	19'-11 15/16	4.01 TC			303-11	CVN 2
8	1	PL 1 1/4 x 18	30'-0	4.01 BA			304-9	
9	1	PL 2 1/2 x 20	40'-0	4.01 BB			304-8	
10	1	PL 1 1/4 x 18	19'-11 15/16	4.01 BC			304-7	
11								
12								
13								
14	1	GIRDER SUB-ASSY.			B306			
15	1	PL 1/2 x 54	64'-0 3/8	5.01 WA			303-5	CVN 2
16	1	PL 1/2 x 54	63'-11 15/16	5.01 WB			303-5	CVN 2
17	1	PL 1 1/4 x 18	127'-10	5.01 TA			304-6	
18	1	PL 1 1/4 x 18	15'-0	5.01 BA			303-10	CVN 2
19	1	PL 2 1/4 x 18	85'-0 1/2	5.01 BB			304-2	CVN 3
20	1	PL 1 1/4 x 18	27'-9 1/2	5.01 BC			303-8	CVN 2
21								
22								
23								
24								
25								
26								
27								
28								
29								
30								
31								
32								
33								
34								
35								
36								
37								
38								
39								
40								
41								
42								
43								
44								
45								
46								
47								
48								
49								
50								
51								
52								
53								
54								
55								
56								
57								
58								
59								
60								

TEXAS DEPARTMENT OF TRANSPORTATION
APPROVED
DIVISION OF BRIDGES AND STRUCTURES
DEC 29 1992

APPROVAL OF THIS DRAWING DOES NOT RELIEVE THE CONTRACTOR OF THE RESPONSIBILITY FOR THE CORRECTNESS OF DETAIL.

FOR APPROVAL
AUG 24 '92
NOT FOR CONSTRUCTION

REVISION	DATE	DESCRIPTION OF REVISION
NO. 1		
NO. 2		
NO. 3		
NO. 4		
NO. 5		

PRINTING		
Reqd	For	Date

Bolts Holes. Unless Noted
Shop Paint SEE SHT. GN1
Fab Spec A572-50 UN. Inspection
Architect
Erection By Field Connections

HIRSCHFELD STEEL CO. INC.
112 WEST 29TH SAN ANGELO TEXAS 76903
PHONE (915) 653-3211

DESCRIPTION 510'-0 PLATE GIRDER UNIT
STRUCTURE US 83/281 INTERCHANGE RAMP "I"
LOCATION HIDALGO COUNTY
CUSTOMER GILBERT TEXAS CONSTRUCTION
SHIP TO
Customer's Order No.
Dwg. By ERT Date 6-92
Checked By DLT Date 6-92
SHEET 306 OF
JOB NO 92-1006

G0306

FED ROAD DIV NO	STATE	FEDERAL AID PROJECT NO			
6	TX.	NH (50) M			
STATE DIST NO	COUNTY	CONTROL NO	SECTION NO	JOB NO	HIGHWAY NO
21	HIDALGO	39	17	97	83/281

CE 92-11 (LINE "I")

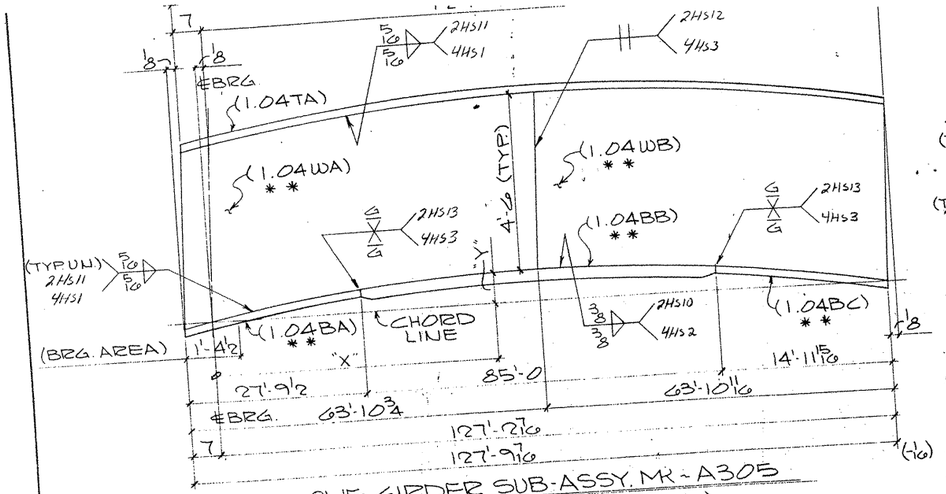

ONE GIRDER SUB-ASSY. MK-A305

(FOR GIRDER-313 PG1.04)

MK-A305						
"X"	23'-10 11/16	47'-9 5/16	63'-3 3/4	71'-7 15/16	95'-6 9/16	119'-5 1/4
"Y"	3 5/8	6"	6 3/8	6 9/16	5"	1 1/2
			℄ WEB SPLICE			

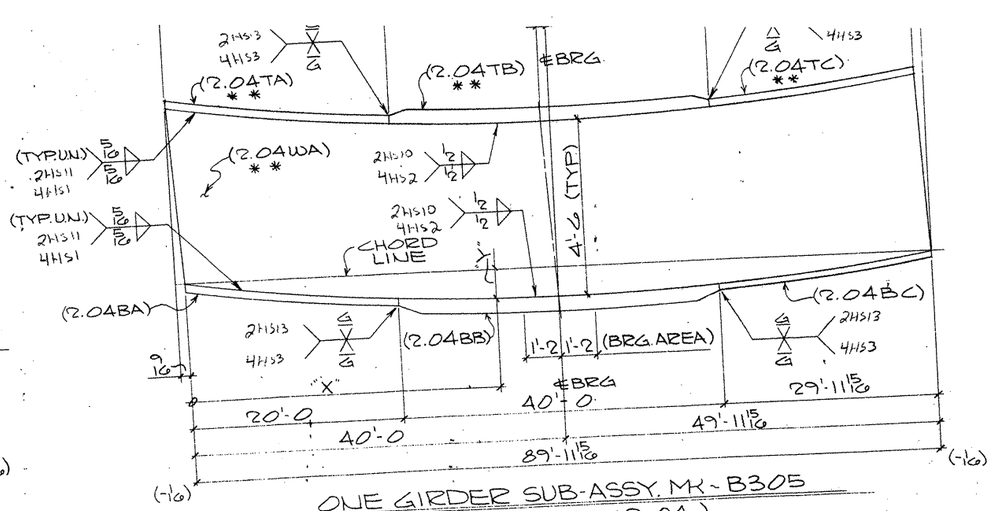

ONE GIRDER SUB-ASSY. MK-B305

(FOR GIRDER-317PG2.04)

MK-B305					
"X"	16'-1 5/16	40'-0	64'-3 7/16	88'-6 7/8	
"Y"	9/16	1 1/8	15/16	1/16	
		℄BRG			

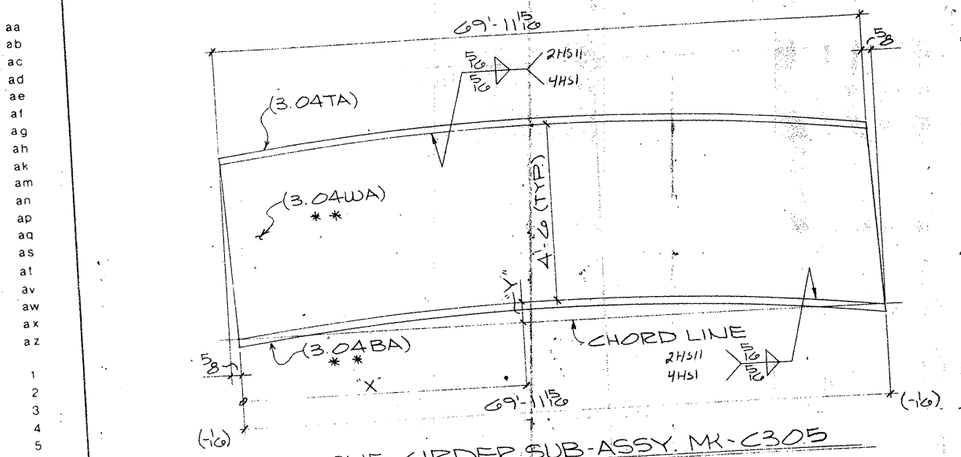

ONE GIRDER SUB-ASSY. MK-C305

(FOR GIRDER-321PG3.04)

MK-C305		
"X"	22'-10 1/4	47'-11 1/16
"Y"	13/16	13/16

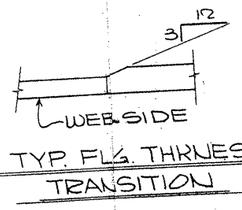

TYP. FLG. THKNESS TRANSITION

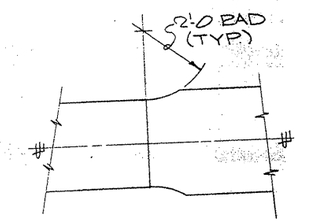

TYP. FLG. WIDTH TRANSITION

SHOP NOTES:

1) FOR GENERAL NOTES SEE SHT. GN1
2) MATERAL NOTED "**" MUST MEET CHARPY V-NOTCH REQUIREMENTS

5	1	PL 1 1/4 × 18	121'-11 1/16	1.04BA			303-8	CVN 2
6	1	PL 1 1/4 × 18	27'-9 1/2	1.04BA			304-2	CVN 3
7	1	PL 2 1/4 × 18	85'-0	1.04BB			303-10	CVN 2
8	1	PL 1 1/4 × 18	14'-11 15/16	1.04BC				
9								
10								
11								
12	1	GIRDER SUB-ASSY			B305			
13	1	PL 9/16 × 54	90'-0 1/2	2.04WA			303-3	CVN 2
14	1	PL 1 1/4 × 18	20'-0	2.04TA			303-11	CVN 2
15	1	PL 2 1/2 × 20	40'-0	2.04TB			304-3	CVN 3
16	1	PL 1 1/4 × 18	29'-11 15/16	2.04TC			303-13	CVN 2
17	1	PL 1 1/4 × 18	20'-0	2.04BA			304-7	
18	1	PL 2 1/2 × 20	40'-0	2.04BB			304-8	
19	1	PL 1 1/4 × 18	29'-11 15/16	2.04BC			304-9	
20								
21								
22								
23	1	GIRDER SUB-ASSY			C305			
24	1	PL 1/2 × 54	70'-0 7/16	3.04WA			303-4	CVN 2
25	1	PL 1 1/4 × 18	69'-11 15/16	3.04TA			304-10	
26	1	PL 1 1/4 × 18	69'-11 15/16	3.04TB			303-14	CVN 2

TEXAS DEPARTMENT OF TRANSPORTATION
APPROVED
DIVISION OF BRIDGES AND STRUCTURES
DEC 29 1992

APPROVAL OF THIS DRAWING DOES NOT RELIEVE THE CONTRACTOR OF THE RESPONSIBILITY FOR THE CORRECTNESS OF DETAILS.

FOR APPROVAL
AUG 24 92
NOT FOR CONSTRUCTION

REVISION	DATE	DESCRIPTION OF REVISION
NO. 1		
NO. 2		
NO. 3		
NO. 4		
NO. 5		

PRINTING		
Read	For	Date

Bolts: Holes: Unless Noted
Shop Paint: SEE SHT GN1
Fab. Spec: AST.M 270 UN Inspection
Architect
Erection By: Field Connections

HIRSCHFELD STEEL CO. INC.
112 WEST 29TH SAN ANGELO TEXAS 76903
PHONE (915) 653-3211

DESCRIPTION: 510'-0 PLATE GIRDER UNIT
STRUCTURE: US 83/281 INTERCHANGE RAMP "K"
LOCATION: HIDALGO COUNTY
CUSTOMER: GILBERT TEXAS CONSTRUCTION
SHIP TO
Customer's Order No.
Dwg. By: CRT Date: 6-92
Checked By: DLT Date: 6-92
SHEET 305 OF
JOB NO 92-16

G0206

FED. ROAD DIV. NO	STATE	FEDERAL AID PROJECT NO				
6	TX.	NH (50) M				
STATE DIST. NO	COUNTY	CONTROL NO.	SECTION NO.	JOB NO	HIGHWAY NO.	
21	HIDALGO	39	17	97	83/281	

(CE 92-11) (LINE # 4)

Engineers Dad Copy

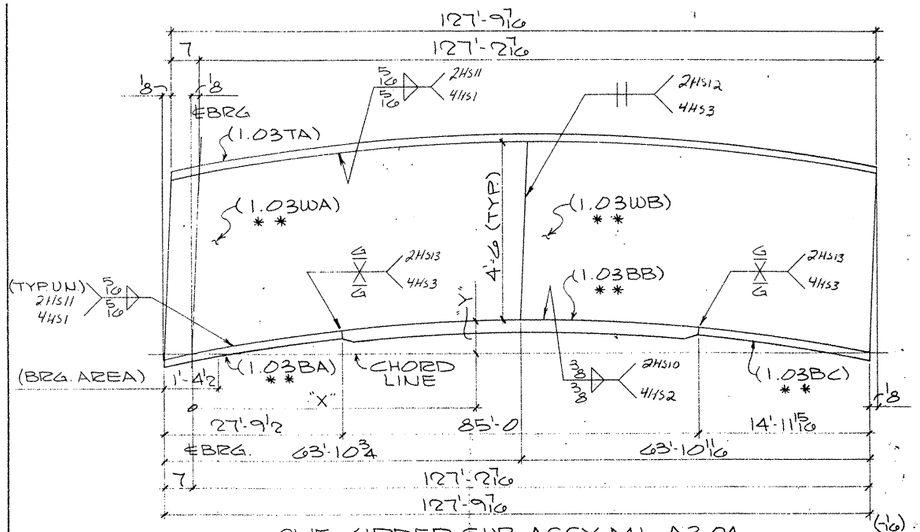

ONE GIRDER SUB-ASSY. MK-A304

(FOR GIRDER - 312 PG1.03)

MK-A304						
"X"	23'-10 11/16	47'-9 5/16	63'-3 3/4	71'-7 15/16	95'-6 9/16	119'-5 1/4
"Y"	3 5/8	0"	6 3/8	6 9/16	5"	1 1/2

℄ WEB SPLICE

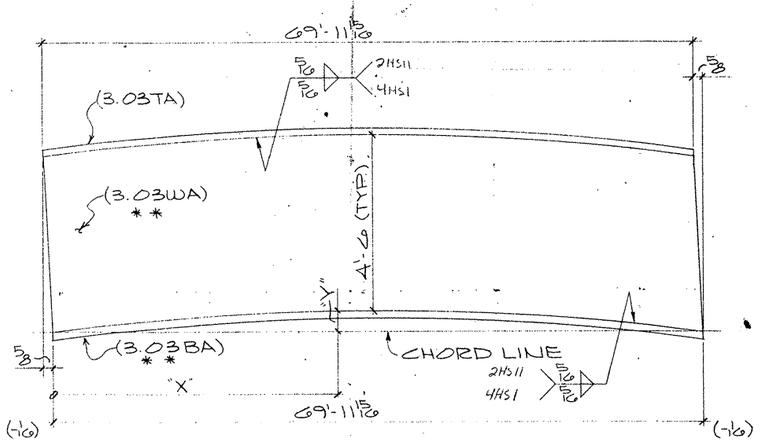

ONE GIRDER SUB-ASSY. MK-C304

(FOR GIRDER - 320PG3.03)

MK-C304		
"X"	22'-10 1/4	47'-11 1/16
"Y"	13/16	13/16

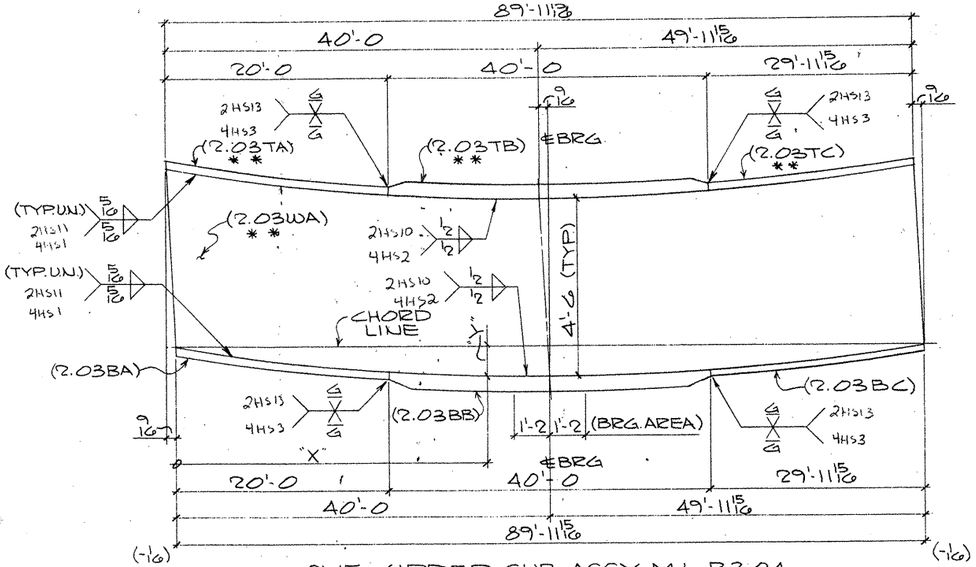

ONE GIRDER SUB-ASSY. MK-B304

(FOR GIRDER - 316PG2.03)

MK-B304				
"X"	16'-1 15/16	40'-0	64'-3 7/16	88'-6 3/8
"Y"	9/16	1 1/8	15/16	1/16

℄BRG

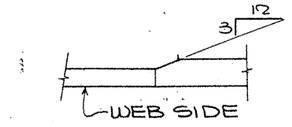

TYP. FLG. THKNESS TRANSITION

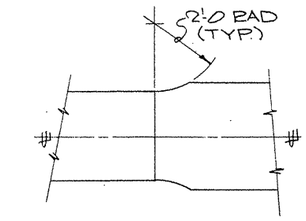

TYP. FLG. WIDTH TRANSITION

SHOP NOTES:

1) FOR GENERAL NOTES SEE SHT. GN1
2) MATERAL NOTED " * * " MUST MEET CHARPY V-NOTCH REQUIREMENTS

BILL OF MATERIAL

	Qnty.	Material	Length	Mark Temp	Mark Ship	Wt.	Cut From	Remarks
1								
2	1	GIRDER SUB-ASSY			A304			
3	1	PL 1/2 x 54	63'-11 3/8	1.03WA			303-2	CVN 2
4	1	PL 1/2 x 54	63'-11 15/16	1.03WB			303-2	CVN 2
5	1	PL 1 1/4 x 18	127'-9 7/16	1.03TA			304-6	
6	1	PL 1 1/4 x 18	27'-9 1/2	1.03BA			303-8	CVN 2
7	1	PL 2 1/4 x 18	85'-0	1.03BB			304-2	CVN 3
8	1	PL 1 1/4 x 18	14'-11 15/16	1.03BC			303-10	CVN 2
9								
10								
11								
12	1	GIRDER SUB-ASSY			B304			
13	1	PL 9/16 x 54	90'-0 1/2	2.03WA			303-3	CVN 2
14	1	PL 1 1/4 x 18	20'-0	2.03TA			303-11	CVN 2
15	1	PL 2 1/2 x 20	40'-0	2.03TB			304-3	CVN 3
16	1	PL 1 1/4 x 18	29'-11 15/16	2.03TC			303-13	CVN 2
17	1	PL 1 1/4 x 18	20'-0	2.03BA			304-7	
18	1	PL 2 1/2 x 20	40'-0	2.03BB			304-8	
19	1	PL 1 1/4 x 18	29'-11 15/16	2.03BC			304-9	
20								
21								
22								
23	1	GIRDER SUB-ASSY			C304			
24	1	PL 1/2 x 54	70'-0 9/16	3.03WA			303-4	CVN 2
25	1	PL 1 1/4 x 18	69'-11 15/16	3.03TA			304-10	
26	1	PL 1 1/4 x 18	69'-11 15/16	3.03TB			303-14	CVN 2
27								
28								
29								
30								
31								
32								
33								
34								
35								
36								
37								
38								
39								
40								
41								
42								
43								
44								
45								
46								
47								
48								
49								
50								
51								
52								
53								
54								
55								
56								
57								
58								
59								
60								

TEXAS DEPARTMENT OF TRANSPORTATION
APPROVED
DIVISION OF BRIDGES AND STRUCTURES
DEC 29 1992
APPROVAL OF THIS DRAWING DOES NOT RELIEVE THE CONTRACTOR OF THE RESPONSIBILITY FOR THE CORRECTNESS OF DETAIL.

FOR APPROVAL
AUG 19 9
NOT FOR CONSTRUCTION

REVISION	DATE	DESCRIPTION OF REVISION
NO 1		
NO 2		
NO 3		
NO 4		
NO 5		

PRINTING Req'd	For	Date

Bolts: Holes: Unless Noted
Shop Paint SEE SHT GN1
Fab Spec AST2-50 UN Inspection
Architect
Erection By Field Connections

HIRSCHFELD STEEL CO. INC.
112 WEST 29TH SAN ANGELO TEXAS 76903
PHONE (915) 653-3211

DESCRIPTION	510'-0 PLATE GIRDER UNIT
STRUCTURE	US 83/281 INTERCHANGE RAMP # 1
LOCATION	HIDALGO COUNTY
CUSTOMER	GILBERT TEXAS CONSTRUCTION
SHIP TO	
Customer's Order No.	
Dwg. By CRT Date 6-92	SHEET 3.0A OF
Checked By DLT Date 6-92	JOB NO. 92-106

G0306

FED. ROAD DIV. NO.	STATE	FEDERAL AID PROJECT NO			
6	TX.	NH (50) M			
STATE DIST. NO.	COUNTY	CONTROL NO	SECTION NO	JOB NO.	HIGHWAY NO.
21	HIDALGO	39	17	97	83/281

(CE 92-11) (LINE # 3)

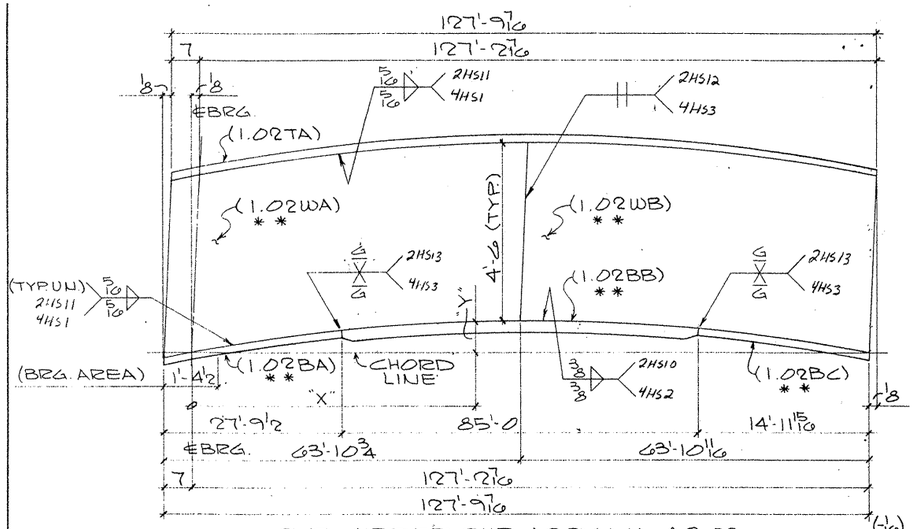

ONE GIRDER SUB-ASSY. MK-A303

(FOR GIRDER - 311 PG1.02)

MK-A303							
"X"	23'-10 11/16	47'-9 5/16	63'-3 3/4	71'-7 15/16	95'-6 9/16	119'-5 1/4
"Y"	3 5/8	6"	6 3/8	6 9/16	5"	1 1/2
			℄ WEB SPLICE			

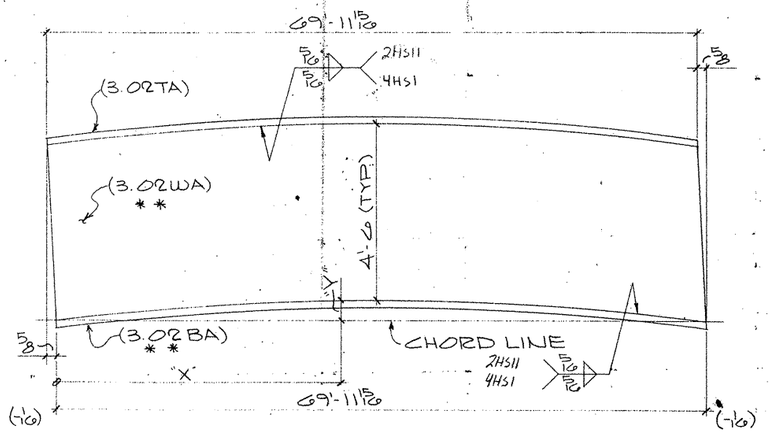

ONE GIRDER SUB-ASSY. MK-C303

(FOR GIRDER - 319 PG3.02)

MK-C303		
"X"	22'-10 1/4	47'-11 1/16
"Y"	13/16	13/16

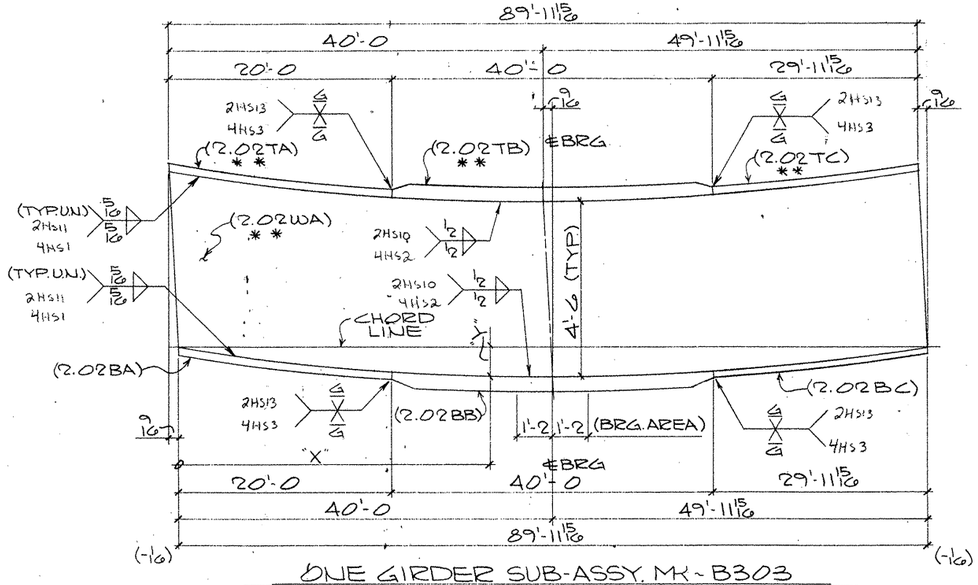

ONE GIRDER SUB-ASSY. MK-B303

(FOR GIRDER - 315PG2.02)

MK-B303				
"X"	16'-1 15/16	40'-0	64'-3 7/16	88'-6 7/8
"Y"	9/16	1 1/8	15/16	1/16
		℄ BRG		

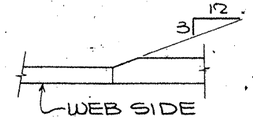

TYP. FLG. THKNESS TRANSITION

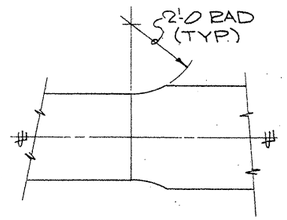

TYP. FLG. WIDTH TRANSITION

SHOP NOTES:

1) FOR GENERAL NOTES SEE SHT. GN1
2) MATERAL NOTED " * * " MUST MEET CHARPY V-NOTCH REQUIREMENTS

BILL OF MATERIAL

	Qnty.	Material	Length	Mark Temp	Mark Ship	Wt.	Cut From	Remarks
1								
2	1	GIRDER SUB-ASSY			A303			
3	1	PL 1/2 x 54	63'-11 3/8	1.02WA			303-2	CVN 2
4	1	PL 1/2 x 54	63'-11 5/16	1.02WB			303-2	CVN 2
5	1	PL 1 1/4 x 18	127'-9 7/16	1.02TA			304-6	
6	1	PL 1 1/4 x 18	27'-9 1/2	1.02BA			303-8	CVN 2
7	1	PL 2 1/4 x 18	85'-0	1.02BB			304-2	CVN 3
8	1	PL 1 1/4 x 18	14'-11 15/16	1.02BC			303-10	CVN 2
9								
10								
11								
12	1	GIRDER SUB-ASSY			B303			
13	1	PL 9/16 x 54	90'-0 1/2	2.02WA			303-3	CVN 2
14	1	PL 1 1/4 x 18	20'-0	2.02TA			303-11	CVN 2
15	1	PL 2 1/2 x 20	40'-0	2.02TB			304-3	CVN 3
16	1	PL 1 1/4 x 18	29'-11 15/16	2.02TC			303-13	CVN 2
17	1	PL 1 1/4 x 18	20'-0	2.02BA			304-7	
18	1	PL 2 1/2 x 20	40'-0	2.02BB			304-8	
19	1	PL 1 1/4 x 18	29'-11 15/16	2.02BC			304-9	
20								
21								
22								
23	1	GIRDER SUB-ASSY			C303			
24	1	PL 1/2 x 54	70'-0 9/16	3.02WA			303-4	CVN 2
25	1	PL 1 1/4 x 18	69'-11 15/16	3.02TA			304-10	
26	1	PL 1 1/4 x 18	69'-11 15/16	3.02TB			303-14	CVN 2
27								
28								
29								
30								
31								
32								
33								
34								
35								
36								
37								
38								
39								
40								
41								
42								
43								
44								
45								
46								
47								
48								
49								
50								
51								
52								
53								
54								
55								
56								
57								
58								
59								
60								

FOR APPROVAL
AUG 24 '92
NOT FOR CONSTRUCTION

TEXAS DEPARTMENT OF TRANSPORTATION
APPROVED
DIVISION OF BRIDGES AND STRUCTURES
DEC 29 1992

APPROVAL OF THIS DRAWING DOES NOT RELIEVE THE CONTRACTOR OF THE RESPONSIBILITY FOR THE CORRECTNESS OF DETAIL

REVISION	DATE	DESCRIPTION OF REVISION
NO. 1		
NO. 2		
NO. 3		
NO. 4		
NO. 5		

PRINTING: Req'd | For | Date

Bolts: Holes: Unless Noted
Shop Paint: SEE SHT GN1
Fab. Spec: AS12-5.0 D.U. Inspection
Architect
Erection By: Field Connections

HIRSCHFELD STEEL CO. INC.
112 WEST 29TH SAN ANGELO, TEXAS 76903
PHONE (915) 653-3211

DESCRIPTION	B10'-0 PLATE GIRDER UNIT
STRUCTURE	US 83/281 INTERCHANGE RAMP * 1
LOCATION	HIDALGO COUNTY
CUSTOMER	GILBERT TEXAS CONSTRUCTION
SHIP TO	
Customer's Order No.	
Dwg. By CRT	Date 6-92
Checked By DCT	Date 6-92

SHEET 303 OF
JOB NO. 92-106

G10306

FED. ROAD DIV. NO	STATE	FEDERAL AID PROJECT NO			
6	TX.	NH (50) M			
STATE DIST. NO	COUNTY	CONTROL NO	SECTION NO	JOB NO	HIGHWAY NO
21	HIDALGO	39	17	97	83/281

(CE 92-11) (LINE #2)

232460

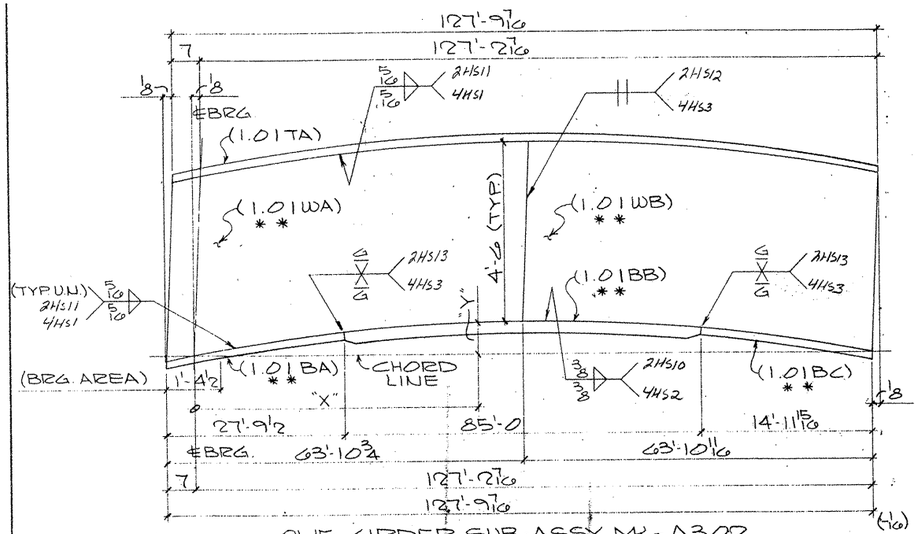

ONE GIRDER SUB-ASSY. MK-A302

(FOR GIRDER - 310 PG1.01)

MK-A302						
"X"	23'-10 11/16	47'-9 5/8	63'-3 3/4	71'-7 15/16	95'-6 9/16	119'-5 1/4
"Y"	3 5/8	0"	6 3/8	6 9/16	5"	1 1/2
			℄WEB SPLICE			

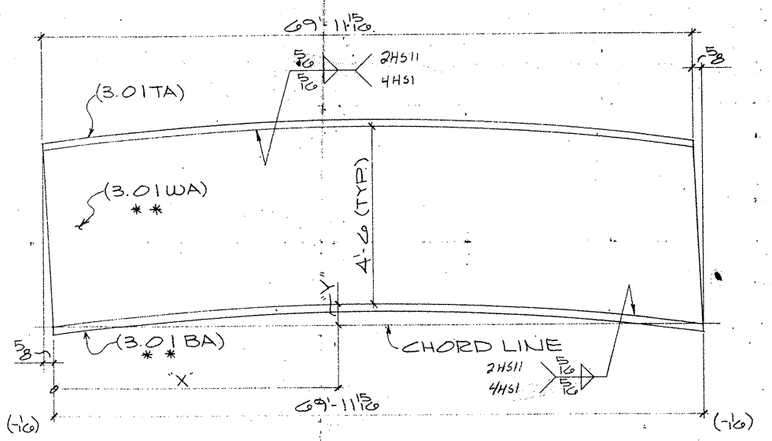

ONE GIRDER SUB-ASSY. MK-C302

(FOR GIRDER - 318 PG3.01)

MK-C302		
"X"	22'-10 1/4	47'-11 1/16
"Y"	13/16	13/16

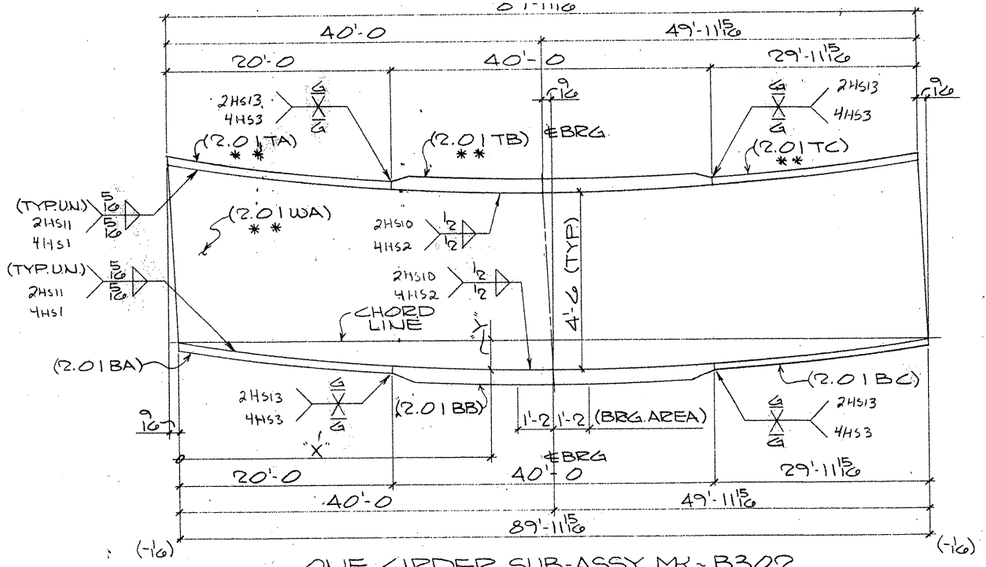

ONE GIRDER SUB-ASSY. MK-B302

(FOR GIRDER - 314 PG2.01)

MK-B302				
"X"	16'-1 15/16	40'-0	64'-3 3/16	88'-6 7/8
"Y"	9/16	1 1/8	15/16	1/16
		℄BRG		

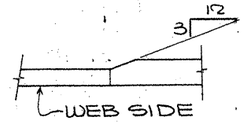

TYP. FLG. THKNESS TRANSITION

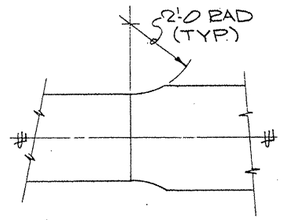

TYP. FLG. WIDTH TRANSITION

SHOP NOTES:

1) FOR GENERAL NOTES SEE SHT. GN1
2) MATERAL NOTED " * * " MUST MEET CHARPY V-NOTCH REQUIREMENTS

	Qnty	Material	Length	Mark Temp	Mark Ship	Wt.	Cut From	Remarks
1								
2	1	GIRDER SUB-ASSY			A302			
3	1	PL 1/2 x 54	63'-1 3/8	1.01 WA			303-2	CVN 2
4	1	PL 1/2 x 54	63'-11 5/16	1.01 WB			303-2	CVN 2
5	1	PL 1 1/4 x 18	127'-9 7/16	1.01 TA			304-6	
6	1	PL 1 1/4 x 18	27'-9 1/2	1.01 BA			303-8	CVN 2
7	1	PL 2 1/4 x 18	85'-0	1.01 BB			304-2	CVN 3
8	1	PL 1 1/4 x 18	14'-11 15/16	1.01 BC			303-10	CVN 2
9								
10								
11								
12	1	GIRDER SUB-ASSY			B302			
13	1	PL 9/16 x 54	90'-0 1/2	2.01 WA			303-3	CVN 2
14	1	PL 1 1/4 x 18	20'-0	2.01 TA			303-11	CVN 2
15	1	PL 2 1/2 x 20	40'-0	2.01 TB			304-3	CVN 3
16	1	PL 1 1/4 x 18	29'-11 15/16	2.01 TC			303-13	CVN 2
17	1	PL 1 1/4 x 18	20'-0	2.01 BA			304-7	
18	1	PL 2 1/2 x 20	40'-0	2.01 BB			304-8	
19	1	PL 1 1/4 x 18	29'-11 15/16	2.01 BC			304-9	
20								
21								
22								
23	1	GIRDER SUB-ASSY			C302			
24	1	PL 1/2 x 54	70'-0 9/16	3.01 WA			303-4	CVN 2
25	1	PL 1 1/4 x 18	69'-11 15/16	3.01 TA			304-10	
26	1	PL 1 1/4 x 18	69'-11 15/16	3.01 TB			303-14	CVN 2
27								
28								
29								
30								
31								
32								
33								
34								
35								
36								
37								
38								
39								
40								
41								
42								
43								
44								
45								
46								
47								
48								
49								
50								
51								
52								
53								
54								
55								
56								
57								
58								
59								
60								

FOR APPROVAL

AUG 24 92

NOT FOR CONSTRUCTION

TEXAS DEPARTMENT OF TRANSPORTATION
APPROVED
DIVISION OF BRIDGES AND STRUCTURES
DEC 29 1992
APPROVAL OF THIS DRAWING DOES NOT RELIEVE THE CONTRACTOR OF THE RESPONSIBILITY FOR THE CORRECTNESS OF DETAIL

REVISION	DATE	DESCRIPTION OF REVISION
NO. 1		
NO. 2		
NO. 3		
NO. 4		
NO. 5		

PRINTING Req'd	For	Date

Bolts: Holes: Unless Noted
Shop Paint SEE SHT. GN1
Fab. Spec. A572-50 UN Inspection
Architect
Erection By Field Connections

HIRSCHFELD STEEL CO. INC.
112 WEST 29TH SAN ANGELO, TEXAS 76903
PHONE (915) 653-3211

DESCRIPTION	510'-0 PLATE GIRDER UNIT
STRUCTURE	US 83/281 INTERCHANGE RAMP # 1
LOCATION	HIDALGO COUNTY
CUSTOMER	GILBERT TEXAS CONSTRUCTION
SHIP TO	
Customer's Order No.	
Dwg. By CET Date 6-92	SHEET 302 OF
Checked By DCT Date 6-92	JOB NO. 92-106

G0306

FED. ROAD DIV. NO	STATE	FEDERAL AID PROJECT NO				
6	TX.	NH (50) M				
STATE DIST. NO	COUNTY	CONTROL NO	SECTION NO	JOB NO	HIGHWAY NO	
21	HIDALGO	39	17	97	83/281	

(CE 92-11) (LINE # 1)

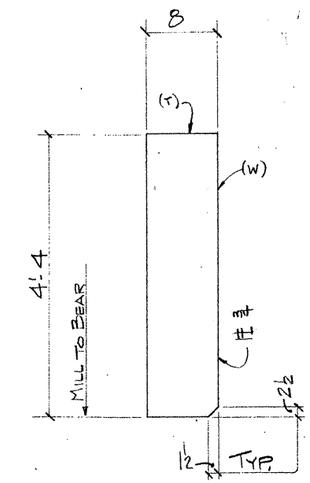

16 - PLATES ~ a301
(END BRG.)

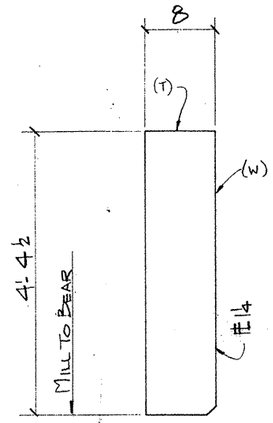

4 - PLATES ~ b301
(INT. BRG.)

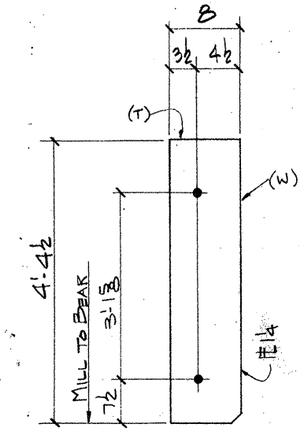

6 - PLATES ~ c301
(INT. BRG.)

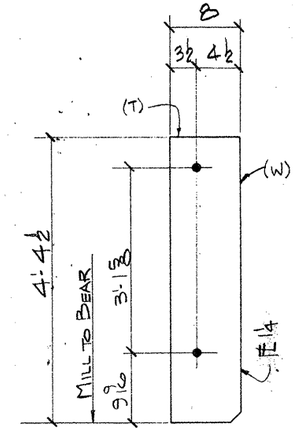

6 - PLATES ~ d301
(INT. BRG.)

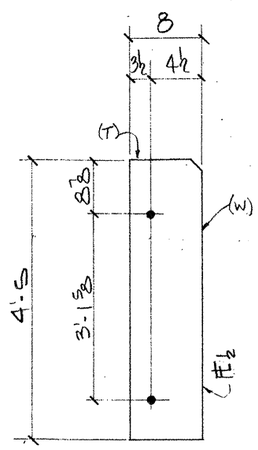

36 - PLATES ~ e301
(INT. STIFF)

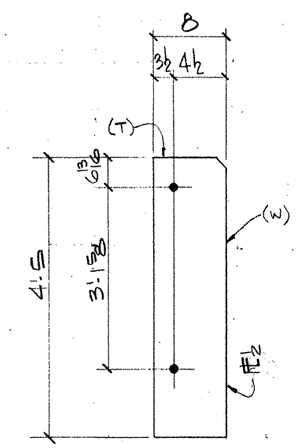

36 - PLATES ~ f301
(INT. STIFF)

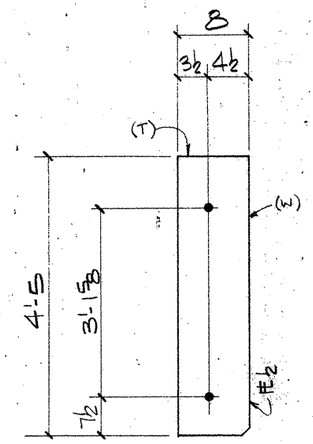

18 - PLATES ~ g301

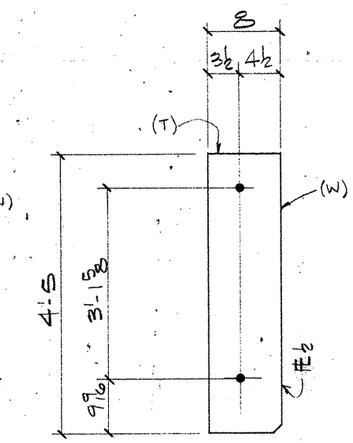

18 - PLATES ~ h301

SHOP NOTES:

1. FOR GENERAL NOTES: SEE SHT GN1.
2. (T) INDICATES "TOP"
3. (W) INDICATES "WEB"

Q0306

FED. ROAD DIV. NO	STATE	FEDERAL AID PROJECT NO			
6	TX	NH (50) M			
STATE DIST. NO	COUNTY	CONTROL NO	SECTION NO	JOB NO	HIGHWAY NO
21	HIDALGO	39	17	97	83/281

BILL OF MATERIAL

	Qnty.	Material	Length	Mark Temp	Mark Ship	Wt	Cut From	Remarks
6	16	PL ¾ x 8	4'-4	a301			301-1	
7	4	PL 1¼ x 8	4'-4½	b301			301-2	
8	6	PL 1¼ x 8	4'-4½	c301			301-2	
9	6	PL 1¼ x 8	4'-4½	d301			301-2	
10	36	PL ½ x 8	4'-5	e301			301-4	
11	36	PL ½ x 8	4'-5	f301			301-4	
12	18	PL ½ x 8	4'-5	g301			301-4	
13	18	PL ½ x 8	4'-5	h301			301-4	

TEXAS DEPARTMENT OF TRANSPORTATION
APPROVED
DIVISION OF BRIDGES AND STRUCTURES
DEC 29 1992
APPROVAL OF THIS DRAWING DOES NOT RELIEVE THE CONTRACTOR OF THE RESPONSIBILITY FOR THE CORRECTNESS OF DETAIL

FOR APPROVAL
AUG 24 '92
NOT FOR CONSTRUCTION

REVISION	DATE	DESCRIPTION OF REVISION
NO. 1		
NO. 2		
NO. 3		
NO. 4		
NO. 5		

PRINTING: Req'd | For | Date

Bolts Holes 15/16φ Unless Noted
Shop Paint SEE SHT. GN1
Fab Spec A36 Inspection
Architect
Erection By Field Connections

HIRSCHFELD STEEL CO. INC.
112 WEST 29TH SAN ANGELO, TEXAS 76903
PHONE (915) 653-3211

DESCRIPTION 510'-0 PLATE GIRDER UNIT
STRUCTURE US 83/281 INTERCHANGE RAMP 1
LOCATION HIDALGO COUNTY
CUSTOMER GILBERT TEXAS CONSTRUCTION
SHIP TO
Customer's Order No.
Dwg. By JDL Date 6/92
Checked By DLT Date 6/92
SHEET 301 OF
JOB NO. 92-106

CE 92-11

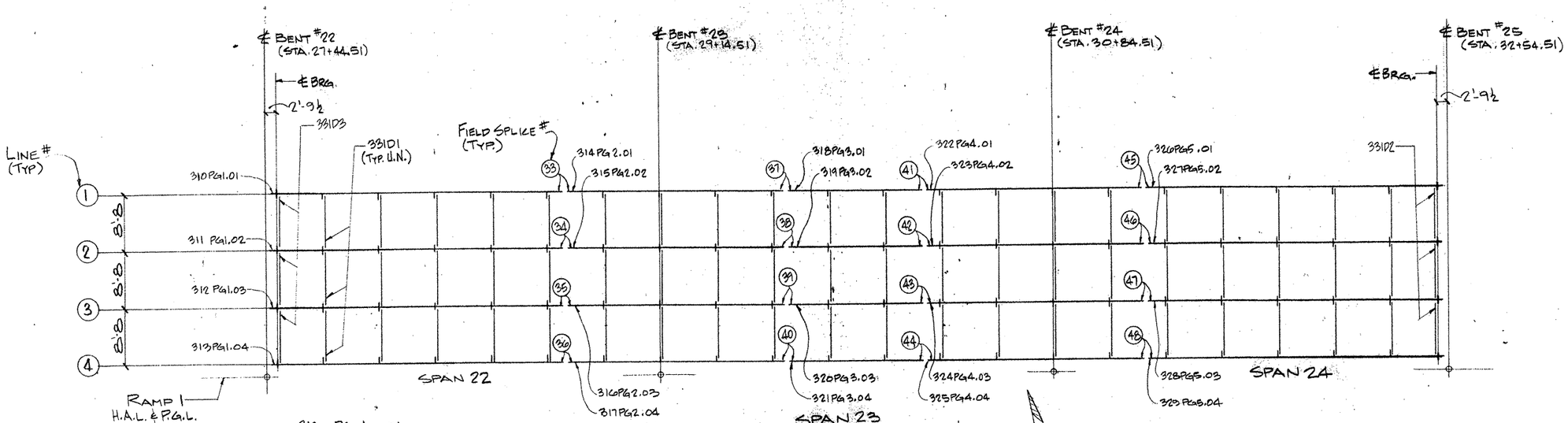

310 PG 1 .01
SHEET # — LINE #
PLATE GIRDER — GIRDER #

GIRDER SHIPPING MARK LEGEND

FRAMING PLAN
(UNIT No 9 RAMP 1)

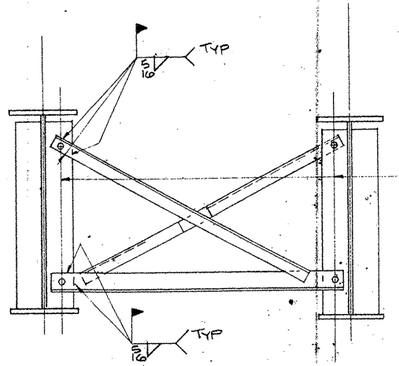

2-¾φ x 2'4 A325 w/2-WASH EA. (TYP U.N.)
2-¾φ x 3 A325 w/2-WASH EA. @ BENT #23 & BENT #24

TYP. INT. DIAFRAMS
(TYPE D)

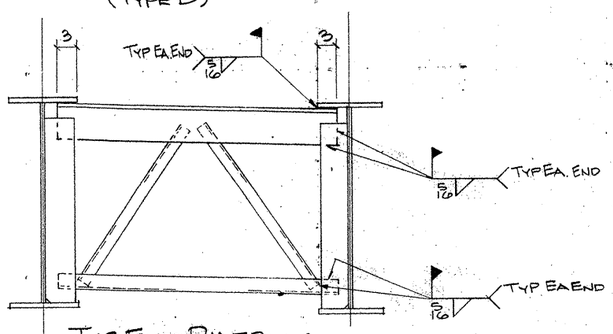

TYP. END DIAFRAM
(TYPE B)

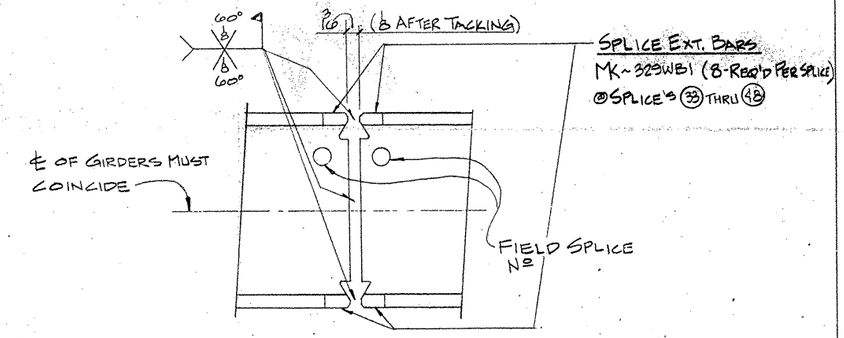

TYP. FIELD SPLICE DETAIL

TEXAS DEPARTMENT OF TRANSPORTATION
APPROVED
DIVISION OF BRIDGES AND STRUCTURES
DEC 29 1992
APPROVAL OF THIS DRAWING DOES NOT RELIEVE THE CONTRACTOR OF THE RESPONSIBILITY FOR THE CORRECTNESS OF DETAIL

FOR APPROVAL
AUG 25 '92
NOT FOR CONSTRUCTION
APV 8/25

FED. ROAD DIV. NO.	STATE	FEDERAL AID PROJECT NO.			
6	TX.	NH (50) M			
STATE DIST. NO.	COUNTY	CONTROL NO.	SECTION NO.	JOB NO.	HIGHWAY NO.
21	HIDALGO	39	17	97	83/281

HOLES ____ U.N. FOR AP'VL ____
BOLTS ____ U.N. RETURNED ____
WELDS ____ U.N. TO SHOP ____
PAINT ____

REVISIONS

NO.	DATE	REMARKS
1		
2		
3		
4		

HIRSCHFELD STEEL CO. INC.
112 WEST 29TH SAN ANGELO, TEXAS 76903
PHONE (915) 653-3211

CUSTOMER GILBERT TEXAS CONSTRUCTION
ARCHITECT
PROJECT US 83/281 INTERCHANGE RAMP #1
LOCATION HIDALGO COUNTY

DRAWN JBC DATE 6/92
CHECKED DLT DATE 6/92
JOB NO. 92-106
SHEET NO. ____ of E301

CE 92-11

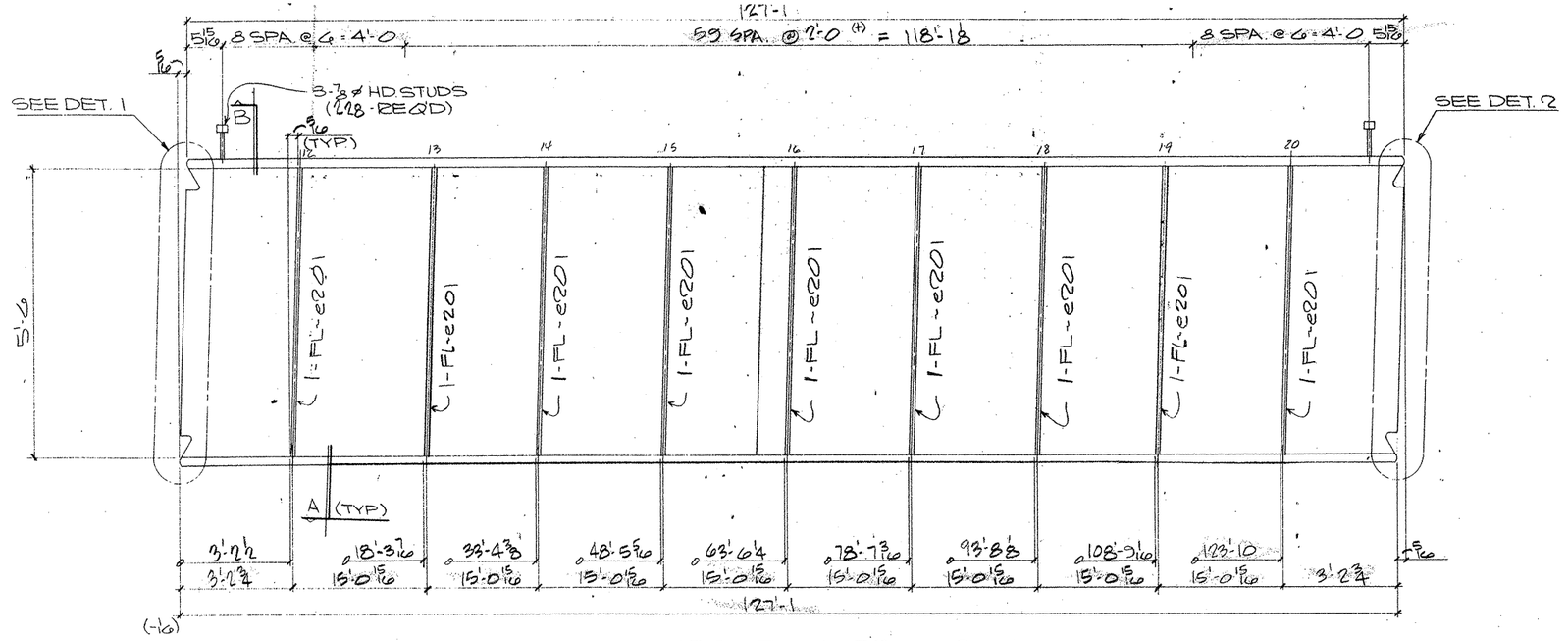

ONE GIRDER MK-220 PG3.01
(APPROX. WT. = TONS)

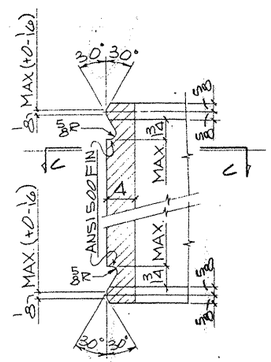

DETAIL - 1

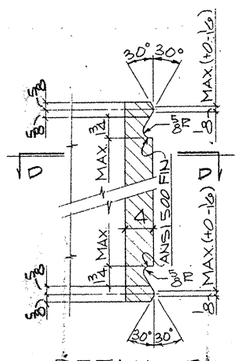

DETAIL - 2

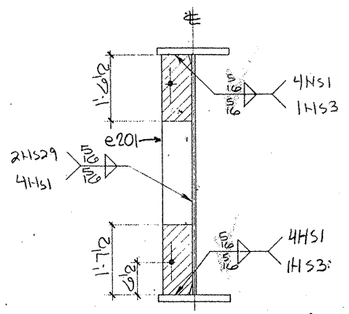

SECTION - A

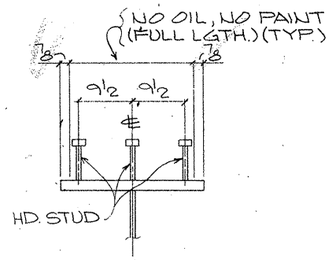

SECTION - B
(TYP. STUD SECT.)

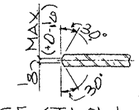

SECTION - C-C

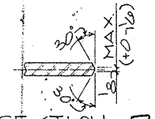

SECTION - D-D

SHOP NOTES:

1) FOR GENERAL NOTES SEE SHT. GN1
2) FOR GIRDER SUB-ASSEMBLY SEE SHT. 202
3) FOR STIFF. DETAILS SEE SHT. 201
4) FOR BLOCKING DIAGRAM SEE SHT. 232
5) FOR HEAT CURVE DIAGRAM SEE SHT. 210
6) ▨ INDICATES OIL, NO PAINT (N.S./P.S. & EDGES)

G02.06

FED. ROAD DIV. NO.	STATE	FEDERAL AID PROJECT NO				
6	TX.	NH (50) M.				
STATE DIST. NO	COUNTY	CONTROL NO	SECTION NO	JOB NO	HIGHWAY NO	
21	HIDALGO	39	17	97	83/281	

SIZE OF MATERIAL

	Qnty.	Material	Length	Mark Temp.	Mark Ship.	Wt.	Cut From	Remarks
1								
2	1	GIRDER			220PG3.01			
3	1	GIRDER SUB-ASSY		G202				
4	3	DIAF. STIFF		e201				
5	228	HD STUDS 7/8	0'-7				202-1	A108
6								
7								
8								
9								
10								
11								
12								
13								
14								
15								
16								
17								
18								
19								
20								
21								
22								
23								
24								
25								
26								
27								
28								
29								
30								
31								
32								
33								
34								
35								
36								
37								
38								
39								
40								
41								
42								
43								
44								
45								
46								
47								
48								
49								
50								
51								
52								
53								
54								
55								
56								
57								
58								
59								
60								

TEXAS DEPARTMENT OF TRANSPORTATION
APPROVED
DIVISION OF BRIDGES AND STRUCTURES
NOV 04 1992
APPROVAL OF AND REVISIONS MADE TO THIS PLAN DO NOT RELIEVE THE CONTRACTOR OF THE RESPONSIBILITY FOR THE CORRECTNESS OF DETAILS.

FOR APPROVAL
AUG 24 '92
NOT FOR CONSTRUCTION

REVISION	DATE	DESCRIPTION OF REVISION
NO 1		
NO 2		
NO 3		
NO 4		
NO 5		

PRINTING Req'd	For	Date

Bolts Holes 15/16 ø Unless Noted
Shop Paint SEE SHT. GN1
Fab Spec AS NTD Inspection
Architect
Erection By Field Connections

HIRSCHFELD STEEL CO. INC.
112 WEST 29TH SAN ANGELO TEXAS 76903
PHONE (915) 653-3211

DESCRIPTION 320'-0 PLATE GIRDER UNIT
STRUCTURE US 83/281 INTERCHANGE RAMP #1
LOCATION HIDALGO COUNTY
CUSTOMER GILBERT TEXAS CONSTRUCTION
SHIP TO
Customer's Order No.
Dwg. By JBC Date 7/92
Checked By JC Date 7-7-92
SHEET 220 OF
JOB NO. 92-1060

CE 92-11 (LINE # 1)

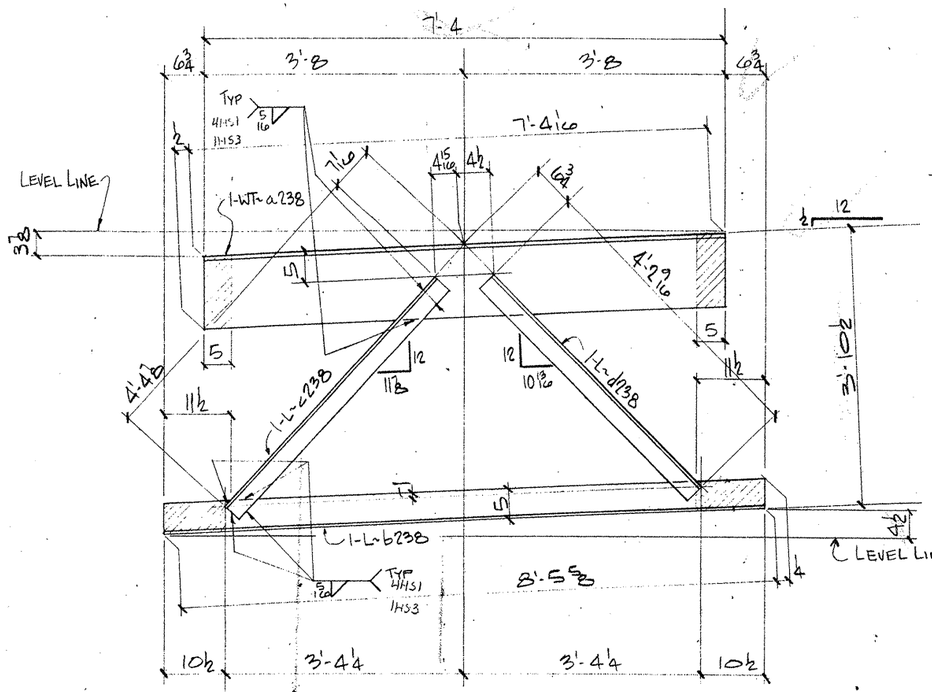

3- END DIAFRAMS~238D1

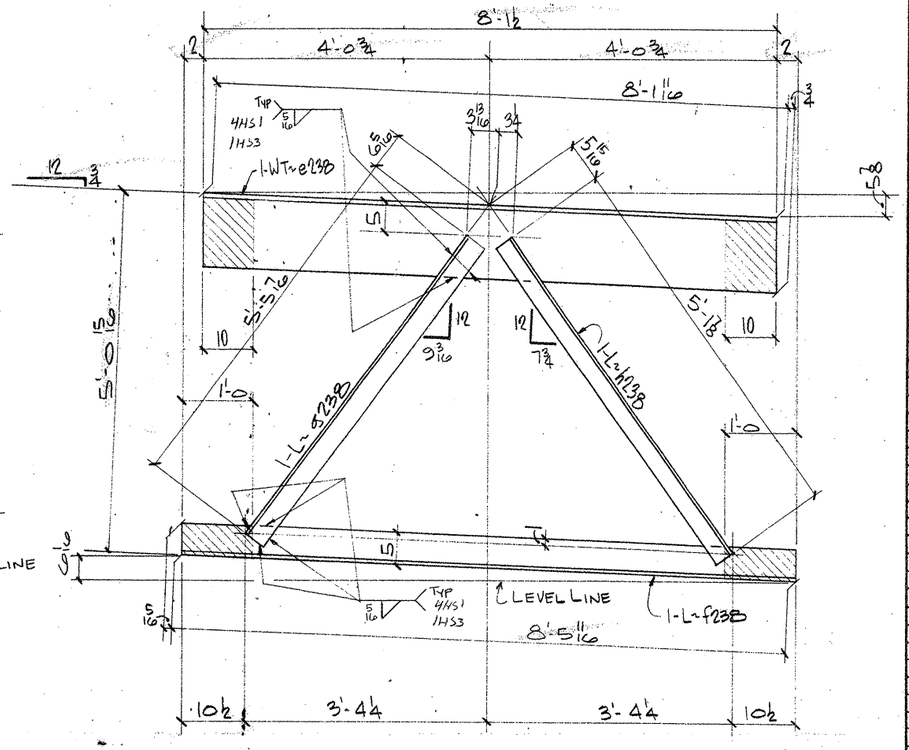

3- END DIAFRAMS~238D2

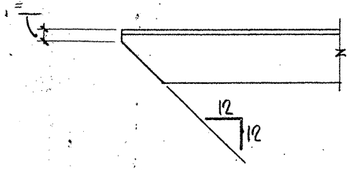

TYP. CLIP ON ALL OUTSTANDING ANGLE LEGS

NOTES:

1. FOR GENERAL NOTES SEE SHT. GN1
2. ▨ INDICATES OIL, NO PAINT (N.S./F.S. & EDGES)

BILL OF MATERIAL

	Qnty	Material	Length	Mark Temp.	Mark Ship.	Wt.	Cut From	Remarks
4	3	DIAFRAMS			238D1			
5	3	WT 12 x 42	7'-4 9/16	a238			209-3	
6	3	L 5 x 3½ x 3/8	8'-5 5/8	b238			209-4	
7	3	L 3½ x 3½ x 3/8	4'-4 3/8	c238			209-5	
8	3	L 3½ x 3½ x 3/8	4'-2 9/16	d238			209-5	
13	3	DIAFRAMS			238D2			
14	3	WT 12 x 42	8'-2 1/16	e238			209-2	
15	3	L 5 x 3½ x 3/8	8'-6	f238			209-4	
16	3	L 3½ x 3½ x 3/8	5'-5 11/16	g238			209-6	
17	3	L 3½ x 3½ x 3/8	5'-1 7/8	h238			209-6	

FOR APPROVAL
AUG 24 92
NOT FOR CONSTRUCTION

TEXAS DEPARTMENT OF TRANSPORTATION
APPROVED
DIVISION OF BRIDGES AND STRUCTURES
NOV 04 1992
APPROVAL OF THIS DRAWING DOES NOT RELIEVE THE DESIGNER OF THE RESPONSIBILITY FOR THE CORRECTNESS OF DETAILS.

REVISION	DATE	DESCRIPTION OF REVISION
NO. 1		
NO. 2		
NO. 3		
NO. 4		
NO. 5		

PRINTING

Req'd	For	Date

Bolts — Holes: 15/16 ⌀ Unless Noted
Shop Paint: SEE SHT GN1
Fab Spec: A36
Inspection
Architect
Erection By — Field Connections

HIRSCHFELD STEEL CO. INC.
112 WEST 29TH SAN ANGELO TEXAS 76903
PHONE (915) 653-3211

DESCRIPTION: 520'-0 PLATE GIRDER UNIT
STRUCTURE: US 83/281 INTERCHANGE RAMP #1
LOCATION: HIDALGO COUNTY
CUSTOMER: GILBERT TEXAS CONSTRUCTION
SHIP TO:
Customer's Order No.
Dwg. By: JRL Date: 6/92
Checked By: DLT Date: 6/92
SHEET 238 OF
JOB NO. 92-1066

CE 92-11

F0206

FED. ROAD DIV. NO.	STATE	FEDERAL AID PROJECT NO.				
6	TX	NH (50) M				
STATE DIST. NO.	COUNTY	CONTROL NO.	SECTION NO.	JOB NO.	HIGHWAY NO.	
21	HIDALGO	39	17	97	83/281	

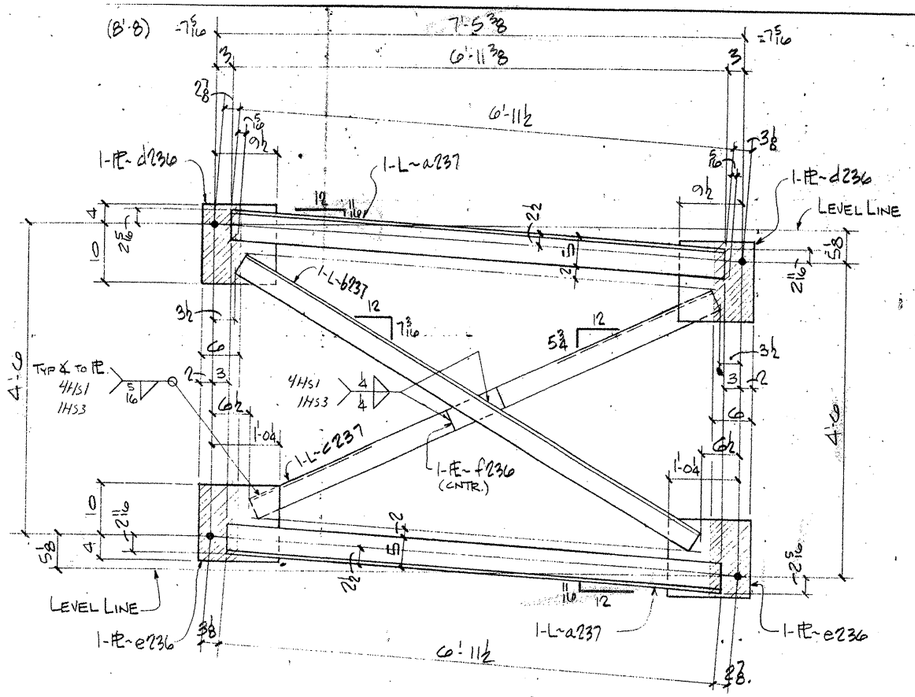

3 - DIAFRAMS ~ 237D1

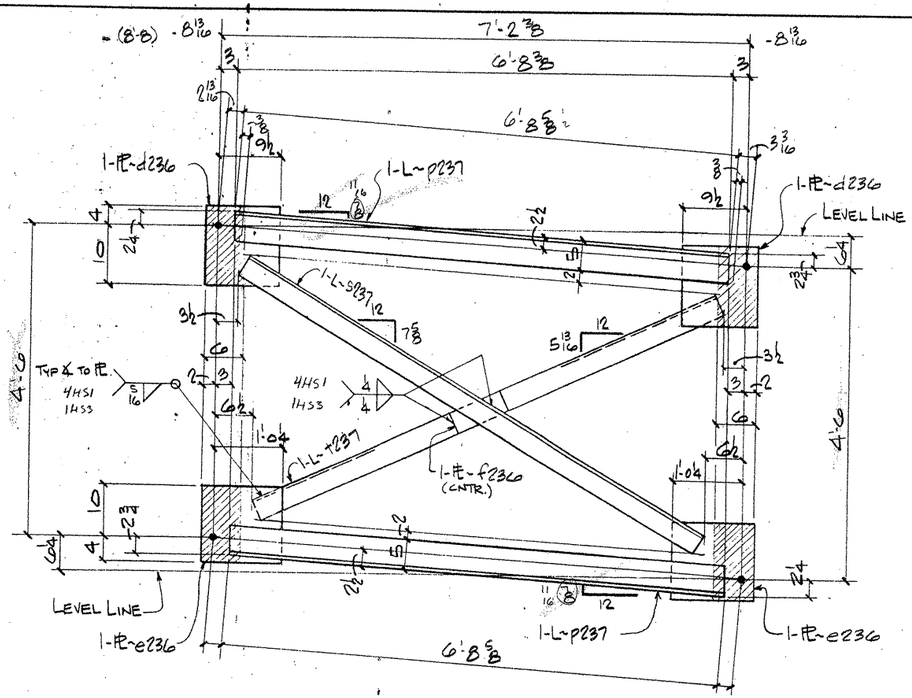

6 - DIAFRAMS ~ 237D3

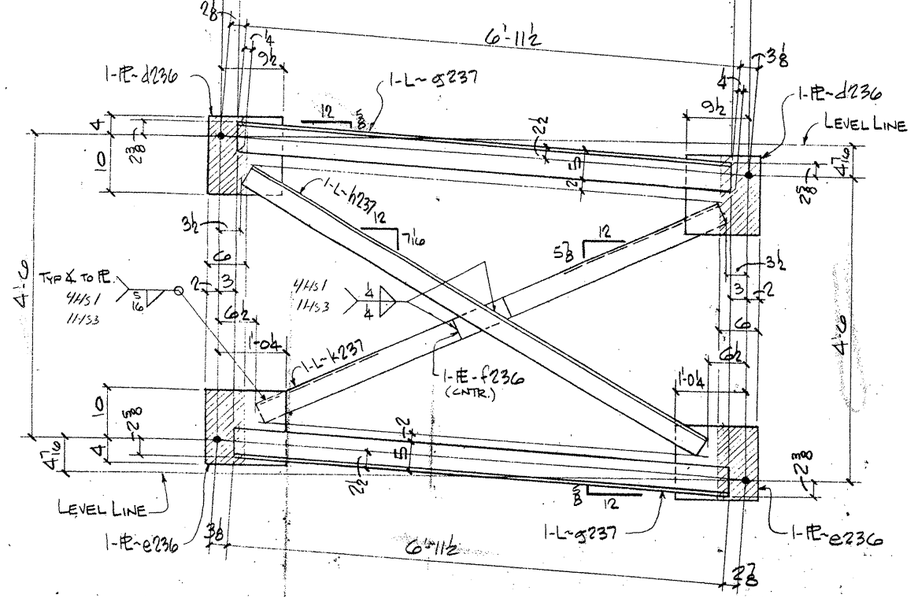

3 - DIAFRAMS ~ 237D2

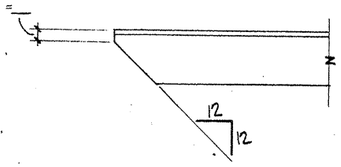

TYP. CLIP ON ALL OUTSTANDING ANGLE LEGS

NOTES:

1. FOR GENERAL NOTES SEE SHT. GN1
2. ▨ INDICATES OIL, NO PAINT (N.S./F.S. & EDGES)

BILL OF MATERIAL

	Qnty	Material	Length	Mark Temp	Mark Ship	Wt.	Cut From	Remarks
3	3	DIAFRAMS			237D1			
4	6	L 5 x 3½ x ½	6'-11 13/16	a237			209-10	
5	3	L 5 x 3½ x ½	7'-6 3/8	b237			209-12	
6	3	L 5 x 3½ x ½	7'-2 5/16	c237			209-12	
7	6	PL ½ x 11½	1'-2	d236			209-14	
8	6	PL ½ x 14	1'-2 1/4	e236			209-15	
9	3	FL ½ x 3½	0'-9	f236			209-16	
18	3	DIAFRAMS			237D2			
19	6	L 5 x 3½ x ½	6'-11 3/4	a237			209-10	
20	3	L 5 x 3½ x ½	7'-6 1/16	h237			209-12	
21	3	L 5 x 3½ x ½	7'-2 9/16	k237			209-12	
22	6	PL ½ x 11½	1'-2	d236			209-14	
23	6	PL ½ x 14	1'-2 1/4	e236			209-15	
24	3	FL ½ x 3½	0'-9	f236			209-16	
32	6	DIAFRAMS			237D3			
33	12	L 5 x 3½ x ½	6'-9	p237			209-11	
34	6	L 5 x 3½ x ½	7'-4 1/4	s237			209-13	
35	6	L 5 x 3½ x ½	6'-11 3/16	t237			209-13	
36	12	PL ½ x 11½	1'-2	d236			209-14	
37	12	PL ½ x 14	1'-2 1/4	e236			209-15	
38	6	FL ½ x 3½	0'-9	f236			209-16	
52		FIELD BOLT LIST (5% ADDED)					A325 TY 1	
53	380	HS BOLT ¾ Ø	0'-2½				202-4	
54	28	HS BOLT ¾ Ø	0'-3				202-5	
55	816	HS WASH ¾ Ø					202-6	

TEXAS DEPARTMENT OF TRANSPORTATION — REVIEWED — DIVISION OF BRIDGES AND STRUCTURES — NOV 3 0 1992

FOR APPROVAL — AUG 2 6 '92

NOT FOR CONSTRUCTION

APPROVAL OF THIS DRAWING DOES NOT RELIEVE THE CONTRACTOR OF THE RESPONSIBILITY FOR THE CORRECTNESS OF DETAIL

REVISION	DATE	DESCRIPTION OF REVISION
NO. 1		
NO. 2		
NO. 3		
NO. 4		
NO. 5		

PRINTING		
Req'd	For	Date

Bolts Holes, STD Unless Noted
Shop Paint SEE SHT GN1
Fab. Spec A36 Inspection
Architect
Erection By Field Connections

HIRSCHFELD STEEL CO. INC.
112 WEST 29TH SAN ANGELO, TEXAS 76903
PHONE (915) 653-3211

DESCRIPTION	PLATE GIRDER UNIT
STRUCTURE	US 83/281 INTERCHANGE RAMP #1
LOCATION	HIDALGO COUNTY
CUSTOMER	GILBERT TEXAS CONSTRUCTION
SHIP TO	
Customer's Order No.	
Dwg. By JRR	Date 6/92
Checked By DLY	Date 6/92

SHEET 237 OF
JOB NO 92-106

FED. ROAD DIV. NO. 6 | STATE TX. | FEDERAL AID PROJECT NO. NH (50) M

STATE DIST. NO.	COUNTY	CONTROL NO.	SECTION NO.	JOB NO.	HIGHWAY NO.
21	HIDALGO	39	17	97	83/281

FO206

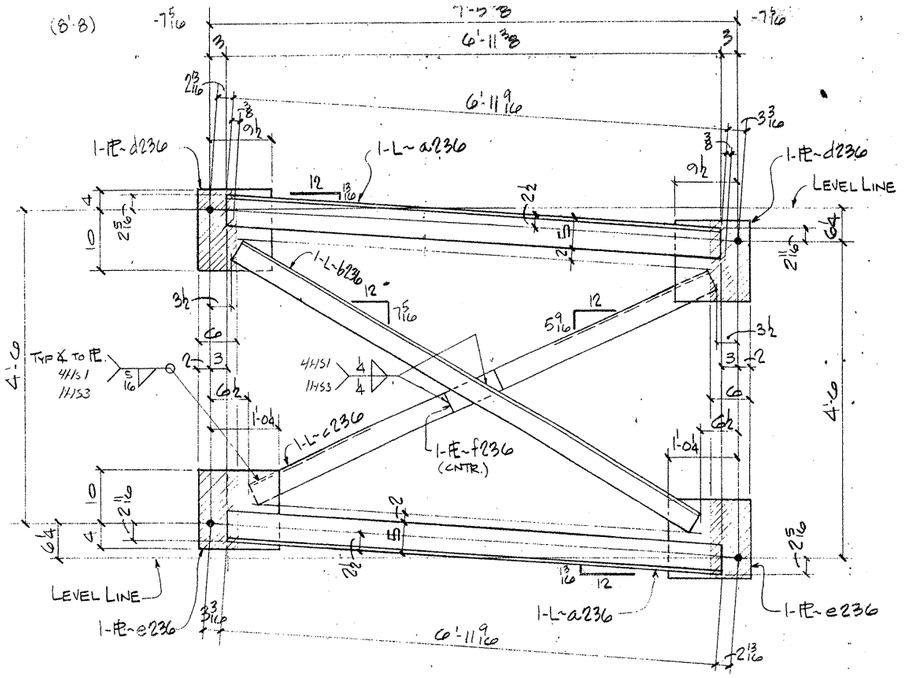

81 - DIAFRAMS~ 236D1

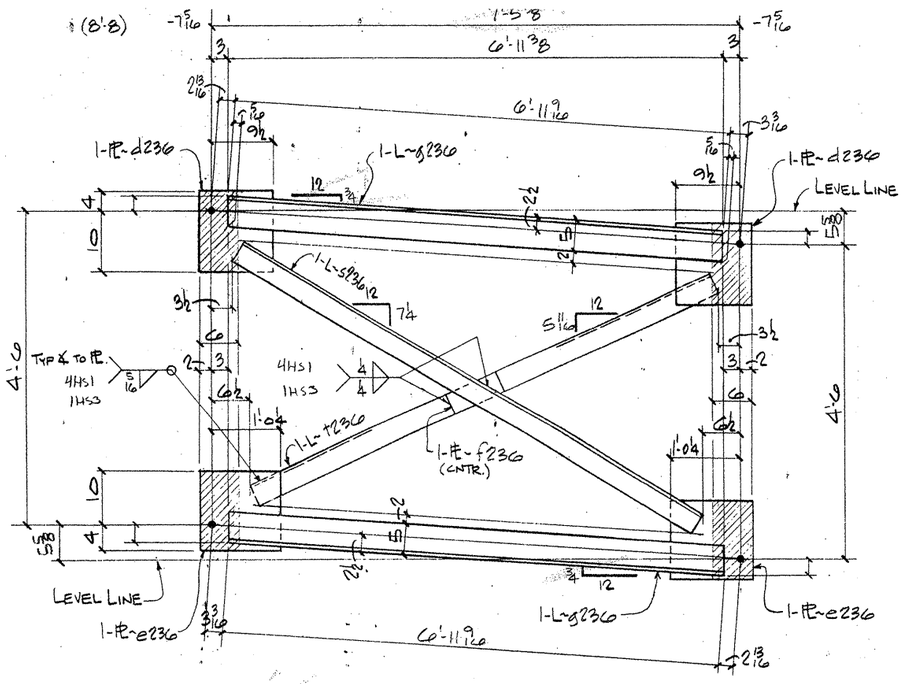

3 - DIAFRAMS~ 236D3

3 - DIAFRAMS~ 236D2

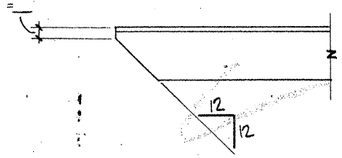

TYP. CLIP ON ALL OUTSTANDING ANGLE LEGS

NOTES:

1. FOR GENERAL NOTES SEE SHT. GN1
2. ▨ INDICATES OIL, NO PAINT (N.S./F.S. & EDGES)

BILL OF MATERIAL

	Qnty.	Material	Length	Mark: Temp	Mark: Ship	Wt.	Cut From	Remarks
3	81	DIAFRAM			236D1			
4	162	L5x3½x½	6'-11 9/16	a236			209-10	
5	81	L5x3½x½	7'-6 13/16	b236			209-12	
6	81	L5x3½x½	7'-2	c236			209-12	
7	162	PL½x11½	1'-2	d236			209-14	
8	162	PL½x14	1'-2 4	e236			209-15	
9	81	FL½x3½	0'-9	f236			209-16	
15	3	DIAFRAM			236D2			
16	6	L5x3½x½	6'-11 3/8	g236			209-10	
17	3	L5x3½x½	7'-6 13/16	h236			209-12	
18	3	L5x3½x½	7'-2	c236			209-12	
19	6	PL½x11½	1'-2	d236			209-14	
20	6	PL½x14	1'-2 4	e236			209-15	
21	3	FL½x3½	0'-9	f236			209-16	
28	3	DIAFRAM			236D3			
29	6	L5x3½x½	6'-11 3/8	g236			209-10	
30	3	L5x3½x½	7'-6 13/16	e236			209-12	
31	3	L5x3½x½	7'-2 3/8	f236			209-12	
32	6	PL½x11½	1'-2	d236			209-14	
33	6	PL½x14	1'-2 4	e236			209-15	
34	3	FL½x3½	0'-9	f236			209-16	

FOR APPROVAL
AUG 26 '92
NOT FOR CONSTRUCTION

TEXAS HIGHWAY DEPARTMENT
TRANSPORTATION PLANNING
APPROVED
DIVISION OF BRIDGES AND STRUCTURES
NOV 04 1992
APPROVAL OF THIS DRAWING DOES NOT RELIEVE THE CONTRACTOR OF THE RESPONSIBILITY FOR THE CORRECTNESS OF DETAIL

REVISION	DATE	DESCRIPTION OF REVISION
NO. 1		
NO. 2		
NO. 3		
NO. 4		
NO. 5		

PRINTING Req'd	For	Date
	APP	8/21

Bolts Holes. STD Unless Noted
Shop Paint SEE SHT GN1
Fab Spec A36 Inspection
Architect
Erection By Field Connections

HIRSCHFELD STEEL CO. INC.
112 WEST 29TH SAN ANGELO, TEXAS 76903
PHONE (915) 653-3211

DESCRIPTION 520'-0 PLATE GIRDER UNIT
STRUCTURE US 83/281 INTERCHANGE RAMP #
LOCATION HIDALGO COUNTY
CUSTOMER GILBERT TEXAS CONSTRUCTION
SHIP TO
Customer's Order No.
Dwg By JRE Date 6/92
Checked By DCT Date 6/92

SHEET 236 OF
JOB NO. 92-106

CE 92-11

F0206

FED. ROAD DIV. NO.	STATE	FEDERAL AID PROJECT NO.				
6	TX.	NH (50) M				
STATE DIST. NO.	COUNTY	CONTROL NO.	SECTION NO.	JOB NO.	HIGHWAY NO.	
21	HIDALGO	39	17	97	83/281	

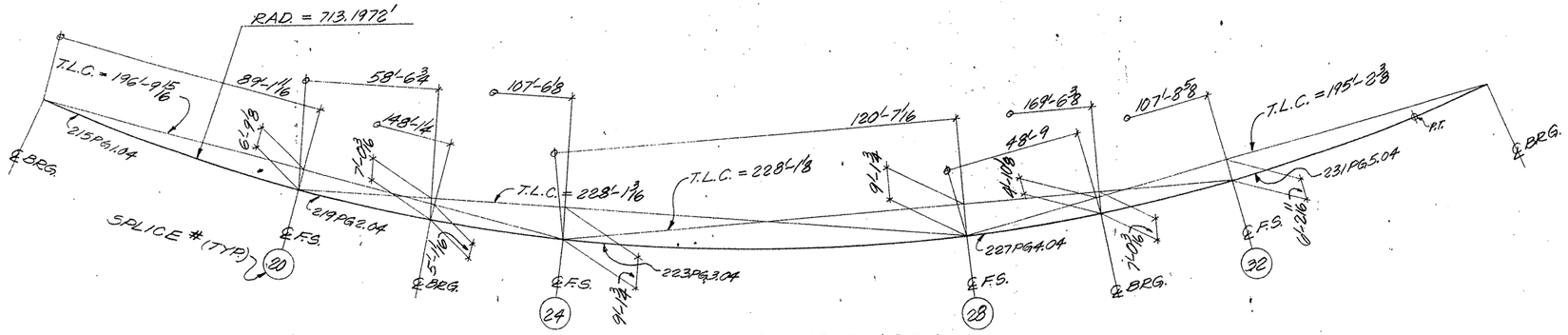

HORIZONTAL BLOCKING DIAGRAM
(SPANS 15, 16 & 17) (UNIT 6) (LINE 4)

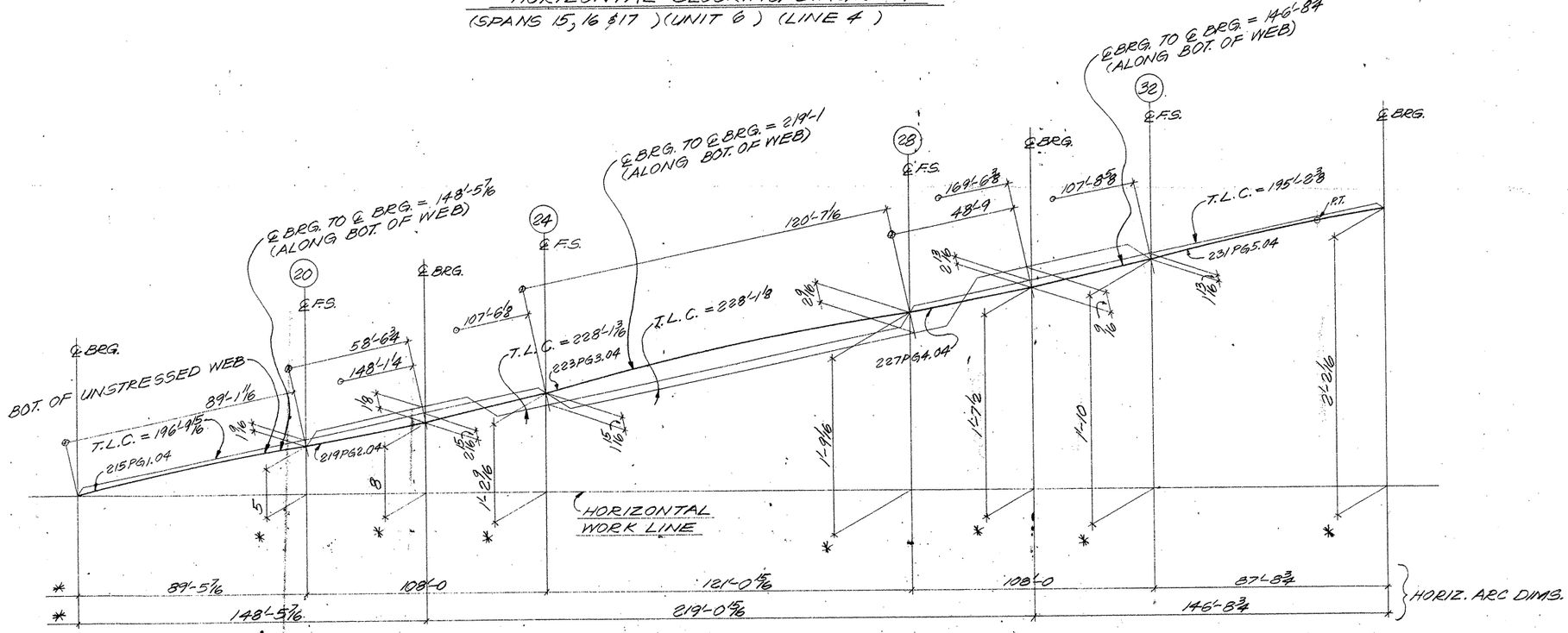

VERTICAL BLOCKING DIAGRAM
(SPANS 15, 16 & 17) (UNIT 6) (LINE 4)

TEXAS HIGHWAY DEPARTMENT
TRANSPORTATION
APPROVED
DIVISION OF BRIDGES AND STRUCTURES
NOV 04 1992
APPROVAL OF THIS DRAWING DOES NOT RELIEVE THE CONTRACTOR OF THE RESPONSIBILITY FOR THE CORRECTNESS OF DETAIL.

FOR APPROVAL
AUG 24 '92
NOT FOR CONSTRUCTION

NOTES:
1. T.L.C. = TRUE LENGTH CHORD.
2. DIMENSIONS ARE GIVEN ALONG OR NORMAL TO THE TRUE LENGTH CHORD UNL. NTD.
3. DIMENSIONS NOTED "*" ARE GIVEN ALONG OR NORMAL TO THE HORIZONTAL WORK LINE.
4. FOR GENERAL NOTES, SEE SHEET GN1.

FED ROAD DIV NO	STATE	FEDERAL AID PROJECT NO				
6	TX.	NH (50) N				
STATE DIST. NO	COUNTY	CONTROL NO	SECTION NO	JOB NO.	HIGHWAY NO	
21	HIDALGO	39	17	97	83/281	

HOLES ____ U.N.	FOR APV'L
BOLTS ____ U.N.	RETURNED
WELDS ____ U.N.	TO SHOP
PAINT	

REVISIONS		
NO	DATE	REMARKS
1		
2		
3		
4		

HIRSCHFELD STEEL CO. INC.
112 WEST 29TH SAN ANGELO, TEXAS 76903
PHONE (915) 653-3211

CUSTOMER GILBERT TEXAS CONSTRUCTION
ARCHITECT
PROJECT US 83/281 INTERCHANGE RAMP #1
LOCATION HIDALGO COUNTY

DRAWN PCC DATE 7-7-92
CHECKED [illegible] DATE 7-10-92
JOB NO 92-106
SHEET NO 235 of

CE 92-11

a b c d e f g h i j k l m n o p q r s t u v w x y z

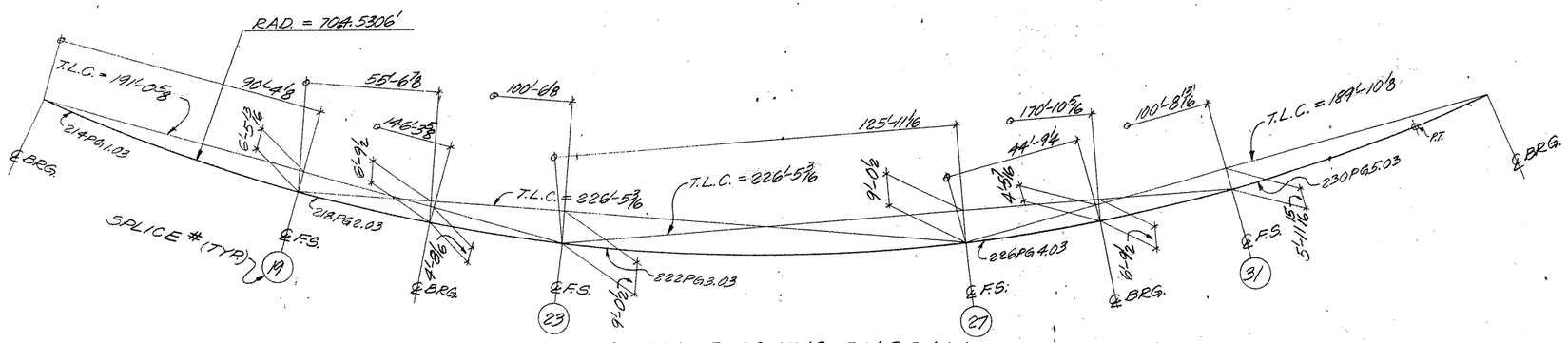

HORIZONTAL BLOCKING DIAGRAM
(SPANS 15, 16 & 17) (UNIT 6) (LINE 3)

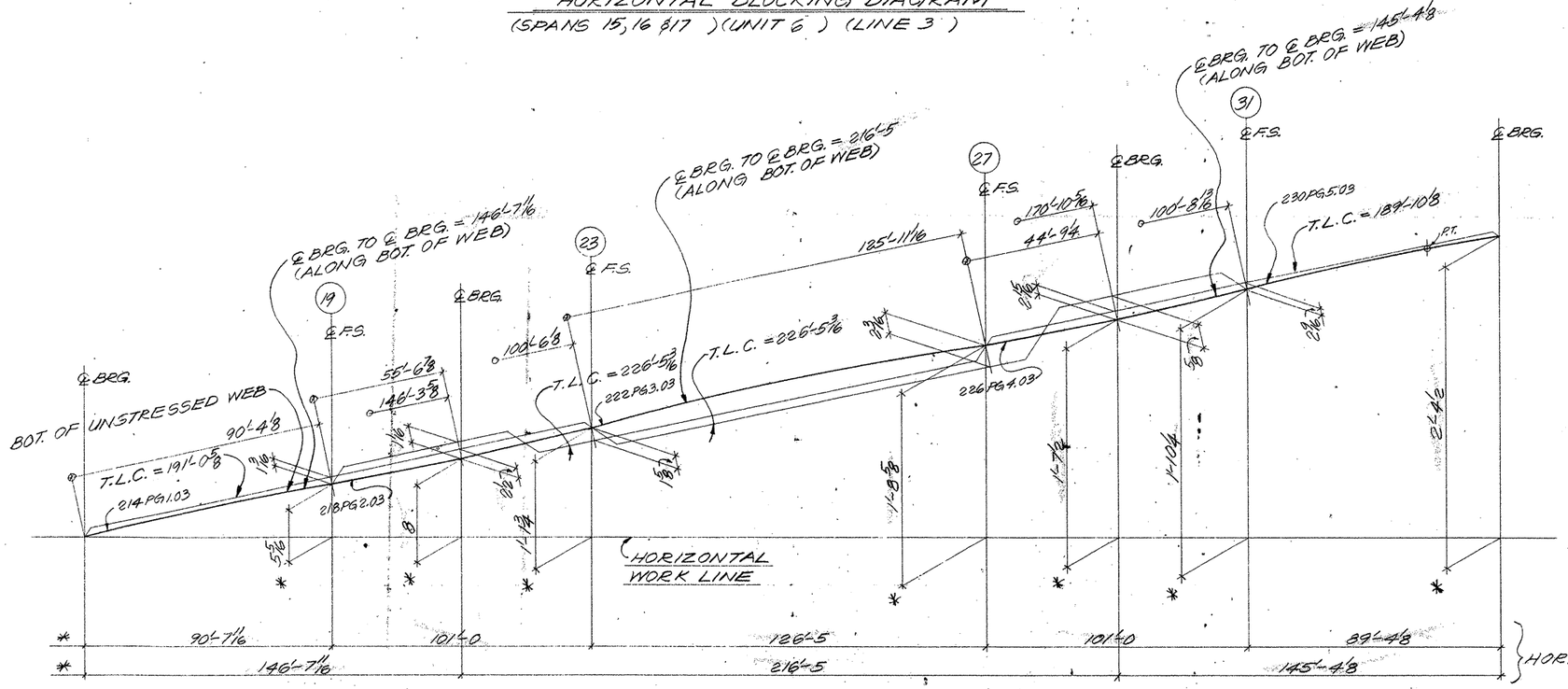

VERTICAL BLOCKING DIAGRAM
(SPANS 15, 16 & 17) (UNIT 6) (LINE 3)

FOR APPROVAL
AUG 24 '92

TEXAS DEPARTMENT OF TRANSPORTATION
APPROVED
DIVISION OF BRIDGES AND STRUCTURES
NOV 04 1992
APPROVAL OF THIS DRAWING DOES NOT RELIEVE THE CONTRACTOR OF THE RESPONSIBILITY FOR THE CORRECTNESS OF DETAILS.

NOT FOR CONSTRUCTION

NOTES:
1. T.L.C. = TRUE LENGTH CHORD.
2. DIMENSIONS ARE GIVEN ALONG OR NORMAL TO THE TRUE LENGTH CHORD UNL. NTD.
3. DIMENSIONS NOTED "*" ARE GIVEN ALONG OR NORMAL TO THE HORIZONTAL WORK LINE.
4. FOR GENERAL NOTES, SEE SHEET GN1.

FED. ROAD DIV. NO.	STATE	FEDERAL AID PROJECT NO.			
6	TX.	NH (50) M			
STATE DIST. NO.	COUNTY	CONTROL NO.	SECTION NO.	JOB NO.	HIGHWAY NO.
21	HIDALGO	39	17	97	83/281

HOLES ____ U.N. FOR AP'VL ____
BOLTS ____ U.N. RETURNED ____
WELDS ____ U.N. TO SHOP ____
PAINT ____

REVISIONS		
NO.	DATE	REMARKS
1		
2		
3		
4		

HIRSCHFELD STEEL CO. INC.
112 WEST 29TH SAN ANGELO, TEXAS 76903
PHONE (915) 653-3211

CUSTOMER GILBERT TEXAS CONSTRUCTION
ARCHITECT
PROJECT US 83/281 INTERCHANGE RAMP #1
LOCATION HIDALGO COUNTY

DRAWN PCC DATE 7-7-92 | JOB NO. 92-106 | SHEET NO. 234 of ____
CHECKED [illegible] DATE 7-10-92

CE 92-11

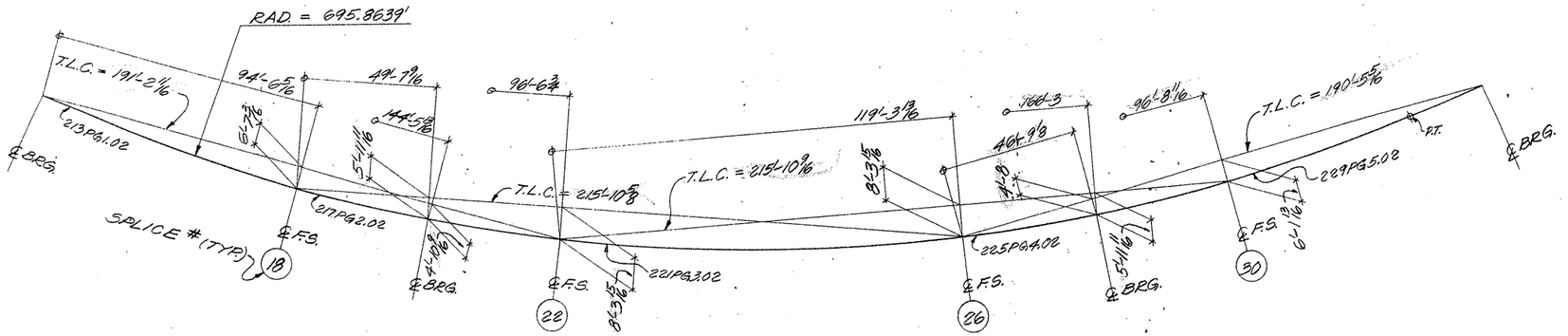

HORIZONTAL BLOCKING DIAGRAM
(SPANS 15, 16 & 17) (UNIT 6) (LINE 2)

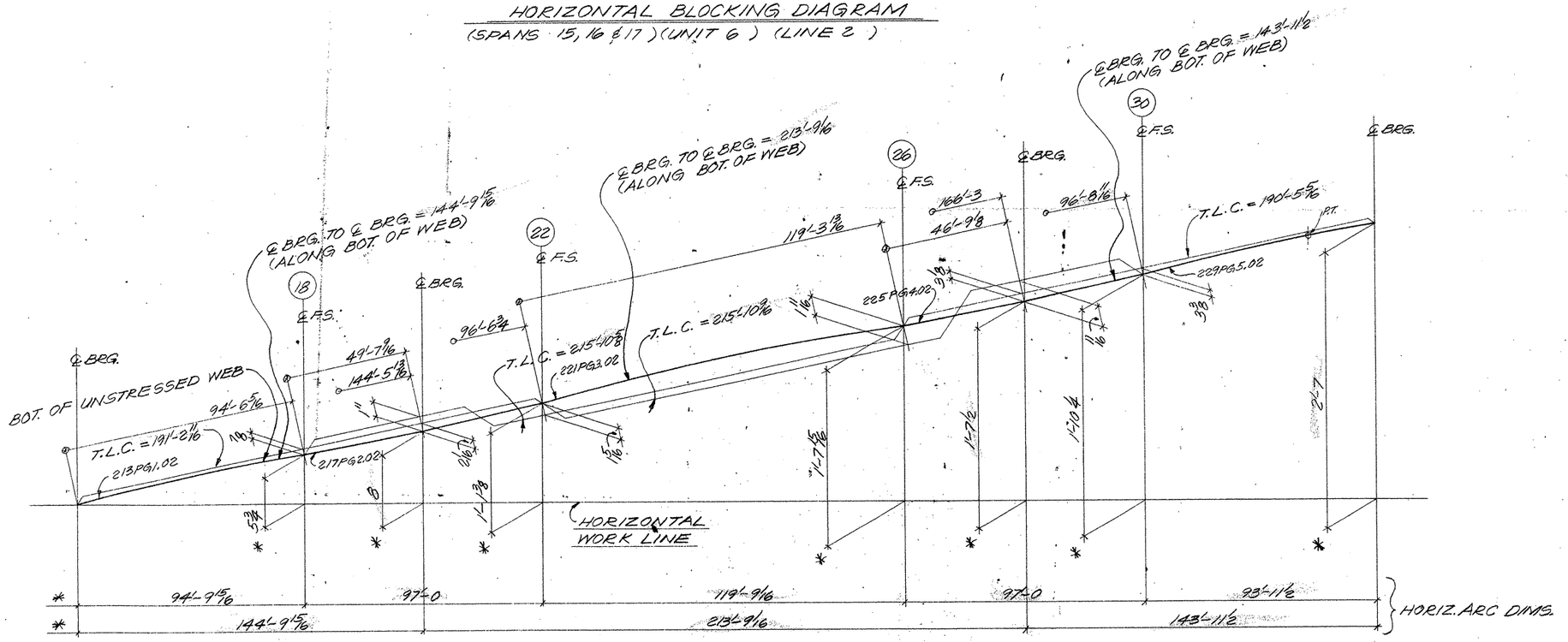

VERTICAL BLOCKING DIAGRAM
(SPANS 15, 16 & 17) (UNIT 6) (LINE 2)

FOR APPROVAL
AUG 24 '92
NOT FOR CONSTRUCTION

TEXAS DEPARTMENT OF TRANSPORTATION
APPROVED:
DIVISION OF BRIDGES AND STRUCTURES
NOV 04 1992
APPROVAL OF THIS DRAWING DOES NOT RELIEVE THE CONTRACTOR OF THE RESPONSIBILITY FOR THE CORRECTNESS OF DETAIL.

NOTES:
1. T.L.C. = TRUE LENGTH CHORD.
2. DIMENSIONS ARE GIVEN ALONG OR NORMAL TO THE TRUE LENGTH CHORD UNL. NTD.
3. DIMENSIONS NOTED "*" ARE GIVEN ALONG OR NORMAL TO THE HORIZONTAL WORK LINE.
4. FOR GENERAL NOTES, SEE SHEET GN1.

FED. ROAD DIV NO.	STATE	FEDERAL AID PROJECT NO			
6	TX.	NH (50) M			
STATE DIST NO	COUNTY	CONTROL NO	SECTION NO	JOB NO	HIGHWAY NO
21	HIDALGO	39	17	97	83/281

HOLES ____ U.N.	FOR APV'L	Apr 8 '93	
BOLTS ____ U.N.	RETURNED		
WELDS ____ U.N.	TO SHOP		
PAINT			

REVISIONS

NO.	DATE	REMARKS
1		
2		
3		
4		

HIRSCHFELD STEEL CO. INC.
112 WEST 29TH SAN ANGELO, TEXAS 76903
PHONE (915) 653-3211

CUSTOMER GILBERT TEXAS CONSTRUCTION
ARCHITECT
PROJECT US 83/281 INTERCHANGE RAMP #1
LOCATION HIDALGO COUNTY

DRAWN	DATE	JOB NO	SHEET NO
PCC	7-7-92	92-106	233 of
CHECKED	DATE 7-10-92		

CE 92-11

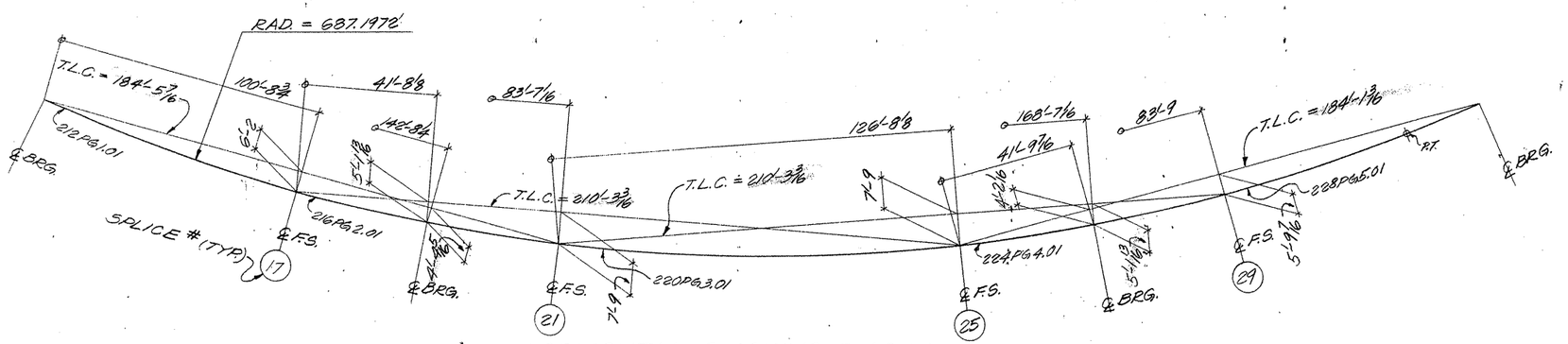

HORIZONTAL BLOCKING DIAGRAM
(SPANS 15, 16 & 17) (UNIT 6) (LINE 1)

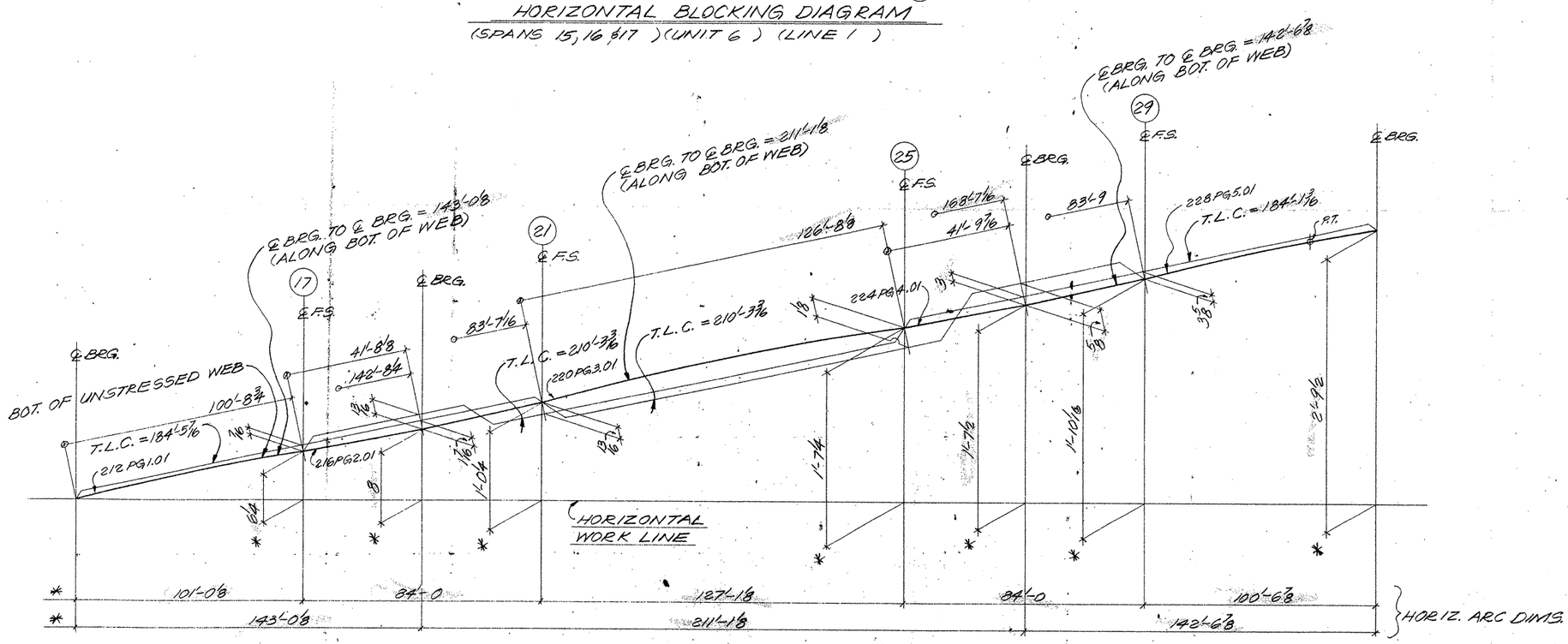

VERTICAL BLOCKING DIAGRAM
(SPANS 15, 16 & 17) (UNIT 6) (LINE 1)

TEXAS DEPARTMENT OF TRANSPORTATION (TXDOT)
DIVISION OF BRIDGES AND STRUCTURES
NOV 04 1992
APPROVAL OF THIS DRAWING DOES NOT RELIEVE THE CONTRACTOR OF THE RESPONSIBILITY FOR THE CORRECTNESS OF DETAIL

FOR APPROVAL
AUG 24 '92
NOT FOR CONSTRUCTION

NOTES:
1. T.L.C. = TRUE LENGTH CHORD.
2. DIMENSIONS ARE GIVEN ALONG OR NORMAL TO THE TRUE LENGTH CHORD UNL. NTD.
3. DIMENSIONS NOTED "✱" ARE GIVEN ALONG OR NORMAL TO THE HORIZONTAL WORK LINE.
4. FOR GENERAL NOTES, SEE SHEET GN1.

FED. ROAD DIV. NO.	STATE	FEDERAL AID PROJECT NO			
6	TX.	NH (50) M			
STATE DIST. NO.	COUNTY	CONTROL NO.	SECTION NO.	JOB NO.	HIGHWAY NO.
21	HIDALGO	39	17	97	83/281

HOLES ____ U.N.	FOR AP'VL		
BOLTS ____ U.N.	RETURNED		
WELDS ____ U.N.	TO SHOP		
PAINT			
REVISIONS			
NO.	DATE	REMARKS	
1			
2			
3			
4			

Aug 8/24

HIRSCHFELD STEEL CO. INC.
112 WEST 29TH SAN ANGELO, TEXAS 76903
PHONE (915) 653-3211

CUSTOMER GILBERT TEXAS CONSTRUCTION
ARCHITECT
PROJECT US 83/281 INTERCHANGE RAMP #1
LOCATION HIDALGO COUNTY

DRAWN PCC DATE 7-7-92 | JOB NO 92-106 | SHEET NO 232 of
CHECKED DATE 7-10-92

CE 92-11

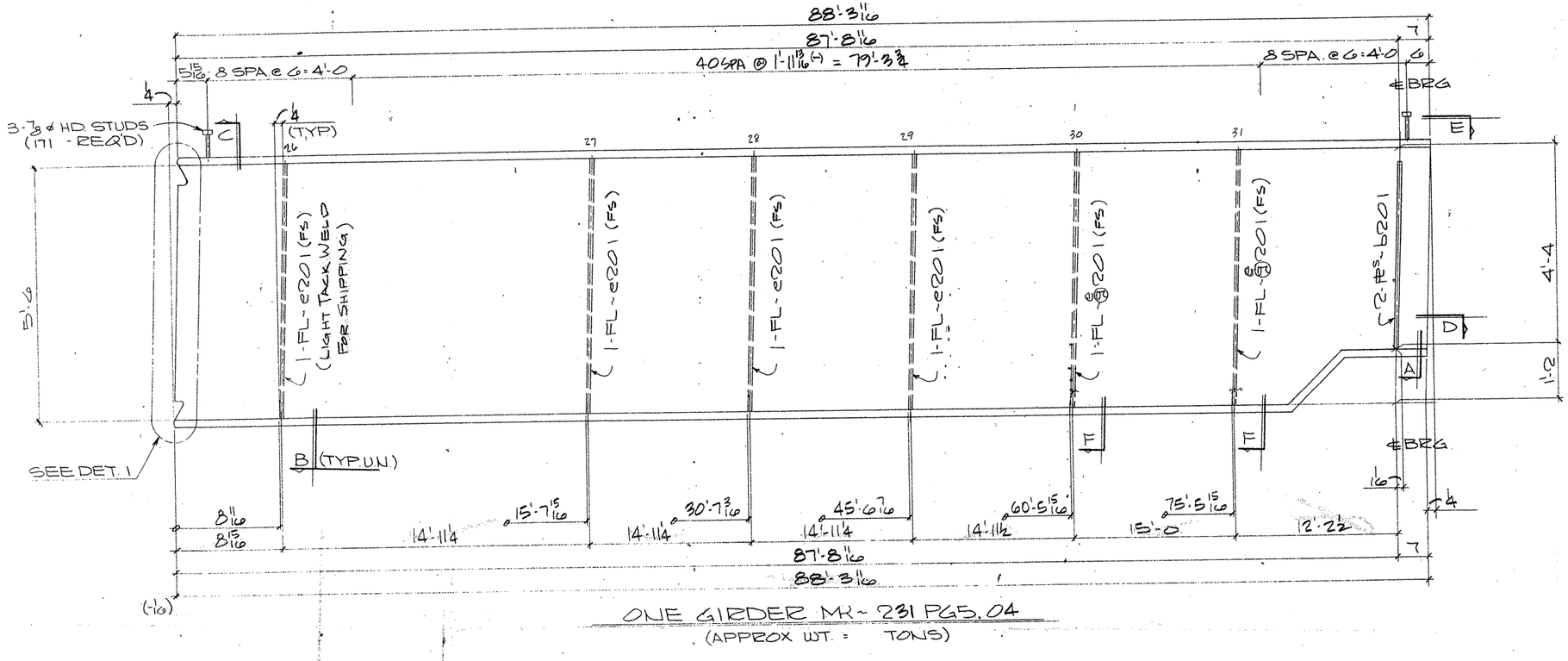

ONE GIRDER MK~ 231 PG5.04
(APPROX WT. = TONS)

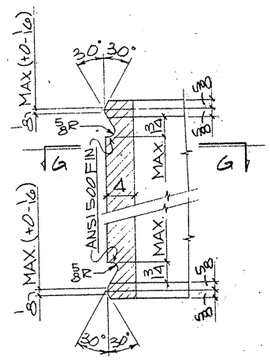

DETAIL - 1

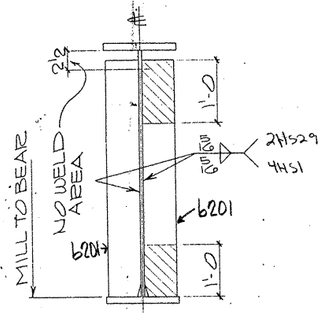

SECTION - A

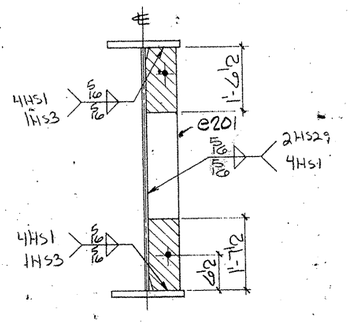

SECTION - B

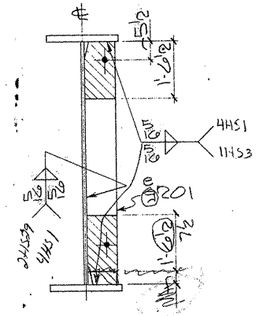

SECTION - F

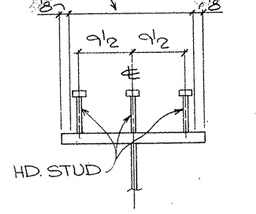

SECTION - C
(TYP. STUD SECT.)

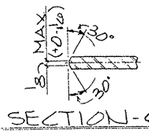

SECTION - G-G

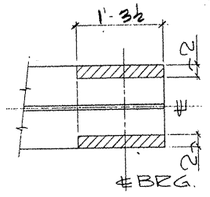

SECTION - D

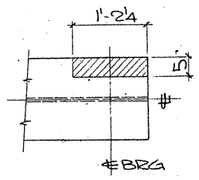

VIEW - E

SHOP NOTES:

1) FOR GENERAL NOTES SEE SHT. GN1
2) FOR GIRDER SUB-ASSEMBLY SEE SHT. 209
3) FOR STIFF. DETAILS SEE SHT. 201
4) FOR BLOCKING DIAGRAM SEE SHT. 235
5) FOR HEAT CURVE DIAGRAM SEE SHT. 211
6) ▨ INDICATES OIL, NO PAINT (N.S./F.S. & EDGES)

G0206

FED. ROAD DIV. NO	STATE	FEDERAL AID PROJECT NO.				
6	TX.	NH (50) M				
STATE DIST. NO	COUNTY	CONTROL NO	SECTION NO	JOB NO	HIGHWAY NO	
21	HIDALGO	39	17	97	83/281	

BILL OF MATERIAL

	Qnty.	Material	Length	Mark Temp	Mark Ship	Wt.	Cut From	Remarks
1								
2	1	GIRDER			231PG5.04			
3	1	GIRDER SUB-ASSY		B209				
4	2	BRG STIFF		b201				
5	4	DIAF STIFF		e201				
6	171	HD STUD 7/8	0'-7				202-1	A108
7	~~12~~	~~DIAF STIFF~~	~~CUT~~	~~g201~~				
8								
9								
10								
11								
12								
13								
14								
15								
16								
17								
18								
19								
20								
21								
22								
23								
24								
25								
26								
27								
28								
29								
30								
31								
32								
33								
34								
35								
36								
37								
38								
39								
40								
41								
42								
43								
44								
45								
46								
47								
48								
49								
50								
51								
52								
53								
54								
55								
56								
57								
58								
59								
60								

FOR APPROVAL
AUG 24 '92
NOT FOR CONSTRUCTION

TEXAS DEPARTMENT OF TRANSPORTATION
APPROVED EXCEPT AS NOTED
DIVISION OF BRIDGES AND STRUCTURES
NOV 04 1992
APPROVAL OF THIS DRAWING DOES NOT RELIEVE THE CONTRACTOR OF THE RESPONSIBILITY FOR THE CORRECTNESS OF DETAILS

REVISION	DATE	DESCRIPTION OF REVISION
NO. 1		
NO. 2		
NO. 3		
NO. 4		
NO. 5		

PRINTING		
Req'd	For	Date

Bolts Holes 15/16 Ø Unless Noted
Shop Paint SEE SHT GN1
Fab Spec AS MTD Inspection
Architect
Erection By Field Connections

HIRSCHFELD STEEL CO. INC.
112 WEST 29TH SAN ANGELO, TEXAS 76903
PHONE (915) 653-3211

DESCRIPTION	520'-0" PLATE GIRDER UNIT
STRUCTURE	US 83/281 INTERCHANGE RAMP #1
LOCATION	HIDALGO COUNTY
CUSTOMER	GILBERT TEXAS CONSTRUCTION
SHIP TO	
Customer's Order No.	
Dwg. By JDC	Date 7/92
Checked By JC	Date 7-9-92

SHEET 231 OF
JOB NO. 92-106

CE92-11 (LINE # 4)

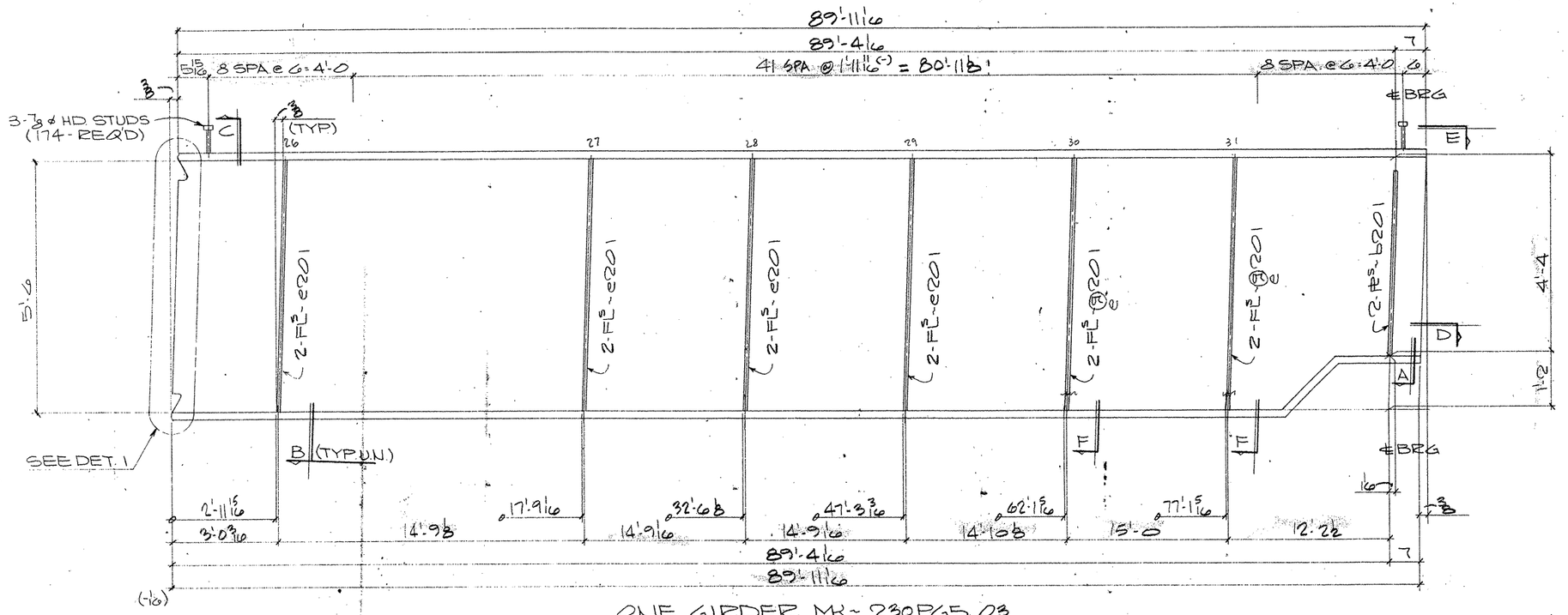

ONE GIRDER MK~ 230PG5.03

(APPROX. WT. = TONS)

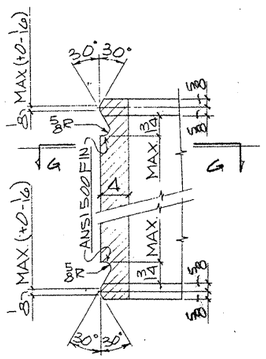

DETAIL - 1

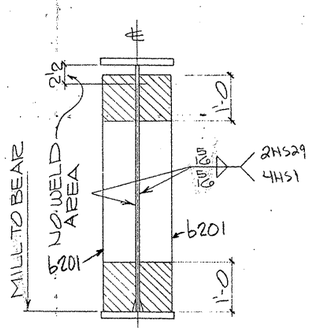

SECTION - A

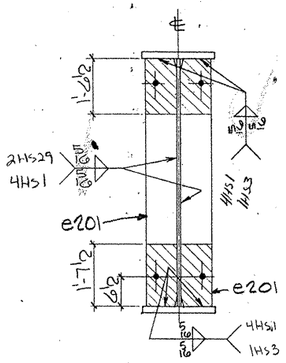

SECTION - B

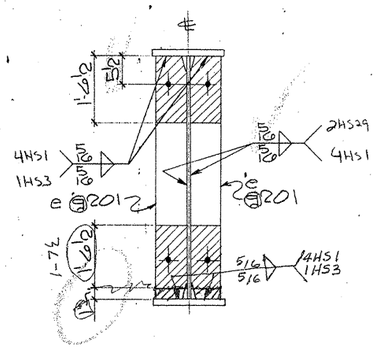

SECTION - F

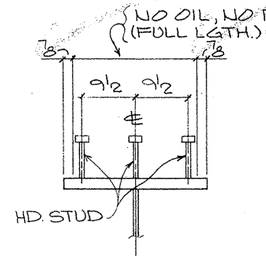

SECTION - C

(TYP. STUD SECT.)

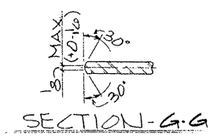

SECTION - G-G

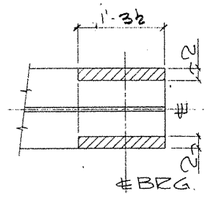

SECTION - D

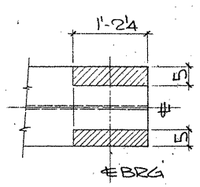

VIEW - E

SHOP NOTES:

1) FOR GENERAL NOTES SEE SHT. GN1
2) FOR GIRDER SUB-ASSEMBLY SEE SHT. 208
3) FOR STIFF. DETAILS SEE SHT. 201
4) FOR BLOCKING DIAGRAM SEE SHT. 224
5) FOR HEAT CURVE DIAGRAM SEE SHT. 211
6) ////// INDICATES OIL, NO PAINT (N.S./F.S. & EDGES)

BILL OF MATERIAL

	Qnty.	Material	Length	Mark Temp.	Mark Ship.	Wt.	Cut From	Remarks
1								
2	1	GIRDER			230PG	5.03		
3	1	GIRDER SUB-ASSY		3708				
4	2	BRG STIFF		b201				
5	(2)	DIAF STIFF		e201				
6	174	HD STUD 7/8	0'-7				202-1	A108
7	4	DIAF STIFF	0'-7	9201				
8								
9								
10								
11								
12								
13								
14								
15								
16								
17								
18								
19								
20								
21								
22								
23								
24								
25								
26								
27								
28								
29								
30								
31								
32								
33								
34								
35								
36								
37								
38								
39								
40								
41								
42								
43								
44								
45								
46								
47								
48								
49								
50								
51								
52								
53								
54								
55								
56								
57								
58								
59								
60								

FOR APPROVAL

AUG 24 '92

NOT FOR CONSTRUCTION

TEXAS DEPARTMENT OF TRANSPORTATION
APPROVED EXCEPT AS NOTED
DIVISION OF BRIDGES AND STRUCTURES
NOV 04 1992
APPROVAL OF THIS DRAWING DOES NOT RELIEVE THE CONTRACTOR OF THE RESPONSIBILITY FOR THE CORRECTNESS OF DETAILS

REVISION	DATE	DESCRIPTION OF REVISION
NO. 1		
NO. 2		
NO. 3		
NO. 4		
NO. 5		

PRINTING Req'd	For	Date

Bolts Holes: 15/16 ø Unless Noted
Shop Paint SEE SHT GN1
Fab Spec AS NTD Inspection
Architect
Erection By Field Connections

HIRSCHFELD STEEL CO. INC.
112 WEST 29TH SAN ANGELO, TEXAS 76903
PHONE (915) 653-3211

DESCRIPTION 520'-0 PLATE GIRDER UNIT
STRUCTURE US 83/281 INTERCHANGE RAMP #1
LOCATION HIDALGO COUNTY
CUSTOMER GILBERT TEXAS CONSTRUCTION
SHIP TO
Customer's Order No.
Dwg. By JRE Date 7/92
Checked By JC Date 7-9-92
SHEET 230 OF
JOB NO. 92-106

FED ROAD DIV. NO	STATE	FEDERAL AID PROJECT NO.			
6	TX.	NH (50) M			
STATE DIST. NO	COUNTY	CONTROL NO	SECTION NO	JOB NO	HIGHWAY NO
21	HIDALGO	39	17	97	83/281

G0206

CE92-11 (LINE # 3)

323460

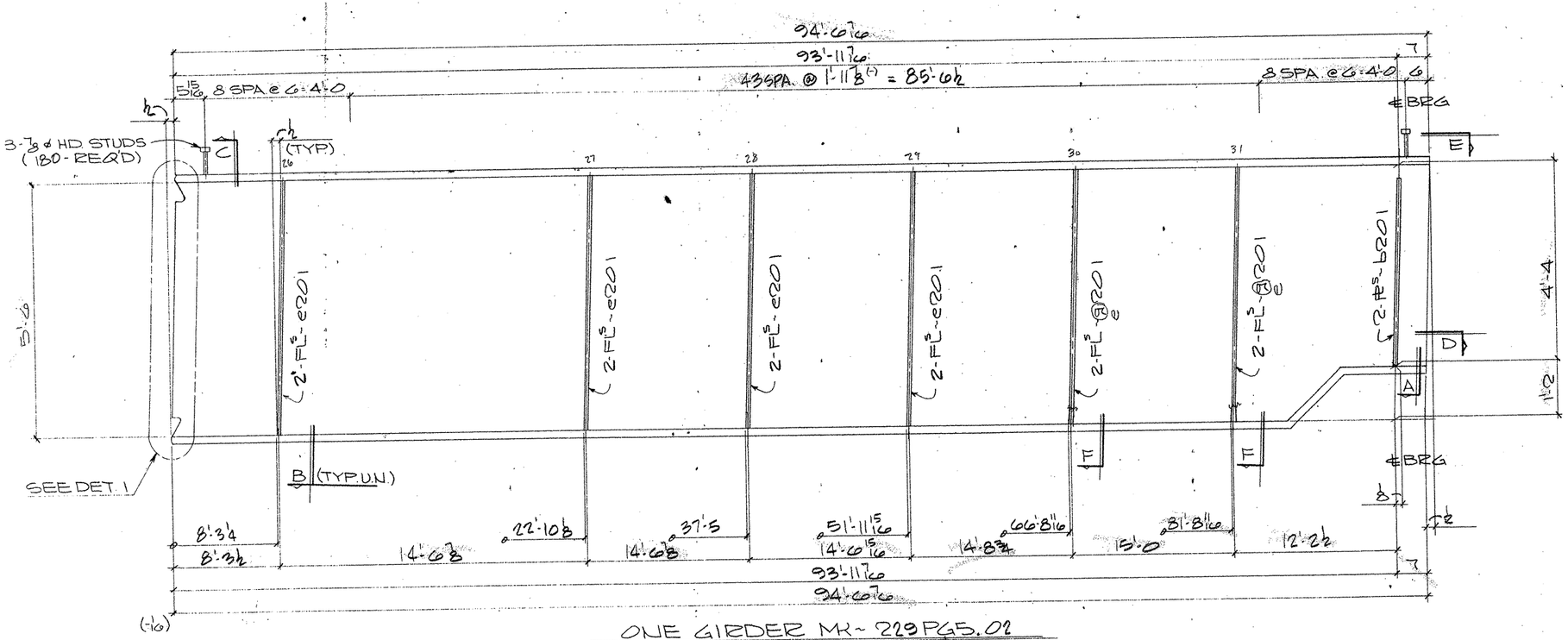

ONE GIRDER MK~ 229PG5.02

(APPROX. WT. = TONS)

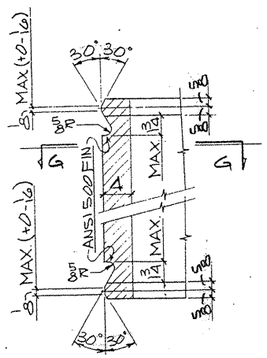

DETAIL-1

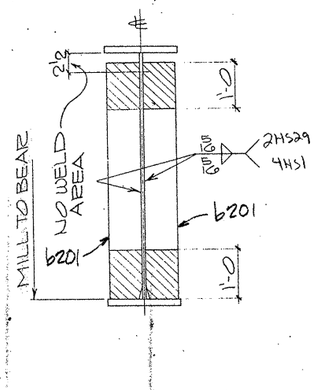

SECTION-A

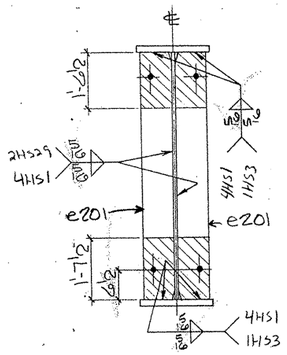

SECTION-B

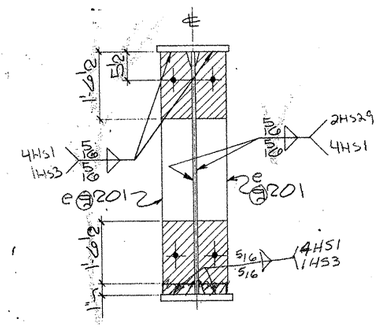

SECTION-F

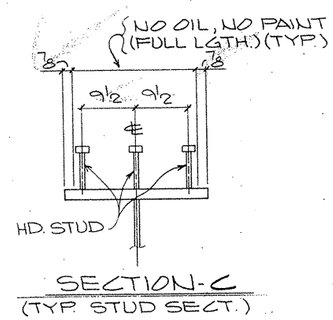

SECTION-C

(TYP. STUD SECT.)

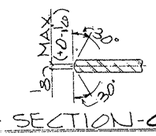

SECTION-G-G

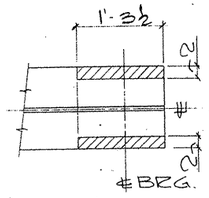

SECTION-D

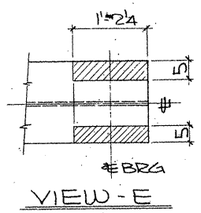

VIEW-E

SHOP NOTES:

1) FOR GENERAL NOTES SEE SHT. GN1
2) FOR GIRDER SUB-ASSEMBLY SEE SHT. 207
3) FOR STIFF. DETAILS SEE SHT. 201
4) FOR BLOCKING DIAGRAM SEE SHT. 233
5) FOR HEAT CURVE DIAGRAM SEE SHT. 211
6) ////// INDICATES OIL, NO PAINT (N.S./P.S. & EDGES)

G0206

FED. ROAD DIV. NO.	STATE	FEDERAL AID PROJECT NO.			
6	TX.	NH (50). M			
STATE DIST. NO.	COUNTY	CONTROL NO.	SECTION NO.	JOB NO.	HIGHWAY NO.
21	HIDALGO	39	17	97	83/281

	Only	Material	Length	Mark Temp.	Mark Ship.	Wt	Cut From	Remarks
1								
2	1	GIRDER			229PG5.02			
3	1	GIRDER SUB-ASSY		B207				
4	2	BRG STIFF		b201				
5	8	DIAF STIFF		e201				
6	180	HD STUD 7/8	0'-7				202-1	A108
7	4	DIAF STIFF	10'-4	B201				
8								
9								
10								
11								
12								
13								
14								
15								
16								
17								
18								
19								
20								
21								
22								
23								
24								
25								
26								
27								
28								
29								
30								
31								
32								
33								
34								
35								
36								
37								
38								
39								
40								
41								
42								
43								
44								
45								
46								
47								
48								
49								
50								
51								
52								
53								
54								
55								
56								
57								
58								
59								
60								

FOR APPROVAL
AUG 24 '92
NOT FOR CONSTRUCTION

TEXAS DEPARTMENT OF TRANSPORTATION
APPROVED EXCEPT AS NOTED
DIVISION OF BRIDGES AND STRUCTURES
NOV 04 1992
APPROVAL OF THE DRAWING DOES NOT RELIEVE THE CONTRACTOR OF THE RESPONSIBILITY FOR THE CORRECTNESS OF DETAIL

REVISION	DATE	DESCRIPTION OF REVISION
NO. 1		
NO. 2		
NO. 3		
NO. 4		
NO. 5		

PRINTING		
Req'd	For	Date
	APV	11/24

Bolts Holes 15/16 ø Unless Noted
Shop Paint SEE SHT GN1
Fab. Spec. AS NTD Inspection
Architect
Erection By Field Connections

HIRSCHFELD STEEL CO. INC.
112 WEST 29TH SAN ANGELO, TEXAS 76903
PHONE (915) 653-3211

DESCRIPTION	520'-0 PLATE GIRDER UNIT
STRUCTURE	US. 83/281 INTERCHANGE RAMP #1
LOCATION	HIDALGO COUNTY
CUSTOMER	GILBERT TEXAS CONSTRUCTION
SHIP TO	
Customer's Order No.	
Dwg. By JBC	Date 7/92
Checked By JC	Date 7-9-92

SHEET 229 OF
JOB NO. 92-1060

CE92-11 (LINE # 2) *

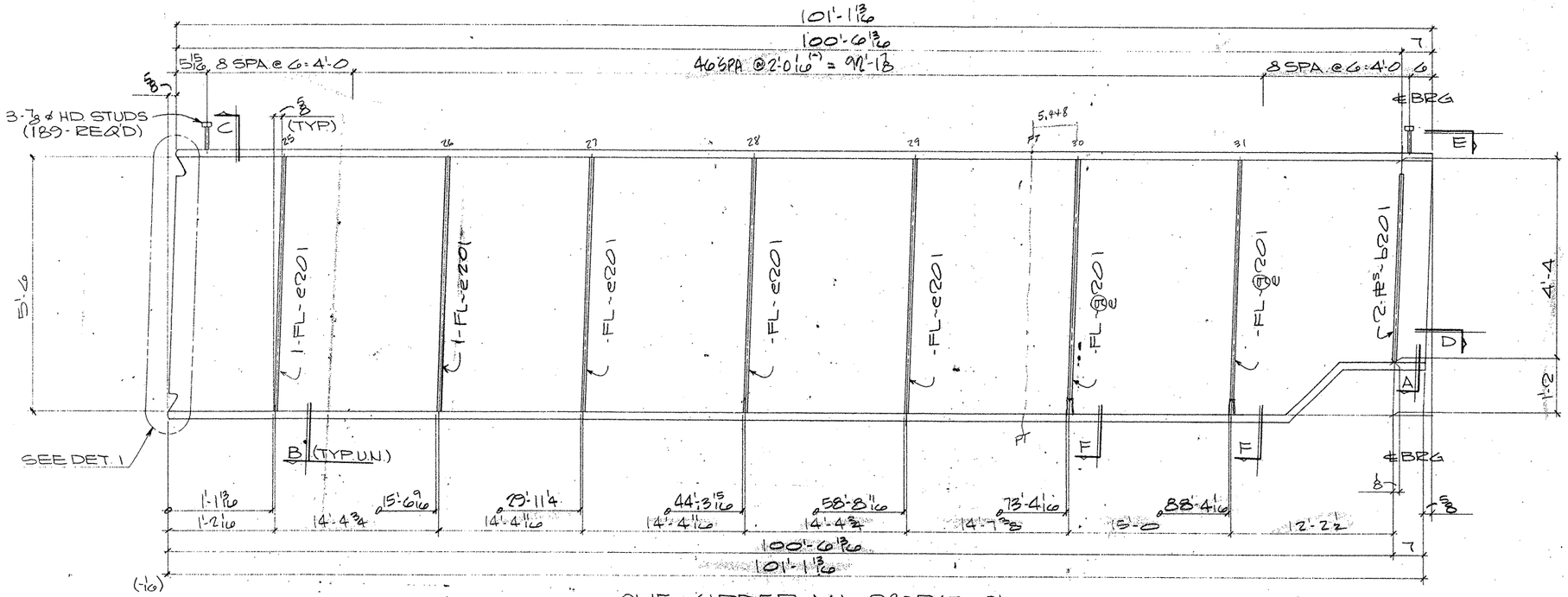

ONE GIRDER MK~ 228PG5.01

(APPROX. WT. = TONS)

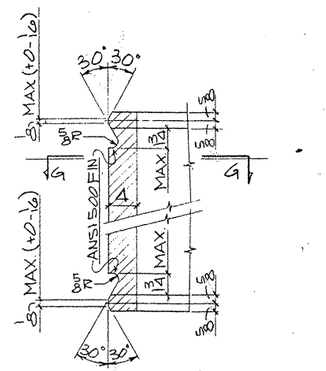

DETAIL - 1

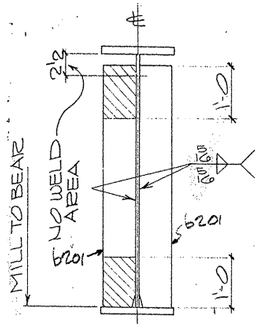

SECTION - A

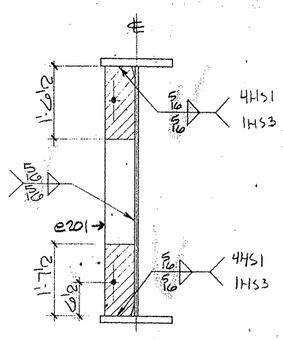

SECTION - B

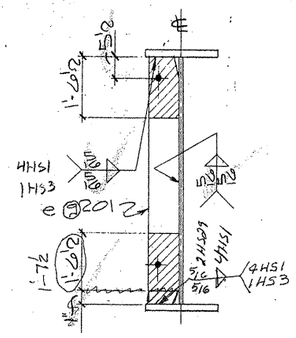

SECTION - F

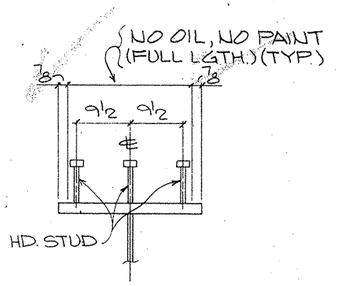

SECTION - C

(TYP. STUD SECT.)

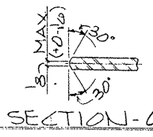

SECTION - G-G

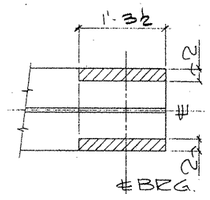

SECTION - D

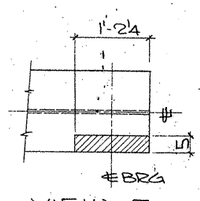

VIEW - E

SHOP NOTES:

1) FOR GENERAL NOTES SEE SHT. GN1
2) FOR GIRDER SUB-ASSEMBLY SEE SHT. 200
3) FOR STIFF. DETAILS SEE SHT. 201
4) FOR BLOCKING DIAGRAM SEE SHT. 232
5) FOR HEAT CURVE DIAGRAM SEE SHT. 211
6) ▨ INDICATES OIL, NO PAINT (N.S./P.S. & EDGES)

G0206

FED. ROAD DIV. NO.	STATE	FEDERAL AID PROJECT NO.				
6	TX.	NH (50) M				
STATE DIST. NO.	COUNTY	CONTROL NO.	SECTION NO.	JOB NO.	HIGHWAY NO.	
21	HIDALGO	39	17	97	83/281	

BILL OF MATERIAL

	Qnty.	Material	Length	Mark Temp.	Mark Ship	Wt.	Cut From	Remarks
1								
2	1	GIRDER			228PG5.01			
3	1	GIRDER SUB-ASSY		8206				
4	2	BRG STIFF		6201				
5	57	DIAF STIFF		e201				
6	189	HD STUD 7/8	0'-7				202-1	A108
7	2	DIAF STIFF	0'-7	8201				
8								
9								
10								
11								
12								
13								
14								
15								
16								
17								
18								
19								
20								
21								
22								
23								
24								
25								
26								
27								
28								
29								
30								
31								
32								
33								
34								
35								
36								
37								
38								
39								
40								
41								
42								
43								
44								
45								
46								
47								
48								
49								
50								
51								
52								
53								
54								
55								
56								
57								
58								
59								
60								

FOR APPROVAL
8/24/92
NOT FOR CONSTRUCTION

TEXAS DEPARTMENT OF TRANSPORTATION
APPROVED EXCEPT AS NOTED
DIVISION OF BRIDGES AND STRUCTURES
NOV 9 1992
APPROVAL OF THIS DRAWING DOES NOT RELIEVE THE CONTRACTOR OF THE RESPONSIBILITY FOR THE CORRECTNESS OF DETAIL

REVISION	DATE	DESCRIPTION OF REVISION
NO. 1		
NO. 2		
NO. 3		
NO. 4		
NO. 5		

PRINTING Req'd	For	Date

Bolts Holes 15/16 ø Unless Noted
Shop Paint SEE SHT GN1
Fab Spec AS NTD Inspection
Architect
Erection By Field Connections

HIRSCHFELD STEEL CO. INC.
112 WEST 29TH SAN ANGELO, TEXAS 76903
PHONE (915) 653-3211

DESCRIPTION	520'-0 PLATE GIRDER UNIT
STRUCTURE	US 83/281 INTERCHANGE RAMP "E"
LOCATION	HIDALGO COUNTY
CUSTOMER	GILBERT TEXAS CONSTRUCTION
SHIP TO	
Customer's Order No.	
Dwg. By JBF Date 7/92	SHEET 228 OF
Checked By JC Date 7-9-92	JOB NO. 92-106

APH 11/24

CE92-11 (LINE* 1 1 *

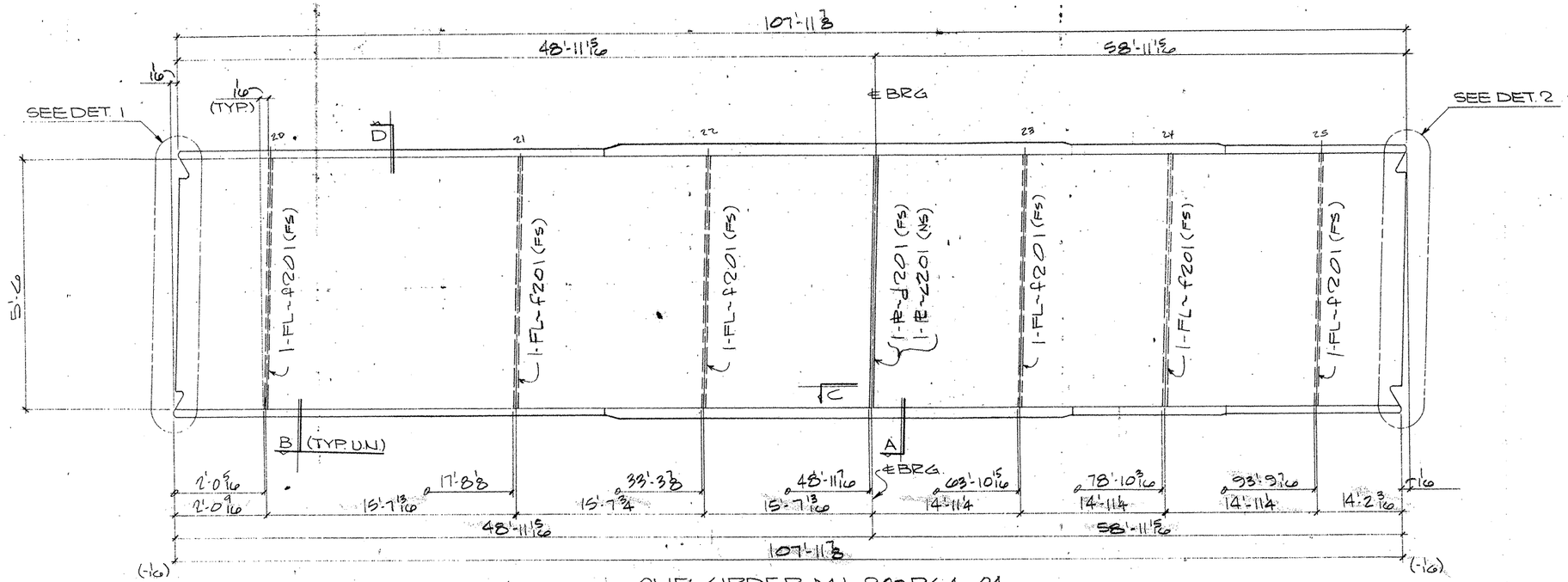

ONE GIRDER MK~227PG4.04

(APPROX. WT. = TONS)

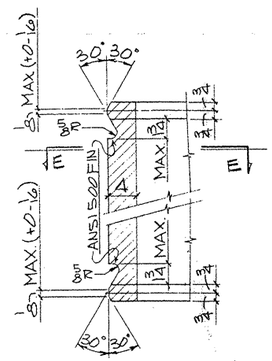

DETAIL - 1

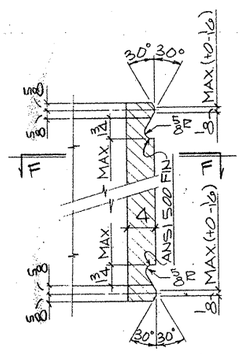

DETAIL - 2

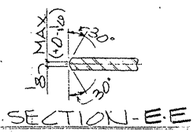

SECTION - E-E

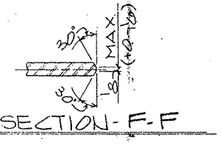

SECTION - F-F

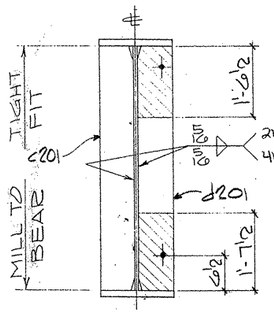

SECTION - A

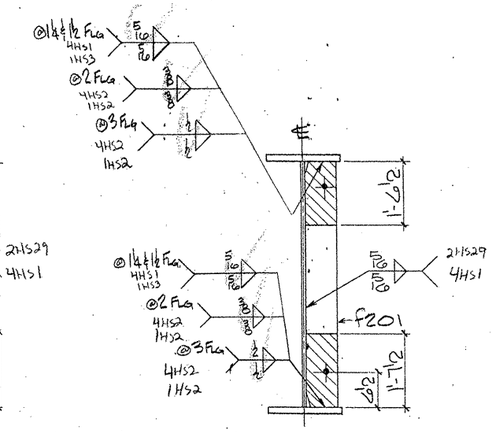

SECTION - B

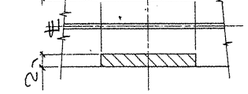

SECTION - C

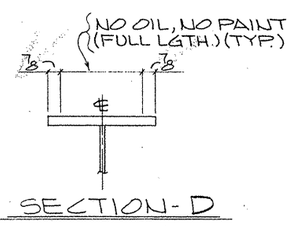

SECTION - D

SHOP NOTES:

1) FOR GENERAL NOTES SEE SHT. GN1
2) FOR GIRDER SUB-ASSEMBLY SEE SHT. 209
3) FOR STIFF. DETAILS SEE SHT. 201
4) FOR BLOCKING DIAGRAM SEE SHT. 235
5) FOR HEAT CURVE DIAGRAM SEE SHT. 211
6) ////// INDICATES OIL, NO PAINT (N.S./F.S. & EDGES)

	Qnty	Material	Length	Mark Temp	Mark Ship	Wt	Cut From	Remarks
1								
2	1	GIRDER			227PG4.04			
3	1	GIRDER SUB-ASSY		A209				
4	1	BRG STIFF		c201				
5	1	BRG STIFF		d201				
6	60	DIAF STIFF		f201				
7–60								

FOR APPROVAL

AUG 24 '92

NOT FOR CONSTRUCTION

REVISION	DATE	DESCRIPTION OF REVISION
NO. 1		
NO. 2		
NO. 3		
NO. 4		
NO. 5		

PRINTING

Req'd	For	Date

Bolts Holes. 15/16 Ø Unless Noted

Shop Paint SEE SHT. GN1

Fab. Spec. AS NTD Inspection

Architect

Erection By Field Connections

HIRSCHFELD STEEL CO. INC.

112 WEST 29TH SAN ANGELO, TEXAS 76903

PHONE (915) 653-3211

DESCRIPTION	520'-0 PLATE GIRDER UNIT
STRUCTURE	US 83/281 INTERCHANGE RAMP#1
LOCATION	HIDALGO COUNTY
CUSTOMER	GILBERT TEXAS CONSTRUCTION
SHIP TO	
Customer's Order No.	
Dwg. By JEE	Date 7/92
Checked By JC	Date 7-9-92

SHEET 227 OF

JOB NO. 92-106

CF 92-11 (LINE # 4)

FED. ROAD DIV. NO.	STATE	FEDERAL AID PROJECT NO.			
6	TX.	NH (50) M			
STATE DIST. NO.	COUNTY	CONTROL NO.	SECTION NO.	JOB NO.	HIGHWAY NO.
21	HIDALGO	39	17	97	83/281

G9206

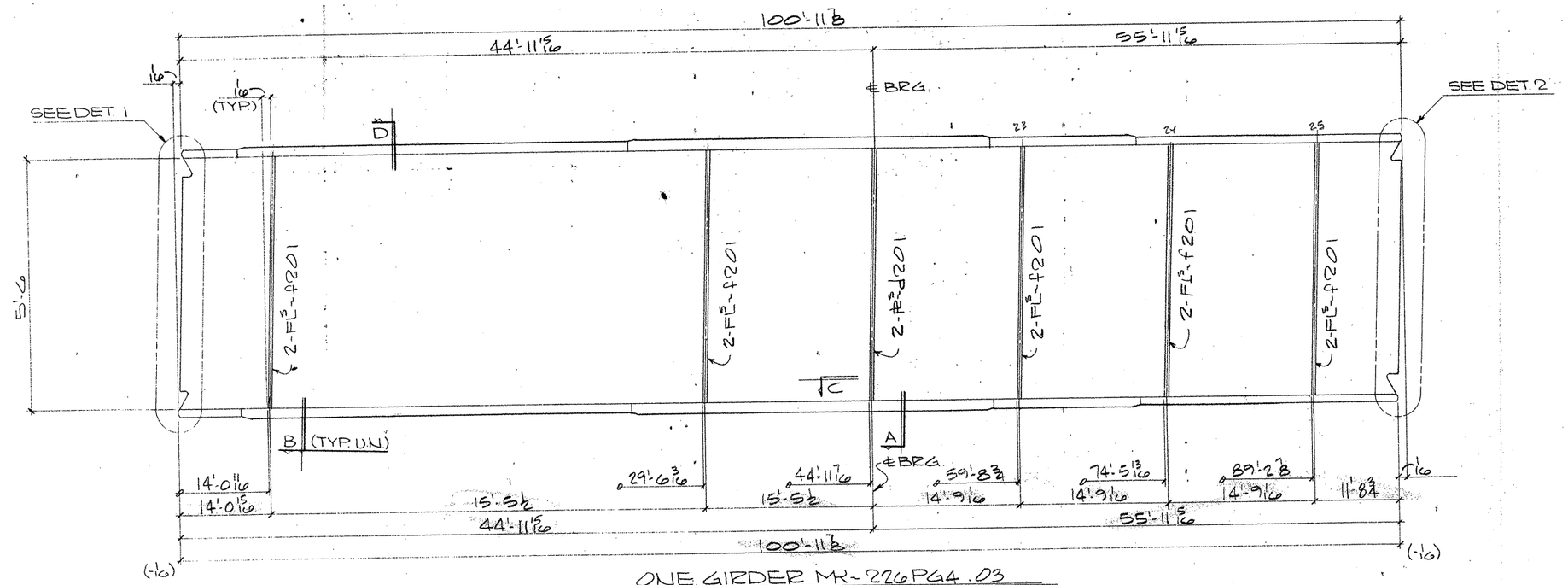

ONE GIRDER MK- 226PG4 .03

(APPROX. WT. = TONS)

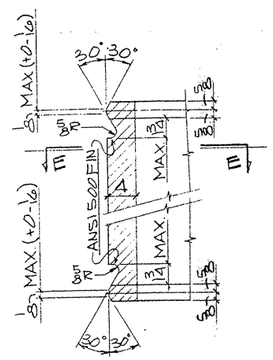

DETAIL - 1

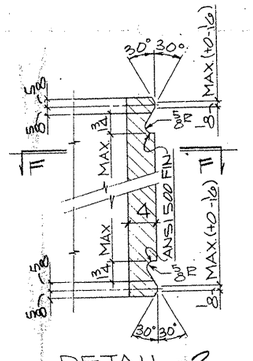

DETAIL - 2

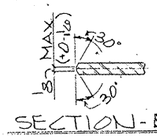

SECTION - E - E

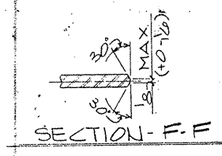

SECTION - F - F

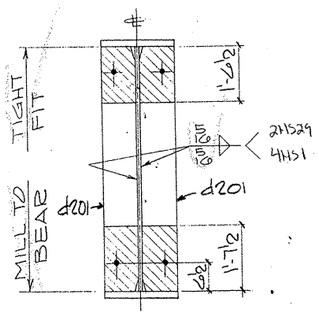

SECTION - A

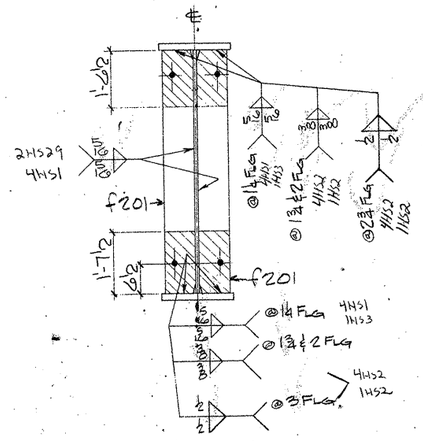

SECTION - B

SECTION - C

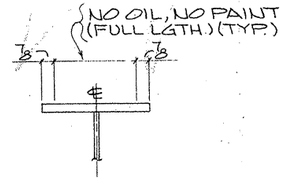

SECTION - D

SHOP NOTES:

1) FOR GENERAL NOTES SEE SHT. GN1
2) FOR GIRDER SUB-ASSEMBLY SEE SHT. 208
3) FOR STIFF. DETAILS SEE SHT. 201
4) FOR BLOCKING DIAGRAM SEE SHT. 234
5) FOR HEAT CURVE DIAGRAM SEE SHT. 211
6) ▨ INDICATES OIL, NO PAINT (N.S./F.S. & EDGES)

	Qnty	Material	Length	Mark Temp	Mark Ship	Wt.	Cut From	Remarks
1								
2	1	GIRDER			226PG4.03			
3	1	GIRDER SUB-ASSY		A208				
4	2	BRG STIFF		f201				
5	10	DIAF STIFF		f201				
6								
7								
8								
9								
10								
11								
12								
13								
14								
15								
16								
17								
18								
19								
20								
21								
22								
23								
24								
25								
26								
27								
28								
29								
30								
31								
32								
33								
34								
35								
36								
37								
38								
39								
40								
41								
42								
43								
44								
45								
46								
47								
48								
49								
50								
51								
52								
53								
54								
55								
56								
57								
58								
59								
60								

TEXAS DEPARTMENT OF TRANSPORTATION
APPROVED
DIVISION OF BRIDGES AND STRUCTURES
NOV 02 1992
APPROVAL OF THIS WORKING SHEET DOES NOT RELIEVE THE CONTRACTOR OF THE RESPONSIBILITY FOR THE CORRECTNESS OF DETAILS.

FOR APPROVAL
AUG 14 '92
NOT FOR CONSTRUCTION

REVISION	DATE	DESCRIPTION OF REVISION
NO. 1		
NO. 2		
NO. 3		
NO. 4		
NO. 5		

PRINTING		
Req'd	For	Date

Rolls Holes 13/16 ø Unless Noted
Shop Paint SEE SHT. GN1
Fab. Spec. AS NTD Inspection
Architect
Erection By Field Connections

HIRSCHFELD STEEL CO. INC.
112 WEST 29TH SAN ANGELO, TEXAS 76903
PHONE (915) 653-3211

DESCRIPTION	820'-0 PLATE, GIRDER UNIT
STRUCTURE	US 83/281 INTERCHANGE RAMP #1
LOCATION	HIDALGO COUNTY
CUSTOMER	GILBERT TEXAS CONSTRUCTION
SHIP TO	
Customer's Order No.	
Dwg. By JDE	Date 7/92
Checked By JC	Date 7-9-92

SHEET 226 OF
JOB NO. 92-106

G0206

FED. ROAD DIV. NO.	STATE	FEDERAL AID PROJECT NO.				
6	TX.	NH (50) M				
STATE DIST. NO.	COUNTY	CONTROL NO.	SECTION NO.	JOB NO.	HIGHWAY NO.	
21	HIDALGO	39	17	97	83/281	

CE92-11 (LINE # 3)

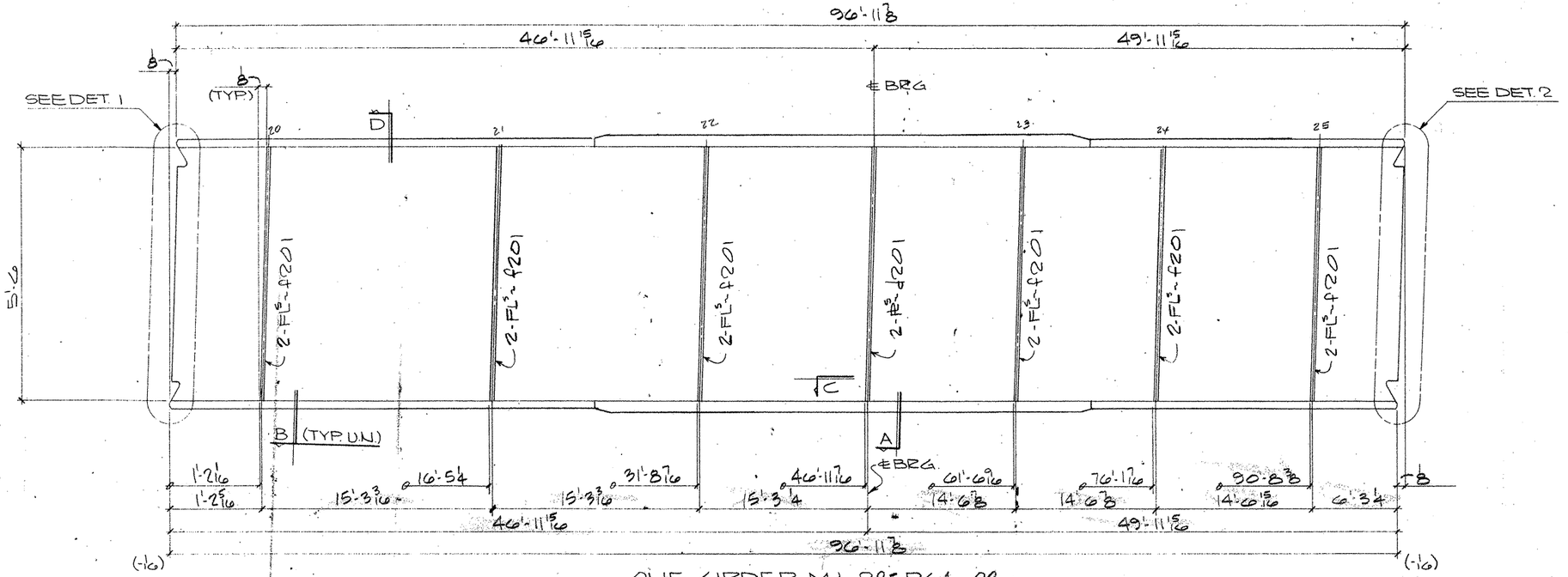

ONE GIRDER MK-225PG4.02

(APPROX. WT. = TONS)

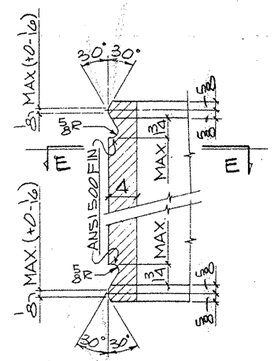

DETAIL - 1

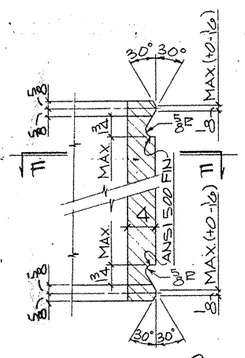

DETAIL - 2

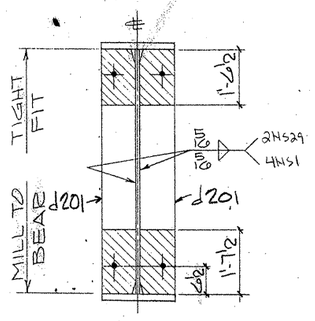

SECTION - A

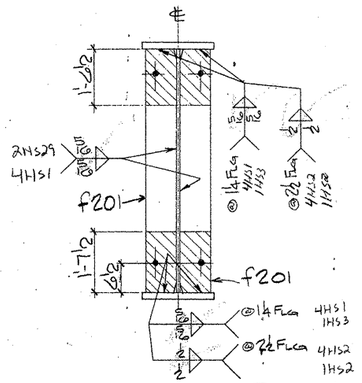

SECTION - B

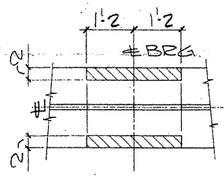

SECTION - C

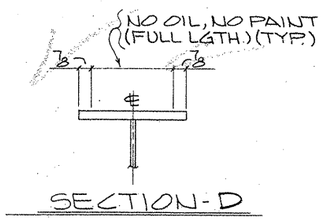

SECTION - D

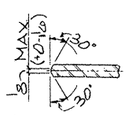

SECTION - E-E

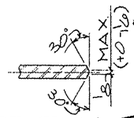

SECTION - F-F

SHOP NOTES:

1) FOR GENERAL NOTES SEE SHT. GN1
2) FOR GIRDER SUB-ASSEMBLY SEE SHT. 207
3) FOR STIFF. DETAILS SEE SHT. 201
4) FOR BLOCKING DIAGRAM SEE SHT. 233
5) FOR HEAT CURVE DIAGRAM SEE SHT. 211
6) ▨ INDICATES OIL, NO PAINT (N.S./F.S. & EDGES)

BILL OF MATERIAL

	Qnty.	Material	Length	Mark Temp.	Mark Ship.	Wt.	Cut From	Remarks
1								
2	1	GIRDER			225PG4.02			
3	1	GIRDER SUB-ASSY		A207				
4	2	BRG STIFF		d201				
5	12	DIAF STIFF		f201				
6								
7								
8								
9								
10								
11								
12								
13								
14								
15								
16								
17								
18								
19								
20								
21								
22								
23								
24								
25								
26								
27								
28								
29								
30								
31								
32								
33								
34								
35								
36								
37								
38								
39								
40								
41								
42								
43								
44								
45								
46								
47								
48								
49								
50								
51								
52								
53								
54								
55								
56								
57								
58								
59								
60								

FOR APPROVAL

AUG 24 '92

NOT FOR CONSTRUCTION

TEXAS DEPARTMENT OF TRANSPORTATION
AUSTIN
DIVISION OF BRIDGES AND STRUCTURES
NOV 04 1992
APPROVAL OF THIS DRAWING DOES NOT RELIEVE THE CONTRACTOR OF THE RESPONSIBILITY FOR THE CORRECTNESS OF DETAILS

REVISION	DATE	DESCRIPTION OF REVISION
NO. 1		
NO. 2		
NO. 3		
NO. 4		
NO. 5		

PRINTING Req'd	For	Date

Bolts Holes, 15/16 ø Unless Noted
Shop Paint SEE SHT. GN1
Fab. Spec. ASTD Inspection
Architect
Erection By Field Connections

HIRSCHFELD STEEL CO. INC.
112 WEST 29TH SAN ANGELO, TEXAS 76903
PHONE (915) 653-3211

DESCRIPTION	520'-0 PLATE GIRDER UNIT
STRUCTURE	US 83/281 INTERCHANGE RAMP E
LOCATION	HIDALGO COUNTY
CUSTOMER	GILBERT TEXAS CONSTRUCTION
SHIP TO	
Customer's Order No.	
Dwg. By JPZ	Date 7/92
Checked By JC	Date 7-9-92

SHEET 225 OF
JOB NO. 92-106

G0206

F.E.D. ROAD DIV. NO.	STATE	FEDERAL AID PROJECT NO			
6	TX.	NH (50) M			
STATE DIST. NO.	COUNTY	CONTROL NO.	SECTION NO.	JOB NO.	HIGHWAY NO.
21	HIDALGO	39	17	97	83/281

CE92-11 (LINE # 21)

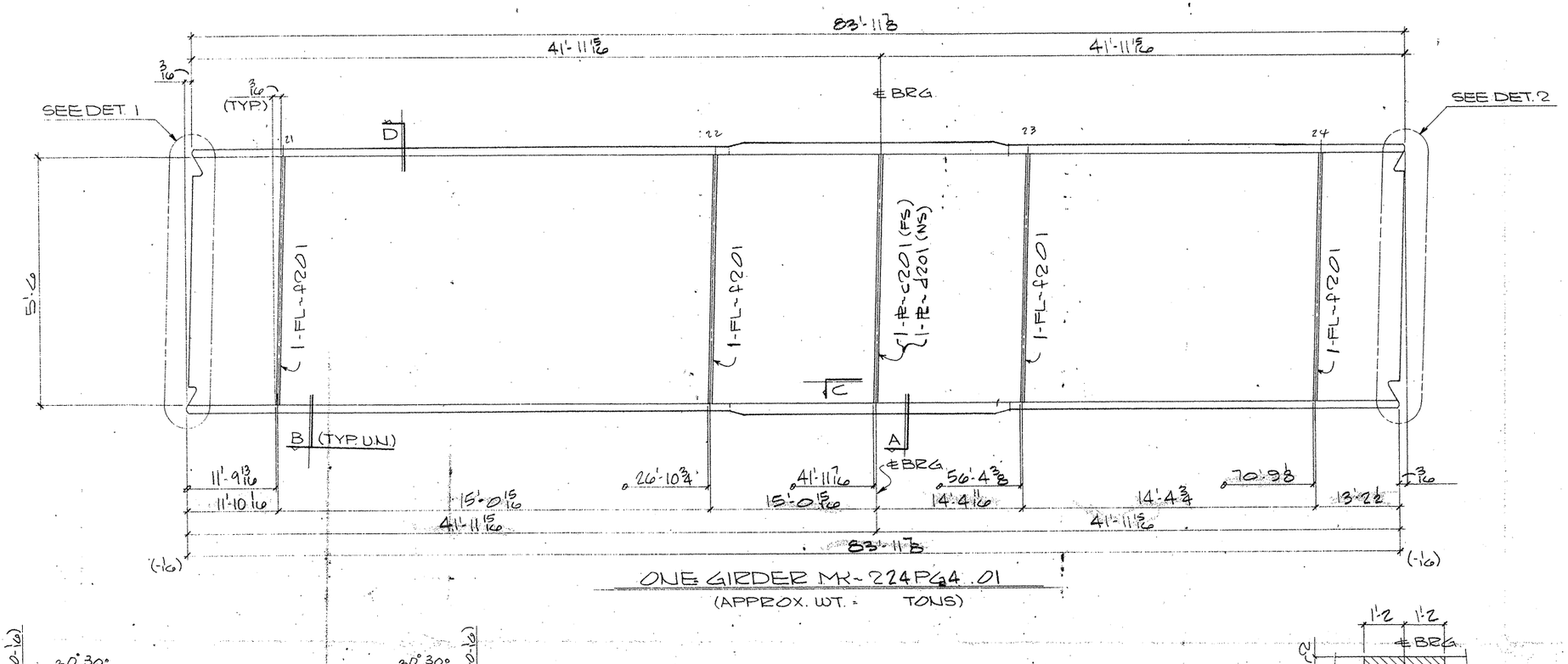

ONE GIRDER MK~224PG4.01

(APPROX. WT. = TONS)

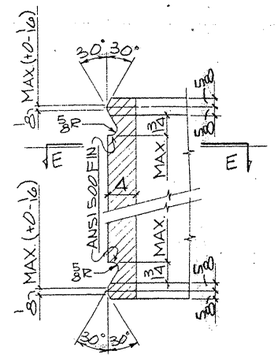

DETAIL - 1

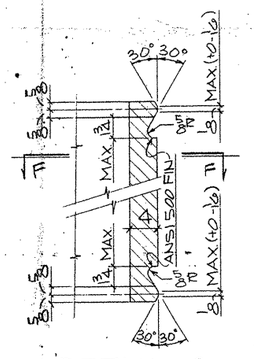

DETAIL - 2

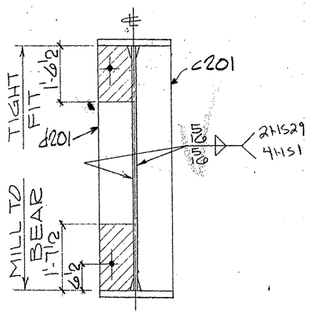

SECTION - A

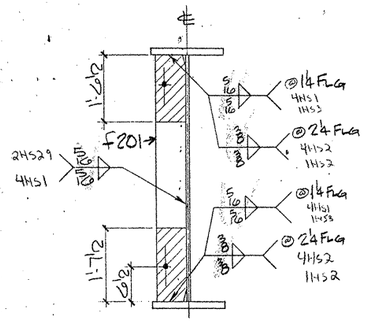

SECTION - B

SECTION - C

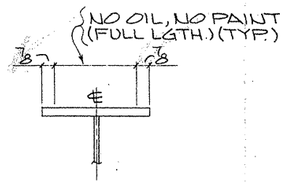

SECTION - D

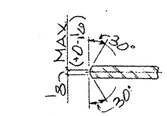

SECTION - E.E

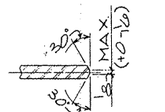

SECTION - F.F

SHOP NOTES:

1) FOR GENERAL NOTES SEE SHT. GN1
2) FOR GIRDER SUB-ASSEMBLY SEE SHT. 206
3) FOR STIFF. DETAILS SEE SHT. 201
4) FOR BLOCKING DIAGRAM SEE SHT. 232
5) FOR HEAT CURVE DIAGRAM SEE SHT. 211
6) ▨ INDICATES OIL, NO PAINT (N.S./F.S. & EDGES)

G0206

FED. ROAD DIV. NO.	STATE	FEDERAL AID PROJECT NO.			
6	TX.	NH (50) M			
STATE DIST. NO.	COUNTY	CONTROL NO.	SECTION NO.	JOB NO.	HIGHWAY NO.
21	HIDALGO	39	17	97	83/281

BILL OF MATERIAL

	Qnty	Material	Length	Mark Temp.	Mark Ship.	Wt.	Cut From	Remarks
1								
2	1	GIRDER			224PG4.01			
3	1	GIRDER SUB-ASSY		A206				
4	1	BRG STIFF		c201				
5	1	BRG STIFF		d201				
6	4	DIAF STIFF		f201				
7								
8								
9								
10								
11								
12								
13								
14								
15								
16								
17								
18								
19								
20								
21								
22								
23								
24								
25								
26								
27								
28								
29								
30								
31								
32								
33								
34								
35								
36								
37								
38								
39								
40								
41								
42								
43								
44								
45								
46								
47								
48								
49								
50								
51								
52								
53								
54								
55								
56								
57								
58								
59								
60								

FOR APPROVAL

AUG 24 '92

NOT FOR CONSTRUCTION

TEXAS DEPARTMENT OF TRANSPORTATION APPROVED FOR ISSUANCE AND CONSTRUCTION AUG 04 1992

APPROVAL OF THIS DRAWING DOES NOT RELIEVE THE CONTRACTOR OF THE RESPONSIBILITY FOR THE CORRECTNESS OF DETAIL

REVISION	DATE	DESCRIPTION OF REVISION
NO. 1		
NO. 2		
NO. 3		
NO. 4		
NO. 5		

PRINTING		
Req'd	For	Date

Bolts: Holes: 15/16 ∅ Unless Noted
Shop Paint SEE SHT. GN1
Fab Spec. AS NTD Inspection
Architect
Erection By Field Connections

HIRSCHFELD STEEL CO. INC.
112 WEST 29TH SAN ANGELO. TEXAS 76903
PHONE (915) 653-3211

DESCRIPTION	520'-0 PLATE GIRDER UNIT
STRUCTURE	US 83/281 INTERCHANGE RAMP "F"
LOCATION	HIDALGO COUNTY
CUSTOMER	GILBERT TEXAS CONSTRUCTION
SHIP TO	
Customer's Order No.	
Dwg. By JPC	Date 7/92
Checked By JC	Date 7-9-92

SHEET 224 OF
JOB NO. 92-106

CE92-11 (LINE # 1)

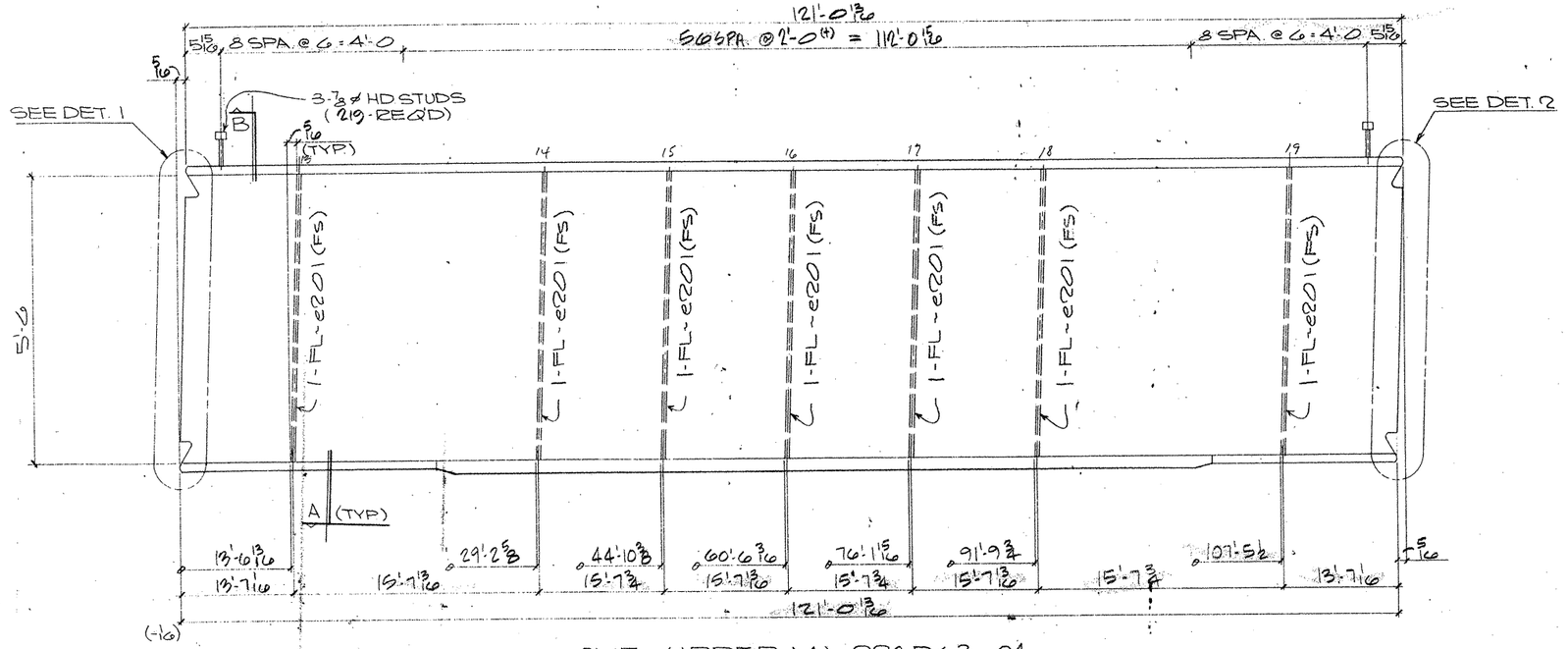

ONE GIRDER MK~223PG3.04

(APPROX. WT. = TONS)

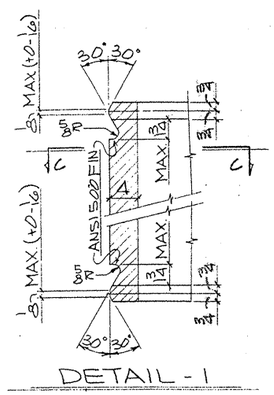

DETAIL - 1

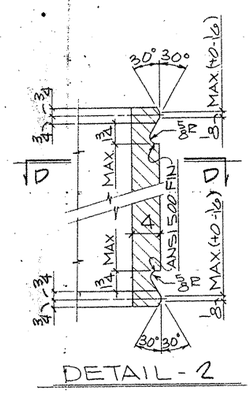

DETAIL - 2

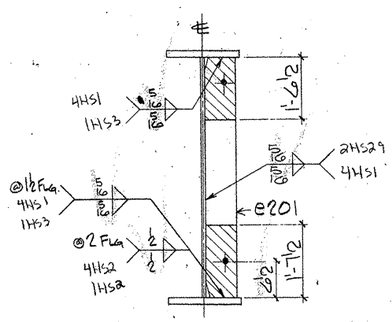

SECTION - A

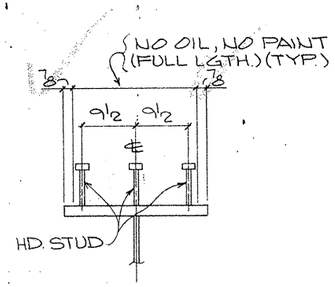

SECTION - B

(TYP. STUD SECT.)

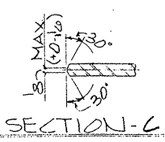

SECTION - C-C

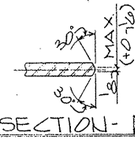

SECTION - D-D

SHOP NOTES:

1) FOR GENERAL NOTES SEE SHT. GN1
2) FOR GIRDER SUB-ASSEMBLY SEE SHT. 205
3) FOR STIFF. DETAILS SEE SHT. 201
4) FOR BLOCKING DIAGRAM SEE SHT. 235
5) FOR HEAT CURVE DIAGRAM SEE SHT. 210
6) ▨ INDICATES OIL, NO PAINT (N.S./F.S. & EDGES)

	Only.	Material	Length	Mark Temp.	Mark Ship.	Wt	Cut From	Remarks
1								
2	1	GIRDER			223PG3.04			
3	1	GIRDER SUB-ASSY		G205				
4	7	DIAF. STIFF		e201				
5	219	HD STUDS 7/8	0'-7				202-1	A108
6								
7								
8								
9								
10								
11								
12								
13								
14								
15								
16								
17								
18								
19								
20								
21								
22								
23								
24								
25								
26								
27								
28								
29								
30								
31								
32								
33								
34								
35								
36								
37								
38								
39								
40								
41								
42								
43								
44								
45								
46								
47								
48								
49								
50								
51								
52								
53								
54								
55								
56								
57								
58								
59								
60								

TEXAS HIGHWAY DEPARTMENT
APPROVED
DIVISION OF BRIDGES AND STRUCTURES
NOV 04 1992
APPROVAL OF THE PLANS DOES NOT RELIEVE THE CONTRACTOR OF THE RESPONSIBILITY FOR THE CORRECTNESS OF DETAILS

FOR APPROVAL
AUG 24 '92
NOT FOR CONSTRUCTION

REVISION	DATE	DESCRIPTION OF REVISION
NO. 1		
NO. 2		
NO. 3		
NO. 4		
NO. 5		

PRINTING Req'd	For	Date

Bolts Holes. 15/16 ø Unless Noted
Shop Paint SEE SHT. GN1
Fab Spec. AS NTD Inspection
Architect
Erection By Field Connections

HIRSCHFELD STEEL CO. INC.
112 WEST 29TH SAN ANGELO, TEXAS 76903
PHONE (915) 653-3211

DESCRIPTION	50'-0 PLATE GIRDER UNIT
STRUCTURE	US 83/281 INTERCHANGE RAMP#1
LOCATION	HIDALGO COUNTY
CUSTOMER	GILBERT TEXAS CONSTRUCTION
SHIP TO	
Customer's Order No.	
Dwg. By JDC	Date 7/92
Checked By JC	Date 7-9-92

SHEET 223 OF
JOB NO. 92-106

AM 8/24

G0206

FED. ROAD DIV. NO.	STATE	FEDERAL AID PROJECT NO.			
6	TX.	NH (50) M			
STATE DIST. NO.	COUNTY	CONTROL NO.	SECTION NO.	JOB NO.	HIGHWAY NO.
21	HIDALGO	39	17	97	83/281

CE 92-11 (LINE # 4)

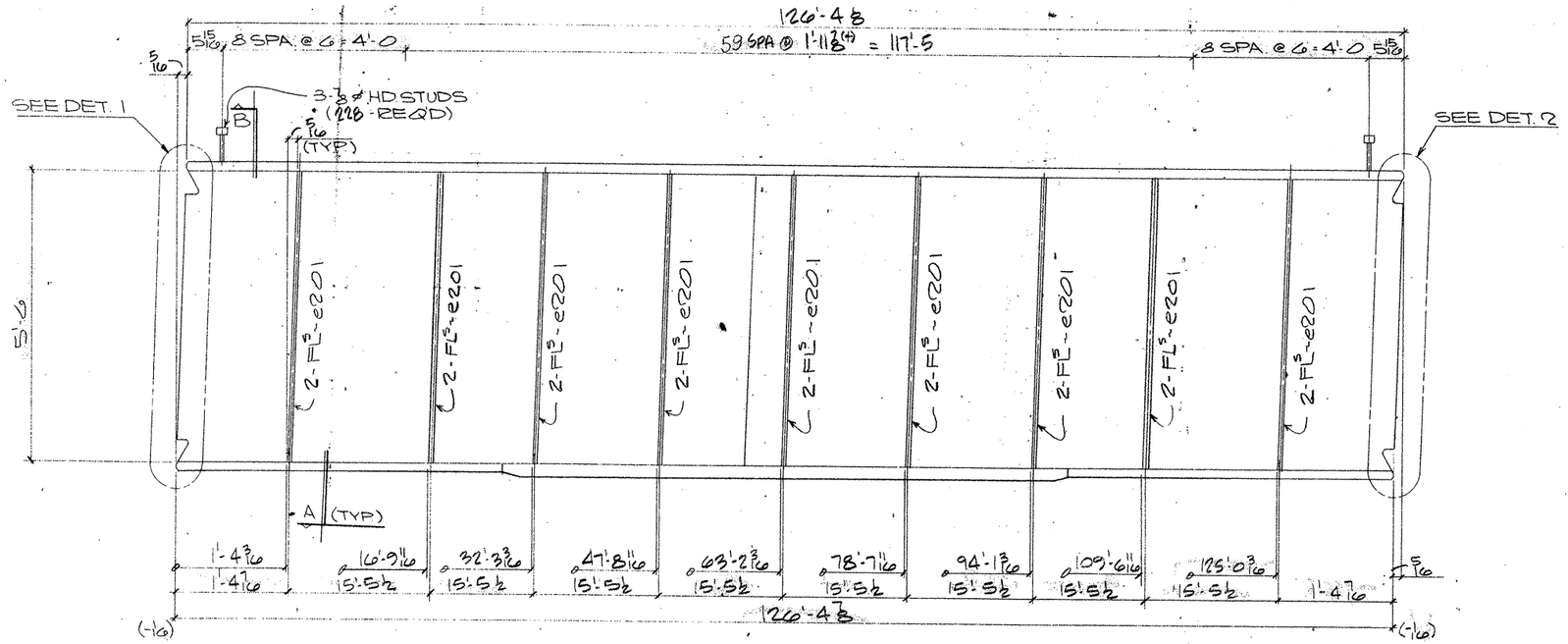

ONE GIRDER MK-222PG3.03
(APPROX. WT. = TONS)

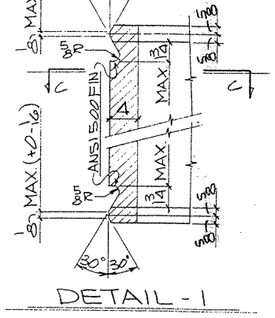

DETAIL-1

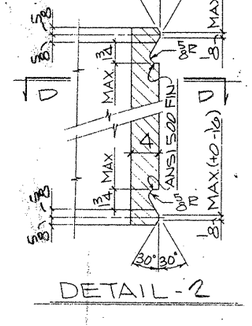

DETAIL-2

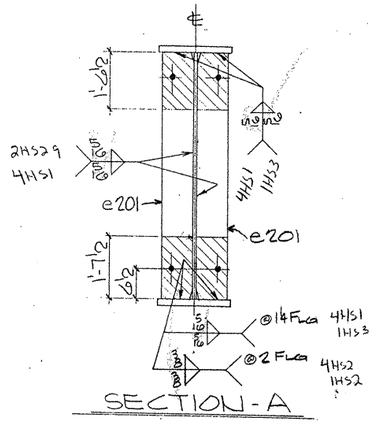

SECTION-A

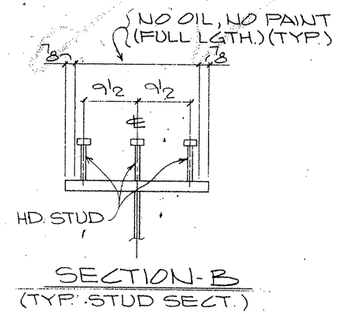

SECTION-B
(TYP. STUD SECT.)

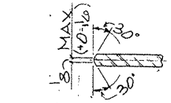

SECTION-C-C

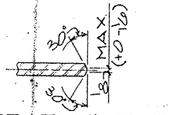

SECTION-D-D

SHOP NOTES:

1) FOR GENERAL NOTES SEE SHT. GN1
2) FOR GIRDER SUB-ASSEMBLY SEE SHT. 204
3) FOR STIFF. DETAILS SEE SHT. 201
4) FOR BLOCKING DIAGRAM SEE SHT. 234
5) FOR HEAT CURVE DIAGRAM SEE SHT. 210
6) ▨ INDICATES OIL, NO PAINT (N.S./F.S. & EDGES)

G02206

FED. ROAD DIV. NO.	STATE	FEDERAL AID PROJECT NO.				
6	TX.	NH (50) M				
STATE DIST. NO.	COUNTY	CONTROL NO.	SECTION NO.	JOB NO.	HIGHWAY NO.	
21	HIDALGO	39	17	97	83/281	

BILL OF MATERIAL

	Qty.	Material	Length	Mark Temp.	Mark Ship.	Wt.	Cut From	Remarks
1								
2	1	GIRDER			222PG3.03			
3	1	GIRDER SUB-ASSY	G204					
4	18	DIAF. STIFF	e201					
5	228	HD STUDS ⅞	0'-7				202-1	A108
6								
7								
8								
9								
10								
11								
12								
13								
14								
15								
16								
17								
18								
19								
20								
21								
22								
23								
24								
25								
26								
27								
28								
29								
30								
31								
32								
33								
34								
35								
36								
37								
38								
39								
40								
41								
42								
43								
44								
45								
46								
47								
48								
49								
50								
51								
52								
53								
54								
55								
56								
57								
58								
59								
60								

FOR APPROVAL
AUG 24 '92
NOT FOR CONSTRUCTION

TEXAS HIGHWAY DEPARTMENT
APPROVED
DIVISION OF BRIDGES AND STRUCTURES
NOV 04 1992
APPROVAL OF THIS SHEET DOES NOT RELIEVE THE FABRICATOR OF THE RESPONSIBILITY FOR THE CORRECTNESS OF DETAILS

REVISION	DATE	DESCRIPTION OF REVISION
NO. 1		
NO. 2		
NO. 3		
NO. 4		
NO. 5		

PRINTING

Req'd	For	Date

Bolts Holes 15/16 ø Unless Noted
Shop Paint SEE SHT GN1
Fab Spec AS NTD Inspection
Architect
Erection By Field Connections

HIRSCHFELD STEEL CO. INC.
112 WEST 29TH SAN ANGELO TEXAS 76903
PHONE (915) 653-3211

DESCRIPTION	520-0 PLATE GIRDER UNIT
STRUCTURE	US 83/281 INTERCHANGE RAMP #1
LOCATION	HIDALGO COUNTY
CUSTOMER	GILBERT TEXAS CONSTRUCTION
SHIP TO	
Customer's Order No.	
Dwg By JPG	Date 7/92
Checked By JC	Date 7-9-92

SHEET 222 OF
JOB NO. 92-106

CF 92-11 (LINE #3)

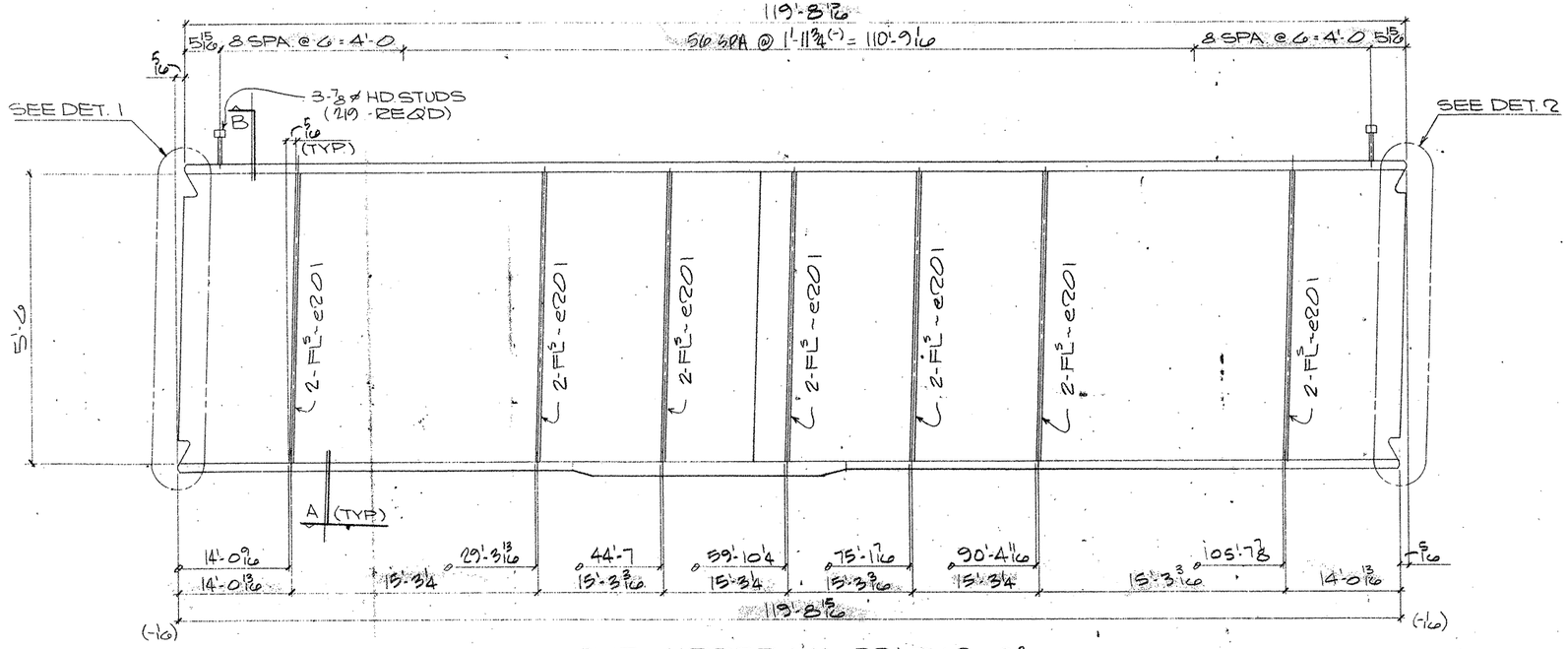

ONE GIRDER MK-221PG3.02

(APPROX. WT. = TONS)

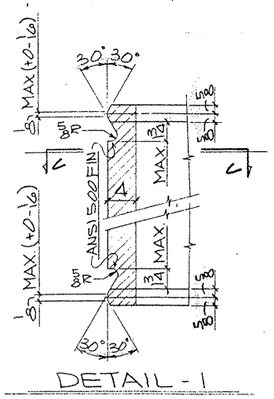

DETAIL - 1

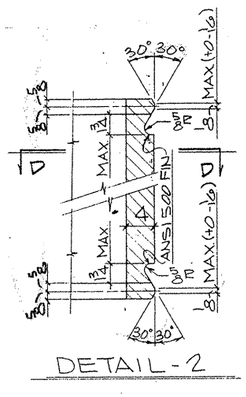

DETAIL - 2

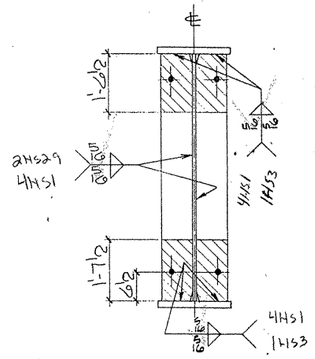

SECTION - A

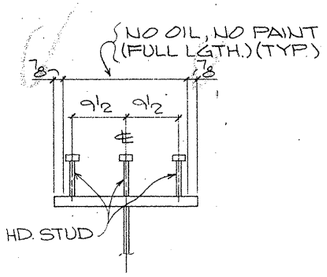

SECTION - B

(TYP. STUD SECT.)

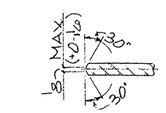

SECTION - C-C

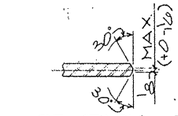

SECTION - D-D

SHOP NOTES:

1) FOR GENERAL NOTES SEE SHT. GN1
2) FOR GIRDER SUB-ASSEMBLY SEE SHT. 203
3) FOR STIFF. DETAILS SEE SHT. 201
4) FOR BLOCKING DIAGRAM SEE SHT. 233
5) FOR HEAT CURVE DIAGRAM SEE SHT. 210
6) ▨ INDICATES OIL, NO PAINT (N.S./F.S. & EDGES)

BILL OF MATERIAL

	Qnty	Material	Length	Mark Temp.	Mark Ship.	Wt.	Cut From	Remarks
1								
2	1	GIRDER			221PG3.02			
3	1	GIRDER SUB-ASSY		C203				
4	14	DIAF. STIFF		e201				
5	219	HD STUDS 7/8	0'-7				202-1	A108
6								
7								
8								
9								
10								
11								
12								
13								
14								
15								
16								
17								
18								
19								
20								
21								
22								
23								
24								
25								
26								
27								
28								
29								
30								
31								
32								
33								
34								
35								
36								
37								
38								
39								
40								
41								
42								
43								
44								
45								
46								
47								
48								
49								
50								
51								
52								
53								
54								
55								
56								
57								
58								
59								
60								

TEXAS HIGHWAY DEPARTMENT
TRANSPORTATION PLANNING
DIVISION OF BRIDGES AND STRUCTURES
NOV 04 1992
APPROVAL OF THIS DRAWING DOES NOT RELIEVE THE CONTRACTOR OF THE RESPONSIBILITY FOR THE CORRECTNESS OF DETAIL

FOR APPROVAL
AUG 28 '92
NOT FOR CONSTRUCTION

REVISION	DATE	DESCRIPTION OF REVISION
NO 1		
NO 2		
NO 3		
NO 4		
NO 5		

PRINTING Req'd	For	Date

Bolts Holes. 15/16 ø Unless Noted
Shop Paint SEE SHT GN1
Fab. Spec. AS NTD Inspection
Architect
Erection By Field Connections

HIRSCHFELD STEEL CO. INC.
112 WEST 29TH SAN ANGELO, TEXAS 76903
PHONE (915) 653-3211

DESCRIPTION	520'-0 PLATE GIRDER UNIT #1
STRUCTURE	US 83/281 INTERCHANGE RAMP
LOCATION	HIDALGO COUNTY
CUSTOMER	GILBERT TEXAS CONSTRUCTION
SHIP TO	
Customer's Order No.	
Dwg. By JDC	Date 7/92
Checked By JC	Date 7-9-92

SHEET 221 OF
JOB NO. 92-106

FED. ROAD DIV. NO.	STATE	FEDERAL AID PROJECT NO.			
6	TX.	NH (50) M			
STATE DIST. NO.	COUNTY	CONTROL NO.	SECTION NO.	JOB NO.	HIGHWAY NO.
21	HIDALGO	39	17	97	83/281

GN03Dp

CE 92-11 (LINE # 2)

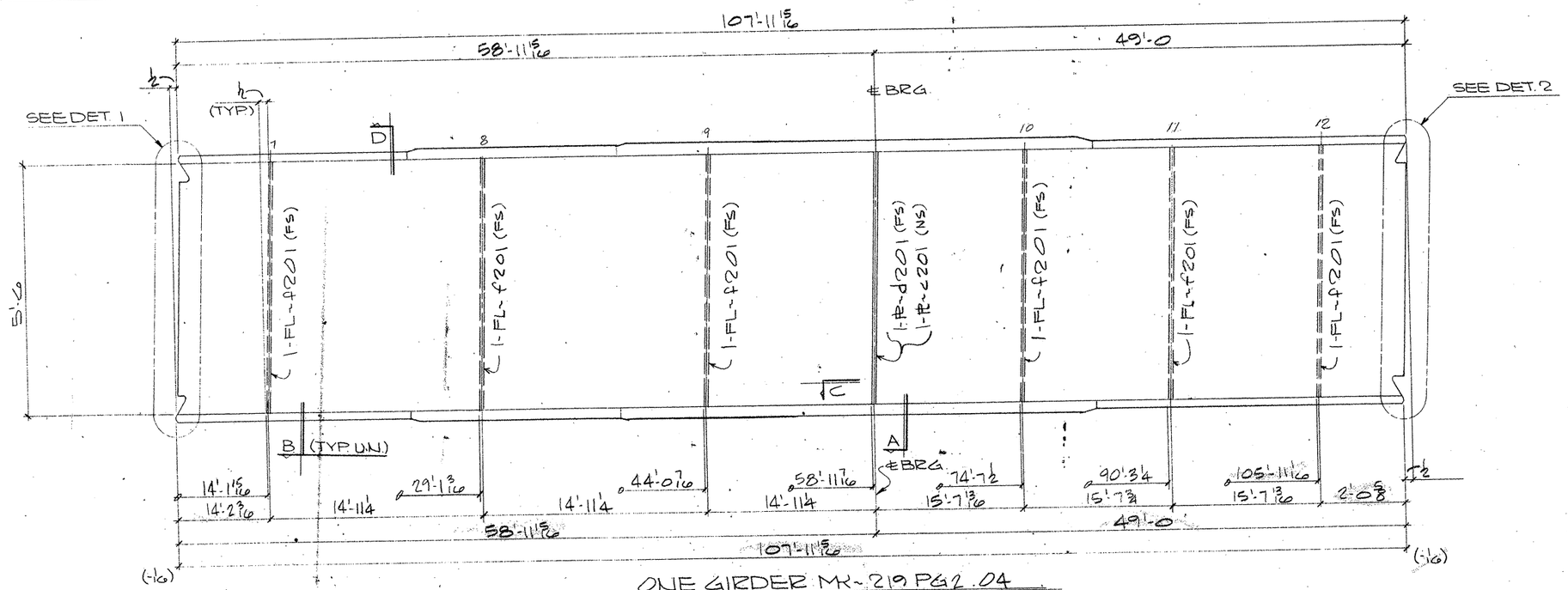

ONE GIRDER MK~219 PG2.04

(APPROX. WT. = TONS)

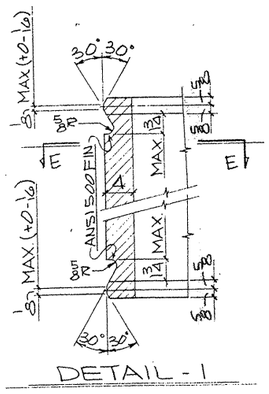

DETAIL - 1

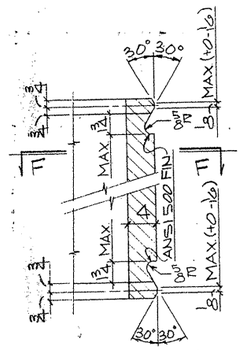

DETAIL - 2

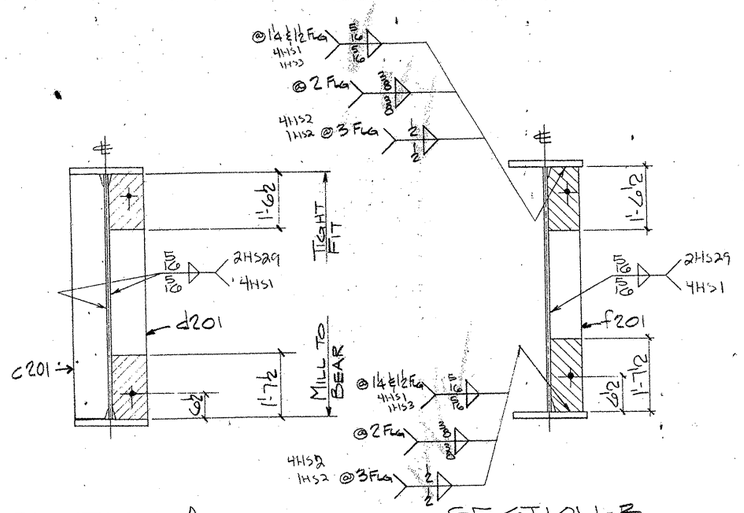

SECTION - A

SECTION - B

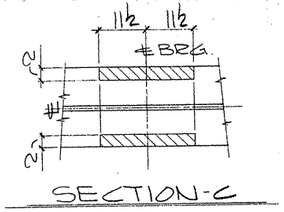

SECTION - C

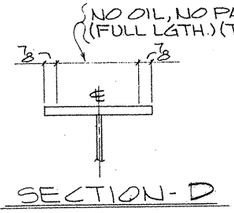

SECTION - D

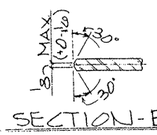

SECTION - E-E

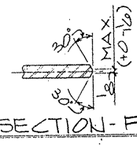

SECTION - F-F

SHOP NOTES:

1) FOR GENERAL NOTES SEE SHT. GN1
2) FOR GIRDER SUB-ASSEMBLY SEE SHT. 205
3) FOR STIFF. DETAILS SEE SHT. 201
4) FOR BLOCKING DIAGRAM SEE SHT. 295
5) FOR HEAT CURVE DIAGRAM SEE SHT. 210
6) ▨ INDICATES OIL, NO PAINT (N.S./F.S. & EDGES)

	Qnty.	Material	Length	Mark Temp	Mark Ship	Wt.	Cut From	Remarks
1								
2	1	GIRDER			219 PG2.04			
3	1	GIRDER SUB-ASSY		B205				
4	1	BRG STIFF		c201				
5	1	BRG STIFF		d201				
6	60	DIAF STIFF		f201				
7–60								

TEXAS DEPARTMENT OF TRANSPORTATION
APPROVED
DIVISION OF BRIDGES AND STRUCTURES
NOV 04 92
APPROVAL OF THESE DRAWINGS DOES NOT RELIEVE THE CONTRACTOR OF THE RESPONSIBILITY FOR THE CORRECTNESS OF THE DETAILS

FOR APPROVAL
AUG 24 92
NOT FOR CONSTRUCTION

REVISION	DATE	DESCRIPTION OF REVISION
NO. 1		
NO. 2		
NO. 3		
NO. 4		
NO. 5		

PRINTING Req'd	For	Date

Bolts Holes, 15/16 ø Unless Noted
Shop Paint SEE SHT. GN1
Fab. Spec. AS NTD Inspection
Architect
Erection By Field Connections

HIRSCHFELD STEEL CO. INC.
112 WEST 29TH SAN ANGELO, TEXAS 76903
PHONE (915) 653-3211

DESCRIPTION	520'-0 PLATE GIRDER UNIT
STRUCTURE	US 83/281 INTERCHANGE RAMP #1
LOCATION	HIDALGO COUNTY
CUSTOMER	GILBERT TEXAS CONSTRUCTION
SHIP TO	
Customer's Order No.	
Dwg. By JSE Date 7/92	SHEET 219 OF
Checked By JC Date 7-9-92	JOB NO. 92-106

G0206

FED. ROAD DIV. NO.	STATE	FEDERAL AID PROJECT NO.			
6	TX.	NH (50) M			
STATE DIST. NO.	COUNTY	CONTROL NO.	SECTION NO.	JOB NO.	HIGHWAY NO.
21	HIDALGO	39	17	97	83/281

CE 92-11. (LINE # 4.)

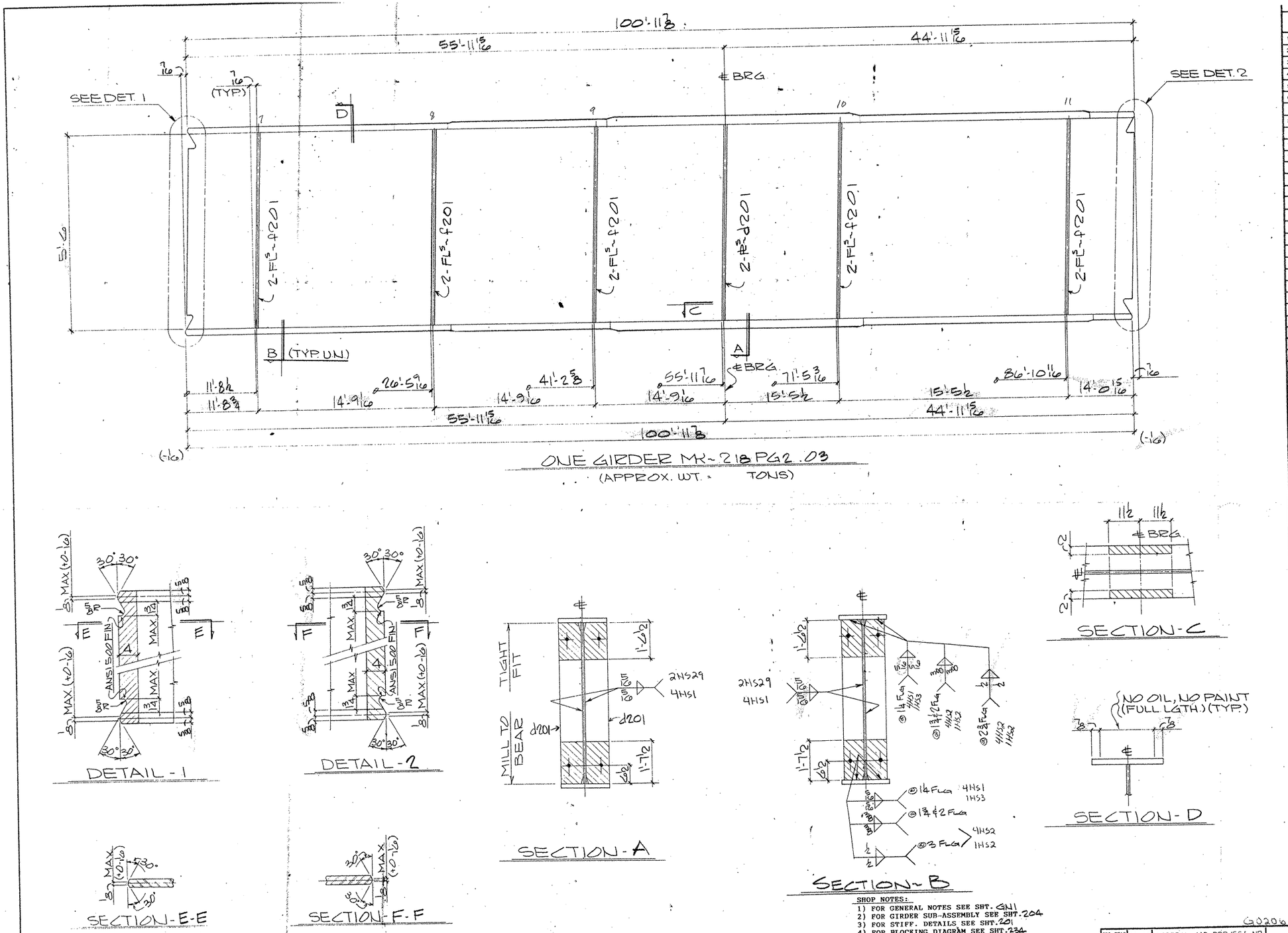

ONE GIRDER MK-218 PG2.03
(APPROX. WT. = TONS)

DETAIL-1

DETAIL-2

SECTION-A

SECTION-B

SECTION-C

SECTION-D

SECTION-E-E

SECTION-F-F

SHOP NOTES:
1) FOR GENERAL NOTES SEE SHT. GN1
2) FOR GIRDER SUB-ASSEMBLY SEE SHT. 204
3) FOR STIFF. DETAILS SEE SHT. 201
4) FOR BLOCKING DIAGRAM SEE SHT. 234
5) FOR HEAT CURVE DIAGRAM SEE SHT. 210
6) ▨ INDICATES OIL, NO PAINT (N.S./F.S. & EDGES)

G0206

FED. ROAD DIV. NO.	STATE	FEDERAL AID PROJECT NO.			
6	TX.	NH (50) M			
STATE DIST. NO.	COUNTY	CONTROL NO.	SECTION NO.	JOB NO.	HIGHWAY NO.
21	HIDALGO	39	17	97	83/281

	Qnty	Material	Length	Mark Temp.	Mark Ship.	Wt.	Cut From	Remarks
1								
2	1	GIRDER			218PG2.03			
3	1	GIRDER SUB-ASSY		B204				
4	2	BRG STIFF		d201				
5	10	DIAF STIFF		f201				

TEXAS DEPARTMENT OF TRANSPORTATION
APPROVED
DIVISION OF BRIDGES AND ARCHITECTURE
NOV 04 1992
APPROVAL OF THIS DRAWING DOES NOT RELIEVE THE CONTRACTOR OF THE RESPONSIBILITY FOR THE CORRECT USE OF DETAIL.

FOR APPROVAL
AUG 24 '92
NOT FOR CONSTRUCTION

REVISION	DATE	DESCRIPTION OF REVISION
NO. 1		
NO. 2		
NO. 3		
NO. 4		
NO. 5		

PRINTING

Req'd	For	Date

Bolts Holes 15/16 ø Unless Noted
Shop Paint SEE SHT. GN1
Fab Spec AS NTD Inspection
Architect
Erection By Field Connections

HIRSCHFELD STEEL CO. INC.
112 WEST 29TH SAN ANGELO TEXAS 76903
PHONE (915) 653-3211

DESCRIPTION 520'-0 PLATE GIRDER UNIT
STRUCTURE US 83/281 INTERCHANGE RAMP #1
LOCATION HIDALGO COUNTY
CUSTOMER GILBERT TEXAS CONSTRUCTION
SHIP TO
Customer's Order No.
Dwg. By JPC Date 7/92
Checked By JC Date 7-9-92
SHEET 218 OF
JOB NO. 92-106

CE92-11 (LINE #3)

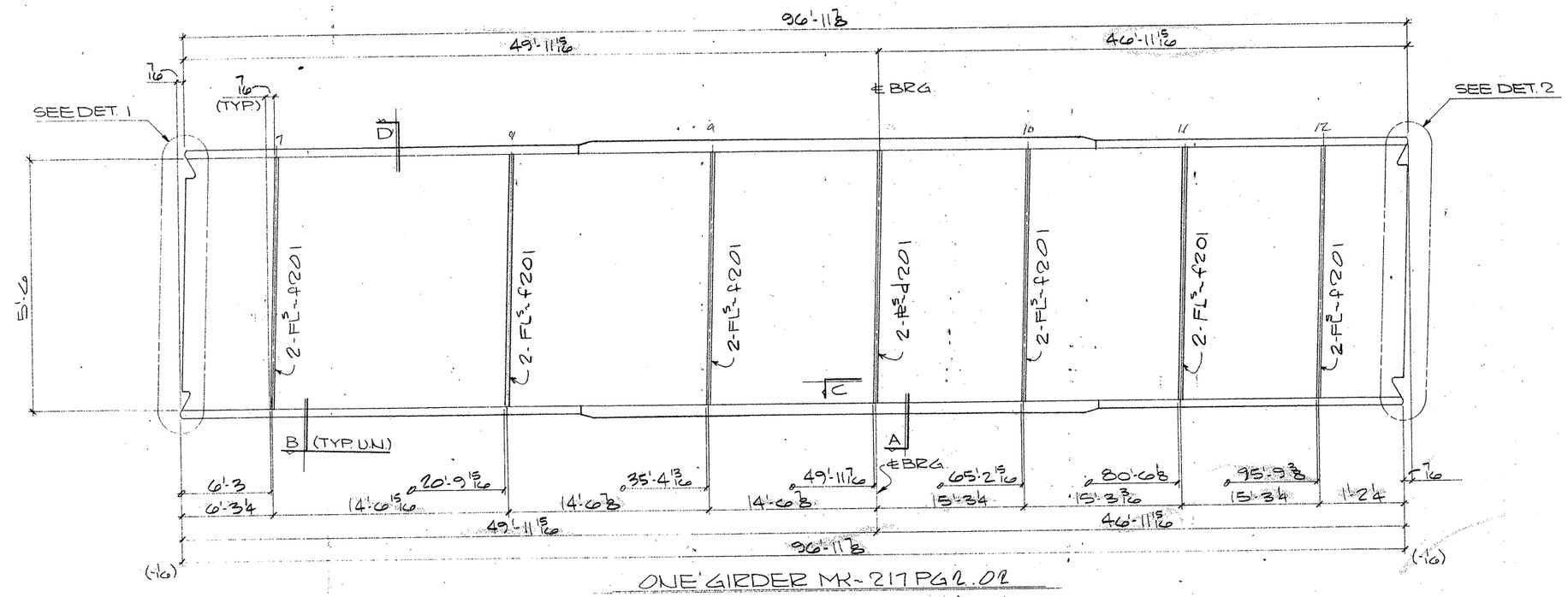

ONE GIRDER MK-217PG2.02

(APPROX. WT. = TONS)

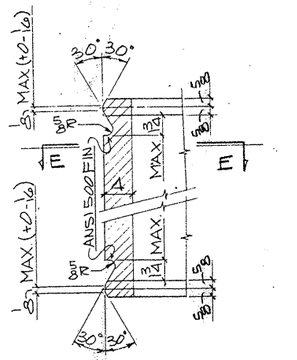

DETAIL - 1

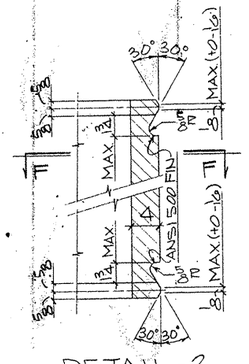

DETAIL - 2

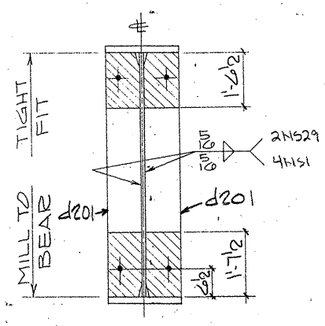

SECTION - A

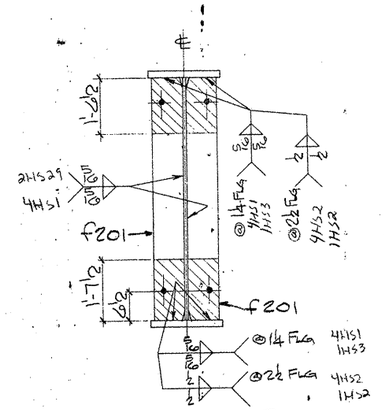

SECTION - B

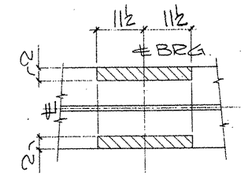

SECTION - C

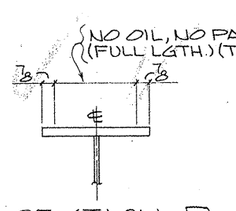

SECTION - D

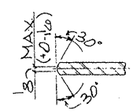

SECTION - E-E

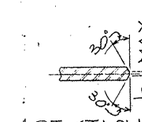

SECTION - F-F

SHOP NOTES:

1) FOR GENERAL NOTES SEE SHT. GN1
2) FOR GIRDER SUB-ASSEMBLY SEE SHT. 203
3) FOR STIFF. DETAILS SEE SHT. 201
4) FOR BLOCKING DIAGRAM SEE SHT. 233
5) FOR HEAT CURVE DIAGRAM SEE SHT. 210
6) ▨ INDICATES OIL, NO PAINT (N.S./F.S. & EDGES)

	Qnty	Material	Length	Mark Temp.	Mark Ship.	Wt.	Cut From	Remarks
1								
2	1	GIRDER			217PG2.02			
3	1	GIRDER SUB-ASSY		B203				
4	2	BRG STIFF		d201				
5	12	DIAF STIFF		f201				
6								
7								
8								
9								
10								
11								
12								
13								
14								
15								
16								
17								
18								
19								
20								
21								
22								
23								
24								
25								
26								
27								
28								
29								
30								
31								
32								
33								
34								
35								
36								
37								
38								
39								
40								
41								
42								
43								
44								
45								
46								
47								
48								
49								
50								
51								
52								
53								
54								
55								
56								
57								
58								
59								
60								

FOR APPROVAL
AUG 24 92
NOT FOR CONSTRUCTION

TEXAS DEPARTMENT OF TRANSPORTATION
APPROVED
DIVISION OF BRIDGES AND STRUCTURES
NOV 04 1992
APPROVAL OF THIS DRAWING DOES NOT RELIEVE THE CONTRACTOR OF THE RESPONSIBILITY FOR THE CORRECTNESS OF DETAILS

REVISION	DATE	DESCRIPTION OF REVISION
NO. 1		
NO. 2		
NO. 3		
NO. 4		
NO. 5		

PRINTING Reqd	For	Date

Bolts Holes, 15/16 ⌀ Unless Noted
Shop Paint SEE SHT. GN1
Fab. Spec. AS NTD Inspection
Architect
Erection By Field Connections

HIRSCHFELD STEEL CO. INC.
112 WEST 29TH SAN ANGELO, TEXAS 76903
PHONE (915) 653-3211

DESCRIPTION	520'-0 PLATE GIRDER UNIT
STRUCTURE	US 83/281 INTERCHANGE RAMP#1
LOCATION	HIDALGO COUNTY
CUSTOMER	GILBERT TEXAS CONSTRUCTION
SHIP TO	
Customer's Order No.	
Dwg. By JRH	Date 7/92
Checked By JC	Date 7-9-92

SHEET 217 OF
JOB NO. 92-106

G0206

FED ROAD DIV NO	STATE	FEDERAL AID PROJECT NO				
6	TX.	NH (50) M				
STATE DIST NO	COUNTY	CONTROL NO	SECTION NO	JOB NO	HIGHWAY NO	
21	HIDALGO	39	17	97	83/281	

APP 8/24

CE92-11 (LINE # 2)

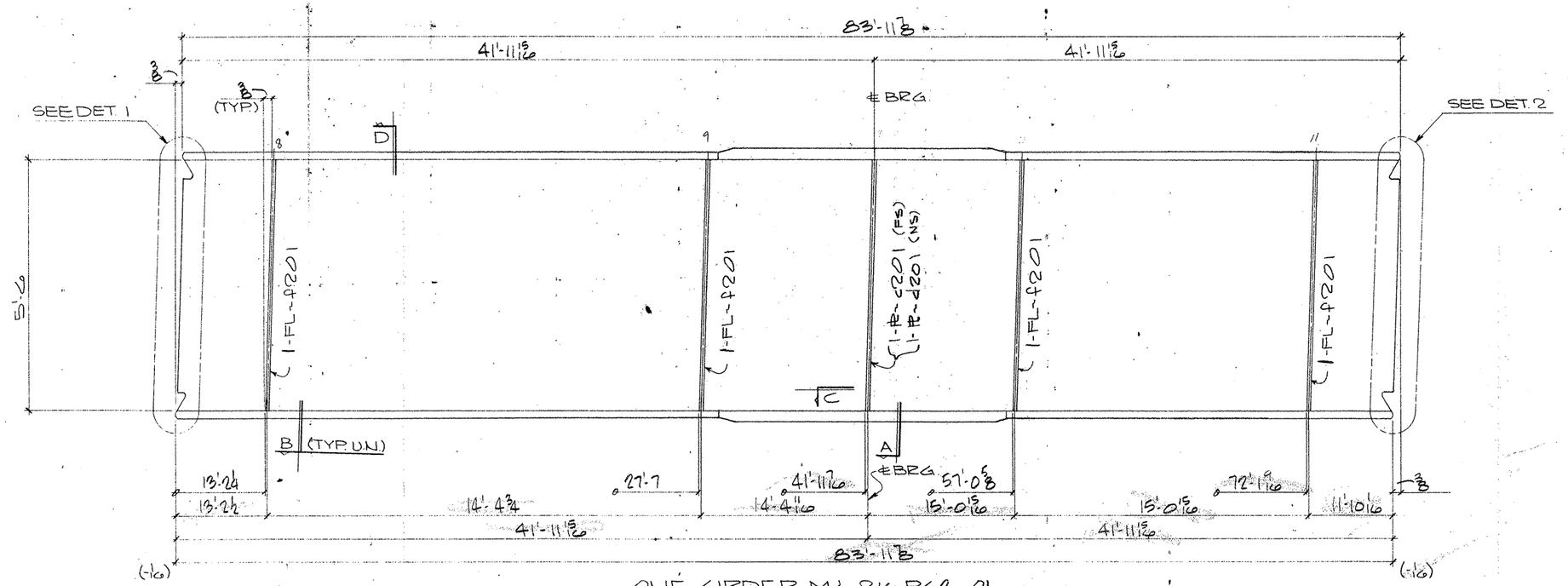

ONE GIRDER MK-216 PG2.01
(APPROX. WT. = TONS)

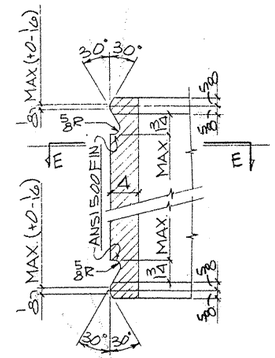

DETAIL-1

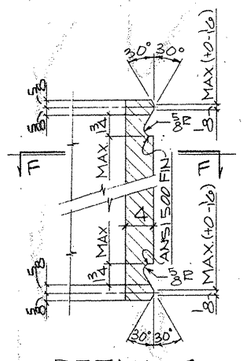

DETAIL-2

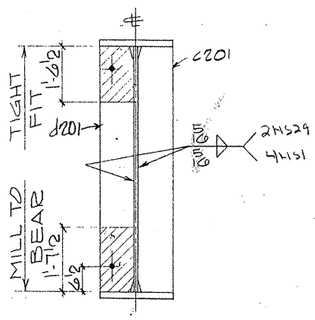

SECTION-A

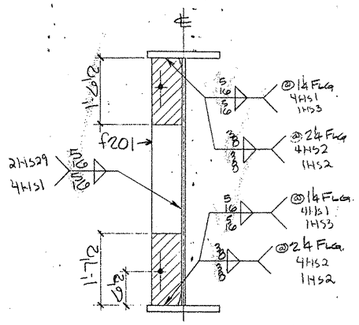

SECTION-B

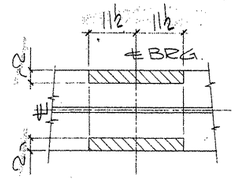

SECTION-C

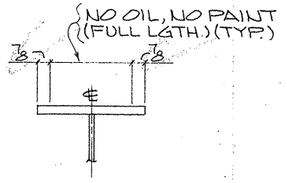

SECTION-D

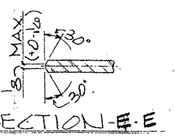

SECTION-E-E

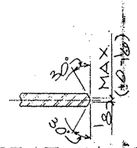

SECTION-F-F

SHOP NOTES:

1) FOR GENERAL NOTES SEE SHT. GN1
2) FOR GIRDER SUB-ASSEMBLY SEE SHT. 202
3) FOR STIFF. DETAILS SEE SHT. 221
4) FOR BLOCKING DIAGRAM SEE SHT. 232
5) FOR HEAT CURVE DIAGRAM SEE SHT. 210
6) ▨ INDICATES OIL; NO PAINT (N.S./F.S. & EDGES)

BILL OF MATERIAL

	Qnty	Material	Length	Mark Temp.	Mark Ship	Wt.	Cut From	Remarks
2	1	GIRDER			216Pg2.01			
3	1	GIRDER SUB-ASSY		B202				
4	1	BRG STIFF		c221				
5	1	BRG STIFF		d221				
6	4	DIAF STIFF		f221				

FOR APPROVAL
AUG 24 92
NOT FOR CONSTRUCTION

TEXAS HIGHWAY DEPARTMENT
APPROVED
DIVISION OF BRIDGE AND STRUCTURES
NOV 04 1992
APPROVAL OF THIS DRAWING DOES NOT RELIEVE THE FABRICATOR OF THE RESPONSIBILITY FOR THE CORRECTNESS OF DETAIL

REVISION	DATE	DESCRIPTION OF REVISION
NO. 1		
NO. 2		
NO. 3		
NO. 4		
NO. 5		

PRINTING Req'd	For	Date

Bolts Holes, 15/16 ø Unless Noted
Shop Paint SEE SHT. GN1
Fab Spec. AS NTD Inspection
Architect
Erection By Field Connections

HIRSCHFELD STEEL CO. INC.
112 WEST 29TH SAN ANGELO TEXAS 76903
PHONE (915) 653-3211

DESCRIPTION	520'-0 PLATE GIRDER UNIT
STRUCTURE	US 83/281 INTERCHANGE RAMP F
LOCATION	HIDALGO COUNTY
CUSTOMER	GILBERT TEXAS CONSTRUCTION
SHIP TO	
Customer's Order No.	
Dwg. By JDL	Date 7/92
Checked By JC	Date 7-9-92

SHEET 216 OF
JOB NO. 92-106

FED. ROAD DIV. NO.	STATE	FEDERAL AID PROJECT NO.			
6	TX.	NH (50) M			
STATE DIST. NO.	COUNTY	CONTROL NO.	SECTION NO.	JOB NO.	HIGHWAY NO.
21	HIDALGO	39	17	97	83/281

602066

CE92-11 1 (LINE # 1.)

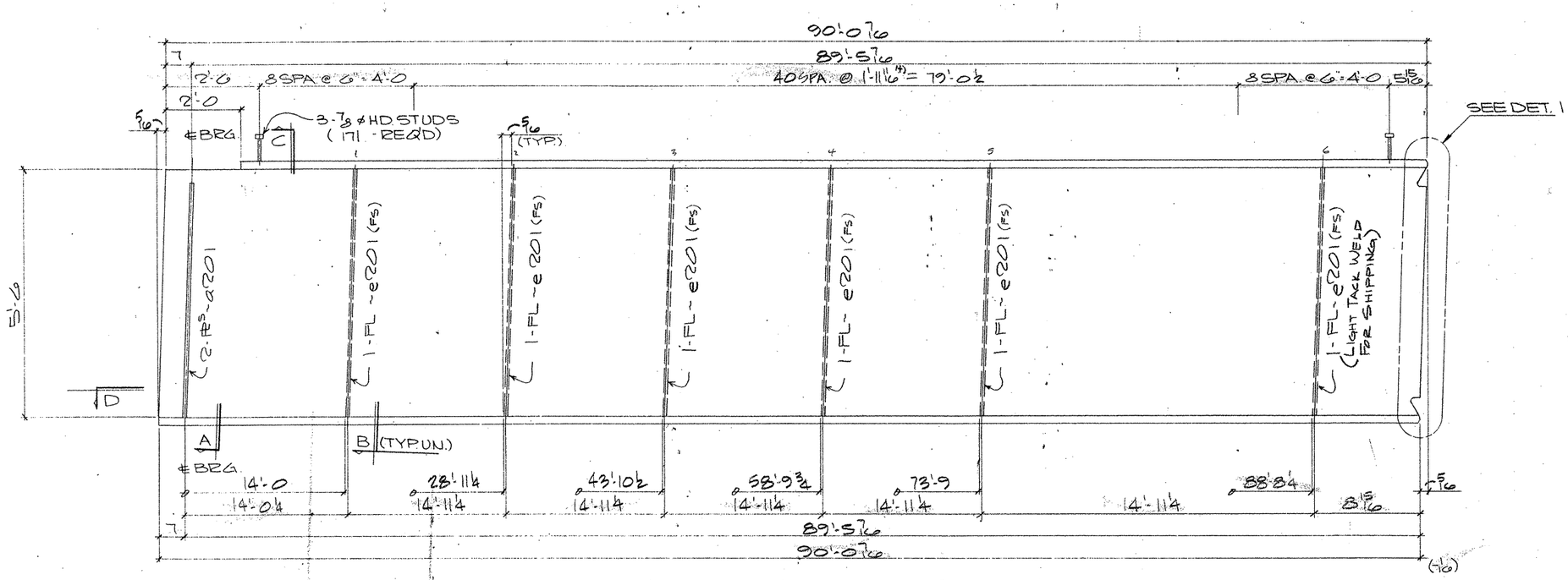

ONE GIRDER MK~ 215PG1.04

(APPROX. WT. = TONS)

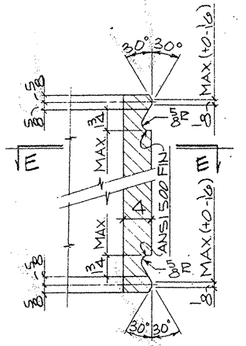

DETAIL - 1

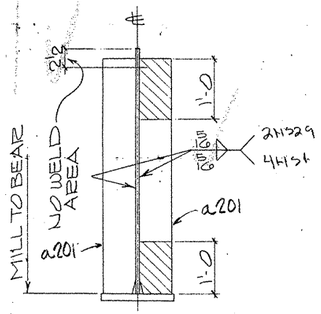

SECTION - A

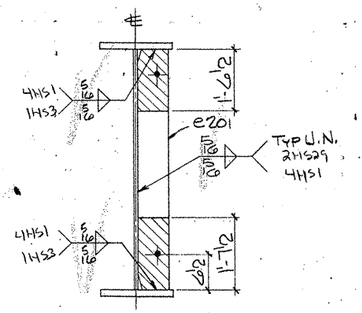

SECTION - B

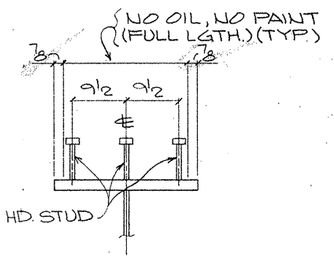

SECTION - C

(TYP. STUD SECT.)

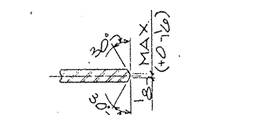

SECTION - E-E

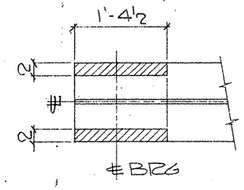

SECTION - D

SHOP NOTES:

1) FOR GENERAL NOTES SEE SHT. GN1
2) FOR GIRDER SUB-ASSEMBLY SEE SHT. 205
3) FOR STIFF. DETAILS SEE SHT. 201
4) FOR BLOCKING DIAGRAM SEE SHT. 235
5) FOR HEAT CURVE DIAGRAM SEE SHT. 210
6) ▨ INDICATES OIL, NO PAINT (N.S./F.S. & EDGES)

BILL OF MATERIAL

	Qnty.	Material	Length	Mark Temp.	Mark Ship.	Wt.	Cut From	Remarks
1								
2	1	GIRDER			215PG1.04			
3	1	GIRDER SUB-ASSY		A205				
4	2	BRG STIFF		a201				
5	6	DIAF STIFF		e201				
6								
7	171	HD STUD 7/8	0'-7				202-1	A108
8–60								

TEXAS DEPARTMENT OF TRANSPORTATION APPROVED REVISION OF BRIDGES AND STRUCTURES NOV 04 1992

APPROVAL OF THIS DRAWING DOES NOT RELIEVE THE FABRICATOR OF THE RESPONSIBILITY FOR THE CORRECTNESS OF DETAILS

FOR APPROVAL AUG 24 '92

NOT FOR CONSTRUCTION

REVISION	DATE	DESCRIPTION OF REVISION
NO. 1		
NO. 2		
NO. 3		
NO. 4		
NO. 5		

PRINTING: Reqd | For | Date

Bolts — Holes: 15/16 ø Unless Noted
Shop Paint SEE SHT. GN1
Fab. Spec AS NTD — Inspection
Architect
Erection By — Field Connections

HIRSCHFELD STEEL CO. INC.
112 WEST 29TH SAN ANGELO, TEXAS 76903
PHONE (915) 653-3211

DESCRIPTION 320'-0 PLATE GIRDER UNIT
STRUCTURE US 83/281 INTERCHANGE RAMP "B"
LOCATION HIDALGO COUNTY
CUSTOMER GILBERT TEXAS CONSTRUCTION
SHIP TO
Customer's Order No. — SHEET 215 OF
Dwg. By JBK — Date 7/92
Checked By JC — Date 7-9-92 — JOB NO. 92-106

60206

FED. ROAD DIV. NO.	STATE	FEDERAL AID PROJECT NO				
6	TX.	NH (50) M				
STATE DIST. NO.	COUNTY	CONTROL NO.	SECTION NO.	JOB NO.		HIGHWAY NO.
21	HIDALGO	39	17	97		83/281

CE 92-11 (LINE # 4)

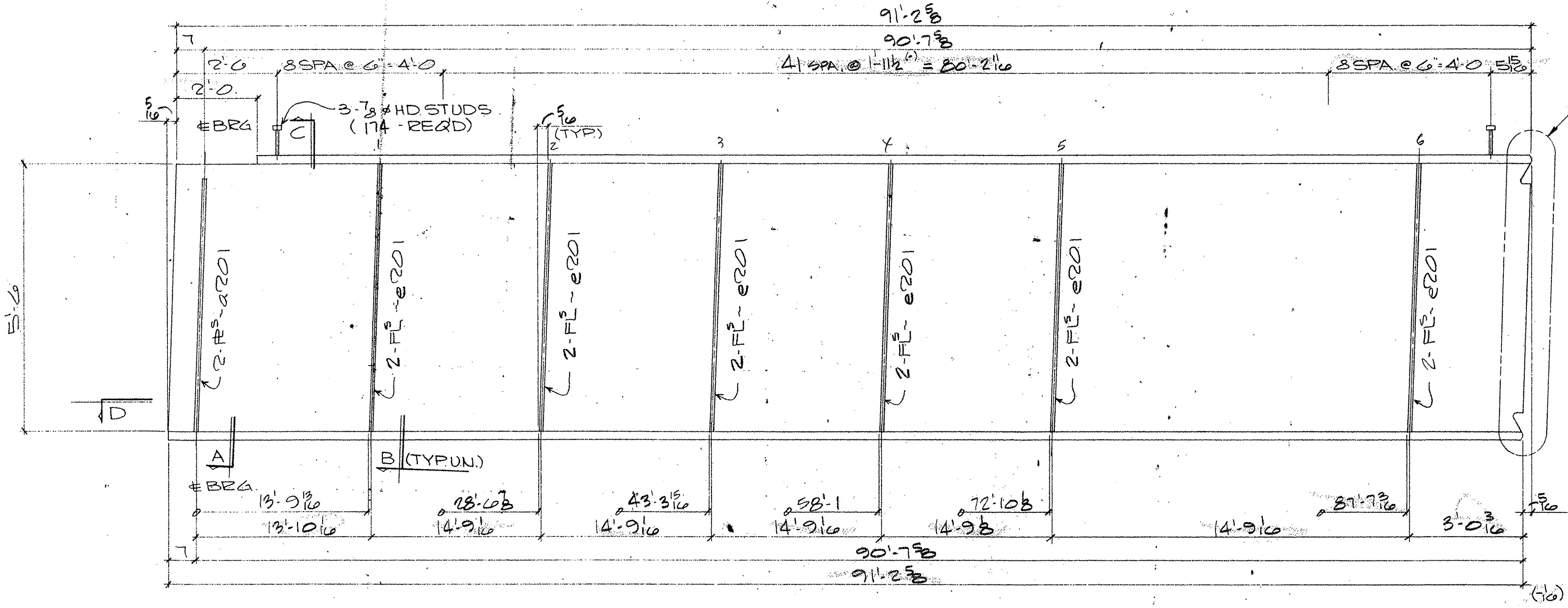

ONE GIRDER MK- 214PG1.03

(APPROX. WT. =   TONS)

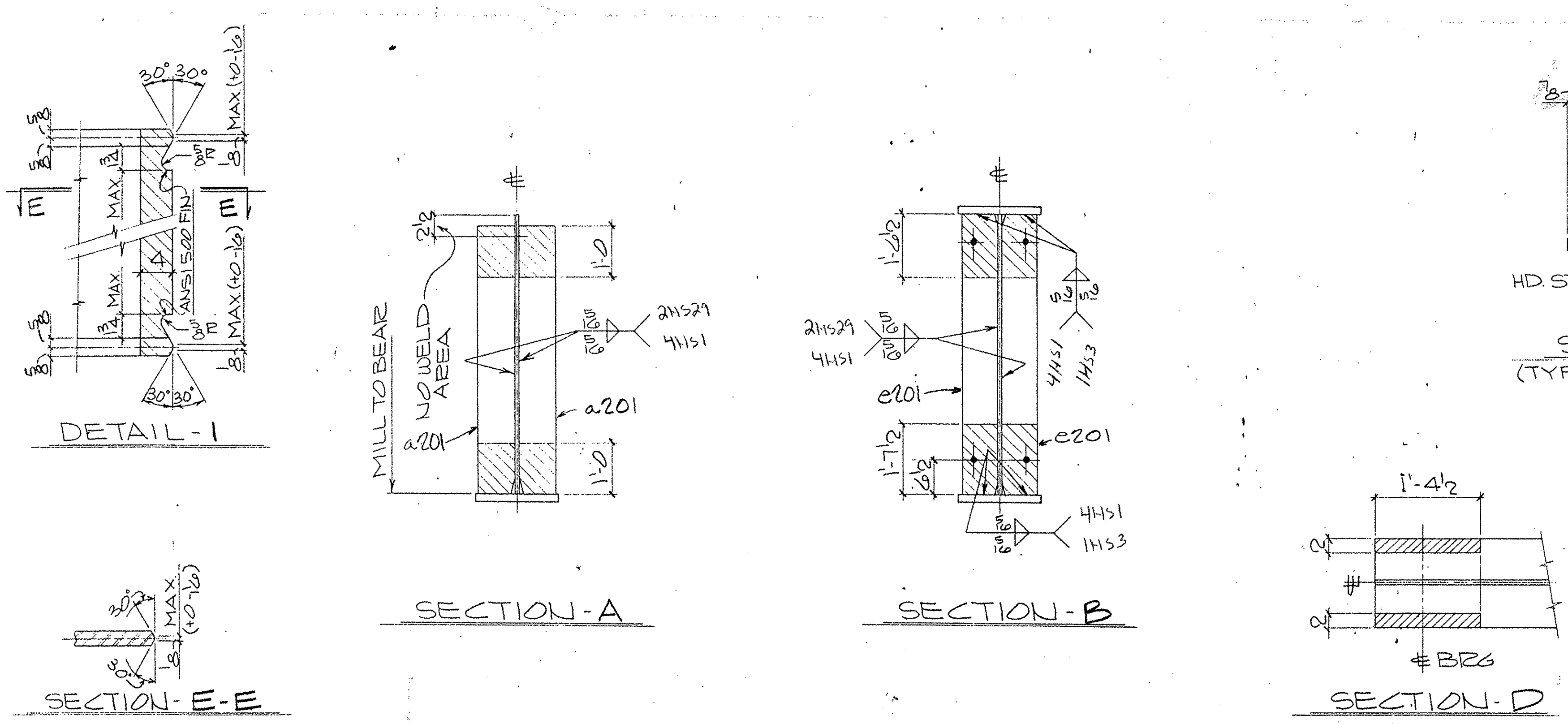

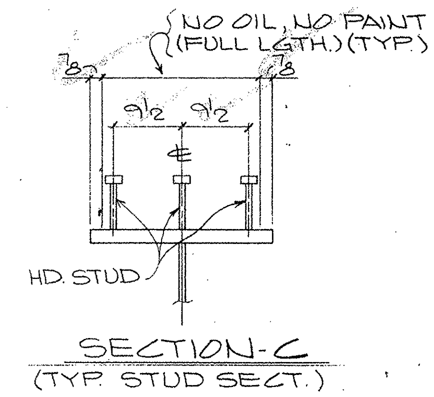

SHOP NOTES:
1) FOR GENERAL NOTES SEE SHT. GN1
2) FOR GIRDER SUB-ASSEMBLY SEE SHT. 204
3) FOR STIFF. DETAILS SEE SHT. 201
4) FOR BLOCKING DIAGRAM SEE SHT. 234
5) FOR HEAT CURVE DIAGRAM SEE SHT. 210
6) ▨ INDICATES OIL, NO PAINT (N.S./F.S. & EDGES)

BILL OF MATERIAL

	Qnty.	Material	Length	Mark Temp.	Mark Ship	Wt.	Cut From	Remarks
1								
2	1	GIRDER			214PG1.03			
3	1	GIRDER SUB-ASSY		A204				
4	2	BRG STIFF		a201				
5	12	DIAF STIFF		e201				
6								
7	174	HD STUD 7/8	0'-7				202-1	A108

FOR APPROVAL
AUG 24 '92
NOT FOR CONSTRUCTION

TEXAS DEPARTMENT OF TRANSPORTATION
APPROVED
DIVISION OF BRIDGES AND STRUCTURES
NOV 04 1992
APPROVAL OF THIS DRAWING DOES NOT RELIEVE THE CONTRACTOR OF THE RESPONSIBILITY FOR THE CORRECTNESS OF DETAIL.

REVISION	DATE	DESCRIPTION OF REVISION
NO. 1		
NO. 2		
NO. 3		
NO. 4		
NO. 5		

G0206

FED. ROAD DIV. NO.	STATE	FEDERAL AID PROJECT NO.			
6	TX.	NH (50) M			
STATE DIST. NO.	COUNTY	CONTROL NO.	SECTION NO.	JOB NO.	HIGHWAY NO.
21	HIDALGO	39	17	97	83/281

PRINTING: Req'd / For / Date

Bolts — Holes 15/16 ø Unless Noted
Shop Paint SEE SHT. GN1
Fab. Spec AS NTD — Inspection
Architect
Erection By — Field Connections

HIRSCHFELD STEEL CO. INC.
112 WEST 29TH SAN ANGELO, TEXAS 76903
PHONE (915) 653-3211

DESCRIPTION	520'-0 PLATE GIRDER UNIT
STRUCTURE	US 83/281 INTERCHANGE RAMP#1
LOCATION	HIDALGO COUNTY
CUSTOMER	GILBERT TEXAS CONSTRUCTION
SHIP TO	
Customer's Order No.	SHEET 214 OF
Dwg. By JBC — Date 7/92	JOB NO. 92-106
Checked By JC — Date 7-9-92	

CE 92-11 (LINE#3)

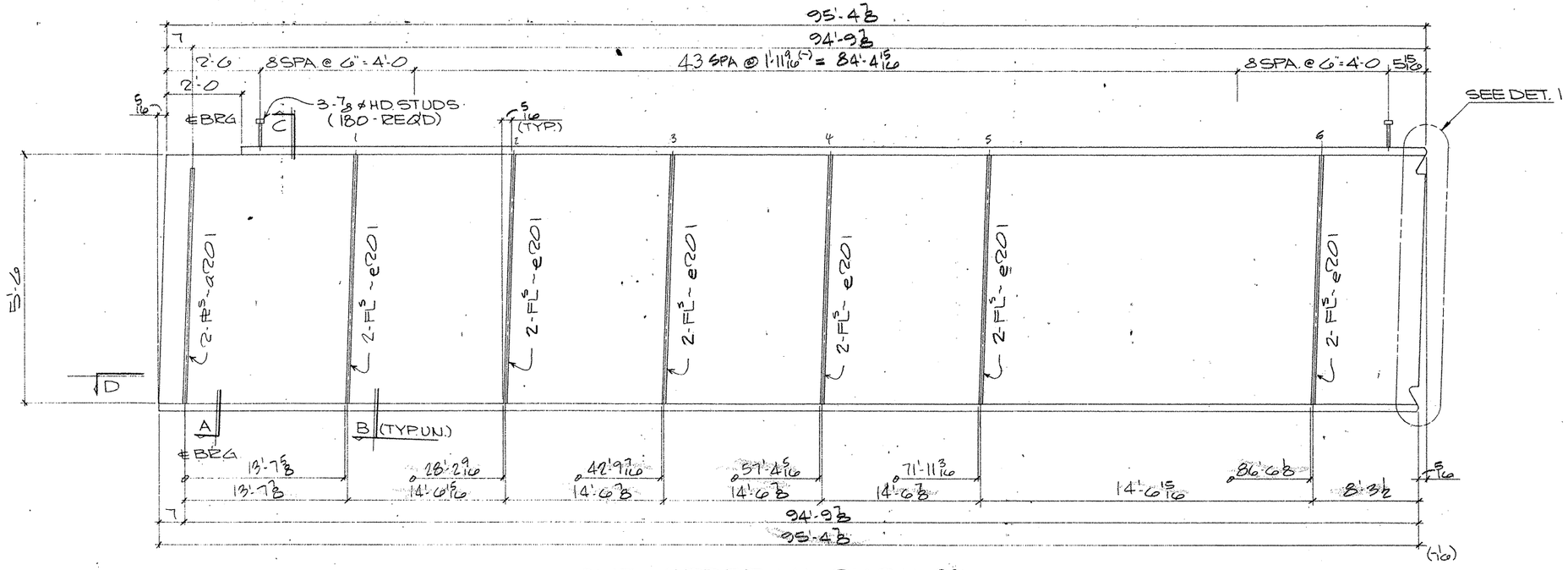

ONE GIRDER MK~ 213PG1.02

(APPROX. WT. = TONS)

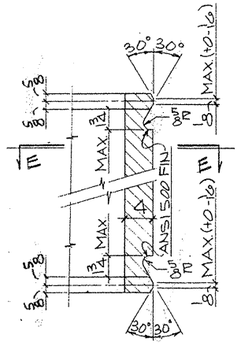

DETAIL - 1

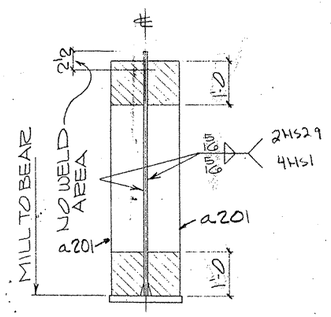

SECTION - A

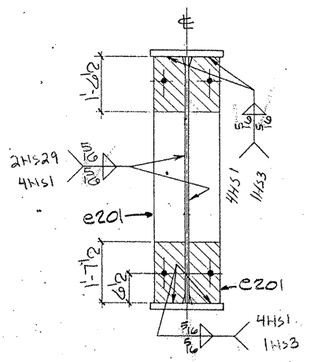

SECTION - B

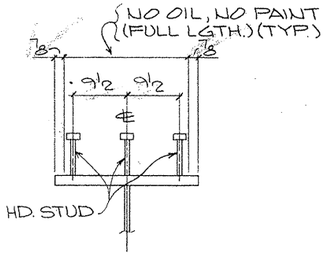

SECTION - C

(TYP. STUD SECT.)

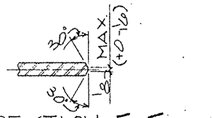

SECTION - E - E

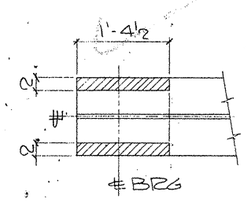

SECTION - D

SHOP NOTES:

1) FOR GENERAL NOTES SEE SHT. GN1
2) FOR GIRDER SUB-ASSEMBLY SEE SHT. 203
3) FOR STIFF. DETAILS SEE SHT. 201
4) FOR BLOCKING DIAGRAM SEE SHT. 233
5) FOR HEAT CURVE DIAGRAM SEE SHT. 210
6) ▨ INDICATES OIL, NO PAINT (N.S./F.S. & EDGES)

BILL OF MATERIAL

	Only.	Material	Length	Mark Temp	Mark Ship	Wt.	Cut From	Remarks
2	1	GIRDER			213PG1.02			
3	1	GIRDER SUB-ASSY		A203				
4	2	BRG STIFF		a201				
5	12	DIAF STIFF		e201				
7	180	HD STUD 7/8	0'-7				202-1	A108

TEXAS DEPARTMENT OF TRANSPORTATION
APPROVED
DIVISION OF BRIDGES AND STRUCTURES
NOV 04 1992

APPROVAL OF THIS DRAWING DOES NOT RELIEVE THE CONTRACTOR OF THE RESPONSIBILITY FOR THE CORRECTNESS OF THESE

FOR APPROVAL
AUG 24 '92
NOT FOR CONSTRUCTION

REVISION	DATE	DESCRIPTION OF REVISION
NO. 1		
NO. 2		
NO. 3		
NO. 4		
NO. 5		

PRINTING

Req'd	For	Date

Bolts. Holes: 15/16 ø Unless Noted
Shop Paint SEE SHT. GN1
Fab Spec AS NTD Inspection
Architect
Erection By Field Connections

HIRSCHFELD STEEL CO. INC.
112 WEST 29TH SAN ANGELO TEXAS 76903
PHONE (915) 653-3211

DESCRIPTION	520'-0 PLATE GIRDER UNIT
STRUCTURE	US 83/281 INTERCHANGE RAMP *1
LOCATION	HIDALGO COUNTY
CUSTOMER	GILBERT TEXAS CONSTRUCTION
SHIP TO	
Customer's Order No.	
Dwg. By JDK	Date 7/92
Checked By JC	Date 7-9-92

SHEET 213 OF
JOB NO. 92-106

60206

FED. ROAD DIV. NO.	STATE	FEDERAL AID PROJECT NO.			
6	TX.	NH (50) M			
STATE DIST. NO.	COUNTY	CONTROL NO.	SECTION NO.	JOB NO.	HIGHWAY NO.
21	HIDALGO	39	17	97	83/281

CE 92-11 (LINE # 2)

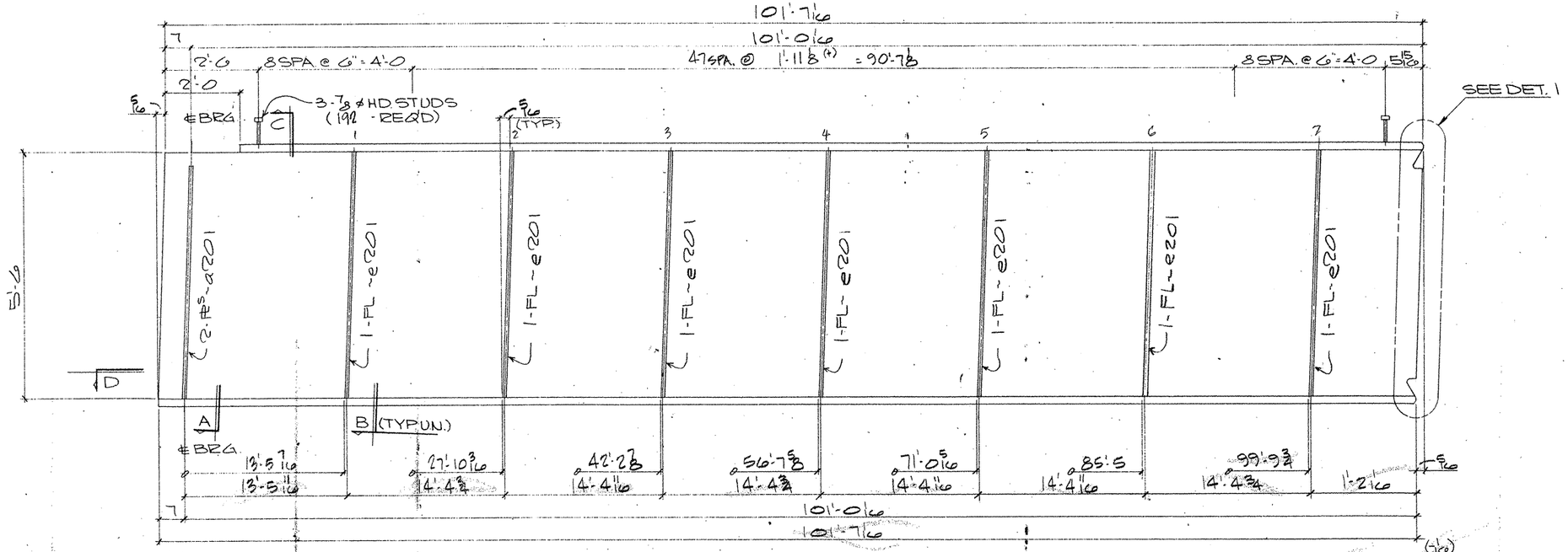

ONE GIRDER MK~212PG1.01

(APPROX. WT. = TONS)

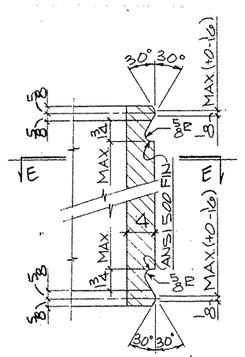

DETAIL-1

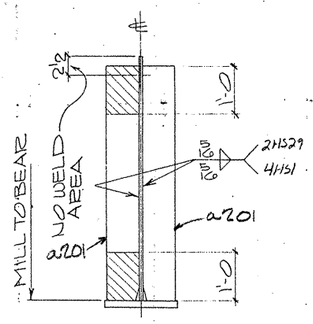

SECTION-A

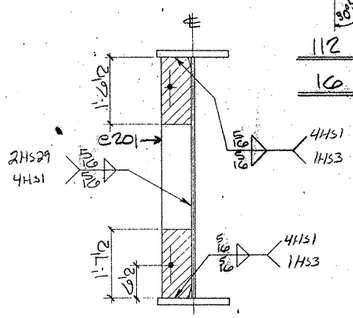

SECTION-B

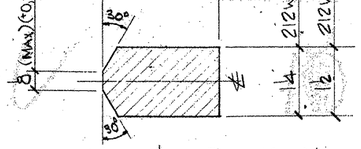

112 - WELD BARS Mk~212WB1

160 - WELD BARS Mk~212WB2

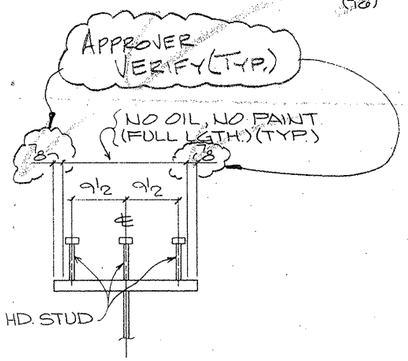

SECTION-C

(TYP. STUD SECT.)

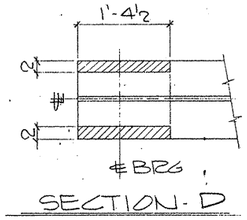

SECTION-D

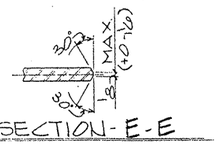

SECTION-E-E

SHOP NOTES:

1) FOR GENERAL NOTES SEE SHT. GN1
2) FOR GIRDER SUB-ASSEMBLY SEE SHT. 202
3) FOR STIFF. DETAILS SEE SHT. 221
4) FOR BLOCKING DIAGRAM SEE SHT. 232
5) FOR HEAT CURVE DIAGRAM SEE SHT. 210
6) ▨ INDICATES OIL, NO PAINT (N.S./F.S. & EDGES)

	Qnty	Material	Length	Mark Temp	Mark Ship.	Wt.	Cut From	Remarks
1.								
2	1	GIRDER			212PG1.01			
3	1	GIRDER SUB-ASSY		A202				
4	2	BRG STIFF		a201				
5	7	DIAF STIFF		e201				
6								
7	192	HD STUD 7/8	0'-7				202-1	A108
8								
9								
10								
11								
12								
13								
14								
15								
16								
17								
18								
19								
20								
21								
22								
23								
24								
25								
26								
27								
28								
29								
30		WELD BARS						
31	112	PL 1/4 x 1	0'-3		212WB1		STK	
32	160	PL 1/2 x 1	0'-3		212WB2		STK	
33								
34								
35								
36								
37								
38								
39								
40								
41								
42								
43								
44								
45								
46								
47								
48								
49								
50								
51								
52								
53								
54								
55								
56								
57								
58								
59								
60								

TEXAS DEPARTMENT OF TRANSPORTATION APPROVED DIVISION OF BRIDGES AND STRUCTURES NOV 04 1992

APPROVAL OF THIS DRAWING DOES NOT RELIEVE THE CONTRACTOR OF THE RESPONSIBILITY FOR THE CORRECTNESS OF DETAIL

FOR APPROVAL AUG 24 '92

NOT FOR CONSTRUCTION

REVISION	DATE	DESCRIPTION OF REVISION
NO. 1		
NO. 2		
NO. 3		
NO. 4		
NO. 5		

PRINTING		
Req'd	For	Date
4	4	8/24

Bolts Holes: 15/16 ø Unless Noted
Shop Paint SEE SHT. GN1
Fab. Spec. AS NTD Inspection
Architect
Erection By Field Connections

HIRSCHFELD STEEL CO. INC.
112 WEST 29TH SAN ANGELO. TEXAS 76903
PHONE (915) 653-3211

DESCRIPTION	320'-0 PLATE GIRDER UNIT
STRUCTURE	US 83/281 INTERCHANGE RAMP=I
LOCATION	HIDALGO COUNTY
CUSTOMER	GILBERT TEXAS CONSTRUCTION
SHIP TO	
Customer's Order No.	
Dwg. By JDC	Date 7/92
Checked By JC	Date 7-9-92

SHEET 212 OF
JOB NO. 92-1060

FED ROAD DIV. NO.	STATE	FEDERAL AID PROJECT NO			
6	TX.	NH (50) M			
STATE DIST. NO.	COUNTY	CONTROL NO.	SECTION NO.	JOB NO.	HIGHWAY NO.
21	HIDALGO	39	17	97	83/281

109

G020xp

CE 92-11 (LINE# 1')

A B C D E F G H K M N P S T V W X Z a b c d e f g h k m n p s t v w x aa ab ac ad ae af ag ah ak am an ap aq as at av aw ak az 1 2 3 4 5 6 7 8 9 10

327449

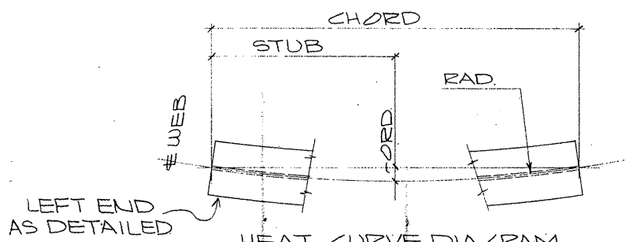

HEAT CURVE DIAGRAM
(ALONG TOP FLG.)

THIS SHEET NOT
DETAIL CHECKED

	STUB	5'-0	10'-0	15'-0	20'-0	25'-0	30'-0	35'-0	40'-0	45'-0	50'-0	55'-0	60'-0	65'-0
CORD	MR-224PG4.01	3 3/16	6 1/16	9 1/16	11 3/16	1'-0 7/8	1'-2 1/8	1'-3	1'-3 3/8	1'-3 5/16	1'-2 15/16	1'-1 15/16	1'-0 9/16	10 3/4
	MR-225PG4.02	4"	7 1/2	10 5/8	1'-1 5/16	1'-3 1/2	1'-5 5/16	1'-6 11/16	1'-7 7/8	1'-8 5/16	1'-8 1/4	1'-7 7/8	1'-7 7/8	1'-5 5/16
	MR-226PG4.03	4 1/16	7 3/4	11"	1'-1 13/16	1'-4 3/16	1'-6 1/8	1'-7 11/16	1'-8 3/4	1'-9 7/16	1'-9 1/16	1'-9 1/2	1'-8 15/16	1'-7 7/8
	MR-227PG4.04	4 5/16	8 1/4	11 3/4	1'-2 3/16	1'-5 7/16	1'-7 11/16	1'-9 1/2	1'-10 7/8	1'-11 3/16	2'-0 3/8	2'-0 1/2	2'-0 3/8	1'-11 1/2

	STUB	70'-0	75'-0	80'-0	85'-0	90'-0	95'-0	100'-0	105'-0	CHORD	RADIUS
CORD	MR-224PG4.01	8 1/2	5 7/8	2 3/4	—	—	—	—	—	83'-11 1/4	687.1972'
	MR-225PG4.02	1'-4 1/4	1'-2 3/16	11 1/16	8 3/4	5 3/8	1 9/16	—	—	96'-10 15/16	695.8639'
	MR-226PG4.03	1'-0 9/16	1'-4 9/16	1'-2 1/4	11 1/16	8 3/8	4 13/16	3/4	—	100'-10 13/16	704.5306'
	MR-227PG4.04	1'-10 3/8	1'-8 13/16	1'-6 13/16	1'-4 3/8	1'-1 15/16	10 5/16	6 5/8	2 9/16	107'-10 5/8	713.1972'

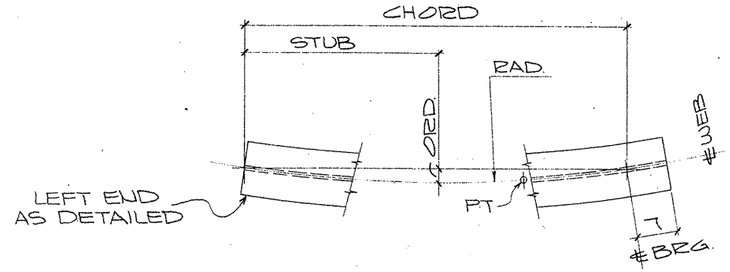

HEAT CURVE DIAGRAM
(ALONG TOP FLG.)

THIS SHEET NOT
DETAIL CHECKED

	STUB	5'-0	10'-0	15'-0	20'-0	25'-0	30'-0	35'-0	40'-0	45'-0	50'-0	55'-0	60'-0	65'-0	70'-0
CORD	MR-228PG5.01	3 11/16	7"	9 13/16	1'-0 1/4	1'-2 5/16	1'-3 3/4	1'-4 13/16	1'-5 1/2	1'-5 11/16	1'-5 1/2	1'-4 13/16	1'-3 3/4	1'-2 7/16	1'-0 1/4
	MR-229PG5.02	3 3/8	6 1/4	8 3/4	10 13/16	1'-0 7/16	1'-1 3/8	1'-2 3/8	1'-2 7/16	1'-2 5/8	1'-2 1/16	1'-1 1/8	11 3/4	10	8 5/16
	MR-230PG5.03	3 1/16	5 3/4	8"	9 1/8	11 3/16	1'-0 3/8	1'-0 11/16	1'-0 3/4	1'-0 7/16	11 1/16	10 1/2	9."	7 1/2	5 15/16
	MR-231PG5.04	3"	5 1/2	7 11/16	9 3/8	10 5/8	11 1/2	11 15/16	1'-0	11 5/8	10 13/16	9 9/16	8 3/8	6 5/8	5 3/16

	STUB	75'-0	80'-0	85'-0	90'-0	95'-0	100'-0	CHORD	RADIUS
CORD	MR-228PG5.01	10 1/4	8 1/4	6 1/4	4 1/4	2 1/4	3/16	100'-0 3/16	687.1972'
	MR-229PG5.02	6 9/16	4 13/16	3 1/8	1 3/8	—	—	93'-10 15/16	695.8639'
	MR-230PG5.03	4 7/16	2 7/8	1 5/16	—	—	—	89'-3 11/16	704.5306'
	MR-231PG5.04	3 3/4	2 1/4	13/16	—	—	—	87'-8 5/16	713.1972'

NOTE:
FOR GENERAL NOTES, SEE SHT. GN1.

TEXAS DEPARTMENT OF TRANSPORTATION
APPROVED EXCEPT AS NOTED
DIVISION OF BRIDGES AND STRUCTURES
NOV 04 1992
APPROVAL OF THIS DRAWING DOES NOT RELIEVE THE CONTRACTOR OF THE RESPONSIBILITY FOR THE CORRECTNESS OF DETAIL.

FOR APPROVAL
AUG 24 '92
NOT FOR CONSTRUCTION

10/9/92
THIS SHEET NOT
DETAIL CHECKED

FED. ROAD DIV. NO	STATE	FEDERAL AID PROJECT NO.			
6	TX.	NH (50) M			
STATE DIST. NO	COUNTY	CONTROL NO	SECTION NO	JOB NO	HIGHWAY NO
21	HIDALGO	39	17	97	83/281

HOLES ____ U.N.	FOR AP'VL ____		
BOLTS ____ U.N	RETURNED ____		
WELDS ____ U.N	TO SHOP ____		
PAINT SEE SHT GN1			

REVISIONS

NO.	DATE	REMARKS
1		
2		
3		
4		

HIRSCHFELD STEEL CO. INC.
112 WEST 29TH SAN ANGELO, TEXAS 76903
PHONE (915) 653-3211

CUSTOMER GILBERT TEXAS CONSTRUCTION
ARCHITECT
PROJECT US 83/281 INTERCHANGE RAMP "I"
LOCATION HIDALGO COUNTY

DRAWN CRT DATE 6-92
CHECKED DCT DATE 6-92
JOB NO. 92-106
SHEET NO. 21 of

CE92-11

b c d e f g h i j k l m n o p q r s t u v w x y z

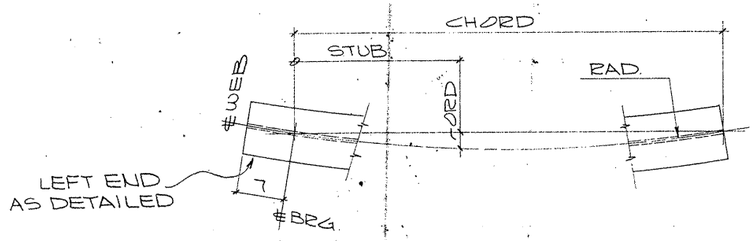

HEAT CURVE DIAGRAM
(ALONG TOP FLG.)

THIS SHEET NOT
DETAIL CHECKED

	STUB	5'-0	10'-0	15'-0	20'-0	25'-0	30'-0	35'-0	40'-0	45'-0	50'-0	55'-0	60'-0	65'-0	70'-0
CORD	MR-212PG1.01	4 3/16	7 15/16	11 1/4	1'-2 1/8	1'-4 5/8	1'-6 5/8	1'-8 3/16	1'-9 5/16	1'-10	1'-10 1/4	1'-10 1/16	1'-9 7/16	1'-8 7/16	1'-6 15/16
	MR-213PG1.02	3 7/8	7 5/16	10 5/8	1'-0 15/16	1'-3 1/16	1'-4 3/4	1'-6 1/16	1'-6 7/8	1'-7 5/16	1'-7 5/16	1'-6 7/8	1'-6	1'-4 1/16	1'-2 15/16
	MR-214PG1.03	3 5/8	6 7/8	9 1/16	1'-0 1/16	1'-2	1'-3 1/2	1'-4 9/16	1'-5 1/4	1'-5 1/2	1'-5 5/16	1'-4 1/16	1'-3 5/8	1'-2 3/8	1'-0 1/4
	MR-215PG1.04	3 5/16	6 1/16	9 3/8	11 1/16	1'-1 7/16	1'-3	1'-4 1/16	1'-4 5/8	1'-4 3/8	1'-4 1/16	1'-3 15/16	1'-2 7/8	1'-1 3/8	11 7/16

	STUB	75'-0	80'-0	85'-0	90'-0	95'-0	100'-0	CHORD	RADIUS
CORD	MR-212PG1.01	1'-5	1'-2 5/8	11 3/16	8 5/8	4 15/16	1 3/16	100'-11	687.1972'
	MR-213PG1.02	1'-0 13/16	10 7/16	7 7/16	3 11/16	—	—	94'-9	695.8639'
	MR-214PG1.03	9 15/16	7 3/16	4 1/16	7/16	—	—	90'-6 7/8	704.5306'
	MR-215PG1.04	9 1/8	6 5/16	3 3/8	—	—	—	89'-4 3/4	713.1972'

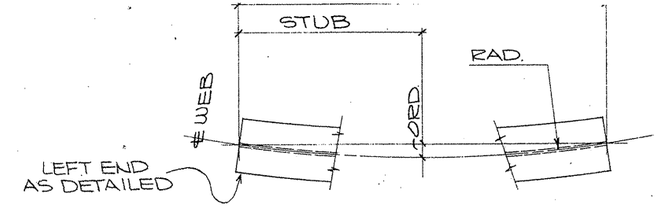

HEAT CURVE DIAGRAM
(ALONG TOP FLG.)

THIS SHEET NOT
DETAIL CHECKED

	STUB	5'-0	10'-0	15'-0	20'-0	25'-0	30'-0	35'-0	40'-0	45'-0	50'-0	55'-0	60'-0	65'-0
CORD	MR-216PG2.01	3 7/16	6 7/16	9 1/16	11 7/16	1'-0 7/8	1'-2 3/8	1'-3	1'-3 3/8	1'-3 5/16	1'-2 13/16	1'-1 15/16	1'-0 9/16	10 3/4
	MR-217PG2.02	4"	7 1/2	10 5/8	1'-1 5/16	1'-3 1/2	1'-5 5/16	1'-6 11/16	1'-7 5/8	1'-8 3/16	1'-8 1/4	1'-7 7/8	1'-7 1/8	1'-5 5/16
	MR-218PG2.03	4 1/16	7 3/4	11"	1'-1 13/16	1'-4 3/16	1'-6 1/8	1'-7 1/16	1'-8 3/4	1'-9 7/16	1'-9 1/16	1'-9 1/2	1'-8 15/16	1'-7 3/8
	MR-219PG2.04	4 5/16	8 1/4	11 3/4	1'-2 3/16	1'-5 7/16	1'-7 11/16	1'-9 1/2	1'-10 7/8	1'-11 7/8	2'-0 3/8	2'-0 1/2	2'-0 5/16	1'-11 1/2

	STUB	70'-0	75'-0	80'-0	85'-0	90'-0	95'-0	100'-0	105'-0	CHORD	RADIUS
CORD	MR-216PG2.01	8 1/2	5 7/8	2 3/4	—	—	—	—	—	83'-11 1/4	687.1972'
	MR-217PG2.02	1'-4 1/4	1'-2 3/16	11 1/16	8 3/4	5 3/8	1 9/16	—	—	96'-10 15/16	695.8639'
	MR-218PG2.03	1'-6 7/16	1'-4 9/16	1'-2 1/4	11 9/16	8 3/8	4 13/16	3/4	—	100'-10 13/16	704.5306'
	MR-219PG2.04	1'-10 3/8	1'-8 13/16	1'-6 13/16	1'-4 3/8	1'-1 9/16	10 5/16	6 5/8	2 9/16	107'-10 11/16	713.1972'

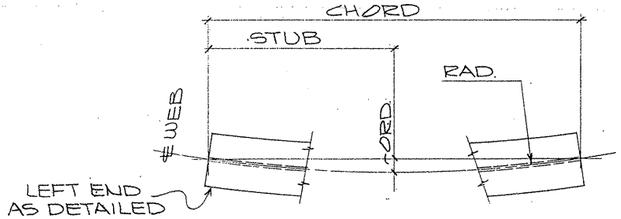

HEAT CURVE DIAGRAM
(ALONG TOP FLG.)

THIS SHEET NOT
DETAIL CHECKED

	STUB	5'-0	10'-0	15'-0	20'-0	25'-0	30'-0	35'-0	40'-0	45'-0	50'-0	55'-0	60'-0	65'-0	70'-0	75'-0	80'-0	85'-0	90'-0	95'-0	100'-0	105'-0	110'-0	115'-0	120'-0	125'-0	CHORD	RADIUS
CORD	MR-220PG3.01	5 1/16	10 1/4	1'-2 1/16	1'-6 3/4	1'-10 5/16	2'-1 7/16	2'-4 3/16	2'-6 7/16	2'-8 1/4	2'-9 5/8	2'-10 5/8	2'-11 1/8	2'-11 7/16	2'-10 7/8	2'-10 1/16	2'-8 13/16	2'-7 3/16	2'-5 1/16	2'-2 9/16	1'-11 9/16	1'-8 3/8	1'-4 5/16	1'-0	7/4	2 1/16	126'-10 13/16	687.1972'
	MR-221PG3.02	4 15/16	9 1/2	1'-1 9/16	1'-5 1/4	1'-8 7/16	1'-11 1/4	2'-1 9/16	2'-3 1/2	2'-5	2'-6 1/16	2'-6 1/16	2'-6 3/8	2'-8 11/16	2'-6	2'-4 3/8	2'-3 3/8	2'-1 7/16	1'-11	1'-8 3/16	1'-4 15/16	1'-1 1/4	9 1/8	4 9/16	—	—	119'-7 7/16	695.8639'
	MR-222PG3.03	5 3/16	9 15/16	1'-2 1/4	1'-6 1/8	1'-9 5/8	2'-0 3/8	2'-3 1/4	2'-5 7/16	2'-7 7/16	2'-8 1/2	2'-9 7/16	2'-9 15/16	2'-9 15/16	2'-9 7/16	2'-8 1/8	2'-7 7/16	2'-5 1/8	2'-3 1/16	2'-1 5/16	1'-10 3/8	1'-7 1/16	1'-3 1/4	11 1/16	6 3/8	1 5/16	126'-2 13/16	704.5306'
	MR-223PG3.04	4 7/8	9 3/8	1'-1 3/8	1'-5	1'-8 1/4	1'-11"	2'-1 3/8	2'-3 5/16	2'-4 13/16	2'-5 5/8	2'-6 9/16	2'-6 13/16	2'-6 5/8	2'-6 1/16	2'-5 1/16	2'-3 5/8	2'-1 3/4	1'-11 7/16	1'-8 3/4	1'-5 5/8	1'-2 1/8	10 1/8	5 3/4	15/16	—	120'-11 1/16	713.1972'

FOR APPROVAL
AUG 24 '92

NOT FOR CONSTRUCTION

TEXAS DEPARTMENT OF TRANSPORTATION
APPROVED EXCEPT AS NOTED
DIVISION OF BRIDGES AND STRUCTURES
NOV 04 1992
APPROVAL OF THIS DRAWING DOES NOT RELIEVE THE CONTRACTOR OF THE RESPONSIBILITY FOR THE CORRECTNESS OF DETAIL

NOTE:
FOR GENERAL NOTES, SEE SHT. GN1.

THIS SHEET NOT
DETAIL CHECKED
4/15/24

HOLES	U.N	FOR AP'VL	
BOLTS	U.N	RETURNED	
WELDS	U.N	TO SHOP	
PAINT	SEE SHT GN1		

REVISIONS

NO.	DATE	REMARKS
1		
2		
3		
4		

HIRSCHFELD STEEL CO. INC.
112 WEST 29TH SAN ANGELO, TEXAS 76903
PHONE (915) 653-3211

CUSTOMER GILBERT TEXAS CONSTRUCTION
ARCHITECT
PROJECT US 83/281 INTERCHANGE RAMP # 1
LOCATION HIDALGO COUNTY

DRAWN CBT DATE 6-92
CHECKED DCT DATE 6-92
JOB NO. 92-106
SHEET NO. 210 of

FED. ROAD DIV. NO.	STATE	FEDERAL AID PROJECT NO.			
6	TX.	NH (50) M			
STATE DIST. NO.	COUNTY	CONTROL NO.	SECTION NO.	JOB NO.	HIGHWAY NO.
21	HIDALGO	39	17	97	83/281

CE 92-11

a b c d e f g h i j k l m n o p q r s t u v w x y z

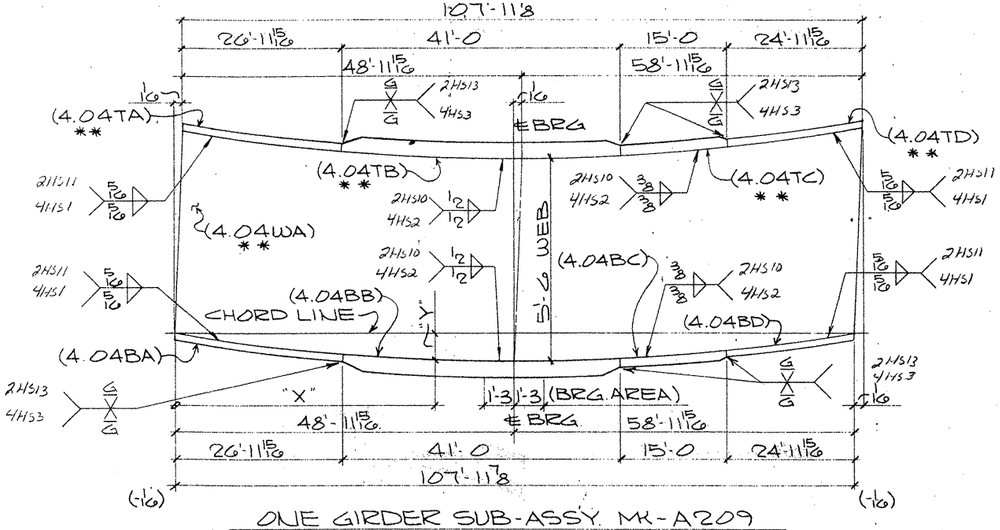

ONE GIRDER SUB-ASSY. MK-A209
(FOR GIRDER ~ 227PG4.04)

MK-A209								
"X"	2'-0 9/16	17'-8 3/8	33'-4 1/8	48'-11 15/16	63'-11 3/16	78'-10 7/16	93'-9 11/16	
"Y"	1/8	15/16	1 5/8	2	1 15/16	1 9/16	1 13/16	
				℄BRG				

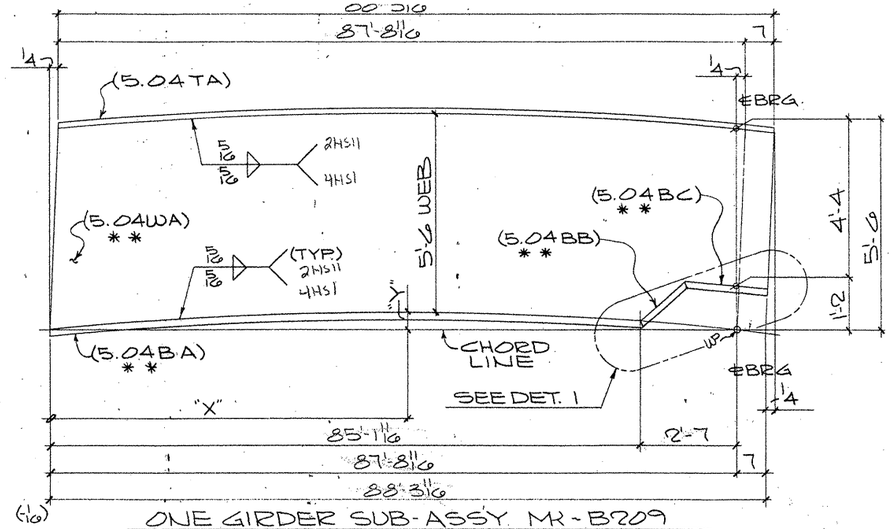

ONE GIRDER SUB-ASSY. MK-B209
(FOR GIRDER ~ 231PG5.04)

MK-B209								
"X"	8 15/16	15'-8 3/16	30'-7 1/16	45'-6 11/16	60'-6 3/16	75'-6 3/16		
"Y"	0"	3/8	5/8	3/4	5/8	5/16		

	Qnty	Material	Length	Mark Temp.	Mark Ship.	Wt.	Cut From	Remarks
1								
2								
3	1	GIRDER SUB-ASSY			A209			
4	1	PL 11/16 × 66	107'-11 15/16	4.04WA			203-15	CVN2
5	1	PL 1 1/2 × 22	26'-11 15/16	4.04TA			205-5	CVN2
6	1	PL 3 × 24	41'-0	4.04TB			206-5	CVN3
7	1	PL 2 × 22	15'-0	4.04TC			205-4	CVN2
8	1	PL 1¼ × 22	24'-11 15/16	4.04TD			205-3	CVN2
9	1	PL 1 1/2 × 22	26'-11 15/16	4.04BA			208-6	
10	1	PL 3 × 24	41'-0	4.04BB			208-5	
11	1	PL 2 × 22	15'-0	4.04BC			208-4	
12	1	PL 1¼ × 22	24'-11 15/16	4.04BD			208-3	
13								
14								
15								
16								
17								
18	1	GIRDER SUB-ASSY			B209			
19	1	PL 1/2 × 66	88'-3 15/16	5.04WA			203-17	CVN2
20	1	PL 1¼ × 22	88'-3 1/16	5.04TA			208-8	
21	1	PL 1¼ × 22	85'-1 1/16	5.04BA			205-7	CVN2
22	1	PL 1¼ × 22	1'-7 15/16	5.04BB			205-9	CVN2
23	1	PL 1¼ × 22	1'-10 3/16	5.04BC			205-8	CVN2
24								
25								
26								
27								
28								
29								
30								
31								
32								
33								
34								
35								
36								
37								
38								
39								
40								
41								
42								
43								
44								
45								
46								
47								
48								
49								
50								
51								
52								
53								
54								
55								
56								
57								
58								
59								
60								

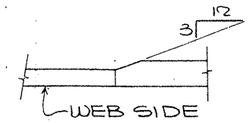

TYP. FLG. THKNESS TRANSITION

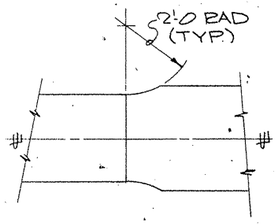

TYP. FLG. WIDTH TRANSITION

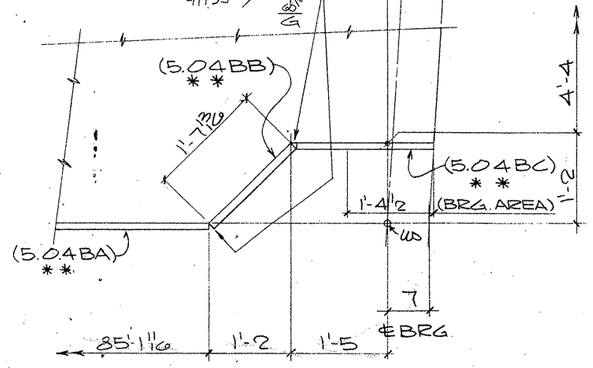

DETAIL - 1

SHOP NOTES:
1) FOR GENERAL NOTES SEE SHT. GN1
2) MATERIAL NOTED * * MUST MEET CHARPY V-NOTCH REQUIREMENTS
3) FOR HEAT CURVE DIAGRAM SEE SHT. 211

FOR APPROVAL
AUG 24 '92
NOT FOR CONSTRUCTION

TEXAS TRANSPORTATION COMMISSION
TRANSPORTATION PLANNING AND PROGRAMMING
APPROVED
NOV 04 1992
APPROVAL OF THIS DRAWING DOES NOT RELIEVE THE CONTRACTOR OF THE RESPONSIBILITY FOR THE CORRECTNESS OF DETAIL

REVISION	DATE	DESCRIPTION OF REVISION
NO. 1		
NO. 2		
NO. 3		
NO. 4		
NO. 5		

PRINTING Req'd	For	Date

Bolts Holes Unless Noted
Shop Paint SEE SHT GN1
Fab. Spec. A572-50 UN Inspection
Architect
Erection By Field Connections

HIRSCHFELD STEEL CO. INC.
112 WEST 29TH SAN ANGELO, TEXAS 76903
PHONE (915) 653-3211

DESCRIPTION	320'-0 PLATE GIRDER UNIT
STRUCTURE	US 83/281 INTERCHANGE RAMP * 1
LOCATION	HIDALGO COUNTY
CUSTOMER	GILBERT TEXAS CONSTRUCTION
SHIP TO	
Customer's Order No.	
Dwg By CET	Date 8-92
Checked By	Date

SHEET 209 OF
JOB NO. 92-106

G0206

FED ROAD DIV. NO.	STATE	FEDERAL AID PROJECT NO.			
6	TX.	NH (50) M			
STATE DIST. NO.	COUNTY	CONTROL NO.	SECTION NO.	JOB NO.	HIGHWAY NO.
21	HIDALGO	39	17	97	83/281

CE92-11 (LINE # 4)

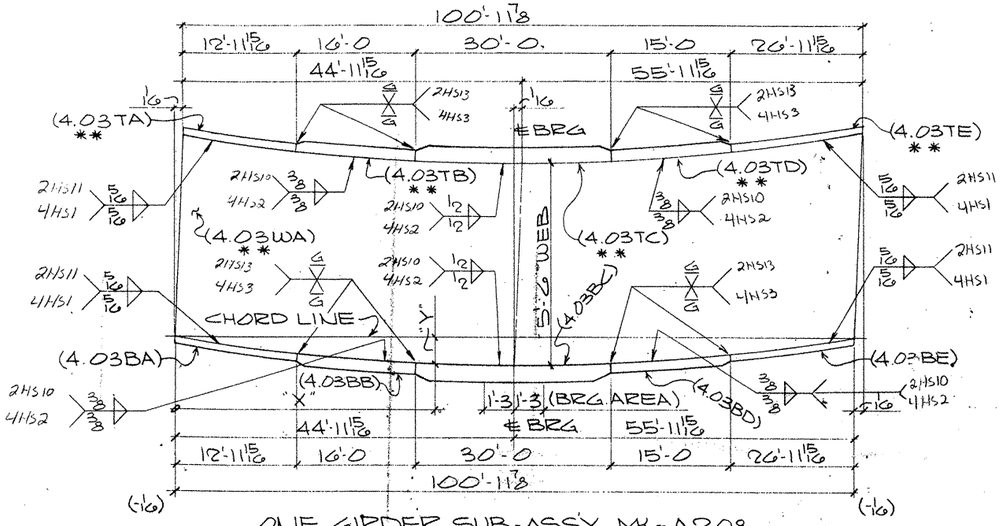

ONE GIRDER SUB-ASSY. MK-A208
(FOR GIRDER - 230PG4.03)

MK-A208								
"X"	14'-0 15/16	29'-6 1/16	44'-11 15/16	59'-9	74'-6 1/16	89'-3 1/8		
"Y"	13/16	1 1/2	1 13/16	1 3/4	1 15/16	5/8		
			℄BRG					

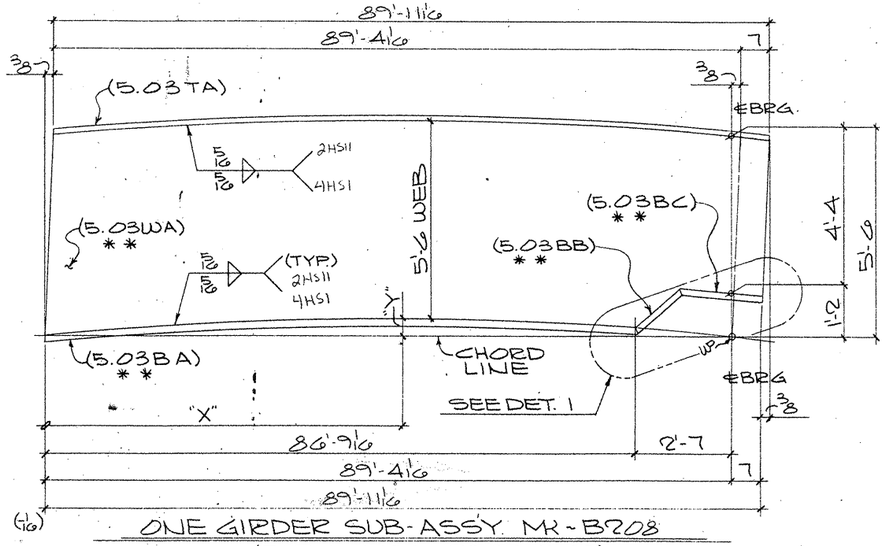

ONE GIRDER SUB-ASSY. MK-B208
(FOR GIRDER - 230PG5.03)

MK-B208								
"X"	3'-0 3/16	17'-9 7/16	32'-6 3/8	47'-3 7/16	62'-1 7/16	77'-1/16		
"Y"	0"	0"	1/16	1/16	1/16	0"		

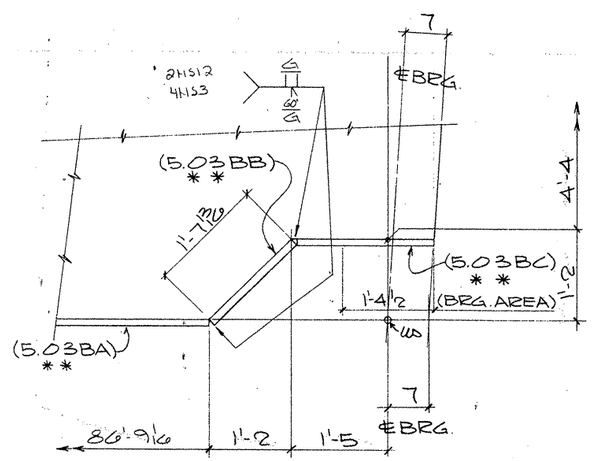

DETAIL - 1

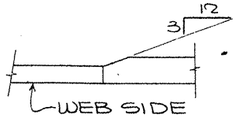

TYP. FLG. THKNESS TRANSITION

SHOP NOTES:

1) FOR GENERAL NOTES SEE SHT. GN1
2) MATERAL NOTED "* *" MUST MEET CHARPY V-NOTCH REQUIREMENTS
3) FOR HEAT CURVE DIAGRAM SEE SHT. 21\

BILL OF MATERIAL

	Qnty.	Material	Length	Mark Temp	Mark Ship	Wt	Cut From	Remarks
3	1	GIRDER SUB-ASSY			A208			
4	1	PL 5/8 x 66	100'-11 7/16	4.03WA			203-11	CVN2
5	1	PL 1 1/4 x 22	12'-11 15/16	4.03TA			204-17	CVN2
6	1	PL 1 3/4 x 22	16'-0	4.03TB			204-16	CVN2
7	1	PL 2 3/4 x 22	30'-0	4.03TC			206-4	CVN3
8	1	PL 2 x 22	15'-0	4.03TD			204-15	CVN2
9	1	PL 1 1/4 x 22	26'-11 15/16	4.03TE			204-14	CVN2
10	1	PL 1 1/4 x 22	12'-11 15/16	4.03BA			207-18	
11	1	PL 1 3/4 x 22	16'-0	4.03BB			207-17	
12	1	PL 3 x 22	30'-0	4.03BC			207-16	
13	1	PL 2 x 22	15'-0	4.03BD			207-15	
14	1	PL 1 1/4 x 22	26'-11 15/16	4.03BE			207-14	
15								
16								
17								
18	1	GIRDER SUB-ASSY			B208			
19	1	PL 1/2 x 66	89'-11 7/16	5.03WA			203-13	CVN2
20	1	PL 1 1/4 x 22	89'-11 7/16	5.03TA			207-20	
21	1	PL 1 1/4 x 22	86'-9 1/16	5.03BA			204-19	CVN2
22	1	PL 1 1/4 x 22	1'-7 13/16	5.03BB			205-9	CVN2
23	1	PL 1 1/4 x 22	1'-10 3/4	5.03BC			205-8	CVN2
24								
25								
26								
27								
28								
29								
30								
31								
32								
33								
34								
35								
36								
37								
38								
39								
40								
41								
42								
43								
44								
45								
46								
47								
48								
49								
50								
51								
52								
53								
54								
55								
56								
57								
58								
59								
60								

FOR APPROVAL
AUG 24 92
NOT FOR CONSTRUCTION

TEXAS HIGHWAY DEPARTMENT
TRANSPORTATION
APPROVED
DIVISION OF BRIDGES AND STRUCTURES
NOV 04 1992
APPROVAL OF THIS DRAWING DOES NOT RELIEVE THE CONTRACTOR OF THE RESPONSIBILITY FOR THE CORRECTNESS OF DETAILS.

REVISION	DATE	DESCRIPTION OF REVISION
NO. 1		
NO. 2		
NO. 3		
NO. 4		
NO. 5		

PRINTING Req'd	For	Date

Bolts Holes Unless Noted
Shop Paint SEE SHT GN1
Fab Spec A572-50 UN Inspection
Architect
Erection By Field Connections

HIRSCHFELD STEEL CO. INC.
112 WEST 29TH SAN ANGELO, TEXAS 76903
PHONE (915) 653-3211

DESCRIPTION 520'-0 PLATE GIRDER UNIT
STRUCTURE US 83/281 INTERCHANGE RAMP # 1
LOCATION HIDALGO COUNTY
CUSTOMER GILBERT TEXAS CONSTRUCTION
SHIP TO
Customer's Order No.
Dwg. By ERT Date 8-92
Checked By DLT Date 8-92
SHEET 208 OF
JOB NO. 92-106

Apr 8/21

FED. ROAD DIV. NO.	STATE	FEDERAL AID PROJECT NO.				
6	TX.	NH (50) M				
STATE DIST. NO.	COUNTY	CONTROL NO.	SECTION NO.	JOB NO.	HIGHWAY NO.	
21	HIDALGO	39	17	97	83/281	

G0200

CE92-11 (LINE # 3)

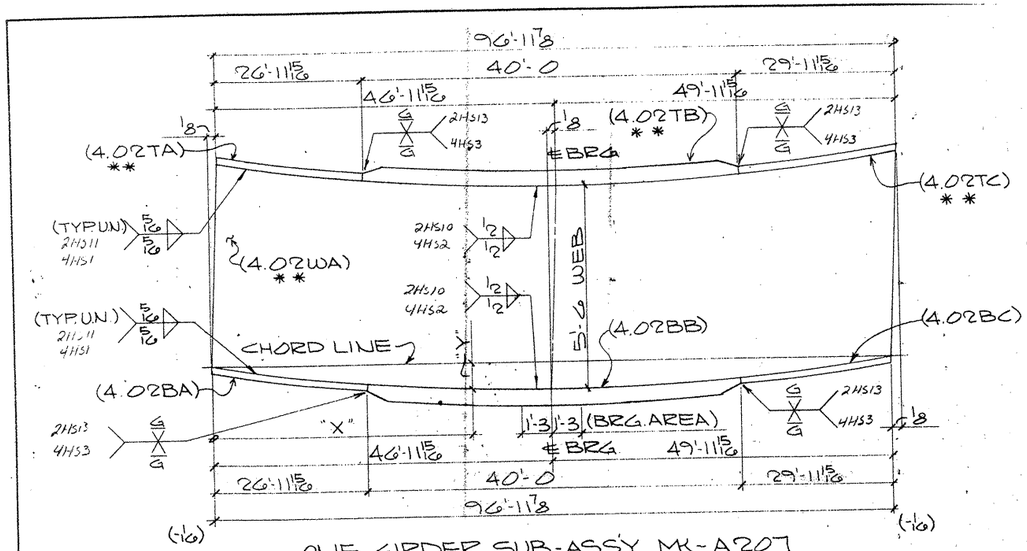

ONE GIRDER SUB-ASSY. MK-A207

(FOR GIRDER-225PG4.02)

MK-A207								
"X"	1'-2 5/16	16'-5 1/2	31'-8 1/16	46'-11 15/16	61'-6 13/16	76'-1 1/16	90'-8 5/8	
"Y"	1/16	3/4	1 5/16	1 1/2	1 3/8	15/16	5/16	
				℄BRG				

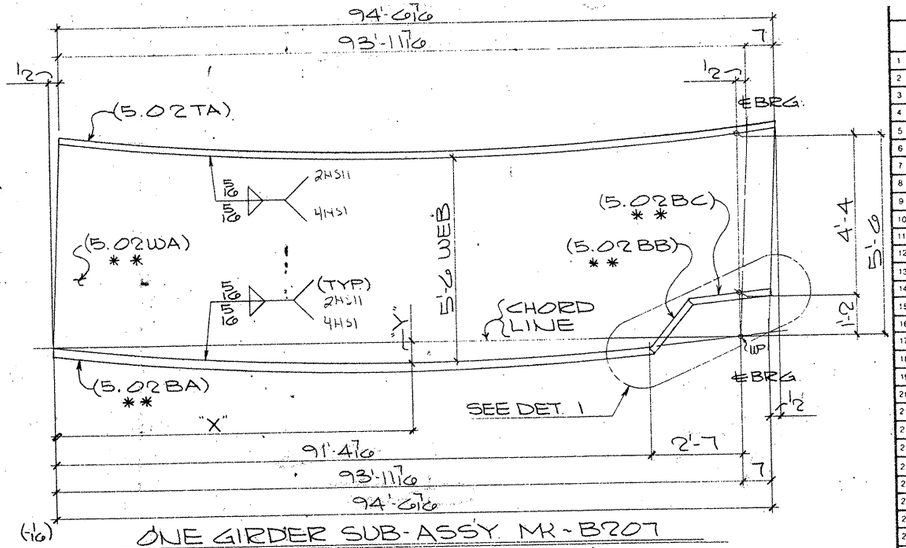

ONE GIRDER SUB-ASSY. MK-B207

(FOR GIRDER-229PG5.02)

MK-B207								
"X"	8'-3 1/2	22'-10 3/8	37'-5 1/4	52'-0 3/16	66'-8 5/8	81'-8 15/16		
"Y"	3/16	1/2	11/16	11/16	9/16	5/16		

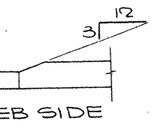

TYP. FLG. THKNESS TRANSITION

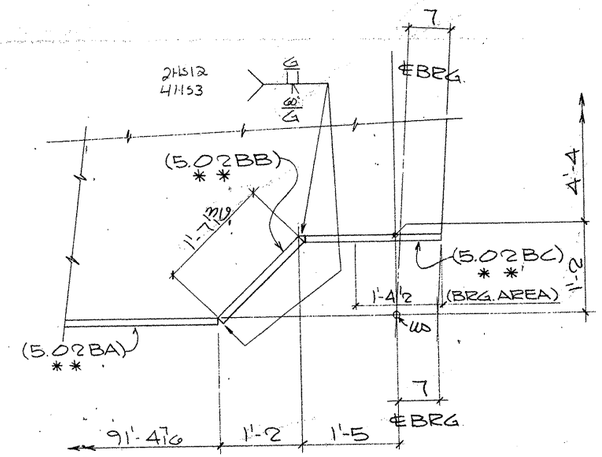

DETAIL - 1

SHOP NOTES:

1) FOR GENERAL NOTES SEE SHT. GN1
2) MATERAL NOTED "* *" MUST MEET CHARPY V-NOTCH REQUIREMENTS
3) FOR HEAT CURVE DIAGRAM SEE SHT. 211

	Qnty.	Material	Length	Mark Temp	Mark Ship.	Wt.	Cut From	Remarks
1								
2								
3	1	GIRDER SUB-ASSY			A207			
4	1	PL 5/8 x 66	97'-0	4.02WA			203-7	CVN2
5	1	PL 1 1/4 x 22	26'-11 15/16	4.02TA			204-9	CVN2
6	1	PL 2 1/2 x 22	40'-0	4.02TB			206-3	CVN3
7	1	PL 1 1/4 x 22	29'-11 15/16	4.02TC			204-8	CVN2
8	1	PL 1 1/4 x 22	26'-11 15/16	4.02BA			207-10	
9	1	PL 2 1/2 x 22	40'-0	4.02BB			207-9	
10	1	PL 1 1/4 x 22	29'-11 15/16	4.02BC			207-8	
11								
12								
13								
14								
15								
16								
17								
18	1	GIRDER SUB-ASSY			B207			
19	1	PL 1/2 x 66	94'-6 15/16	5.02WA			203-9	CVN2
20	1	PL 1 1/4 x 22	94'-6 7/16	5.02TA			207-12	
21	1	PL 1 1/4 x 22	91'-4 7/16	5.02BA			204-12	CVN2
22	1	PL 1 1/4 x 22	1'-7 15/16	5.02BB			205-9	CVN2
23	1	PL 1 1/4 x 22	1'-10 3/4	5.02BC			205-8	CVN2
24								
25								
26								
27								
28								
29								
30								
31								
32								
33								
34								
35								
36								
37								
38								
39								
40								
41								
42								
43								
44								
45								
46								
47								
48								
49								
50								
51								
52								
53								
54								
55								
56								
57								
58								
59								
60								

FOR APPROVAL
AUG 24 '92
NOT FOR CONSTRUCTION

TEXAS DEPARTMENT OF TRANSPORTATION
APPROVED
DIVISION OF BRIDGES AND STRUCTURES
NOV 04 1992
APPROVAL OF THIS DRAWING DOES NOT RELIEVE THE CONTRACTOR OF THE RESPONSIBILITY FOR THE CORRECTNESS OF DETAILS

REVISION	DATE	DESCRIPTION OF REVISION
NO. 1		
NO. 2		
NO. 3		
NO. 4		
NO. 5		

PRINTING Req'd	For	Date

Bolts: Holes: Unless Noted
Shop Paint SEE SHT GN1
Fab Spec A572-50 UN Inspection
Architect
Erection By Field Connections

HIRSCHFELD STEEL CO. INC.
112 WEST 29TH SAN ANGELO, TEXAS 76903
PHONE (915) 653-3211

DESCRIPTION	320'-0 PLATE GIRDER UNIT
STRUCTURE	US 83/281 INTERCHANGE RAMP # 1
LOCATION	HIDALGO COUNTY
CUSTOMER	GILBERT TEXAS CONSTRUCTION
SHIP TO	
Customer's Order No.	
Dwg. By CRT	Date 6-92
Checked By DCT	Date 6-92

SHEET 207 OF
JOB NO. 92-100

FED ROAD DIV. NO.	STATE	FEDERAL AID PROJECT NO.			
6	TX.	NH (50) M			
STATE DIST. NO.	COUNTY	CONTROL NO.	SECTION NO.	JOB NO.	HIGHWAY NO.
21	HIDALGO	39	17	97	83/281

60206

CE92-11 (LINE #2)

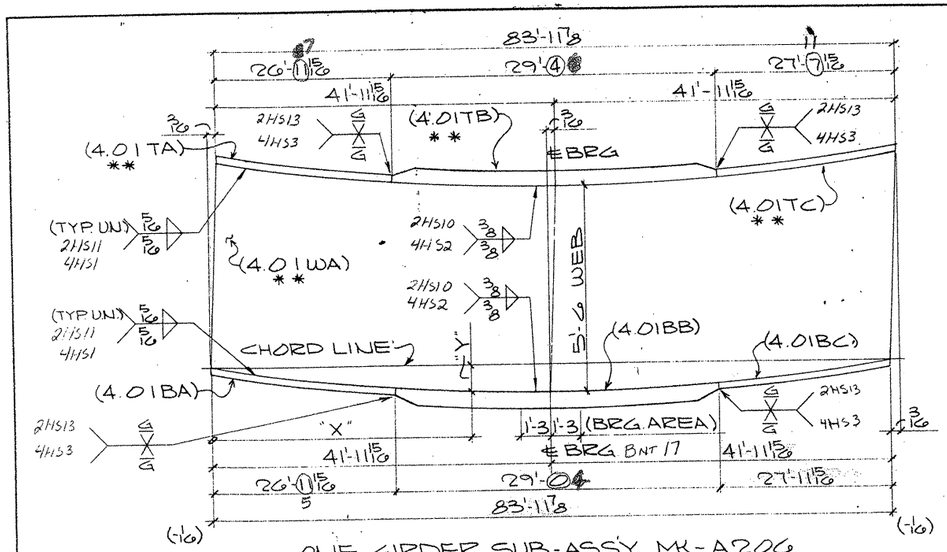

ONE GIRDER SUB-ASSY. MK-A206
(FOR GIRDER-228PG4.01)

MK-A206							
"X"	11'-10 1/16	26'-11	41'-11 15/16	56'-4 5/8	70'-9 3/8		
"Y"	1/2	15/16	1 1/8	1"	9/16		
			℄BRG				

TYP. FLG. THKNESS TRANSITION

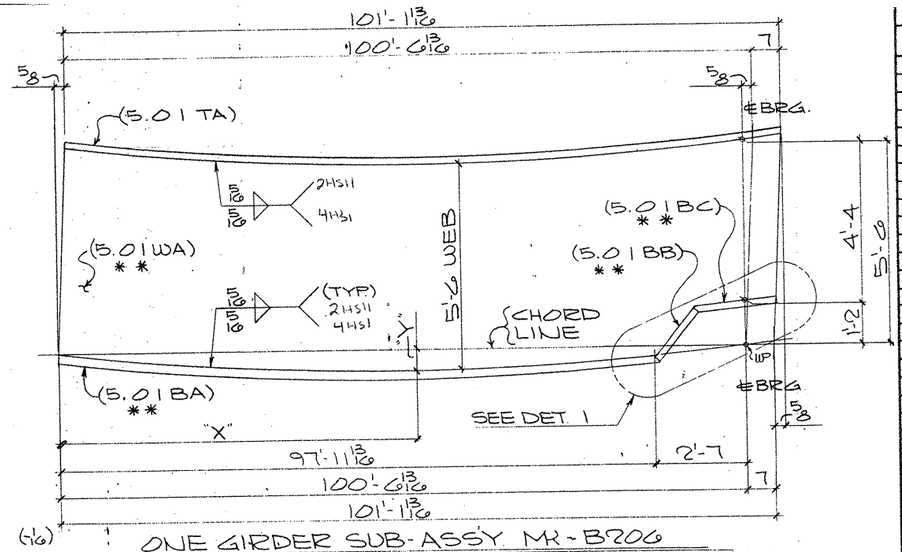

ONE GIRDER SUB-ASSY MK-B206
(FOR GIRDER-228PG5.01)

MK-B206								
"X"	1'-2 1/16	15'-6 13/16	29'-11 1/2	44'-4 5/16	58'-8 5/16	73'-4 5/16	88'-4 5/16	
"Y"	1/16	5/8	1 1/4	1 9/16	1 1/2	1 1/4	5/8	

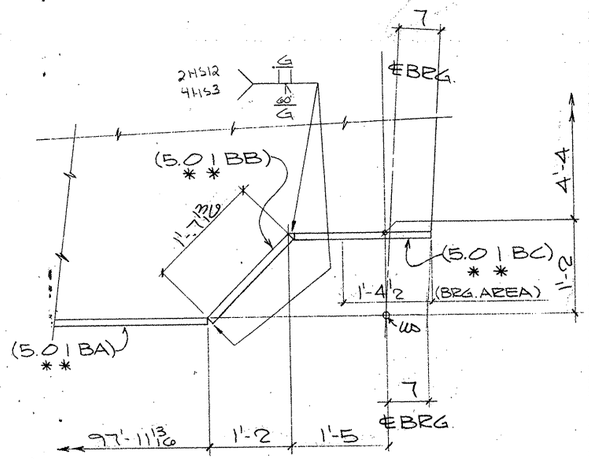

DETAIL - 1

SHOP NOTES:

1) FOR GENERAL NOTES SEE SHT. GN1
2) MATERIAL NOTED "* *" MUST MEET CHARPY V-NOTCH REQUIREMENTS
3) FOR HEAT CURVE DIAGRAM SEE SHT. 211

BILL OF MATERIAL

	Qnty	Material	Length	Mark Temp	Mark Ship.	Wt.	Cut From	Remarks
1								
2								
3	1	GIRDER SUB-ASSY			A206			
4	1	PL 5/8 × 66	84'-0 16	4.01WA			203-3	CVN2
5	1	PL 1 1/4 × 22	26'-11 15/16	4.01TA			204-4	CVN2
6	1	PL 2 1/4 × 22	29'-④	4.01TB			206-2	CVN3
7	1	PL 1 1/4 × 22	27'-11 15/16	4.01TC			204-3	CVN2
8	1	PL 1 1/4 × 22	26'-3 15/16	4.01BA			207-5	
9	1	PL 2 1/4 × 22	29'-0 4	4.01BB			207-4	
10	1	PL 1 1/4 × 22	27'-11 15/16	4.01BC			207-3	
11								
12								
13								
14								
15								
16								
17								
18	1	GIRDER SUB-ASSY			B206			
19	1	PL 1/2 × 66	101'-2 1/16	5.01WA			203-5	CVN2
20	1	PL 1 1/4 × 22	101'-1 13/16	5.01TA			208-9	
21	1	PL 1 1/4 × 22	97'-11 13/16	5.01BA			204-6	CVN2
22	1	PL 1 1/4 × 22	1'-7 3/8	5.01BB			205-9	CVN2
23	1	PL 1 1/4 × 22	1'-10 3/4	5.01BC			205-8	CVN2
24								
25								
26								
27								
28								
29								
30								
31								
32								
33								
34								
35								
36								
37								
38								
39								
40								
41								
42								
43								
44								
45								
46								
47								
48								
49								
50								
51								
52								
53								
54								
55								
56								
57								
58								
59								
60								

FOR APPROVAL
AUG 24 92
NOT FOR CONSTRUCTION

TEXAS DEPARTMENT OF TRANSPORTATION
APPROVED EXCEPT AS NOTED
DIVISION OF BRIDGES AND STRUCTURES
NOV 04 1992
APPROVAL OF THIS DRAWING DOES NOT RELIEVE THE CONTRACTOR OF THE RESPONSIBILITY FOR THE CORRECTNESS OF DETAIL.

REVISION	DATE	DESCRIPTION OF REVISION
NO. 1		
NO. 2		
NO. 3		
NO. 4		
NO. 5		

PRINTING Rec'd	For	Date

Both Holes Unless Noted
Shop Paint SEE SHT GN1
Fab. Spec. A572-50 UN. Inspection
Architect
Erection By Field Connections

HIRSCHFELD STEEL CO. INC.
112 WEST 29TH SAN ANGELO, TEXAS 76903
PHONE (915) 653-3211

DESCRIPTION 520'-0" PLATE GIRDER UNIT
STRUCTURE US 83/281 INTERCHANGE RAMP "I"
LOCATION HIDALGO COUNTY
CUSTOMER GILBERT TEXAS CONSTRUCTION
SHIP TO
Customer's Order No.
Dwg. By CRT Date 6-92
Checked By DLT Date 6-92
SHEET 206 OF
JOB NO. 92-106

FED. ROAD DIV. NO.	STATE	FEDERAL AID PROJECT NO.			
6	TX.	NH (50) M			
STATE DIST. NO.	COUNTY	CONTROL NO.	SECTION NO.	JOB NO.	HIGHWAY NO.
21	HIDALGO	39	17	97	83/281

G0206

CE92-11 (LINE # 1)

A B C D E G H K M N P S T V W X Z a b c d e f g h k m n p s t v w x aa ab ac ad ae af ag ah ak am an ap aq as at av aw ax az 1 2 3 4 5 6 7 8 9 10

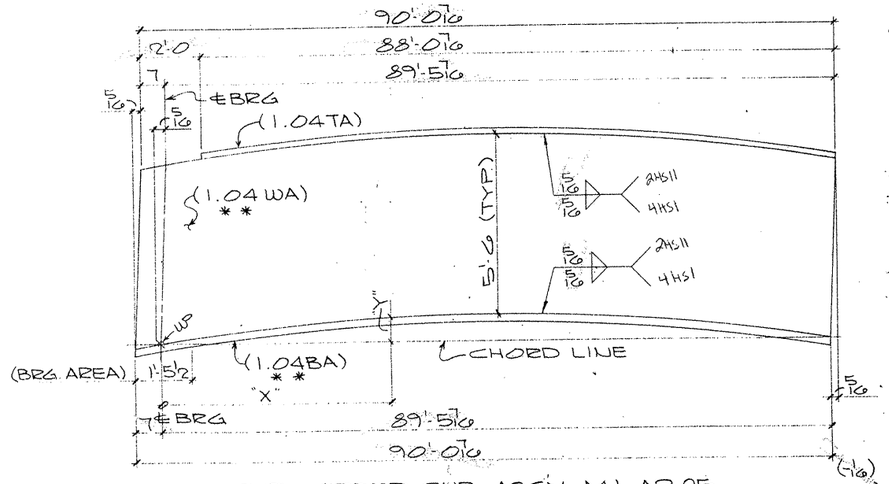

ONE GIRDER SUB-ASSY. MK-A205
(FOR GIRDER - 215PG1.04)

MK-A205							
"X"	14'-0 1/4	28'-11 1/2	43'-10 3/4	58'-10	73'-9 1/4	88'-8 1/2	
"Y"	1/2	7/8	11/16	7/8	5/16	0	

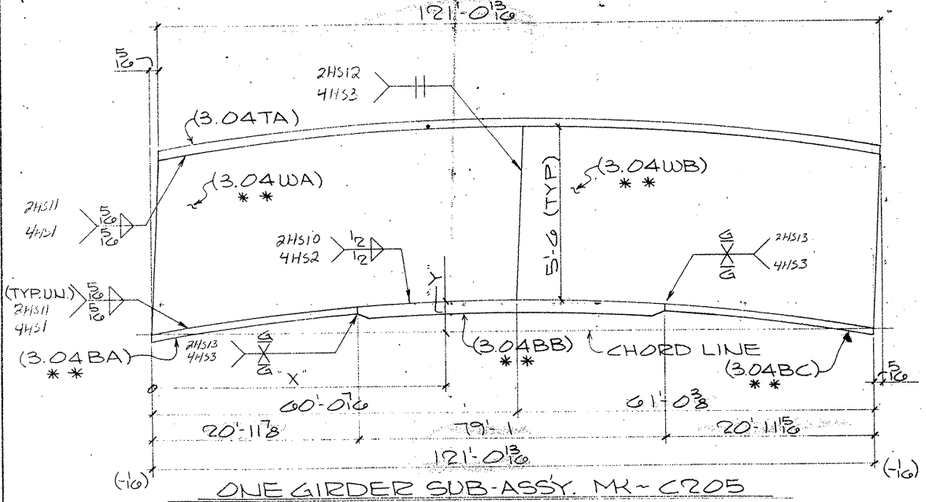

ONE GIRDER SUB-ASSY. MK-C205
(FOR GIRDER - 223PG3.04)

MK-C205							
"X"	13'-7 1/16	29'-2 7/8	44'-10 5/8	60'-0 7/16	76'-2 3/16	91'-1/0	107'-5 3/4
"Y"	1 1/4	2 7/16	3 3/16	3 1/2 ℄ WEB SPLICE	3 1/4	2 1/2	1 5/16

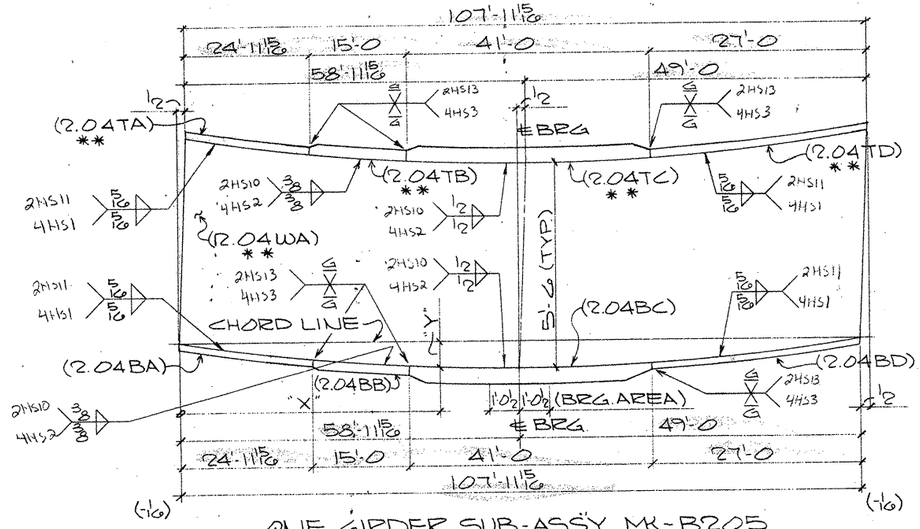

ONE GIRDER SUB-ASSY. MK-B205
(FOR GIRDER - 219PG2.04)

MK-B205							
"X"	14'-2 7/16	29'-1 7/16	44'-0 1/16	58'-11 15/16	74'-7 3/4	90'-3 1/2	105'-11 15/16
"Y"	15/16	1 13/16	2 1/8	2 1/8 ℄ BRG	1 13/16	1"	1/8

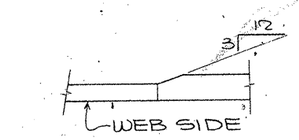

TYP. FLG. THKNESS TRANSITION

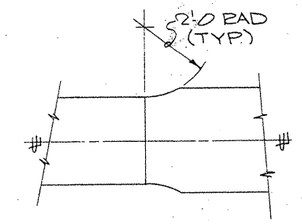

TYP FLG. WIDTH TRANSITION

SHOP NOTES:

1) FOR GENERAL NOTES SEE SHT. GN1
2) MATERAL NOTED "** **" MUST MEET CHARPY V-NOTCH REQUIREMENTS
3) FOR HEAT CURVE DIAGRAM SEE SHT. 210

BILL OF MATERIAL

	Qnty	Material	Length	Mark Temp.	Mark Ship	Wt.	Cut From	Remarks
1								
2								
3	1	GIRDER SUB-ASSY			A205			
4	1	PL 1/2 x 66	90'-0 3/4	1.04WA			203-14	CVN 2
5	1	PL 1 1/4 x 22	88'-0 7/16	1.04TA			208-2	
6	1	PL 1 1/4 x 22	90'-0 7/16	1.04BA			205-2	CVN 2
7								
8								
9								
10	1	GIRDER SUB-ASSY			B205			
11	1	PL 1 1/16 x 66	108'-0 7/16	2.04WA			203-15	CVN 2
12	1	PL 1 1/4 x 22	24'-11 15/16	2.04TA			205-3	CVN 2
13	1	PL 2 x 22	15'-0	2.04TB			205-4	CVN 2
14	1	PL 3 x 24	41'-0	2.04TC			206-5	CVN 3
15	1	PL 1 1/2 x 22	27'-0	2.04TD			205-5	CVN 2
16	1	PL 1 1/4 x 22	24'-11 15/16	2.04BA			208-3	
17	1	PL 2 x 22	15'-0	2.04BB			208-4	
18	1	PL 3 x 24	41'-0	2.04BC			208-5	
19	1	PL 1 1/2 x 22	27'-0	2.04BD			208-6	
20								
21								
22								
23								
24								
25	1	GIRDER SUB-ASSY			C205			
26	1	PL 9/16 x 66	60'-0 7/16	3.04WA			205-15	CVN 2
27	1	PL 9/16 x 66	61'-0 1/16	3.04WB			203-16	CVN 2
28	1	PL 1 1/2 x 22	121'-0 13/16	3.04TA			208-7	
29	1	PL 1 1/2 x 22	80'-11 7/8	3.04BA			205-6	CVN 2
30	1	PL 2 1/2 x 22	79'-1	3.04BB			206-6	CVN 3
31	1	PL 1 1/2 x 22	20'-11 15/16	3.04BC			205-6	CVN 2
32								
33								
34								
35								
36								
37								
38								
39								
40								
41								
42								
43								
44								
45								
46								
47								
48								
49								
50								
51								
52								
53								
54								
55								
56								
57								
58								
59								
60								

FOR APPROVAL
AUG 24 '92
NOT FOR CONSTRUCTION

TEXAS DEPARTMENT OF TRANSPORTATION
APPROVED
DIVISION OF BRIDGES AND STRUCTURES
NOV 03 1992
APPROVAL OF THIS DRAWING DOES NOT RELEASE THE FABRICATOR OF THE RESPONSIBILITY FOR THE CORRECTNESS OF DETAILS

REVISION	DATE	DESCRIPTION OF REVISION
NO. 1		
NO. 2		
NO. 3		
NO. 4		
NO. 5		

PRINTING			Bolts: Holes: Unless Noted
Req'd	For	Date	Shop Paint SEE SHT. GN 1
			Fab. Spec. A572-50 U.N. Inspection
			Architect
			Erection By: Field Connections

HIRSCHFELD STEEL CO. INC.
112 WEST 29TH SAN ANGELO TEXAS 76903
PHONE (915) 653-3211

DESCRIPTION	520'-0 PLATE GIRDER UNIT
STRUCTURE	US 83/281 INTERCHANGE RAMP "I
LOCATION	HIDALGO COUNTY
CUSTOMER	GILBERT TEXAS CONSTRUCTION
SHIP TO	
Customer's Order No.	
Dwg. By CRT	Date 6-92
Checked By DCT	Date 6-92

SHEET 205 OF
JOB NO 92-106

FED. ROAD DIV. NO.	STATE	FEDERAL AID PROJECT NO.			
6	TX.	NH (50) M			
STATE DIST. NO.	COUNTY	CONTROL NO.	SECTION NO.	JOB NO.	HIGHWAY NO.
21	HIDALGO	39	17	97	83/281

6020.6

CE 92-11 (LINE*4)

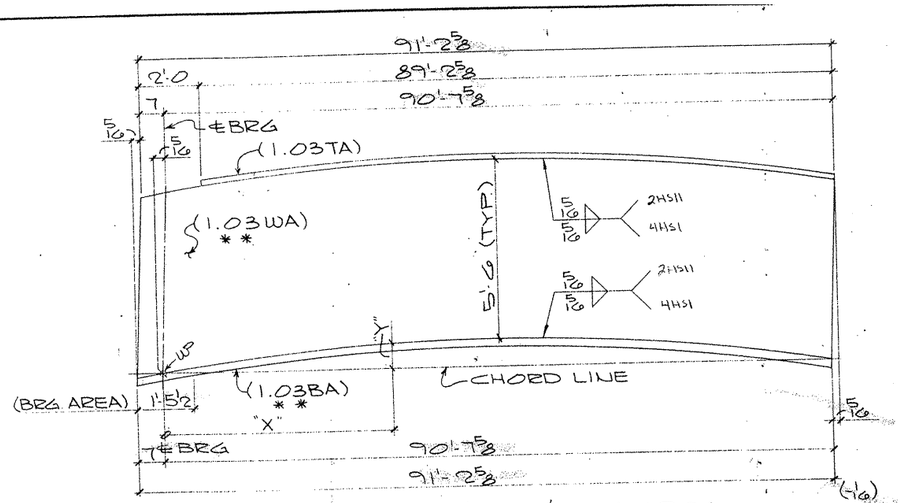

ONE GIRDER SUB-ASSY. MK-A204
(FOR GIRDER ~ 214PG1.03)

MK-A204							
"X"	13'-10 1/16	28'-7 1/8	43'-4 3/16	58'-1 1/4	72'-10 3/8	87'-7 1/16	
"Y"	1/2	7/8	1 1/16	15/16	9/16	1/8	

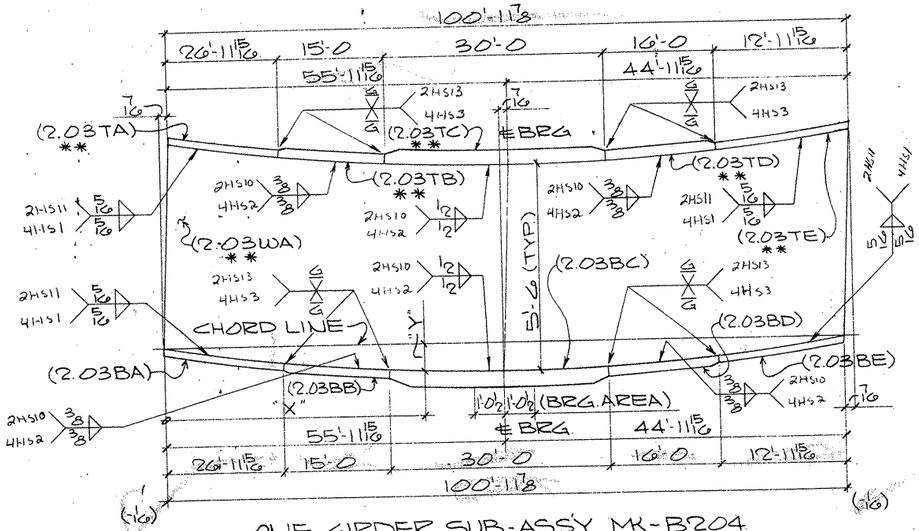

ONE GIRDER SUB-ASSY. MK-B204
(FOR GIRDER ~ 218PG2.03)

MK-B204							
"X"	11'-8 3/4	26'-5 13/16	41'-2 7/8	55'-11 15/16	71'-5 7/16	86'-10 15/16	
"Y"	1/16	1 7/16	1 7/8	1 15/16	1 5/8	7/8	
				℄BRG			

	Qnty	Material	Length	Mark Temp.	Mark Ship.	Wt.	Cut From	Remarks
1								
2								
3	1	GIRDER SUB-ASSY			A204			
4	1	PL 1/2 × 66	91'-2 5/8	1.03WA			203-10	CVN 2
5	1	PL 1/4 × 22	89'-2 5/8	1.03TA			207-13	
6	1	PL 1/4 × 22	91'-2 5/8	1.03BA			204-13	CVN 2
7								
8								
9								
10	1	GIRDER SUB-ASSY			B204			
11	1	PL 5/8 × 66	101'-0 15/16	2.03WA			203-11	CVN 2
12	1	PL 1/4 × 22	26'-11 15/16	2.03TA			204-14	CVN 2
13	1	PL 2 × 22	15'-0	2.03TB			204-15	CVN 2
14	1	PL 2 3/4 × 22	30'-0	2.03TC			206-4	CVN 3
15	1	PL 1 3/4 × 22	16'-0	2.03TD			204-16	CVN 2
16	1	PL 1/4 × 22	12'-11 15/16	2.03TE			204-17	CVN 2
17	1	PL 1/4 × 22	26'-11 15/16	2.03BA			207-14	
18	1	PL 2 × 22	15'-0	2.03BB			207-15	
19	1	PL 3 × 22	30'-0	2.03BC			207-16	
20	1	PL 1 3/4 × 22	16'-0	2.03BD			207-17	
21	1	PL 1/4 × 22	12'-11 15/16	2.03BE			207-18	
22								
23								
24								
25	1	GIRDER SUB-ASSY			C204			
26	1	PL 9/16 × 66	62'-8 13/16	3.03WA			205-14	CVN 2
27	1	PL 9/16 × 66	63'-8 3/4	3.03WB			203-12	CVN 2
28	1	PL 1/4 × 22	126'-4 7/8	3.03TA			207-19	
29	1	PL 1/4 × 22	31'-11 15/16	3.03BA			204-18	CVN 2
30	1	PL 2 × 22	62'-5	3.03BB			204-20	CVN 2
31	1	PL 1/4 × 22	31'-11 15/16	3.03BC			204-18	CVN 2
32								
33								
34								
35								
36								
37								
38								
39								
40								
41								
42								
43								
44								
45								
46								
47								
48								
49								
50								
51								
52								
53								
54								
55								
56								
57								
58								
59								
60								

TEXAS DEPARTMENT OF TRANSPORTATION
APPROVED
DIVISION OF BRIDGES AND STRUCTURES
NOV 04 1992
APPROVAL OF THIS DRAWING DOES NOT RELIEVE THE FABRICATOR OF HIS RESPONSIBILITY FOR THE CORRECTNESS OF DETAIL.

FOR APPROVAL
AUG 24 '92
NOT FOR CONSTRUCTION

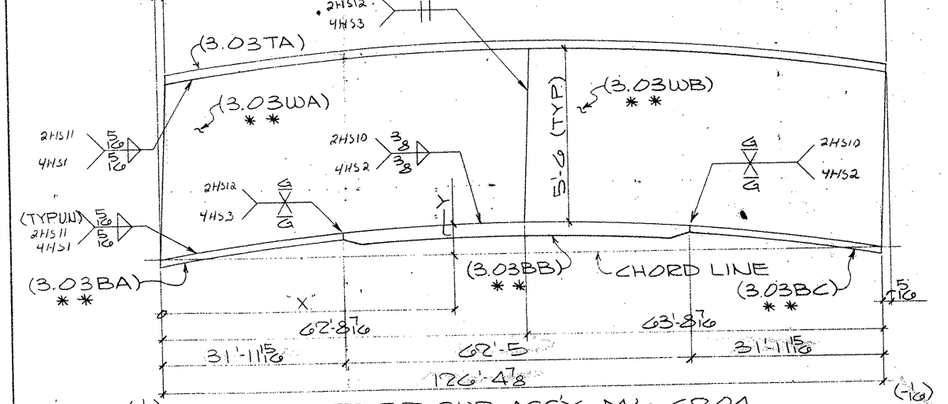

ONE GIRDER SUB-ASSY. MK-C204
(FOR GIRDER ~ 222PG3.03)

MK-C204										
"X"	1'-4 7/16	16'-9 15/16	32'-3 3/16	47'-8 15/16	62'-8 13/16	78'-7 1/8	94'-1 1/16	109'-6 15/16	125'-0 7/16	
"Y"	1/8	1 1/2	2 1/16	3 3/8	3 1/16	3 3/8	2 1/16	1 9/16	1/8	
					℄ WEB SPLICE					

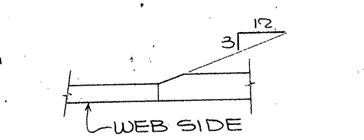

TYP. FLG. THKNESS TRANSITION

SHOP NOTES:

1) FOR GENERAL NOTES SEE SHT. GN1
2) MATERAL NOTED "* *" MUST MEET CHARPY V-NOTCH REQUIREMENTS
3) FOR HEAT CURVE DIAGRAM SEE SHT. 210

REVISION	DATE	DESCRIPTION OF REVISION
NO. 1		
NO. 2		
NO. 3		
NO. 4		
NO. 5		

PRINTING Req'd	For	Date

Bolts: Holes: Unless Noted
Shop Paint SEE SHT. GN1
Fab Spec A572-50 DN Inspection
Architect
Erection By Field Connections

HIRSCHFELD STEEL CO. INC.
112 WEST 29TH SAN ANGELO, TEXAS 76903
PHONE (915) 653-3211

DESCRIPTION	520'-0 PLATE GIRDER UNIT
STRUCTURE	US 83/281 INTERCHANGE RAMP # 1
LOCATION	HIDALGO COUNTY
CUSTOMER	GILBERT TEXAS CONSTRUCTION
SHIP TO	
Customer's Order No.	
Dwg. By CRT Date 6-92	SHEET 204 OF
Checked By DLT Date 6-92	JOB NO. 92-1006

G0206

FED. ROAD DIV. NO.	STATE	FEDERAL AID PROJECT NO.			
6	TX.	NH (50) M			
STATE DIST. NO.	COUNTY	CONTROL NO.	SECTION NO.	JOB NO.	HIGHWAY NO.
21	HIDALGO	39	17	97	83/281

CE 92-11 (LINE #3)

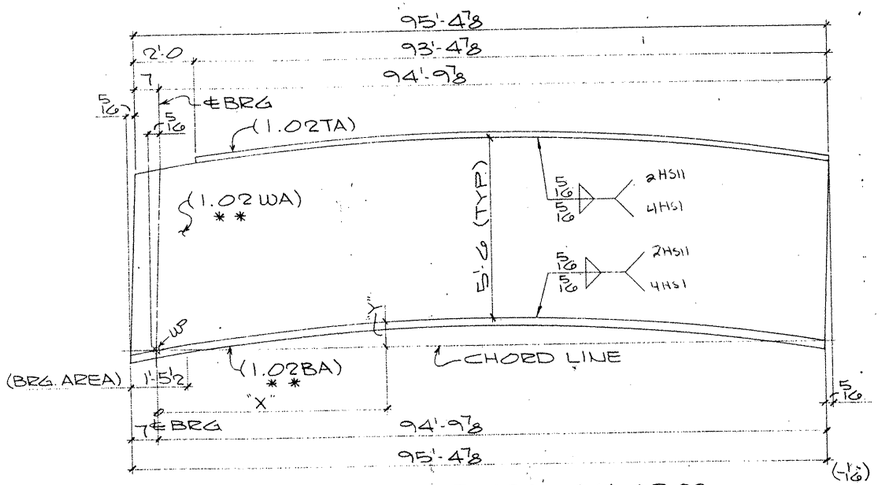

ONE GIRDER SUB-ASSY. MK-A203
(FOR GIRDER - 213PG1.02)

MK - A203						
"X"	13'-7 7/8	28'-2 13/16	42'-9 11/16	57'-4 9/16	71'-11 7/16	86'-6 3/8
"Y"	1/2	7/8	1 1/16	1"	3/4	5/16

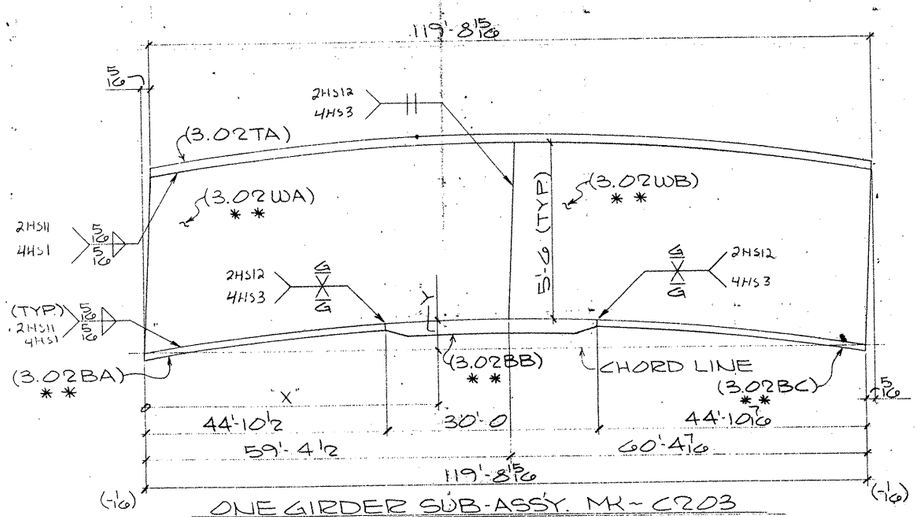

ONE GIRDER SUB-ASSY. MK-C203
(FOR GIRDER - 221PG3.02)

MK - C203								
"X"	14'-0 13/16	29'-4 1/16	44'-7 1/4	59'-4 1/2	75'-1 1/16	90'-4 15/16	105'-8 1/8	
"Y"	1"	1 15/16	2 7/16	2 3/4	2 7/16	2	1 1/16	
				℄ WEB SPLICE				

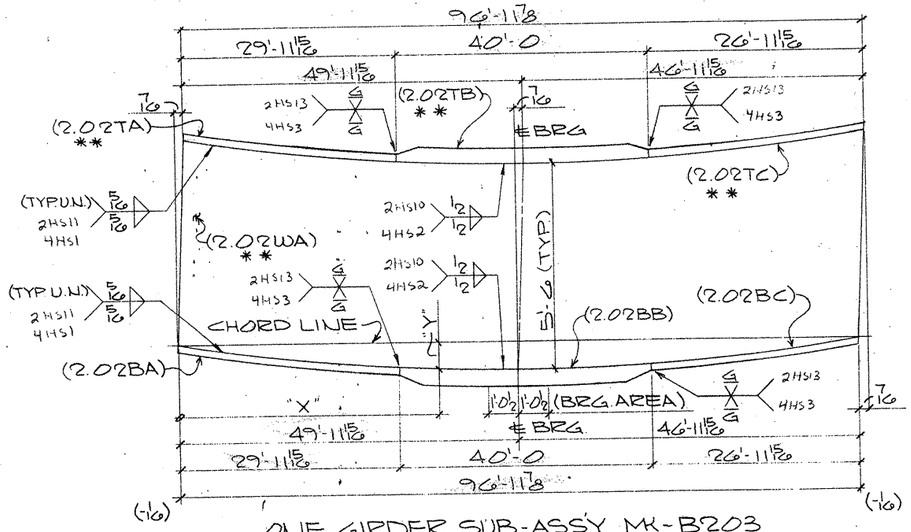

ONE GIRDER SUB-ASSY. MK-B203
(FOR GIRDER - 217PG2.02)

MK - B203								
"X"	0'-3 1/4	20'-10 3/16	35'-5 1/16	49'-11 15/16	65'-3 3/16	80'-6 3/8	95'-9 5/8	
"Y"	5/16	1 1/16	1 1/2	1 5/8	1 3/8	7/8	1/16	
				℄ BRG				

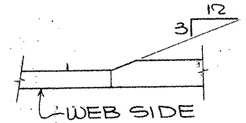

TYP. FLG. THKNESS TRANSITION

SHOP NOTES:

1) FOR GENERAL NOTES SEE SHT. GN1
2) MATERAL NOTED " * * " MUST MEET CHARPY V-NOTCH REQUIREMENTS
3) FOR HEAT CURVE DIAGRAM SEE SHT. 210

	Qnty.	Material	Length	Mark Temp	Mark Ship	Wt.	Cut From	Remarks
1								
2								
3	1	GIRDER SUB-ASSY			A203			
4	1	PL 1 1/2 x 66	95'-5 5/16	1.02WA			203-6	CVN 2
5	1	PL 1 1/4 x 22	93'-4 7/8	1.02TA			207-7	
6	1	PL 1 1/4 x 22	95'-4 7/8	1.02BA			204-7	CVN 2
7								
8								
9								
10	1	GIRDER SUB-ASSY			B203			
11	1	PL 5/8 x 66	97'-0 5/16	2.02WA			203-7	CVN 2
12	1	PL 1 1/4 x 22	29'-11 15/16	2.02TA			204-8	CVN 2
13	1	PL 2 1/2 x 22	40'-0	2.02TB			206-3	CVN 3
14	1	PL 1 1/4 x 22	26'-11 15/16	2.02TC			204-9	CVN 2
15	1	PL 1 1/4 x 22	29'-11 15/16	2.02BA			207-8	
16	1	PL 2 1/2 x 22	40'-0	2.02BB			207-9	
17	1	PL 1 1/4 x 22	26'-11 15/16	2.02BC			207-10	
18								
19								
20								
21								
22								
23								
24								
25	1	GIRDER SUB-ASSY			C203			
26	1	PL 1/2 x 66	59'-4 3/4	3.02WA			205-13	CVN 2
27	1	PL 1/2 x 66	60'-4 3/4	3.02WB			203-8	CVN 2
28	1	PL 1 1/4 x 22	119'-8 15/16	3.02TA			207-11	
29	1	PL 1 1/4 x 22	44'-10 1/2	3.02BA			204-10	CVN 2
30	1	PL 1 1/2 x 22	30'-0	3.02BB			204-11	CVN 2
31	1	PL 1 1/4 x 22	44'-10 1/16	3.02BC			204-10	CVN 2
32								
33								
34								
35								
36								
37								
38								
39								
40								
41								
42								
43								
44								
45								
46								
47								
48								
49								
50								
51								
52								
53								
54								
55								
56								
57								
58								
59								
60								

FOR APPROVAL
AUG 24 '92
NOT FOR CONSTRUCTION

TEXAS DEPARTMENT OF TRANSPORTATION
APPROVED
DIVISION OF BRIDGE AND STRUCTURES
NOV 04 1992
APPROVAL OF THIS DRAWING DOES NOT RELIEVE THE CONTRACTOR OF THE RESPONSIBILITY FOR THE CORRECTNESS OF DETAILS

REVISION	DATE	DESCRIPTION OF REVISION
NO. 1		
NO. 2		
NO. 3		
NO. 4		
NO. 5		

PRINTING Req'd	For	Date

Bolts Holes Unless Noted
Shop Paint SEE SHT. GN1
Fab. Spec. A572-50 UN, Inspection
Architect
Erection By Field Connections

HIRSCHFELD STEEL CO. INC.
112 WEST 29TH SAN ANGELO, TEXAS 76903
PHONE (915) 653-3211

DESCRIPTION	520'-0 PLATE GIRDER UNIT
STRUCTURE	US 83/281 INTERCHANGE RAMP # 1
LOCATION	HIDALGO COUNTY
CUSTOMER	GILBERT TEXAS CONSTRUCTION
SHIP TO	
Customer's Order No.	
Dwg. By ERT	Date 6-92
Checked By DLT	Date 6-92

SHEET 203 OF
JOB NO. 92-100

FED. ROAD DIV. NO.	STATE	FEDERAL AID PROJECT NO.			
6	TX.	NH (50) M			
STATE DIST. NO.	COUNTY	CONTROL NO.	SECTION NO.	JOB NO.	HIGHWAY NO.
21	HIDALGO	39	17	97	83/281

G0206

CE 92-11 (LINE # 2)

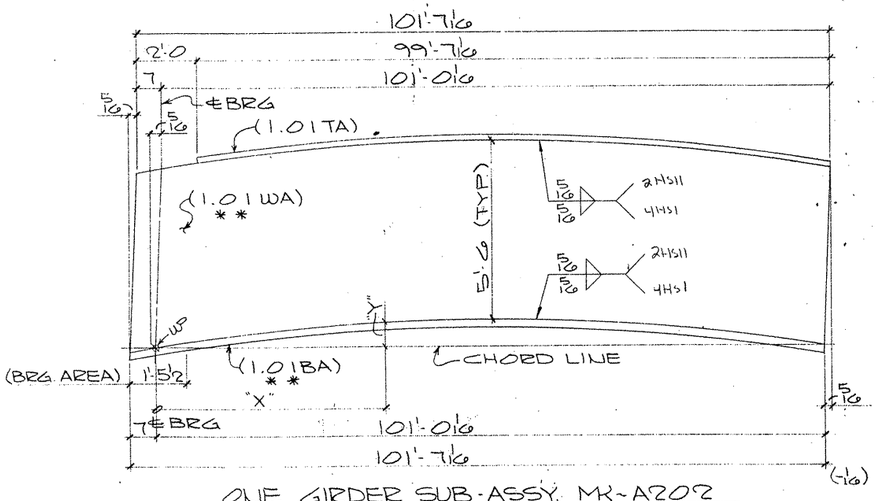

ONE GIRDER SUB-ASSY. MK-A202
(FOR GIRDER - 212PG1.01)

MK - A202							
"X"	13'-5 11/16	27'-10 7/16	42'-3 3/8	56'-7 3/8	71'-0 9/16	85'-5 1/4	99'-10
"Y"	9/16	15/16	1 3/16	1 3/16	1"	9/16	1/16

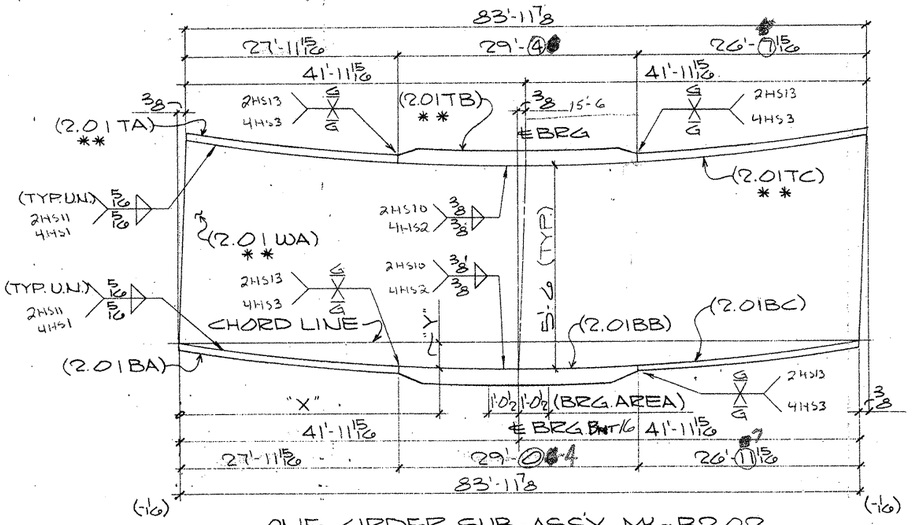

ONE GIRDER SUB-ASSY. MK-B202
(FOR GIRDER - 216PG2.01)

MK - B202								
"X"	13'-2 1/2	27'-7 1/4	41'-11 15/16	57'-0 7/8	72'-1 13/16			
"Y"	15/16	1"	1 3/16	1"	1/2			
			℄ BRG					

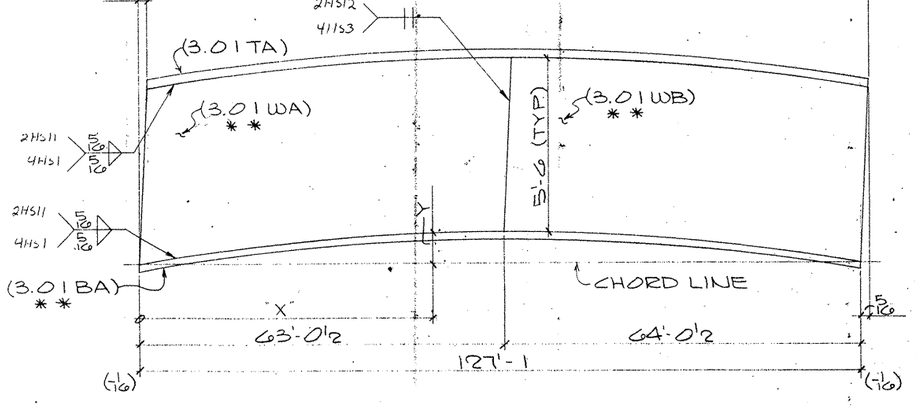

ONE GIRDER SUB-ASSY. MK-C202
(FOR GIRDER - 220PG3.01)

MK - C202									
"X"	3'-2 3/4	18'-3 1/16	33'-4 5/8	48'-5 9/16	63'-0 1/2	78'-7 1/16	93'-8 3/8	108'-9 5/16	123'-10 1/4
"Y"	3/16	1/16	1 3/16	2 1/4	2 7/16	2 1/4	1 3/16	1 1/8	3/16
					℄ WEB SPLICE				

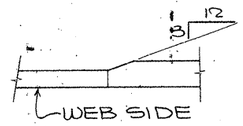

TYP. FLG. THKNESS TRANSITION

SHOP NOTES:

1) FOR GENERAL NOTES SEE SHT. GN1
2) MATERAL NOTED "* *" MUST MEET CHARPY V-NOTCH REQUIREMENTS
3) FOR HEAT CURVE DIAGRAM SEE SHT. 210

BILL OF MATERIAL

	Qnty	Material	Length	Mark Temp.	Mark Ship	Wt.	Cut From	Remarks
3	1	GIRDER SUB-ASSY			A202			
4	1	PL 1/2 x 66	101'-7 3/8	1.01 WA			203-2	CVN 2
5	1	PL 1 1/4 x 22	99'-7 1/16	1.01 TA			207-2	
6	1	PL 1 1/4 x 22	101'-7 1/16	1.01 BA			204-2	CVN 2
10	1	GIRDER SUB-ASSY			B202			
11	1	PL 5/8 x 66	84'-0 1/4	2.01 WA			203-3	CVN 2
12	1	PL 1 1/4 x 22	27'-11 15/16	2.01 TA			204-3	CVN 2
13	1	PL 2 1/4 x 22	29'-4	2.01 TB			206-2	CVN 3
14	1	PL 1 1/4 x 22	26'-11 15/16	2.01 TC			204-4	CVN 2
15	1	PL 1 1/4 x 22	27'-11 15/16	2.01 BA			207-3	
16	1	PL 2 1/4 x 22	29'-0 3/4	2.01 BB			207-4	
17	1	PL 1 1/4 x 22	26'-11 15/16	2.01 BC			207-5	
			57					
25	1	GIRDER SUB-ASSY			C202			
26	1	PL 1/2 x 66	63'-0 11/16	3.01 WA			205-12	CVN 2
27	1	PL 1/2 x 66	64'-0 3/4	3.01 WB			203-4	CVN 2
28	1	PL 1 1/4 x 22	127'-1	3.01 TA			207-6	
29	1	PL 1 1/4 x 22	127'-1	3.01 BA			204-5	CVN 2

TEXAS DEPARTMENT OF TRANSPORTATION
APPROVED EXCEPT AS NOTED
DIVISION OF BRIDGES AND STRUCTURES
NOV 04 1992
APPROVAL OF THIS DRAWING DOES NOT RELIEVE THE CONTRACTOR OF THE RESPONSIBILITY FOR THE CORRECTNESS OF DETAIL

FOR APPROVAL
AUG 24 '92
NOT FOR CONSTRUCTION

REVISION	DATE	DESCRIPTION OF REVISION
NO. 1		
NO. 2		
NO. 3		
NO. 4		
NO. 5		

PRINTING: Reqd | For | Date

Bolts: Holes: Unless Noted
Shop Paint SEE SHT. GN1
Fab. Spec. A572-50 UN. Inspection
Architect
Erection By Field Connections

HIRSCHFELD STEEL CO. INC.
112 WEST 29TH SAN ANGELO, TEXAS 76903
PHONE (915) 653-3211

DESCRIPTION	520'-0 PLATE GIRDER UNIT # 6
STRUCTURE	US 83/281 INTERCHANGE RAMP # 1
LOCATION	HIDALGO COUNTY
CUSTOMER	GILBERT TEXAS CONSTRUCTION
SHIP TO	
Customer's Order No.	
Dwg. By CRT	Date 6-92
Checked By DLT	Date 6-92
SHEET 202 OF	
JOB NO 92-106	

G0306

FED. ROAD DIV. NO	STATE	FEDERAL AID PROJECT NO.			
6	TX.	NH (50) M			
STATE DIST. NO	COUNTY	CONTROL NO	SECTION NO	JOB NO	HIGHWAY NO
21	HIDALGO	39	17	97	83/281

CE 92-11 (LINE # 1)

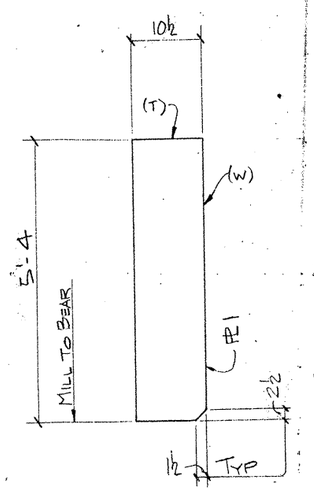

8 - PLATES ~ a201
(END BRG. BENT 15)

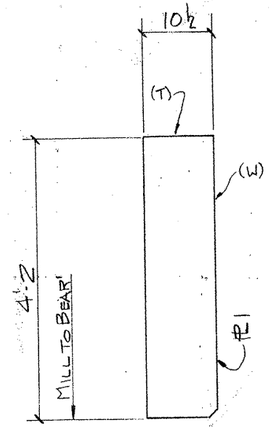

8 - PLATES ~ b201
(END BRG. BENT 18)

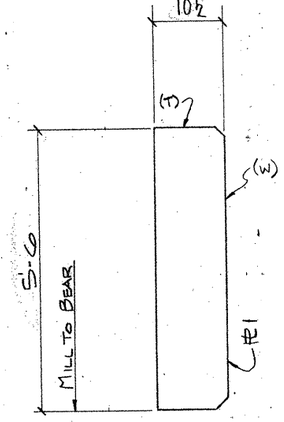

4 - PLATE ~ c201
(INT. BRG. BENT 16 & 17)

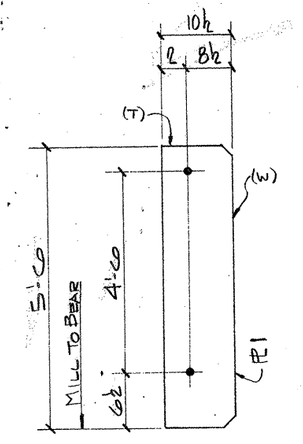

12 - PLATES ~ d201
(INT. BRG. BENT 16 & 17)

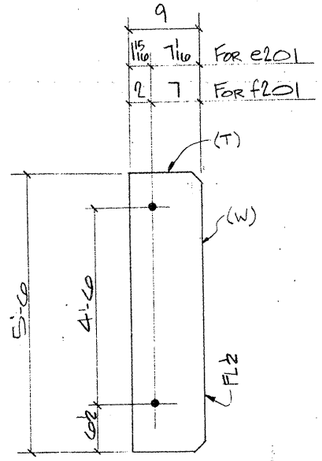

122
(110) - PLATES ~ e201 "AS NTD"

64 - PLATES ~ f201 "AS NTD"
(DIAFRAM STIFFS @ CURVED GIRD.)

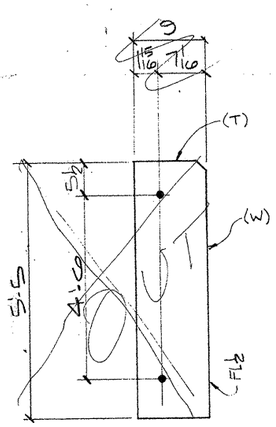

12 - OUT - PLATES ~ 520½
(DIAFRAM STIFFS @ STR. GIRD.)

SHOP NOTES:

1. FOR GENERAL NOTES: SEE SHT GN1.
2. (T) INDICATES "TOP"
3. (W) INDICATES "WEB"

	Qty	Material	Length	Mark Temp	Mark Ship	Wt.	Cut From	Remarks
3	8	PL 1 x 10½	5'-4	a201			201-1	
4	8	PL 1 x 10½	4'-2	b201			201-3	
5	4	PL 1 x 10½	5'-0	c201			201-2	
6	12	PL 1 x 10½	5'-0	d201			201-2	
7	(110)	PL ½ x 9	5'-0	e201			201-5	
8	64	PL ½ x 9	5'-0	f201			201-5	
9	12	~~PL ½ x 9~~	~~5'-5~~	~~STR~~ OUT				

122

TEXAS DEPARTMENT OF TRANSPORTATION
APPROVED EXCEPT AS NOTED
DIVISION OF BRIDGES AND STRUCTURES
NOV 04 1992
APPROVAL OF THIS DRAWING DOES NOT RELIEVE THE CONTRACTOR OF THE RESPONSIBILITY FOR THE CORRECTNESS OF DETAIL.

FOR APPROVAL
AUG 24 92
NOT FOR CONSTRUCTION

REVISION	DATE	DESCRIPTION OF REVISION
NO. 1		
NO. 2		
NO. 3		
NO. 4		
NO. 5		

PRINTING Read	For	Date

Bolts Holes 15/16 ø Unless Noted
Shop Paint SEE SHT GN1
Fab Spec. A36 Inspection
Architect
Erection By Field Connections

HIRSCHFELD STEEL CO. INC.
112 WEST 29TH SAN ANGELO, TEXAS 76903
PHONE (915) 653-3211

DESCRIPTION	520'-0 PLATE GIRDER UNIT
STRUCTURE	US 83/281 INTERCHANGE RAMP I
LOCATION	HIDALGO COUNTY
CUSTOMER	GILBERT TEXAS CONSTRUCTION
SHIP TO	
Customer's Order No.	
Dwg By JE	Date 6/92
Checked By JC	Date 7-9-92

SHEET 201 OF
JOB NO. 92-1006

FED ROAD DIV. NO.	STATE	FEDERAL AID PROJECT NO.			
6	TX.	NH (50) M			
STATE DIST. NO.	COUNTY	CONTROL NO.	SECTION NO.	JOB NO.	HIGHWAY NO.
21	HIDALGO	39	17	97	83/281

CE92-11

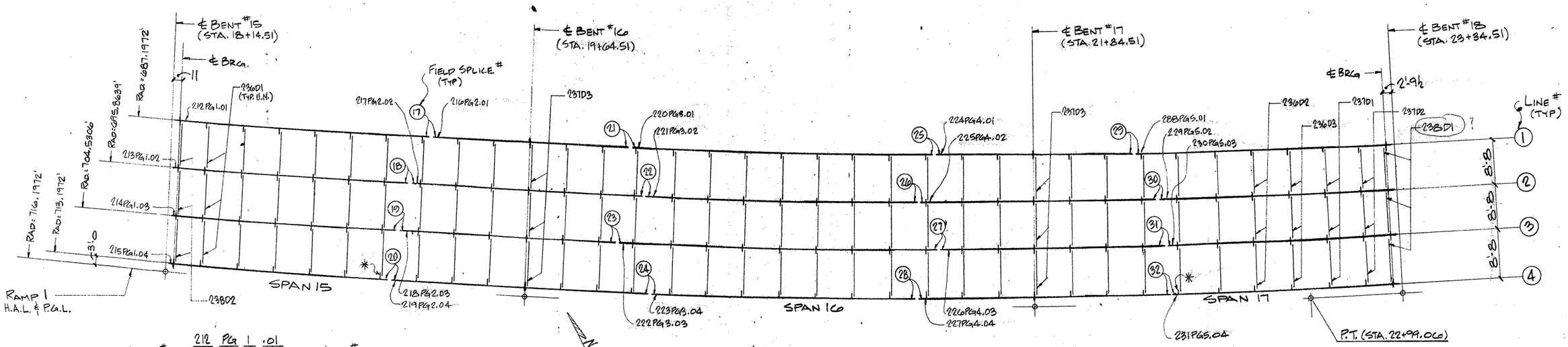

SHEET # 212 PG 1 .01 LINE #
PLATE GIRDER — GIRDER #

GIRDER SHIPPING MARK LEGEND

FRAMING PLAN
(UNIT Nº 6 RAMP 1)

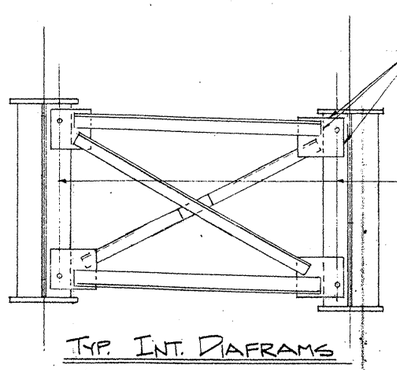

TYP. INT. DIAFRAMS

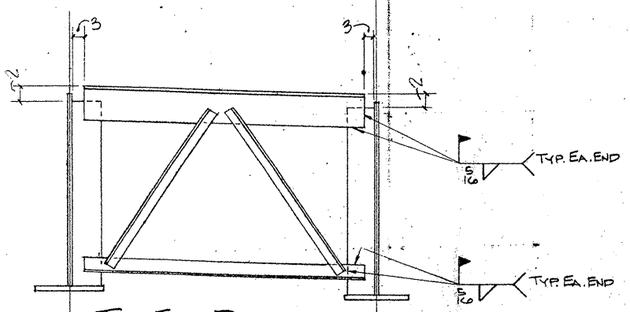

TYP. END DIAFRAM
(TYPE B MOD.)
@ BENT 15

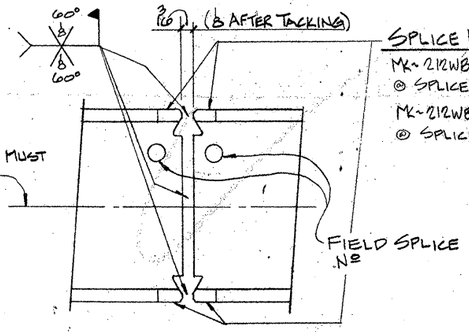

SPLICE EXT. BARS

MK-212WB1 (8-REQ'D PER SPLICE)
@ SPLICE'S ⑰ THRU ⑲, ㉕ THRU ㉑, & ㉙ THRU ㉜

MK-212WB2 (8-REQ'D PER SPLICE)
@ SPLICE'S ㉔ & ㉘

TYP. FIELD SPLICE DETAIL

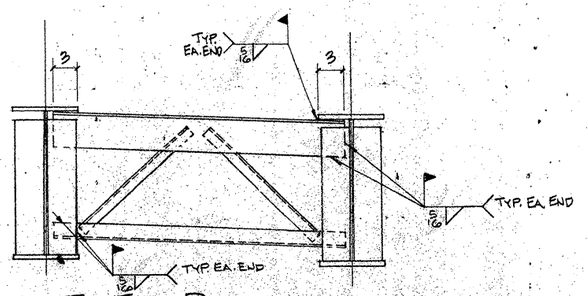

TYP. END DIAFRAMS
(TYPE B)
@ BENT 18

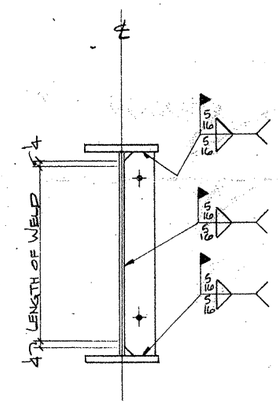

*= FIELD WELDING OF STIFF.
(2-PLACES)

TEXAS DEPARTMENT OF TRANSPORTATION
APPROVED
DIVISION OF BRIDGES AND STRUCTURES
NOV 04 1992
APPROVAL OF THIS DRAWING DOES NOT RELIEVE THE CONTRACTOR OF THE RESPONSIBILITY FOR THE CORRECTNESS OF DETAIL

FOR APPROVAL
AUG 25 '92
NOT FOR CONSTRUCTION

ABV 8/25

FED. ROAD DIV. NO	STATE	FEDERAL AID PROJECT NO.				
6	TX.	NH (50) M				
STATE DIST. NO	COUNTY	CONTROL NO	SECTION NO	JOB NO	HIGHWAY NO.	
21	HIDALGO	39	17	97	83/281	

HOLES ____ U.N.	FOR AP'VL ____
BOLTS ____ U.N.	RETURNED ____
WELDS ____ U.N.	TO SHOP ____
PAINT ____	

REVISIONS		
NO.	DATE	REMARKS
1		
2		
3		
4		

HIRSCHFELD STEEL CO. INC.
112 WEST 29TH SAN ANGELO, TEXAS 76903
PHONE (915) 653-3211

CUSTOMER GILBERT TEXAS CONSTRUCTION
ARCHITECT
PROJECT US 83/281 INTERCHANGE RAMP #1
LOCATION HIDALGO COUNTY

DRAWN JDL DATE 6/92
CHECKED DLT DATE 6/92

JOB NO 92-100
SHEET NO E201 of

CE92-11 7020

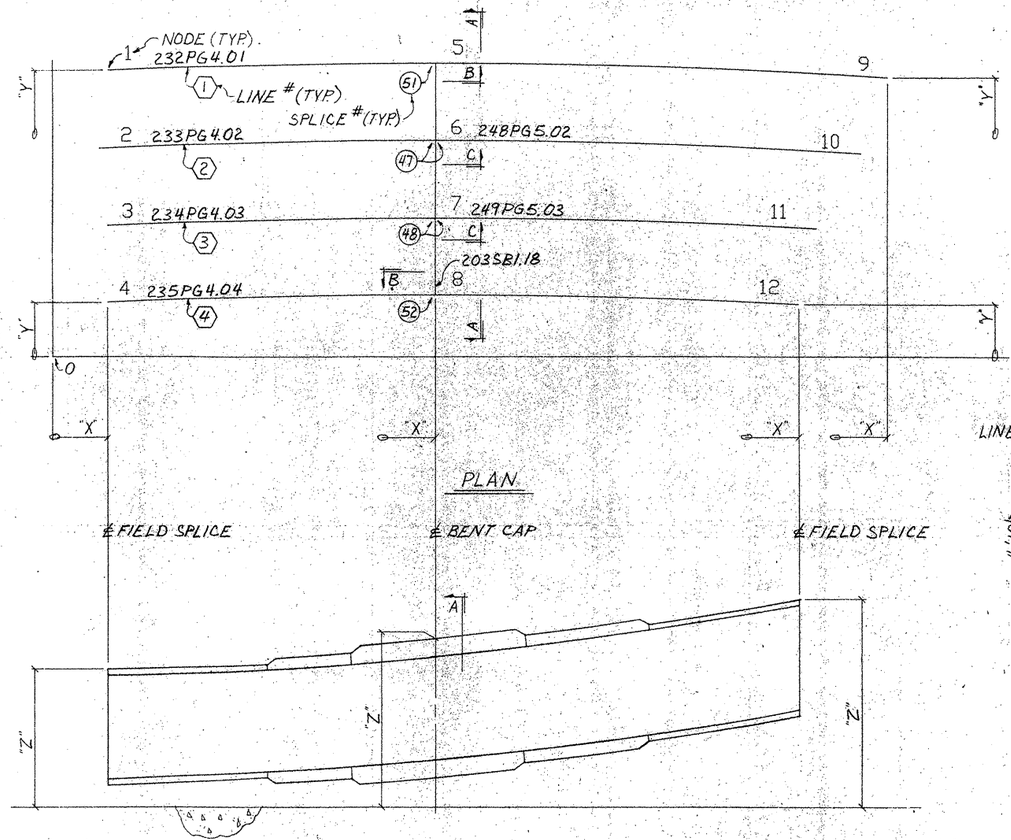

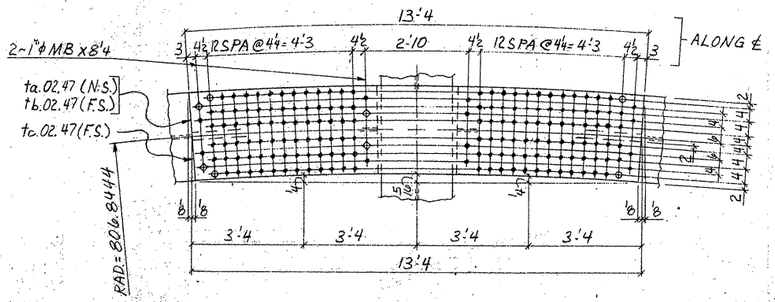

VIEW "D"

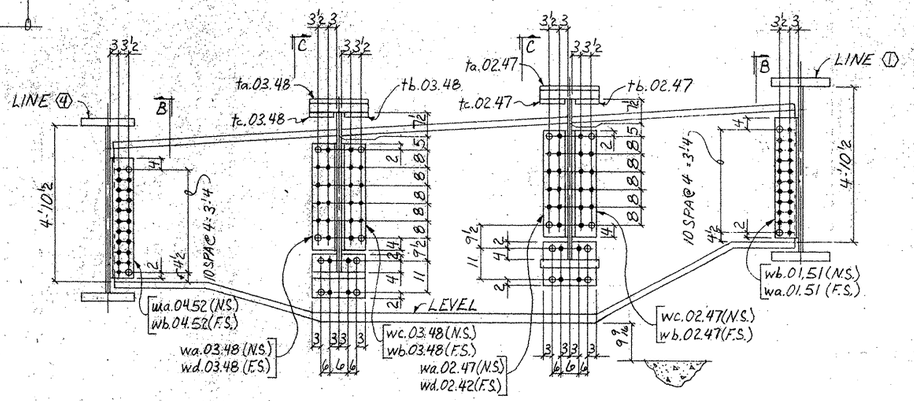

SECTION "A"

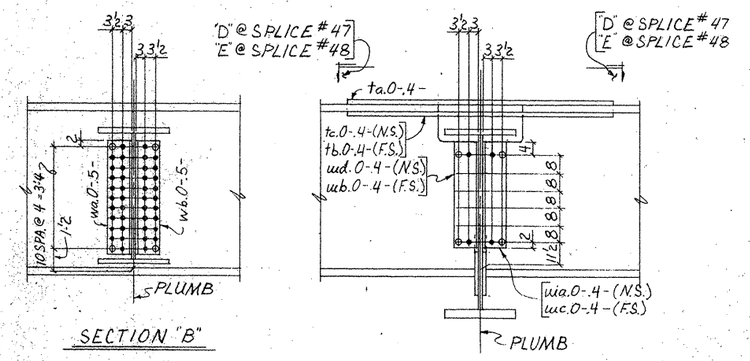

SECTION "B"

SECTION "C"

NODE	TABLE OF VARIABLES												
COORDINATE	0	1	2	3	4	5	6	7	8	9	10	11	12
X	0	6'-0 1/2	6'-0 1/2	7'-0 7/16	7'-9 7/16	60'-0	60'-0	60'-0	60'-0	112'-11 9/16	111'-11 9/16	111'-11 9/16	111'-3 9/16
Y	0	29'-2 9/16	20'-6 5/16	11'-10 3/8	3'-3 1/4	31'-0	22'-4	13'-8	5'-0	29'-3 5/16	20'-7 7/8	11'-11 1/16	3'-4
Z	0	8'-8 9/16	8'-2 3/16	7'-7 3/4	7'-1 7/16	9'-0 9/16	8'-6 1/16	7'-11 13/16	7'-5 5/16	9'-2	8'-7 7/8	8'-1 3/16	7'-6 13/16

SHOP NOTES:

1. ALL SUBPUNCHING AND CENTER PUNCHING TO BE DONE ON CNC PUNCH TABLE.
2. SEE GIRDER DETAILS FOR PLACEMENT OF ANGLES FOR SHIPPING.
3. ○ SUBPUNCH THESE HOLES 1/4" SMALL.
4. ● CENTER PUNCH THESE HOLES.
5. ONLY N.S. PL'S. AND ANGLES AND TOP FLG. SPLICE PLS. SHOULD BE SUBPUNCHED OR CENTER PUNCHED.
6. HOLES TO RECEIVE 1"ϕ" FULL SIZE HOLE DURING ASSEMBLY.
7. ◇ SHOP APPLIED SHIPPING BOLTS.

EXAMPLE MARK: ta.01.12
SPLICE # MARK
GIRDER LINE #
SPLICE #

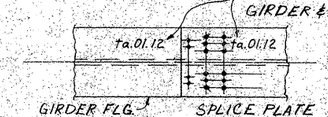

TYP MATCH MARK LOCATION

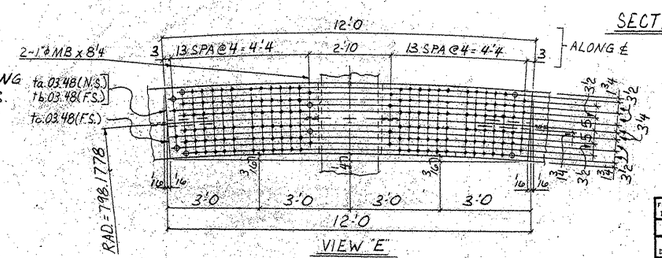

VIEW "E"

BILL OF MATERIAL

	Qnty.	Material	Length	Mark Temp.	Mark Ship.	Wt.	Cut From	Remarks
1		FIELD SPLICE	(51) & (52)					
2	2	L 8 x 8 x 3/4	3'-10	e.202	wa.0-.5-		201-9	CVN 2
3	2	L 8 x 8 x 3/4	3'-10	d.202	wb.0-.5-		201-9	CVN 2
4								
5								
6								
7								
8								
9								
10								
11		FIELD SPLICE	(47)					
12	1	PL 2 x 28	13'-4	a.202	ta.02.47		201-10	CVN 2
13	1	PL 2 x 12	13'-4	b.202	tb.02.47		201-11	
14	1	PL 2 x 12	13'-4	c.202	tc.02.47		201-11	
15	1	L 8 x 8 x 3/4	3'-10	g.202	wa.02.47		201-9	
16	1	L		g.202	wb.02.47			
17	1	L 8 x 8 x 3/4	3'-10	f.202	wc.02.47			
18	1	L		f.202	wd.02.47			
19								
20								
21		FIELD SPLICE	(48)					
22	1	PL 2 x 24	12'-0	aa.202	ta.03.48		201-12	CVN 2
23	1	PL 2 x 10 1/2	12'-0	ab.202	tb.03.48		201-13	
24	1	PL 2 x 10 1/2	12'-0	ac.202	tc.03.48		201-13	
25	1	L 8 x 8 x 3/4	3'-10	g.202	wa.03.48		201-9	
26	1	L		g.202	wb.03.48			
27	1	L 8 x 8 x 3/4	3'-10	f.202	wc.03.48			
28	1	L		f.202	wd.03.48			
29								
30								
31		SHIPPING BOLTS	(SHOP)					
32	8	1"ϕ MB	0'-8'4					A307
33								
34								
35								
36								
37								
38								
39								
40								
41								
42								
43								
44								
45								
46								
47								
48								
49								
50								
51								
52								
53								
54								
55								
56								
57								
58								
59								
60								

TEXAS DEPARTMENT OF TRANSPORTATION
ASSUMED
DIVISION OF BRIDGES AND STRUCTURES
APR 23 1993
APPROVAL OF THIS DRAWING DOES NOT RELIEVE THE CONTRACTOR OF THE RESPONSIBILITY FOR THE CORRECTNESS OF DETAIL.

FOR APPROVAL
NOT FOR CONSTRUCTION

REVISION	DATE	DESCRIPTION OF REVISION
NO. 1		
NO. 2		
NO. 3		
NO. 4		
NO. 5		

PRINTING Req'd	For	Date

Bolts: SEE NOTE Holes: NTD. Unless Noted
Shop Paint: SEE SHT GN1.
Fab Spec: AS72-50 U.N. Inspection
Architect
Erection By: Field Connections

HIRSCHFELD STEEL CO. INC.
112 WEST 29TH SAN ANGELO, TEXAS 76903
PHONE (915) 653-3211

DESCRIPTION: BLOCKING, SPLICE ℄ & MATCH MARKING DETAILS
STRUCTURE: US 83/281 INTERCHANGE RAMP #2
LOCATION: HIDALGO COUNTY
CUSTOMER: GILBERT TEXAS CONSTRUCTION
SHIP TO:
Customer's Order No.
Dwg. By: MSG Date: 3-6-93
Checked By Date
SHEET 259 OF
JOB NO. 92-107

FED. ROAD DIV. NO.	STATE	FEDERAL AID PROJECT NO.			
6	TX.	NH 92(50)M			
STATE DIST. NO.	COUNTY	CONTROL NO.	SECTION NO.	JOB NO.	HIGHWAY NO.
21	HIDALGO	39	17	97	83/281

Q0207

ADV. NOV. 24

C.E. 92-12

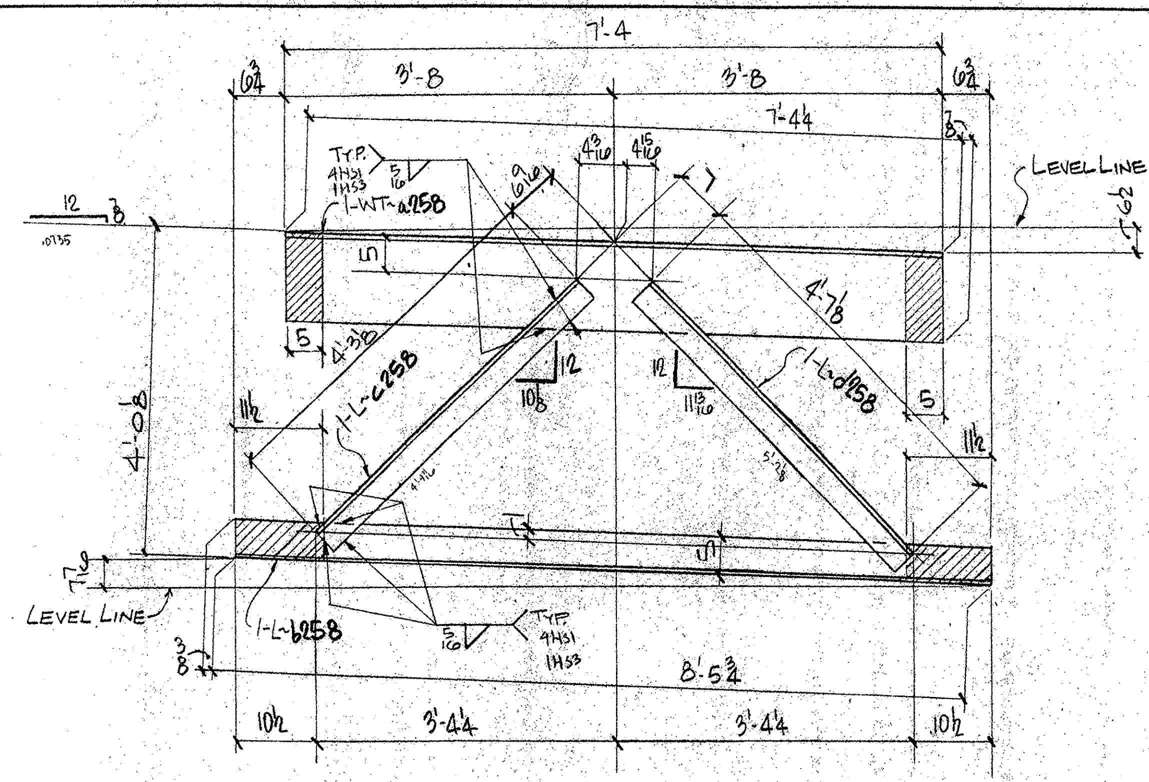

ONE-END DIAFRAM ~ 258D1

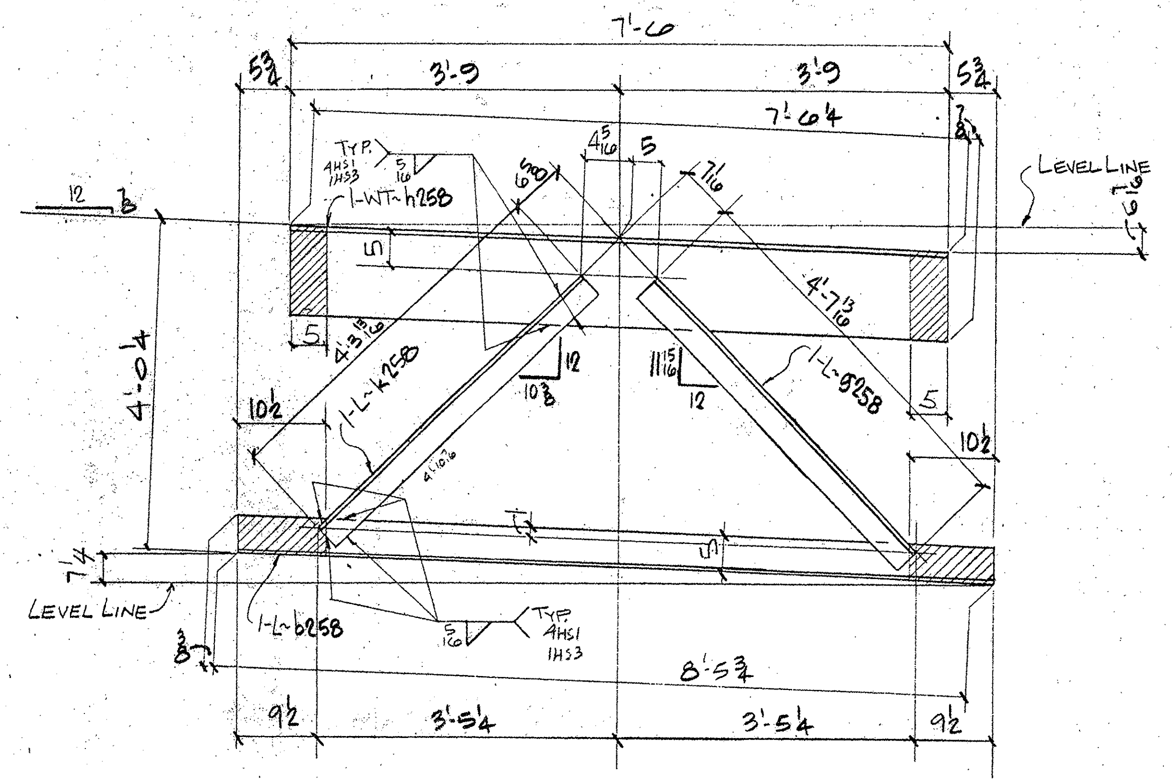

ONE-END DIAFRAM ~ 258D3

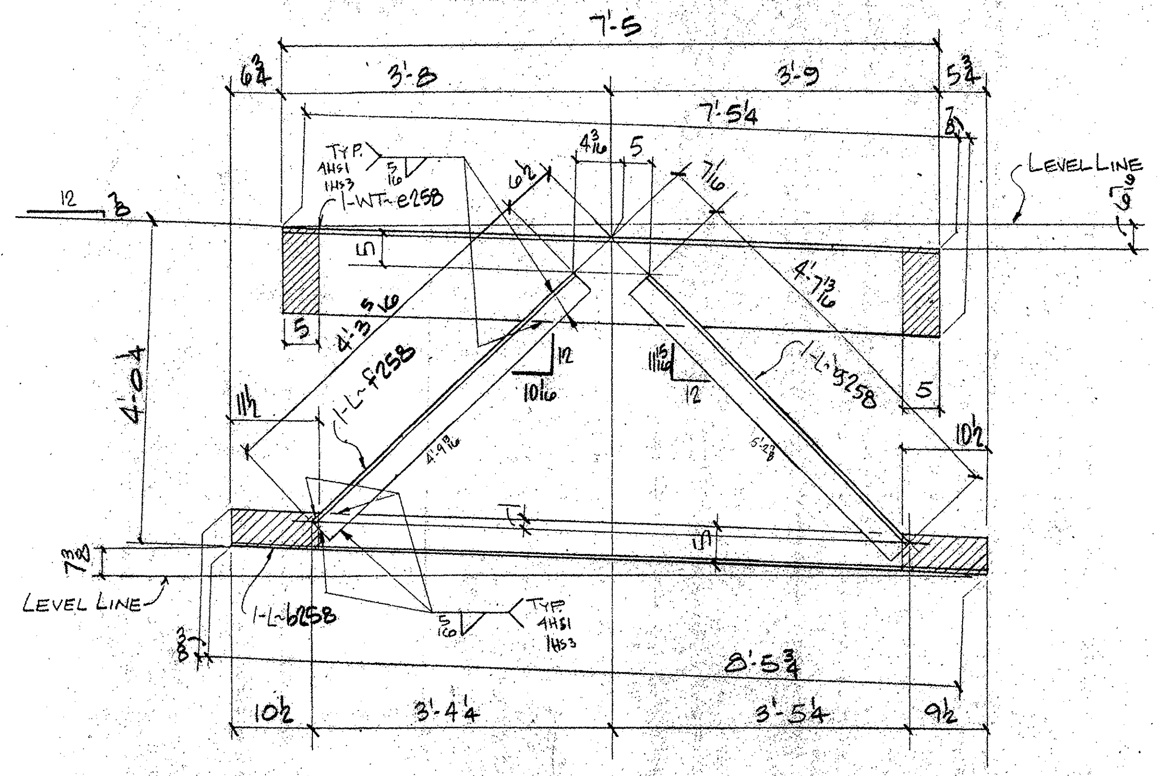

ONE-END DIAFRAM ~ 258D2

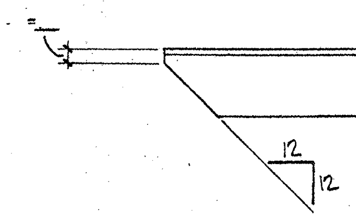

TYP. CLIP ON ALL OUTSTANDING ANGLE LEGS

NOTES:
1. FOR GENERAL NOTES SEE SHT. GN1
2. ▨ INDICATES OIL, NO PAINT (N.S./F.S. & EDGES)

BILL OF MATERIAL

	Qnty.	Material	Length	Mark Temp.	Mark Ship.	Wt.	Cut From	Remarks
1								
2								
3	ONE	DIAFRAM			258D1			
4	ONE	WT 12×42	7'-5⅛	a258			206-3	
5	ONE	L 5×3½×⅜	8'-6⅛	b258			206-4	
6	ONE	L 3½×3½×⅜	4'-3⅛	c258			206-5	
7	ONE	L 3½×3½×⅜	4'-7⅛	d258			206-5	
8								
9								
10								
11								
12								
13								
14	ONE	DIAFRAM			258D2			
15	ONE	WT 12×42	7'-6⅛	e258			206-3	
16	ONE	L		b258				
17	ONE	L 3½×3½×⅜	4'-3 5/16	f258			206-5	
18	ONE	L 3½×3½×⅜	4'-7 13/16	g258			206-5	
19								
20								
21								
22								
23								
24	ONE	DIAFRAM			258D3			
25	ONE	WT 12×42	7'-7⅛	h258			206-3	
26	ONE	L		b258				
27	ONE	L		g258				
28	ONE	L 3½×3½×⅜	4'-3 13/16	k258			206-5	
29								
30								
31								
32								
33								
34								
35								
36								
37								
38								
39								
40		FIELD BOLTS (% ADDED) A325 TY I						
41	490	HS BOLT ¾⌀	0'-2½				205-4	
42	15	HS BOLT ¾⌀	0'-3				205-5	
43	15	HS BOLT ¾⌀	0'-3¼				205-6	
44	1040	HS WASH ¾⌀					205-7	
45								
46	93	HS BOLT 1⌀	0'-2¾				205-9	
47	52	HS BOLT 1⌀	0'-3½				205-10	
48	28	HS BOLT 1⌀	0'-4				205-11	
49	19	HS BOLT 1⌀	0'-4½				205-12	
50	339	HS BOLT 1⌀	0'-8½				205-13	
51	531	HS WASH 1⌀					205-14	
52								
53								
54								
55								
56								
57								
58								
59								
60								

TEXAS DEPARTMENT OF TRANSPORTATION
APPROVED
DIVISION OF BRIDGES AND STRUCTURES
APR 23 1993
APPROVAL OF THIS DRAWING DOES NOT RELIEVE THE CONTRACTOR OF THE RESPONSIBILITY FOR THE CORRECTNESS OF DETAIL

FOR APPROVAL
MAR 24 '93
NOT FOR CONSTRUCTION

REVISION	DATE	DESCRIPTION OF REVISION
NO. 1		
NO. 2		
NO. 3		
NO. 4		
NO. 5		

PRINTING: Req'd | For | Date — APR MAR 24

Bolts | Holes: | Unless Noted
Shop Paint SEE SHT GN1
Fab. Spec. A36 | Inspection
Architect
Erection By | Field Connections

HIRSCHFELD STEEL CO. INC.
112 WEST 29TH SAN ANGELO, TEXAS 76903
PHONE (915) 653-3211

DESCRIPTION: 680'-0 PLATE GIRDER UNIT
STRUCTURE: US 83/281 INTERCHANGE RAMP #2
LOCATION: HIDALGO COUNTY
CUSTOMER: GILBERT TEXAS CONSTRUCTION
SHIP TO
Customer's Order No.
Dwg. By JRC Date 9/92
Checked By DZT Date 9/92
SHEET 258 OF
JOB NO. 92-107

F0207

FED. ROAD DIV. NO.	STATE	FEDERAL AID PROJECT NO.			
6	TX.	NH 92(50)M			
STATE DIST. NO.	COUNTY	CONTROL NO.	SECTION NO.	JOB NO.	HIGHWAY NO.
21	HIDALGO	39	17	97	83/281

CE 92-12

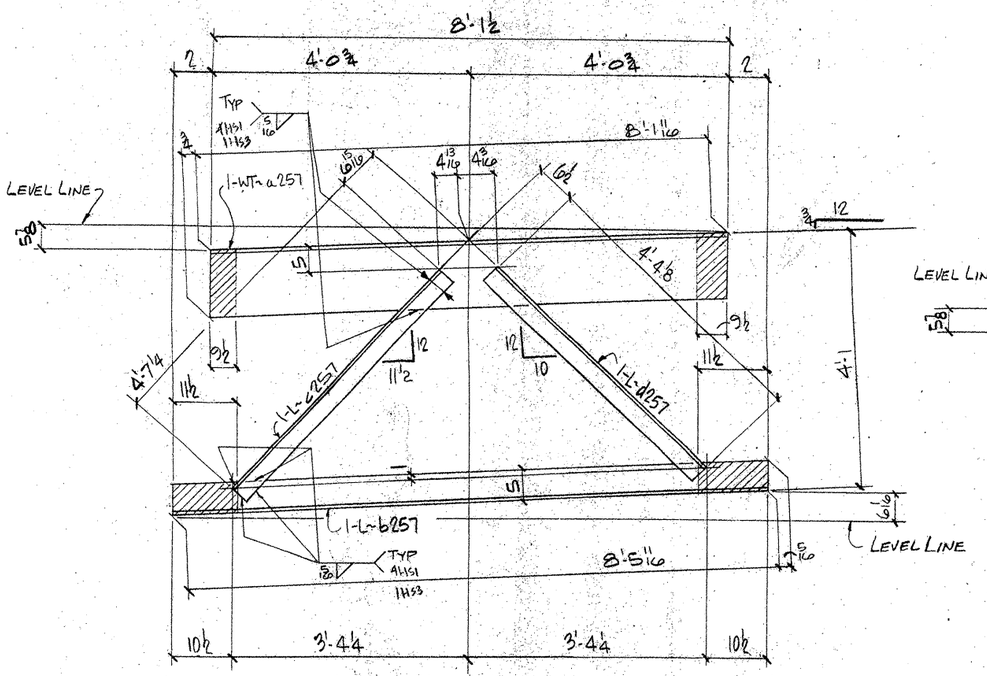

ONE - END DIAFRAM 257D1

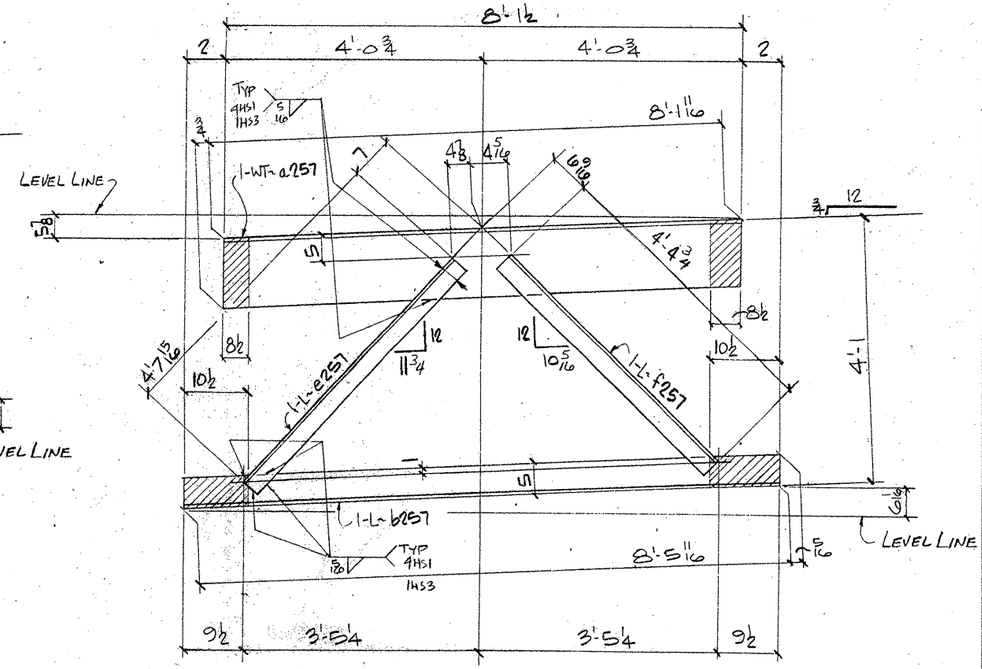

ONE - END DIAFRAM 257D3

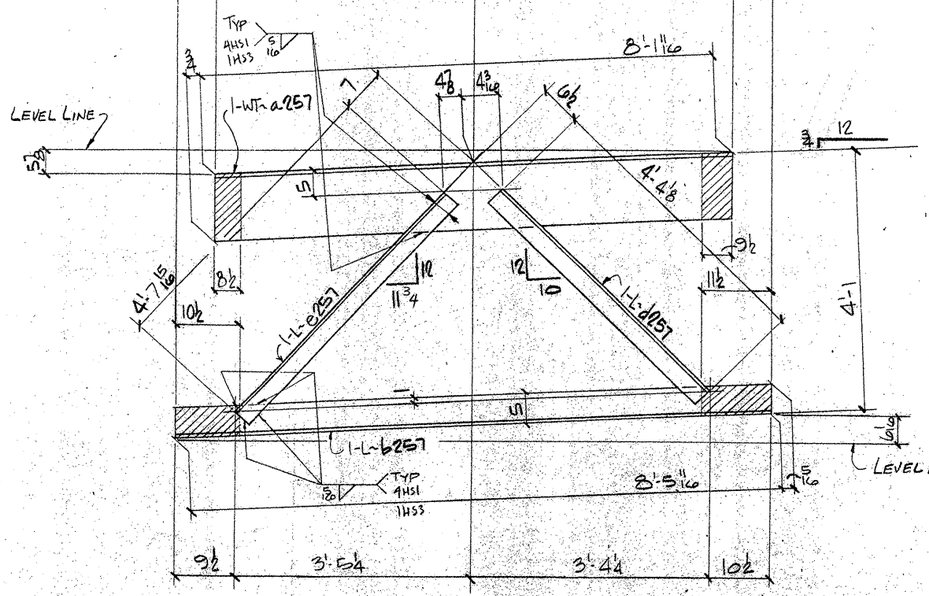

ONE - END DIAFRAM 257D2

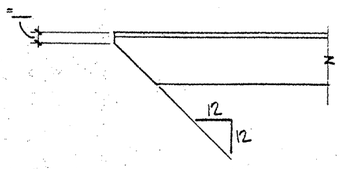

TYP. CLIP ON ALL OUTSTANDING ANGLE LEGS

NOTES:

1. FOR GENERAL NOTES SEE SHT. GN1
2. ▨ INDICATES OIL, NO PAINT (N.S./F.S. & EDGES)

F0207

FED. ROAD DIV. NO.	STATE	FEDERAL AID PROJECT NO.				
6	TX.	NH 92(50)M				
STATE DIST. NO.	COUNTY	CONTROL NO.	SECTION NO.	JOB NO.	HIGHWAY NO.	
21	HIDALGO	39	17	97	83/281	

BILL OF MATERIAL

	Qnty.	Material	Length	Mark Temp.	Mark Ship.	Wt.	Cut From	Remarks
3	ONE	DIAFRAM			257D1			
4	ONE	WT12 x 42	8'-2 7/16	a257			206-2	
5	ONE	L 5 x 3½ x 3/8	8'-6	b257			206-4	
6	ONE	L 3½ x 3½ x 3/8	4'-7 15/16	c257			206-5	
7	ONE	L 3½ x 3½ x 3/8	4'-4⅛	d257			206-5	
14	ONE	DIAFRAM			257D2			
15	ONE	WT		a257				
16	ONE	L		b257				
17	ONE	L		d257				
18	ONE	L 3½ x 3½ x 3/8	4'-7 15/16	e257			206-5	
28	ONE	DIAFRAM			257D3			
29	ONE	WT		a257				
30	ONE	L		b257				
31	ONE	L		e257				
32	ONE	L 3½ x 3½ x 3/8	4'-4¾	f257			206-5	

TEXAS DEPARTMENT OF TRANSPORTATION
APPROVED
DIVISION OF BRIDGES AND STRUCTURES
APR 23 1993

APPROVAL OF THIS DRAWING DOES NOT RELIEVE THE CONTRACTOR OF THE RESPONSIBILITY FOR THE CORRECTNESS OF DETAIL

FOR FABRICATION
MAY 24 93
NOT FOR CONSTRUCTION

REVISION	DATE	DESCRIPTION OF REVISION
NO. 1		
NO. 2		
NO. 3		
NO. 4		
NO. 5		

PRINTING Req'd | For | Date

Bolts. Holes. Unless Noted.
Shop Paint SEE SHT GN1
Fab Spec. A36 Inspection
Architect
Erection By Field Connections

HIRSCHFELD STEEL CO. INC.
112 WEST 29TH SAN ANGELO, TEXAS 76903
PHONE (915) 653-3211

DESCRIPTION 680'-0 PLATE GIRDER UNIT
STRUCTURE US 83/281 INTERCHANGE RAMP #2
LOCATION HIDALGO COUNTY
CUSTOMER GILBERT TEXAS CONSTRUCTION
SHIP TO
Customer's Order No.
Dwg. By JDZ Date 9/92
Checked By DLT Date 9/92
APR 1993 24

SHEET 257 OF
JOB NO. 92-107
CE92-12

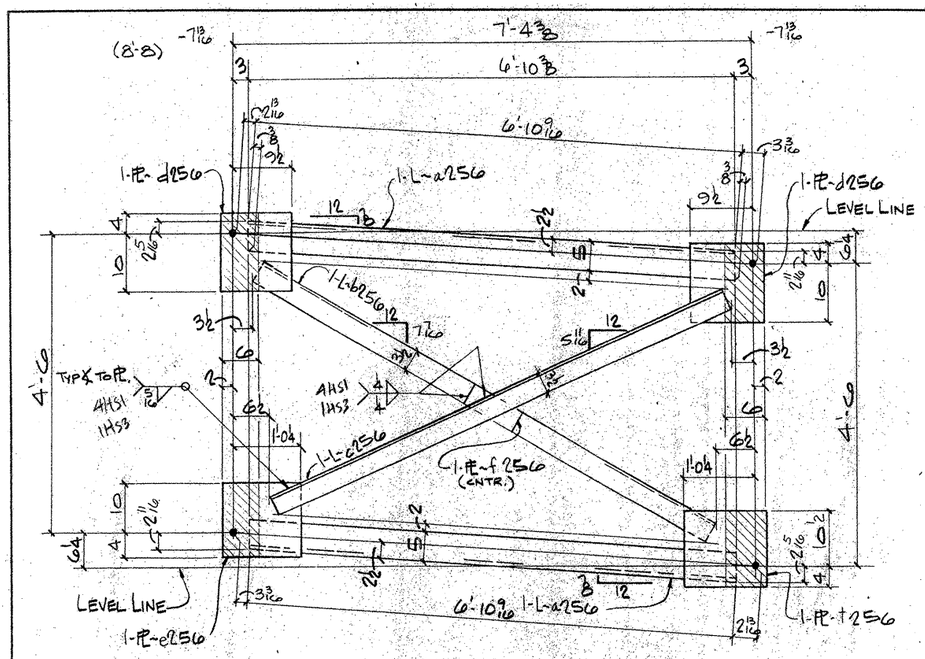

122 - DIAFRAMS~ 256D1

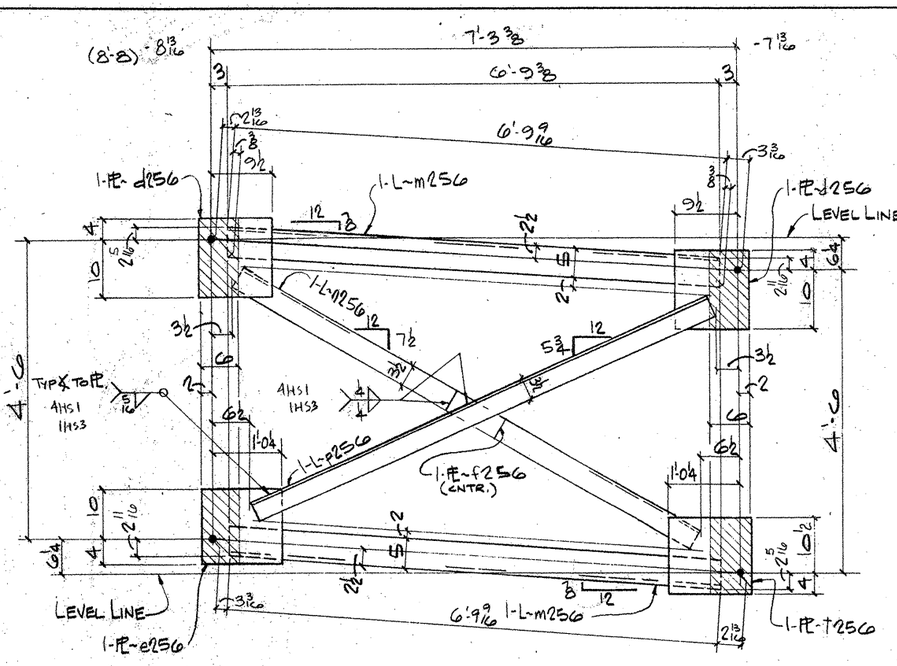

2 - DIAFRAMS~ 256D3

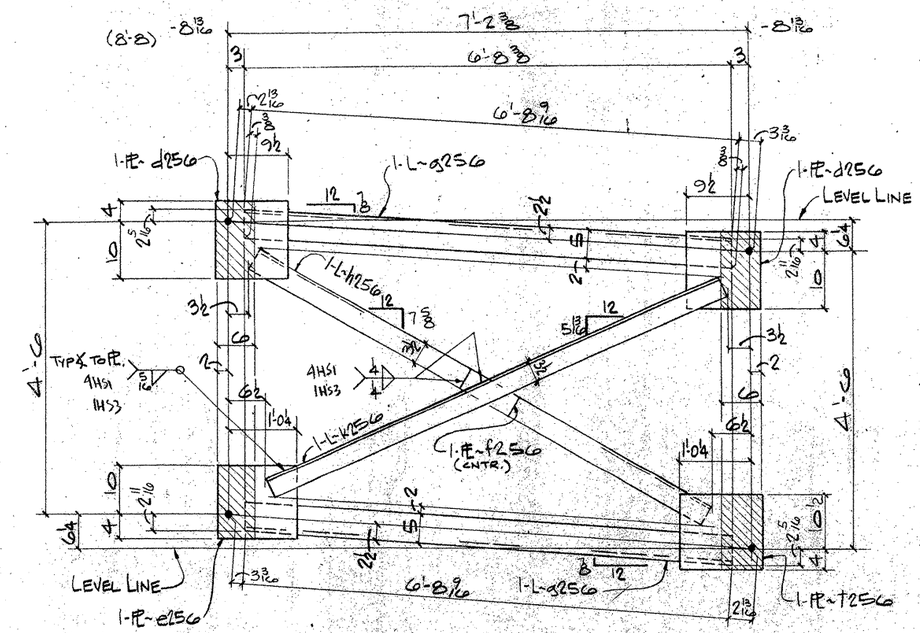

2 - DIAFRAMS~ 256D2

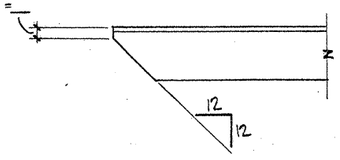

TYP. CLIP ON ALL OUTSTANDING ANGLE LEGS

NOTES:

1. FOR GENERAL NOTES SEE SHT. GN1
2. ▨ INDICATES OIL, NO PAINT (N.S./F.S. & EDGES)

F0207

FED. ROAD DIV. NO	STATE	FEDERAL AID PROJECT NO.			
6	TX.	NH 92(50) M			
STATE DIST. NO	COUNTY	CONTROL NO	SECTION NO	JOB NO	HIGHWAY NO
21	HIDALGO	39	17	97	83/281

BILL OF MATERIAL

	Qnty.	Material	Length	Mark Temp.	Mark Ship.	Wt.	Cut From	Remarks
1								
2								
3	122	DIAFRAMS			256D1			
4	244	L5x3½x½	6'-10 15/16	a256			206-15	
5	122	L5x3½x½	7'-6	b256			206-16	
6	122	L5x3½x½	7'-1	c256			206-16	
7	244	PL½x11½	1'-2	d256			206-17	
8	122	PL½x14	1'-2¼	e256			206-18	
9	122	PL½x3½	0'-9	f256			206-19	
10	122	PL½x14¼	1'-2½	t256			206-18	
11								
12								
13								
14	2	DIAFRAMS			256D2			
15	4	L5x3½x½	6'-8 15/16	g256			206-15	
16	2	L5x3½x½	7'-4¼	h256			206-16	
17	2	L5x3½x½	6'-11 3/16	k256			206-16	
18	4	PL		d256				
19	2	PL		e256				
20	2	PL		f256				
21	2	PL		t256				
22								
23								
24								
25								
26	2	DIAFRAMS			256D3			
27	4	L5x3½x½	6'-9 15/16	m256			206-15	
28	2	L5x3½x½	7'-5⅛	n256			206-16	
29	2	L5x3½x½	7'-0⅛	p256			206-16	
30	4	PL		d256				
31	2	PL		e256				
32	2	PL		f256				
33	2	PL		t256				
34								
35								
36								
37								
38								
39								
40								
41								
42								
43								
44								
45								
46								
47								
48								
49								
50								
51								
52								
53								
54								
55								
56								
57								
58								
59								
60								

TEXAS DEPARTMENT OF TRANSPORTATION
APPROVED
DIVISION OF BRIDGES AND STRUCTURES
APR 23 1993
APPROVAL OF THIS DRAWING DOES NOT RELIEVE THE CONTRACTOR OF THE RESPONSIBILITY FOR THE CORRECTNESS OF DETAIL.

FOR APPROVAL
NOT FOR CONSTRUCTION

REVISION	DATE	DESCRIPTION OF REVISION
NO. 1		
NO. 2		
NO. 3		
NO. 4		
NO. 5		

PRINTING

Req'd	For	Date

Bolts Holes: 15/16φ Unless Noted
Shop Paint SEE SHT GN1
Fab. Spec A36 Inspection
Architect
Erection By Field Connections

HIRSCHFELD STEEL CO. INC.
112 WEST 29TH SAN ANGELO, TEXAS 76903
PHONE (915) 653-3211

DESCRIPTION 680'-0 PLATE GIRDER UNIT
STRUCTURE US 83/281 INTERCHANGE RAMP #2
LOCATION HIDALGO COUNTY
CUSTOMER GILBERT TEXAS CONSTRUCTION
SHIP TO
Customer's Order No.
Dwg. By JDL Date 8/92
Checked By DLT Date 9/92
SHEET 256 OF
JOB NO. 92-107
CE 92-12

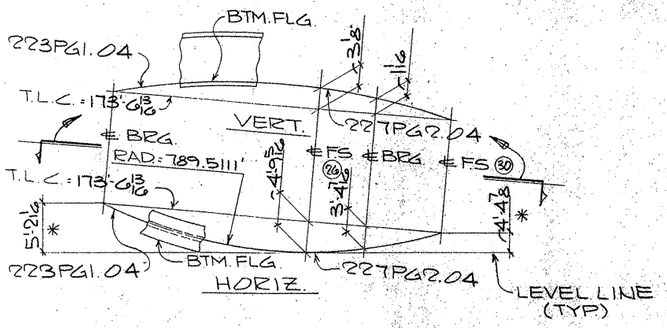

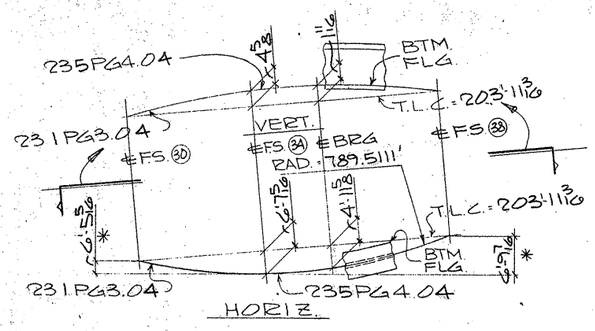

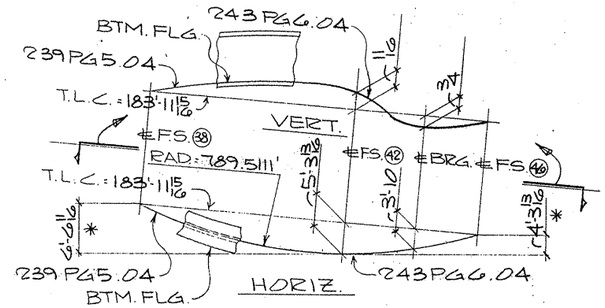

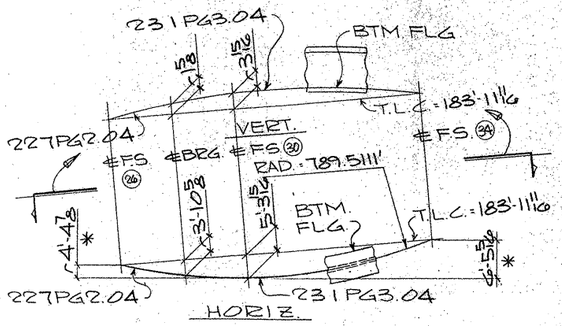

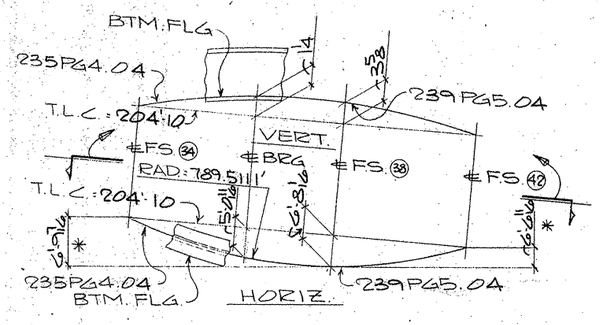

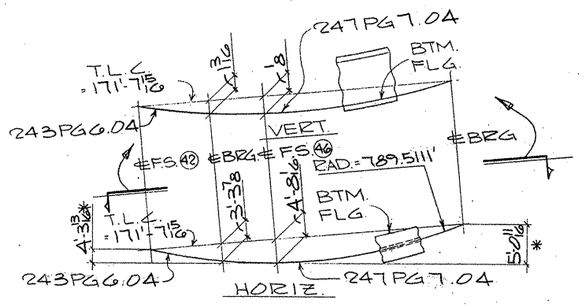

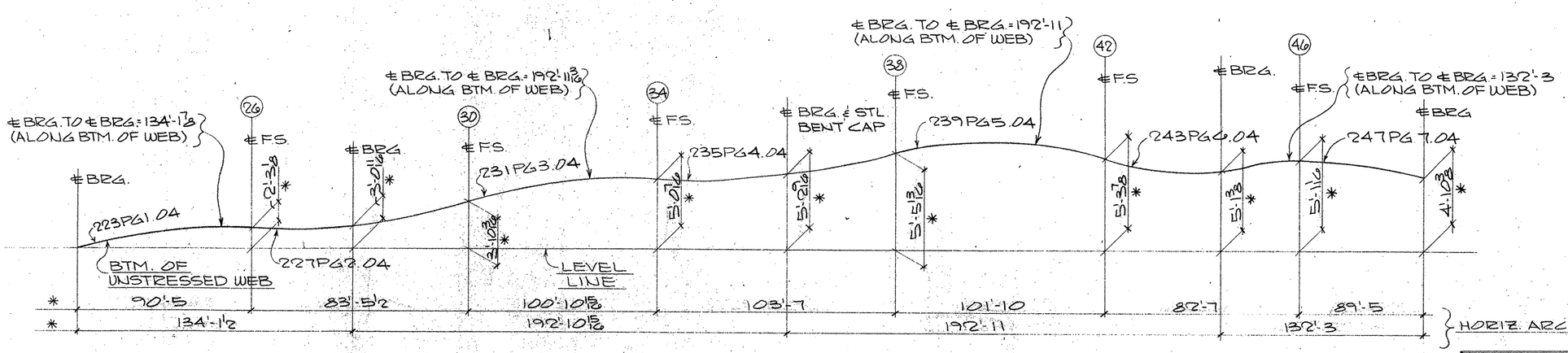

VERTICAL BLOCKING DIAGRAM
(LINE #4)

TEXAS DEPARTMENT OF TRANSPORTATION
APPROVED
DIVISION OF BRIDGES AND STRUCTURES
APR 23 1993
APPROVAL OF THIS DRAWING DOES NOT RELIEVE THE CONTRACTOR OF THE RESPONSIBILITY FOR THE CORRECTNESS OF DETAIL.

FOR APPROVAL
NOT FOR CONSTRUCTION

NOTES:
1. T.L.C.= TRUE LENGTH CHORD.
2. DIMENSIONS ARE GIVEN ALONG OR NORMAL TO THE TRUE LENGTH CHORD UNL. NTD.
3. DIMENSIONS NOTED "*" ARE GIVEN ALONG OR NORMAL TO THE LEVEL LINE.
4. FOR GENERAL NOTES SEE SHT. GN1.

FED. ROAD DIV. NO.	STATE	FEDERAL AID PROJECT NO.			
6	TX.	NH92 (50) M			
STATE DIST. NO.	COUNTY	CONTROL NO.	SECTION NO.	JOB NO.	HIGHWAY NO.
21	HIDALGO	39	17	97	83/281

HOLES ____ U.N.	FOR AP'VL.
BOLTS ____ U.N.	RETURNED
WELDS ____ U.N.	TO SHOP
PAINT	

REVISIONS		
NO.	DATE	REMARKS
1		
2		
3		
4		

HIRSCHFELD STEEL CO. INC.
112 WEST 29TH SAN ANGELO, TEXAS 76903
PHONE (915) 653-3211

CUSTOMER GILBERT TEXAS CONSTRUCTION
ARCHITECT
PROJECT US 83/281 INTERCHANGE RAMP #2
LOCATION HIDALGO COUNTY

DRAWN CRT DATE 8-92 | JOB NO. 92-107 | SHEET NO. 255 of ____
CHECKED DMS DATE 10/6/92

CE 92-12 (LINE #4)

a b c d e f g h i j k l m n o p q r s t u v w x y z

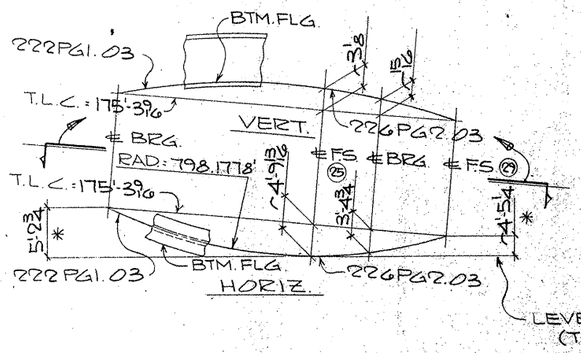

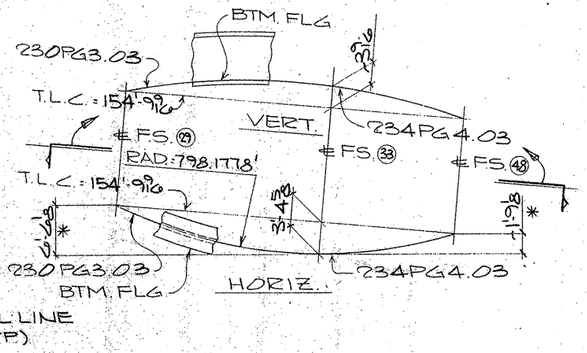

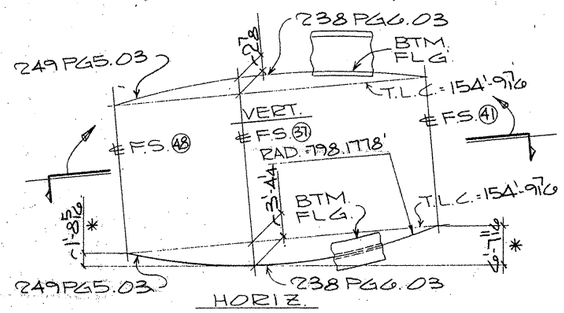

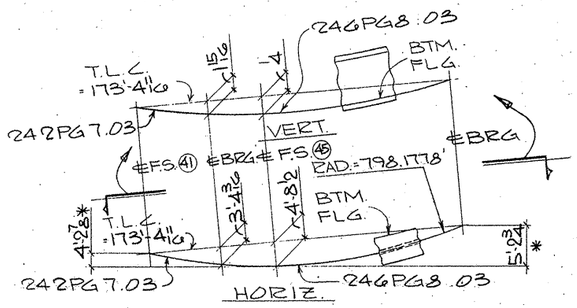

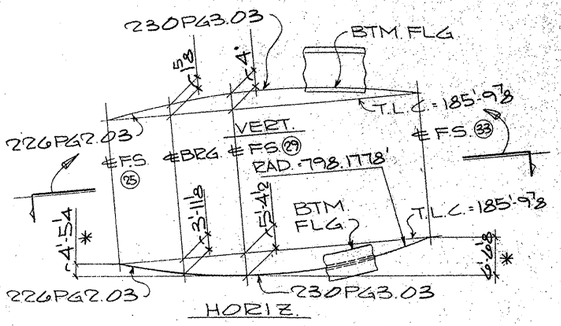

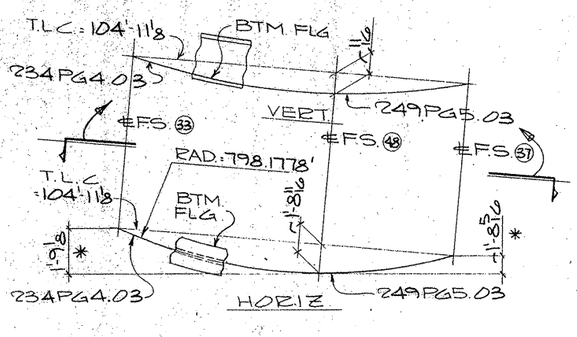

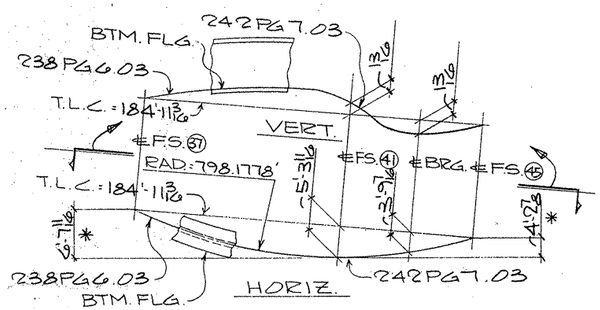

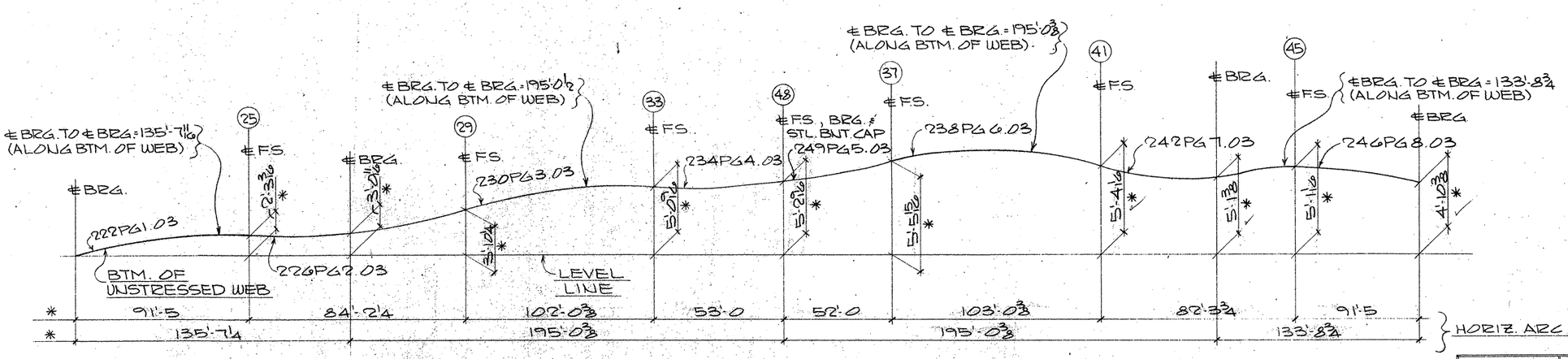

VERTICAL BLOCKING DIAGRAM
(LINE # 3)

FED. ROAD DIV. NO.	STATE	FEDERAL AID PROJECT NO.				
6	TX.	NH92 (50) M				
STATE DIST. NO.	COUNTY	CONTROL NO.	SECTION NO.	JOB NO.	HIGHWAY NO.	
21	HIDALGO	39	17	97	83/281	

TEXAS DEPARTMENT OF TRANSPORTATION
APPROVED
DIVISION OF BRIDGES AND STRUCTURES
APR 23 1993
APPROVAL OF THIS DRAWING DOES NOT RELIEVE THE CONTRACTOR OF THE RESPONSIBILITY FOR THE CORRECTNESS OF DETAIL.

FOR APPROVAL
APR 14 '93
NOT FOR CONSTRUCTION

NOTES:
1. T.L.C.= TRUE LENGTH CHORD.
2. DIMENSIONS ARE GIVEN ALONG OR NORMAL TO THE TRUE LENGTH CHORD UNL. NTD.
3. DIMENSIONS NOTED * ARE GIVEN ALONG OR NORMAL TO THE LEVEL LINE.
4. FOR GENERAL NOTES SEE SHT. GN1.
5. SEE SHT.* 253 FOR MATCH MARKING AT SPLICE #48

HOLES ____ U.N.	FOR AP'VL ____
BOLTS ____ U.N.	RETURNED ____
WELDS ____ U.N.	TO SHOP ____
PAINT ____	

REVISIONS		
NO.	DATE	REMARKS
1		
2		
3		
4		

HIRSCHFELD STEEL CO. INC.
112 WEST 29TH SAN ANGELO, TEXAS 76903
PHONE (915) 653-3211

CUSTOMER GILBERT TEXAS CONSTRUCTION
ARCHITECT
PROJECT US 83/281 INTERCHANGE RAMP #2
LOCATION HIDALGO COUNTY
DRAWN CRT DATE 8-92
CHECKED MSG DATE 10/6/92
JOB NO 92-107
SHEET NO 254 of ____

CE 92-12 (LINE # 3)

a b c d e f g h i j k l m n o p q r s t u v w x y z

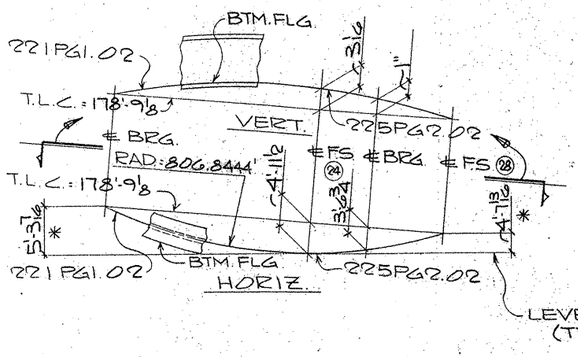

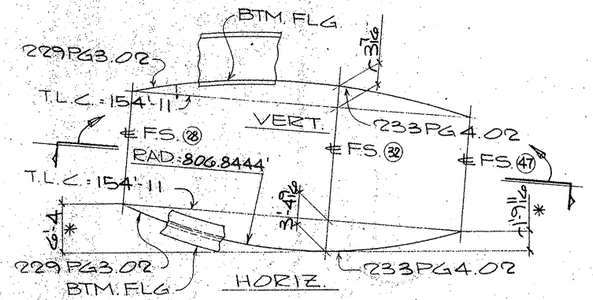

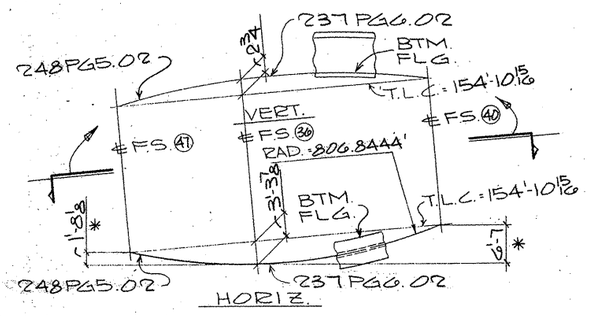

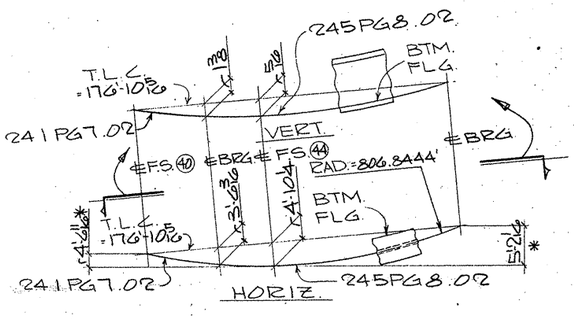

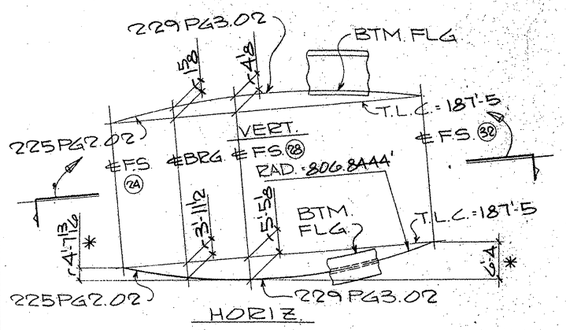

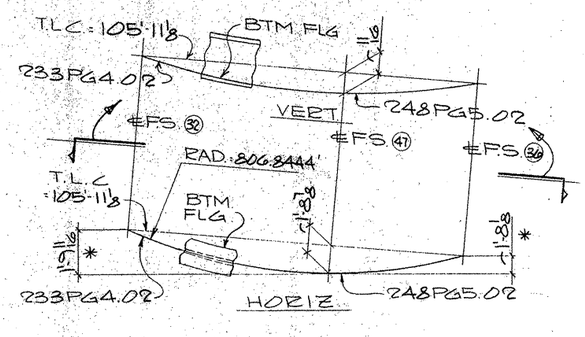

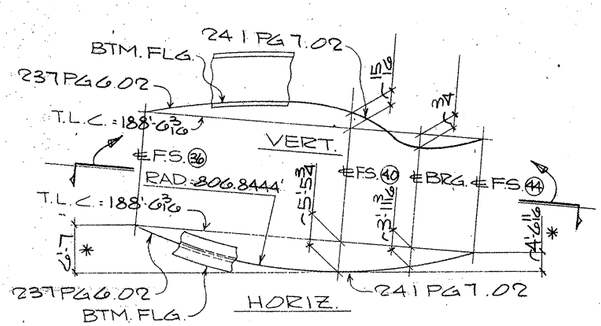

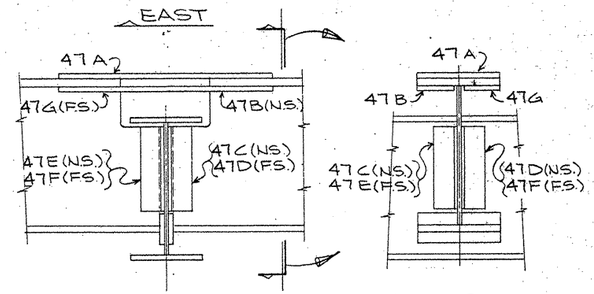

DETAIL OF FIELD SPLICE (47)

FIELD SPLICES MARKED THUS (47) ARE MATCHMARKS. ALL GIRDERS TO BE ERECTED WITH MATCHING MARKS AS SHOWN. FOR FIELD SPLICES (47) & (48) ONLY.

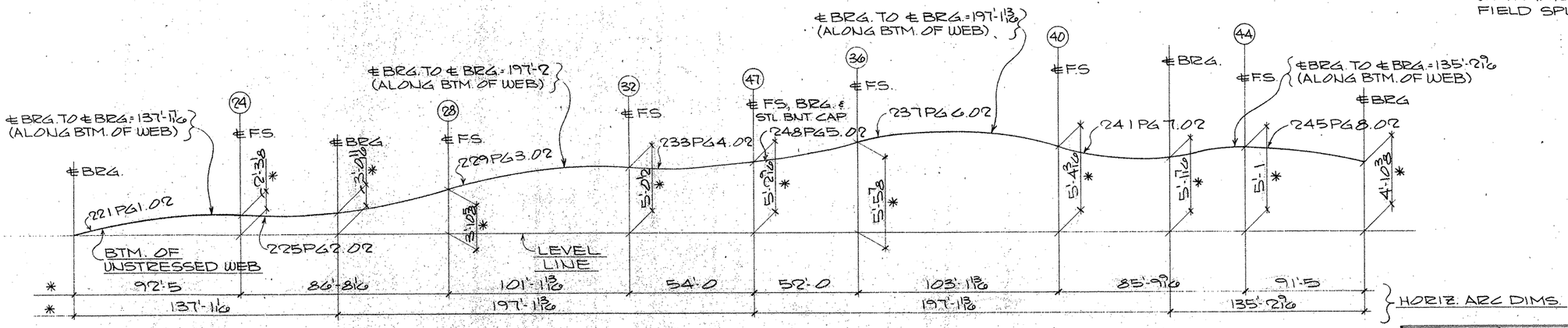

VERTICAL BLOCKING DIAGRAM (LINE #2)

TEXAS DEPARTMENT OF TRANSPORTATION
APPROVED
DIVISION OF BRIDGES AND STRUCTURES
APR 23 1993
APPROVAL OF THIS DRAWING DOES NOT RELIEVE THE CONTRACTOR OF THE RESPONSIBILITY FOR THE CORRECTNESS OF DETAIL.

FOR APPROVAL
APR 24 93
NOT FOR CONSTRUCTION

NOTES:
1. T.L.C.= TRUE LENGTH CHORD.
2. DIMENSIONS ARE GIVEN ALONG OR NORMAL TO THE TRUE LENGTH CHORD UNL. NTD.
3. DIMENSIONS NOTED * ARE GIVEN ALONG OR NORMAL TO THE LEVEL LINE.
4. FOR GENERAL NOTES SEE SHT. GN1.

APR 1993 24

FED. ROAD DIV. NO.	STATE	FEDERAL AID PROJECT NO.			
6	TX.	NH92 (50) M			
STATE DIST. NO.	COUNTY	CONTROL NO.	SECTION NO.	JOB NO.	HIGHWAY NO.
21	HIDALGO	39	17	97	83/281

HOLES ____ U.N.	FOR AP'VL ____
BOLTS ____ U.N.	RETURNED ____
WELDS ____ U.N.	TO SHOP ____
PAINT ____	

REVISIONS

NO.	DATE	REMARKS
1		
2		
3		
4		

HIRSCHFELD STEEL CO. INC.
112 WEST 29TH SAN ANGELO, TEXAS 76903
PHONE (915) 653-3211

CUSTOMER GILBERT TEXAS CONSTRUCTION
ARCHITECT
PROJECT US 83/281 INTERCHANGE RAMP *2
LOCATION HIDALGO COUNTY

DRAWN CRT DATE 8-92
CHECKED mso DATE 10/6/92
JOB NO. 92-107
SHEET NO. 253 of

CE 92-12 (LINE #2)

a b c d e f g h i j k l m n o p q r s t u v w x y z

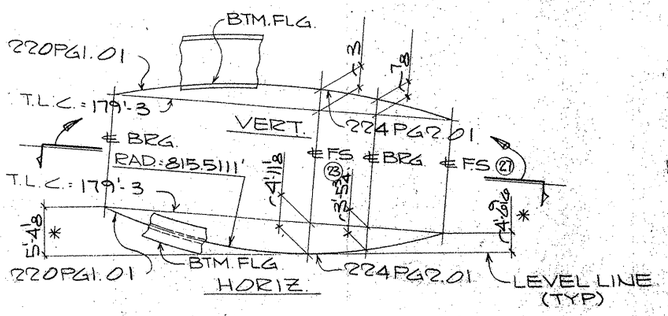

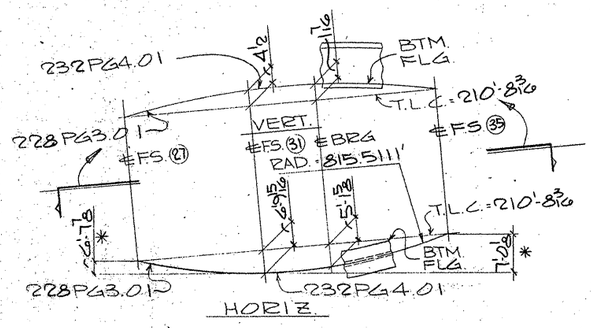

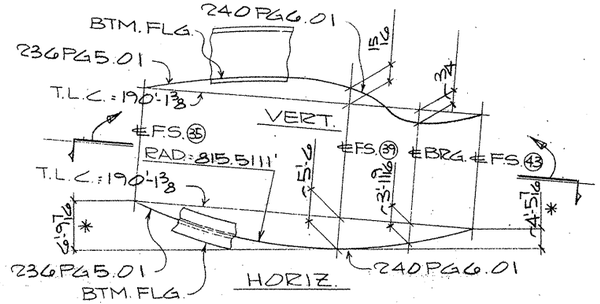

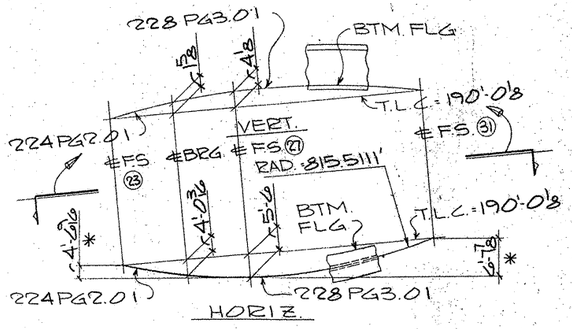

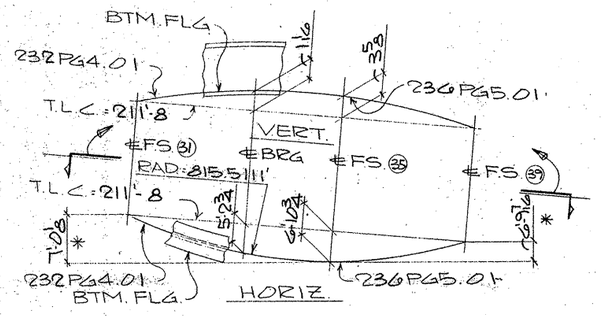

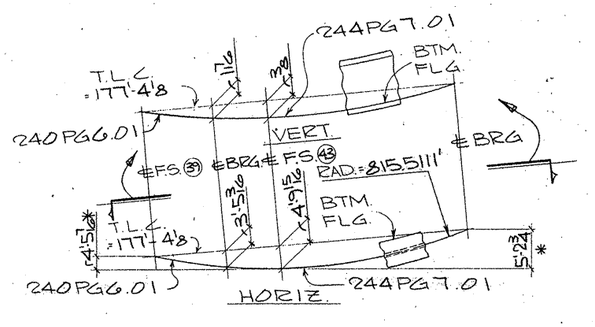

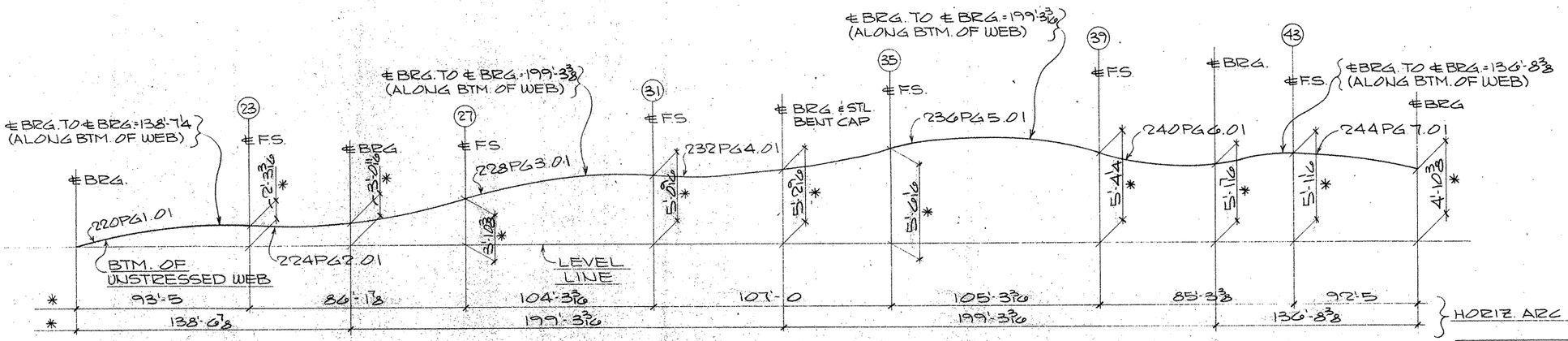

VERTICAL BLOCKING DIAGRAM
(LINE # 1)

TEXAS DEPARTMENT OF TRANSPORTATION
APPROVED
DIVISION OF BRIDGES AND STRUCTURES
APR 23 1993
APPROVAL OF THIS DRAWING DOES NOT RELIEVE THE CONTRACTOR OF THE RESPONSIBILITY FOR THE CORRECTNESS OF DETAIL

FOR APPROVAL
MAR 25
NOT FOR CONSTRUCTION

NOTES:
1. T.L.C.= TRUE LENGTH CHORD.
2. DIMENSIONS ARE GIVEN ALONG OR NORMAL TO THE TRUE LENGTH CHORD UNL. NTD.
3. DIMENSIONS NOTED ✻ ARE GIVEN ALONG OR NORMAL TO THE LEVEL LINE.
4. FOR GENERAL NOTES SEE SHT. GN1.

APR MAR 24

FED. ROAD DIV. NO.	STATE	FEDERAL AID PROJECT NO.				
6	TX.	NH92 (50) M				
STATE DIST. NO.	COUNTY	CONTROL NO.	SECTION NO.	JOB NO.		HIGHWAY NO.
21	HIDALGO	39	17	97		83/281

HOLES ____ U.N.	FOR AP'VL		
BOLTS ____ U.N.	RETURNED		
WELDS: ____ U.N.	TO SHOP		
PAINT			
REVISIONS			
NO.	DATE	REMARKS	
1			
2			
3			
4			

HIRSCHFELD STEEL CO. INC.
112 WEST 29TH SAN ANGELO, TEXAS 76903
PHONE (915) 653-3211

CUSTOMER GILBERT TEXAS CONSTRUCTION
ARCHITECT
PROJECT US 83/281 INTERCHANGE RAMP "C"
LOCATION HIDALGO COUNTY

DRAWN CRT DATE 8-92 | JOB NO 92-107 | SHEET NO 252 of
CHECKED DATE 10/5/92

CE 92-12 (LINE #1)

a b c d e f g h i j k l m n o p q r s t u v w x y z

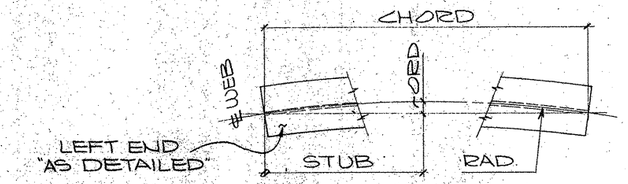

HEAT CURVE DIAGRAM
(ALONG TOP FLG.)

THIS SHEET NOT DETAIL CHECKED

	STUB	5'-0	10'-0	15'-0	20'-0	25'-0	30'-0	35'-0	40'-0	45'-0	50'-0	55'-0	60'-0	65'-0	70'-0	75'-0	80'-0	85'-0	90'-0	95'-0	100'-0	105'-0	CHORD	RADIUS
CORD	236PG5.01	3 1/16	7	9 15/16	1'-0 9/16	1'-2 3/4	1'-4 5/8	1'-6 1/16	1'-7 7/16	1'-7 15/16	1'-8 5/16	1'-8 5/16	1'-7 15/16	1'-7 1/4	1'-6 3/8	1'-4 1/16	1'-2 1/8	1'-0 5/8	10 1/16	7 1/8	3 3/16	1/8	105'-2 1/8	815.5111'
	237PG6.02	3 5/8	6 1/8	9 1/16	1'-0 3/8	1'-2 1/16	1'-4 5/8	1'-5 3/4	1'-6 3/4	1'-7 1/16	1'-7 3/4	1'-7 11/16	1'-7 1/4	1'-6 1/16	1'-5 1/4	1'-3 1/16	1'-1 3/4	11 1/16	8 3/4	5 1/16	2 5/16	-	103'-0 3/8	806.8444'
	238PG6.03	3 1/16	7	9 1/16	1'-0 1/2	1'-2 1/16	1'-4 1/2	1'-5 3/8	1'-6 1/16	1'-7 1/8	1'-7 15/16	1'-7 7/8	1'-7 3/8	1'-6 9/16	1'-5 3/8	1'-3 3/4	1'-1 1/8	11 1/2	8 3/4	5 1/16	2 1/4	-	102'-11 3/8	798.1778'
	239PG5.04	3 1/16	7	9 7/8	1'-0 7/16	1'-2 3/8	1'-4 3/8	1'-5 3/4	1'-6 3/16	1'-7 1/16	1'-7 1/16	1'-7 1/16	1'-7 1/16	1'-6 3/16	1'-4 5/8	1'-3 1/4	1'-1 1/4	10 13/16	8 1/16	4 7/8	1 5/16	-	101'-9	789.5111'
	240PG6.01	2 15/16	5 7/16	7 3/4	9 5/8	11 1/16	1'-0 3/16	1'-0 15/16	1'-1 5/16	1'-1 5/16	1'-1	1'-0 1/4	11 1/8	9 11/16	7 7/8	5 5/8	3 1/16	1/8	-	-	-	-	85'-2 1/8	815.5111'
	241PG7.02	3	5 5/8	7 7/8	9 13/16	11 5/16	1'-0 7/16	1'-1 7/16	1'-1 3/8	1'-1 5/16	1'-1 1/16	1'-0 9/16	11 1/2	10 1/16	8 3/16	6	3 7/16	1/2	-	-	-	-	85'-8 1/8	806.8444'
	242PG7.03	2 15/16	5 7/16	7 7/16	9 3/8	10 3/4	11 13/16	1'-0 7/16	1'-0 1/16	1'-0 5/8	1'-0 1/8	11 5/16	10 1/16	8 1/16	6 1/16	4 1/8	1 3/8	-	-	-	-	-	82'-3 3/16	798.1778'
	243PG6.04	2 15/16	5 1/2	7 1/16	9 1/2	10 15/16	1'-0	1'-0 3/8	1'-0 15/16	1'-0 7/8	1'-0 3/8	11 1/2	10 5/16	8 1/16	6 1/16	4 5/16	1 9/16	-	-	-	-	-	82'-0 1/16	789.5111'

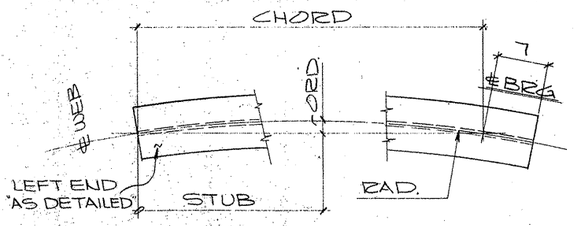

HEAT CURVE DIAGRAM
(ALONG TOP FLG.)

THIS SHEET NOT DETAIL CHECKED

	STUB	5'-0	10'-0	15'-0	20'-0	25'-0	30'-0	35'-0	40'-0	45'-0	50'-0	55'-0	60'-0	65'-0	70'-0	75'-0	80'-0	85'-0	90'-0	CHORD	RADIUS
CORD	244PG7.01	3 3/16	6 1/16	8 7/16	10 1/16	1'-0 3/8	1'-1 3/4	1'-2 13/16	1'-3 3/16	1'-3 1/16	1'-3 5/16	1'-3 1/8	1'-2 5/16	1'-1 3/8	11 1/2	9 9/16	7 5/8	4 5/8	1 7/16	92'-4 3/8	815.5111'
	245PG8.02	3 3/16	6 1/16	8 1/2	10 5/8	1'-0 3/8	1'-1 1/16	1'-2 1/16	1'-3 5/16	1'-3 1/2	1'-3 3/8	1'-2 3/8	1'-2	1'-0 3/4	11 3/8	9 1/8	6 3/4	4	1 5/16	91'-4 3/8	806.8444'
	246PG8.03	3 1/4	6 1/8	8 5/8	10 3/4	1'-0 1/2	1'-1 7/8	1'-2 13/16	1'-3 7/16	1'-3 1/16	1'-3 9/16	1'-3 1/16	1'-2 5/16	1'-0 7/8	11 1/4	9 1/4	6 1/16	4 1/16	1 5/16	91'-4 5/16	798.1778'
	247PG7.04	3 3/16	6 1/16	8 1/2	10 9/16	1'-0 1/4	1'-1 9/16	1'-2 1/2	1'-3	1'-3 3/16	1'-3	1'-2 3/8	1'-1 3/8	1'-0 1/16	10 5/8	8 7/16	5 1/16	2 13/16	-	89'-4 3/8	789.5111'

NOTE:
FOR GENERAL NOTES, SEE SHT. GN1.

TEXAS DEPARTMENT OF TRANSPORTATION
APPROVED EXCEPT AS NOTED
DIVISION OF BRIDGES AND STRUCTURES

APR 23 1993

APPROVAL OF THIS DRAWING DOES NOT RELIEVE THE CONTRACTOR OF THE RESPONSIBILITY FOR THE CORRECTNESS OF DETAIL.

FOR APPROVAL
MAR 19
NOT FOR CONSTRUCTION

THIS SHEET NOT DETAIL CHECKED

APR MAR 24

FED. ROAD DIV. NO.	STATE	FEDERAL AID PROJECT NO.			
6	TX.	NH92 (50) M			
STATE DIST. NO.	COUNTY	CONTROL NO.	SECTION NO.	JOB NO.	HIGHWAY NO.
21	HIDALGO	39	17	97	83/281

HOLES ____ U.N. FOR AP'VL ____
BOLTS ____ U.N. RETURNED ____
WELDS ____ U.N. TO SHOP ____
PAINT ____

REVISIONS

NO.	DATE	REMARKS
1		
2		
3		
4		

HIRSCHFELD STEEL CO. INC.
112 WEST 29TH SAN ANGELO, TEXAS 76903
PHONE (915) 653-3211

CUSTOMER GILBERT TEXAS CONSTRUCTION
ARCHITECT
PROJECT US 83/281 INTERCHANGE RAMP #2
LOCATION HIDALGO COUNTY

DRAWN ERT DATE 3-93 | JOB NO. 92-107 | SHEET NO. 251 of ____
CHECKED JC DATE 10-92

CE 92-12

a b c d e f g h i j k l m n o p q r s t u v w x y z

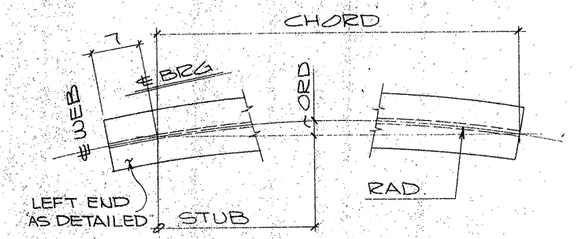

HEAT CURVE DIAGRAM.
(ALONG TOP FLG.)

THIS SHEET NOT DETAIL CHECKED

	STUB	5'-0	10'-0	15'-0	20'-0	25'-0	30'-0	35'-0	40'-0	45'-0	50'-0	55'-0	60'-0	65'-0	70'-0	75'-0	80'-0	85'-0	90'-0	CHORD	RADIUS
ORD	220PG1.01	3 1/4	6 1/8	8 11/16	10 13/16	1'-0 7/16	1'-0	1'-3 1/16	1'-3 3/4	1'-4 1/16	1'-4	1'-3 9/16	1'-2 3/4	1'-1 15/16	1'-0 1/16	10 3/16	7 7/8	5 1/4	2 1/4	93'-4 5/8	815.5111'
	221PG1.02	3 1/4	6 1/8	8 5/8	10 3/4	1'-0 9/16	1'-1 5/16	1'-2 1/16	1'-3 5/8	1'-3 7/8	1'-3 3/4	1'-3 5/16	1'-2 7/16	1'-1 1/4	11 1/16	9 1/16	7 3/8	4 1/16	1 3/8	92'-4 3/8	806.8444'
	222PG1.03	3 1/4	6 1/8	8 5/8	10 3/4	1'-0 1/2	1'-1 3/8	1'-2 1/8	1'-3 1/16	1'-3 1/16	1'-2 9/16	1'-3 1/16	1'-2 1/16	1'-0 15/16	11 1/4	9 1/4	6 7/8	4 1/16	1 5/16	91'-4 5/8	798.1778'
	223PG1.04	3 1/4	6 1/8	8 5/8	10 1/16	1'-0 1/16	1'-1 3/8	1'-2 3/16	1'-3 5/16	1'-3 9/16	1'-3 3/8	1'-2 11/16	1'-1 3/8	1'-0 7/16	10 7/8	8 13/16	6 5/16	3 1/2	1/4	90'-4 1/16	789.5111'

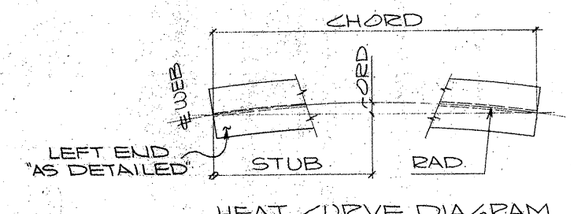

HEAT CURVE DIAGRAM
(ALONG TOP FLG.)

THIS SHEET NOT DETAIL CHECKED

	STUB	5'-0	10'-0	15'-0	20'-0	25'-0	30'-0	35'-0	40'-0	45'-0	50'-0	55'-0	60'-0	65'-0	70'-0	75'-0	80'-0	85'-0	90'-0	95'-0	100'-0	105'-0	CHORD	RADIUS
ORD	224PG2.01	3	5 5/8	7 7/8	9 3/4	11 3/4	1'-0 3/8	1'-1 3/16	1'-1 7/16	1'-1 5/8	1'-1 15/16	1'-0 3/8	11 7/16	10 1/8	8 5/16	6 1/8	3 5/8	1 1/16	-	-	-	-	86'-1 3/8	815.5111'
	225PG2.02	3 1/16	5 1/16	8	9 15/16	11 7/16	1'-0 5/8	1'-1 7/16	1'-1 7/8	1'-1 15/16	1'-1 5/8	1'-0 15/16	11 3/8	10 7/16	8 1/16	6 1/2	3 5/16	1 1/16	-	-	-	-	86'-7 5/8	806.8444'
	226PG2.03	3	5 9/16	7 13/16	9 5/8	11 3/8	1'-0 1/4	1'-0 15/16	1'-1 7/16	1'-1 1/4	1'-0 7/8	1'-0 1/16	10 7/8	9 3/8	7 1/16	5 3/16	2 1/2	-	-	-	-	-	84'-1 7/8	798.1778'
	227PG2.04	3	5 9/16	7 13/16	9 5/8	11 3/8	1'-0 5/8	1'-0 7/8	1'-1 3/16	1'-1 3/8	1'-0 11/16	11 3/8	10 11/16	9 1/8	7 1/8	4 3/16	2 1/16	-	-	-	-	-	83'-5 1/8	789.5111'
	228PG3.01	3 5/8	6 15/16	9 7/8	1'-0 3/8	1'-2 9/16	1'-4 3/8	1'-5 13/16	1'-6 15/16	1'-7 5/8	1'-7 7/8	1'-7 15/16	1'-7 1/2	1'-6 3/4	1'-5 5/8	1'-4 3/8	1'-2 1/4	1'-0	9 7/16	6 7/16	3 1/16	-	104'-2 5/16	815.5111'
	229PG3.02	3 9/16	6 13/16	9 5/8	1'-0 1/16	1'-2 5/16	1'-3 3/8	1'-5 3/16	1'-6 3/16	1'-6 1/16	1'-7	1'-6 3/8	1'-6 3/8	1'-5 7/16	1'-4 3/16	1'-2 9/16	1'-0 9/16	10 13/16	7 7/16	4 5/16	1 3/16	-	101'-0 15/16	806.8444
	230PG3.03	3 5/8	6 15/16	9 13/16	1'-0 5/16	1'-2 1/2	1'-4 1/4	1'-5 5/8	1'-6 5/8	1'-7 5/16	1'-7 9/16	1'-7 7/16	1'-6 15/16	1'-6 1/16	1'-4 3/16	1'-3 3/16	1'-1 1/4	10 7/8	8 1/8	5	1 1/2	-	101'-11 1/2	798.1778'
	231PG3.04	3 5/8	6 15/16	9 13/16	1'-0 5/16	1'-2 1/16	1'-4 3/16	1'-5 1/16	1'-6 1/2	1'-7 1/8	1'-7 5/16	1'-7 3/16	1'-6 5/8	1'-5 3/4	1'-4 7/16	1'-2 3/4	1'-0 11/16	10 1/4	7 1/16	4 1/4	5/8	-	100'-10 1/8	789.5111'
	232PG4.01	3 3/4	7 1/8	10 3/16	1'-0 13/16	1'-3 1/16	1'-5	1'-6 1/16	1'-7 11/16	1'-8 1/2	1'-8 15/16	1'-9	1'-8 3/4	1'-8 1/16	1'-7 1/16	1'-5 5/8	1'-3 5/8	1'-1 3/4	11 7/16	8 5/16	5 1/8	1 1/2	106'-10 5/16	815.5111'
	235PG4.04	3 3/4	7 1/8	10 1/8	1'-0 11/16	1'-2 5/16	1'-4 3/4	1'-6 1/4	1'-7 5/16	1'-8	1'-8 3/8	1'-8 5/16	1'-7 3/8	1'-7 1/16	1'-5 1/8	1'-4 1/4	1'-2 5/16	11 5/16	9 1/4	6 1/8	2 1/16	-	103'-6	789.5111'

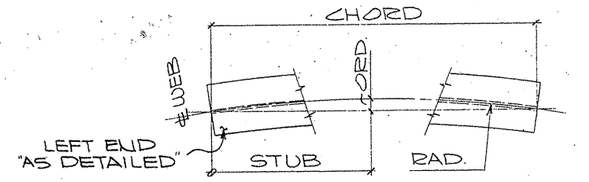

HEAT CURVE DIAGRAM
(ALONG TOP FLG.)

THIS SHEET NOT DETAIL CHECKED

	STUB	5'-0	10'-0	15'-0	20'-0	25'-0	30'-0	35'-0	40'-0	45'-0	50'-0	CHORD	RADIUS
ORD	233PG4.02	1 3/16	3 1/4	4 3/8	5 1/16	5 3/8	5 3/8	4 15/16	4 3/16	3	1 1/2	53'-10 5/16	806.8444'
	234PG4.03	1 3/16	3 1/4	4 5/16	4 15/16	5 1/4	5 7/16	4 3/4	3 1/8	2 1/16	1 1/8	52'-10 5/16	798.1778'
	248PG5.02	1 3/4	3 1/8	4 1/8	4 3/4	5	4 7/8	4 7/16	3 9/16	2 5/16	3/4	51'-10 5/16	806.8444'
	249PG5.03	1 3/4	3 3/16	4 3/16	4 13/16	5 1/16	4 15/16	4 1/2	3 5/8	2 3/8	3/4	51'-10 5/16	798.1778'

NOTE:
FOR GENERAL NOTES, SEE SHT. GN1.

TEXAS DEPARTMENT OF TRANSPORTATION
APPROVED EXCEPT AS NOTED
DIVISION OF BRIDGES AND STRUCTURES

APR 23 1993

APPROVAL OF THIS DRAWING DOES NOT RELIEVE THE CONTRACTOR OF THE RESPONSIBILITY FOR THE CORRECTNESS OF DETAIL.

FOR APPROVAL
MAY 14 93
NOT FOR CONSTRUCTION

APV USER 2.4

THIS SHEET NOT DETAIL CHECKED

FED. ROAD DIV. NO.	STATE	FEDERAL AID PROJECT NO.			
6	TX.	NH92 (50) M			
STATE DIST. NO.	COUNTY	CONTROL NO.	SECTION NO.	JOB NO.	HIGHWAY NO.
21	HIDALGO	39	17	97	83/281

HOLES ____ U.N.	FOR AP'VL ____		
BOLTS ____ U.N.	RETURNED ____		
WELDS ____ U.N.	TO SHOP ____		
PAINT ____			

REVISIONS		
NO	DATE	REMARKS
1		
2		
3		
4		

HIRSCHFELD STEEL CO. INC.
112 WEST 29TH SAN ANGELO, TEXAS 76903
PHONE (915) 653-3211

CUSTOMER GILBERT TEXAS CONSTRUCTION
ARCHITECT
PROJECT US 83/281 INTERCHANGE RAMP #2
LOCATION HIDALGO COUNTY

DRAWN CRT DATE 8-92 | JOB NO 92-107 | SHEET NO. 250 of ____
CHECKED VC DATE 10-92

CE 92-12

b c d e f g h i j k l m n o p q r s t u v w x y z

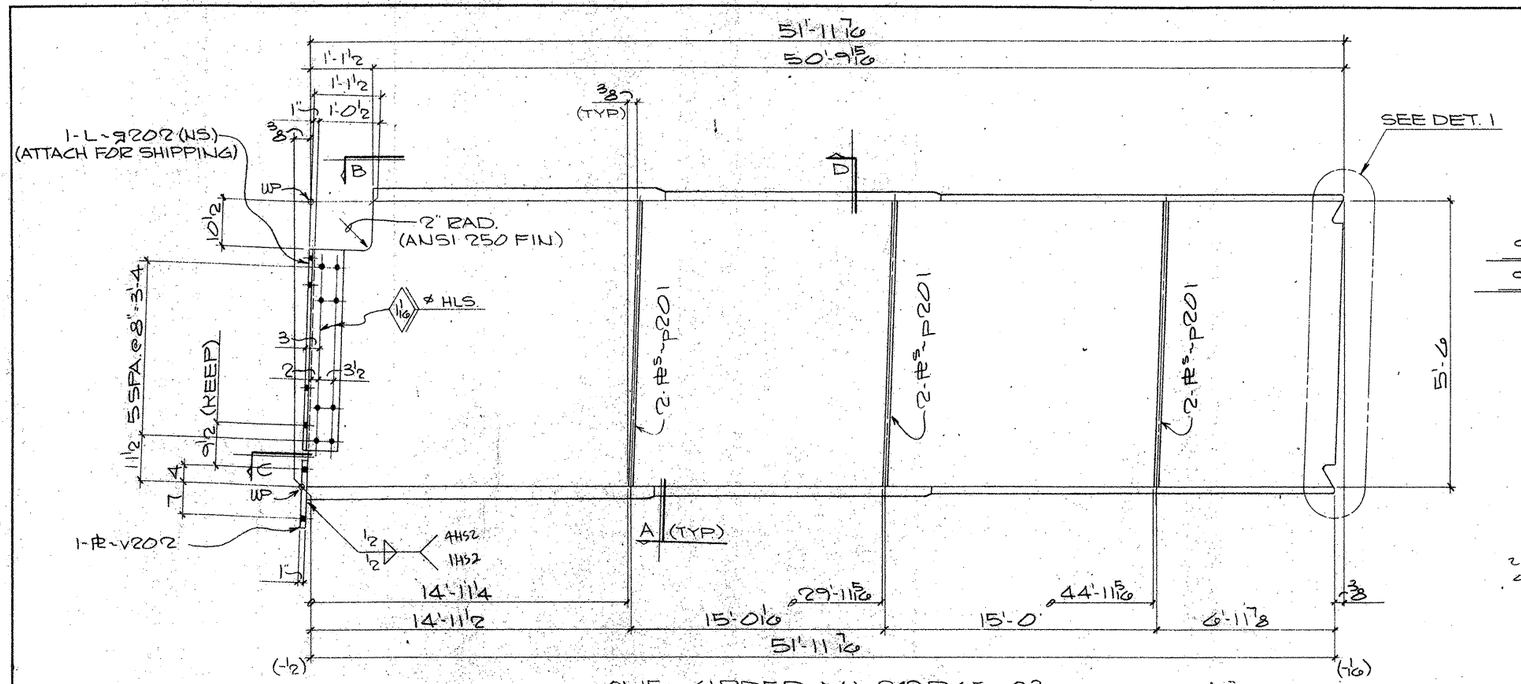

ONE GIRDER MK-249PG5.03
(APPROX. WT. = TONS)

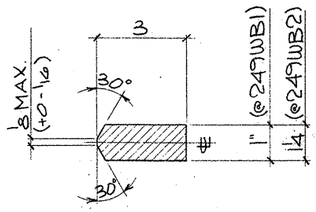

96-WELD BARS MK-249WB1
96-WELD BARS MK-249WB2

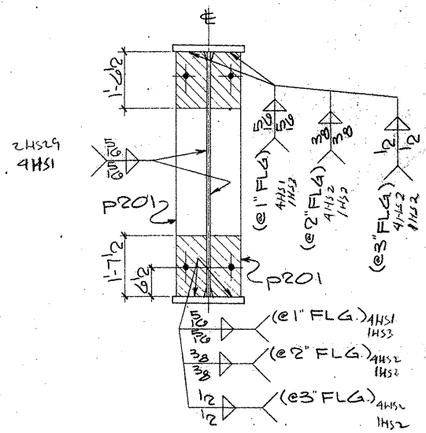

SECTION-A

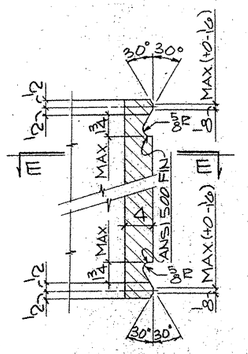

DETAIL-1

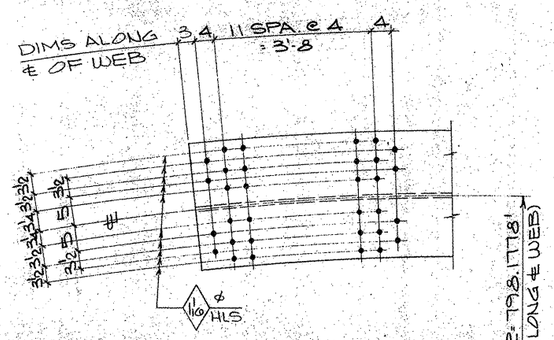

VIEW-B

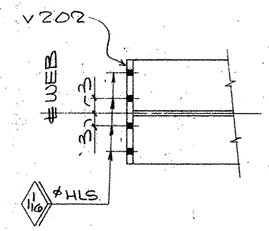

SECTION-C

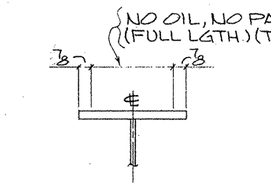

SECTION-D

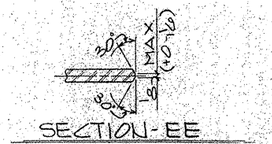

SECTION-EE

SHOP NOTES:
1) FOR GENERAL NOTES SEE SHT. GN1
2) FOR GIRDER SUB-ASSEMBLY SEE SHT. 212
3) FOR STIFF. DETAILS SEE SHT. 201
4) FOR BLOCKING DIAGRAM SEE SHT. 254
5) FOR HEAT CURVE DIAGRAM SEE SHT. 250
6) FOR SPLICE ATTACHMENTS SEE SHT. 202
7) ▨ INDICATES OIL, NO PAINT (N.S./F.S. & EDGES)

BILL OF MATERIAL

	Qnty	Material	Length	Mark Temp.	Mark Ship.	Wt.	Cut From	Remarks
1								
2	1	GIRDER		249PG5.03				
3	1	GIRDER SUB-ASSY		C212				
4	6	DIAF STIFF		P201				
5	1	ANGLE		9202				
6	1	CONN. PL		V202				
7								
8								
9								
10								
11								
12								
13								
14								
15								
16								
17								
18								
19								
20								
21								
22								
23								
24								
25		WELD BARS						
26	96	PL 1 x 1	0'-3	249WB1			STR	
27	96	PL 1 1/4 x 1	0'-3	249WB2			STR	
28								
29								
30								
31								
32								
33								
34								
35								
36								
37								
38								
39								
40								
41								
42								
43								
44								
45								
46								
47								
48								
49								
50								
51		TEXAS DEPARTMENT OF TRANSPORTATION APPROVED DIVISION OF BRIDGES AND STRUCTURES APR 23 1993						
52								
53								
54								
55								
56		APPROVAL OF THIS DRAWING DOES NOT RELIEVE THE CONTRACTOR OF THE RESPONSIBILITY FOR THE CORRECTNESS OF DETAIL.						
57								
58								
59								
60								

FOR APPROVAL
NOT FOR CONSTRUCTION

REVISION	DATE	DESCRIPTION OF REVISION
NO. 1		
NO. 2		
NO. 3		
NO. 4		
NO. 5		

PRINTING Req'd	For	Date

Bolts Holes 15/16 ø Unless Noted
Shop Paint SEE SHT. GN1
Fab. Spec AS NTD Inspection
Architect
Erection By Field Connections

HIRSCHFELD STEEL CO. INC.
112 WEST 29TH SAN ANGELO, TEXAS 76903
PHONE (915) 653-3211

DESCRIPTION	450'-0 PLATE GIRDER UNIT
STRUCTURE	US 83/281 INTERCHANGE RAMP "C"
LOCATION	HIDALGO COUNTY
CUSTOMER	GILBERT TEXAS CONSTRUCTION
SHIP TO	
Customer's Order No.	
Dwg. By CRT	Date 9-92
Checked By JC	Date 10-92

SHEET 249 OF
JOB NO. 92-107

APV MAR 2 4

FED. ROAD DIV. NO.	STATE	FEDERAL AID PROJECT NO.				
6	TX.	NH 92(50)M				
STATE DIST. NO.	COUNTY	CONTROL NO.	SECTION NO.	JOB NO.	HIGHWAY NO.	
21	HIDALGO	39	17	97	83/281	

G0207

CE 92-12 (LINE #3)

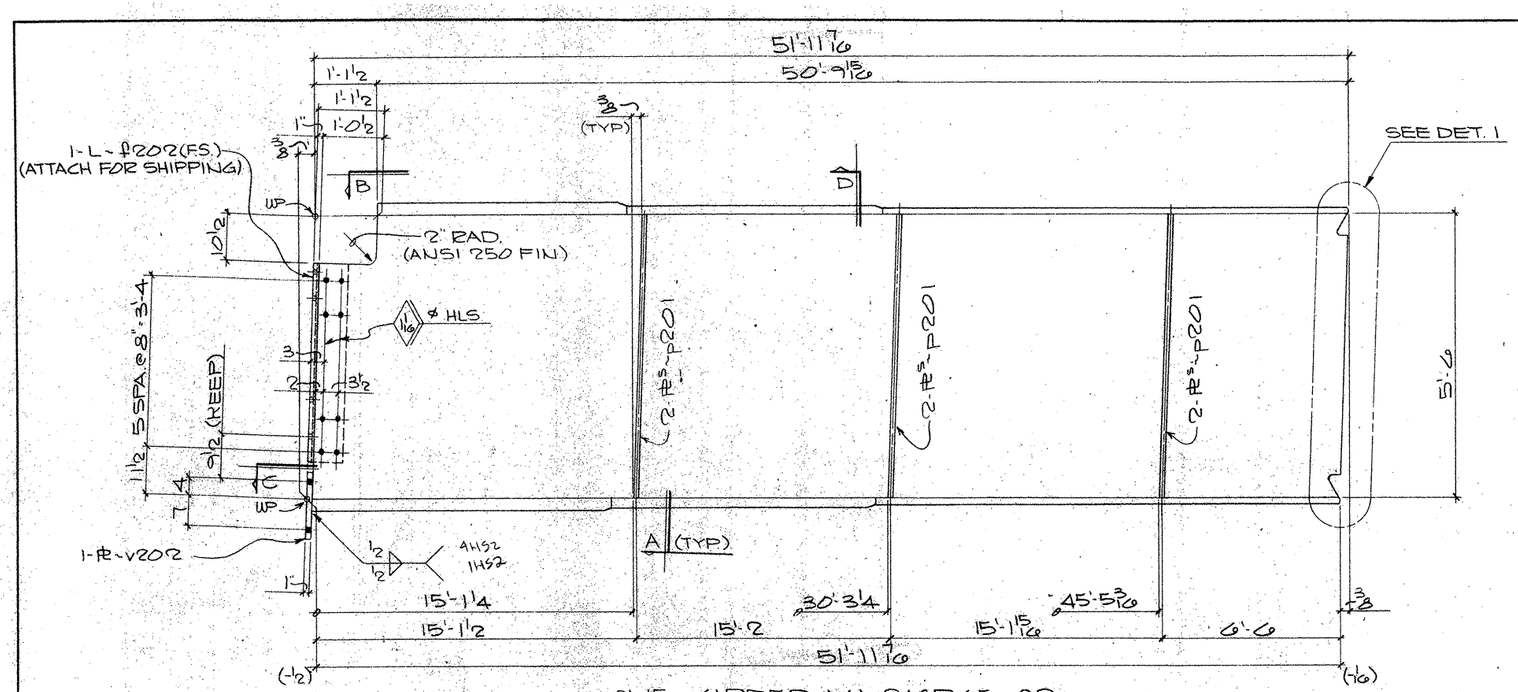

ONE GIRDER MK-248PG5.02
(APPROX. WT. = TONS)

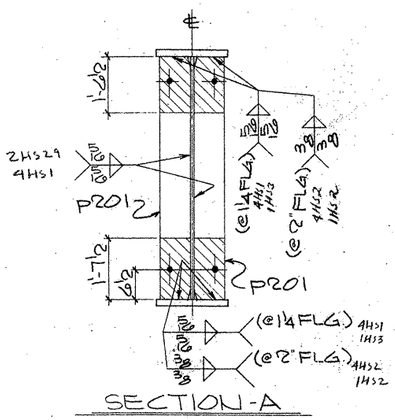

SECTION-A

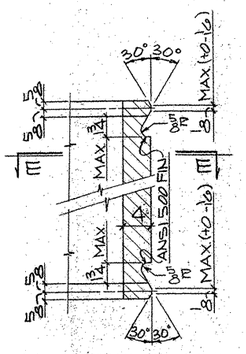

DETAIL-1

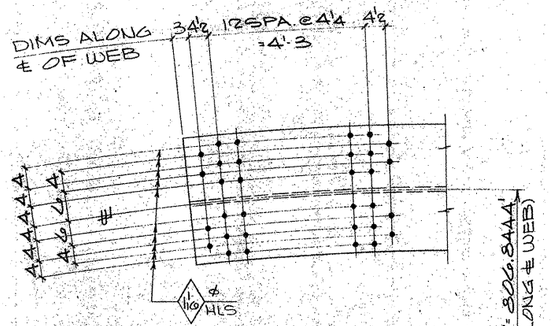

VIEW-B

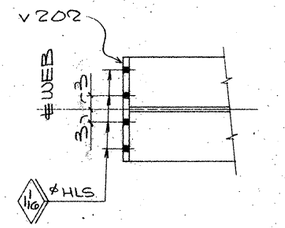

SECTION-C

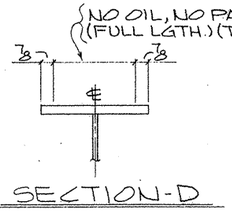

SECTION-D

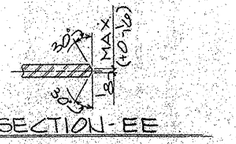

SECTION-EE

SHOP NOTES:
1) FOR GENERAL NOTES SEE SHT. GN1
2) FOR GIRDER SUB-ASSEMBLY SEE SHT. 211
3) FOR STIFF. DETAILS SEE SHT. 201
4) FOR BLOCKING DIAGRAM SEE SHT. 253
5) FOR HEAT CURVE DIAGRAM SEE SHT. 250
6) FOR SPLICE ATTACHMENTS SEE SHT. 202
7) ////// INDICATES OIL, NO PAINT (N.S./F.S. & EDGES)

G0207

FED. ROAD DIV. NO.	STATE	FEDERAL AID PROJECT NO.				
6	TX.	NH 92(50)M				
STATE DIST. NO.	COUNTY	CONTROL NO.	SECTION NO.	JOB NO.	HIGHWAY NO.	
21	HIDALGO	39	17	97	83/281	

BILL OF MATERIAL

	Qnty.	Material	Length	Mark Temp	Mark Ship	Wt.	Cut From	Remarks
1								
2	1	GIRDER		248PG5.02				
3	1	GIRDER SUB-ASSY		C211				
4	60	DIAF STIFF		P201				
5	1	ANGLE		f202				
6	1	CONN. PL		V202				
7–60								

TEXAS DEPARTMENT OF TRANSPORTATION
APPROVED
DIVISION OF BRIDGES AND STRUCTURES
APR 23 1993
APPROVAL OF THIS DRAWING DOES NOT RELIEVE THE CONTRACTOR OF THE RESPONSIBILITY FOR THE CORRECTNESS OF DETAIL

FOR APPROVAL
NOT FOR CONSTRUCTION

REVISION	DATE	DESCRIPTION OF REVISION
NO. 1		
NO. 2		
NO. 3		
NO. 4		
NO. 5		

PRINTING

Req'd	For	Date

Bolts: Holes: 15/16 ø Unless Noted
Shop Paint SEE SHT. GN1
Fab. Spec. AS NTD Inspection
Architect
Erection By Field Connections

HIRSCHFELD STEEL CO. INC.
312 WEST 29TH SAN ANGELO, TEXAS 76903
PHONE (915) 653-3211

DESCRIPTION 248'-0" PLATE GIRDER UNIT
STRUCTURE US 83/281 INTERCHANGE RAMP "Z"
LOCATION HIDALGO COUNTY
CUSTOMER GILBERT TEXAS CONSTRUCTION
SHIP TO
Customer's Order No.
Dwg. By CRT Date 9-92
Checked By JC Date 10-92

SHEET 248 OF
JOB NO. 92-107

CE 92-12 (LINE #2)

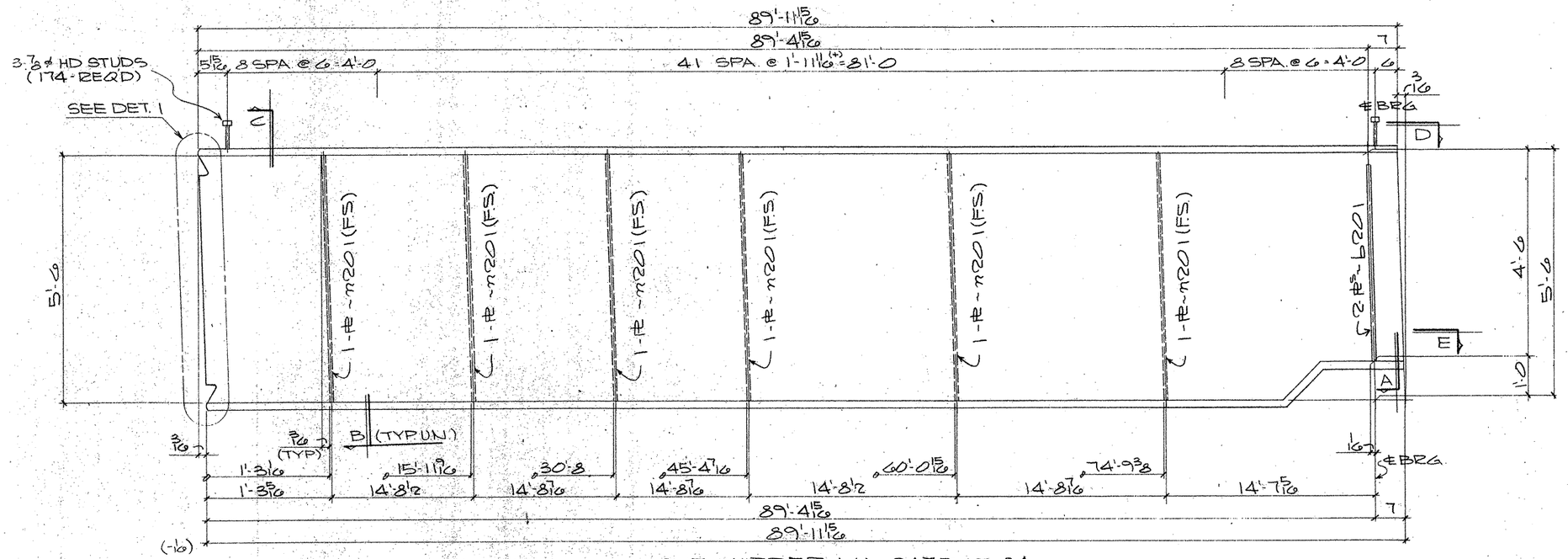

ONE GIRDER MK-247PG7.04
(APPROX. WT= TONS)

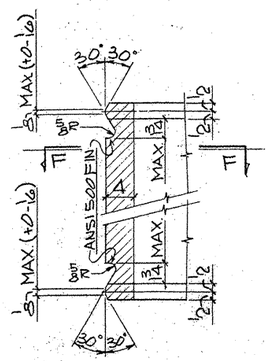

DETAIL-1

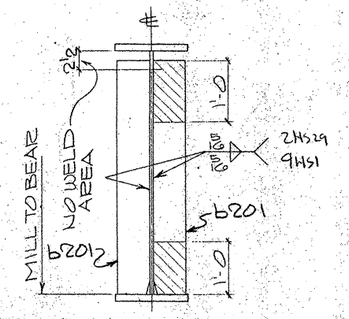

SECTION-A

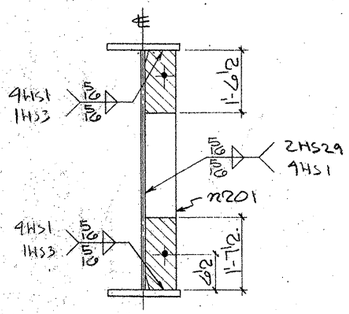

SECTION-B

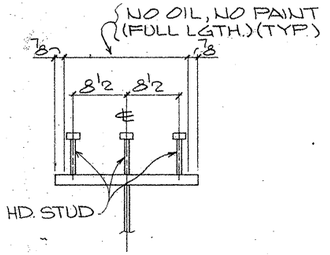

SECTION-C
(TYP. STUD SECT.)

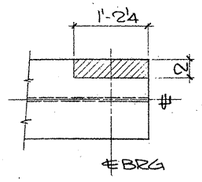

VIEW-D

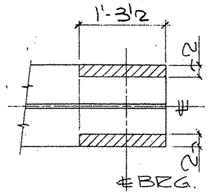

SECTION-E

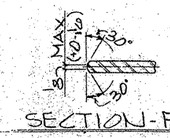

SECTION-FF

SHOP NOTES:
1) FOR GENERAL NOTES SEE SHT. GN1
2) FOR GIRDER SUB-ASSEMBLY SEE SHT. 219
3) FOR STIFF. DETAILS SEE SHT. 201
4) FOR BLOCKING DIAGRAM SEE SHT. 255
5) FOR HEAT CURVE DIAGRAM SEE SHT. 251
6) ▨ INDICATES OIL, NO PAINT (N.S./F.S. & EDGES)

BILL OF MATERIAL

	Qnty.	Material	Length	Mark Temp	Mark Ship.	Wt.	Cut From	Remarks
2	1	GIRDER			247PG7.04			
3	1	GIRDER SUB-ASSY		B219				
4	2	BRG STIFF		B201				
5	6	DIAF STIFF		M201				
7	174	HD STUD 7/8	0'-7				205-1	A108

TEXAS DEPARTMENT OF TRANSPORTATION
APPROVED
DIVISION OF BRIDGES AND STRUCTURES
APR 23 1993
APPROVAL OF THIS DRAWING DOES NOT RELIEVE THE CONTRACTOR OF THE RESPONSIBILITY FOR THE CORRECTNESS OF DETAIL

FOR APPROVAL

REVISION	DATE	DESCRIPTION OF REVISION
NO. 1		
NO. 2		
NO. 3		
NO. 4		
NO. 5		

PRINTING Req'd	For	Date

Bolts Holes 15/16 DIA Unless Noted
Shop Paint SEE SHT GN1
Fab Spec. AS UTD Inspection
Architect
Erection By Field Connections

HIRSCHFELD STEEL CO. INC.
112 WEST 29TH SAN ANGELO, TEXAS 76903
PHONE (915) 653-3211

DESCRIPTION	180'-0" PLATE GIRDER UNIT
STRUCTURE	US 83/281 INTERCHANGE RAMP #2
LOCATION	HIDALGO COUNTY
CUSTOMER	GILBERT TEXAS CONSTRUCTION
SHIP TO	
Customer's Order No.	
Dwg. By CET	Date 9-92
Checked By JC	Date 10-92

SHEET 247 OF
JOB NO. 92-107

G0207

FED. ROAD DIV. NO.	STATE	FEDERAL AID PROJECT NO.			
6	TX.	NH 92(50)M			
STATE DIST. NO.	COUNTY	CONTROL NO.	SECTION NO.	JOB NO.	HIGHWAY NO.
21	HIDALGO	39	17	97	83/281

CE 92-12 (LINE # 4)

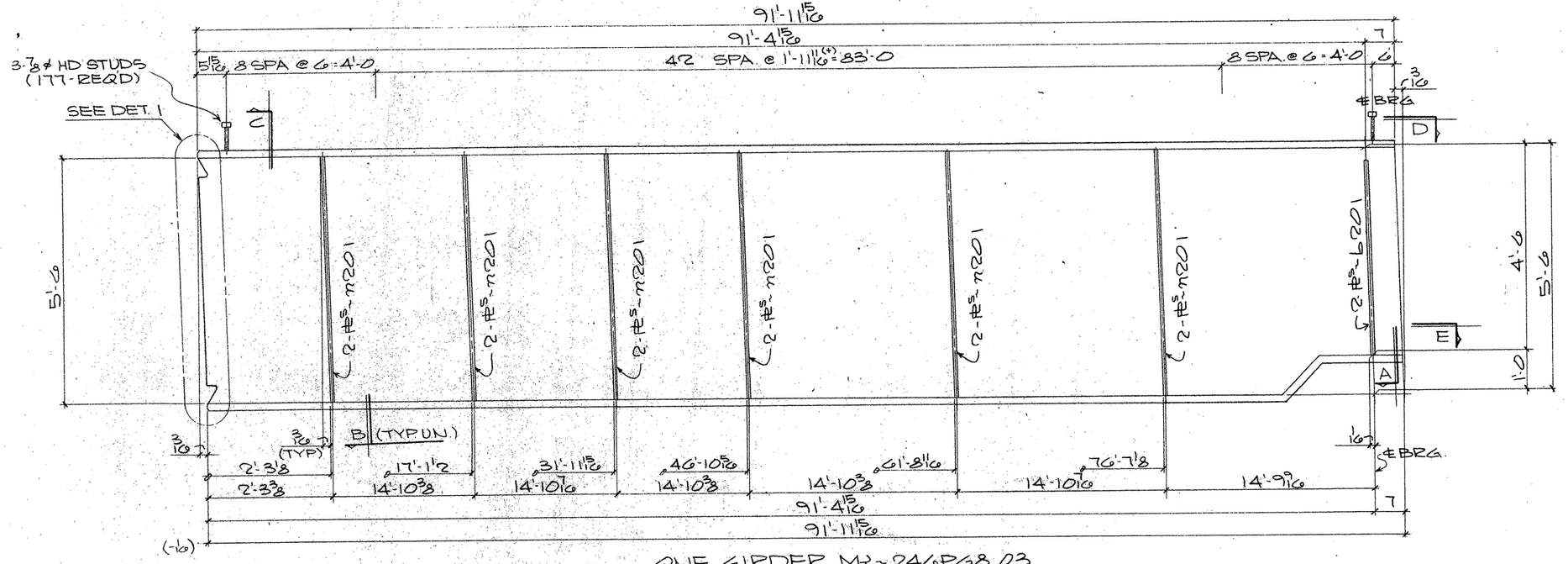

ONE GIRDER MK~246PG8.03

(APPROX. WT= TONS)

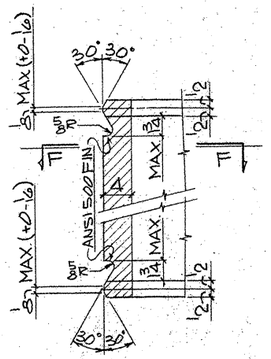

DETAIL - 1

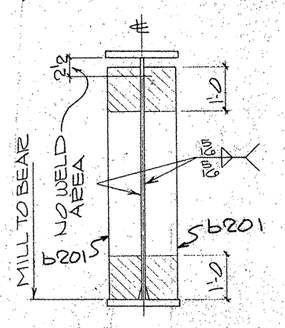

SECTION - A

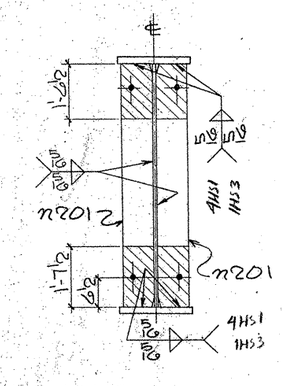

SECTION - B

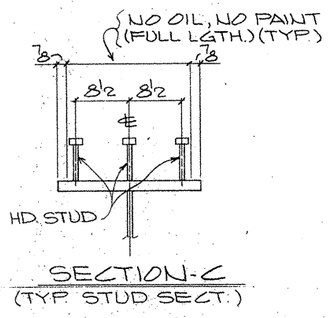

SECTION - C
(TYP. STUD SECT.)

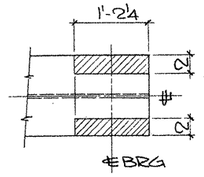

VIEW - D

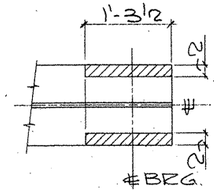

SECTION - E

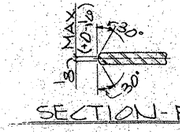

SECTION - FF

SHOP NOTES:

1) FOR GENERAL NOTES SEE SHT. GN1
2) FOR GIRDER SUB-ASSEMBLY SEE SHT. 219
3) FOR STIFF. DETAILS SEE SHT. 201
4) FOR BLOCKING DIAGRAM SEE SHT. 254
5) FOR HEAT CURVE DIAGRAM SEE SHT. 251
6) ////// INDICATES OIL, NO PAINT (N.S./F.S. & EDGES)

BILL OF MATERIAL

	Qnty	Material	Length	Mark Temp	Mark Ship	Wt.	Cut From	Remarks
1								
2	1	GIRDER			246PG8.03			
3	1	GIRDER SUB-ASSY	A219					
4	2	BRG STIFF	b201					
5	12	DIAF STIFF	m201					
6								
7	177	HD STUD 7/8	0'-7				205-1	A108
8								
9								
10								
11								
12								
13								
14								
15								
16								
17								
18								
19								
20								
21								
22								
23								
24								
25								
26								
27								
28								
29								
30								
31								
32								
33								
34								
35								
36								
37								
38								
39								
40								
41								
42								
43								
44								
45								
46								
47								
48								
49								
50								
51								
52								
53								
54								
55								
56								
57								
58								
59								
60								

TEXAS DEPARTMENT OF TRANSPORTATION
APPROVED
DIVISION OF BRIDGES AND STRUCTURES
APR 23 1993
APPROVAL OF THIS DRAWING DOES NOT RELIEVE THE CONTRACTOR OF THE RESPONSIBILITY FOR THE CORRECTNESS OF DETAIL

REVISION	DATE	DESCRIPTION OF REVISION
NO. 1		
NO. 2		
NO. 3		
NO. 4		
NO. 5		

PRINTING Req'd	For	Date

Bolts: Holes. 5/8ϕ STD Unless Noted
Shop Paint: SEE SHT GN1
Fab Spec: AS NTD Inspection
Architect
Erection By: Field Connections

HIRSCHFELD STEEL CO. INC.
112 WEST 29TH SAN ANGELO, TEXAS 76903
PHONE (915) 653-3211

DESCRIPTION	680'-0 PLATE GIRDER UNIT
STRUCTURE	US 83/281 INTERCHANGE RAMP "Q"
LOCATION	HIDALGO COUNTY
CUSTOMER	GILBERT TEXAS CONSTRUCTION
SHIP TO	
Customer's Order No.	SHEET 246 OF
Dwg By CRT	Date 9-92
Checked By JC	Date 10-92
	JOB NO. 92-107

60207

FED. ROAD DIV. NO.	STATE	FEDERAL AID PROJECT NO.				
6	TX.	NH 92(50)M				
STATE DIST. NO.	COUNTY	CONTROL NO.	SECTION NO.	JOB NO.	HIGHWAY NO.	
21	HIDALGO	39	17	97	83/281	

CE 92-12 (LINE # 3)

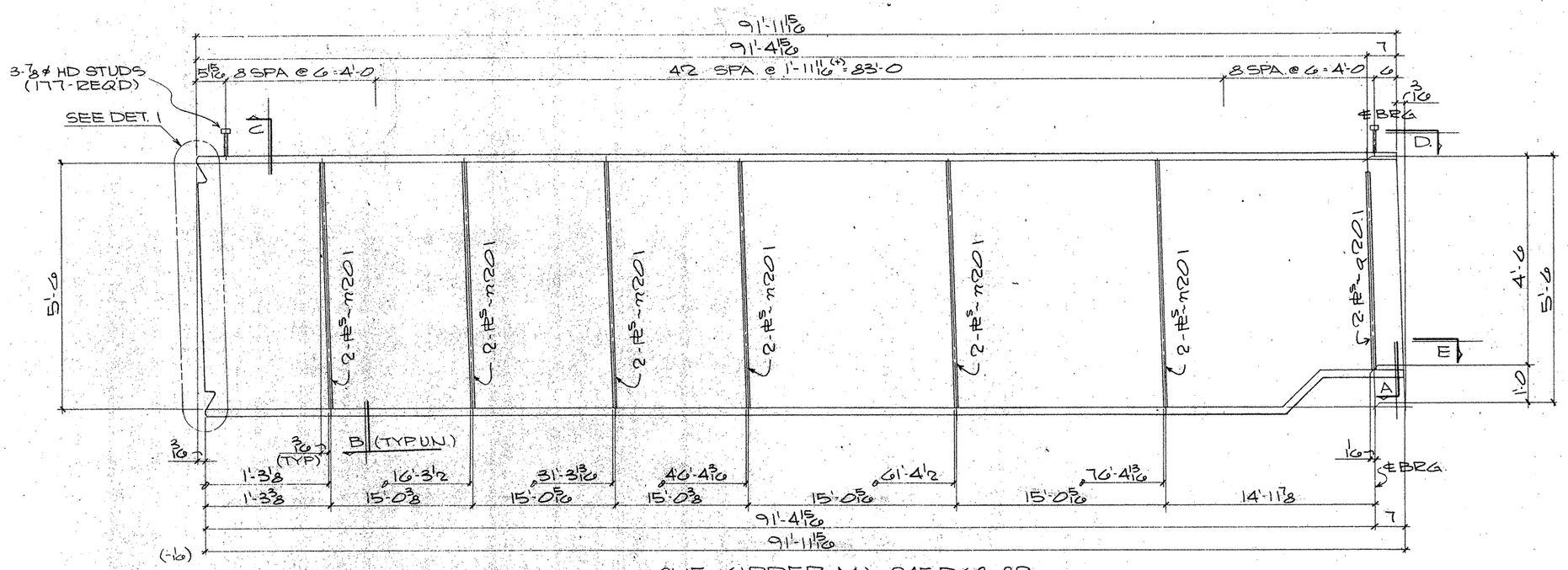

ONE GIRDER MK~245PG8.02

(APPROX. WT= TONS)

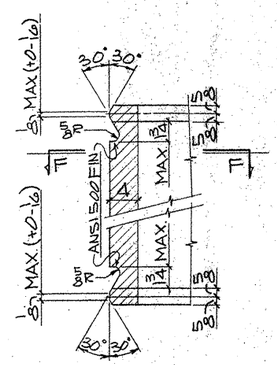

DETAIL - 1

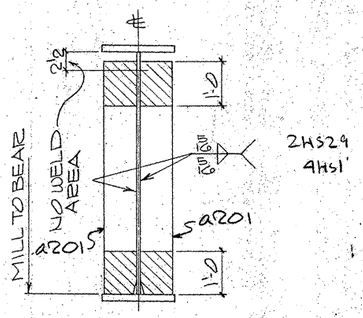

SECTION - A

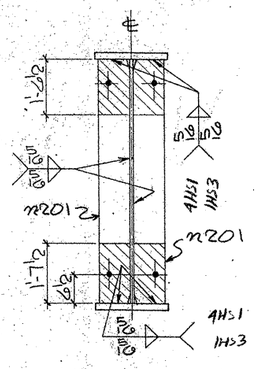

SECTION - B

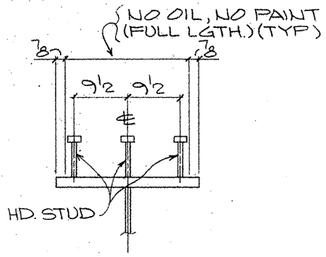

SECTION - C

(TYP. STUD SECT.)

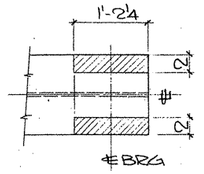

VIEW - D

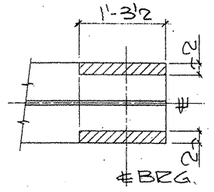

SECTION - E

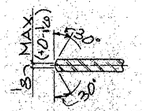

SECTION - FF

SHOP NOTES:

1) FOR GENERAL NOTES SEE SHT. GN1
2) FOR GIRDER SUB-ASSEMBLY SEE SHT. 218
3) FOR STIFF. DETAILS SEE SHT. 201
4) FOR BLOCKING DIAGRAM SEE SHT. 253
5) FOR HEAT CURVE DIAGRAM SEE SHT. 251
6) ▨ INDICATES OIL, NO PAINT (N.S./F.S. & EDGES)

BILL OF MATERIAL

	Qnty	Material	Length	Mark Temp	Mark Ship	Wt.	Cut From	Remarks
1								
2	1	GIRDER			245PG8.02			
3	1	GIRDER SUB-ASSY		B218				
4	2	BRG STIFF		@201				
5	12	DIAF STIFF		M201				
6								
7	177	HD STUD 7/8	0'-7				205-1	A108
8								
9								
10								
11								
12								
13								
14								
15								
16								
17								
18								
19								
20								
21								
22								
23								
24								
25								
26								
27								
28								
29								
30								
31								
32								
33								
34								
35								
36								
37								
38								
39								
40								
41								
42								
43								
44								
45								
46								
47								
48								
49								
50								
51								
52								
53								
54								
55								
56								
57								
58								
59								
60								

TEXAS DEPARTMENT OF TRANSPORTATION
APPROVED
DIVISION OF BRIDGES AND STRUCTURES
APR 23 1993
APPROVAL OF THIS DRAWING DOES NOT RELIEVE THE CONTRACTOR OF THE RESPONSIBILITY FOR THE CORRECTNESS OF DETAIL

FOR APPROVAL
NOT FOR CONSTRUCTION

REVISION	DATE	DESCRIPTION OF REVISION
NO. 1		
NO. 2		
NO. 3		
NO. 4		
NO. 5		

PRINTING

Req'd	For	Date

Bolts Holes: 5/8 ø UNL Unless Noted
Shop Paint SEE SHT GN1
Fab. Spec AS NTD Inspection
Architect
Erection By Field Connections

HIRSCHFELD STEEL CO. INC.
112 WEST 29TH SAN ANGELO, TEXAS 76903
PHONE (915) 653-3211

DESCRIPTION 680'-0 PLATE GIRDER UNIT
STRUCTURE US 83/281 INTERCHANGE RAMP *2
LOCATION HIDALGO COUNTY
CUSTOMER GILBERT TEXAS CONSTRUCTION
SHIP TO
Customer's Order No.
Dwg. By CET Date 9-92
Checked By JC Date 10-92
SHEET 245 OF
JOB NO. 92-107

G0207

FED. ROAD DIV. NO.	STATE	FEDERAL AID PROJECT NO.				
6	TX.	NH 92(50)M				
STATE DIST. NO.	COUNTY	CONTROL NO.	SECTION NO.	JOB NO.	HIGHWAY NO.	
21	HIDALGO	39	17	97	83/281	

CE 92-12 (LINE *2)

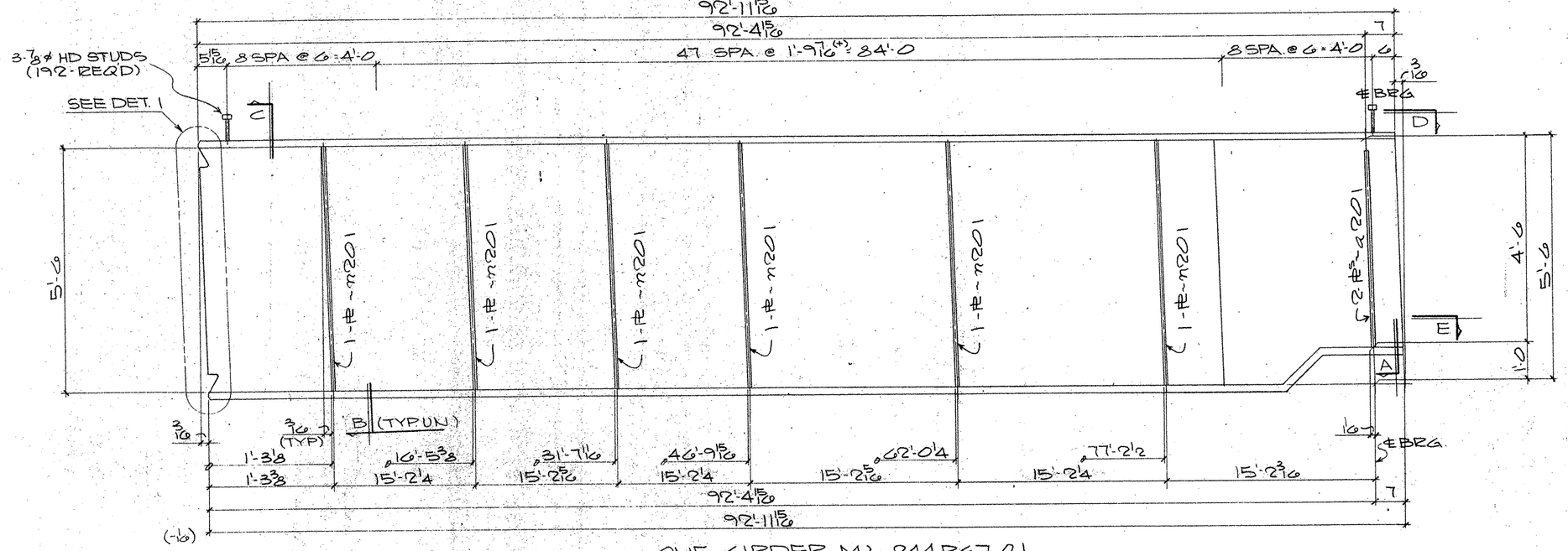

ONE GIRDER MK~244PG7.01
(APPROX. WT= TONS)

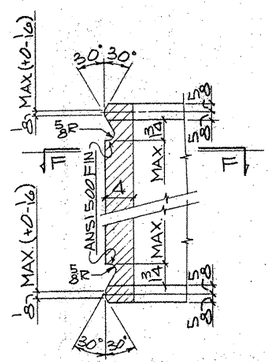

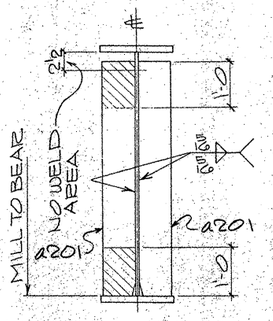

SECTION - A

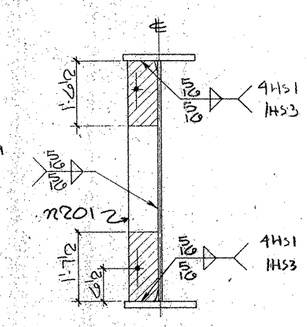

SECTION - B

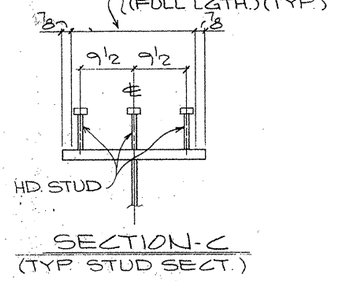

SECTION - C
(TYP. STUD SECT.)

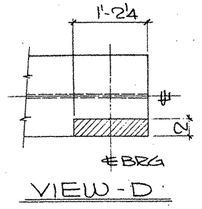

VIEW - D

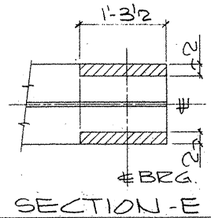

SECTION - E

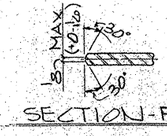

SECTION - FF

SHOP NOTES:

1) FOR GENERAL NOTES SEE SHT. GN1
2) FOR GIRDER SUB-ASSEMBLY SEE SHT. 218
3) FOR STIFF. DETAILS SEE SHT. 201
4) FOR BLOCKING DIAGRAM SEE SHT. 252
5) FOR HEAT CURVE DIAGRAM SEE SHT. 251
6) ▨ INDICATES OIL, NO PAINT (N.S./F.S. & EDGES)

BILL OF MATERIAL

	Qnty	Material	Length	Mark Temp.	Mark Ship.	Wt.	Cut From	Remarks
1								
2	1	GIRDER			244PG7.01			
3	1	GIRDER SUB-ASSY	A218					
4	2	BRG STIFF	a201					
5	6	DIAF STIFF	m201					
6								
7	192	HD STUD 7/8	0'-7				205-1	A108
8–60								

TEXAS DEPARTMENT OF TRANSPORTATION
APPROVED
DIVISION OF BRIDGES AND STRUCTURES
APR 23 1993
APPROVAL OF THIS DRAWING DOES NOT RELIEVE THE CONTRACTOR OF THE RESPONSIBILITY FOR THE CORRECTNESS OF DETAILS.

FOR APPROVAL

REVISION	DATE	DESCRIPTION OF REVISION
NO 1		
NO 2		
NO 3		
NO 4		
NO 5		

PRINTING Req'd	For	Date

Bolts: Holes: 5/16 DIA Unless Noted
Shop Paint: SEE SHT GN1
Fab Spec: AS NTD
Inspection
Architect
Erection By: Field Connections

HIRSCHFELD STEEL CO. INC.
112 WEST 29TH SAN ANGELO, TEXAS 76903
PHONE (915) 653-3211

DESCRIPTION	680'-0 PLATE GIRDER UNIT
STRUCTURE	US 83/281 INTERCHANGE RAMP "C"
LOCATION	HIDALGO COUNTY
CUSTOMER	GILBERT TEXAS CONSTRUCTION
SHIP TO	
Customer's Order No.	
Dwg. By CET	Date 9-92
Checked By JC	Date 10-92

SHEET 244 OF
JOB NO. 92-107

60207

FED. ROAD DIV. NO.	STATE	FEDERAL AID PROJECT NO.			
6	TX.	NH 92(50)M			
STATE DIST. NO.	COUNTY	CONTROL NO.	SECTION NO.	JOB NO.	HIGHWAY NO.
21	HIDALGO	39	17	97	83/281

APP MAR 24

CE 92-12 (LINE "I")

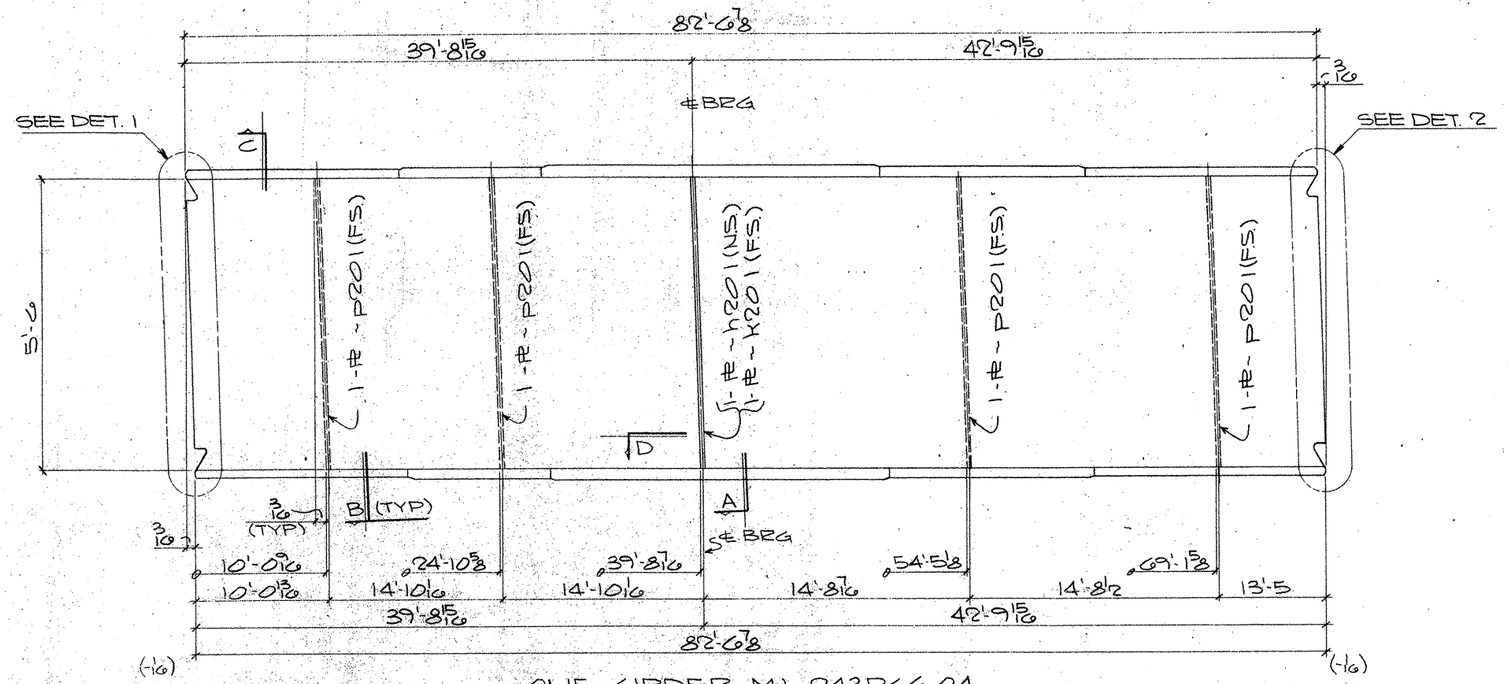

ONE GIRDER MK~243PG6.04

(APPROX. WT. = TONS)

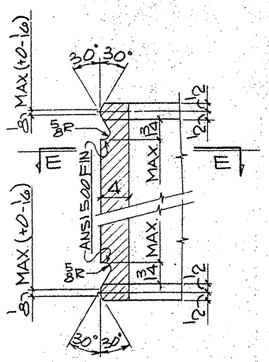

DETAIL-1

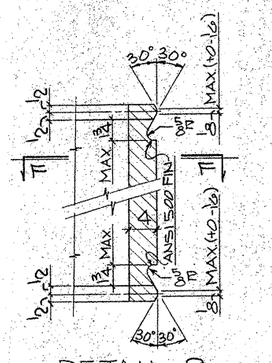

DETAIL-2

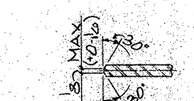

SECTION-EE

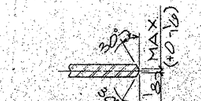

SECTION-FF

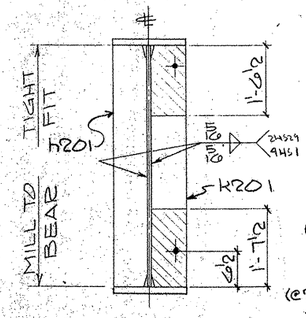

SECTION-A

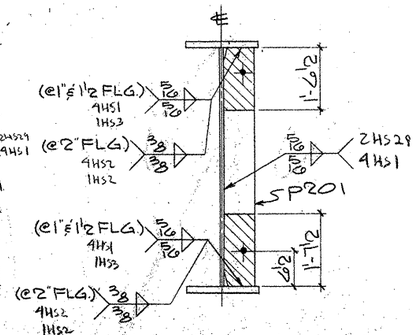

SECTION-B

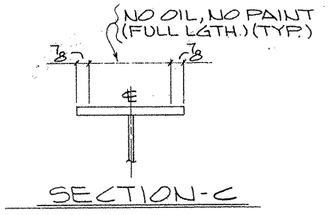

SECTION-C

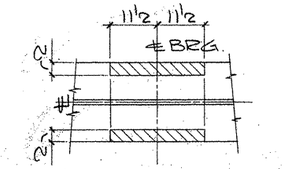

SECTION-D

SHOP NOTES:

1) FOR GENERAL NOTES SEE SHT. GN1
2) FOR GIRDER SUB-ASSEMBLY SEE SHT. 217
3) FOR STIFF. DETAILS SEE SHT. 201
4) FOR BLOCKING DIAGRAM SEE SHT. 255
5) FOR HEAT CURVE DIAGRAM SEE SHT. 251
6) ▨ INDICATES OIL, NO PAINT (N.S./F.S. & EDGES)

60207

FED. ROAD DIV. NO.	STATE	FEDERAL AID PROJECT NO.			
6	TX.	NH 92(50)M			
STATE DIST. NO.	COUNTY	CONTROL NO.	SECTION NO.	JOB NO.	HIGHWAY NO.
21	HIDALGO	39	17	97	83/281

BILL OF MATERIAL

	Qnty.	Material	Length	Mark Temp.	Mark Ship.	Wt.	Cut From	Remarks
1								
2	1	GIRDER			243PG6.04			
3	1	GIRDER SUB-ASSY		B217				
4	1	BRG STIFF		h201				
5	1	BRG STIFF		K201				
6	4	DIAF STIFF		P201				
7–60								

TEXAS DEPARTMENT OF TRANSPORTATION
APPROVED
DIVISION OF BRIDGES AND STRUCTURES
APR 23 1993
APPROVAL OF THIS DRAWING DOES NOT RELIEVE THE CONTRACTOR OF THE RESPONSIBILITY FOR THE CORRECTNESS OF DETAIL

FOR APPROVAL

REVISION	DATE	DESCRIPTION OF REVISION
NO. 1		
NO. 2		
NO. 3		
NO. 4		
NO. 5		

PRINTING Req'd	For	Date

Bolts Holes 15/16 ø Unless Noted
Shop Paint SEE SHT. GN1
Fab. Spec. AS NTD. Inspection
Architect
Erection By Field Connections

HIRSCHFELD STEEL CO. INC.
112 WEST 29TH SAN ANGELO, TEXAS 76903
PHONE (915) 653-3211

DESCRIPTION 680'-0 PLATE GIRDER UNIT
STRUCTURE US 83/281 INTERCHANGE RAMP #2
LOCATION HIDALGO COUNTY
CUSTOMER GILBERT TEXAS CONSTRUCTION
SHIP TO
Customer's Order No.
Dwg. By CRT Date 9-92
Checked By JC Date 10-92
SHEET 243 OF
JOB NO. 92-107

CE 92-12 (LINE #4)

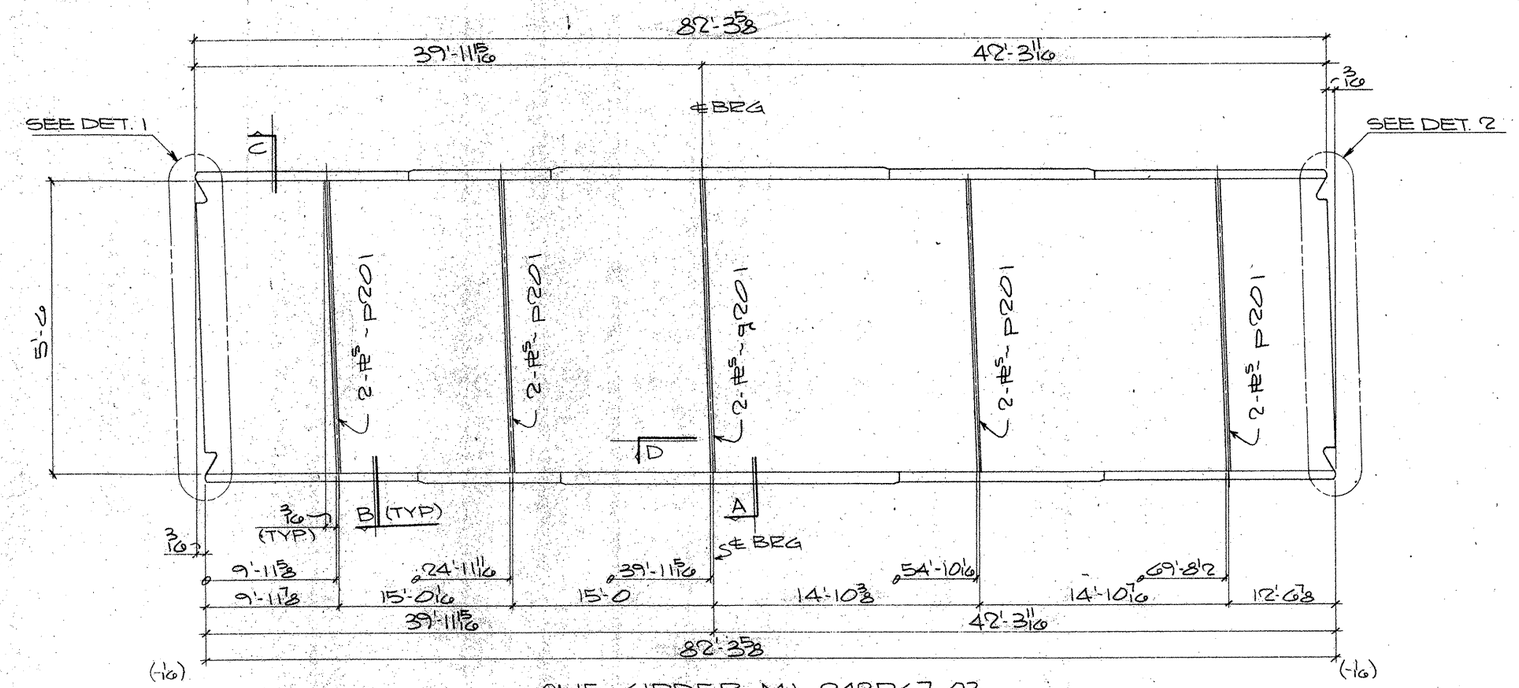

ONE GIRDER MK-242PG7.03

(APPROX. WT. = TONS).

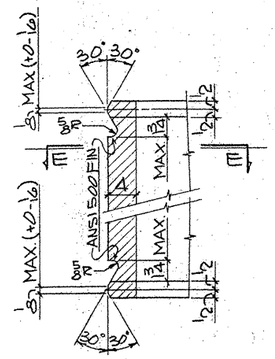

DETAIL-1

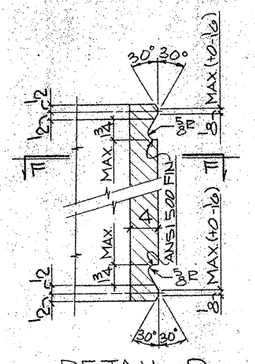

DETAIL-2

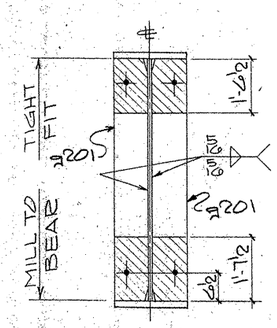

SECTION-A

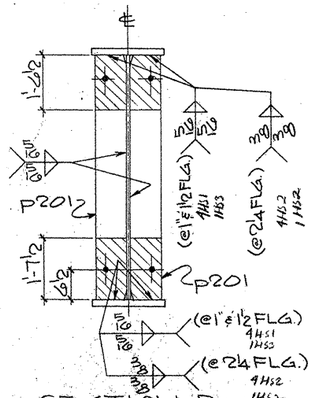

SECTION-B

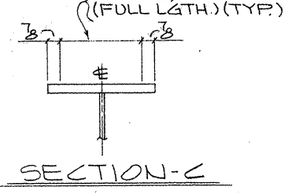

SECTION-C

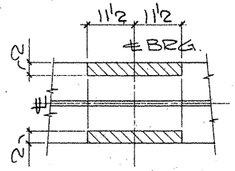

SECTION-D

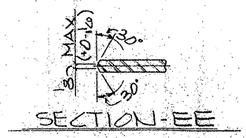

SECTION-EE

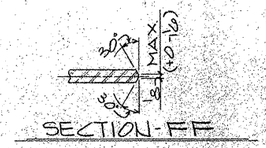

SECTION-FF

SHOP NOTES:

1) FOR GENERAL NOTES SEE SHT. GN1
2) FOR GIRDER SUB-ASSEMBLY SEE SHT. 216
3) FOR STIFF. DETAILS SEE SHT. 201
4) FOR BLOCKING DIAGRAM SEE SHT. 254
5) FOR HEAT CURVE DIAGRAM SEE SHT. 251
6) ▨ INDICATES OIL, NO PAINT (N.S./F.S. & EDGES)

BILL OF MATERIAL

	Qnty.	Material	Length	Mark Temp.	Mark Ship.	Wt.	Cut From	Remarks
2	1	GIRDER			242PG7.03			
3	1	GIRDER SUB-ASSY		B216				
4	2	BRG STIFF		g201				
6	8	DIAF STIFF		p201				

TEXAS DEPARTMENT OF TRANSPORTATION
APPROVED
DIVISION OF BRIDGES AND STRUCTURES
APR 23 1993

APPROVAL OF THIS DRAWING DOES NOT RELIEVE THE CONTRACTOR OF THE RESPONSIBILITY FOR THE CORRECTNESS OF DETAIL

FOR APPROVAL
NOT FOR CONSTRUCTION

REVISION	DATE	DESCRIPTION OF REVISION
NO. 1		
NO. 2		
NO. 3		
NO. 4		
NO. 5		

PRINTING

Req'd	For	Date

Bolts Holes. 15/16 ø Unless Noted
Shop Paint SEE SHT. GN1
Fab Spec. AS NTD. Inspection
Architect
Erection By Field Connections

HIRSCHFELD STEEL CO. INC.
112 WEST 29TH SAN ANGELO, TEXAS 76903
PHONE (915) 653-3211

DESCRIPTION 6801.0 PLATE GIRDER UNIT
STRUCTURE US 83/281 INTERCHANGE RAMP "Z"
LOCATION HIDALGO COUNTY
CUSTOMER GILBERT TEXAS CONSTRUCTION
SHIP TO
Customer's Order No.
Dwg By CRT Date 9-92
Checked By JC Date 10-92
SHEET 242 OF
JOB NO. 92-107

G0207

FED. ROAD DIV. NO.	STATE	FEDERAL AID PROJECT NO.				
6	TX.	NH 92(50)M				
STATE DIST. NO.	COUNTY	CONTROL NO.	SECTION NO.	JOB NO.		HIGHWAY NO.
21	HIDALGO	39	17	97		83/281

CE 92-12 (LINE # 3)

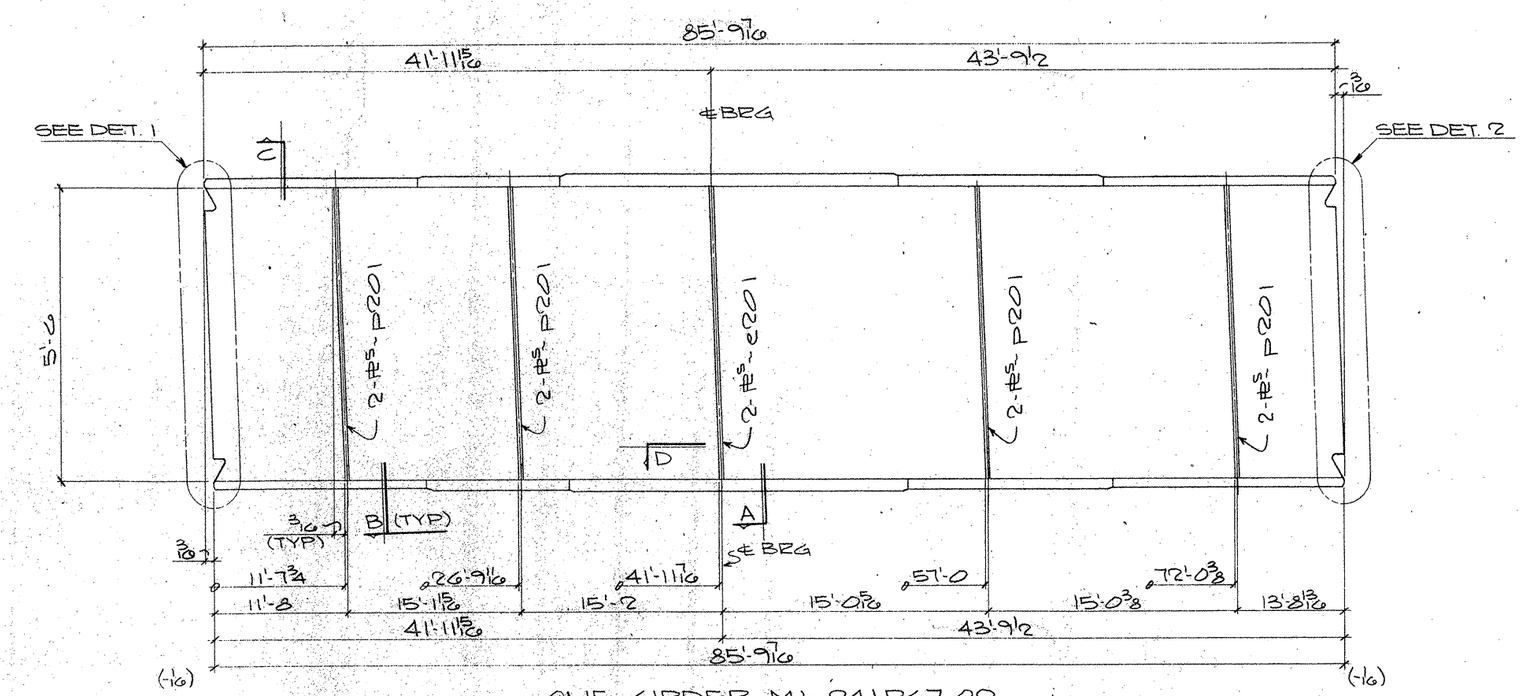

ONE GIRDER MK-241PG7.02
(APPROX. WT. = TONS)

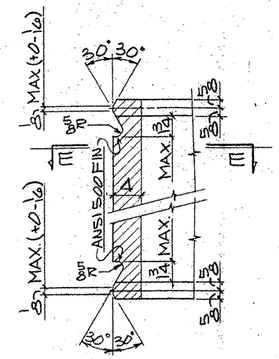

DETAIL-1

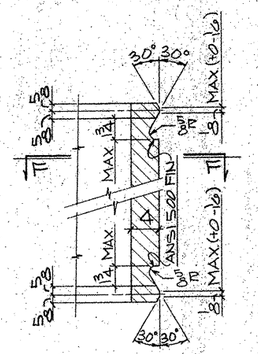

DETAIL-2

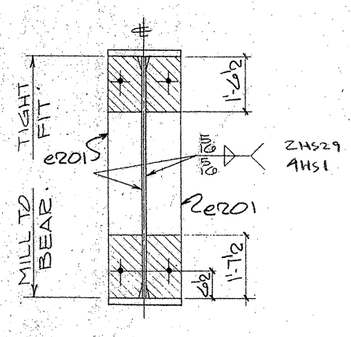

SECTION-A

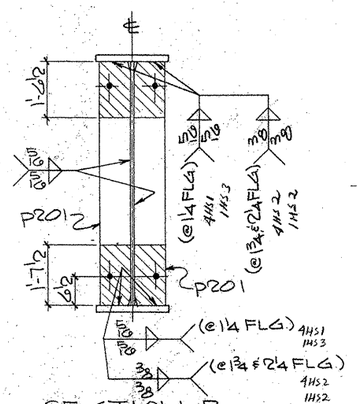

SECTION-B

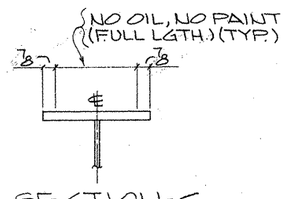

SECTION-C

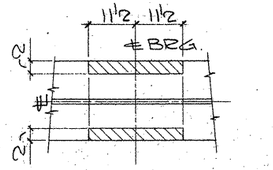

SECTION-D

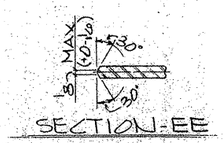

SECTION-EE

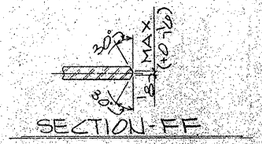

SECTION-FF

SHOP NOTES:

1) FOR GENERAL NOTES SEE SHT. GN1
2) FOR GIRDER SUB-ASSEMBLY SEE SHT. 215
3) FOR STIFF. DETAILS SEE SHT. 201
4) FOR BLOCKING DIAGRAM SEE SHT. 253
5) FOR HEAT CURVE DIAGRAM SEE SHT. 251
6) ▨ INDICATES OIL, NO PAINT (N.S./F.S. & EDGES)

BILL OF MATERIAL

	Qnty.	Material	Length	Mark Temp	Mark Ship	Wt.	Cut From	Remarks
1								
2	1	GIRDER			241PG7.02			
3	1	GIRDER SUB-	ASSY	B215				
4	2	BRG STIFF		e201				
5								
6	8	DIAF STIFF		P201				
7								
8								
9								
10								
11								
12								
13								
14								
15								
16								
17								
18								
19								
20								
21								
22								
23								
24								
25								
26								
27								
28								
29								
30								
31								
32								
33								
34								
35								
36								
37								
38								
39								
40								
41								
42								
43								
44								
45								
46								
47								
48								
49								
50								
51								
52								
53								
54								
55								
56								
57								
58								
59								
60								

TEXAS DEPARTMENT OF TRANSPORTATION
APPROVED
DIVISION OF BRIDGES AND STRUCTURES
APR 23 1993
APPROVAL OF THIS DRAWING DOES NOT RELIEVE THE CONTRACTOR OF THE RESPONSIBILITY FOR THE CORRECTNESS OF DETAIL

FOR APPROVAL
MAR 2 '93
NOT FOR CONSTRUCTION

REVISION	DATE	DESCRIPTION OF REVISION
NO. 1		
NO. 2		
NO. 3		
NO. 4		
NO. 5		

PRINTING		
Req'd	For	Date

Bolts Holes: 15/16 ø Unless Noted
Shop Paint SEE SHT. GN1
Fab Spec. AASHTO Inspection
Architect
Erection By Field Connections

HIRSCHFELD STEEL CO. INC.
112 WEST 29TH SAN ANGELO, TEXAS 76903
PHONE (915) 653-3211

DESCRIPTION 680'-0 PLATE GIRDER UNIT
STRUCTURE US 83/281 INTERCHANGE RAMP #2
LOCATION HIDALGO COUNTY
CUSTOMER GILBERT TEXAS CONSTRUCTION
SHIP TO
Customer's Order No.
Dwg. By CET Date 9-92
Checked By JC Date 10-92

SHEET 241 OF
JOB NO. 92-107

CE 92-12 (LINE #2)

FED. ROAD DIV. NO.	STATE	FEDERAL AID PROJECT NO.			
6	TX.	NH 92(50)M			
STATE DIST. NO.	COUNTY	CONTROL NO.	SECTION NO.	JOB NO.	HIGHWAY NO.
21	HIDALGO	39	17	97	83/281

90207

APR APR 2 8

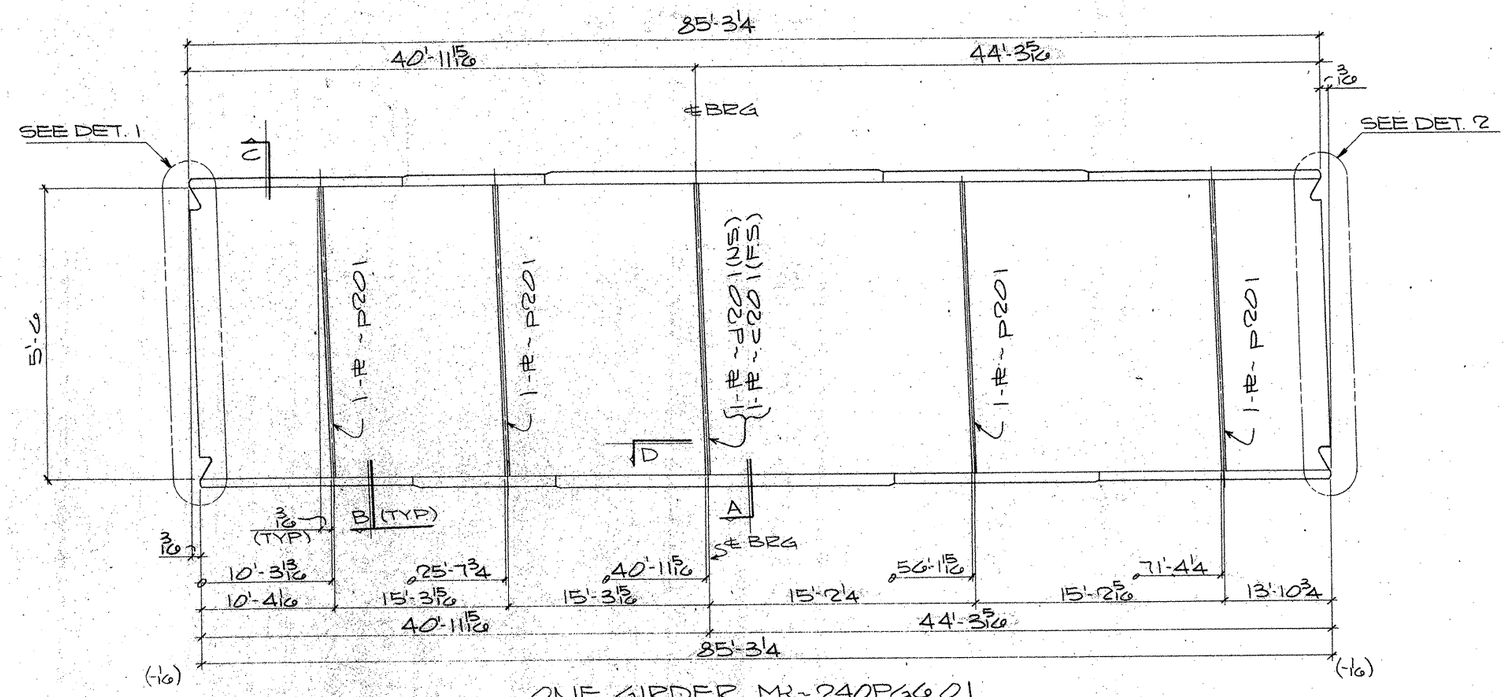

ONE GIRDER MK~240PG6.01

(APPROX. WT = TONS)

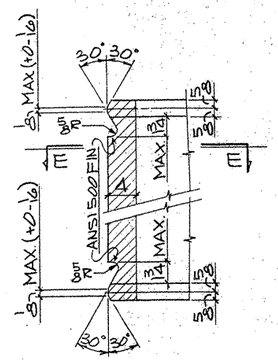

DETAIL-1

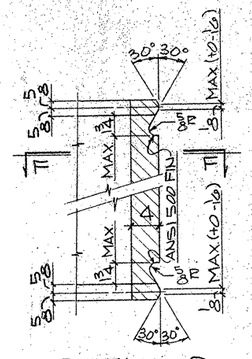

DETAIL-2

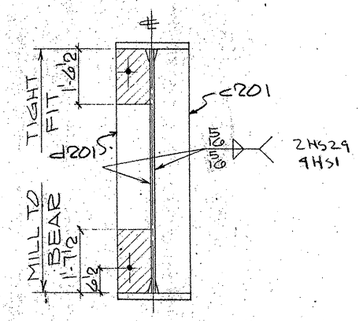

SECTION-A

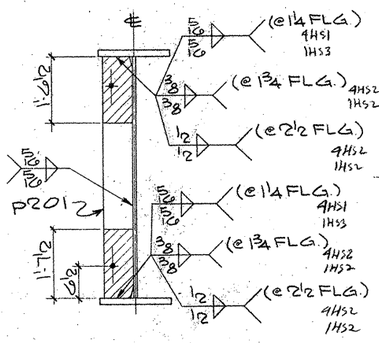

SECTION-B

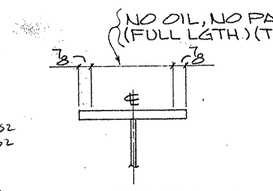

SECTION-C

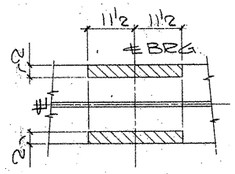

SECTION-D

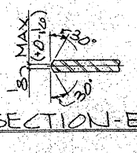

SECTION-EE

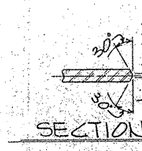

SECTION-FF

SHOP NOTES:

1) FOR GENERAL NOTES SEE SHT. GN1
2) FOR GIRDER SUB-ASSEMBLY SEE SHT. 214
3) FOR STIFF. DETAILS SEE SHT. 201
4) FOR BLOCKING DIAGRAM SEE SHT. 252
5) FOR HEAT CURVE DIAGRAM SEE SHT. 251
6) ▨ INDICATES OIL, NO PAINT (N.S./F.S. & EDGES)

BILL OF MATERIAL

	Qnty.	Material	Length	Mark Temp.	Mark Ship.	Wt.	Cut From	Remarks
2	1	GIRDER			240PG601			
3	1	GIRDER SUB-ASSY		B214				
4	1	BRG STIFF		c201				
5	1	BRG STIFF		d201				
6	4	DIAF STIFF		p201				

TEXAS DEPARTMENT OF TRANSPORTATION
APPROVED
DIVISION OF BRIDGES AND STRUCTURES
APR 23 1993
APPROVAL OF THIS DRAWING DOES NOT RELIEVE THE CONTRACTOR OF THE RESPONSIBILITY FOR THE CORRECTNESS OF DETAIL

FOR APPROVAL
NOT FOR CONSTRUCTION

REVISION	DATE	DESCRIPTION OF REVISION
NO 1		
NO 2		
NO 3		
NO 4		
NO 5		

PRINTING Req'd	For	Date

Bolts — Holes 15/16 ø Unless Noted
Shop Paint SEE SHT. GN1
Fab. Spec. AS NTD. Inspection
Architect
Erection By — Field Connections

HIRSCHFELD STEEL CO. INC.
112 WEST 29TH SAN ANGELO, TEXAS 76903
PHONE (915) 653-3211

DESCRIPTION 680'-0 PLATE GIRDER UNIT
STRUCTURE US 83/281 INTERCHANGE RAMP "C"2
LOCATION HIDALGO COUNTY
CUSTOMER GILBERT TEXAS CONSTRUCTION
SHIP TO
Customer's Order No.
Dwg. By CET Date 9-92
Checked By JC Date 10-92
SHEET 240 OF
JOB NO 92-187

60207

FED. ROAD DIV. NO.	STATE	FEDERAL AID PROJECT NO.				
6	TX.	NH 92(50)M				
STATE DIST. NO.	COUNTY	CONTROL NO.	SECTION NO.	JOB NO.	HIGHWAY NO.	
21	HIDALGO	39	17	97	83/281	

APM Mar 24

CE92-12 (LINE #1)

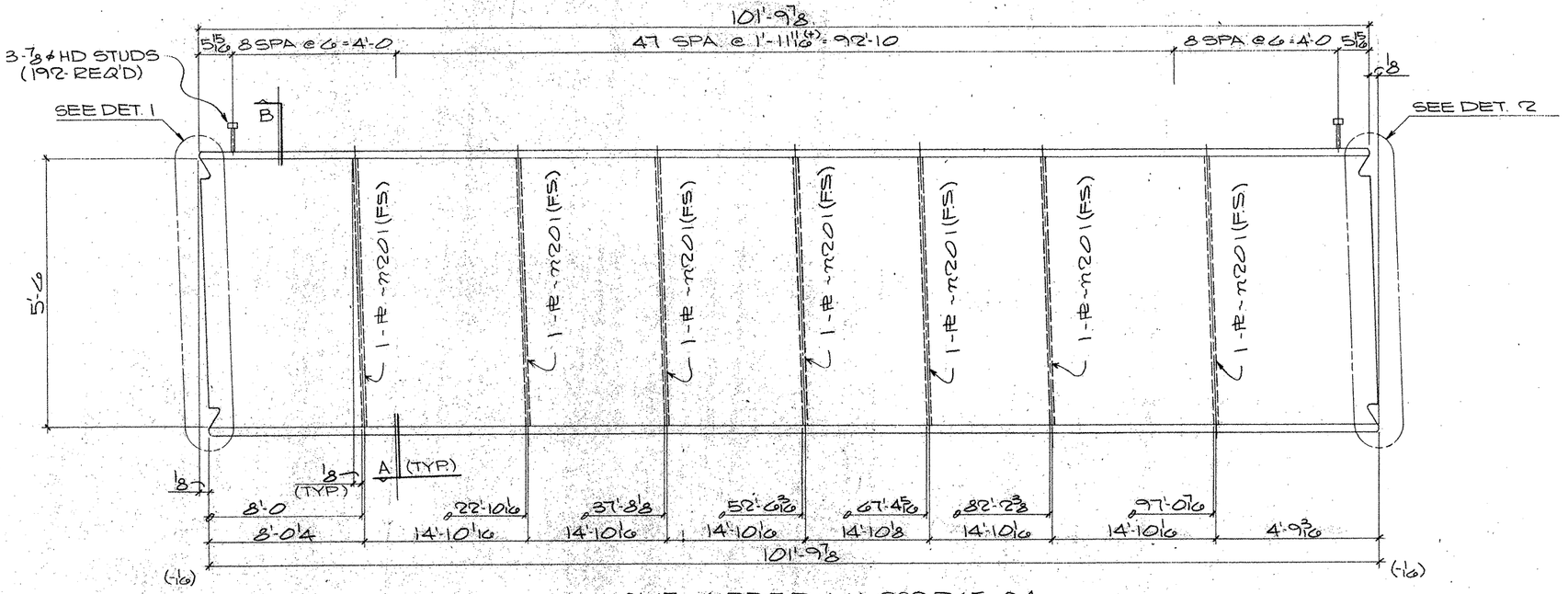

ONE GIRDER MK-239PG504

(APPROX. WT. = TONS)

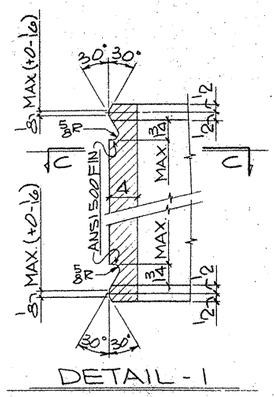

DETAIL-1

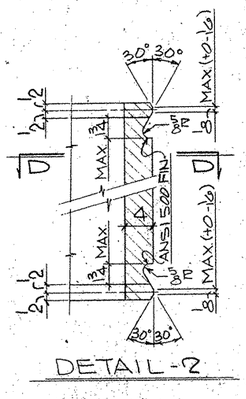

DETAIL-2

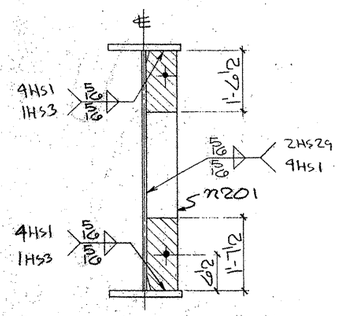

SECTION-A

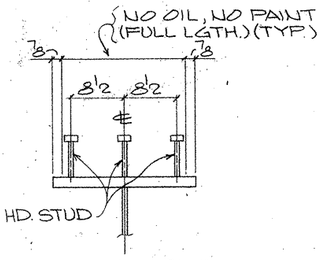

SECTION-B

(TYP. STUD SECT.)

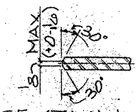

SECTION-CC

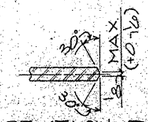

SECTION-DD

SHOP NOTES:

1) FOR GENERAL NOTES SEE SHT. GN1
2) FOR GIRDER SUB-ASSEMBLY SEE SHT. 217
3) FOR STIFF. DETAILS SEE SHT. 201
4) FOR BLOCKING DIAGRAM SEE SHT. 255
5) FOR HEAT CURVE DIAGRAM SEE SHT. 251
6) ▨ INDICATES OIL, NO PAINT (N.S./F.S. & EDGES)

BILL OF MATERIAL

	Qnty.	Material	Length	Mark Temp.	Mark Ship.	Wt	Cut From	Remarks
1								
2	1	GIRDER		239PG5.04				
3	1	GIRDER SUB-ASSY		A217				
4	7	DIAF STIFF		M201				
5								
6	192	HD STUDS 7/8	0'-7				205-1	A108
7								
8								
9								
10								
11								
12								
13								
14								
15								
16								
17								
18								
19								
20								
21								
22								
23								
24								
25								
26								
27								
28								
29								
30								
31								
32								
33								
34								
35								
36								
37								
38								
39								
40								
41								
42								
43								
44								
45								
46								
47								
48								
49								
50								
51								
52								
53								
54								
55								
56								
57								
58								
59								
60								

TEXAS DEPARTMENT OF TRANSPORTATION
APPROVED
DIVISION OF BRIDGES AND STRUCTURES
APR 23 1993

APPROVAL OF THIS DRAWING DOES NOT RELIEVE THE CONTRACTOR OF THE RESPONSIBILITY FOR THE CORRECTNESS OF DETAIL.

FOR APPROVAL
NOT FOR CONSTRUCTION

REVISION	DATE	DESCRIPTION OF REVISION
NO. 1		
NO. 2		
NO. 3		
NO. 4		
NO. 5		

PRINTING Req'd	For	Date

Bolts Holes: 15/16 ø Unless Noted
Shop Paint SEE SHT. GN1
Fab Spec AS NTD Inspection
Architect
Erection By Field Connections

HIRSCHFELD STEEL CO. INC.
112 WEST 29TH SAN ANGELO, TEXAS 76903
PHONE (915) 653-3211

DESCRIPTION: 480'-0 PLATE GIRDER UNIT
STRUCTURE: DS 83/281 INTERCHANGE RAMP #2
LOCATION: HIDALGO COUNTY
CUSTOMER: GILBERT TEXAS CONSTRUCTION
SHIP TO:
Customer's Order No.:
Dwg. By CBT Date 9-92
Checked By JC Date 10-92
SHEET 239 OF
JOB NO. 92-107

FED. ROAD DIV. NO.	STATE	FEDERAL AID PROJECT NO.			
6	TX.	NH 92(50)M			
STATE DIST. NO.	COUNTY	CONTROL NO.	SECTION NO.	JOB NO.	HIGHWAY NO.
21	HIDALGO	39	17	97	83/281

G0207

CE 92-12 (LINE #4)

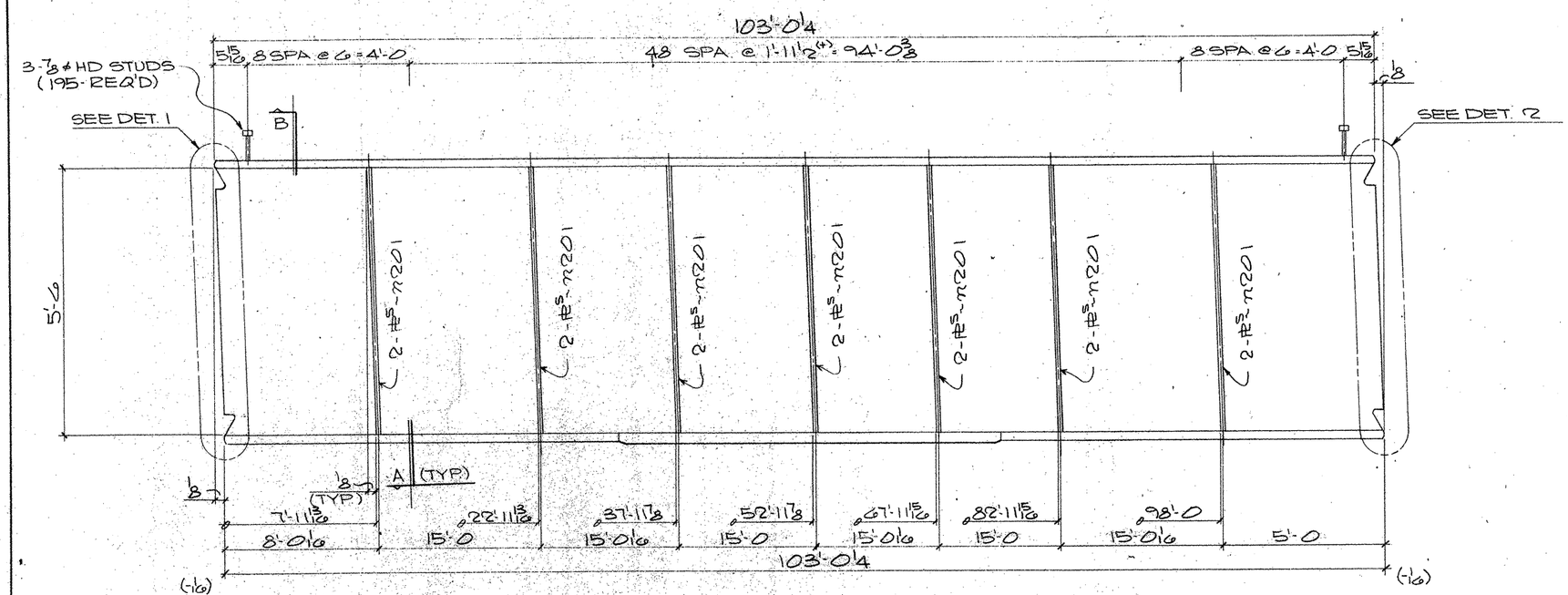

ONE GIRDER MK-238PG6.03
(APPROX WT. = TONS)

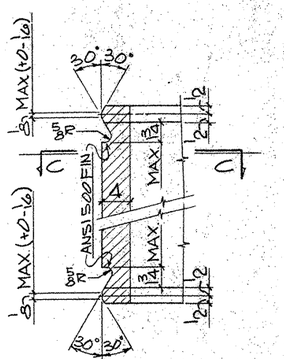

DETAIL-1

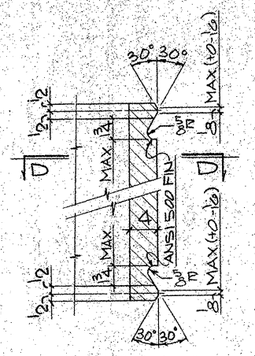

DETAIL-2

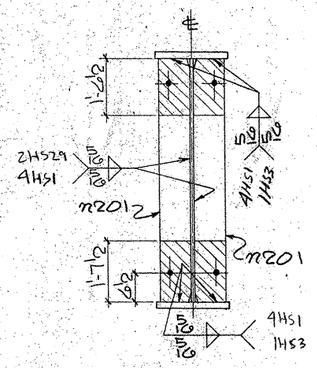

SECTION-A

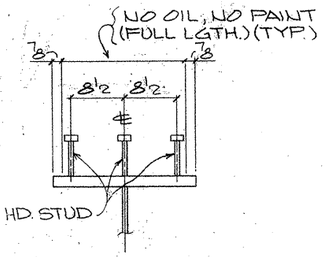

SECTION-B
(TYP STUD SECT.)

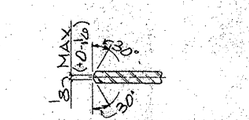

SECTION-CC

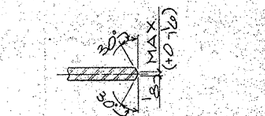

SECTION-DD

SHOP NOTES:

1) FOR GENERAL NOTES SEE SHT. GN1
2) FOR GIRDER SUB-ASSEMBLY SEE SHT. 216
3) FOR STIFF. DETAILS SEE SHT. 201
4) FOR BLOCKING DIAGRAM SEE SHT. 254
5) FOR HEAT CURVE DIAGRAM SEE SHT. 251
6) ▨ INDICATES OIL, NO PAINT (N.S./F.S. & EDGES)

BILL OF MATERIAL

	Qnty.	Material	Length	Mark Temp.	Mark Ship.	Wt.	Cut From	Remarks
2	1	GIRDER		238PG6.03				
3	1	GIRDER SUB-ASSY		A216				
4	14	DIAF STIFF		M201				
6	195	HD STUDS 7/8	0'-7				205-1	A108

TEXAS DEPARTMENT OF TRANSPORTATION
APPROVED
DIVISION OF BRIDGES AND STRUCTURES
APR 23 1993
APPROVAL OF THIS DRAWING DOES NOT RELIEVE THE CONTRACTOR OF THE RESPONSIBILITY FOR THE CORRECTNESS OF DETAIL

FOR APPROVAL
NOT FOR CONSTRUCTION

REVISION	DATE	DESCRIPTION OF REVISION
NO. 1		
NO. 2		
NO. 3		
NO. 4		
NO. 5		

PRINTING Req'd	For	Date

Bolts — Holes: 15/16 ø — Unless Noted
Shop Paint: SEE SHT. GN1
Fab. Spec.: AS NTD — Inspection
Architect
Erection By — Field Connections

HIRSCHFELD STEEL CO. INC.
112 WEST 29TH SAN ANGELO, TEXAS 76903
PHONE (915) 653-3211

DESCRIPTION: 6810 PLATE GIRDER UNIT
STRUCTURE: US 83/281 INTERCHANGE RAMP #2
LOCATION: HIDALGO COUNTY
CUSTOMER: GILBERT TEXAS CONSTRUCTION
SHIP TO
Customer's Order No.
Dwg. By: CRT — Date: 9-92
Checked By: JC — Date: 10-92
SHEET 238 OF
JOB NO. 92-107

APR MAR 24

60207

FED. ROAD DIV. NO.	STATE	FEDERAL AID PROJECT NO.			
6	TX.	NH 92(50)M			
STATE DIST. NO.	COUNTY	CONTROL NO.	SECTION NO.	JOB NO.	HIGHWAY NO.
21	HIDALGO	39	17	97	83/281

CE 92-12 (LINE #3)

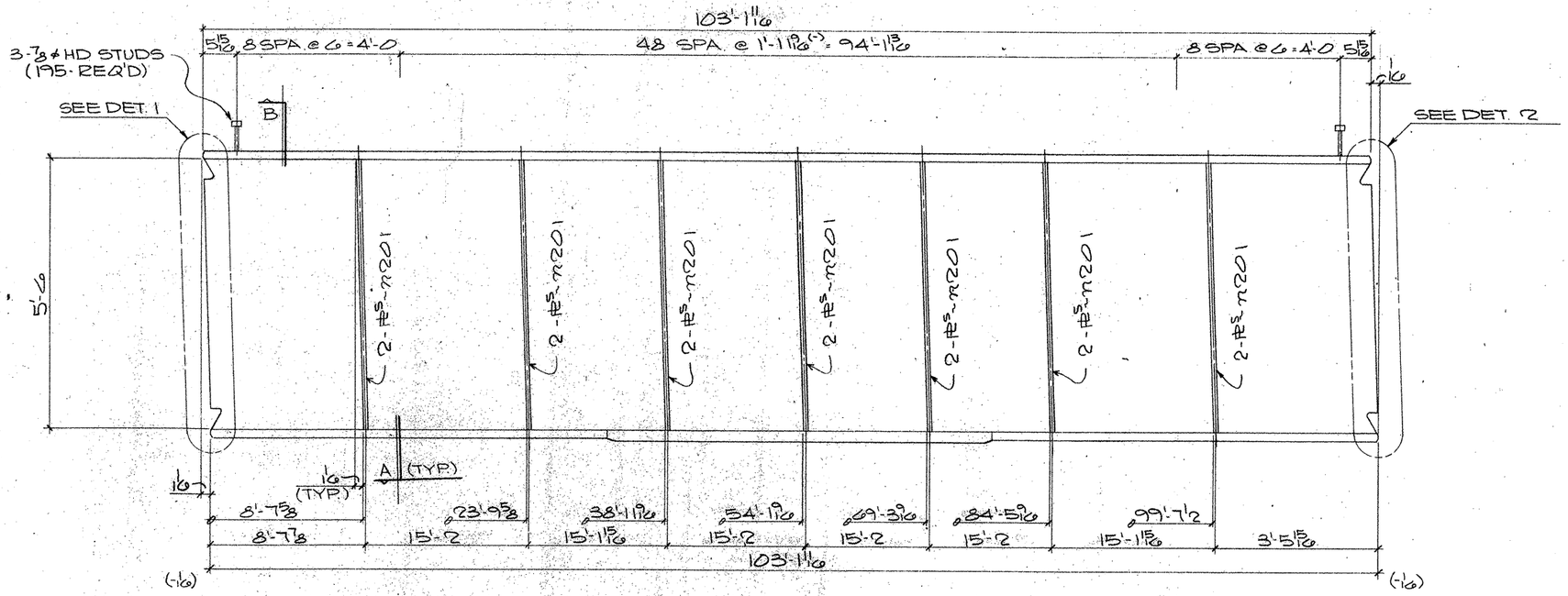

ONE GIRDER MK-237PG6.02

(APPROX. WT. = TONS)

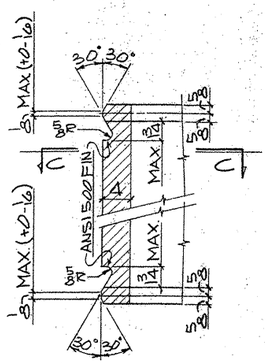

DETAIL-1

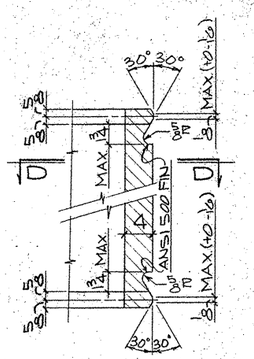

DETAIL-2

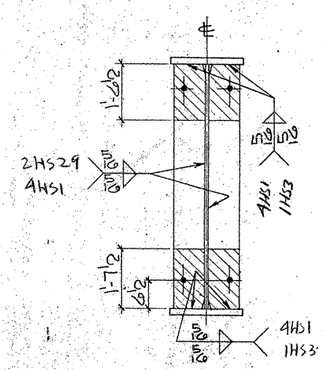

SECTION-A

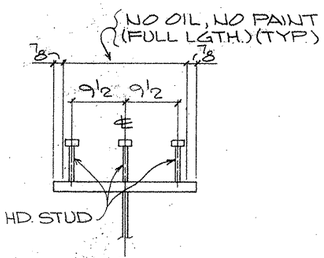

SECTION-B
(TYP. STUD SECT.)

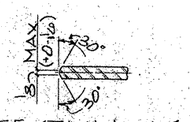

SECTION-CC

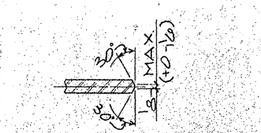

SECTION-DD

SHOP NOTES:

1) FOR GENERAL NOTES SEE SHT. GN1
2) FOR GIRDER SUB-ASSEMBLY SEE SHT. 215
3) FOR STIFF. DETAILS SEE SHT. 201
4) FOR BLOCKING DIAGRAM SEE SHT. 253
5) FOR HEAT CURVE DIAGRAM SEE SHT. 251
6) ////// INDICATES OIL, NO PAINT (N.S./P.S. & EDGES)

BILL OF MATERIAL

	Qnty.	Material	Length	Mark Temp	Mark Ship	Wt.	Cut From	Remarks
2	1	GIRDER		237PG6.02				
3	1	GIRDER SUB-ASSY		A215				
4	14	DIAF STIFF		M201				
6	195	HD STUDS 7/8	0'-7				205-1	A108

TEXAS DEPARTMENT OF TRANSPORTATION
APPROVED
DIVISION OF BRIDGES AND STRUCTURES
APR 23 1993
APPROVAL OF THIS DRAWING DOES NOT RELIEVE THE CONTRACTOR OF THE RESPONSIBILITY FOR THE CORRECTNESS OF DETAIL.

REVISION	DATE	DESCRIPTION OF REVISION
NO. 1		
NO. 2		
NO. 3		
NO. 4		
NO. 5		

PRINTING		
Req'd	For	Date

Bolts Holes 15/16 ø Unless Noted
Shop Paint SEE SHT. GN1
Fab Spec. AS NTD Inspection
Architect
Erection By Field Connections

HIRSCHFELD STEEL CO. INC.
112 WEST 29TH SAN ANGELO, TEXAS 76903
PHONE (915) 653-3211

DESCRIPTION	480'-0 PLATE GIRDER UNIT
STRUCTURE	US 83/281, INTERCHANGE RAMP "Z"
LOCATION	HIDALGO COUNTY
CUSTOMER	GILBERT TEXAS CONSTRUCTION
SHIP TO	
Customer's Order No.	
Dwg. By CRT	Date 9-92
Checked By JC	Date 10-92
SHEET	237 OF
JOB NO.	92-107

G0207

FED. ROAD DIV. NO.	STATE	FEDERAL AID PROJECT NO.				
6	TX.	NH,92(50)M				
STATE DIST. NO.	COUNTY	CONTROL NO.	SECTION NO.	JOB NO.	HIGHWAY NO.	
21	HIDALGO	39	17	97	83/281	

CE 92-12 (LINE #2)

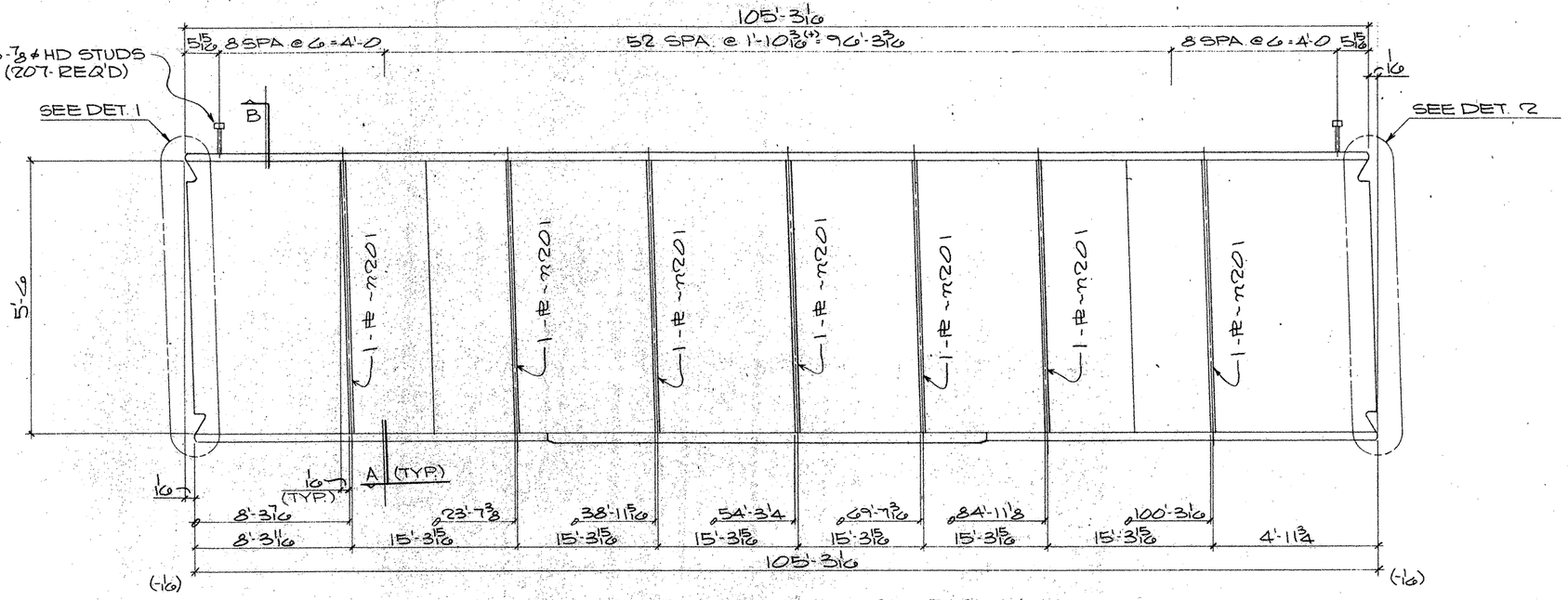

ONE GIRDER MK-236PG5.01

(APPROX WT = TONS)

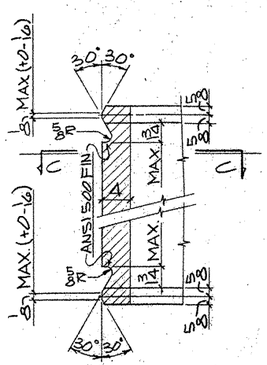

DETAIL-1

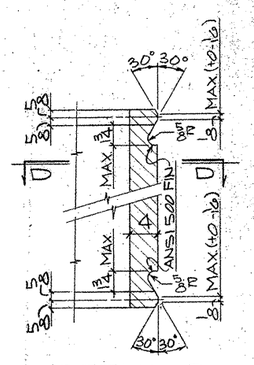

DETAIL-2

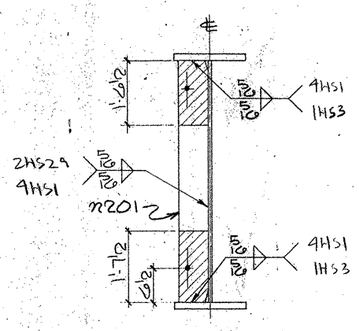

SECTION-A

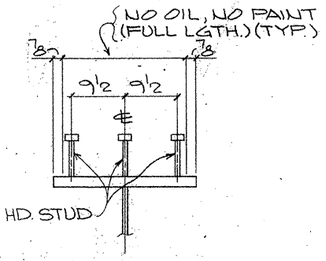

SECTION-B

(TYP. STUD SECT.)

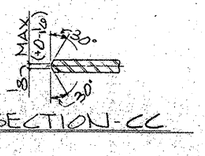

SECTION-CC

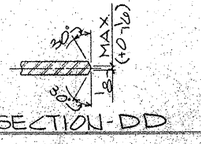

SECTION-DD

SHOP NOTES:

1) FOR GENERAL NOTES SEE SHT. GN1
2) FOR GIRDER SUB-ASSEMBLY SEE SHT. 214
3) FOR STIFF. DETAILS SEE SHT. 201
4) FOR BLOCKING DIAGRAM SEE SHT. 252
5) FOR HEAT CURVE DIAGRAM SEE SHT. 251
6) ▨ INDICATES OIL, NO PAINT (N.S./F.S. & EDGES)

BILL OF MATERIAL

	Only	Material	Length	Mark Temp.	Mark Ship.	Wt.	Cut From	Remarks
1								
2	1	GIRDER		236PG5.01			1	
3	1	GIRDER SUB-ASSY		A214				
4	7	DIAF STIFF		M201				
5								
6	207	HD STUDS 7/8	0'-7				205-1	A108
7								
8								
9								
10								
11								
12								
13								
14								
15								
16								
17								
18								
19								
20								
21								
22								
23								
24								
25								
26								
27								
28								
29								
30								
31								
32								
33								
34								
35								
36								
37								
38								
39								
40								
41								
42								
43								
44								
45								
46								
47								
48								
49								
50								
51								
52								
53								
54								
55								
56								
57								
58								
59								
60								

TEXAS DEPARTMENT OF TRANSPORTATION
APPROVED
DIVISION OF BRIDGES AND STRUCTURES
APR 23 1993

APPROVAL OF THIS DRAWING DOES NOT RELIEVE THE CONTRACTOR OF THE RESPONSIBILITY FOR THE CORRECTNESS OF DETAIL

FOR APPROVAL MAR 23 '93
NOT FOR CONSTRUCTION

REVISION	DATE	DESCRIPTION OF REVISION
NO. 1		
NO. 2		
NO. 3		
NO. 4		
NO. 5		

PRINTING

Req'd	For	Date

Bolts: Holes: 15/16 ø Unless Noted
Shop Paint: SEE SHT. GN1
Fab. Spec.: AS NTD Inspection
Architect:
Erection By: Field Connections

HIRSCHFELD STEEL CO. INC.
112 WEST 29TH SAN ANGELO, TEXAS 76903
PHONE (915) 653-3211

DESCRIPTION: 80'-0 PLATE GIRDER UNIT
STRUCTURE: US 83/281 INTERCHANGE RAMP #2
LOCATION: HIDALGO COUNTY
CUSTOMER: GILBERT TEXAS CONSTRUCTION
SHIP TO:
Customer's Order No.:
Dwg. By: CRT Date: 9-92
Checked By: JC Date: 10-92
SHEET 236 OF
JOB NO. 92-107

APV MAR 24

G0207

FED. ROAD DIV. NO.	STATE	FEDERAL AID PROJECT NO.			
6	TX.	NH 92(50)M			
STATE DIST. NO.	COUNTY	CONTROL NO.	SECTION NO.	JOB NO.	HIGHWAY NO.
21	HIDALGO	39	17	97	83/281

CE 92-12 (LINE # 1)

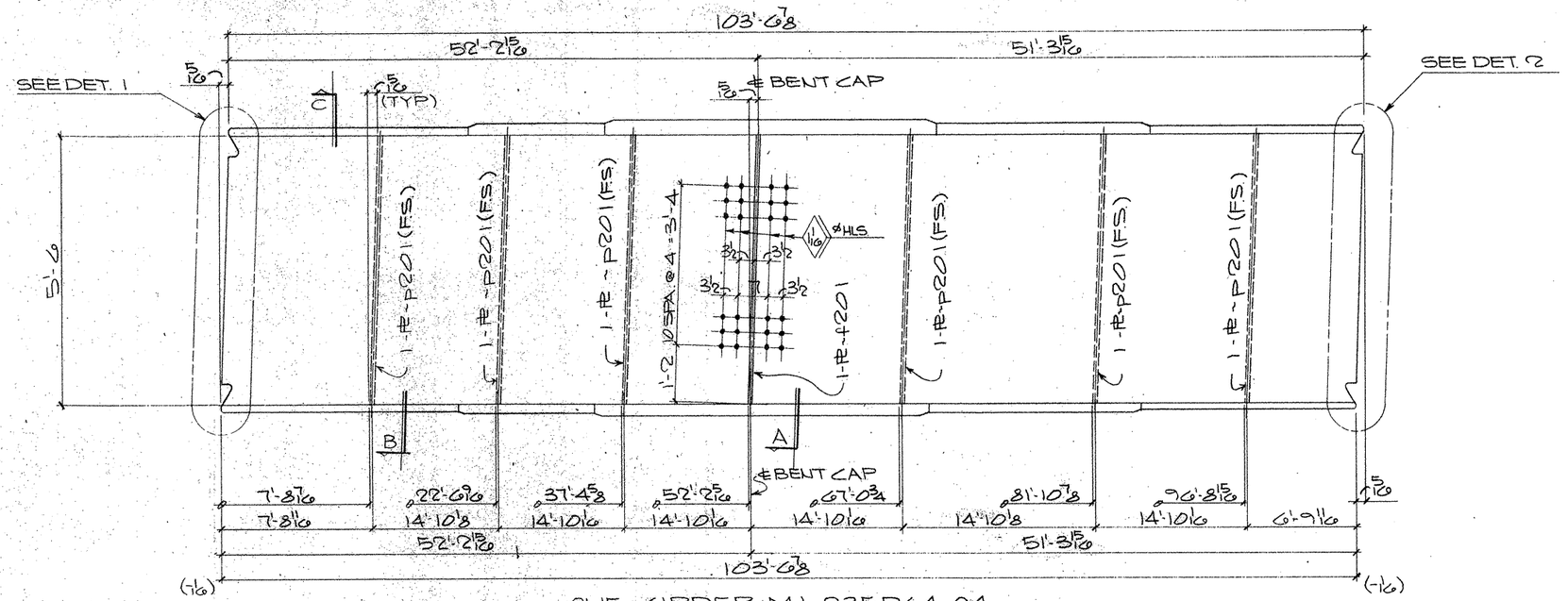

ONE GIRDER MK-235PG4.04
(APPROX. WT. = TONS)

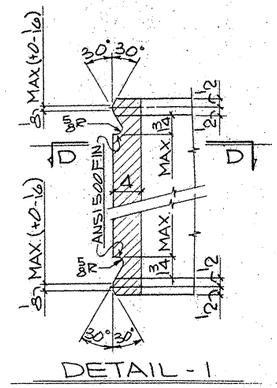

DETAIL-1

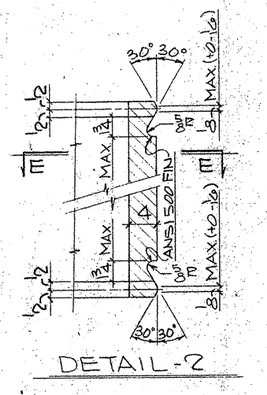

DETAIL-2

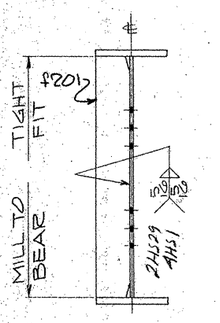

SECTION-A

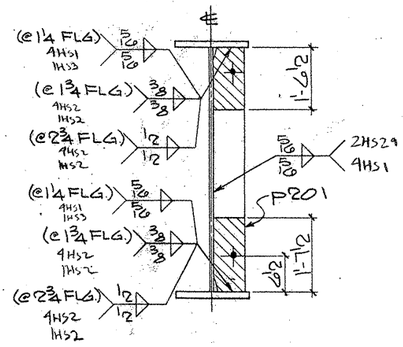

SECTION-B

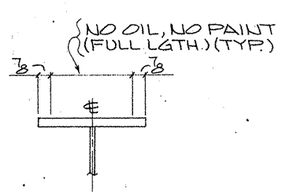

SECTION-C

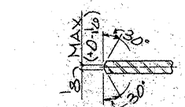

SECTION-DD

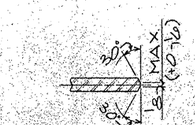

SECTION-EE

SHOP NOTES:
1) FOR GENERAL NOTES SEE SHT. GN1
2) FOR GIRDER SUB-ASSEMBLY SEE SHT. 213
3) FOR STIFF. DETAILS SEE SHT. 201
4) FOR BLOCKING DIAGRAM SEE SHT. 255
5) FOR HEAT CURVE DIAGRAM SEE SHT. 250
6) ▨ INDICATES OIL, NO PAINT (N.S./F.S. & EDGES)

BILL OF MATERIAL

	Qnty.	Material	Length	Mark Temp.	Mark Ship.	Wt.	Cut From	Remarks
1								
2	1	GIRDER		235PG4.04				
3	1	GIRDER SUB-ASSY		B213				
4	1	INT. BRG. STIFF		#201				
5	6	INT. STIFF		P201				
6–60								

TEXAS DEPARTMENT OF TRANSPORTATION
APPROVED
DIVISION OF BRIDGES AND STRUCTURES
APR 23 1993
APPROVAL OF THIS DRAWING DOES NOT RELIEVE THE CONTRACTOR OF THE RESPONSIBILITY FOR THE CORRECTNESS OF DETAILS.

FOR PRELIMINARY NOT FOR CONSTRUCTION

REVISION	DATE	DESCRIPTION OF REVISION
NO. 1		
NO. 2		
NO. 3		
NO. 4		
NO. 5		

PRINTING: Read / For / Date

Bolts Holes, 15/16 ⌀ Unless Noted
Shop Paint SEE SHT. GN1
Fab. Spec. AS NTD Inspection
Architect
Erection By Field Connections

HIRSCHFELD STEEL CO. INC.
112 WEST 29TH SAN ANGELO, TEXAS 76903
PHONE (915) 653-3211

DESCRIPTION	630'-0 PLATE GIRDER UNIT
STRUCTURE	US 83/281 INTERCHANGE RAMP #2
LOCATION	HIDALGO COUNTY
CUSTOMER	GILBERT TEXAS CONSTRUCTION
SHIP TO	
Customer's Order No.	
Dwg. By	CRT Date 9-92
Checked By	JC Date 10-92
SHEET	235 OF
JOB NO.	92-107

APV MAR 24

G0207

FED. ROAD DIV. NO.	STATE	FEDERAL AID PROJECT NO.			
6	TX.	NH 92(50)M			
STATE DIST. NO.	COUNTY	CONTROL NO.	SECTION NO.	JOB NO.	HIGHWAY NO.
21	HIDALGO	39	17	97	83/281

CE92-12 (LINE #4)

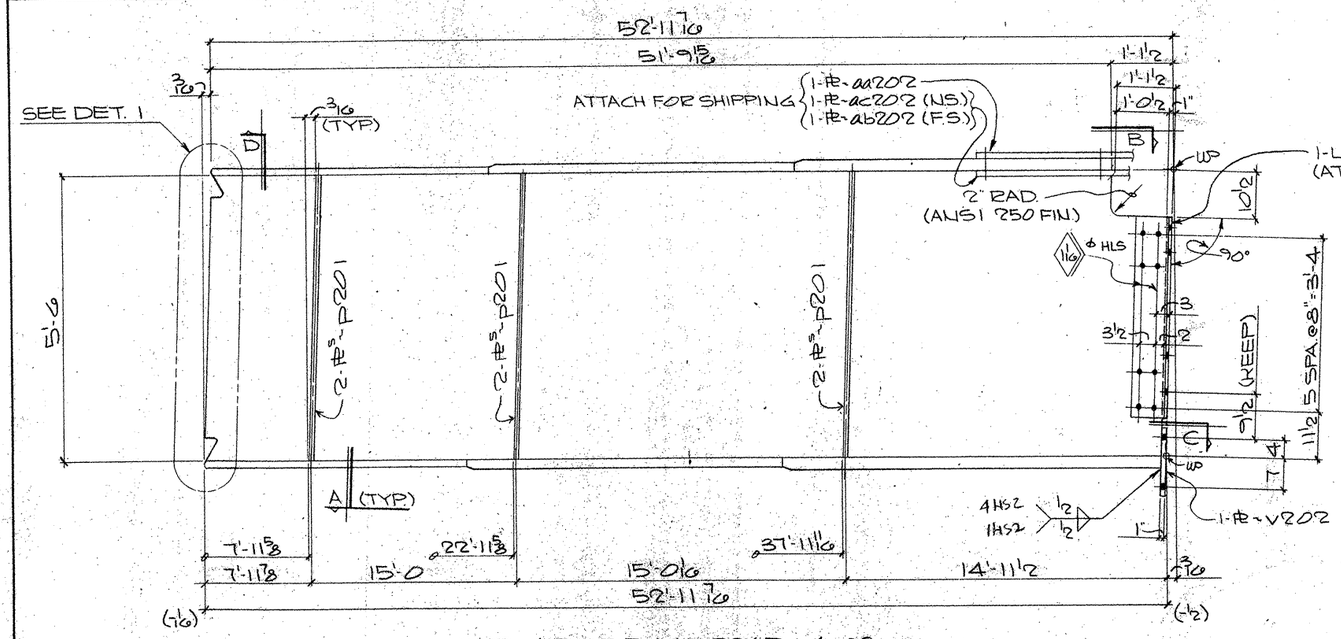

ONE GIRDER MK-234PG4.03
(APPROX. WT. - TONS)

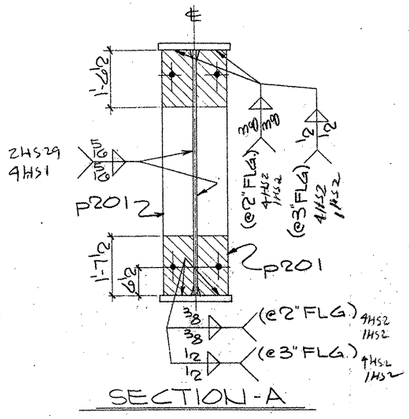

SECTION-A

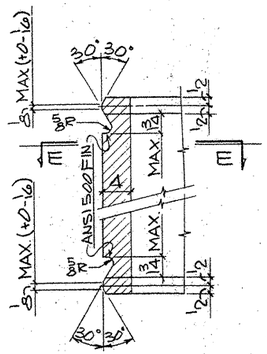

DETAIL-1

DIMS. ALONG ℄ OF WEB

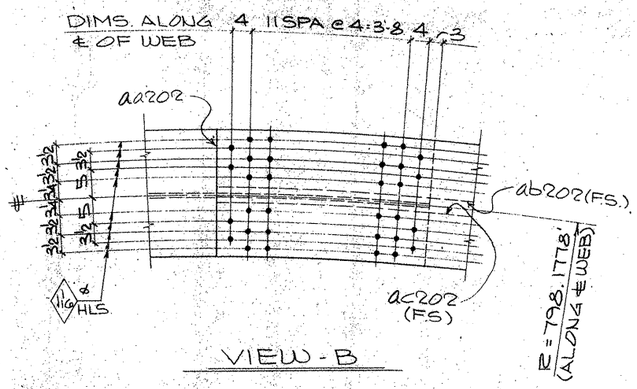

VIEW-B

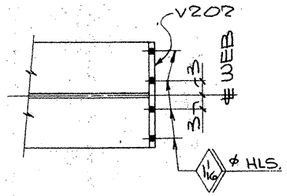

SECTION-C

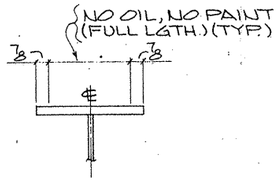

SECTION-D

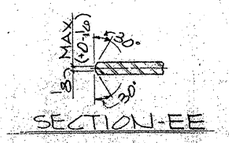

SECTION-EE

SHOP NOTES:

1) FOR GENERAL NOTES SEE SHT. GN1
2) FOR GIRDER SUB-ASSEMBLY SEE SHT. 212
3) FOR STIFF. DETAILS SEE SHT. 201
4) FOR BLOCKING DIAGRAM SEE SHT. 254
5) FOR HEAT CURVE DIAGRAM SEE SHT. 250
6) FOR SPLICE ATTACHMENTS SEE SHT. 202
7) ▨ INDICATES OIL, NO PAINT (N.S./F.S. & EDGES)

BILL OF MATERIAL

	Qnty	Material	Length	Mark Temp	Mark Ship.	Wt.	Cut From	Remarks
2	1	GIRDER		234PG4.03				
3	1	GIRDER SUB-ASSY		B212				
4	1	SPLICE PL		aa202				
5	1	SPLICE PL		ab202				
6	1	SPLICE PL		ac202				
7	6	DIAF STIFF		P201				
8	1	ANGLE		f202				
9	1	CONN. PL		V202				

TEXAS DEPARTMENT OF TRANSPORTATION
APPROVED
DIVISION OF BRIDGES AND STRUCTURES
APR 23 1993
APPROVAL OF THIS DRAWING DOES NOT RELIEVE THE CONTRACTOR OF THE RESPONSIBILITY FOR THE CORRECTNESS OF DETAIL.

FOR FABRICATION
NOT FOR CONSTRUCTION

REVISION	DATE	DESCRIPTION OF REVISION
NO. 1		
NO. 2		
NO. 3		
NO. 4		
NO. 5		

PRINTING Req'd	For	Date

Bolts Holes, 15/16 ϕ Unless Noted
Shop Paint SEE SHT GN1
Fab Spec. AS NTD Inspection
Architect
Erection By Field Connections

HIRSCHFELD STEEL CO. INC.
112 WEST 29TH SAN ANGELO, TEXAS 76903
PHONE (915) 653-3211

DESCRIPTION	480'-0 PLATE GIRDER UNIT
STRUCTURE	US 83/281 INTERCHANGE RAMP "S"
LOCATION	HIDALGO COUNTY
CUSTOMER	GILBERT TEXAS CONSTRUCTION
SHIP TO	
Customer's Order No.	SHEET 234 OF
Dwg By CET Date 9-92	JOB NO. 92-107
Checked By JC Date 10-92	

APR MAR 29

FED. ROAD DIV. NO.	STATE	FEDERAL AID PROJECT NO.				
6	TX.	NH 92(50)M				
STATE DIST. NO.	COUNTY	CONTROL NO.	SECTION NO.	JOB NO.	HIGHWAY NO.	
21	HIDALGO	39	17	97	83/281	

60207

CE 92-12 (LINE # 3)

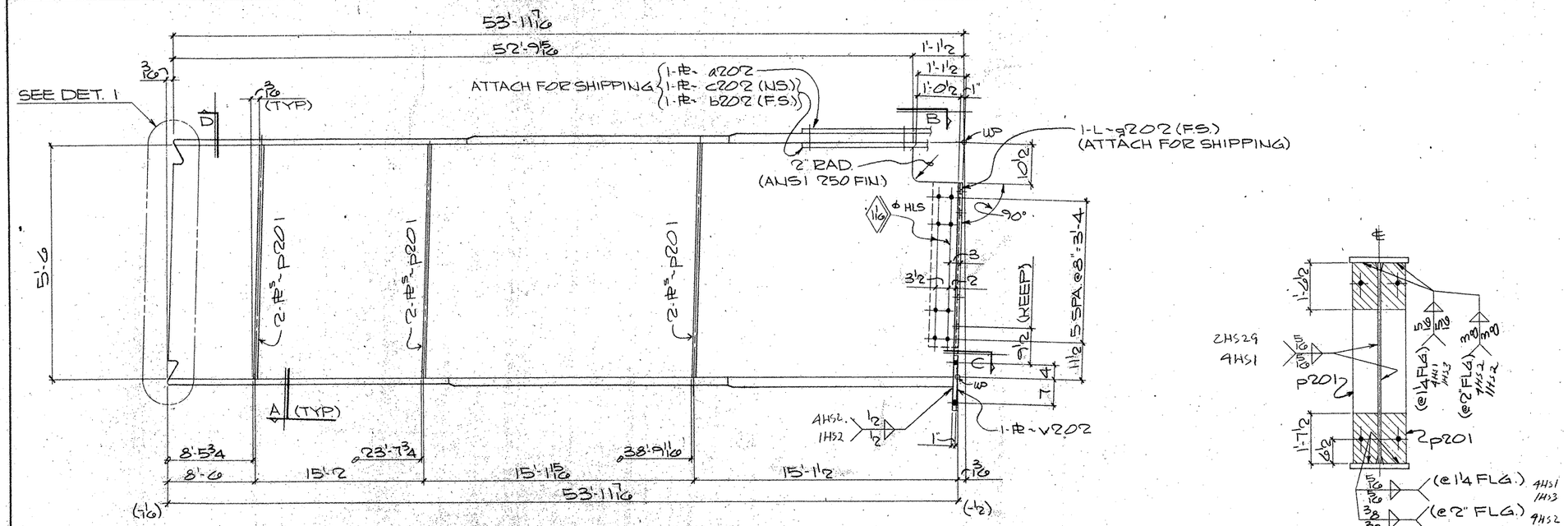

ONE GIRDER MK-233PG4.02
(APPROX. WT. = TONS)

SECTION-A

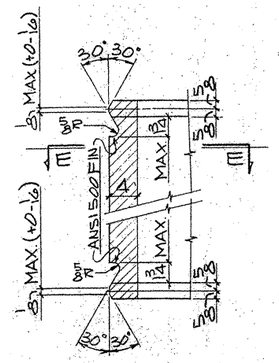

DETAIL-1

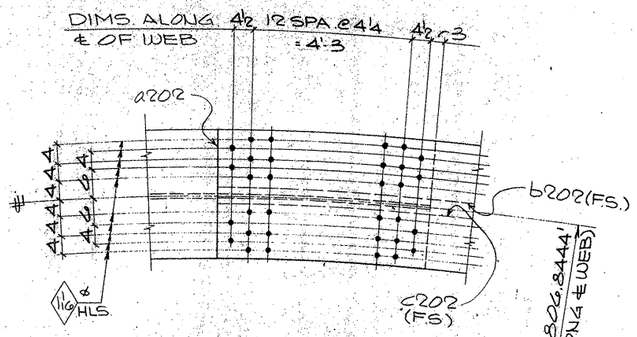

VIEW-B

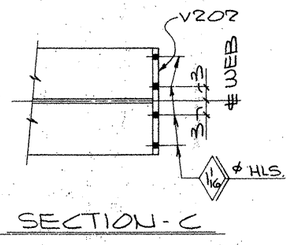

SECTION-C

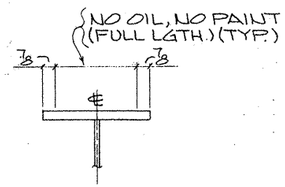

SECTION-D

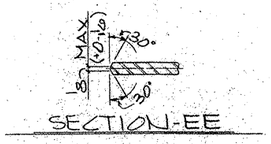

SECTION-EE

SHOP NOTES:

1) FOR GENERAL NOTES SEE SHT. GN1
2) FOR GIRDER SUB-ASSEMBLY SEE SHT. 211
3) FOR STIFF. DETAILS SEE SHT. 201
4) FOR BLOCKING DIAGRAM SEE SHT. 253
5) FOR HEAT CURVE DIAGRAM SEE SHT. 250
6) FOR SPLICE ATTACHMENTS SEE SHT. 202
7) ▨ INDICATES OIL, NO PAINT (N.S./F.S. & EDGES)

BILL OF MATERIAL

	Qnty	Material	Length	Mark Temp	Mark Ship	Wt.	Cut From	Remarks
1								
2	1	GIRDER		233PG4.02				
3	1	GIRDER SUB-ASSY		B211				
4	1	SPLICE PL		a202				
5	1	SPLICE PL		b202				
6	1	SPLICE PL		c202				
7	6	DIAF STIFF		p201				
8	1	ANGLE		9x202			4	
9	1	CONN. PL		v202				
10								
11								
12								
13								
14								
15								
16								
17								
18								
19								
20								
21								
22								
23								
24								
25								
26								
27								
28								
29								
30								
31								
32								
33								
34								
35								
36								
37								
38								
39								
40								
41								
42								
43								
44								
45								
46								
47								
48								
49								
50								
51								
52								
53								
54								
55								
56								
57								
58								
59								
60								

TEXAS DEPARTMENT OF TRANSPORTATION
APPROVED
~~DIVISION OF BRIDGES AND STRUCTURES~~
APR 23 1993
APPROVAL OF THIS DRAWING DOES NOT RELIEVE THE CONTRACTOR OF THE RESPONSIBILITY FOR THE CORRECTNESS OF DETAIL

FOR APPROVAL
NOT FOR CONSTRUCTION

REVISION	DATE	DESCRIPTION OF REVISION
NO. 1		
NO. 2		
NO. 3		
NO. 4		
NO. 5		

PRINTING Req'd	For	Date

Bolts: Holes: 15/16 ϕ Unless Noted
Shop Paint: SEE SHT GN1
Fab Spec: AS NTD. Inspection
Architect
Erection By: Field Connections

HIRSCHFELD STEEL CO. INC.
112 WEST 29TH SAN ANGELO, TEXAS 76903
PHONE (915) 653-3211

DESCRIPTION	480'-0 PLATE GIRDER UNIT
STRUCTURE	US 83/281 INTERCHANGE RAMP #2
LOCATION	HIDALGO COUNTY
CUSTOMER	GILBERT TEXAS CONSTRUCTION
SHIP TO	
Customer's Order No.	
Dwg. By: CRT Date: 9-92	SHEET 253 OF
Checked By: JC Date: 10-92	JOB NO. 92-107

APV MAR 24

G0207

FED. ROAD DIV. NO.	STATE	FEDERAL AID PROJECT NO.			
6	TX.	NH 92(50)M			
STATE DIST. NO.	COUNTY	CONTROL NO.	SECTION NO.	JOB NO.	HIGHWAY NO.
21	HIDALGO	39	17	97	83/281

CE92-12 (LINE #2)

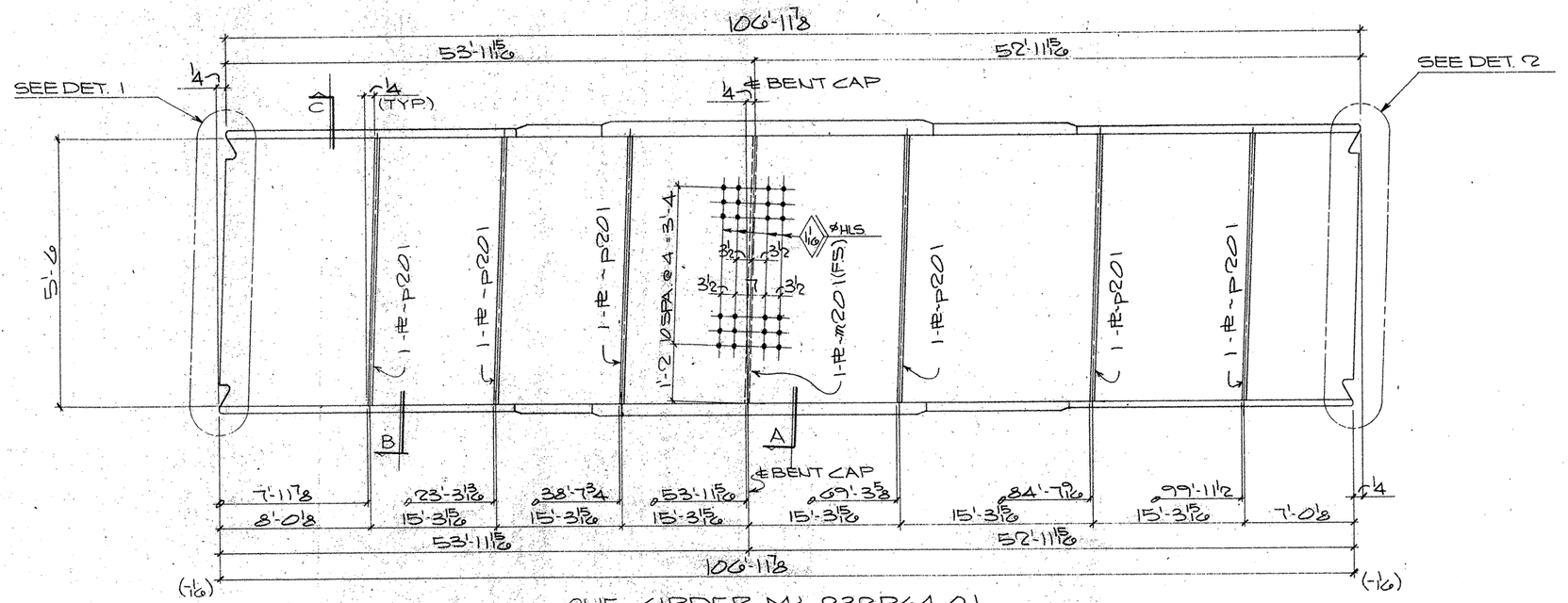

ONE GIRDER MK-232PG4.01
(APPROX WT. = TONS)

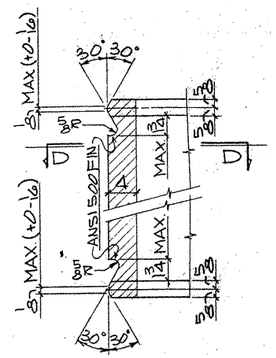

DETAIL-1

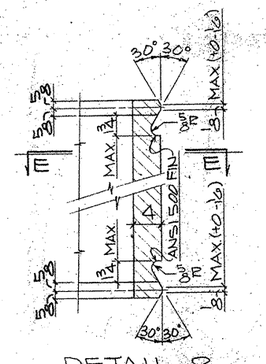

DETAIL-2

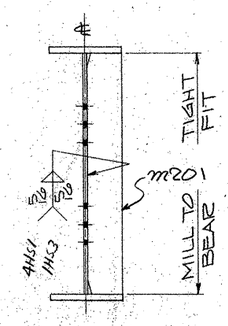

SECTION-A

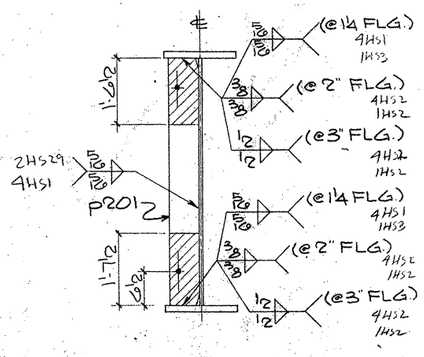

SECTION-B

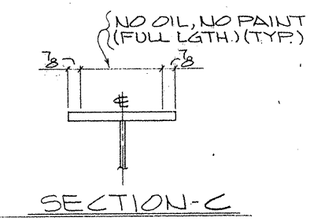

SECTION-C

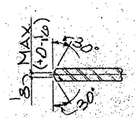

SECTION-DD

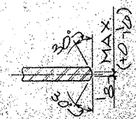

SECTION-EE

SHOP NOTES:

1) FOR GENERAL NOTES SEE SHT. GN1
2) FOR GIRDER SUB-ASSEMBLY SEE SHT. 210
3) FOR STIFF. DETAILS SEE SHT. 201
4) FOR BLOCKING DIAGRAM SEE SHT. 252
5) FOR HEAT CURVE DIAGRAM SEE SHT. 250
6) ▨ INDICATES OIL, NO PAINT (N.S./F.S. & EDGES)

BILL OF MATERIAL

	Qnty	Material	Length	Mark Temp.	Mark Ship.	Wt.	Cut From	Remarks
1								
2	1	GIRDER		232PG4.01				
3	1	GIRDER SUB-ASSY		B210				
4	1	INT. BRG. STIFF		M201				
5	6	INT. STIFF		P201				
6								
7								
8								
9								
10								
11								
12								
13								
14								
15								
16								
17								
18								
19								
20								
21								
22								
23								
24								
25								
26								
27								
28								
29								
30								
31								
32								
33								
34								
35								
36								
37								
38								
39								
40								
41								
42								
43								
44								
45								
46								
47								
48								
49								
50								
51								
52								
53								
54								
55								
56								
57								
58								
59								
60								

TEXAS DEPARTMENT OF TRANSPORTATION
APPROVED
DIVISION OF BRIDGES AND STRUCTURES
APR. 23 1993
APPROVAL OF THIS DRAWING DOES NOT RELIEVE THE CONTRACTOR OF THE RESPONSIBILITY FOR THE CORRECTNESS OF SAME

FOR APPROVAL
NOT FOR CONSTRUCTION

REVISION	DATE	DESCRIPTION OF REVISION
NO. 1		
NO. 2		
NO. 3		
NO. 4		
NO. 5		

PRINTING Req'd	For	Date

Bolts: Holes: 15/16 ø Unless Noted
Shop Paint: SEE SHT. GN1
Fab. Spec.: AASHTO Inspection:
Architect:
Erection By: Field Connections:

HIRSCHFELD STEEL CO. INC.
112 WEST 29TH SAN ANGELO, TEXAS 76903
PHONE (915) 653-3211

DESCRIPTION: 680'-0 PLATE GIRDER UNIT
STRUCTURE: US 83/281 INTERCHANGE RAMP "Z"
LOCATION: HIDALGO COUNTY
CUSTOMER: GILBERT TEXAS CONSTRUCTION
SHIP TO:
Customer's Order No.:
Dwg. By: CBT Date: 9-92
Checked By: JC Date: 10-92
SHEET: 232 OF
JOB NO. 92-107

FED. ROAD DIV. NO.	STATE	FEDERAL AID PROJECT NO.			
6	TX.	NH 92(50)M			
STATE DIST. NO.	COUNTY	CONTROL NO.	SECTION NO.	JOB NO.	HIGHWAY NO.
21	HIDALGO	39	17	97	83/281

60207

CE92-12 (LINE # 1)

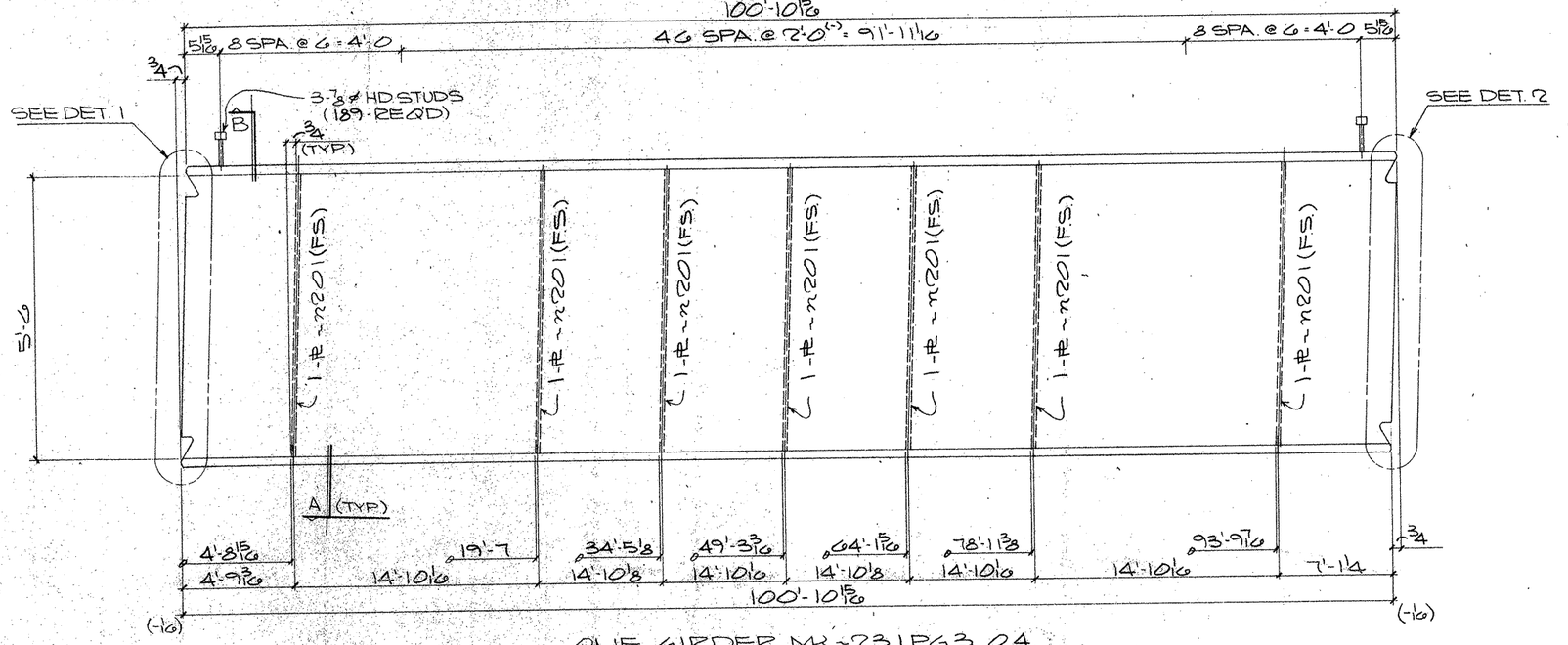

ONE GIRDER MK~231PG3.04

(APPROX. WT. = TONS)

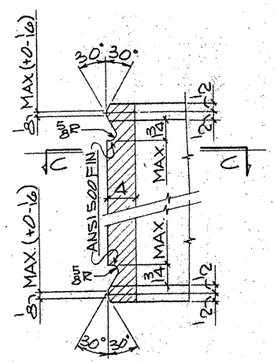

DETAIL-1

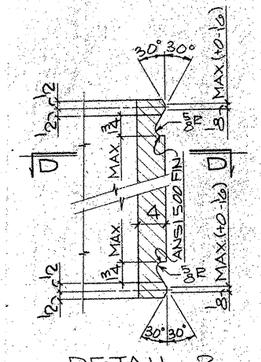

DETAIL-2

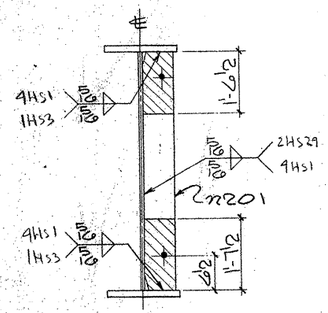

SECTION-A

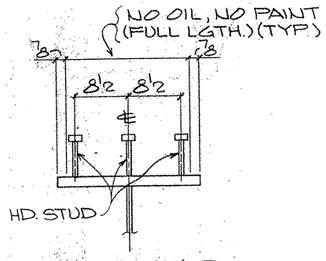

SECTION-B

(TYP. STUD SECT.)

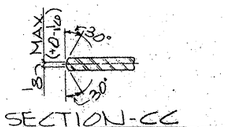

SECTION-CC

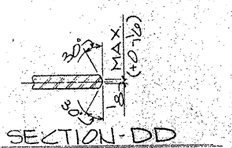

SECTION-DD

SHOP NOTES:

1) FOR GENERAL NOTES SEE SHT. GN1
2) FOR GIRDER SUB-ASSEMBLY SEE SHT. 213
3) FOR STIFF. DETAILS SEE SHT. 201
4) FOR BLOCKING DIAGRAM SEE SHT. 255
5) FOR HEAT CURVE DIAGRAM SEE SHT. 250
6) ▨ INDICATES OIL, NO PAINT (N.S./F.S. & EDGES)

BILL OF MATERIAL

	Qnty.	Material	Length	Mark Temp.	Mark Ship	Wt.	Cut From	Remarks
2	1	GIRDER			231PG3.04			
3	1	GIRDER SUB-ASSY		A213				
4	7	DIAF. STIFF		n201				
5	189	HD STUDS 7/8	0'-7				205-1	A108

TEXAS DEPARTMENT OF TRANSPORTATION
APPROVED
DIVISION OF BRIDGES AND STRUCTURES
APR 23 1993

APPROVAL OF THIS DRAWING DOES NOT RELIEVE THE CONTRACTOR OF THE RESPONSIBILITY FOR THE CORRECTNESS OF DETAIL.

FOR CONSTRUCTION
NOT FOR CONSTRUCTION

REVISION	DATE	DESCRIPTION OF REVISION
NO. 1		
NO. 2		
NO. 3		
NO. 4		
NO. 5		

PRINTING		
Req'd	For	Date

Bolts Holes: 15/16 ø Unless Noted
Shop Paint SEE SHT. GN1
Fab Spec. AS NTD Inspection
Architect
Erection By Field Connections

HIRSCHFELD STEEL CO. INC.
112 WEST 29TH SAN ANGELO, TEXAS 76903
PHONE (915) 653-3211

DESCRIPTION	280'-0" PLATE GIRDER UNIT
STRUCTURE	US 83/281 INTERCHANGE RAMP #2
LOCATION	HIDALGO COUNTY
CUSTOMER	GILBERT TEXAS CONSTRUCTION
SHIP TO	
Customer's Order No.	
Dwg. By CRT	Date 9-92
Checked By JC	Date 10-92

SHEET 231 OF
JOB NO. 92-107

FED. ROAD DIV. NO.	STATE	FEDERAL AID PROJECT NO.				
6	TX.	NH 92(50)M				
STATE DIST. NO.	COUNTY	CONTROL NO.	SECTION NO.	JOB NO.	HIGHWAY NO.	
21	HIDALGO	39	17	97	83/281	

G0207

ADM MST 2.4

CE 92-12 (LINE #4)

231PG3

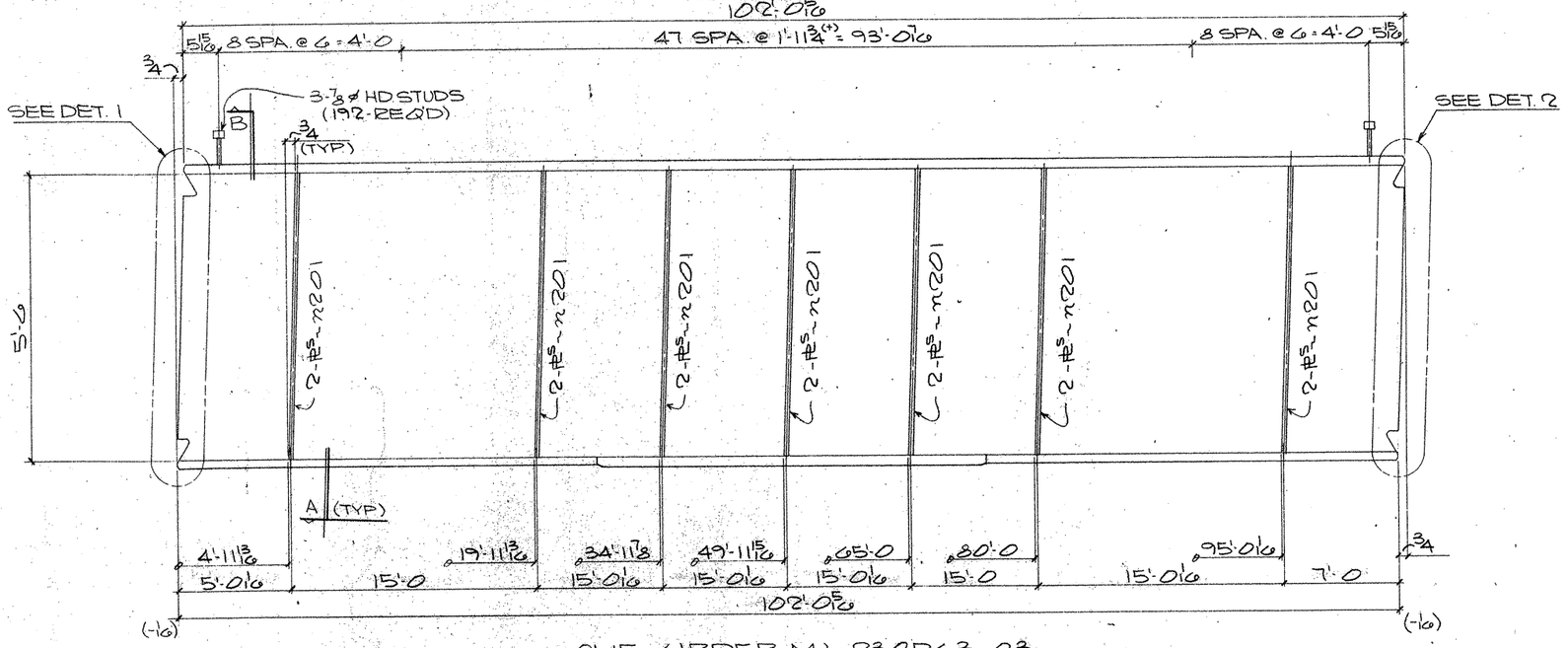

ONE GIRDER MK-230PG3.03

(APPROX. WT. = TONS)

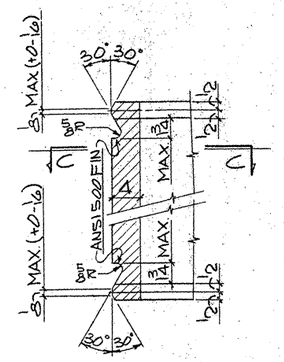

DETAIL-1

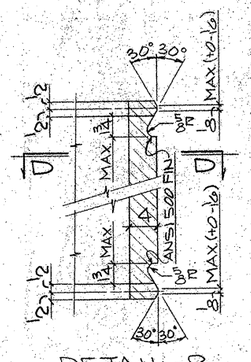

DETAIL-2

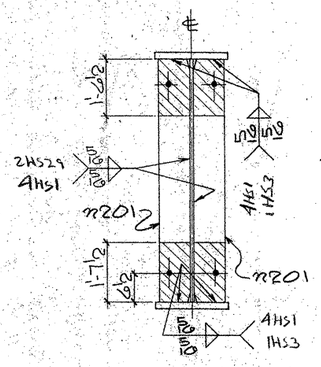

SECTION-A

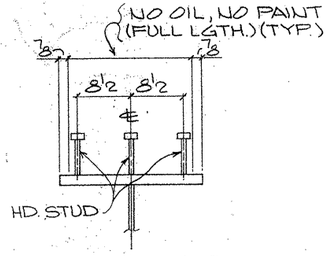

SECTION-B

(TYP. STUD SECT.)

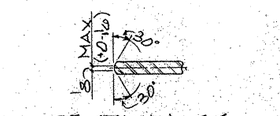

SECTION-CC

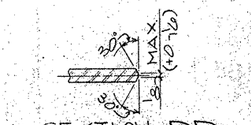

SECTION-DD

SHOP NOTES:

1) FOR GENERAL NOTES SEE SHT. GN1
2) FOR GIRDER SUB-ASSEMBLY SEE SHT. 212
3) FOR STIFF. DETAILS SEE SHT. 201
4) FOR BLOCKING DIAGRAM SEE SHT. 254
5) FOR HEAT CURVE DIAGRAM SEE SHT. 250
6) ▨ INDICATES OIL, NO PAINT (N.S./F.S. & EDGES)

BILL OF MATERIAL

	Qnty.	Material	Length	Mark Temp	Mark Ship.	Wt.	Cut From	Remarks
2	1	GIRDER			230PG3.03			
3	1	GIRDER SUB-ASSY		A212				
4	14	DIAF. STIFF		n201				
5	192	HD STUDS 7/8	0'-7				205-1	A108

TEXAS DEPARTMENT OF TRANSPORTATION
APPROVED
DIVISION OF BRIDGES AND STRUCTURES
APR 23 1993
APPROVAL OF THIS DRAWING DOES NOT RELIEVE THE CONTRACTOR OF THE RESPONSIBILITY FOR THE CORRECTNESS OF DETAIL.

PRELIMINARY
NOT FOR CONSTRUCTION

REVISION	DATE	DESCRIPTION OF REVISION
NO. 1		
NO. 2		
NO. 3		
NO. 4		
NO. 5		

PRINTING Req'd	For	Date

Bolts Holes, 15/16 ø Unless Noted
Shop Paint SEE SHT. GN1
Fab. Spec. AS NTD Inspection
Architect
Erection By Field Connections

HIRSCHFELD STEEL CO. INC.
112 WEST 29TH SAN ANGELO, TEXAS 76903
PHONE (915) 653-3211

DESCRIPTION	680'-0 PLATE GIRDER UNIT
STRUCTURE	US 83/281 INTERCHANGE RAMP "Z"
LOCATION	HIDALGO COUNTY
CUSTOMER	GILBERT TEXAS CONSTRUCTION
SHIP TO	
Customer's Order No.	
Dwg. By CRT Date 9-92	SHEET 230 OF
Checked By JC Date 10-92	JOB NO. 92-107

G0207

FED. ROAD DIV. NO.	STATE	FEDERAL AID PROJECT NO.			
6	TX.	NH 92(50)M			
STATE DIST. NO.	COUNTY	CONTROL NO.	SECTION NO.	JOB NO.	HIGHWAY NO.
21	HIDALGO	39	17	97	83/281

CE 92-12 (LINE # 3)

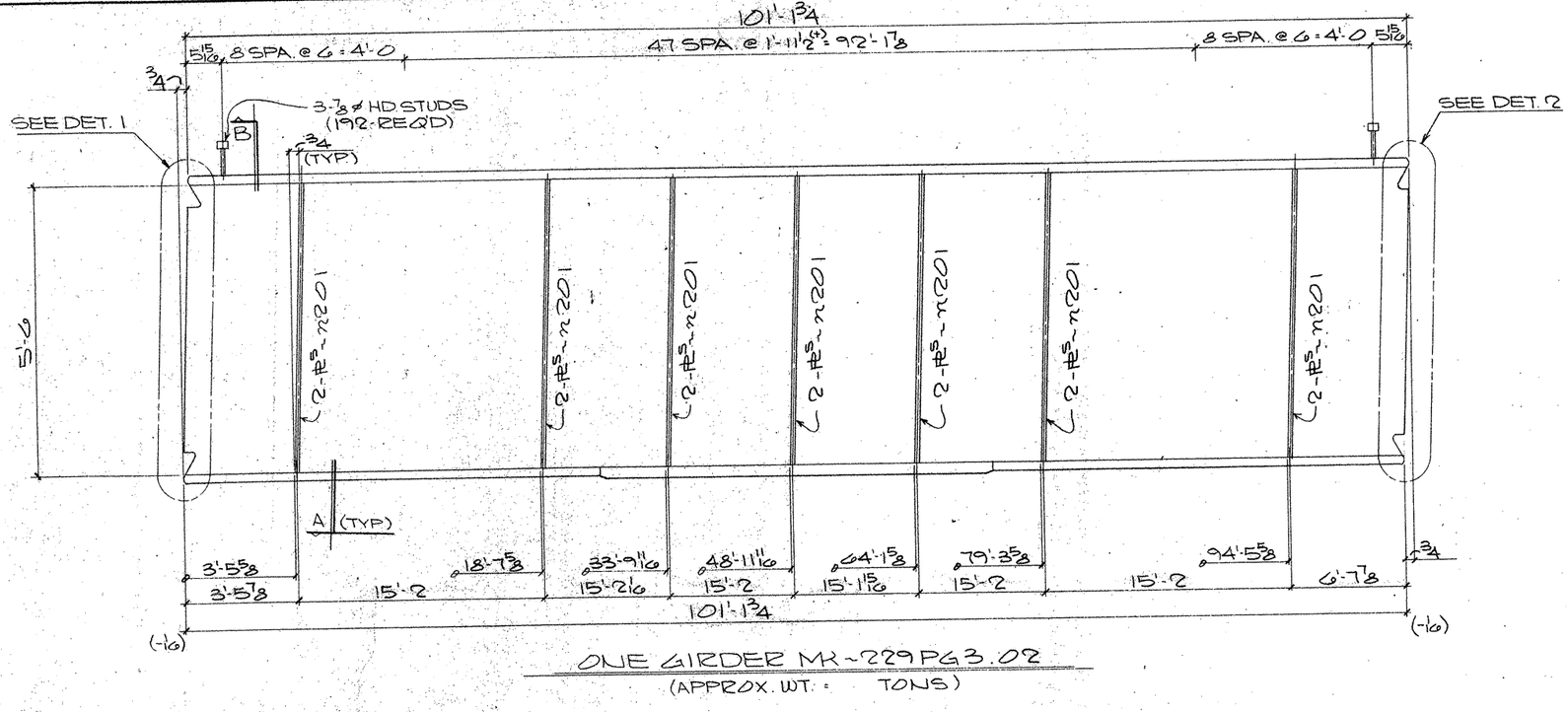

ONE GIRDER MK-229PG3.02

(APPROX. WT. = TONS)

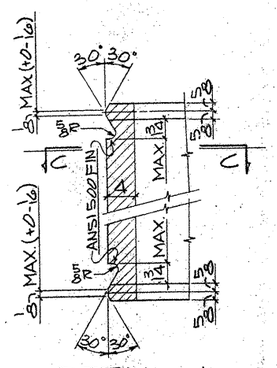

DETAIL-1

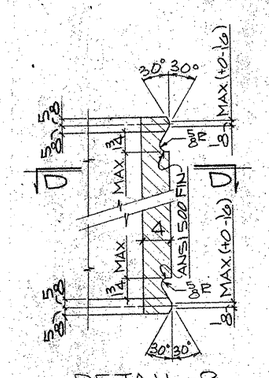

DETAIL-2

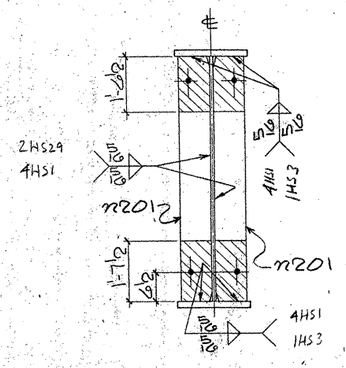

SECTION-A

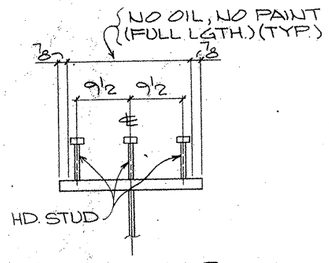

SECTION-B

(TYP STUD SECT.)

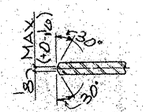

SECTION-CC

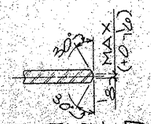

SECTION-DD

SHOP NOTES:

1) FOR GENERAL NOTES SEE SHT. GN1
2) FOR GIRDER SUB-ASSEMBLY SEE SHT. 211
3) FOR STIFF. DETAILS SEE SHT. 201
4) FOR BLOCKING DIAGRAM SEE SHT. 253
5) FOR HEAT CURVE DIAGRAM SEE SHT. 250
6) ▨ INDICATES OIL, NO PAINT (N.S./E.S. & EDGES)

BILL OF MATERIAL

	Qnty	Material	Length	Mark Temp	Mark Ship	Wt.	Cut From	Remarks
1								
2	1	GIRDER			229PG3.02			
3	1	GIRDER SUB-ASSY		A211				
4	14	DIAF. STIFF		n201				
5	192	HD STUDS 7/8	0'-7				205-1	A108
6								
7								
8								
9								
10								
11								
12								
13								
14								
15								
16								
17								
18								
19								
20								
21								
22								
23								
24								
25								
26								
27								
28								
29								
30								
31								
32								
33								
34								
35								
36								
37								
38								
39								
40								
41								
42								
43								
44								
45								
46								
47								
48								
49								
50								
51								
52								
53								
54								
55								
56								
57								
58								
59								
60								

TEXAS DEPARTMENT OF TRANSPORTATION
APPROVED
DIVISION OF BRIDGES AND STRUCTURES
APR 23 1993
APPROVAL OF THIS DRAWING DOES NOT RELIEVE THE CONTRACTOR OF THE RESPONSIBILITY FOR THE CORRECTNESS OF DETAIL.

FOR APPROVAL APR 24 93
NOT FOR CONSTRUCTION

REVISION	DATE	DESCRIPTION OF REVISION
NO. 1		
NO. 2		
NO. 3		
NO. 4		
NO. 5		

PRINTING Req'd	For	Date

Bolts Holes 15/16 ø Unless Noted
Shop Paint SEE SHT GN1
Fab. Spec. AS NTD Inspection
Architect
Erection By Field Connections

HIRSCHFELD STEEL CO. INC.
112 WEST 29TH SAN ANGELO TEXAS 76903
PHONE (915) 653-3211

DESCRIPTION	480'-0 PLATE GIRDER UNIT
STRUCTURE	US 83/281 INTERCHANGE RAMP #2
LOCATION	HIDALGO COUNTY
CUSTOMER	GILBERT TEXAS CONSTRUCTION
SHIP TO	
Customer's Order No.	SHEET 229 OF
Dwg. By SRT Date 9-92	JOB NO. 92-107
Checked By JC Date 10-92	

APR MAR 24

60207

FED. ROAD DIV. NO.	STATE	FEDERAL AID PROJECT NO.			
6	TX.	NH 92(50)M			
STATE DIST. NO.	COUNTY	CONTROL NO.	SECTION NO.	JOB NO.	HIGHWAY NO.
21	HIDALGO	39	17	97	83/281

CE 92-12 (LINE # 2)

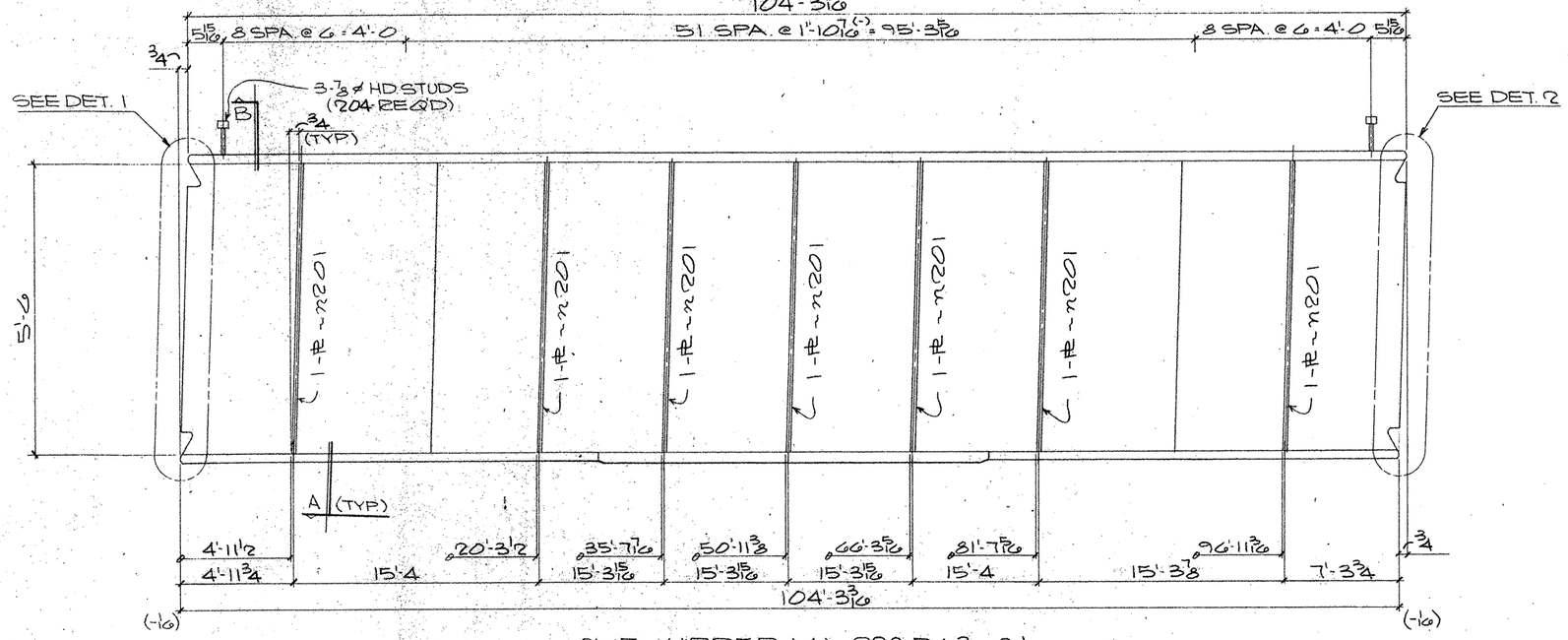

ONE GIRDER MK~228 PG3.01

(APPROX. WT. = TONS)

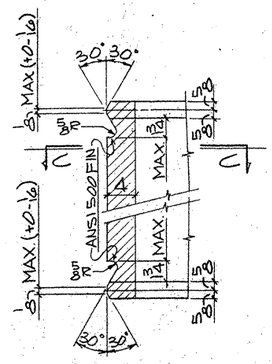

DETAIL-1

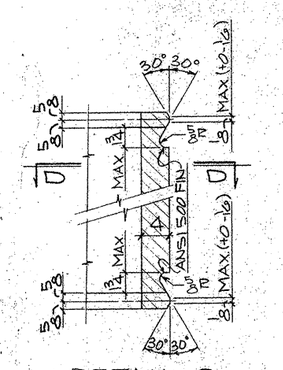

DETAIL-2

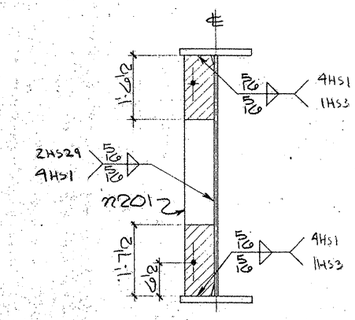

SECTION-A

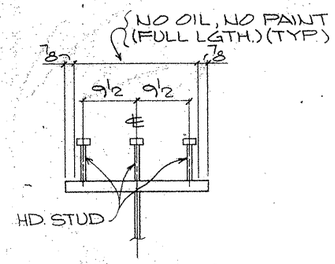

SECTION-B
(TYP. STUD SECT.)

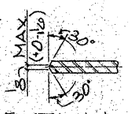

SECTION-CC

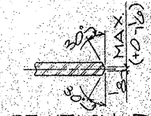

SECTION-DD

SHOP NOTES:

1) FOR GENERAL NOTES SEE SHT. GN1
2) FOR GIRDER SUB-ASSEMBLY SEE SHT. 210
3) FOR STIFF. DETAILS SEE SHT. 201
4) FOR BLOCKING DIAGRAM SEE SHT. 252
5) FOR HEAT CURVE DIAGRAM SEE SHT. 250
6) ▨ INDICATES OIL, NO PAINT (N.S./F.S. & EDGES)

BILL OF MATERIAL

	Qnty.	Material	Length	Mark Temp.	Mark Ship.	Wt.	Cut From	Remarks
1								
2	1	GIRDER			228PG3.01			
3	1	GIRDER SUB-ASSY		A210				
4	7	DIAF. STIFF		M201				
5	204	HD STUDS 7/8	0'-7				205-1	A108
6								
7								
8								
9								
10								
11								
12								
13								
14								
15								
16								
17								
18								
19								
20								
21								
22								
23								
24								
25								
26								
27								
28								
29								
30								
31								
32								
33								
34								
35								
36								
37								
38								
39								
40								
41								
42								
43								
44								
45								
46								
47								
48								
49								
50								
51								
52								
53								
54								
55								
56								
57								
58								
59								
60								

TEXAS DEPARTMENT OF TRANSPORTATION
APPROVED
DIVISION OF BRIDGES AND STRUCTURES
APR 23 1993
APPROVAL OF THIS DRAWING DOES NOT RELIEVE THE CONTRACTOR OF THE RESPONSIBILITY FOR THE CORRECTNESS OF DETAIL.

FOR APPROVAL
NOT FOR CONSTRUCTION

REVISION	DATE	DESCRIPTION OF REVISION
NO. 1		
NO. 2		
NO. 3		
NO. 4		
NO. 5		

PRINTING

Req'd	For	Date

Bolts Holes 15/16 ø Unless Noted
Shop Paint SEE SHT. GN1
Fab. Spec. AS NTD Inspection
Architect
Erection By Field Connections

HIRSCHFELD STEEL CO. INC.
112 WEST 29TH SAN ANGELO, TEXAS 76903
PHONE (915) 653-3211

DESCRIPTION 680'-0 PLATE GIRDER UNIT
STRUCTURE US 83/281 INTERCHANGE RAMP "E"
LOCATION HIDALGO COUNTY
CUSTOMER GILBERT TEXAS CONSTRUCTION
SHIP TO
Customer's Order No.
Dwg. By CRT Date 9-92
Checked By JC Date 10-92
SHEET 228 OF
JOB NO. 92-107

G0207

FED. ROAD DIV. NO.	STATE	FEDERAL AID PROJECT NO.			
6	TX.	NH 92(50)M			
STATE DIST. NO.	COUNTY	CONTROL NO.	SECTION NO.	JOB NO.	HIGHWAY NO.
21	HIDALGO	39	17	97	83/281

CE92-12 (LINE # 1)

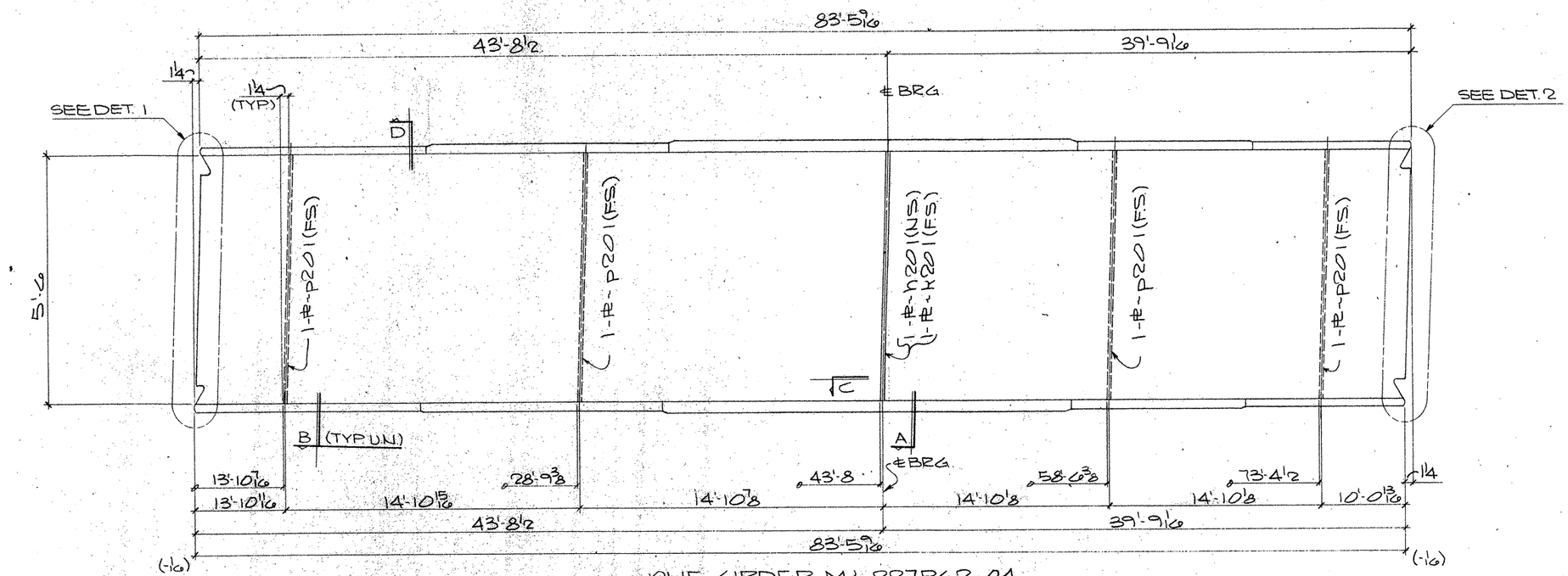

ONE GIRDER MK-227PG2.04

(APPROX. WT. = TONS)

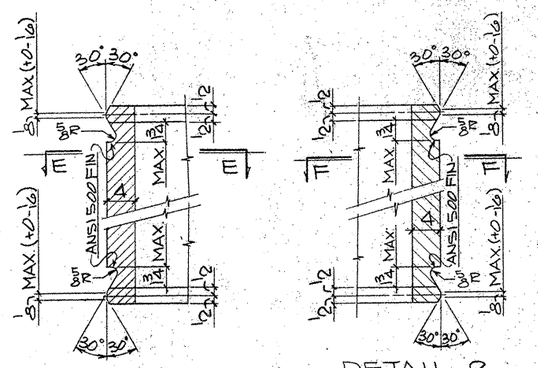

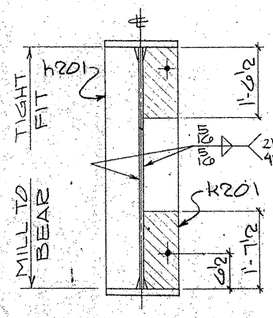

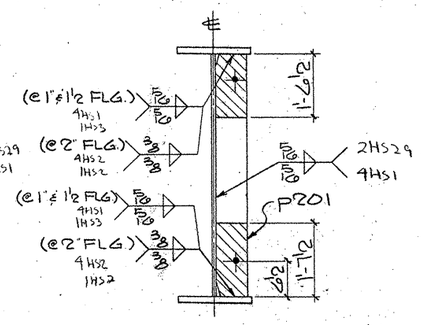

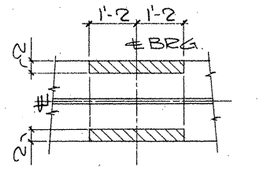

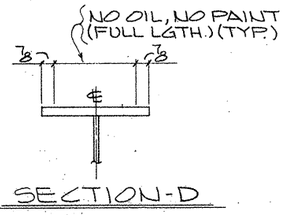

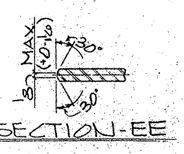

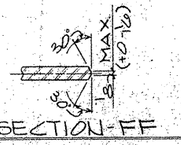

SHOP NOTES:

1) FOR GENERAL NOTES SEE SHT. GN1
2) FOR GIRDER SUB-ASSEMBLY SEE SHT. 209
3) FOR STIFF. DETAILS SEE SHT. 201
4) FOR BLOCKING DIAGRAM SEE SHT. 256
5) FOR HEAT CURVE DIAGRAM SEE SHT. 250
6) ////// INDICATES OIL, NO PAINT (N.S./F.S. & EDGES)

G0207

FED. ROAD DIV. NO.	STATE	FEDERAL AID PROJECT NO.			
6	TX.	NH 92(50)M			
STATE DIST. NO.	COUNTY	CONTROL NO.	SECTION NO.	JOB NO.	HIGHWAY NO.
21	HIDALGO	39	17	97	83/281

APP MAR 2 4

BILL OF MATERIAL

	Qnty.	Material	Length	Mark Temp.	Mark Ship.	Wt.	Cut From	Remarks
1								
2	1	GIRDER			227PG2.04			
3	1	GIRDER SUB-ASSY		B209				
4	1	BRG STIFF		h201				
5	1	BRG STIFF		k201				
6	4	DIAF STIFF		p201				
7–60								

TEXAS DEPARTMENT OF TRANSPORTATION
APPROVED
DIVISION OF BRIDGES AND STRUCTURES
APR 23 1993
APPROVAL OF THIS DRAWING DOES NOT RELIEVE THE CONTRACTOR OF THE RESPONSIBILITY FOR THE CORRECTNESS OF DETAIL

FOR APPROVAL

REVISION	DATE	DESCRIPTION OF REVISION
NO. 1		
NO. 2		
NO. 3		
NO. 4		
NO. 5		

PRINTING Read	For	Date

Bolts Holes. 15/16 ⌀ Unless Noted
Shop Paint SEE SHT. GN1
Fab Spec. AS NTD Inspection
Architect
Erection By Field Connections

HIRSCHFELD STEEL CO. INC.
112 WEST 29TH SAN ANGELO, TEXAS 76903
PHONE (915) 653-3211

DESCRIPTION	680'-0 PLATE GIRDER UNIT
STRUCTURE	US 83/281 INTERCHANGE RAMP "Z"
LOCATION	HIDALGO COUNTY
CUSTOMER	GILBERT TEXAS CONSTRUCTION
SHIP TO	
Customer's Order No.	
Dwg. By CRT	Date 9-92
Checked By MC	Date 10-92

SHEET 227 OF
JOB NO. 92-107

CE 92-12 (LINE #4)

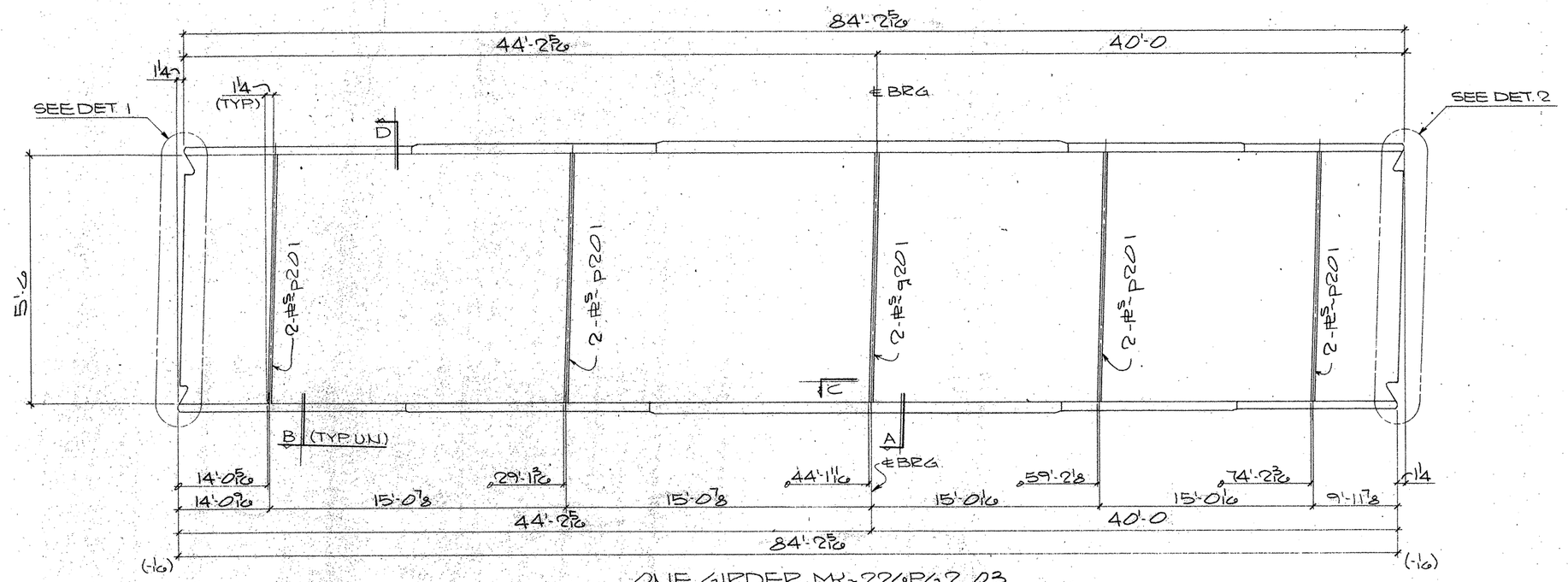

ONE GIRDER MK-220PG2.03
(APPROX. WT. = TONS)

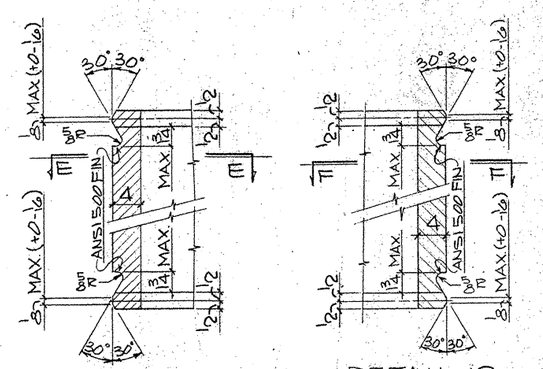

DETAIL-1

DETAIL-2

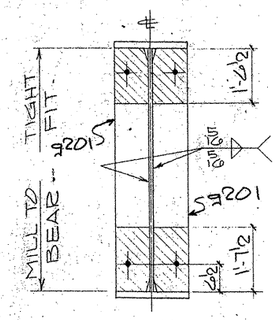

SECTION-A

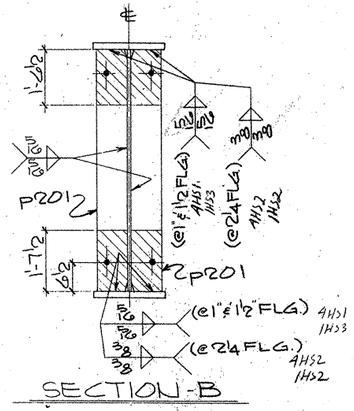

SECTION-B

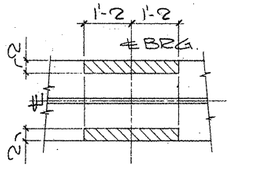

SECTION-C

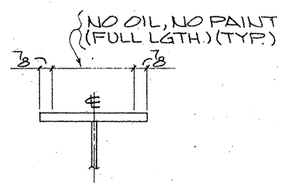

SECTION-D

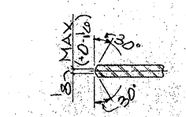

SECTION-EE

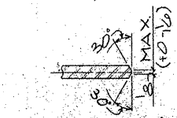

SECTION-FF

SHOP NOTES:

1) FOR GENERAL NOTES SEE SHT. GN1
2) FOR GIRDER SUB-ASSEMBLY SEE SHT. 208
3) FOR STIFF. DETAILS SEE SHT. 201
4) FOR BLOCKING DIAGRAM SEE SHT. 255
5) FOR HEAT CURVE DIAGRAM SEE SHT. 250
6) ▨ INDICATES OIL, NO PAINT (N.S./F.S. & EDGES)

BILL OF MATERIAL

	Qnty.	Material	Length	Mark Temp.	Mark Ship.	Wt.	Cut From	Remarks
2	1	GIRDER			220PG2.03			
3	1	GIRDER SUB-ASSY		B208				
4	2	BRG STIFF		B201				
6	8	DIAF STIFF		P201				

TEXAS DEPARTMENT OF TRANSPORTATION
APPROVED
DIVISION OF BRIDGES AND STRUCTURES
APR 23 '93
FOR APPROVAL
APPROVAL OF THIS DRAWING DOES NOT RELIEVE THE CONTRACTOR OF THE RESPONSIBILITY FOR THE CORRECTNESS OF DETAIL.
DATE FOR CONSTRUCTION

REVISION	DATE	DESCRIPTION OF REVISION
NO. 1		
NO. 2		
NO. 3		
NO. 4		
NO. 5		

PRINTING Reqd | For | Date

Bolts Holes 15/16 Ø Unless Noted
Shop Paint SEE SHT. GN1
Fab Spec. AS NTD Inspection
Architect
Erection By Field Connections

HIRSCHFELD STEEL CO. INC.
112 WEST 29TH SAN ANGELO, TEXAS 76903
PHONE (915) 653-3211

DESCRIPTION 080'-0 PLATE GIRDER UNIT
STRUCTURE US 83/281 INTERCHANGE RAMP #2
LOCATION HIDALGO COUNTY
CUSTOMER GILBERT TEXAS CONSTRUCTION
SHIP TO
Customer's Order No.
Dwg. By CRT Date 9-92
Checked By JC Date 10-92
SHEET 226 OF
JOB NO. 92-107

G0207

FED. ROAD DIV. NO.	STATE	FEDERAL AID PROJECT NO.			
6	TX.	NH 92(50)M			
STATE DIST. NO.	COUNTY	CONTROL NO.	SECTION NO.	JOB NO.	HIGHWAY NO.
21	HIDALGO	39	17	97	83/281

CE92-12 (LINE #3)

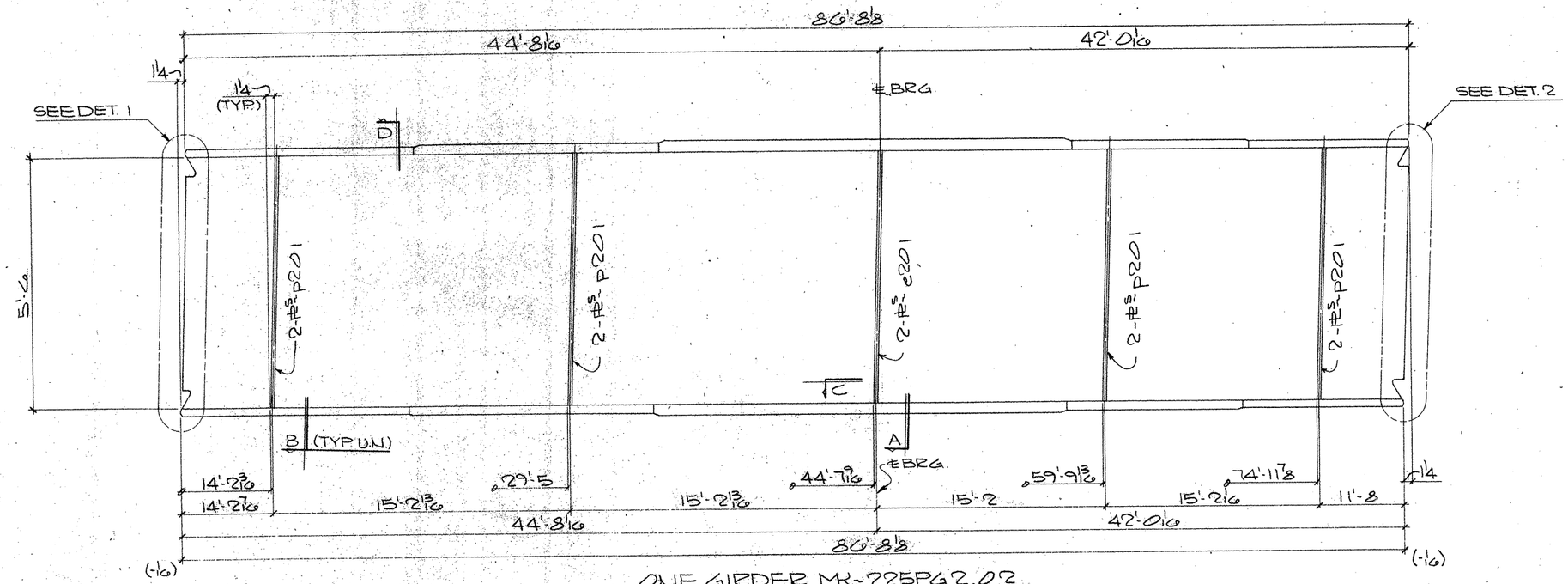

ONE GIRDER MK~225PG2.02

(APPROX. WT. = TONS)

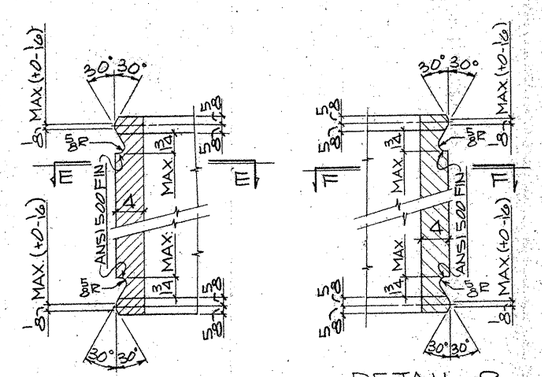

DETAIL-1

DETAIL-2

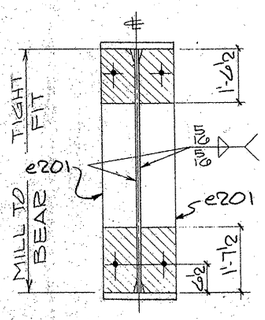

SECTION-A

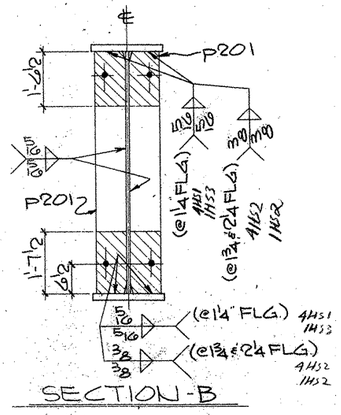

SECTION-B

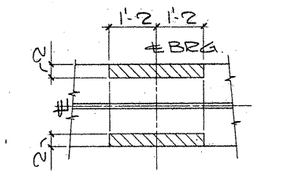

SECTION-C

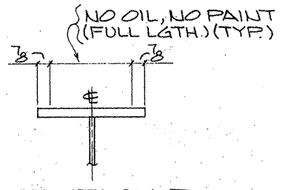

SECTION-D

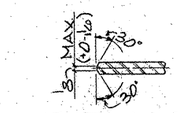

SECTION-EE

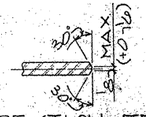

SECTION-FF

SHOP NOTES:

1) FOR GENERAL NOTES SEE SHT. GN1
2) FOR GIRDER SUB-ASSEMBLY SEE SHT. 207
3) FOR STIFF. DETAILS SEE SHT. 201
4) FOR BLOCKING DIAGRAM SEE SHT. 254
5) FOR HEAT CURVE DIAGRAM SEE SHT. 250
6) ▨ INDICATES OIL, NO PAINT (N.S./F.S. & EDGES)

G020.7

FED. ROAD DIV. NO.	STATE	FEDERAL AID PROJECT NO.				
6	TX.	NH 92(50)M				
STATE DIST. NO.	COUNTY	CONTROL NO.	SECTION NO.	JOB NO.	HIGHWAY NO.	
21	HIDALGO	39	17	97	83/281	

BILL OF MATERIAL

	Qnty	Material	Length	Mark Temp	Mark Ship	Wt.	Cut From	Remarks
2	1	GIRDER			225PG2.02			
3	1	GIRDER SUB-ASSY		B207				
4	2	BRG STIFF		e201				
6	8	DIAF STIFF		p201				

TEXAS DEPARTMENT OF TRANSPORTATION
APPROVED
DIVISION OF BRIDGES AND STRUCTURES
APR 23 1993
APPROVAL OF THIS DRAWING DOES NOT RELIEVE THE CONTRACTOR OF THE RESPONSIBILITY FOR THE CORRECTNESS OF DETAIL.

NOT APPROVED FOR CONSTRUCTION

REVISION	DATE	DESCRIPTION OF REVISION
NO. 1		
NO. 2		
NO. 3		
NO. 4		
NO. 5		

PRINTING

Regd	For	Date

Bolts Holes 15/16 ø Unless Noted
Shop Paint SEE SHT. GN1
Fab. Spec. AS NTD Inspection
Architect
Erection By Field Connections

HIRSCHFELD STEEL CO. INC.
112 WEST 29TH SAN ANGELO, TEXAS 76903
PHONE (915) 653-3211

DESCRIPTION	480'-0" PLATE GIRDER UNIT
STRUCTURE	US. 83/281 INTERCHANGE RAMP "2"
LOCATION	HIDALGO COUNTY
CUSTOMER	GILBERT TEXAS CONSTRUCTION
SHIP TO	
Customer's Order No.	
Dwg. By CRT	Date 9-92
Checked By JC	Date 10-92

SHEET 225 OF
JOB NO. 92-107

CE 92-12 (LINE #2)

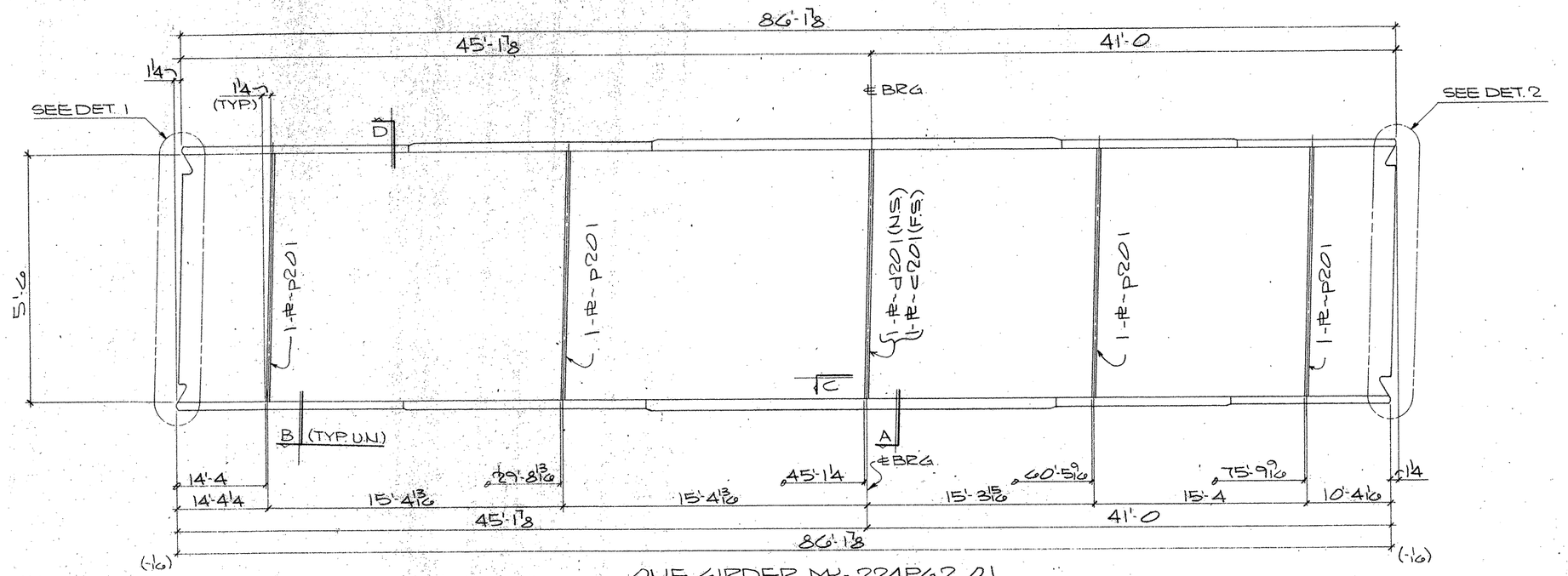

ONE GIRDER MK-224PG2.01

(APPROX. WT. = TONS)

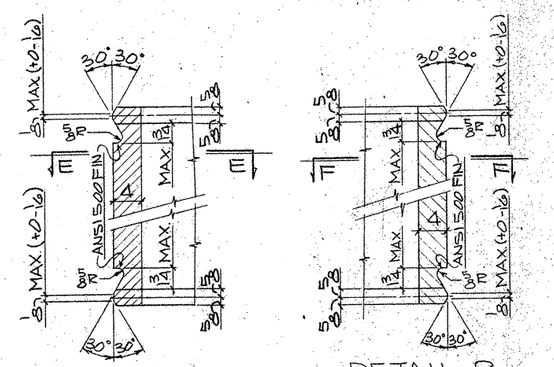

DETAIL-1

DETAIL-2

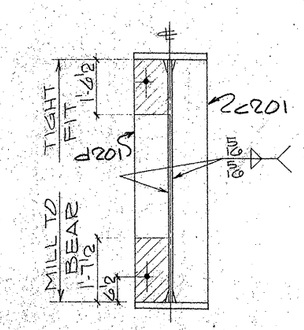

SECTION-A

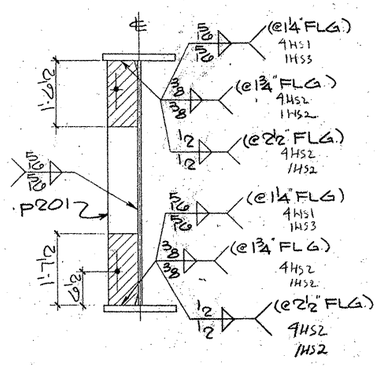

SECTION-B

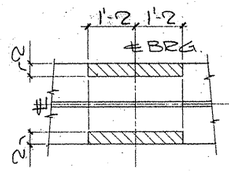

SECTION-C

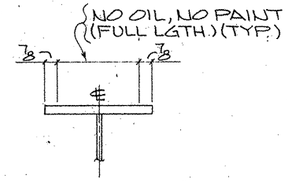

SECTION-D

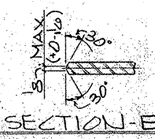

SECTION-EE

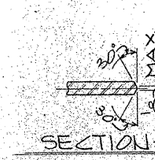

SECTION-FF

SHOP NOTES:

1) FOR GENERAL NOTES SEE SHT. GN1
2) FOR GIRDER SUB-ASSEMBLY SEE SHT. 206
3) FOR STIFF. DETAILS SEE SHT. 201
4) FOR BLOCKING DIAGRAM SEE SHT. 252
5) FOR HEAT CURVE DIAGRAM SEE SHT. 250
6) ▨ INDICATES OIL, NO PAINT (N.S./F.S. & EDGES)

BILL OF MATERIAL

	Qnty.	Material	Length	Mark Temp	Mark Ship	Wt.	Cut From	Remarks
2	1	GIRDER			224PG2.01			
3	1	GIRDER SUB-ASSY		B206				
4	1	BRG STIFF		c201				
5	1	BRG STIFF		d201				
6	4	DIAF STIFF		p201				

TEXAS DEPARTMENT OF TRANSPORTATION
APPROVED
~~DIVISION OF BRIDGES AND STRUCTURES~~
APR 23 1993
APPROVAL OF THIS DRAWING DOES NOT RELIEVE THE CONTRACTOR OF THE RESPONSIBILITY FOR THE CORRECTNESS OF DETAIL

FOR APPROVAL
NOT FOR CONSTRUCTION

REVISION	DATE	DESCRIPTION OF REVISION
NO. 1		
NO. 2		
NO. 3		
NO. 4		
NO. 5		

PRINTING Req'd	For	Date

Bolts Holes: 15/16 ⌀ Unless Noted
Shop Paint SEE SHT. GN1
Fab Spec AS NTD Inspection
Architect
Erection By Field Connections

HIRSCHFELD STEEL CO. INC.
112 WEST 29TH SAN ANGELO, TEXAS 76903
PHONE (915) 653-3211

DESCRIPTION	680'-0 PLATE GIRDER UNIT
STRUCTURE	US 83/281 INTERCHANGE RAMP "2"
LOCATION	HIDALGO COUNTY
CUSTOMER	GILBERT TEXAS CONSTRUCTION
SHIP TO	
Customer's Order No.	
Dwg. By CRT	Date 9-92
Checked By JC	Date 10-92

SHEET 224 OF
JOB NO. 92-107

FED. ROAD DIV. NO.	STATE	FEDERAL AID PROJECT NO.			
6	TX.	NH 92(50)M			
STATE DIST. NO.	COUNTY	CONTROL NO.	SECTION NO.	JOB NO.	HIGHWAY NO.
21	HIDALGO	39	17	97 . 83/281	

G0207

CE92-12 (LINE #1)

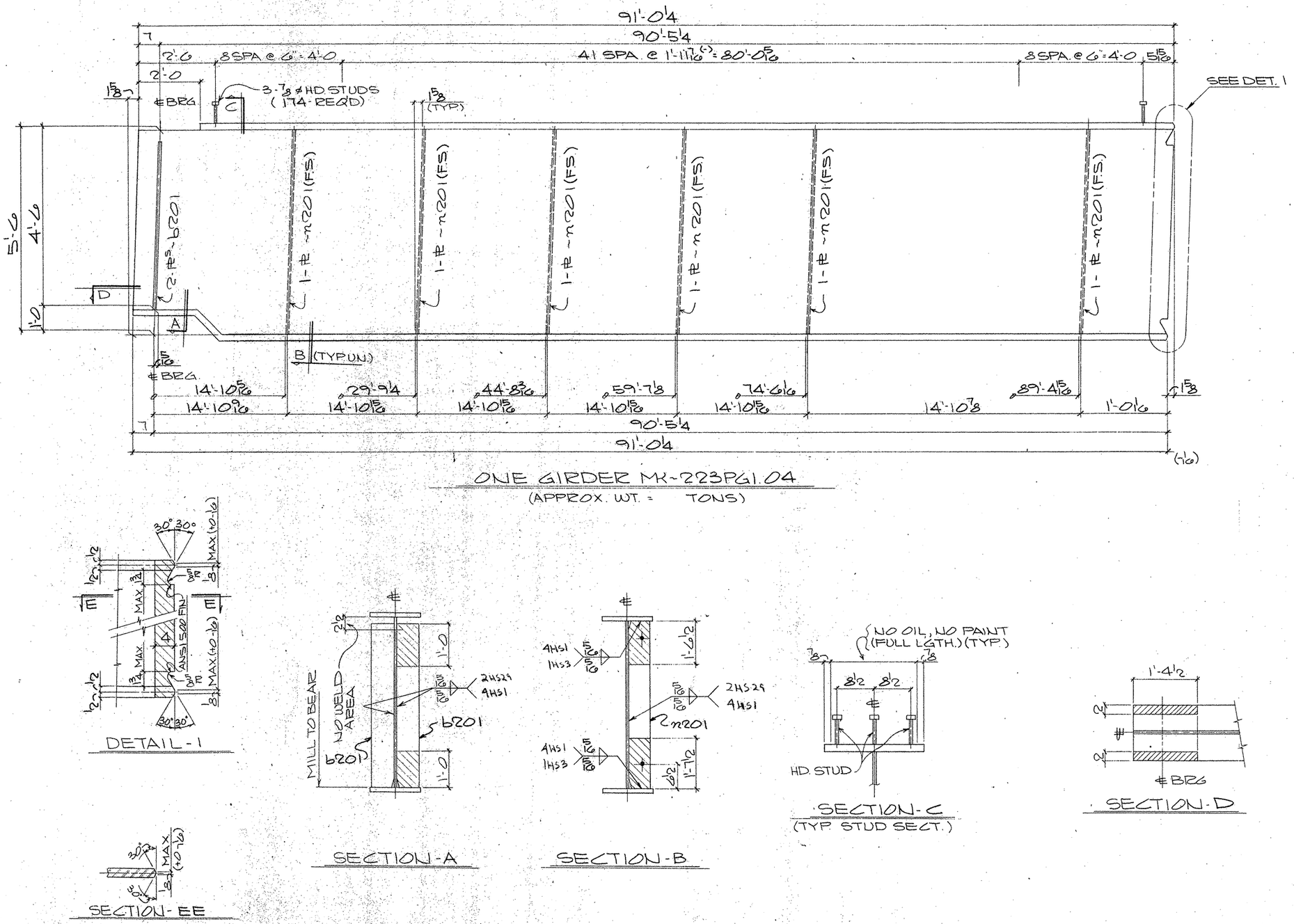

ONE GIRDER MK-223PG1.04
(APPROX. WT. = TONS)

DETAIL-1

SECTION-A

SECTION-B

SECTION-C
(TYP. STUD SECT.)

SECTION-D

SECTION-EE

SHOP NOTES:
1) FOR GENERAL NOTES SEE SHT. GN1
2) FOR GIRDER SUB-ASSEMBLY SEE SHT. 209
3) FOR STIFF. DETAILS SEE SHT. 201
4) FOR BLOCKING DIAGRAM SEE SHT. 255
5) FOR HEAT CURVE DIAGRAM SEE SHT. 250
6) ▨ INDICATES OIL, NO PAINT (N.S./F.S. & EDGES)

G0207

FED. ROAD DIV. NO.	STATE	FEDERAL AID PROJECT NO.			
6	TX.	NH 92(50)M			
STATE DIST. NO.	COUNTY	CONTROL NO.	SECTION NO.	JOB NO.	HIGHWAY NO.
21	HIDALGO	39	17	97	83/281

BILL OF MATERIAL

	Qnty.	Material	Length	Mark Temp	Mark Ship	Wt	Cut From	Remarks
1								
2	1	GIRDER			223PG1.04			
3	1	GIRDER SUB-ASSY		A209				
4	2	BRG STIFF		b201				
5	6	DIAF STIFF		n201				
6								
7	174	HD STUD 7/8	0'-7				205-1	A108

TEXAS DEPARTMENT OF TRANSPORTATION
APPROVED
DIVISION OF BRIDGES AND STRUCTURES
APR 23 1993
APPROVAL OF THIS DRAWING DOES NOT RELIEVE THE CONTRACTOR OF THE RESPONSIBILITY FOR THE CORRECTNESS OF DETAIL.

FOR APPROVAL
NOT FOR CONSTRUCTION

REVISION	DATE	DESCRIPTION OF REVISION
NO 1		
NO 2		
NO 3		
NO 4		
NO 5		

PRINTING

Req'd	For	Date

Bolts Holes 15/16 ø Unless Noted
Shop Paint SEE SHT. GN1
Fab Spec AS NTD Inspection
Architect
Erection By Field Connections

HIRSCHFELD STEEL CO. INC.
112 WEST 29TH SAN ANGELO, TEXAS 76903
PHONE (915) 653-3211

DESCRIPTION 680'-0 PLATE GIRDER UNIT
STRUCTURE US 83/281 INTERCHANGE RAMP #2
LOCATION HIDALGO COUNTY
CUSTOMER GILBERT TEXAS CONSTRUCTION
SHIP TO
Customer's Order No.
Dwg By CRT Date 9-92
Checked By JC Date 10-92
SHEET 223 OF
JOB NO. 92-107

APR 24

CE 92-12 (LINE #4)

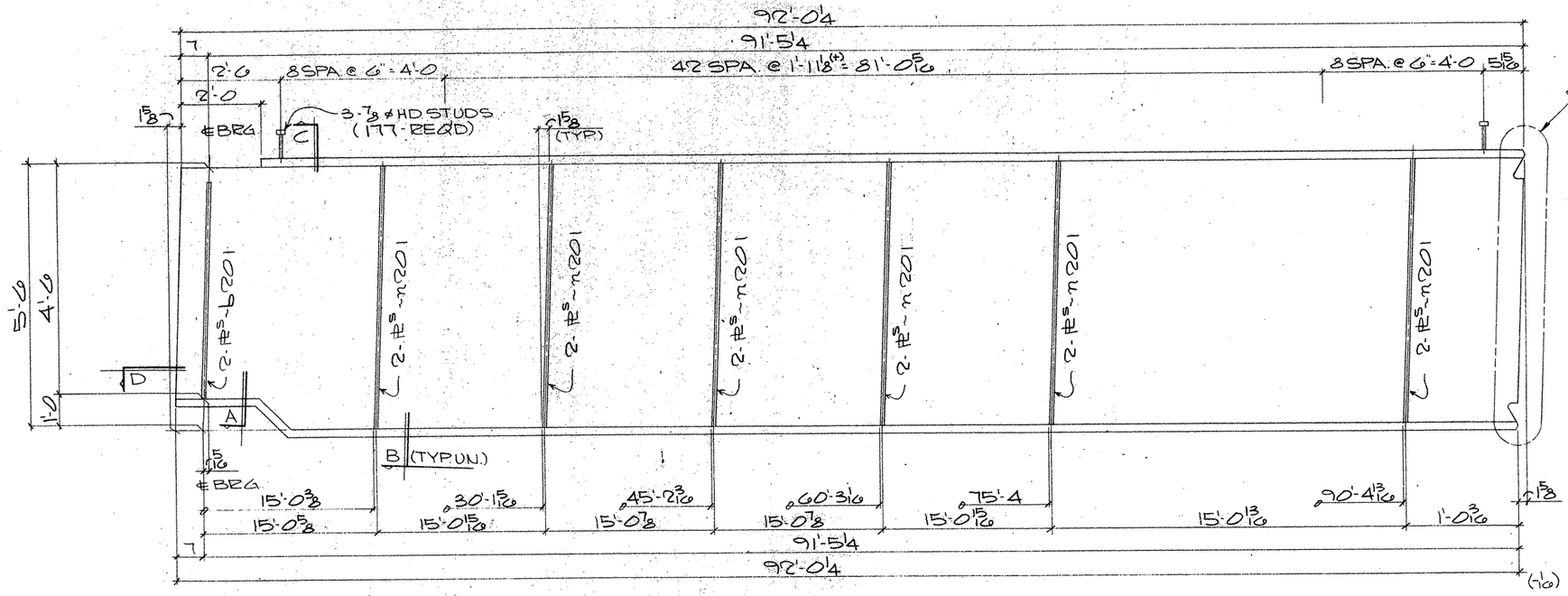

ONE GIRDER MK-222PG1.03

(APPROX. WT. = TONS)

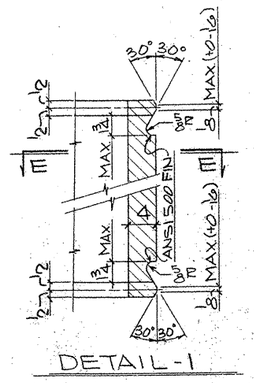

DETAIL-1

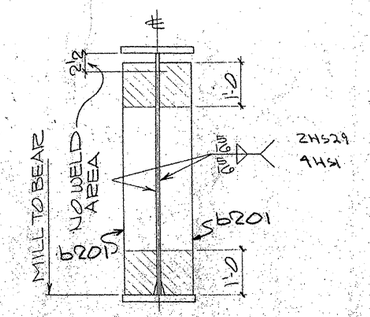

SECTION-A

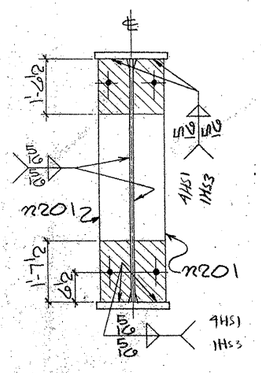

SECTION-B

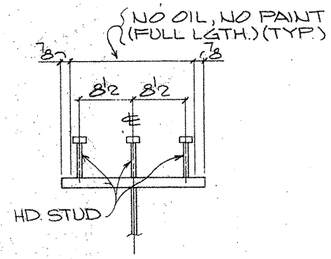

SECTION-C
(TYP. STUD SECT.)

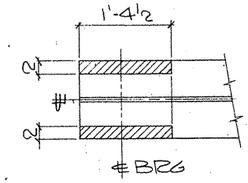

SECTION-D

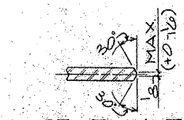

SECTION-EE

SHOP NOTES:

1) FOR GENERAL NOTES SEE SHT. GN1
2) FOR GIRDER SUB-ASSEMBLY SEE SHT. 208
3) FOR STIFF. DETAILS SEE SHT. 201
4) FOR BLOCKING DIAGRAM SEE SHT. 254
5) FOR HEAT CURVE DIAGRAM SEE SHT. 250
6) ▨ INDICATES OIL, NO PAINT (N.S./F.S. & EDGES)

BILL OF MATERIAL

	Qnty.	Material	Length	Mark Temp	Mark Ship	Wt.	Cut From	Remarks
1								
2	1	GIRDER			222PG1.03			
3	1	GIRDER SUB-ASSY		A208				
4	2	BRG STIFF		b201				
5	12	DIAF STIFF		n201				
6								
7	177	HD STUD 7/8	0'-7				205.1	A108
8–60								

TEXAS DEPARTMENT OF TRANSPORTATION
APPROVED
DIVISION OF BRIDGES AND STRUCTURES
APR 28 1993
APPROVAL OF THIS DRAWING DOES NOT RELIEVE THE CONTRACTOR OF THE RESPONSIBILITY FOR THE CORRECTNESS OF DETAIL.

FOR CONSTRUCTION
NOT FOR CONSTRUCTION

REVISION	DATE	DESCRIPTION OF REVISION
NO. 1		
NO. 2		
NO. 3		
NO. 4		
NO. 5		

PRINTING

Req'd	For	Date

Bolts — Holes: 15/16 ø Unless Noted
Shop Paint SEE SHT. GN1
Fab. Spec. AS NTD — Inspection
Architect
Erection By — Field Connections

HIRSCHFELD STEEL CO. INC.
112 WEST 29TH SAN ANGELO, TEXAS 76903
PHONE (915) 653-3211

DESCRIPTION	680'-0" PLATE GIRDER UNIT
STRUCTURE	US 83/281 INTERCHANGE RAMP #2
LOCATION	HIDALGO COUNTY
CUSTOMER	GILBERT TEXAS CONSTRUCTION
SHIP TO	
Customer's Order No.	
Dwg. By CRT	Date 9-92
Checked By JC	Date 10-92

SHEET 222 OF
JOB NO. 92-107

G0207

FED. ROAD DIV. NO.	STATE	FEDERAL AID PROJECT NO.			
6	TX.	NH 92(50)M			
STATE DIST. NO.	COUNTY	CONTROL NO.	SECTION NO.	JOB NO.	HIGHWAY NO.
21	HIDALGO	39	17	97	83/281

CE 92-12 (LINE #3)

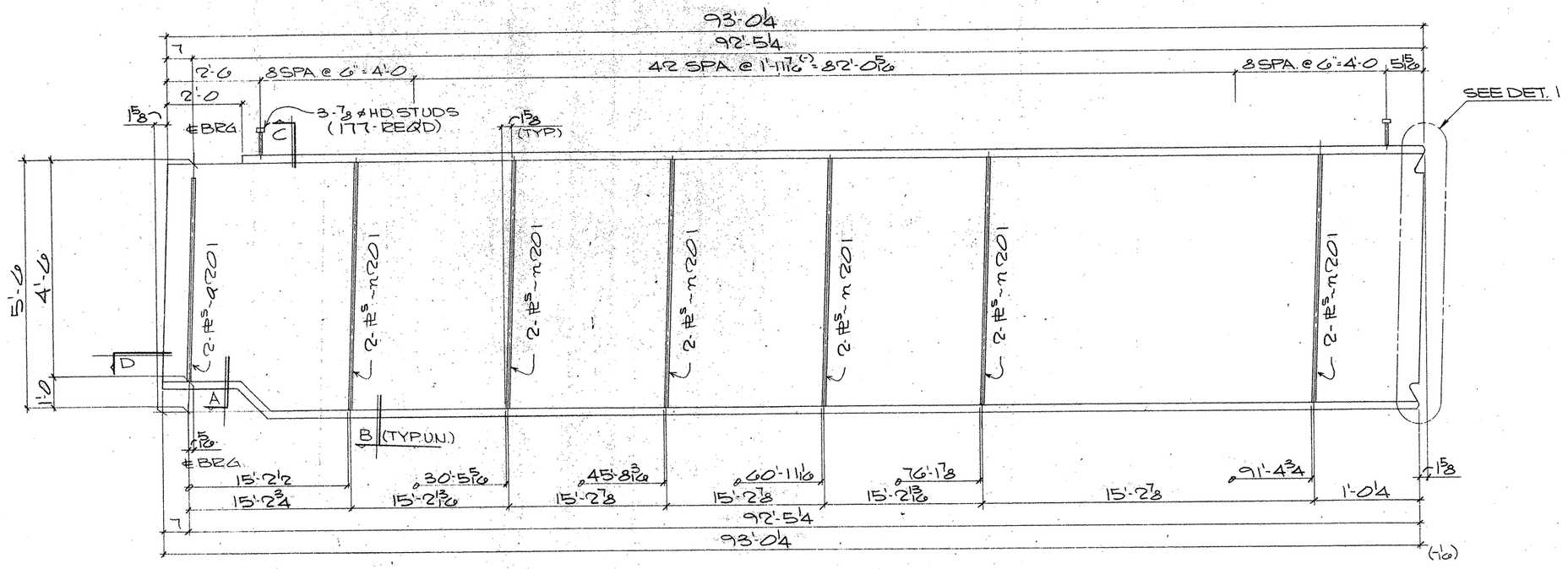

ONE GIRDER MK-221PG1.02

(APPROX. WT. = TONS)

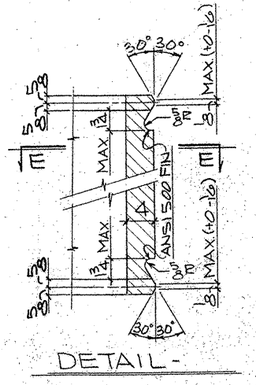

DETAIL-

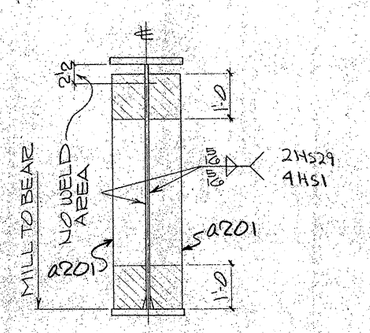

SECTION-A

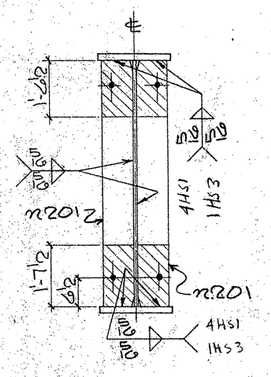

SECTION-B

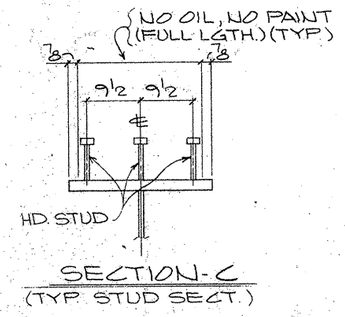

SECTION-C

(TYP. STUD SECT.)

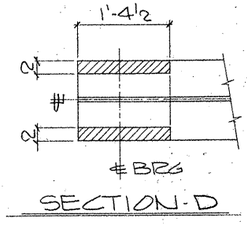

SECTION-D

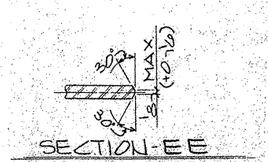

SECTION-EE

SHOP NOTES:

1) FOR GENERAL NOTES SEE SHT. GN1
2) FOR GIRDER SUB-ASSEMBLY SEE SHT. 207
3) FOR STIFF. DETAILS SEE SHT. 201
4) FOR BLOCKING DIAGRAM SEE SHT. 253
5) FOR HEAT CURVE DIAGRAM SEE SHT. 250
6) ////// INDICATES OIL, NO PAINT (N.S./F.S. & EDGES)

BILL OF MATERIAL

	Qnty	Material	Length	Mark Temp	Mark Ship	Wt.	Cut From	Remarks
1								
2	1	GIRDER			221PG1.02			
3	1	GIRDER SUB-ASSY		A207				
4	2	BRG STIFF		A201				
5	12	DIAF STIFF		A201				
6								
7	177	HD STUD 7/8	0'-7				205:1	A108
8								
9								
10								
11								
12								
13								
14								
15								
16								
17								
18								
19								
20								
21								
22								
23								
24								
25								
26								
27								
28								
29								
30								
31								
32								
33								
34								
35								
36								
37								
38								
39								
40								
41								
42								
43								
44								
45								
46								
47								
48								
49								
50								
51								
52								
53								
54								
55								
56								
57								
58								
59								
60								

TEXAS DEPARTMENT OF TRANSPORTATION
APPROVED
~~DIVISION OF BRIDGES AND STRUCTURES~~
APR 23 1993
APPROVAL OF THIS DRAWING DOES NOT RELIEVE THE CONTRACTOR OF THE RESPONSIBILITY FOR THE CORRECTNESS OF DETAILS.

FOR APPROVAL
NOT FOR CONSTRUCTION

REVISION	DATE	DESCRIPTION OF REVISION
NO. 1		
NO. 2		
NO. 3		
NO. 4		
NO. 5		

PRINTING

Req'd	For	Date

Bolts: Holes. 15/16 ø Unless Noted
Shop Paint SEE SHT. GN1
Fab Spec AS NTD Inspection
Architect
Erection By Field Connections

HIRSCHFELD STEEL CO. INC.
112 WEST 29TH SAN ANGELO, TEXAS 76903
PHONE (915) 653-3211

DESCRIPTION	880:0 PLATE GIRDER UNIT
STRUCTURE	US 83/281 INTERCHANGE RAMP #2
LOCATION	HIDALGO COUNTY
CUSTOMER	GILBERT TEXAS CONSTRUCTION
SHIP TO	
Customer's Order No.	
Dwg. By CRT	Date 9-92
Checked By JC	Date 10-92

SHEET 221 OF
JOB NO. 92-107

60207

FED. ROAD DIV. NO.	STATE	FEDERAL AID PROJECT NO.				
6	TX.	NH 92(50)M				
STATE DIST. NO.	COUNTY	CONTROL NO.	SECTION NO.	JOB NO.	HIGHWAY NO.	
21	HIDALGO	39	17	97	83/281	

CE 92-12 (LINE # 2)

225840

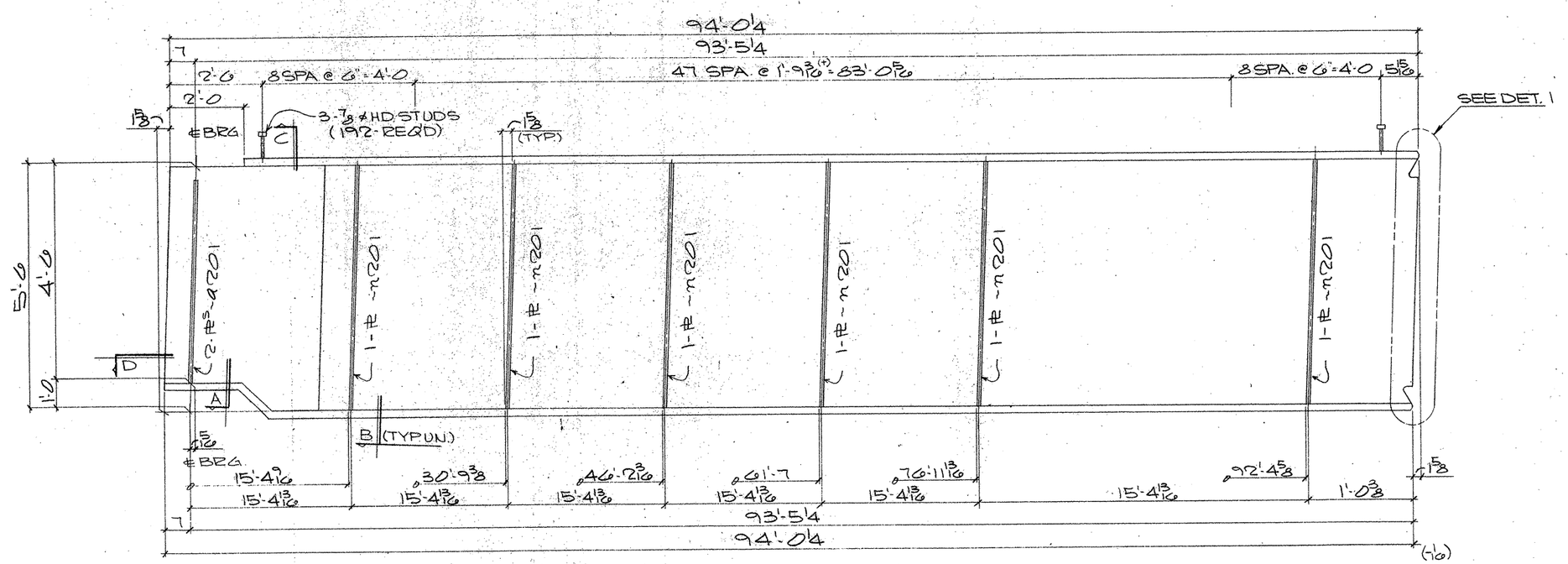

ONE GIRDER MK-220PG1.01

(APPROX. WT. = TONS)

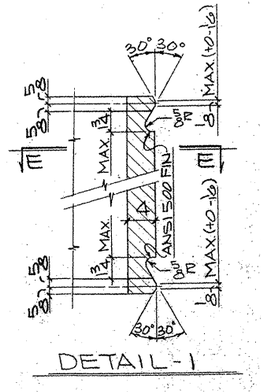

DETAIL-1

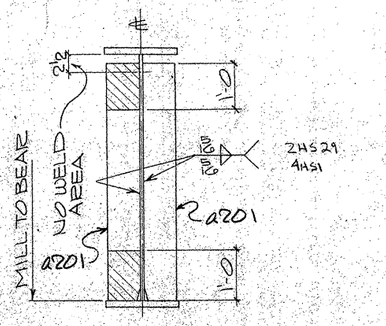

SECTION-A

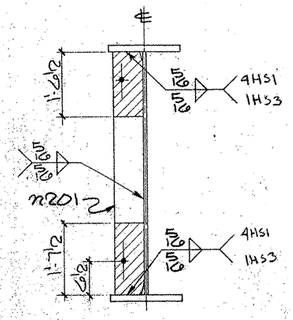

SECTION-B

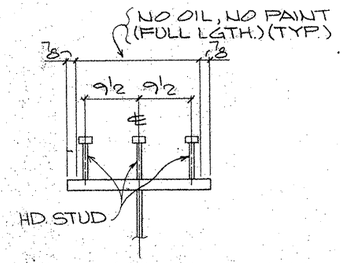

SECTION-C
(TYP. STUD SECT.)

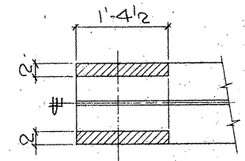

SECTION-D

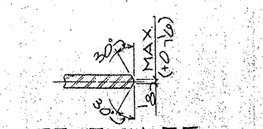

SECTION-EE

SHOP NOTES:

1) FOR GENERAL NOTES SEE SHT. GN1
2) FOR GIRDER SUB-ASSEMBLY SEE SHT. 206
3) FOR STIFF. DETAILS SEE SHT. 201
4) FOR BLOCKING DIAGRAM SEE SHT. 252
5) FOR HEAT CURVE DIAGRAM SEE SHT. 250
6) ////// INDICATES OIL, NO PAINT (N.S./F.S. & EDGES)

BILL OF MATERIAL

	Qnty	Material	Length	Mark Temp	Mark Ship	Wt.	Cut From	Remarks
1								
2	1	GIRDER			220PG1.01			
3	1	GIRDER SUB-ASSY		A206				
4	2	BRG STIFF		a201				
5	6	DIAF STIFF		n201				
6								
7	192	HD STUD 7/8	0'-7				205-1	A108
8–60								

TEXAS DEPARTMENT OF TRANSPORTATION
APPROVED
DIVISION OF BRIDGES AND STRUCTURES
APR 26 1993
APPROVAL OF THIS DRAWING DOES NOT RELIEVE THE CONTRACTOR OF THE RESPONSIBILITY FOR THE CORRECTNESS OF DETAIL.

ISSUED FOR APPROVAL
APR 23 '93
NOT FOR CONSTRUCTION

REVISION	DATE	DESCRIPTION OF REVISION
NO 1		
NO 2		
NO 3		
NO 4		
NO 5		

PRINTING Req'd	For	Date

Bolts: Holes 15/16 ø Unless Noted
Shop Paint: SEE SHT. GN1
Fab Spec: AS NTD — Inspection
Architect
Erection By — Field Connections

HIRSCHFELD STEEL CO. INC.
112 WEST 29TH SAN ANGELO, TEXAS 76903
PHONE (915) 653-3211

DESCRIPTION	680'-0 PLATE GIRDER UNIT
STRUCTURE	US 83/281 INTERCHANGE RAMP #2
LOCATION	HIDALGO COUNTY
CUSTOMER	GILBERT TEXAS CONSTRUCTION
SHIP TO	
Customer's Order No.	
Dwg. By CRT	Date 9-92
Checked By JC	Date 10-92
SHEET 220 OF	
JOB NO. 92-107	

FED. ROAD DIV. NO.	STATE	FEDERAL AID PROJECT NO.			
6	TX.	NH 92(50)M			
STATE DIST. NO.	COUNTY	CONTROL NO.	SECTION NO.	JOB NO.	HIGHWAY NO.
21	HIDALGO	39	17	97	83/281

G0207

CE 92-12 (LINE #1)

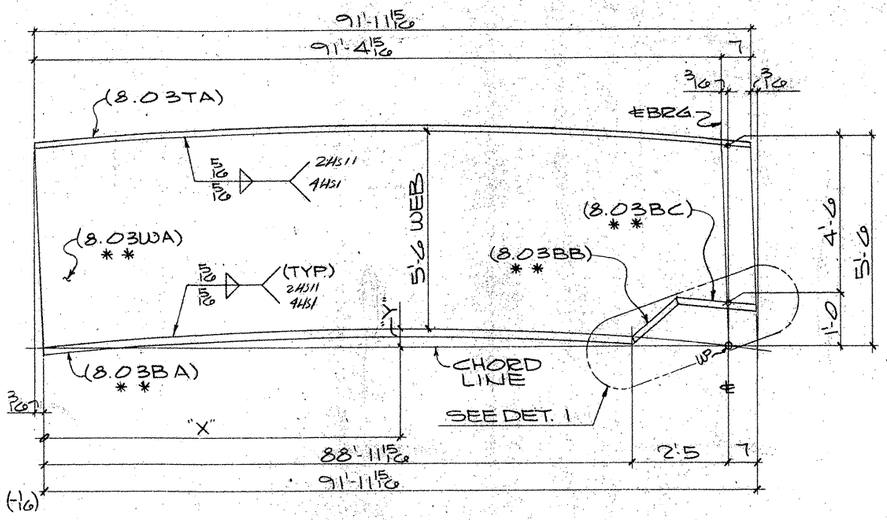

ONE GIRDER SUB-ASSY. MK-A219
(FOR GIRDER - 246PG8.03)

MK-A219							
"X"	2'-3 3/8	17'-1 3/4	32'-0 3/16	46'-10 9/16	61'-8 15/16	76'-7 3/8	91'-4 15/16
"Y"	1/16	5/8	1"	1 1/8	1"	9/16	0"

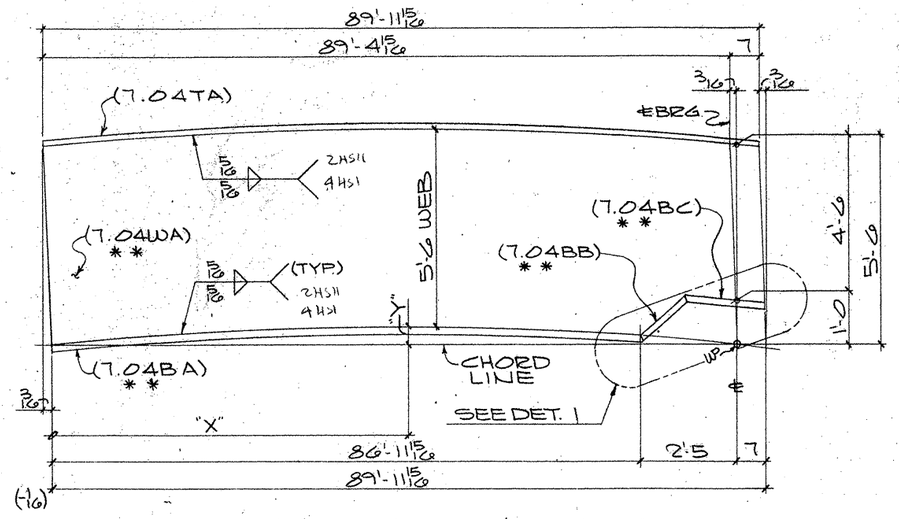

ONE GIRDER SUB-ASSY. MK-B219
(FOR GIRDER - 247PG7.04)

MK-B219								
"X"	1'-3 5/16	15'-11 13/16	30'-8 1/2	45'-4 11/16	60'-1 3/16	74'-9 5/8	89'-4 15/16	
"Y"	1/16	9/16	7/8	1"	7/8	1/2	0"	

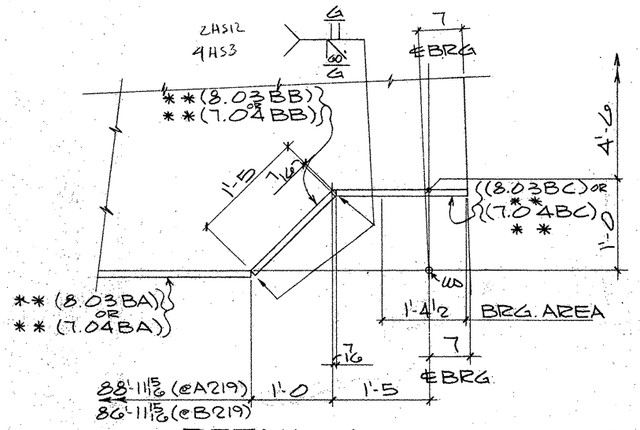

DETAIL - 1

SHOP NOTES:
1) FOR GENERAL NOTES, SEE SHT. GN1
2) MATERIAL NOTED "**" MUST MEET CHARPY V-NOTCH REQUIREMENTS
3) FOR HEAT CURVE DIAGRAM, SEE SHT. #251

BILL OF MATERIAL

	Qnty.	Material	Length	Mark Temp	Mark Ship.	Wt.	Cut From	Remarks
3	1	GIRDER SUB-ASSY			A219			
4	1	PL 1/2 x 66	92'-0 1/8	8.03WA			208-11	CVN2
5	1	PL 1 x 20	91'-11 15/16	8.03TA			216-17	
6	1	PL 1 x 20	88'-11 15/16	8.03BA			211-18	CVN2
7	1	PL 1 x 20	1'-4 9/16	8.03BB			209-5	CVN2
8	1	PL 1 x 20	1'-11 9/16	8.03BC			209-4	CVN2
18	1	GIRDER SUB-ASSY			B219			
19	1	PL 1/2 x 66	90'-0 1/8	7.04WA			208-18	CVN2
20	1	PL 1 x 20	89'-11 15/16	7.04TA			217-17	
21	1	PL 1 x 20	86'-11 15/16	7.04BA			212-16	CVN2
22	1	PL 1 x 20	1'-4 9/16	7.04BB			209-5	CVN2
23	1	PL 1 x 20	1'-11 9/16	7.04BC			209-4	CVN2

TEXAS DEPARTMENT OF TRANSPORTATION
APPROVED
DIVISION OF BRIDGES AND STRUCTURES
APR 23 1996
APPROVAL OF THIS DRAWING DOES NOT RELIEVE THE CONTRACTOR OF THE RESPONSIBILITY FOR THE CORRECTNESS OF DETAIL

FOR APPROVAL
MAR 27 96
NOT FOR CONSTRUCTION

REVISION	DATE	DESCRIPTION OF REVISION
NO. 1		
NO. 2		
NO. 3		
NO. 4		
NO. 5		

PRINTING Req'd	For	Date

Bolts: Holes: Unless Noted
Shop Paint SEE SHT GN1
Fab Spec. A572-50 UN Inspection
Architect
Erection By Field Connections

HIRSCHFELD STEEL CO. INC.
112 WEST 29TH SAN ANGELO, TEXAS 76903
PHONE (915) 653-3211

DESCRIPTION	G80-0 PLATE GIRDER UNIT
STRUCTURE	US 83/281 INTERCHANGE RAMP #2
LOCATION	HIDALGO COUNTY
CUSTOMER	GILBERT TEXAS CONSTRUCTION
SHIP TO	
Customer's Order No.	SHEET 219 OF
Dwg. By CRT Date 9-92	JOB NO. 92-107
Checked By JC Date 10-92	

G0207

FED. ROAD DIV. NO.	STATE	FEDERAL AID PROJECT NO.			
6	TX.	NH 92(50)M			
STATE DIST. NO.	COUNTY	CONTROL NO.	SECTION NO.	JOB NO.	HIGHWAY NO.
21	HIDALGO	39	17	97	83/281

CE92-12 (LINE #3:4)

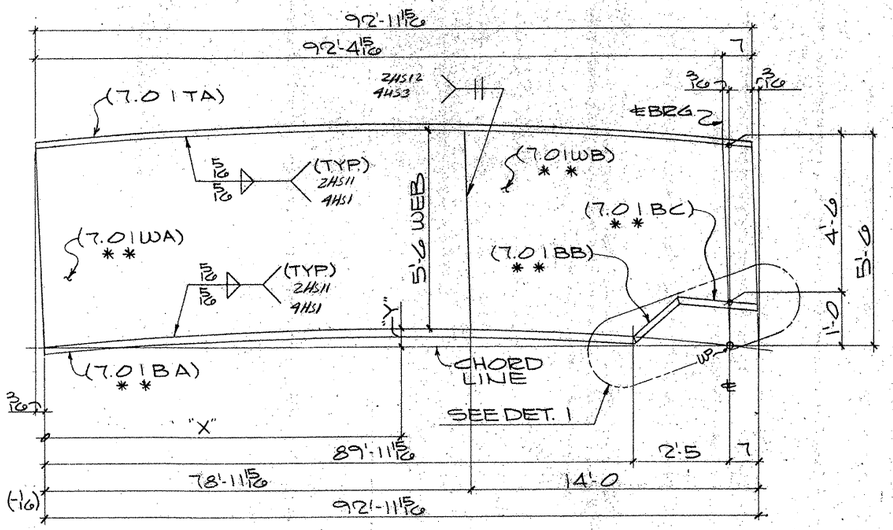

ONE GIRDER SUB-ASSY MK-A218
(FOR GIRDER-244PG7.01)

MK-A218								
"X"	1'-3 3/8	16'-5 5/8	31'-7 15/16	46'-10 3/16	62'-0 1/2	77'-2 3/4	78'-11 15/16	92'-4 15/16
"Y"	1/16	5/8	1"	1 1/8	1"	9/16	1/2 ℄ WEB SPLICE	0"

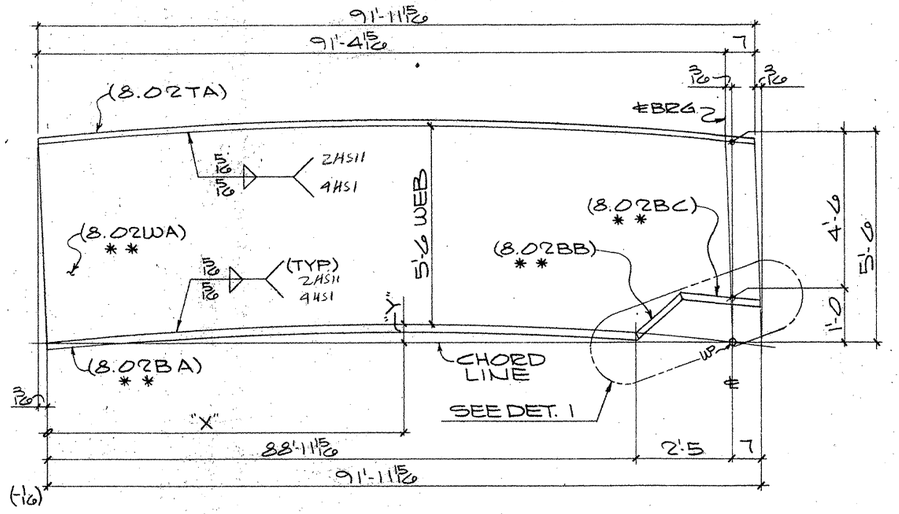

ONE GIRDER SUB-ASSY MK-B218
(FOR GIRDER-245PG8.02)

MK-B218								
"X"	1'-3 3/8	16'-3 3/4	31'-4 1/16	46'-4 7/16	61'-4 3/4	76'-5 1/16	91'-4 15/16	
"Y"	1/16	9/16	15/16	1 1/16	15/16	9/16	0"	

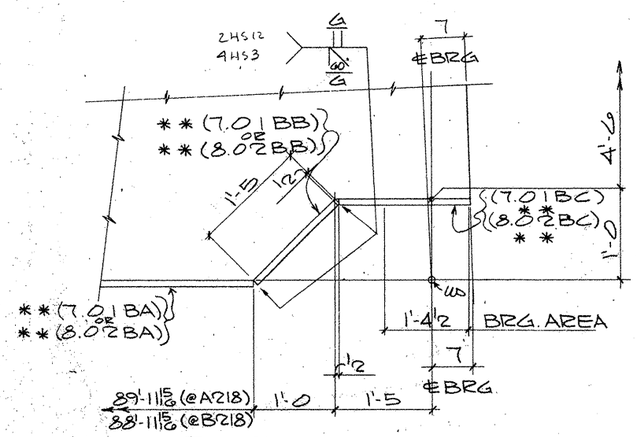

DETAIL - 1

SHOP NOTES:

1) FOR GENERAL NOTES, SEE SHT. GN1
2) MATERIAL NOTED "**" MUST MEET CHARPY V-NOTCH REQUIREMENTS
3) FOR HEAT CURVE DIAGRAM, SEE SHT.#251

60207

FED. ROAD DIV. NO.	STATE	FEDERAL AID PROJECT NO.			
6	TX.	NH 92(50)M			
STATE DIST. NO.	COUNTY	CONTROL NO.	SECTION NO.	JOB NO.	HIGHWAY NO.
21	HIDALGO	39	17	97	83/281

BILL OF MATERIAL

	Qnty.	Material	Length	Mark Temp.	Mark Ship.	Wt.	Cut From	Remarks
3	1	GIRDER SUB-ASSY			A218			
4	1	PL 1/2 x 66	79'-0 3/16	7.01WA			207-13	CVN2
5	1	PL 9/16 x 66	14'-0 1/8	7.01WB			207-14	CVN2
6	1	PL 1 1/4 x 22	92'-11 15/16	7.01TA			214-17	
7	1	PL 1 1/4 x 22	89'-11 15/16	7.01BA			210-3	CVN2
8	1	PL 1 1/4 x 22	1'-4 1/2	7.01BB			209-3	CVN2
9	1	PL 1 1/4 x 22	1'-11 1/2	7.01BC			209-2	CVN2
18	1	GIRDER SUB-ASSY			B218			
19	1	PL 1/2 x 66	92'-0 1/8	8.02WA			208-2	CVN2
20	1	PL 1 1/4 x 22	91'-11 15/16	8.02TA			215-17	
21	1	PL 1 1/4 x 22	88'-11 15/16	8.02BA			210-20	CVN2
22	1	PL 1 1/4 x 22	1'-4 1/2	8.02BB			209-3	CVN2
23	1	PL 1 1/4 x 22	1'-11 1/2	8.02BC			209-2	CVN2

TEXAS DEPARTMENT OF TRANSPORTATION
APPROVED
DIVISION OF BRIDGES AND STRUCTURES
APR 23 1993
APPROVAL OF THIS DRAWING DOES NOT RELIEVE THE CONTRACTOR OF THE RESPONSIBILITY FOR THE CORRECTNESS OF DETAIL.

FOR APPROVAL
NOT FOR CONSTRUCTION

REVISION	DATE	DESCRIPTION OF REVISION
NO. 1		
NO. 2		
NO. 3		
NO. 4		
NO. 5		

PRINTING Req'd	For	Date

Bolts Holes Unless Noted
Shop Paint SEE SHT GN1
Fab. Spec. A572-50 UN Inspection
Architect
Erection By Field Connections

HIRSCHFELD STEEL CO. INC.
112 WEST 29TH SAN ANGELO, TEXAS 76903
PHONE (915) 653-3211

DESCRIPTION 680'-0 PLATE GIRDER UNIT
STRUCTURE US 83/281 INTERCHANGE RAMP #2
LOCATION HIDALGO COUNTY
CUSTOMER GILBERT TEXAS CONSTRUCTION
SHIP TO
Customer's Order No.
Dwg. By ERT Date 9-93
Checked By JC Date 10-92
APV MAR 24

SHEET 218 OF
JOB NO. 92-107

CE92-12 (LINE #62)

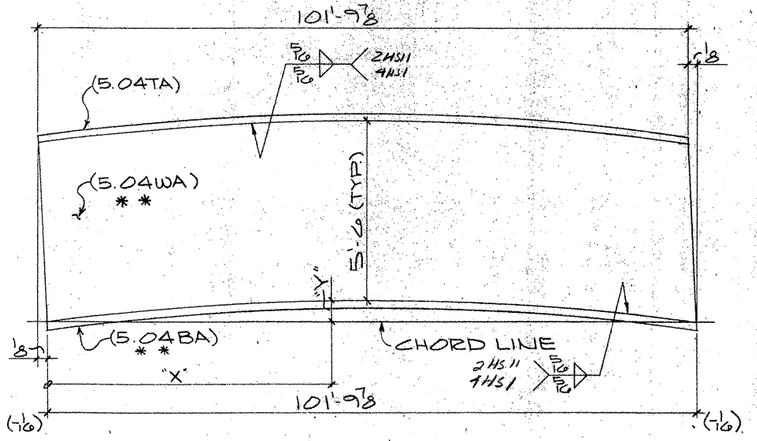

ONE GIRDER SUB-ASSY. MK-A217
(FOR GIRDER-239PG5.04)

MK-A217								
"X"	8'-0 1/4	22'-10 15/16	37'-8 3/8	52'-6 7/16	67'-4 9/16	82'-2 5/8	97'-0 11/16	101'-9 7/8
"Y"	5/8	1 1/2	1 3/8	1 15/16	1 5/8	1 1/16	1/4	0"

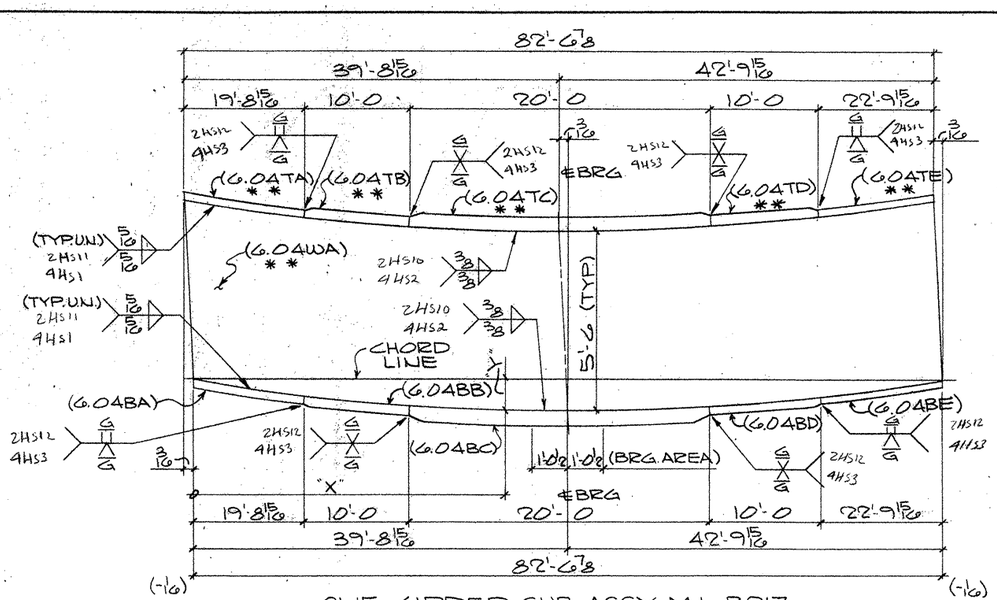

ONE GIRDER SUB-ASSY. MK-B217
(FOR GIRDER-243PG6.04)

MK-B217							
"X"	10'-0 15/16	24'-10 7/8	39'-8 15/16 ℄BRG	54'-5 3/8	69'-1 7/8	82'-6 7/8	
"Y"	7/16	7/8	1 1/8	15/16	9/16	0"	

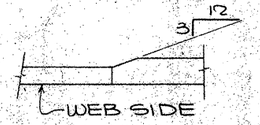

TYP. FLG. THKNESS TRANSITION

SHOP NOTES:
1) FOR GENERAL NOTES, SEE SHT. GN1
2) MATERIAL NOTED "** " MUST MEET CHARPY V-NOTCH REQUIREMENTS
3) FOR HEAT CURVE DIAGRAM, SEE SHT. *251

BILL OF MATERIAL

	Qnty.	Material	Length	Mark Temp.	Mark Ship	Wt.	Cut From	Remarks
1								
2								
3	1	GIRDER SUB-ASSY			A217			
4	1	PL 1 1/2 x 0'-6	101'-10	5.04WA			208-16	CVN2
5	1	PL 1 x 2'-0	101'-9 7/8	5.04TA			217-12	
6	1	PL 1 x 2'-0	101'-9 7/8	5.04BA			212-11	CVN2
7								
8								
9								
10								
11								
12								
13								
14								
15	1	GIRDER SUB-ASSY			B217			
16	1	PL 5/8 x 0'-6	82'-7 1/16	6.04WA			208-17	CVN2
17	1	PL 1 x 2'-0	19'-8 15/16	6.04TA			212-13	CVN2
18	1	PL 1 1/2 x 2'-0	10'-0	6.04TB			212-14	CVN2
19	1	PL 1 1/2 x 2'-0	20'-0	6.04TC			212-15	CVN2
20	1	PL 1 1/2 x 2'-0	10'-0	6.04TD			212-14	CVN2
21	1	PL 1 x 2'-0	22'-9 15/16	6.04TE			212-16	CVN2
22	1	PL 1 x 2'-0	19'-8 15/16	6.04BA			217-13	
23	1	PL 1 1/2 x 2'-0	10'-0	6.04BB			217-14	
24	1	PL 1 x 2'-0	20'-0	6.04BC			217-15	
25	1	PL 1 1/2 x 2'-0	10'-0	6.04BD			217-14	
26	1	PL 1 x 2'-0	22'-9 15/16	6.04BE			217-16	
27								
28								
29								
30								
31								
32								
33								
34								
35								
36								
37								
38								
39								
40								
41								
42								
43								
44								
45								
46								
47								
48								
49								
50								
51								
52								
53								
54								
55								
56								
57								
58								
59								
60								

TEXAS DEPARTMENT OF TRANSPORTATION
APPROVED
DIVISION OF BRIDGES AND STRUCTURES
APR 28 1993
APPROVAL OF THIS DRAWING DOES NOT RELIEVE THE CONTRACTOR OF THE RESPONSIBILITY FOR THE CORRECTNESS OF DETAIL.

FOR APPROVAL
MAR 24 '93
NOT FOR CONSTRUCTION

REVISION	DATE	DESCRIPTION OF REVISION
NO. 1		
NO. 2		
NO. 3		
NO. 4		
NO. 5		

PRINTING Req'd	For	Date

Bolts: Holes: Unless Noted
Shop Paint SEE SHT. GN1
Fab. Spec. AST-50 UN Inspection
Architect
Erection By Field Connections

HIRSCHFELD STEEL CO. INC.
112 WEST 29TH SAN ANGELO, TEXAS 76903
PHONE (915) 653-3211

DESCRIPTION 680'-0 PLATE GIRDER UNIT
STRUCTURE US 83/281 INTERCHANGE RAMP *2
LOCATION HIDALGO COUNTY
CUSTOMER GILBERT TEXAS CONSTRUCTION
SHIP TO
Customer's Order No. SHEET 21 OF
Dwg. By CRT Date 9-92
Checked By JC Date 10-92 JOB NO. 92-107

CE 92-12 (LINE #4)

60207

FED. ROAD DIV. NO.	STATE	FEDERAL AID PROJECT NO.			
6	TX.	NH 92(50)N			
STATE DIST. NO.	COUNTY	CONTROL NO.	SECTION NO.	JOB NO.	HIGHWAY NO.
21	HIDALGO	39	17	97	83/281

APR 1993 24

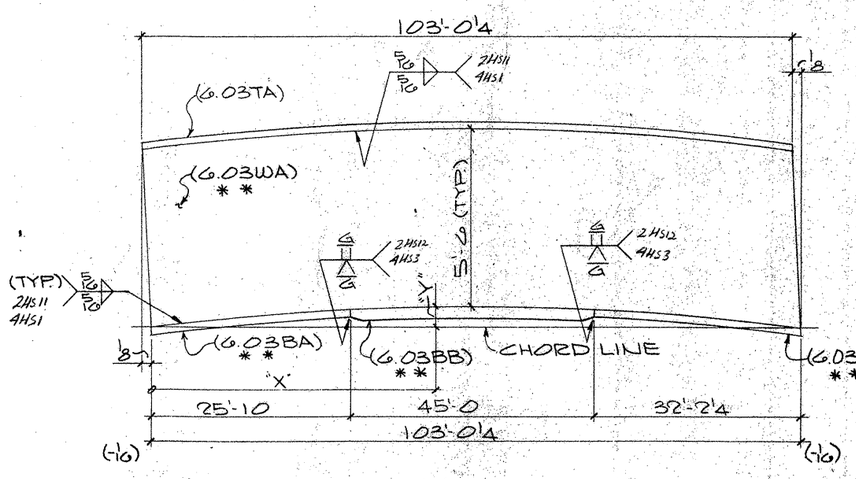

ONE GIRDER SUB-ASSY. MK-A216
(FOR GIRDER-238PG6.03)

MK-A216								
"X"	8'-0 1/16	23'-0 1/16	38'-0 1/8	53'-0 1/8	68'-0 3/16	83'-0 3/16	98'-0 1/4	103'-0 1/4
"Y"	1 1/16	1 1/16	2 1/16	2 1/16	1 13/16	1 3/16	5/16	0"

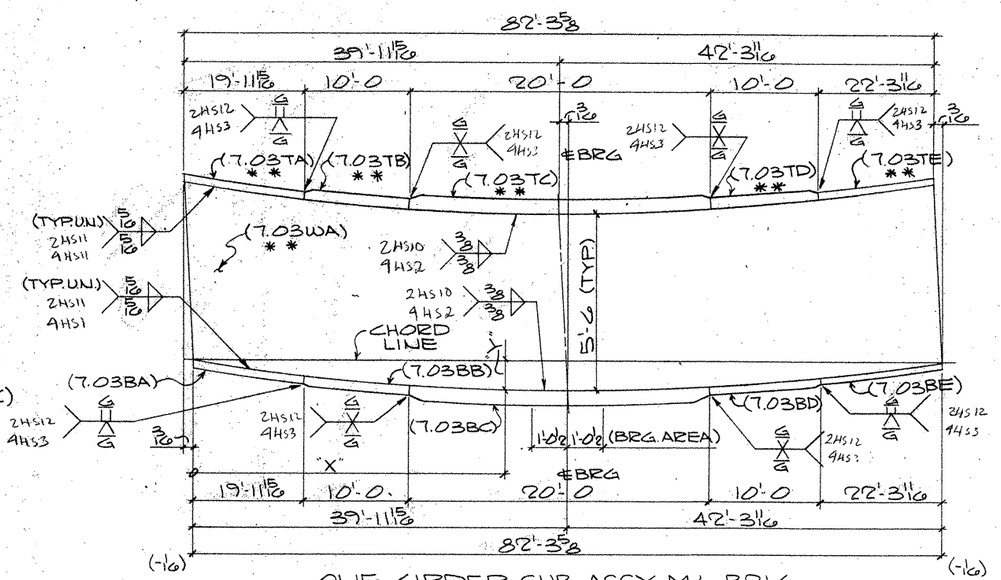

ONE GIRDER SUB-ASSY. MK-B216
(FOR GIRDER-242PG7.03)

MK-B216							
"X"	9'-11 7/8	24'-11 5/16	39'-11 5/16	54'-10 5/16	69'-8 3/4	82'-3 5/8
"Y"	7/16	15/16	1 3/16	1/16	9/16	0"
			℄BRG			

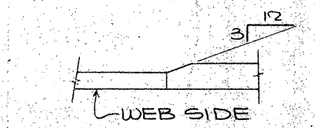

TYP. FLG. THKNESS TRANSITION

SHOP NOTES:
1) FOR GENERAL NOTES, SEE SHT. GN1
2) MATERIAL NOTED "** **" MUST MEET CHARPY V-NOTCH REQUIREMENTS
3) FOR HEAT CURVE DIAGRAM, SEE SHT.* 251

60207

FED. ROAD DIV. NO.	STATE	FEDERAL AID PROJECT NO.				
6	TX.	NH 92(50)M				
STATE DIST. NO.	COUNTY	CONTROL NO.	SECTION NO.	JOB NO.	HIGHWAY NO.	
21	HIDALGO	39	17	97	83/281	

BILL OF MATERIAL

	Qnty.	Material	Length	Mark Temp	Mark Ship	Wt.	Cut From	Remarks
1								
2								
3	1	GIRDER SUB-ASSY			A216			
4	1	PL 1/2 x 66	103'-03/16	6.03WA			208-9	CVN2
5	1	PL 1 x 20	103'-0 1/4	6.03TA			216-12	
6	1	PL 1 x 20	25'-10	6.03BA			211-12	CVN2
7	1	PL 1 1/4 x 20	45'-0	6.03BB			211-13	CVN2
8	1	PL 1 x 20	32'-2 1/4	6.03BC			211-14	CVN2
9								
10								
11								
12								
13								
14								
15	1	GIRDER SUB-ASSY			B216			
16	1	PL 5/8 x 66	82'-3 5/16	7.03WA			208-10	CVN2
17	1	PL 1 x 20	19'-11 5/16	7.03TA			211-15	CVN2
18	1	PL 1 1/2 x 20	10'-0	7.03TB			211-16	CVN2
19	1	PL 2 1/4 x 20	20'-0	7.03TC			213-8	CVN3
20	1	PL 1 1/2 x 20	10'-0	7.03TD			211-16	CVN2
21	1	PL 1 x 20	22'-3 11/16	7.03TE			211-17	CVN2
22	1	PL 1 x 20	19'-11 5/16	7.03BA			216-13	
23	1	PL 1 1/2 x 20	10'-0	7.03BB			216-14	
24	1	PL 2 1/4 x 20	20'-0	7.03BC			216-15	
25	1	PL 1 1/2 x 20	10'-0	7.03BD			216-14	
26	1	PL 1 x 20	22'-3 11/16	7.03BE			216-16	
27								
28								
29								
30								
31								
32								
33								
34								
35								
36								
37								
38								
39								
40								
41								
42								
43								
44								
45								
46								
47								
48								
49								
50								
51								
52								
53								
54								
55								
56								
57								
58								
59								
60								

TEXAS DEPARTMENT OF TRANSPORTATION
APPROVED
DIVISION OF BRIDGES AND STRUCTURES
APR 23 1993
APPROVAL OF THIS DRAWING DOES NOT RELIEVE THE CONTRACTOR OF THE RESPONSIBILITY FOR THE CORRECTNESS OF DETAIL

FOR APPROVAL
MAR 24 1993
NOT FOR CONSTRUCTION

REVISION	DATE	DESCRIPTION OF REVISION
NO. 1		
NO. 2		
NO. 3		
NO. 4		
NO. 5		

PRINTING Req'd	For	Date

Bolts Holes Unless Noted
Shop Paint SEE SHT. GN1
Fab Spec A572-50 U.N. Inspection
Architect
Erection By Field Connections

HIRSCHFELD STEEL CO. INC.
112 WEST 29TH SAN ANGELO, TEXAS 76903
PHONE (915) 653-3211

DESCRIPTION 180'-0 PLATE GIRDER UNIT
STRUCTURE US 83/281 INTERCHANGE RAMP "C"
LOCATION HIDALGO COUNTY
CUSTOMER GILBERT TEXAS CONSTRUCTION
SHIP TO
Customer's Order No.
Dwg. By ERT Date 9-92
Checked By JC Date 10-92

SHEET 216 OF
JOB NO. 92-107

CE 92-12 (LINE #3)

A B C D E F G H K M N P S T V W X Z a b c d e f g h k m n p s t v w x aa ab ac ad ae af ag ah ak am an ap aq as at av aw ax az 1 2 3 4 5 6 7 8 9 10

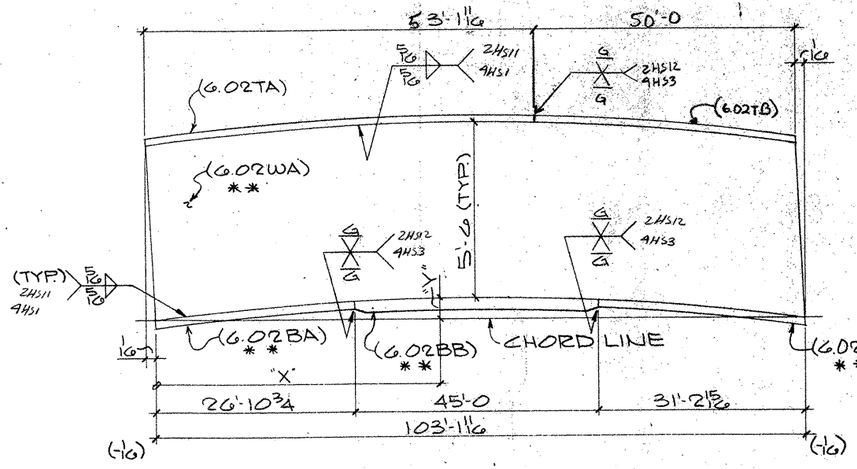

ONE GIRDER SUB-ASSY. MK-A215
(FOR GIRDER-237PG6.02)

MK-A215								
"X"	8'-7 7/8	23'-9 7/8	38'-11 3/8	54'-1 13/16	69'-3 3/16	84'-5 3/16	99'-7 3/4	103'-11 1/16
"Y"	1 1/16	1 9/16	2	2 1/16	1 1/16	1 1/16	1/4	0"

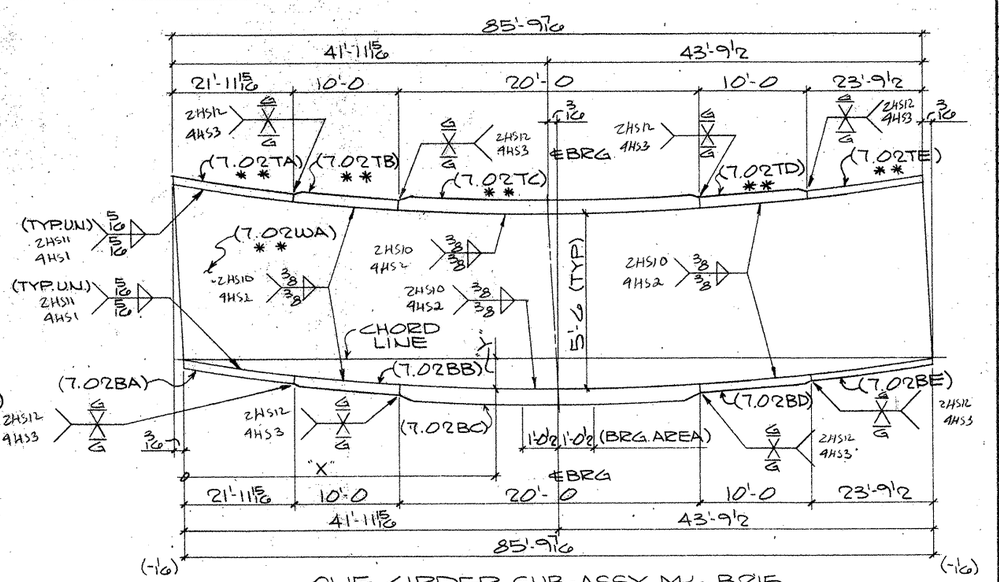

ONE GIRDER SUB-ASSY. MK-B215
(FOR GIRDER-241PG7.02)

MK-B215							
"X"	11'-8	26'-9 15/16	41'-11 15/16	57'-0 1/4	72'-0 5/8	85'-9 7/16	
"Y"	1/2	1"	1 1/4 ℄ BRG	1 1/16	9/16	0"	

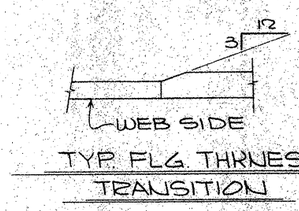

TYP. FLG. THKNESS TRANSITION

SHOP NOTES:

1) FOR GENERAL NOTES, SEE SHT. GN1
2) MATERIAL NOTED "**" MUST MEET CHARPY V-NOTCH REQUIREMENTS
3) FOR HEAT CURVE DIAGRAM, SEE SHT.#251

BILL OF MATERIAL

	Qnty.	Material	Length	Mark Temp.	Mark Ship.	Wt.	Cut From	Remarks
1								
2								
3	1	GIRDER SUB-ASSY			A215			
4	1	PL 1/2 x 66	103'-1 3/4	6.02WA			207-20	CVN2
5	1	PL 1 1/4 x 22	53'-1 11/16	6.02TA			215-12	
6	1	PL 1 1/4 x 22	26'-10 3/4	6.02BA			210-14	CVN2
7	1	PL 1 1/2 x 22	45'-0	6.02BB			210-15	CVN2
8	1	PL 1 1/4 x 22	31'-2 15/16	6.02BC			210-16	CVN2
9	1	PL 1 1/4 x 22	50'-0	6.02TB			215-12	
10								
11								
12								
13								
14								
15	1	GIRDER SUB-ASSY			B215			
16	1	PL 5/8 x 66	85'-9 5/8	7.02WA			208-1	CVN2
17	1	PL 1/4 x 22	21'-11 15/16	7.02TA			210-17	CVN2
18	1	PL 1 3/4 x 22	10'-0	7.02TB			210-18	CVN2
19	1	PL 2 1/4 x 22	20'-0	7.02TC			213-7	CVN3
20	1	PL 1 3/4 x 22	10'-0	7.02TD			210-18	CVN2
21	1	PL 1 1/4 x 22	23'-9 1/2	7.02TE			210-19	CVN2
22	1	PL 1 1/4 x 22	21'-11 15/16	7.02BA			215-13	
23	1	PL 1 3/4 x 22	10'-0	7.02BB			215-14	
24	1	PL 2 1/4 x 22	20'-0	7.02BC			215-15	
25	1	PL 1 3/4 x 22	10'-0	7.02BD			215-14	
26	1	PL 1 1/4 x 22	23'-9 1/2	7.02BE			215-16	
27								
28								
29								
30								
31								
32								
33								
34								
35								
36								
37								
38								
39								
40								
41								
42								
43								
44								
45								
46								
47								
48								
49								
50								
51								
52								
53								
54								
55								
56								
57								
58								
59								
60								

TEXAS DEPARTMENT OF TRANSPORTATION
APPROVED
DIVISION OF BRIDGES AND STRUCTURES
APR 23 1993
APPROVAL OF THIS DRAWING DOES NOT RELIEVE THE CONTRACTOR OF THE RESPONSIBILITY FOR THE CORRECTNESS OF DETAIL

FOR PRELIMINARY PLANS ONLY NOT FOR CONSTRUCTION

REVISION	DATE	DESCRIPTION OF REVISION
NO. 1		
NO. 2		
NO. 3		
NO. 4		
NO. 5		

PRINTING Req'd	For	Date

Bolts Holes Unless Noted
Shop Paint SEE SHT. GN1
Fab. Spec. A572-50 UN Inspection
Architect
Erection By Field Connections

HIRSCHFELD STEEL CO. INC.
112 WEST 29TH SAN ANGELO, TEXAS 76903
PHONE (915) 653-3211

DESCRIPTION 680'-0 PLATE GIRDER UNIT
STRUCTURE US 83/281 INTERCHANGE RAMP #2
LOCATION HIDALGO COUNTY
CUSTOMER GILBERT TEXAS CONSTRUCTION
SHIP TO
Customer's Order No.
Dwg. By CRT Date 9-92
Checked By JC Date 10-92
SHEET 215 OF
JOB NO. 92-107
CE 92-12 (LINE #2)

FED. ROAD DIV. NO.	STATE	FEDERAL AID PROJECT NO.			
6	TX.	NH 92(50)M			
STATE DIST. NO.	COUNTY	CONTROL NO.	SECTION NO.	JOB NO.	HIGHWAY NO.
21	HIDALGO	39	17	97	83/281

G0207

322540

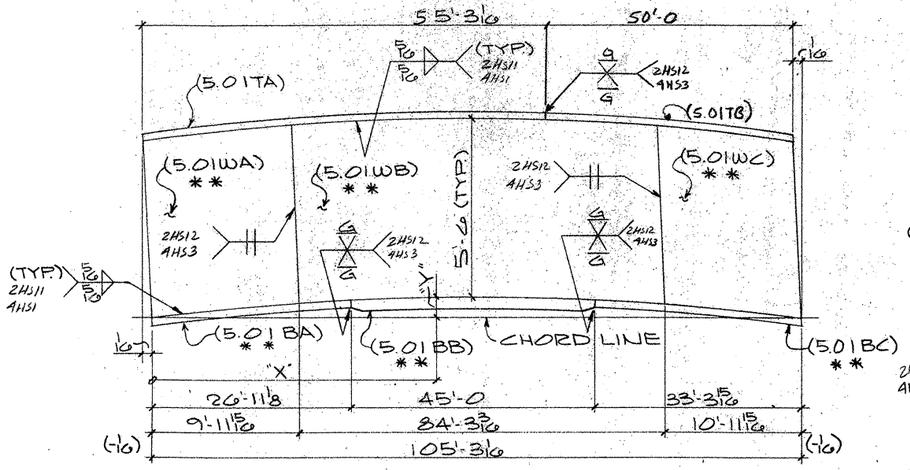

ONE GIRDER SUB-ASSY. MK-A214
(FOR GIRDER-236PG5.01)

MK-A214											
"X"	8'-3 1/16	9'-11 15/16	23'-7 5/8	38'-11 1/16	54'-3 1/2	69'-7 1/16	84'-11 3/8	94'-3 1/8	100'-3 5/16	105'-3 1/16
"Y"	1/16	13/16 ℄ WEB SPLICE	1 1/16	2 3/16	2 1/4	1 15/16	1 1/4	1 1/16 ℄ WEB SPLICE	5/16	0"

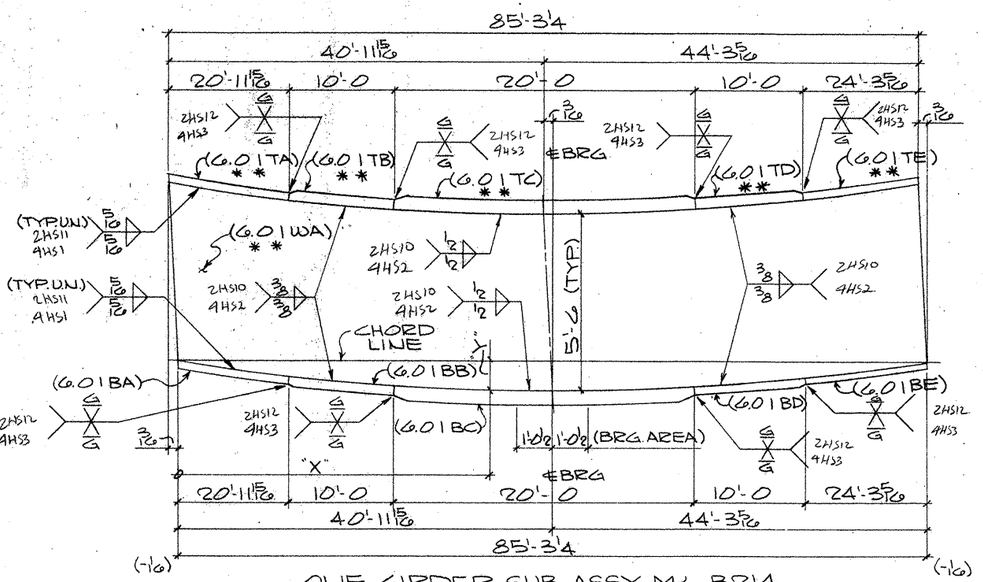

ONE GIRDER SUB-ASSY. MK-B214
(FOR GIRDER-240PG6.01)

MK-B214							
"X"	10'-4 1/16	25'-8	40'-11 15/16	56'-2 7/16	71'-4 1/2	85'-3 1/4
"Y"	1/2	1"	1 1/4 ℄ BRG	1 1/8	5/8	0"

TYP. FLG. THKNESS TRANSITION

SHOP NOTES:
1) FOR GENERAL NOTES, SEE SHT. GN1
2) MATERIAL NOTED "* *" MUST MEET CHARPY V-NOTCH REQUIREMENTS
3) FOR HEAT CURVE DIAGRAM, SEE SHT. 251

BILL OF MATERIAL

	Qnty.	Material	Length	Mark Temp.	Mark Ship.	Wt.	Cut From	Remarks
1								
2								
3	1	GIRDER SUB-ASSY			A214			
4	1	PL 9/16 x 66	10'-0 3/16	5.01WA			207-9	CVN2
5	1	PL 1/2 x 66	84'-3 5/8	5.01WB			207-10	CVN2
6	1	PL 9/16 x 66	11'-0 1/8	5.01WC			207-11	CVN2
7	1	PL 1 1/4 x 22	55'-3 1/16	5.01TA			214-12	
8	1	PL 1 1/4 x 22	26'-11 1/8	5.01BA			209-16	CVN2
9	1	PL 1 1/2 x 22	45'-0	5.01BB			209-17	CVN2
10	1	PL 1 1/4 x 22	33'-3 15/16	5.01BC			209-18	CVN2
11	1	PL 1 1/4 x 22	50'-0	5.01B			214-12	
12								
13								
14								
15	1	GIRDER SUB-ASSY			B214			
16	1	PL 5/8 x 66	85'-3 1/16	6.01WA			207-12	CVN2
17	1	PL 1 1/4 x 22	20'-11 15/16	6.01TA			209-19	CVN2
18	1	PL 1 3/4 x 22	10'-0	6.01TB			209-20	CVN2
19	1	PL 2 1/2 x 22	20'-0	6.01TC			213-4	CVN3
20	1	PL 1 3/4 x 22	10'-0	6.01TD			209-20	CVN2
21	1	PL 1 1/4 x 22	24'-3 5/16	6.01TE			210-2	CVN2
22	1	PL 1 1/4 x 22	20'-11 15/16	6.01BA			214-13	
23	1	PL 1 3/4 x 22	10'-0	6.01BB			214-14	
24	1	PL 2 1/2 x 22	20'-0	6.01BC			214-15	
25	1	PL 1 3/4 x 22	10'-0	6.01BD			214-14	
26	1	PL 1 1/4 x 22	24'-3 5/16	6.01BE			214-16	
27								
28								
29								
30								
31								
32								
33								
34								
35								
36								
37								
38								
39								
40								
41								
42								
43								
44								
45								
46								
47								
48								
49								
50								
51								
52								
53								
54								
55								
56								
57								
58								
59								
60								

TEXAS DEPARTMENT OF TRANSPORTATION
APPROVED
DIVISION OF BRIDGES AND STRUCTURES
APR 23 1993
APPROVAL OF THIS DRAWING DOES NOT RELIEVE THE CONTRACTOR OF THE RESPONSIBILITY FOR THE CORRECTNESS OF DETAIL

NOT FOR CONSTRUCTION

REVISION	DATE	DESCRIPTION OF REVISION
NO. 1		
NO. 2		
NO. 3		
NO. 4		
NO. 5		

PRINTING Req'd	For	Date

Bolts Holes Unless Noted
Shop Paint SEE SHT. GN1
Fab. Spec. A572-50 UN. Inspection
Architect
Erection By Field Connections

HIRSCHFELD STEEL CO. INC.
112 WEST 29TH SAN ANGELO, TEXAS 76903
PHONE (915) 653-3211

DESCRIPTION 680'-0 PLATE GIRDER UNIT
STRUCTURE US 83/281 INTERCHANGE RAMP "Z"
LOCATION HIDALGO COUNTY
CUSTOMER GILBERT TEXAS CONSTRUCTION
SHIP TO
Customer's Order No.
Dwg. By CRT Date 9-92
Checked By JC Date 10-92
SHEET 214 OF
JOB NO. 92-107

60207

FED. ROAD DIV. NO.	STATE	FEDERAL AID PROJECT NO.			
6	TX.	NH 92(50)M			
STATE DIST. NO.	COUNTY	CONTROL NO.	SECTION NO.	JOB NO.	HIGHWAY NO.
21	HIDALGO	39	17	97	83/281

CE 92-12 (LINE #1)

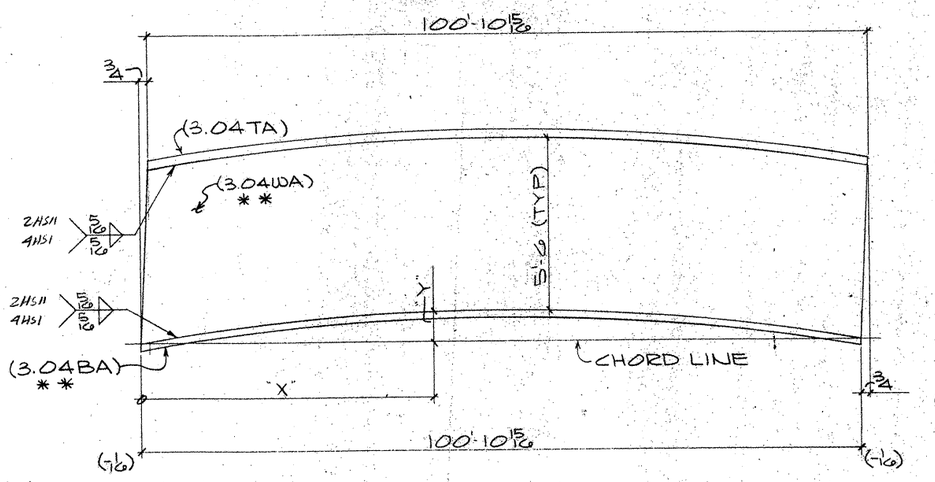

ONE GIRDER SUB-ASSY. MK-A213
(FOR GIRDER - 231PG3.04)

MK-A213								
"X"	4'-9 9/16	19'-7 1/4	34'-5 3/8	49'-3 3/16	64'-1 9/16	78'-11 5/8	93'-9 1/16	100'-10 15/16
"Y"	7/16	1 5/8	2 3/8	2 1/16	2 1/2	1 13/16	1 1/16	0"

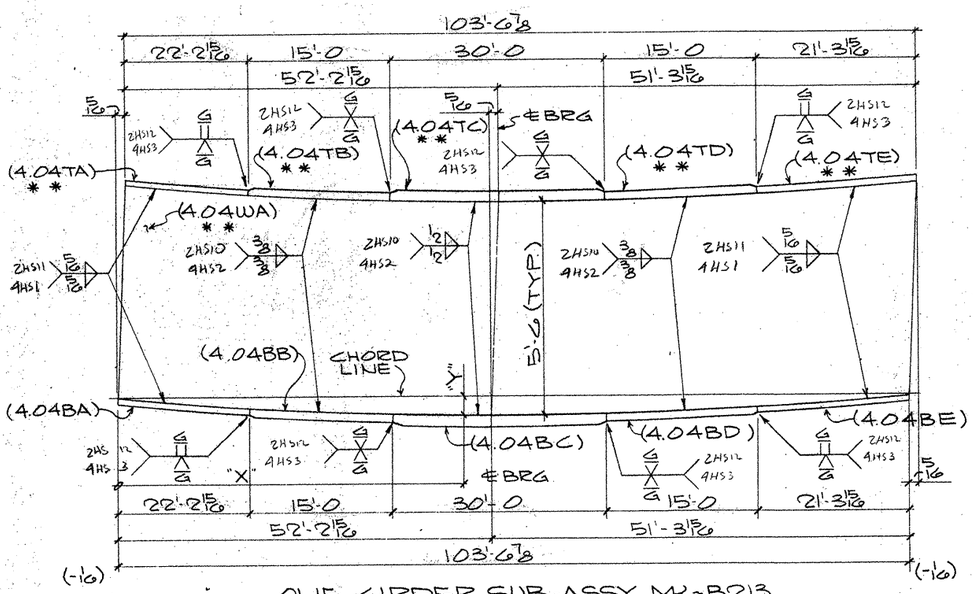

ONE GIRDER SUB-ASSY. MK-B213
(FOR GIRDER - 235PG4.04)

MK-B213								
"X"	7'-8 1/16	22'-6 13/16	37'-4 7/8	52'-2 15/16 ℄BRG	67'-1 1/2	81'-11 1/8	96'-9 9/16	103'-6 7/8
"Y"	1/16	5/16	1/2	9/16	1/2	1/4	1/16	0"

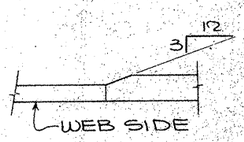

TYP. FLG. THKNESS TRANSITION

SHOP NOTES:
1) FOR GENERAL NOTES, SEE SHT. GN1
2) MATERIAL NOTED "**" MUST MEET CHARPY V-NOTCH REQUIREMENTS
3) FOR HEAT CURVE DIAGRAM, SEE SHT. 250

BILL OF MATERIAL

	Qnty	Material	Length	Mark Temp	Mark Shipt	Wt.	Cut From	Remarks
1								
2								
3	1	GIRDER SUB-ASSY			A213			
4	1	PL 12 x 66	100'-11 11/16	3.04WA			208-14	CVN2
5	1	PL 1 x 20	100'-10 15/16	3.04TA			217-7	
6	1	PL 1 x 20	100'-10 15/16	3.04TB			212-7	CVN2
7								
8								
9								
10								
11								
12								
13								
14								
15	1	GIRDER SUB-ASSY			B213			
16	1	PL 5/8 x 66	103'-7 3/16	4.04WA			208-15	CVN2
17	1	PL 1 x 20	22'-2 15/16	4.04TA			212-8	CVN2
18	1	PL 1 3/4 x 20	15'-0	4.04TB			212-9	CVN2
19	1	PL 2 3/4 x 20	30'-0	4.04TC			213-10	CVN3
20	1	PL 1 3/4 x 20	15'-0	4.04TD			212-9	CVN2
21	1	PL 1 x 20	21'-3 15/16	4.04TE			212-10	CVN2
22	1	PL 1 x 20	22'-2 15/16	4.04BA			217-8	
23	1	PL 2 x 20	15'-0	4.04BB			217-9	
24	1	PL 2 3/4 x 20	30'-0	4.04BC			217-10	
25	1	PL 2 x 20	15'-0	4.04BD			217-9	
26	1	PL 1 x 20	21'-3 15/16	4.04BE			217-11	
27								
28								
29								
30								
31								
32								
33								
34								
35								
36								
37								
38								
39								
40								
41								
42								
43								
44								
45								
46								
47								
48								
49								
50								
51								
52								
53								
54								
55								
56								
57								
58								
59								
60								

TEXAS DEPARTMENT OF TRANSPORTATION
APPROVED
DIVISION OF BRIDGES AND STRUCTURES
APR 23 1993
APPROVAL OF THIS DRAWING DOES NOT RELIEVE THE CONTRACTOR OF THE NECESSITY FOR THE CORRECTNESS OF DETAIL

FOR APPROVAL
MAR 23 93
NOT FOR CONSTRUCTION

REVISION	DATE	DESCRIPTION OF REVISION
NO. 1		
NO. 2		
NO. 3		
NO. 4		
NO. 5		

PRINTING Req'd	For	Date

Bolts: Holes: Unless Noted
Shop Paint SEE SHT. GN1
Fab. Spec. A572-50 UN. Inspection
Architect
Erection By Field Connections

HIRSCHFELD STEEL CO. INC.
112 WEST 29TH SAN ANGELO, TEXAS 76903
PHONE (915) 653-3211

DESCRIPTION 230'-0 PLATE GIRDER UNIT
STRUCTURE US 83/281 INTERCHANGE RAMP "C"
LOCATION HIDALGO COUNTY
CUSTOMER GILBERT TEXAS CONSTRUCTION
SHIP TO
Customer's Order No.
Dwg. By CRT Date 9-92
Checked By JC Date 10-92
SHEET 213 OF
JOB NO. 92-107
CE 92-12 (LINE #4)

60207

FED. ROAD DIV. NO.	STATE	FEDERAL AID PROJECT NO.			
6	TX.	NH 92(50)M			
STATE DIST. NO.	COUNTY	CONTROL NO.	SECTION NO.	JOB NO.	HIGHWAY NO.
21	HIDALGO	39	17	97	83/281

332640

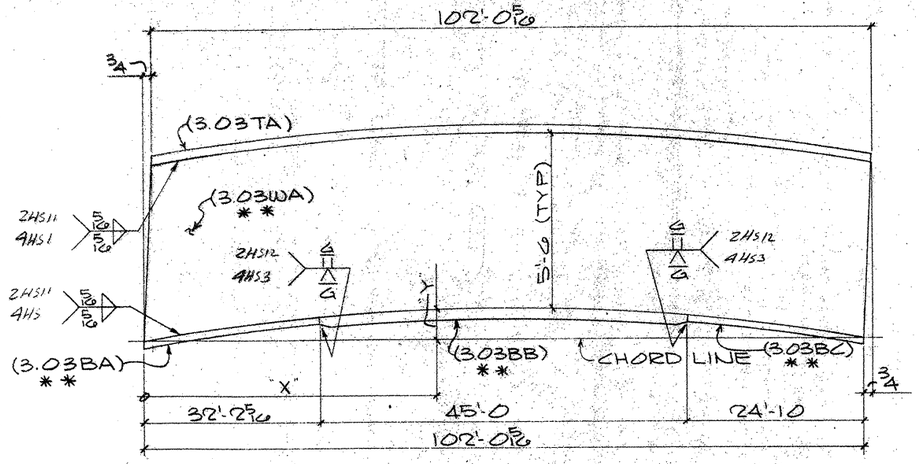

ONE GIRDER SUB-ASSY. MK-A212

(FOR GIRDER-230PG3.03)

MK-A212								
"X"	5'-0 1/16	20'-0 1/16	35'-0 1/8	50'-0 3/16	65'-0 1/4	80'-0 1/4	95'-0 5/16	102'-0 3/8
"Y"	1/2	1 3/4	2 9/16	2 7/8	2 5/8	1 7/8	1/16	0"

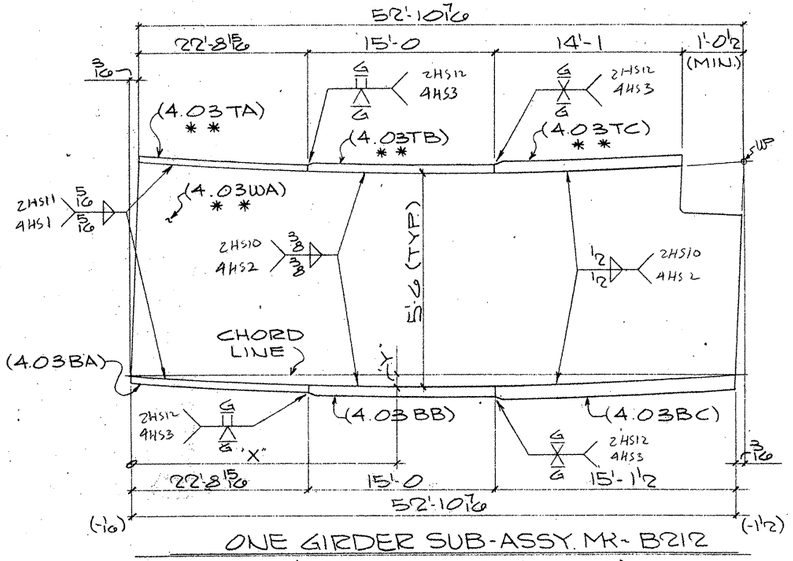

ONE GIRDER SUB-ASSY. MK-B212

(FOR GIRDER-234PG4.03)

MK-B212					
"X"	7'-11 7/8	22'-11 7/8	37'-11 15/16	52'-10 7/16	
"Y"	0"	1/16	1/16	0"	

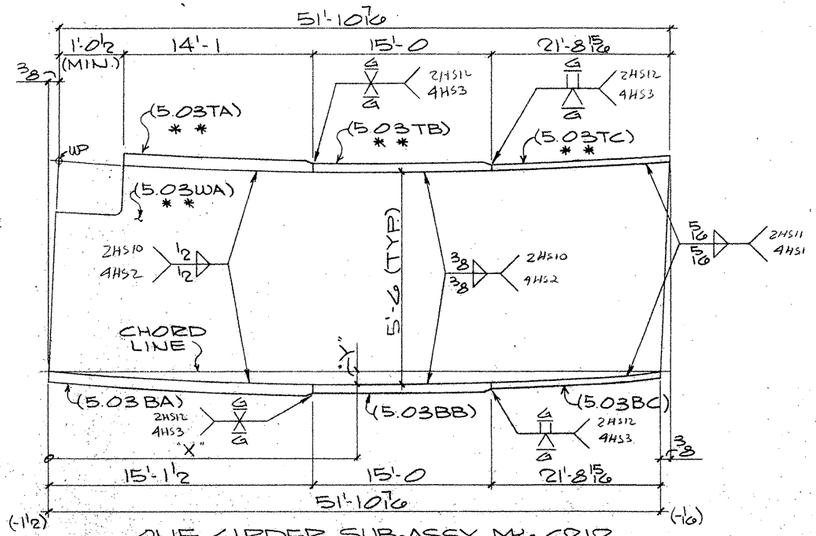

ONE GIRDER SUB-ASSY. MK-C212

(FOR GIRDER-249PG5.03)

MK-C212				
"X"	14'-11 15/16	30'-0	45'-0	51'-10 7/16
"Y"	1/16	1/16	0"	0"

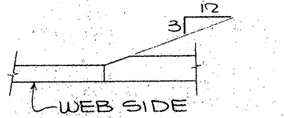

TYP. FLG. THKNESS TRANSITION

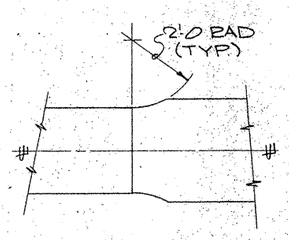

TYP. FLG. WIDTH TRANSITION

SHOP NOTES:

1) FOR GENERAL NOTES, SEE SHT. GN1
2) MATERIAL NOTED "**" MUST MEET CHARPY V-NOTCH REQUIREMENTS
3) FOR HEAT CURVE DIAGRAM, SEE SHT. 250

BILL OF MATERIAL

	Qnty	Material	Length	Mark Temp.	Mark Ship.	Wt.	Cut From	Remarks
1								
2								
3	1	GIRDER SUB-ASSY			A212			
4	1	PL 1/2 x 66	102'-1 1/16	3.03WA			208-6	CVN2
5	1	PL 1 x 20	102'-0 5/16	3.03TA			216-7	
6	1	PL 1 x 20	32'-2 5/16	3.03BA			211-6	CVN2
7	1	PL 1 1/4 x 20	45'-0	3.03BB			211-7	CVN2
8	1	PL 1 x 20	24'-10	3.03BC			211-8	CVN2
9								
10								
11								
12								
13								
14								
15	1	GIRDER SUB-ASSY			B212			
16	1	PL 5/8 x 66	52'-10 5/8	4.03WA			208-7	CVN2
17	1	PL 1 x 20	22'-8 15/16	4.03TA			211-9	CVN2
18	1	PL 2 x 20	15'-0	4.03TB			211-10	CVN2
19	1	PL 3 x 24	14'-1	4.03TC			213-9	CVN3
20	1	PL 1 x 20	22'-8 15/16	4.03BA			216-8	
21	1	PL 2 x 20	15'-0	4.03BB			216-9	
22	1	PL 3 x 24	15'-1 1/2	4.03BC			216-10	
23								
24								
25								
26								
27								
28								
29	1	GIRDER SUB-ASSY			C212			
30	1	PL 5/8 x 66	51'-10 7/16	5.03WA			208-8	CVN2
31	1	PL 3 x 24	14'-1	5.03TA			213-9	CVN3
32	1	PL 2 x 20	15'-0	5.03TB			211-10	CVN2
33	1	PL 1 x 20	21'-8 15/16	5.03TC			211-11	CVN2
34	1	PL 3 x 24	15'-1 1/2	5.03BA			216-10	
35	1	PL 2 x 20	15'-0	5.03BB			216-9	
36	1	PL 1 x 20	21'-8 15/16	5.03BC			216-11	
37								
38								
39								
40								
41								
42								
43								
44								
45								
46								
47								
48								
49								
50								
51								
52								
53								
54								
55								
56								
57								
58								
59								
60								

TEXAS DEPARTMENT OF TRANSPORTATION
APPROVED
DIVISION OF BRIDGES AND STRUCTURES
APR 23 1993
APPROVAL OF THIS DRAWING DOES NOT RELIEVE THE CONTRACTOR OF THE RESPONSIBILITY FOR THE CORRECTNESS OF DETAIL

NOT APPROVED FOR CONSTRUCTION

REVISION	DATE	DESCRIPTION OF REVISION
NO. 1		
NO. 2		
NO. 3		
NO. 4		
NO. 5		

PRINTING Req'd	For	Date

Bolts: Holes: Unless Noted
Shop Paint SEE SHT. GN1
Fab Spec A572-50 U.N. Inspection
Architect
Erection By Field Connections

HIRSCHFELD STEEL CO. INC.
112 WEST 29TH SAN ANGELO, TEXAS 76903
PHONE (915) 653-3211

DESCRIPTION	180'-0 PLATE GIRDER UNIT
STRUCTURE	US 83/281 INTERCHANGE RAMP "S"
LOCATION	HIDALGO COUNTY
CUSTOMER	GILBERT TEXAS CONSTRUCTION
SHIP TO	
Customer's Order No	
Dwg By CRT	Date 9-92
Checked By JC	Date 10-92

SHEET 212 OF
JOB NO. 92-107

60207

FED. ROAD DIV. NO.	STATE	FEDERAL AID PROJECT NO.			
6	TX.	NH 92(50)M			
STATE DIST. NO.	COUNTY	CONTROL NO.	SECTION NO.	JOB NO.	HIGHWAY NO.
21	HIDALGO	39	17	97	83/281

CE 92-12 (LINE #3)

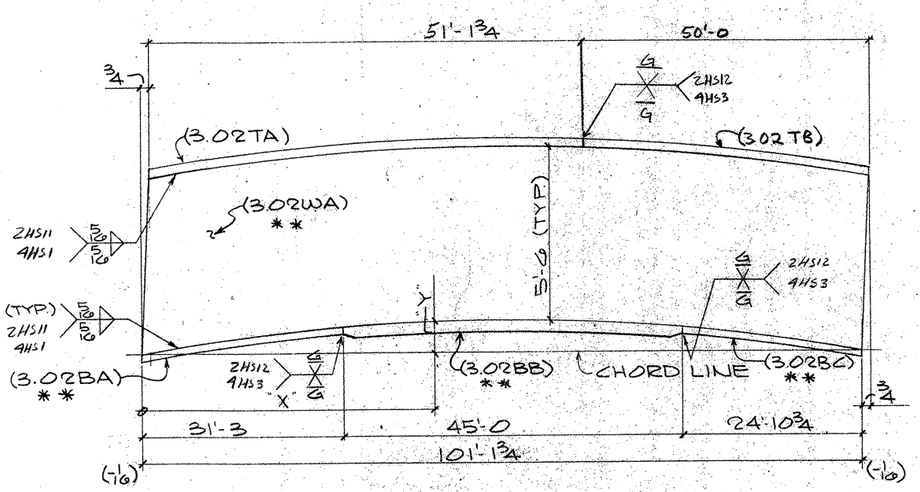

ONE GIRDER SUB-ASSY. MK-A211
(FOR GIRDER-223PG3.02)

MK-A211							
"X"	3'-5 7/8	18'-7 7/8	33'-9 15/16	48'-11 15/16	64'-1 7/8	79'-3 7/8	94'-5 7/8	101'-1 3/4
"Y"	5/16	1/16	2 3/8	2 3/4	2 1/2	1 13/16	5/8	0"

TYP. FLG. THKNESS TRANSITION

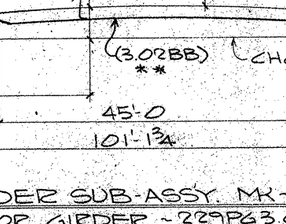

TYP. FLG. WIDTH TRANSITION

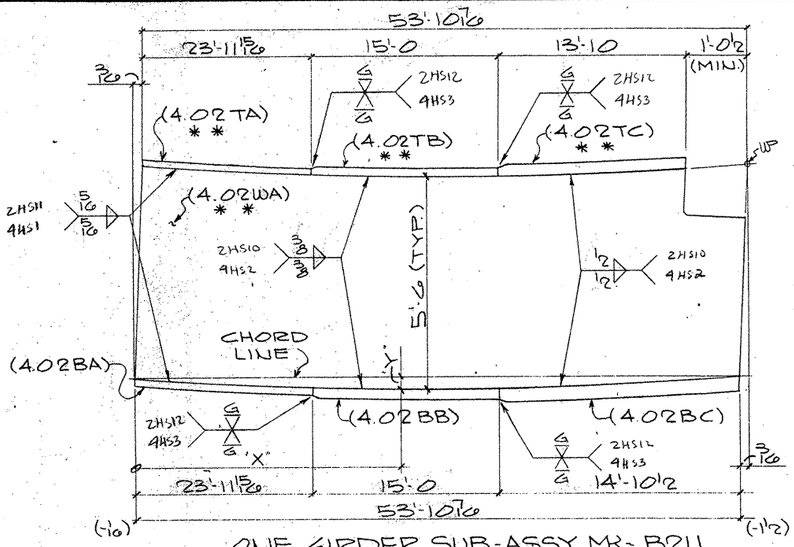

ONE GIRDER SUB-ASSY. MK-B211
(FOR GIRDER-233PG4.02)

MK-B211				
"X"	8'-6	23'-8	38'-9 15/16	53'-10 7/16
"Y"	0"	1/16	1/16	0"

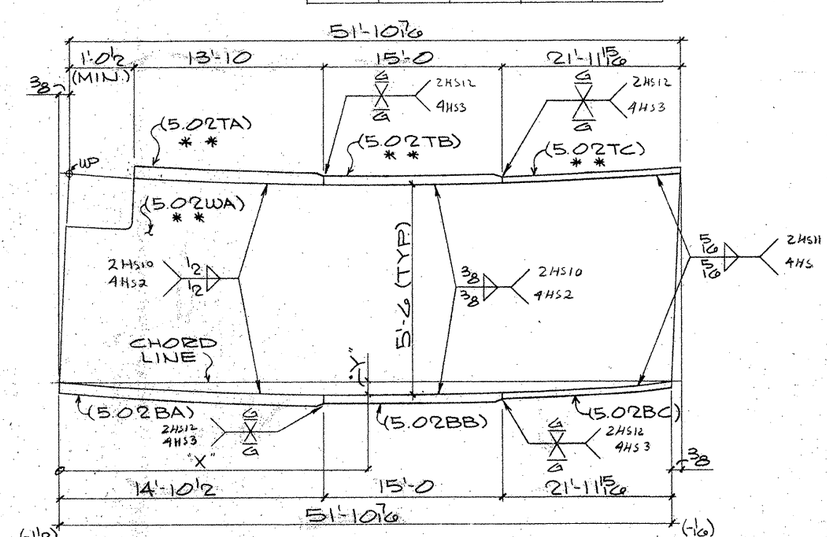

ONE GIRDER SUB-ASSY. MK-C211
(FOR GIRDER-248PG5.02)

MK-C211				
"X"	15'-1 1/16	30'-3 15/16	45'-5 7/8	51'-10 7/16
"Y"	1/16	1/16	0"	0"

SHOP NOTES:
1) FOR GENERAL NOTES, SEE SHT. GN1
2) MATERIAL NOTED "**" MUST MEET CHARPY V-NOTCH REQUIREMENTS
3) FOR HEAT CURVE DIAGRAM, SEE SHT. #250

BILL OF MATERIAL

	Qnty.	Material	Length	Mark Temp.	Mark Ship.	Wt.	Cut From	Remarks
3	1	GIRDER SUB-ASSY			A211			
4	1	PL 1/2 x 66	101'-2 1/2	3.02WA			207-17	CVN2
5	1	PL 1/4 x 22	51'-1 3/4	3.02TA			215-7	
6	1	PL 1/4 x 22	31'-3	3.02BA			210-8	CVN2
7	1	PL 1/2 x 22	45'-0	3.02BB			210-9	CVN2
8	1	PL 1/4 x 22	24'-10 3/4	3.02BC			210-10	CVN2
9	1	PL 1/4 x 22	50'-0	3.02TB			215-7	
15	1	GIRDER SUB-ASSY			B211			
16	1	PL 5/8 x 66	53'-10 7/16	4.02WA			207-18	CVN2
17	1	PL 1/4 x 22	23'-11 15/16	4.02TA			210-11	CVN2
18	1	PL 2 x 24	15'-0	4.02TB			210-12	CVN2
19	1	PL 3 x 28	13'-10	4.02TC			213-6	CVN3
20	1	PL 1/4 x 22	23'-11 15/16	4.02BA			215-8	
21	1	PL 2 x 24	15'-0	4.02BB			215-9	
22	1	PL 3 x 28	14'-10 1/2	4.02BC			215-10	
29	1	GIRDER SUB-ASSY			C211			
30	1	PL 5/8 x 66	51'-10 7/16	5.02WA			207-19	CVN2
31	1	PL 3 x 28	13'-10	5.02TA			213-6	CVN3
32	1	PL 2 x 24	15'-0	5.02TB			210-12	CVN2
33	1	PL 1/4 x 22	21'-11 15/16	5.02TC			210-13	CVN2
34	1	PL 3 x 28	14'-10 1/2	5.02BA			215-10	
35	1	PL 2 x 24	15'-0	5.02BB			215-9	
36	1	PL 1/4 x 22	21'-11 15/16	5.02BC			215-11	

TEXAS DEPARTMENT OF TRANSPORTATION
APPROVED EXCEPT AS NOTED
DIVISION OF BRIDGES AND STRUCTURES
APR 23 1993
APPROVAL OF THIS DRAWING DOES NOT RELIEVE THE CONTRACTOR OF THE RESPONSIBILITY FOR THE CORRECTNESS OF DETAIL.

FOR APPROVAL
MAR 24 93
NOT FOR CONSTRUCTION

REVISION	DATE	DESCRIPTION OF REVISION
NO. 1		
NO. 2		
NO. 3		
NO. 4		
NO. 5		

PRINTING Req'd	For	Date

Bolts Holes Unless Noted
Shop Paint SEE SHT. GN1
Fab Spec ASTM-50 UN. Inspection
Architect
Erection By Field Connections

HIRSCHFELD STEEL CO. INC.
112 WEST 29TH SAN ANGELO, TEXAS 76903
PHONE (915) 653-3211

DESCRIPTION 680'-0 PLATE GIRDER UNIT
STRUCTURE US 83/281 INTERCHANGE RAMP # 2
LOCATION HIDALGO COUNTY
CUSTOMER GILBERT TEXAS CONSTRUCTION
SHIP TO
Customer's Order No.
Dwg By CRT Date 9-92
Checked By JC Date 10-92
SHEET 211 OF
JOB NO. 92-107

G0207

FED. ROAD DIV. NO.	STATE	FEDERAL AID PROJECT NO.			
6	TX.	NH 92(50)M			
STATE DIST. NO.	COUNTY	CONTROL NO.	SECTION NO.	JOB NO.	HIGHWAY NO.
21	HIDALGO	39	17	97	83/281

CE 92-12 (LINE #2)

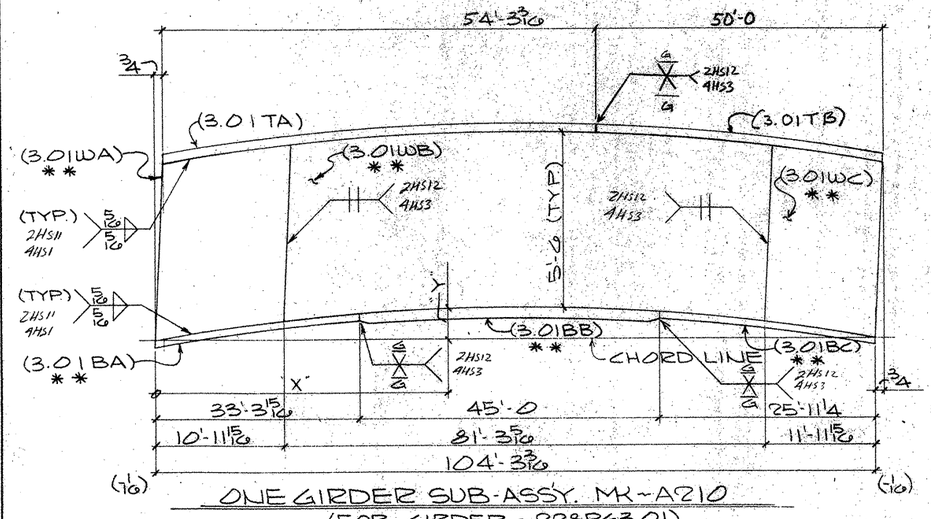

ONE GIRDER SUB-ASSY. MK-A210

(FOR GIRDER - 228PG3.01)

MK-A210										
"X"	4'-11 3/4	10'-11 15/16	20'-3 3/4	35'-7 1/16	50'-11 5/8	66'-3 9/16	81'-7 1/16	92'-3 1/4	96'-11 1/16	104'-3 15/16
"Y"	1/2	1"	1 3/16	2 1/16	3"	2 3/4	2	1 1/8	3/4	0"
		℄ WEB SPLICE						℄ WEB SPLICE		

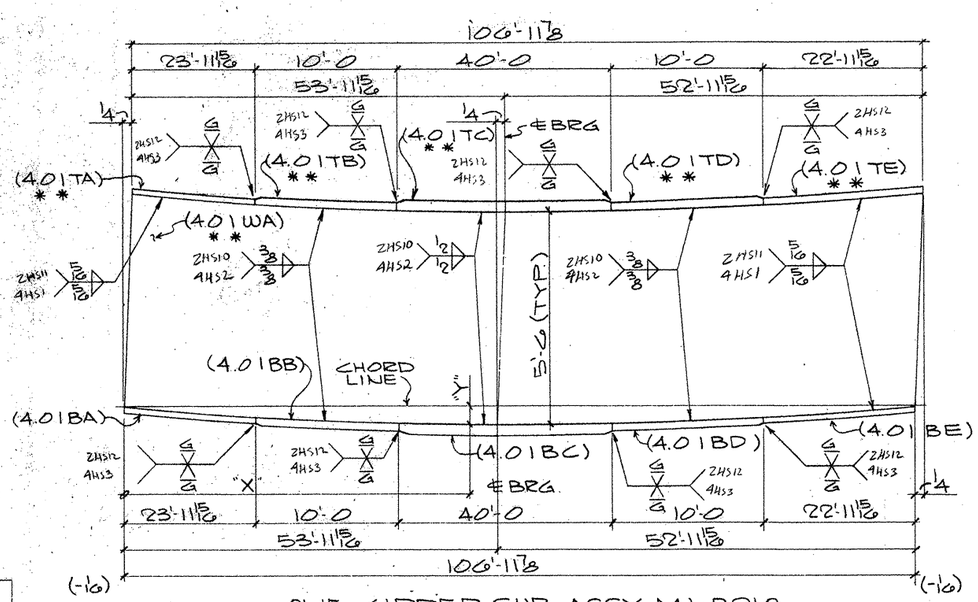

ONE GIRDER SUB-ASSY. MK-B210

(FOR GIRDER - 232PG4.01)

MK-B210								
"X"	8'-0 3/8	23'-4 1/16	38'-8	53'-11 15/16	69'-3 7/8	84'-7 13/16	99'-11 3/4	106'-11 7/8
"Y"	1/8	7/16	11/16	3/4	5/8	7/16	1/8	0"
				℄ BRG				

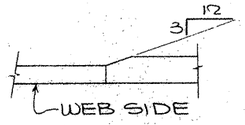

TYP. FLG. THKNESS TRANSITION

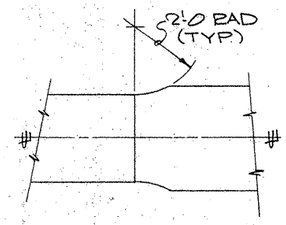

TYP. FLG. WIDTH TRANSITION

SHOP NOTES:

1) FOR GENERAL NOTES, SEE SHT. GN1
2) MATERIAL NOTED "* *" MUST MEET CHARPY V-NOTCH REQUIREMENTS
3) FOR HEAT CURVE DIAGRAM, SEE SHT. #250

BILL OF MATERIAL

	Qnty.	Material	Length	Mark Temp.	Mark Ship.	Wt.	Cut From	Remarks
1								
2								
3	1	GIRDER SUB-ASSY			A210			
4	1	PL 9/16 x 66	11'-0 3/16	3.01WA			207-5	CVN2
5	1	PL 1/2 x 66	81'-3 3/4	3.01WB			207-6	CVN2
6	1	PL 9/16 x 66	12'-0 1/16	3.01WC			207-7	CVN2
7	1	PL 1 1/4 x 22	54'-3 3/16	3.01TA			214-7	
8	1	PL 1 1/4 x 22	33'-3 15/16	3.01BA			209-10	CVN2
9	1	PL 1 1/2 x 22	45'-0	3.01BB			209-11	CVN2
10	1	PL 1 1/4 x 22	25'-11 1/4	3.01BC			209-12	CVN2
11	1	PL 1 1/4 x 22	50'-0	3.01TB			214-7	
12								
13								
14								
15	1	GIRDER SUB-ASSY			B210			
16	1	PL 5/8 x 66	107'-0 3/8	4.01WA			207-8	CVN2
17	1	PL 1 1/4 x 22	23'-11 15/16	4.01TA			209-13	CVN2
18	1	PL 2 x 22	10'-0	4.01TB			209-14	CVN2
19	1	PL 3 x 26	40'-0	4.01TC			213-3	CVN3
20	1	PL 2 x 22	10'-0	4.01TD			209-14	CVN2
21	1	PL 1 1/4 x 22	22'-11 15/16	4.01TE			209-15	CVN2
22	1	PL 1 1/4 x 22	23'-11 15/16	4.01BA			214-8	
23	1	PL 2 x 22	10'-0	4.01BB			214-9	
24	1	PL 3 x 26	40'-0	4.01BC			214-10	
25	1	PL 2 x 22	10'-0	4.01BD			214-9	
26	1	PL 1 1/4 x 22	22'-11 15/16	4.01BE			214-11	
27								
28								
29								
30								
31								
32								
33								
34								
35								
36								
37								
38								
39								
40								
41								
42								
43								
44								
45								
46								
47								
48								
49								
50								
51								
52								
53								
54								
55								
56								
57								
58								
59								
60								

TEXAS DEPARTMENT OF TRANSPORTATION
APPROVED
DIVISION OF BRIDGES AND STRUCTURES
APR 23 1993
APPROVAL OF THIS DRAWING DOES NOT RELIEVE THE CONTRACTOR OF THE RESPONSIBILITY FOR THE CORRECTNESS OF DETAILS

FOR APPROVAL
MAR 19 93
NOT FOR CONSTRUCTION

REVISION	DATE	DESCRIPTION OF REVISION
NO. 1		
NO. 2		
NO. 3		
NO. 4		
NO. 5		

PRINTING Req'd	For	Date

Bolts Holes Unless Noted
Shop Paint SEE SHT. GN1
Fab. Spec. A572-50 UN Inspection
Architect
Erection By Field Connections

HIRSCHFELD STEEL CO. INC.
112 WEST 29TH SAN ANGELO, TEXAS 76903
PHONE (915) 653-3211

DESCRIPTION 680'-0 PLATE GIRDER UNIT
STRUCTURE US 83/281 INTERCHANGE RAMP "R"
LOCATION HIDALGO COUNTY
CUSTOMER GILBERT TEXAS CONSTRUCTION
SHIP TO
Customer's Order No.
Dwg. By CRT Date 9-93
Checked By JC Date 10-92
SHEET 210 OF
JOB NO. 92-107

FED. ROAD DIV. NO.	STATE	FEDERAL AID PROJECT NO.				
6	TX.	NH 92(50)M				
STATE DIST. NO.	COUNTY	CONTROL NO.	SECTION NO.	JOB NO.	HIGHWAY NO.	
21	HIDALGO	39	17	97	83/281	

40207

CE 92-12 (LINE #1)

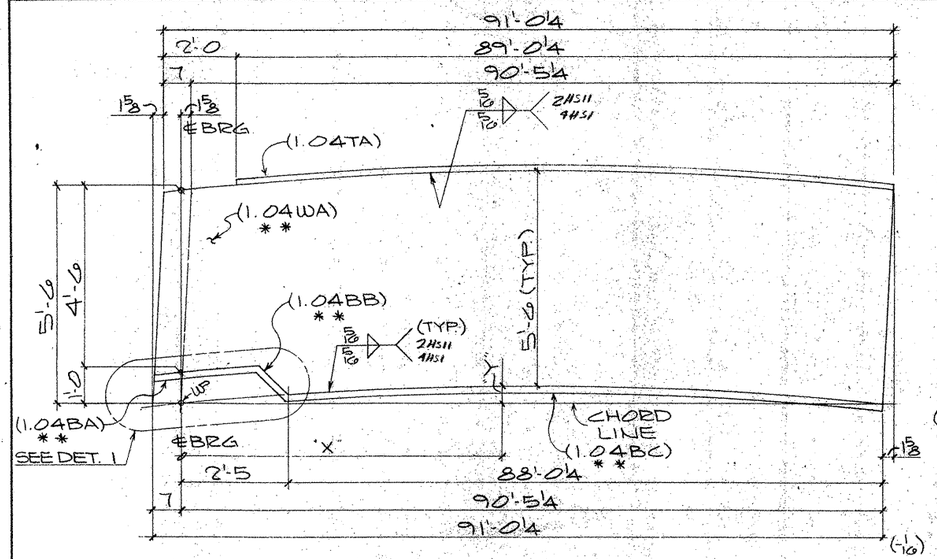

ONE GIRDER SUB-ASSY. MK-A209
(FOR GIRDER-223PG1.04)

MK-A209								
"X"	14'-10 9/16	29'-9 1/2	44'-8 7/16	59'-7 3/8	74'-6 5/16	89'-5 3/16	90'-5¼	
"Y"	1"	1 1/16	1 15/16	1 3/4	1 1/16	1/16	0"	

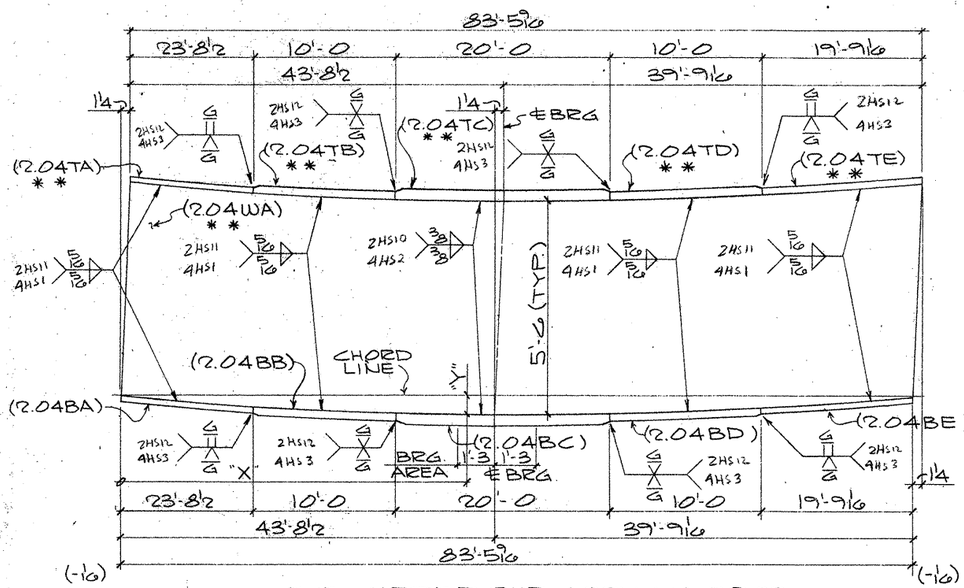

ONE GIRDER SUB-ASSY. MK-B209
(FOR GIRDER-227PG2.04)

MK-B209							
"X"	13'-10 9/16	28'-9 5/8	43'-8½	58'-6 5/8	73'-4 3/4	83'-5 9/16	
"Y"	1/8	5/16	7/16	5/16	1/8	0"	
			℄BRG				

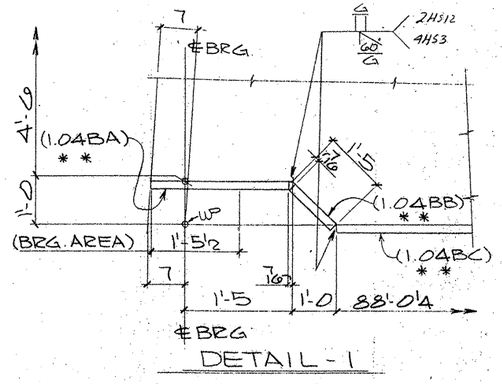

DETAIL-1

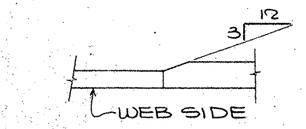

TYP. FLG. THKNESS TRANSITION

SHOP NOTES:

1) FOR GENERAL NOTES, SEE SHT. GN1
2) MATERIAL NOTED "* *" MUST MEET. CHARPY V-NOTCH REQUIREMENTS
3) FOR HEAT CURVE DIAGRAM, SEE SHT." 250

BILL OF MATERIAL

	Qnty.	Material	Length	Mark Temp	Mark Ship.	Wt.	Cut From	Remarks
2	1	GIRDER SUB-ASSY			A209			
3	1	PL 1½ × 66	91'-1 7/8	1.04WA			208-12	CVN2
5	1	PL 1 × 20	89'-0¼	1.04TA			217-2	
6	1	PL 1 × 20	1'-11 9/16	1.04BA			209-4	CVN2
7	1	PL 1 × 20	1'-4 9/16	1.04BB			209-5	CVN2
8	1	PL 1 × 20	88'-0¼	1.04BC			212-2	CVN2
14	1	GIRDER SUB-ASSY			B209			
15	1	PL 5/8 × 66	83'-6 3/8	2.04WA			208-13	CVN2
16	1	PL 1 × 20	23'-8½	2.04TA			212-3	CVN2
17	1	PL 1½ × 20	10'-0	2.04TB			212-4	CVN2
18	1	PL 2 × 20	20'-0	2.04TC			212-5	CVN2
19	1	PL 1½ × 20	10'-0	2.04TD			212-4	CVN2
20	1	PL 1 × 20	19'-9 1/16	2.04TE			212-6	CVN2
21	1	PL 1 × 20	23'-8½	2.04BA			217-3	
22	1	PL 1½ × 20	10'-0	2.04BB			217-4	
23	1	PL 2 × 20	20'-0	2.04BC			217-5	
24	1	PL 1½ × 20	10'-0	2.04BD			217-4	
25	1	PL 1 × 20	19'-9 1/16	2.04BE			217-6	

TEXAS DEPARTMENT OF TRANSPORTATION
APPROVED
DIVISION OF BRIDGES AND STRUCTURES
APR 23 1993
APPROVAL OF THIS DRAWING DOES NOT RELIEVE THE CONTRACTOR OF THE RESPONSIBILITY FOR THE CORRECTNESS OF DETAIL.

FOR APPROVAL
NOT FOR CONSTRUCTION

REVISION	DATE	DESCRIPTION OF REVISION
NO. 1		
NO. 2		
NO. 3		
NO. 4		
NO. 5		

PRINTING Req'd	For	Date

Bolts: Holes: Unless Noted
Shop Paint SEE SHT. GN1
Fab Spec. A572-50 UU Inspection
Architect
Erection By Field Connections

HIRSCHFELD STEEL CO. INC.
112 WEST 29TH SAN ANGELO, TEXAS 76903
PHONE (915) 653-3211

DESCRIPTION	680'-0 PLATE GIRDER UNIT
STRUCTURE	US 83/281 INTERCHANGE RAMP "S"
LOCATION	HIDALGO COUNTY
CUSTOMER	GILBERT TEXAS CONSTRUCTION
SHIP TO	
Customer's Order No.	SHEET 209 OF
Dwg. By CBT Date 9-92	JOB NO. 92-107
Checked By JC Date 10-92	

CE # 92-12 (LINE #4)

40207

FED. ROAD DIV. NO.	STATE	FEDERAL AID PROJECT NO.				
6	TX.	NH 92(50)M				
STATE DIST. NO.	COUNTY	CONTROL NO.	SECTION NO.	JOB NO.	HIGHWAY NO.	
21	HIDALGO	39	17	97	83/281	

APR MAR 24

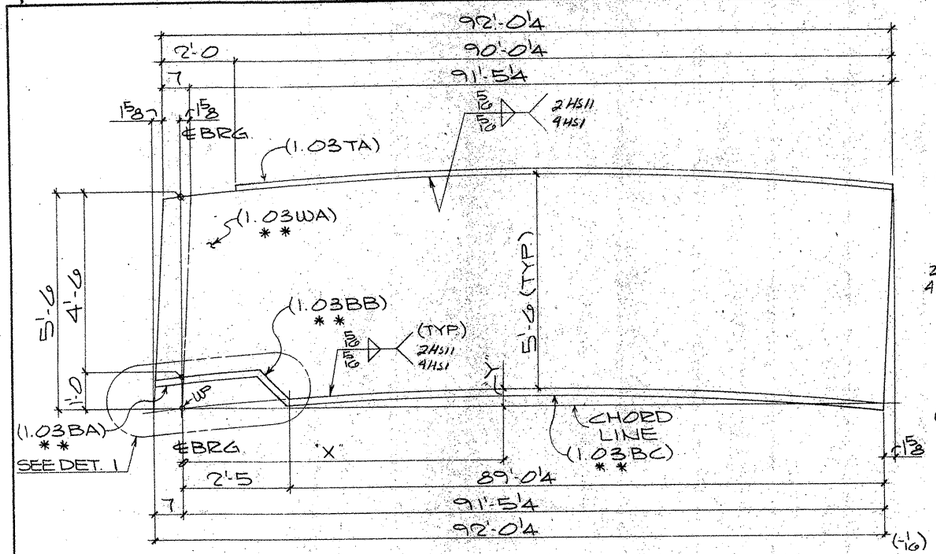

ONE GIRDER SUB-ASSY. MK-A208
(FOR GIRDER - 222PG1.03)

MK-A208								
"X"	15'-0 5/8	30'-1 9/16	45'-2 7/16	60'-3 5/16	75'-4¼	90'-5 1/16	91'-5¼	
"Y"	1/16	1 3/16	2 1/16	1 3/16	1 3/16	1/16	0"	

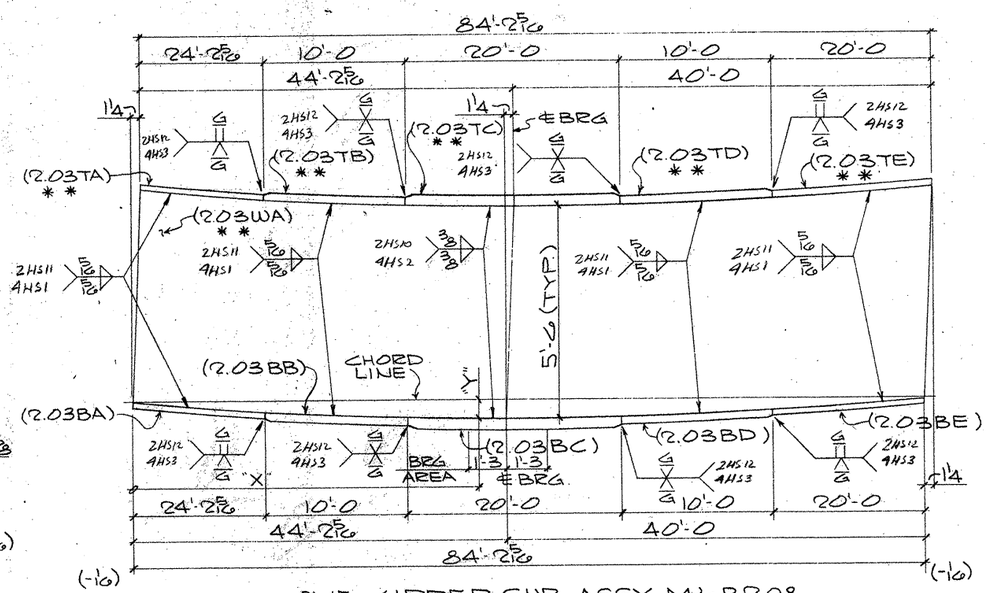

ONE GIRDER SUB-ASSY. MK-B208
(FOR GIRDER - 220PG2.03)

MK-B208							
"X"	14'-0 9/16	29'-1 7/16	44'-2 5/16	59'-3 3/8	74'-2 1/16	84'-2 5/16	
"Y"	3/16	7/16	1/2 ℄BRG	3/8	1/8	0"	

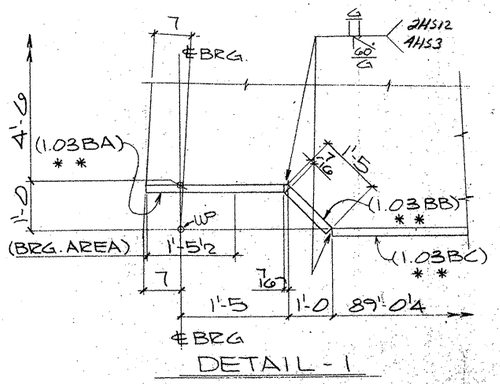

DETAIL - 1

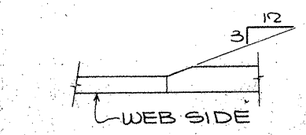

TYP. FLG. THKNESS TRANSITION

SHOP NOTES:
1) FOR GENERAL NOTES, SEE SHT. GN1
2) MATERIAL NOTED "* *" MUST MEET CHARPY V-NOTCH REQUIREMENTS
3) FOR HEAT CURVE DIAGRAM, SEE SHT. *250

BILL OF MATERIAL

	Qnty.	Material	Length	Mark Temp.	Mark Ship.	Wt.	Cut From	Remarks
2	1	GIRDER SUB-ASSY			A208			
3	1	PL 1/2 × 66	92'-1 7/8	1.03WA			208-4	CVN2
5	1	PL 1 × 20	90'-0¼	1.03TA			216-2	
6	1	PL 1 × 20	1'-11 9/16	1.03BA			209-4	CVN2
7	1	PL 1 × 20	1'-4 9/16	1.03BB			209-5	CVN2
8	1	PL 1 × 20	89'-0¼	1.03BC			211-2	CVN2
14	1	GIRDER SUB-ASSY			B208			
15	1	PL 5/8 × 66	84'-3 5/16	2.03WA			208-5	CVN2
16	1	PL 1 × 20	24'-2 5/16	2.03TA			211-3	CVN2
17	1	PL 1 1/2 × 20	10'-0	2.03TB			211-4	CVN2
18	1	PL 2¼ × 20	20'-0	2.03TC			213-3	CVN3
19	1	PL 1 1/2 × 20	10'-0	2.03TD			211-4	CVN2
20	1	PL 1 × 20	20'-0	2.03TE			211-5	CVN2
21	1	PL 1 × 20	24'-2 5/16	2.03BA			216-3	
22	1	PL 1 1/2 × 20	10'-0	2.03BB			216-4	
23	1	PL 2¼ × 20	20'-0	2.03BC			216-5	
24	1	PL 1 1/2 × 20	10'-0	2.03BD			216-4	
25	1	PL 1 × 20	20'-0	2.03BE			216-6	

TEXAS DEPARTMENT OF TRANSPORTATION
APPROVED
DIVISION OF BRIDGES AND STRUCTURES
APR 23 1993
APPROVAL OF THIS DRAWING DOES NOT RELIEVE THE CONTRACTOR OF THE RESPONSIBILITY FOR THE CORRECTNESS OF DETAIL.

FOR ASSEMBLY APPROVAL MAR 29 93
NOT FOR CONSTRUCTION

REVISION	DATE	DESCRIPTION OF REVISION
NO. 1		
NO. 2		
NO. 3		
NO. 4		
NO. 5		

PRINTING Req'd	For	Date

Bolts , Holes, Unless Noted
Shop Paint SEE SHT. GN1
Fab Spec. A572-50 DN Inspection
Architect
Erection By Field Connections

HIRSCHFELD STEEL CO. INC.
112 WEST 29TH SAN ANGELO, TEXAS 76903
PHONE (915) 653-3211

DESCRIPTION 680'-0 PLATE GIRDER UNIT
STRUCTURE US 83/281 INTERCHANGE RAMP *2
LOCATION HIDALGO COUNTY
CUSTOMER GILBERT TEXAS CONSTRUCTION
SHIP TO
Customer's Order No.
Dwg. By CBT Date 9-92
Checked By JC Date 10-92
SHEET 208 OF
JOB NO. 92-107
CE *92-12 (LINE *3)

FED. ROAD DIV. NO.	STATE	FEDERAL AID PROJECT NO.			
6	TX.	NB 92(50)M			
STATE DIST. NO.	COUNTY	CONTROL NO.	SECTION NO.	JOB NO.	HIGHWAY NO.
21	HIDALGO	39	17	97	83/281

G0207

APR MAR 24

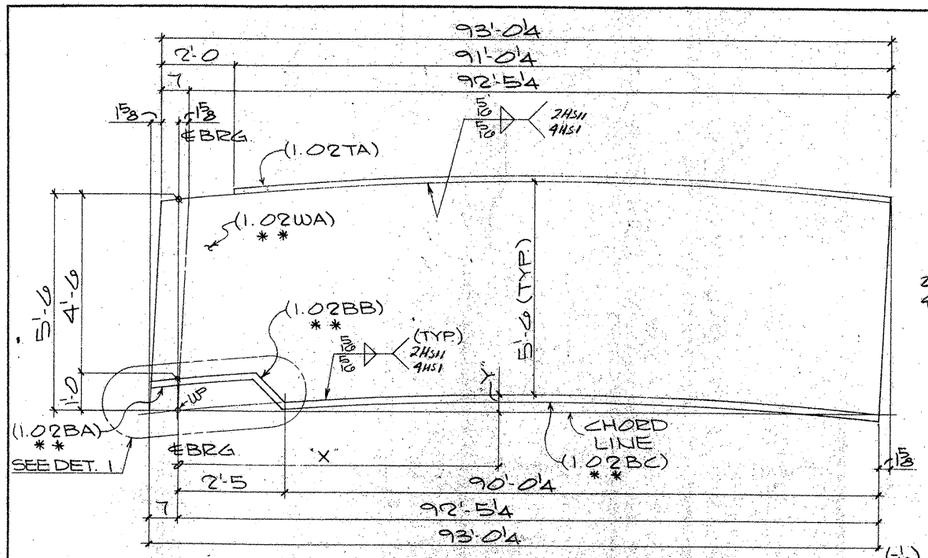

ONE GIRDER SUB-ASSY. MK-A207

(FOR GIRDER-221PG1.02)

MK-A207								
"X"	15'-2 3/4	30'-5 9/16	45'-8 1/16	60'-11 5/16	76'-2 1/8	91'-5	92'-5¼	
"Y"	1"	1 3/4	2	1 3/4	1 1/8	1/16	0"	

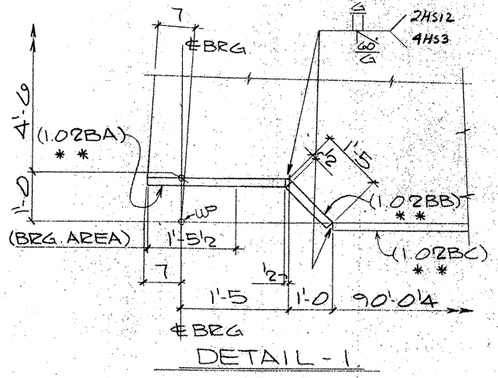

DETAIL-1

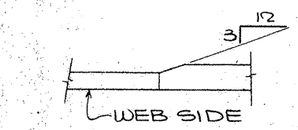

TYP. FLG. THKNESS TRANSITION

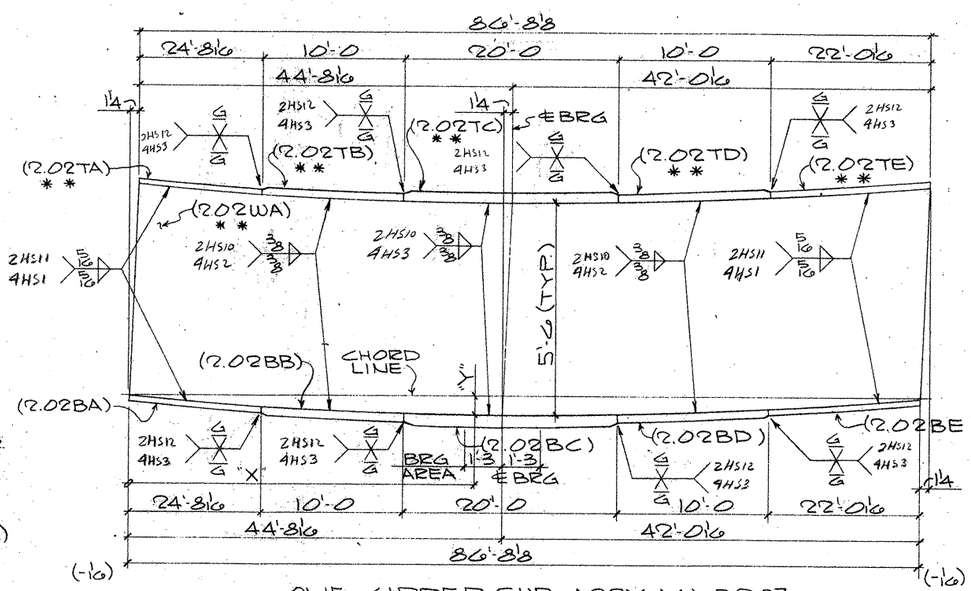

ONE GIRDER SUB-ASSY. MK-B207

(FOR GIRDER-225PG2.02)

MK-B207							
"X"	14'-2 7/16	29'-5¼	44'-8 1/16	59'-10 1/16	75'-0⅛	86'-8⅛	
"Y"	3/16	3/8	1/2	5/16	1/8	0"	
			℄BRG				

SHOP NOTES:

1) FOR GENERAL NOTES, SEE SHT. GN1
2) MATERIAL NOTED "**" MUST MEET CHARPY V-NOTCH REQUIREMENTS
3) FOR HEAT CURVE DIAGRAM, SEE SHT. 250

BILL OF MATERIAL

	Qnty.	Material	Length	Mark Temp.	Mark Ship.	Wt.	Cut From	Remarks
2	1	GIRDER SUB-ASSY			A207			
3	1	PL 1/2 × 66	93'-1⅞	1.02WA			207-15	CVN2
5	1	PL 1¼ × 22	91'-0¼	1.02TA			215-8	
6	1	PL 1¼ × 22	1'-11½	1.02BA			209-2	CVN2
7	1	PL 1¼ × 22	1'-4½	1.02BB			209-3	CVN2
8	1	PL 1¼ × 22	90'-0¼	1.02BC			210-4	CVN2
14	1	GIRDER SUB-ASSY			B207			
15	1	PL 5/8 × 66	86'-9⅜	2.02WA			207-16	CVN2
16	1	PL 1¼ × 22	24'-8 1/16	2.02TA			210-5	CVN2
17	1	PL 1¾ × 22	10'-0	2.02TB			210-6	CVN2
18	1	PL 2¼ × 22	20'-0	2.02TC			213-5	CVN3
19	1	PL 1¾ × 22	10'-0	2.02TD			210-6	CVN2
20	1	PL 1¼ × 22	22'-0 1/16	2.02TE			210-7	CVN2
21	1	PL 1¼ × 22	24'-8 1/16	2.02BA			215-3	
22	1	PL 1¾ × 22	10'-0	2.02BB			215-4	
23	1	PL 2¼ × 22	20'-0	2.02BC			215-5	
24	1	PL 1¾ × 22	10'-0	2.02BD			215-4	
25	1	PL 1¼ × 22	22'-0 1/16	2.02BE			215-6	

TEXAS DEPARTMENT OF TRANSPORTATION
APPROVED
DIVISION OF BRIDGES AND STRUCTURES
APR 23 1993
APPROVAL OF THIS DRAWING DOES NOT RELIEVE THE CONTRACTOR OF THE RESPONSIBILITY FOR THE CORRECTNESS OF DETAILS.

FOR APPROVAL
NOT FOR CONSTRUCTION

REVISION	DATE	DESCRIPTION OF REVISION
NO. 1		
NO. 2		
NO. 3		
NO. 4		
NO. 5		

PRINTING Req'd	For	Date

Bolts: Holes: Unless Noted
Shop Paint SEE SHT. GN1
Fab. Spec. A572-50 UU Inspection
Architect
Erection By Field Connections

HIRSCHFELD STEEL CO. INC.
1112 WEST 29TH SAN ANGELO, TEXAS 76903
PHONE (915) 653-3211

DESCRIPTION	680'-0 PLATE GIRDER UNIT
STRUCTURE	US 83/281 INTERCHANGE RAMP #2
LOCATION	HIDALGO COUNTY
CUSTOMER	GILBERT TEXAS CONSTRUCTION
SHIP TO	
Customer's Order No.	
Dwg. By CRT Date 9-92	SHEET 207 OF
Checked By JC Date 10-92	JOB NO. 92-107

CE #92-12 (LINE #2)

60207

FED. ROAD DIV. NO.	STATE	FEDERAL AID PROJECT NO.			
6	TX.	NH 92(50)M			
STATE DIST. NO.	COUNTY	CONTROL NO.	SECTION NO.	JOB NO.	HIGHWAY NO.
21	HIDALGO	39	17	97	83/281

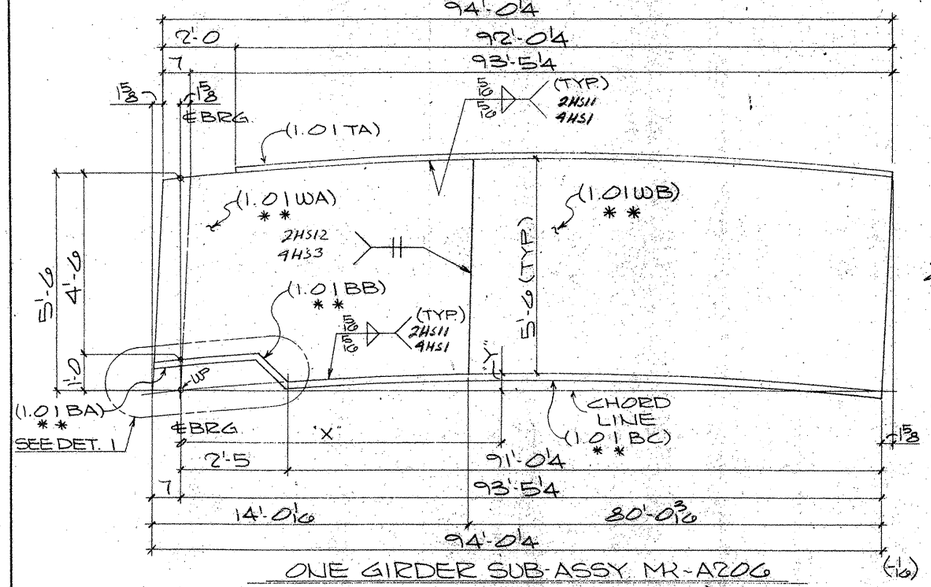

ONE GIRDER SUB-ASSY. MK-A206
(FOR GIRDER-220PG1.01)

MK-A206								
"X"	13'-5 1/16	15'-4 15/16	30'-9 5/8	46'-2 7/16	61'-7¼	77'-0 1/16	92'-4 3/8	93'-5¼
"Y"	1 3/16 ℄ WEB SPLICE	1 1/16	1 3/16	2⅛	1⅜	1 3/16	1/16	0"

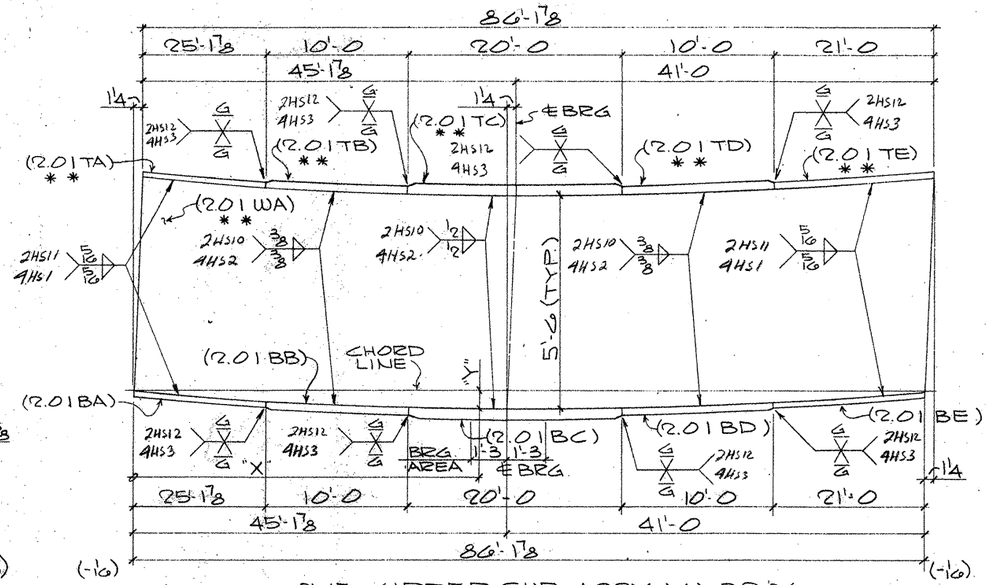

ONE GIRDER SUB-ASSY. MK-B206
(FOR GIRDER-224PG2.01)

MK-B206							
"X"	14'-4¼	29'-9 1/16	45'-1⅞	60'-5 3/16	75'-9 3/16	80'-1⅞	
"Y"	¼	½	9/16 ℄BRG	7/16	3/16	0"	

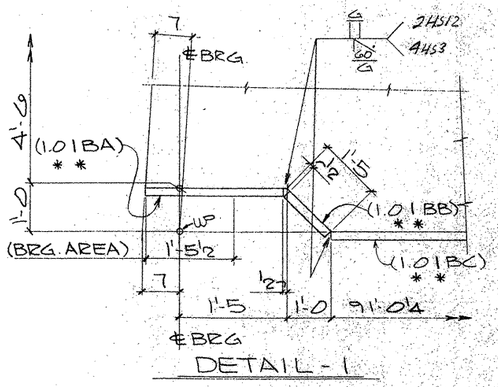

DETAIL-1

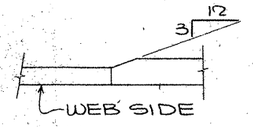

TYP. FLG. THKNESS TRANSITION

SHOP NOTES:

1) FOR GENERAL NOTES, SEE SHT. GN1
2) MATERIAL NOTED "**" MUST MEET CHARPY V-NOTCH REQUIREMENTS
3) FOR HEAT CURVE DIAGRAM, SEE SHT. "250

BILL OF MATERIAL

	Qnty.	Material	Length	Mark Temp.	Mark Ship	Wt	Cut From	Remarks
1								
2	1	GIRDER SUB-ASSY			A206			
3	1	PL 9/16 × 66	14'-0 5/16	1.01 WA			207-2	CVN2
4	1	PL 1/2 × 66	80'-1 15/16	1.01 WB			207-3	CVN2
5	1	PL 1¼ × 22	92'-0¼	1.01 TA			214-2	
6	1	PL 1¼ × 22	1'-11½	1.01 BA			209-2	CVN2
7	1	PL 1¼ × 22	1'-4½	1.01 BB			209-3	CVN2
8	1	PL 1¼ × 22	91'-0¼	1.01 BC			209-6	CVN2
9								
10								
11								
12								
13								
14	1	GIRDER SUB-ASSY			B206			
15	1	PL 5/8 × 66	86'-3⅜	2.01 WA			207-4	CVN2
16	1	PL 1¼ × 22	25'-1⅞	2.01 TA			209-7	CVN2
17	1	PL 1¾ × 22	10'-0	2.01 TB			209-8	CVN2
18	1	PL 2½ × 22	20'-0	2.01 TC			213-2	CVN3
19	1	PL 1¾ × 22	10'-0	2.01 TD			209-8	CVN2
20	1	PL 1¼ × 22	21'-0	2.01 TE			209-9	CVN2
21	1	PL 1¼ × 22	25'-1⅞	2.01 BA			214-3	
22	1	PL 1¾ × 22	10'-0	2.01 BB			214-4	
23	1	PL 2½ × 22	20'-0	2.01 BC			214-5	
24	1	PL 1¾ × 22	10'-0	2.01 BD			214-4	
25	1	PL 1¼ × 22	21'-0	2.01 BE			214-6	
26								
27								
28								
29								
30								
31								
32								
33								
34								
35								
36								
37								
38								
39								
40								
41								
42								
43								
44								
45								
46								
47								
48								
49								
50								
51								
52								
53								
54		TEXAS DEPARTMENT OF TRANSPORTATION APPROVED DIVISION OF BRIDGES AND STRUCTURES						
55		APR 23 1993						
56		APPROVAL OF THIS DRAWING DOES NOT RELIEVE THE CONTRACTOR OF THE RESPONSIBILITY FOR THE CORRECTNESS OF THE DETAILS						
57		FOR APPROVAL NOT FOR CONSTRUCTION						
58								
59								
60								

REVISION	DATE	DESCRIPTION OF REVISION
NO. 1		
NO. 2		
NO. 3		
NO. 4		
NO. 5		

PRINTING Req'd	For	Date

Rolls. Holes. Unless Noted
Shop Paint SEE SHT. GN1
Fab Spec. A572-50 UU. Inspection
Architect
Erection By. Field Connections

HIRSCHFELD STEEL CO. INC.
112 WEST 29TH SAN ANGELO, TEXAS 76903
PHONE (915) 653-3211

DESCRIPTION 280'-0 PLATE GIRDER UNIT
STRUCTURE US 83/281 INTERCHANGE RAMP "2"
LOCATION HIDALGO COUNTY
CUSTOMER GILBERT TEXAS CONSTRUCTION
SHIP TO
Customer's Order No.
Dwg. By CRT Date 9-92
Checked By JC Date 10-92
SHEET 206 OF
JOB NO. 92-107

APV MAR 24

60207

FED. ROAD DIV. NO.	STATE	FEDERAL AID PROJECT NO.				
6	TX.	NH 92(50)M				
STATE DIST. NO.	COUNTY	CONTROL NO.	SECTION NO.	JOB NO.	HIGHWAY NO.	
21	HIDALGO	39	17	97	83/281	

CE*92-12 (LINE #1)

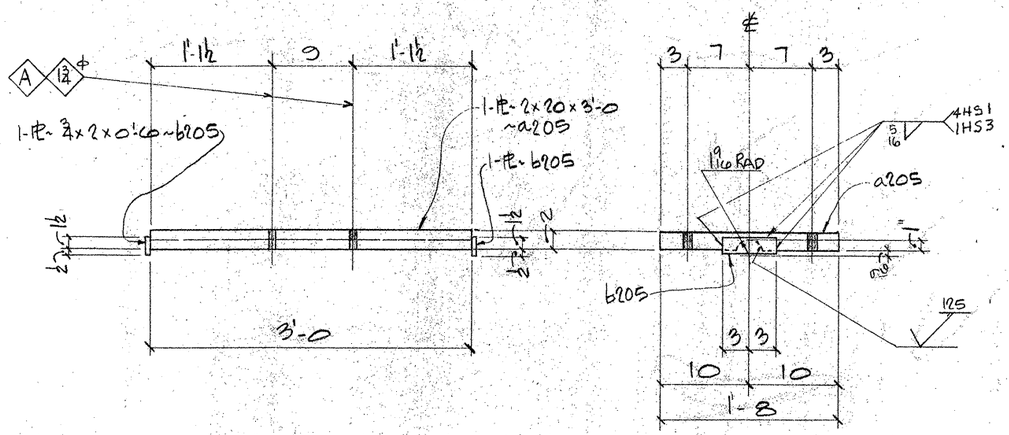

2- SOLE PLATES~205BS1

(SHOP WELD TO BENT CAP 2035B1.18)

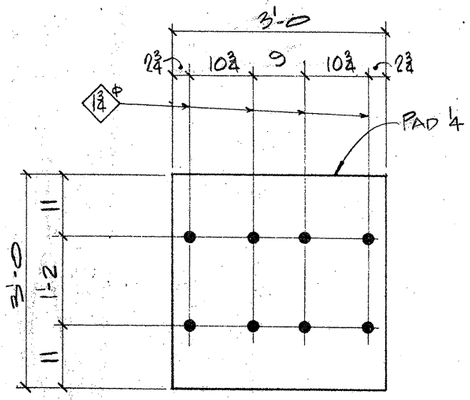

2- PREFORMED FABRIC PAD~205BS3

(PER SDH & PT ITEM 441.33)

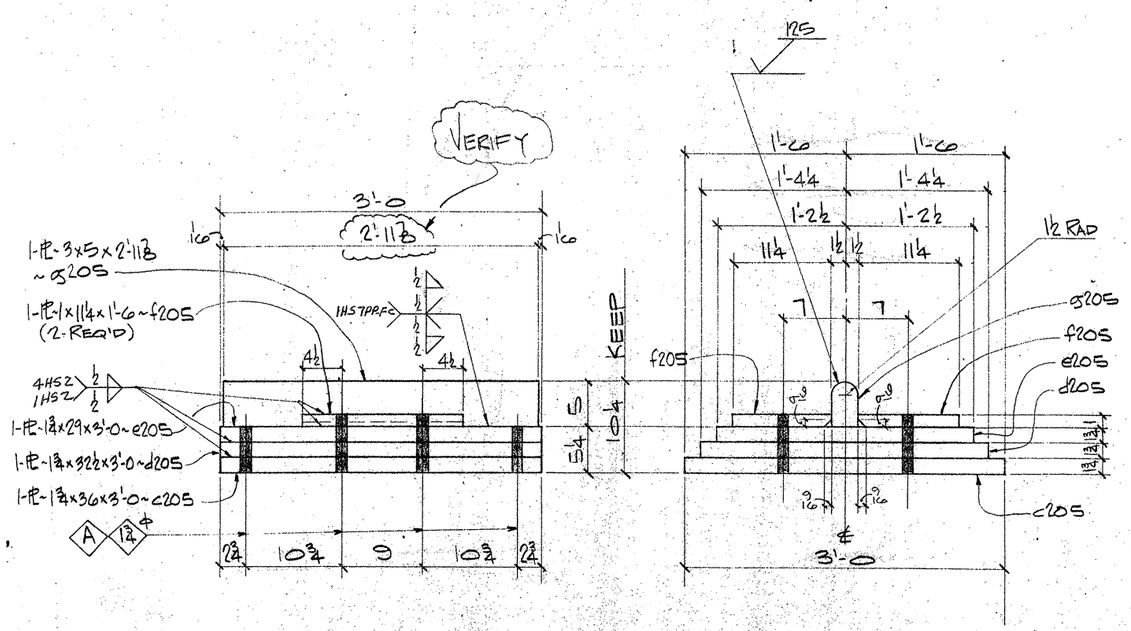

2- MASONRY PLATES~205BS2

NOTE:
FOR GENERAL NOTES, SEE SHT. GN1.

BILL OF MATERIAL

	Qnty	Material	Length	Mark Temp.	Mark Ship.	Wt	Cut From	Remarks
1								
2								
3								
4	2	SOLE PLATES			205BS1			
5	2	PL 2x20	3'-0	a205			204-6	
6	4	PL ¾x2	0'-6	b205			204-7	
7								
8								
9								
10	2	MASONRY PLATES			205BS2			
11	2	PL ¾x36	3'-0	c205			204-1	
12	2	PL ¾x32½	3'-0	d205			204-2	
13	2	PL ¾x29	3'-0	e205			204-3	
14	4	PL 1 x11¼	1'-6	f205			204-4	
15	2	PL 3x5	2'-11⅞	s205			204-5	
16								
17								
18								
19								
20								
21								
22								
23								
24	2	PREFORMED FABRIC PAD			205BS3			
25	2	PAD ¼x36	3'-0				204-14	
26		(PER SDH & PT ITEM 441.33)						
27								
28								
29								
30								
31								
32								
33								
34								
35								
36								
37								
38								
39								
40								
41								
42								
43								
44								
45								
46								
47								
48								
49								
50								
51								
52								
53								
54								
55								
56								
57								
58								
59								
60								

TEXAS DEPARTMENT OF TRANSPORTATION
APPROVED EXCEPT AS NOTED
DIVISION OF BRIDGES AND STRUCTURES
APR 23 1993
APPROVAL OF THIS DRAWING DOES NOT RELIEVE THE CONTRACTOR OF THE RESPONSIBILITY FOR THE CORRECTNESS OF DETAIL

FOR APPROVAL
NOT FOR CONSTRUCTION

REVISION	DATE	DESCRIPTION OF REVISION
NO. 1		
NO. 2		
NO. 3		
NO. 4		
NO. 5		

PRINTING Req'd	For	Date
	0	11/4

Bolts. Holes. NTP. Unless Noted
Shop Paint SEE SHT GN1
Fab Spec A572-50 Inspection
Architect
Erection By Field Connections

HIRSCHFELD STEEL CO. INC.
112 WEST 29TH SAN ANGELO, TEXAS 76903
PHONE (915) 653-3211

DESCRIPTION	680'-0 PLATE GIRDER UNIT
STRUCTURE	US 83/281 INTERCHANGE RAMP "Z"
LOCATION	HIDALGO COUNTY
CUSTOMER	GILBERT TEXAS CONSTRUCTION
SHIP TO	
Customer's Order No.	
Dwg. By JRE	Date 9/92
Checked By JC	Date 10-92

SHEET 205 OF
JOB NO. 92-107

APR MAR 2-4

FED ROAD DIV NO	STATE	FEDERAL AID PROJECT NO.				
6	TX.	NH 92(50) M				
STATE DIST NO	COUNTY	CONTROL NO	SECTION NO	JOB NO	HIGHWAY NO	
21	HIDALGO	39	17	97	83/281	

CE 92-12 X

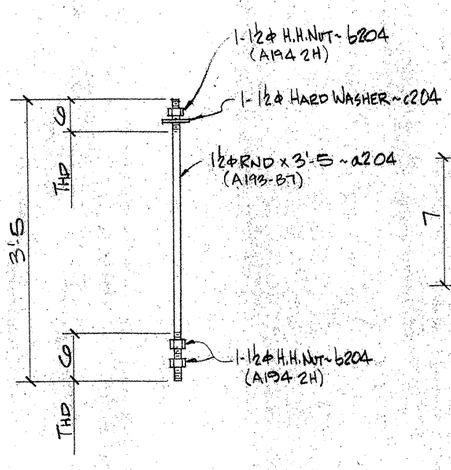

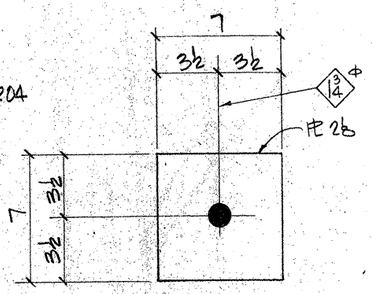

8- PLATE WASHER~204P1
(GALV.)

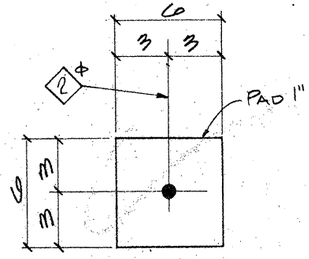

8- PREFORMED FABRIC PAD~204P3
(PER SDH & PT ITEM 441.33)

8- ANCHOR BOLTS~204AB1
(GALV. SEE GALV. NOTE)

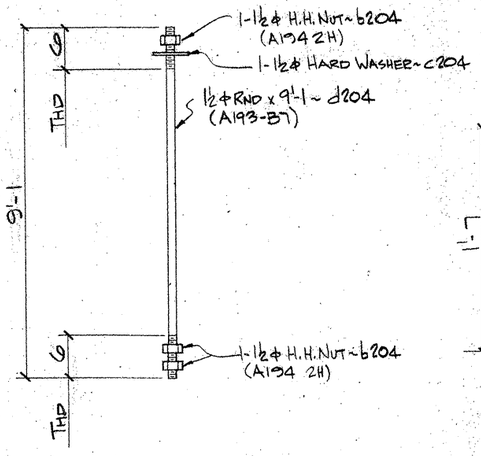

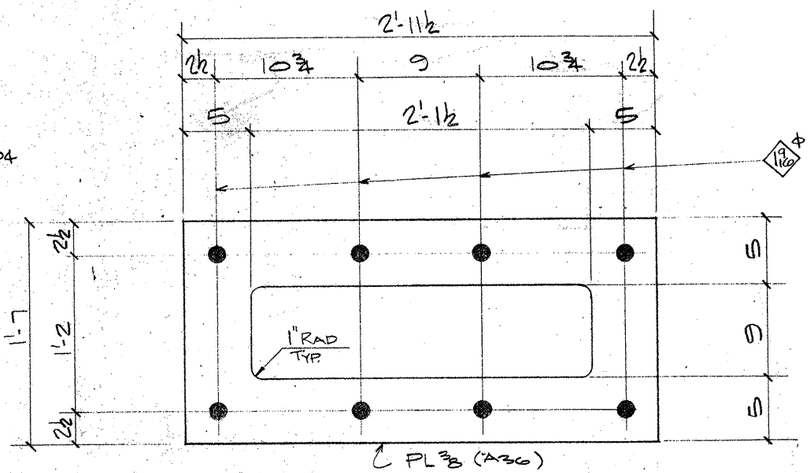

2- BOLT TEMPLATE~204P2
(NO PAINT)

8- HOLD DOWN BOLTS~204AB2
(GALV. SEE GALV. NOTE)

GALV. NOTE:
HOT DIP GALVANIZE AFTER FABRICATION. ALL NUTS SHALL BE RETAPPED AFTER GALVANIZING FOR CLASS 2B FIT.

NOTE:
FOR GENERAL NOTES, SEE SHT. GN1.

Bill of outs

BILL OF MATERIAL

	Qnty.	Material	Length	Mark Temp.	Mark Ship.	Wt.	Cut From	Remarks
4	8	ANCHOR BOLTS			204AB1			
5	8	1½øRND	3'-5	a204			202-3	A193-B7
6	24	1½ø H.H.NUT		b204			202-4	A194 2H
7	8	1½ø HARD WASH.		c204			202-5	A325
12	8	ANCHOR BOLTS			204AB2			
13	8	1½ø RND	9'-1	d204			202-2	A193-B7
14	24	1½ø H.H.NUT		b204			202-4	A194 2H
15	8	1½ø HARD WASH		c204			202-5	A325
19	8	PLATE WASHER			204P1			
20	8	PL 2øx7	0'-7				202-11	
24	2	BOLT TEMPLATE			204P2			
25	2	PL ⅜øx19	2'-11½				202-8	A36
29	8	PREFORMED PAD			204P3			
30	8	PAD 1 x 6 (PER SDH & PT ITEM 441.33)	0'-6				202-14	

TEXAS DEPARTMENT OF TRANSPORTATION
APPROVED
DIVISION OF BRIDGES AND STRUCTURES
APR 23 1993
APPROVAL OF THIS DRAWING DOES NOT RELIEVE THE CONTRACTOR OF THE RESPONSIBILITY FOR THE CORRECTNESS OF DETAIL

FOR APPROVAL
NOT FOR CONSTRUCTION

REVISION	DATE	DESCRIPTION OF REVISION
NO. 1		
NO. 2		
NO. 3		
NO. 4		
NO. 5		

PRINTING Req'd	For	Date
	DR	7/16

Bolts Holes NTD
Shop Paint NO PAINT
Fab Spec A572 50 U.N. Inspection
Architect
Erection By Field Connections

HIRSCHFELD STEEL CO. INC.
112 WEST 29TH SAN ANGELO, TEXAS 76903
PHONE (915) 653-3211

DESCRIPTION	680'-0 PLATE GIRDER UNIT
STRUCTURE	US 83/281 INTERCHANGE RAMP #2
LOCATION	HIDALGO COUNTY
CUSTOMER	GILBERT TEXAS CONSTRUCTION
SHIP TO	
Customer's Order No.	
Dwg. By JRC Date 8/92	SHEET 204 OF.
Checked By DLT Date 8/92	JOB NO 92-107

FE 92-12

M0207

FED ROAD DIV. NO	STATE	FEDERAL AID PROJECT NO.			
6	TX.	NH (50) M			
STATE DIST. NO	COUNTY	CONTROL NO	SECTION NO	JOB NO	HIGHWAY NO
21	HIDALGO	39	17	97	83/281

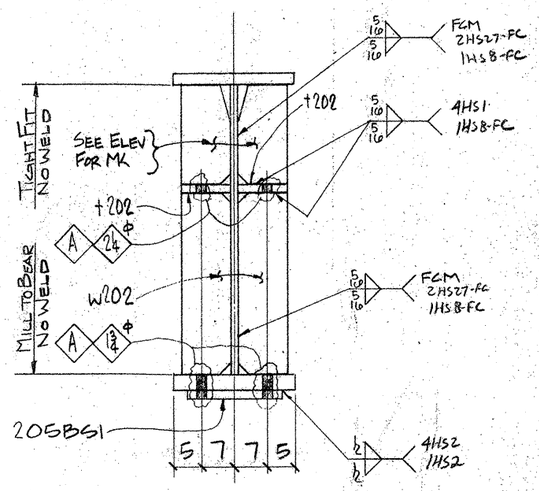

SECTION ~ A

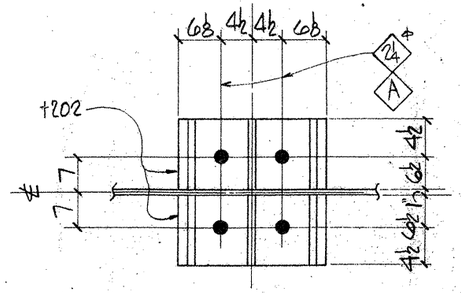

SECTION ~ B

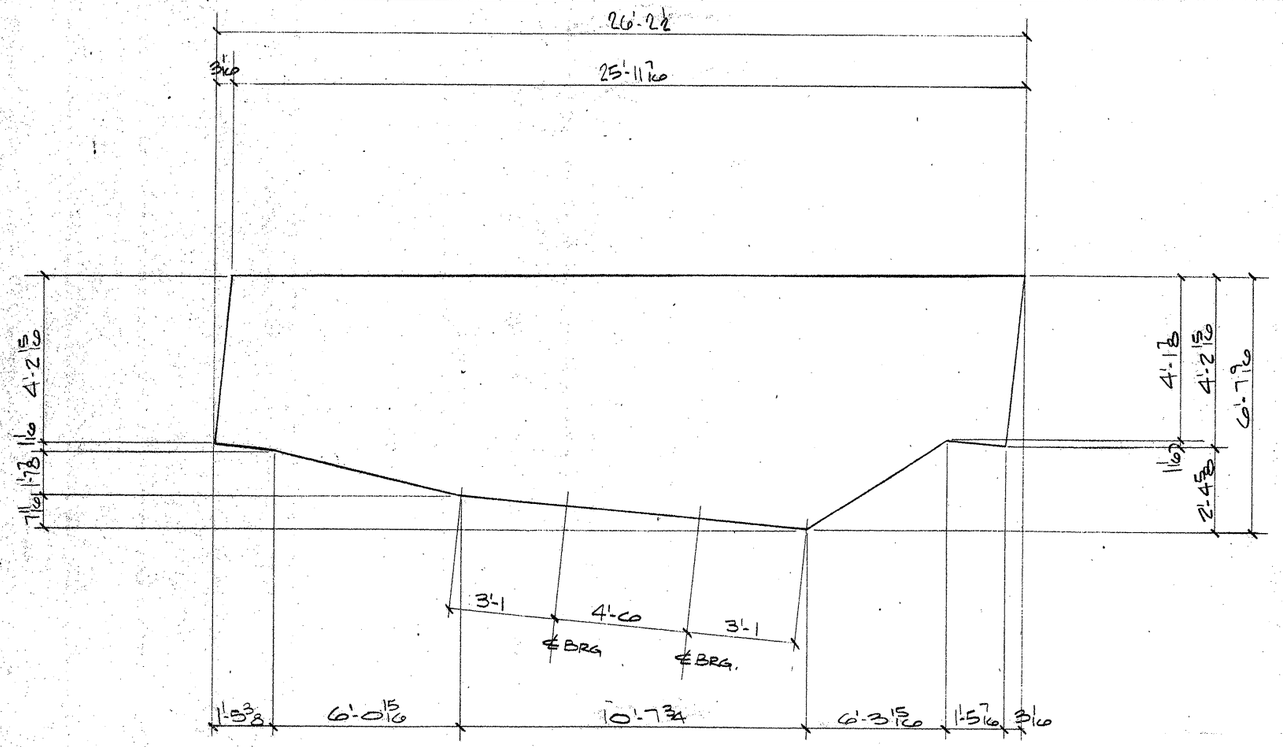

DETAIL WEB PL ~ 1.18WA

BILL OF MATERIAL

	Qnty.	Material	Length	Mark Temp.	Mark Ship.	Wt.	Cut From	Remarks
4	ONE	STEEL BENT CAP			205SB1-B			
5	ONE	PL 1 x 79 9/16	26'-2½	1.18WA			201-1	FCM1
6	ONE	PL 1½ x 24	25'-11 7/16	1.18TA			201-2	FCM1
7	ONE	PL 1½ x 24	6'-3 15/16	1.18BA			201-4	CVN2
8	ONE	PL 3 x 24	10'-8	1.18BB			201-3	CVN3
9	ONE	PL 1½ x 24	6'-9 9/16	1.18BC			201-5	CVN2
10	2	ANGLE		d202				
11	2			e202				
12	2			f202				
13	2			g202				
14	ONE	STIFF		h202R				
15	ONE			h202L				
16	ONE			k202R				
17	ONE			k202L				
18	ONE			m202R				
19	ONE			m202L				
20	ONE			n202R				
21	ONE			n202L				
22	ONE			p202R				
23	ONE			p202L				
24	ONE			s202R				
25	ONE			s202L				
26	4	BRG PLATE		t202				
27	12	STIFF		w202				
28	2	SOLE PLATE		205BS1				
29	68	HS BOLT 1¢	0'-4					A325
30	68	HS WASH 1¢						A325
31	ONE	PL 1½ x 24	1'-5 7/16	1.18BD			201-6	CVN2
32	ONE	PL 1½ x 24	1'-5 7/16	1.18BE			201-6	CVN2

TEXAS DEPARTMENT OF TRANSPORTATION
APPROVED
DIVISION OF BRIDGES AND STRUCTURES
APR 23 1993
APPROVAL OF THIS DRAWING DOES NOT RELIEVE THE CONTRACTOR OF THE RESPONSIBILITY FOR THE CORRECTNESS OF DETAIL.

FOR APPROVAL MAR 23 '93
NOT FOR CONSTRUCTION

REVISION	DATE	DESCRIPTION OF REVISION
NO. 1		
NO. 2		
NO. 3		
NO. 4		
NO. 5		

PRINTING

Req'd	For	Date

Bolts A325 TY1 Holes: 1 1/16 ϕ Unless Noted
Shop Paint SEE SHT. GN1
Fab. Spec A572 50 U.N. Inspection
Architect
Erection By Field Connections

HIRSCHFELD STEEL CO. INC.
112 WEST 29TH SAN ANGELO, TEXAS 76903
PHONE (915) 653-3211

DESCRIPTION	680'-0 PLATE GIRDER UNIT
STRUCTURE	US 83/281 INTERCHANGE RAMP "2"
LOCATION	HIDALGO COUNTY
CUSTOMER	GILBERT TEXAS CONSTRUCTION
SHIP TO	
Customer's Order No.	
Dwg. By	Date 8/92
Checked By JC	Date 10/92

SHEET 203B OF
JOB NO. 92-107
CE92-12

BG207

FED ROAD DIV NO	STATE	FEDERAL AID PROJECT NO.				
6	TX.	NH 92(50) M				
STATE DIST. NO	COUNTY	CONTROL NO	SECTION NO	JOB NO	HIGHWAY NO	
21	HIDALGO	39	17	97	83/281	

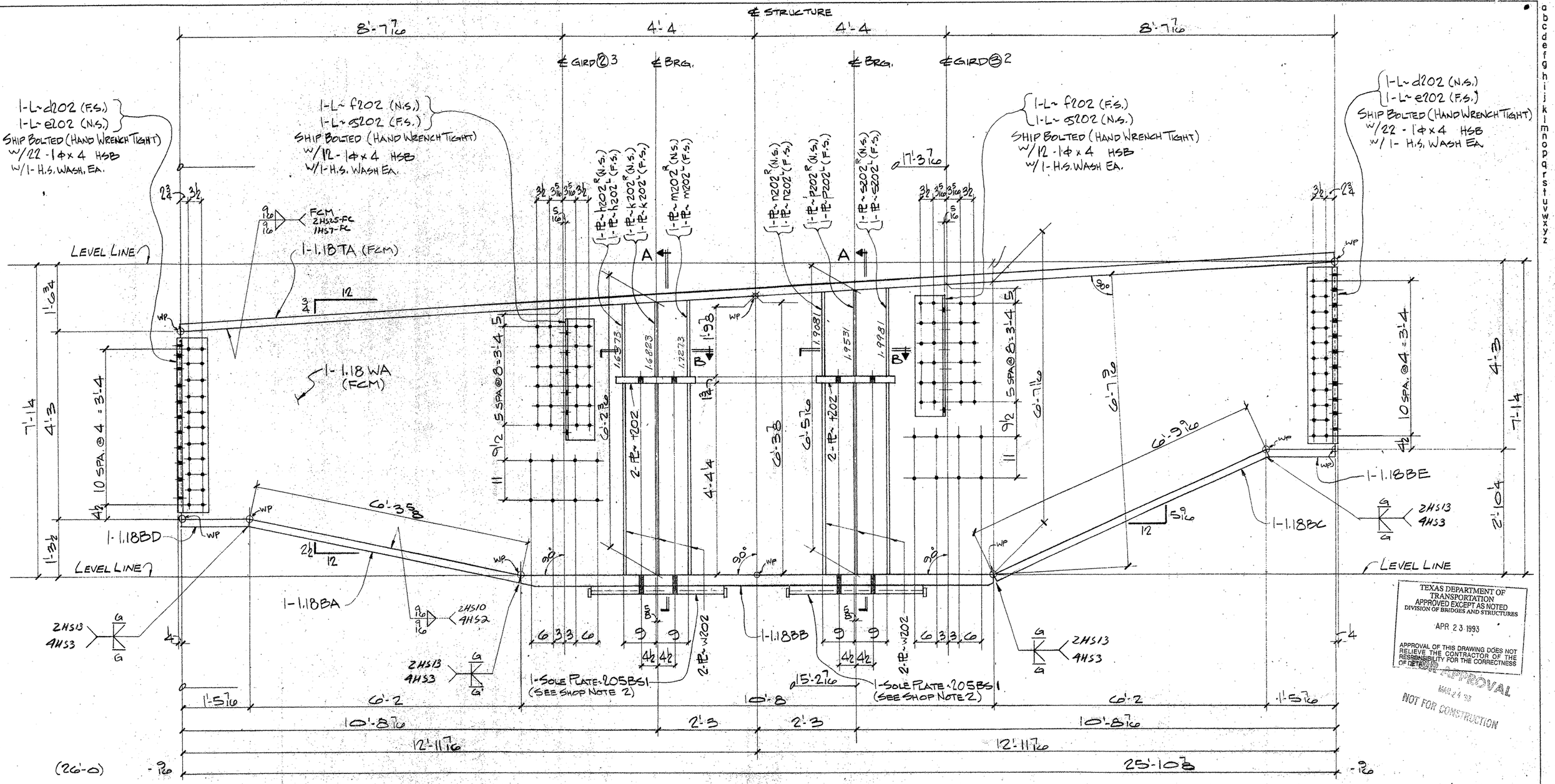

SHOP NOTES:

1. WORK THIS SHT. W/SHT. 203B.
2. SPACING & ALIGNMENT OF SOLE PLATES 205BS1 IS CRITICAL & MUST BE EXACT.
3. FOR GENERAL NOTES SEE SHT. GN1.

(LOOKING DOWN STATION)

ONE - STEEL BENT CAP ~ 205SB1.18

(APPROX. WT. = TONS)

BG207

CO. ROAD DIV. NO.	STATE	FEDERAL AID PROJECT NO.			
6	TX.	NH 92 (50) M			
STATE DIST. NO	COUNTY	CONTROL NO.	SECTION NO	JOB NO	HIGHWAY NO
21	HIDALGO	39	17	97	83/281

TEXAS DEPARTMENT OF TRANSPORTATION
APPROVED EXCEPT AS NOTED
DIVISION OF BRIDGES AND STRUCTURES
APR 23 1993
APPROVAL OF THIS DRAWING DOES NOT RELIEVE THE CONTRACTOR OF THE RESPONSIBILITY FOR THE CORRECTNESS OF DETAILS
FINAL APPROVAL
MAR 24 '93
NOT FOR CONSTRUCTION

APV MAR 24

HOLES 1/16 U.N. | FOR AP'VL
BOLTS ____ U.N. | RETURNED
WELDS ____ U.N. | TO SHOP
PAINT

REVISIONS		
NO.	DATE	REMARKS
1		
2		
3		
4		

HIRSCHFELD STEEL CO. INC.
112 WEST 29TH SAN ANGELO, TEXAS 76903
PHONE (915) 653-3211

CUSTOMER GILBERT TEXAS CONSTRUCTION
ARCHITECT
PROJECT US 83/281 INTERCHANGE RAMP #2
LOCATION HIDALGO COUNTY
DRAWN JJZ DATE 9/92
CHECKED JC DATE 10-92
JOB NO 92-107
SHEET NO 205A/B

CE 92-12

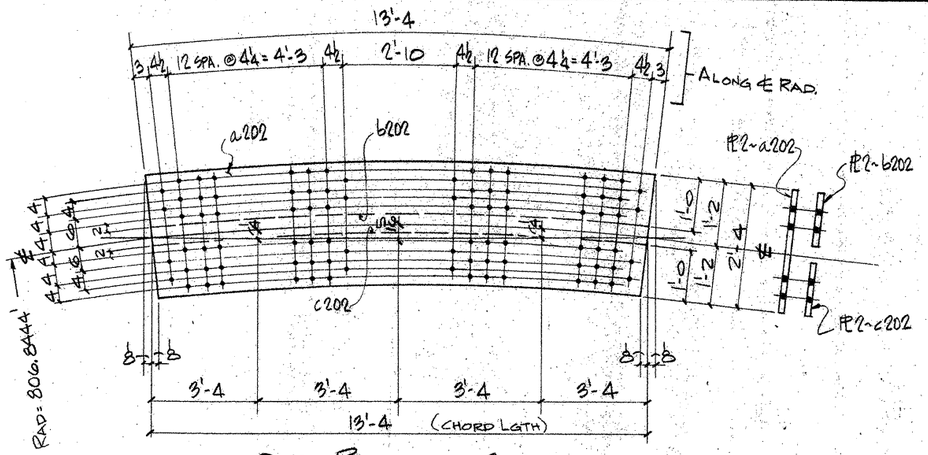

ONE PLATE ~ a202

ONE PLATE ~ b202

ONE PLATE ~ c202

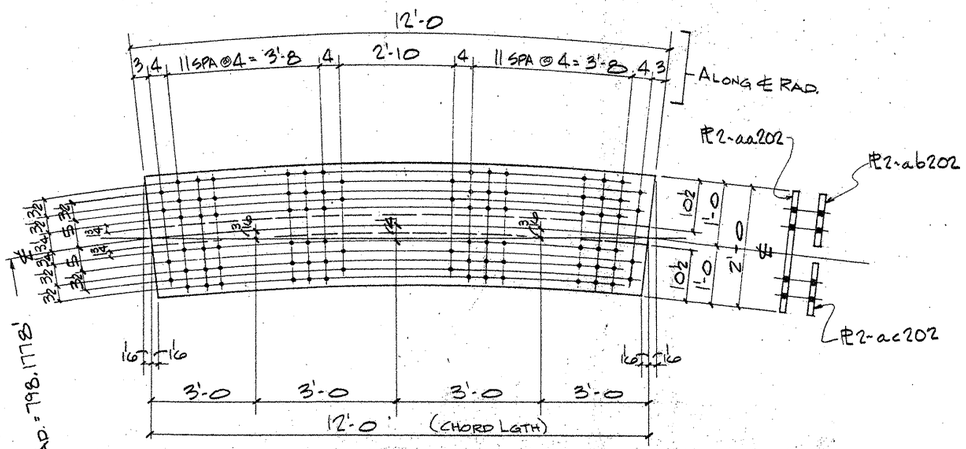

ONE PLATE ~ aa202

ONE PLATE ~ ab202

ONE PLATE ~ ac202

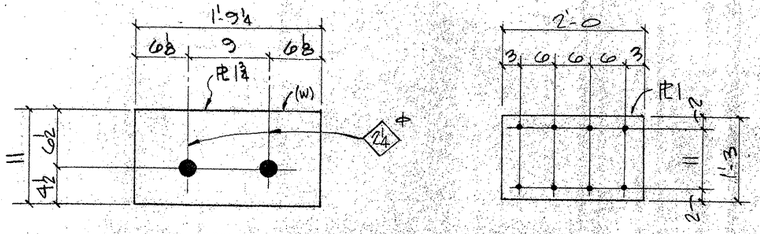

4-PLATES ~ t202

4-PLATES ~ V202

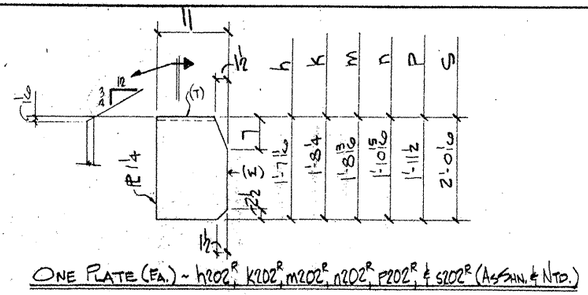

ONE PLATE (EA.) ~ h202R, k202R, m202R, n202R, p202R, & s202R (ASSEM. & NTD.)

ONE PLATE (EA.) ~ h202L, k202L, m202L, n202L, p202L, & s202L (OPP. HD.)

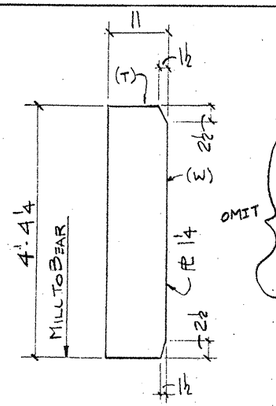

12- PLATES ~ W202

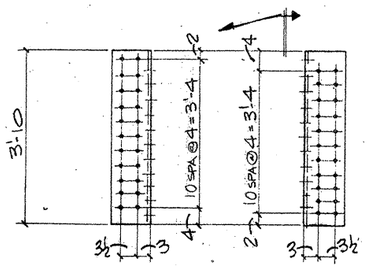

2-ANGLES ~ d202

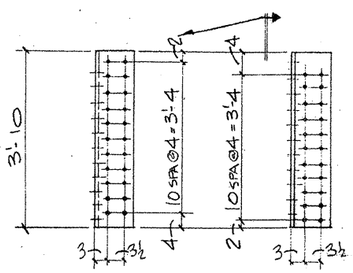

2-ANGLES ~ e202

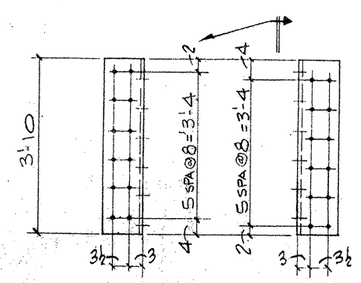

4-ANGLES ~ f202

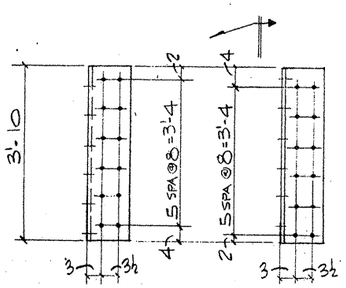

4-ANGLES ~ J202

NOTE:
FOR GENERAL NOTES, SEE SHT. GN1.

Q0207

FED. ROAD DIV. NO.	STATE	FEDERAL AID PROJECT NO.			
6	TX.	NH92(50) M			
STATE DIST. NO.	COUNTY	CONTROL NO.	SECTION NO.	JOB NO.	HIGHWAY NO.
21	HIDALGO	39	17	97	83/281

BILL OF MATERIAL

	Qnty	Material	Length	Mark	Ship	Wt.	Cut From	Remarks
1								
2								
3								
4	ONE	PL 2 x 28 5/16	13'-4¼	a202			201-10	CVN 2
5	ONE	PL 2 x 12 5/16	13'-4¼	b202			201-11	CVN 2
6	ONE	PL 2 x 12 5/16	13'-4	c202			201-11	CVN 2
7	ONE	PL 2 x 24 ¼	12'-0⅜	aa202			201-12	CVN 2
8	ONE	PL 2 x 10 ¾	12'-0⅜	ab202			201-13	CVN 2
9	ONE	PL 2 x 10 ¾	12'-0	ac202			201-13	CVN 2
10	2	L 8 x 8 x ¾	3'-10	d202			201-9	CVN 2
11	2	L 8 x 8 x ¾	3'-10	e202			201-9	CVN 2
12	4	L 8 x 8 x ¾	3'-10	f202			201-9	CVN 2
13	4	L 8 x 8 x ¾	3'-10	g202			201-9	CVN 2
14	ONE	PL 1¼ x 11	1'-7 11/16	h202R			201-17	
15	ONE	PL 1¼ x 11	1'-7 11/16	h202L			201-17	
16	ONE	PL 1¼ x 11	1'-8⅜	k202R			201-17	
17	ONE	PL 1¼ x 11	1'-8⅜	k202L			201-17	
18	ONE	PL 1¼ x 11	1'-8 13/16	m202R			201-17	
19	ONE	PL 1¼ x 11	1'-8 13/16	m202L			201-17	
20	ONE	PL 1¼ x 11	1'-10 15/16	n202R			201-16	
21	ONE	PL 1¼ x 11	1'-10 15/16	n202L			201-16	
22	ONE	PL 1¼ x 11	1'-11½	P202R			201-16	
23	ONE	PL 1¼ x 11	1'-11½	P202L			201-16	
24	ONE	PL 1¼ x 11	2'-0 1/16	s202R			201-16	
25	ONE	PL 1¼ x 11	2'-0 1/16	s202L			201-16	
26	4	PL 1¾ x 11	1'-9¼	t202			201-7	
27	4	PL 1 x 15	2'-0	V202			201-14	CVN 2
28	12	PL 1¼ x 11	4'-4¼	W202			201-15	
29								
30								
31								
32								
33								
34								
35								
36								
37								
38								
39								
40								
41								
42								
43								
44								
45								
46								
47								
48								
49								
50								
51								
52								
53								
54								
55								
56								
57								
58								
59								
60								

OMIT

TEXAS DEPARTMENT OF TRANSPORTATION
APPROVED
DIVISION OF BRIDGES AND STRUCTURES
APR 23 1993
APPROVAL OF THIS DRAWING DOES NOT RELIEVE THE CONTRACTOR OF THE RESPONSIBILITY FOR THE CORRECTNESS OF DETAIL.

FOR APPROVAL
MAR 24 93
NOT FOR CONSTRUCTION

REVISION	DATE	DESCRIPTION OF REVISION
NO. 1		
NO. 2		
NO. 3		
NO. 4		
NO. 5		

PRINTING

Req'd	For	Date
APR 1993	24	

Bolts: Holes: 11/16 ℄ Unless Noted.
Shop Paint: SEE SHT. GN1
Fab. Spec: A572-50 Inspection
Architect:
Erection By: Field Connections

HIRSCHFELD STEEL CO. INC.
112 WEST 29TH SAN ANGELO, TEXAS 76903
PHONE (915) 653-3211

DESCRIPTION	680'-0 PLATE GIRDER UNIT
STRUCTURE	US 83/281 INTERCHANGE RAMP #2
LOCATION	HIDALGO COUNTY
CUSTOMER	GILBERT TEXAS CONSTRUCTION
SHIP TO	
Customer's Order No.	
Dwg. By: JRE Date: 3/92	SHEET 20 OF
Checked By: JC Date: 10/92	JOB NO. 92-107

CE 92-12

332640

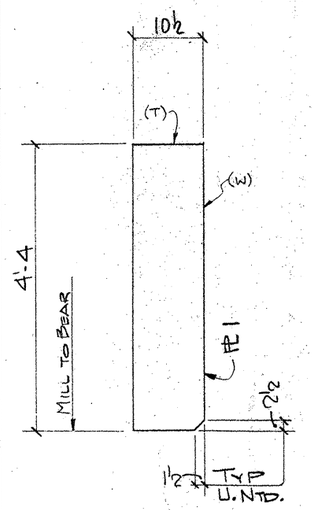

8 - PLATES ~ a201
(END BRG.)

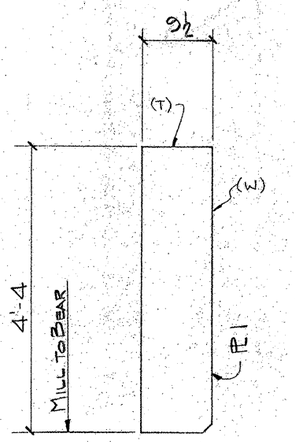

8 - PLATES ~ b201
(END BRG.)

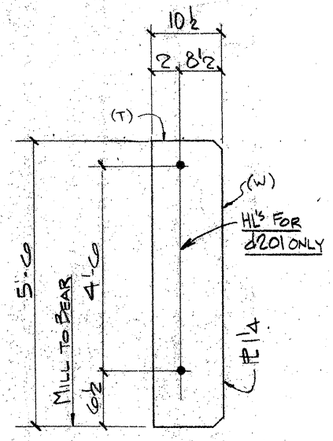

2 - PLATES "AS NTD" ~ c201
(INT. BRG.)

2 - PLATES "AS NTD." ~ d201
(INT. BRG)

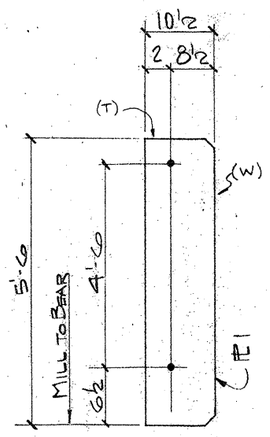

4 - PLATES ~ e201
(INT. BRG.)

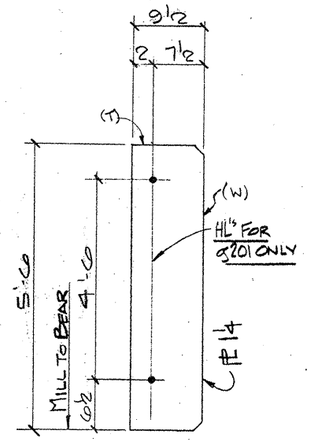

ONE - PLATE "AS NTD" ~ f201
(INT BRG)

4 - PLATE "AS NTD" ~ g201
(INT. BRG.)

2 - PLATES "AS NTD" ~ h201
(INT. BRG)

2 - PLATES "AS NTD" ~ k201
(INT BRG)

ONE - PLATE ~ m201
(INT. BRG.)

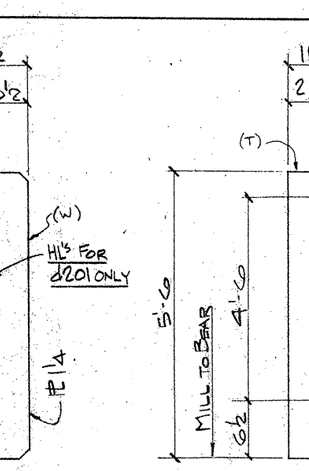

156 - PLATES "AS NTD" ~ n201
(INT. STIFF)

84 - PLATES "AS NTD" ~ P201
(INT. STIFF)

SHOP NOTES:

1. FOR GENERAL NOTES: SEE SHT GN1.
2. (T) INDICATES "TOP"
3. (W) INDICATES "WEB"
4. All holes to be drilled unless Ntd.

BILL OF MATERIAL

	Qnty	Material	Length	Mark Temp	Mark Ship.	Wt.	Cut From	Remarks
4	8	PL 1 x 10½	4'-4	a201			203-1	
5	8	PL 1 x 9½	4'-4	b201			203-2	
6	2	PL 1¼ x 10½	5'-0	c201			203-6	
7	2	PL 1¼ x 10½	5'-0	d201			203-6	
8	4	PL 1 x 10½	5'-0	e201			203-4	
9	ONE	PL 1¼ x 9½	5'-0	f201			203-5	
10	4	PL 1¼ x 9½	5'-0	g201			203-5	
11	2	PL 1 x 9½	5'-0	h201			203-3	
12	2	PL 1 x 9½	5'-0	k201			203-3	
13	ONE	PL 1¼ x 12½	5'-0	m201			203-7	
14	156	PL ½ x 9½	5'-0	n201			203-9	Punch
15	84	PL ½ x 9½	5'-0	P201			203-9	Punch

TEXAS DEPARTMENT OF TRANSPORTATION
APPROVED
DIVISION OF BRIDGES AND STRUCTURES
APR 23 1993
APPROVAL OF THIS DRAWING DOES NOT RELIEVE THE CONTRACTOR OF THE RESPONSIBILITY FOR THE CORRECTNESS OF DETAIL

FOR APPROVAL
MAR 24 93
NOT FOR CONSTRUCTION

REVISION	DATE	DESCRIPTION OF REVISION
NO. 1		
NO. 2		
NO. 3		
NO. 4		
NO. 5		

PRINTING

Req'd	For	Date

Bolts Holes 15/16ø Unless Noted
Shop Paint SEE SHT GN1
Fab. Spec. A36 Inspection
Architect
Erection By Field Connections

HIRSCHFELD STEEL CO. INC.
112 WEST 29TH SAN ANGELO, TEXAS 76903
PHONE (915) 653-3211

DESCRIPTION 680'-0 PLATE GIRDER UNIT
STRUCTURE US 83/281 INTERCHANGE RAMP #2
LOCATION HIDALGO COUNTY
CUSTOMER GILBERT TEXAS CONSTRUCTION
SHIP TO
Customer's Order No.
Dwg. By JBE Date 8/92
Checked By JC Date 10-92
SHEET OF 201
JOB NO. 92-107

CE92-12

Q0207

FED. ROAD DIV. NO.	STATE	FEDERAL AID PROJECT NO.			
6	TX.	NH92 (50) M			
STATE DIST. NO.	COUNTY	CONTROL NO.	SECTION NO.	JOB NO.	HIGHWAY NO.
21	HIDALGO	39	17	97	83/281

APR MAR 24

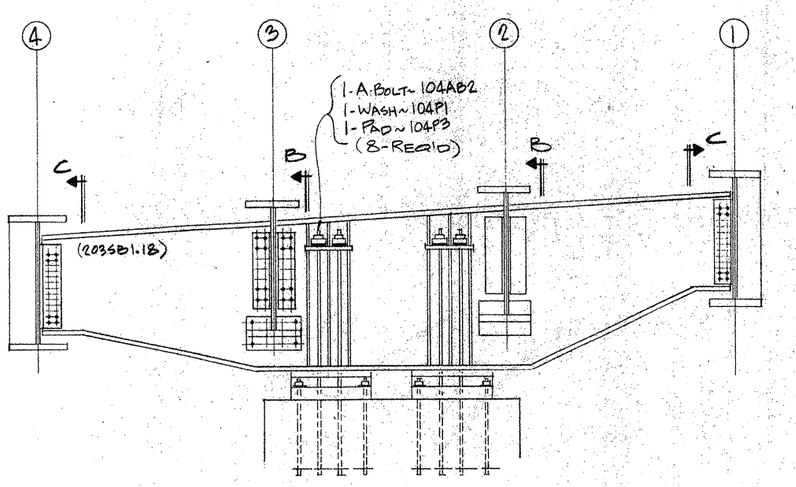

SECTION~A-A

GENERAL NOTES:

THE STEEL BENT CAP SHALL BE ERECTED WITH THE WEB SET VERTICAL AND ALL ANCHOR BOLTS UNIFORMLY TIGHTENED. ADJUSTMENT OF GIRDERS FOR PROPER SPLICE ALIGNMENT CAN BE MADE BY LOOSENING NUTS ON ONE SIDE OF THE CAP WHILE TIGHTENING NUTS ON THE OTHER SIDE BY AN EQUAL AMOUNT. AFTER THE SLAB AND RAIL HAVE BEEN PLACED AND DEAD LOAD DEFLECTION HAS OCCURRED, ALL ANCHOR BOLTS SHALL BE LOOSENED AND UNIFORMLY RETIGHTENED TO A SNUG FIT PLUS 1/4 TURN CONDITION.

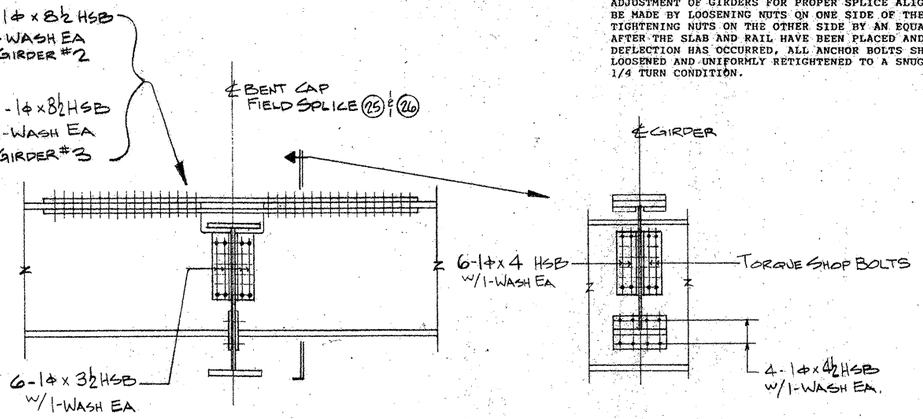

SECTION~B

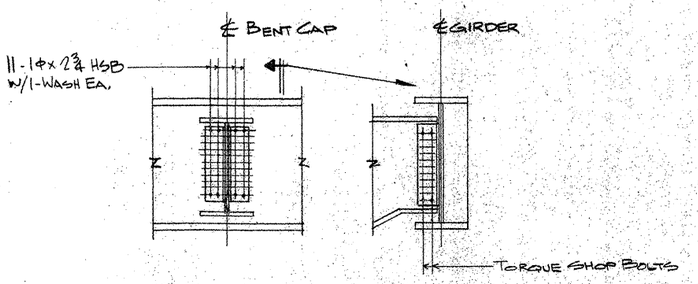

SECTION~C

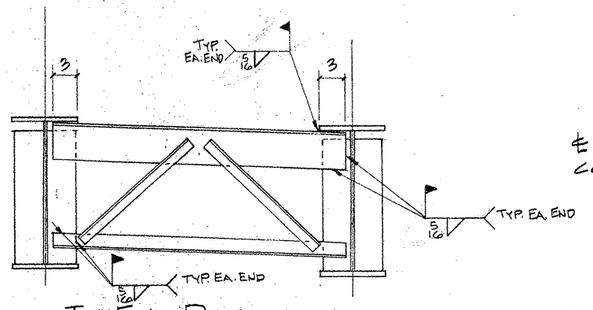

TYP. END DIAFRAMS (TYPE B)

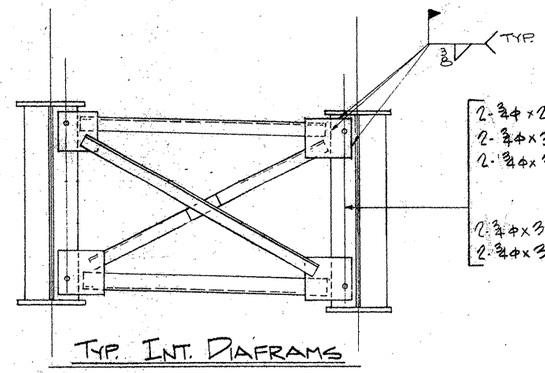

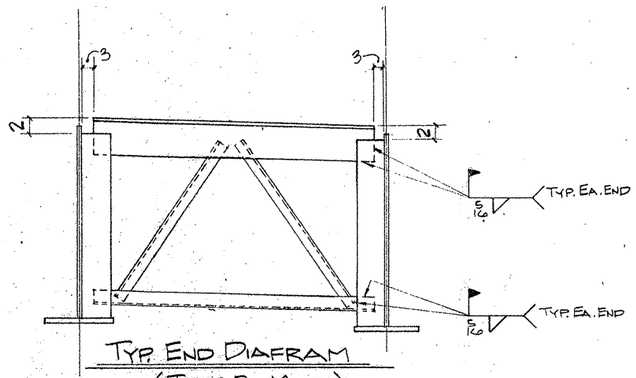

TYP. END DIAFRAM (TYPE B MOD.)

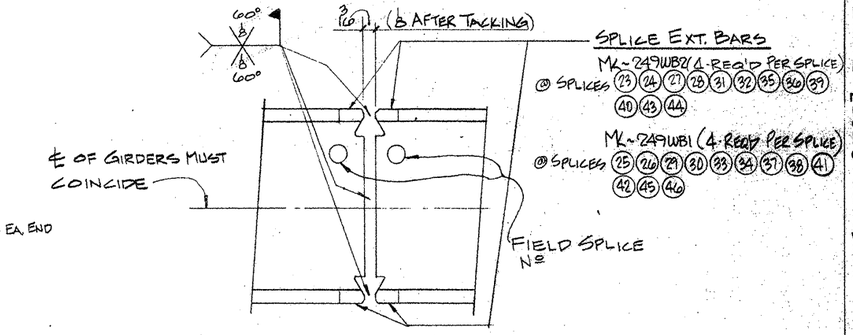

TYP. FIELD SPLICE DETAIL

2-¾¢ x 2½ A325 W/2-WASH EA (TYP U.N.)
2-¾¢ x 3¼ A325 W/2-WASH EA @ GIRD LINE (3) @ BENT 17 & 19.
2-¾¢ x 3 A325 W/2-WASH EA @ GIRD LINE (2) @ BENT 17 & 19

2-¾¢ x 3¼ A325 W/2-WASH EA @ GIRD LINE (1) @ BENT 17 & 19
2-¾¢ x 3 A325 W/2-WASH EA @ GIRD LINE (4) @ BENT 17 & 19

NOTE: WORK THIS SHEET W/SHEET E201

TEXAS DEPARTMENT OF TRANSPORTATION. APPROVED DIVISION OF BRIDGES AND STRUCTURES
APR 23 1993
APPROVAL OF THIS DRAWING DOES NOT RELIEVE THE CONTRACTOR OF THE RESPONSIBILITY FOR THE CORRECTNESS OF DETAIL.

FOR APPROVAL
MAR 24 '93
NOT FOR CONSTRUCTION
APR MAR 24

FED. ROAD DIV. NO	STATE	FEDERAL AID PROJECT NO			
6	TX.	NH92 (50) M			
STATE DIST. NO	COUNTY	CONTROL NO	SECTION NO	JOB NO	HIGHWAY NO
21	HIDALGO	39	17	97	83/281

HOLES ____ U.N.	FOR AP'VL.		
BOLTS ____ U.N.	RETURNED		
WELDS ____ U.N.	TO SHOP		
PAINT			

REVISIONS		
NO.	DATE	REMARKS
1		
2		
3		
4		

HIRSCHFELD STEEL CO. INC.
112 WEST 29TH SAN ANGELO, TEXAS 76903
PHONE (915) 653-3211

CUSTOMER GILBERT TEXAS CONSTRUCTION
ARCHITECT
PROJECT US 83/281 INTERCHANGE RAMP #2
LOCATION HIDALGO COUNTY

DRAWN JZ DATE 8/92
CHECKED JC DATE 10/92
JOB NO 92-107
SHEET NO E202 OF

CE92-12

a b c d e f g h i j k l m n o p q r s t u w x y z

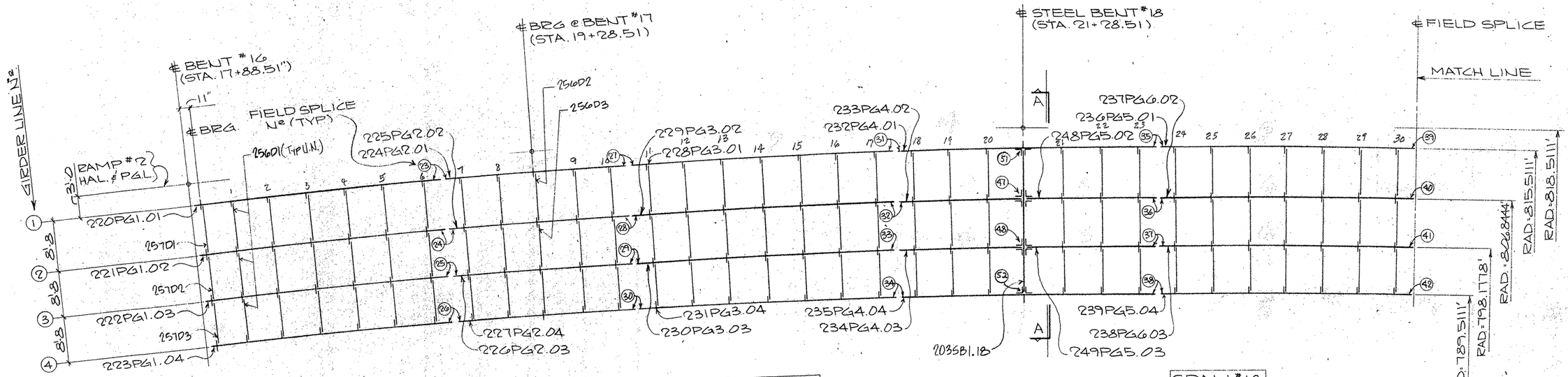

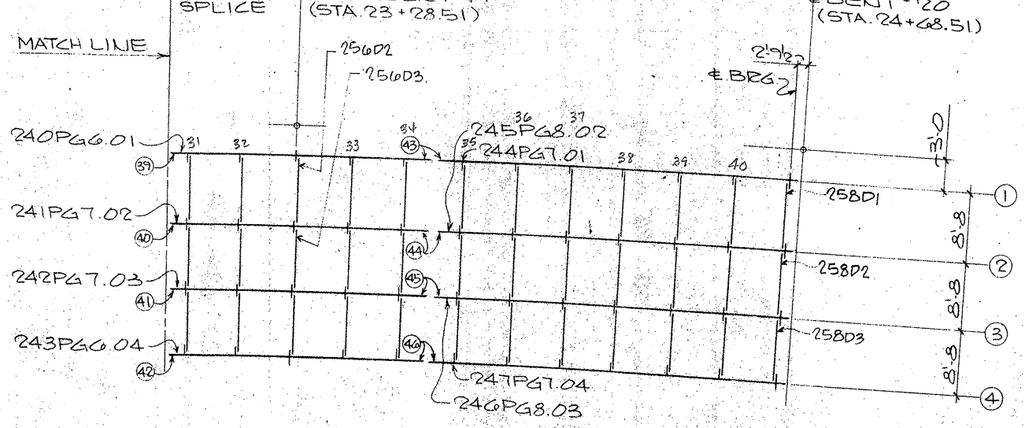

220 PG 1 .01
SHEET # — PLATE GIRDER — GIRDER # — LINE #

GIRDER SHIPPING MARK LEGEND

FRAMING PLAN
(UNIT 6 / RAMP 2)

NORTH

TEXAS DEPARTMENT OF TRANSPORTATION
APPROVED
DIVISION OF BRIDGES AND STRUCTURES
APR 23 1993
APPROVAL OF THIS DRAWING DOES NOT RELIEVE THE CONTRACTOR OF THE RESPONSIBILITY FOR THE CORRECTNESS OF DETAIL.

FOR APPROVAL
MAR 24 '93
NOT FOR CONSTRUCTION

NOTE:
WORK THIS SHT. WITH SHT. # E202

APV MAR 24

FED. ROAD DIV. NO.	STATE	FEDERAL AID PROJECT NO.				
6	TX.	NH 92(50)M				
STATE DIST. NO.	COUNTY	CONTROL NO.	SECTION NO.	JOB NO.	HIGHWAY NO.	
21	HIDALGO	39	17	97	83/281	

HOLES ____ U.N.	FOR APV'L
BOLTS ____ U.N.	RETURNED
WELDS ____ U.N.	TO SHOP
PAINT	

REVISIONS

NO.	DATE	REMARKS
1		
2		
3		
4		

HIRSCHFELD STEEL CO. INC.
112 WEST 29TH SAN ANGELO, TEXAS 76903
PHONE (915) 653-3211

CUSTOMER GILBERT TEXAS CONSTRUCTION
ARCHITECT
PROJECT US 83/281 INTERCHANGE RAMP #2
LOCATION HIDALGO COUNTY

DRAWN CRT DATE 8-92
CHECKED JC DATE 11-92
JOB NO 92-107
SHEET NO. E201 of

CE 92-12

a b c d e f g h i j k l m n o p q r s t u v w x y z

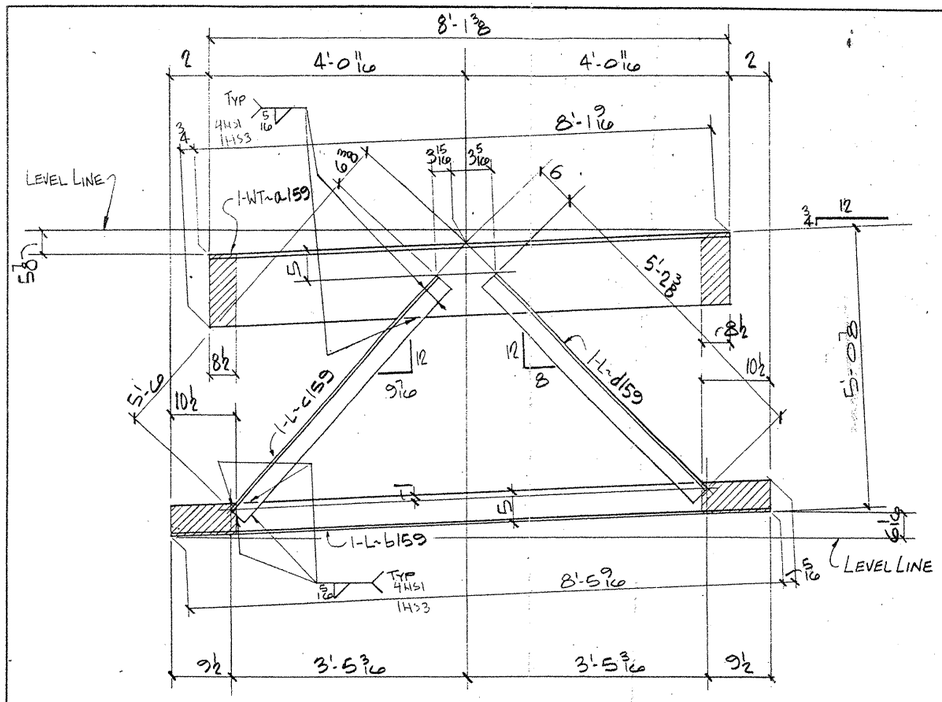

2 - END DIAFRAMS ~ 159D1

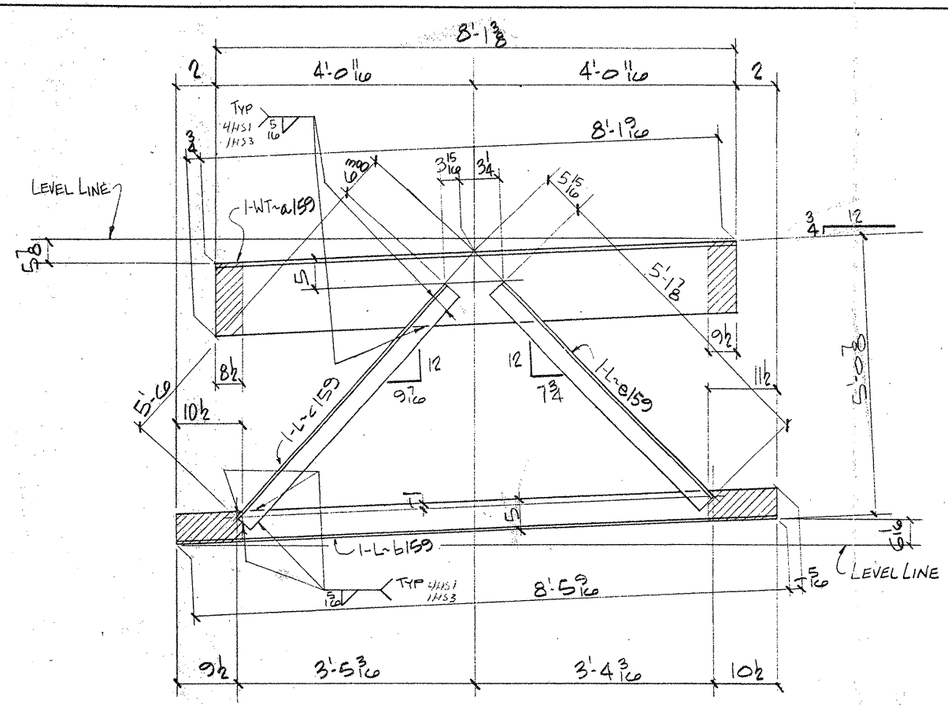

ONE - END DIAFRAM ~ 159D2

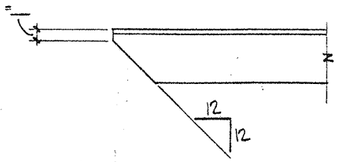

TYP. CLIP ON ALL OUTSTANDING ANGLE LEGS

NOTES:

1. FOR GENERAL NOTES SEE SHT. GN1
2. ▨ INDICATES OIL, NO PAINT (N.S./F.S. & EDGES)

F0108

FED. ROAD DIV. NO.	STATE	FEDERAL AID PROJECT NO.			
6	TX.	NH 92(50)M			
STATE DIST. NO.	COUNTY	CONTROL NO.	SECTION NO.	JOB NO.	HIGHWAY NO.
21	HIDALGO	39	17	97	83/281

BILL OF MATERIAL

Line	Qnty	Material	Length	Mark Temp	Mark Ship.	Wt.	Cut From	Remarks
4	2	DIAFRAMS			159D1			
5	2	WT 12 X 42	8'-2 5/16	a159			117-2	
6	2	L 5 x 3 1/2 x 3/8	8'-5 7/8	b159			117-4	
7	2	L 3 1/2 x 3 1/2 x 3/8	5'-6	c159			117-5	
8	2	L 3 1/2 x 3 1/2 x 3/8	5'-2 3/8	d159			117-5	
15	ONE	DIAFRAM			159D2			
16	ONE	WT		a159				
17	ONE	L		b159				
18	ONE	L		c159				
19	ONE	L 3 1/2 x 3 1/2 x 3/8	5'-1 7/8	e159			117-5	
40		FIELD BOLTS	(% ADDED)		A325	TY1		
41	527	HS BOLT 3/4 φ	0'-2 1/2				116-4	
42	15	HS BOLT 3/4 φ	0'-3				116-5	
43	15	HS BOLT 3/4 φ	0'-3 1/4				116-6	
44	1114	HS WASH 3/4 φ					116-7	
46	101	HS BOLT 1 φ	0'-3				116-9	
47	61	HS BOLT 1 φ	0'-3 1/2				116-10	
48	32	HS BOLT 1 φ	0'-4 1/4				116-11	
49	19	HS BOLT 1 φ	0'-4 3/4				116-12	
50	351	HS BOLT 1 φ	0'-8 1/2				116-13	
51	564	HS WASH 1 φ					116-14	

FOR APPROVAL
NOV 05 '92
NOT FOR CONSTRUCTION

TEXAS DEPARTMENT OF TRANSPORTATION
APPROVED
DIVISION OF BRIDGES AND STRUCTURES
DEC 16 1992
APPROVAL OF THIS DRAWING DOES NOT RELIEVE THE CONTRACTOR OF THE RESPONSIBILITY FOR THE CORRECTNESS OF DETAIL.

REVISION	DATE	DESCRIPTION OF REVISION
NO. 1		
NO. 2		
NO. 3		
NO. 4		
NO. 5		

PRINTING Req'd	For	Date
—	APV	11-5

Bolts Holes Unless Noted
Shop Paint SEE SHT GN1
Fab Spec A36 Inspection
Architect
Erection By Field Connections

HIRSCHFELD STEEL CO. INC.
112 WEST 29TH SAN ANGELO, TEXAS 76903
PHONE (915) 653-3211

DESCRIPTION 702'-5 PLATE GIRDER UNIT
STRUCTURE US 83/281 INTERCHANGE RAMP #3
LOCATION HIDALGO COUNTY
CUSTOMER GILBERT TEXAS CONSTRUCTION
SHIP TO
Customer's Order No.
Dwg By JDC Date 9/92
Checked By DLT Date 9/92

SHEET 159 OF
JOB NO. 92-108

CE 92-13

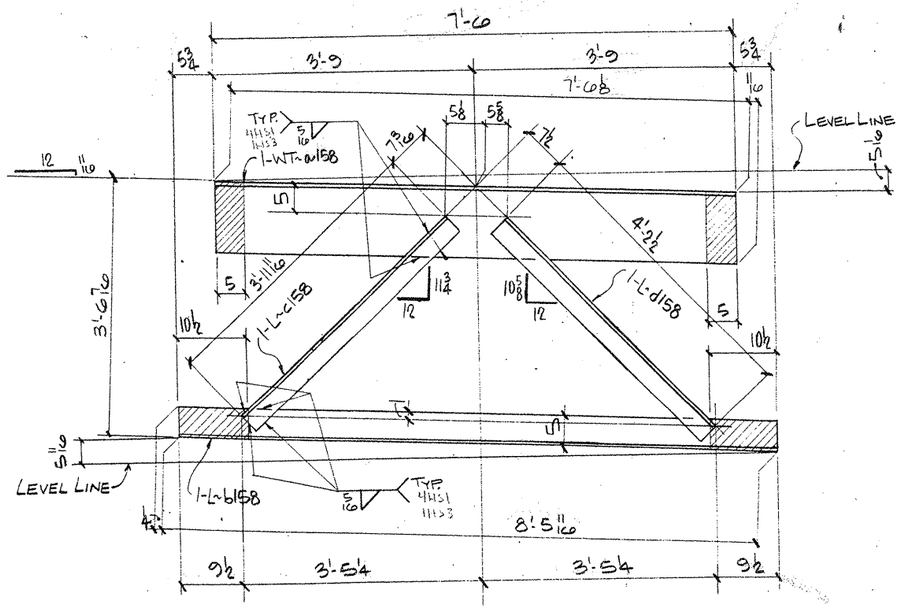

2 - END DIAFRAMS ~ 158D1

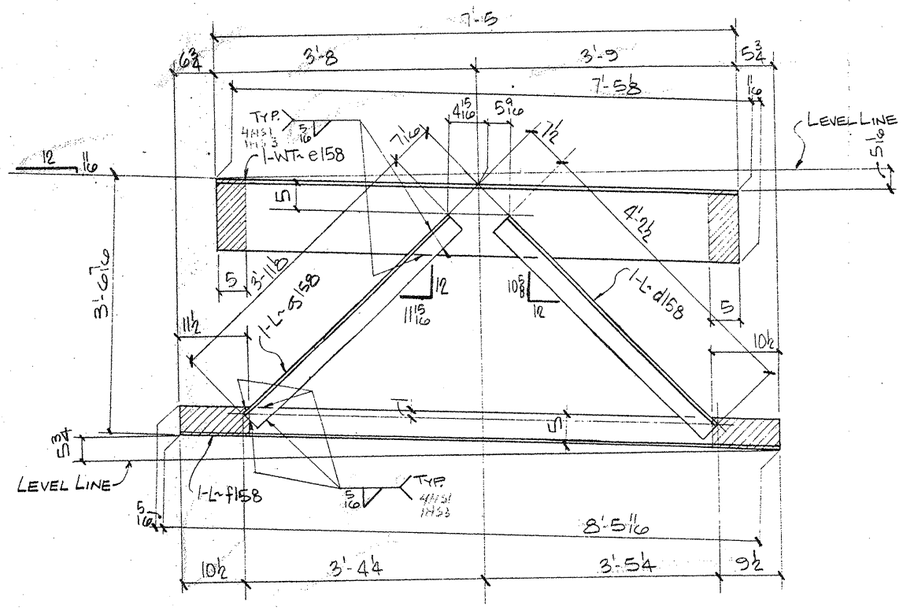

ONE- END DIAFRAM ~ 158D2

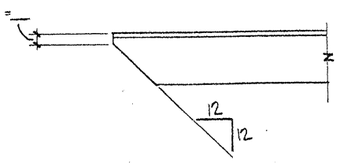

TYP. CLIP ON ALL OUTSTANDING ANGLE LEGS

NOTES:
1. FOR GENERAL NOTES SEE SHT. GN1
2. ▨ INDICATES OIL, NO PAINT (N.S./F.S. & EDGES)

BILL OF MATERIAL

	Qnty	Material	Length	Mark Temp	Mark Ship	Wt.	Cut From	Remarks
3	2	DIAFRAMS			158D1			
4	2	WT 12 x 42	7'-6 1/8	a158		-	117-3	
5	2	L 5 x 3½ x ⅜	8'-5 19/16	b158			117-4	
6	2	L 3½ x 3½ x ⅜	3'-11 11/16	c158			117-6	
7	2	L 3½ x 3½ x ⅜	4'-2½	d158			117-6	
12	ONE	DIAFRAM						
13	ONE	WT 12 x 42	7'-5 13/16	e158			117-3	
14	ONE	L 5 x 3½ x ⅜	8'-0	f158			117-4	
15	ONE	L 3½ x 3½ x ⅜	3'-11⅛	b158			117-6	
16	ONE	L		d158				

TEXAS DEPARTMENT OF TRANSPORTATION
APPROVED
DIVISION OF BRIDGES AND STRUCTURES
DEC 15 1992
APPROVAL OF THIS DRAWING DOES NOT RELIEVE THE CONTRACTOR OF THE RESPONSIBILITY FOR THE CORRECTNESS OF DETAIL.

FOR APPROVAL
NOV 05 '92
NOT FOR CONSTRUCTION

REVISION	DATE	DESCRIPTION OF REVISION
NO. 1		
NO. 2		
NO. 3		
NO. 4		
NO. 5		

PRINTING: Reqd | For | Date

Bolts: Holes: Unless Noted
Shop Paint SEE SHT GN1
Fab. Spec. A36 Inspection
Architect
Erection By Field Connections

HIRSCHFELD STEEL CO. INC.
112 WEST 29TH SAN ANGELO. TEXAS 76903
PHONE (915) 653-3211

DESCRIPTION 102'-5 PLATE GIRDER UNIT
STRUCTURE US 83/281 INTERCHANGE RAMP #3
LOCATION HIDALGO COUNTY
CUSTOMER GILBERT TEXAS CONSTRUCTION
SHIP TO
Customer's Order No.
Dwg. By JRC Date 9/92
Checked By DCT Date 9/92
SHEET 158 OF
JOB NO. 92-108

F0103

FED. ROAD DIV. NO.	STATE	FEDERAL AID PROJECT NO.			
6	TX.	NH 92(50)M			
STATE DIST. NO.	COUNTY	CONTROL NO.	SECTION NO.	JOB NO.	HIGHWAY NO.
21	HIDALGO	39	17	97	83/281

CE92-13

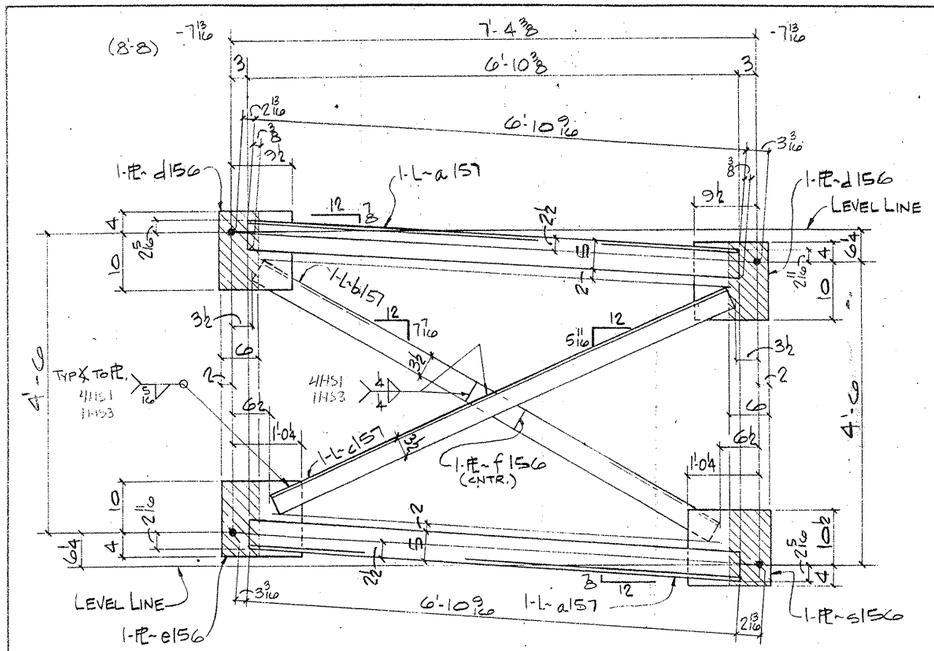

4 - DIAFRAMS~ 157D1

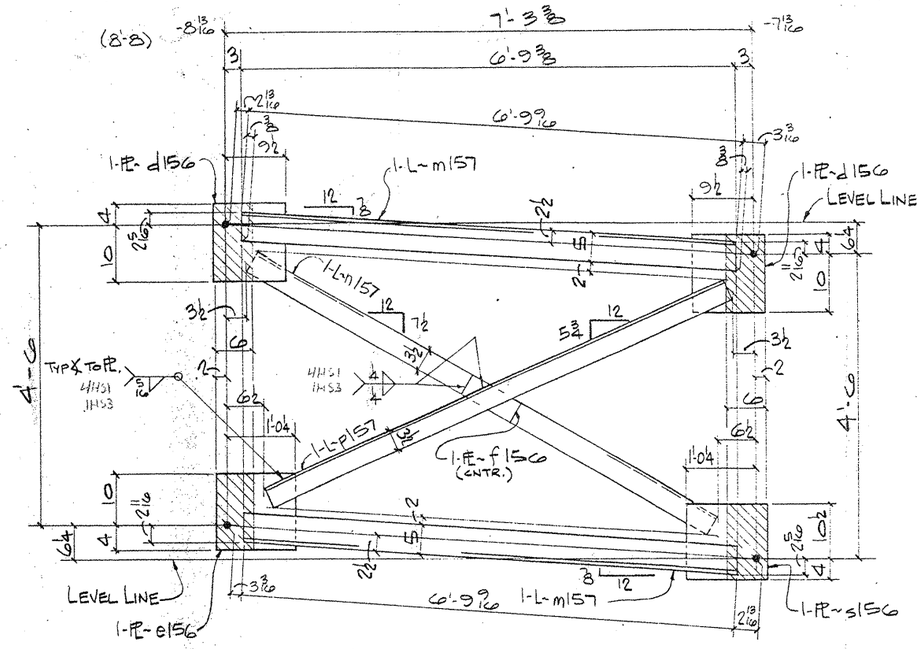

ONE - DIAFRAMS~ 157D3

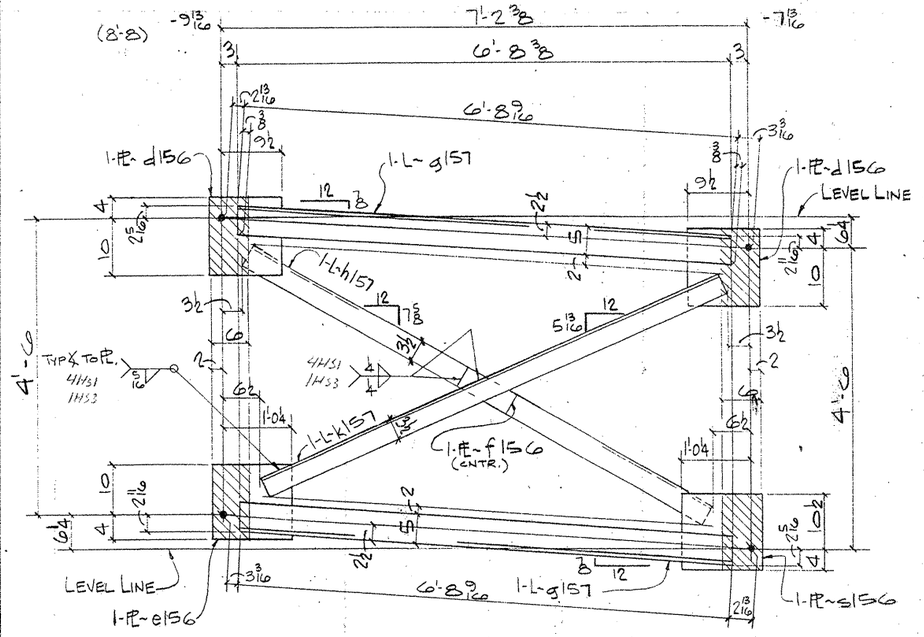

ONE - DIAFRAMS~ 157D2

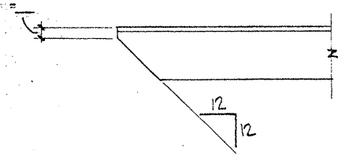

TYP. CLIP ON ALL OUTSTANDING ANGLE LEGS

NOTES:

1. FOR GENERAL NOTES SEE SHT. GN1
2. ▨ INDICATES OIL, NO PAINT (N.S./F.S. & EDGES)

BILL OF MATERIAL

	Qnty	Material	Length	Mark Trans	Mark Ship	Wt	Cut From	Remarks
4	4	DIAFRAMS			157D1			
5	8	L 5x3½x½	6'-10 9/16	a157			117-11	
6	4	L 5x3½x½	7'-6	b157			117-13	
7	4	L 5x3½x½	7'-1	c157			117-13	
8	8	PL ½x11½	1'-2	d156			117-14	
9	4	PL ½x14	1'-2¼	e156			117-15	
10	4	FL ½x3½	0'-9	f156			117-16	
11	4	PL ½x14¼	1'-2½	s156			117-15	
16	ONE	DIAFRAM			157D2			
17	2	L 5x3½x½	6'-8 9/16	g157			117-11	
18	ONE	L 5x3½x½	7'-4¼	h157			117-13	
19	ONE	L 5x3½x½	6'-11 9/16	k157			117-13	
20	2	PL		d156				
21	1	PL		e156				
22	ONE	FL		f156				
23	1	PL		s156				
28	ONE	DIAFRAM			157D3			
29	2	L 5x3½x½	6'-9 15/16	m157			117-11	
30	ONE	L 5x3½x½	7'-5⅛	n157			117-13	
31	ONE	L 5x3½x½	7'-0⅛	P157			117-13	
32	2	PL		d156				
33	1	PL		e156				
34	ONE	FL		f156				
35	1	PL		s156				

TEXAS DEPARTMENT OF TRANSPORTATION
APPROVED
DIVISION OF BRIDGES AND STRUCTURES
DEC 16 1992
APPROVAL OF THIS DRAWING DOES NOT RELIEVE THE CONTRACTOR OF THE RESPONSIBILITY FOR THE CORRECTNESS OF DETAIL.

FOR APPROVAL
NOV 05 '92
NOT FOR CONSTRUCTION

REVISION	DATE	DESCRIPTION OF REVISION
NO. 1		
NO. 2		
NO. 3		
NO. 4		
NO. 5		

PRINTING: Regd | Fin | Date — AP'V 11-5

Bolts: Holes 13/16ϕ Unless Noted
Shop Paint: SEE SHT GN1
Fab. Spec.: A36 Inspection
Architect:
Erection By: Field Connections

HIRSCHFELD STEEL CO. INC.
112 WEST 29TH SAN ANGELO TEXAS 76903
PHONE (915) 653-3211

DESCRIPTION: 702-5 PLATE GIRDER UNIT
STRUCTURE: US 83/281 INTERCHANGE RAMP #3
LOCATION: HIDALGO COUNTY
CUSTOMER: GILBERT TEXAS CONSTRUCTION
SHIP TO:
Customer's Order No.:
Dwg. By: JBK Date: 9/92
Checked By: DCT Date: 9/92
SHEET 157 OF
JOB NO 92-108
CE 92-13

F0108

FED. ROAD DIV. NO.	STATE	FEDERAL AID PROJECT NO.			
6	TX.	NH 92(50)M			
STATE DIST. NO.	COUNTY	CONTROL NO.	SECTION NO.	JOB NO.	HIGHWAY NO.
21	HIDALGO	39	17	97	83/281

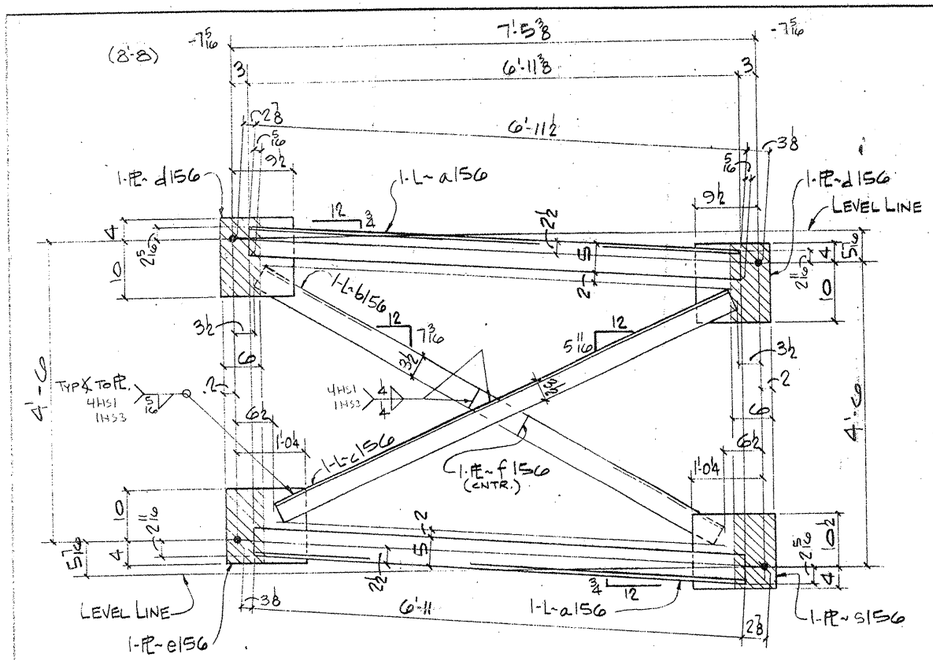

3 - DIAFRAMS~1560D1

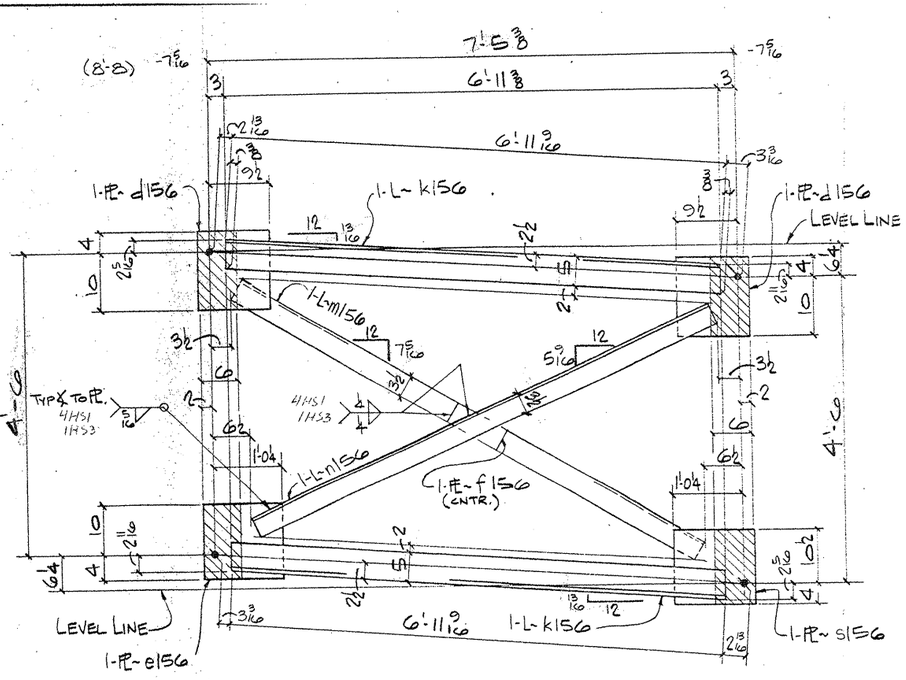

120 - DIAFRAMS~1560D23

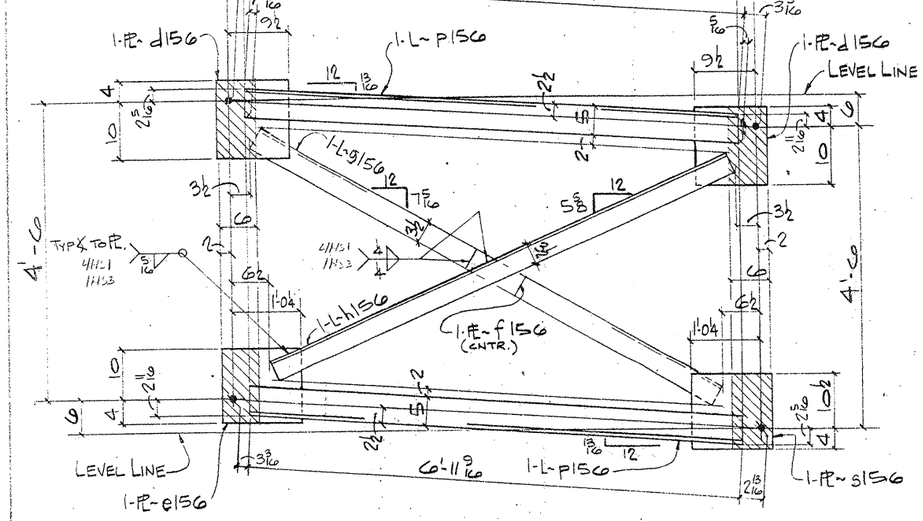

6 - DIAFRAMS~1560D2

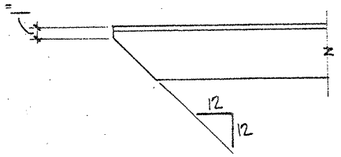

TYP. CLIP ON ALL OUTSTANDING ANGLE LEGS

NOTES:
1. FOR GENERAL NOTES SEE SHT. GN1
2. ▨ INDICATES OIL, NO PAINT (N.S./F.S. & EDGES)

F0108

FED. ROAD DIV. NO.	STATE	FEDERAL AID PROJECT NO.				
6	TX.	NH 92(50)M				
STATE DIST. NO.	COUNTY	CONTROL NO.	SECTION NO.	JOB NO.	HIGHWAY NO.	
21	HIDALGO	39	17	97	83/281	

BILL OF MATERIAL

	Qnty	Material	Length	Mark Shop	Wt	Cut From	Remarks
3	3	DIAFRAMS		1560D1			
4	60	L 5x3½x½	6'-11 3/16	a156		117-10	
5	3	L 5x3½x½	7'-6½	b156		117-12	
6	3	L 5x3½x½	7'-2¼	c156		117-12	
7	6	PL ½ x 11½	1'-2	d156		117-14	
8	3	PL ½ x 14	1'-2¼	e156		117-15	
9	3	FL ½ x 3½	0'-3	f156		117-16	
10	3	PL ½ x 14¼	1'-2½	s156		117-15	
14	60	DIAFRAMS		1560D2			
15	12	L 5x3½x½	6'-11 3/16	p156		117-10	
16	60	L 5x3½x½	7'-6 3/4	g156		117-12	
17	60	L 5x3½x½	7'-2	h156		117-12	
18	12	PL		d156			
19	6	PL		e156			
20	60	FL		f156			
21	60	PL		s156			
25	120	DIAFRAMS		1560D3			
26	240	L 5x3½x½	6'-11 9/16	k156		117-10	
27	120	L 5x3½x½	7'-6 13/16	m156		117-12	
28	120	L 5x3½x½	7'-1 15/16	n156		117-12	
29	240	PL		d156			
30	120	PL		e156			
31	120	FL		f156			
32	120	PL		s156			

FOR APPROVAL
NOVEMBER 92
NOT FOR CONSTRUCTION

TEXAS DEPARTMENT OF TRANSPORTATION
APPROVED EXCEPT AS NOTED
DIVISION OF BRIDGES AND STRUCTURES
DEC 16 1992
APPROVAL OF THIS DRAWING DOES NOT RELIEVE THE CONTRACTOR OF THE RESPONSIBILITY FOR THE CORRECTNESS OF DETAIL.

REVISION	DATE	DESCRIPTION OF REVISION
NO. 1		
NO. 2		
NO. 3		
NO. 4		
NO. 5		

PRINTING			Date	Issued 15 Dec 92 Comm. Number
Req'd	For	Date	Shop Paint	SEE SHT GN1 Inspection
			Fab. Shop	ASCO
			Architect	
			Erection By	Field Connections

HINSCHFELD STEEL CO. INC.
112 WEST 29TH SAN ANGELO TEXAS 76903
PHONE (915) 653-3211

DESCRIPTION	70'-5" PLATE GIRDER UNIT
STRUCTURE	US 83/281 INTERCHANGE RAMP #3
LOCATION	HIDALGO COUNTY
CUSTOMER	GILBERT TEXAS CONSTRUCTION
SHIP TO	
Customer's Order No.	
Dwn. By JDL	Date 9/1/92
Checked By DLT	Date 9-92

SHEET 156 OF
JOB NO 92-108
CE 92-13

— APV 11-5

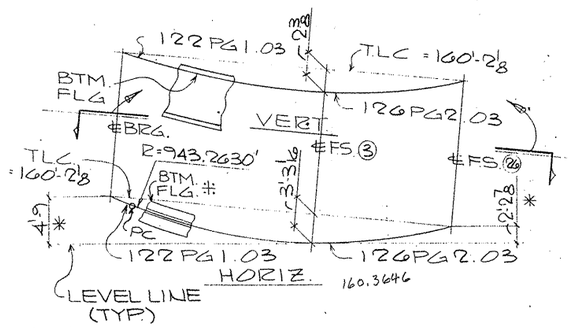

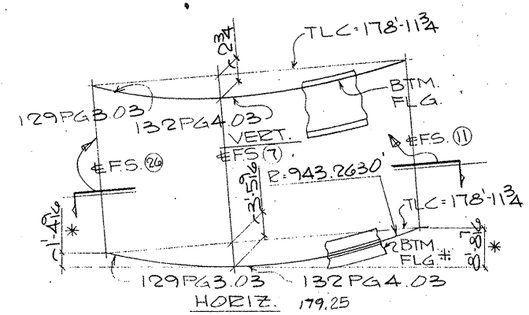

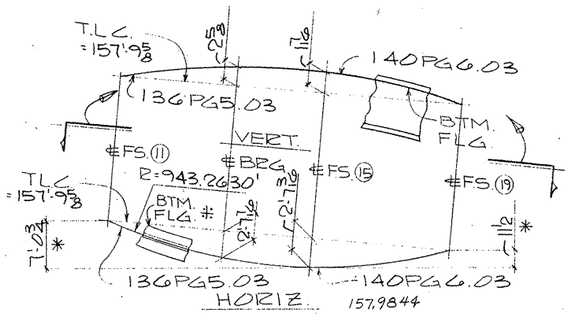

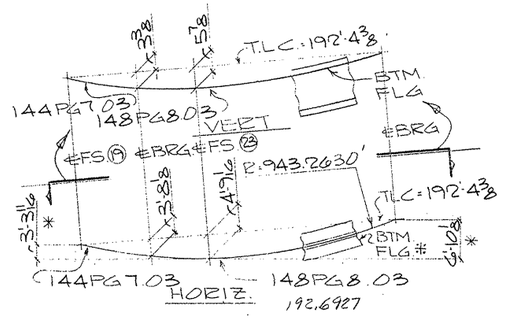

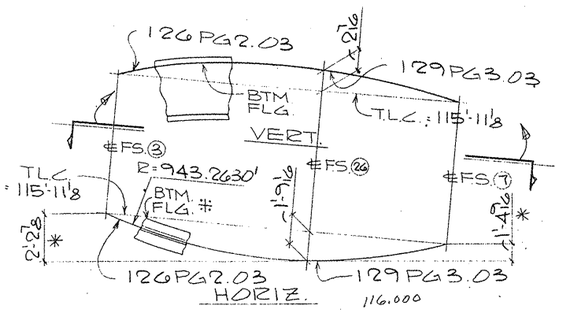

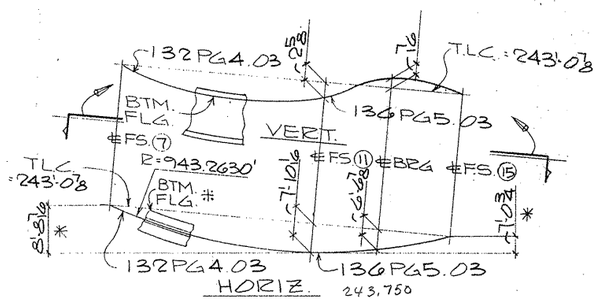

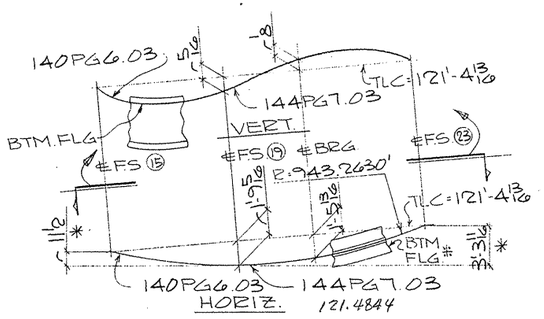

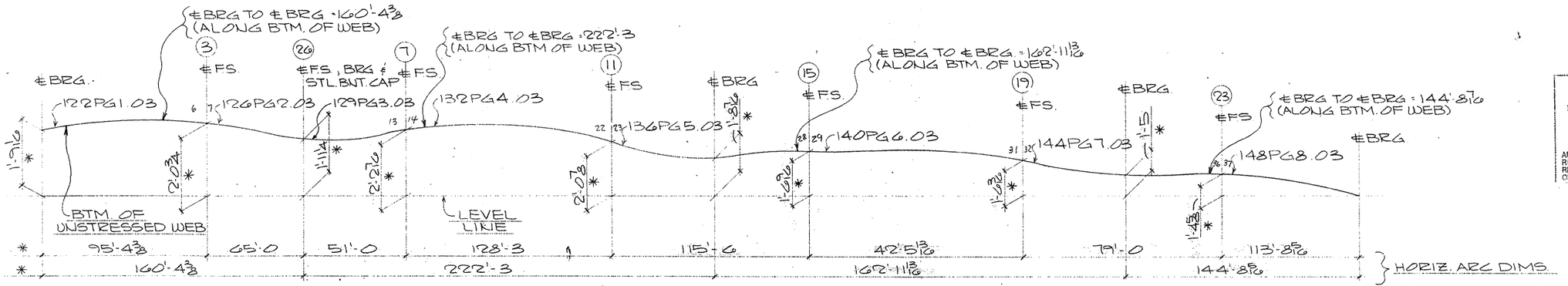

VERTICAL BLOCKING DIAGRAM
(LINE # 3)

FED. ROAD DIV. NO.	STATE	FEDERAL AID PROJECT NO.			
6	TX.	NH 92(50)M			
STATE DIST. NO.	COUNTY	CONTROL NO.	SECTION NO.	JOB NO.	HIGHWAY NO.
21	HIDALGO	39	17	97	83/281

G0108

TEXAS DEPARTMENT OF TRANSPORTATION
APPROVED
DIVISION OF BRIDGES AND STRUCTURES
DEC 16 1992
APPROVAL OF THIS DRAWING DOES NOT RELIEVE THE CONTRACTOR OF THE RESPONSIBILITY FOR THE CORRECTNESS OF DETAIL.

FOR APPROVAL
NOV 06 '92
NOT FOR CONSTRUCTION

NOTES:
1. T.L.C. = TRUE LENGTH CHORD.
2. DIMENSIONS ARE GIVEN ALONG OR NORMAL TO THE TRUE LENGTH CHORD UNL. NTD.
3. DIMENSIONS NOTED * ARE GIVEN ALONG OR NORMAL TO THE LEVEL LINE.
4. FOR GENERAL NOTES SEE SHT. GN1.
5. # = TOP FLG. (N.S.) NOT SHOWN FOR CLARITY.
6. SEE SHT. 153 FOR MATCH MARRING AT SPLICE # 26

APV 11-5

HOLES ____ U N | FOR AP'VL ____
BOLTS ____ U N. | RETURNED ____
WELDS ____ U N | TO SHOP ____
PAINT ____

REVISIONS

NO	DATE	REMARKS
1		
2		
3		
4		

HIRSCHFELD STEEL CO. INC.
112 WEST 29TH SAN ANGELO, TEXAS 76903
PHONE (915) 653-3211

CUSTOMER GILBERT TEXAS CONSTRUCTION
ARCHITECT
PROJECT US 83/281 INTERCHANGE RAMP # 3
LOCATION HIDALGO COUNTY
DRAWN CRT DATE 9-92
CHECKED DWG DATE 7/14/92
JOB NO. 92-108
SHEET NO. 154 of

CE 92-13 (LINE # 3)

J K L M N O P Q R S T U V W X Y Z

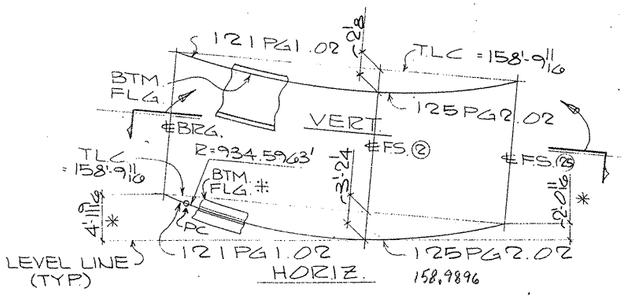

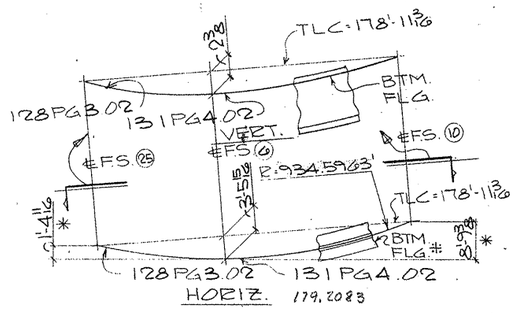

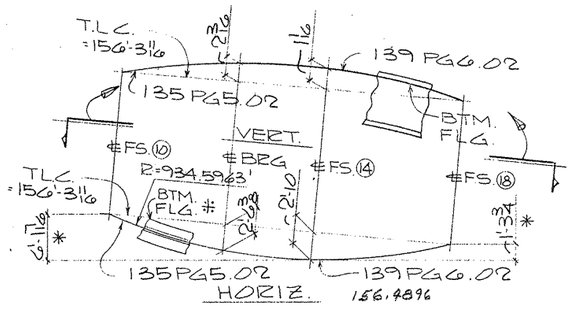

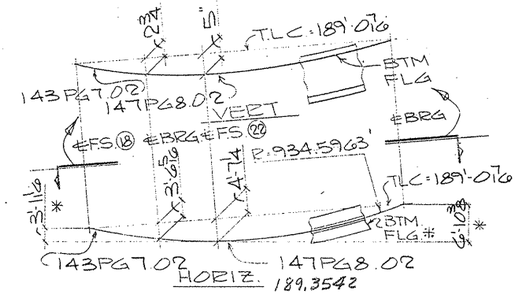

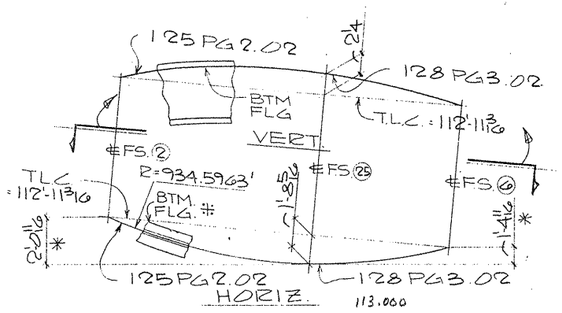

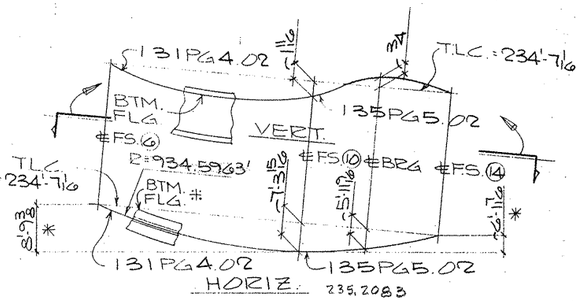

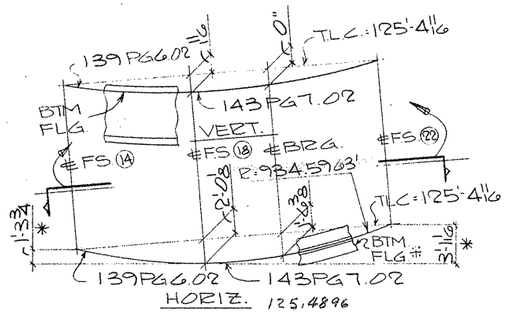

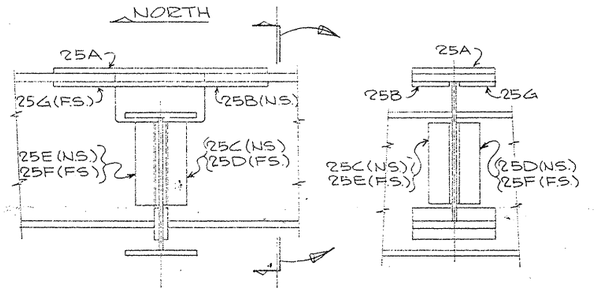

DETAIL OF FIELD SPLICE (25)

FIELD SPLICES MARKED THUS (25) ARE MATCHMARKS. ALL GIRDERS TO BE ERECTED WITH MATCHING MARKS AS SHOWN. FOR FIELD SPLICES (25) & (26) ONLY.

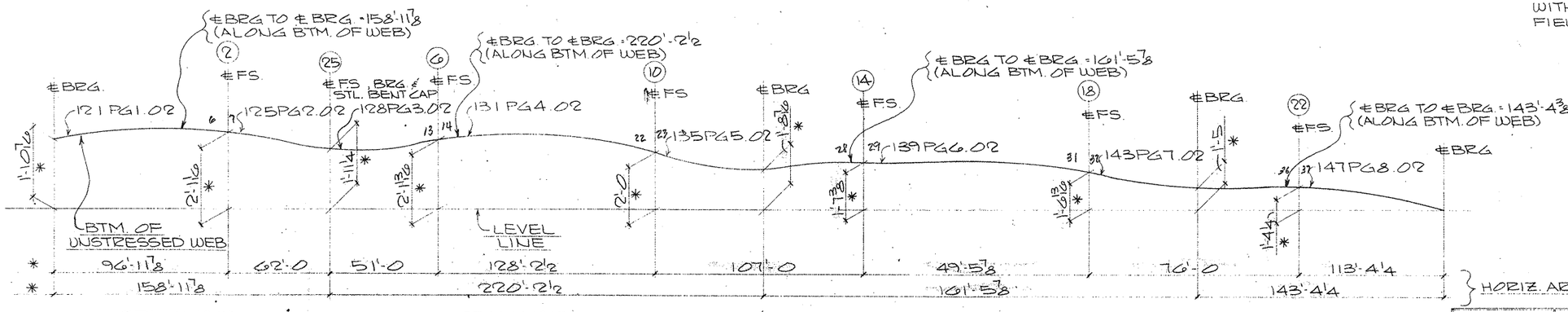

VERTICAL BLOCKING DIAGRAM
(LINE # 2)

TEXAS DEPARTMENT OF TRANSPORTATION
APPROVED
DIVISION OF BRIDGES AND STRUCTURES
DEC 16 1992
FOR APPROVAL
NOV 05 '92
NOT FOR CONSTRUCTION
APPROVAL OF THIS DRAWING DOES NOT RELIEVE THE CONTRACTOR OF THE RESPONSIBILITY FOR THE CORRECTNESS OF DETAILS.

1. T.L.C. ~~THUS LENGTH~~ CHORD.
2. DIMENSIONS ARE GIVEN ALONG OR NORMAL TO THE TRUE LENGTH CHORD UNL. NTD.
3. DIMENSIONS NOTED * ARE GIVEN ALONG OR NORMAL TO THE LEVEL LINE.
4. FOR GENERAL NOTES SEE SHT. GN1.
5. ℄ = TOP FLG. (N.S.) NOT SHOWN FOR CLARITY.

APV 11-5

HOLES	UN	FOR APVL	
BOLTS	UN	RETURNED	
WELDS	UN	TO SHOP	
PAINT			

REVISIONS		
NO	DATE	REMARKS
1		
2		
3		
4		

HIRSCHFELD STEEL CO. INC.
112 WEST 29TH SAN ANGELO, TEXAS 76903
PHONE (915) 653-3211

CUSTOMER GILBERT TEXAS CONSTRUCTION
ARCHITECT
PROJECT US 83/281 INTERCHANGE RAMP # 3
LOCATION HIDALGO COUNTY
DRAWN CRT DATE 9-92
CHECKED C.G. DATE 9-92
JOB NO 92-108
SHEET NO 153 of

G0108

FED. ROAD DIV. NO	STATE	FEDERAL AID PROJECT NO.			
6	TX.	NH 92(50)M			
STATE DIST. NO.	COUNTY	CONTROL NO.	SECTION NO.	JOB NO.	HIGHWAY NO.
21	HIDALGO	39	17	97	83/281

CE 92-13 (LINE #2)

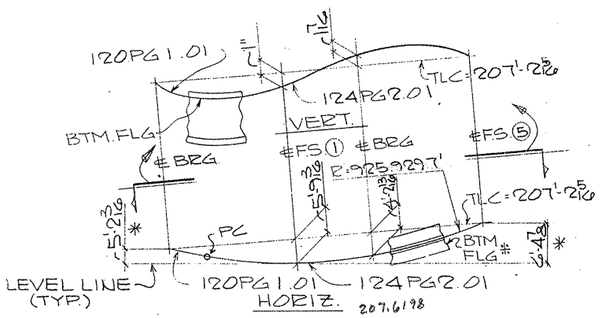

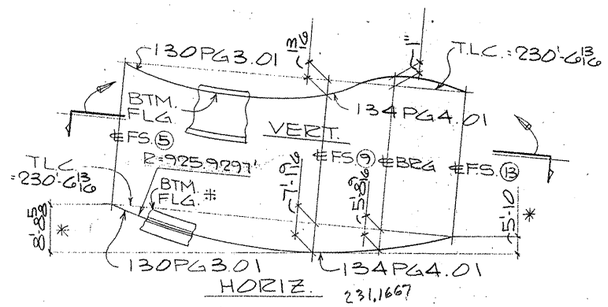

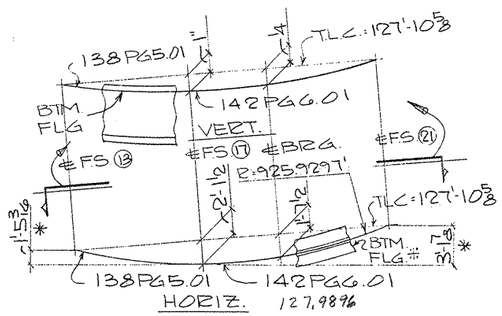

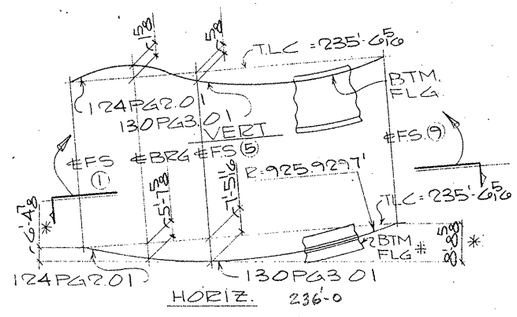

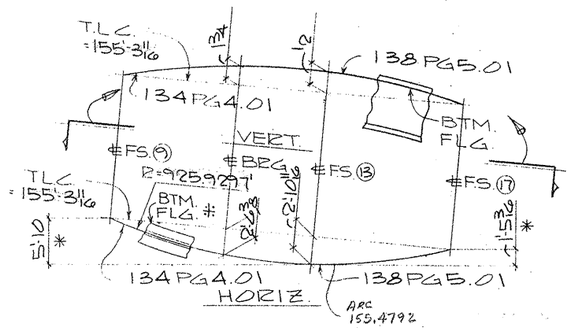

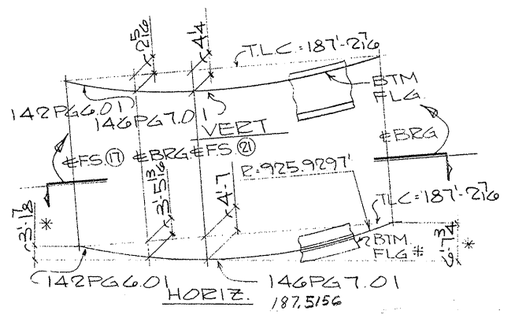

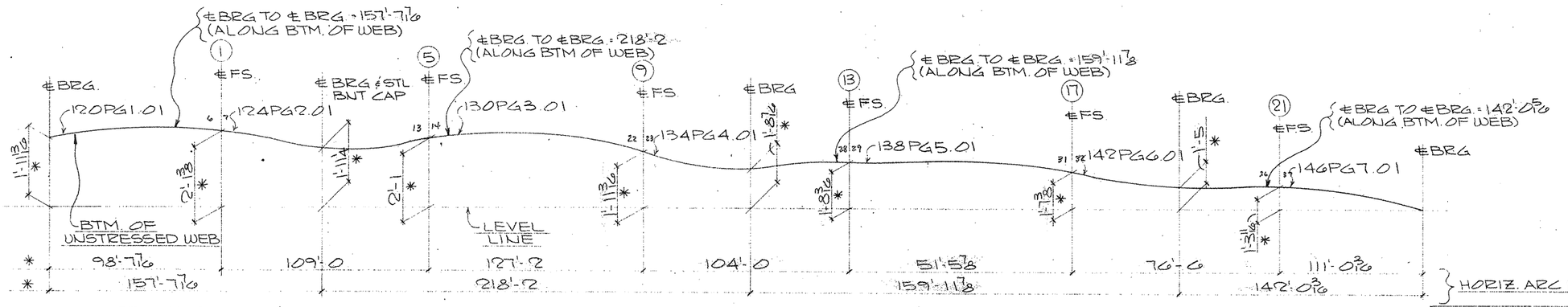

VERTICAL BLOCKING DIAGRAM
(LINE # 1)

TEXAS DEPARTMENT OF TRANSPORTATION
APPROVED
DIVISION OF BRIDGES AND STRUCTURES
DEC 16 1992
APPROVAL OF THIS DRAWING DOES NOT RELIEVE THE CONTRACTOR OF THE RESPONSIBILITY FOR THE CORRECTNESS OF DETAIL

FOR APPROVAL
NOV 05 '92
NOT FOR CONSTRUCTION

NOTES:
1. T.L.C. = TRUE LENGTH CHORD.
2. DIMENSIONS ARE GIVEN ALONG OR NORMAL TO THE TRUE LENGTH CHORD UNL. NTD.
3. DIMENSIONS NOTED ✱ ARE GIVEN ALONG OR NORMAL TO THE LEVEL LINE.
4. FOR GENERAL NOTES SEE SHT. GN1.
5. # = TOP FLG. (N.S.) NOT SHOWN FOR CLARITY.

APV 11-5

HOLES ___ UN	FOR APVL
BOLTS ___ UN	RETURNED
WELDS ___ UN	TO SHOP
PAINT	

REVISIONS		
NO	DATE	REMARKS
1		
2		
3		
4		

HIRSCHFELD STEEL CO. INC.
112 WEST 29TH SAN ANGELO, TEXAS 76903
PHONE (915) 653-3211

CUSTOMER GILBERT TEXAS CONSTRUCTION
ARCHITECT
PROJECT US 83/281 INTERCHANGE RAMP #3
LOCATION HIDALGO COUNTY

DRAWN CRT DATE 9-92 | JOB NO 92-108 | SHEET NO 152 of ___
CHECKED DWS DATE 9-11-92

G0108

FED. ROAD DIV NO	STATE	FEDERAL AID PROJECT NO.			
6	TX.	NH 92(50)M			
STATE DIST NO	COUNTY	CONTROL NO	SECTION NO	JOB NO	HIGHWAY NO
21	HIDALGO	39	17	97	83/281

CE 92-13 (LINE #1)

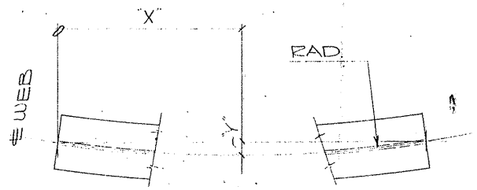

HEAT CURVE DIAGRAM
(ALONG TOP FLG.)

THIS SHEET NOT
DETAIL CHECKED

GIRDER MK		VARIABLES												RADIUS
	"X"	3'-5 5/8"	13'-5 5/8"	23'-5 5/8"	33'-5 5/8"	43'-5 5/8"	53'-5 5/8"	63'-5 5/8"	73'-5 5/8"	83'-5 5/8"	93'-5 5/8"	103'-5 5/8"	106'-11 7/16"	
135PG5.02	"Y"	2 5/16"	8'8	1'-0 5/8"	1'-3 13/16"	1'-5 3/4	1'-6 3/8	1'-5 3/4	1'-3 13/16"	1'-0 5/8"	8'8	2 5/16"	0"	934.5963
	"X"	7'-8 1/2"	17'-8 1/2"	27'-8 1/2"	37'-8 1/2"	47'-8 1/2"	57'-8 1/2"	67'-8 1/2"	77'-8 1/2"	87'-8 1/2"	97'-8 1/2"	107'-8 1/2"	115'-5	
136PG5.03	"Y"	5'4	11"	1'-3 7/16"	1'-6 5/8"	1'-8 9/16"	1'-9 3/16"	1'-8 9/16"	1'-6 5/8"	1'-3 7/16"	11"	5'4	0"	943.2630
	"X"	7'-5 9/16"	17'-5 9/16"	27'-5 9/16"	37'-5 9/16"	47'-5 9/16"	57'-5 9/16"	67'-5 9/16"	77'-5 9/16"	87'-5 9/16"	97'-5 9/16"	107'-5 9/16"	114'-11 1/16"	
137PG4.04	"Y"	5 1/16"	10 3/4	1'-3 3/8	1'-6 5/16"	1'-8 3/16"	1'-8 13/16"	1'-8 3/16"	1'-6 5/16"	1'-3 3/8	10 3/4	5 1/16"	0"	951.9297
	"X"	5'-8 7/8"	15'-8 7/8"	25'-8 7/8"	35'-8 7/8"	45'-8 7/8"	51'-5 11/16"							
138PG5.01	"Y"	1 3/4	3 1/16"	4 5/16"	3 1/16"	1 3/4	0"							925.9297
	"X"	4'-8 7/8"	14'-8 7/8"	24'-8 7/8"	34'-8 7/8"	44'-8 7/8"	49'-5 11/16"							
139PG6.02	"Y"	1 3/8	3 5/16"	3 15/16"	3 5/16"	1 3/8	0"							934.5963
	"X"	1'-2 13/16"	11'-2 13/16"	21'-2 13/16"	31'-2 13/16"	41'-2 13/16"	42'-5 5/8"							
140PG6.03	"Y"	5/16"	2'4	2'8	2'4	5/16"	0"							943.2630
	"X"	1'-8 13/16"	11'-8 13/16"	21'-8 13/16"	31'-8 13/16"	41'-8 13/16"	43'-5 5/8"							
141PG5.04	"Y"	1/2	2 3/8	3"	2 3/8	1/2	0"							951.9297
	"X"	8'-2 13/16"	18'-2 13/16"	28'-2 13/16"	38'-2 13/16"	48'-2 13/16"	58'-2 13/16"	68'-2 13/16"	76'-5 5/8"					
142PG6.01	"Y"	3 1/16"	6 15/16"	8 7/8"	9'2	8 7/8"	6 15/16"	3 1/16"	0"					925.9297
	"X"	7'-11 13/16"	17'-11 13/16"	27'-11 13/16"	37'-11 13/16"	47'-11 13/16"	57'-11 13/16"	67'-11 13/16"	75'-11 5/8"					
143PG7.02	"Y"	3'2	6 11/16"	8 5/8"	9'4	8 5/8"	6 1/16"	3'2	0"					934.5963
	"X"	9'-5 13/16"	19'-5 13/16"	29'-5 13/16"	39'-5 13/16"	49'-5 13/16"	59'-5 13/16"	69'-5 13/16"	78'-11 5/8"					
144PG7.03	"Y"	4 7/16"	7 3/8	9 5/16"	9 15/16"	9 5/16"	7 3/8	4 7/16"	0"					943.2630
	"X"	9'-5 13/16"	19'-5 13/16"	29'-5 13/16"	39'-5 13/16"	49'-5 13/16"	59'-5 13/16"	69'-5 13/16"	78'-11 5/8"					
145PG6.04	"Y"	4'8	7 5/16"	9 3/16"	9 13/16"	9 3/16"	7 5/16"	4'8	0"					951.9297

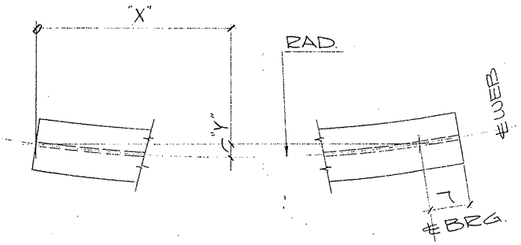

HEAT CURVE DIAGRAM
(ALONG TOP FLG.)

THIS SHEET NOT
DETAIL CHECKED

GIRDER MK		VARIABLES												RADIUS
	"X"	5'-5 3/4"	15'-5 3/4"	25'-5 3/4"	35'-5 3/4"	45'-5 3/4"	55'-5 3/4"	65'-5 3/4"	75'-5 3/4"	85'-5 3/4"	95'-5 3/4"	105'-5 3/4"	110'-11 7/16"	
146PG7.01	"Y"	3 3/4	9 9/16"	1'-2 1/8	1'-5 3/8	1'-7 5/16"	1'-7 15/16"	1'-7 5/16"	1'-5 3/8	1'-2 1/8	9 9/16"	3 3/4	0"	925.9297
													℄ BRG	
	"X"	6'-7 3/4"	16'-7 3/4"	26'-7 3/4"	36'-7 3/4"	46'-7 3/4"	56'-7 3/4"	66'-7 3/4"	76'-7 3/4"	86'-7 3/4"	96'-7 3/4"	106'-7 3/4"	113'-3 1/2"	
147PG8.02	"Y"	4 9/16"	10 3/8	1'-2 7/8	1'-6 1/16"	1'-8	1'-8 5/8"	1'-8	1'-6 1/16"	1'-2 7/8	10 3/8	4 9/16"	0"	934.5963
													℄ BRG.	
	"X"	6'-9 3/4"	16'-9 3/4"	26'-9 3/4"	36'-9 3/4"	46'-9 3/4"	56'-9 3/4"	66'-9 3/4"	76'-9 3/4"	86'-9 3/4"	96'-9 3/4"	106'-9 3/4"	113'-7 9/16"	
148PG8.03	"Y"	4 5/8"	10 3/8	1'-2 13/16"	1'-6	1'-7 15/16"	1'-8 9/16"	1'-7 15/16"	1'-6	1'-2 13/16"	10 3/8	4 5/8"	0"	943.2630
													℄ BRG.	
	"X"	7'-5 13/16"	17'-5 13/16"	27'-5 13/16"	37'-5 13/16"	47'-5 13/16"	57'-5 13/16"	67'-5 13/16"	77'-5 13/16"	87'-5 13/16"	97'-5 13/16"	107'-5 13/16"	114'-11 5/8"	
149PG7.04	"Y"	5'8	10 13/16"	1'-3 7/16"	1'-6 3/8	1'-8 1/4	1'-8 7/8	1'-8 1/4	1'-6 3/8	1'-3 7/16"	10 13/16"	5'8	0"	951.9297
													℄ BRG.	

TEXAS DEPARTMENT OF TRANSPORTATION
APPROVED EXCEPT AS NOTED
DIVISION OF BRIDGES AND STRUCTURES
DEC 16 1992
APPROVAL OF THIS DRAWING DOES NOT RELIEVE THE CONTRACTOR OF THE RESPONSIBILITY FOR THE CORRECTNESS OF DETAIL.

FOR APPROVAL
NOV 05 '92
NOT FOR CONSTRUCTION

THIS SHEET NOT
DETAIL CHECKED
APV 11-5

SHOP NOTE :
FOR GENERAL NOTES, SEE SHT. GN1.

G0108

FED. ROAD DIV. NO.	STATE	FEDERAL AID PROJECT NO.			
6	TX.	NH 92(50)M			
STATE DIST. NO.	COUNTY	CONTROL NO.	SECTION NO.	JOB NO.	HIGHWAY NO.
21	HIDALGO	39	17	97	83/281

HOLES ___ U.N.	FOR APVL		
BOLTS ___ U.N.	RETURNED		
WELDS ___ U.N.	TO SHOP		
PAINT			

REVISIONS

NO	DATE	REMARKS
1		
2		
3		
4		

HIRSCHFELD STEEL CO. INC.
112 WEST 29TH SAN ANGELO TEXAS 76903
PHONE (915) 653-3211

CUSTOMER GILBERT TEXAS CONSTRUCTION
ARCHITECT
PROJECT US 83/281 INTERCHANGE RAMP #3
LOCATION HIDALGO COUNTY

DRAWN LHS DATE 9-10-92	JOB NO	SHEET NO
CHECKED DLT DATE 9-92	92-108	151 of

CE 92-13

A B C D E F G H I J K L M N O P Q R S T U V W X Y Z

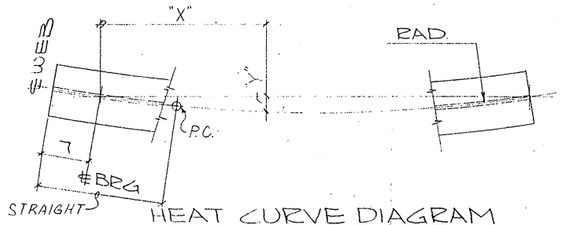

HEAT CURVE DIAGRAM
(ALONG TOP FLG.)

THIS SHEET NOT
DETAIL CHECKED

GIRDER MK		VARIABLES											RADIUS
120PG1.01	"X"	9'-10 7/8"	11'-1 3/8"	19'-10 7/8"	29'-10 7/8"	39'-10 7/8"	49'-10 7/8"	59'-10 7/8"	69'-10 7/8"	79'-10 7/8"	89'-10 7/8"	98'-6 7/8"	
	"Y"	5"	5 5/8"	9 1/2"	1'-0 3/4"	1'-2 11/16"	1'-3 3/8"	1'-2 11/16"	1'-0 3/4"	9 1/2"	5"	0"	925.9297
			P.C.										
121PG1.02	"X"	9'-1 1/4"	11'-1 3/8"	19'-1 1/4"	29'-1 1/4"	39'-1 1/4"	49'-1 1/4"	59'-1 1/4"	69'-1 1/4"	79'-1 1/4"	89'-1 1/4"	96'-11 3/8"	
	"Y"	4 7/16"	5 7/16"	8 15/16"	1'-0 1/8"	1'-2 1/16"	1'-2 1/16"	1'-2 1/16"	1'-0 1/8"	8 15/16"	4 7/16"	0"	934.5963
			P.C.										
122PG1.03	"X"	8'-3 5/8"	11'-1 3/8"	18'-3 5/8"	28'-3 5/8"	38'-3 5/8"	48'-3 5/8"	58'-3 5/8"	68'-3 5/8"	78'-3 5/8"	88'-3 5/8"	95'-3 13/16"	
	"Y"	3 15/16"	5 1/4"	8 3/8"	11 1/2"	1'-1 7/16"	1'-2 1/16"	1'-1 7/16"	11 1/2"	8 3/8"	3 7/8"	0"	943.2630
			P.C.										
123PG1.04	"X"	8'-11 1/4"	11'-1 3/8"	18'-11 3/4"	28'-11 3/4"	38'-11 3/4"	48'-11 3/4"	58'-11 3/4"	68'-11 3/4"	78'-11 3/4"	88'-11 3/4"	96'-8 1/4"	
	"Y"	4 5/16"	5 5/16"	8 11/16"	11 13/16"	1'-1 3/4"	1'-2 3/8"	1'-1 3/4"	11 13/16"	8 11/16"	4 1/4"	0"	951.9297
			P.C.										

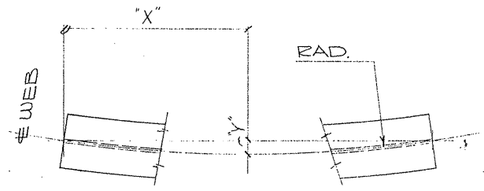

HEAT CURVE DIAGRAM
(ALONG TOP FLG.)

THIS SHEET NOT
DETAIL CHECKED

GIRDER MK		VARIABLES														RADIUS
124PG2.01	"X"	4'-5 9/16"	14'-5 9/16"	24'-5 9/16"	34'-5 9/16"	44'-5 9/16"	54'-5 9/16"	64'-5 9/16"	74'-5 9/16"	84'-5 9/16"	94'-5 9/16"	104'-5 9/16"	108'-11 1/8"			
	"Y"	3 1/16"	8 7/8"	1'-7 7/16"	1'-4 11/16"	1'-6 5/8"	1'-7 1/4"	1'-6 5/8"	1'-4 11/16"	1'-1 7/16"	8 7/8"	3 1/16"	0"			925.9297
125PG2.02	"X"	11'8	10'-11 1/8"	20'-11 1/8"	30'-11 1/8"	40'-11 1/8"	50'-11 1/8"	60'-11 1/8"	61'-10 3/16"							
	"Y"	3/8	3 9/16"	5 1/2"	6 1/8"	5 1/2"	3 9/16"	3/8"	0"							934.5963
126PG2.03	"X"	2'-5 1/8"	12'-5 1/8"	22'-5 1/8"	32'-5 1/8"	42'-5 1/8"	52'-5 1/8"	62'-5 1/8"	64'-10 3/16"							
	"Y"	15/16"	4 1/8"	6 1/16"	6 11/16"	6 1/16"	4 1/8"	15/16"	0"							943.2630
127PG2.04	"X"	7'-11 1/2"	17'-11 1/2"	27'-11 1/2"	37'-11 1/2"	47'-11 1/2"	57'-11 1/2"	67'-11 1/2"	77'-11 1/2"	87'-11 1/2"	97'-11 1/2"	107'-11 1/2"	115'-11"			
	"Y"	5 7/16"	11 1/8"	1'-3 1/2"	1'-6 11/16"	1'-8 9/16"	1'-9 3/16"	1'-8 9/16"	1'-6 11/16"	1'-3 1/2"	11 1/8"	5 7/16"	0"			951.9297
128PG3.02	"X"	5'-5 1/8"	15'-5 1/8"	25'-5 1/8"	35'-5 1/8"	45'-5 1/8"	50'-10 1/4"									934.5963
129PG3.03	"Y"	1 9/16"	3 1/2"	4 1/8"	3 1/2"	1 9/16"	0"									943.2630
130PG3.01	"X"	3'-6 3/8"	13'-6 3/8"	23'-6 3/8"	33'-6 3/8"	43'-6 3/8"	53'-6 3/8"	63'-6 3/8"	73'-6 3/8"	83'-6 3/8"	93'-6 3/8"	103'-6 3/8"	113'-6 3/8"	123'-6 3/8"	127'-0 1/16"	
	"Y"	2 13/16"	10"	1'-3 13/16"	1'-8 3/8"	1'-11 5/8"	2'-1 9/16"	2'-2 3/16"	2'-1 9/16"	1'-11 5/8"	1'-8 3/8"	1'-3 13/16"	10"	2 13/16"	0"	925.9297
131PG4.02	"X"	4'-0 9/16"	14'-0 9/16"	24'-0 9/16"	34'-0 9/16"	44'-0 9/16"	54'-0 9/16"	64'-0 9/16"	74'-0 9/16"	84'-0 9/16"	94'-0 1/16"	104'-0 1/16"	114'-0 1/16"	124'-0 1/16"	128'-1 3/16"	
	"Y"	3 1/4"	10 5/16"	1'-4 1/8"	1'-8 5/8"	1'-11 13/16"	2'-1 3/4"	2'-2 3/8"	2'-1 3/4"	1'-11 13/16"	1'-8 5/8"	1'-4 1/8"	10 5/16"	3 1/4"	0"	934.5963
132PG4.03	"X"	4'-0 7/8"	14'-0 7/8"	24'-0 7/8"	34'-0 7/8"	44'-0 7/8"	54'-0 7/8"	64'-0 7/8"	74'-0 7/8"	84'-0 7/8"	94'-0 7/8"	104'-0 7/8"	114'-0 7/8"	124'-0 7/8"	128'-1 1/16"	
	"Y"	3 3/16"	10 3/16"	1'-3 15/16"	1'-8 3/8"	1'-11 9/16"	2'-1 1/2"	2'-2 1/8"	2'-1 1/2"	1'-11 9/16"	1'-8 3/8"	1'-3 15/16"	10 3/16"	3 3/16"	0"	943.2630
133PG3.04	"X"	5'-7 1/16"	15'-7 1/16"	25'-7 1/16"	35'-7 1/16"	45'-7 1/16"	55'-7 1/16"	65'-7 1/16"	75'-7 1/16"	85'-7 1/16"	95'-7 1/16"	105'-7 1/16"	115'-7 1/16"	125'-7 1/16"	131'-2 1/8"	
	"Y"	4 7/16"	11 3/8"	1'-5 1/16"	1'-9 7/16"	2'-0 5/8"	2'-2 1/2"	2'-3 1/8"	2'-2 1/2"	2'-0 5/8"	1'-9 7/16"	1'-5 1/16"	11 3/8"	4 7/16"	0"	951.9297
134PG4.01	"X"	1'-11 5/8"	11'-11 5/8"	21'-11 5/8"	31'-11 5/8"	41'-11 5/8"	51'-11 5/8"	61'-11 5/8"	71'-11 5/8"	81'-11 5/8"	91'-11 5/8"	101'-11 5/8"	103'-11 7/8"			
	"Y"	1 5/16"	7 1/8"	11 11/16"	1'-2 15/16"	1'-4 7/8"	1'-5 1/2"	1'-4 7/8"	1'-2 15/16"	11 11/16"	7 1/8"	1 5/16"	0"			925.9297

FOR APPROVAL
NOV 16 '92
NOT FOR CONSTRUCTION

TEXAS DEPARTMENT OF TRANSPORTATION
APPROVED EXCEPT AS NOTED
DIVISION OF BRIDGES AND STRUCTURES
DEC 16 1992
APPROVAL OF THIS DRAWING DOES NOT RELIEVE THE CONTRACTOR OF THE RESPONSIBILITY FOR THE CORRECTNESS OF DETAIL

THIS SHEET NOT
DETAIL CHECKED

APV

SHOP NOTE :
FOR GENERAL NOTES, SEE SHT. GN1.

G0108

FED. ROAD DIV. NO.	STATE	FEDERAL AID PROJECT NO.			
6	TX.	NH 92(50)M			
STATE DIST. NO.	COUNTY	CONTROL NO.	SECTION NO.	JOB NO.	HIGHWAY NO.
21	HIDALGO	39	17	97	83/281

HOLES ____ U N	FOR AP'VL ____		
BOLTS ____ U N	RETURNED ____		
WELDS ____ U N	TO SHOP ____		
PAINT ____			

REVISIONS		
NO	DATE	REMARKS
1		
2		
3		
4		

HIRSCHFELD STEEL CO. INC.
112 WEST 29TH SAN ANGELO, TEXAS 76903
PHONE (915) 653-3211

CUSTOMER GILBERT TEXAS CONSTRUCTION
ARCHITECT
PROJECT US 83/281 INTERCHANGE RAMP #3
LOCATION HIDALGO COUNTY

DRAWN MSG	DATE 9-16-92	JOB NO	SHEET NO
CHECKED DLT	DATE 9-92	92-108	150 of

CE 92-13

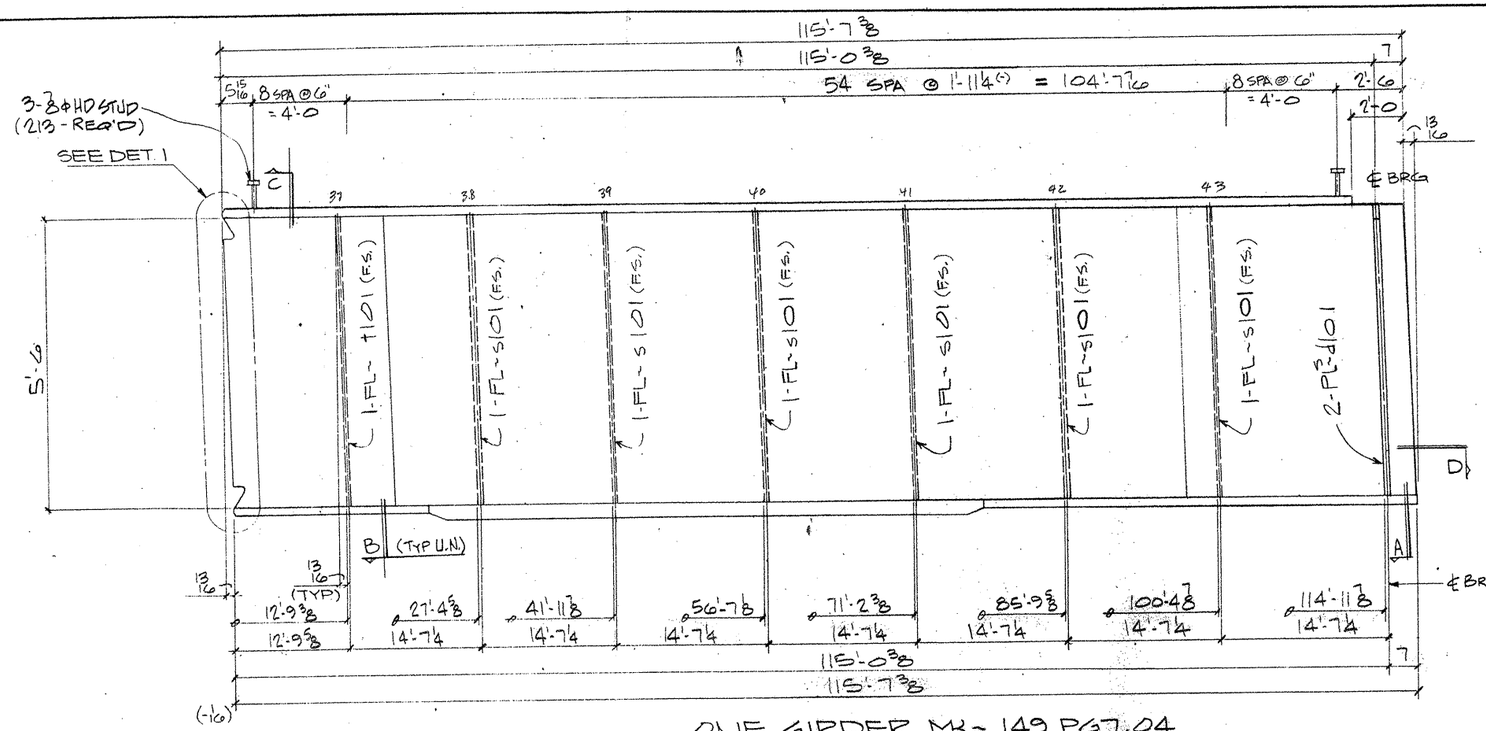

ONE GIRDER MK~ 149 PG7.04

(APPROX. WT. = TONS)

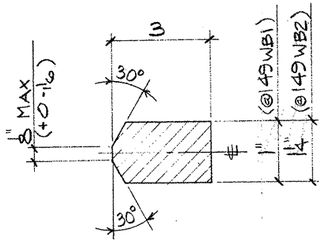

144 - WELD BARS MK~ 149WB1

48 - WELD BARS MK~ 149WB2

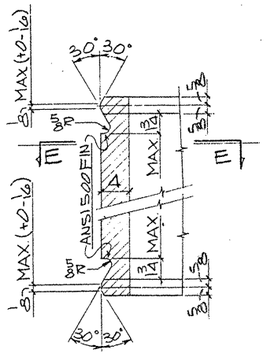

DETAIL - 1

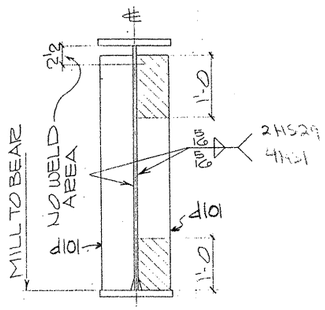

SECTION - A

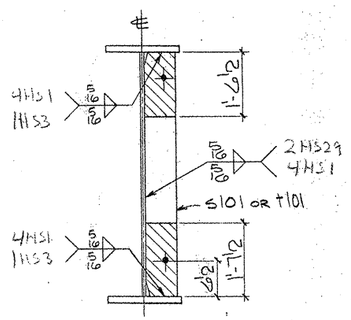

SECTION - B

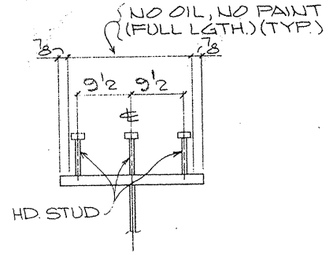

SECTION - C

(TYP. STUD SECT.)

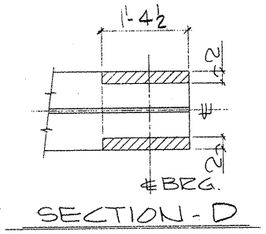

SECTION - D

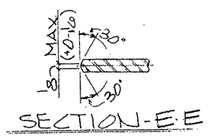

SECTION - E-E

SHOP NOTES:

1) FOR GENERAL NOTES SEE SHT. GN1
2) FOR GIRDER SUB-ASSEMBLY SEE SHT. 119
3) FOR STIFF. DETAILS SEE SHT. 101
4) FOR BLOCKING DIAGRAM SEE SHT. 155
5) FOR HEAT CURVE DIAGRAM SEE SHT. 151
6) ////// INDICATES OIL, NO PAINT (N.S./F.S. & EDGES)

BILL OF MATERIAL

	Qnty	Material	Length	Mark Temp	Mark Ship	Wt	Cut From	Remarks
2	1	GIRDER			149PG7.04			
3	1	GIRDER SUB-ASSY		B119				
4	2	BRG STIFF		d101				
5	1	DIAF STIFF		t101				
6	6	DIAF STIFF		6101				
7	213	HD STUD 7/8	0'-7					1160-1 A108
26		WELD BARS						
27	144	PL 1 x 1	0'-3		149WB1			STK
28	48	PL 1 1/4 x 1	0'-3		149WB2			STK

TEXAS DEPARTMENT OF TRANSPORTATION
APPROVED
DIVISION OF BRIDGES AND STRUCTURES
DEC 16 1992

APPROVAL OF THIS DRAWING DOES NOT RELIEVE THE CONTRACTOR OF THE RESPONSIBILITY FOR THE CORRECTNESS OF DETAIL

FOR APPROVAL
NOV 05 '92
NOT FOR CONSTRUCTION

REVISION	DATE	DESCRIPTION OF REVISION
NO. 1		
NO. 2		
NO. 3		
NO. 4		
NO. 5		

PRINTING — Welds: Prod. 5/16 Unless Noted
Reqd | For | Date
Shop Paint: SEE SHT GN1
Fab. Spec: AS NTD — Inspection
Architect
Erection By — Final Connections

HIRSCHFELD STEEL CO. INC.
112 WEST 29TH SAN ANGELO TEXAS 76903
PHONE (915) 653-3211

DESCRIPTION	70'-5 PLATE GIRDER UNIT
STRUCTURE	US 83/281 INTERCHANGE RAMPS
LOCATION	HIDALGO COUNTY
CUSTOMER	GILBERT TEXAS CONSTRUCTION
SHIP TO	
Customer's Order No.	
Dwg. By JDL	Date 3/92
Checked By DLT	Date 9-92

SHEET 49 OF
JOB NO 92-108

APV 11-5

G010 B

FED. ROAD DIV. NO.	STATE	FEDERAL AID PROJECT NO.			
6	TX.	NH 92(50)M			
STATE DIST. NO.	COUNTY	CONTROL NO.	SECTION NO.	JOB NO.	HIGHWAY NO.
21	HIDALGO	39	17	97	83/281

CE 92-13 (LINE # 4)

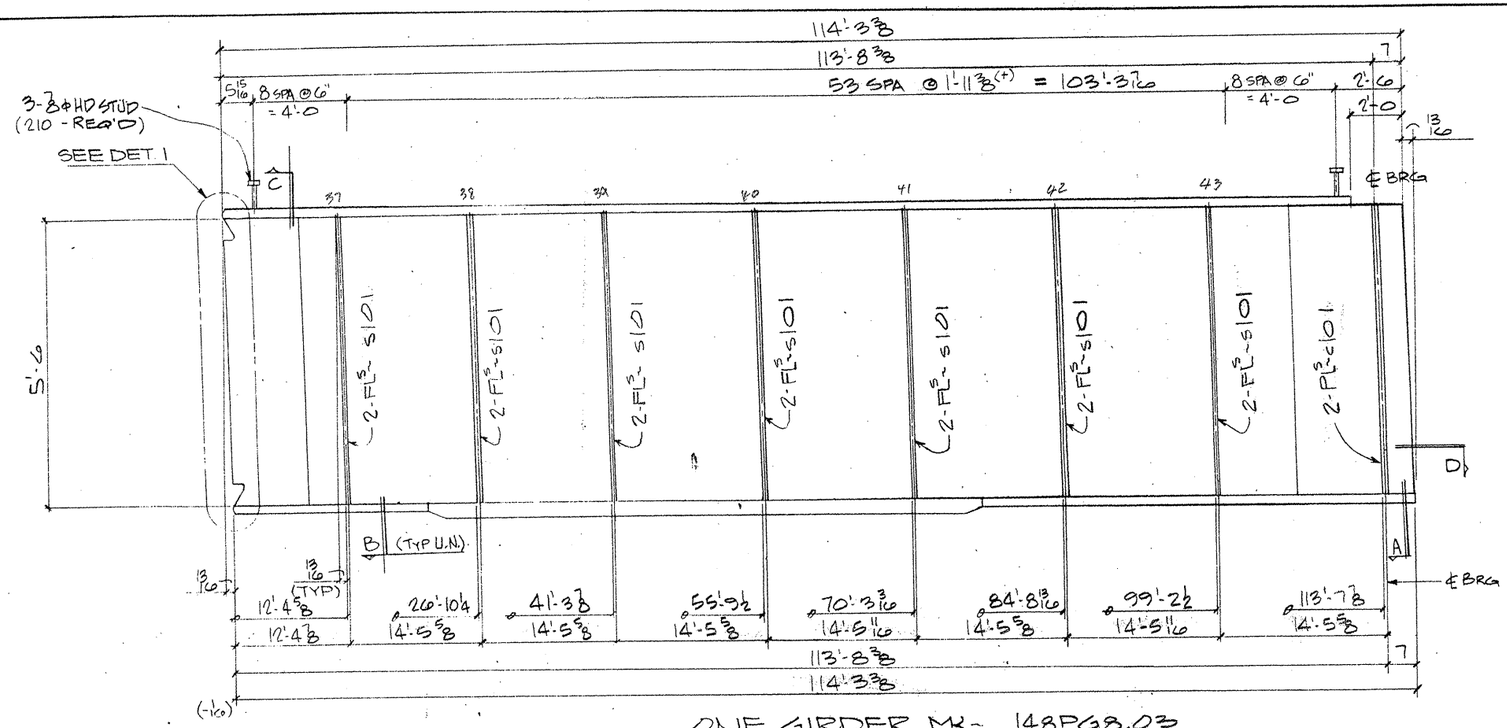

ONE GIRDER MK- 148PG8.03

(APPROX. WT. = TONS)

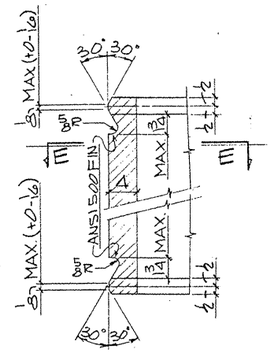

DETAIL - 1

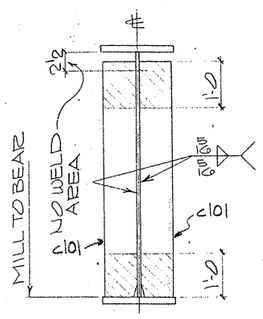

2HS29
4HS1

SECTION - A

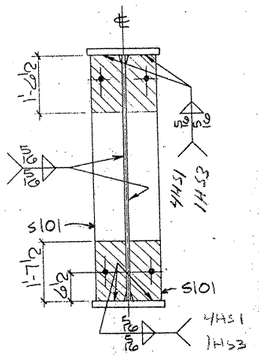

SECTION - B

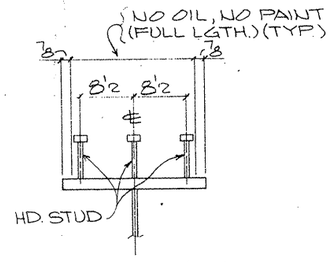

SECTION - C
(TYP. STUD SECT.)

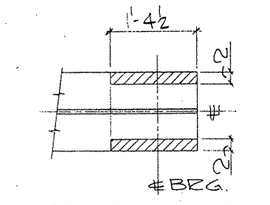

SECTION - D

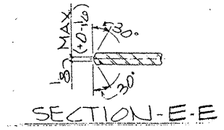

SECTION - E - E

SHOP NOTES:

1) FOR GENERAL NOTES SEE SHT. GN1
2) FOR GIRDER SUB-ASSEMBLY SEE SHT. 119
3) FOR STIFF. DETAILS SEE SHT. 10
4) FOR BLOCKING DIAGRAM SEE SHT. 154
5) FOR HEAT CURVE DIAGRAM SEE SHT. 151
6) ▨ INDICATES OIL, NO PAINT (N.S./F.S. & EDGES)

G0108

FED. ROAD DIV. NO.	STATE	FEDERAL AID PROJECT NO.			
6	TX.	NH 92(50)M			
STATE DIST. NO.	COUNTY	CONTROL NO.	SECTION NO.	JOB NO.	HIGHWAY NO.
21	HIDALGO	39	17	97	83/281

BILL OF MATERIAL

	Qnty	Material	Length	Mark Temp	Mark Stnd	Wt	Cut From	Remarks
1								
2	1	GIRDER			148 PG8.03			
3	1	GIRDER SUB-ASSY		A119				
4	2	BRG STIFF		C101				
5								
6	14'	DIAF STIFF.		S101				
7	210	HD STUD 7/8ϕ	0'-7				1160-1	A108
8								
9								
10								
11								
12								
13								
14								
15								
16								
17								
18								
19								
20								
21								
22								
23								
24								
25								
26								
27								
28								
29								
30								
31								
32								
33								
34								
35								
36								
37								
38								
39								
40								
41								
42								
43								
44								
45								
46								
47								
48								
49								
50								
51								
52								
53								
54								
55								
56								
57								
58								
59								
60								

FOR APPROVAL
NOV 05 92
NOT FOR CONSTRUCTION

TEXAS DEPARTMENT OF TRANSPORTATION
APPROVED
DIVISION OF BRIDGES AND STRUCTURES
DEC 16 1992

APPROVAL OF THIS DRAWING DOES NOT RELIEVE THE CONTRACTOR OF THE RESPONSIBILITY FOR THE CORRECTNESS OF SAME

REVISION	DATE	DESCRIPTION OF REVISION
NO. 1		
NO. 2		
NO. 3		
NO. 4		
NO. 5		

PRINTING

Revis	For	Date
→	APV	11-5

Date: Unless Noted Otherwise
Shop Print: SEE SHT GN1
Tab Size: AS NTD Inspector
Archive:
Erection By: Field Connections

HIRSCHFELD STEEL CO. INC.
112 WEST 29TH SAN ANGELO TEXAS 76903
PHONE (915) 653-3211

DESCRIPTION	702'-5 PLATE GIRDER UNIT
STRUCTURE	US 83/281 INTERCHANGE RAMP E3
LOCATION	HIDALGO COUNTY
CUSTOMER	GILBERT TEXAS CONSTRUCTION
SHIP TO	
Customer's Order No.	
Dwg By JRL	Date 9/92
Checked By DLT	Date 9-92

SHEET 148 OF
JOB NO 92-108

CE 92-13 (LINE # 3)

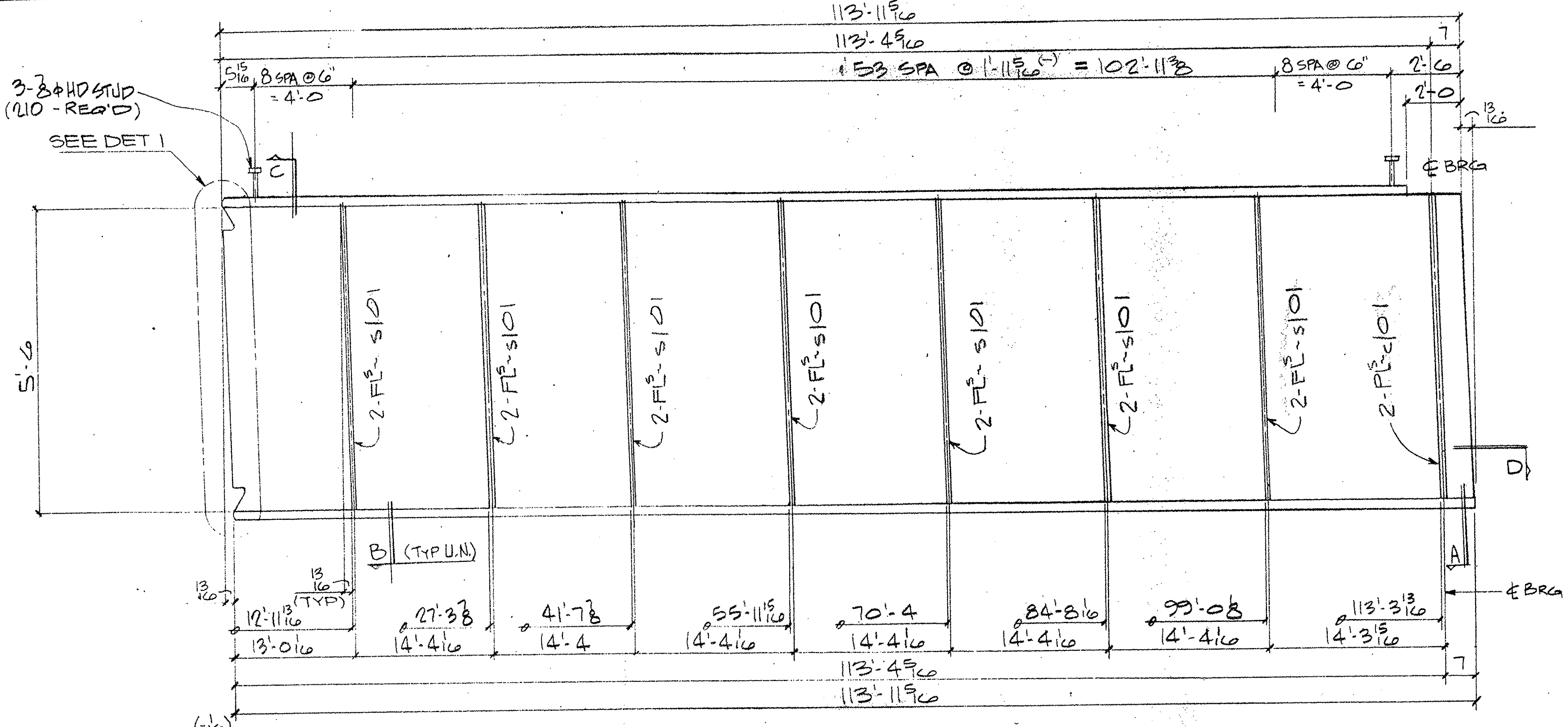

ONE GIRDER MK- 147 PG8.02

(APPROX. WT. = TONS)

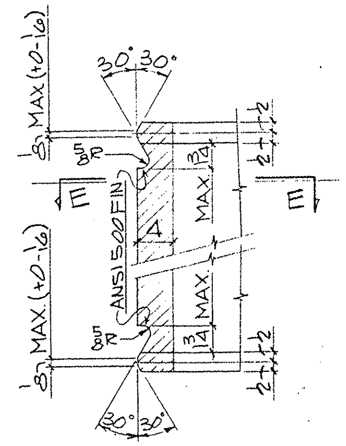

DETAIL - 1

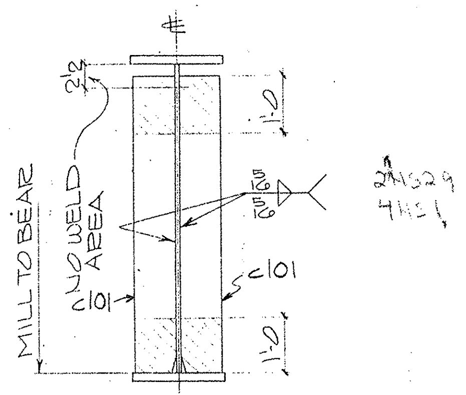

SECTION - A

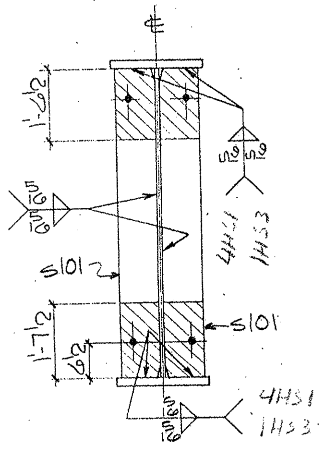

SECTION - B

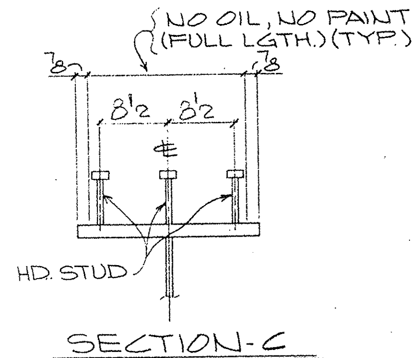

SECTION - C
(TYP. STUD SECT.)

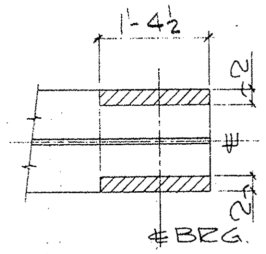

SECTION - D

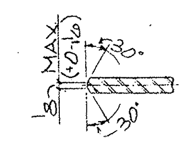

SECTION - E-E

BILL OF MATERIAL

	Qnty	Material	Length	Mark Temp	Mark Ship	Wt	Cut From	Remarks
1								
2	1	GIRDER			147PG8.02			
3	1	GIRDER SUB-ASSY		B118				
4	2	BRG STIFF		C101				
5								
6	14	DIAF STIFF		S101				
7	210	HD STUD 7/8 φ	0'-7				6-1	A108
8								
9								
10								
11								
12								
13								
14								
15								
16								
17								
18								
19								
20								
21								
22								
23								
24								
25								
26								
27								
28								
29								
30								
31								
32								
33								
34								
35								
36								
37								
38								
39								
40								
41								
42								
43								
44								
45								
46								
47								
48								
49								
50								
51								
52								
53								
54								
55								
56								
57								
58								
59								
60								

FOR APPROVAL
NOV 05 '92
NOT FOR CONSTRUCTION

TEXAS DEPARTMENT OF TRANSPORTATION
APPROVED
DIVISION OF BRIDGES AND STRUCTURES
DEC 16 1992
APPROVAL OF THIS DRAWING DOES NOT RELIEVE THE CONTRACTOR OF THE RESPONSIBILITY FOR THE CORRECTNESS OF DETAIL

REVISION	DATE	DESCRIPTION OF REVISION
NO. 1		
NO. 2		
NO. 3		
NO. 4		
NO. 5		

SHOP NOTES:
1) FOR GENERAL NOTES SEE SHT. GN1
2) FOR GIRDER SUB-ASSEMBLY SEE SHT. 118
3) FOR STIFF. DETAILS SEE SHT. 101
4) FOR BLOCKING DIAGRAM SEE SHT. 153
5) FOR HEAT CURVE DIAGRAM SEE SHT. 151
6) ▨ INDICATES OIL, NO PAINT (N.S./F.S. & EDGES)

G0108

FED. ROAD DIV. NO.	STATE	FEDERAL AID PROJECT NO.			
6	TX.	NH 92(50)M			
STATE DIST. NO.	COUNTY	CONTROL NO.	SECTION NO.	JOB NO.	HIGHWAY NO.
21	HIDALGO	39	17	97	83/281

PRINTING		
Req'd	For	Date
—	APV	11-5

Bolts: Holes 15/16 φ Unless Noted
Shop Paint: SEE SHT GN1
Fab Spec: AS NTD Inspection
Architect
Erection By Field Connections

HIRSCHFELD STEEL CO. INC.
112 WEST 29TH SAN ANGELO TEXAS 76903
PHONE (915) 653-3211

DESCRIPTION: 102'-5 PLATE GIRDER UNIT
STRUCTURE: US-83/281 INTERCHANGE RAMP #3
LOCATION: HIDALGO COUNTY
CUSTOMER: GILBERT TEXAS CONSTRUCTION
SHIP TO
Customer's Order No.
SHEET 147 OF
Dwg By: JDC Date: 9/92
Checked By: DLT Date: 9-92
JOB NO 92-108

CE 92-13 (LINE #2)

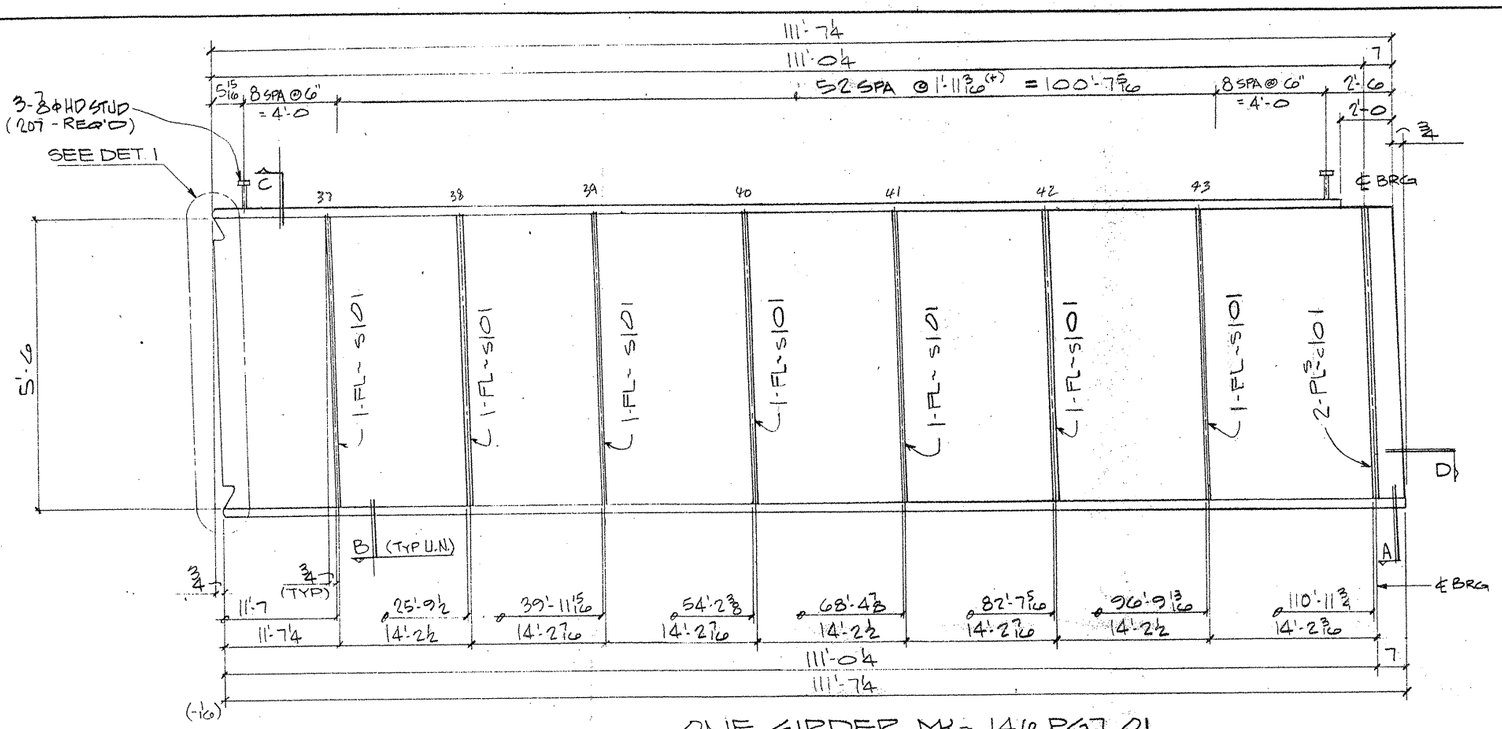

ONE GIRDER MK- 146 PG7.01

(APPROX. WT. = TONS)

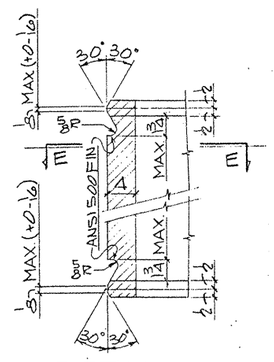

DETAIL - 1

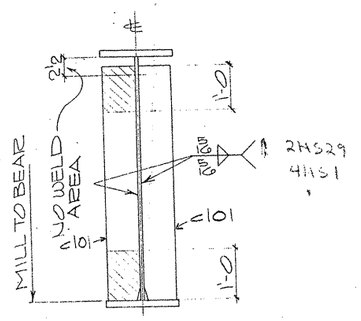

SECTION - A

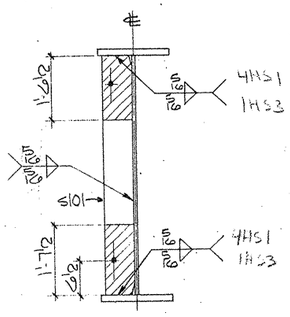

SECTION - B

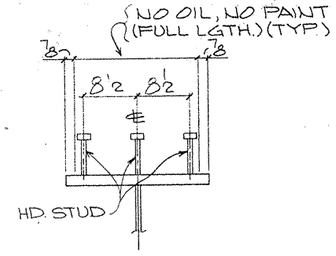

SECTION - C

(TYP. STUD SECT.)

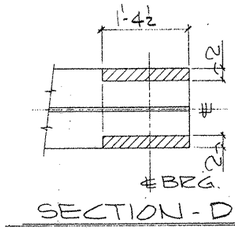

SECTION - D

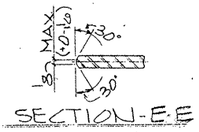

SECTION - E-E

SHOP NOTES:

1) FOR GENERAL NOTES SEE SHT. GN1
2) FOR GIRDER SUB-ASSEMBLY SEE SHT. 118
3) FOR STIFF. DETAILS SEE SHT. 101
4) FOR BLOCKING DIAGRAM SEE SHT. 152
5) FOR HEAT CURVE DIAGRAM SEE SHT. 151
6) ▨ INDICATES OIL, NO PAINT (N.S./F.S. & EDGES)

G0108

FED. ROAD DIV. NO.	STATE	FEDERAL AID PROJECT NO.			
6	TX.	NH 92(50)M			
STATE DIST. NO.	COUNTY	CONTROL NO.	SECTION NO.	JOB NO.	HIGHWAY NO.
21	HIDALGO	39	17	97	83/281

BILL OF MATERIAL

	Qnty	Material	Length	Mark Temp	Mark Ship	Wt	Cut From	Remarks
2	1	GIRDER			146PG7.01			
3	1	GIRDER SUB-ASSY		A118				
4	2	BRG STIFF		C101				
6	7	DIAF STIFF		S101				
7	207	HD STUD 7/8ϕ	0'-7				116-1	A108

FOR APPROVAL
NOV 05 '92
NOT FOR CONSTRUCTION

TEXAS DEPARTMENT OF TRANSPORTATION
APPROVED
DIVISION OF BRIDGES AND STRUCTURES
DEC 16 1992
APPROVAL OF THIS DRAWING DOES NOT RELIEVE THE CONTRACTOR OF THE RESPONSIBILITY FOR THE CORRECTNESS OF DETAILS

REVISION	DATE	DESCRIPTION OF REVISION
NO. 1		
NO. 2		
NO. 3		
NO. 4		
NO. 5		

PRINTING — Prints For — Date

Units — Metric 5/16" Dimensioning
Shop Paint — SEE GSHT GN1
Fab Spec — AS NTD Inspection
Architect
Erection By — Field Connections

KIRKSCHFELD STEEL CO. INC.
112 WEST 29TH SAN ANGELO, TEXAS 76903
PHONE (915) 653-3211

DESCRIPTION	207'-5 PLATE GIRDER UNIT
STRUCTURE	US 83/281 INTERCHANGE, RAMP "B"
LOCATION	HIDALGO COUNTY
CUSTOMER	GILBERT TEXAS CONSTRUCTION
SHIP TO	
Customer's Order No.	
Dwg By JDL	Date 8/92
Checked By DLT	Date 9-92

SHEET 146 OF
JOB NO. 92-108

APV 11-5

EE 92-13 (LINE #1)

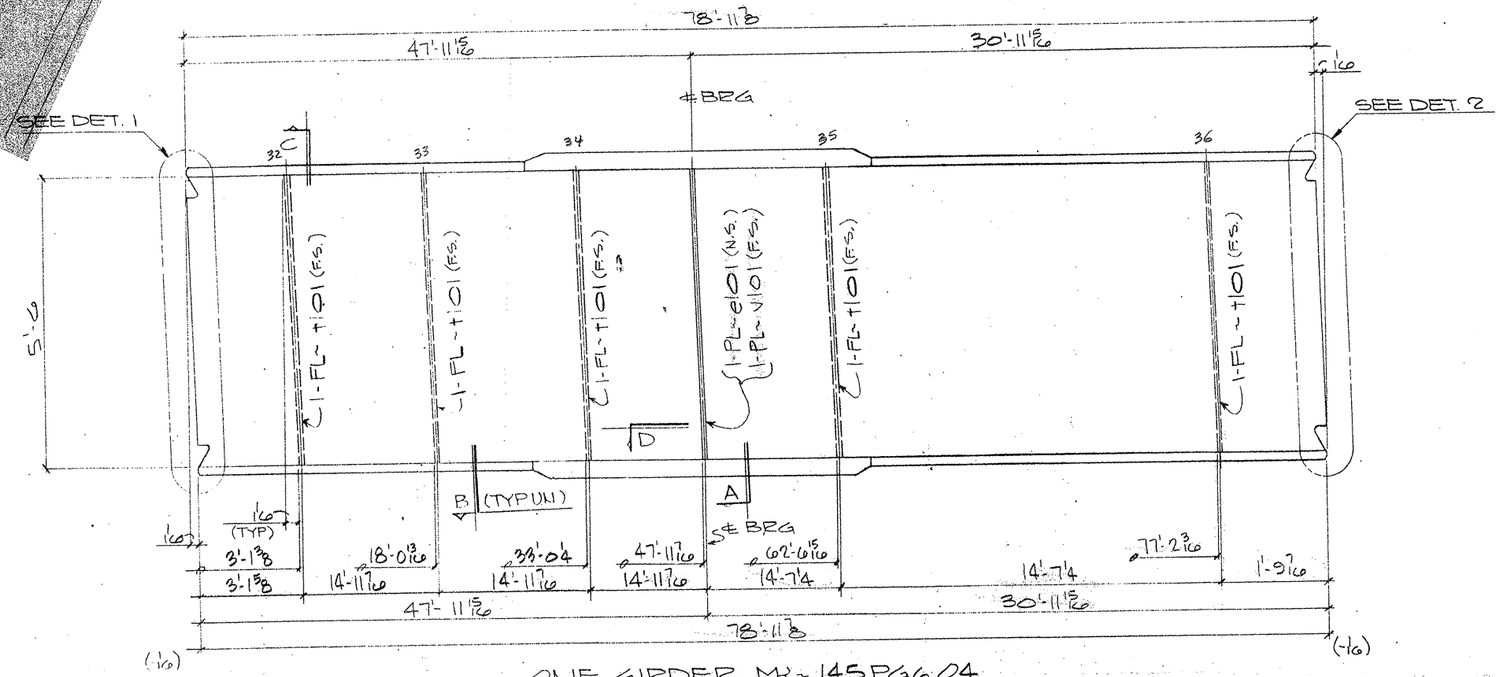

ONE GIRDER MK~ 145PG6.04

(APPROX. WT = TONS)

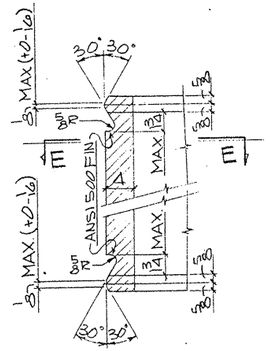

DETAIL - 1

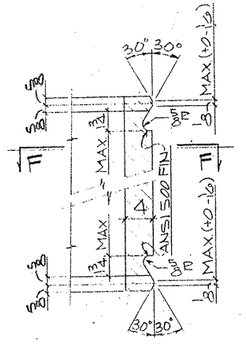

DETAIL - 2

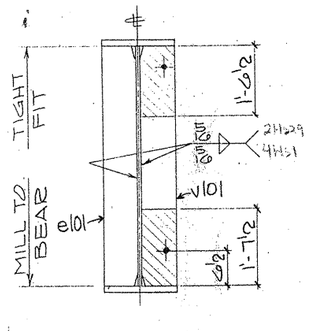

SECTION-A

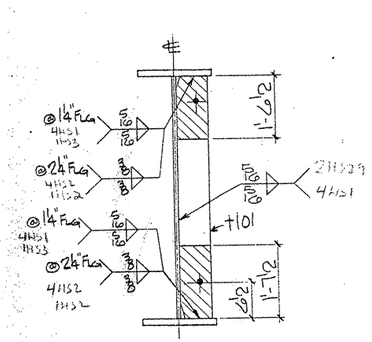

SECTION-B

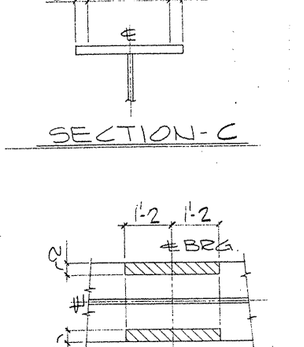

SECTION-C

SECTION-D

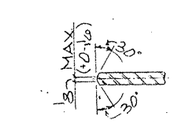

SECTION-E-E

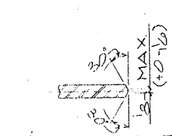

SECTION-F-F

SHOP NOTES:

1) FOR GENERAL NOTES SEE SHT. GN11
2) FOR GIRDER SUB-ASSEMBLY SEE SHT. 117
3) FOR STIFF. DETAILS SEE SHT. 101
4) FOR BLOCKING DIAGRAM SEE SHT. 155
5) FOR HEAT CURVE DIAGRAM SEE SHT. 151
6) ////// INDICATES OIL, NO PAINT (N.S./F.S. & EDGES)

G0108

FED. ROAD DIV. NO.	STATE	FEDERAL AID PROJECT NO.				
6	TX.	NH 92(50)M				
STATE DIST. NO.	COUNTY	CONTROL NO.	SECTION NO.	JOB NO.	HIGHWAY NO.	
21	HIDALGO	39	17	97	83/281	

BILL OF MATERIAL

	Qnty	Material	Length	Mark Fwng	Mark Ship	Wt.	Cut From	Remarks
1								
2	1	GIRDER			145PG6.04			
3	1	GIRDER SUB-ASSY		B117				
4	1	BRG STIFF		e101				
5	1	BRG STIFF		V101				
6	5	DIAF STIFF		t101				

FOR APPROVAL
NOV 05 '92
NOT FOR CONSTRUCTION

TEXAS DEPARTMENT OF TRANSPORTATION
APPROVED
DIVISION OF BRIDGES AND STRUCTURES
DEC 16 1992
APPROVAL OF THIS DRAWING DOES NOT RELIEVE THE CONTRACTOR OF THE RESPONSIBILITY FOR THE CORRECTNESS OF DETAIL.

REVISION	DATE	DESCRIPTION OF REVISION
NO 1		
NO 2		
NO 3		
NO 4		
NO 5		

PRINTING		
Reqd	For	Date

Units: Inch Fract. ± Decimals
Structural: SEE SHT. GN11
Fab. Spec: AASHTO Inspection
Painting:
Welding By: Shop Connections

HIRSCHFELD STEEL CO. INC.
117 WEST 29TH SAN ANGELO TEXAS 76903
PHONE (915) 653-3211

DESCRIPTION	102'-5 PLATE GIRDER UNIT
STRUCTURE	OL R3726 INTERCHANGE RAMP ⇔
LOCATION	HIDALGO COUNTY
CUSTOMER	GILBERT TEXAS CONSTRUCTION
SHIP TO	
Customer's Order No.	
Dwg. By JDZ	Date 9/92
Checked By DLT	Date 9-92

SHEET 145 OF
JOB NO 92-108

APV 11-5

CE 92-13 (LINE 4)

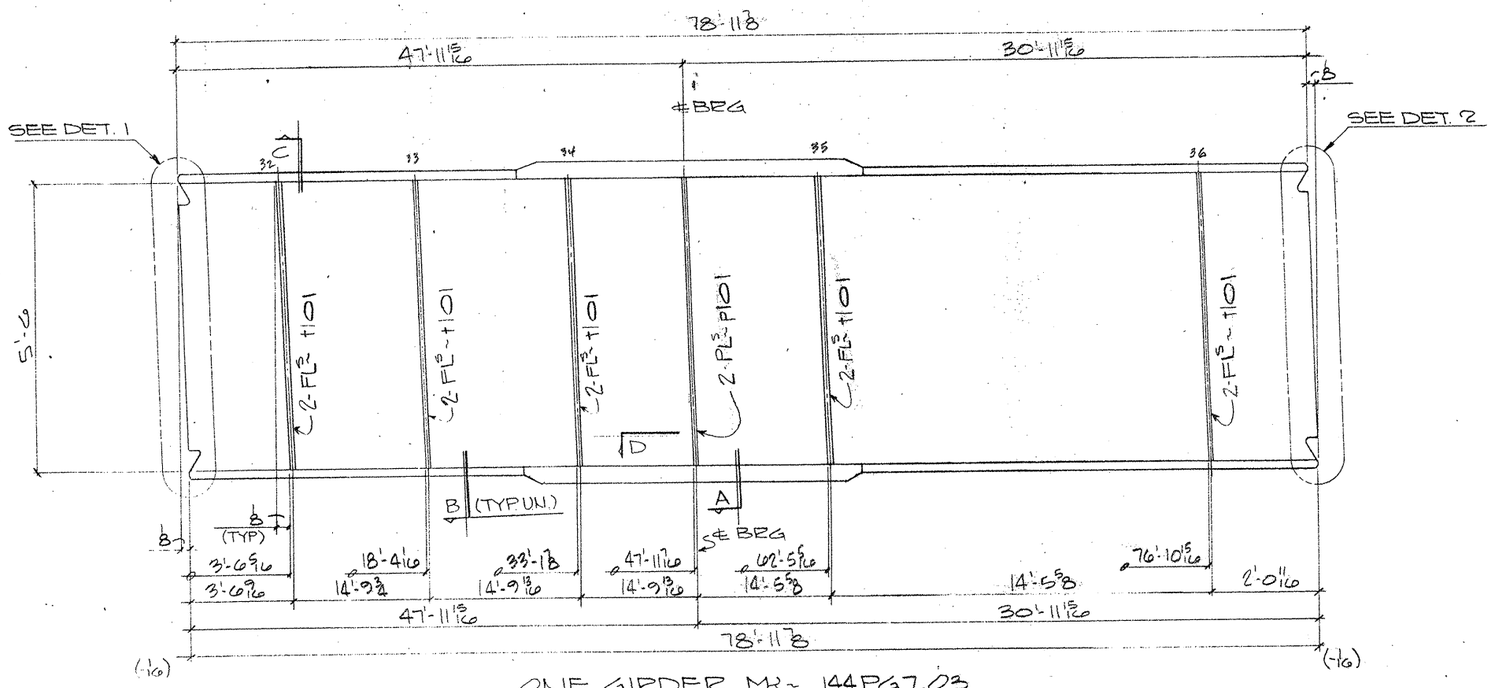

ONE GIRDER MK- 144PG7.03

(APPROX. WT. = TONS)

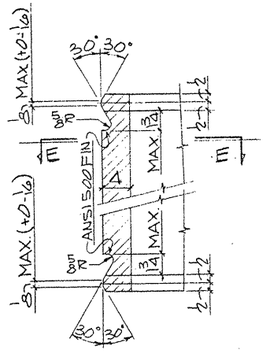

DETAIL - 1

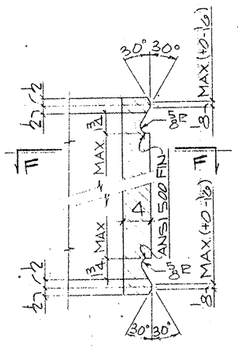

DETAIL - 2

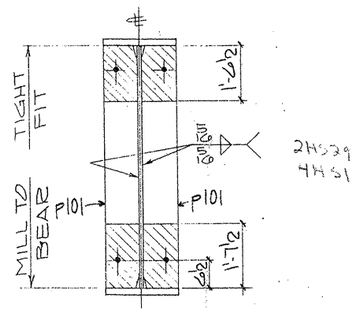

SECTION - A

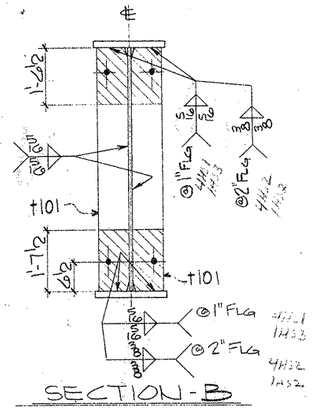

SECTION - B

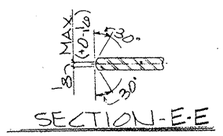

SECTION - E-E

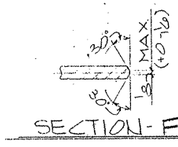

SECTION - F-F

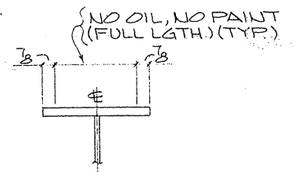

SECTION - C

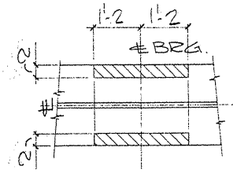

SECTION - D

SHOP NOTES:

1) FOR GENERAL NOTES SEE SHT. GN1
2) FOR GIRDER SUB-ASSEMBLY SEE SHT. 116
3) FOR STIFF. DETAILS SEE SHT. 101
4) FOR BLOCKING DIAGRAM SEE SHT. 154
5) FOR HEAT CURVE DIAGRAM SEE SHT. 151
6) ▨ INDICATES OIL, NO PAINT (N.S./F.S. & EDGES)

G0108

FED. ROAD DIV. NO.	STATE	FEDERAL AID PROJECT NO.				
6	TX.	NH 92(50)M				
STATE DIST. NO.	COUNTY	CONTROL NO.	SECTION NO.	JOB NO.	HIGHWAY NO.	
21	HIDALGO	39	17	97	(83/281)	

BILL OF MATERIAL

	Qnty	Material	Length	Mark Temp	Mark Ship	Wt	Cut From	Remarks
1								
2	1	GIRDER			144PG7.03			
3	1	GIRDER SUB-ASSY		B116				
4	2	BRG STIFF		P101				
5								
6	10	DIAF STIFF		T101				
7								
8								
9								
10								
11								
12								
13								
14								
15								
16								
17								
18								
19								
20								
21								
22								
23								
24								
25								
26								
27								
28								
29								
30								
31								
32								
33								
34								
35								
36								
37								
38								
39								
40								
41								
42								
43								
44								
45								
46								
47								
48								
49								
50								
51								
52								
53								
54								
55								
56								
57								
58								
59								
60								

TEXAS DEPARTMENT OF ~~TRANSPORTATION~~
APPROVED
DIVISION OF BRIDGES AND STRUCTURES
DEC 16 1992

APPROVAL OF THIS DRAWING DOES NOT RELIEVE THE CONTRACTOR OF THE RESPONSIBILITY FOR THE CORRECTNESS OF DETAIL.

FOR APPROVAL
NOV 6 5 '92
NOT FOR CONSTRUCTION

REVISION	DATE	DESCRIPTION OF REVISION
NO. 1		
NO. 2		
NO. 3		
NO. 4		
NO. 5		

PRINTING

Rev.	Date	Item	Mark	Quan.	Sheet Mark	Fab. Spec.	Architect	Erection By
					SEE SHT GN1	ASTM		

Paint 3 coats unless Noted
Inspection
Field Connections

HIRSCHFELD STEEL CO. INC.
112 WEST 29TH SAN ANGELO TEXAS 76903
PHONE (915) 653-3211

DESCRIPTION	702'-5 PLATE GIRDER UNIT
STRUCTURE	US 83/281 INTERCHANGE RAMP #3
LOCATION	HIDALGO COUNTY
CUSTOMER	GILBERT TEXAS CONSTRUCTION
SHIP TO	
Customer's Order No.	
Dwg By JDL	Date 9/92
Checked By DLT	Date 9-92

SHEET 44 OF
JOB NO 92-108

CE 92-13 (LINE #3)

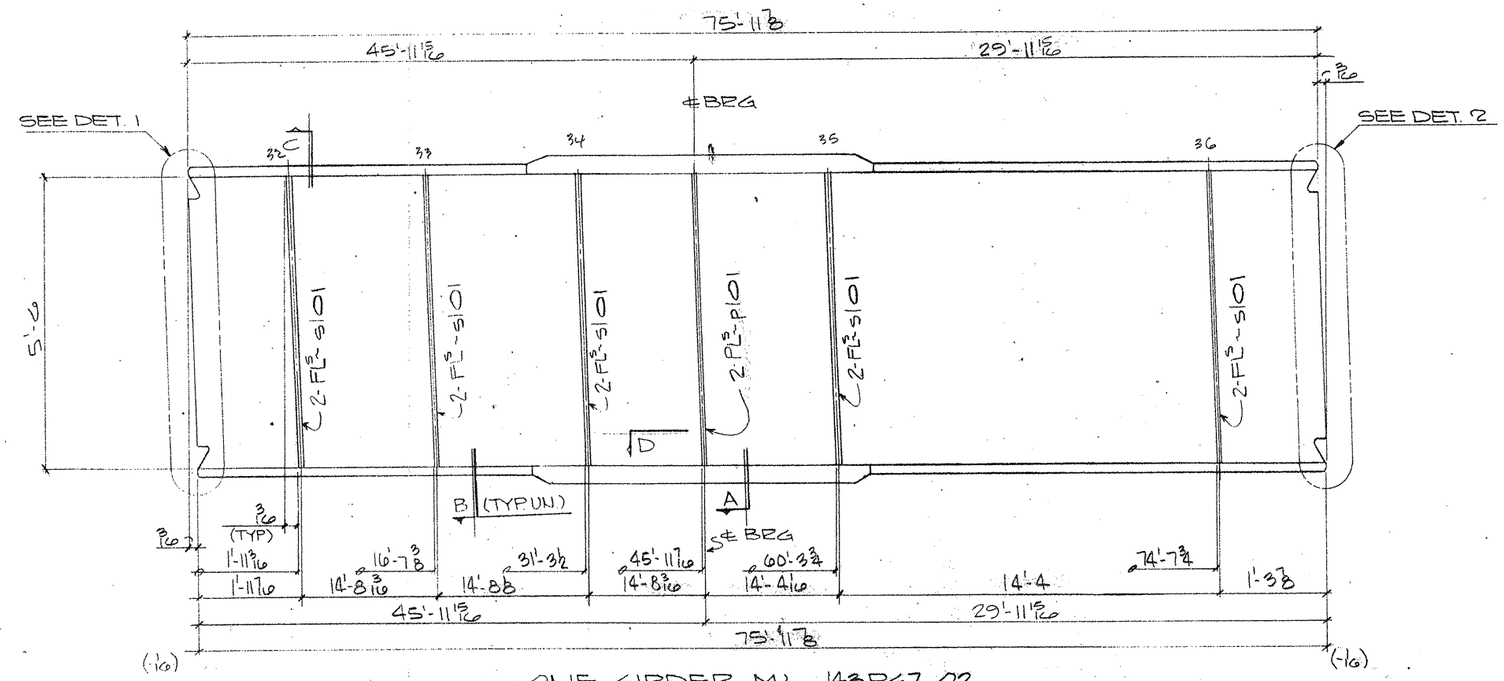

ONE GIRDER MK- 143PG7.02

(APPROX. WT. = TONS)

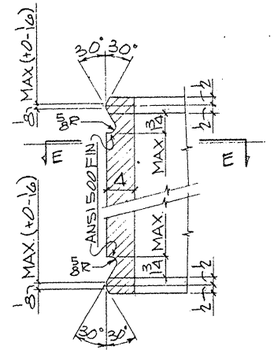

DETAIL - 1

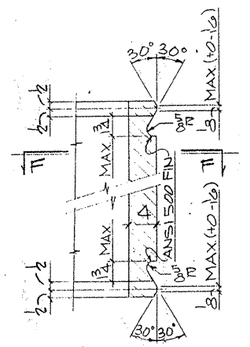

DETAIL - 2

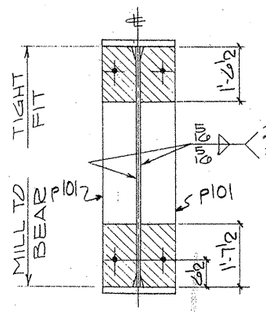

SECTION - A

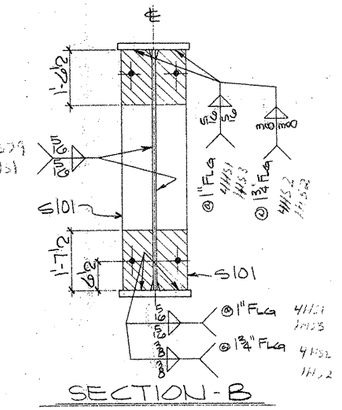

SECTION - B

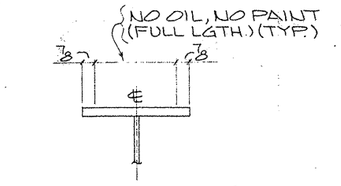

SECTION - C

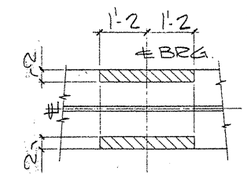

SECTION - D

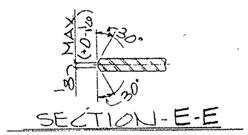

SECTION - E-E

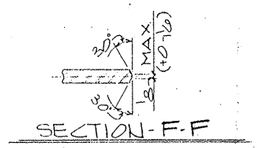

SECTION - F-F

SHOP NOTES:

1) FOR GENERAL NOTES SEE SHT. GN1
2) FOR GIRDER SUB-ASSEMBLY SEE SHT. 115
3) FOR STIFF. DETAILS SEE SHT. 101
4) FOR BLOCKING DIAGRAM SEE SHT. 153
5) FOR HEAT CURVE DIAGRAM SEE SHT. 151
6) ▨ INDICATES OIL, NO PAINT (N.S./F.S. & EDGES)

G0108

FED. ROAD DIV. NO.	STATE	FEDERAL AID PROJECT NO.			
6	TX.	NR 92(50)M			
STATE DIST. NO.	COUNTY	CONTROL NO.	SECTION NO.	JOB NO.	HIGHWAY NO.
21	HIDALGO	39	17	97	83/281

BILL OF MATERIAL

	Qnty	Material	Length	Mark Temp	Mark Ship	Wt	Cut From	Remarks
1								
2	1	GIRDER			143PG7.02			
3	1	GIRDER SUB-ASSY		B115				
4	2	BRG STIFF		P101				
5								
6	10	DIAF STIFF		S101				
7								
8								
9								
10								
11								
12								
13								
14								
15								
16								
17								
18								
19								
20								
21								
22								
23								
24								
25								
26								
27								
28								
29								
30								
31								
32								
33								
34								
35								
36								
37								
38								
39								
40								
41								
42								
43								
44								
45								
46								
47								
48								
49								
50								
51								
52								
53								
54								
55								
56								
57								
58								
59								
60								

TEXAS DEPARTMENT OF TRANSPORTATION
APPROVED
~~DIVISION OF BRIDGES AND STRUCTURES~~
DEC 16 1992

APPROVAL OF THIS DRAWING DOES NOT RELIEVE THE CONTRACTOR OF THE RESPONSIBILITY FOR THE CORRECTNESS OF DETAIL

FOR APPROVAL
NOV 05 '92
NOT FOR CONSTRUCTION

REVISION	DATE	DESCRIPTION OF REVISION
NO. 1		
NO. 2		
NO. 3		
NO. 4		
NO. 5		

PRINTING Req'd	For	Date

Detail Prints from 3/16 in. Unless Noted
Shop Paint: SEE SHT. GN1
Fab. Spec.: AASHTO Inspection
Architect:
Erection By: Field Connections

HIRSCHFELD STEEL CO. INC.
112 WEST 29TH SAN ANGELO, TEXAS 76903
PHONE (915) 653-3211

DESCRIPTION	102'-5 PLATE GIRDER UNIT
STRUCTURE	US 83/281 INTERCHANGE RAMP #3
LOCATION	HIDALGO COUNTY
CUSTOMER	GILBERT TEXAS CONSTRUCTION
SHIP TO	
Customer's Order No.	
Dwg By: JDE	Date 9/92
Checked By: DLT	Date 9-92

SHEET 143 OF
JOB NO 92-108

— AIV 11-5

CE92-13 (LINE #2)

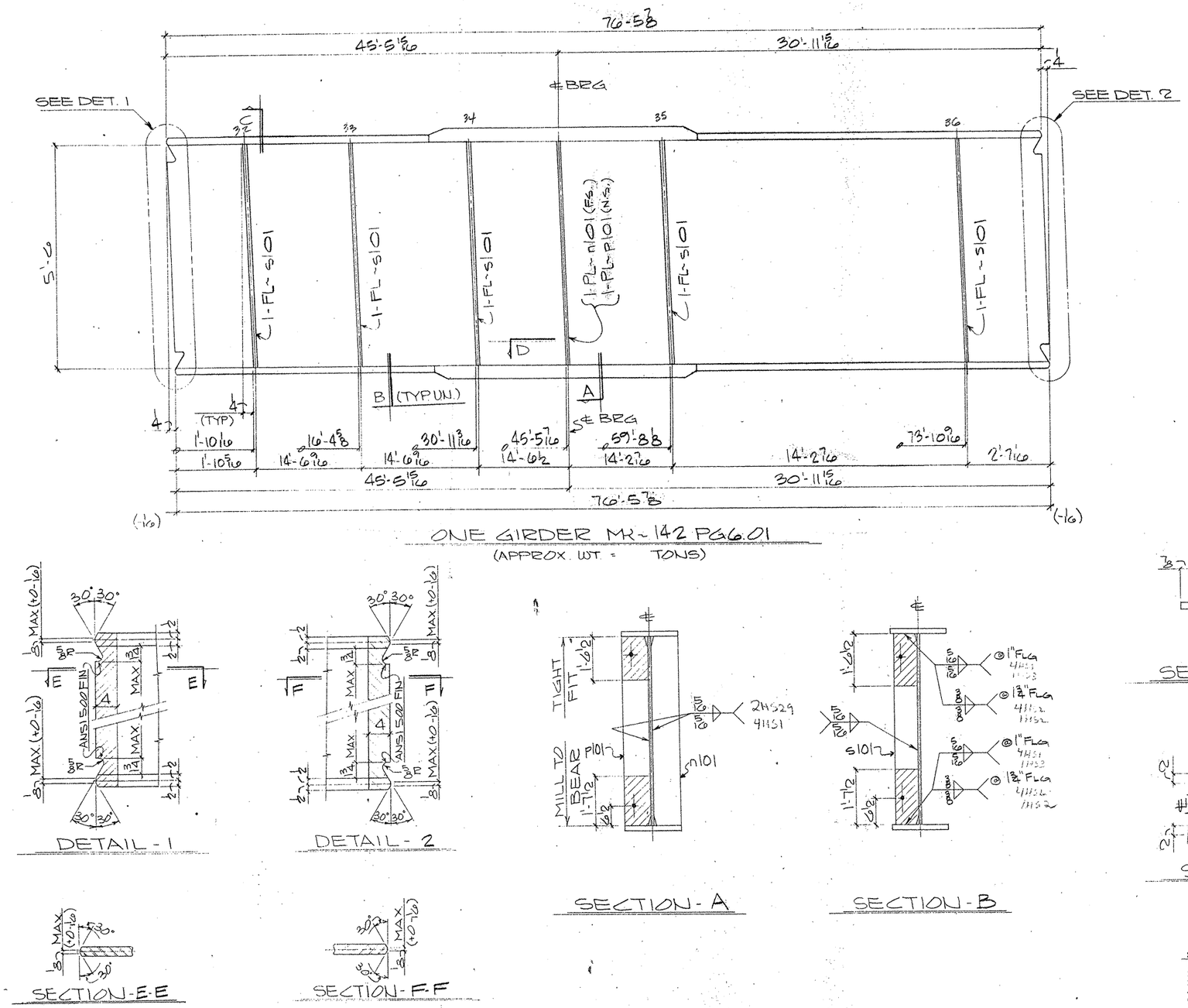

ONE GIRDER MK~142 PG6.01
(APPROX. WT. = TONS)

DETAIL - 1

DETAIL - 2

SECTION - A

SECTION - B

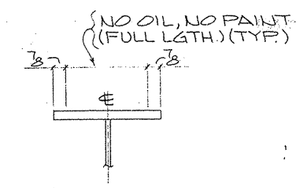

SECTION - C

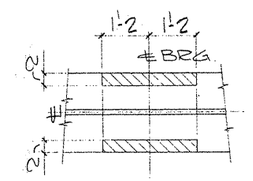

SECTION - D

SECTION - E-E

SECTION - F-F

SHOP NOTES:
1) FOR GENERAL NOTES SEE SHT. GN1
2) FOR GIRDER SUB-ASSEMBLY SEE SHT. 114
3) FOR STIFF. DETAILS SEE SHT. 101
4) FOR BLOCKING DIAGRAM SEE SHT. 152
5) FOR HEAT CURVE DIAGRAM SEE SHT. 151
6) ▨ INDICATES OIL, NO PAINT (N.S./F.S. & EDGES)

G0108

FED. ROAD DIV. NO.	STATE	FEDERAL AID PROJECT NO.			
6	TX.	NH 92(50)M			
STATE DIST. NO.	COUNTY	CONTROL NO.	SECTION NO.	JOB NO.	HIGHWAY NO.
21	HIDALGO	39	17	97	83/281

BILL OF MATERIAL

	Qnty.	Material	Length	Mark Temp	Mark Ship	Wt.	Cut From	Remarks
1								
2	1	GIRDER			142 PG6.01			
3	1	GIRDER SUB-ASSY		B114				
4	1	BRG STIFF		n101				
5	1	BRG STIFF		P101				
6	5	DIAF STIFF		s101				

TEXAS DEPARTMENT OF TRANSPORTATION
APPROVED
DIVISION OF BRIDGES AND STRUCTURES
DEC 16 1992
APPROVAL OF THIS DRAWING DOES NOT RELIEVE THE CONTRACTOR OF THE RESPONSIBILITY FOR THE CORRECTNESS OF DETAIL

FOR APPROVAL
NOV 10 '92
NOT FOR CONSTRUCTION

REVISION	DATE	DESCRIPTION OF REVISION
NO. 1		
NO. 2		
NO. 3		
NO. 4		
NO. 5		

PRINTING

Req'd	For	Date
—	APV	11-5

Bolts Holes 15/16 ø Unless Noted
Shop Paint SEE SHT. GN1
Fab Spec AS NTD Inspection
Architect
Erection By Field Connections

HIRSCHFELD STEEL CO. INC.
112 WEST 29TH SAN ANGELO TEXAS 76903
PHONE (915) 653-3211

DESCRIPTION 702'-5 PLATE GIRDER UNIT
STRUCTURE US 83/281 INTERCHANGE RAMP #3
LOCATION HIDALGO COUNTY
CUSTOMER GILBERT TEXAS CONSTRUCTION
SHIP TO
Customer's Order No.
Dwg By JDC Date 9/92
Checked By DLT Date 9-92
SHEET 142 OF
JOB NO. 92-108

CE 92-13 (LINE #1)

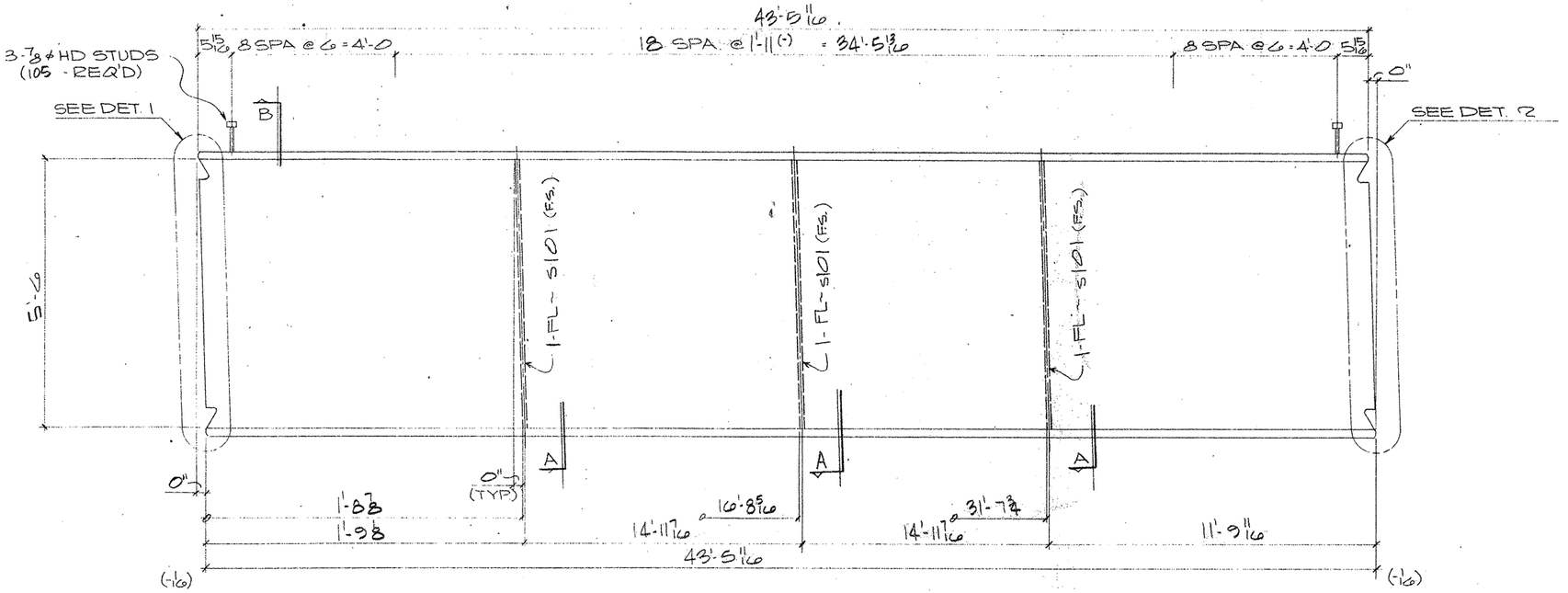

ONE GIRDER MK- 141 PG5.04

(APPROX. WT. = TONS)

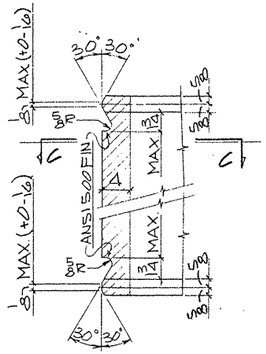

DETAIL - 1

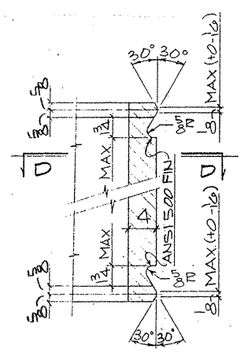

DETAIL - 2

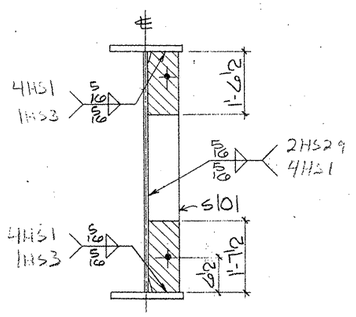

SECTION-A

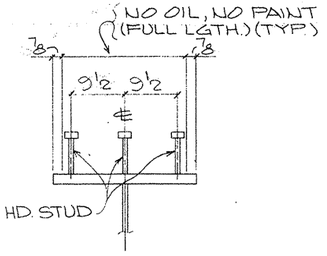

SECTION-B

(TYP. STUD SECT.)

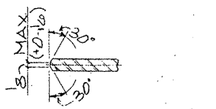

SECTION-C-C

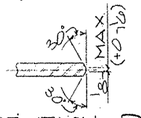

SECTION-D-D

SHOP NOTES:

1) FOR GENERAL NOTES SEE SHT. GN1
2) FOR GIRDER SUB-ASSEMBLY SEE SHT. 117
3) FOR STIFF. DETAILS SEE SHT. 101
4) FOR BLOCKING DIAGRAM SEE SHT. 155
5) FOR HEAT CURVE DIAGRAM SEE SHT. 151
6) ▨ INDICATES OIL, NO PAINT (N.S./F.S. & EDGES)

G0108

FED. ROAD DIV. NO.	STATE	FEDERAL AID PROJECT NO.				
6	TX.	NH 92(50)M				
STATE DIST. NO.	COUNTY	CONTROL NO.	SECTION NO.	JOB NO.		HIGHWAY NO.
21	HIDALGO	39	17	97		83/281

BILL OF MATERIAL

	Qnty.	Material	Length	Mark Temp.	Mark Ship.	Wt.	Cut From	Remarks
1								
2	1	GIRDER			141PG5.04			
3	1	GIRDER SUB-ASSY		A117				
4	3	DIAF STIFF		S101				
5								
6	105	HD STUDS 7/8ø	0'-7				116-1	A108
7								
8								
9								
10								
11								
12								
13								
14								
15								
16								
17								
18								
19								
20								
21								
22								
23								
24								
25								
26								
27								
28								
29								
30								
31								
32								
33								
34								
35								
36								
37								
38								
39								
40								
41								
42								
43								
44								
45								
46								
47								
48								
49								
50								
51								
52								
53								
54								
55								
56								
57								
58								
59								
60								

TEXAS DEPARTMENT OF TRANSPORTATION
APPROVED
DIVISION OF BRIDGES AND STRUCTURES
DEC 16 1992

APPROVAL OF THIS DRAWING DOES NOT RELIEVE THE CONTRACTOR OF THE RESPONSIBILITY FOR THE CORRECTNESS

FOR APPROVAL
NOV 06 92
NOT FOR CONSTRUCTION

REVISION	DATE	DESCRIPTION OF REVISION
NO 1		
NO 2		
NO 3		
NO 4		
NO 5		

PRINTING: Reqd | For | Date

Born: Holes 15/16 ø Unless Noted
Shop Paint: SEE SHT. GN1
Fab. Spec.: AS NTD Inspection
Architect:
Erection By: Field Connections

HIRSCHFELD STEEL CO. INC.
112 WEST 29TH SAN ANGELO TEXAS 76903
PHONE (915) 653-3211

DESCRIPTION	702'-5" PLATE GIRDER UNIT
STRUCTURE	US 83/281 INTERCHANGE RAMP #3
LOCATION	HIDALGO COUNTY
CUSTOMER	GILBERT TEXAS CONSTRUCTION
SHIP TO	
Customer's Order No.	
Dwg. By: JDC Date: 3/92	SHEET 4 OF
Checked By: DCT Date: 9-92	JOB NO. 92-108

APV 11-5

CE 92-13 (LINE # 4)

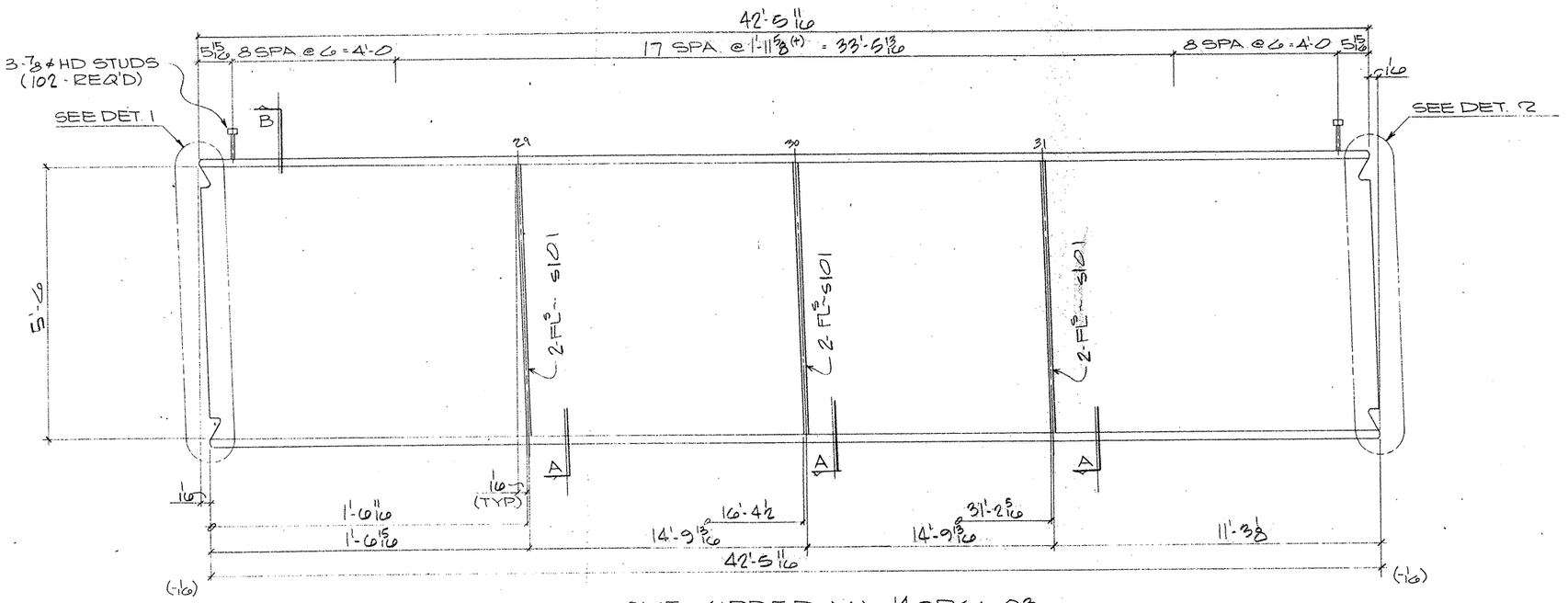

ONE GIRDER MK- 140P66.03

(APPROX. WT. = TONS)

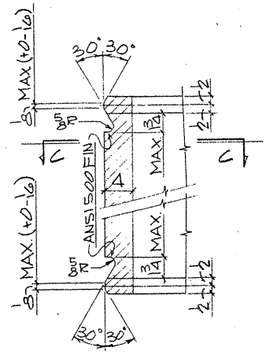

DETAIL - 1.

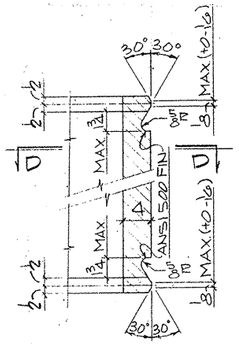

DETAIL - 2

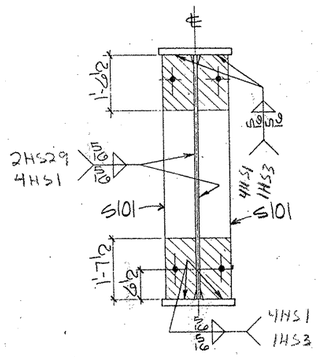

SECTION - A

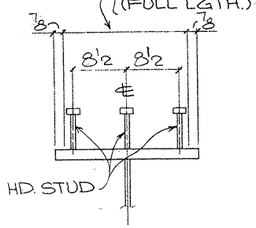

SECTION - B

(TYP. STUD SECT.)

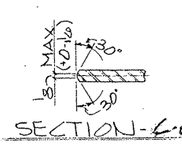

SECTION - C-C

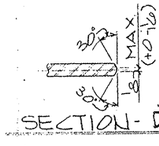

SECTION - D-D

SHOP NOTES:

1) FOR GENERAL NOTES SEE SHT. GN1
2) FOR GIRDER SUB-ASSEMBLY SEE SHT. 1166
3) FOR STIFF. DETAILS SEE SHT. 101
4) FOR BLOCKING DIAGRAM SEE SHT. 154
5) FOR HEAT CURVE DIAGRAM SEE SHT. 151
6) ▨ INDICATES OIL, NO PAINT (N.S./F.S. & EDGES)

BILL OF MATERIAL

	Only	Material	Length	Mark Temp	Mark Ship	Wt	Cut From	Remarks
1								
2	1	GIRDER			140P66.03			
3	1	GIRDER SUB-ASSY		A1166				/
4	66	DIAF STIFF		S101				"
5								
6	102	HD STUDS 7/8	0'-7				1166-1	A108
7								
8								
9								
10								
11								
12								
13								
14								
15								
16								
17								
18								
19								
20								
21								
22								
23								
24								
25								
26								
27								
28								
29								
30								
31								
32								
33								
34								
35								
36								
37								
38								
39								
40								
41								
42								
43								
44								
45								
46								
47								
48								
49								
50								
51								
52								
53								
54								
55								
56								
57								
58								
59								
60								

TEXAS DEPARTMENT OF TRANSPORTATION
APPROVED
DIVISION OF BRIDGES AND STRUCTURES
DEC 16 1992

APPROVAL OF THIS DRAWING DOES NOT RELIEVE THE CONTRACTOR OF THE RESPONSIBILITY FOR THE CORRECTNESS OF DETAIL

FOR APPROVAL
NOV 06 92
NOT FOR CONSTRUCTION

REVISION	DATE	DESCRIPTION OF REVISION
NO. 1		
NO. 2		
NO. 3		
NO. 4		
NO. 5		

PRINTING

Reqd	For	Date

Bolts Holes 15/16 ø Unless Noted
Shop Paint SEE SHT. GN1
Fab. Spec. AS NTD Inspection
Architect
Erection By Field Connections

HIRSCHFELD STEEL CO. INC.
112 WEST 29TH SAN ANGELO TEXAS 76903
PHONE (915) 653-3211

DESCRIPTION 702'-5 PLATE GIRDER UNIT
STRUCTURE US 83/281 INTERCHANGE RAMP #3
LOCATION HIDALGO COUNTY
CUSTOMER GILBERT TEXAS CONSTRUCTION
SHIP TO
Customer's Order No.
Dwg. By JRL Date 9/92
Checked By DLT Date 9 92
SHEET 140 OF
JOB NO. 92-108

G0108

FED. ROAD DIV. NO.	STATE	FEDERAL AID PROJECT NO.			
6	TX.	NH 92(50)M			
STATE DIST. NO.	COUNTY	CONTROL NO.	SECTION NO.	JOB NO.	HIGHWAY NO.
21	HIDALGO	39	17	97	83/281

CE 92-13 (LINE #3)

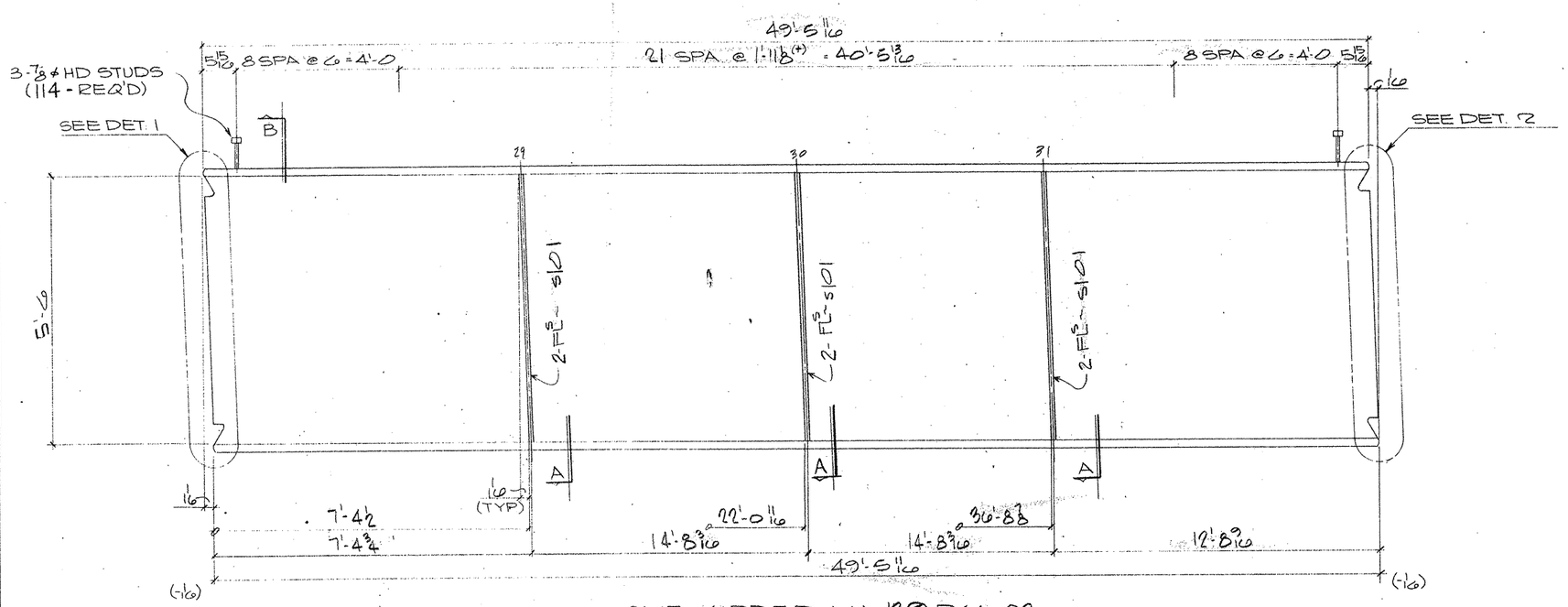

ONE GIRDER MK~139 PG6.02

(APPROX. WT. = TONS)

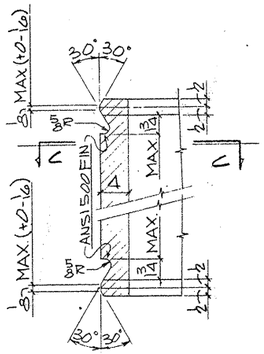

DETAIL - 1

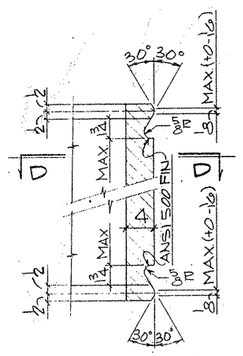

DETAIL - 2

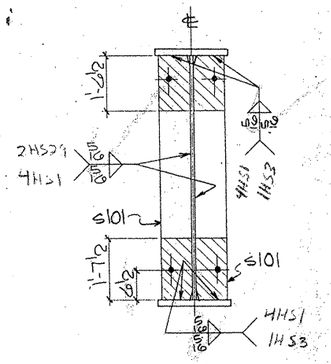

SECTION - A

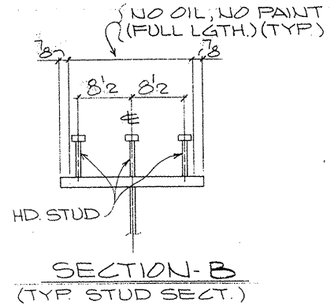

SECTION - B

(TYP. STUD SECT.)

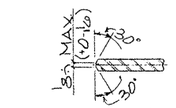

SECTION - C-C

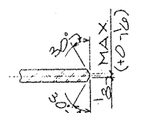

SECTION - D-D

SHOP NOTES:

1) FOR GENERAL NOTES SEE SHT. GN1
2) FOR GIRDER SUB-ASSEMBLY SEE SHT. 115
3) FOR STIFF. DETAILS SEE SHT. 101
4) FOR BLOCKING DIAGRAM SEE SHT. 153
5) FOR HEAT CURVE DIAGRAM SEE SHT. 151
6) ▨ INDICATES OIL, NO PAINT (N.S./F.S. & EDGES)

G0108

FED. ROAD DIV. NO.	STATE	FEDERAL AID PROJECT NO.			
6	TX.	NH 92(50)M			
STATE DIST. NO.	COUNTY	CONTROL NO.	SECTION NO.	JOB NO.	HIGHWAY NO.
21	HIDALGO	39	17	97	83/281

BILL OF MATERIAL

	Qnty	Material	Length	Mark Temp	Mark Ship	Wt	Cut From	Remarks
1								
2	1	GIRDER			139PG6.02			
3	1	GIRDER SUB-ASSY		A115				
4	6	DIAF STIFF		S101				
5								
6	114	HD STUDS 7/8	0'-7				1160-1	A108

TEXAS DEPARTMENT OF TRANSPORTATION APPROVED DIVISION OF BRIDGES AND STRUCTURES DEC 16 1992	APPROVAL OF THIS DRAWING DOES NOT RELIEVE THE CONTRACTOR OF THE RESPONSIBILITY FOR THE CORRECTNESS OF DETAILS.	FOR APPROVAL NOV 05 '92 NOT FOR CONSTRUCTION

REVISION	DATE	DESCRIPTION OF REVISION
NO. 1		
NO. 2		
NO. 3		
NO. 4		
NO. 5		

PRINTING Reqd	For	Date
	APV	11-5

Bolts Holes 15/16 ø Unless Noted
Shop Paint SEE SHT GN1
Fab. Spec. AS NTD Inspection
Architect
Erection By Field Connections

HIRSCHFELD STEEL CO. INC.
112 WEST 29TH SAN ANGELO TEXAS 76903
PHONE (915) 653-3211

DESCRIPTION	702'-5" PLATE GIRDER UNIT
STRUCTURE	US 83/281 INTERCHANGE RAMP F3
LOCATION	HIDALGO COUNTY
CUSTOMER	GILBERT TEXAS CONSTRUCTION
SHIP TO	
Customer's Order No.	
Dwg By JRC Date 3/92	SHEET 139 OF
Checked By DLT Date 9-92	JOB NO. 92-108

CE 92-13 (LINE #2)

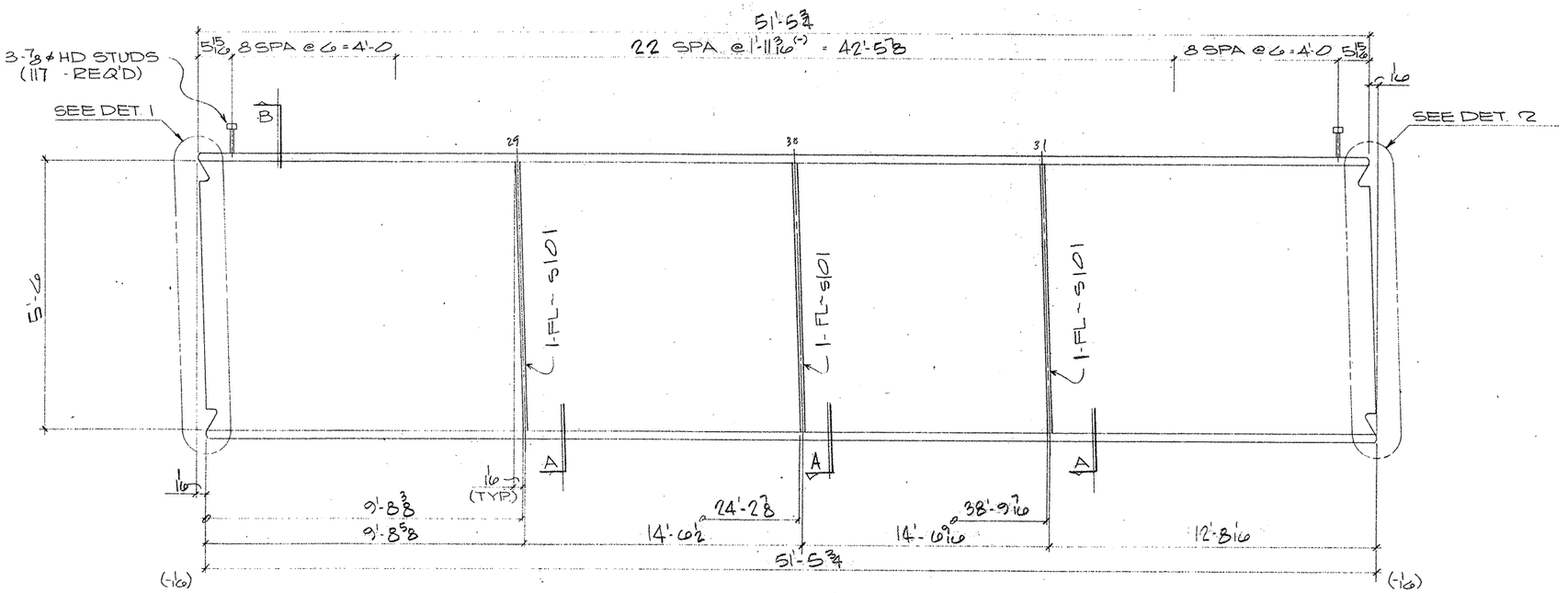

ONE GIRDER MK- 138PG5.01

(APPROX. WT. = TONS)

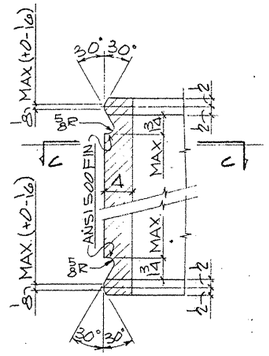

DETAIL - 1

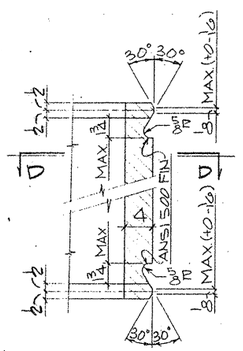

DETAIL - 2

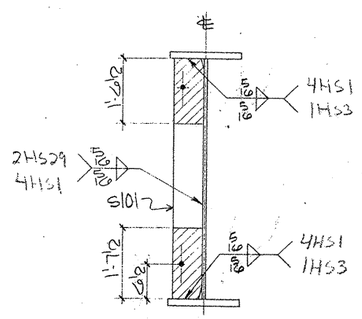

SECTION - A

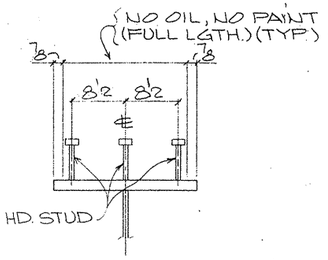

SECTION - B

(TYP. STUD SECT.)

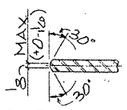

SECTION - C-C

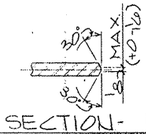

SECTION - D-D

SHOP NOTES:

1) FOR GENERAL NOTES SEE SHT. GN1
2) FOR GIRDER SUB-ASSEMBLY SEE SHT. 114
3) FOR STIFF. DETAILS SEE SHT. 101
4) FOR BLOCKING DIAGRAM SEE SHT. 152
5) FOR HEAT CURVE DIAGRAM SEE SHT. 151
6) ▨ INDICATES OIL, NO PAINT (N.S./F.S. & EDGES)

BILL OF MATERIAL

	Qnty	Material	Length	Mark Temp	Mark Ship	Wt	Cut From	Remarks
1								
2	1	GIRDER			138PG5.01			
3	1	GIRDER SUB-ASSY		A114				
4	3	DIAF STIFF		5101				
5								
6	117	HD STUDS 7/8	0'-7				116-1	A108
7								
8								
9								
10								
11								
12								
13								
14								
15								
16								
17								
18								
19								
20								
21								
22								
23								
24								
25								
26								
27								
28								
29								
30								
31								
32								
33								
34								
35								
36								
37								
38								
39								
40								
41								
42								
43								
44								
45								
46								
47								
48								
49								
50								
51								
52								
53								
54								
55								
56								
57								
58								
59								
60								

TEXAS DEPARTMENT OF TRANSPORTATION
APPROVED
DIVISION OF BRIDGES AND STRUCTURES
DEC 16 1992
APPROVAL OF THIS DRAWING DOES NOT RELIEVE THE CONTRACTOR OF THE RESPONSIBILITY FOR THE CORRECTNESS OF DETAIL

FOR APPROVAL
NOV 05 '92
NOT FOR CONSTRUCTION

REVISION	DATE	DESCRIPTION OF REVISION
NO. 1		
NO. 2		
NO. 3		
NO. 4		
NO. 5		

PRINTING Reqd | For | Date

Holes: Holes 15/16 ø Unless Noted
Shop Paint: SEE SHT. GN1
Fab Spec: AS NTD Inspection
Architect:
Erection By: Field Connections

HIRSCHFELD STEEL CO. INC.
112 WEST 29TH SAN ANGELO, TEXAS 76903
PHONE (915) 653-3211

DESCRIPTION	702'-5 PLATE GIRDER UNIT
STRUCTURE	US. 83/281 INTERCHANGE RAMP #3
LOCATION	HIDALGO COUNTY
CUSTOMER	GILBERT TEXAS CONSTRUCTION
SHIP TO	
Customer's Order No.	
Dwg By JRC Date 9/92	SHEET 138 OF
Checked By DLT Date 9-92	JOB NO 92-108

— pm 11-5

G0108

FED. ROAD DIV. NO	STATE	FEDERAL AID PROJECT NO.				
6	TX.	NH 92(50)M				
STATE DIST. NO	COUNTY	CONTROL NO.	SECTION NO.	JOB NO.	HIGHWAY NO.	
21	HIDALGO	39	17	97	83/281	

CE 92-13 (LINE # 1)

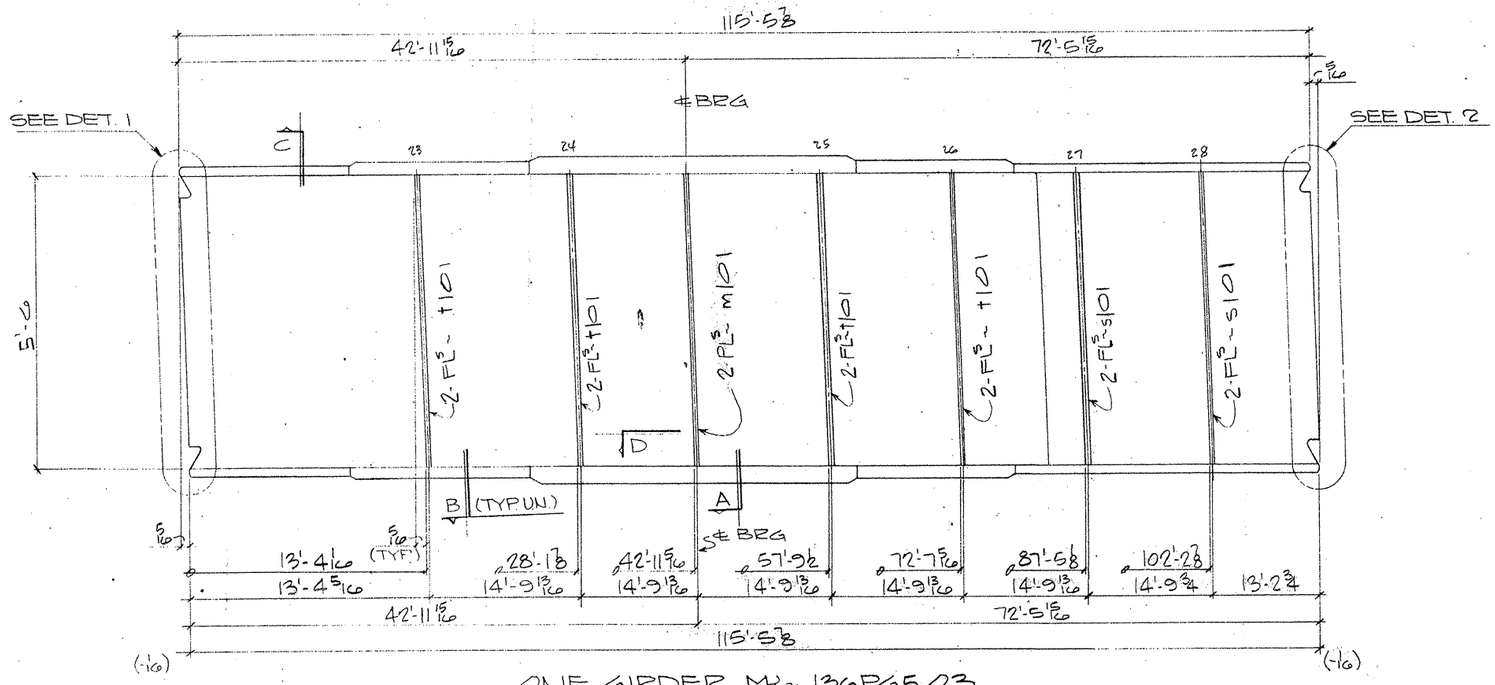

ONE GIRDER MK- 136PG5.03

(APPROX. WT. = TONS)

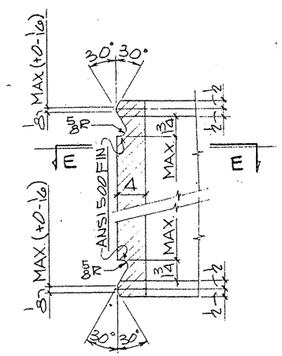

DETAIL - 1

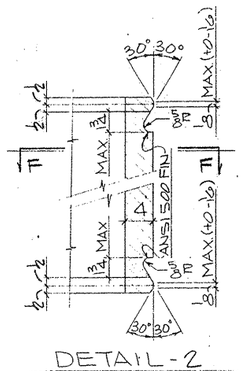

DETAIL - 2

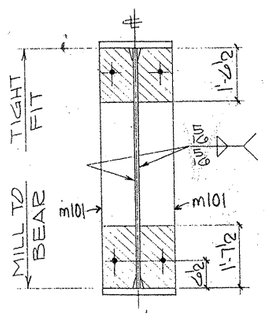

SECTION - A

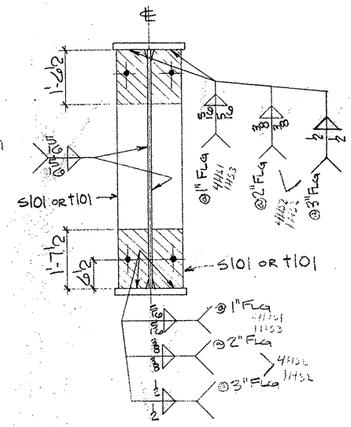

SECTION - B

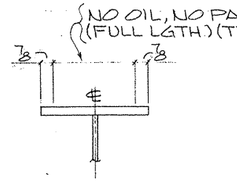

SECTION - C

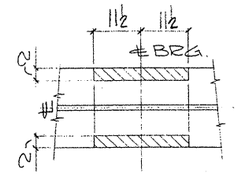

SECTION - D

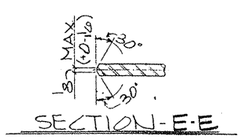

SECTION - E-E

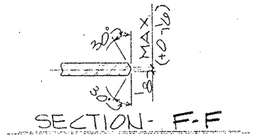

SECTION - F-F

SHOP NOTES:

1) FOR GENERAL NOTES SEE SHT. GN1
2) FOR GIRDER SUB-ASSEMBLY SEE SHT. 112
3) FOR STIFF. DETAILS SEE SHT. 101
4) FOR BLOCKING DIAGRAM SEE SHT. 154
5) FOR HEAT CURVE DIAGRAM SEE SHT. 151
6) ▨ INDICATES OIL, NO PAINT (N.S./F.S. & EDGES)

BILL OF MATERIAL

	Qnty	Material	Length	Mark Temp	Mark Ship	Wt.	Cut From	Remarks
1								
2	1	GIRDER			136PG5.03			
3	1	GIRDER SUB-ASSY		B112				
4	2	BRG STIFF		m101				
5	4	DIAF STIFF		s101				
6	8	DIAF STIFF		t101				
7–60								

TEXAS DEPARTMENT OF TRANSPORTATION
APPROVED
DIVISION OF BRIDGES AND STRUCTURES
DEC 16 1992

APPROVAL OF THIS DRAWING DOES NOT RELIEVE THE CONTRACTOR OF THE RESPONSIBILITY FOR THE CORRECTNESS OF DETAIL

FOR APPROVAL
NOV 05 '92
NOT FOR CONSTRUCTION

REVISION	DATE	DESCRIPTION OF REVISION
NO. 1		
NO. 2		
NO. 3		
NO. 4		
NO. 5		

PRINTING — Req'd / For

Date — Basis: Typical Shop Unless Noted
Shop Paint: SEE SHT. GN1
Fab Spec: AASHTO — Inspection
Architect
Erection by — Field Connections

HIRSCHFELD STEEL CO. INC.
112 WEST 29TH SAN ANGELO TEXAS 76903
PHONE (915) 653-3211

DESCRIPTION: 70'-5 PLATE GIRDER UNIT
STRUCTURE: US 83/281 INTERCHANGE RAMP #3
LOCATION: HIDALGO COUNTY
CUSTOMER: GILBERT TEXAS CONSTRUCTION
SHIP TO:
Customer's Order No.
Dwg. By: JDL — Date: 9/92
Checked By: DLT — Date: 9-92
SHEET 136 OF
JOB NO. 92-108

FED. ROAD DIV. NO	STATE	FEDERAL AID PROJECT NO.			
6	TX.	NH 92(50)M			
STATE DIST. NO	COUNTY	CONTROL NO.	SECTION NO.	JOB NO.	HIGHWAY NO.
21	HIDALGO	39	17	97	83/281

G0108

CE92-13 (LINE #3)

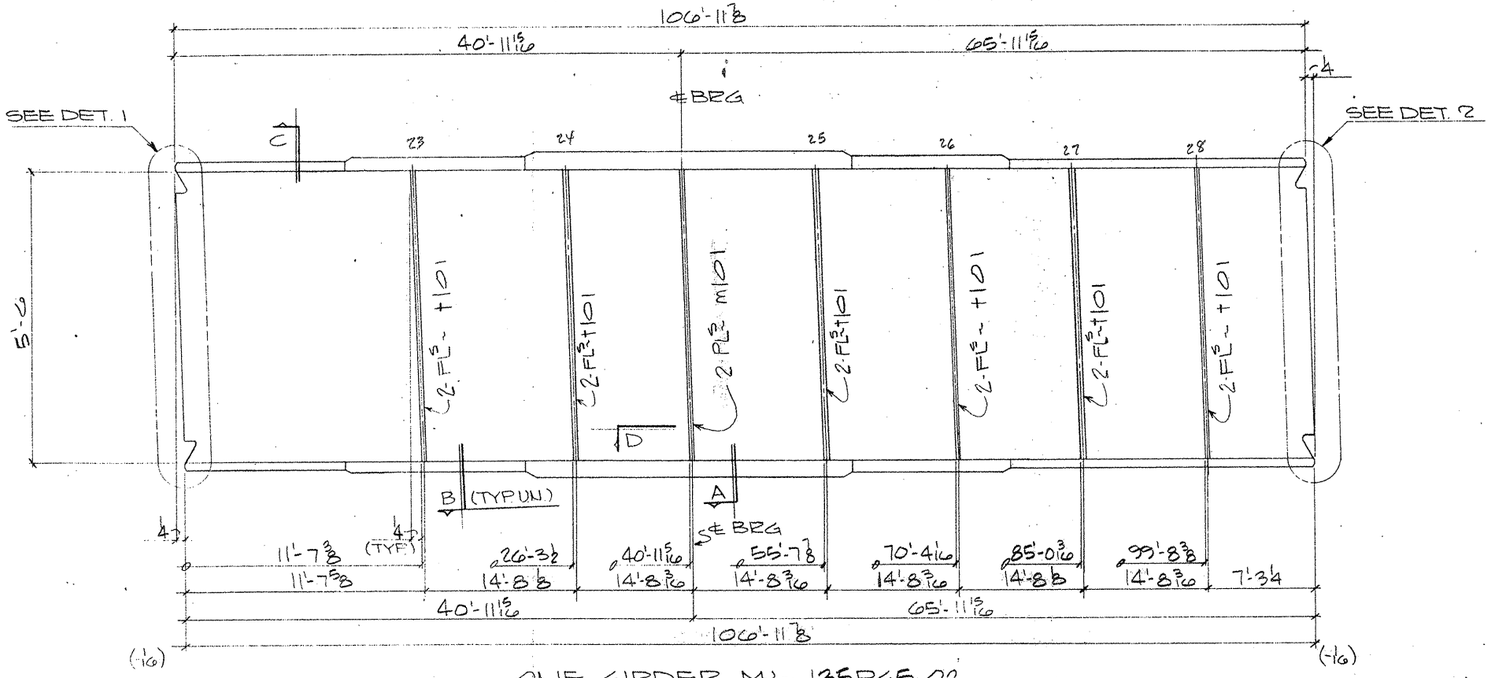

ONE GIRDER MK~ 135PG5.02

(APPROX. WT = TONS)

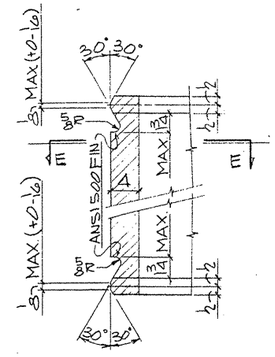

DETAIL - 1

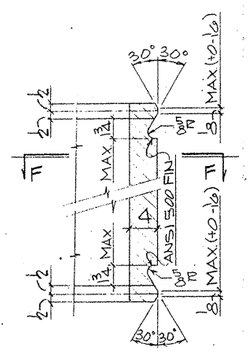

DETAIL - 2

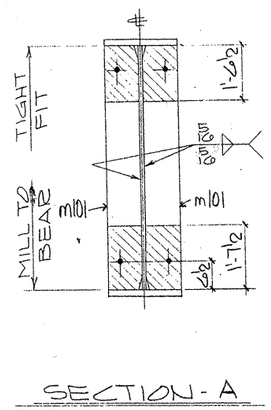

SECTION - A

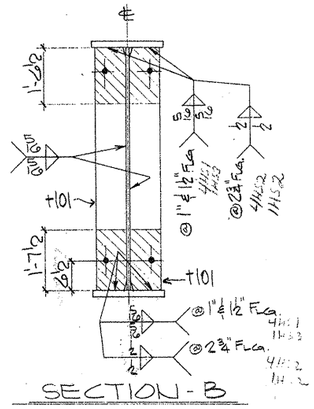

SECTION - B

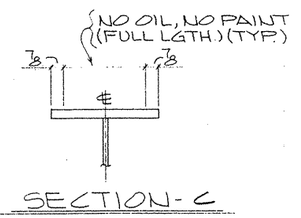

SECTION - C

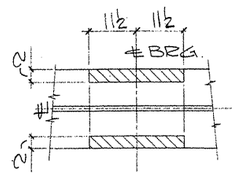

SECTION - D

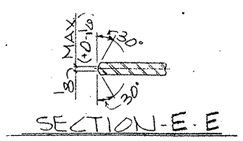

SECTION - E - E

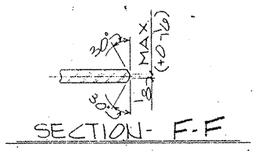

SECTION - F - F

SHOP NOTES:

1) FOR GENERAL NOTES SEE SHT. GN1
2) FOR GIRDER SUB-ASSEMBLY SEE SHT. 111
3) FOR STIFF. DETAILS SEE SHT. 101
4) FOR BLOCKING DIAGRAM SEE SHT. 150
5) FOR HEAT CURVE DIAGRAM SEE SHT. 151
6) ▨ INDICATES OIL, NO PAINT (N.S./F.S. & EDGES)

G0108

FED. ROAD DIV. NO.	STATE	FEDERAL AID PROJECT NO.			
6	TX.	NH 92(50)M			
STATE DIST. NO.	COUNTY	CONTROL NO.	SECTION NO	JOB NO.	HIGHWAY NO
21	HIDALGO	39	17	97	83/281

BILL OF MATERIAL

	Qnty	Material	Length	Mark Temp	Mark Ship	Wt	Cut From	Remarks
1								
2	1	GIRDER			135PG5.02			
3	1	GIRDER SUB-ASSY		B111				
4	2	BRG STIFF		M101				
5								
6	12	DIAF STIFF		+101				

TEXAS DEPARTMENT OF TRANSPORTATION	FOR APPROVAL
APPROVED DIVISION OF BRIDGES AND STRUCTURES	NOV 05 '92
DEC 16 1992	NOT FOR CONSTRUCTION
APPROVAL OF THIS DRAWING DOES NOT RELIEVE THE CONTRACTOR OF THE RESPONSIBILITY FOR THE CORRECTNESS OF DETAIL.	

REVISION	DATE	DESCRIPTION OF REVISION
NO. 1		
NO. 2		
NO. 3		
NO. 4		
NO. 5		

PRINTING

Req'd	For	Date

Units Inches 5/16 & Unless Noted
Shop Paint SEE SHT. GN1
Fab. Spec. AS NTD Inspection
Architect
Erection By Field Connections

HIRSCHFELD STEEL CO. INC.
112 WEST 29TH SAN ANGELO, TEXAS 76903
PHONE (915) 653-3211

DESCRIPTION	702'-5 PLATE GIRDER UNIT
STRUCTURE	US 83/281 INTERCHANGE RAMP #3
LOCATION	HIDALGO COUNTY
CUSTOMER	GILBERT TEXAS CONSTRUCTION
SHIP TO	
Customer's Order No.	
Dwg. By JDZ	Date 3/92
Checked By DCT	Date 9-92

SHEET 135 OF
JOB NO 92-108

APV 11-5

CE 92-13 (LINE #2)

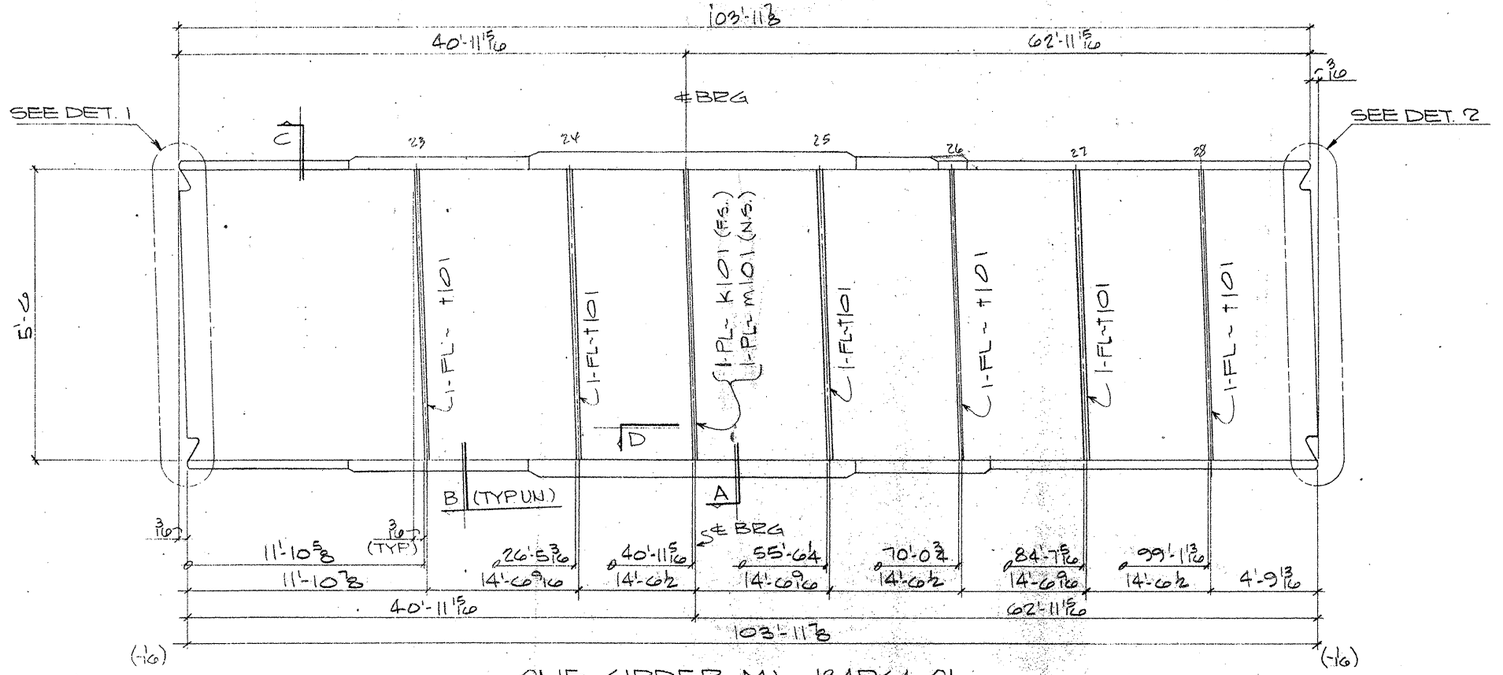

ONE GIRDER MK~ 134PG4.01

(APPROX. WT. = TONS)

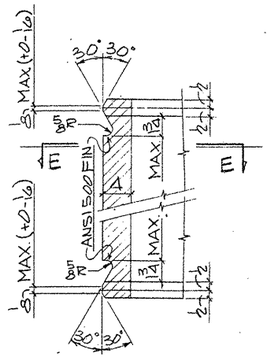

DETAIL - 1

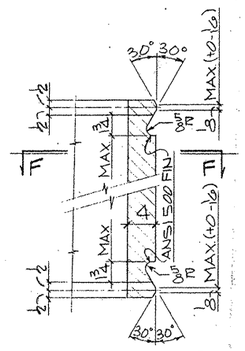

DETAIL - 2

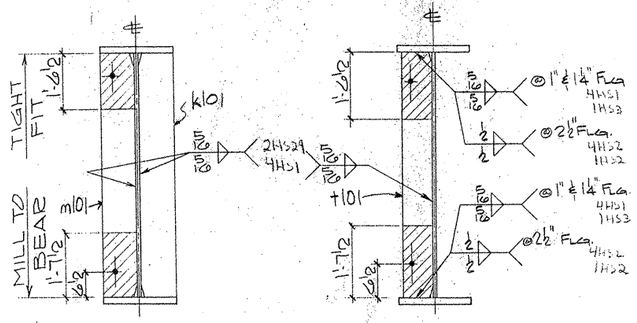

SECTION-A SECTION-B

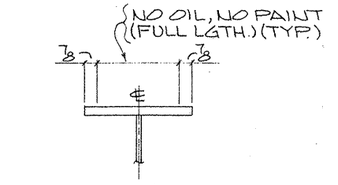

SECTION-C

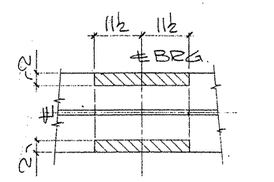

SECTION-D

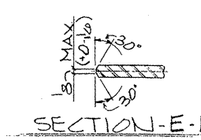

SECTION-E-E

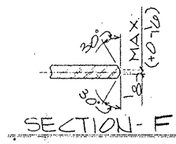

SECTION-F-F

SHOP NOTES:

1) FOR GENERAL NOTES SEE SHT. GN1
2) FOR GIRDER SUB-ASSEMBLY SEE SHT. 110
3) FOR STIFF. DETAILS SEE SHT. 101
4) FOR BLOCKING DIAGRAM SEE SHT. 152
5) FOR HEAT CURVE DIAGRAM SEE SHT. 150
6) ▨ INDICATES OIL, NO PAINT (N.S./F.S. & EDGES)

G0108

FED ROAD DIV. NO	STATE	FEDERAL AID PROJECT NO.			
6	TX.	NH 92(50)M			
STATE DIST. NO.	COUNTY	CONTROL NO.	SECTION NO.	JOB NO.	HIGHWAY NO.
21	HIDALGO	39	17	97	83/281

BILL OF MATERIAL

	Qnty	Material	Length	Mark Temp.	Mark Ship	Wt	Cut From	Remarks
1								
2	1	GIRDER			134PG4.01			
3	1	GIRDER SUB-	ASSY	B110				
4	1	BRG STIFF		k101				
5	1	BRG STIFF		m101				
6	6	DIAF STIFF		t101				
7								
8								
9								
10								
11								
12								
13								
14								
15								
16								
17								
18								
19								
20								
21								
22								
23								
24								
25								
26								
27								
28								
29								
30								
31								
32								
33								
34								
35								
36								
37								
38								
39								
40								
41								
42								
43								
44								
45								
46								
47								
48								
49								
50								
51								
52								
53								
54								
55								
56								
57								
58								
59								
60								

TEXAS DEPARTMENT OF TRANSPORTATION
APPROVED
DIVISION OF BRIDGES AND STRUCTURES
DEC. 16 1992

APPROVAL
NOV 05 '92
NOT FOR CONSTRUCTION

APPROVAL OF THIS DRAWING DOES NOT RELIEVE THE CONTRACTOR OF THE RESPONSIBILITY FOR THE CORRECTNESS OF DETAIL.

REVISION	DATE	DESCRIPTION OF REVISION
NO. 1		
NO. 2		
NO. 3		
NO. 4		
NO. 5		

PRINTING Req'd	For	Date

Bolts Holes, 15/16 ℄ Unless Noted
Shop Paint SEE SHT. GN1
Fab. Spec. AS NTD. Inspection
Architect
Erection By Field Connections

HIRSCHFELD STEEL CO. INC.
112 WEST 29TH SAN ANGELO, TEXAS 76903
PHONE (915) 653-3211

DESCRIPTION	70'-5 PLATE GIRDER UNIT
STRUCTURE	US 83/281 INTERCHANGE RAMP #3
LOCATION	HIDALGO COUNTY
CUSTOMER	GILBERT TEXAS CONSTRUCTION
SHIP TO	
Customer's Order No.	
Dwg. By JRC	Date 9/92
Checked By DLT	Date 9-92

SHEET 134 OF
JOB NO. 92-108

CE92-13 (LINE #1)

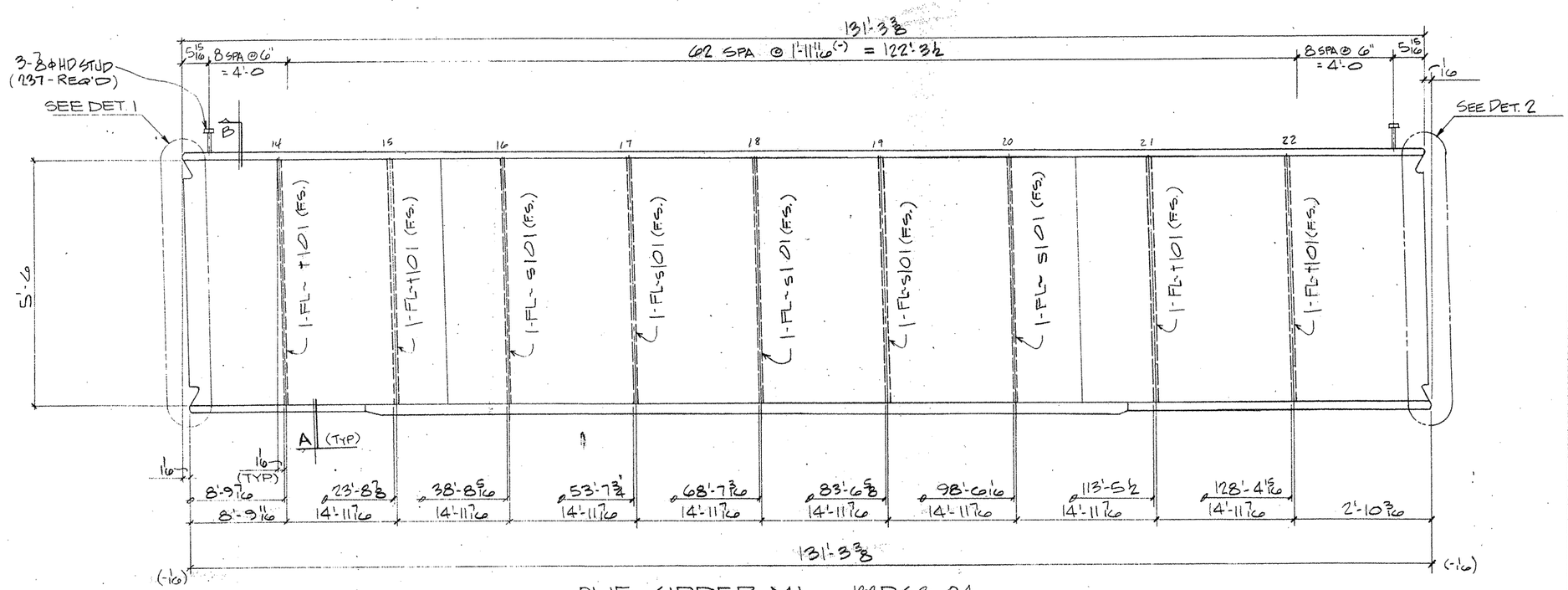

ONE GIRDER MK- 133PG3.04

(APPROX. WT. = TONS)

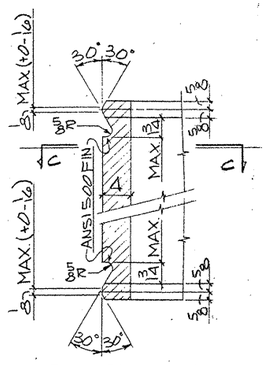

DETAIL - 1

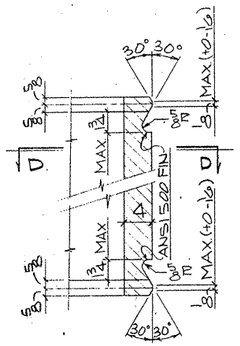

DETAIL - 2

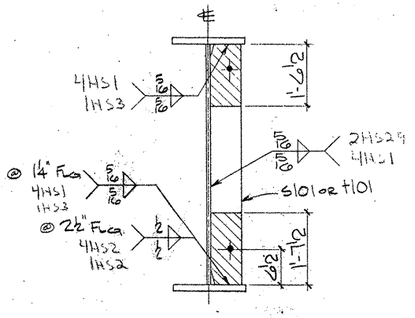

SECTION - A

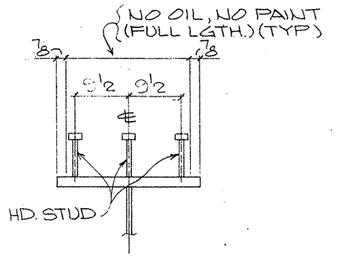

SECTION - B

(TYP. STUD SECT.)

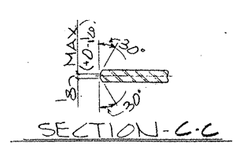

SECTION - C-C

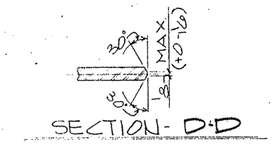

SECTION - D-D

SHOP NOTES:

1) FOR GENERAL NOTES SEE SHT. GN1
2) FOR GIRDER SUB-ASSEMBLY SEE SHT. 113
3) FOR STIFF. DETAILS SEE SHT. 101
4) FOR BLOCKING DIAGRAM SEE SHT. 155
5) FOR HEAT CURVE DIAGRAM SEE SHT. 150
6) ▨ INDICATES OIL, NO PAINT (N.S./F.S. & EDGES)

G0108

FED. ROAD DIV. NO.	STATE	FEDERAL AID PROJECT NO.				
6	TX.	NH 92(50)M				
STATE DIST. NO.	COUNTY	CONTROL NO.	SECTION NO.	JOB NO.	HIGHWAY NO.	
21	HIDALGO	39	17	97	83/281	

BILL OF MATERIAL

	Qnty.	Material	Length	Mark Temp.	Mark Ship	Wt	Cut From	Remarks
1								
2	1	GIRDER			133PG3.04			
3	1	GIRDER SUB-ASSY		A113				
4	5	DIAF STIFF		S101				
5	4	DIAF STIFF		T101				
6	237	HDSTUD 3/8ϕ	0'-7				116-1	A108
7–60								

TEXAS DEPARTMENT OF TRANSPORTATION
APPROVED
DIVISION OF BRIDGES AND STRUCTURES
DEC 16 1992

APPROVAL OF THIS DRAWING DOES NOT RELIEVE THE CONTRACTOR OF THE RESPONSIBILITY FOR THE CORRECTNESS OF DETAILS

FOR APPROVAL
NOV 05 '92
NOT FOR CONSTRUCTION

REVISION	DATE	DESCRIPTION OF REVISION
NO. 1		
NO. 2		
NO. 3		
NO. 4		
NO. 5		

PRINTING Req'd	For	Date

Bolts: Holes 15/16ϕ Unless Noted
Shop Paint: SEE SHT GN1
Fab. Spec: AASHTO Inspection
Architect:
Erection By: Field Connections

HIRSCHFELD STEEL CO. INC.
112 WEST 29TH SAN ANGELO TEXAS 76903
PHONE (915) 653-3211

DESCRIPTION: 702'-5 PLATE GIRDER UNIT
STRUCTURE: US 83/281 INTERCHANGE RAMP #3
LOCATION: HIDALGO COUNTY
CUSTOMER: GILBERT TEXAS CONSTRUCTION
SHIP TO:
Customer's Order No.:
Dwg. By: JDZ Date: 9/92
Checked By: DLT Date: 9-92

SHEET 133 OF
JOB NO 92-108

APV 11-5

CE 92-13 (LINE # 4)

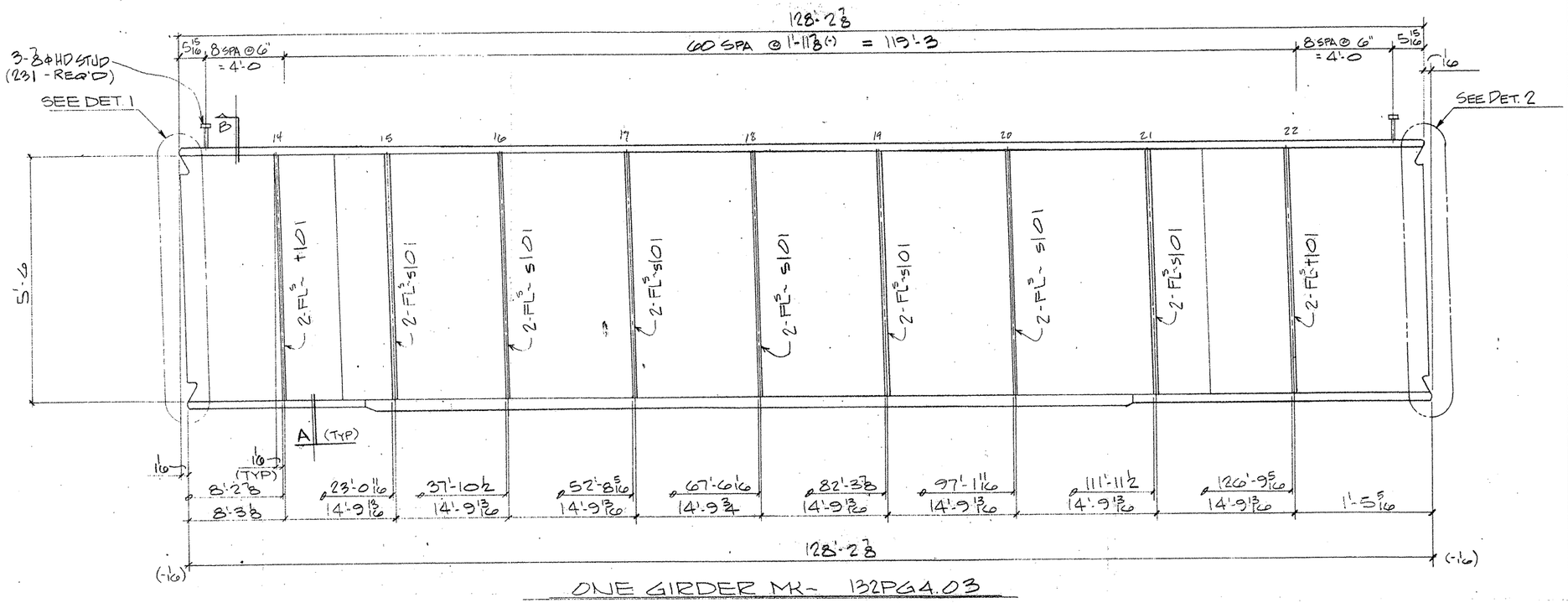

ONE GIRDER MK- 132PG4.03

(APPROX. WT. = TONS)

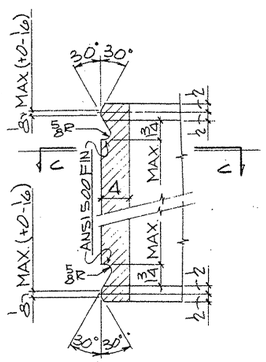

DETAIL-1

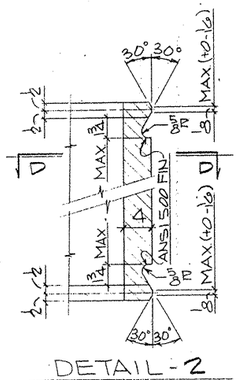

DETAIL-2

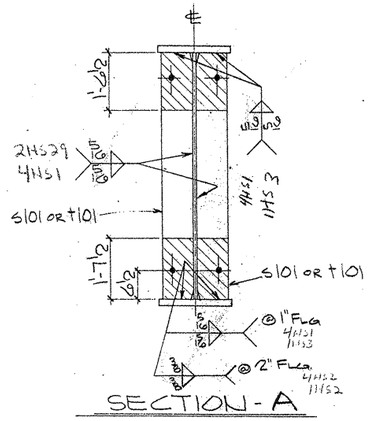

SECTION-A

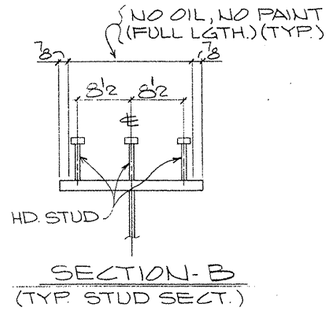

SECTION-B

(TYP. STUD SECT.)

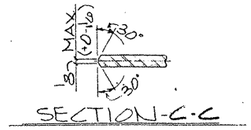

SECTION-C-C

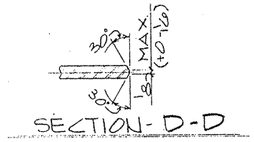

SECTION-D-D

SHOP NOTES:

1) FOR GENERAL NOTES SEE SHT. GN1
2) FOR GIRDER SUB-ASSEMBLY SEE SHT. 112
3) FOR STIFF. DETAILS SEE SHT. 101
4) FOR BLOCKING DIAGRAM SEE SHT. 154
5) FOR HEAT CURVE DIAGRAM SEE SHT. 150
6) ▨ INDICATES OIL, NO PAINT (N.S./F.S. & EDGES)

G0108

FED ROAD DIV. NO.	STATE	FEDERAL AID PROJECT NO.				
6	TX.	NH 92(50)M				
STATE DIST. NO	COUNTY	CONTROL NO	SECTION NO	JOB NO.	HIGHWAY NO	
21	HIDALGO	39	17	97	83/281	

BILL OF MATERIAL

	Qnty	Material	Length	Mark Temp	Mark Ship	Wt	Cut From	Remarks
2	1	GIRDER			132PG4.03			
3	1	GIRDER SUB-ASSY		A112				
4	14	DIAF STIFF		S101				
5	4	DIAF STIFF		T101				
6	231	HDSTUD 3/4ϕ	0'-7				116-1	A108

TEXAS DEPARTMENT OF TRANSPORTATION
APPROVED
DIVISION OF BRIDGES AND STRUCTURES
DEC 16 1992

FOR APPROVAL
NOV 05 '92
NOT FOR CONSTRUCTION

APPROVAL OF THIS DRAWING DOES NOT RELIEVE THE CONTRACTOR OF THE RESPONSIBILITY FOR THE CORRECTNESS OF DETAIL

REVISION	DATE	DESCRIPTION OF REVISION
NO. 1		
NO. 2		
NO. 3		
NO. 4		
NO. 5		

PRINTING Req'd	For	Date

Bolts Holes 15/16ϕ Unless Noted
Shop Paint SEE SHT GN1
Fab Spec AS NTD Inspection
Architect
Erection By Field Connections

HIRSCHFELD STEEL CO. INC.
112 WEST 29TH SAN ANGELO TEXAS 76903
PHONE (915) 653-3211

DESCRIPTION	702'-5 PLATE GIRDER UNIT
STRUCTURE	US 83/281 INTERCHANGE RAMP "B"
LOCATION	HIDALGO COUNTY
CUSTOMER	GILBERT TEXAS CONSTRUCTION
SHIP TO	
Customer's Order No.	
Dwg. By JDC	Date 9/92
Checked By DCT	Date 9-92

SHEET 32 OF
JOB NO 92-108

CE 92-13 (LINE # 3)

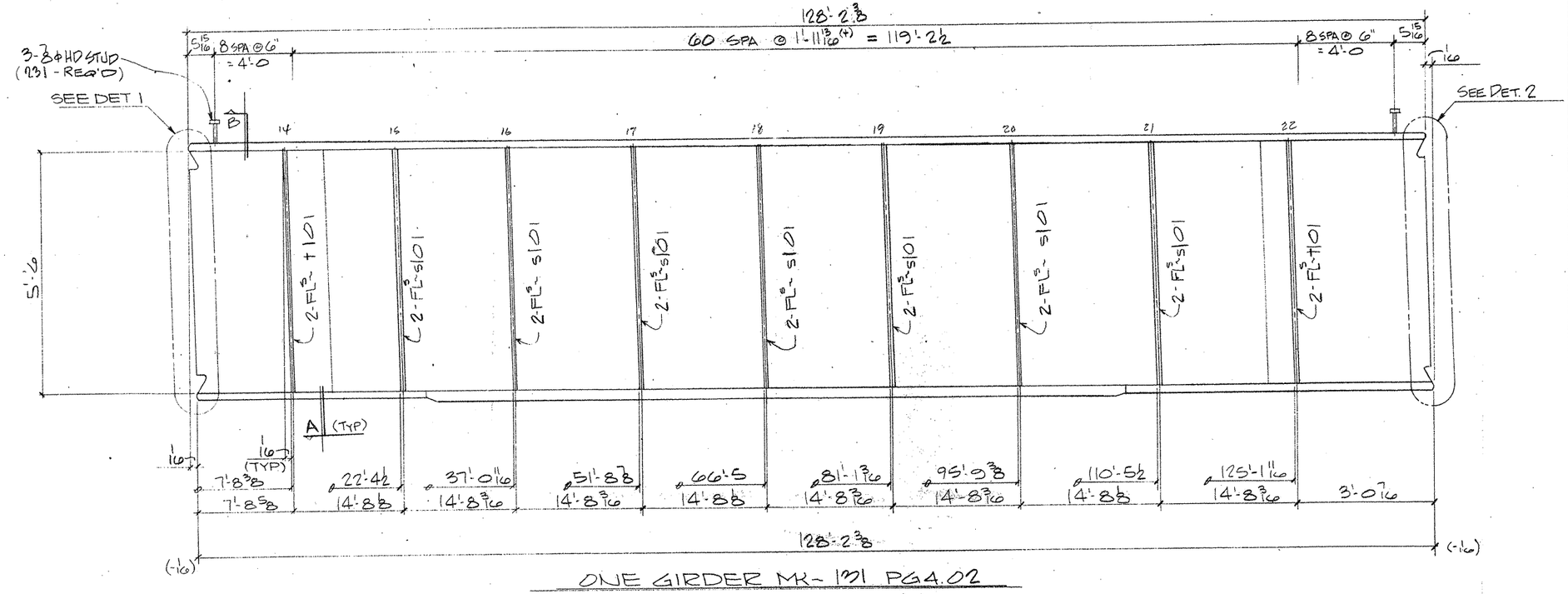

ONE GIRDER MK- 131 PG4.02

(APPROX. WT. = TONS)

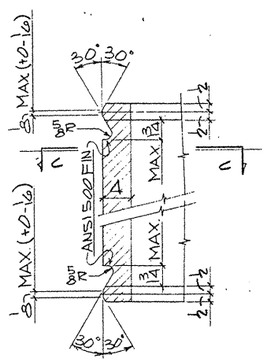

DETAIL - 1

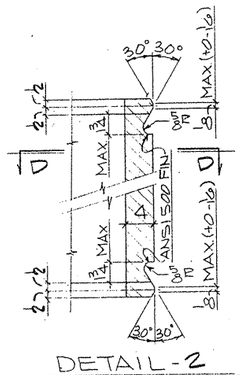

DETAIL - 2

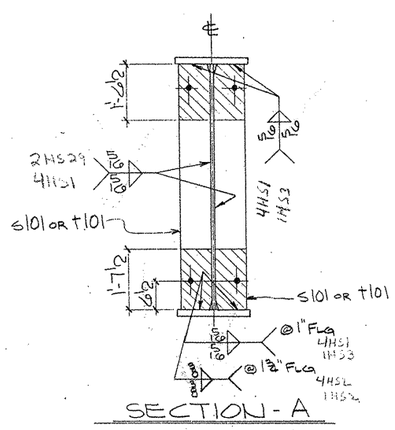

SECTION - A

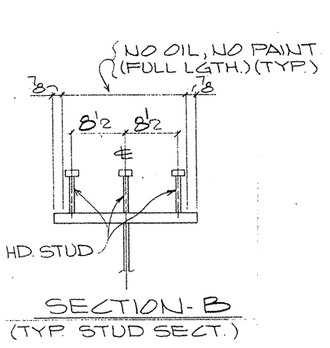

SECTION - B

(TYP. STUD SECT.)

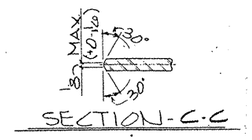

SECTION - C-C

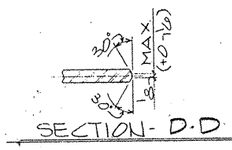

SECTION - D-D

SHOP NOTES:

1) FOR GENERAL NOTES SEE SHT. GN1
2) FOR GIRDER SUB-ASSEMBLY SEE SHT. 111
3) FOR STIFF. DETAILS SEE SHT. 101
4) FOR BLOCKING DIAGRAM SEE SHT. 151
5) FOR HEAT CURVE DIAGRAM SEE SHT. 150
6) ▨ INDICATES OIL, NO PAINT. (N.S./P.S. & EDGES)

BILL OF MATERIAL

	Qnty	Material	Length	Mark Temp	Mark Shtg.	Wt	Cut From	Remarks
1								
2	1	GIRDER			131PG4.02			
3	1	GIRDER SUB-ASSY		A111				
4	14	DIAF STIFF		s101				
5	4	DIAF STIFF		t101				
6	231	HDSTUD 3/4	0'-7				116-1	A108
7								
8								
9								
10								
11								
12								
13								
14								
15								
16								
17								
18								
19								
20								
21								
22								
23								
24								
25								
26								
27								
28								
29								
30								
31								
32								
33								
34								
35								
36								
37								
38								
39								
40								
41								
42								
43								
44								
45								
46								
47								
48								
49								
50								
51								
52								
53								
54								
55								
56								
57								
58								
59								
60								

TEXAS DEPARTMENT OF TRANSPORTATION
APPROVED
DIVISION OF BRIDGES AND STRUCTURES
DEC 16 1992
FOR APPROVAL
NOV 05 '92
APPROVAL OF THIS DRAWING DOES NOT RELIEVE THE CONTRACTOR OF THE RESPONSIBILITY OF DETAIL
NOT FOR CONSTRUCTION

REVISION	DATE	DESCRIPTION OF REVISION
NO. 1		
NO. 2		
NO. 3		
NO. 4		
NO. 5		

PRINTING Req'd	For	Date

Holes: 13/16 ϕ Unless Noted
Shop Paint: SEE SHT GN1
Fab. Spec.: AS NTD Inspection
Architect
Erection By: Field Connections

HIRSCHFELD STEEL CO. INC.
112 WEST 29TH SAN ANGELO TEXAS 76903
PHONE (915) 653-3211

DESCRIPTION	702'-5" PLATE GIRDER UNIT
STRUCTURE	US 83/281 INTERCHANGE RAMP #3
LOCATION	HIDALGO COUNTY
CUSTOMER	GILBERT TEXAS CONSTRUCTION
Ship TO	
Customer's Order No.	
Dwg. By: JDC	Date 3/92
Checked By: DLT	Date 9-92

SHEET 131 OF
JOB NO 92-108

FED. ROAD DIV. NO.	STATE	FEDERAL AID PROJECT NO.				
6	TX.	NH 92(50)M				
STATE DIST. NO.	COUNTY	CONTROL NO.	SECTION NO.	JOB NO.	HIGHWAY NO.	
21	HIDALGO	39	17	97	83/281	

G0108

CE 92-13 (LINE # 2)

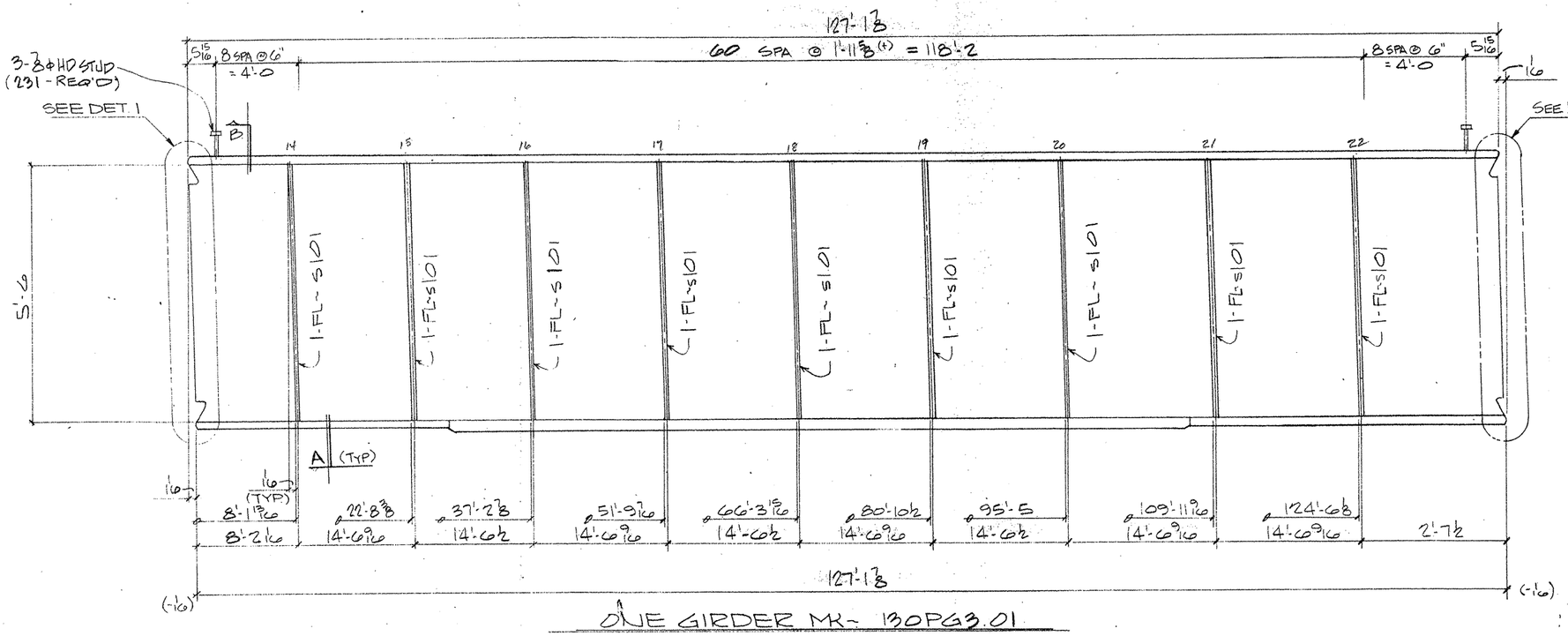

ONE GIRDER MK- 130PG3.01

(APPROX. WT. = TONS)

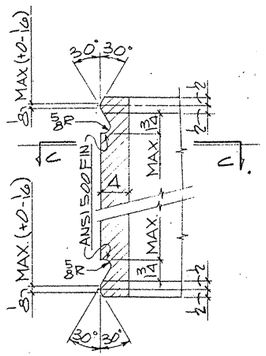

DETAIL - 1

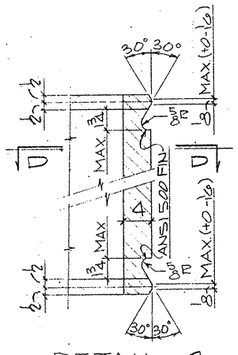

DETAIL - 2

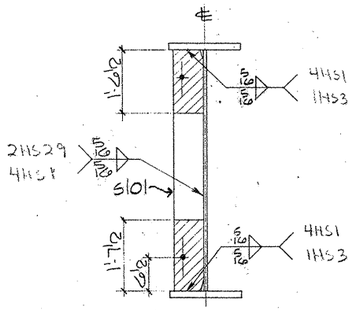

SECTION - A

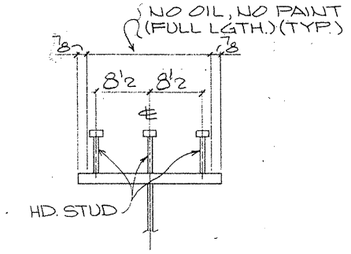

SECTION - B

(TYP. STUD SECT.)

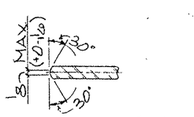

SECTION - C-C

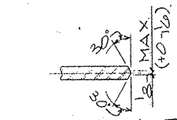

SECTION - D-D

SHOP NOTES:

1) FOR GENERAL NOTES SEE SHT. GN1
2) FOR GIRDER SUB-ASSEMBLY SEE SHT. 110
3) FOR STIFF. DETAILS SEE SHT. 101
4) FOR BLOCKING DIAGRAM SEE SHT. 152
5) FOR HEAT CURVE DIAGRAM SEE SHT. 150
6) ▨ INDICATES OIL, NO PAINT (N.S./F.S. & EDGES)

G0108

FED ROAD DIV. NO	STATE	FEDERAL AID PROJECT NO.			
6	TX.	NH 92(50)M			
STATE DIST. NO	COUNTY	CONTROL NO	SECTION NO	JOB NO	HIGHWAY NO
21	HIDALGO	39	17	97	83/281

BILL OF MATERIAL

	Qnty	Material	Length	Mark Temp	Mark Ship	Wt.	Cut From	Remarks
1								
2	1	GIRDER			130PG3.01			
3	1	GIRDER SUB-ASSY		A110				
4	9	DIAF STIFF		S101				
5								
6	231	HDSTUD 7/8ϕ	0'-7				1116-1	A108
7								
8								
9								
10								
11								
12								
13								
14								
15								
16								
17								
18								
19								
20								
21								
22								
23								
24								
25								
26								
27								
28								
29								
30								
31								
32								
33								
34								
35								
36								
37								
38								
39								
40								
41								
42								
43								
44								
45								
46								
47								
48								
49								
50								
51								
52								
53								
54								
55								
56								
57								
58								
59								
60								

TEXAS DEPARTMENT OF TRANSPORTATION
APPROVED
DIVISION OF BRIDGES AND STRUCTURES
DEC 16 1992
APPROVAL OF THIS DRAWING DOES NOT RELIEVE THE CONTRACTOR OF THE RESPONSIBILITY FOR THE CORRECTNESS OF DETAIL.

FOR APPROVAL
NOV 05 '92
NOT FOR CONSTRUCTION

REVISION	DATE	DESCRIPTION OF REVISION
NO. 1		
NO. 2		
NO. 3		
NO. 4		
NO. 5		

PRINTING Reqd	For	Date

Bolts Holes 15/16ϕ Unless Noted
Shop Paint SEE SHT GN1
Fab Spec AS NTD Inspection
Architect
Erection By Field Connections

HIRSCHFELD STEEL CO. INC.
112 WEST 29TH SAN ANGELO TEXAS 76903
PHONE (915) 653-3211

DESCRIPTION	70'-5 PLATE GINDER UNIT
STRUCTURE	US 83/281 INTERCHANGE RAMP #3
LOCATION	HIDALGO COUNTY
CUSTOMER	GILBERT TEXAS CONSTRUCTION
SHIP TO	
Customer's Order No.	
Dwg By JDL	Date 9/92
Checked By DLT	Date 9/92

SHEET 130 OF
JOB NO 92-108

— MPV 11-5

CE 92-13 (LINE # 1)

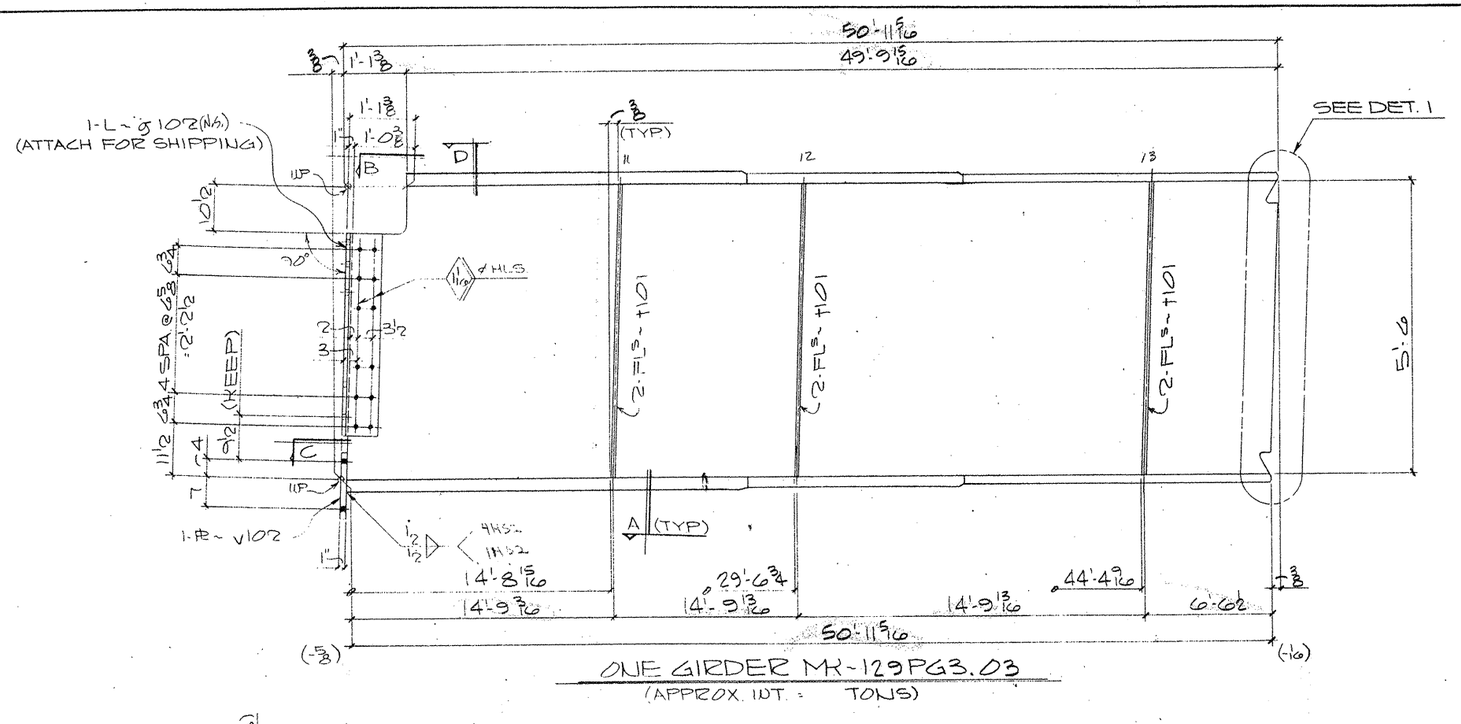

ONE GIRDER MK-129PG3.03
(APPROX. WT. = TONS)

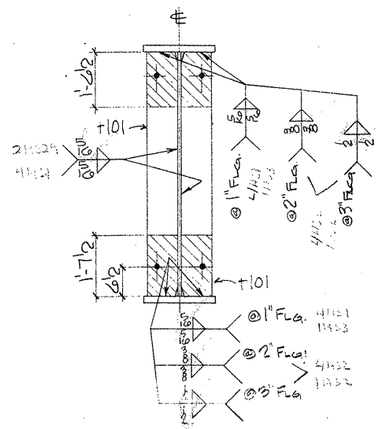

SECTION-A

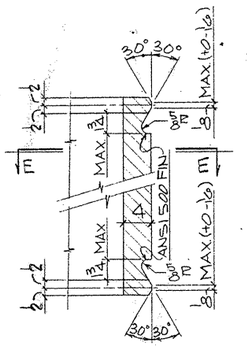

DETAIL-1

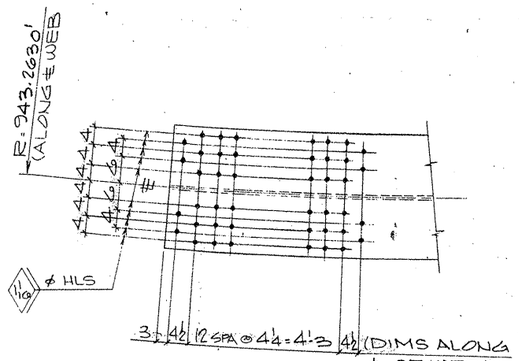

VIEW-B

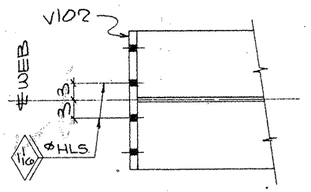

SECTION-C

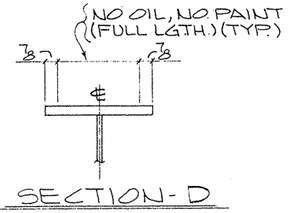

SECTION-D

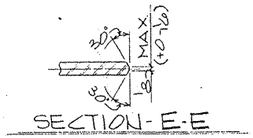

SECTION-E-E

SHOP NOTES:

1) FOR GENERAL NOTES SEE SHT. GN1
2) FOR GIRDER SUB-ASSEMBLY SEE SHT. 108
3) FOR STIFF. DETAILS SEE SHT. 101
4) FOR BLOCKING DIAGRAM SEE SHT. 154
5) FOR HEAT CURVE DIAGRAM SEE SHT. 150
6) FOR SPLICE ATTACHMENTS SEE SHT. 102
7) ////// INDICATES OIL, NO PAINT (N.S./F.S. & EDGES)

G0108

FED. ROAD DIV. NO.	STATE	FEDERAL AID PROJECT NO.				
6	TX.	NH 92(50)M				
STATE DIST. NO.	COUNTY	CONTROL NO.	SECTION NO.	JOB NO.		HIGHWAY NO.
21	HIDALGO	39	17	97		83/281

BILL OF MATERIAL

	Qnty	Material	Length	Mark Temp.	Mark Ship.	Wt.	Cut From	Remarks
1								
2	1	GIRDER			129PG3.03			
3	1	GIRDER SUB-ASSY		C108				
4	6	DIAF STIFF		†101				
5	1	ANGLE		3102				
6	1	CONN PL		V102				
7								
8								
9								
10								
11								
12								
13								
14								
15								
16								
17								
18								
19								
20								
21								
22								
23								
24								
25								
26								
27								
28								
29								
30								
31								
32								
33								
34								
35								
36								
37								
38								
39								
40								
41								
42								
43								
44								
45								
46								
47								
48								
49								
50								
51								
52								
53								
54								
55								
56								
57								
58								
59								
60								

TEXAS DEPARTMENT OF TRANSPORTATION
APPROVED
DIVISION OF BRIDGES AND STRUCTURES
DEC 16 1992
APPROVAL OF THIS DRAWING DOES NOT RELIEVE THE CONTRACTOR OF THE RESPONSIBILITY FOR THE CORRECTNESS OF DETAIL.

FOR APPROVAL
NOV 05 92
NOT FOR CONSTRUCTION

REVISION	DATE	DESCRIPTION OF REVISION
NO. 1		
NO. 2		
NO. 3		
NO. 4		
NO. 5		

PRINTING Rec'd For Date

Bolts Holes 15/16 ø Unless Noted
Shop Paint SEE SHT. GN1
Fab Spec. AS NTD. Inspection
Architect
Erection By Field Connections

HIRSCHFELD STEEL CO. INC.
112 WEST 29TH SAN ANGELO, TEXAS 76903
PHONE (915) 653-3211

DESCRIPTION 102'-5 PLATE GIRDER UNIT
STRUCTURE US 83/281 INTERCHANGE RAMP #3
LOCATION HIDALGO COUNTY
CUSTOMER GILBERT TEXAS CONSTRUCTION
SHIP TO
Customer's Order No
Dwg By JRC Date 9/92
Checked By DCT Date 9-92
APV 11-5

SHEET 129 OF
JOB NO 92-108

CE 92-13 (LINE # 3)

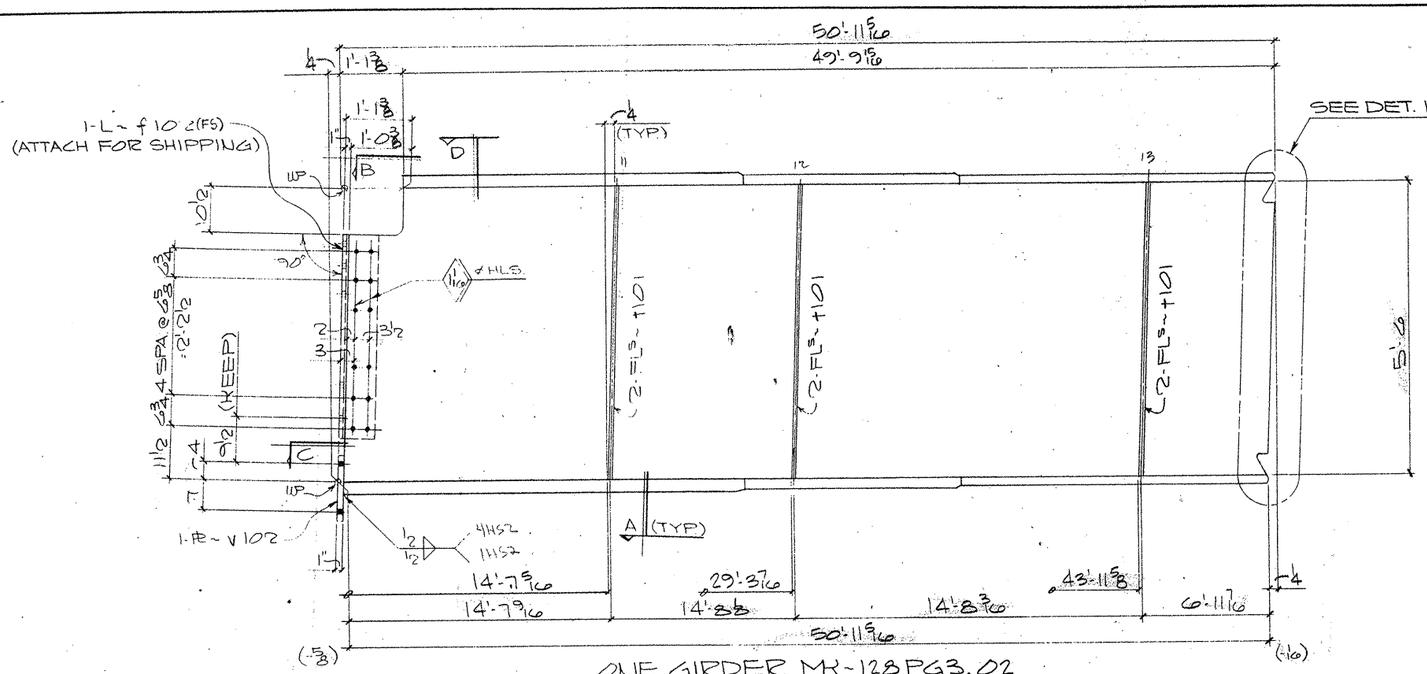

ONE GIRDER MK-128PG3.02
(APPROX. WT. = TONS)

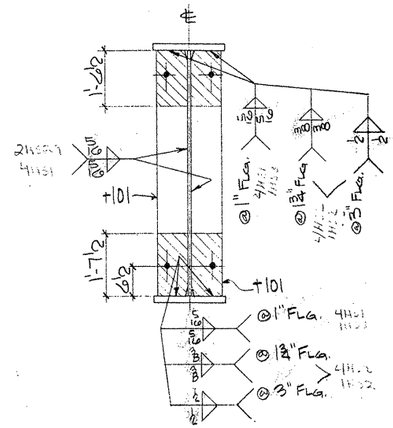

SECTION-A

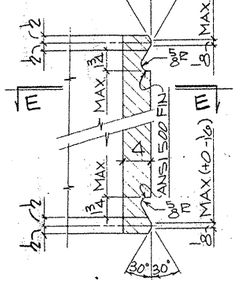

DETAIL-1

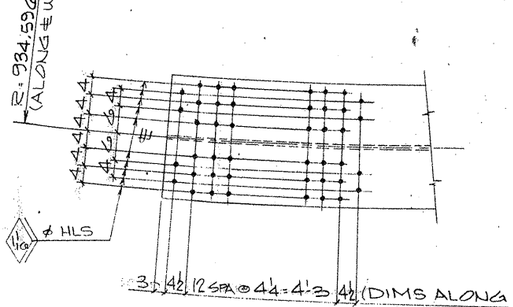

VIEW-B

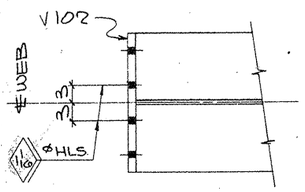

SECTION-C

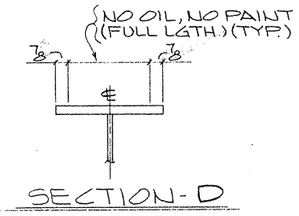

SECTION-D

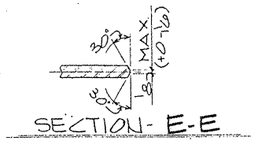

SECTION-E-E

SHOP NOTES:

1) FOR GENERAL NOTES SEE SHT. GN1
2) FOR GIRDER SUB-ASSEMBLY SEE SHT. 107
3) FOR STIFF. DETAILS SEE SHT. 101
4) FOR BLOCKING DIAGRAM SEE SHT. 153
5) FOR HEAT CURVE DIAGRAM SEE SHT. 150
6) FOR SPLICE ATTACHMENTS SEE SHT. 102
7) ////// INDICATES OIL, NO PAINT (N.S./F.S. & EDGES)

BILL OF MATERIAL

	Qty	Material	Length	Mark Temp	Mark Ship	Wt.	Cut From	Remarks
2	1	GIRDER			128PG3.02			
3	1	GIRDER SUB-ASSY		C107				
4	6	DIAF STIFF		+101				
5	1	ANGLE		f102				
6	1	CONN PL		V102				

TEXAS DEPARTMENT OF TRANSPORTATION
APPROVED
DIVISION OF BRIDGES AND STRUCTURES
DEC 16 1992
APPROVAL OF THIS DRAWING DOES NOT RELIEVE THE CONTRACTOR OF THE RESPONSIBILITY FOR THE CORRECTNESS OF DETAIL.

FOR APPROVAL
NOV 05 '92
NOT FOR CONSTRUCTION

REVISION	DATE	DESCRIPTION OF REVISION
NO. 1		
NO. 2		
NO. 3		
NO. 4		
NO. 5		

PRINTING Req'd	For	Date

Bolts Holes 15/16 ø Unless Noted
Shop Paint SEE SHT. GN1
Fab. Spec. Inspection
Architect
Erector By Field Connections

HIRSCHFELD STEEL CO. INC.
112 WEST 29TH SAN ANGELO, TEXAS 76903
PHONE (915) 653-3211

DESCRIPTION 102'-5 PLATE GIRDER UNIT
STRUCTURE US 83/281 INTERCHANGE RAMP #3
LOCATION HIDALGO COUNTY
CUSTOMER GILBERT TEXAS CONSTRUCTION
SHIP TO
Customer's Order No.
Dwg By JDC Date 9/92
Checked By DLT Date 9-92
SHEET 128 OF
JOB NO 92-108

G0108

FED. ROAD DIV. NO.	STATE	FEDERAL AID PROJECT NO.			
6	TX.	NH 92(50)M			
STATE DIST. NO.	COUNTY	CONTROL NO.	SECTION NO.	JOB NO.	HIGHWAY NO.
21	HIDALGO	39	17	97	83/281

CE 92-13 (LINE # 2)

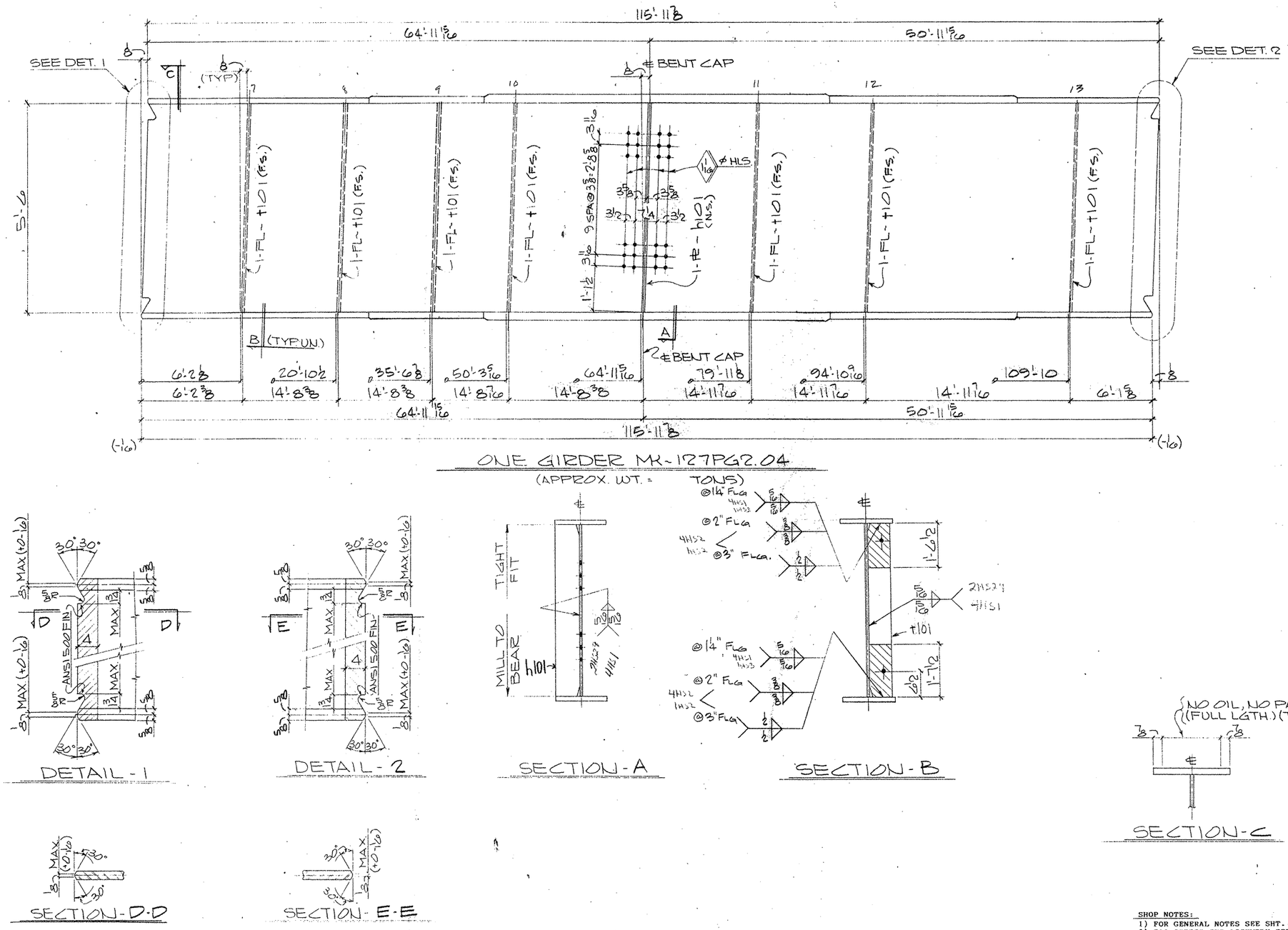

BILL OF MATERIAL

Qnty	Material	Length	Mark Temp	Mark Ship	Wt	Cut From	Remarks
1	GIRDER			127PG	2.04		
1	GIRDER SUB-ASSY		B109				
1	INT. BRG. STIFF		h101				
7	DIAF. STIFF		t101				

TEXAS DEPARTMENT OF TRANSPORTATION
APPROVED
DIVISION OF BRIDGES AND STRUCTURES
DEC 16 1992
APPROVAL OF THIS DRAWING DOES NOT RELIEVE THE CONTRACTOR OF THE RESPONSIBILITY FOR THE CORRECTNESS OF DETAIL.

FOR APPROVAL
NOV 05 '92
NOT FOR CONSTRUCTION

REVISION	DATE	DESCRIPTION OF REVISION
NO. 1		
NO. 2		
NO. 3		
NO. 4		
NO. 5		

PRINTING

Req'd	For	Date
	APV	11-5

Rests Holes 15/16 ø Unless Noted
Shop Paint SEE SHT GN1
Fab. Spec. ASNTD Inspection
Architect
Erection By Field Connections

HIRSCHFELD STEEL CO. INC.
112 WEST 29TH SAN ANGELO TEXAS 76903
PHONE (915) 653-3211

DESCRIPTION 702'-5 PLATE GIRDER UNIT
STRUCTURE US 83/281 INTERCHANGE RAMP #3
LOCATION HIDALGO COUNTY
CUSTOMER GILBERT TEXAS CONSTRUCTION
SHIP TO
Customer's Order No.
Dwg By JDC Date 9/92
Checked By DLT Date 9-92
SHEET 127 OF
JOB NO 92-108

SHOP NOTES:
1) FOR GENERAL NOTES SEE SHT. GN1
2) FOR GIRDER SUB-ASSEMBLY SEE SHT. 109
3) FOR STIFF. DETAILS SEE SHT. 101
4) FOR BLOCKING DIAGRAM SEE SHT. 155
5) FOR HEAT CURVE DIAGRAM SEE SHT. 150
6) ▨ INDICATES OIL, NO PAINT (N.S./F.S. & EDGES)

G0108

FED. ROAD DIV. NO.	STATE	FEDERAL AID PROJECT NO.			
6	TX.	NH 92(50)M			
STATE DIST. NO.	COUNTY	CONTROL NO.	SECTION NO.	JOB NO.	HIGHWAY NO.
21	HIDALGO	39	17	97	83/281

CE 92-13 (LINE # 4)

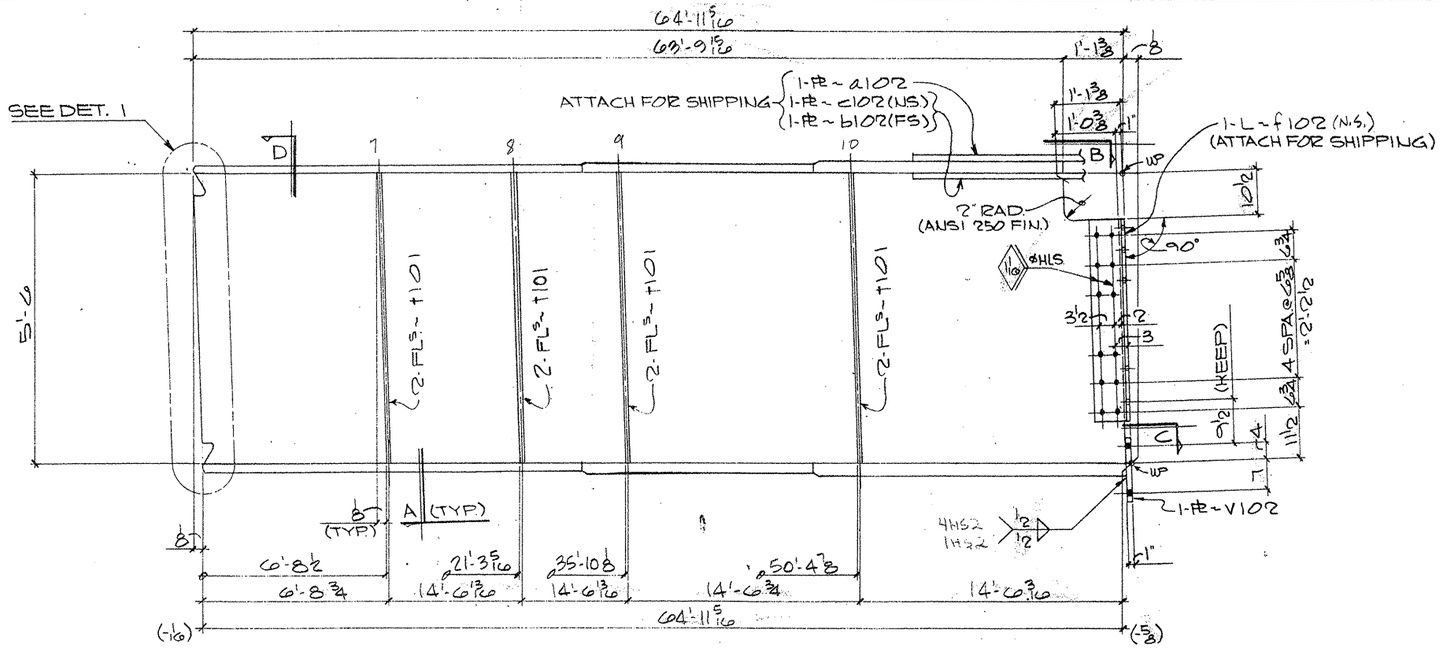

ONE GIRDER MK ~ 126PG2.03
(APPROX. WT. = TONS)

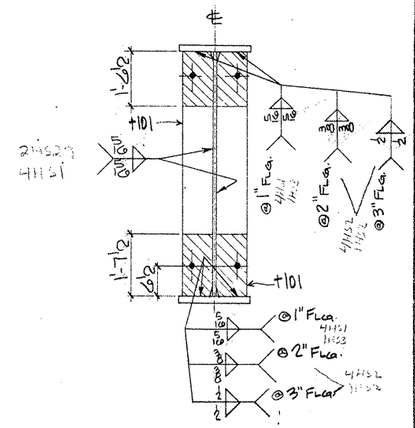

SECTION ~ A

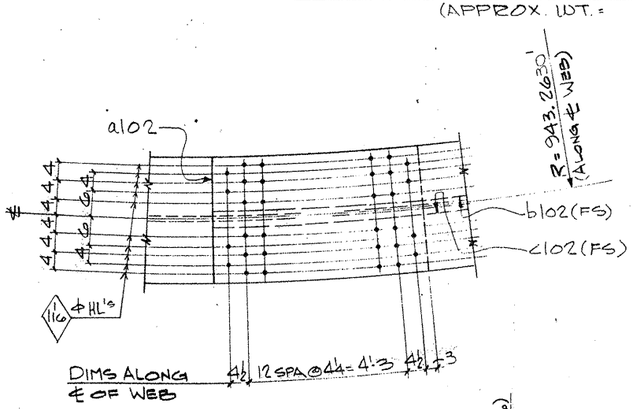

VIEW - B

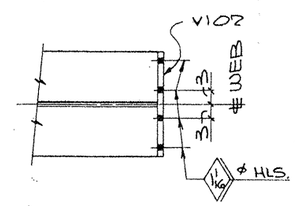

SECTION - C

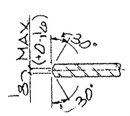

SECTION - E-E

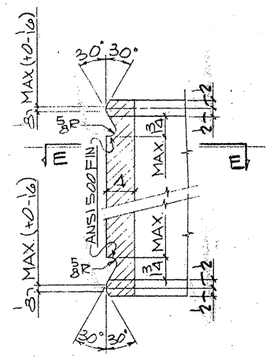

DETAIL - 1

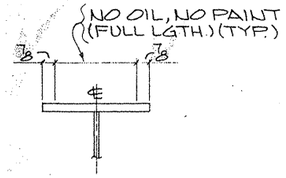

SECTION - D

SHOP NOTES:
1) FOR GENERAL NOTES SEE SHT. GN1
2) FOR GIRDER SUB-ASSEMBLY SEE SHT. 108
3) FOR STIFF. DETAILS SEE SHT. 101
4) FOR BLOCKING DIAGRAM SEE SHT. 154
5) FOR HEAT CURVE DIAGRAM SEE SHT. 150
6) FOR SPLICE ATTACHMENTS SEE SHT. 102
7) ▨ INDICATES OIL, NO PAINT (N.S./F.S. & EDGES)

G0108

FED. ROAD DIV. NO.	STATE	FEDERAL AID PROJECT NO.			
6	TX.	NH 92(50)M			
STATE DIST. NO.	COUNTY	CONTROL NO.	SECTION NO.	JOB NO.	HIGHWAY NO.
21	HIDALGO	39	17	97	83/281

BILL OF MATERIAL

Qnty	Material	Length	Mark Temp	Mark Ship.	Wt.	Cut From	Remarks
1	GIRDER		126PG2.03				
1	GIRDER SUB-ASSY		B108				
1	SPLICE PL		a102				
1	SPLICE PL		b102				
1	SPLICE PL		c102				
8	DIAF STIFF		t101				
1	ANGLE		f102				
1	CONN. PL		V102				

TEXAS DEPARTMENT OF TRANSPORTATION
APPROVED
DIVISION OF BRIDGES AND STRUCTURES
DEC 16 1992
APPROVAL OF THIS DRAWING DOES NOT RELIEVE THE CONTRACTOR OF THE RESPONSIBILITY FOR THE CORRECTNESS OF DETAIL.

FOR APPROVAL
NOV 05 92
NOT FOR CONSTRUCTION

REVISION	DATE	DESCRIPTION OF REVISION
NO 1		
NO 2		
NO 3		
NO 4		
NO 5		

PRINTING: Req'd | For | Date

Bolts Holes 15/16 ⌀ Unless Noted
Shop Paint SEE SHT GN1
Fab Spec AS NTD Inspection
Architect
Erection By Field Connections

HIRSCHFELD STEEL CO. INC.
112 WEST 29TH SAN ANGELO, TEXAS 76903
PHONE (915) 653-3211

DESCRIPTION 702'-5 PLATE GIRDER UNIT
STRUCTURE US 83/281 INTERCHANGE RAMP #3
LOCATION HIDALGO COUNTY
CUSTOMER GILBERT TEXAS CONSTRUCTION
SHIP TO
Customer's Order No
Dwg By JDC Date 9/92
Checked By DLT Date 9-92
SHEET 126 OF
JOB NO. 92-108

— APV 11-5

CE 92-13 (LINE #3)

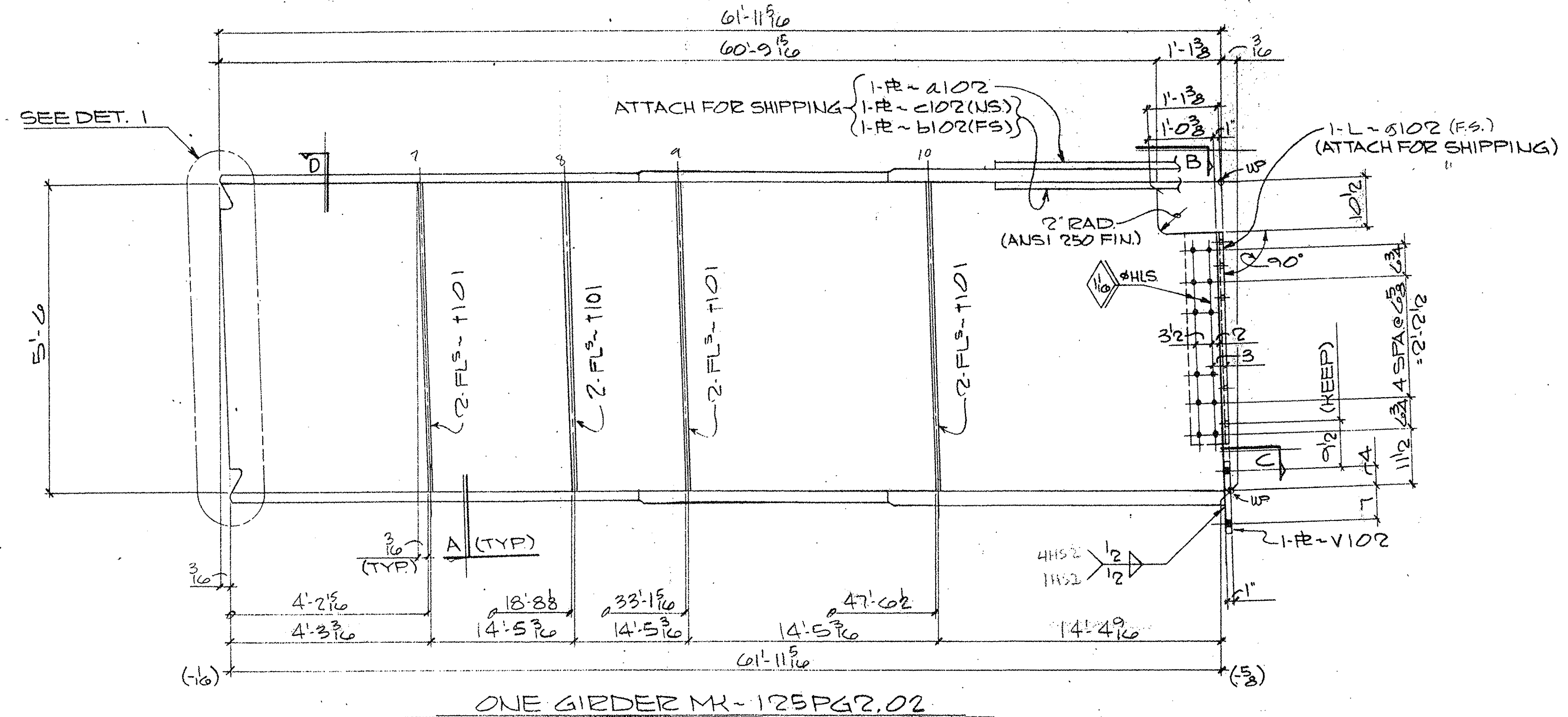

ONE GIRDER MK ~ 125PG2.02
(APPROX. WT. = TONS)

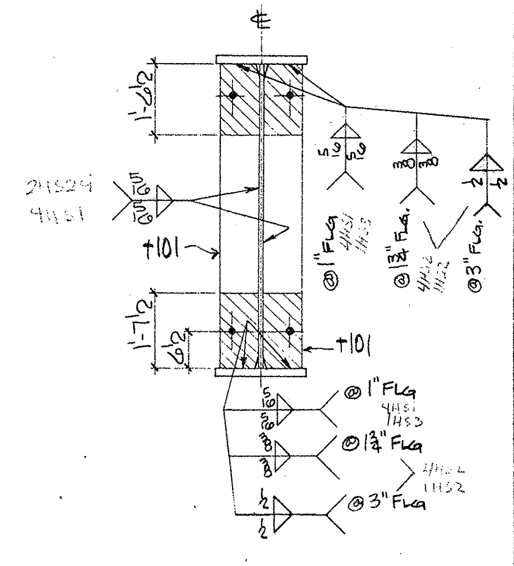

SECTION ~ A

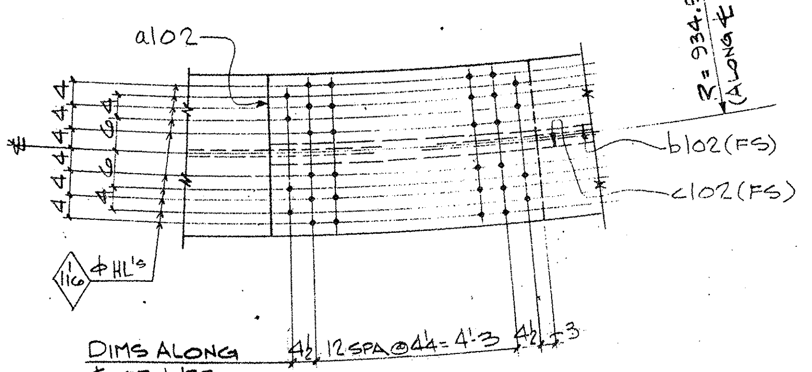

VIEW - B

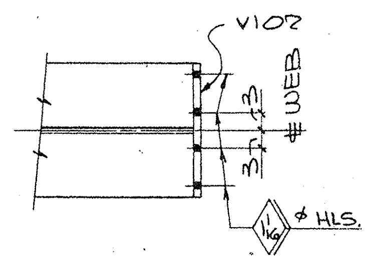

SECTION - C

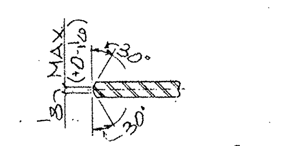

SECTION - E - E

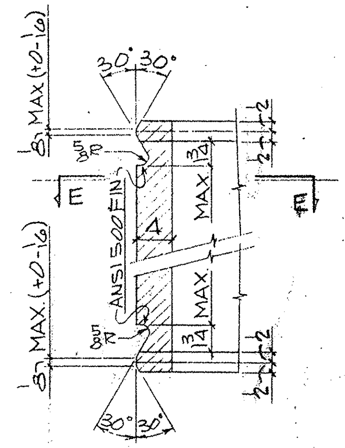

DETAIL - 1

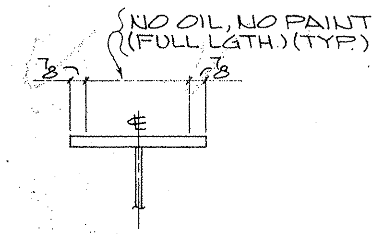

SECTION - D

SHOP NOTES:
1) FOR GENERAL NOTES SEE SHT. GN1
2) FOR GIRDER SUB-ASSEMBLY SEE SHT. 107
3) FOR STIFF. DETAILS SEE SHT. 101
4) FOR BLOCKING DIAGRAM SEE SHT. 153
5) FOR HEAT CURVE DIAGRAM SEE SHT. 150
6) FOR SPLICE ATTACHMENTS SEE SHT. 102
7) ▨ INDICATES OIL, NO PAINT (N.S./F.S. & EDGES)

G0108

FED. ROAD DIV. NO.	STATE	FEDERAL AID PROJECT NO.			
6	TX.	NH 92(50)M			
STATE DIST. NO.	COUNTY	CONTROL NO.	SECTION NO.	JOB NO.	HIGHWAY NO.
21	HIDALGO	39	17	97	83/281

BILL OF MATERIAL

	Qnty	Material	Length	Mark Temp	Mark Ship.	Wt.	Cut From	Remarks
1								
2	1	GIRDER		125PG2.02				
3	1	GIRDER SUB-ASSY		B107				
4	1	SPLICE PL		a102				
5	1	SPLICE PL		b102				
6	1	SPLICE PL		c102				
7	8	DIAF STIFF		t101				
8	1	ANGLE		g102				
9	1	CONN. PL		V102				
10								
11								
12								
13								
14								
15								
16								
17								
18								
19								
20								
21								
22								
23								
24								
25								
26								
27								
28								
29								
30								
31								
32								
33								
34								
35								
36								
37								
38								
39								
40								
41								
42								
43								
44								
45								
46								
47								
48								
49								
50								
51								
52								
53								
54								
55								
56								
57								
58								
59								
60								

TEXAS DEPARTMENT OF TRANSPORTATION
APPROVED
DIVISION OF BRIDGES AND STRUCTURES
DEC 16 1992
APPROVAL OF THIS DRAWING DOES NOT RELIEVE THE CONTRACTOR OF THE RESPONSIBILITY FOR THE CORRECTNESS OF DETAIL.

FOR APPROVAL
NOV 05 '92
NOT FOR CONSTRUCTION

REVISION	DATE	DESCRIPTION OF REVISION
NO 1		
NO 2		
NO 3		
NO 4		
NO 5		

PRINTING Req'd	For	Date
—	APV	11-5

Bolts — Holes 15/16 ⌀ Unless Noted
Shop Paint SEE SHT GN1
Fab Spec. AS NTD. Inspection
Architect
Erection By — Field Connections

HIRSCHFELD STEEL CO. INC.
112 WEST 29TH SAN ANGELO, TEXAS 76903
PHONE (915) 653-3211

DESCRIPTION	702'-5 PLATE GIRDER UNIT
STRUCTURE	US 83/281 INTERCHANGE RAMP #3
LOCATION	HIDALGO COUNTY
CUSTOMER	GILBERT TEXAS CONSTRUCTION
SHIP TO	
Customer's Order No	
Dwg. By JDC	Date 9/92
Checked By DCT	Date 9-92

SHEET 125 OF
JOB NO. 92-108

CE 92-13 (LINE # 2)

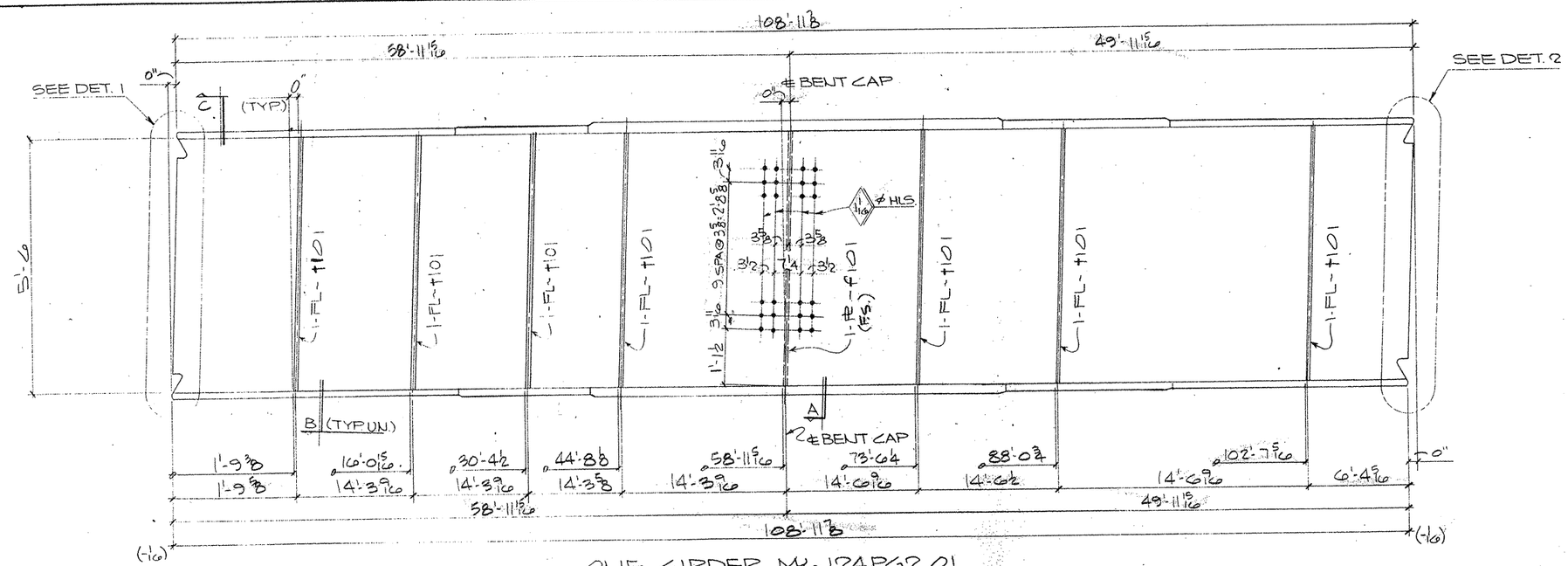

ONE GIRDER MK-124PG2.01
(APPROX. WT. = TONS)

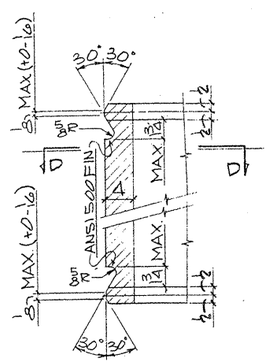

DETAIL-1

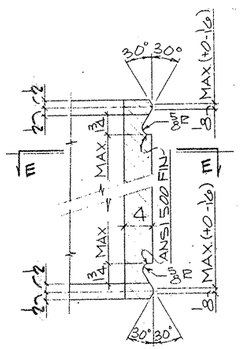

DETAIL-2

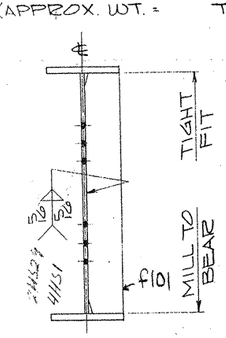

SECTION-A

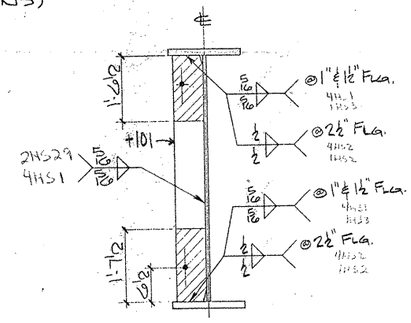

SECTION-B

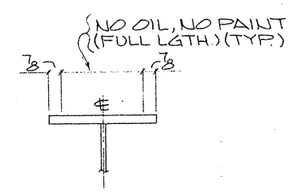

SECTION-C

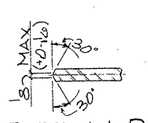

SECTION-D-D

SECTION-E-E

SHOP NOTES:
1) FOR GENERAL NOTES SEE SHT. GN1
2) FOR GIRDER SUB-ASSEMBLY SEE SHT. 106
3) FOR STIFF. DETAILS SEE SHT. 101
4) FOR BLOCKING DIAGRAM SEE SHT. 152
5) FOR HEAT CURVE DIAGRAM SEE SHT. 150
6) ▨ INDICATES OIL, NO PAINT (N.S./F.S. & EDGES)

G0108

FED. ROAD DIV. NO	STATE	FEDERAL AID PROJECT NO.				
6	TX.	NH 92(50)M				
STATE DIST. NO	COUNTY	CONTROL NO	SECTION NO	JOB NO	HIGHWAY NO	
21	HIDALGO	39	17	97	83/281	

BILL OF MATERIAL

	Qty	Material	Length	Mark Temp	Mark Ship	Wt	Cut From	Remarks
1								
2								
3	1	GIRDER			124PG2.01			
4	1	GIRDER SUB-ASSY		B106				
5	1	INT. BRG STIFF		f101				
6	7	DIAF. STIFF		t101				

TEXAS DEPARTMENT OF TRANSPORTATION
APPROVED
DIVISION OF BRIDGES AND STRUCTURES
DEC 16 1992
APPROVAL OF THIS DRAWING DOES NOT RELIEVE THE CONTRACTOR OF THE RESPONSIBILITY FOR THE CORRECTNESS OF DETAIL.

FOR APPROVAL
NOV 05 '92
NOT FOR CONSTRUCTION

REVISION	DATE	DESCRIPTION OF REVISION
NO. 1		
NO. 2		
NO. 3		
NO. 4		
NO. 5		

PRINTING

Reqd	Fer	Date

Bolts Holes 13/16 ø Unless Noted
Shop Paint SEE SHT GN1
Fab. Spec ASNTD. Inspection
Architect
Erection By Field Connections

HIRSCHFELD STEEL CO. INC.
112 WEST 29TH SAN ANGELO, TEXAS 76903
PHONE (915) 653-3211

DESCRIPTION 702'-5" PLATE GIRDER UNIT
STRUCTURE US 83/281 INTERCHANGE RAMP #3
LOCATION HIDALGO COUNTY
CUSTOMER GILBERT TEXAS CONSTRUCTION
SHIP TO
Customer's Order No
Dwg. By JDC Date 9/92
Checked By DLT Date 9-92
SHEET 124 OF
JOB NO. 92-108

CE 92-13 (LINE # 1)

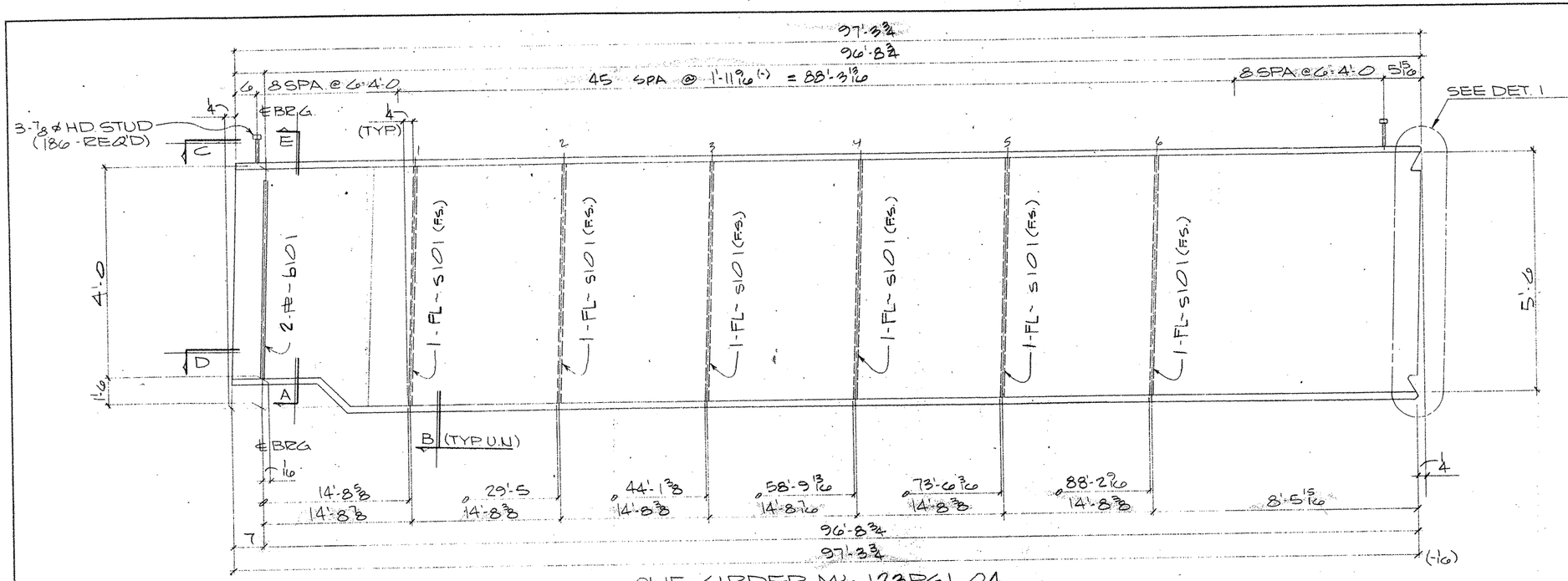

ONE GIRDER MK-123PG1.04
(APPROX. WT. = TONS)

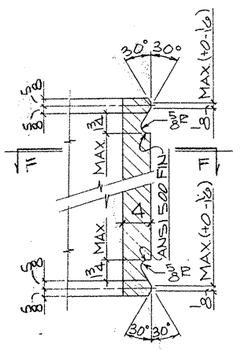

DETAIL-1

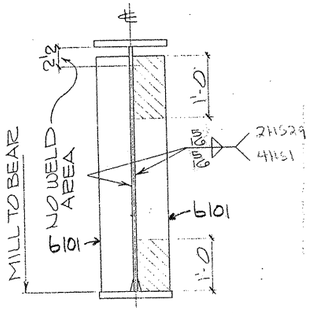

SECTION-A

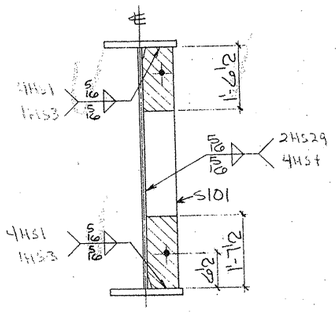

SECTION-B

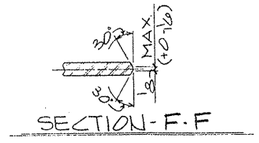

SECTION-F-F

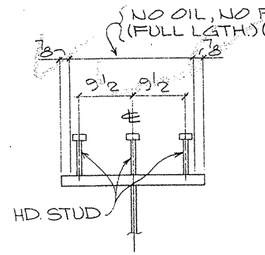

SECTION-E
(TYP. STUD SECT.)

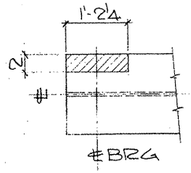

VIEW-C

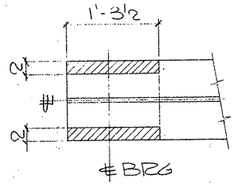

SECTION-D

SHOP NOTES:

1) FOR GENERAL NOTES SEE SHT. GN1
2) FOR GIRDER SUB-ASSEMBLY SEE SHT.108
3) FOR STIFF. DETAILS SEE SHT.101
4) FOR BLOCKING DIAGRAM SEE SHT.155
5) FOR HEAT CURVE DIAGRAM SEE SHT.150
6) ▨ INDICATES OIL, NO PAINT (N.S./F.S. & EDGES)

BILL OF MATERIAL

	Qnty	Material	Length	Mark Temp	Mark Ship	Wt.	Cut From	Remarks
3	1	GIRDER		123PG1.04				
4	1	GIRDER SUB-ASSY		A108				
5	2	BRG STIFF		b101				
7	6	DIAF. STIFF		s101				
9	186	HD STUD 7/8	0'-7				116-1	A108

TEXAS DEPARTMENT OF TRANSPORTATION
APPROVED
DIVISION OF BRIDGES AND STRUCTURES
DEC 16 1992
APPROVAL OF THIS DRAWING DOES NOT RELIEVE THE CONTRACTOR OF THE RESPONSIBILITY FOR THE CORRECTNESS OF DETAIL.

FOR APPROVAL
NOV 03 '92
NOT FOR CONSTRUCTION

REVISION	DATE	DESCRIPTION OF REVISION
NO. 1		
NO. 2		
NO. 3		
NO. 4		
NO. 5		

PRINTING: Reqd | For | Date

Bolts: Holes: 15/16 ø Unless Noted
Shop Paint: SEE SHT. GN1
Fab. Spec.: AS NTD
Inspection:
Architect:
Erection By: Field Connections

HIRSCHFELD STEEL CO. INC.
112 WEST 29TH SAN ANGELO, TEXAS 76903
PHONE (915) 653-3211

DESCRIPTION	702'-6 PLATE GIRDER UNIT
STRUCTURE	US 83/281 INTERCHANGE RAMP "B"
LOCATION	HIDALGO COUNTY
CUSTOMER	GILBERT TEXAS CONSTRUCTION
SHIP TO	
Customer's Order No.:	
Dwg. By JDE	Date 9/92
Checked By DLT	Date 9-92

SHEET 123 OF
JOB NO. 92-108

G0108

FED ROAD DIV. NO	STATE	FEDERAL AID PROJECT NO.			
6	TX.	NH 92(50)M			
STATE DIST. NO.	COUNTY	CONTROL NO.	SECTION NO.	JOB NO.	HIGHWAY NO.
21	HIDALGO	39	17	97	83/281

APV 11-5

CE 92-13 (LINE # 4)

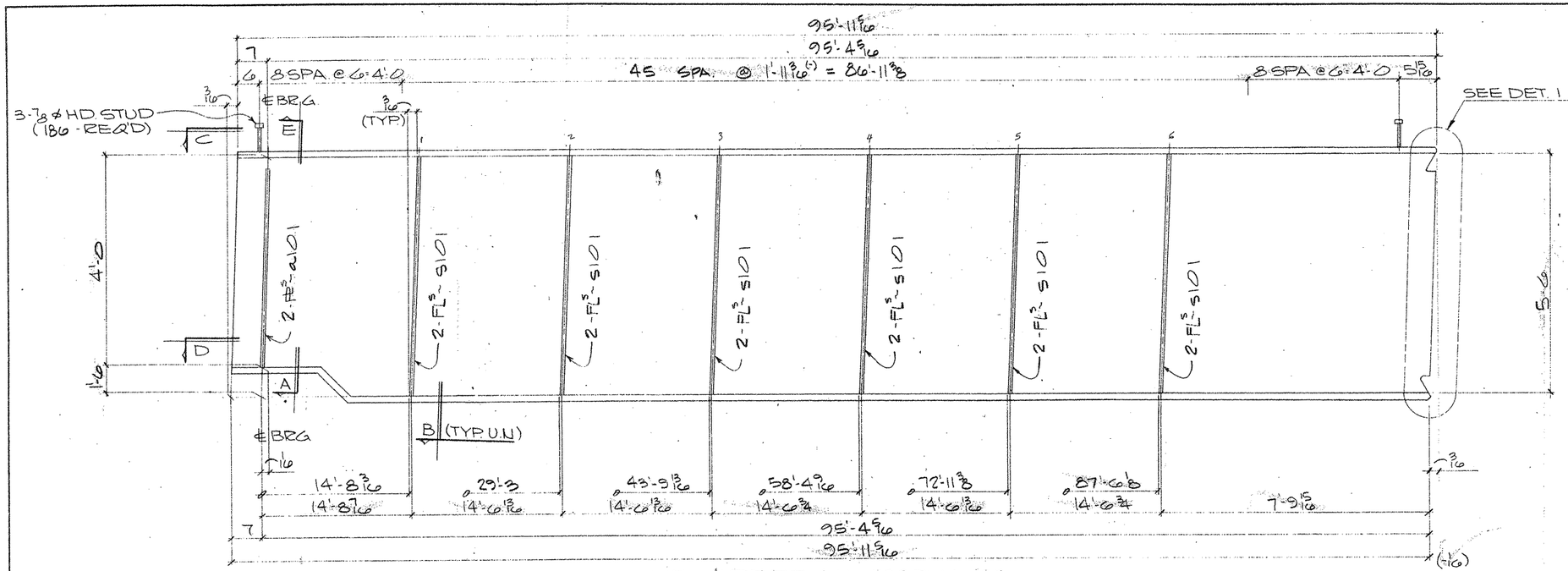

ONE GIRDER MK-122PG1.03
(APPROX. WT. = TONS)

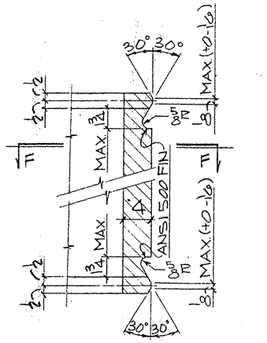

DETAIL-1

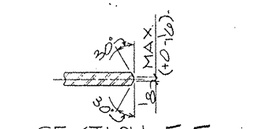

SECTION-F-F

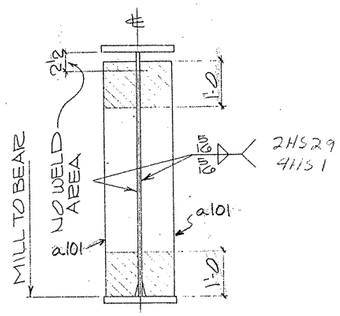

SECTION-A

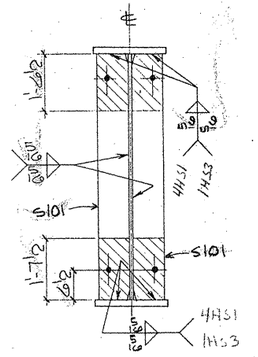

SECTION-B

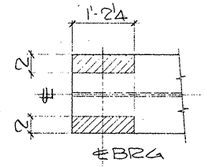

VIEW-C

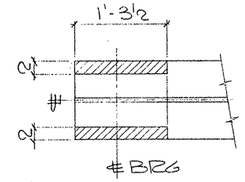

SECTION-D

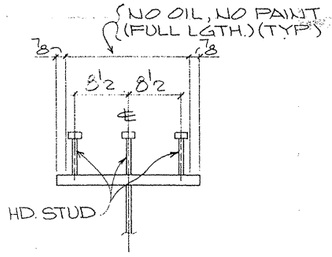

SECTION-E
(TYP. STUD SECT.)

SHOP NOTES:
1) FOR GENERAL NOTES SEE SHT. GN1
2) FOR GIRDER SUB-ASSEMBLY SEE SHT. 108
3) FOR STIFF. DETAILS SEE SHT. 101
4) FOR BLOCKING DIAGRAM SEE SHT. 154
5) FOR HEAT CURVE DIAGRAM SEE SHT. 150
6) ▨ INDICATES OIL, NO PAINT (N.S./F.S. & EDGES)

G0108

FED. ROAD DIV. NO.	STATE	FEDERAL AID PROJECT NO.			
6	TX.	NH 92(50)M			
STATE DIST. NO.	COUNTY	CONTROL NO.	SECTION NO.	JOB NO.	HIGHWAY NO.
21	HIDALGO	39	17	97	83/281

BILL OF MATERIAL

	Qnty.	Material	Length	Mark Temp.	Mark Ship.	Wt	Cut From	Remarks
1								
2								
3	1	GIRDER		122PG1.03				
4	1	GIRDER SUB-ASSY		A108				
5	2	BRG STIFF		a101				
6								
7	12	DIAF. STIFF		S101				
8								
9	186	HD STUD 7/8	0'-7				116-1	A108
10								
11								
12								
13								
14								
15								
16								
17								
18								
19								
20								
21								
22								
23								
24								
25								
26								
27								
28								
29								
30								
31								
32								
33								
34								
35								
36								
37								
38								
39								
40								
41								
42								
43								1
44								
45								
46								
47								
48								
49								
50								
51								
52								
53								
54								
55								
56								
57								
58								
59								
60								

TEXAS DEPARTMENT OF TRANSPORTATION
APPROVED
~~DIVISION OF BRIDGES AND STRUCTURES~~
DEC 16 1992

APPROVAL OF THIS DRAWING DOES NOT RELIEVE THE CONTRACTOR OF THE RESPONSIBILITY FOR THE CORRECTNESS OF DESIGN

FOR APPROVAL
NOV 05 '92
NOT FOR CONSTRUCTION

REVISION	DATE	DESCRIPTION OF REVISION
NO. 1		
NO. 2		
NO. 3		
NO. 4		
NO. 5		

PRINTING: Reqd | For | Date

Bolts Holes 15/16 ø Unless Noted
Shop Paint SEE SHT. GN1
Fab. Spec. AS NTD Inspection
Architect
Erection By Field Connections

HIRSCHFELD STEEL CO. INC.
112 WEST 29TH SAN ANGELO, TEXAS 76903
PHONE (915) 653-3211

DESCRIPTION	70215 PLATE GIRDER UNIT
STRUCTURE	US 83/281 INTERCHANGE RAMP #3
LOCATION	HIDALGO COUNTY
CUSTOMER	GILBERT TEXAS CONSTRUCTION
SHIP TO	
Customer's Order No.	
Dwg. By JDL Date 9/92	SHEET 122 OF
Checked By DLT Date 9-92	JOB NO. 92-108

– APV 11-5

CE 92-13 (LINE # 3)

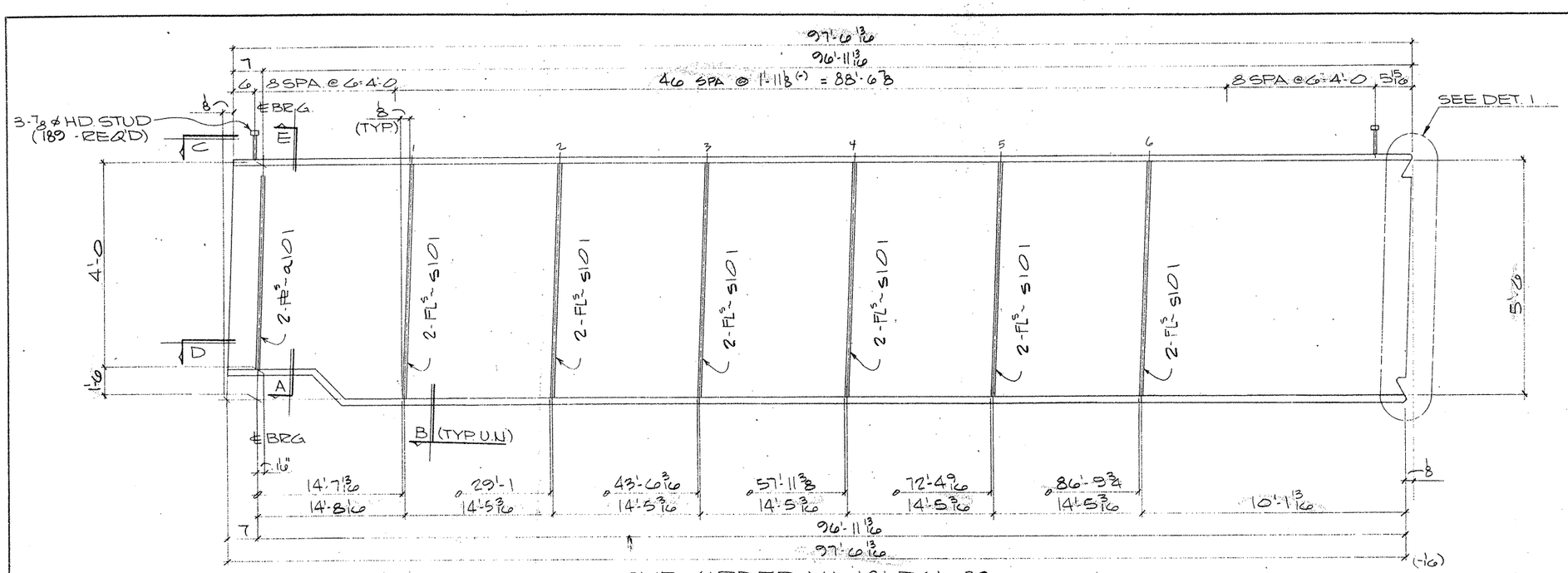

ONE GIRDER MK-121 PG1.02
(APPROX. WT. = TONS)

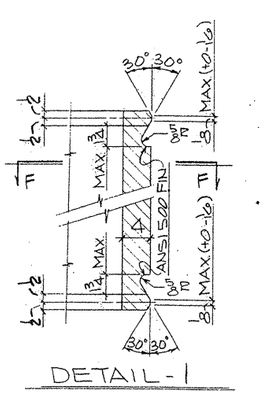

DETAIL-1

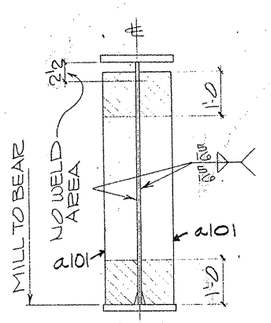

SECTION-A

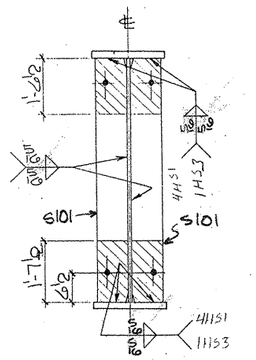

SECTION-B

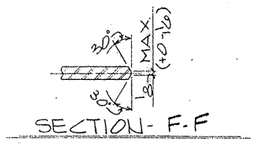

SECTION-F-F

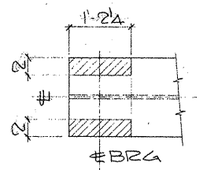

VIEW-C

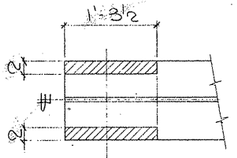

SECTION-D

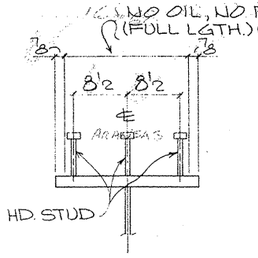

SECTION-E
(TYP. STUD SECT.)

SHOP NOTES:
1) FOR GENERAL NOTES SEE SHT. GN1
2) FOR GIRDER SUB-ASSEMBLY SEE SHT. 107
3) FOR STIFF. DETAILS SEE SHT. 101
4) FOR BLOCKING DIAGRAM SEE SHT. 153
5) FOR HEAT CURVE DIAGRAM SEE SHT. 150
6) ▨ INDICATES OIL, NO PAINT (N.S./F.S. & EDGES)

G0108

FED. ROAD DIV. NO.	STATE	FEDERAL AID PROJECT NO.				
6	TX.	NH 92(50)M				
STATE DIST. NO.	COUNTY	CONTROL NO.	SECTION NO.	JOB NO.	HIGHWAY NO.	
21	HIDALGO	39	17	97	83/281	

BILL OF MATERIAL

	Qnty.	Material	Length	Mark Temp.	Mark Ship.	Wt	Cut From	Remarks
3	1	GIRDER		121PG1.02				
4	1	GIRDER SUB-ASSY		A107				
5	2	BRG STIFF		a101				
7	12	DIAF. STIFF		S101				
9	189	HD. STUD 7/8	0'-7				116-1	A108

TEXAS DEPARTMENT OF TRANSPORTATION
APPROVED
DIVISION OF BRIDGES AND STRUCTURES
DEC 16 1992

APPROVAL OF THIS DRAWING DOES NOT RELIEVE THE CONTRACTOR OF THE RESPONSIBILITY FOR THE CORRECTNESS OF DETAIL.

FOR APPROVAL
NOV 06 92
NOT FOR CONSTRUCTION

REVISION	DATE	DESCRIPTION OF REVISION
NO. 1		
NO. 2		
NO. 3		
NO. 4		
NO. 5		

PRINTING: Recd | For | Date

Bolts: Holes, 15/16 ø Unless Noted /
Shop Paint: SEE SHT. GN1
Fab Spec: AS N.T.D. Inspection
Architect
Erection By: Field Connections

HIRSCHFELD STEEL CO. INC.
112 WEST 29TH SAN ANGELO, TEXAS 76903
PHONE (915) 653-3211

DESCRIPTION: 702'-5 PLATE GIRDER UNIT
STRUCTURE: US 83/281 INTERCHANGE RAMP "3"
LOCATION: HIDALGO COUNTY
CUSTOMER: GILBERT TEXAS CONSTRUCTION
SHIP TO
Customer's Order No.
Dwg. By: JDL Date: 9/92
Checked By: DLT Date: 9/92

SHEET 121 OF
JOB NO. 92-108

- APV 11-5

CE 92-13 (LINE # 2)

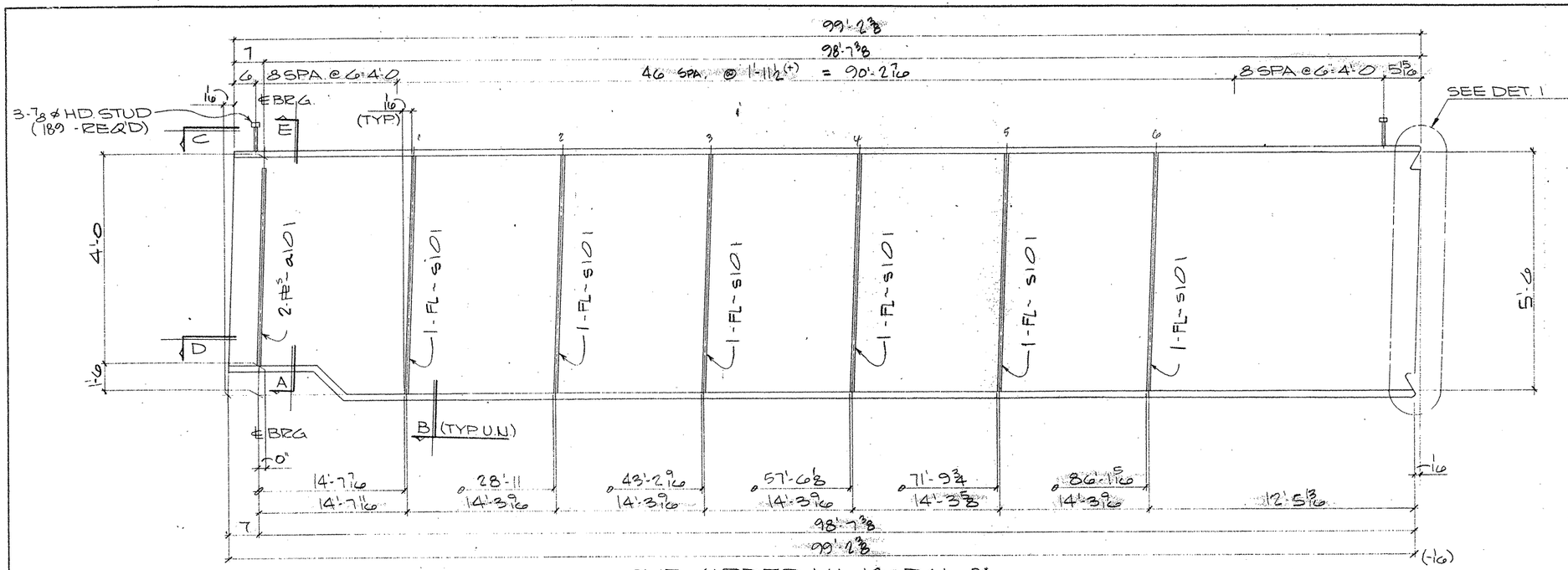

ONE GIRDER MK-120PG1.01
(APPROX. WT. = TONS)

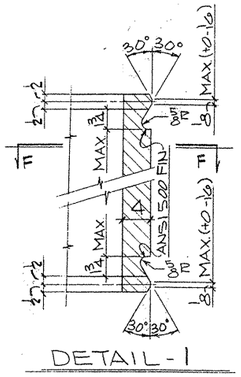

DETAIL - 1

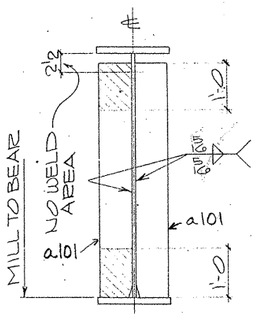

SECTION - A

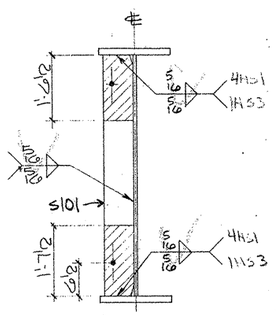

SECTION - B

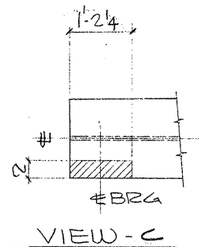

VIEW - C

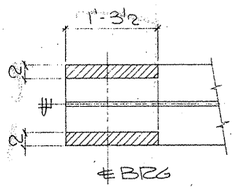

SECTION - D

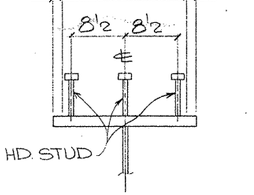

SECTION - E
(TYP. STUD SECT.)

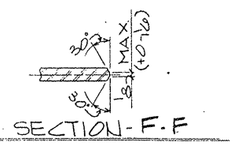

SECTION - F - F

SHOP NOTES:
1) FOR GENERAL NOTES SEE SHT. GN1
2) FOR GIRDER SUB-ASSEMBLY SEE SHT. 106
3) FOR STIFF. DETAILS SEE SHT. 101
4) FOR BLOCKING DIAGRAM SEE SHT. 152
5) FOR HEAT CURVE DIAGRAM SEE SHT. 150
6) ▨ INDICATES OIL, NO PAINT (N.S./F.S. & EDGES)

BILL OF MATERIAL

	Qnty.	Material	Length	Mark Temp.	Mark Ship	Wt.	Cl. Fact.	Remarks
3	1	GIRDER		120PG1.01				
4	1	GIRDER SUB-ASSY		A106				
5	2	BRG. STIFF		a101				
7	6	DIAF. STIFF		s101				
9	189	HD. STUD 7/8	0'-7				116-1	A108

TEXAS DEPARTMENT OF TRANSPORTATION
APPROVED
DIVISION OF BRIDGES AND STRUCTURES
DEC 16 1992
APPROVAL OF THIS DRAWING DOES NOT RELIEVE THE CONTRACTOR OF THE RESPONSIBILITY FOR THE CORRECTNESS OF DETAIL.

FOR APPROVAL
NOV 05 '92
NOT FOR CONSTRUCTION

REVISION	DATE	DESCRIPTION OF REVISION
NO. 1		
NO. 2		
NO. 3		
NO. 4		
NO. 5		

PRINTING: Read | For | Date

Bolts: Holes: 15/16 ø Unless Noted
Shop Paint: SEE SHT. GN1
Fab Spec: AS NTD Inspection
Architect
Erection By: Field Connections

HIRSCHFELD STEEL CO. INC.
112 WEST 29TH SAN ANGELO, TEXAS 76903
PHONE (915) 653-3211

DESCRIPTION	702'-5 PLATE GIRDER UNIT
STRUCTURE	US 83/281 INTERCHANGE RAMP "B"
LOCATION	HIDALGO COUNTY
CUSTOMER	GILBERT TEXAS CONSTRUCTION
SHIP TO	
Customer's Order No.	
Dwg By JDL	Date 9/92
Checked By DCT	Date 9/92

SHEET 120 OF
JOB NO. 92-108

G0108

FED. ROAD DIV. NO.	STATE	FEDERAL AID PROJECT NO.				
6	TX.	NH 92(50)M				
STATE DIST. NO.	COUNTY	CONTROL NO.	SECTION NO.	JOB NO.	HIGHWAY NO.	
21	HIDALGO	39	17	97	83/281	

— APV 11-5

CE 92-13 (LINE # 1)

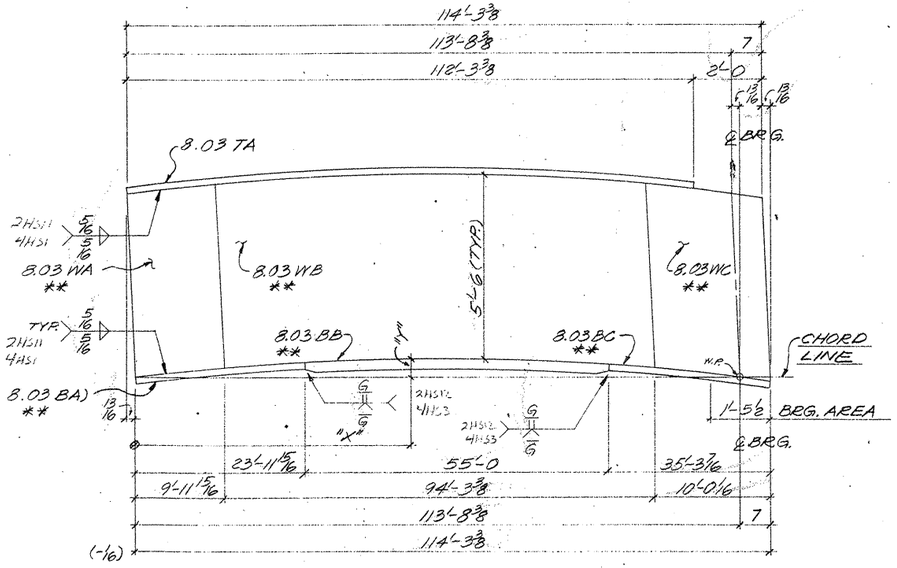

ONE ~ GIRDER SUB-ASSY. ~ MK A119

(FOR GIRDER ~ 148 PG 8.03)

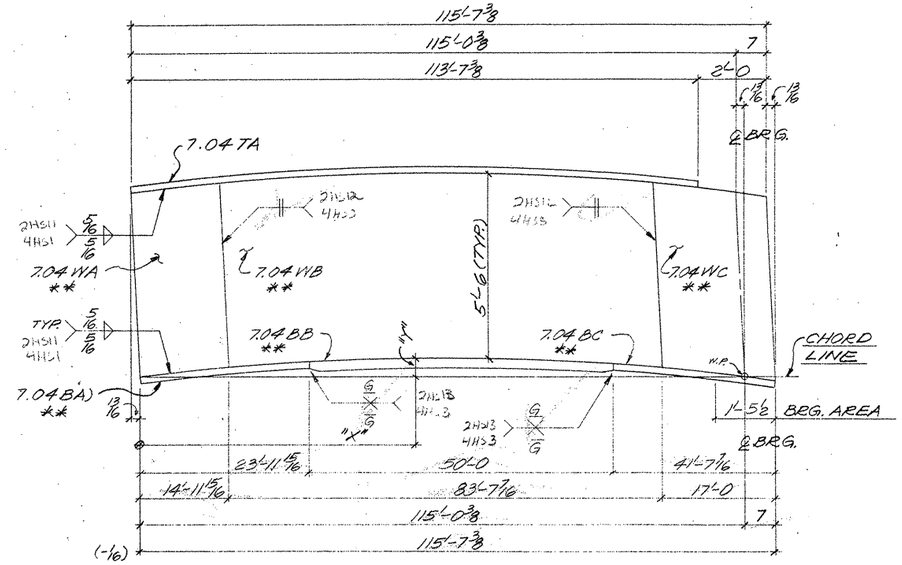

ONE ~ GIRDER SUB-ASSY. ~ MK B119

(FOR GIRDER ~ 149 PG 7.04)

MK A119

"X"	9'-11 15/16	12'-4 3/8	26'-10 1/2	41'-4 3/8	55'-9 3/4	70'-3 7/16	84'-9 1/16	99'-2 3/4	104'-3 7/16	113'-8 3/8
"Y"	1/4	1 9/16	3	3 3/8	4 4	4	3 3/8	1 3/4	1 1/8	0"
	℄ WEB SPLICE								℄ WEB SPLICE	℄ BRG.

MK B119

"X"	12'-9 5/8	14'-11 15/16	27'-4 3/8	42'-0 1/8	56'-7 3/8	71'-2 5/8	85'-9 3/8	98'-7 3/8	100'-5 1/2	115'-0 3/8
"Y"	1 1/16	1 3/4	2 15/16	3 3/8	4 3/16	3 15/16	3 1/16	1 1/3	1 3/4	0"
		℄ WEB SPLICE						℄ WEB SPLICE		℄ BRG.

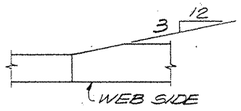

TYP FLG. THICKNESS TRANSITION

SHOP NOTES:

1) FOR GENERAL NOTES, SEE SHT. GN1
2) MATERIAL NOTED "**" MUST MEET CHARPY V-NOTCH REQUIREMENTS
3) FOR HEAT CURVE DIAGRAM, SEE SHT. 15/.

G0108

FED. ROAD DIV. NO.	STATE	FEDERAL AID PROJECT NO.			
6	TX.	NH 92(50)M			
STATE DIST. NO.	COUNTY	CONTROL NO.	SECTION NO.	JOB NO.	HIGHWAY NO.
21	HIDALGO	39	17	97	83/281

BILL OF MATERIAL

	Qnty.	Material	Length	Mark Temp	Mark Ship.	Wt.	Cut From	Remarks
1								
2	1	GIRDER SUB-ASSY.			A119			
3	1	PL 5/8 x 66	10'-0 3/8	8.03WA			103-12	CVN2
4	1	PL 1/2 x 66	94'-4	8.03WB			103-13	CVN2
5	1	PL 9/16 x 66	10'-0 3/8	8.03WC			103-14	CVN2
6	1	PL 1 x 20	112'-3 3/8	8.03TA			112-16	
7	1	PL 1 x 20	23'-11 15/16	8.03BA			107-6	CVN2
8	1	PL 1 1/4 x 20	55'-0	8.03BB			107-7	CVN2
9	1	PL 1 x 80	35'-3 7/16	8.03BC			107-8	CVN2
10								
11								
12								
13								
14	1	GIRDER SUB-ASSY.			B119			
15	1	PL 5/8 x 66	15'-0 3/8	7.04WA			104-6	CVN2
16	1	PL 1/2 x 66	83'-8 1/16	7.04WB			104-7	CVN2
17	1	PL 9/16 x 66	17'-0 3/8	7.04WC			104-8	CVN2
18	1	PL 1 1/4 x 22	113'-7 3/8	7.04TA			113-16	
19	1	PL 1 1/4 x 22	23'-11 15/16	7.04BA			109-2	CVN2
20	1	PL 1 1/2 x 22	50'-0	7.04BB			109-3	CVN2
21	1	PL 1 1/4 x 22	41'-7 7/16	7.04BC			109-4	CVN2
22								
23								
24								
25								
26								
27								
28								
29								
30								
31								
32								
33								
34								
35								
36								
37								
38								
39								
40								
41								
42								
43								
44								
45								
46								
47								
48								
49								
50								
51								
52								
53								
54								
55								
56								
57								
58								
59								
60								

TEXAS DEPARTMENT OF TRANSPORTATION
APPROVED
DIVISION OF BRIDGES AND STRUCTURES
DEC 16 1992
APPROVAL OF THIS DRAWING DOES NOT RELIEVE THE CONTRACTOR OF THE RESPONSIBILITY FOR THE CORRECTNESS OF DETAIL

FOR APPROVAL
NOV 05 92
NOT FOR CONSTRUCTION

REVISION	DATE	DESCRIPTION OF REVISION
NO. 1		
NO. 2		
NO. 3		
NO. 4		
NO. 5		

PRINTING: Reqd | For | Date

Bolts: Holes: Unless Noted
Shop Paint SEE SHT. GN1
Fab Spec A572-50 U.N. Inspection
Architect
Erection By Field Connections

HIRSCHFELD STEEL CO. INC.
112 WEST 29TH SAN ANGELO, TEXAS 76903
PHONE (915) 653-3211

DESCRIPTION 702-5 PLATE GIRDER UNIT
STRUCTURE US 83/281 INTERCHANGE RAMP "3"
LOCATION HIDALGO COUNTY
CUSTOMER GILBERT TEXAS CONSTRUCTION
SHIP TO
Customer's Order No.
Dwg. By PEC Date 9-16-92
Checked By DLT Date 9-92
SHEET 119 OF
JOB NO. 92-108

APV

CE 92-13 (LINE 364)

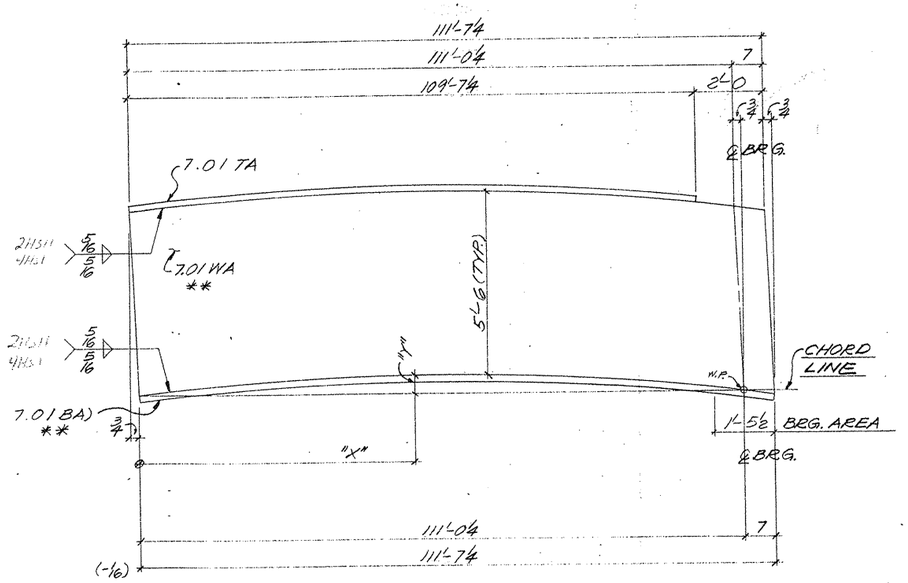

ONE ~ GIRDER SUB-ASSY. ~ MK A118

(FOR GIRDER ~ 146 PG 7.01)

MK A118										
"X"	11'-7 4	25'-9 3/8	40'-0 3/16	54'-2 5/8	68'-5 5/8	82'-7 1/16	96'-10 1/16			111'-0 4
"Y"	1/16	2 3/16	2 5/16	3 3/16	3	2 3/8	1/2			0"
										℄ BRG.

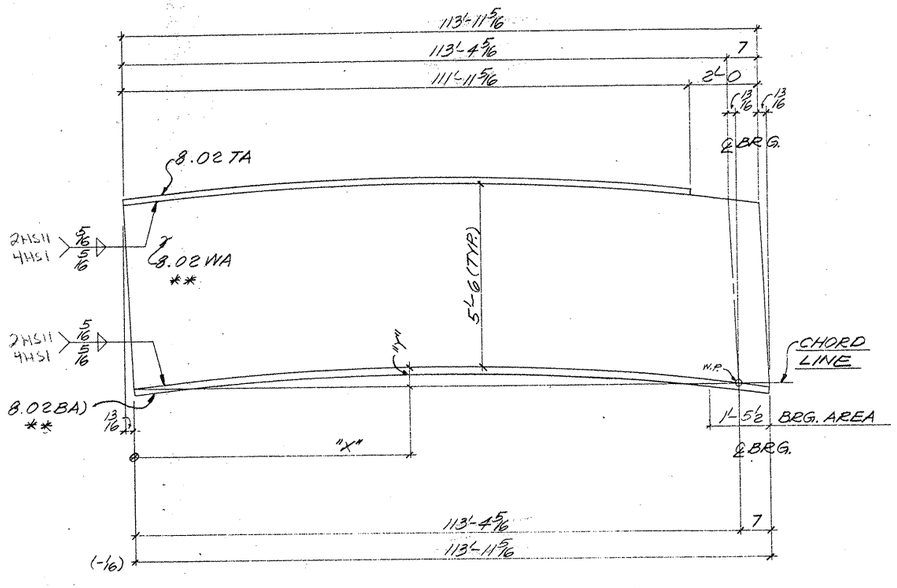

ONE ~ GIRDER SUB-ASSY. ~ MK B118

(FOR GIRDER ~ 147 PG 8.02)

MK B118										
"X"	13'-0 1/16	27'-4 1/8	41'-8 1/8	56'-0 7/16	70'-4 4	84'-8 5/16	99'-0 3/8			113'-4 5/16
"Y"	1 7/16	2 3/4	3 7/16	3 3/8	3 5/8	2 13/16	1 9/16			0"
										℄ BRG.

SHOP NOTES:
1) FOR GENERAL NOTES, SEE SHT. GN1
2) MATERIAL NOTED "**" MUST MEET CHARPY V-NOTCH REQUIREMENTS
3) FOR HEAT CURVE DIAGRAM, SEE SHT. 151

G0108

FED. ROAD DIV. NO.	STATE	FEDERAL AID PROJECT NO.			
6	TX.	NH 92(50)M			
STATE DIST. NO	COUNTY	CONTROL NO.	SECTION NO.	JOB NO.	HIGHWAY NO.
21	HIDALGO	39	17	97	83/281

BILL OF MATERIAL

	Qnty.	Material	Length	Mark Temp	Mark Ship	Wt	Cut From	Remarks
1								
2	1	GIRDER SUB-ASSY.			A118			
3	1	R 1/2 x 66	111'-8	7.01WA			108-8	CVN2
4	1	R 1 x 20	109'-7 4	7.01TA			110-16	
5	1	R 1 x 20	111'-7 4	7.01BA			105-18	CVN2
6								
7								
8								
9								
10								
11								
12	1	GIRDER SUB-ASSY.			B118			
13	1	R 1/2 x 66	114'-0 1/8	8.02WA			108-18	CVN2
14	1	R 1 x 20	111'-11 5/16	8.02TA			111-16	
15	1	R 1 x 20	113'-11 5/16	8.02BA			106-10	CVN2
16								
17								
18								
19								
20								
21								
22								
23								
24								
25								
26								
27								
28								
29								
30								
31								
32								
33								
34								
35								
36								
37								
38								
39								
40								
41								
42								
43								
44								
45								
46								
47								
48								
49								
50								
51								
52								
53								
54								
55								
56								
57								
58								
59								
60								

TEXAS DEPARTMENT OF TRANSPORTATION
APPROVED
DIVISION OF BRIDGES AND STRUCTURES
DEC 16 1992

APPROVAL OF THIS DRAWING DOES NOT RELIEVE THE CONTRACTOR OF THE RESPONSIBILITY FOR THE CORRECTNESS OF DETAIL

FOR APPROVAL
NOV 05 '92
NOT FOR CONSTRUCTION

REVISION	DATE	DESCRIPTION OF REVISION
NO. 1		
NO. 2		
NO. 3		
NO. 4		
NO. 5		

PRINTING Req'd	For	Date

Bolts Holes: Unless Noted
Shop Paint SEE SHT. GN1
Fab. Spec. A572-50 U.N. Inspection
Architect
Erection By Field Connections

HIRSCHFELD STEEL CO. INC.
112 WEST 29TH SAN ANGELO, TEXAS 76903
PHONE (915) 653-3211

DESCRIPTION	702'-5" PLATE GIRDER UNIT
STRUCTURE	US 83/281 INTERCHANGE RAMP "B"
LOCATION	HIDALGO COUNTY
CUSTOMER	GILBERT TEXAS CONSTRUCTION
SHIP TO	
Customer's Order No.	
Dwg. By PCC	Date 9-15-92
Checked By DLT	Date 9-92

SHEET 118 OF
JOB NO. 92-108

CE 92-13 (LINE 162)

332645

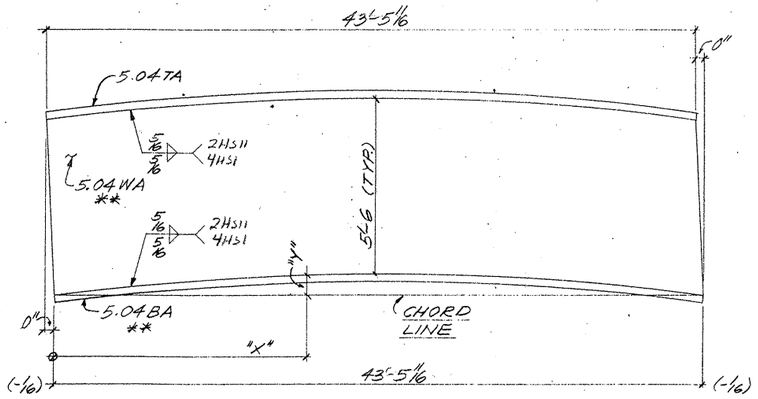

ONE ~ GIRDER SUB-ASSY. ~ MK A117

(FOR GIRDER 141 PG 5.04)

MK A117				
"X"	1'-9 9/8	16'-8 9/16	31'-8	43'-5 11/16
"Y"	0"	1/16	1/16	0"

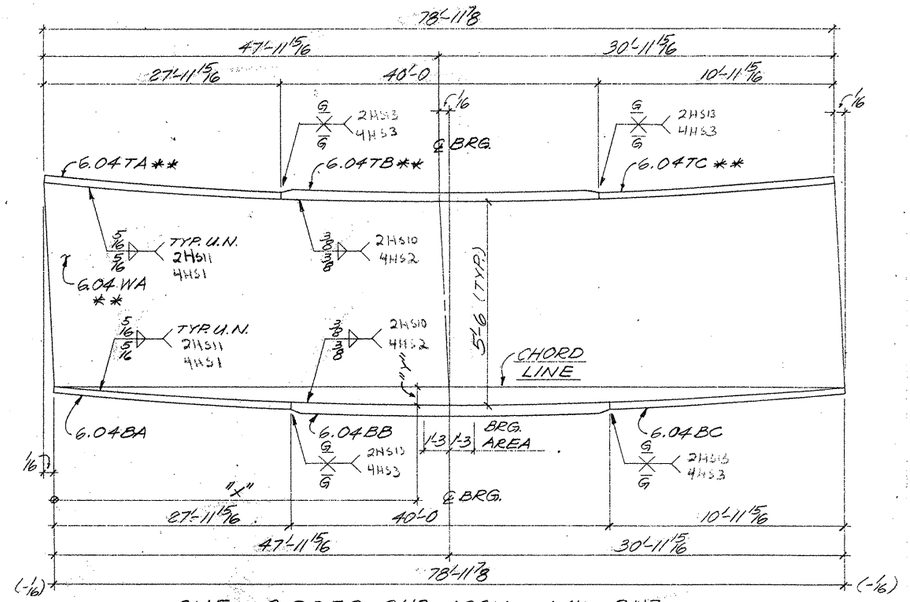

ONE ~ GIRDER SUB-ASSY. ~ MK B117

(FOR GIRDER ~ 145 PG 6.04)

MK B117							
"X"	3'-1 5/8	18'-1/16	33'-0 1/2	47'-11 15/16	62'-7 3/16	77'-2 7/16	78'-11 7/8
"Y"	0"	1/16	1/8	1/8	1/16	0"	0"

℄ BRG.

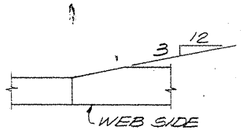

TYP. FLG. THICKNESS TRANSITION

SHOP NOTES:

1) FOR GENERAL NOTES, SEE SHT. GN1
2) MATERIAL NOTED "* *" MUST MEET CHARPY V-NOTCH REQUIREMENTS
3) FOR HEAT CURVE DIAGRAM, SEE SHT. 15

G0108

FED. ROAD DIV. NO.	STATE	FEDERAL AID PROJECT NO.			
6	TX.	NH 92(50)M			
STATE DIST. NO.	COUNTY	CONTROL NO.	SECTION NO.	JOB NO.	HIGHWAY NO.
21	HIDALGO	39	17	97	83/281

BILL OF MATERIAL

	Qnty	Material	Length	Mark Temp	Mark Ship	Wt.	Cut From	Remarks
1								
2	1	GIRDER SUB-ASSY.			A117			
3	1	PL 12x66	43'-5 11/16	5.04WA			104-4	CVN2
4	1	PL 14x22	43'-5 11/16	5.04TA			113-12	
5	1	PL 14x22	43'-5 11/16	5.04BA			107-18	CVN2
6								
7								
8								
9								
10								
11								
12	1	GIRDER SUB-ASSY.			B117			
13	1	PL 58x66	78'-11 15/16	6.04WA			104-5	CVN2
14	1	PL 14x22	27'-11 15/16	6.04TA			107-19	CVN2
15	1	PL 24x22	40'-0	6.04TB			109-17	CVN3
16	1	PL 14x22	10'-11 15/16	6.04TC			107-20	CVN2
17	1	PL 14x22	27'-11 15/16	6.04BA			113-13	
18	1	PL 24x22	40'-0	6.04BB			113-14	
19	1	PL 14x22	10'-11 15/16	6.04BC			113-15	
20								
21								
22								
23								
24								
25								
26								
27								
28								
29								1
30								
31								
32								
33								
34								
35								
36								
37								
38								
39								
40								
41								
42								
43								
44								
45								
46								
47								
48								
49								
50								
51								
52								
53								
54								
55								
56								
57								
58								
59								
60								

TEXAS DEPARTMENT OF TRANSPORTATION
APPROVED
DIVISION OF BRIDGES AND STRUCTURES
DEC 16 1992
APPROVAL OF THIS DRAWING DOES NOT RELIEVE THE CONTRACTOR OF THE RESPONSIBILITY FOR THE CORRECTNESS OF SAME

FOR APPROVAL
NOV 04 92
NOT FOR CONSTRUCTION

REVISION	DATE	DESCRIPTION OF REVISION
NO 1		
NO 2		
NO 3		
NO 4		
NO 5		

PRINTING Req'd	For	Date
—	APV	11-5

Bolts, Holes, Unless Noted
Shop Paint SEE SHT. GN1
Fab Spec A572-50 U.N. Inspection
Architect
Erection By Field Connections

HIRSCHFELD STEEL CO. INC.
112 WEST 29TH SAN ANGELO TEXAS 76903
PHONE (915) 653-3211

DESCRIPTION 702'-5" PLATE GIRDER UNIT
STRUCTURE US 83/281 INTERCHANGE RAMP "S"
LOCATION HIDALGO COUNTY
CUSTOMER GILBERT TEXAS CONSTRUCTION
SHIP TO
Customer's Order No.
Dwg. By PCC Date 9-16-92
Checked By DLT Date 9-92
SHEET 1/7 OF
JOB NO 92-108

CE 92-13 (LINE 4)

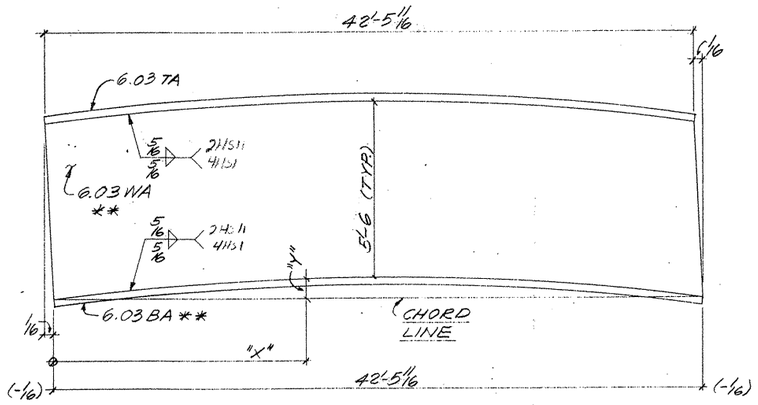

ONE ~ GIRDER SUB-ASSY. ~ MK A116

(FOR GIRDER 140 PG 6.03)

MK A116				
"X"	1'-6 15/16	16'-4 3/4	31'-2 9/16	42'-5 11/16
"Y"	0"	1/8	1/8	0"

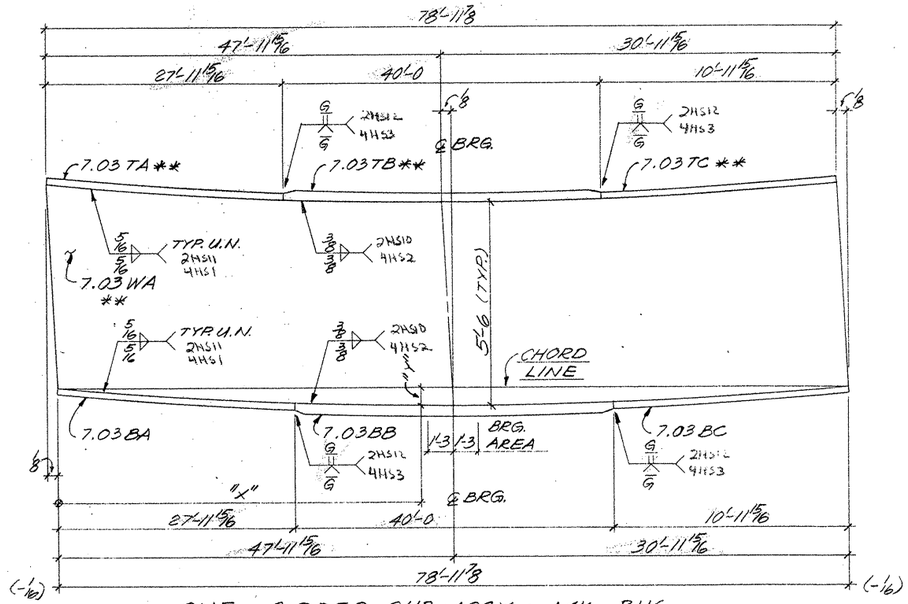

ONE ~ GIRDER SUB-ASSY. ~ MK B116

(FOR GIRDER ~ 144 PG 7.03)

MK B116							
"X"	3'-6 9/16	18'-4 5/16	33'-2 1/8	47'-11 15/16	62'-5 7/16	76'-11 3/16	78'-11 3/8
"Y"	0"	1/16	3/16	4	1/8	0"	0"

℄ BRG.

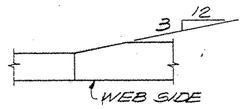

TYP. FLG. THICKNESS TRANSITION

SHOP NOTES:

1) FOR GENERAL NOTES, SEE SHT. GN1
2) MATERIAL NOTED "**" MUST MEET CHARPY V-NOTCH REQUIREMENTS
3) FOR HEAT CURVE DIAGRAM, SEE SHT. 151.

G0108

FED. ROAD DIV. NO.	STATE	FEDERAL AID PROJECT NO.			
6	TX.	NH 92(50)M			
STATE DIST. NO.	COUNTY	CONTROL NO.	SECTION NO.	JOB NO.	HIGHWAY NO.
21	HIDALGO	39	17	97	83/281

BILL OF MATERIAL

	Qnty.	Material	Length	Mark Temp	Mark Ship	Wt.	Cut From	Remarks
1								
2	1	GIRDER SUB-ASSY.			A116			
3	1	PL 1/2 x 66	42'-5 3/4	6.03 WA			103-10	CVN 2
4	1	PL 1 x 20	42'-5 11/16	6.03 TA			118-12	
5	1	PL 1 x 20	42'-5 11/16	6.03 BA			107-2	CVN 2
6								
7								
8								
9								
10								
11								
12	1	GIRDER SUB-ASSY.			B116			
13	1	PL 5/8 x 66	79'-0	7.03 WA			103-11	CVN 2
14	1	PL 1 x 20	27'-11 15/16	7.03 TA			107-3	CVN 2
15	1	PL 2 x 20	40'-0	7.03 TB			107-4	CVN 2
16	1	PL 1 x 20	10'-11 15/16	7.03 TC			107-5	CVN 2
17	1	PL 1 x 20	27'-11 15/16	7.03 BA			118-13	
18	1	PL 2 x 20	40'-0	7.03 BB			118-14	
19	1	PL 1 x 20	10'-11 15/16	7.03 BC			118-15	
20								
21								
22								
23								
24								
25								
26								
27								
28								
29								
30								
31								
32								
33								
34								
35								
36								
37								
38								
39								
40								
41								
42								
43								
44								
45								
46								
47								
48								
49								
50								
51								
52								
53								
54								
55								
56								
57								
58								
59								
60								

TEXAS DEPARTMENT OF TRANSPORTATION
APPROVED
DIVISION OF BRIDGES AND STRUCTURES
DEC 15 1992
APPROVAL OF THIS DRAWING DOES NOT RELIEVE THE CONTRACTOR OF THE RESPONSIBILITY FOR THE CORRECTNESS OF DETAIL

FOR APPROVAL
NOV 05 92
NOT FOR CONSTRUCTION

REVISION	DATE	DESCRIPTION OF REVISION
NO. 1		
NO. 2		
NO. 3		
NO. 4		
NO. 5		

PRINTING Req'd	For	Date
—	APV	11-5

Bolts: Holes: Unless Noted
Shop Paint SEE SHT. GN1
Fab Spec A572-50 U.N. Inspection
Architect
Erection By Field Connections

HIRSCHFELD STEEL CO. INC.
112 WEST 29TH SAN ANGELO, TEXAS 76903
PHONE (915) 653-3211

DESCRIPTION 702'-5" PLATE GIRDER UNIT
STRUCTURE US 83/281 INTERCHANGE RAMP "3"
LOCATION HIDALGO COUNTY
CUSTOMER GILBERT TEXAS CONSTRUCTION
SHIP TO
Customer's Order No.
Dwg. By PJC Date 3-15-92
Checked By DLT Date 9-92

SHEET 116 OF
JOB NO. 92-108

CE 92-13 (LINE 3)

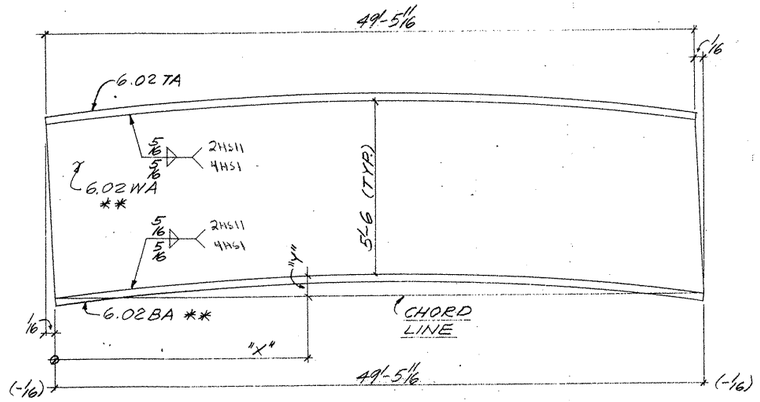

ONE ~ GIRDER SUB-ASSY. ~ MK A115

(FOR GIRDER 139 PG 6.02)

MK A115				
"X"	7'-4 3/4	22'-0 15/16	36'-9 1/8	49'-5 11/16
"Y"	1/8	3/16	3/16	0"

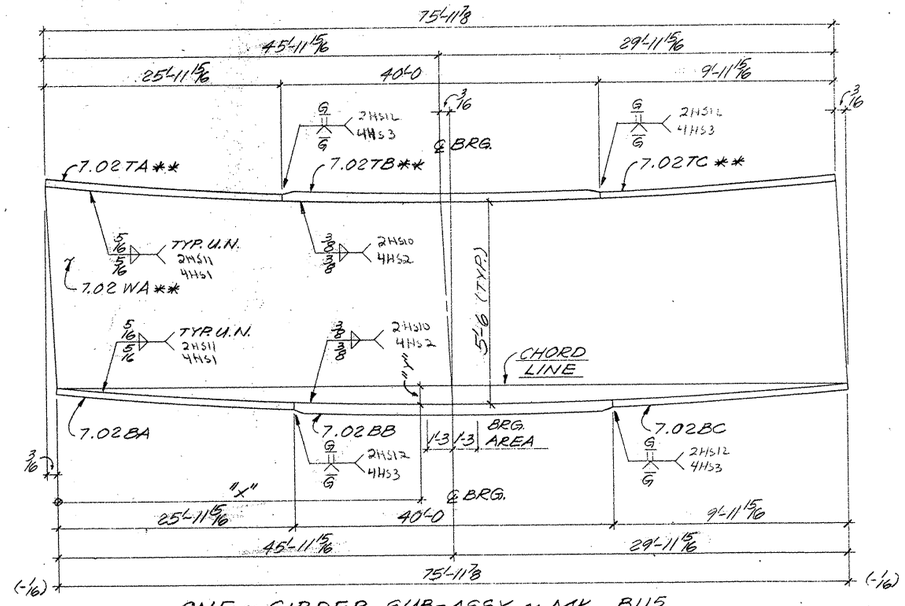

ONE ~ GIRDER SUB-ASSY. ~ MK B115

(FOR GIRDER ~ 143 PG 7.02)

MK B115							
"X"	1'-11 7/16	16'-7 5/8	31'-3 3/4	45'-11 15/16 ℄ BRG.	60'-4	74'-8	75'-11 7/8
"Y"	0"	1/16	3/16	1/4	1/8	0"	0"

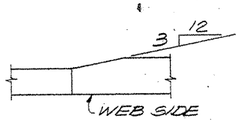

TYP. FLG. THICKNESS TRANSITION

SHOP NOTES:

1) FOR GENERAL NOTES, SEE SHT. GN1
2) MATERIAL NOTED "**" MUST MEET CHARPY V-NOTCH REQUIREMENTS
3) FOR HEAT CURVE DIAGRAM, SEE SHT. 151

G0108

FED. ROAD DIV. NO.	STATE	FEDERAL AID PROJECT NO.			
6	TX.	NH 92(50)M			
STATE DIST. NO.	COUNTY	CONTROL NO.	SECTION NO.	JOB NO.	HIGHWAY NO.
21	HIDALGO	39	17	97	83/281

BILL OF MATERIAL

	Qnty.	Material	Length	Mark Temp.	Mark Ship.	Wt.	Cut From	Remarks
1								/
2	1	GIRDER SUB-ASSY.			A115			
3	1	PL 1/2 x 66	49'-5 3/4	6.02 WA			108-16	CVN 2
4	1	PL 1 x 20	49'-5 11/16	6.02 TA			111-12	
5	1	PL 1 x 20	49'-5 11/16	6.02 BA			106-6	CVN 2
6								
7								
8								
9								
10								
11								
12	1	GIRDER SUB-ASSY.			B115			
13	1	PL 9/16 x 66	76'-0 1/16	7.02 WA			108-17	CVN 2
14	1	PL 1 x 20	25'-11 15/16	7.02 TA			106-7	CVN 2
15	1	PL 1 3/4 x 20	40'-0	7.02 TB			106-8	CVN 2
16	1	PL 1 x 20	9'-11 15/16	7.02 TC			106-9	CVN 2
17	1	PL 1 x 20	25'-11 15/16	7.02 BA			111-13	
18	1	PL 1 3/4 x 20	40'-0	7.02 BB			111-14	
19	1	PL 1 x 20	9'-11 15/16	7.02 BC			111-15	
20								
21								
22								
23								
24								
25								
26								
27								
28								
29								
30								
31								
32								
33								
34								
35								
36								
37								
38								
39								
40								
41								
42								
43								
44								
45								
46								
47								
48								
49								
50								
51								
52								
53								
54								
55								
56								
57								
58								
59								
60								

FOR APPROVAL
NOV 05 92
NOT FOR CONSTRUCTION

TEXAS DEPARTMENT OF TRANSPORTATION
APPROVED
DIVISION OF BRIDGES AND STRUCTURES
DEC 16 1992
APPROVAL OF THIS DRAWING DOES NOT RELIEVE THE CONTRACTOR OF THE RESPONSIBILITY FOR THE CORRECTNESS OF DETAILS

REVISION	DATE	DESCRIPTION OF REVISION
NO. 1		
NO. 2		
NO. 3		
NO. 4		
NO. 5		

PRINTING Regd	For	Date
—	APV	11-5

Bolts: Holes: Unless Noted
Shop Paint SEE SHT. GN1
Fab. Spec. A572-50 U.N. Inspection
Architect
Erection By Field Connections

HIRSCHFELD STEEL CO. INC.
112 WEST 29TH SAN ANGELO, TEXAS 76903
PHONE (915) 653-3211

DESCRIPTION	702-5 PLATE GIRDER UNIT
STRUCTURE	US 83/281 INTERCHANGE RAMP "3
LOCATION	HIDALGO COUNTY
CUSTOMER	GILBERT TEXAS CONSTRUCTION
SHIP TO	
Customer's Order No.	
Dwg. By PCC	Date 9-15-92
Checked By DLT	Date 9-92

SHEET 115 OF
JOB NO. 92-108

CE 92-13 (LINE 2)

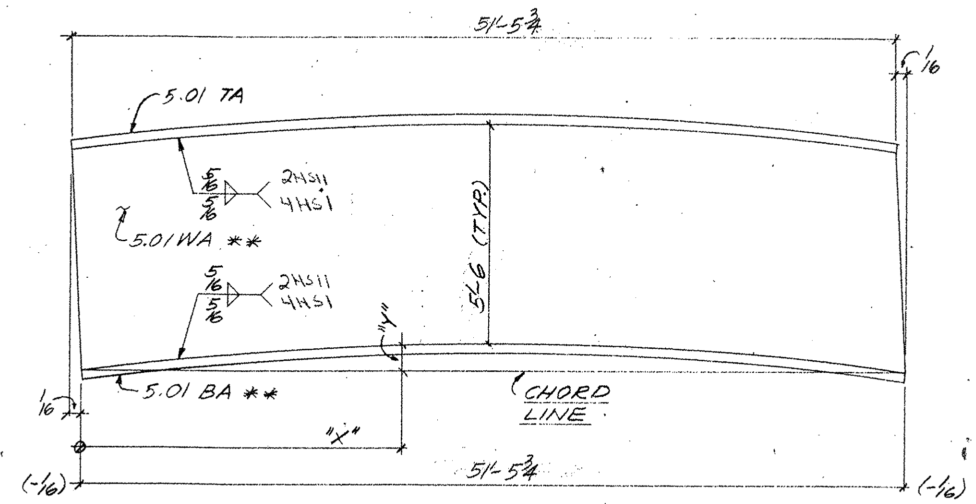

ONE ~ GIRDER SUB-ASSY. ~ MK A114
(FOR GIRDER 138 PG5.01)

MK A114				
"X"	9'-8 5/8	24'-3 1/8	38'-9 11/16	51'-5 3/4
"Y"	3/16	5/16	1/4	0"

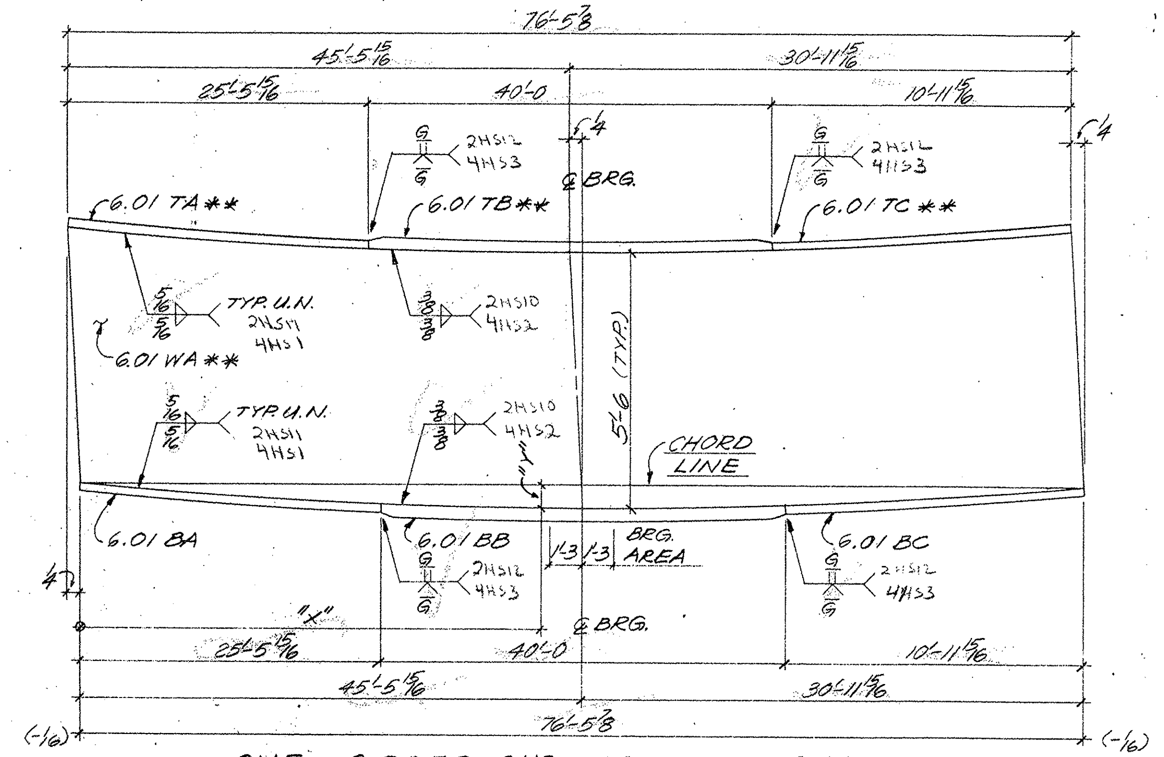

ONE ~ GIRDER SUB-ASSY. ~ MK B114
(FOR GIRDER ~ 142 PG6.01)

MK B114							
"X"	1'-10 5/16	16'-4 7/8	30'-11 7/16	45'-5 15/16	59'-8 3/8	73'-10 13/16	76'-5 7/8
"Y"	0"	0"	1/8	3/16	1/8	0"	0"
				℄ BRG.			

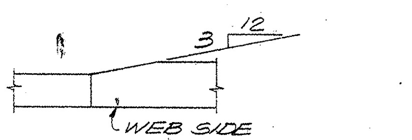

TYP. FLG. THICKNESS TRANSITION

SHOP NOTES:
1) FOR GENERAL NOTES, SEE SHT. GN1
2) MATERIAL NOTED "**" MUST MEET CHARPY V-NOTCH REQUIREMENTS
3) FOR HEAT CURVE DIAGRAM, SEE SHT. 151.

G0108

FED. ROAD DIV. NO.	STATE	FEDERAL AID PROJECT NO.			
6	TX.	NH 92(50)M			
STATE DIST. NO.	COUNTY	CONTROL NO.	SECTION NO.	JOB NO.	HIGHWAY NO.
21	HIDALGO	39	17	97	83/281

BILL OF MATERIAL

	Qnty.	Material	Length	Mark Temp	Mark Ship.	Wt.	Cut From	Remarks
1								
2	1	GIRDER SUB-ASSY.			A114			
3	1	PL 1/2x66	51'-5 13/16	5.01WA			108-6	CVN2
4	1	PL 1x20	51'-5 3/4	5.01 TA			110-12	
5	1	PL 1x20	51'-5 3/4	5.01 BA			105-9	CVN2
6								
7								
8								
9	1	GIRDER SUB-ASSY.			B114			
10	1	PL 9/16x66	76'-6 1/8	6.01WA			108-7	CVN2
11	1	PL 1x20	25'-5 15/16	6.01 TA			105-10	CVN2
12	1	PL 1 3/4x20	40'-0	6.01TB			105-11	CVN2
13	1	PL 1x20	10'-11 15/16	6.01TC			105-12	CVN2
14	1	PL 1x20	25'-5 15/16	6.01 BA			110-13	
15	1	PL 1 3/4x20	40'-0	6.01BB			110-14	
16	1	PL 1x20	10'-11 15/16	6.01BC			110-15	

TEXAS DEPARTMENT OF TRANSPORTATION APPROVED
DIVISION OF BRIDGES AND STRUCTURES
DEC 16 1992
APPROVAL OF THIS DRAWING DOES NOT RELIEVE THE CONTRACTOR OF THE RESPONSIBILITY FOR THE CORRECTNESS OF DETAIL.

FOR APPROVAL
NOV 05 92
NOT FOR CONSTRUCTION

REVISION	DATE	DESCRIPTION OF REVISION
NO 1		
NO 2		
NO 3		
NO 4		
NO 5		

PRINTING: Req'd — For APV — Date 11-5

Bolts | Holes | Unless Noted
Shop Paint SEE SHT. GN1
Fab. Spec. A572-50 U.N. Inspection
Architect
Erection By | Field Connections

HIRSCHFELD STEEL CO. INC.
112 WEST 29TH SAN ANGELO, TEXAS 76903
PHONE (915) 653-3211

DESCRIPTION 702'-5 PLATE GIRDER UNIT
STRUCTURE US 83/281 INTERCHANGE RAMP #3
LOCATION HIDALGO COUNTY
CUSTOMER GILBERT TEXAS CONSTRUCTION
SHIP TO
Customer's Order No.
Dwg. By PCC Date 9-15-92
Checked By DLT Date 9-92
SHEET 114 OF
JOB NO. 92-108

CE 92-13 (LINE 1)

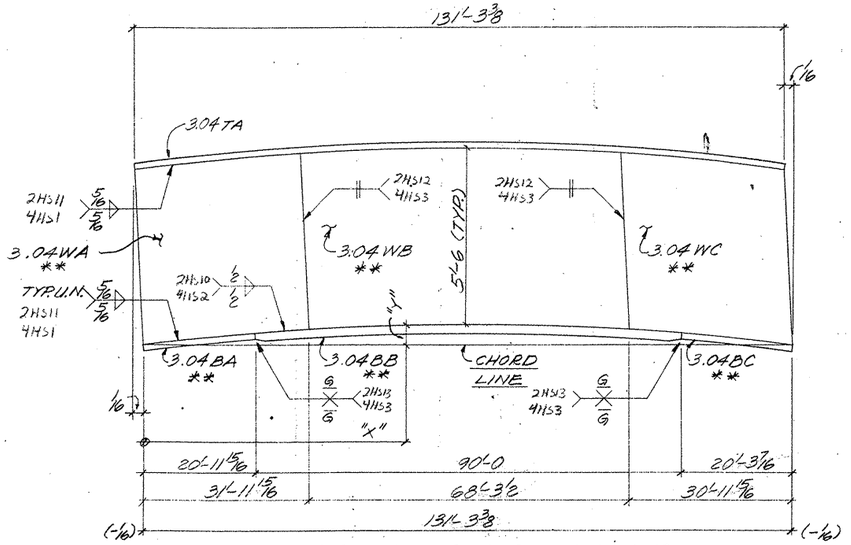

ONE ~ GIRDER SUB-ASSY. ~ MK A113

(FOR GIRDER 133 PG 3.04)

MK A113												
"X"	8'-9 9/16	23'-9 5/8	31'-11 15/16	38'-8 9/16	53'-8	68'-7 7/16	83'-6 3/8	98'-6 5/8	100'-3 7/16	113'-5 3/4	128'-5 3/8	131'-3 3/8
"Y"	3/8	2 1/4	2 3/8	3 3/8	4	4 3/16	3 3/8	3	2 3/8	1 1/16	5/16	0"
			& WEB SPLICE						& WEB SPLICE			

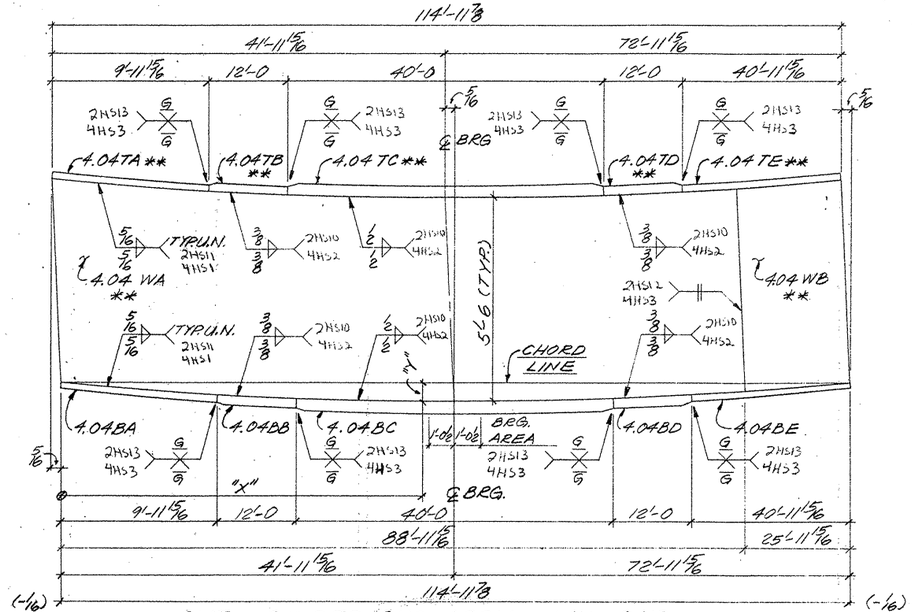

ONE ~ GIRDER SUB-ASSY. ~ MK B113

(FOR GIRDER ~ 137 PG 4.04)

MK B113										
"X"	12'-1 1/16	27'-0 1/2	41'-11 15/16	56'-11 3/8	71'-10 13/16	86'-10 1/4	88'-11 15/16	101'-9 1/16	114'-11 7/8
"Y"	3/4	1 1/2	2	2 3/16	2	1 1/2	1 3/8	3/4	0"
			& BRG.				& WEB SPLICE		

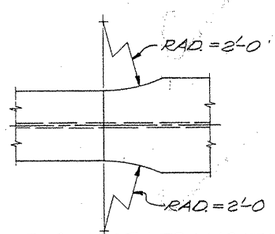

TYP. FLG. WIDTH TRANSITION

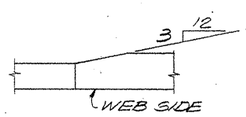

TYP. FLG. THICKNESS TRANSITION

SHOP NOTES:

1) FOR GENERAL NOTES, SEE SHT. GN1
2) MATERIAL NOTED "* *" MUST MEET CHARPY V-NOTCH REQUIREMENTS
3) FOR HEAT CURVE DIAGRAM, SEE SHT. 150 & 151.

G0108

FED. ROAD DIV. NO.	STATE	FEDERAL AID PROJECT NO.			
6	TX.	NH 92(50)M			
STATE DIST. NO.	COUNTY	CONTROL NO.	SECTION NO.	JOB NO.	HIGHWAY NO.
21	HIDALGO	39	17	97	83/281

BILL OF MATERIAL

	Qnty	Material	Length	Mark Temp	Mark Ship	Wt.	Cut From	Remarks
1								
2	1	GIRDER SUB-ASSY.			A113			
3	1	PL 1/16 x 66	32'-0 7/16	3.04WA			103-18	CVN2
4	1	PL 1/2 x 66	68'-4	3.04WB			103-19	CVN2
5	1	PL 1/16 x 66	31'-0 3/16	3.04WC			103-20	CVN2
6	1	PL 14 x 22	131'-3 3/8	3.04TA			113-7	
7	1	PL 14 x 22	20'-11 15/16	3.04BA			107-13	CVN2
8	1	PL 2 1/2 x 22	90'-0	3.04BB			109-15	CVN3
9	1	PL 14 x 22	20'-3 7/16	3.04BC			107-14	CVN2
10								
11								
12								
13								
14								
15								
16								
17	1	GIRDER SUB-ASSY.			B113			
18	1	PL 1/16 x 66	89'-0 3/8	4.04WA			104-2	CVN2
19	1	PL 1/2 x 66	25'-11 15/16	4.04WB			104-3	CVN2
20	1	PL 14 x 22	9'-11 15/16	4.04TA			107-15	CVN2
21	1	PL 2 x 24	12'-0	4.04TB			107-16	CVN2
22	1	PL 3 x 24	40'-0	4.04TC			109-16	CVN3
23	1	PL 2 x 24	12'-0	4.04TD			107-16	CVN2
24	1	PL 14 x 22	40'-11 15/16	4.04TE			107-17	CVN2
25	1	PL 14 x 22	9'-11 15/16	4.04BA			113-8	
26	1	PL 2 x 24	12'-0	4.04BB			113-9	
27	1	PL 3 x 24	40'-0	4.04BC			113-10	
28	1	PL 2 x 24	12'-0	4.04BD			113-9	
29	1	PL 14 x 22	40'-11 15/16	4.04BE			113-11	
30								
31								
32								
33								
34								
35								
36								
37								
38								
39								
40								
41								
42								
43								
44								
45								
46								
47								
48								
49								
50								
51								
52								
53								
54								
55								
56								
57								
58								
59								
60								

TEXAS DEPARTMENT OF TRANSPORTATION
APPROVED
DIVISION OF BRIDGES AND STRUCTURES
DEC 16 1992
APPROVAL OF THIS DRAWING DOES NOT RELIEVE THE CONTRACTOR OF THE RESPONSIBILITY FOR THE CORRECTNESS OF DETAIL

FOR APPROVAL
NOV 05 '92
NOT FOR CONSTRUCTION

REVISION	DATE	DESCRIPTION OF REVISION
NO. 1		
NO. 2		
NO. 3		
NO. 4		
NO. 5		

PRINTING Req'd	For	Date
—	MV	11/5

Bolts Holes Unless Noted
Shop Paint SEE SHT. GN1
Fab Spec. A572-50 U.N. Inspection
Architect
Erection By Field Connections

HIRSCHFELD STEEL CO. INC.
112 WEST 29TH SAN ANGELO, TEXAS 76903
PHONE (915) 653-3211

DESCRIPTION 102'-5 PLATE GIRDER UNIT
STRUCTURE US 83/281 INTERCHANGE RAMP "J"
LOCATION HIDALGO COUNTY
CUSTOMER GILBERT TEXAS CONSTRUCTION
SHIP TO
Customer's Order No.
Dwg. By PCC Date 9-16-92
Checked By DLT Date 9-92
SHEET 113 OF
JOB NO. 92-108

CE 92-13 (LINE 4)

325640

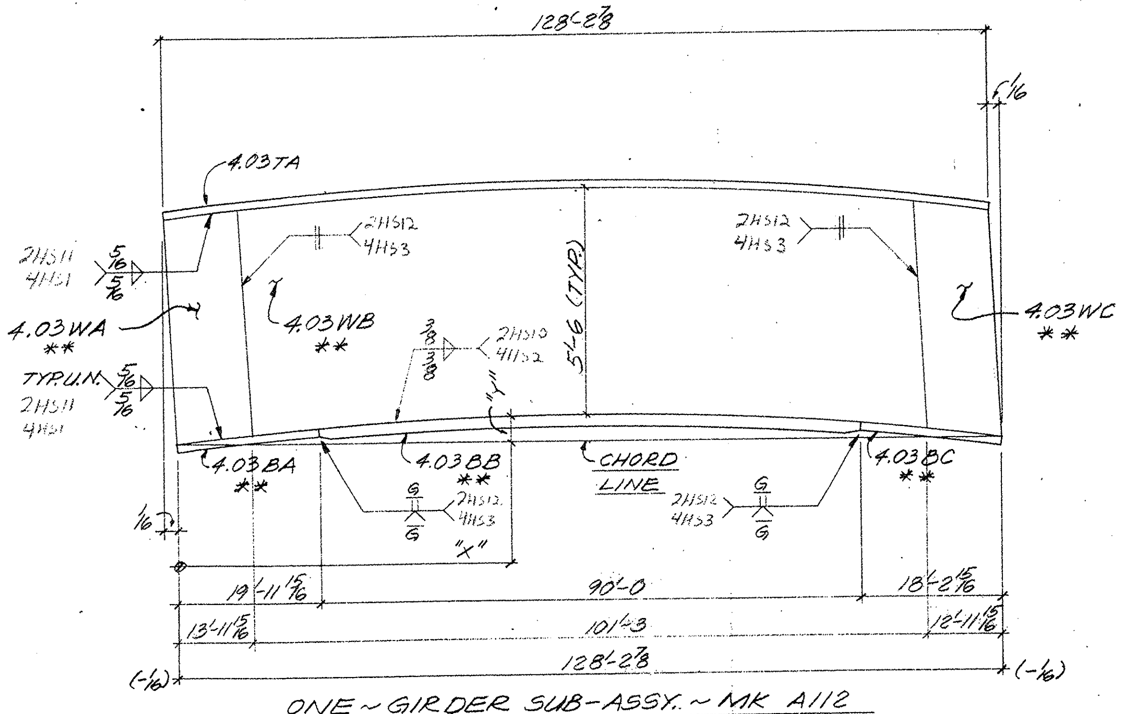

ONE ~ GIRDER SUB-ASSY. ~ MK A112
(FOR GIRDER 132 PG 4.03)

MK A112												
"X"	8'-3 1/8	13'-11 15/16	23'-0 15/16	37'-10 3/4	52'-8 9/16	67'-6 5/16	82'-4 1/8	97'-1 15/16	111'-11 3/4	115'-2 15/16	126'-9 9/16	128'-2 7/8
"Y"	13/16	1 3/8	2 3/16	3 1/4	3 13/16	4	3 11/16	2 13/16	1 5/8	1 5/16	1/8	0"
		℄ WEB SPLICE								℄ WEB SPLICE		

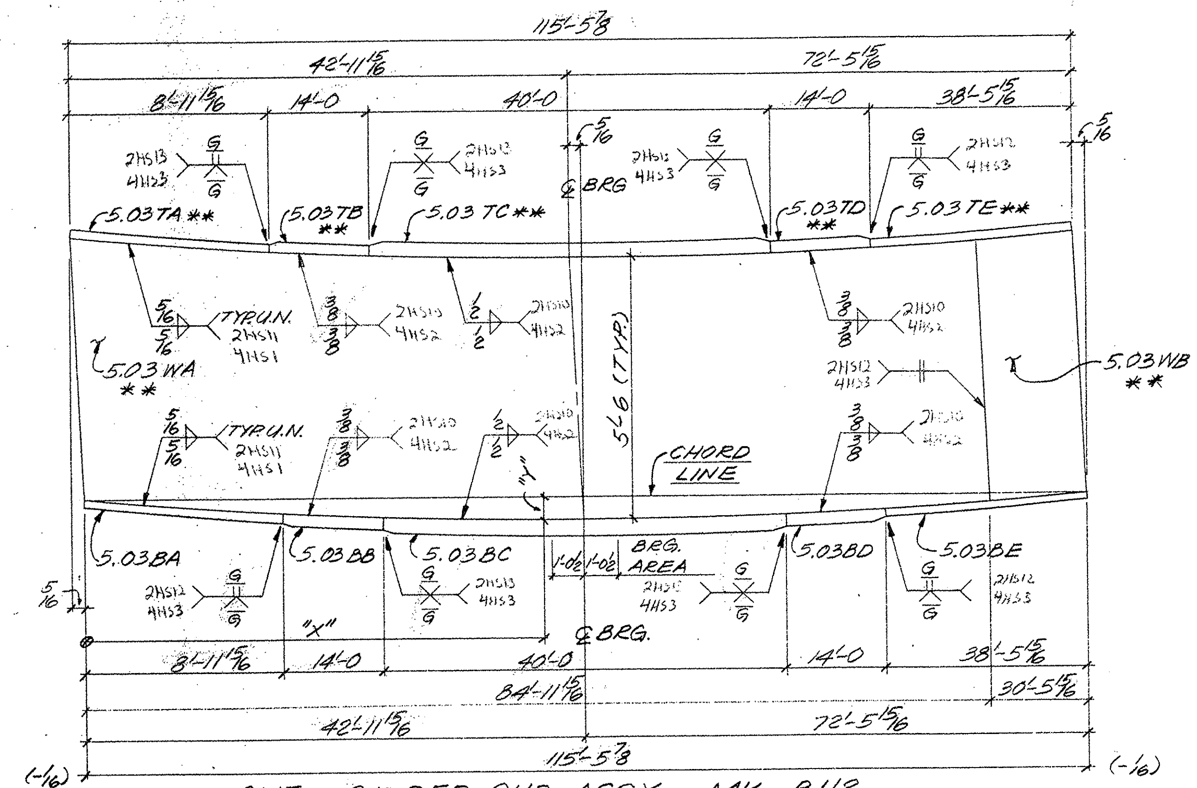

ONE ~ GIRDER SUB-ASSY. ~ MK B112
(FOR GIRDER ~ 136 PG 5.03)

MK B112									
"X"	13'-4 5/16	28'-2 1/8	42'-11 15/16	57'-9 3/4	72'-7 9/16	84'-11 15/16	87'-5 3/8	102'-3 1/8	115'-5 7/8
"Y"	13/16	1 9/16	2 1/16	2 3/16	2	1 9/16	1 1/2	3/4	0"
			℄ BRG.			℄ WEB SPLICE			

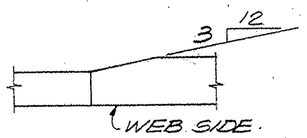

TYP. FLG. THICKNESS TRANSITION

SHOP NOTES:
1) FOR GENERAL NOTES, SEE SHT. GN1
2) MATERIAL NOTED "**" MUST MEET CHARPY V-NOTCH REQUIREMENTS
3) FOR HEAT CURVE DIAGRAM, SEE SHT. 150 & 151.

G0108

FED. ROAD DIV. NO.	STATE	FEDERAL AID PROJECT NO.				
6	TX.	NH 92(50)M				
STATE DIST. NO.	COUNTY	CONTROL NO.	SECTION NO.	JOB NO.	HIGHWAY NO.	
21	HIDALGO	39	17	97	83/281	

BILL OF MATERIAL

	Qnty.	Material	Length	Mark Temp	Mark Ship.	Wt.	Cut From	Remarks
1								
2	1	GIRDER SUB-ASSY.			A112			
3	1	PL 5/8x66	14'-0 3/16	4.03WA			103-5	CVN2
4	1	PL 1/2x66	101'-3 1/2	4.03WB			103-6	CVN2
5	1	PL 5/8x66	13'-0 3/16	4.03WC			103-7	CVN2
6	1	PL 1x20	128'-2 7/8	4.03TA			112-7	
7	1	PL 1x20	19'-11 15/16	4.03BA			106-15	CVN2
8	1	PL 2x20	90'-0	4.03BB			106-16	CVN2
9	1	PL 1x20	18'-2 15/16	4.03BC			106-17	CVN2
10								
11								
12								
13								
14								
15								
16								
17	1	GIRDER SUB-ASSY.			B112			
18	1	PL 5/8x66	85'-0 5/16	5.03WA			103-8	CVN2
19	1	PL 1/2x66	30'-5 15/16	5.03WB			103-9	CVN2
20	1	PL 1x20	8'-11 15/16	5.03TA			106-18	CVN2
21	1	PL 2x20	14'-0	5.03TB			106-19	CVN2
22	1	PL 3x20	40'-0	5.03TC			109-13	CVN3
23	1	PL 2x20	14'-0	5.03TD			106-19	CVN2
24	1	PL 1x20	38'-5 15/16	5.03TE			106-20	CVN2
25	1	PL 1x20	8'-11 15/16	5.03BA			112-8	
26	1	PL 2x20	14'-0	5.03BB			112-9	
27	1	PL 3x20	40'-0	5.03BC			112-10	
28	1	PL 2x20	14'-0	5.03BD			112-9	
29	1	PL 1x20	38'-5 15/16	5.03BE			112-11	

TEXAS DEPARTMENT OF TRANSPORTATION
APPROVED
DIVISION OF BRIDGES AND STRUCTURES
DEC 16 1992
APPROVAL OF THIS DRAWING DOES NOT RELIEVE THE CONTRACTOR OF THE RESPONSIBILITY FOR THE CORRECTNESS OF DETAIL

FOR APPROVAL
NOV 05 '92

NOT FOR CONSTRUCTION

REVISION	DATE	DESCRIPTION OF REVISION
NO 1		
NO 2		
NO 3		
NO 4		
NO 5		

PRINTING Req'd	For	Date
—	APV	11-5

Bolts / Holes: / Unless Noted
Shop Paint SEE SHT. GN1
Fab Spec. A572-50 U.N. Inspection
Architect
Erection By / Field Connections

HIRSCHFELD STEEL CO. INC.
112 WEST 29TH SAN ANGELO, TEXAS 76903
PHONE (915) 653-3211

DESCRIPTION 702'-5 PLATE GIRDER UNIT
STRUCTURE US 83/281 INTERCHANGE RAMP #3
LOCATION HIDALGO COUNTY
CUSTOMER GILBERT TEXAS CONSTRUCTION
SHIP TO
Customer's Order No. / SHEET 112 OF
Dwg. By PCC Date 9-16-92 / JOB NO. 92-108
Checked By DLT Date 9-92

CE 92-13 (LINE 3)

322640

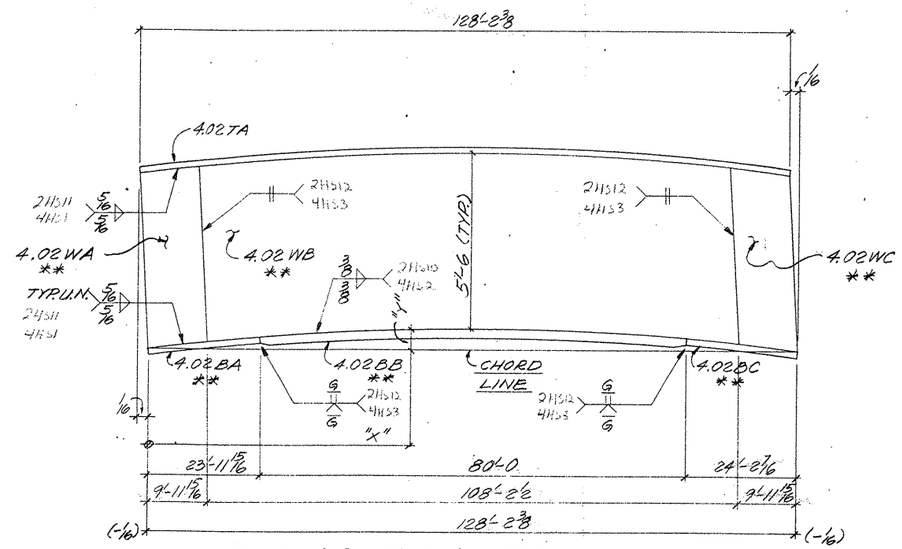

ONE ~ GIRDER SUB-ASSY. ~ MK A111

(FOR GIRDER 131 PG 4.02)

MK A111												
"X"	7'-8 5/8"	9'-11 15/16"	22'-4 3/4"	37'-0 15/16"	51'-9 1/8"	66'-5 1/4"	81'-1 7/16"	95'-9 5/8"	110'-5 3/4"	118'-2 7/16"	125'-1 15/16"	128'-2 3/8"
"Y"	1/16	3/8 ℄ WEB SPLICE	1 3/8	2 13/16	3 5/16	3 7/16	3 3/16	2 1/2	1 1/2	1/2 ℄ WEB SPLICE	4	0"

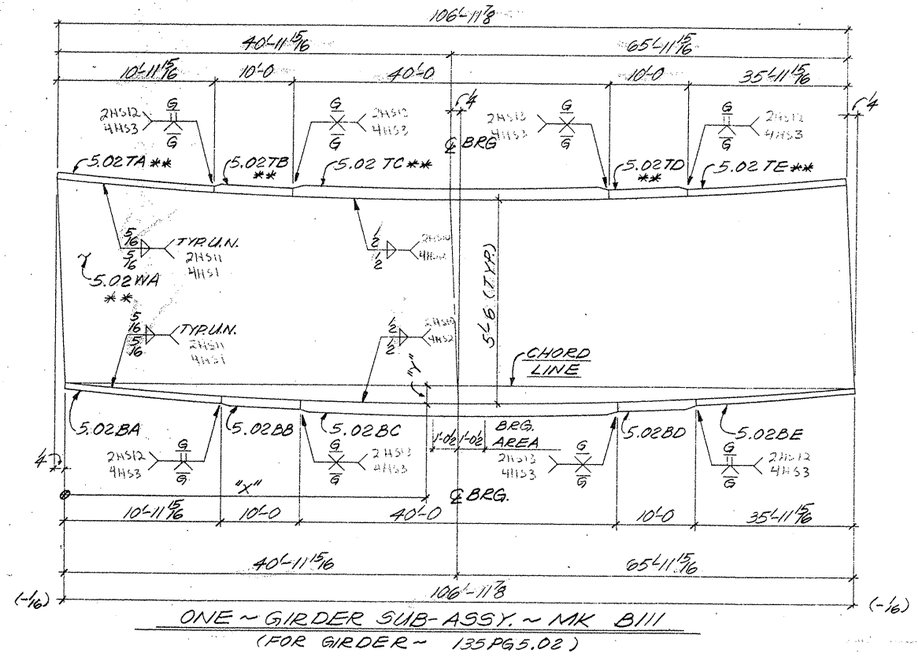

ONE ~ GIRDER SUB-ASSY. ~ MK B111

(FOR GIRDER ~ 135 PG 5.02)

MK B111										
"X"	11'-7 5/8"	26'-3 3/4"	40'-11 15/16"	55'-8 1/8"	70'-4 5/16"	85'-0 7/16"	99'-8 5/8"		106'-11 7/8"
"Y"	1/16	1 3/8	1 3/4 ℄ BRG.	1 3/16	1 9/16	1"	5/16		0"

TYP. FLG. THICKNESS TRANSITION

SHOP NOTES:

1) FOR GENERAL NOTES, SEE SHT. GN1
2) MATERIAL NOTED "* *" MUST MEET CHARPY V-NOTCH REQUIREMENTS
3) FOR HEAT CURVE DIAGRAM, SEE SHT. 150 & 151.

BILL OF MATERIAL

	Qnty.	Material	Length	Mark Temp	Mark Ship.	Wt.	Cut From	Remarks
1								
2	1	GIRDER SUB-ASSY.			A111			
3	1	PL 5/8 x 66	10'-0 7/16"	4.02 WA			108-12	CVN2
4	1	PL 1/2 x 66	108'-3"	4.02 WB			108-13	CVN2
5	1	PL 3/8 x 66	10'-0 3/16"	4.02 WC			108-14	CVN2
6	1	PL 1 x 20	128'-2 3/8"	4.02 TA			111-7	
7	1	PL 1 x 20	23'-11 15/16"	4.02 BA			105-19	CVN2
8	1	PL 1 3/4 x 20	80'-0"	4.02 BB			105-20	CVN2
9	1	PL 1 x 20	24'-2 1/16"	4.02 BC			106-2	CVN2
10								
11								
12								
13								
14								
15								
16								
17	1	GIRDER SUB-ASSY			B111			
18	1	PL 5/8 x 66	107'-0 7/8"	5.02 WA			108-15	CVN2
19	1	PL 1 x 20	10'-11 15/16"	5.02 TA			106-3	CVN2
20	1	PL 1 1/2 x 20	10'-0	5.02 TB			106-4	CVN2
21	1	PL 2 3/4 x 20	40'-0	5.02 TC			109-11	CVN3
22	1	PL 1 1/16 x 20	10'-0	5.02 TD			106-4	CVN2
23	1	PL 1 x 20	35'-11 15/16"	5.02 TE			106-5	CVN2
24	1	PL 1 x 20	10'-11 15/16"	5.02 BA			111-8	
25	1	PL 1 1/2 x 20	10'-0	5.02 BB			111-9	
26	1	PL 2 3/4 x 20	40'-0	5.02 BC			111-10	
27	1	PL 1 1/2 x 20	10'-0	5.02 BD			111-9	
28	1	PL 1 x 20	35'-11 15/16"	5.02 BE			111-11	
29								
30								
31								
32								
33								
34								
35								
36								
37								
38								
39								
40								
41								
42								
43								
44								
45								
46								
47								
48								
49								
50								
51								
52								
53								
54								
55								
56								
57								
58								
59								
60								

TEXAS DEPARTMENT OF TRANSPORTATION
APPROVED
DIVISION OF BRIDGES AND STRUCTURES
DEC 16 1992
APPROVAL OF THIS DRAWING DOES NOT RELIEVE THE CONTRACTOR OF THE RESPONSIBILITY FOR THE CORRECTNESS OF DETAIL.

FOR APPROVAL
NOV 05 '92
NOT FOR CONSTRUCTION

REVISION	DATE	DESCRIPTION OF REVISION
NO. 1		
NO. 2		
NO. 3		
NO. 4		
NO. 5		

PRINTING Req'd	For	Date

Bolts Holes: Unless Noted
Shop Paint SEE SHT. GN1
Fab Spec A572-50 U.N. Inspection
Architect
Erection By Field Connections

HIRSCHFELD STEEL CO. INC.
112 WEST 29TH SAN ANGELO. TEXAS 76903
PHONE (915) 653-3211

DESCRIPTION 702-5 PLATE GIRDER UNIT
STRUCTURE US 83/281 INTERCHANGE RAMP #3
LOCATION HIDALGO COUNTY
CUSTOMER GILBERT TEXAS CONSTRUCTION
SHIP TO
Customer's Order No.
Dwg By PGC Date 9-16-92
Checked By DLT Date 9-92
SHEET 111 OF
JOB NO. 92-108

AFV 11-5

G0108

FED. ROAD DIV. NO.	STATE	FEDERAL AID PROJECT NO.			
6	TX.	NH 92(50)M			
STATE DIST. NO.	COUNTY	CONTROL NO.	SECTION NO.	JOB NO.	HIGHWAY NO.
21	HIDALGO	39	17	97	83/281

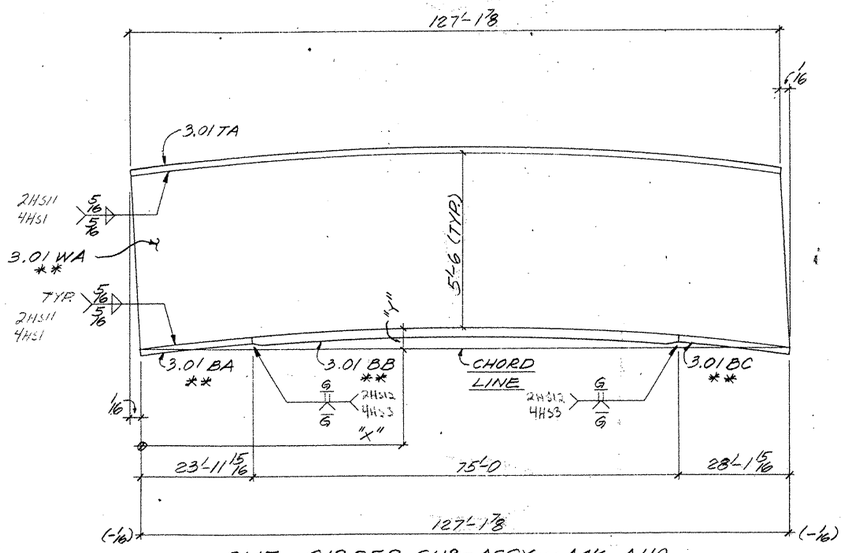

ONE ~ GIRDER SUB-ASSY. ~ MK A110

(FOR GIRDER 130 PG 3.01)

MK A110												
"X"	8'-2 1/16	22'-8 5/8	37'-3 1/8	51'-9 11/16	66'-4 3/16	80'-10 3/4	95'-5 5/16	109'-11 13/16	124'-6 3/8			127'-1 7/8
"Y"	9/16	1 1/2	2 1/4	2 5/8	2 3/4	2 1/2	1 5/16	1 1/8	3/16			0"

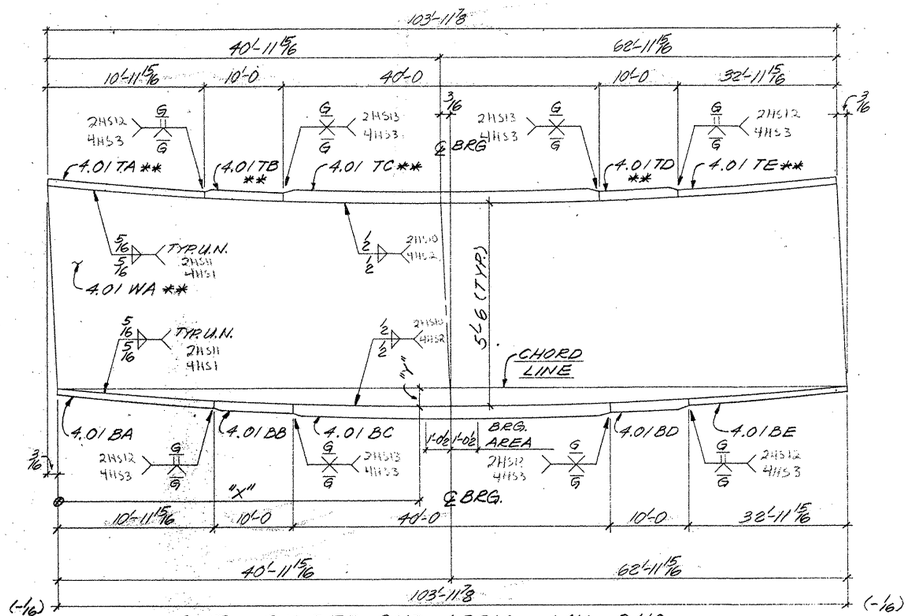

ONE ~ GIRDER SUB-ASSY. ~ MK B110

(FOR GIRDER ~ 134 PG 4.01)

MK B110									
"X"	11'-10 3/8	26'-5 7/16	40'-11 15/16 ℄ BRG.	55'-6 1/2	70'-1	84'-7 9/16	99'-2 1/16		103'-11 7/8
"Y"	5/8	1 7/16	1 9/16	1 1/2	1 7/16	1/16	3/16		0"

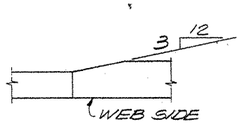

TYP. FLG. THICKNESS TRANSITION

SHOP NOTES:

1) FOR GENERAL NOTES, SEE SHT. GN1
2) MATERIAL NOTED "**" MUST MEET CHARPY V-NOTCH REQUIREMENTS
3) FOR HEAT CURVE DIAGRAM, SEE SHT. 150.

G0108

FED. ROAD DIV. NO.	STATE	FEDERAL AID PROJECT NO.			
6	TX.	NH 92(50)M			
STATE DIST. NO.	COUNTY	CONTROL NO.	SECTION NO.	JOB NO.	HIGHWAY NO.
21	HIDALGO	39	17	97	83/281

BILL OF MATERIAL

	Qnty	Material	Length	Mark Temp	Mark Ship	Wt.	Cut From	Remarks
1								
2	1	GIRDER SUB-ASSY.			A110			
3	1	PL 1'-6"x66	127'-1 7/8	3.01 WA			108-4	CVN2
4	1	PL 1"x20"	127'-1 7/8	3.01 TA			110-7	
5	1	PL 1"x20"	23'-11 15/16	3.01 BA			105-2	CVN2
6	1	PL 1'-6"x20"	75'-0	3.01 BB			105-3	CVN2
7	1	PL 1"x20"	28'-1 15/16	3.01 BC			105-4	CVN2
8								
9								
10								
11								
12								
13								
14	1	GIRDER SUB-ASSY.			B110			
15	1	PL 3'-0"x66	104'-0 1/16	4.01 WA			108-5	CVN2
16	1	PL 1"x20"	10'-11 15/16	4.01 TA			105-5	CVN2
17	1	PL 1'-4"x20"	10'-0	4.01 TB			105-6	CVN2
18	1	PL 2'-6"x20"	40'-0	4.01 TC			109-9	CVN3
19	1	PL 1'-4"x20"	10'-0	4.01 TD			105-6	CVN2
20	1	PL 1"x20"	32'-11 15/16	4.01 TE			105-8	CVN2
21	1	PL 1"x20"	10'-11 15/16	4.01 BA			110-8	
22	1	PL 1'-4"x20"	10'-0	4.01 BB			110-9	
23	1	PL 2'-6"x20"	40'-0	4.01 BC			110-10	
24	1	PL 1'-4"x20"	10'-0	4.01 BD			110-9	
25	1	PL 1"x20"	32'-11 15/16	4.01 BE			110-11	
26								
27								
28								
29								
30								
31								
32								
33								
34								
35								
36								
37								
38								
39								
40								
41								
42								
43								
44								
45								
46								
47								
48								
49								
50								
51								
52								
53								
54								
55								
56								
57								
58								
59								
60								

TEXAS DEPARTMENT OF TRANSPORTATION
APPROVED
DIVISION OF BRIDGES AND STRUCTURES
DEC 16 1992
APPROVAL OF THIS DRAWING DOES NOT RELIEVE THE CONTRACTOR OF THE RESPONSIBILITY FOR THE CORRECTNESS OF DETAIL

FOR APPROVAL
NOV 05 92
NOT FOR CONSTRUCTION

REVISION	DATE	DESCRIPTION OF REVISION
NO. 1		
NO. 2		
NO. 3		
NO. 4		
NO. 5		

PRINTING Req'd	For	Date

Bolts Holes: Unless Noted
Shop Paint SEE SHT. GN1
Fab Spec A572-50 U.N. Inspection
Architect
Erection By Field Connections

HIRSCHFELD STEEL CO. INC.
112 WEST 29TH SAN ANGELO, TEXAS 76903
PHONE (915) 653-3211

DESCRIPTION	702-5 PLATE GIRDER UNIT
STRUCTURE	US 83/281 INTERCHANGE RAMP "3
LOCATION	HIDALGO COUNTY
CUSTOMER	GILBERT TEXAS CONSTRUCTION
SHIP TO	
Customer's Order No.	
Dwg. By PLC	Date 9-15-92
Checked By DLT	Date 9-92

SHEET 110 OF
JOB NO. 92-108

— APV 11-5

CE 92-13 (LINE 1)

322640

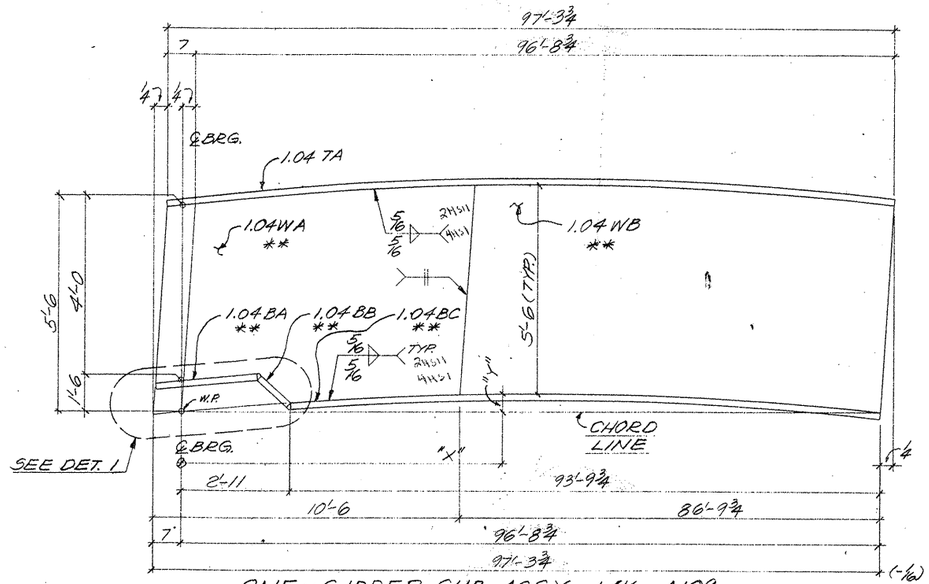

ONE ~ GIRDER SUB-ASSY ~ MK A109

(FOR GIRDER ~ 123PG1.04)

MK A109								
"X"	9'-11	14'-3⅜	29'-5¼	44'-1⅝	58'-10⅛	73'-6⅞	88'-2⅝	96'-8¾
"Y"	1/16 ℄ WEB SPLICE	1"	1¾	⅜	2/16	1⅜	1/16	0"

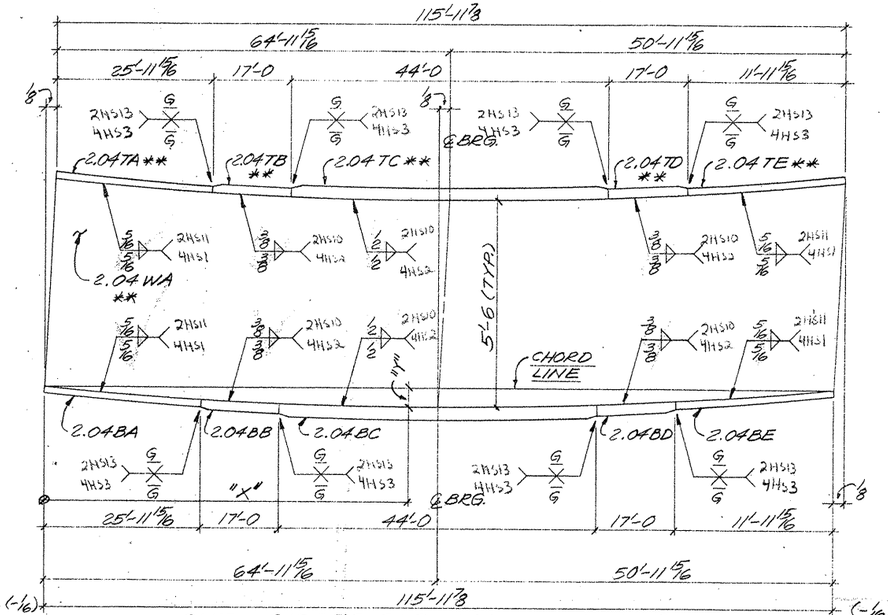

ONE ~ GIRDER SUB-ASSY. ~ MK B109

(FOR GIRDER ~ 127PG2.04)

MK B109									
"X"	6'-2⅜	20'-10¾	35'-7⅞	50'-3 9/16	64'-11 15/16 ℄ BRG.	79'-1⅜	94'-10½	109'-10¼	115'-11⅞
"Y"	5/16	1 3/16	1⅛	2 5/16	2⅜	2/16	1⅜	7/16	0"

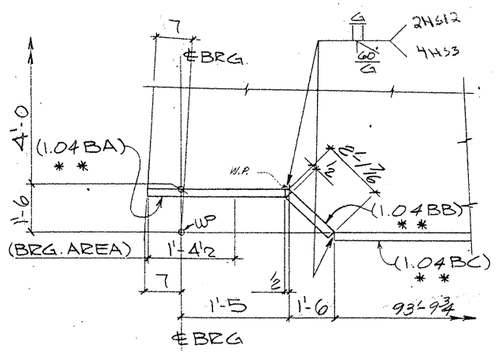

DETAIL - 1

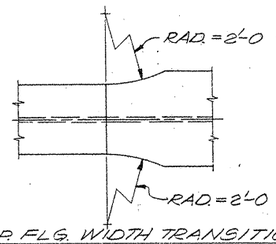

TYP. FLG. WIDTH TRANSITION

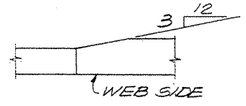

TYP. FLG. THICKNESS TRANSITION

SHOP NOTES:

1) FOR GENERAL NOTES SEE SHT. GN1
2) MATERIAL NOTED * * MUST MEET CHARPY V-NOTCH REQUIREMENTS
3) FOR HEAT CURVE DIAGRAM SEE SHT. 150.

G0108

FED. ROAD DIV. NO.	STATE	FEDERAL AID PROJECT NO.				
6	TX.	NH 92(50)M				
STATE DIST. NO.	COUNTY	CONTROL NO.	SECTION NO.	JOB NO.	HIGHWAY NO.	
21	HIDALGO	39	17	97	83/281	

BILL OF MATERIAL

	Qnty	Material	Length	Mark Temp	Mark Ship	Wt	Cut From	Remarks
1								
2	1	GIRDER SUB-ASSY.			A109			
3	1	PL 9/16 x 66	10'-6⅜	1.04WA			103-15	CVN2
4	1	PL ½ x 66	86'-10⅜	1.04WB			103-16	CVN2
5	1	PL 1¼ x 22	97'-3¾	1.04TA			113-2	
6	1	PL 1¼ x 22	1'-11½	1.04BA			104-14	CVN2
7	1	PL 1¼ x 22	2'-0⅝	1.04BB			104-15	CVN2
8	1	PL 1¼ x 22	93'-9¾	1.04BC			107-9	CVN2
9								
10								
11								
12								
13								
14	1	GIRDER SUB-ASSY.			B109			
15	1	PL 11/16 x 66	116'-0	2.04WA			103-17	CVN2
16	1	PL 1¼ x 22	25'-11 15/16	2.04TA			107-10	CVN2
17	1	PL 2 x 24	17'-0	2.04TB			107-11	CVN2
18	1	PL 3 x 28	44'-0	2.04TC			109-14	CVN3
19	1	PL 2 x 24	17'-0	2.04TD			107-11	CVN2
20	1	PL 1¼ x 22	11'-11 15/16	2.04TE			107-18	CVN2
21	1	PL 1¼ x 22	25'-11 15/16	2.04BA			113-3	
22	1	PL 2 x 24	17'-0	2.04BB			113-4	
23	1	PL 3 x 28	44'-0	2.04BC			113-5	
24	1	PL 2 x 24	17'-0	2.04BD			113-4	
25	1	PL 1¼ x 22	11'-11 15/16	2.04BE			113-6	
26								
27								
28								
29								
30								
31								
32								
33								
34								
35								
36								
37								
38								
39								
40								
41								
42								
43								
44								
45								
46								
47								
48								
49								
50								
51								
52								
53								
54								
55								
56								
57								
58								
59								
60								

TEXAS DEPARTMENT OF TRANSPORTATION
APPROVED
DIVISION OF BRIDGES AND STRUCTURES
DEC 16 1992
APPROVAL OF THIS DRAWING DOES NOT RELIEVE THE CONTRACTOR OF THE RESPONSIBILITY FOR THE CORRECTNESS OF THE DETAILS

FOR APPROVAL
NOV 05 '92
NOT FOR CONSTRUCTION

REVISION	DATE	DESCRIPTION OF REVISION
NO. 1		
NO. 2		
NO. 3		
NO. 4		
NO. 5		

PRINTING Req'd	For	Date

Bolts Holes Unless Noted
Shop Paint SEE SHT. GN1
Fab. Spec. A572-50 U.N. Inspection
Architect
Erection By Field Connections

HIRSCHFELD STEEL CO. INC.
112 WEST 29TH SAN ANGELO, TEXAS 76903
PHONE (915) 653-3211

DESCRIPTION	702'-5 PLATE GIRDER UNIT
STRUCTURE	US 83/281 INTERCHANGE RAMP #3
LOCATION	HIDALGO COUNTY
CUSTOMER	GILBERT TEXAS CONSTRUCTION
SHIP TO	
Customer's Order No.	
Dwg. By	PCC Date 9-16-92
Checked By	DLT Date 9-92
SHEET	109 OF
JOB NO.	92-108

APV 1:5

CE 92-13 (LINE 4)

322640

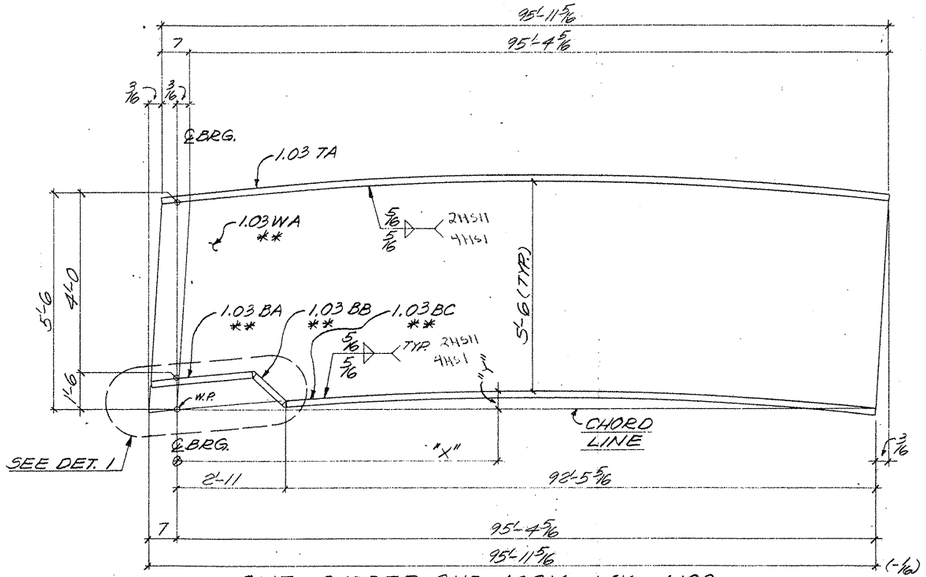

ONE ~ GIRDER SUB-ASSY. ~ MK A108

(FOR GIRDER ~ 122 PG 1.03)

MK A108								
"X"	14'-8 7/16	29'-3 1/4	43'-10 1/16	58'-4 13/16	72'-11 5/8	87'-6 3/8		95'-4 5/16
"Y"	3/4	1 5/16	1 1/16	1 1/16	1 3/8	9/16		0"

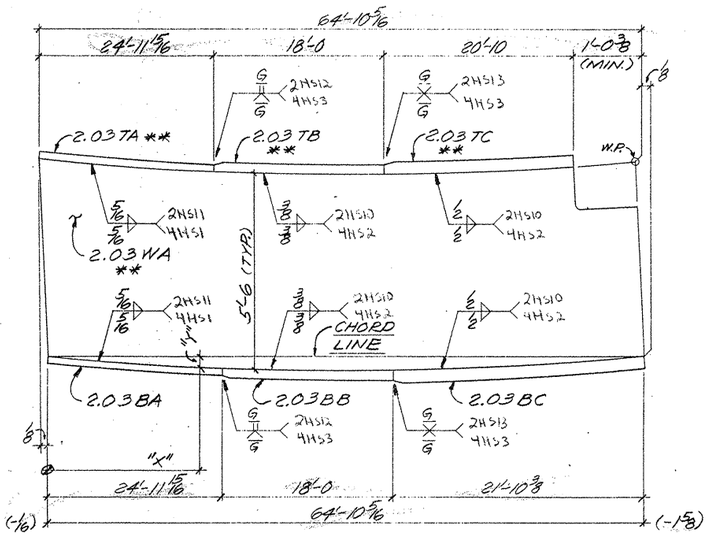

ONE ~ GIRDER SUB-ASSY. ~ MK B108

(FOR GIRDER 126 PG 2.03)

MK B108					
"X"	6'-8 3/4	21'-3 7/16	35'-10 3/8	50'-5 1/8	64'-10 5/16
"Y"	1/8	7/16	9/16	7/16	0"

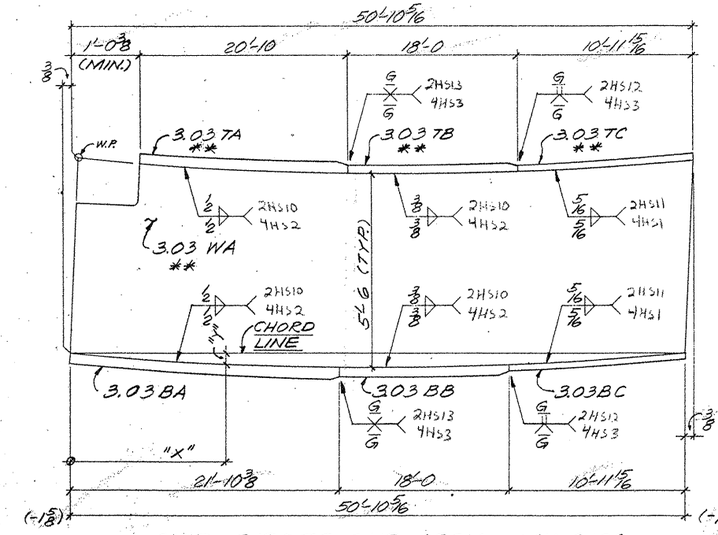

ONE ~ GIRDER SUB-ASSY. ~ MK C108

(FOR GIRDER 129 PG 3.03)

MK C108					
"X"	14'-8 3/16	29'-6	44'-3 13/16	50'-10 5/16	
"Y"	3/8	7/16	3/16	0"	

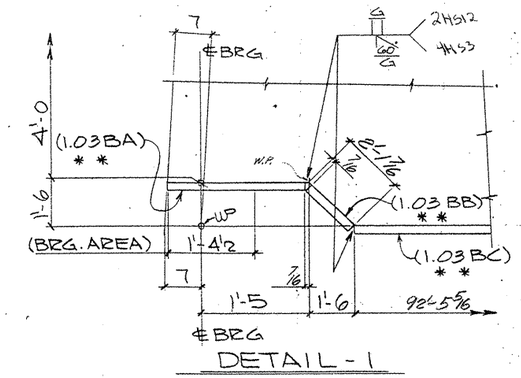

DETAIL - 1

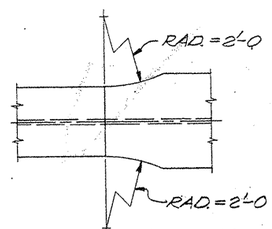

TYP. FLG. WIDTH TRANSITION

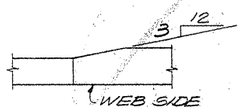

TYP. FLG. THICKNESS TRANSITION

SHOP NOTES:

1) FOR GENERAL NOTES, SEE SHT. GN1
2) MATERIAL NOTED '* *' MUST MEET CHARPY V-NOTCH REQUIREMENTS
3) FOR HEAT CURVE DIAGRAM, SEE SHT. 150

G0108

BILL OF MATERIAL

	Qnty.	Material	Length	Mark Temp.	Mark Ship	Wt.	Cut From	Remarks
1								
2	1	GIRDER SUB-ASSY.			A108			
3	1	R 1/2 x 66	95'-11 1/2	1.03 WA			103-2	CVN2
4	1	R 1 x 20	95'-11 5/16	1.03 TA			112-2	
5	1	R 1 x 20	1'-11 9/16	1.03 BA			104-12	CVN2
6	1	R 1 x 20	2'-1	1.03 BB			104-13	CVN2
7	1	R 1 x 20	92'-5 5/16	1.03 BC			106-11	CVN2
8								
9								
10								
11								
12								
13								
14	1	GIRDER SUB-ASSY.			B108			
15	1	R 5/8 x 66	64'-10 5/16	2.03 WA			103-3	CVN2
16	1	R 1 x 20	24'-11 5/16	2.03 TA			106-12	CVN2
17	1	R 2 x 20	18'-0	2.03 TB			106-13	CVN2
18	1	R 3 x 28	20'-10	2.03 TC			109-12	CVN3
19	1	R 1 x 20	24'-11 5/16	2.03 BA			112-3	
20	1	R 2 x 20	18'-0	2.03 BB			112-4	
21	1	R 3 x 24	21'-10 3/8	2.03 BC			112-5	
22								
23								
24								
25								
26	1	GIRDER SUB-ASSY.			C108			
27	1	R 5/8 x 66	50'-10 5/16	3.03 WA			103-4	CVN2
28	1	R 3 x 28	20'-10	3.03 TA			109-12	CVN3
29	1	R 2 x 20	18'-0	3.03 TB			106-13	CVN2
30	1	R 1 x 20	10'-11 5/16	3.03 TC			106-14	CVN2
31	1	R 3 x 24	21'-10 3/8	3.03 BA			112-5	
32	1	R 2 x 20	18'-0	3.03 BB			112-4	
33	1	R 1 x 20	10'-11 5/16	3.03 BC			112-6	
34								
35								
36								
37								
38								
39								
40								
41								
42								
43								
44								
45								
46								
47								
48								
49								
50								
51								
52								
53		TEXAS DEPARTMENT OF TRANSPORTATION APPROVED DIVISION OF BRIDGES AND STRUCTURES DEC 16 1992 APPROVAL OF THIS DRAWING DOES NOT RELIEVE THE CONTRACTOR OF THE RESPONSIBILITY FOR THE CORRECTNESS OF DETAIL						
54								
55								
56								
57								
58								
59								
60								

FCS APPROVAL NOV 05 '92

NOT FOR CONSTRUCTION

REVISION	DATE	DESCRIPTION OF REVISION
NO. 1		
NO. 2		
NO. 3		
NO. 4		
NO. 5		

PRINTING Req'd	For	Date
—	APV	11-5

Bolts Holes Unless Noted
Shop Paint SEE SHT. GN1
Fab Spec A572-50 U.N. Inspection
Architect
Erection By Field Connections

HIRSCHFELD STEEL CO, INC.
112 WEST 29TH SAN ANGELO, TEXAS 76903
PHONE (915) 653-3211

DESCRIPTION	702'-5 PLATE GIRDER UNIT
STRUCTURE	US 83/281 INTERCHANGE RAMP "S"
LOCATION	HIDALGO COUNTY
CUSTOMER	GILBERT TEXAS CONSTRUCTION
SHIP TO	
Customer's Order No.	
Dwg. By PCC	Date 9-15-92
Checked By DLT	Date 9-92

SHEET 108 OF
JOB NO. 92-108

CE 92-13 (LINE 3)

FED. ROAD DIV. NO.	STATE	FEDERAL AID PROJECT NO.			
6	TX.	NH 92(50)M			
STATE DIST. NO.	COUNTY	CONTROL NO.	SECTION NO.	JOB NO.	HIGHWAY NO.
21	HIDALGO	39	17	97	83/281

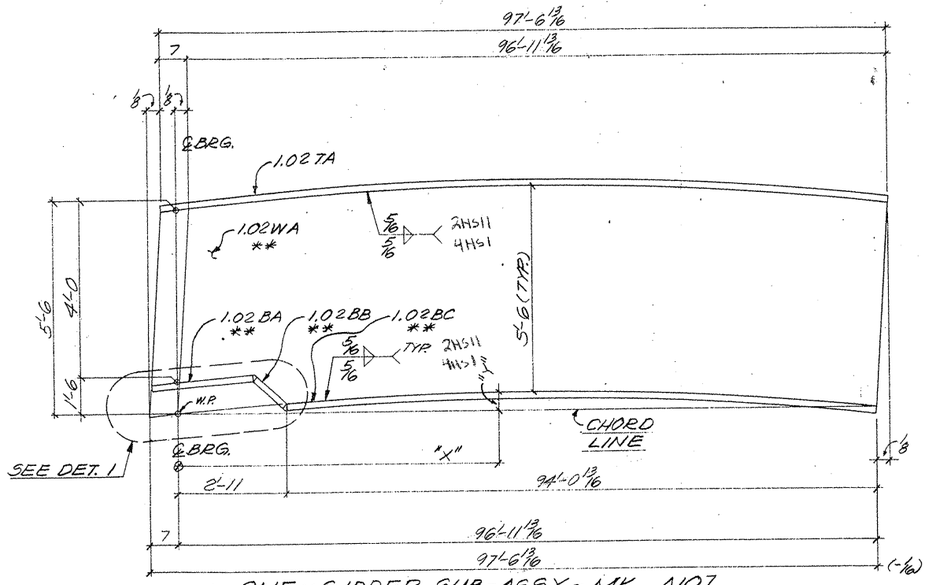

ONE ~ GIRDER SUB-ASSY ~ MK A107

(FOR GIRDER ~ 121 PG 1.02)

MK A107								
"X"	14'-8 1/16	29'-1/4	43'-6 7/16	57'-11 5/8	72'-4 13/16	86'-10		96'-11 13/16
"Y"	3/8	3/4	1/16	1/4	1/16	5/8		0"

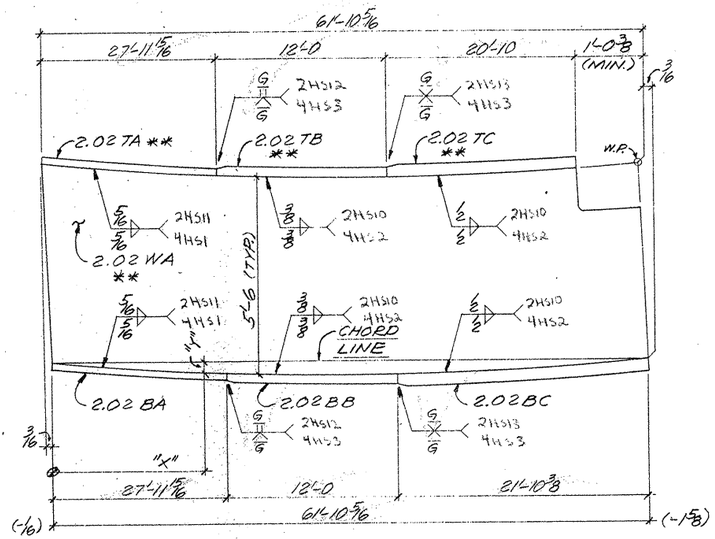

ONE ~ GIRDER SUB-ASSY ~ MK B107

(FOR GIRDER 125 PG 2.02)

MK B107						
"X"	4'-3 3/16	18'-8 3/8	33'-1/16	47'-6 3/4	61'-10 5/16	
"Y"	0"	5/16	1/2	3/8	0"	

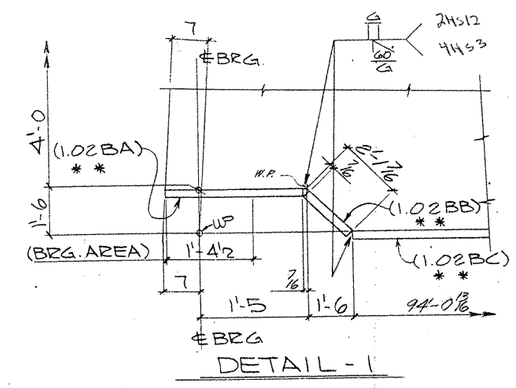

DETAIL - 1

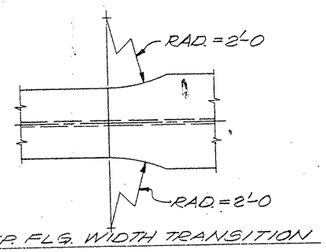

TYP. FLG. WIDTH TRANSITION

TYP. FLG. THICKNESS TRANSITION

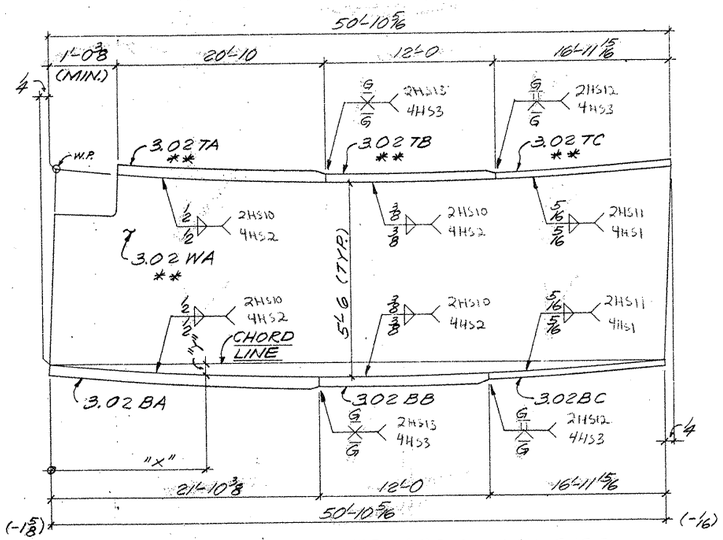

ONE ~ GIRDER SUB-ASSY. ~ MK C107

(FOR GIRDER 128 PG 3.02)

MK C107					
"X"	14'-6 3/16	29'-2 1/16	43'-10 7/8	50'-10 5/16	
"Y"	3/8	3/8	3/16	0"	

SHOP NOTES:

1) FOR GENERAL NOTES SEE SHT. GN1
2) MATERIAL NOTED "* *" MUST MEET CHARPY V-NOTCH REQUIREMENTS
3) FOR HEAT CURVE DIAGRAM SEE SHT. 150.

BILL OF MATERIAL

	Qnty	Material	Length	Mark Temp.	Mark Ship	Wt.	Cut From	Remarks
1								
2	1	GIRDER SUB-ASSY.			A107			
3	1	PL 1/2 x 66	97'-6 15/16	1.02WA			108-9	CVN2
4	1	PL 1 x 20	97'-6 13/16	1.02TA			111-2	
5	1	PL 1 x 20	14'-11 7/16	1.02BA			104-12	CVN2
6	1	PL 1 x 20	8'-1	1.02BB			104-13	CVN2
7	1	PL 1 x 20	94'-0 13/16	1.02BC			105-14	CVN2
8								
9								
10								
11								
12								
13								
14	1	GIRDER SUB-ASSY.			B107			
15	1	PL 5/8 x 66	61'-10 1/2	2.02WA			108-10	CVN2
16	1	PL 1 x 20	27'-11 5/16	2.02TA			105-15	CVN2
17	1	PL 1 3/4 x 20	12'-0	2.02TB			105-16	CVN2
18	1	PL 3 x 28	20'-10	2.02TC			109-10	CVN3
19	1	PL 1 x 20	27'-11 5/16	2.02BA			111-3	
20	1	PL 1 3/4 x 20	12'-0	2.02BB			111-4	
21	1	PL 3 x 24	21'-10 3/8	2.02BC			111-5	
22								
23								
24								
25								
26	1	GIRDER SUB-ASSY.			C107			
27	1	PL 3/8 x 66	50'-10 5/16	3.02WA			108-11	CVN2
28	1	PL 3 x 28	20'-10	3.02TA			109-10	CVN3
29	1	PL 1 3/4 x 20	12'-0	3.02TB			105-16	CVN2
30	1	PL 1 x 20	16'-11 15/16	3.02TC			105-18	CVN2
31	1	PL 3 x 24	21'-10 3/8	3.02BA			111-5	
32	1	PL 1 3/4 x 20	12'-0	3.02BB			111-4	
33	1	PL 1 x 20	16'-11 15/16	3.02BC			111-6	
34								
35								
36								
37								
38								
39								
40								
41								
42								
43								
44								
45								
46								
47								
48								
49								
50								
51								
52								
53								
54								
55								
56								
57								
58								
59								
60								

TEXAS DEPARTMENT OF TRANSPORTATION
APPROVED
DIVISION OF BRIDGES AND STRUCTURES
DEC 16 1992

APPROVAL OF THIS DRAWING DOES NOT RELIEVE THE CONTRACTOR OF THE RESPONSIBILITY FOR THE CORRECTNESS OF DETAIL.

FOR APPROVAL
NOV 05 92
NOT FOR CONSTRUCTION

REVISION	DATE	DESCRIPTION OF REVISION
NO 1		
NO 2		
NO 3		
NO 4		
NO 5		

PRINTING Req'd	For	Date

Bolts Holes Unless Noted
Shop Paint SEE SHT. GN1
Fab Spec. A572-50 U.N. Inspection
Architect
Erection By Field Connections

HIRSCHFELD STEEL CO. INC.
112 WEST 29TH SAN ANGELO TEXAS 76903
PHONE (915) 653-3211

DESCRIPTION	702-5 PLATE GIRDER UNIT
STRUCTURE	US 83/281 INTERCHANGE RAMP #3
LOCATION	HIDALGO COUNTY
CUSTOMER	GILBERT TEXAS CONSTRUCTION
SHIP TO	
Customer's Order No.	
Dwg. By PCC	Date 9-15-92
Checked By DLT	Date 9-92

SHEET 107 OF
JOB NO. 92-108

FED. ROAD DIV. NO.	STATE	FEDERAL AID PROJECT NO.			
6	TX.	NH 92(50)M			
STATE DIST. NO.	COUNTY	CONTROL NO.	SECTION NO.	JOB NO.	HIGHWAY NO.
21	HIDALGO	39	17	97	83/281

—	APV	11-5

G0108

CE 92-13 (LINE 2)

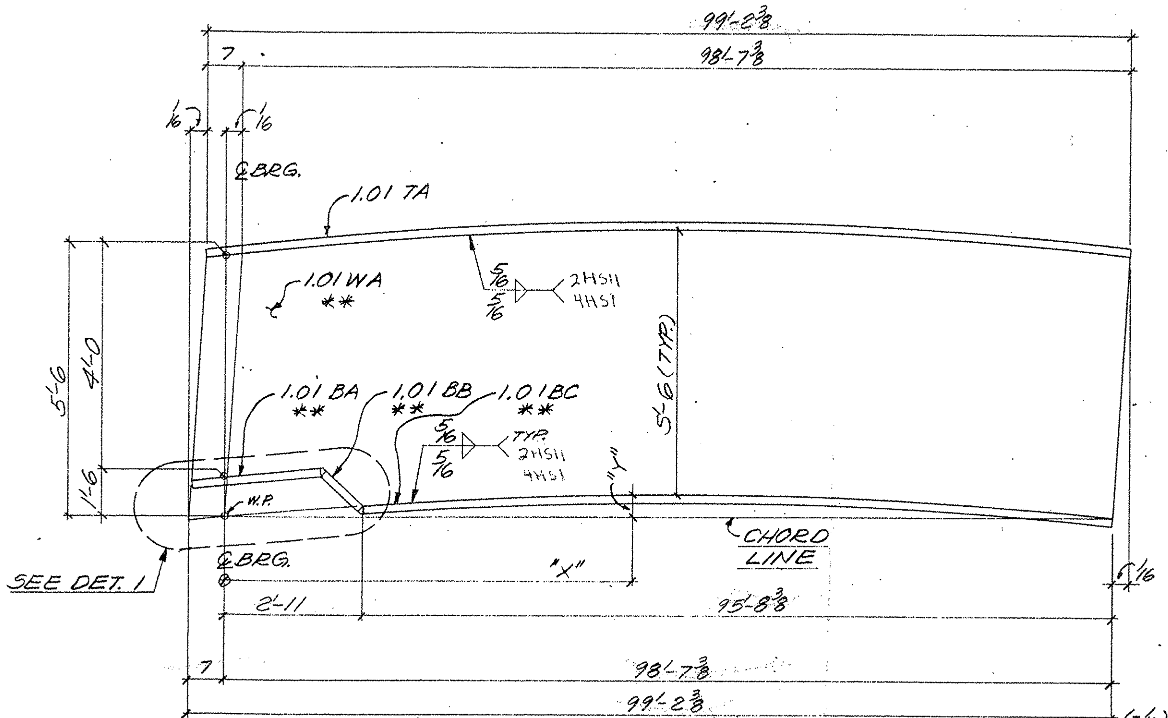

ONE ~ GIRDER SUB-ASSY. ~ MK A106
(FOR GIRDER ~ 120PG1.01)

MK A106								
"X"	14'-7 11/16	28'-11 1/4	43'-2 13/16	57'-6 3/8	71'-10	86'-1 9/16		98'-7 3/8
"Y"	0"	1/8	3/8	11/16	7/8	5/8		0"

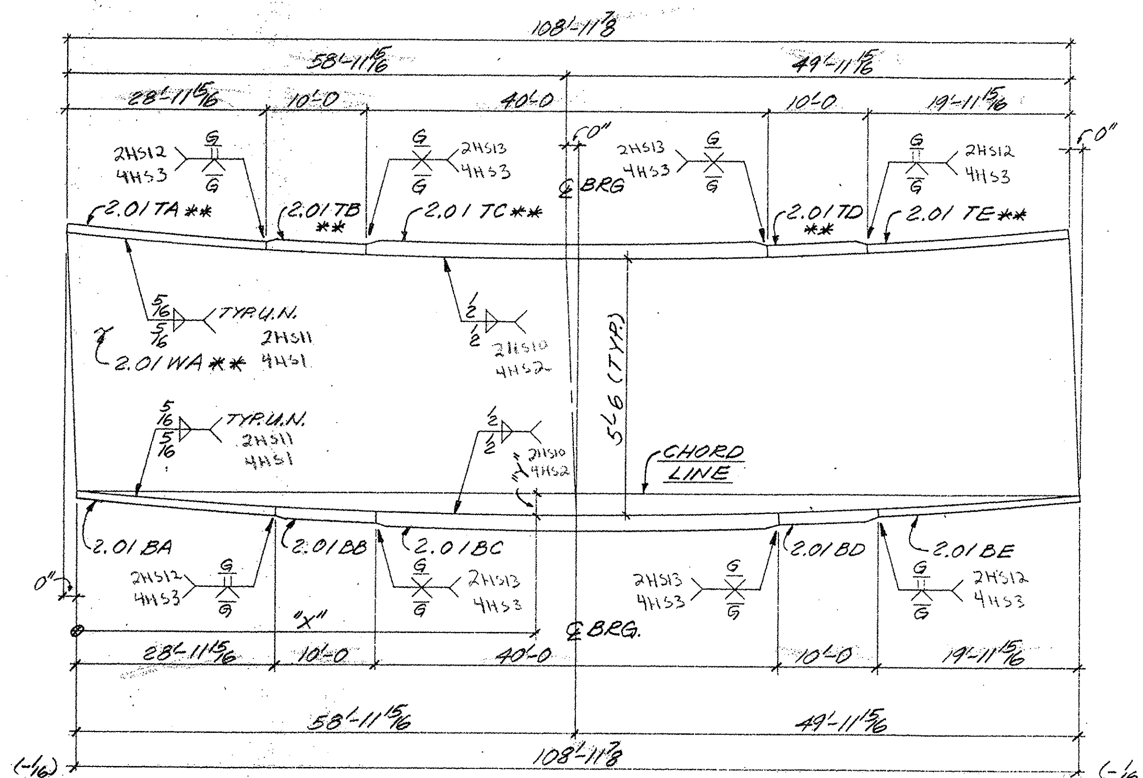

ONE ~ GIRDER SUB-ASSY. ~ MK B106
(FOR GIRDER ~ 124PG2.01)

MK B106									
"X"	1'-9 5/8	16'-1 3/16	30'-4 3/4	44'-8 3/8	58'-11 15/16	73'-6 1/2	88'-1	102'-7 9/16	108'-11 7/8
"Y"	1/16	11/16	1 3/8	1 13/16	1 15/16	1 1/16	1 3/16	3/8	0"
					℄ BRG.				

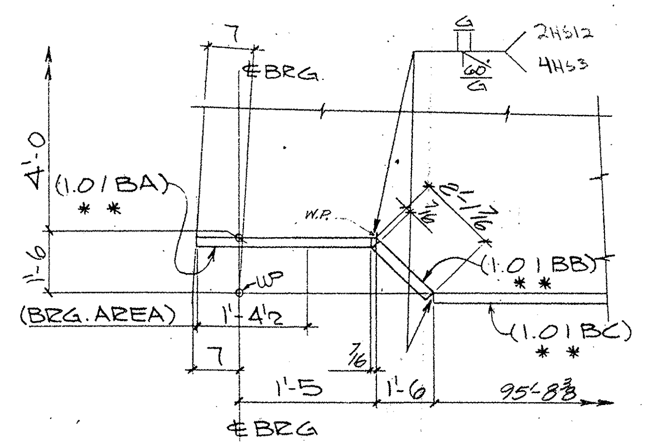

DETAIL - 1

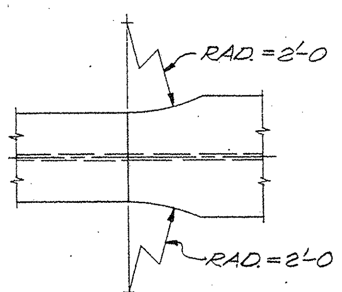

TYP. FLG. WIDTH TRANSITION

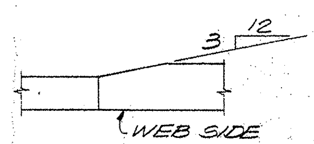

TYP. FLG. THICKNESS TRANSITION

SHOP NOTES:

1) FOR GENERAL NOTES SEE SHT. GN1
2) MATERIAL NOTED "* *" MUST MEET CHARPY V-NOTCH REQUIREMENTS
3) FOR HEAT CURVE DIAGRAM SEE SHT. 150.

G0108

FED. ROAD DIV. NO.	STATE	FEDERAL AID PROJECT NO.			
6	TX.	NH 92(50)M			
STATE DIST. NO.	COUNTY	CONTROL NO.	SECTION NO.	JOB NO.	HIGHWAY NO.
21	HIDALGO	39	17	97	83/281

BILL OF MATERIAL

	Qnty.	Material	Length	Mark Temp	Mark Ship.	Wt	Cut From	Remarks
1								
2	1	GIRDER SUB-ASSY.			A106			
3	1	PL 1/2 x 66	99'-2 7/16	1.01WA			108-2	CVN2
4	1	PL 1 x 20	99'-2 3/8	1.01TA			110-2	
5	1	PL 1 x 20	1'-11 9/16	1.01BA			104-12	CVN2
6	1	PL 1 x 20	2'-1	1.01BB			104-13	CVN2
7	1	PL 1 x 20	95'-8 3/8	1.01BC			104-16	CVN2
8–13								
14	1	GIRDER SUB-ASSY.			B106			
15	1	PL 5/8 x 66	108'-11 7/8	2.01WA			108-3	CVN2
16	1	PL 1 x 20	28'-11 15/16	2.01TA			104-17	CVN2
17	1	PL 1 1/2 x 20	10'-0	2.01TB			104-18	CVN2
18	1	PL 2 1/2 x 24	40'-0	2.01TC			109-8	CVN3
19	1	PL 1 1/2 x 20	10'-0	2.01TD			104-18	CVN2
20	1	PL 1 x 20	19'-11 15/16	2.01TE			104-20	CVN2
21	1	PL 1 x 20	28'-11 15/16	2.01BA			110-3	
22	1	PL 1 1/2 x 20	10'-0	2.01BB			110-4	
23	1	PL 2 1/2 x 24	40'-0	2.01BC			110-5	
24	1	PL 1 1/2 x 20	10'-0	2.01BD			110-4	
25	1	PL 1 x 20	19'-11 15/16	2.01BE			110-6	
26–60								

TEXAS DEPARTMENT OF TRANSPORTATION
APPROVED
DIVISION OF BRIDGES AND STRUCTURES
DEC 16 1992
APPROVAL OF THIS DRAWING DOES NOT RELIEVE THE CONTRACTOR OF THE RESPONSIBILITY FOR THE CORRECTNESS OF DETAIL.

FOR APPROVAL
NOV 05 '92
NOT FOR CONSTRUCTION

REVISION	DATE	DESCRIPTION OF REVISION
NO 1		
NO. 2		
NO 3		
NO 4		
NO 5		

PRINTING — Req'd | For | Date: — | APV | 11-5

Bolts: Holes: Unless Noted
Shop Paint: SEE SHT. GN1
Fab Spec: A572-50 U.N. Inspection
Architect
Erection By: Field Connections

HIRSCHFELD STEEL CO. INC.
112 WEST 29TH SAN ANGELO, TEXAS 76903
PHONE (915) 653-3211

DESCRIPTION: 702'-5 PLATE GIRDER UNIT
STRUCTURE: US 83/281 INTERCHANGE RAMP #3
LOCATION: HIDALGO COUNTY
CUSTOMER: GILBERT TEXAS CONSTRUCTION
SHIP TO
Customer's Order No.
Dwg. By: PCC Date: 9-15-92
Checked By: DLT Date: 9-92
SHEET 106 OF
JOB NO. 92-108

CE 92-13 (LINE 1)

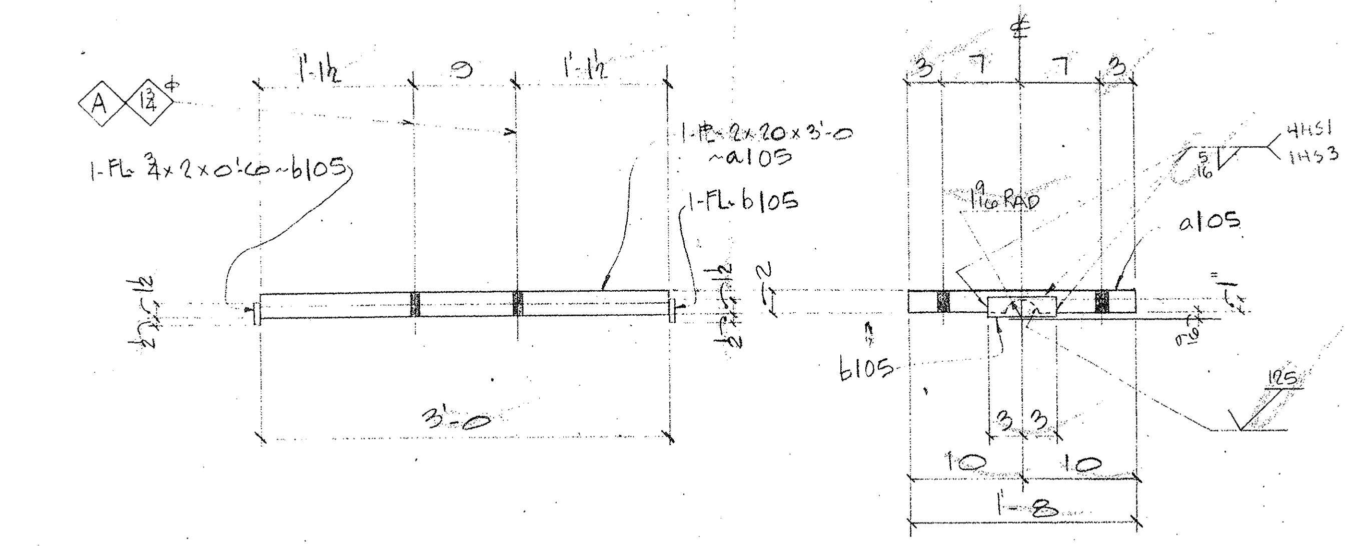

2- SOLE PLATES~105BS1
(SHOP WELD TO BENT CAP 103SB1.13)

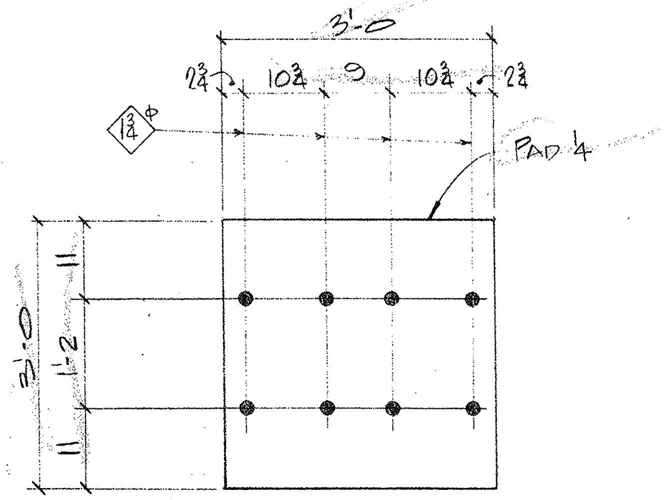

2- PREFORMED FABRIC PAD~105BS3
(PER SDH & PT ITEM 441.33)

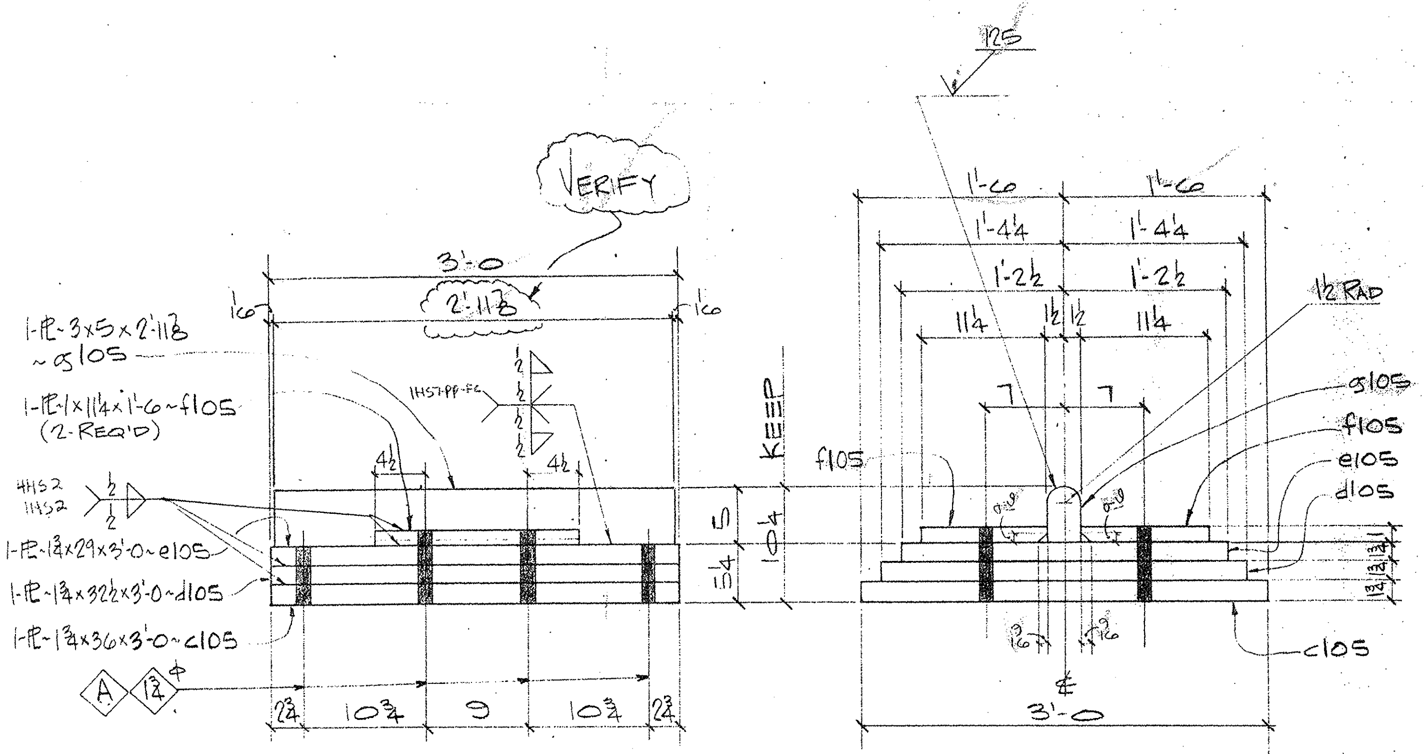

2- MASONRY PLATES~105BS2

NOTE:
FOR GENERAL NOTES, SEE SHT. GN1.

M0108

FED. ROAD DIV. NO.	STATE	FEDERAL AID PROJECT NO.			
6	TX.	NH 92(50)M			
STATE DIST. NO.	COUNTY	CONTROL NO.	SECTION NO.	JOB NO.	HIGHWAY NO.
21	HIDALGO	39	17	97	83/281

BILL OF MATERIAL

	Qnty	Material	Length	Mark Temp.	Mark Ship.	Wt.	Cut From	Remarks
1								
2								
3								
4	2	SOLE PLATES			105BS1			
5	2	PL 2x20	3'-0	a105			115-6	
6	4	FL ¾x2	0'-6	b105			115-7	
7								
8								
9								
10	2	MASONRY PLATES			105BS2			
11	2	PL 1¾x36	3'-0	c105			115-1	
12	2	PL 1¾x32½	3'-0	d105			115-2	
13	2	PL 1¾x29	3'-0	e105			115-3	
14	4	PL 1x11¼	1'-6	f105			115-4	
15	2	PL 3x5	2'-11⅞	g105			115-5	
16								
17								
18								
19								
20								
21								
22								
23								
24	2	PREFORMED FABRIC PAD			105BS3			
25	2	PAD ¼x36	3'-0				115-14	
26		(PER SDH & PT ITEM 441.33)						
27								
28								
29								
30								
31								
32								
33								
34								
35								
36								
37								
38								
39								
40								
41								
42								
43								
44								
45								
46								
47								
48								
49								
50								
51								
52								
53								
54								
55								
56								
57								
58								
59								
60								

TEXAS DEPARTMENT OF TRANSPORTATION
APPROVED
DIVISION OF BRIDGES AND STRUCTURES
DEC 16 1992
APPROVAL OF THIS DRAWING DOES NOT RELIEVE THE CONTRACTOR OF THE RESPONSIBILITY FOR THE CORRECTNESS OF DETAIL.

FOR APPROVAL
NOV 05 '92
NOT FOR CONSTRUCTION

REVISION	DATE	DESCRIPTION OF REVISION
NO. 1		
NO. 2		
NO. 3		
NO. 4		
NO. 5		

PRINTING

Req'd	For	Date
—	APV	11-5

Bolts: | Holes: NTD | Unless Noted
Shop Paint: SEE SHT GN1
Fab Spec: A572-50 | Inspection:
Architect:
Erection By: | Field Connections:

HIRSCHFELD STEEL CO. INC.
112 WEST 29TH SAN ANGELO, TEXAS 76903
PHONE (915) 653-3211

DESCRIPTION	102'-5 PLATE GIRDER UNIT
STRUCTURE	US 83/281 INTERCHANGE RAMP #3
LOCATION	HIDALGO COUNTY
CUSTOMER	GILBERT TEXAS CONSTRUCTION
SHIP TO	
Customer's Order No.	SHEET 105 OF
Dwg By JPC, Date 9/92	
Checked By DCT, Date 9/92	JOB NO. 92-108

CE 92-13

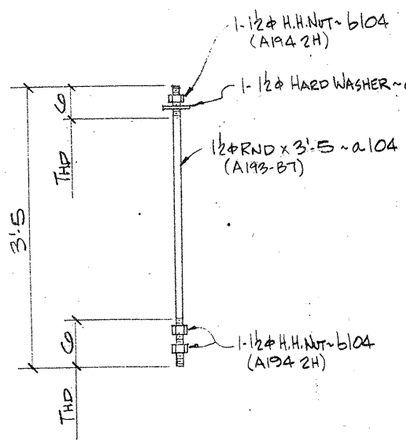

8- ANCHOR BOLTS~104AB1
(GALV. SEE GALV. NOTE)

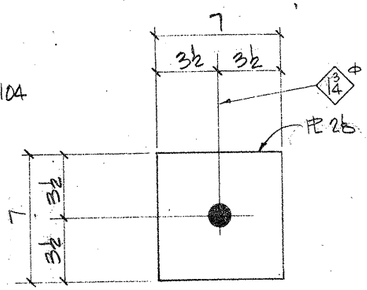

8- PLATE WASHER~104P1
(GALV.)

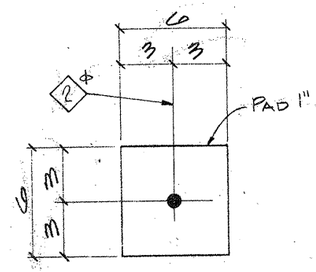

8- PREFORMED FABRIC PAD~104P3
(PER SDH & PT ITEM 441.33)

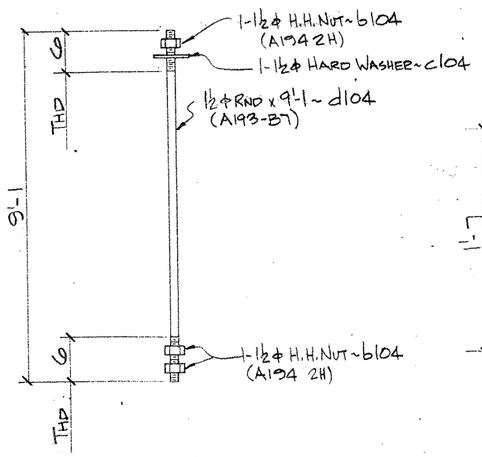

8- HOLD DOWN BOLTS~104AB2
(GALV. SEE GALV. NOTE)

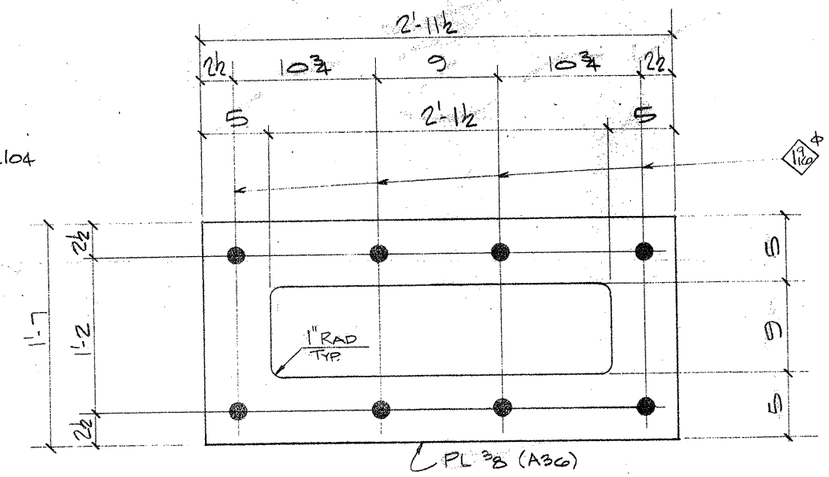

2- BOLT TEMPLATE~104P2
(NO PAINT)

GALV. NOTE:
HOT DIP GALVANIZE AFTER FABRICATION.
ALL NUTS SHALL BE RETAPPED
AFTER GALVANIZING FOR CLASS 2B FIT.

NOTE:
FOR GENERAL NOTES, SEE SHT. GN1.

Buy outs

BILL OF MATERIAL

	Qnty.	Material	Length	Mark Temp	Mark Ship	Wt.	Cut From	Remarks
1								
2								
3								
4	8	ANCHOR BOLTS			104AB1			
5	8	1½φ RND	3'-5	a104			102-3	A193-B7
6	24	1½φ H.H.NUT		b104			102-4	A194 2H
7	8	1½φ HARD WASH.		c104			102-5	A325
8								
9								
10								
11								
12	8	ANCHOR BOLTS			104AB2			
13	8	1½φ RND	9'-1	d104			102-2	A193-B7
14	24	1½φ H.H.NUT		b104			102-4	A194 2H
15	8	1½φ HARD WASH		c104			102-5	A325
16								
17								
18								
19	8	PLATE WASHER			104P1			
20	8	PL 2⅛ x 7	0'-7				102-11	
21								
22								
23								
24	2	BOLT TEMPLATE			104P2			
25	2	PL ⅜ x 19	2'-11½				102-8	A36
26								
27								
28								
29	8	PREFORMED PAD			104P3			
30	8	PAD 1 x 6	0'-6				102-14	
31		(PER SDH & PT ITEM 441.33)						
32								
33								
34								
35								
36								
37								
38								
39								
40								
41								
42								
43								
44								
45								
46								
47								
48								
49								
50								
51								
52								
53								
54								
55								
56								
57								
58								
59								
60								

TEXAS DEPARTMENT OF TRANSPORTATION
APPROVED
DIVISION OF BRIDGES AND STRUCTURES
DEC 16 1992
APPROVAL OF THIS DRAWING DOES NOT RELIEVE THE CONTRACTOR OF THE RESPONSIBILITY FOR THE CORRECTNESS OF DETAIL.

FOR APPROVAL
NOV 05 '92
NOT FOR CONSTRUCTION

REVISION	DATE	DESCRIPTION OF REVISION
NO 1		
NO 2		
NO 3		
NO 4		
NO 5		

PRINTING		
Req'd	For	Date
	SCH	1/91
—	APV	11-5

Bolts Holes NTD
Shop Paint NO PAINT
Fab Spec AS7250 U.N. Inspection
Architect
Erection By Field Connections

HIRSCHFELD STEEL CO. INC.
112 WEST 29TH SAN ANGELO, TEXAS 76903
PHONE (915) 653-3211

DESCRIPTION 702'-5 PLATE GIRDER UNIT
STRUCTURE US 83/281 INTERCHANGE RAMP #3
LOCATION HIDALGO COUNTY
CUSTOMER GILBERT TEXAS CONSTRUCTION
SHIP TO
Customer's Order No.
Dwg. By JDC Date 8/92
Checked By DCT Date 8/92
SHEET 104 OF
JOB NO. 92-108
CE 92-13

MO 108

FED. ROAD DIV. NO.	STATE	FEDERAL AID PROJECT NO.			
6	TX.	NH (50) M			
STATE DIST. NO.	COUNTY	CONTROL NO.	SECTION NO.	JOB NO.	HIGHWAY NO.
21	HIDALGO	39	17	97	83/281

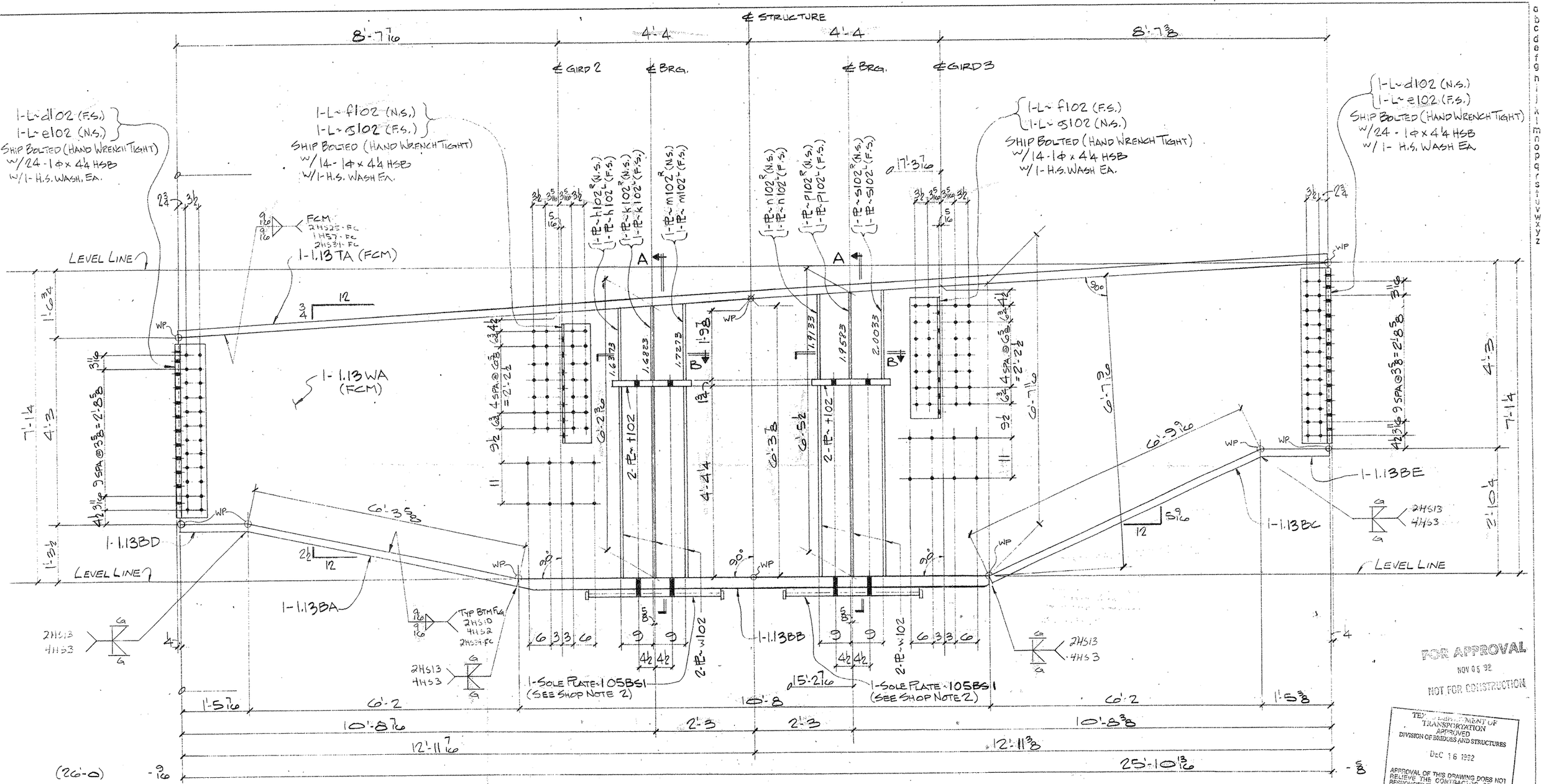

FOR APPROVAL
NOV 05 '92
NOT FOR CONSTRUCTION

TEXAS DEPARTMENT OF TRANSPORTATION
APPROVED
DIVISION OF BRIDGES AND STRUCTURES
DEC 16 1992
APPROVAL OF THIS DRAWING DOES NOT RELIEVE THE CONTRACTOR OF THE RESPONSIBILITY FOR THE CORRECTNESS OF DETAIL APV 11-25

SHOP NOTE:

1. WORK THIS SHT. W/SHT. 103B.
2. SPACING & ALIGNMENT OF SOLE PLATES 105BS1 IS CRITICAL & MUST BE EXACT.
3. FOR GENERAL NOTES SEE SHT. GN1.

ONE- STEEL BENT CAP ~ 103SB1.13
(APPROX. WT. = TONS)

BG108

FED. ROAD DIV. NO.	STATE	FEDERAL AID PROJECT NO.			
6	TX.	NH 92(50)M			
STATE DIST. NO.	COUNTY	CONTROL NO.	SECTION NO.	JOB NO.	HIGHWAY NO.
21	HIDALGO	39	17	97	83/281

HOLES 1 1/16 U.N. FOR APV'L
BOLTS U.N. RETURNED
WELDS U.N. TO SHOP
PAINT

REVISIONS

NO.	DATE	REMARKS
1		
2		
3		
4		

HIRSCHFELD STEEL CO. INC.
112 WEST 29TH SAN ANGELO, TEXAS 76903
PHONE (915) 653-3211

CUSTOMER GILBERT TEXAS CONSTRUCTION
ARCHITECT
PROJECT US 83/281 INTERCHANGE RAMP #3
LOCATION HIDALGO COUNTY

DRAWN JRC DATE 9/92
CHECKED DLT DATE 9/92
JOB NO 92-108
SHEET NO 103A/B of

CE 92-13

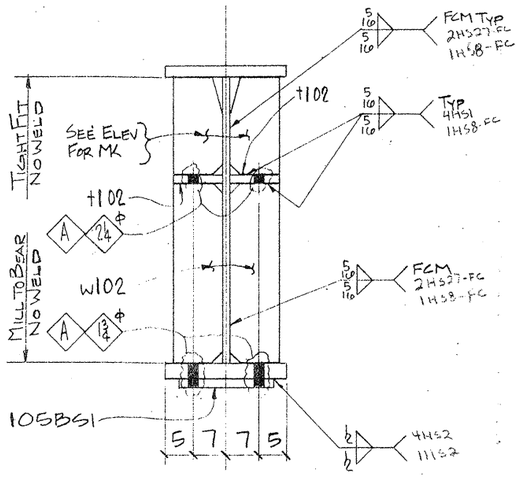

SECTION ~ A

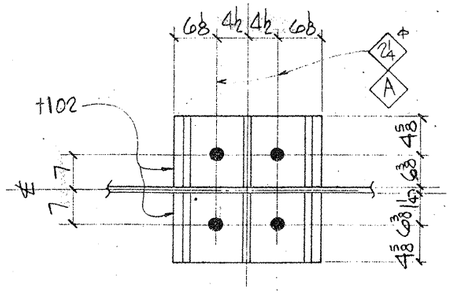

SECTION ~ B

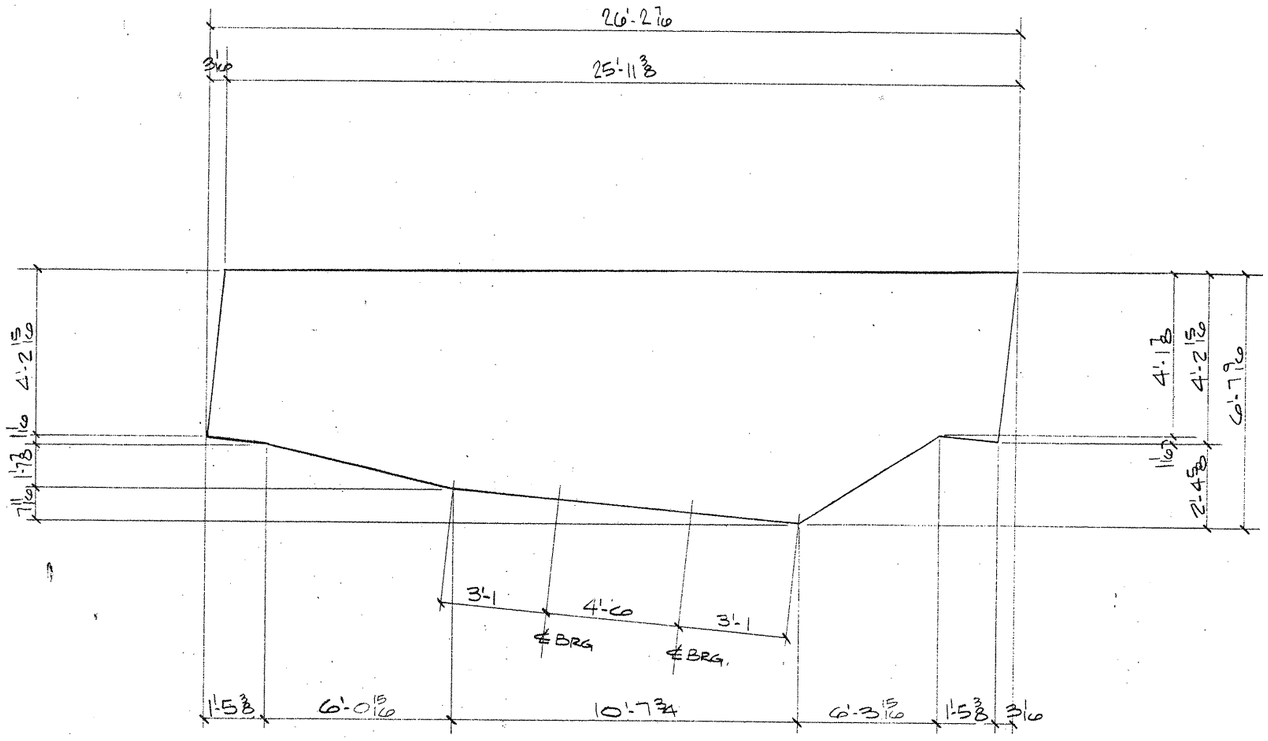

DETAIL WEB PL ~ 1.13WA

BILL OF MATERIAL

	Qnty	Material	Length	Mark Temp.	Mark Ship.	Wt.	Cut From	Remarks
4	ONE	STEEL BENT CAP			103SB1-B			
5	ONE	PL 1/4 x 7'-9 9/16	26'-2 7/16	1.13WA			101-1	FCM1
6	ONE	PL 2 x 24	25'-11 3/8	1.13TA			101-2	FCM1
7	ONE	PL 2 x 24	6'-3 5/8	1.13BA			101-4	CVN2
8	ONE	PL 3 x 24	10'-8	1.13BB			101-3	CVN3
9	ONE	PL 2 x 24	6'-9 9/16	1.13BC			101-5	CVN2
10	2	ANGLE		d102				
11	2			e102				
12	2			f102				
13	2	"		g102				
14	ONE	STIFF		n102R				
15	ONE			h102L				
16	ONE	"		k102R				
17	ONE			k102L				
18	ONE			m102R				
19	ONE			m102L				
20	ONE			n102R				
21	ONE			n102L				
22	ONE			p102R				
23	ONE			p102L				
24	ONE			s102R				
25	ONE	"		s102L				
26	4	BRG PLATE		t102				
27	12	STIFF		w102				
28	2	SOLE PLATE		105BS11				
29	76	HS BOLT 1℄	0'-4 4				116-17	A325
30	76	HS WASH 1℄					116-18	A325
31	ONE	PL 2 x 24	1'-5 7/16	1.13BD			101-6	CVN2
32	ONE	PL 2 x 24	1'-5 3/8	1.13BE			101-6	CVN2

TEXAS DEPARTMENT OF TRANSPORTATION
APPROVED
DIVISION OF BRIDGES AND STRUCTURES
DEC 16 1992
APPROVAL OF THIS DRAWING DOES NOT RELIEVE THE CONTRACTOR OF THE RESPONSIBILITY FOR THE CORRECTNESS OF DETAIL.

FINAL APPROVAL
NOV 05 '92
NOT FOR CONSTRUCTION

REVISION	DESCRIPTION OF REVISION
NO. 1	
NO. 2	
NO. 3	
NO. 4	
NO. 5	

PRINTING

Req'd	For	Date

Bolts A325 TY 1 Holes 1 1/16 ⌀ Unless Noted
Shop Paint SEE SHT GN1
Fab. Spec. AST-2 50 U.N. Inspection
Architect
Erected By Field Connections

HIRSCHFELD STEEL CO. INC.
112 WEST 29TH SAN ANGELO, TEXAS 76903
PHONE (915) 653-3211

DESCRIPTION 702'-5 PLATE GIRDER UNIT
STRUCTURE US 83/281 INTERCHANGE RAMP #3
LOCATION HIDALGO COUNTY
CUSTOMER GILBERT TEXAS CONSTRUCTION
SHIP TO
Customer's Order No.
Dwg By DE Date 9/92
Checked By DLT Date 9/92
SHEET 103B OF
JOB NO. 92-108

BG108

FED. ROAD DIV. NO.	STATE	FEDERAL AID PROJECT NO.			
6	TX.	NH 92(50)M			
STATE DIST. NO.	COUNTY	CONTROL NO.	SECTION NO.	JOB NO.	HIGHWAY NO.
21	HIDALGO	39	17	97	83/281

CE92-13

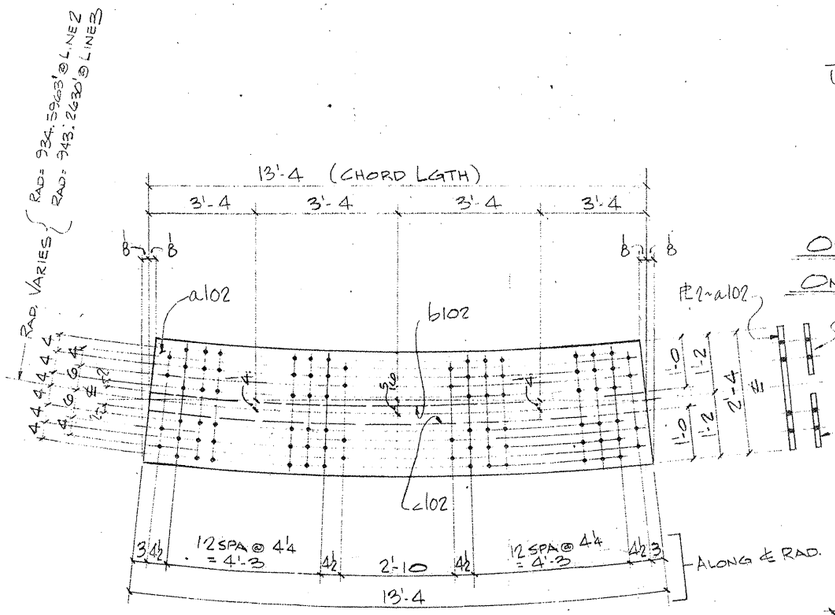

2 - PLATES ~ a102

2 - PLATES ~ b102

2 - PLATES ~ c102

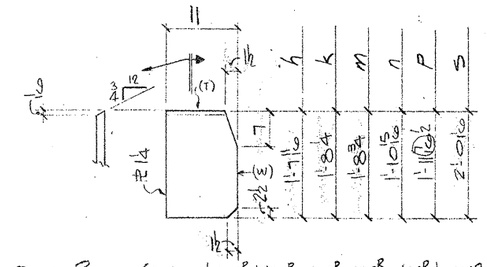

ONE - PLATE (EA.) ~ h102R, k102R, m102R, n102R, p102R & s102R (AS SHN & NTD.)

ONE - PLATE (EA.) ~ h102L, k102L, m102L, n102L, p102L & s102L (OPP. HD.)

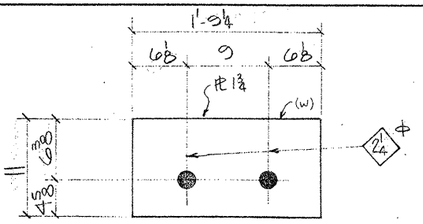

4 - PLATES ~ t102

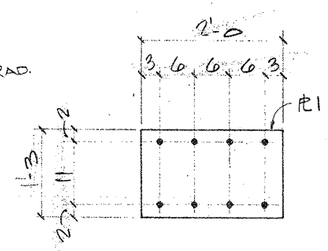

4 - PLATES ~ v102

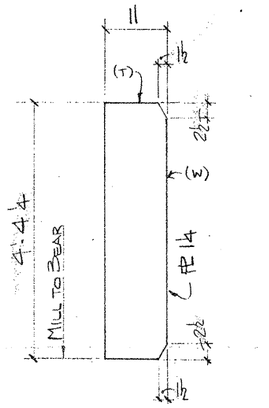

12 - PLATES ~ w102

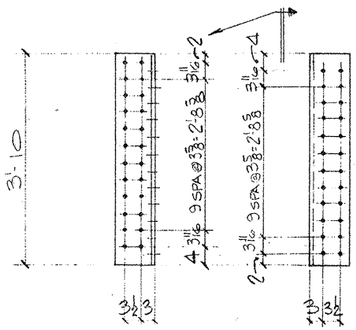

2 - ANGLES ~ d102

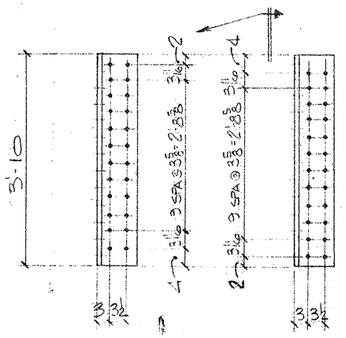

2 - ANGLES ~ e102

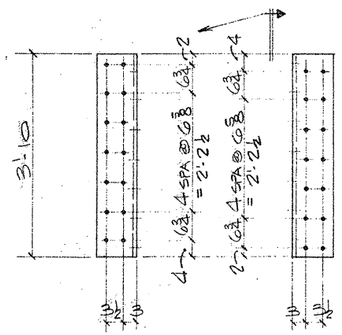

4 - ANGLES ~ f102

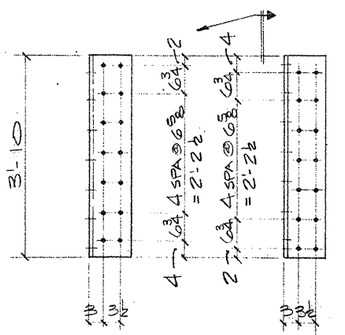

4 - ANGLES ~ g102

NOTE:
FOR GENERAL NOTES, SEE SHT. GN1.

Q0108

FED. ROAD DIV. NO.	STATE	FEDERAL AID PROJECT NO.				
6	TX.	NH 92(50)M				
STATE DIST. NO.	COUNTY	CONTROL NO.	SECTION NO.	JOB NO.	HIGHWAY NO.	
21	HIDALGO	39	17	97	83/281	

BILL OF MATERIAL

	Qnty.	Material	Length	Mark Temp.	Mark Ship.	Wt.	Cut From	Remarks
4	2	PL 2 x 28 5/16	13'-4¼	a102			101-10	CVN 2
5	2	PL 2 x 12 5/16	13'-4	b102			101-11	CVN 2
6	2	PL 2 x 12 5/16	13'-4¼	c102			101-11	CVN 2
7	2	L 8 x 8 x ¾	3'-10	d102			101-9	CVN 2
8	2	L 8 x 8 x ¾	3'-10	e102			101-9	CVN 2
9	4	L 8 x 8 x ¾	3'-10	f102			101-9	CVN 2
10	4	L 8 x 8 x ¾	3'-10	g102			101-9	CVN 2
11	ONE	PL ¼ x 11	1'-7 11/16	h102R			101-15	
12	ONE	PL ¼ x 11	1'-7 11/16	h102L			101-15	
13	ONE	PL ¼ x 11	1'-8¼	k102R			101-15	
14	ONE	PL ¼ x 11	1'-8¼	k102L			101-15	
15	ONE	PL ¼ x 11	1'-8¾	m102R			101-15	
16	ONE	PL ¼ x 11	1'-8¾	m102L			101-15	
17	ONE	PL ¼ x 11	1'-10 15/16	n102R			101-14	
18	ONE	PL ¼ x 11	1'-10 15/16	n102L			101-14	
19	ONE	PL ¼ x 11	1'-11 13/16	P102R			101-14	
20	ONE	PL ¼ x 11	1'-11 13/16	P102L			101-14	
21	ONE	PL ¼ x 11	2'-0 1/16	s102R			101-14	
22	ONE	PL ¼ x 11	2'-0 1/16	s102L			101-14	
23	4	PL ¾ x 11	1'-9¼	T102			101-7	
24	4	PL 1 x 15	2'-0	V102			101-12	CVN 2
25	12	PL ¼ x 11	4'-4¼	W102			101-13	

TEXAS DEPARTMENT OF TRANSPORTATION
APPROVED
DIVISION OF BRIDGES AND STRUCTURES
DEC 16 1992
APPROVAL OF THIS DRAWING DOES NOT RELIEVE THE CONTRACTOR OF THE RESPONSIBILITY FOR THE CORRECTNESS OF DETAIL.

FOR APPROVAL
NOV 05 92
NOT FOR CONSTRUCTION

REVISION	DATE	DESCRIPTION OF REVISION
NO. 1		
NO. 2		
NO. 3		
NO. 4		
NO. 5		

PRINTING Reqd	For	Date
—	APV	11-5

Bolts Holes 1/16 Unless Noted
Shop Paint SEE SHT. GN1
Fab. Spec. A572-50 Inspection
Architect
Erection By Field Connections

HIRSCHFELD STEEL CO. INC.
112 WEST 29TH SAN ANGELO TEXAS 76903
PHONE (915) 653-3211

DESCRIPTION	102'-5 PLATE GIRDER UNIT
STRUCTURE	US 83/281 INTERCHANGE RAMP #3
LOCATION	HIDALGO COUNTY
CUSTOMER	GILBERT TEXAS CONSTRUCTION
SHIP TO	
Customer's Order No.	
Dwg. By JBE	Date 3/92
Checked By DLT	Date 9-92

SHEET 102 OF
JOB NO 92-108

CE 92-13

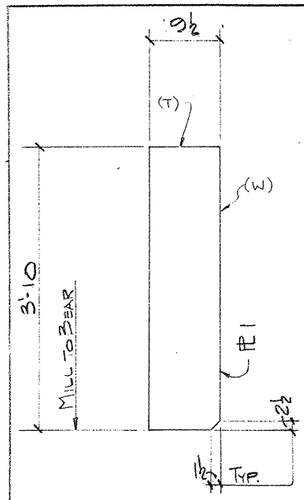

6 - PLATES ~ a101
(END BRG.)

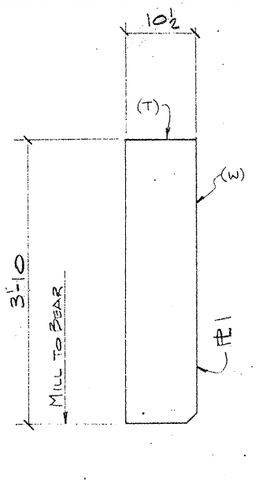

2 - PLATES ~ b101
(END BRG.)

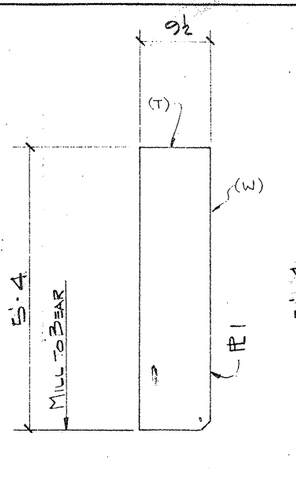

6 - PLATES ~ c101
(END BRG.)

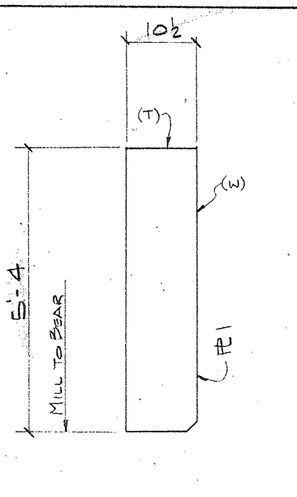

2 - PLATES ~ d101
(END BRG.)

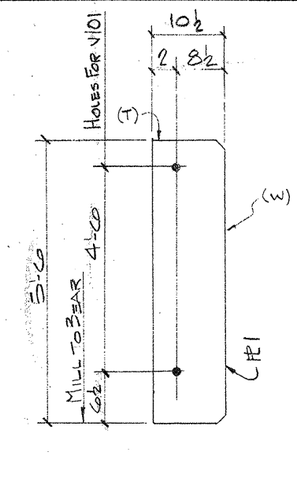

ONE - PLATES ~ e101
(INT. BRG.)

ONE - PLATE ~ V101 "AS NTD"
(INT. BRG.)

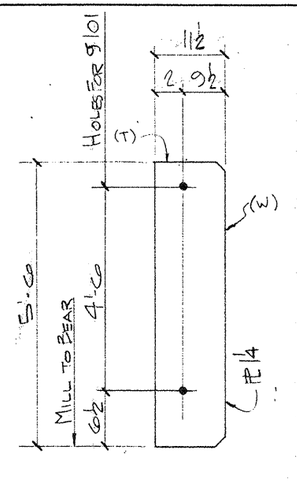

2 - PLATES ~ f101
(INT. BRG.)

ONE - PLATE g101 "AS NTD."
(INT. BRG.)

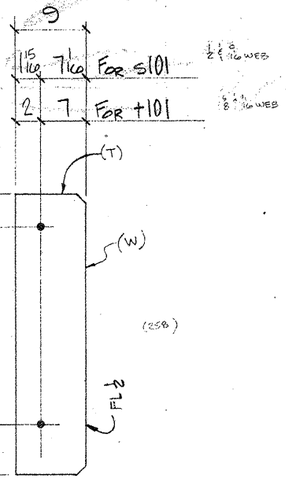

157 - PLATES ~ s101 "AS NTD"
(INT. STIFF)

101 - PLATES ~ t101 "AS NTD."
(INT. STIFF)

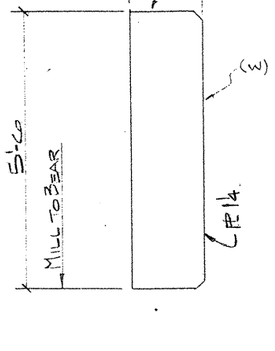

ONE - PLATE ~ h101
(INT. BRG.)

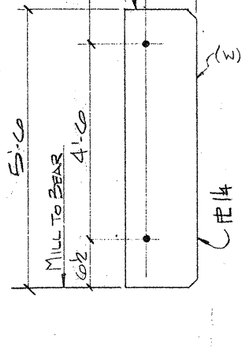

ONE - PLATE ~ k101
(INT. BRG.)

5 - PLATES ~ m101 "AS NTD."
(INT. BRG.)

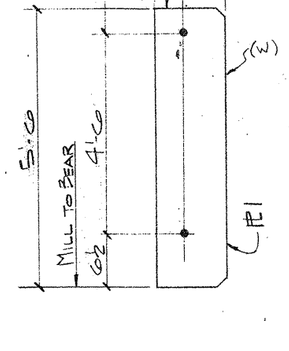

ONE - PLATE ~ n101
(INT. BRG.)

5 - PLATES ~ P101 "AS NTD."
(INT. BRG.)

SHOP NOTES:
1. FOR GENERAL NOTES: SEE SHT GN1.
2. (T) INDICATES "TOP"
3. (W) INDICATES "WEB"

Q0108

FED. ROAD DIV. NO.	STATE	FEDERAL AID PROJECT NO.				
6	TX.	NH 92(50)M				
STATE DIST. NO.	COUNTY	CONTROL NO.	SECTION NO.	JOB NO.	HIGHWAY NO.	
21	HIDALGO	39	17	97	83/281	

BILL OF MATERIAL

	Qnty	Material	Length	Mark Temp.	Mark Ship.	Wt.	Cut From	Remarks
3	6	PL 1 x 9½	3'-10	a101			114-1	
4	2	PL 1 x 10½	3'-10	b101			114-2	
5	6	PL 1 x 9½	5'-4	c101			114-3	
6	2	PL 1 x 10½	5'-4	d101			114-4	
7	ONE	PL 1 x 10½	5'-0	e101			114-6	
8	ONE	PL 1 x 10½	5'-0	v101			114-6	
9	2	PL ¼ x 11½	5'-0	f101			114-9	
10	ONE	PL ¼ x 11½	5'-0	g101			114-9	
11	ONE	PL ¼ x 13½	5'-0	h101			114-10	
12	ONE	PL ¼ x 9½	5'-0	k101			114-7	
13	5	PL ¼ x 9½	5'-0	m101			114-7	
14	ONE	PL 1 x 9½	5'-0	n101			114-5	
15	5	PL 1 x 9½	5'-0	P101			114-5	
16	157	FL ½ x 9	5'-0	s101			114-13	
17	101	FL ½ x 9	5'-0	t101			114-13	

FOR APPROVAL
NOV 06 '92
NOT FOR CONSTRUCTION

TEXAS DEPARTMENT OF TRANSPORTATION
APPROVED
DIVISION OF BRIDGES AND STRUCTURES
DEC 16 1992
APPROVAL OF THIS DRAWING DOES NOT RELIEVE THE CONTRACTOR OF THE RESPONSIBILITY FOR THE CORRECTNESS OF DETAIL

REVISION	DATE	DESCRIPTION OF REVISION
NO. 1		
NO. 2		
NO. 3		
NO. 4		
NO. 5		

PRINTING: Req'd | For | Date

Bolts: Holes STD Unless Noted
Shop Paint: SEE SHT GN1
Fab. Spec: A36 Inspection
Architect
Erection By: Field Connections

HIRSCHFELD STEEL CO. INC.
112 WEST 29TH SAN ANGELO TEXAS 76903
PHONE (915) 653-3211

DESCRIPTION	702'-3 PLATE GIRDER UNIT
STRUCTURE	US 83/281 INTERCHANGE RAMPS
LOCATION	HIDALGO COUNTY
CUSTOMER	GILBERT TEXAS CONSTRUCTION
SHIP TO	
Customer's Order No.	
Dwg. By JDC	Date 9/92
Checked By DLT	Date 9-92

SHEET 101 OF
JOB NO 92-108

APV 11-5

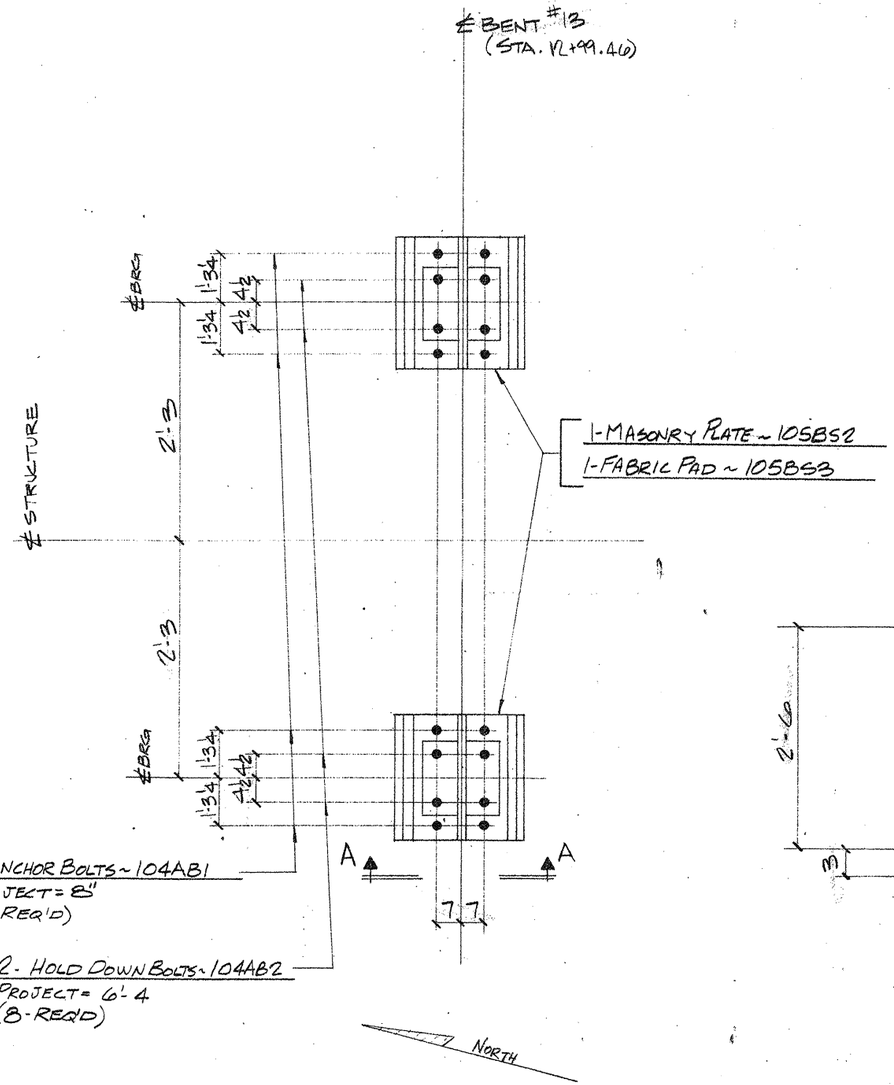

ANCHOR BOLT SETTING PLAN @ BENT #13

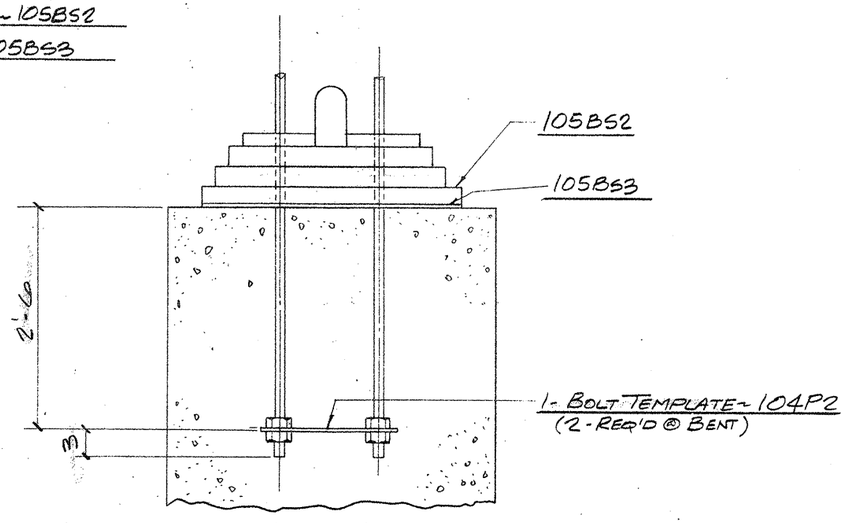

SECTION-A-A

FOR APPROVAL
NOV 05 '92
NOT FOR CONSTRUCTION

TEXAS DEPARTMENT OF TRANSPORTATION
APPROVED
DIVISION OF BRIDGES AND STRUCTURES
DEC 16 1992
APPROVAL OF THIS DRAWING DOES NOT RELIEVE THE CONTRACTOR OF THE RESPONSIBILITY FOR THE CORRECTNESS OF DETAIL.
APV TLS

FED ROAD DIV NO	STATE	FEDERAL AID PROJECT NO				
6	TX.	NH (50) M				
STATE DIST NO	COUNTY	CONTROL NO	SECT NO	JOB NO	HIGHWAY NO	
21	HIDALGO	39	17	97	83/281	

HOLES ___ U N	FOR AP'VL		
BOLTS ___ U N	RETURNED		
WELDS ___ U N	TO SHOP		
PAINT			

REVISIONS		
NO.	DATE	REMARKS
1		
2		
3		
4		

HIRSCHFELD STEEL CO. INC.
112 WEST 29TH SAN ANGELO, TEXAS 76903
PHONE (915) 653-3211

CUSTOMER GILBERT TEXAS CONSTRUCTION
ARCHITECT
PROJECT US 83/281 INTERCHANGE RAMP #3
LOCATION HIDALGO COUNTY
DRAWN TLE DATE 8/92
CHECKED DLT DATE 9/92
JOB NO. 92-108
SHEET NO. E103 of

CE92-13

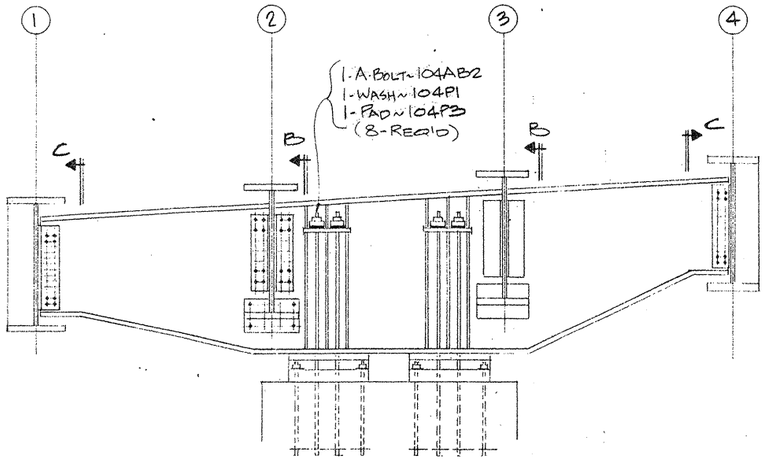

SECTION~A-A

GENERAL NOTES:

THE STEEL BENT CAP SHALL BE ERECTED WITH THE WEB SET VERTICAL AND ALL ANCHOR BOLTS UNIFORMLY TIGHTENED. ADJUSTMENT OF GIRDERS FOR PROPER SPLICE ALIGNMENT CAN BE MADE BY LOOSENING NUTS ON ONE SIDE OF THE CAP WHILE TIGHTENING NUTS ON THE OTHER SIDE BY AN EQUAL AMOUNT. AFTER THE SLAB AND RAIL HAVE BEEN PLACED AND DEAD LOAD DEFLECTION HAS OCCURRED, ALL ANCHOR BOLTS SHALL BE LOOSENED AND UNIFORMLY RETIGHTENED TO A SNUG FIT PLUS 1/4 TURN CONDITION.

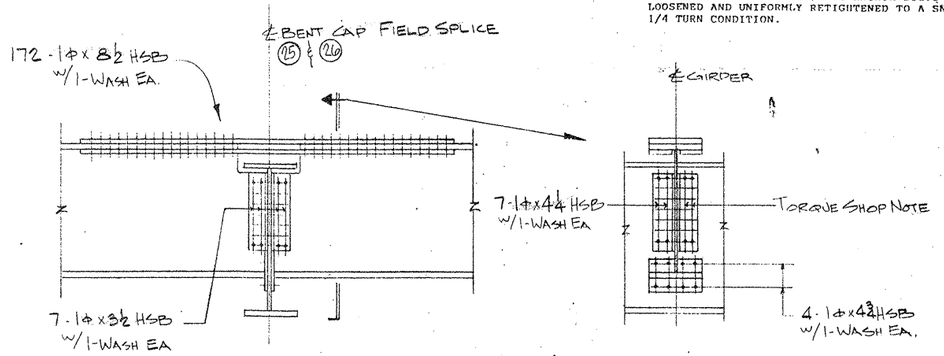

SECTION~B

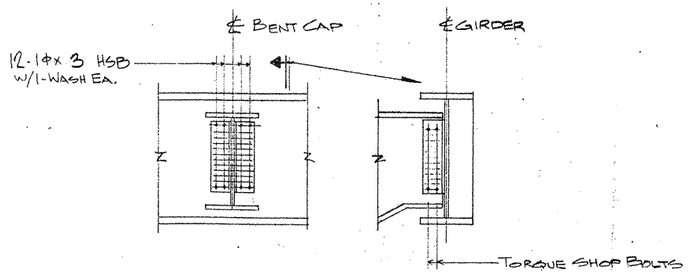

SECTION~C

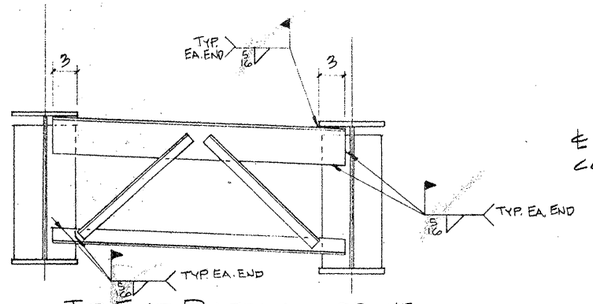

TYP. END DIAFRAMS @ BNT 12
(TYPE B)

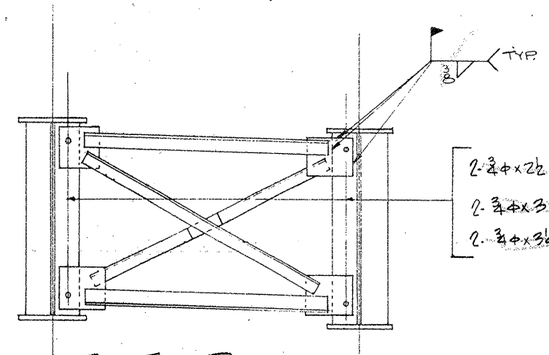

2-¾φ x 2½ A325 w/2-WASH. EA. (TYP. U.N.)
2-¾φ x 3 A325 w/2-WASH EA @ GIRD LINES (1) THRU (4) @ BENT 15
2-¾φ x 3¼ A325 w/2-WASH EA @ GIRD LINES (1) THRU (4) @ BENT 14

TYP. INT. DIAFRAMS

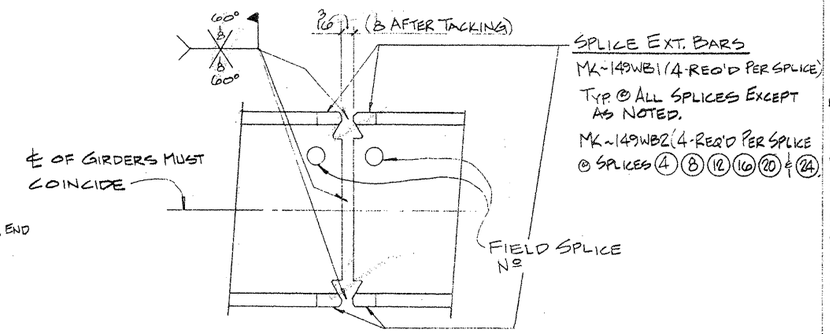

TYP. FIELD SPLICE DETAIL

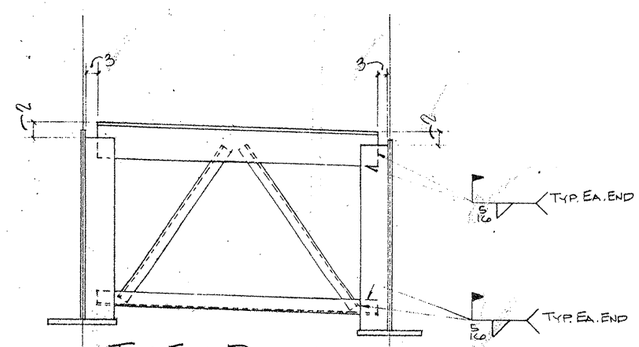

TYP. END DIAFRAM @ BNT 16
(TYPE B MOD.)

FOR APPROVAL
NOV 05 '92
NOT FOR CONSTRUCTION

NOTE: WORK THIS SHEET W/SHEET E101

TEXAS DEPARTMENT OF TRANSPORTATION
APPROVED
DIVISION OF BRIDGES AND STRUCTURES
DEC 16 1992
APPROVAL OF THIS DRAWING DOES NOT RELIEVE THE CONTRACTOR OF THE RESPONSIBILITY FOR THE CORRECTNESS OF DETAIL. APV 11-5

FED. ROAD DIV. NO.	STATE	FEDERAL AID PROJECT NO.			
6	TX.	NH 92(50)M			
STATE DIST. NO.	COUNTY	CONTROL NO.	SECTION NO.	JOB NO.	HIGHWAY NO.
21	HIDALGO	39	17	97	83/281

HOLES ____ U.N. FOR AP'VL ____
BOLTS ____ U.N. RETURNED ____
WELDS ____ U.N. TO SHOP ____
PAINT ____

REVISIONS

NO	DATE	REMARKS
1		
2		
3		
4		

HIRSCHFELD STEEL CO. INC.
112 WEST 29TH SAN ANGELO, TEXAS 76903
PHONE (915) 653-3211

CUSTOMER GILBERT TEXAS CONSTRUCTION
ARCHITECT
PROJECT US 83/281 INTERCHANGE RAMP #3
LOCATION HIDALGO COUNTY

DRAWN JDL DATE 9/92
CHECKED DLT DATE 9/92
JOB NO 92-108
SHEET NO E102 of

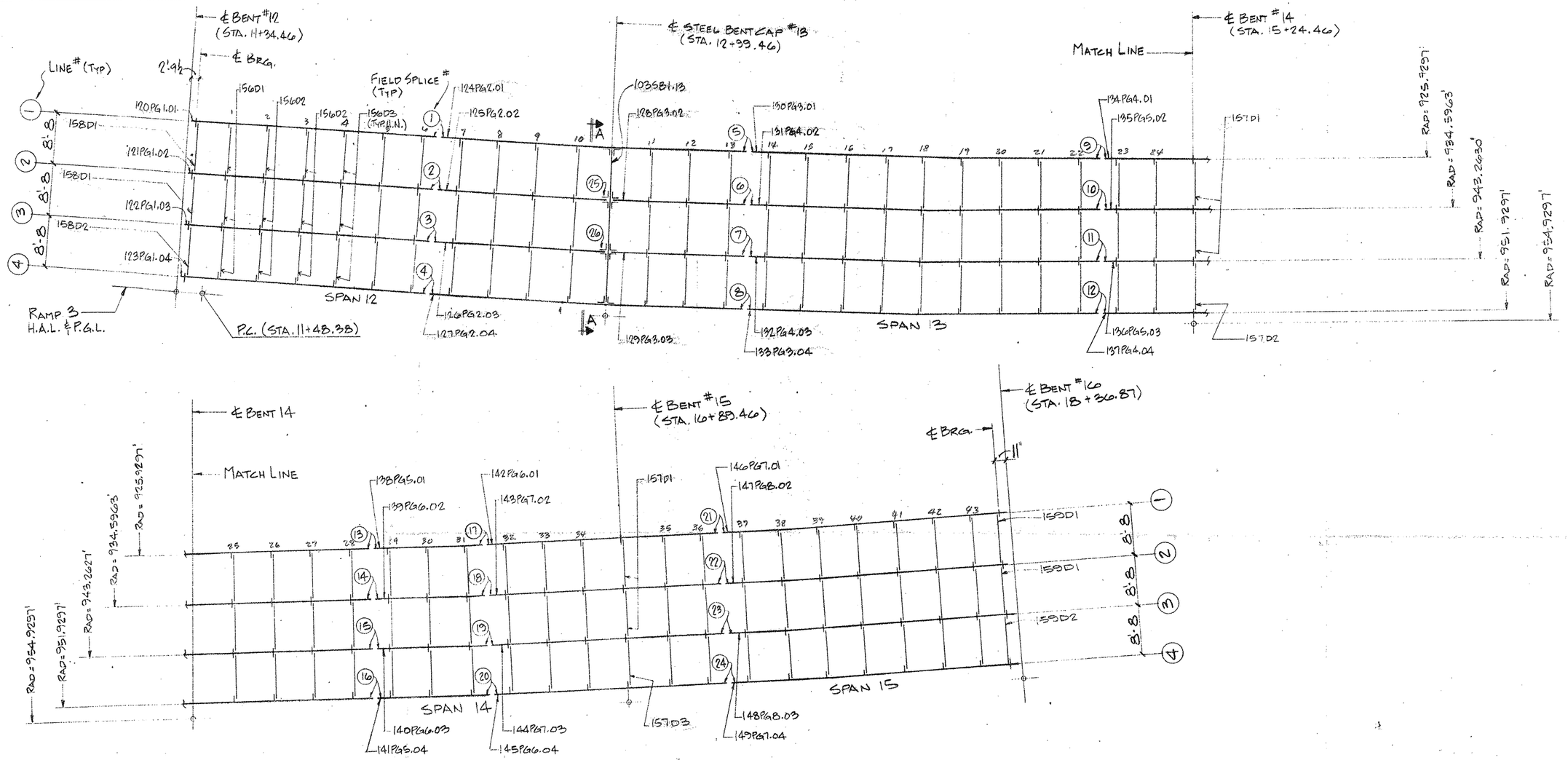

NORTH

FRAMING PLAN
(UNIT NºS RAMP 3)

SHEET # 120 PG 1 .01 — LINE # OR BENT #; GIRDER #; PLATE GIRDER OR STEEL BENT (SB)

GIRDER SHIPPING MARK LEGEND

FOR APPROVAL
NOV 05 '92
NOT FOR CONSTRUCTION

NOTE: WORK THIS SHEET W/SHEET E102.

TEXAS DEPARTMENT OF TRANSPORTATION
APPROVED
DIVISION OF BRIDGES AND STRUCTURES
DEC 16 1992
APPROVAL OF THIS DRAWING DOES NOT RELIEVE THE CONTRACTOR OF THE RESPONSIBILITY FOR THE CORRECTNESS OF DETAIL.
APV 11-5

FED. ROAD DIV. NO	STATE	FEDERAL AID PROJECT NO.			
6	TX.	NH 92(50)M			
STATE DIST. NO.	COUNTY	CONTROL NO.	SECTION NO.	JOB NO	HIGHWAY NO.
21	HIDALGO	39	17	97	83/281

HOLES ___ U.N.	FOR APVL		
BOLTS ___ U.N.	RETURNED		
WELDS ___ U.N.	TO SHOP		
PAINT			

HIRSCHFELD STEEL CO. INC.
112 WEST 29TH SAN ANGELO, TEXAS 76903
PHONE (915) 653-3211

REVISIONS		
NO	DATE	REMARKS
1		
2		
3		
4		

CUSTOMER: GILBERT TEXAS CONSTRUCTION
ARCHITECT:
PROJECT: US 83/281 INTERCHANGE RAMP #3
LOCATION: HIDALGO COUNTY
DRAWN JRL DATE 9/92 — JOB NO 92-108 — SHEET NO ___ of E101
CHECKED DLT DATE 9/92

CE 92-13

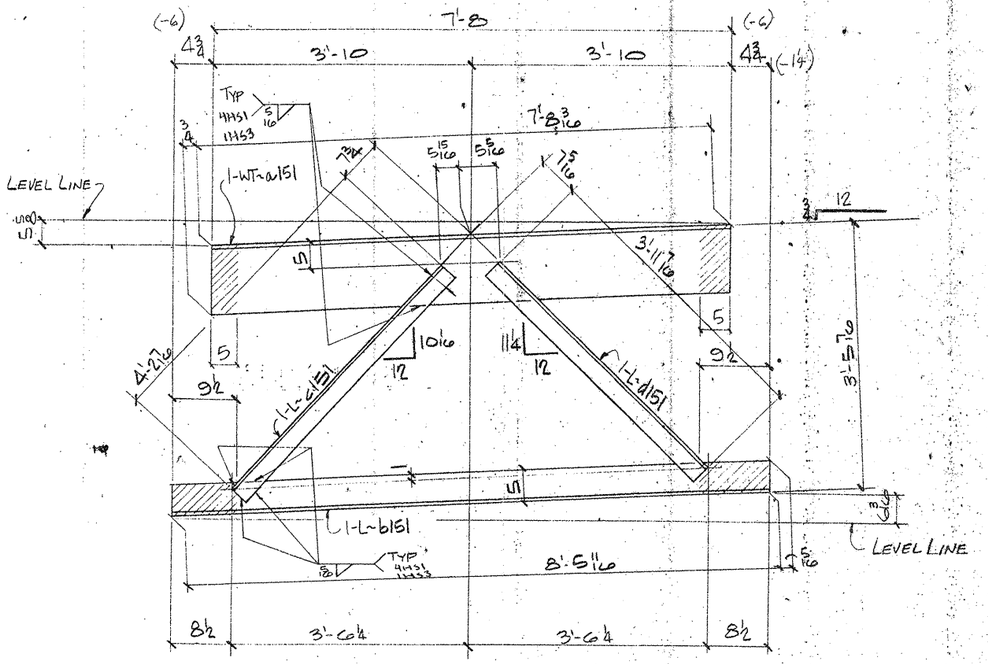

3 - END DIAFRAMS 151D1

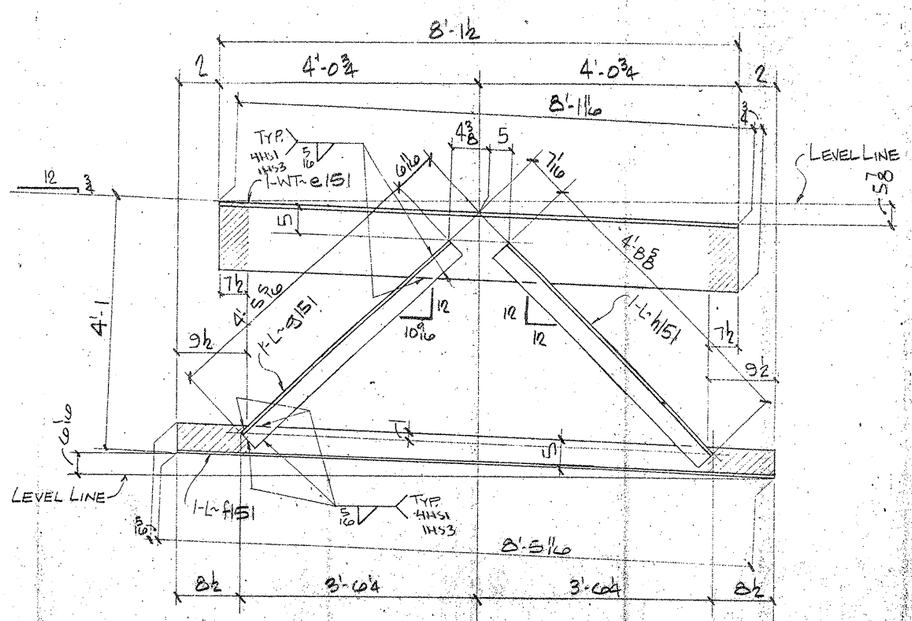

3 - END DIAFRAMS 151D2

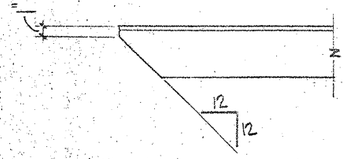

TYP CLIP ON ALL OUTSTANDING ANGLE LEGS

NOTES:
1. FOR GENERAL NOTES SEE SHT. GN1
2. ▨ INDICATES OIL, NO PAINT (N.S./F.S. & EDGES)

BILL OF MATERIAL

	Qnty	Material	Length	Mark Temp	Mark Ship	Wt	Cut From	Remarks
4	3	DIAFRAMS			151D1			
5	3	WT 12 x 42	7'-8 15/16	a151			115-2	
6	3	L5 x 3½ x 3/8	8'-6	b151			115-4	
7	3	L3½ x 3½ x 3/8	4'-2 7/16	c151			115-6	
8	3	L3½ x 3½ x 3/8	3'-11 7/16	d151			115-6	
15	3	DIAFRAMS			151D2			
16	3	WT12 x 42	8'-2 7/16	e151			115-3	
17	3	L5 x 3½ x 3/8	8'-6	f151			115-4	
18	3	L3½ x 3½ x 3/8	4'-5 5/16	g151			115-5	
19	3	L3½ x 3½ x 3/8	4'-8 5/8	h151			115-5	
41		FIELD BOLT LIST		(0% ADDED)			A325	TY 1
42	429	HS BOLT ¾		0'-2½			114-2	
43	12	HS BOLT ¾		0'-3			114-3	
44	17	HS BOLT ¾		0'-3¼			114-4	
45	916	HS WASH ¾					114-5	
47	77	HS BOLT 1		0'-2 3/4			114-7	
48	44	HS BOLT 1		0'-3½			114-8	
49	23	HS BOLT 1		0'-4			114-9	
50	19	HS BOLT 1		0'-4½			114-10	
51	254	HS BOLT 1		0'-7½			114-11	
52	417	HS WASH 1					114-12	

TEXAS DEPARTMENT OF TRANSPORTATION
APPROVED
DIVISION OF BRIDGES AND STRUCTURES
DEC 08 1992
APPROVAL OF THIS DRAWING DOES NOT RELIEVE THE CONTRACTOR OF THE RESPONSIBILITY FOR THE CORRECTNESS OF DETAIL

FOR APPROVAL
OCT 27 '92
NOT FOR CONSTRUCTION

REVISION	DATE	DESCRIPTION OF REVISION
NO. 1		
NO. 2		
NO. 3		
NO. 4		
NO. 5		

PRINTING: Reqd | For | Date

Bolts: Holes: Unless Noted
Shop Paint SEE SHEET GN1
Fab Spec A36, Inspection
Architect
Erection By Field Connections

HIRSCHFELD STEEL CO. INC.
112 WEST 29TH SAN ANGELO, TEXAS 76903
PHONE (915) 653-3211

DESCRIPTION 584'-0 PLATE GIRDER UNIT
STRUCTURE US 83/281 INTERCHANGE RAMP #2
LOCATION HIDALGO COUNTY
CUSTOMER GILBERT TEXAS CONSTRUCTION
SHIP TO
Customer's Order No.
Dwg. By JRE Date 8/92
Checked By DLT Date 8/92
SHEET 15 OF
JOB NO. 92-10

FED. ROAD DIV. NO. 6 | STATE TX. | FEDERAL AID PROJECT NO. NH92(50)M | HIGHWAY NO. 83/281
STATE DIST. NO. 21 | COUNTY HIDALGO | CONTROL NO. 39 | SECTION NO. 17 | JOB NO. 97

F0107

CE 92-12

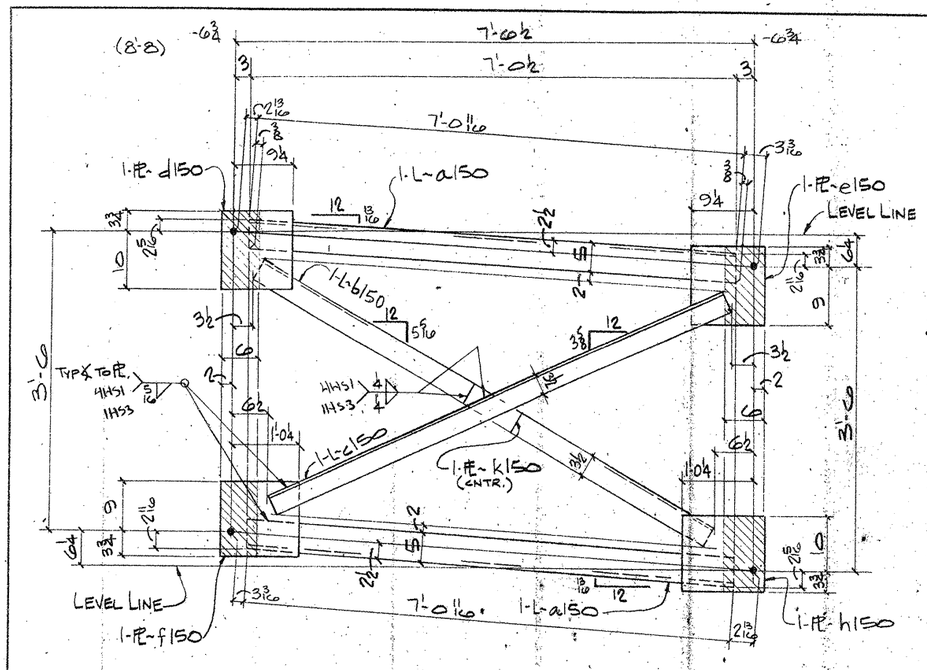

104 - DIAFRAMS~150D1

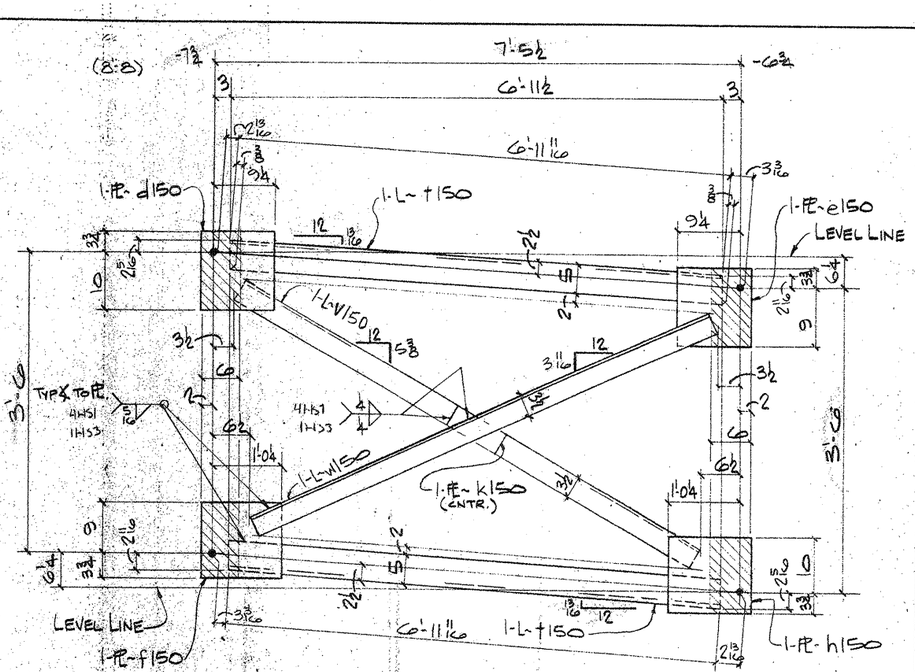

ONE - DIAFRAMS~150D3

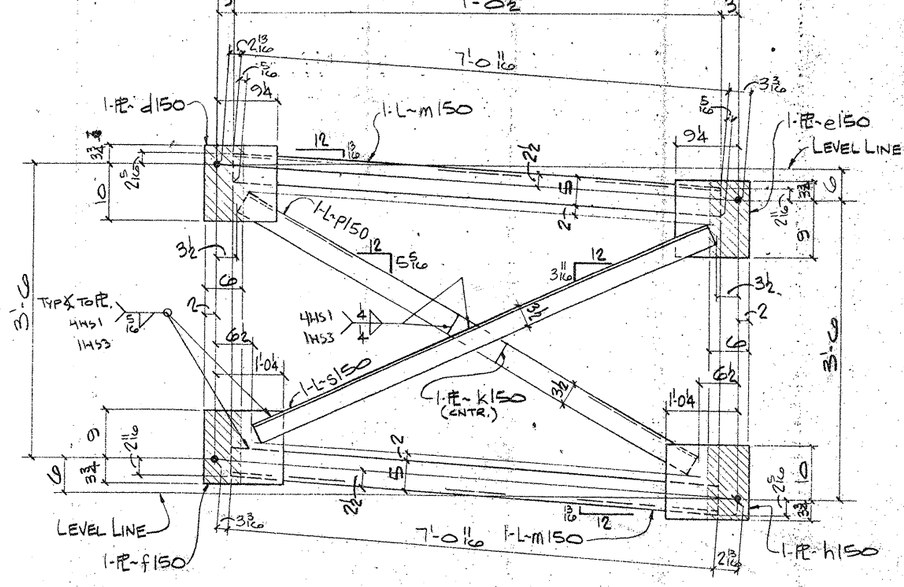

6 - DIAFRAMS~150D2

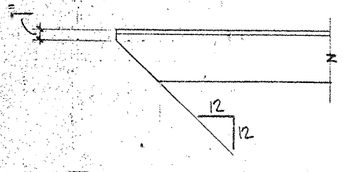

TYP. CLIP ON ALL OUTSTANDING ANGLE LEGS

NOTES:

1. FOR GENERAL NOTES SEE SHT. GN1
2. ▨ INDICATES OIL, NO PAINT (N.S./F.S. & EDGES)

BILL OF MATERIAL

	Qnty	Material	Length	Mark Temp.	Mark Ship.	Wt.	Cut From	Remarks
3	104	DIAFRAM			150D1			
4	208	L5x3½x½	7'-11/16	a150			115-10	
5	104	L5x3½x½	7'-2 9/16	b150			115-11	
6	104	L5x3½x½	6'-11 1/16	c150			115-11	
7	104	PL½x11¼	1'-1¾	d150			115-12	
8	104	PL½x11¼	1'-0¾	e150			115-13	
9	104	PL½x12¾	1'-2¼	f150			115-14	
10	104	PL½x13¾	1'-2¼	h150			115-16	
11	104	FL½x3½	0'-11	k150			115-16	
19	6	DIAFRAM			150D2			
20	12	L5x3½x½	7'-1	m150			115-10	
21	6	L5x3½x½	7'-2 7/16	p150			115-11	
22	6	L5x3½x½	6'-11⅜	s150			115-11	
23	6	PL½x11¼	1'-1¾	d150			115-12	
24	6	PL½x11¼	1'-0¾	e150			115-13	
25	6	PL½x12¾	1'-2¼	f150			115-14	
26	6	PL½x13¾	1'-2¼	h150			115-15	
27	6	FL½x3½	0'-11	k150			115-16	
35	ONE	DIAFRAM			150D3			
36	2	L5x3½x½	7'-0 1/16	t150			115-10	
37	ONE	L5x3½x½	7'-1 5/8	v150			115-11	
38	ONE	L5x3½x½	6'-10 1/16	w150			115-11	
39	ONE	PL½x11¼	1'-1¾	d150			115-12	
40	ONE	PL½x11¼	1'-0¾	e150			115-13	
41	ONE	PL½x12¾	1'-2¼	f150			115-14	
42	ONE	PL½x13¾	1'-2¼	h150			115-15	
43	ONE	FL½x3½	0'-11	k150			115-16	

TEXAS DEPARTMENT OF TRANSPORTATION
APPROVED
DIVISION OF BRIDGES AND STRUCTURES
DEC 08 1992
APPROVAL OF THIS DRAWING DOES NOT RELIEVE THE CONTRACTOR OF THE RESPONSIBILITY FOR THE CORRECTNESS OF DETAIL

FOR APPROVAL
OCT 27 '92
NOT FOR CONSTRUCTION

REVISION	DATE	DESCRIPTION OF REVISION
NO. 1		
NO. 2		
NO. 3		
NO. 4		
NO. 5		

PRINTING

Reqd	For	Date

Bolts: Holes 15/16ø Unless Noted
Shop Paint: SEE SHT GN1
Fab Spec: A36 Inspection
Architect
Erection By: Field Connections

HIRSCHFELD STEEL CO. INC.
112 WEST 29TH SAN ANGELO, TEXAS 76903
PHONE (915) 653-3211

DESCRIPTION	5840 PLATE GIRDER UNIT
STRUCTURE	US 83/281 INTERCHANGE RAMP #2
LOCATION	HIDALGO COUNTY
CUSTOMER	GILBERT TEXAS CONSTRUCTION
SHIP TO	
Customer's Order No	
Dwg By: JDV	Date 8/92
Checked By DLT	Date 8/92

SHEET 50 OF
JOB NO 92-107

F0107

FED. ROAD DIV. NO.	STATE	FEDERAL AID PROJECT NO.			
6	TX.	NH92 (50) M			
STATE DIST. NO.	COUNTY	CONTROL NO.	SECTION NO.	JOB NO.	HIGHWAY NO.
21	HIDALGO	39	17	97	83/281

CE 92-12

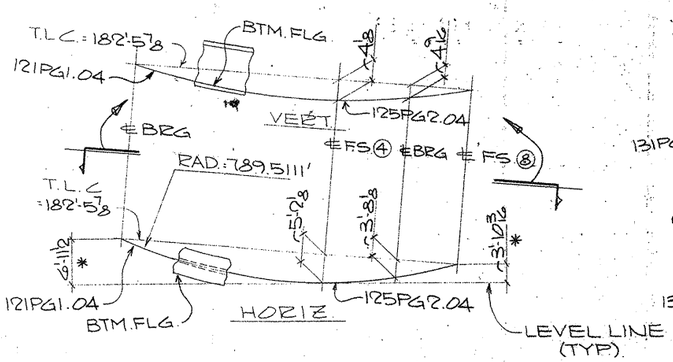

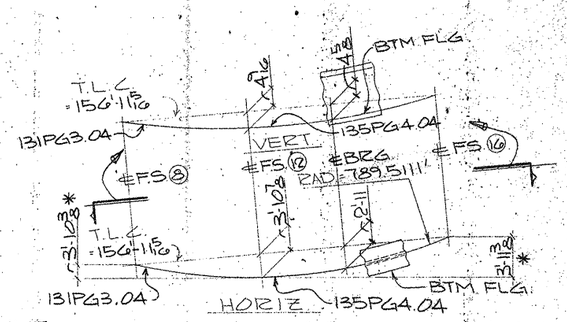

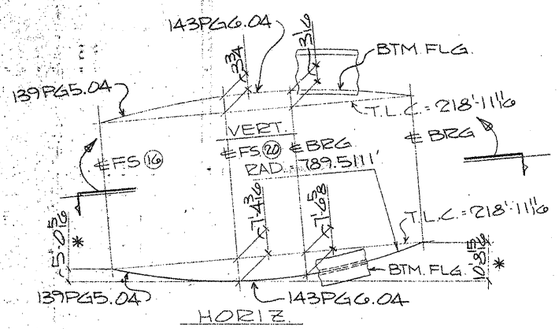

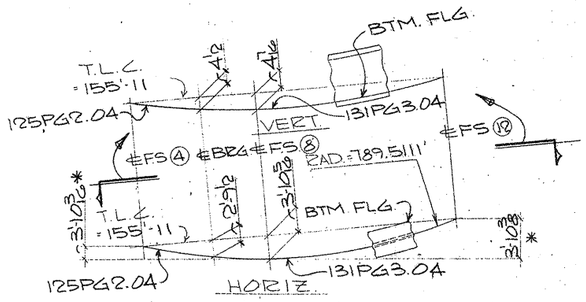

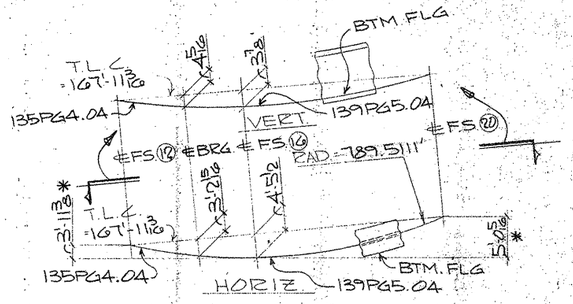

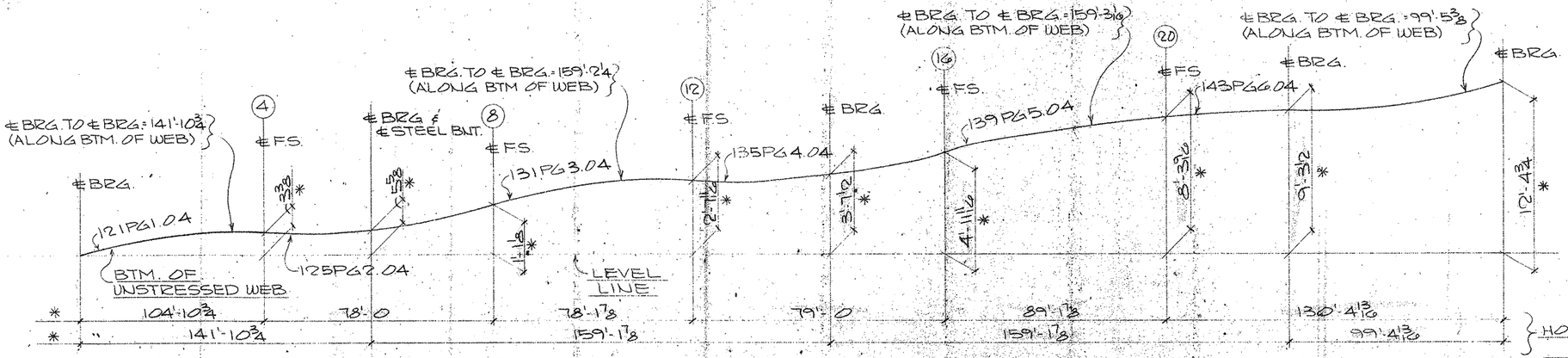

VERTICAL BLOCKING DIAGRAM
(LINE #4)

TEXAS DEPARTMENT OF TRANSPORTATION
APPROVED
DIVISION OF BRIDGES AND STRUCTURES
DEC 08 1992
APPROVAL OF THIS DRAWING DOES NOT RELIEVE THE CONTRACTOR OF THE RESPONSIBILITY FOR THE CORRECTNESS OF DETAIL.

FOR APPROVAL
OCT 27 '92
NOT FOR CONSTRUCTION

NOTES:
1. T.L.C. = TRUE LENGTH CHORD.
2. DIMENSIONS ARE GIVEN ALONG OR NORMAL TO THE TRUE LENGTH CHORD UNL. NTD.
3. DIMENSIONS NOTED * ARE GIVEN ALONG OR NORMAL TO THE LEVEL LINE.
4. FOR GENERAL NOTES SEE SHT. GN1.

FED. ROAD DIV. NO.	STATE	FEDERAL AID PROJECT NO.				
6	TX.	NH92 (50) M				
STATE DIST. NO.	COUNTY	CONTROL NO.	SECTION NO.	JOB NO.	HIGHWAY NO.	
21	HIDALGO	39	17	97	83/281	

HOLES ___ U.N.	FOR APVL.
BOLTS ___ U.N.	RETURNED
WELDS ___ U.N.	TO SHOP
PAINT	

APV 10-27

HIRSCHFELD STEEL CO. INC.
112 WEST 29TH SAN ANGELO, TEXAS 76903
PHONE (915) 653-3211

REVISIONS		
NO.	DATE	REMARKS
1		
2		
3		
4		

CUSTOMER GILBERT TEXAS CONSTRUCTION
ARCHITECT
PROJECT US 83/281 INTERCHANGE RAMP "S"
LOCATION HIDALGO COUNTY

DRAWN CRT DATE 8-92 | JOB NO. 92-107 | SHEET NO. 149 of
CHECKED DMG DATE 9-9-92

CE 92-12 (LINE #4)

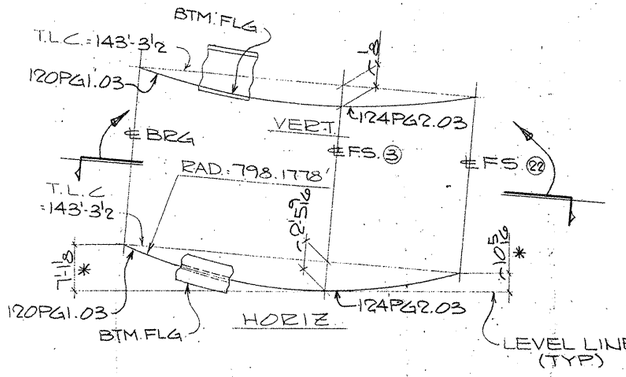

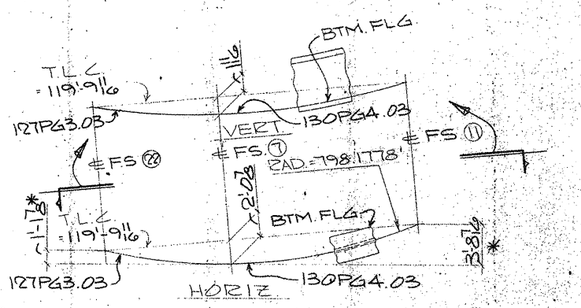

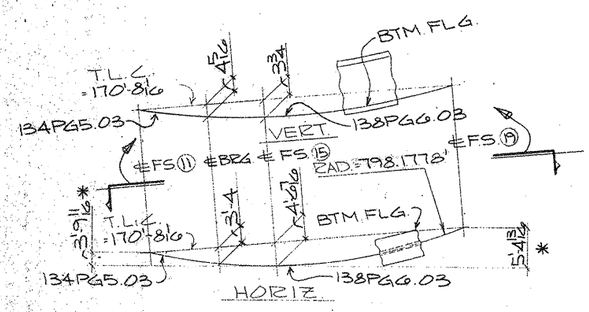

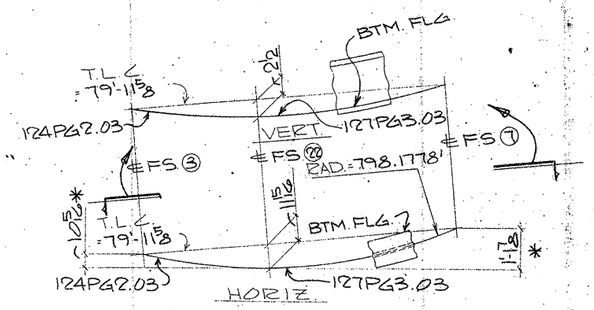

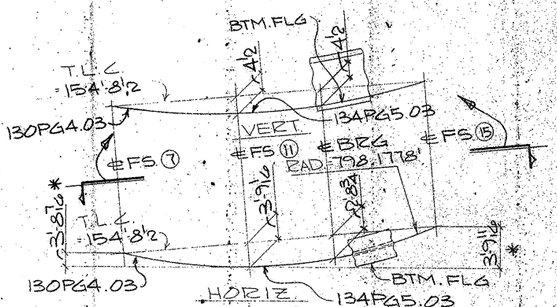

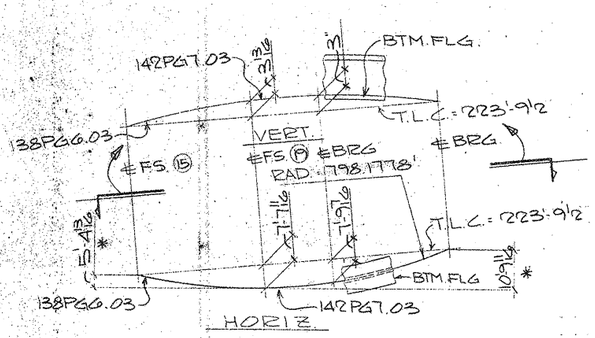

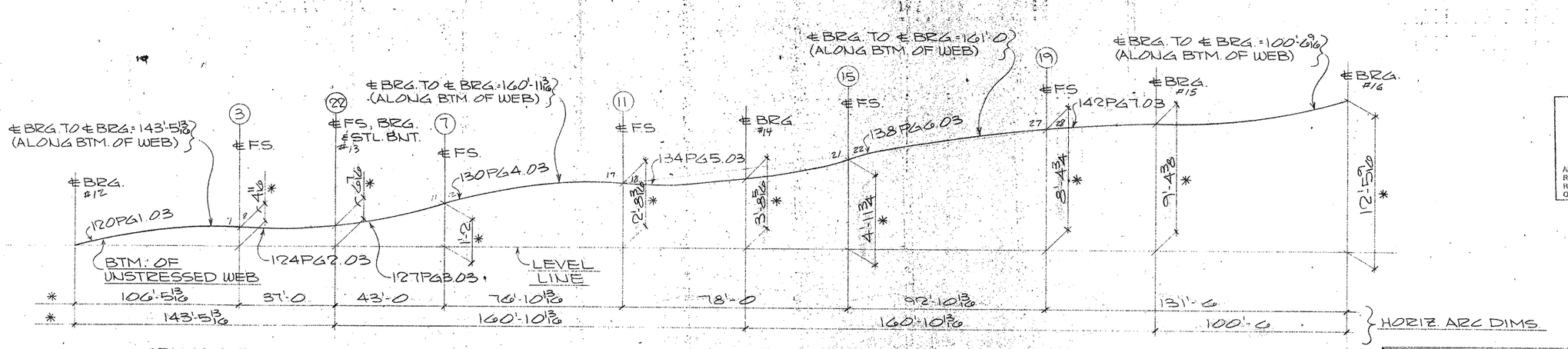

VERTICAL BLOCKING DIAGRAM
(LINE #3)

TEXAS DEPARTMENT OF TRANSPORTATION
APPROVED
DIVISION OF BRIDGES AND STRUCTURES
DEC 08 1992
APPROVAL OF THIS DRAWING DOES NOT RELIEVE THE CONTRACTOR OF THE RESPONSIBILITY FOR THE CORRECTNESS OF DETAIL.

FOR APPROVAL
OCT 27 '92
NOT FOR CONSTRUCTION

NOTES:
1. T.L.C.= TRUE LENGTH CHORD.
2. DIMENSIONS ARE GIVEN ALONG OR NORMAL TO THE TRUE LENGTH CHORD UNL. NTD.
3. DIMENSIONS NOTED * ARE GIVEN ALONG OR NORMAL TO THE LEVEL LINE.
4. FOR GENERAL NOTES SEE SHT. GN1.
5 SEE SHT. #147 FOR MATCH MARRING AT SPLICE #22

FED. ROAD DIV. NO.	STATE	FEDERAL AID PROJECT NO.				
6	TX.	NH92 (50) M				
STATE DIST. NO.	COUNTY	CONTROL NO.	SECTION NO.	JOB NO.	HIGHWAY NO.	
21	HIDALGO	39	17	97	83/281	

NO.	DATE	REMARKS
1		
2		
3		
4		

HOLES ____ U.N. FOR AP'VL ____
BOLTS ____ U.N. RETURNED ____
WELDS ____ U.N. TO SHOP ____
PAINT ____

APV 12-2-9

HIRSCHFELD STEEL CO. INC.
112 WEST 29TH SAN ANGELO, TEXAS 76903
PHONE (915) 653-3211

CUSTOMER GILBERT TEXAS CONSTRUCTION
ARCHITECT
PROJECT US 83/281 INTERCHANGE RAMP #2
LOCATION HIDALGO COUNTY

DRAWN CRT DATE 8.92 | JOB NO. 92-107 | SHEET NO. 148 of
CHECKED DATE 9.8.92

CE 92-12 (LINE 3)

a b c d e f g h i j k l m n o p q r s t u v w x y z

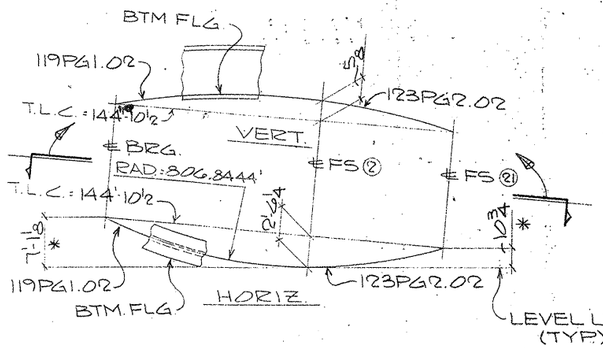

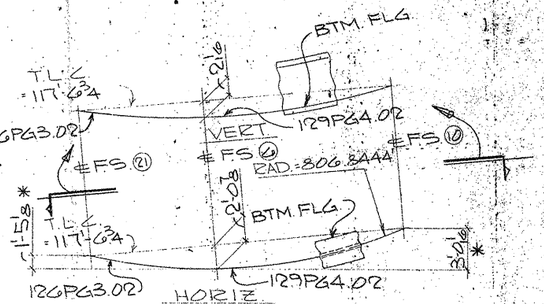

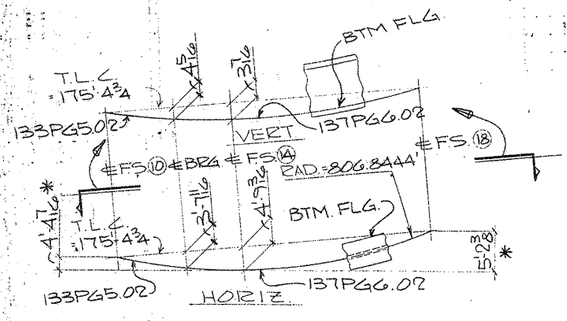

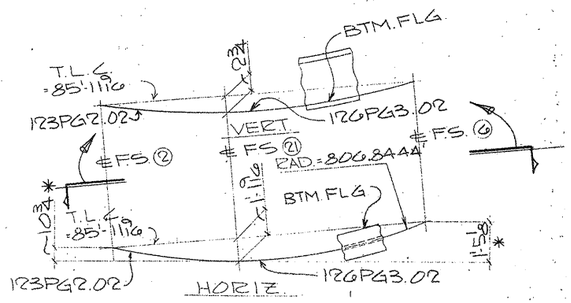

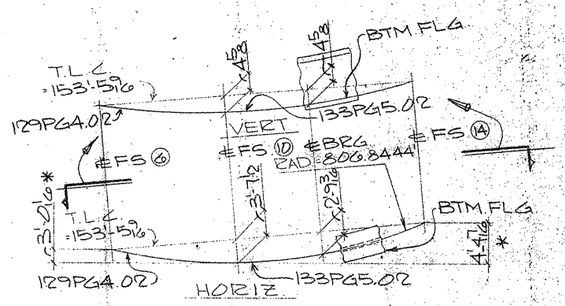

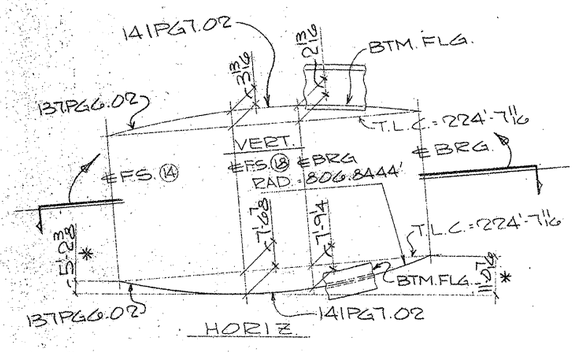

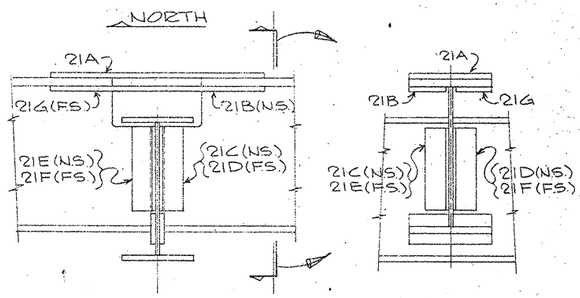

DETAIL OF FIELD SPLICE ㉑

FIELD SPLICES MARKED THUS ㉑ ARE MATCHMARKS. ALL GIRDERS TO BE ERECTED WITH MATCHING MARKS AS SHOWN. FOR FIELD SPLICES ㉑ & ㉒ ONLY.

FOR APPROVAL

OCT 27 '92

NOT FOR CONSTRUCTION

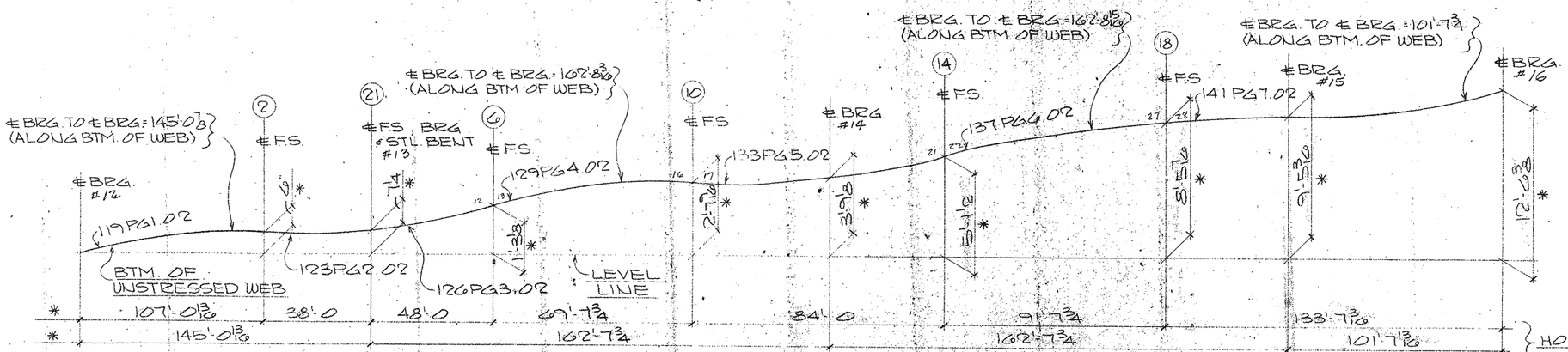

VERTICAL BLOCKING DIAGRAM (LINE #2)

TEXAS DEPARTMENT OF TRANSPORTATION
APPROVED
DIVISION OF BRIDGES AND STRUCTURES
DEC 08 1992
APPROVAL OF THIS DRAWING DOES NOT RELIEVE THE CONTRACTOR OF THE RESPONSIBILITY FOR THE CORRECTNESS OF DETAIL.

NOTES:
1. T.L.C.= TRUE LENGTH CHORD.
2. DIMENSIONS ARE GIVEN ALONG OR NORMAL TO THE TRUE LENGTH CHORD UNL. NTD.
3. DIMENSIONS NOTED ✳ ARE GIVEN ALONG OR NORMAL TO THE LEVEL LINE.
4. FOR GENERAL NOTES SEE SHT. GN1.

FED. ROAD DIV. NO.	STATE	FEDERAL AID PROJECT NO.				
6	TX.	NH92 (50) M				
STATE DIST. NO.	COUNTY	CONTROL NO.	SECTION NO.	JOB NO.	HIGHWAY NO.	
21	HIDALGO	39	17	97	83/281	

HOLES ____ U.N. FOR AP'VL
BOLTS ____ U.N. RETURNED
WELDS ____ U.N. TO SHOP
PAINT

APV 10-27

MIRSCHFELD STEEL CO. INC.
312 WEST 29TH SAN ANGELO, TEXAS 76903
PHONE (915) 653-3211

REVISIONS		
NO.	DATE	REMARKS
1		
2		
3		
4		

CUSTOMER GILBERT TEXAS CONSTRUCTION
ARCHITECT
PROJECT US 83/281 INTERCHANGE RAMP #2
LOCATION HIDALGO COUNTY
DRAWN CRT DATE 8-92
CHECKED [illegible] DATE 9.8.92
JOB NO 92-107
SHEET NO 147 of

CE 92-12 (LINE #2)

a b c d e f g h i j k l m n o p q r s t u v w x y z

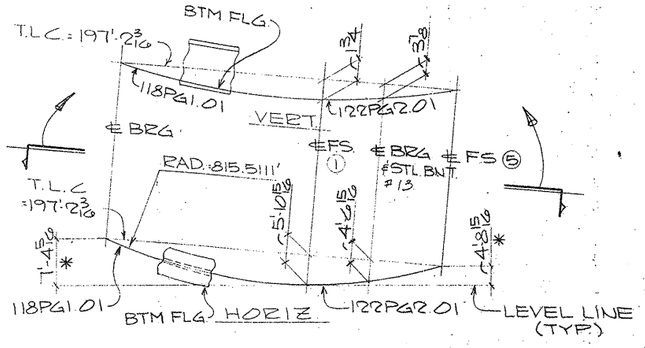

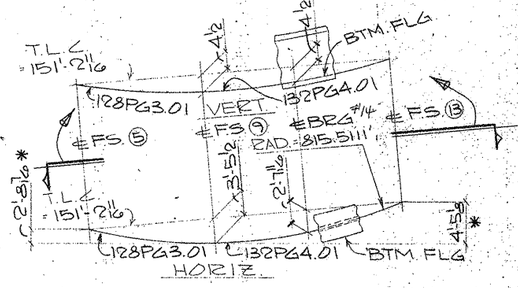

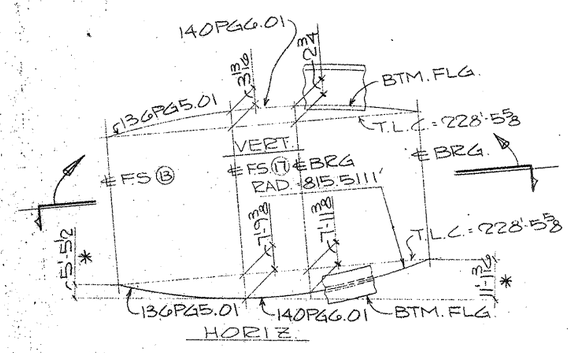

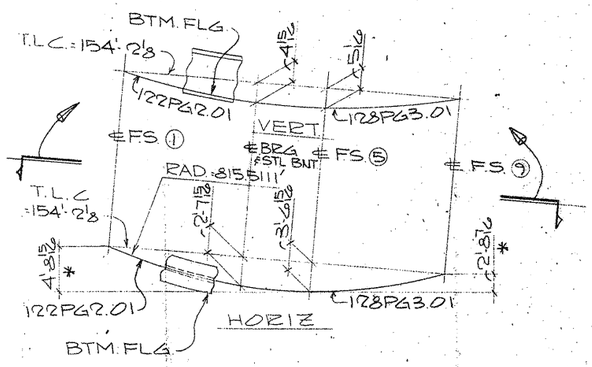

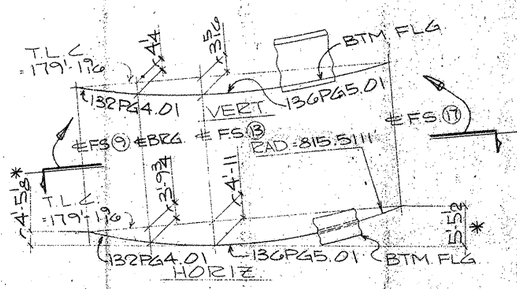

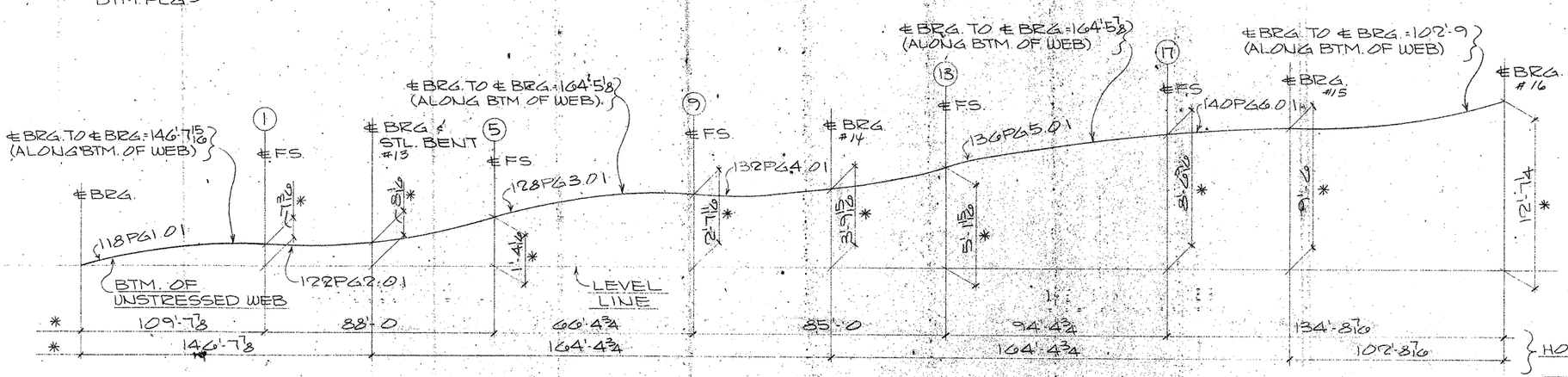

VERTICAL BLOCKING DIAGRAM (LINE # 1)

TEXAS DEPARTMENT OF TRANSPORTATION
APPROVED
DIVISION OF BRIDGES AND STRUCTURES
DEC 08 1992
APPROVAL OF THIS DRAWING DOES NOT RELIEVE THE CONTRACTOR OF THE RESPONSIBILITY FOR THE CORRECTNESS OF DETAIL.

FOR APPROVAL
OCT 27 '92
NOT FOR CONSTRUCTION

NOTES:
1. T.L.C.= TRUE LENGTH CHORD.
2. DIMENSIONS ARE GIVEN ALONG OR NORMAL TO THE TRUE LENGTH CHORD UNL. NTD.
3. DIMENSIONS NOTED ✱ ARE GIVEN ALONG OR NORMAL TO THE LEVEL LINE.
4. FOR GENERAL NOTES SEE SHT. GN1.

APV 10-27

FED. ROAD DIV. NO.	STATE	FEDERAL AID PROJECT NO.				
6	TX.	NH92 (50) M				
STATE DIST. NO.	COUNTY	CONTROL NO.	SECTION NO.	JOB NO.	HIGHWAY NO.	
21	HIDALGO	39	17	97	83/281	

HOLES ____ U.N.	FOR AP'VL ____
BOLTS ____ U.N.	RETURNED ____
WELDS ____ U.N.	TO SHOP ____
PAINT ____	

REVISIONS		
NO	DATE	REMARKS
1		
2		
3		
4		

HIRSCHFELD STEEL CO. INC.
112 WEST 29TH SAN ANGELO, TEXAS 76903
PHONE (915) 653-3211

CUSTOMER GILBERT TEXAS CONSTRUCTION
ARCHITECT
PROJECT US 83/281 INTERCHANGE RAMP #2
LOCATION HIDALGO COUNTY

DRAWN CRT DATE 8-92 | JOB NO 92-107 | SHEET NO. 146 of ____
CHECKED DATE 9-8-92

CF 92-12 LINE-1

a b c d e f g h i j k l m n o p q r s t u v w x y z

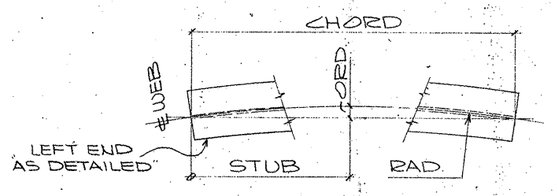

HEAT CURVE DIAGRAM
(ALONG TOP FLG.)

THIS SHEET NOT
DETAIL CHECKED

	STUB	5'-0	10'-0	15'-0	20'-0	25'-0	30'-0	35'-0	40'-0	45'-0	50'-0	55'-0	60'-0	65'-0	70'-0	75'-0	80'-0	85'-0	90'-0	CHORD	RADIUS
CORD	132PG4.01	2 15/16	5 1/2	7 3/4	9 9/16	11 1/16	1'-0 3/8	1'-0 7/8	1'-1 1/4	1'-1 1/4	1'-0 7/8	1'-0 3/8	11 1/16	9 9/16	7 3/4	5 1/2	2 15/16	-	-	84'-1 7/8	815.5111'
	133PG5.02	2 15/16	5 1/2	7 1/16	9 1/2	11"	1'-0 1/16	1'-0 3/4	1'-1 1/16	1'-1 1/16	1'-0 5/8	11 3/8	10 1/16	9 3/16	7 5/16	5	2 3/8	-	-	83'-11 3/8	806.8444
	134PG5.03	2 3/4	5 1/8	7 1/8	8 3/4	9 15/16	10 13/16	11 5/16	11 7/16	11 3/16	10 1/2	9 1/2	8 1/8	6 3/8	4 3/16	1 11/16	-	-	-	77'-11 3/8	798.1778
	135PG4.04	2 15/16	5 1/4	7 5/16	9	10 1/4	11 3/16	11 1/16	11 1/8	11 5/8	11"	10 1/16	8 1/16	6 1/8	4 1/8	2 1/4	-	-	-	78'-11 5/8	789.5111'
	136PG5.01	3 5/16	6 3/16	8 3/4	10 1/8	1'-0 3/4	1'-2 1/4	1'-3 5/16	1'-4	1'-4 3/8	1'-4 3/8	1'-3 15/16	1'-3 5/16	1'-2 1/16	1'-0 1/16	10 1/16	8 1/2	5 7/8	2 15/16	94'-4 1/16	815.5111'
	137PG6.02	3 1/4	6 1/16	8 9/16	10 1/16	1'-0 3/8	1'-1 3/4	1'-2 3/4	1'-3 3/8	1'-3 5/8	1'-3 1/2	1'-3	1'-2 1/8	1'-0 7/8	11 1/4	9 5/16	6 15/16	4 3/16	1 1/8	91'-7 13/16	806.8444
	138PG6.03	3 5/16	6 1/4	8 1/16	11"	1'-0 3/4	1'-2 3/16	1'-3 1/4	1'-3 15/16	1'-4 3/16	1'-4 1/8	1'-3 11/16	1'-2 1/8	1'-1 5/8	1'-0 1/16	10 1/8	7 3/4	5 1/16	1 15/16	92'-10 3/16	798.1778
	139PG5.04	3 3/16	6	8 1/16	10 1/2	1'-0 3/16	1'-1 1/2	1'-2 1/16	1'-2 1/16	1'-3 1/8	1'-2 1/8	1'-2 5/16	1'-1 5/16	11 15/16	10 3/16	8 1/16	5 1/16	2 1/16	-	89'-1 7/8	789.5111'

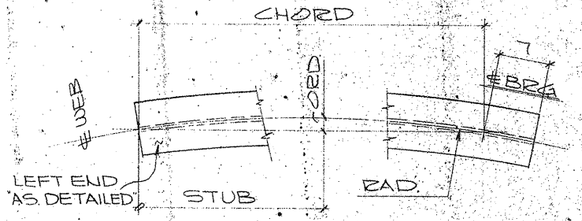

HEAT CURVE DIAGRAM
(ALONG TOP FLG.)

THIS SHEET NOT
DETAIL CHECKED

	STUB	5'-0	10'-0	15'-0	20'-0	25'-0	30'-0	35'-0	40'-0	45'-0	50'-0	55'-0	60'-0	65'-0	70'-0	75'-0	80'-0	85'-0	90'-0	95'-0	100'-0	105'-0	110'-0	115'-0	120'-0	125'-0	130'-0	CHORD	RADIUS
CORD	140PG6.01	4 13/16	9 3/16	1'-1 1/4	1'-4 15/16	1'-8 3/16	1'-11 3/8	2'-1 1/16	2'-3 7/8	2'-5 3/4	2'-7 5/8	2'-9 1/4	2'-9	2'-9 3/8	2'-9 7/16	2'-8 15/16	2'-8 1/16	2'-7 1/16	2'-5 9/16	2'-3 3/4	2'-1 1/2	1'-10 5/8	1'-7 13/16	1'-4 7/8	1'-2 1/16	8 3/8	4 7/16	134'-7 5/16	815.5111'
	141PG7.02	4 13/16	9 3/16	1'-1 1/4	1'-4 15/16	1'-8 1/4	1'-11 3/8	2'-1 1/16	2'-3 7/8	2'-5 11/16	2'-7 5/8	2'-8 3/16	2'-8 7/8	2'-9 3/16	2'-9 1/8	2'-8 1/16	2'-7 1/8	2'-6 1/16	2'-5 3/16	2'-3 1/4	2'-1 5/16	1'-10 5/16	1'-7 1/4	1'-3 7/8	1'-0 1/16	7 15/16	3 3/8	133'-6 1/16	806.8444
	142PG7.03	4 3/4	9 1/8	1'-1 3/16	1'-4 1/16	1'-8 1/16	1'-10 15/16	2'-1 7/16	2'-3 9/16	2'-5 5/16	2'-6 3/8	2'-7 5/8	2'-8 1/4	2'-8 1/2	2'-8 3/8	2'-7 1/8	2'-7	2'-5 11/16	2'-4 1/16	2'-2 1/16	1'-11 1/16	1'-8 1/8	1'-5 3/4	1'-2 1/4	10 5/16	6 1/16	1 3/8	131'-4 3/8	798.1778
	143PG6.04	4 3/4	9 3/16	1'-1 3/16	1'-4 1/16	1'-8 1/16	1'-10 15/16	2'-1 3/8	2'-3 1/2	2'-5 1/4	2'-6 1/16	2'-7 1/16	2'-8 1/8	2'-8 5/16	2'-8 1/8	2'-7 1/16	2'-6 3/8	2'-5 5/16	2'-3 5/8	2'-1 7/16	1'-11 1/16	1'-8 1/4	1'-5	1'-1 7/16	9 7/16	5 1/16	1 5/16	130'-3 3/4	789.5111'

THIS SHEET NOT
DETAIL CHECKED

NOTE:
FOR GENERAL NOTES, SEE SHT. GN1.

TEXAS DEPARTMENT OF TRANSPORTATION
APPROVED EXCEPT AS NOTED
DIVISION OF BRIDGES AND STRUCTURES
DEC 08 1992
APPROVAL OF THIS DRAWING DOES NOT RELIEVE THE CONTRACTOR OF THE RESPONSIBILITY FOR THE CORRECTNESS OF DETAIL.

FOR APPROVAL
OCT 27 '92
NOT FOR CONSTRUCTION

APV 10-27

FED. ROAD DIV. NO.	STATE	FEDERAL AID PROJECT NO.				
6	TX.	NH92 (50) M				
STATE DIST. NO.	COUNTY	CONTROL NO.	SECTION NO.	JOB NO.	HIGHWAY NO.	
21	HIDALGO	39	17	97	83/281	

HOLES	U.N.	FOR AP'VL	
BOLTS	U.N.	RETURNED	
WELDS	U.N.	TO SHOP	
PAINT	SEE SHT. GN1		

HIRSCHFELD STEEL CO. INC.
112 WEST 29TH SAN ANGELO, TEXAS 76903
PHONE (915) 653-3211

REVISIONS		
NO.	DATE	REMARKS
1		
2		
3		
4		

CUSTOMER GILBERT TEXAS CONSTRUCTION
ARCHITECT
PROJECT US 83/281 INTERCHANGE RAMP "Q"
LOCATION HIDALGO COUNTY

DRAWN	DATE	JOB NO.	SHEET NO.
CHECKED	DATE		
SRT	8-92	92-107	145 of
DCT	8-92		

CE92-12

X

a b c d e f g h i j k l m n o p q r s t u v w x y z

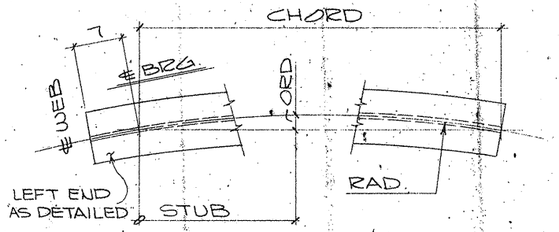

HEAT CURVE DIAGRAM
(ALONG TOP FLG.)

THIS SHEET NOT
DETAIL CHECKED

	STUB	5'-0	10'-0	15'-0	20'-0	25'-0	30'-0	35'-0	40'-0	45'-0	50'-0	55'-0	60'-0
CORD	118PG1.01	3 3/8	7 5/16	10 7/16	1'-1 3/16	1'-3 9/16	1'-5 9/16	1'-7 1/4	1'-8 1/2	1'-9 3/8	1'-9 15/16	1'-10 3/8	1'-9 15/16
	119PG1.02	3 3/16	7 1/4	10 1/4	1'-0 15/16	1'-3 1/4	1'-5 3/16	1'-6 3/4	1'-7 15/16	1'-8 3/4	1'-9 7/16	1'-9 5/16	1'-9
	120PG1.03	3 1/16	7 1/4	10 5/16	1'-1	1'-3 5/16	1'-5 1/4	1'-6 13/16	1'-8	1'-8 13/16	1'-9 1/4	1'-9 1/4	1'-8 5/16
	121PG1.04	3 3/16	7 1/4	10 1/4	1'-0 15/16	1'-3 5/16	1'-5 1/16	1'-6 7/16	1'-7 3/4	1'-8 1/2	1'-8 3/8	1'-8 3/8	1'-8 1/16

	STUB	65'-0	70'-0	75'-0	80'-0	85'-0	90'-0	95'-0	100'-0	105'-0	CHORD	RADIUS
CORD	118PG1.01	1'-9 1/16	1'-8 3/8	1'-7 7/8	1'-5 7/16	1'-3 3/8	1'-1	10 5/16	7 1/16	3 9/16	109'-6 3/8	815.5111'
	119PG1.02	1'-8 5/16	1'-7 1/4	1'-5 7/8	1'-4 1/16	1'-1 5/16	11 3/8	8 1/2	5 3/16	1 9/16	106'-11 3/8	806.8444
	120PG1.03	1'-8 1/4	1'-7 3/16	1'-5 3/4	1'-3 7/8	1'-1 1/16	11 1/8	8 1/8	4 13/16	1 1/8	106'-4 13/16	798.1778'
	121PG1.04	1'-7 11/16	1'-6 9/16	1'-5	1'-3 1/8	1'-0 13/16	10 3/8	7 1/8	3 1/16	-	104'-9 3/4	789.5111'

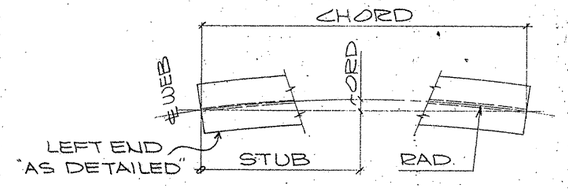

HEAT CURVE DIAGRAM
(ALONG TOP FLG.)

THIS SHEET NOT
DETAIL CHECKED

	STUB	5'-0	10'-0	15'-0	20'-0	25'-0	30'-0	35'-0	40'-0	45'-0	CHORD	RADIUS
CORD	123PG2.02	1 1/4	2 1/16	2 9/16	2 11/16	2 7/16	1 13/16	3/4	-	-	37'-10 3/8	806.8444
	124PG2.03	1 3/16	1'2	2'1/2	2 9/16	2 1/4	1 9/16	1'2	-	-	36'-10 3/8	798.1778'
	126PG3.02	1 5/8	2 15/16	3 11/16	4 7/16	4 1/4	4	3 3/8	2 3/8	1"	47'-10 7/16	806.8444
	127PG3.03	1 7/16	2'1/2	3 1/8	3 7/16	3 5/8	2 15/16	2 1/8	7/8	-	42'-10 7/16	798.1778

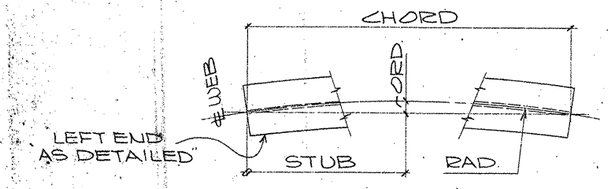

HEAT CURVE DIAGRAM
(ALONG TOP FLG.)

THIS SHEET NOT
DETAIL CHECKED

	STUB	5'-0	10'-0	15'-0	20'-0	25'-0	30'-0	35'-0	40'-0	45'-0	50'-0	55'-0	60'-0	65'-0	70'-0	75'-0	80'-0	85'-0	CHORD	RADIUS
CORD	122PG2.01	3 1/16	5 3/4	8 1/16	10	11 9/16	1'-0 13/16	1'-1 5/8	1'-2 3/8	1'-2 1/4	1'-2	1'-1 3/8	1'-0 3/8	11"	9 1/4	7 3/8	4 11/16	1 7/8	87'-11 7/16	815.5111'
	125PG2.04	2 3/4	5 3/16	7 7/16	8 7/16	10 1/16	10 15/16	11 7/16	11 9/16	11 1/4	10 5/8	9 5/8	8 3/16	6 7/16	4 1/4	1 11/16	-	-	77'-11 7/16	789.5111'
	128PG3.01	2 1/4	4 1/8	5 11/16	6 15/16	7 5/8	8 1/16	8 1/16	7 3/4	7 1/16	6	4 5/8	2 13/16	1 1/16	-	-	-	-	66'-4 1/2	815.5111'
	129PG4.02	2 3/8	4 1/16	6 1/8	7 3/8	8 5/16	8 3/8	9	8 3/16	8 1/4	7 5/16	6	4 5/16	2 1/4	-	-	-	-	69'-7 7/16	806.8444
	130PG4.03	2 1/16	5 1/16	7	8 5/16	9 3/4	10 7/16	11	11 3/8	10 13/16	10 1/8	9 1/16	7 5/8	5 13/16	3 5/8	1 1/16	-	-	76'-10 1/2	798.1778'
	131PG3.04	2 1/16	5 3/16	7 5/16	8 3/16	10 1/8	11	11 1/2	11 3/8	11 5/16	10 11/16	9 11/16	8 1/4	6'2	4 5/16	1 13/16	-	-	78'-1 7/16	789.5111'

NOTE:
FOR GENERAL NOTES, SEE SHT. GN1.

TEXAS DEPARTMENT OF TRANSPORTATION
APPROVED EXCEPT AS NOTED
DIVISION OF BRIDGES AND STRUCTURES
DEC 03 1992
APPROVAL OF THIS DRAWING DOES NOT RELIEVE THE CONTRACTOR OF THE RESPONSIBILITY FOR THE CORRECTNESS OF DETAIL

FOR APPROVAL
OCT 27 92
NOT FOR CONSTRUCTION

THIS SHEET NOT
DETAIL CHECKED

APV 10-27

HOLES	U.N.	FOR AP'VL	
BOLTS	U.N.	RETURNED	
WELDS	U.N.	TO SHOP	
PAINT	SEE SHT. GN1		

HIRSCHFELD STEEL CO. INC.
112 WEST 29TH SAN ANGELO TEXAS 76903
PHONE (915) 653-3211

REVISIONS		
NO.	DATE	REMARKS
1.		
2		
3		
4		

CUSTOMER GILBERT TEXAS CONSTRUCTION
ARCHITECT
PROJECT US 83/281 INTERCHANGE RAMP # 2
LOCATION HIDALGO COUNTY

DRAWN CET DATE 8-92
CHECKED DLT DATE 8-92
JOB NO. 92-107
SHEET NO. 144 of

FED. ROAD DIV. NO.	STATE	FEDERAL AID PROJECT NO.			
6	TX.	NH92 (50) H			
STATE DIST. NO.	COUNTY	CONTROL NO.	SECTION NO.	JOB NO.	HIGHWAY NO.
21	HIDALGO	39	17	97	83/281

CE 92-12

X

a b c d e f g h i j k l m n o p q r s t u v w x y z

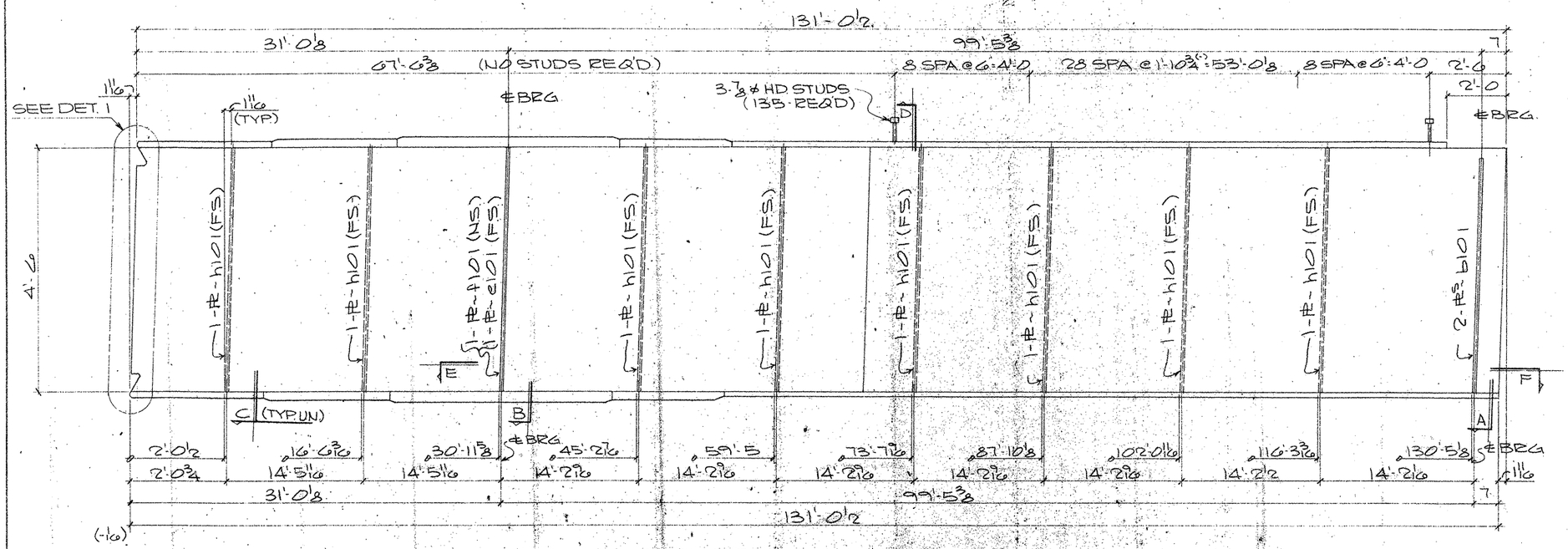

ONE GIRDER MK-143PG6.04
(APPROX WT. = TONS)

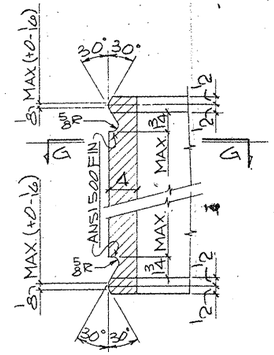

DETAIL-1

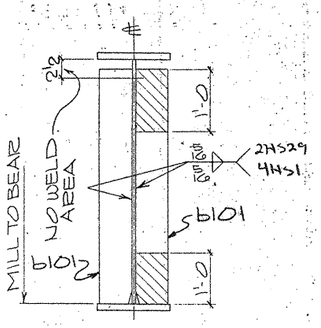

SECTION-A

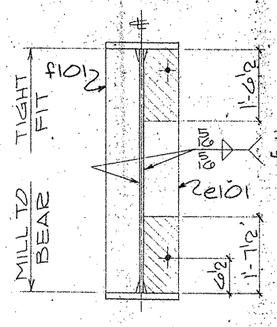

SECTION-B

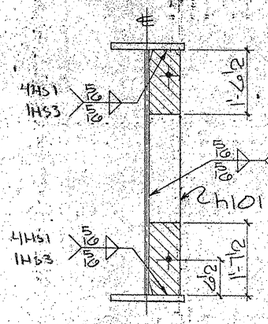

SECTION-C

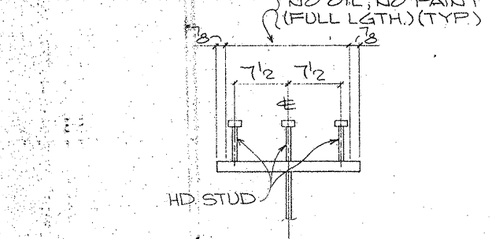

SECTION-D
(TYP. STUD SECT.)

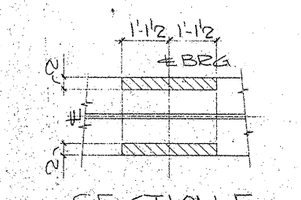

SECTION-E

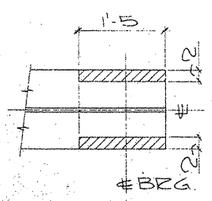

SECTION-F

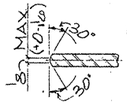

SECTION-GG

SHOP NOTES:
1) FOR GENERAL NOTES SEE SHT. GN1
2) FOR GIRDER SUB-ASSEMBLY SEE SHT. 117
3) FOR STIFF. DETAILS SEE SHT. 101
4) FOR BLOCKING DIAGRAM SEE SHT. 149
5) FOR HEAT CURVE DIAGRAM SEE SHT. 145
6) ▨ INDICATES OIL, NO PAINT (N.S./F.S. & EDGES)

BILL OF MATERIAL

	Qnty	Material	Length	Mark Temp.	Mark Ship.	Wt.	Cut From	Remarks
1								
2	1	GIRDER			143PG6.04			
3	1	GIRDER SUB-ASSY		B117				
4	2	BRG STIFF		b101				
5	1	INT BRG STIFF		e101				
6	1	INT BRG STIFF		f101				
7								
8	8	DIAF STIFF		h101				
9								
10	135	HD STUD 7/8ϕ	0'-7				113-1	A108
11–60								

TEXAS DEPARTMENT OF TRANSPORTATION
APPROVED
DIVISION OF BRIDGES AND STRUCTURES
DEC 08 1992

APPROVAL OF THIS DRAWING DOES NOT RELIEVE THE CONTRACTOR OF THE RESPONSIBILITY FOR THE CORRECTNESS OF DETAIL

FOR APPROVAL
OCT 27 '92
NOT FOR CONSTRUCTION

REVISION	DATE	DESCRIPTION OF REVISION
NO. 1		
NO. 2		
NO. 3		
NO. 4		
NO. 5		

PRINTING Req'd	For	Date

Bolts Holes, 15/16ϕ Unless Noted
Shop Paint SEE SHT GN1
Fab. Spec. AS NTD Inspection
Architect
Erection By Field Connections

HIRSCHFELD STEEL CO. INC.
112 WEST 29TH SAN ANGELO, TEXAS 76903
PHONE (915) 653-3211

DESCRIPTION 584'-0" PLATE GIRDER UNIT
STRUCTURE US 83/281 INTERCHANGE RAMP "Z"
LOCATION HIDALGO COUNTY
CUSTOMER GILBERT TEXAS CONSTRUCTION
SHIP TO
Customer's Order No.
Dwg. By CRT Date 8-92
Checked By DLT Date 8-92
SHEET 143 OF
JOB NO. 92-107

FED. ROAD DIV. NO.	STATE	FEDERAL AID PROJECT NO.				
6	TX.	NH92 (50) M				
STATE DIST. NO.	COUNTY	CONTROL NO.	SECTION NO.	JOB NO.	HIGHWAY NO.	
21	HIDALGO	39	17	97	83/281	

G0107

APV 10-27

CE92-12 (LINE #4)

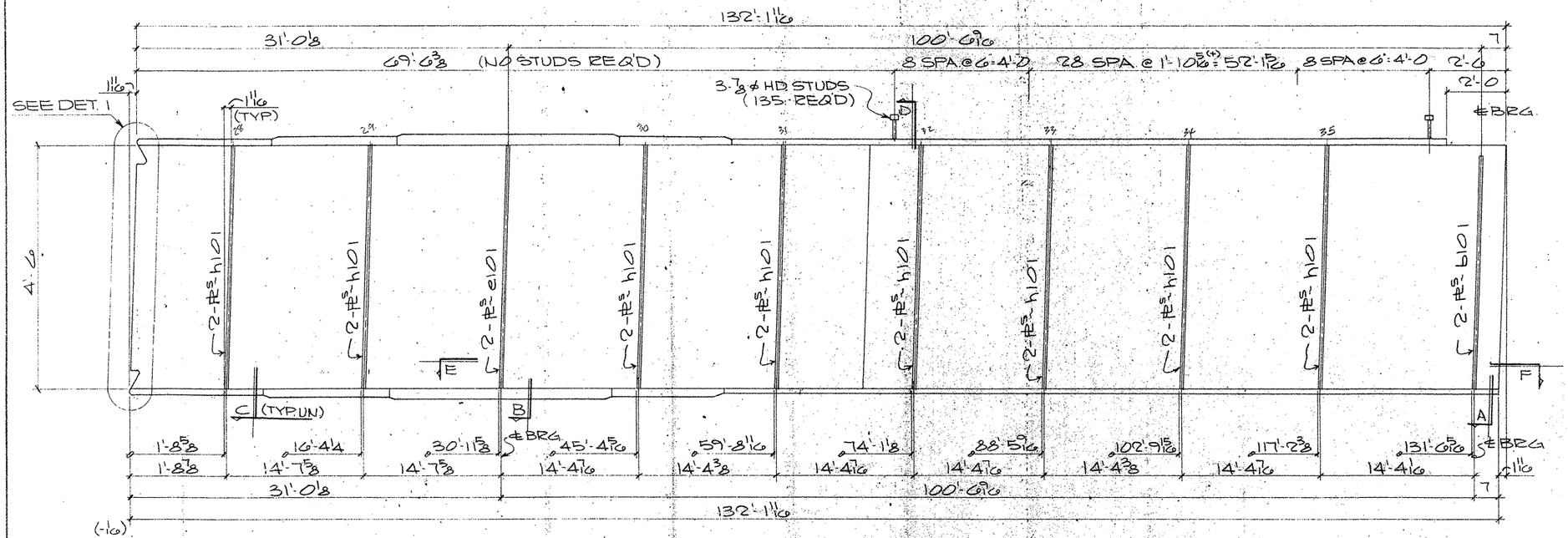

ONE GIRDER MK~142PG7.03
(APPROX. WT. = TONS)

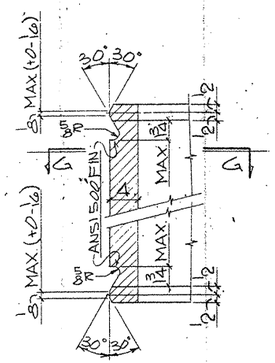

DETAIL - 1

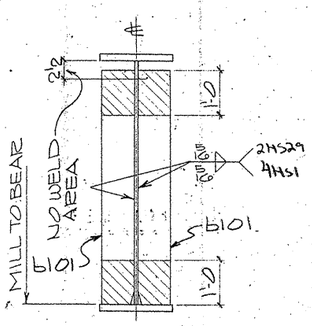

SECTION - A

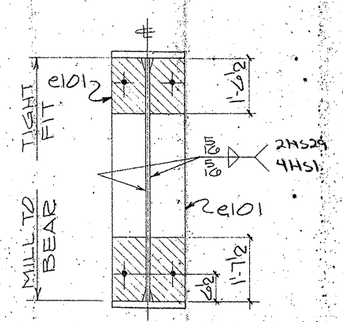

SECTION - B

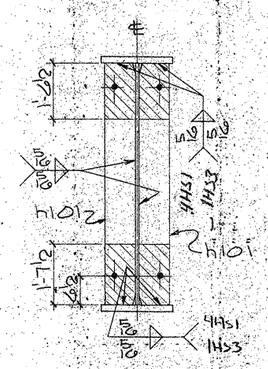

SECTION - C

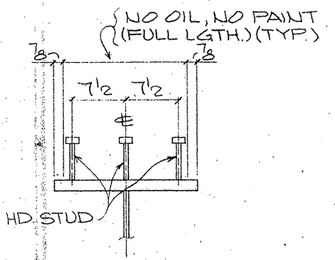

SECTION - D
(TYP. STUD SECT.)

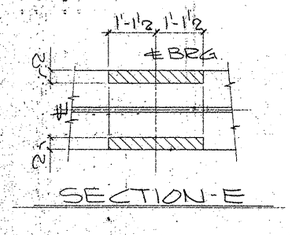

SECTION - E

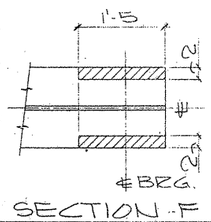

SECTION - F

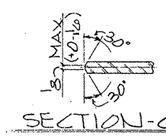

SECTION - GG

SHOP NOTES:

1) FOR GENERAL NOTES SEE SHT. GN1
2) FOR GIRDER SUB-ASSEMBLY SEE SHT. 116
3) FOR STIFF. DETAILS SEE SHT. 101
4) FOR BLOCKING DIAGRAM SEE SHT. 148
5) FOR HEAT CURVE DIAGRAM SEE SHT. 145
6) ▨ INDICATES OIL, NO PAINT (N.S./P.S. & EDGES)

BILL OF MATERIAL

	Qnty	Material	Length	Mark Temp	Mark Ship.	Wt.	Cut From	Remarks
2	1	GIRDER			142PG7.03			
3	1	GIRDER SUB-ASSY		B116				
4	2	BRG STIFF		b101			•	
6	2	INT BRG STIFF		e101				
8	16	DIAF STIFF		h101				
10	135	HD. STUD 7/8ϕ	0'-7				113-1	A108

TEXAS DEPARTMENT OF TRANSPORTATION
APPROVED
DIVISION OF BRIDGES AND STRUCTURES
DEC 08 1992

APPROVAL OF THIS DRAWING DOES NOT RELIEVE THE CONTRACTOR OF THE RESPONSIBILITY FOR THE CORRECTNESS OF DETAIL.

FOR APPROVAL
OCT 27 '92
NOT FOR CONSTRUCTION

REVISION	DATE	DESCRIPTION OF REVISION
NO. 1		
NO. 2		
NO. 3		
NO. 4		
NO. 5		

PRINTING: Reqd | For | Date

Bolts: Holes: 15/16ϕ Unless Noted
Shop Paint: SEE SHT GN1
Fab Spec: AS NTD Inspection
Architect
Erected By: Field Corrections

HIRSCHFELD STEEL CO. INC.
112 WEST 29TH SAN ANGELO TEXAS 76903
PHONE (915) 653-3211

DESCRIPTION	584'-0 PLATE GIRDER UNIT
STRUCTURE	US 83/281 INTERCHANGE RAMP "C"
LOCATION	HIDALGO COUNTY
CUSTOMER	GILBERT TEXAS CONSTRUCTION
SHIP TO	
Customer's Order No.	
Dwg By CRT	Date 8-92
Checked By DLT	Date 8-92

SHEET 142 OF
JOB NO 92-107

G0107

FED. ROAD DIV. NO.	STATE	FEDERAL AID PROJECT NO.				
6	TX.	NH92 (50) M				
STATE DIST. NO.	COUNTY	CONTROL NO.	SECTION NO.	JOB NO.	HIGHWAY NO.	
21	HIDALGO	39	17	97	83/281	— APN 10-27

CE92-12 (LINE #3)

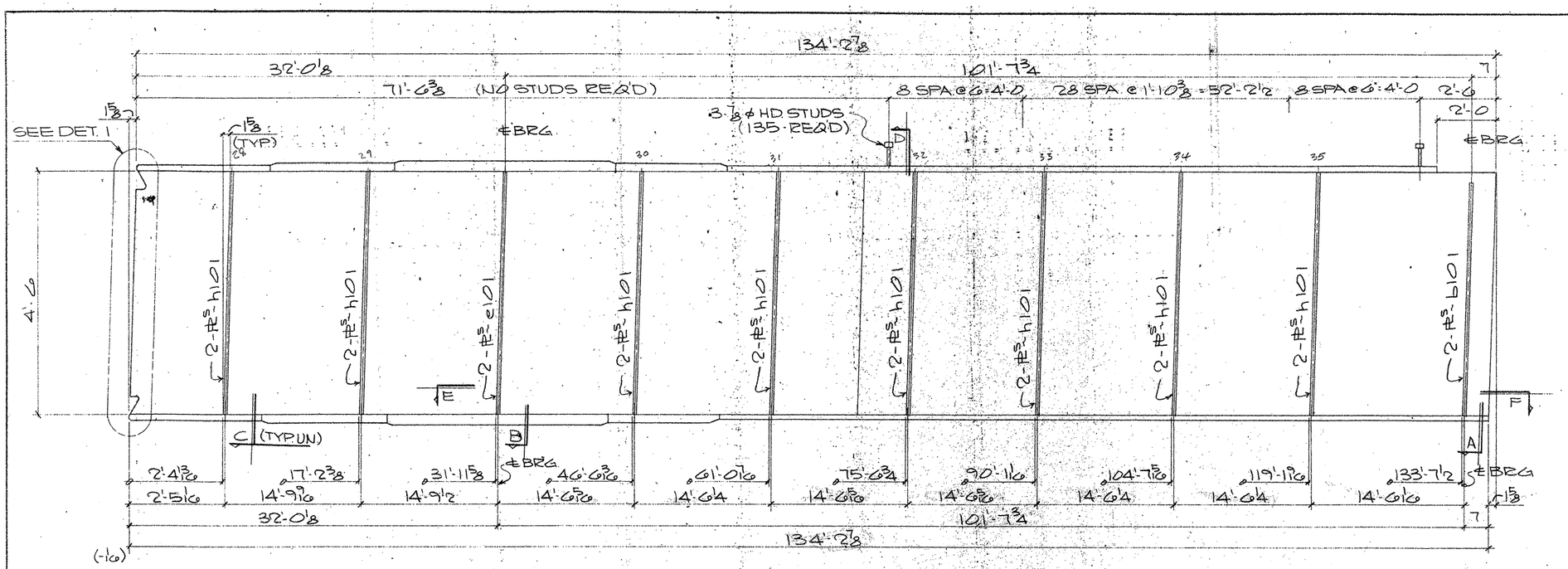

ONE GIRDER MK-141PG7.07
(APPROX. WT. = TONS)

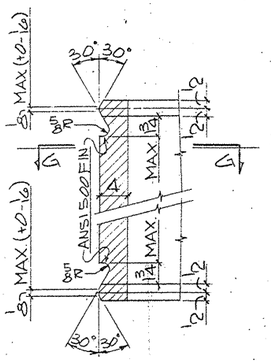

DETAIL - 1

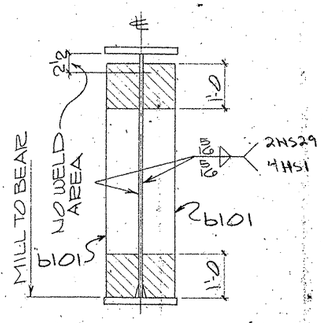

SECTION - A

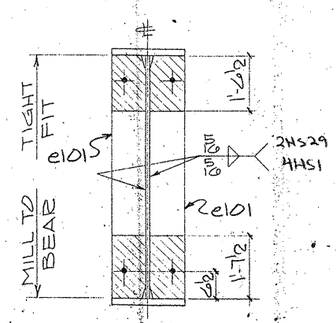

SECTION - B

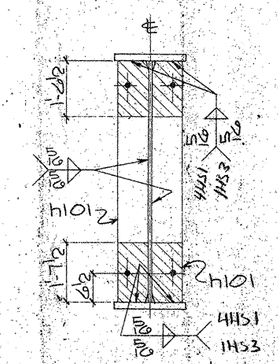

SECTION - C

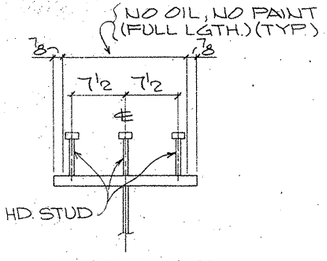

SECTION - D
(TYP STUD SECT.)

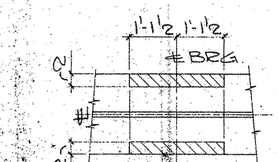

SECTION - E

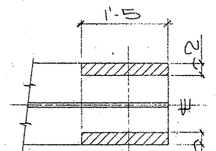

SECTION - F

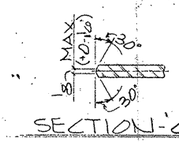

SECTION - GG

SHOP NOTES:
1) FOR GENERAL NOTES SEE SHT. GN1
2) FOR GIRDER SUB-ASSEMBLY SEE SHT. 115
3) FOR STIFF. DETAILS SEE SHT. 101
4) FOR BLOCKING DIAGRAM SEE SHT. 147
5) FOR HEAT CURVE DIAGRAM SEE SHT. 145
6) ▨ INDICATES OIL, NO PAINT (N.S./F.S. & EDGES)

BILL OF MATERIAL

	Qnty	Material	Length	Mark Temp	Mark Ship.	Wt	Cut From	Remarks
1								
2	1	GIRDER			141PG7.07			
3	1	GIRDER SUB-ASSY		B115				
4	2	BRG STIFF		b101				
5								
6	2	INT BRG STIFF		e101				
7								
8	16	DIAF STIFF		h101				
9								
10	135	HD STUD 7/8ϕ	0'-7				113-1	A108
11								
12								
13								
14								
15								
16								
17								
18								
19								
20								
21								
22								
23								
24								
25								
26								
27								
28								
29								
30								
31								
32								
33								
34								
35								
36								
37								
38								
39								
40								
41								
42								
43								
44								
45								
46								
47								
48								
49								
50								
51								
52								
53								
54								
55								
56								
57								
58								
59								
60								

TEXAS DEPARTMENT OF TRANSPORTATION
APPROVED
DIVISION OF BRIDGES AND STRUCTURES
DEC 08 1992
APPROVAL OF THIS DRAWING DOES NOT RELIEVE THE CONTRACTOR OF THE RESPONSIBILITY FOR THE CORRECTNESS OF DETAIL

FOR APPROVAL
OCT 26 '92
NOT FOR CONSTRUCTION

REVISION	DATE	DESCRIPTION OF REVISION
NO. 1		
NO. 2		
NO. 3		
NO. 4		
NO. 5		

PRINTING Req'd	For	Date

Bolts: Holes: 15/16ϕ Unless Noted
Shop Paint: SEE SHT GN1
Fab. Spec: AS HTD Inspection
Architect
Erection By: Field Connections

HIRSCHFELD STEEL CO. INC.
112 WEST 29TH SAN ANGELO, TEXAS 76903
PHONE (915) 653-3211

DESCRIPTION: 584'-0 PLATE GIRDER UNIT
STRUCTURE: US 83/281 INTERCHANGE RAMP #2
LOCATION: HIDALGO COUNTY
CUSTOMER: GILBERT TEXAS CONSTRUCTION
SHIP TO:
Customer's Order No.
Dwg By: CET Date: 8-92
Checked By: DLT Date: 8-92
SHEET 141 OF
JOB NO. 92-107

FED. ROAD DIV. NO.	STATE	FEDERAL AID PROJECT NO.				
6	TX.	NH92 (50) M				
STATE DIST. NO.	COUNTY	CONTROL NO.	SECTION NO.	JOB NO.	HIGHWAY NO.	
21	HIDALGO	39	17	97	83/281	

60107

APV 16-20

CE 92-12 (LINE #2)

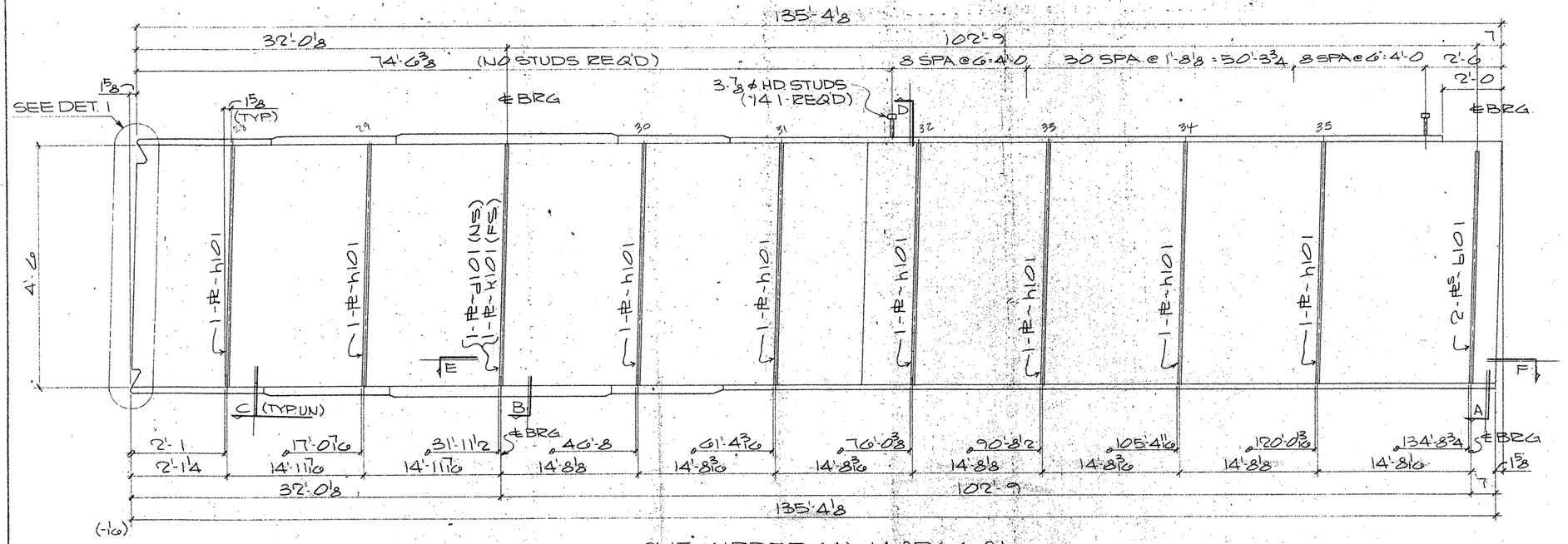

ONE GIRDER MK- 140PG0.01
(APPROX. WT. = TONS)

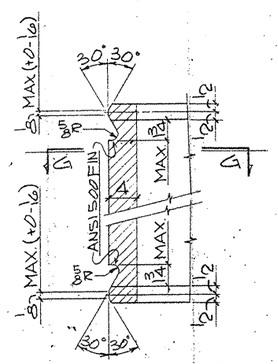

DETAIL - 1

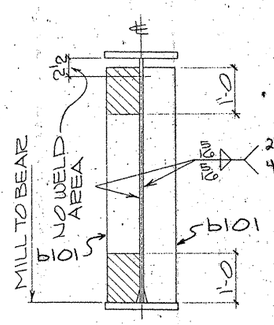

SECTION - A

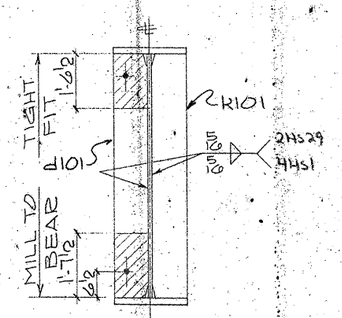

SECTION - B

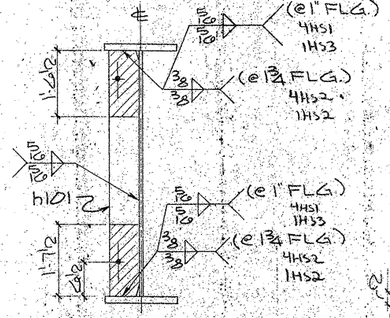

SECTION - C

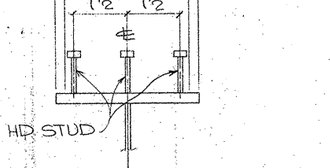

SECTION - D
(TYP. STUD SECT.)

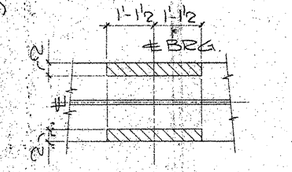

SECTION - E

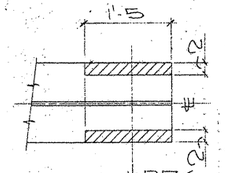

SECTION - F

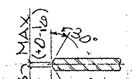

SECTION - GG

SHOP NOTES:

1) FOR GENERAL NOTES SEE SHT. GN1
2) FOR GIRDER SUB-ASSEMBLY SEE SHT. 114
3) FOR STIFF. DETAILS SEE SHT. 101
4) FOR BLOCKING DIAGRAM SEE SHT. 146
5) FOR HEAT CURVE DIAGRAM SEE SHT. 145
6) ▨ INDICATES OIL, NO PAINT (N.S./F.S. & EDGES)

G0107

FED. ROAD DIV. NO.	STATE	FEDERAL AID PROJECT NO.				
6	TX.	NH92 (50) M				
STATE DIST. NO.	COUNTY	CONTROL NO.	SECTION NO.	JOB NO.	HIGHWAY NO.	
21	HIDALGO	39	17	97	83/281	

BILL OF MATERIAL

	Qnty	Material	Length	Mark Temp	Mark Ship	Wt.	Cut From	Remarks
1								
2	1	GIRDER			140PG0.01			
3	1	GIRDER SUB-ASSY		B114				
4	2	BRG STIFF		b101				
5	1	INT BRG STIFF		d101				
6	1	INT BRG STIFF		k101				
7								
8	8	DIAF STIFF		h101				
9								
10	141	HD STUD 7/8 ϕ	0'-7				113-1	A108
11–60								

TEXAS DEPARTMENT OF TRANSPORTATION
APPROVED
DIVISION OF BRIDGES AND STRUCTURES
DEC 08 1992

APPROVAL OF THIS DRAWING DOES NOT RELIEVE THE CONTRACTOR OF THE RESPONSIBILITY FOR THE CORRECTNESS OF DETAIL

FOR APPROVAL
OCT 27 '92
NOT FOR CONSTRUCTION

REVISION	DATE	DESCRIPTION OF REVISION
NO. 1		
NO. 2		
NO. 3		
NO. 4		
NO. 5		

PRINTING Req'd | For | Date

Bolts Holes: 15/16 ϕ Unless Noted
Shop Paint SEE SHT. GN1
Fab. Spec. AS NTD Inspection
Architect
Erection By Field Connections

HIRSCHFELD STEEL CO. INC.
112 WEST 29TH SAN ANGELO, TEXAS 76903
PHONE (915) 653-3211

DESCRIPTION 584'-0 PLATE GIRDER UNIT
STRUCTURE US 83/281 INTERCHANGE RAMP "2"
LOCATION HIDALGO COUNTY
CUSTOMER GILBERT TEXAS CONSTRUCTION
SHIP TO
Customer's Order No.
Dwg. By CRT Date 8-92
Checked By DLT Date 8-92

SHEET 140 OF
JOB NO. 92-107

CE92-12 (LINE # 1)

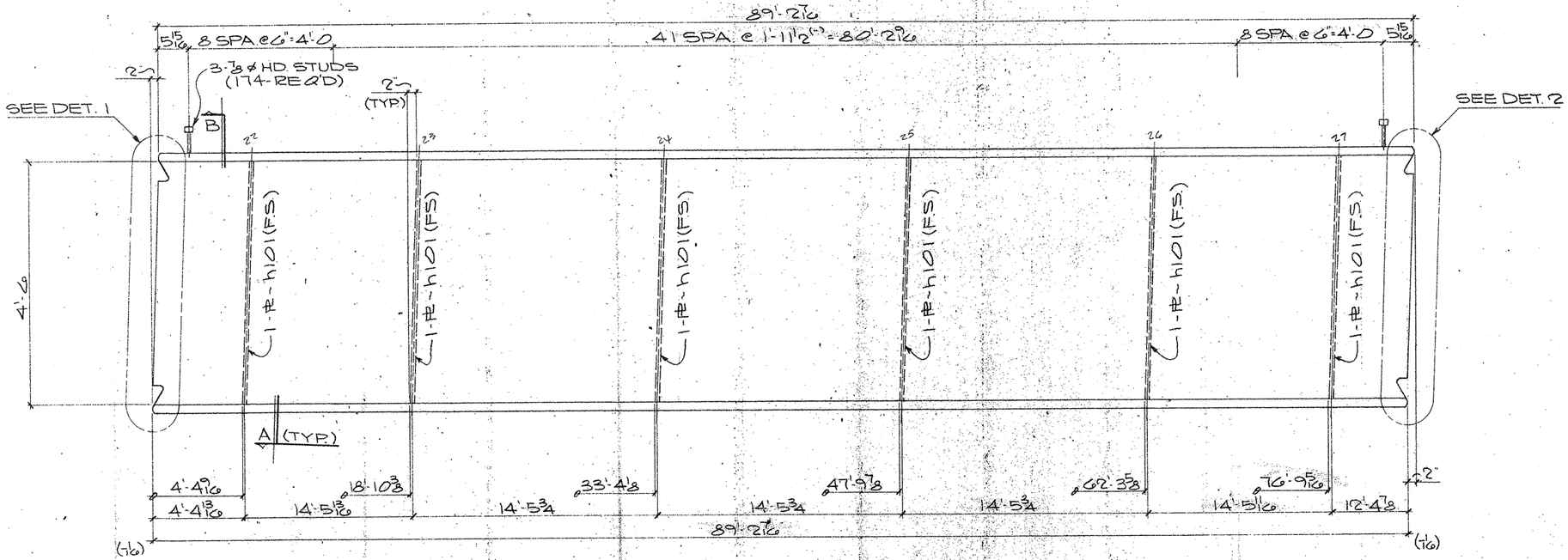

ONE GIRDER MK~139PG5.04

(APPROX. WT. = TONS)

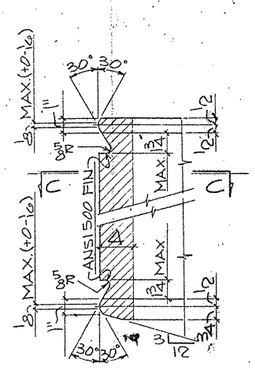

DETAIL - 1

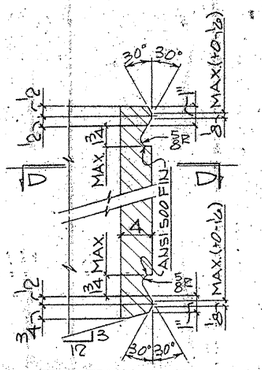

DETAIL - 2

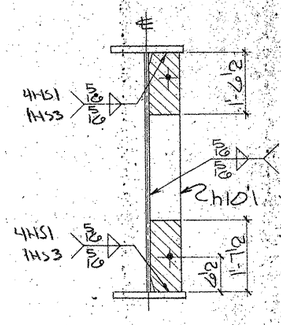

SECTION - A

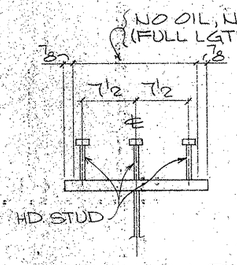

SECTION-B

(TYP. STUD SECT.)

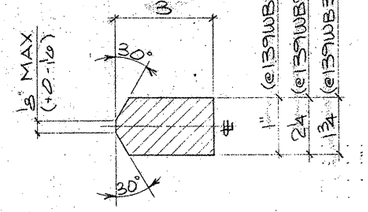

152 - WELD BARS MK-139WB1

4 - WELD BARS MK-139WB2

4 - WELD BARS MK-139WB3

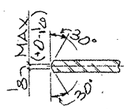

SECTION-CC

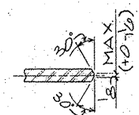

SECTION-DD

SHOP NOTES:

1) FOR GENERAL NOTES SEE SHT. GN1
2) FOR GIRDER SUB-ASSEMBLY SEE SHT. 117
3) FOR STIFF. DETAILS SEE SHT. 101
4) FOR BLOCKING DIAGRAM SEE SHT. 149
5) FOR HEAT CURVE DIAGRAM SEE SHT. 145
6) ////// INDICATES OIL, NO PAINT (N.S./F.S. & EDGES)

G0107

FED. ROAD DIV. NO.	STATE	FEDERAL AID PROJECT NO.			
6	TX.	NH92 (50) M			
STATE DIST. NO.	COUNTY	CONTROL NO.	SECTION NO.	JOB NO.	HIGHWAY NO.
21	HIDALGO	39	17	97	83/281

BILL OF MATERIAL

	Qnty.	Material	Length	Mark Temp.	Mark Ship.	Wt.	Cut From	Remarks
1								
2	1	GIRDER		139PG5.04				
3	1	GIRDER SUB-ASSY		A117				
4	6	DIAF. STIFF		h101				
5								
6	174	H.D. STUDS 7/8	0'-7"				113-1	A108
7								
8								
9								
10								
11								
12								
13								
14								
15								
16								
17								
18								
19								
20								
21								
22								
23								
24		WELD BARS						
25	152	PL 1 x 1"	0'-3"	139WB1			STR	
26	4	PL 2 1/4 x 1"	0'-3"	139WB2			STR	
27	4	PL 1 3/4 x 1"	0'-3"	139WB3			STR	
28								
29								
30								
31								
32								
33								
34								
35								
36								
37								
38								
39								
40								
41								
42								
43								
44								
45								
46								
47								
48								
49								
50								
51								
52								
53								
54								
55								
56								
57								
58								
59								
60								

TEXAS DEPARTMENT OF TRANSPORTATION
APPROVED
DIVISION OF BRIDGES AND STRUCTURES
DEC 08 1992

APPROVAL OF THIS DRAWING DOES NOT RELIEVE THE CONTRACTOR OF THE RESPONSIBILITY FOR THE CORRECTNESS OF DETAIL

FOR APPROVAL
OCT 27 '92
NOT FOR CONSTRUCTION

REVISION	DATE	DESCRIPTION OF REVISION
NO. 1		
NO. 2		
NO. 3		
NO. 4		
NO. 5		

PRINTING Reqd	For	Date
	APV	10-27

Bolts: Holes: 15/16 ø Unless Noted
Shop Paint: SEE SHT GN1
Fab Spec: AS NTD Inspection
Architect
Erection By: Field Connections

HIRSCHFELD STEEL CO. INC.
112 WEST 29TH SAN ANGELO, TEXAS 76903
PHONE (915) 653-3211

DESCRIPTION: 584'-0" PLATE GIRDER UNIT
STRUCTURE: OS 83/281 INTERCHANGE RAMP "Z"
LOCATION: HIDALGO COUNTY
CUSTOMER: GILBERT TEXAS CONSTRUCTION
SHIP TO:
Customer's Order No.:
Dwg. By: CRT Date: 8-92
Checked By: DLT Date: 8-92

SHEET 139 OF
JOB NO. 92-107

(CE 92-12) (LINE # 4)

232460

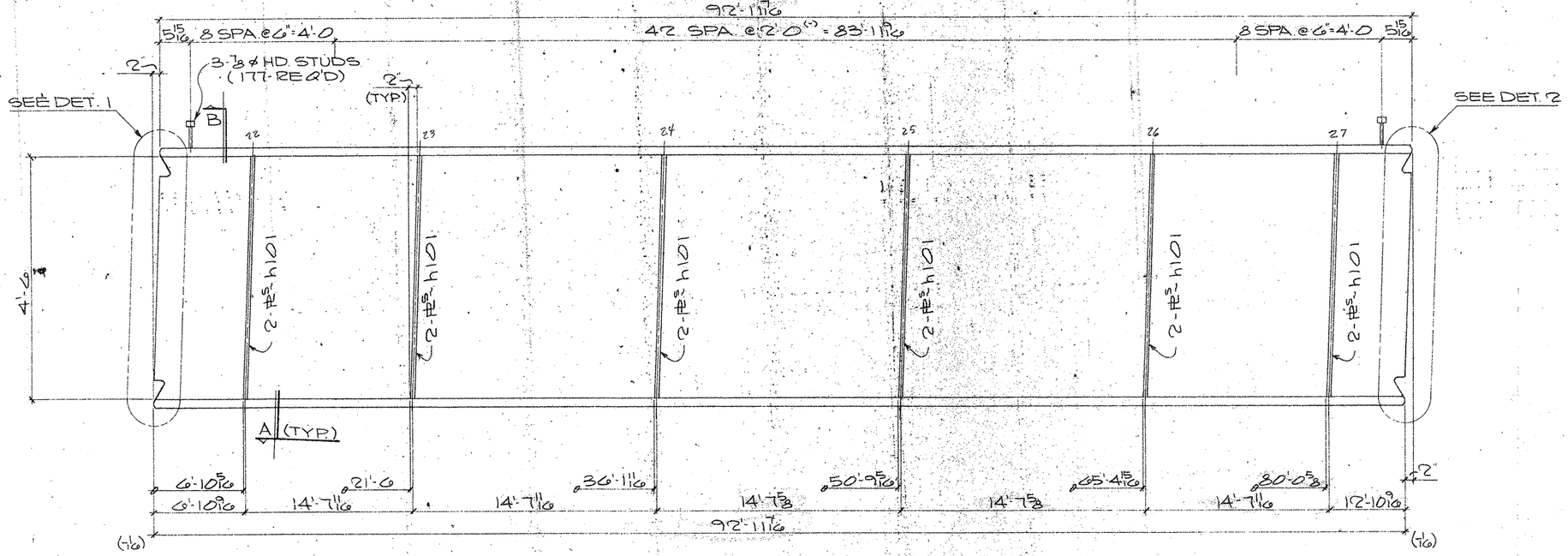

ONE GIRDER MK~ 138PG6.03

(APPROX. WT. = TONS)

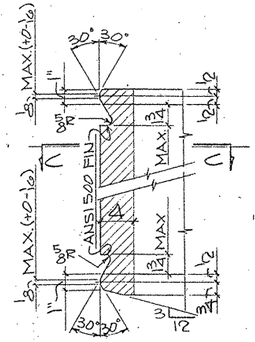

DETAIL-1

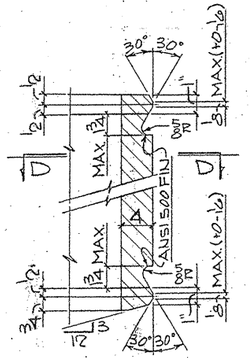

DETAIL-2

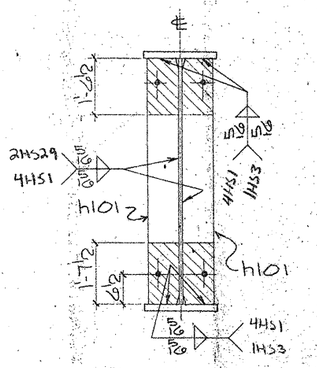

SECTION-A

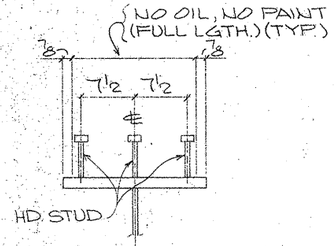

SECTION-B

(TYP. STUD SECT.)

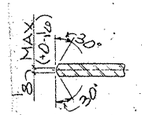

SECTION-CC

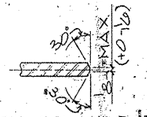

SECTION-DD

SHOP NOTES:

1) FOR GENERAL NOTES SEE SHT. GN1
2) FOR GIRDER SUB-ASSEMBLY SEE SHT. 110
3) FOR STIFF. DETAILS SEE SHT. 101
4) FOR BLOCKING DIAGRAM SEE SHT. 148
5) FOR HEAT CURVE DIAGRAM SEE SHT. 145
6) ▨ INDICATES OIL, NO PAINT (N.S./F.S. & EDGES)

BILL OF MATERIAL

	Qnty	Material	Length	Mark Temp.	Mark Ship.	Wt.	Cut From	Remarks
1								
2	1	GIRDER		138PG6.03				
3	1	GIRDER SUB-ASSY		A116				
4	12	DIAF STIFF		H101				
5								
6	177	H.D. STUDS 3/8	0'-7				113-1	A108
7								
8								
9								
10								
11								
12								
13								
14								
15								
16								
17								
18								
19								
20								
21								
22								
23								
24								
25								
26								
27								
28								
29								
30								
31								
32								
33								
34								
35								
36								
37								
38								
39								
40								
41								
42								
43								
44								
45								
46								
47								
48								
49								
50								
51								
52								
53								
54								
55								
56								
57								
58								
59								
60								

TEXAS DEPARTMENT OF TRANSPORTATION
APPROVED
DIVISION OF BRIDGES AND STRUCTURES
DEC 08 1992
APPROVAL OF THIS DRAWING DOES NOT RELIEVE THE CONTRACTOR OF THE RESPONSIBILITY FOR THE CORRECTNESS OF DETAIL

FOR APPROVAL
OCT 27 '92
NOT FOR CONSTRUCTION

REVISION	DATE	DESCRIPTION OF REVISION
NO. 1		
NO. 2		
NO. 3		
NO. 4		
NO. 5		

PRINTING

Req'd	For	Date

Bolts: Holes: 15/16 ø Unless Noted
Shop Paint: SEE SHT. GN1
Fab. Spec.: AS NTD. Inspection
Architect:
Erection By: Field Connections

HIRSCHFELD STEEL CO. INC.
112 WEST 29TH SAN ANGELO, TEXAS 76903
PHONE (915) 653-3211

DESCRIPTION: 584'-0 PLATE GIRDER UNIT
STRUCTURE: US 83/281 INTERCHANGE RAMP "Q"
LOCATION: HIDALGO COUNTY
CUSTOMER: GILBERT TEXAS CONSTRUCTION
SHIP TO:
Customer's Order No.:
Dwg. By: CET Date: 8-92
Checked By: DLT Date: 8-92

SHEET 138 OF
JOB NO. 92-107

G0107

FED. ROAD DIV. NO.	STATE	FEDERAL AID PROJECT NO.				
6	TX.	NH92 (50) M				
STATE DIST. NO.	COUNTY	CONTROL NO.	SECTION NO.	JOB NO.	HIGHWAY NO.	
21	HIDALGO	39	17	97	83/281	

APV. 10-27

(CE 92-12) (LINE # 3)

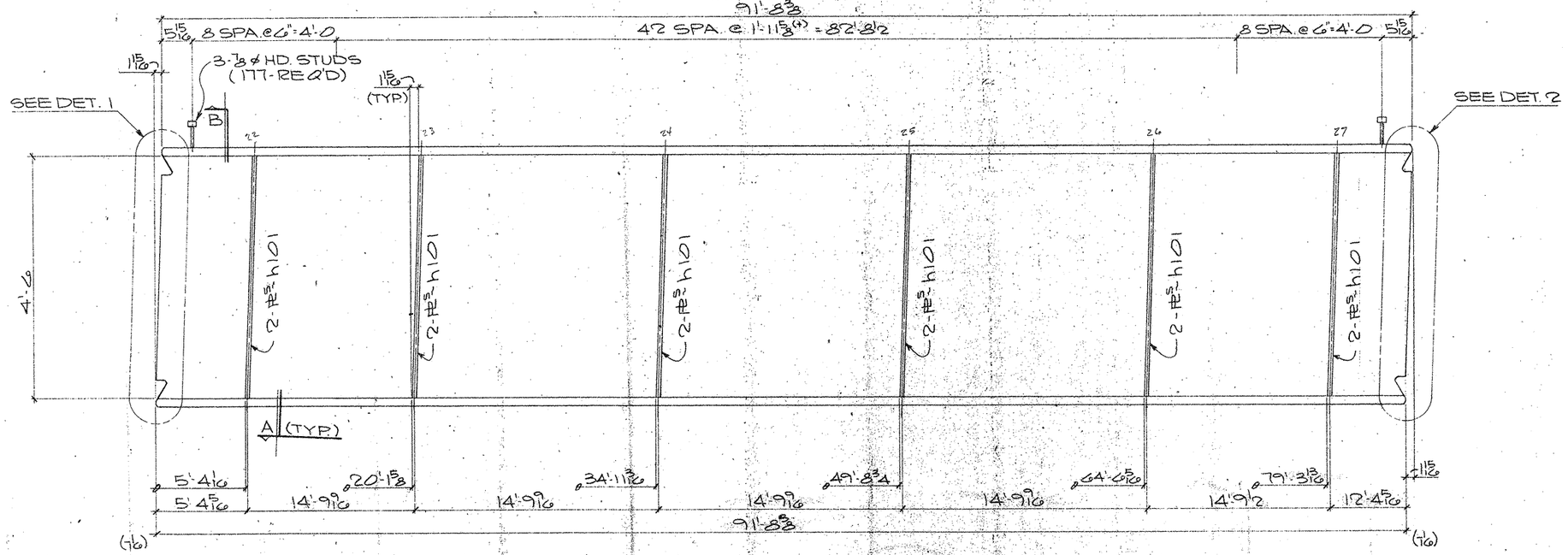

ONE GIRDER MK-137PG6.02

(APPROX. WT. = TONS)

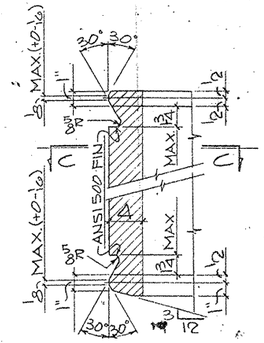

DETAIL - 1

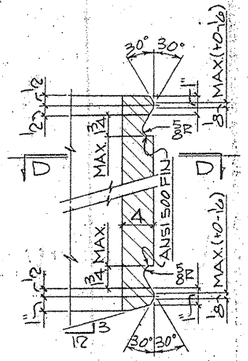

DETAIL - 2

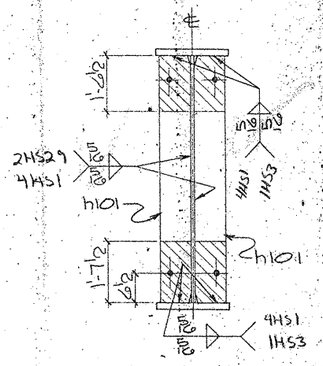

SECTION - A

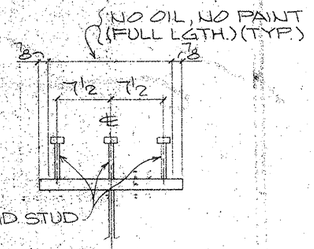

SECTION - B

(TYP. STUD SECT.)

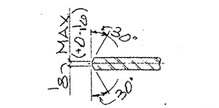

SECTION - CC

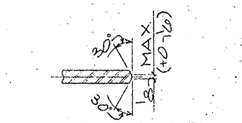

SECTION - DD

SHOP NOTES:
1) FOR GENERAL NOTES SEE SHT. GN1
2) FOR GIRDER SUB-ASSEMBLY SEE SHT. 115
3) FOR STIFF. DETAILS SEE SHT. 101
4) FOR BLOCKING DIAGRAM SEE SHT. 147
5) FOR HEAT CURVE DIAGRAM SEE SHT. 145
6) ////// INDICATES OIL, NO PAINT (N.S./F.S. & EDGES)

G0107

FED. ROAD DIV. NO.	STATE	FEDERAL AID PROJECT NO.			
6	TX.	NH92 (50) M			
STATE DIST. NO.	COUNTY	CONTROL NO.	SECTION NO.	JOB NO.	HIGHWAY NO.
21	HIDALGO	39	17	97	83/281

BILL OF MATERIAL

	Qnty.	Material	Length	Mark Temp	Mark Ship.	Wt.	Cut From	Remarks
1								
2	1	GIRDER		137PG6.02				
3	1	GIRDER SUB-ASSY		A115				
4	12	DIAF STIFF.		H101				
5								
6	177	H.D. STUDS 7/8	0'-7				113-1	A108
7								
8								
9								
10								
11								
12								
13								
14								
15								
16								
17								
18								
19								
20								
21								
22								
23								
24								
25								
26								
27								
28								
29								
30								
31								
32								
33								
34								
35								
36								
37								
38								
39								
40								
41								
42								
43								
44								
45								
46								
47								
48								
49								
50								
51								
52								
53								
54								
55								
56								
57								
58								
59								
60								

TEXAS DEPARTMENT OF TRANSPORTATION
APPROVED
DIVISION OF BRIDGES AND STRUCTURES
DEC 08 1992
APPROVAL OF THIS DRAWING DOES NOT RELIEVE THE CONTRACTOR OF THE RESPONSIBILITY FOR THE CORRECTNESS OF DETAIL.

FOR APPROVAL
OCT 27 '92
NOT FOR CONSTRUCTION

REVISION	DATE	DESCRIPTION OF REVISION
NO. 1		
NO. 2		
NO. 3		
NO. 4		
NO. 5		

PRINTING Reqd	For	Date

Bolts Holes 15/16 ø Unless Noted
Shop Paint SEE SHT. GN1
Fab. Spec. AS NTD Inspection
Architect
Erection By Field Connections

HIRSCHFELD STEEL CO. INC.
112 WEST 29TH SAN ANGELO, TEXAS 76903
PHONE (915) 653-3211

DESCRIPTION 58'-0 PLATE GIRDER UNIT
STRUCTURE US 83/281 INTERCHANGE RAMP "2"
LOCATION HIDALGO COUNTY
CUSTOMER GILBERT TEXAS CONSTRUCTION
SHIP TO
Customer's Order No
Dwg By CBT Date 8-92
Checked By DLT Date 8-92
SHEET 137 OF
JOB NO. 92-107

(CE 92-12) (LINE "2")

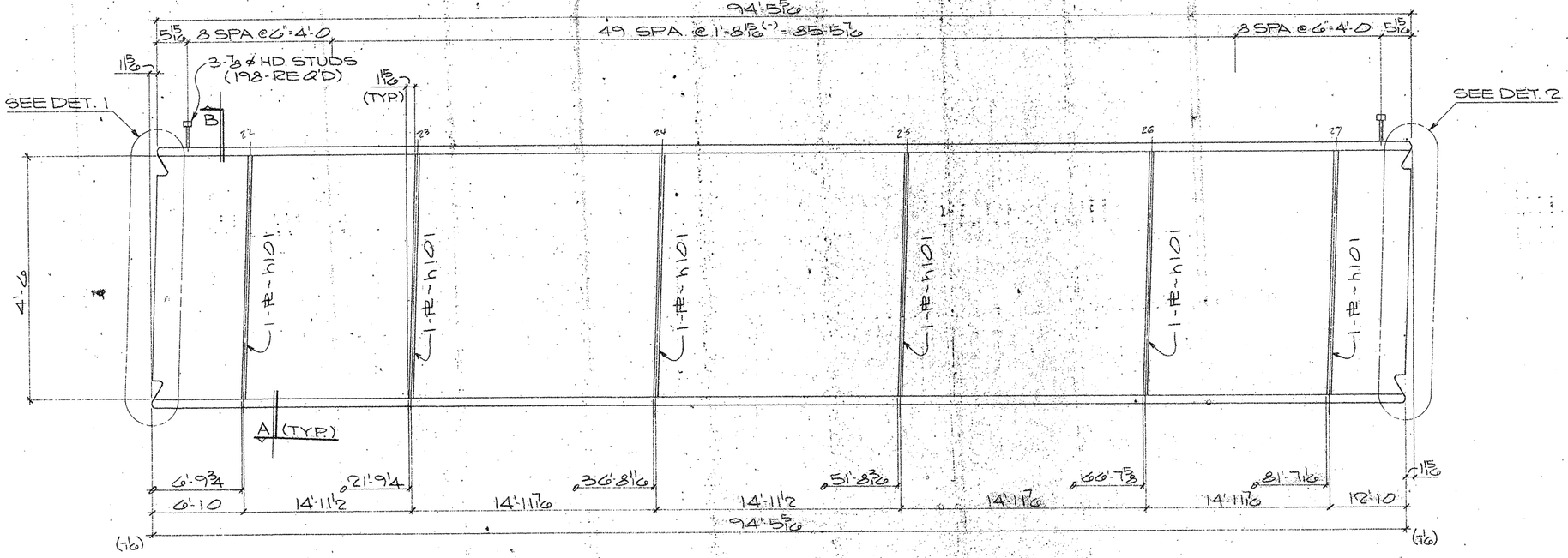

ONE GIRDER MK~136PG5.01

(APPROX. WT. = TONS)

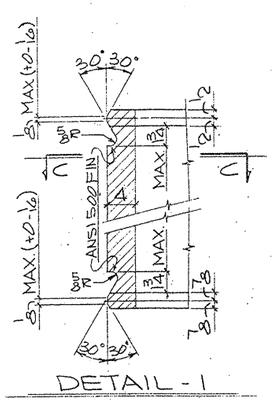

DETAIL - 1

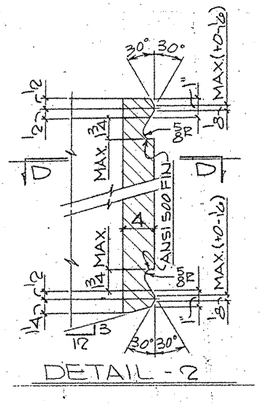

DETAIL - 2

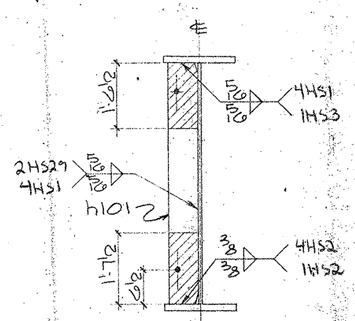

SECTION-A

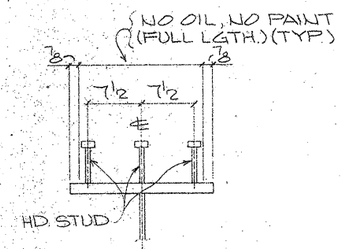

SECTION-B

(TYP. STUD SECT.)

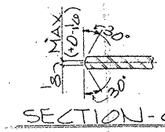

SECTION-CC

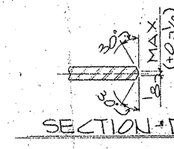

SECTION-DD

SHOP NOTES:

1) FOR GENERAL NOTES SEE SHT. GN1
2) FOR GIRDER SUB-ASSEMBLY SEE SHT. 114
3) FOR STIFF. DETAILS SEE SHT. 101
4) FOR BLOCKING DIAGRAM SEE SHT. 146
5) FOR HEAT CURVE DIAGRAM SEE SHT. 145
6) ▨ INDICATES OIL, NO PAINT (N.S./F.S. & EDGES)

BILL OF MATERIAL

	Qnty	Material	Length	Mark Temp	Mark Ship	Wt.	Cut From	Remarks
2	1	GIRDER		136PG5.01				
3	1	GIRDER SUB-ASSY		A114				
4	6	DIAF STIFF		H101				
6	198	H.D. STUDS 7/8ø	0'-7				113-1	A108

TEXAS DEPARTMENT OF TRANSPORTATION
APPROVED
~~DIVISION OF BRIDGES AND STRUCTURES~~
DEC 08 1992
APPROVAL OF THIS DRAWING DOES NOT RELIEVE THE CONTRACTOR OF THE RESPONSIBILITY FOR THE CORRECTNESS OF DETAIL.

FOR APPROVAL
OCT 27 92
~~NOT FOR CONSTRUCTION~~

REVISION	DATE	DESCRIPTION OF REVISION
NO. 1		
NO. 2		
NO. 3		
NO. 4		
NO. 5		

PRINTING

Reqd	For	Date

Bolts Holes 15/16ø Unless Noted
Shop Paint SEE SHT. GN1
Fab Spec AS NTD. Inspection
Architect
Erection By Field Connections

HIRSCHFELD STEEL CO. INC.
112 WEST 29TH SAN ANGELO, TEXAS 76903
PHONE (915) 653-3211

DESCRIPTION 534'-0 PLATE GIRDER UNIT
STRUCTURE US 83/281 INTERCHANGE RAMP #2
LOCATION HIDALGO COUNTY
CUSTOMER GILBERT TEXAS CONSTRUCTION
SHIP TO
Customer's Order No.
Dwg. By CRT Date 8-92
Checked By DLT Date 8-92
SHEET 136 OF
JOB NO 92-107

G0107

FED. ROAD DIV. NO.	STATE	FEDERAL AID PROJECT NO.			
6	TX.	NH92 (50) M			
STATE DIST. NO.	COUNTY	CONTROL NO.	SECTION NO.	JOB NO.	HIGHWAY NO.
21	HIDALGO	39	17	97	83/281

APV 10-29

(CE 92-12) (LINE # 1)

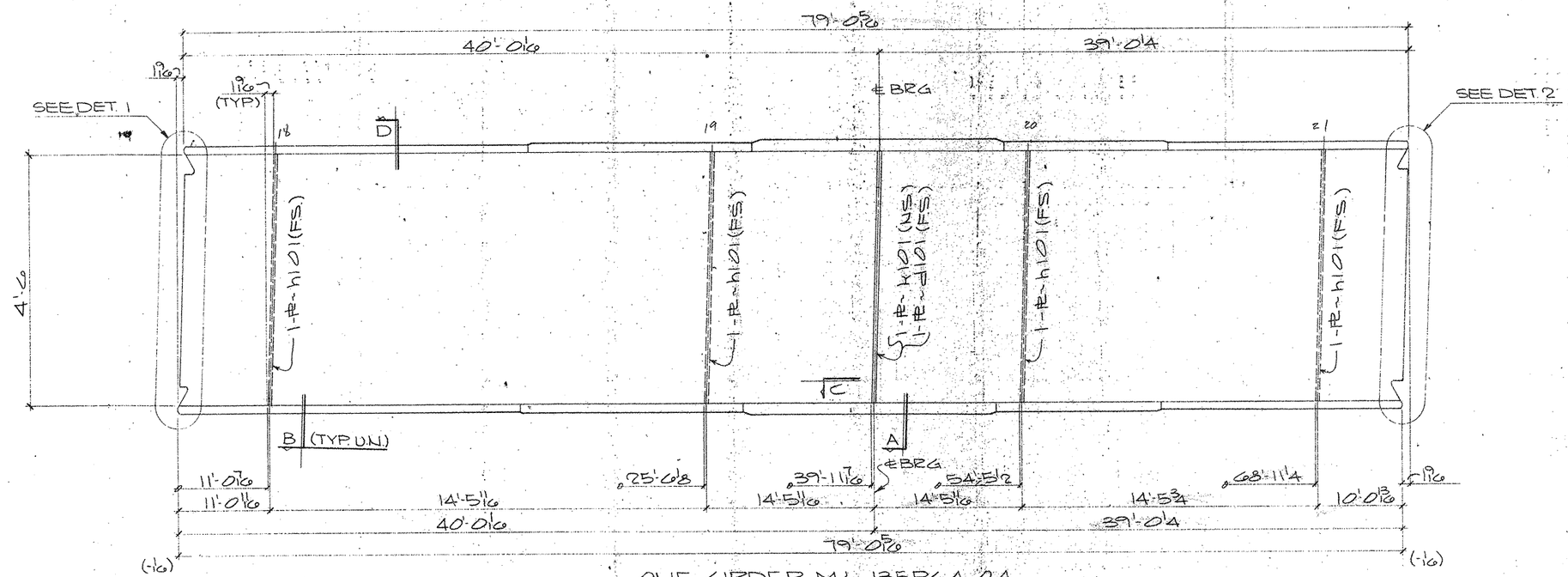

ONE GIRDER MK- 135PG4.04

(APPROX. WT. = TONS)

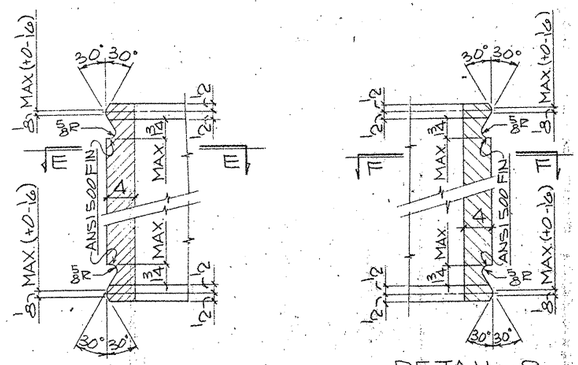

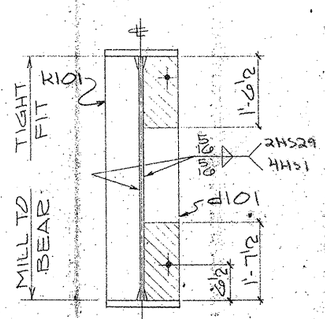

SECTION-A

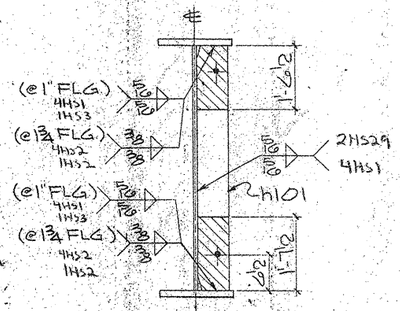

SECTION-B

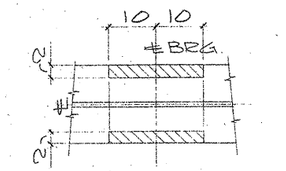

SECTION-C

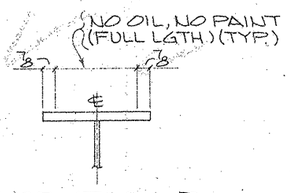

SECTION-D

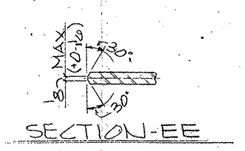

SECTION-EE

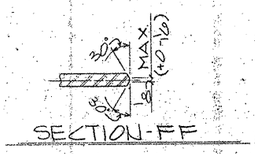

SECTION-FF

SHOP NOTES:
1) FOR GENERAL NOTES SEE SHT. GN1
2) FOR GIRDER SUB-ASSEMBLY SEE SHT. 113
3) FOR STIFF. DETAILS SEE SHT. 101
4) FOR BLOCKING DIAGRAM SEE SHT. 149
5) FOR HEAT CURVE DIAGRAM SEE SHT. 145
6) ▨ INDICATES OIL, NO PAINT (N.S.Y.P.S. & EDGES)

G0107

FED. ROAD DIV. NO.	STATE	FEDERAL AID PROJECT NO.				
6	TX.	NH912 (50) M				
STATE DIST. NO.	COUNTY	CONTROL NO.	SECTION NO.	JOB NO.	HIGHWAY NO.	
21	HIDALGO	39	17	97	83/281	

BILL OF MATERIAL

	Qnty.	Material	Length	Mark Temp.	Mark Ship.	Wt.	Cut From	Remarks
1								
2	1	GIRDER			135PG4.04			
3	1	GIRDER SUB-ASSY		B113				
4	1	BRG STIFF		d101				
5	1	BRG STIFF		k101				
6	4	DIAF. STIFF		h101				
7–60								

TEXAS DEPARTMENT OF TRANSPORTATION
APPROVED
DIVISION OF BRIDGES AND STRUCTURES
DEC 08 1992
APPROVAL OF THIS DRAWING DOES NOT RELIEVE THE CONTRACTOR OF THE RESPONSIBILITY FOR THE CORRECTNESS OF DETAIL

FOR APPROVAL
OCT 27 92
NOT FOR CONSTRUCTION

REVISION	DATE	DESCRIPTION OF REVISION
NO. 1		
NO. 2		
NO. 3		
NO. 4		
NO. 5		

PRINTING

Reqd	For	Date
—	APV	10-27

Bolts Holes 15/16 ϕ Unless Noted
Shop Paint SEE SHT. GN1
Fab Spec AS MTD Inspection
Architect
Erection By Field Connections

HIRSCHFELD STEEL CO. INC.
112 WEST 29TH SAN ANGELO, TEXAS 76903
PHONE (915) 653-3211

DESCRIPTION	584'-0 PLATE GIRDER UNIT
STRUCTURE	US 83/281 INTERCHANGE RAMP "C"
LOCATION	HIDALGO COUNTY
CUSTOMER	GILBERT TEXAS CONSTRUCTION
SHIP TO	
Customer's Order No.	
Dwg. By	CRT Date 8-92
Checked By	DLT Date 8-92
SHEET	135 OF
JOB NO.	92-107

CE 92-12 (LINE #4)

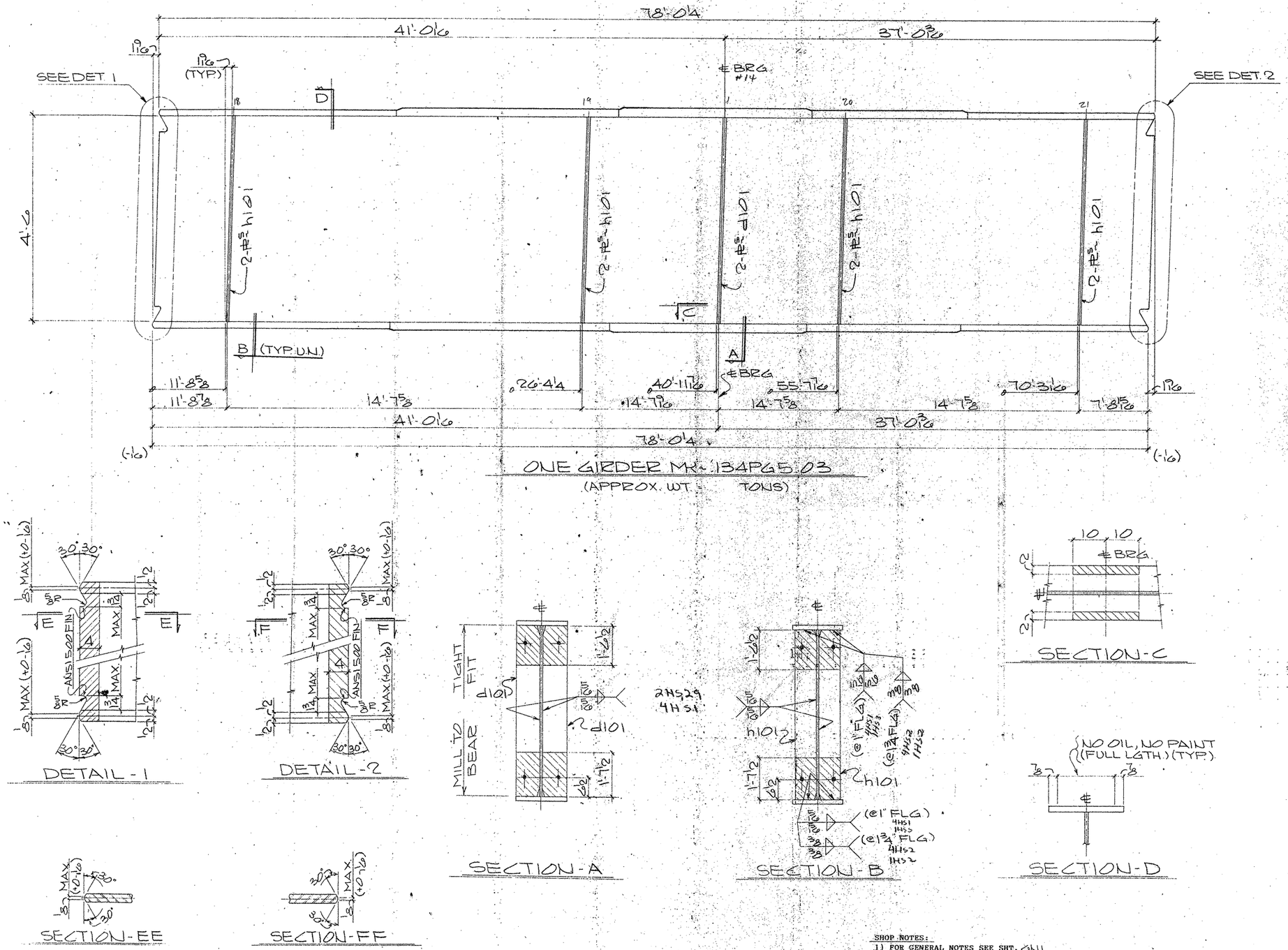

SHOP NOTES:
1) FOR GENERAL NOTES SEE SHT. GN1
2) FOR GIRDER SUB-ASSEMBLY SEE SHT. 112
3) FOR STIFF. DETAILS SEE SHT. 101
4) FOR BLOCKING DIAGRAM SEE SHT. 148
5) FOR HEAT CURVE DIAGRAM SEE SHT. 145
6) ▨ INDICATES OIL, NO PAINT (N.S./F.S. & EDGES)

G0107

FED. ROAD DIV. NO.	STATE	FEDERAL AID PROJECT NO.			
6	TX.	NH92 (50) M			
STATE DIST. NO.	COUNTY	CONTROL NO.	SECTION NO.	JOB NO.	HIGHWAY NO.
21	HIDALGO	39	17	97	83/281

BILL OF MATERIAL

	Qnty.	Material	Length	Mark Temp.	Mark Ship.	Wt.	Cut From	Remarks
1								
2	1	GIRDER			134PG5.03			
3	1	GIRDER SUB-ASSY		B112				
4	2	BRG STIFF		d101				
5								
6	8	DIAF STIFF		h101				

TEXAS DEPARTMENT OF TRANSPORTATION
APPROVED
DIVISION OF BRIDGES AND STRUCTURES
DEC 08 1992
APPROVAL OF THIS DRAWING DOES NOT RELIEVE THE CONTRACTOR OF THE RESPONSIBILITY FOR THE CORRECTNESS OF DETAIL.

FOR APPROVAL
OCT 27 '92
NOT FOR CONSTRUCTION

REVISION	DATE	DESCRIPTION OF REVISION
NO. 1		
NO. 2		
NO. 3		
NO. 4		
NO. 5		

PRINTING

Req'd	For	Date

Bolts Holes 15/16 ⌀ Unless Noted
Shop Paint SEE SHT. GN1
Fab/Spec. AS NTD Inspection
Architect
Erection By Field Connections

HIRSCHFELD STEEL CO. INC.
112 WEST 29TH SAN ANGELO TEXAS 76903
PHONE (915) 653-3211

DESCRIPTION 584'-0 PLATE GIRDER UNIT
STRUCTURE US 83/281 INTERCHANGE RAMP #2
LOCATION HIDALGO COUNTY
CUSTOMER GILBERT TEXAS CONSTRUCTION
SHIP TO
Customer's Order No.
Dwg. By CRT Date 8-92
Checked By DLT Date 8-92
SHEET 134 OF
JOB NO. 92-107

APV 10-27

CE 92-12 (LINE #3)

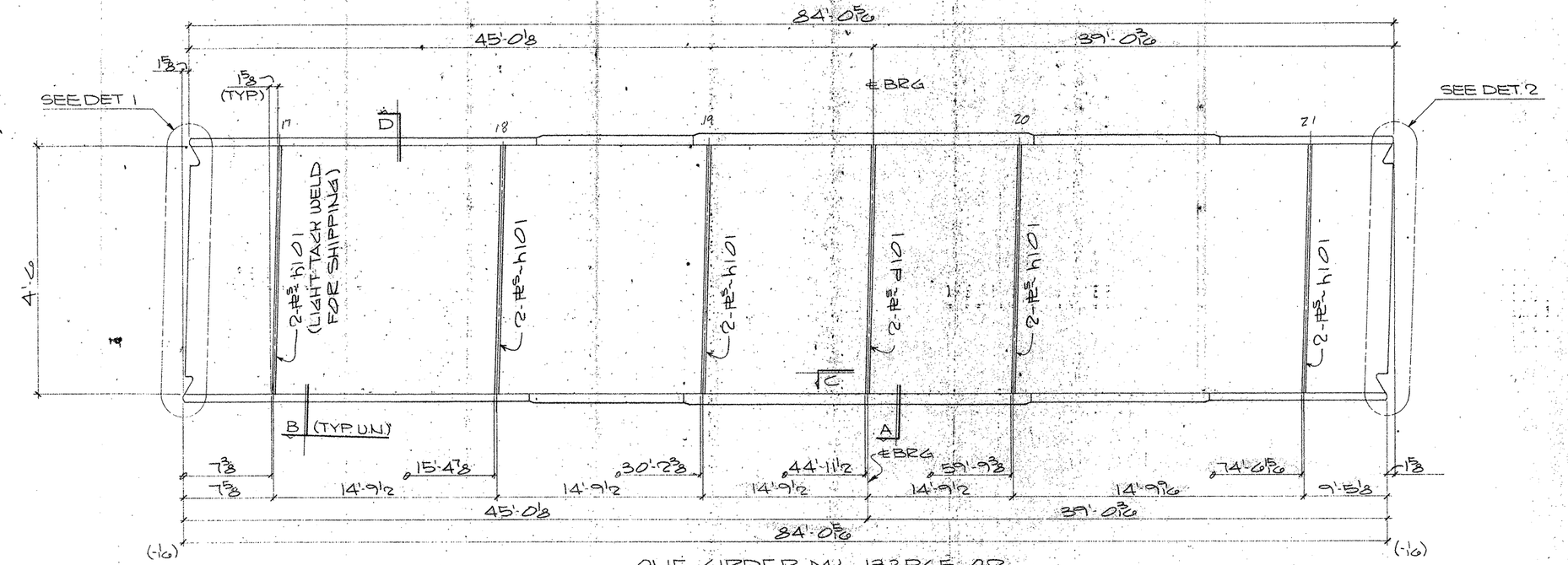

ONE GIRDER MK~ 133PG5.02

(APPROX. WT. = TONS)

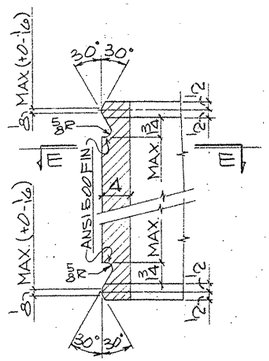

DETAIL-1

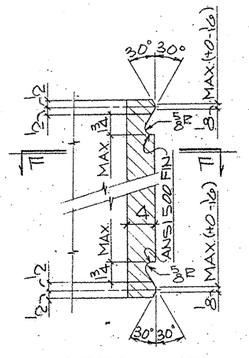

DETAIL-2

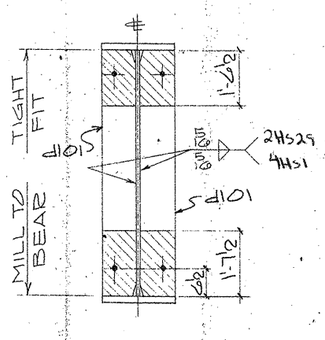

SECTION-A

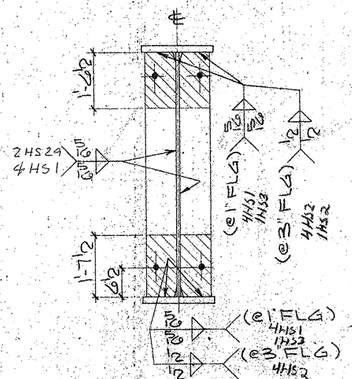

SECTION-B

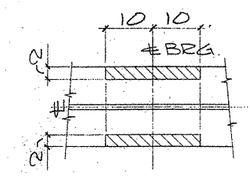

SECTION-C

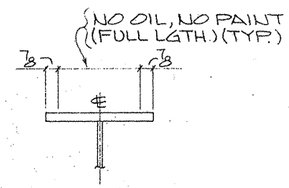

SECTION-D

SECTION-EE

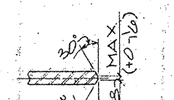

SECTION-FF

SHOP NOTES:

1) FOR GENERAL NOTES SEE SHT. GN1
2) FOR GIRDER SUB-ASSEMBLY SEE SHT. 111
3) FOR STIFF. DETAILS SEE SHT. 101
4) FOR BLOCKING DIAGRAM SEE SHT. 147
5) FOR HEAT CURVE DIAGRAM SEE SHT. 145
6) ZZZZZ INDICATES OIL, NO PAINT (N.S./F.S. & EDGES)

BILL OF MATERIAL

	Qnty:	Material	Length	Mark Temp	Mark Ship.	Wt.	Cut From	Remarks
1								
2	1	GIRDER			133PG5.02			
3	1	GIRDER SUB-ASSY		B111				
4	2	BRG STIFF		d101				
5								
6	10	DIAF STIFF		h101				
7								
8								
9								
10								
11								
12								
13								
14								
15								
16								
17								
18								
19								
20								
21								
22								
23								
24								
25								
26								
27								
28								
29								
30								
31								
32								
33								
34								
35								
36								
37								
38								
39								
40								
41								
42								
43								
44								
45								
46								
47								
48								
49								
50								
51								
52								
53								
54								
55								
56								
57								
58								
59								
60								

TEXAS DEPARTMENT OF TRANSPORTATION
APPROVED
DIVISION OF BRIDGES AND STRUCTURES
DEC 08 1992

APPROVAL OF THIS DRAWING DOES NOT RELIEVE THE CONTRACTOR OR THE RESPONSIBILITY FOR THE CORRECTNESS OF DETAIL.

FOR APPROVAL
OCT 27 92
NOT FOR CONSTRUCTION

REVISION	DATE	DESCRIPTION OF REVISION
NO. 1		
NO. 2		
NO. 3		
NO. 4		
NO. 5		

PRINTING		
Reqd	For	Date

Bolts Holes. 15/16 ø Unless Noted
Shop Paint SEE SHT. GN1
Fab. Spec. AS NTD Inspection
Architect
Erection By Field Connections

HIRSCHFELD STEEL CO. INC.
112 WEST 29TH SAN ANGELO, TEXAS 76903
PHONE (915) 653-3211

DESCRIPTION 584'-0 PLATE GIRDER UNIT
STRUCTURE US 83/281 INTERCHANGE RAMP #2
LOCATION HIDALGO COUNTY
CUSTOMER GILBERT TEXAS CONSTRUCTION
SHIP TO
Customer's Order No.
Dwg By CBT Date 8-92
Checked By DLT Date 8-92
SHEET 33 OF
JOB NO. 92-107

APV 10/9/92

G0107

FED. ROAD DIV. NO.	STATE	FEDERAL AID PROJECT NO.				
6	TX.	NHPP (50) M				
STATE DIST. NO.	COUNTY	CONTROL NO.	SECTION NO.	JOB NO.	HIGHWAY NO.	
21	HIDALGO	39	17	97	83/281	

CE92-12 (LINE # 2)

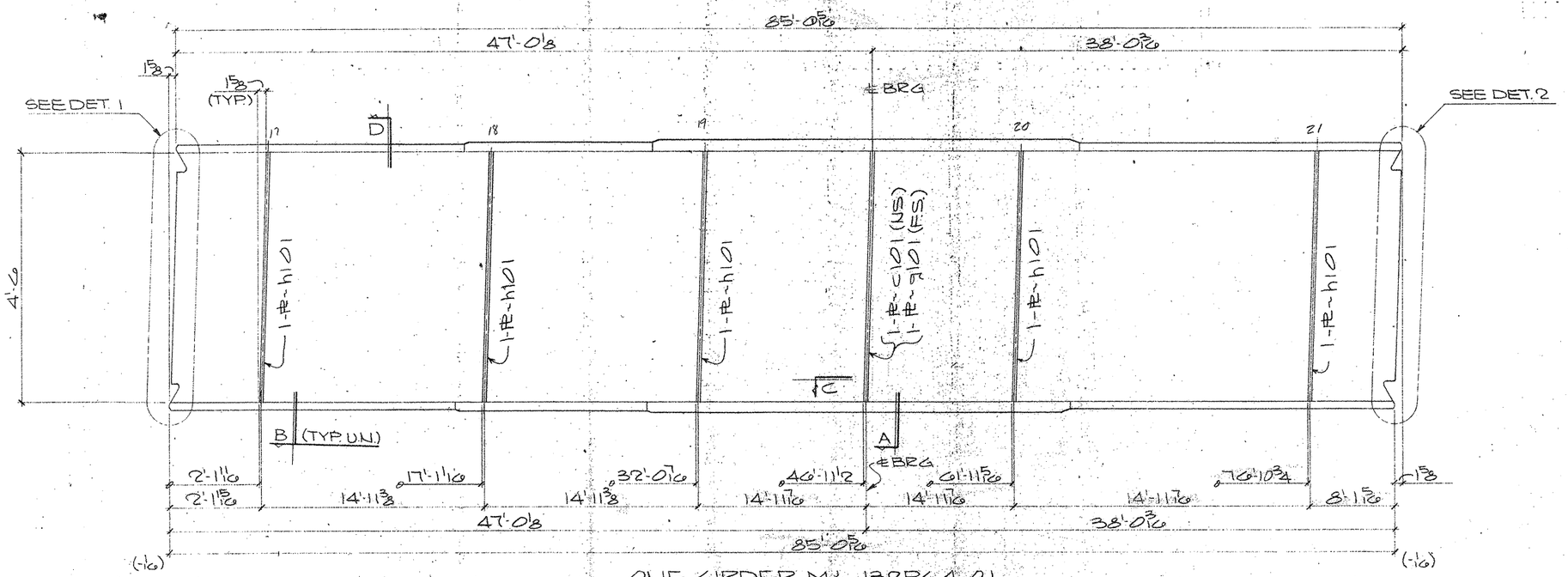

ONE GIRDER MK- 132PG4.01

(APPROX. WT. = TONS)

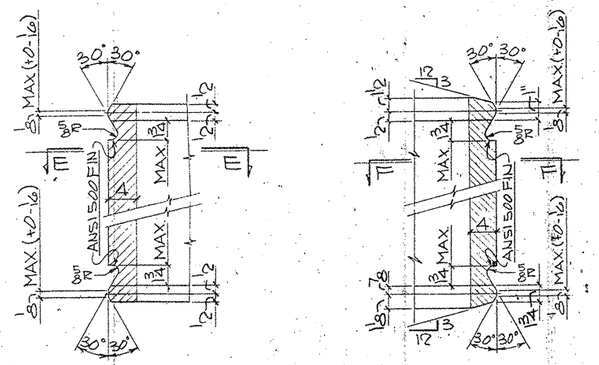

DETAIL-1.

DETAIL-2

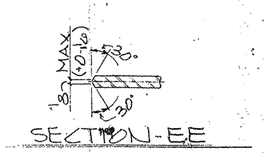

SECTION-EE

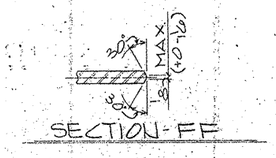

SECTION-FF

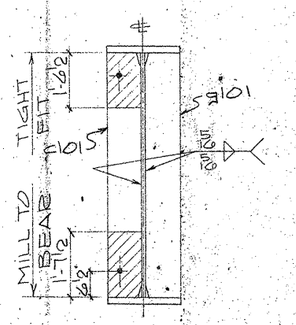

SECTION-A

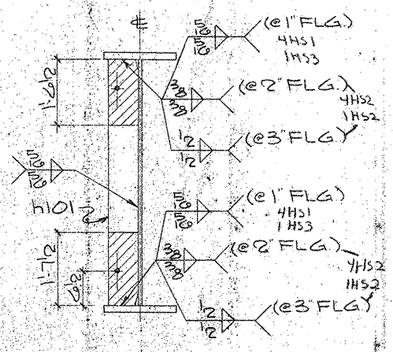

SECTION-B

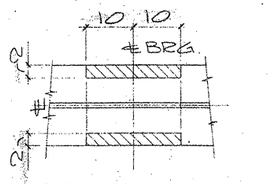

SECTION-C

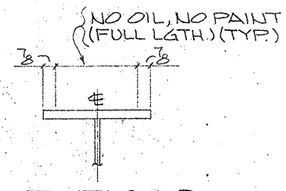

SECTION-D

SHOP NOTES:

1) FOR GENERAL NOTES SEE SHT. GN1
2) FOR GIRDER SUB-ASSEMBLY SEE SHT. 110
3) FOR STIFF. DETAILS SEE SHT. 101
4) FOR BLOCKING DIAGRAM SEE SHT. 140
5) FOR HEAT CURVE DIAGRAM SEE SHT. 145
6) ▨ INDICATES OIL, NO PAINT (N.S./F.S. & EDGES)

BILL OF MATERIAL

	Qnty	Material	Length	Mark Temp.	Mark Ship.	Wt.	Cut From	Remarks
2	1	GIRDER			132PG4.01			
3	1	GIRDER SUB-ASSY		B110				
4	1	BRG STIFF		c101				
5	1	BRG STIFF		g101				
6	5	DIAF STIFF		h101				

TEXAS DEPARTMENT OF TRANSPORTATION
APPROVED
DIVISION OF BRIDGES AND STRUCTURES
DEC 08 1992
APPROVAL OF THIS DRAWING DOES NOT RELIEVE THE CONTRACTOR OF THE RESPONSIBILITY FOR THE CORRECTNESS OF DETAIL

FOR APPROVAL
OCT 27 92
NOT FOR CONSTRUCTION

REVISION	DATE	DESCRIPTION OF REVISION
NO. 1		
NO. 2		
NO. 3		
NO. 4		
NO. 5		

PRINTING Reqd | For | Date

Bolts: Holes: 15/16 ø Unless Noted
Shop Paint SEE SHT GN1
Fab Spec. ASNTD Inspection
Architect
Erection By Field Connections

HIRSCHFELD STEEL CO. INC.
112 WEST 29TH SAN ANGELO TEXAS 76903
PHONE (915) 653-3211

DESCRIPTION 584'-0 PLATE GIRDER UNIT
STRUCTURE US 83/281 INTERCHANGE RAMP "G"
LOCATION HIDALGO COUNTY
CUSTOMER GILBERT TEXAS CONSTRUCTION
SHIP TO
Customer's Order No.
Dwg. By CBT Date 8-92
Checked By DLT Date 8-92
SHEET 132 OF
JOB NO. 92-107

FED. ROAD DIV. NO.	STATE	FEDERAL AID PROJECT NO.
6	TX.	NH92 (50) M

STATE DIST. NO.	COUNTY	CONTROL NO.	SECTION NO.	JOB NO.	HIGHWAY NO.
21	HIDALGO	39	17	97	83/281

G0107

CE92-12 (LINE # 1)

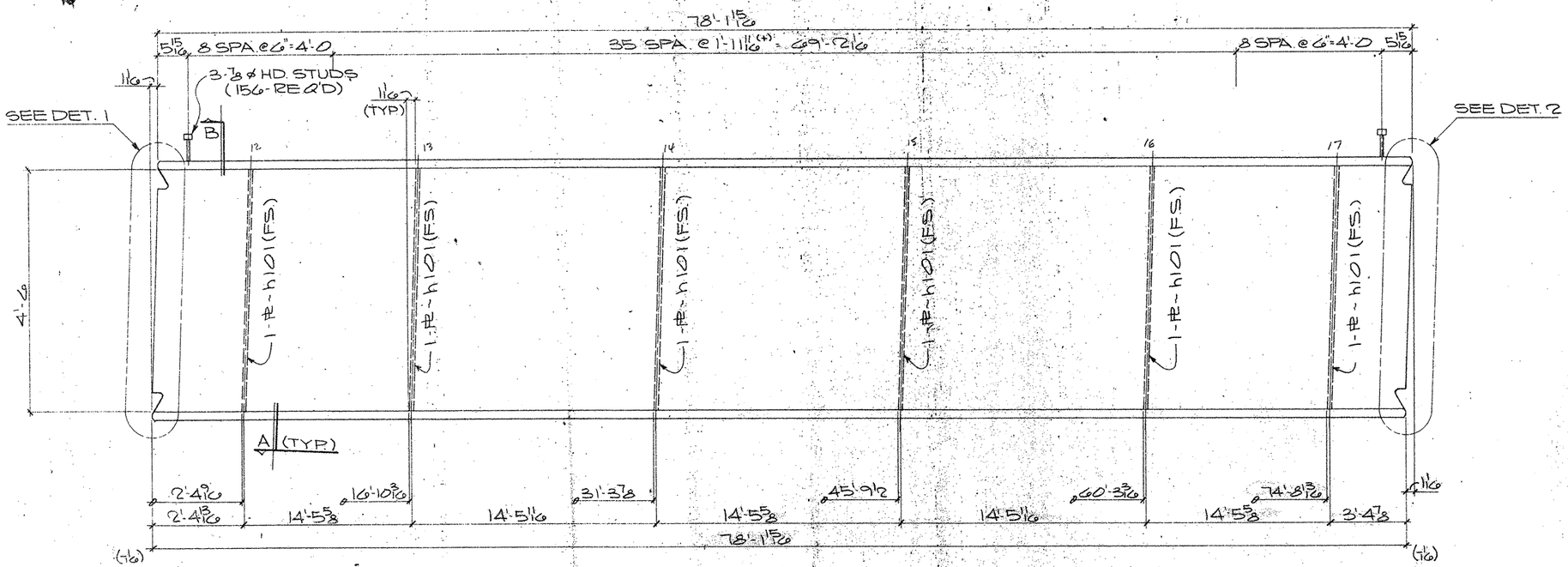

ONE GIRDER MK-131PG3.04

(APPROX. WT. = TONS)

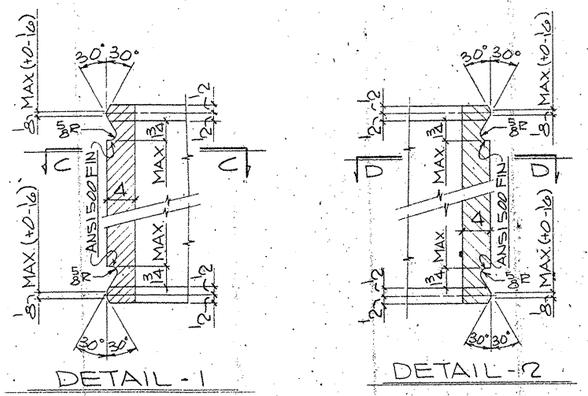

DETAIL-1

DETAIL-2

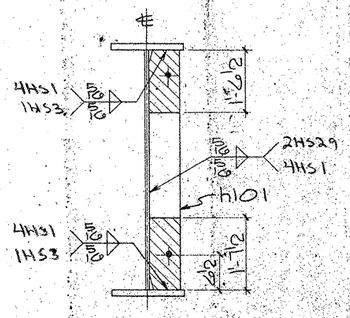

SECTION-A

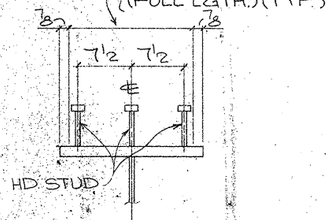

SECTION-B

(TYP STUD SECT.)

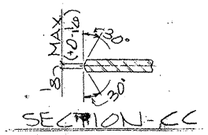

SECTION-CC

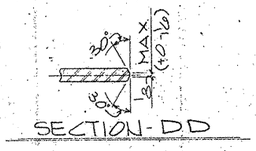

SECTION-DD

SHOP NOTES:

1) FOR GENERAL NOTES SEE SHT. GN1
2) FOR GIRDER SUB-ASSEMBLY SEE SHT. 113
3) FOR STIFF. DETAILS SEE SHT. 101
4) FOR BLOCKING DIAGRAM SEE SHT. 149
5) FOR HEAT CURVE DIAGRAM SEE SHT. 144
6) ▨ INDICATES OIL, NO PAINT (N.S./F.S. & EDGES)

BILL OF MATERIAL

	Only	Material	Length	Mark: Temp	Mark: Ship.	Wt.	Cut From	Remarks
1								
2	1	GIRDER		131PG3.04				
3	1	GIRDER SUB-ASSY		A113				
4	6	DIAF. STIFF.		H101				
5								
6	156	H.D. STUDS 7/8	0'-7				113-1	A108
7–60								

TEXAS DEPARTMENT OF TRANSPORTATION
APPROVED
DIVISION OF BRIDGES AND STRUCTURES
DEC 08 1992

APPROVAL OF THIS DRAWING DOES NOT RELIEVE THE CONTRACTOR OF THE RESPONSIBILITY FOR THE CORRECTNESS OF DETAIL

FOR APPROVAL
OCT 27 92
NOT FOR CONSTRUCTION

REVISION	DATE	DESCRIPTION OF REVISION
NO. 1		
NO. 2		
NO. 3		
NO. 4		
NO. 5		

PRINTING: Reqd | For | Date

Bolts: Holes, 15/16 ø Unless Noted
Shop Paint: SEE SHT. GN1
Fab Spec: AS NTD. Inspection
Architect
Erection By: Field Connections

HIRSCHFELD STEEL CO. INC.
112 WEST 29TH SAN ANGELO, TEXAS 76903
PHONE (915) 653-3211

DESCRIPTION: 554'-0 PLATE GIRDER UNIT
STRUCTURE: US 83/281 INTERCHANGE RAMP "Z"
LOCATION: HIDALGO COUNTY
CUSTOMER: GILBERT TEXAS CONSTRUCTION
SHIP TO
Customer's Order No.
Dwg. By: CET Date: 8-92
Checked By: DLT Date: 8-92

SHEET 131 OF
JOB NO. 92-107

FED. ROAD DIV. NO.	STATE	FEDERAL AID PROJECT NO.			
6	TX.	NH92 (50) M			
STATE DIST. NO.	COUNTY	CONTROL NO.	SECTION NO.	JOB NO.	HIGHWAY NO.
21	HIDALGO	39	17	97	83/281

G0107

(CE 92-12) (LINE # 4)

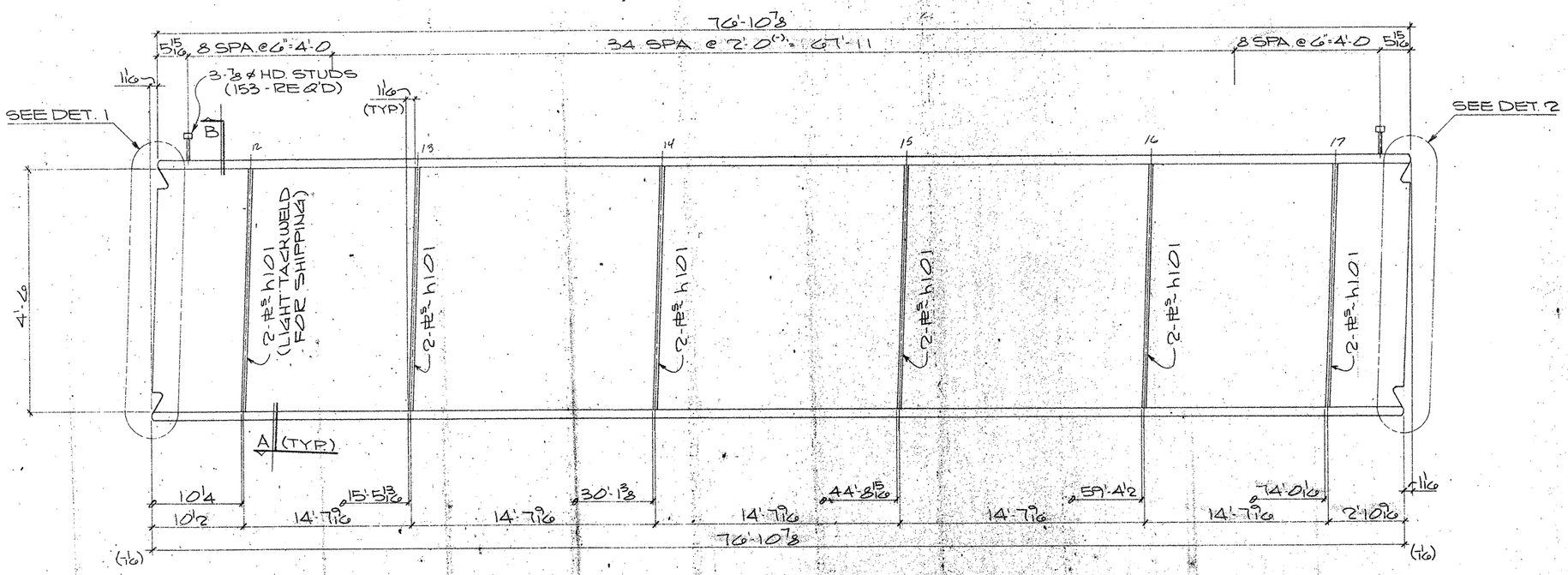

ONE GIRDER MK= 130PG4.03

(APPROX. WT. = TONS)

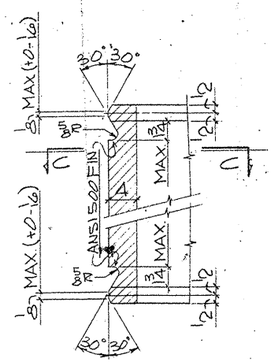

DETAIL-1

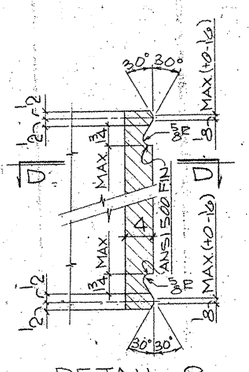

DETAIL-2

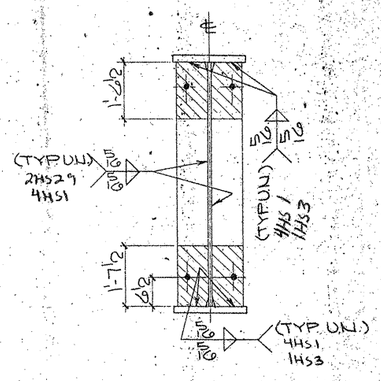

SECTION-A

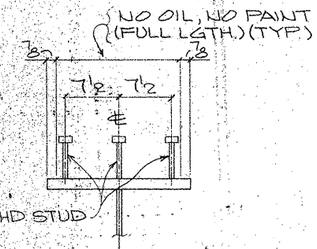

SECTION-B

(TYP STUD SECT.)

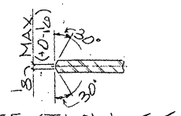

SECTION-CC

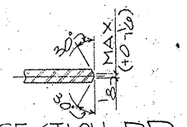

SECTION-DD

SHOP NOTES:

1) FOR GENERAL NOTES SEE SHT. GN1
2) FOR GIRDER SUB-ASSEMBLY SEE SHT. 112
3) FOR STIFF. DETAILS SEE SHT. 101
4) FOR BLOCKING DIAGRAM SEE SHT. 148
5) FOR HEAT CURVE DIAGRAM SEE SHT. 144
6) ▨ INDICATES OIL, NO PAINT (N.S./F.S. & EDGES)

BILL OF MATERIAL

	Qnty.	Material	Length	Mark Temp.	Mark Ship.	Wt.	Cut From	Remarks
2	1	GIRDER		130PG4.03				
3	1	GIRDER SUB-ASSY		A112				
4	12	DIAF. STIFF.		h101				
6	153	H.D. STUDS 7/8	0'-7				113-1	A108

TEXAS DEPARTMENT OF TRANSPORTATION
APPROVED
DIVISION OF BRIDGES AND STRUCTURES
DEC 06 1992

APPROVAL OF THIS DRAWING DOES NOT RELIEVE THE CONTRACTOR OF THE RESPONSIBILITY FOR THE CORRECTNESS OF DETAIL

FOR APPROVAL
OCT 27 '92
NOT FOR CONSTRUCTION

REVISION	DATE	DESCRIPTION OF REVISION
NO. 1		
NO. 2		
NO. 3		
NO. 4		
NO. 5		

PRINTING		
Req'd	For	Date

Bolts Holes 15/16 ø Unless Noted
Shop Paint SEE SHT. GN1
Fab Spec AASHTO Inspection
Architect
Erection By Field Connections

HIRSCHFELD STEEL CO. INC.
112 WEST 29TH SAN ANGELO, TEXAS 76903
PHONE (915) 653-3211

DESCRIPTION	584'-0 PLATE GIRDER UNIT
STRUCTURE	US 83/281 INTERCHANGE RAMP "E"
LOCATION	HIDALGO COUNTY
CUSTOMER	GILBERT TEXAS CONSTRUCTION
SHIP TO	
Customer's Order No.	
Dwg By CRT Date 8-92	
Checked By DLT Date 8-92	

SHEET 130 OF
JOB NO 92-107

G0107

FED. ROAD DIV. NO.	STATE	FEDERAL AID PROJECT NO.			
6	TX.	NH92 (50) M			
STATE DIST. NO.	COUNTY	CONTROL NO.	SECTION NO.	JOB NO.	HIGHWAY NO.
21	HIDALGO	39	17	97	83/281

APV 10-30

(CE 92-12) (LINE # 3)

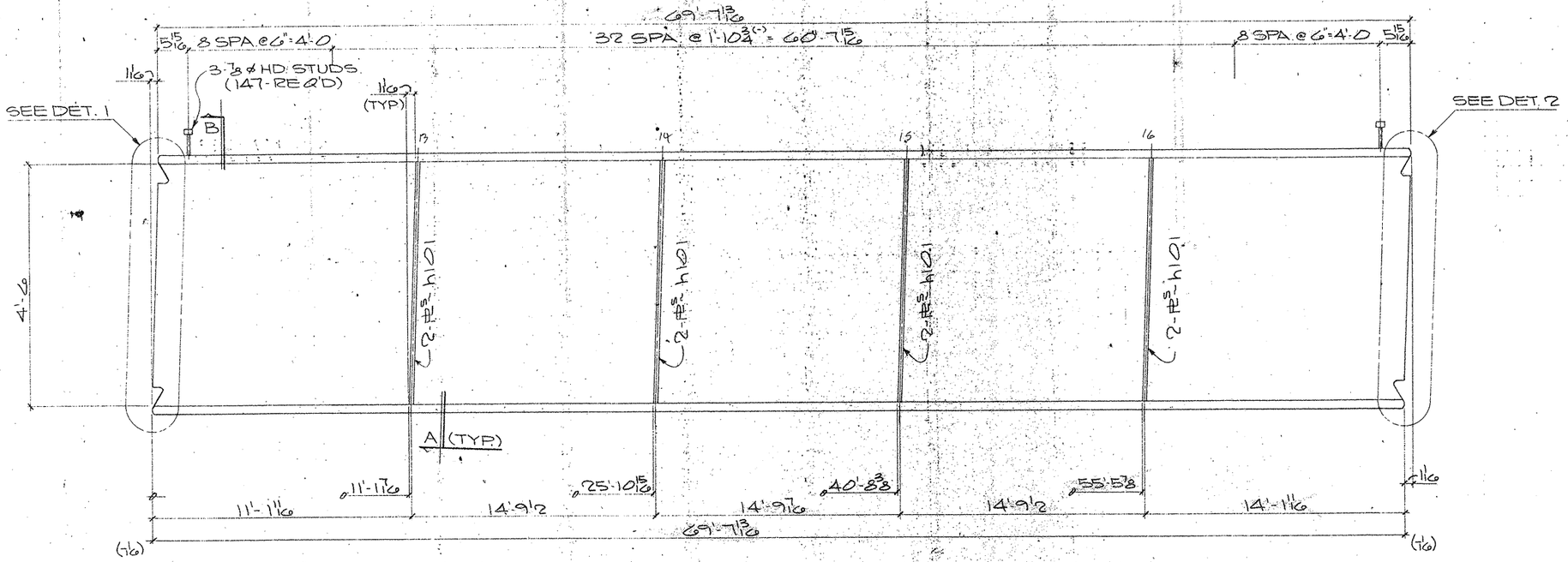

ONE GIRDER MK-129PG4.02

(APPROX. WT. = TONS)

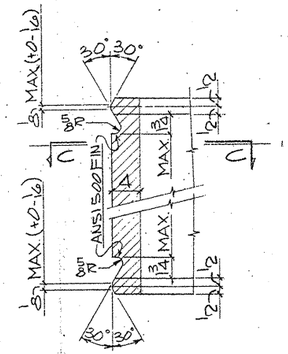

DETAIL-1

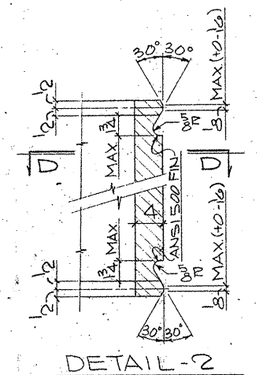

DETAIL-2

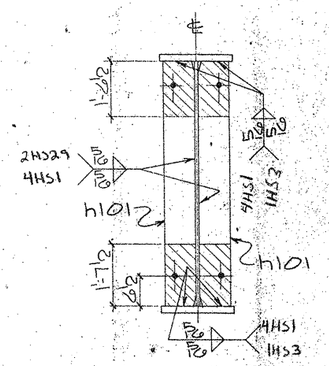

SECTION-A

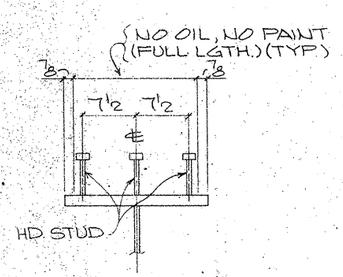

SECTION-B

(TYP STUD SECT.)

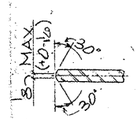

SECTION-CC

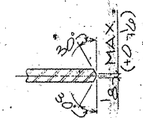

SECTION-DD

SHOP NOTES:
1) FOR GENERAL NOTES SEE SHT. GN1
2) FOR GIRDER SUB-ASSEMBLY SEE SHT. 111
3) FOR STIFF. DETAILS SEE SHT. 101
4) FOR BLOCKING DIAGRAM SEE SHT. 147
5) FOR HEAT CURVE DIAGRAM SEE SHT. 144
6) ////// INDICATES OIL, NO PAINT (N.S./F.S. & EDGES)

BILL OF MATERIAL

	Qnty.	Material	Length	Mark Temp	Mark Ship	Wt.	Cut From	Remarks
1								
2	1	GIRDER	-	129PG4.02			-	
3	1	GIRDER SUB-ASSY	A111					
4	8	DIAF STIFF	h101					
5								
6	147	H.D. STUDS 7/8	0'-7				113-1	A108
7								
8								
9								
10								
11								
12								
13								
14								
15								
16								
17								
18								
19								
20								
21								
22								
23								
24								
25								
26								
27								
28								
29								
30								
31								
32								
33								
34								
35								
36								
37								
38								
39								
40								
41								
42								
43								
44								
45								
46								
47								
48								
49								
50								
51								
52								
53								
54								
55								
56								
57								
58								
59								
60								

TEXAS DEPARTMENT OF TRANSPORTATION
APPROVED
DIVISION OF BRIDGES AND STRUCTURES
DEC 08 1992
APPROVAL DATE: 12/7/92
APPROVAL FOR OTHER CONSTRUCTION
APPROVAL OF THIS DRAWING DOES NOT RELIEVE THE CONTRACTOR OF THE RESPONSIBILITY FOR THE CORRECTNESS OF DETAIL

REVISION	DATE	DESCRIPTION OF REVISION
NO. 1		
NO. 2		
NO. 3		
NO. 4		
NO. 5		

PRINTING
Prints: Notes 1/2 1/16 in. Unless Noted
Revis | For | Date
Shop Paint SEE SHT. GN1
Fab Spec. AS NTD Inspection
Architect
Erection By Field Connections

HIRSCHFELD STEEL CO. INC.
112 WEST 29TH SAN ANGELO, TEXAS 76903
PHONE (915) 653-3211

DESCRIPTION 584'-0 PLATE GIRDER UNIT
STRUCTURE OS 83/281 INTERCHANGE RAMP # 2
LOCATION HIDALGO COUNTY
CUSTOMER GILBERT TEXAS CONSTRUCTION
SHIP TO
Customer's Order No.
Dwg. By ERT Date 8-92
Checked By DLJ Date 8-92
SHEET 129 OF
JOB NO. 92-107

FED. ROAD DIV. NO.	STATE	FEDERAL AID PROJECT NO.			
6	TX.	NHS2 (50) M			
STATE DIST. NO.	COUNTY	CONTROL NO.	SECTION NO.	JOB NO.	HIGHWAY NO.
21	HIDALGO	39	17	97	83/281

G0107

(CE 92-12) (LINE # 2)

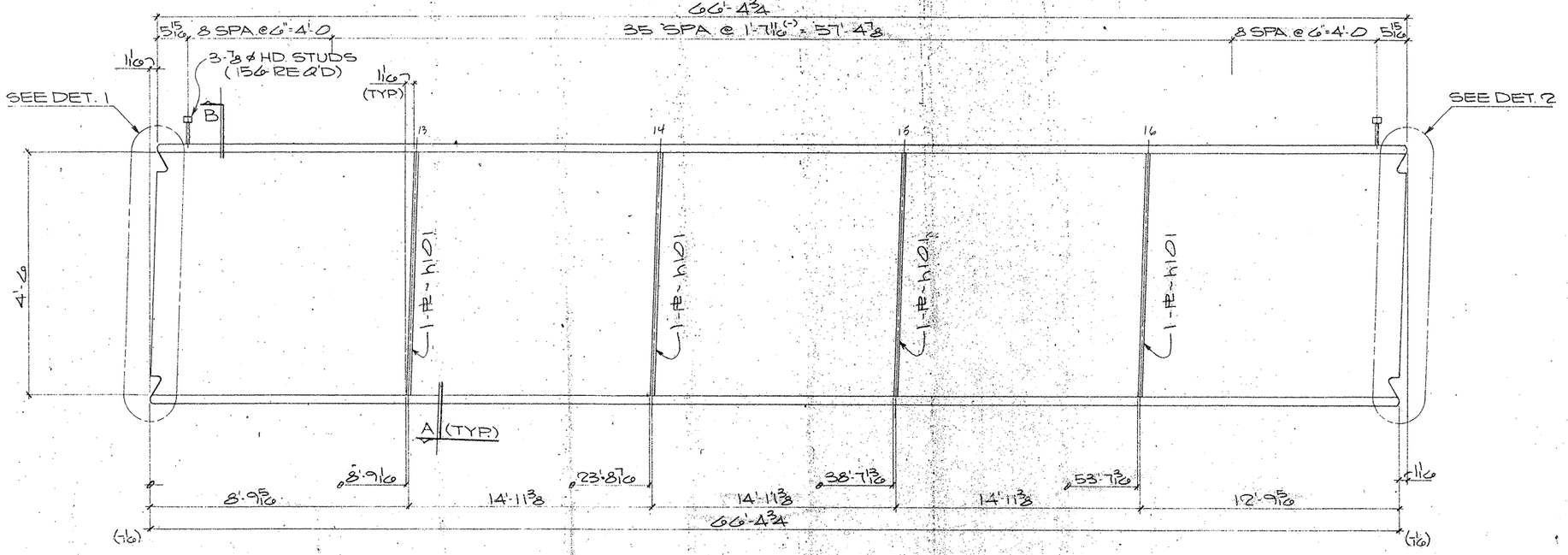

ONE GIRDER MK-128PG3.01

(APPROX. WT. = TONS)

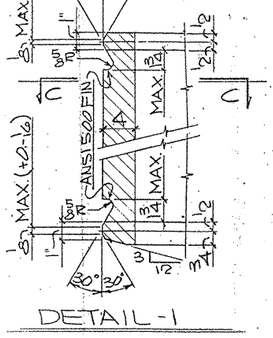

DETAIL-1

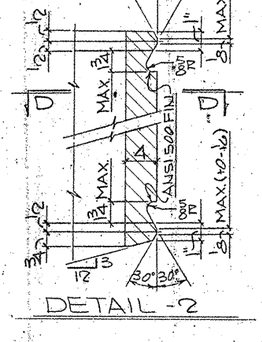

DETAIL-2

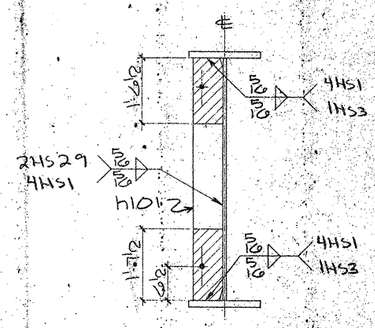

SECTION-A

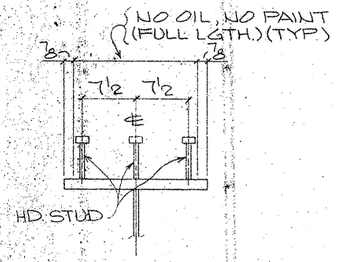

SECTION-B

(TYP. STUD SECT.)

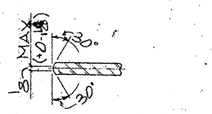

SECTION-CC

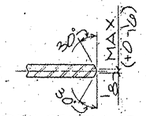

SECTION-DD

SHOP NOTES:

1) FOR GENERAL NOTES SEE SHT. GN1
2) FOR GIRDER SUB-ASSEMBLY SEE SHT. 110
3) FOR STIFF. DETAILS SEE SHT. 101
4) FOR BLOCKING DIAGRAM SEE SHT. 146
5) FOR HEAT CURVE DIAGRAM SEE SHT. 144
6) ▨ INDICATES OIL, NO PAINT (N.S./P.S. & EDGES)

BILL OF MATERIAL

	Qnty.	Material	Length	Mark Temp.	Mark Ship	Wt.	Cut From	Remarks
2	1	GIRDER		128PG3.01				
3	1	GIRDER SUB-ASSY		A110				
4	4	DIAF STIFF		h101				
6	156	H.D. STUDS 7/8	0'-7				113-1	A108

TEXAS DEPARTMENT OF TRANSPORTATION
APPROVED
DIVISION OF BRIDGES AND STRUCTURES
DEC 08 1992
APPROVAL OF THIS DRAWING DOES NOT RELIEVE THE CONTRACTOR OF THE RESPONSIBILITY FOR THE CORRECTNESS OF DETAIL.

FOR APPROVAL
OCT 27 '92
NOT FOR CONSTRUCTION

REVISION	DATE	DESCRIPTION OF REVISION
NO. 1		
NO. 2		
NO. 3		
NO. 4		
NO. 5		

PRINTING Regd	For	Date

Bolts Holes 15/16 ø Unless Noted
Shop Paint SEE SHT. GN1
Fab Spec AS NTD Inspection
Architect
Erection By Field Connections

HIRSCHFELD STEEL CO. INC.
112 WEST 29TH SAN ANGELO, TEXAS 76903
PHONE (915) 653-3211

DESCRIPTION 584'-0 PLATE GIRDER UNIT
STRUCTURE US 83/281 INTERCHANGE RAMP #2
LOCATION HIDALGO COUNTY
CUSTOMER GILBERT TEXAS CONSTRUCTION
SHIP TO
Customer's Order No
Dwg. By ERT Date 8-92
Checked By DLT Date 8-92
SHEET 128 OF
JOB NO. 92-107

FED. ROAD DIV. NO.	STATE	FEDERAL AID PROJECT NO.				
6	TX.	NH92 (50) M				
STATE DIST. NO.	COUNTY	CONTROL NO.	SECTION NO.	JOB NO.		HIGHWAY NO.
21	HIDALGO	39	17	97		83/281

G0107

APV 10/29

(CE 92-12) (LINE # 1)

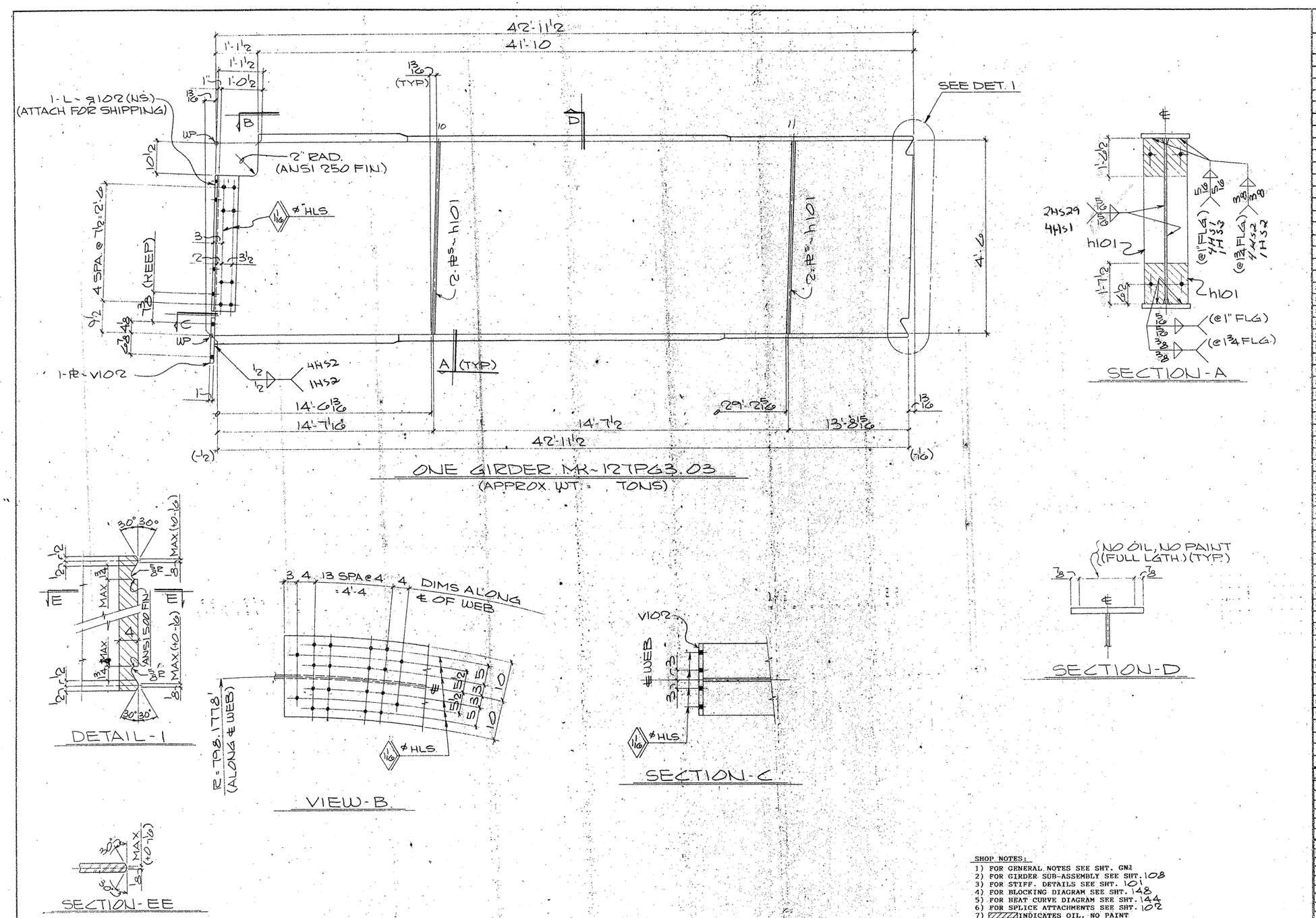

ONE GIRDER MK-127PG3.03
(APPROX. WT. = TONS)

SECTION-A

DETAIL-1

VIEW-B

SECTION-C

SECTION-D

SECTION-EE

SHOP NOTES:

1) FOR GENERAL NOTES SEE SHT. GN1
2) FOR GIRDER SUB-ASSEMBLY SEE SHT. 108
3) FOR STIFF. DETAILS SEE SHT. 101
4) FOR BLOCKING DIAGRAM SEE SHT. 148
5) FOR HEAT CURVE DIAGRAM SEE SHT. 144
6) FOR SPLICE ATTACHMENTS SEE SHT. 102
7) ▨ INDICATES OIL, NO PAINT (N.S./F.S. & EDGES)

G0107

FED. ROAD DIV. NO.	STATE	FEDERAL AID PROJECT NO.			
6	TX.	NH92 (50) M			
STATE DIST. NO.	COUNTY	CONTROL NO.	SECTION NO.	JOB NO.	HIGHWAY NO.
21	HIDALGO	39	17	97	83/281

BILL OF MATERIAL

Qnty	Material	Length	Mark Temp.	Mark Ship.	Wt.	Cut From	Remarks
1	GIRDER		127PG3.03				
1	GIRDER SUB-ASSY		C108				
4	DIAF STIFF		h101				
1	ANGLE		g102				
1	CONN. PL		V102				

TEXAS DEPARTMENT OF TRANSPORTATION
APPROVED
DIVISION OF BRIDGES AND STRUCTURES
DEC 08 1992
APPROVAL OF THIS DRAWING DOES NOT RELIEVE THE CONTRACTOR OF THE RESPONSIBILITY FOR THE CORRECTNESS OF DETAIL.

FOR APPROVAL
OCT 27 '92
NOT FOR CONSTRUCTION

REVISION	DATE	DESCRIPTION OF REVISION
NO. 1		
NO. 2		
NO. 3		
NO. 4		
NO. 5		

PRINTING

Req'd	For	Date
—	APV	10-27

Bolts Holes 15/16 ⌀ Unless Noted
Shop Paint SEE SHT. GN1
Fab Spec AS NTD Inspection
Architect
Erection By Field Connections

HIRSCHFELD STEEL CO. INC.
112 WEST 29TH SAN ANGELO, TEXAS 76903
PHONE (915) 653-3211

DESCRIPTION 584'-0 PLATE GIRDER UNIT
STRUCTURE US 83/281 INTERCHANGE RAMP #2
LOCATION HIDALGO COUNTY
CUSTOMER GILBERT TEXAS CONSTRUCTION
SHIP TO
Customer's Order No
Dwg. By CRT Date 8-92
Checked By DLT Date 8-92
SHEET 127 OF
JOB NO. 92-107

CE 92-12 (LINE #3)

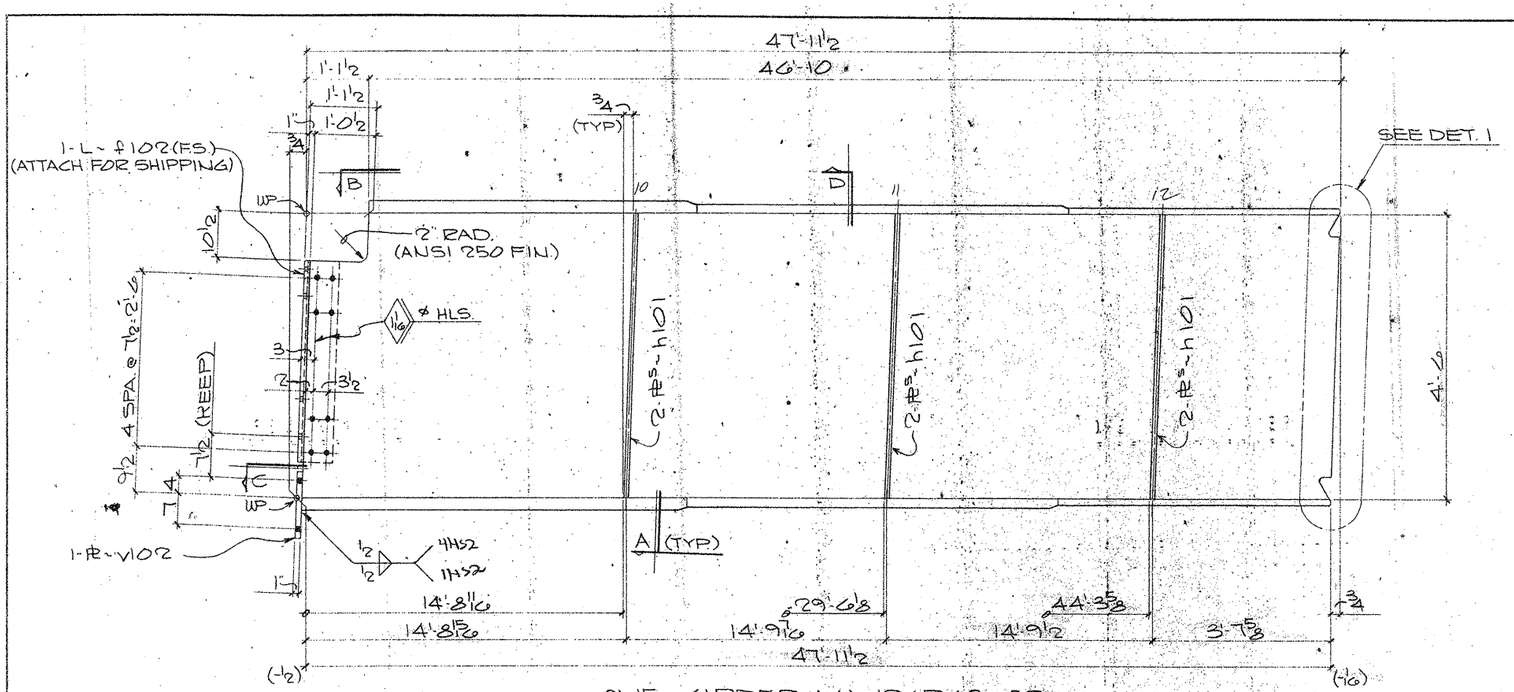

ONE GIRDER MK~126PG3.0?

(APPROX WT. = TONS)

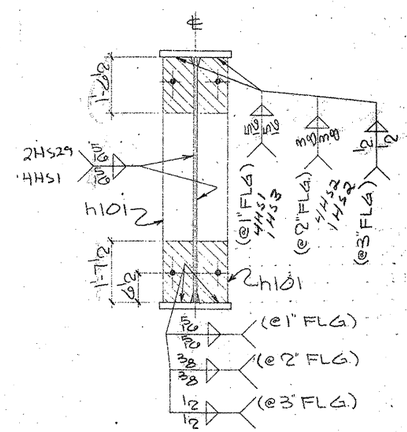

SECTION-A

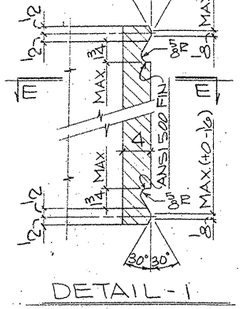

DETAIL-1

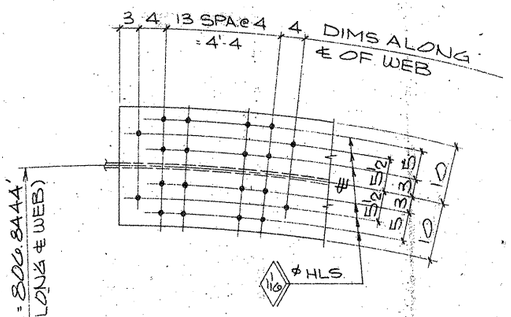

VIEW-B

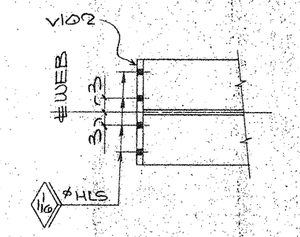

SECTION-C

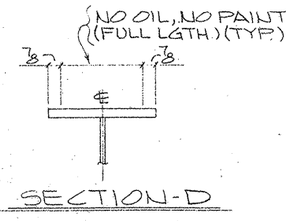

SECTION-D

SECTION-EE

SHOP NOTES:

1) FOR GENERAL NOTES SEE SHT. GN1
2) FOR GIRDER SUB-ASSEMBLY SEE SHT. 107
3) FOR STIFF. DETAILS SEE SHT. 121
4) FOR BLOCKING DIAGRAM SEE SHT. 147
5) FOR HEAT CURVE DIAGRAM SEE SHT. 144
6) FOR SPLICE ATTACHMENTS SEE SHT. 102
7) ////// INDICATES OIL, NO PAINT (N.S./F.S. & EDGES)

G0107

FED. ROAD DIV. NO.	STATE	FEDERAL AID PROJECT NO.				
6	TX.	NHS92 (50) M				
STATE DIST. NO.	COUNTY	CONTROL NO.	SECTION NO.	JOB NO.	HIGHWAY NO.	
21	HIDALGO	39	17	97	83/281	

BILL OF MATERIAL

	Qnty.	Material	Length	Mark Temp.	Mark Ship.	Wt.	Cut From	Remarks
1								
2	1	GIRDER		126PG3.0?				
3	1	GIRDER SUB-ASSY		C107				
4	6	DIAF STIFF		h101				
5	1	ANGLE		f102				
6	1	CONN. PL		V102				
7–60								

TEXAS DEPARTMENT OF TRANSPORTATION
APPROVED
DIVISION OF BRIDGES AND STRUCTURES
DEC 08 1992

FOR APPROVAL
OCT 27 92
NOT FOR CONSTRUCTION

APPROVAL OF THIS DRAWING DOES NOT RELIEVE THE CONTRACTOR OF THE RESPONSIBILITY FOR THE CORRECTNESS OF DETAIL

REVISION	DATE	DESCRIPTION OF REVISION
NO. 1		
NO. 2		
NO. 3		
NO. 4		
NO. 5		

PRINTING Reqd	For	Date

Bolts: Holes: 15/16 ø Unless Noted
Shop Paint: SEE SHT. GN1
Fab Spec.: AS NTD Inspection
Architect:
Erection By: Field Connections

HIRSCHFELD STEEL CO. INC.
112 WEST 29TH SAN ANGELO TEXAS 76903
PHONE (915) 653-3211

DESCRIPTION: 58'-0" PLATE GIRDER UNIT
STRUCTURE: US 83/281 INTERCHANGE RAMP "C"
LOCATION: HIDALGO COUNTY
CUSTOMER: GILBERT TEXAS CONSTRUCTION
SHIP TO:
Customer's Order No.:
Dwg. By: CBT Date: 8-92
Checked By: DLT Date: 8-92

SHEET 126 OF
JOB NO. 92-107

– APV 10-27

CE 92-12 (LINE # 2)

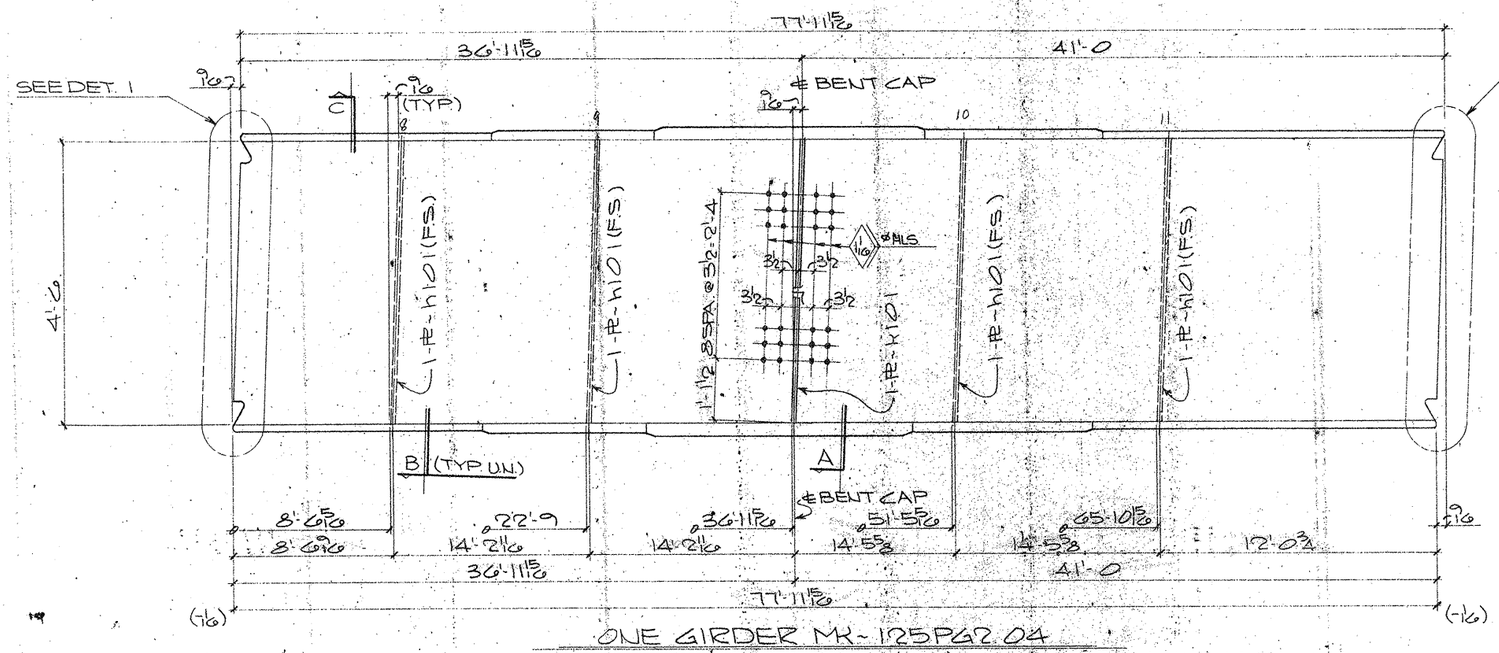

ONE GIRDER MK-125PG2.04
(APPROX. WT. = TONS)

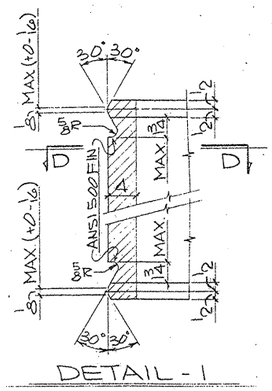

DETAIL-1

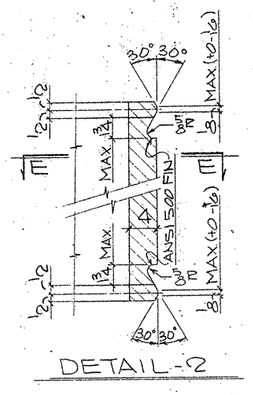

DETAIL-2

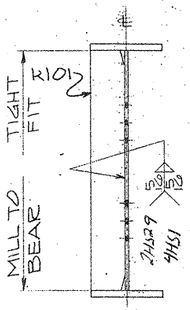

SECTION-A

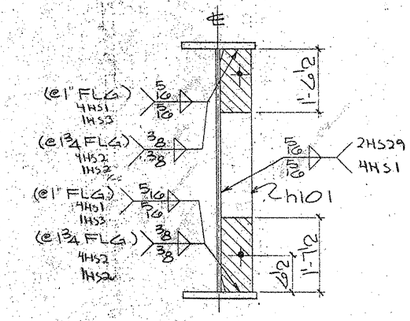

SECTION-B

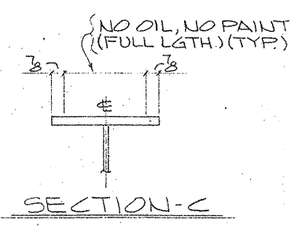

SECTION-C

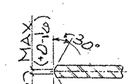

SECTION-DD

SECTION-EE

SHOP NOTES:

1) FOR GENERAL NOTES SEE SHT. GN1
2) FOR GIRDER SUB-ASSEMBLY SEE SHT. 109
3) FOR STIFF. DETAILS SEE SHT. 101
4) FOR BLOCKING DIAGRAM SEE SHT. 149
5) FOR HEAT CURVE DIAGRAM SEE SHT. 144
6) ▨ INDICATES OIL, NO PAINT (N.S./F.S. & EDGES)

BILL OF MATERIAL

	Qnty.	Material	Length	Mark Temp.	Mark Ship.	Wt.	Cut From	Remarks
1								
2	1	GIRDER		125PG2.04				
3	1	GIRDER SUB-ASSY		B109				
4	1	INT. BRG STIFF		H101				
5	4	INT. STIFF		H101				
6–60								

TEXAS DEPARTMENT OF TRANSPORTATION
APPROVED
DIVISION OF BRIDGES AND STRUCTURES
DEC 08 1992
APPROVAL OF THIS DRAWING DOES NOT RELIEVE THE CONTRACTOR OF THE RESPONSIBILITY FOR THE CORRECTNESS OF DETAIL.

REVISION	DATE	DESCRIPTION OF REVISION
NO. 1		P.O. APPROVAL
NO. 2		OCT 27 '92
NO. 3		
NO. 4		
NO. 5		NOT FOR CONSTRUCTION

PRINTING Reqd	For	Date

Bolts: Holes: 15/16 ø Unless Noted
Shop Paint: SEE SHT. GN1
Fab. Spec.: AS NTD Inspection:
Architect:
Erection By: Field Connections:

HIRSCHFELD STEEL CO. INC.
112 WEST 29TH SAN ANGELO TEXAS 76903
PHONE (915) 653-3211

DESCRIPTION: 584'-0 PLATE GIRDER UNIT
STRUCTURE: US 83/281 INTERCHANGE RAMP "C"2
LOCATION: HIDALGO COUNTY
CUSTOMER: GILBERT TEXAS CONSTRUCTION
SHIP TO:
Customer's Order No.:
Dwg By: CRT Date: 8-92
Checked By: DLT Date: 8-92
SHEET 125 OF
JOB NO. 92-107

G0107

FED. ROAD DIV. NO.	STATE	FEDERAL AID PROJECT NO.			
6	TX.	NH92(50)M			
STATE DIST. NO.	COUNTY	CONTROL NO.	SECTION NO.	JOB NO.	HIGHWAY NO.
21	HIDALGO	39	17	97	83/281

CE92-12 (LINE # 4)

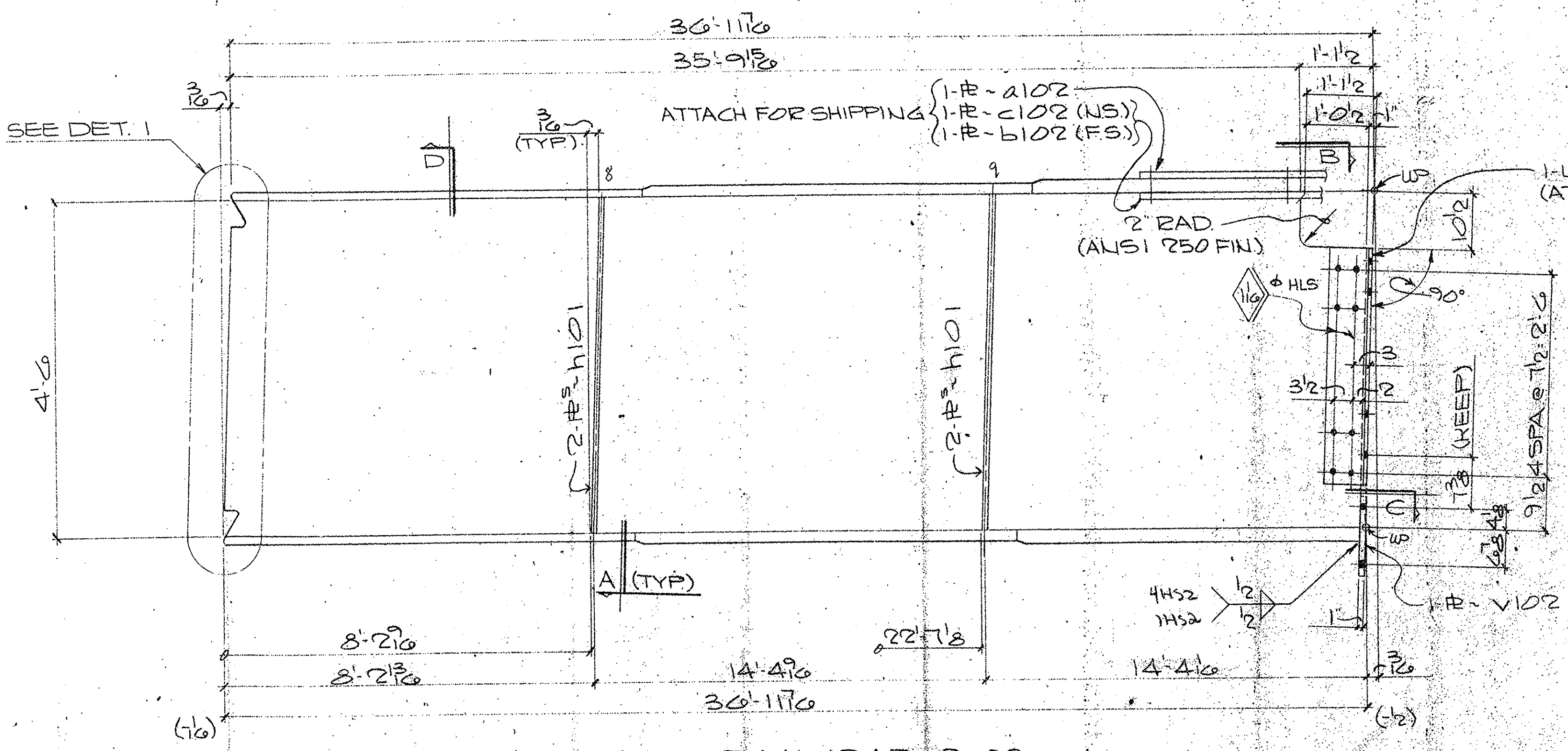

ONE GIRDER MK-124PG2.03
(APPROX. WT. : TONS)

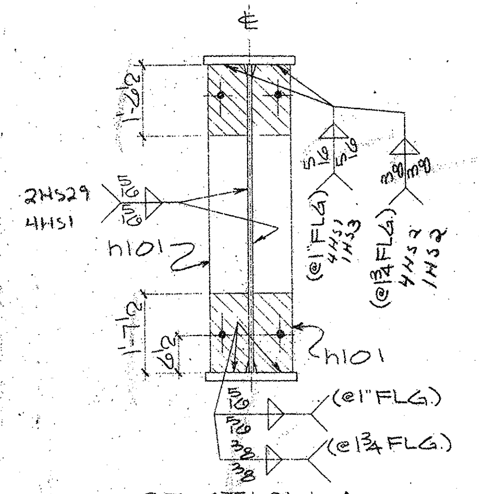

SECTION-A

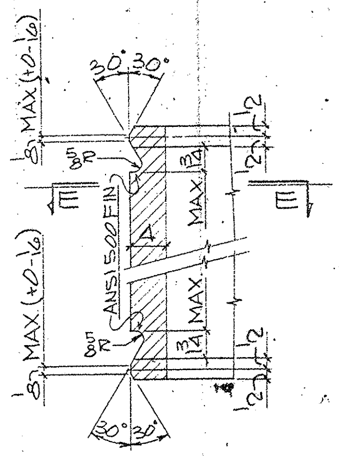

DETAIL-1

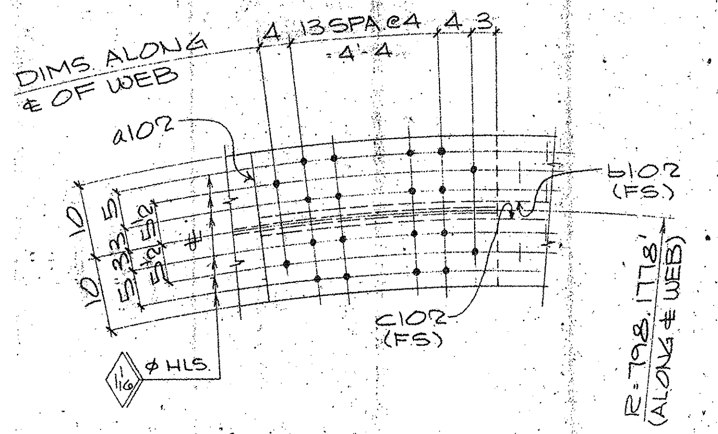

VIEW-B

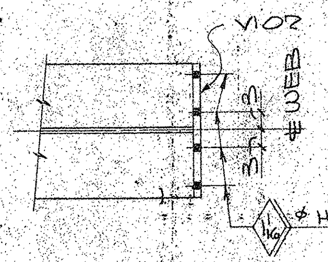

SECTION-C

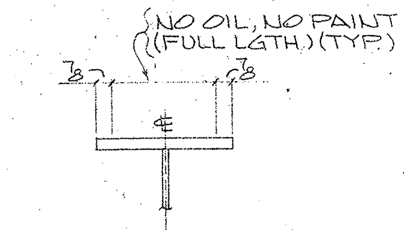

SECTION-D

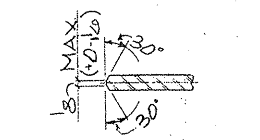

SECTION-EE

BILL OF MATERIAL

	Qnty	Material	Length	Mark Temp	Mark Ship.	Wt.	Cut From	Remarks
1								
2	1	GIRDER		124PG2.03				
3	1	GIRDER SUB-ASSY		B108				
4	1	SPLICE PL		a102				
5	1	SPLICE PL		b102				
6	1	SPLICE PL		c102				
7	4	DIAF STIFF		h101				
8	1	ANGLE		f102				
9	1	CONN. PL		V102				
10								
11								
12								
13								
14								
15								
16								
17								
18								
19								
20								
21								
22								
23								
24								
25								
26								
27								
28								
29								
30								
31								
32								
33								
34								
35								
36								
37								
38								
39								
40								
41								
42								
43								
44								
45								
46								
47								
48								
49								
50								
51								
52								
53								
54								
55								
56								
57								
58								
59								
60								

TEXAS DEPARTMENT OF TRANSPORTATION
APPROVED
DIVISION OF BRIDGES AND STRUCTURES
DEC 08 1992
APPROVAL OF THIS DRAWING DOES NOT RELIEVE THE CONTRACTOR OF THE RESPONSIBILITY FOR THE CORRECTNESS OF DETAIL.

REVISION	DATE	DESCRIPTION OF REVISIONS
NO. 1		FOR APPROVAL
NO. 2		OCT 27 '92
NO. 3		
NO. 4		NOT FOR CONSTRUCTION
NO. 5		

SHOP NOTES:
1) FOR GENERAL NOTES SEE SHT. GN1
2) FOR GIRDER SUB-ASSEMBLY SEE SHT. 108
3) FOR STIFF. DETAILS SEE SHT. 101
4) FOR BLOCKING DIAGRAM SEE SHT. 148
5) FOR HEAT CURVE DIAGRAM SEE SHT. 144
6) FOR SPLICE ATTACHMENTS SEE SHT. 102
7) ▨ INDICATES OIL, NO PAINT (N.S./F.S. & EDGES)

G0107

FED. ROAD DIV. NO.	STATE	FEDERAL AID PROJECT NO.				
6	TX.	NH92 (50) M				
STATE DIST. NO.	COUNTY	CONTROL NO.	SECTION NO.	JOB NO.	HIGHWAY NO.	
21	HIDALGO	39	17	97	83/281	

PRINTING Req'd	For	Date
–	APV	10-27

Bolts — Holes: 15/16 φ Unless Noted
Shop Paint: SEE SHT GN1
Fab. Spec: AS NTD — Inspection
Architect
Erection By — Field Connections

HIRSCHFELD STEEL CO. INC.
112 WEST 29TH SAN ANGELO, TEXAS 76903
PHONE (915) 653-3211

DESCRIPTION: 584'-0 PLATE GIRDER UNIT
STRUCTURE: US 83/281 INTERCHANGE RAMP #2
LOCATION: HIDALGO COUNTY
CUSTOMER: GILBERT TEXAS CONSTRUCTION
SHIP TO
Customer's Order No.
Dwg. By: CRT — Date: 8-92
Checked By: DLT — Date: 8-92
SHEET 124 OF
JOB NO. 92-107

CE 92-12 (LINE #3)

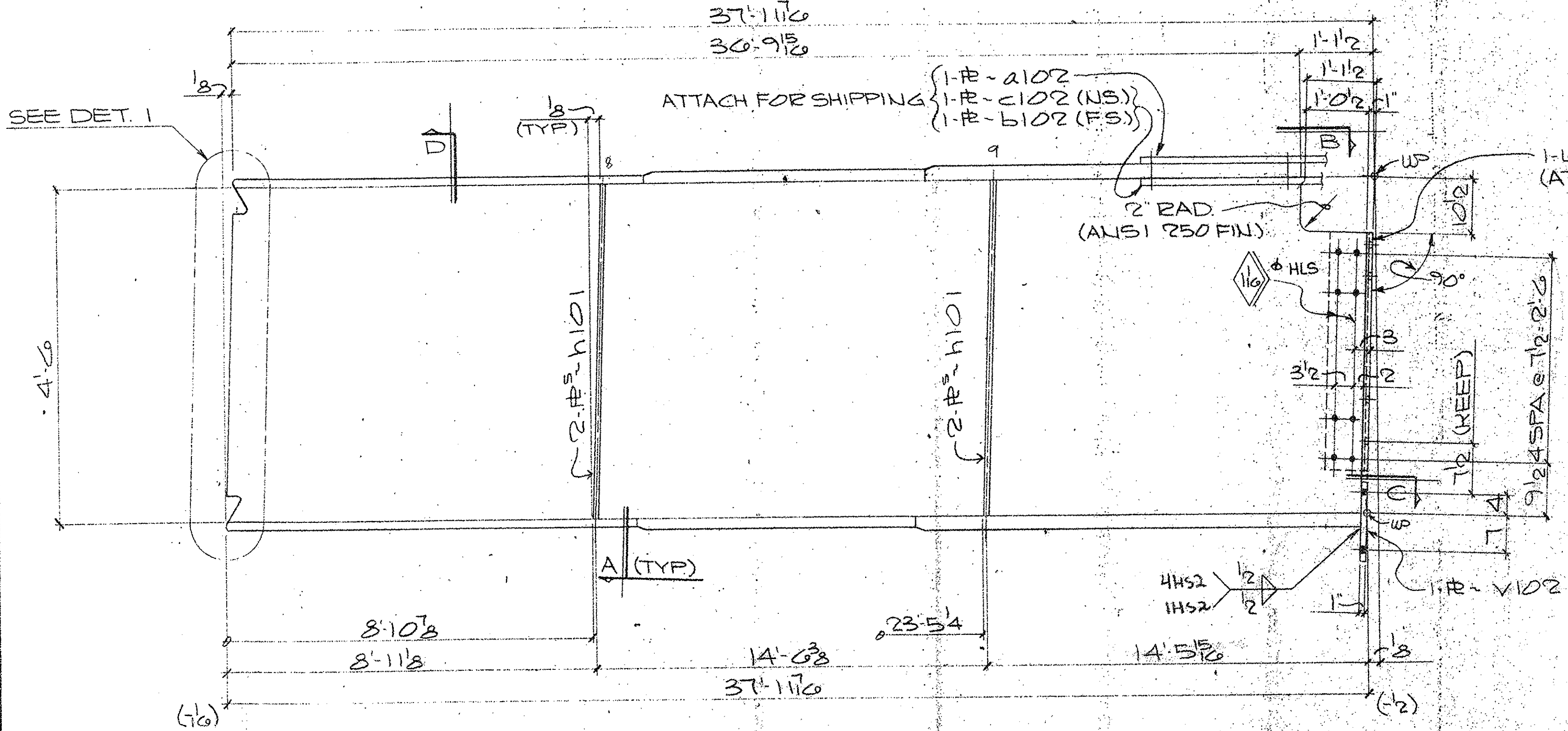

ONE GIRDER MK-123PG2.02
(APPROX. WT: TONS)

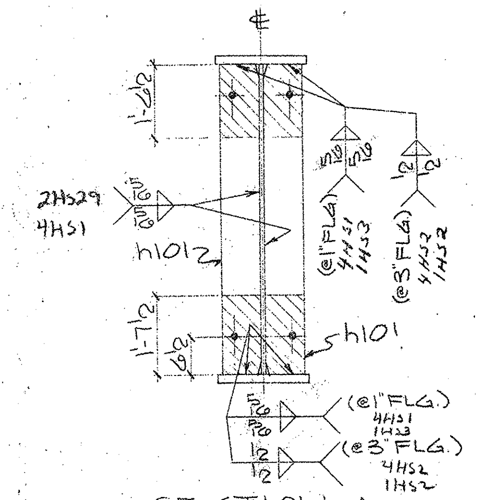

SECTION-A

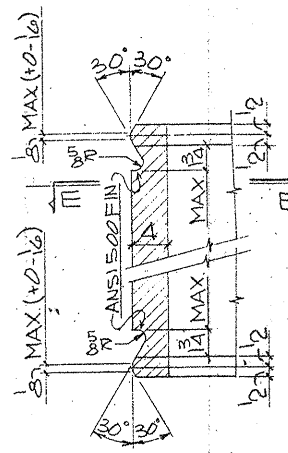

DETAIL-1

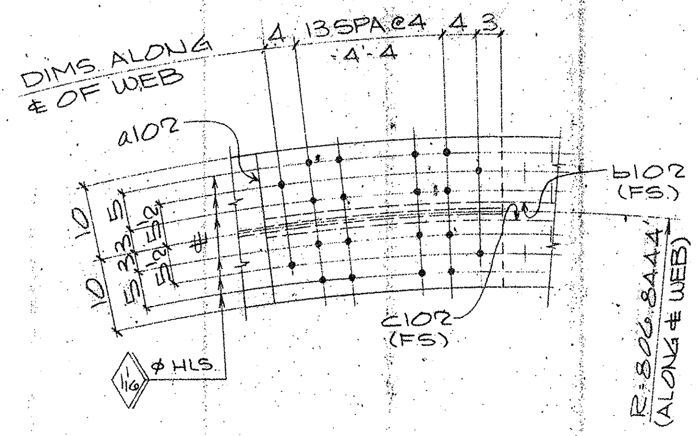

VIEW-B

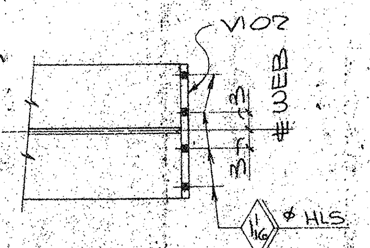

SECTION-C

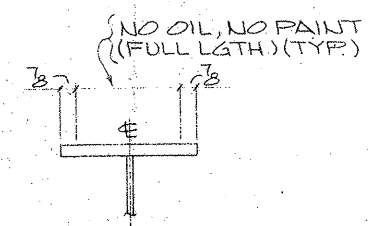

SECTION-D

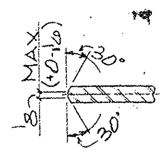

SECTION-EE

BILL OF MATERIAL

	Qnty.	Material	Length	Mark Temp.	Mark Ship.	Wt.	Cut From	Remarks
1								
2	1	GIRDER		123PG2.02				
3	1	GIRDER SUB-ASSY		B107				
4	1	SPLICE PL		a102				
5	1	SPLICE PL		b102				
6	1	SPLICE PL		c102				
7	4	DIAF STIFF		h101				
8	1	ANGLE		g102				
9	1	CONN. PL		V102				
10								
11								
12								
13								
14								
15								
16								
17								
18								
19								
20								
21								
22								
23								
24								
25								
26								
27								
28								
29								
30								
31								
32								
33								
34								
35								
36								
37								
38								
39								
40								
41								
42								
43								
44								
45								
46								
47								
48								
49								
50								
51								
52								
53								
54								
55								
56								
57								
58								
59								
60								

TEXAS DEPARTMENT OF TRANSPORTATION
APPROVED
DIVISION OF BRIDGES AND STRUCTURES
DEC 08 1992
APPROVAL OF THIS DRAWING DOES NOT RELIEVE THE CONTRACTOR OF THE RESPONSIBILITY FOR THE CORRECTNESS OF DETAIL

REVISION	DATE	DESCRIPTION OF REVISION
		FOR APPROVAL
NO. 1		
NO. 2		OCT 27 92
NO. 3		
NO. 4		NOT FOR CONSTRUCTION
NO. 5		

SHOP NOTES:
1) FOR GENERAL NOTES SEE SHT. GN1
2) FOR GIRDER SUB-ASSEMBLY SEE SHT. 107
3) FOR STIFF. DETAILS SEE SHT. 101
4) FOR BLOCKING DIAGRAM SEE SHT. 147
5) FOR HEAT CURVE DIAGRAM SEE SHT. 144
6) FOR SPLICE ATTACHMENTS SEE SHT. 102
7) ▨ INDICATES OIL, NO PAINT (N.S./F.S. & EDGES)

G0107

FED. ROAD DIV. NO.	STATE	FEDERAL AID PROJECT NO.			
6	TX.	NH92 (50) M			
STATE DIST. NO.	COUNTY	CONTROL NO.	SECTION NO.	JOB NO.	HIGHWAY NO.
21	HIDALGO	39	17	97	83/281

PRINTING: Req'd / For / Date — APV 10/27

Bolts — Holes: 15/16 ⌀ Unless Noted
Shop Paint: SEE SHT GN1
Fab Spec: AS NTD — Inspection
Architect
Erection By — Field Connections

HIRSCHFELD STEEL CO. INC.
112 WEST 29TH SAN ANGELO, TEXAS 76903
PHONE (915) 653-3211

DESCRIPTION: 584-0 PLATE GIRDER UNIT
STRUCTURE: US 83/281 INTERCHANGE RAMP #2
LOCATION: HIDALGO COUNTY
CUSTOMER: GILBERT TEXAS CONSTRUCTION
SHIP TO
Customer's Order No. — SHEET 123 OF
Dwg. By CRT — Date 8-92 — JOB NO. 92-107
Checked By DLT — Date 8-92

CE92-12 (LINE #2)

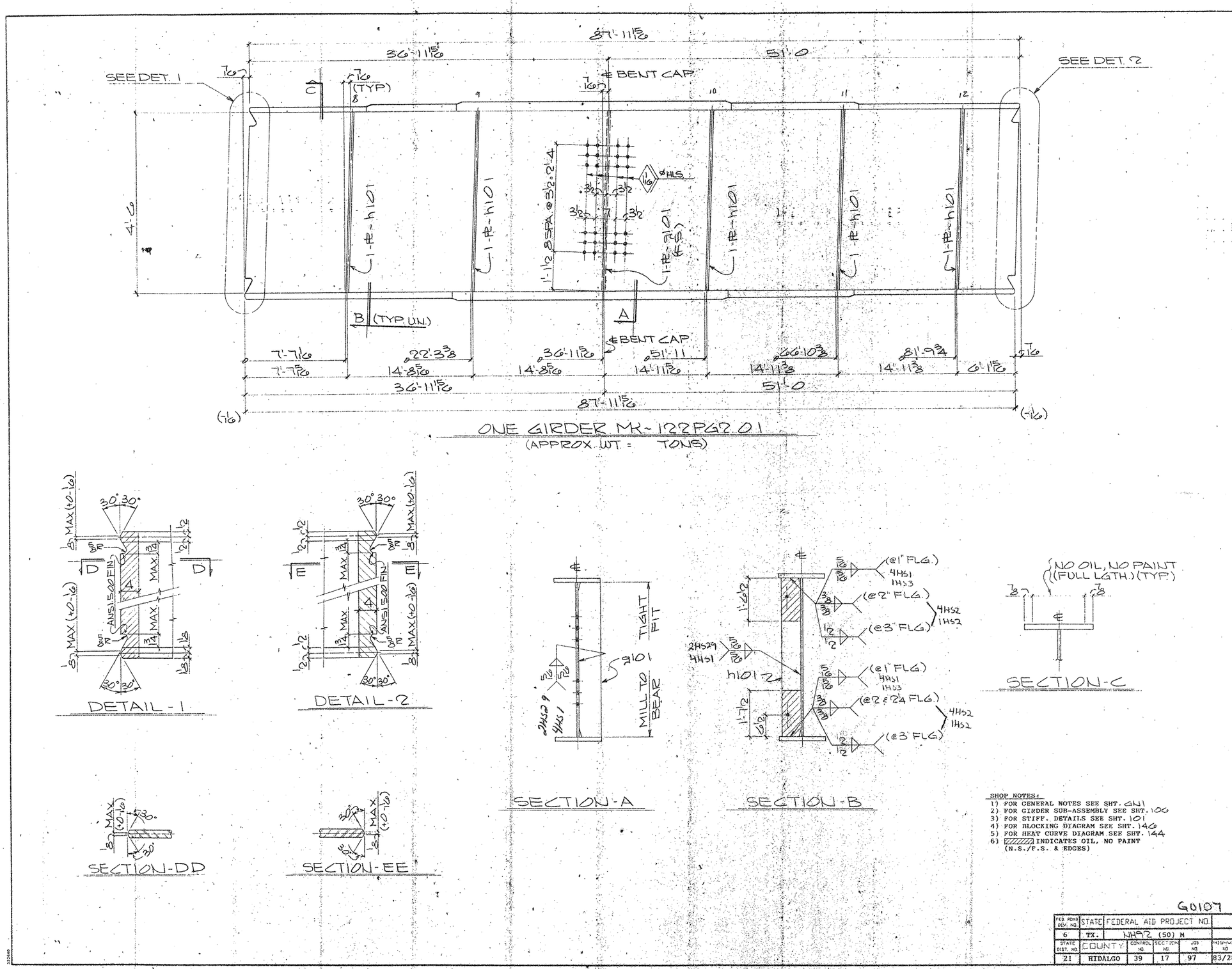

SHOP NOTES:
1) FOR GENERAL NOTES SEE SHT. GN1
2) FOR GIRDER SUB-ASSEMBLY SEE SHT. 106
3) FOR STIFF. DETAILS SEE SHT. 101
4) FOR BLOCKING DIAGRAM SEE SHT. 146
5) FOR HEAT CURVE DIAGRAM SEE SHT. 144
6) ▨ INDICATES OIL, NO PAINT (N.S./F.S. & EDGES)

BILL OF MATERIAL

	Qnty	Material	Length #	Mark Temp	Mark Ship	Wt.	Cut From	Remarks
1								
2	1	GIRDER		122PG2.01				
3	1	GIRDER SUB-ASSY		B106				
4	1	INT. BRG. STIFF		g101				
5	5	INT. STIFF		h101				

TEXAS DEPARTMENT OF TRANSPORTATION
APPROVED
DIVISION OF BRIDGES AND STRUCTURES
DEC 08 1992
APPROVAL OF THIS DRAWING DOES NOT RELIEVE THE CONTRACTOR OF THE RESPONSIBILITY FOR THE CORRECTNESS OF DETAIL.

REVISION	DATE	DESCRIPTION OF REVISION
NO. 1		
NO. 2		
NO. 3		
NO. 4		
NO. 5		

FOR APPROVAL
OCT 27 '92
NOT FOR CONSTRUCTION

PRINTING

Req'd	For	Date

Bolts Holes 15/16 ø Unless Noted
Shop Paint SEE SHT. GN1
Fab Spec. AS NTD Inspection
Architect
Erection By Field Connections

HIRSCHFELD STEEL CO. INC.
112 WEST 29TH SAN ANGELO TEXAS 76903
PHONE (915) 653-3211

DESCRIPTION 584'-0 PLATE GIRDER UNIT
STRUCTURE US 83/281 INTERCHANGE RAMP #2
LOCATION HIDALGO COUNTY
CUSTOMER GILBERT TEXAS CONSTRUCTION
SHIP TO
Customer's Order No.
Dwg By CRT Date 8-92
Checked By DLT Date 8-92
SHEET 122 OF
JOB NO. 92-107

G0107

FED. ROAD DIV. NO.	STATE	FEDERAL AID PROJECT NO.			
6	TX.	NH92 (50) M			
STATE DIST. NO.	COUNTY	CONTROL NO.	SECTION NO.	JOB NO.	HIGHWAY NO.
21	HIDALGO	39	17	97	83/281

CE92-12 (LINE # 1)

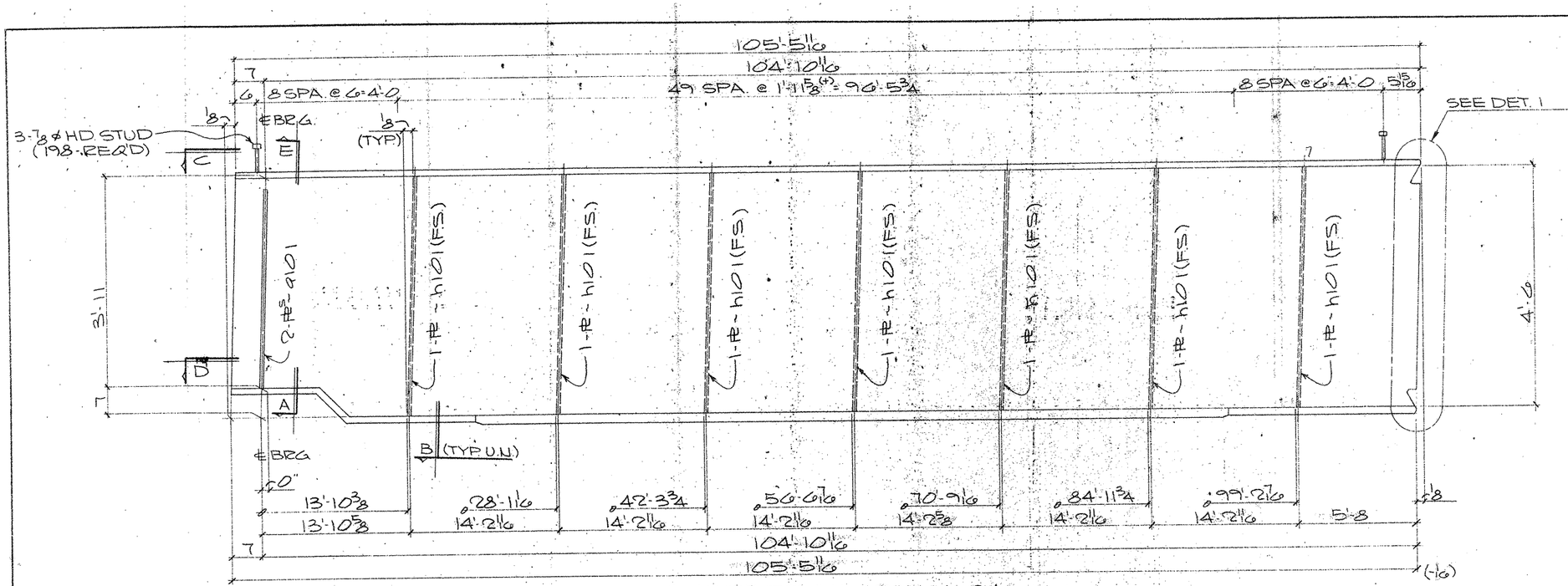

ONE GIRDER MK-121PG1.04
(APPROX. WT. = TONS)

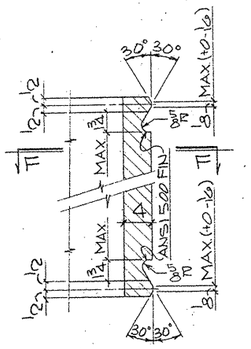

DETAIL-1

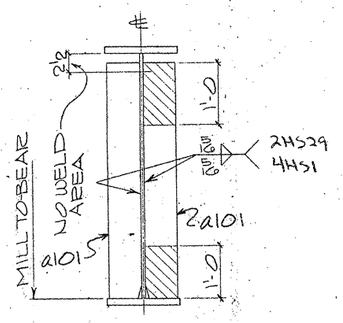

SECTION-A

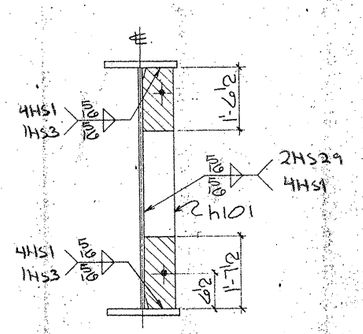

SECTION-B

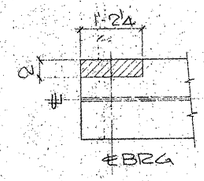

VIEW-C

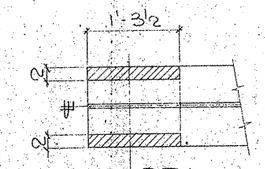

SECTION-D

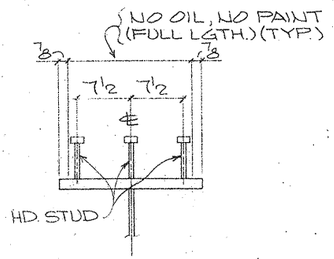

SECTION-E
(TYP. STUD SECT.)

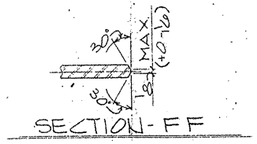

SECTION-FF

SHOP NOTES:
1) FOR GENERAL NOTES SEE SHT. GN1
2) FOR GIRDER SUB-ASSEMBLY SEE SHT. 109
3) FOR STIFF. DETAILS SEE SHT. 101
4) FOR BLOCKING DIAGRAM SEE SHT. 149
5) FOR HEAT CURVE DIAGRAM SEE SHT. 144
6) ▨ INDICATES OIL, NO PAINT (N.S./F.S. & EDGES)

G0107

FED. ROAD DIV. NO.	STATE	FEDERAL AID PROJECT NO.			
6	TX.	NH92 (50) M			
STATE DIST. NO.	COUNTY	CONTROL NO.	SECTION NO.	JOB NO.	HIGHWAY NO.
21	HIDALGO	39	17	97	83/281

BILL OF MATERIAL

	Qnty	Material	Length	Mark Temp.	Mark Ship.	Wt.	Cut From	Remarks
3	1	GIRDER		121PG1.04				
4	1	GIRDER SUB-ASSY		A109				
5	2	BRG STIFF		a101				
7	7	DIAF. STIFF		h101				
9	198	HD. STUD 7/8	0'-7				113-1	A108

TEXAS DEPARTMENT OF TRANSPORTATION
APPROVED
DIVISION OF BRIDGES AND STRUCTURES
DEC 08 1992
APPROVAL OF THIS DRAWING DOES NOT RELIEVE THE CONTRACTOR OF THE RESPONSIBILITY FOR THE CORRECTNESS OF DETAIL

FOR APPROVAL
OCT 27 '92
NOT FOR CONSTRUCTION

REVISION	DATE	DESCRIPTION OF REVISION
NO. 1		
NO. 2		
NO. 3		
NO. 4		
NO. 5		

PRINTING: Reqd | For | Date

Bolts | Holes | Unless Noted
Shop Paint: SEE SHT. GN1
Fab. Spec: AASHTO | Inspection
Amdmts
Erection By | Field Connections

HIRSCHFELD STEEL CO. INC.
112 WEST 29TH SAN ANGELO, TEXAS 76903
PHONE (915) 653-3211

DESCRIPTION: 584'-0 PLATE GIRDER UNIT
STRUCTURE: US 83/281 INTERCHANGE RAMP #2
LOCATION: HIDALGO COUNTY
CUSTOMER: GILBERT TEXAS CONSTRUCTION
SHIP TO
Customer's Order No
Dwg. By: CRT Date: 8-92
Checked By: DCF Date: 5-92
SHEET 121 OF
JOB NO. 92-107

CE 92-12 (LINE #4)

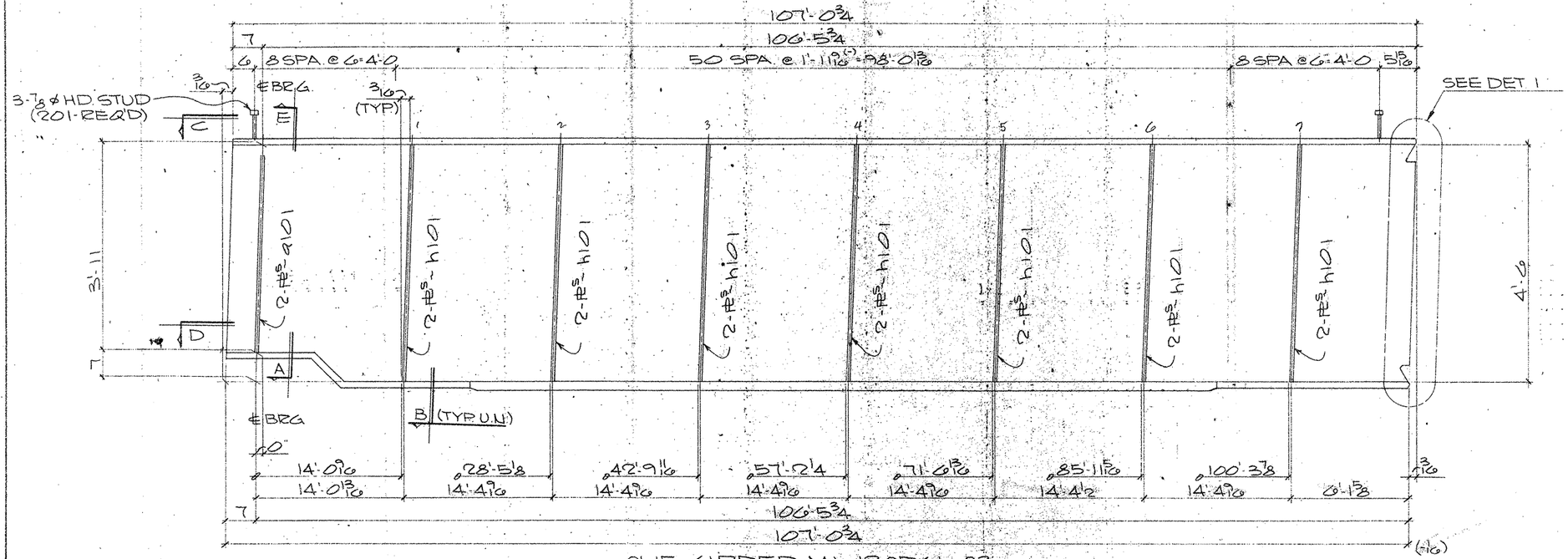

ONE GIRDER MK-120PG1.03
(APPROX. WT. = TONS)

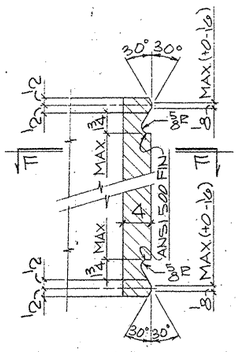

DETAIL-1

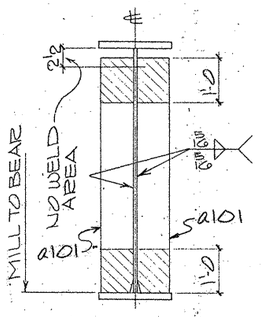

SECTION-A

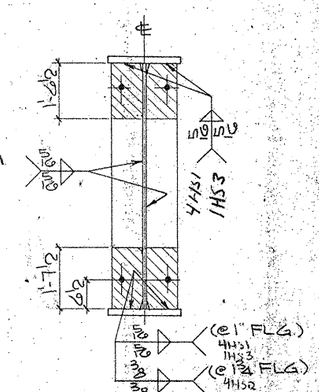

SECTION-B

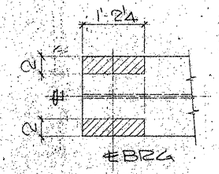

VIEW-C

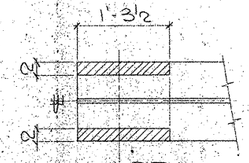

SECTION-D

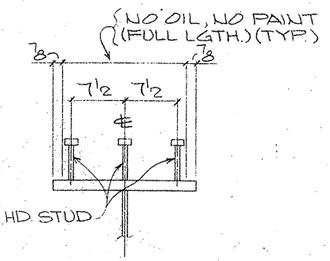

SECTION-E
(TYP STUD SECT.)

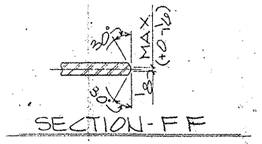

SECTION-F F

SHOP NOTES:
1) FOR GENERAL NOTES SEE SHT. GN1
2) FOR GIRDER SUB-ASSEMBLY SEE SHT. 108
3) FOR STIFF. DETAILS SEE SHT. 101
4) FOR BLOCKING DIAGRAM SEE SHT. 148
5) FOR HEAT CURVE DIAGRAM SEE SHT. 144
6) ▨ INDICATES OIL, NO PAINT (N.S./F.S. & EDGES)

BILL OF MATERIAL

	Qnty	Material	Length	Mark Temp	Mark Ship	Wt.	Cut From	Remarks
3	1	GIRDER		120PG1.03				
4	1	GIRDER SUB-ASSY		A108				
5	2	BRG STIFF		a101				
7	14	DIAF. STIFF		h101				
9	201	HD. STUD 7/8	0'-7				113-1	A108

TEXAS DEPARTMENT OF TRANSPORTATION
APPROVED
DIVISION OF BRIDGES AND STRUCTURES
DEC 06 1992
APPROVAL OF THIS DRAWING DOES NOT RELIEVE THE CONTRACTOR OF THE RESPONSIBILITY FOR THE CORRECTNESS OF DETAIL.

FOR APPROVAL

REVISION	DATE	DESCRIPTION OF REVISION
NO. 1		OCT 27 '92
NO. 2		NOT FOR CONSTRUCTION
NO. 3		
NO. 4		
NO. 5		

PRINTING: Reqd | For | Date

Bolts: Holes: 15/16 ø unless Noted
Shop Paint: SEE SHT. GN1
Fab. Spec.: AS NTD
Inspection:
Architect:
Erector By:
Field Connections:

HIRSCHFELD STEEL CO. INC.
112 WEST 29TH SAN ANGELO, TEXAS 76903
PHONE (915) 653-3211

DESCRIPTION	580'-0 PLATE GIRDER UNIT
STRUCTURE	US 83/281 INTERCHANGE RAMP "C"
LOCATION	HIDALGO COUNTY
CUSTOMER	GILBERT TEXAS CONSTRUCTION
SHIP TO	
Customer's Order No.	
Dwg. By CRT	Date 8-92
Checked By DAT	Date 8-92

SHEET 120 OF
JOB NO. 92-107

G0107

FED. ROAD DIV. NO.	STATE	FEDERAL AID PROJECT NO.				
6	TX.	NH92 (50) M				
STATE DIST. NO.	COUNTY	CONTROL NO.	SECTION NO.	JOB NO.	HIGHWAY NO.	
21	HIDALGO	39	17	97	83/281	

APV 10-20

CE 92-12 (LINE # 3)

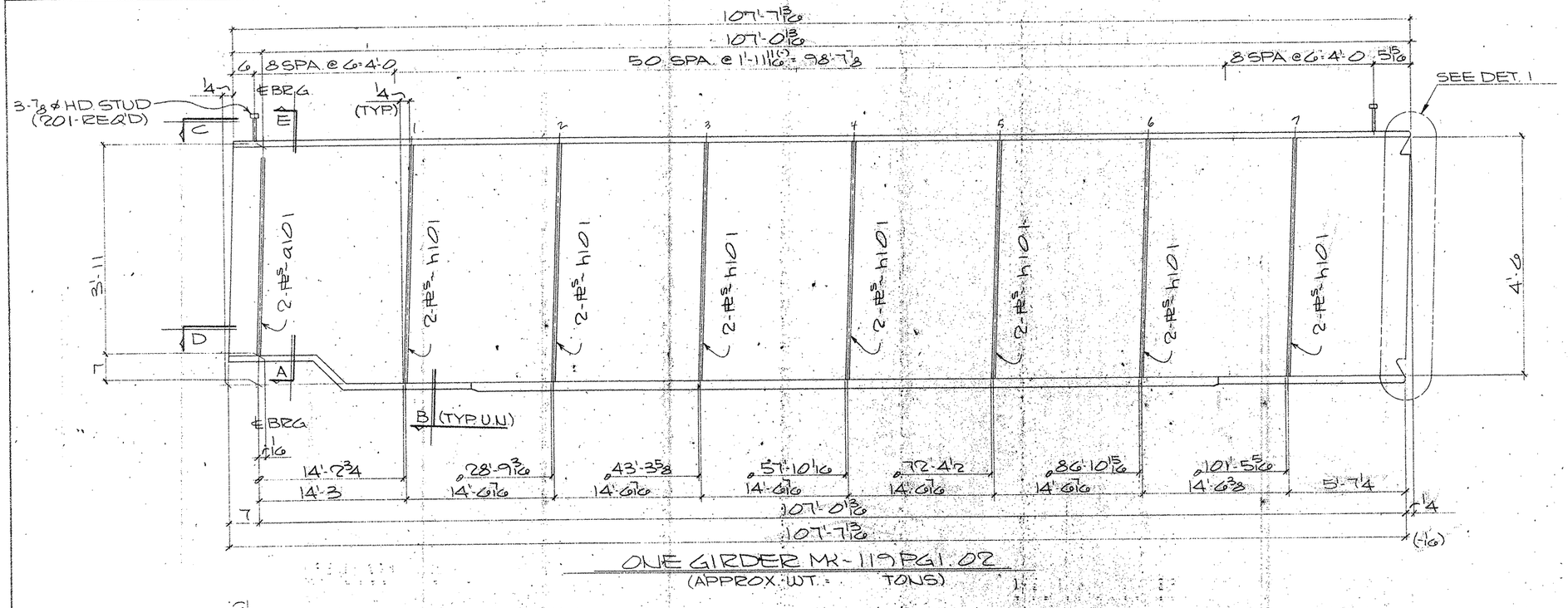

ONE GIRDER MK-119PG1.02
(APPROX. WT. = TONS)

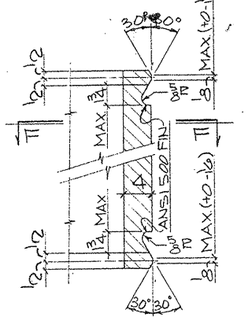

DETAIL-1

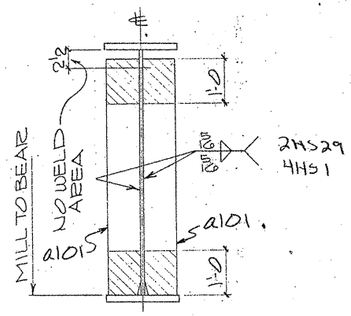

SECTION-A

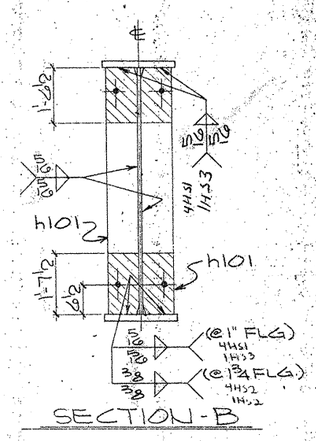

SECTION-B

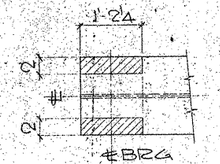

VIEW-C

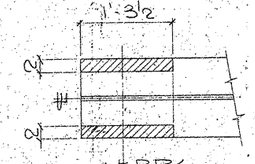

SECTION-D

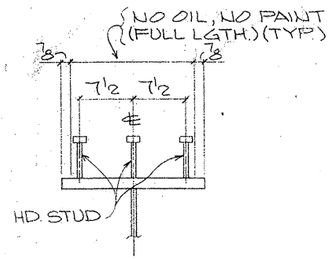

SECTION-E
(TYP. STUD SECT.)

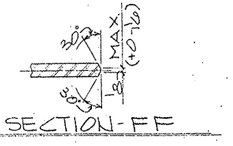

SECTION-FF

SHOP NOTES:
1) FOR GENERAL NOTES SEE SHT. GN1
2) FOR GIRDER SUB-ASSEMBLY SEE SHT. 107
3) FOR STIFF. DETAILS SEE SHT. 101
4) FOR BLOCKING DIAGRAM SEE SHT. 147
5) FOR HEAT CURVE DIAGRAM SEE SHT. 144
6) ▨ INDICATES OIL, NO PAINT (N.S./F.S. & EDGES)

BILL OF MATERIAL

	Qnty.	Material	Length	Mark Temp.	Mark Ship.	Wt.	Cut From	Remarks
3	1	GIRDER		119PG1.02				
4	1	GIRDER SUB-ASSY		A107				
5	2	BRG. STIFF		a101				
7	14	DIAF. STIFF		h101				
9	201	HD. STUD 7/8	0'-7				113-1	A108

TEXAS DEPARTMENT OF TRANSPORTATION
APPROVED
DIVISION OF BRIDGES AND STRUCTURES
DEC 08 1992
APPROVAL OF THIS DRAWING DOES NOT RELIEVE THE CONTRACTOR OF THE RESPONSIBILITY FOR THE CORRECTNESS OF DETAIL.

FOR APPROVAL

REVISION	DATE	DESCRIPTION OF REVISION
NO. 1		OCT 27 '92
NO. 2		
NO. 3		NOT FOR CONSTRUCTION
NO. 4		
NO. 5		

PRINTING Recd	For	Date

Bolts Holes 15/16 ø Unless Noted
Shop Paint SEE SHT. GN1 Description
Fab. Spec. AS NTD
Architect
Erection By Field Connections

HIRSCHFELD STEEL CO. INC.
112 WEST 29TH SAN ANGELO, TEXAS 76903
PHONE (915) 653-3211

DESCRIPTION	584'-0 PLATE GIRDER UNIT
STRUCTURE	US 83/281 INTERCHANGE RAMP #2
LOCATION	HIDALGO COUNTY
CUSTOMER	GILBERT TEXAS CONSTRUCTION
SHIP TO	
Customer's Order No.	
Dwg. By CRT Date 8-92	SHEET 119 OF
Checked By DLT Date 8-92	JOB NO. 92-107

G0107

FED. ROAD DIV. NO.	STATE	FEDERAL AID PROJECT NO.				
6	TX.	NH92 (50) M				
STATE DIST. NO.	COUNTY	CONTROL NO.	SECTION NO.	JOB NO.	HIGHWAY NO.	
21	HIDALGO	39	17	97	83/281	— APV 10-27

CE92-12 (LINE #2)

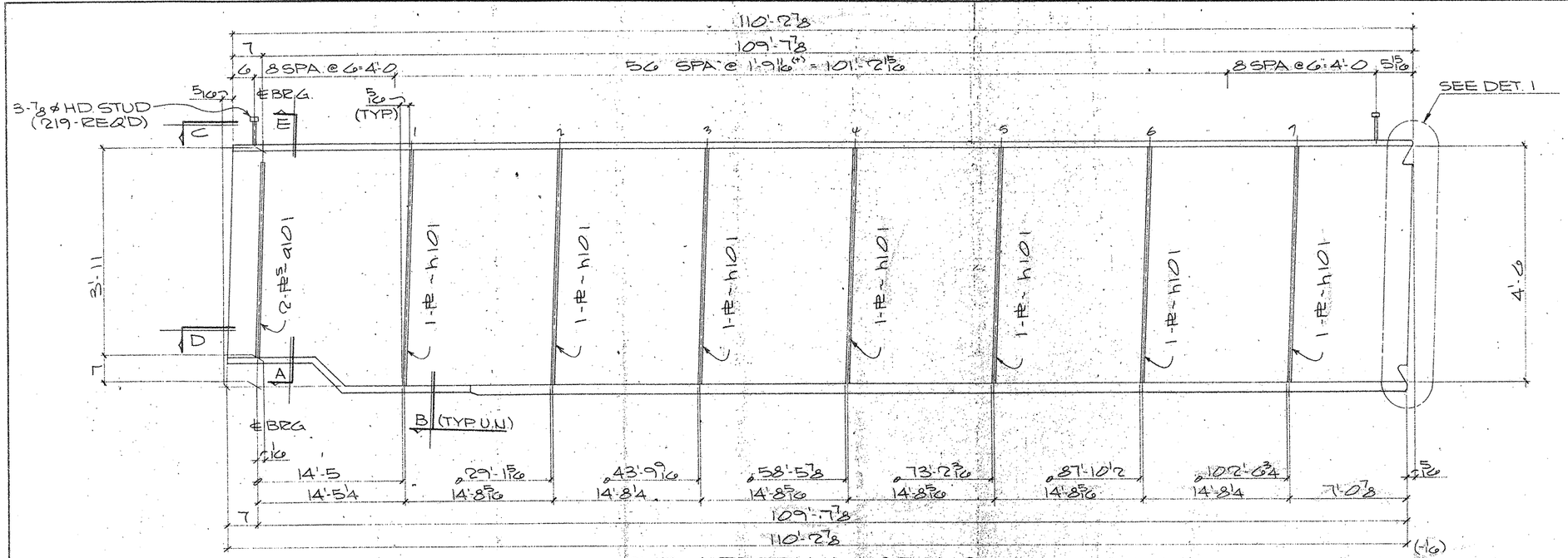

ONE GIRDER MK-118 PG1.01

(APPROX. WT. = , TONS)

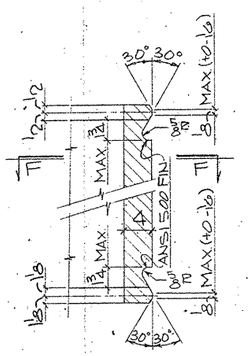

DETAIL-1

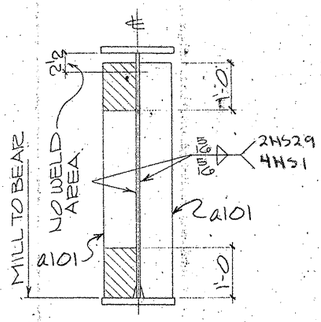

SECTION-A

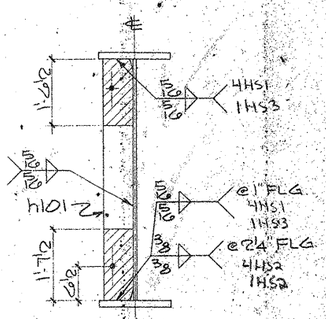

SECTION-B

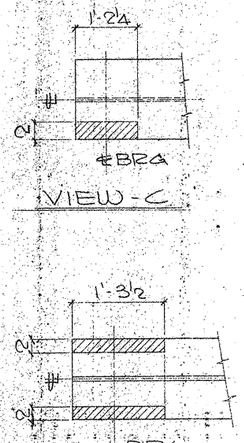

SECTION-D

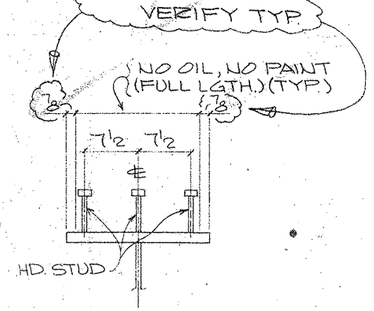

SECTION-E

(TYP. STUD SECT.)

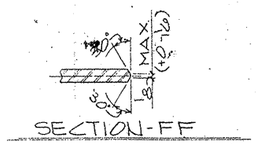

SECTION-FF

SHOP NOTES:

1) FOR GENERAL NOTES SEE SHT. GN1
2) FOR GIRDER SUB-ASSEMBLY SEE SHT. 100
3) FOR STIFF. DETAILS SEE SHT. 101
4) FOR BLOCKING DIAGRAM SEE SHT. 146
5) FOR HEAT CURVE DIAGRAM SEE SHT. 144
6) ▨ INDICATES OIL, NO PAINT (N.S./F.S. & EDGES)

G0107

FED. ROAD DIV. NO.	STATE	FEDERAL AID PROJECT NO.			
6	TX.	NH92 (50) M			
STATE DIST. NO.	COUNTY	CONTROL NO.	SECTION NO.	JOB NO.	HIGHWAY NO.
21	HIDALGO	39	17	97	83/281

BILL OF MATERIAL

	Qnty	Material	Length	Mark Temp.	Mark Ship	Wt.	Cut From	Remarks
1								
2								
3	1	GIRDER		118PG1.01				
4	1	GIRDER SUB-ASSY		A106				
5	2	BRG. STIFF		a101				
6								
7	7	DIAF. STIFF		h101				
8								
9	219	HD STUD 7/8	0'-7				113-1	A108
10								
11								
12								
13								
14								
15								
16								
17								
18								
19								
20								
21								
22								
23								
24								
25								
26								
27								
28								
29								
30								
31								
32								
33								
34								
35								
36								
37								
38								
39								
40								
41								
42								
43								
44								
45								
46								
47								
48								
49								
50								
51								
52								
53								
54								
55								
56								
57								
58								
59								
60								

TEXAS DEPARTMENT OF TRANSPORTATION
APPROVED
DIVISION OF BRIDGES AND STRUCTURES
DEC 08 1992
APPROVAL OF THIS DRAWING DOES NOT RELIEVE THE CONTRACTOR OF THE RESPONSIBILITY FOR THE CORRECTNESS OF DETAIL

REVISION	DATE	DESCRIPTION
NO. 1		FOR APPROVAL
NO. 2		OCT 27 '92
NO. 3		
NO. 4		NOT FOR CONSTRUCTION
NO. 5		

PRINTING

Req'd	For	Date

Bolts: Holes: STD Unless Noted:
Shop Paint: SEE SHT. GN1
Fab. Shop: AS NTD Inspection
Architect:
Erection By: Field Connections:

HIRSCHFELD STEEL CO. INC.
112 WEST 29TH SAN ANGELO, TEXAS 76903
PHONE (915) 653-3211

DESCRIPTION	584'-0 PLATE GIRDER UNIT
STRUCTURE	US 83/281 INTERCHANGE RAMP "Z"
LOCATION	HIDALGO COUNTY
CUSTOMER	GILBERT TEXAS CONSTRUCTION
SHIP TO	
Customer's Order No.	
Dwg. By CRT	Date 8-92
Checked By DLT	Date 8-92

SHEET 118 OF
JOB NO. 92-107

CE92-12 (LINE # 1)

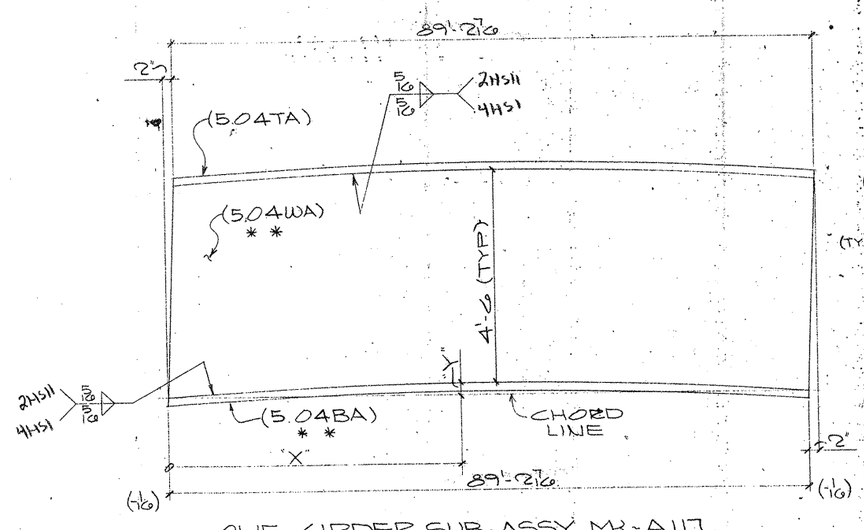

ONE GIRDER SUB-ASSY MK-A117
(FOR GIRDER - 139PG5.04)

MK-A117							
"X"	4'-4 13/16"	18'-10 5/8"	33'-4 3/8"	47'-10 1/8"	62'-3 3/8"	76'-9 1/16"	
"Y"	1/16	3/8	1/16	1"	1 1/16"	1 1/16"	

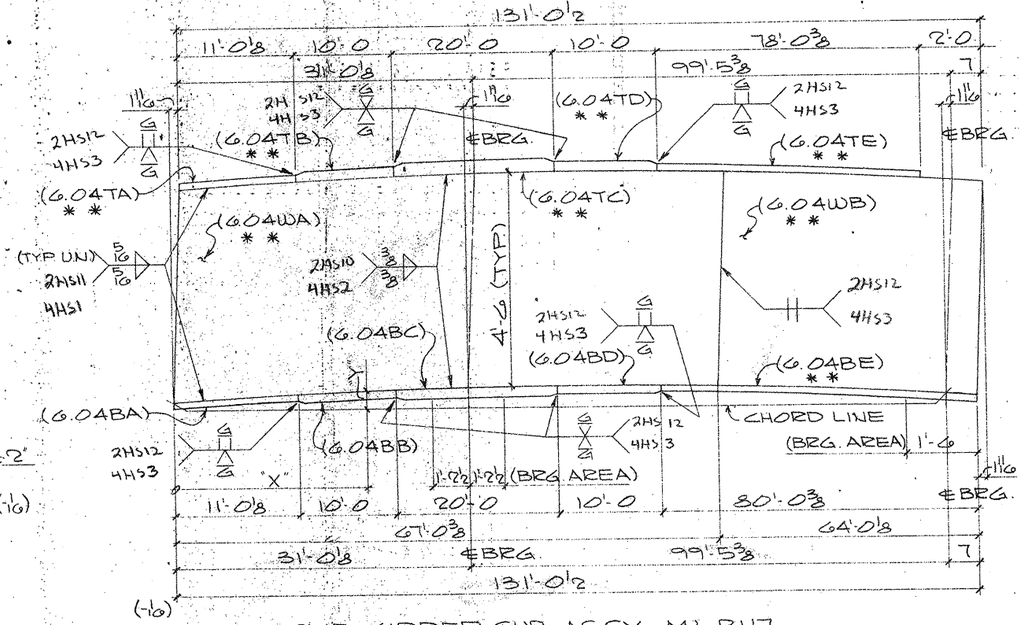

ONE GIRDER SUB-ASSY. MK-B117
(FOR GIRDER - 143PG6.04)

MK-B117											
"X"	2'-0 3/4"	16'-0 7/16"	31'-0 1/8"	45'-2 1/16"	59'-5 1/4"	67'-0 3/8"	73'-7 13/16"	87'-10 3/8"	102'-0 15/16"	116'-3 1/16"	
"Y"	1/16	3/8	5/16	1 1/16"	1 1/8"	1 3/8"	1 1/16"	1 1/16"	1 1/2"	3/8	
			℄BRG.			℄WEB SPLICE					

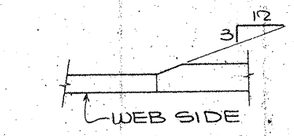

TYP. FLG. THKNESS TRANSITION

SHOP NOTES:
1) FOR GENERAL NOTES SEE SHT. GN1
2) MATERAL NOTED " * " MUST MEET CHARPY V-NOTCH REQUIREMENTS
3) FOR HEAT CURVE DIAGRAM SEE SHT. 145

BILL OF MATERIAL

	Qnty.	Material	Length	Mark Temp.	Mark Ship.	Wt.	Cut From	Remarks
1								
2	1	GIRDER SUB-ASSY			A117			
3	1	PL 1/2 x 54	89'-4 7/16	5.04WA			102-8	CVN12
4	1	PL 1 x 18	89'-2 7/16	5.04TA			109-12	
5	1	PL 1 1/4 x 18	89'-2 7/16	5.04BA			105-11	CVN12
6								
7								
8								
9	1	GIRDER SUB-ASSY			B117			
10	1	PL 1/2 x 54	67'-0 9/16	6.04WA			102-9	CVN12
11	1	PL 1/2 x 54	64'-2	6.04WB			102-10	CVN12
12	1	PL 1 x 18	11'-0 1/8	6.04TA			105-12	CVN12
13	1	PL 1 1/4 x 18	10'-0	6.04TB			105-13	CVN12
14	1	PL 1 3/4 x 18	20'-0	6.04TC			105-14	CVN12
15	1	PL 1 1/4 x 18	10'-0	6.04TD			105-13	CVN12
16	1	PL 1 x 18	78'-0 3/8	6.04TE			105-15	CVN12
17	1	PL 1 x 18	11'-0 1/8	6.04BA			109-13	
18	1	PL 1 1/4 x 18	10'-0	6.04BB			109-14	
19	1	PL 1 3/4 x 18	20'-0	6.04BC			109-15	
20	1	PL 1 1/4 x 18	10'-0	6.04BD			109-14	
21	1	PL 1 x 18	80'-0 3/8	6.04BE			105-16	CVN12
22								
23								
24								
25								
26								
27								
28								
29								
30								
31								
32								
33								
34								
35								
36								
37								
38								
39								
40								
41								
42								
43								
44								
45								
46								
47								
48								
49								
50								
51								
52								
53								
54								
55								
56								
57								
58								
59								
60								

TEXAS DEPARTMENT OF TRANSPORTATION
APPROVED
DIVISION OF BRIDGES AND STRUCTURES
DEC 08 1992
APPROVAL OF THIS DRAWING DOES NOT RELIEVE THE CONTRACTOR OF THE RESPONSIBILITY FOR THE CORRECTNESS OF DETAIL.

FOR APPROVAL

REVISION	DATE	DESCRIPTION OF REVISION
NO. 1		OCT 27 '92
NO. 2		NOT FOR CONSTRUCTION
NO. 3		
NO. 4		
NO. 5		

PRINTING Req'd	For	Date

Bolts: Holes: Unless Noted
Shop Plant SEE SHT GN1
Fab Spec ASTM-50 UNL Inspection
Architect
Erection By
Field Connections

HIRSCHFELD STEEL CO. INC.
112 WEST 29TH SAN ANGELO, TEXAS 76903
PHONE (915) 653-3211

DESCRIPTION	584'-0 PLATE GIRDER UNIT
STRUCTURE	US 83/281 INTERCHANGE RAMP "S"
LOCATION	HIDALGO COUNTY
CUSTOMER	GILBERT TEXAS CONSTRUCTION
SHIP TO	
Customer's Order No.	
Dwg. By CRT Date 7-92	SHEET 117 OF
Checked By DLT Date 8-92	JOB NO. 92-107

G0107

FED. ROAD DIV. NO.	STATE	FEDERAL AID PROJECT NO.			
6	TX.	NH92 (50) M			
STATE DIST. NO.	COUNTY	CONTROL NO.	SECTION NO.	JOB NO.	HIGHWAY NO.
21	HIDALGO	39	17	97	83/281

APV 12-27

CE92-12 (LINE #4)

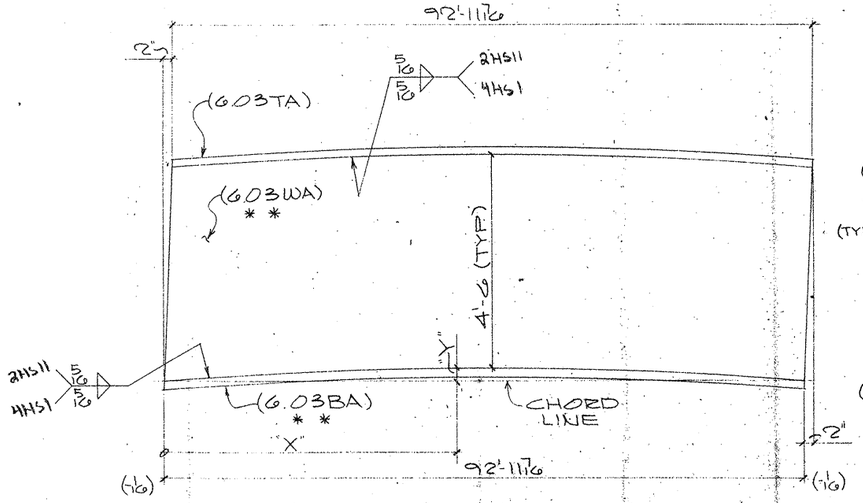

ONE GIRDER SUB-ASSY MK-A116

(FOR GIRDER - 138PG6.03)

MK-A116							
"X"	6'-10 9/16	21'-6 1/4	36'-1 15/16	50'-9 9/16	65'-5 3/16	80'-0 7/8	
"Y"	1/8	9/16	1"	15/16	15/16	3/4	

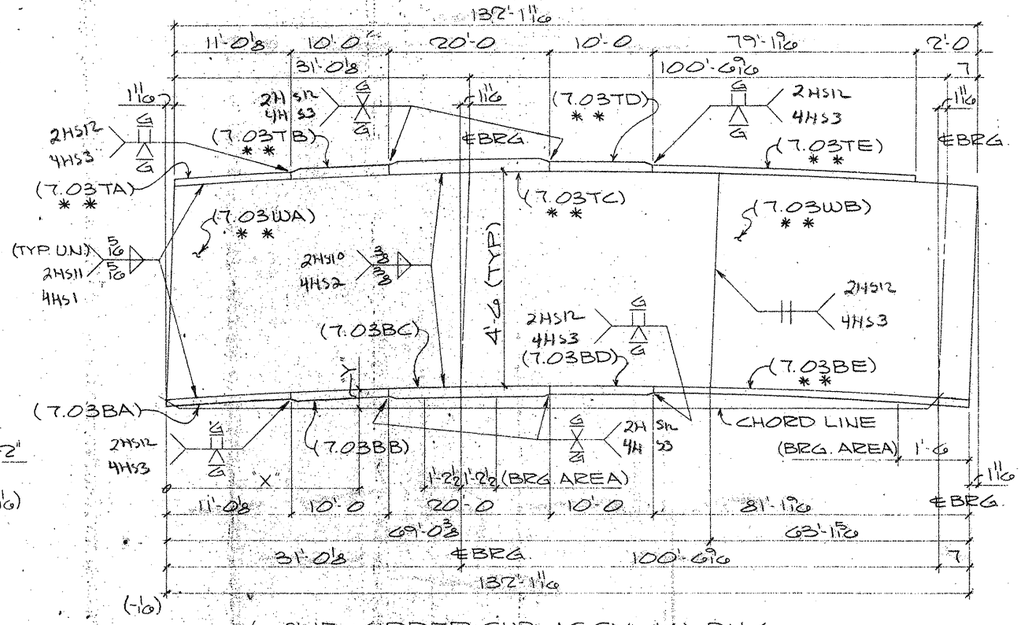

ONE GIRDER SUB-ASSY MK-B116

(FOR GIRDER - 142PG7.03)

MK-B116											
"X"	1'-8 7/8	16'-4 1/2	31'-0 1/8	45'-4 7/16	59'-8 15/16	69'-0 3/8	74'-1 3/8	88'-5 13/16	102'-10 7/16	117'-2 3/8	
"Y"	0"	0"	1/8	7/16	7/8	1 3/16	1 5/16	1 1/2	1 3/8	1 3/16	
			℄BRG			℄ WEB SPLICE					

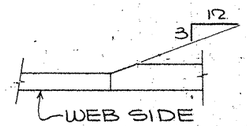

TYP. FLG. THKNESS TRANSITION

SHOP NOTES:

1) FOR GENERAL NOTES SEE SHT. GN1
2) MATERAL NOTED "* *" MUST MEET CHARPY V-NOTCH REQUIREMENTS
3) FOR HEAT CURVE DIAGRAM SEE SHT. 145

G0107

FED. ROAD DIV. NO.	STATE	FEDERAL AID PROJECT NO.				
6	TX.	NH92 (50) M				
STATE DIST. NO.	COUNTY	CONTROL NO.	SECTION NO.	JOB NO.	HIGHWAY NO.	
21	HIDALGO	39	17	97	83/281	— APV 10/27

BILL OF MATERIAL

	Qnty	Material	Length	Mark Temp	Mark Ship	Wt.	Cut From	Remarks
1								
2	1	GIRDER SUB-ASSY			A116			
3	1	PL 1/2 x 54	92'-11 7/16	6.03WA			101-20	CVN2
4	1	PL 1 x 18	92'-11 7/16	6.03TA			108-18	
5	1	PL 1 1/4 x 18	92'-11 7/16	6.03BA			104-14	CVN2
6								
7								
8								
9	1	GIRDER SUB-ASSY			B116			
10	1	PL 9/16 x 54	69'-0 3/8	7.03WA			102-2	CVN2
11	1	PL 1/2 x 54	63'-3 1/8	7.03WB			102-3	CVN2
12	1	PL 1 x 18	11'-0 1/8	7.03TA			104-15	CVN2
13	1	PL 1 1/2 x 18	10'-0	7.03TB			104-16	CVN2
14	1	PL 2 x 18	20'-0	7.03TC			104-17	CVN2
15	1	PL 1 1/2 x 18	10'-0	7.03TD			104-16	CVN2
16	1	PL 1 x 18	79'-1 9/16	7.03TE			104-18	CVN2
17	1	PL 1 x 18	11'-0 1/8	7.03BA			108-19	
18	1	PL 1 1/2 x 18	10'-0	7.03BB			108-20	
19	1	PL 2 x 18	20'-0	7.03BC			109-2	
20	1	PL 1 1/2 x 18	10'-0	7.03BD			108-20	
21	1	PL 1 x 18	81'-1 9/16	7.03BE			104-19	CVN2
22								
23								
24								
25								
26								
27								
28								
29								
30								
31								
32								
33								
34								
35								
36								
37								
38								
39								
40								
41								
42								
43								
44								
45								
46								
47								
48								
49								
50								
51								
52								
53								
54								
55								
56								
57								
58								
59								
60								

TEXAS DEPARTMENT OF TRANSPORTATION
APPROVED
DIVISION OF BRIDGES AND STRUCTURES
DEC 08 1992
APPROVAL OF THIS DRAWING DOES NOT RELIEVE THE CONTRACTOR OF THE RESPONSIBILITY FOR THE CORRECTNESS OF DETAIL.

REVISION	DATE	DESCRIPTION OF REVISION
NO. 1		FOR APPROVAL
NO. 2		OCT 27 '92
NO. 3		
NO. 4		NOT FOR CONSTRUCTION
NO. 5		

PRINTING Req'd	For	Date

Bolts Holes Unless Noted
Shop Paint SEE SHT GN1
Fab. Spec. A572-50 UN. Inspection
Architect
Erection By Field Connections

HIRSCHFELD STEEL CO. INC.
112 WEST 29TH SAN ANGELO, TEXAS 76903
PHONE (915) 653-3211

DESCRIPTION 584'-0 PLATE GIRDER UNIT
STRUCTURE US 83/281 INTERCHANGE RAMP "C"
LOCATION HIDALGO COUNTY
CUSTOMER GILBERT TEXAS CONSTRUCTION
SHIP TO
Customer's Order No
Dwg. By CRT Date 7-92
Checked By DLT Date 8-92
SHEET 116 OF
JOB NO. 92-107

CE 92-12 (LINE #31)

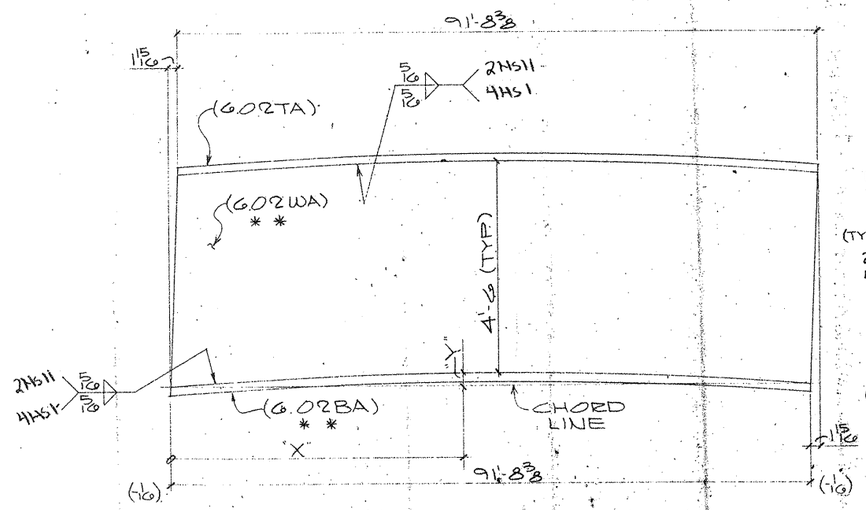

ONE GIRDER SUB-ASSY. MK-A115

(FOR GIRDER - 137FG6.02)

MK-A115						
"X"	5'-4 5/16	20'-1 3/8	34'-11 1/16	49'-9	64'-6 9/16	79'-4 1/16
"Y"	1/8	5/8	1/16	1/16	1 3/8	1 13/16

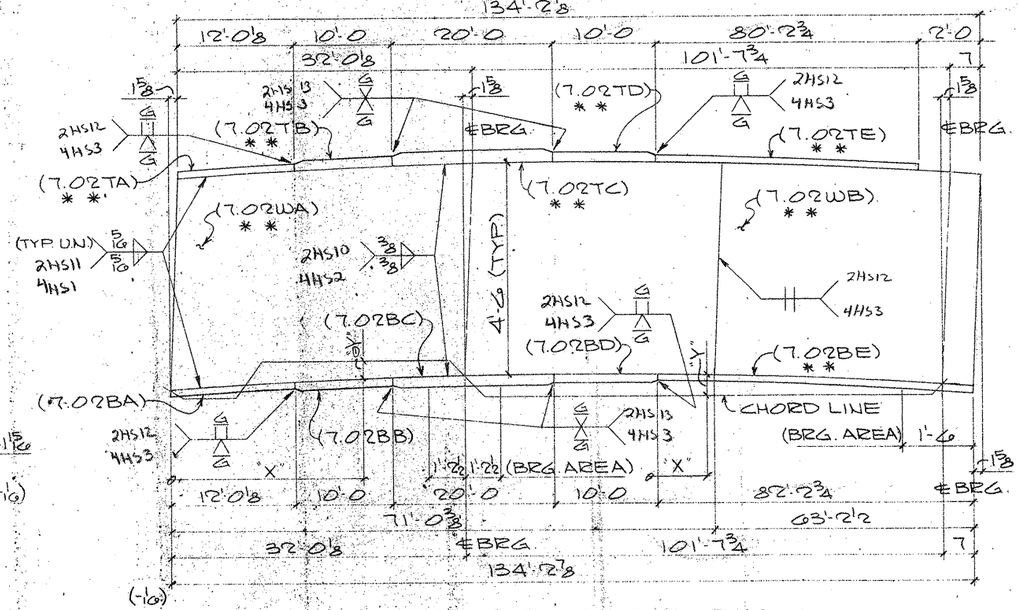

ONE GIRDER SUB-ASSY. MK-B115

(FOR GIRDER - 141FG7.02)

MK-B115											
"X"	2'-5 1/16	17'-2 3/8	32'-0 1/8	46'-6 1/16	61'-0 1/16	71'-0 3/8	75'-7	90'-1 5/16	104'-7 9/16	119'-1 13/16
"Y"	0"	1 9/16	0"	1/4	1/16	1"	1 3/16	1 3/8	1 5/16	1 13/16
			℄BRG			℄WEB SPLICE				

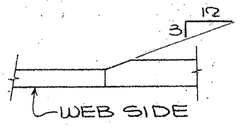

TYP. FLG. THKNESS TRANSITION

SHOP NOTES:

1) FOR GENERAL NOTES SEE SHT. GN1
2) MATERAL NOTED " * * " MUST MEET CHARPY V-NOTCH REQUIREMENTS
3) FOR HEAT CURVE DIAGRAM SEE SHT. 145

G0107

FED. ROAD DIV. NO.	STATE	FEDERAL AID PROJECT NO.			
6	TX.	NH92 (50) M			
STATE DIST. NO.	COUNTY	CONTROL NO.	SECTION NO.	JOB NO.	HIGHWAY NO.
21	HIDALGO	39	17	97	83/281

BILL OF MATERIAL

	Qnty	Material	Length	Mark Temp.	Mark Ship.	Wt.	Cut From	Remarks
1								
2	1	GIRDER SUB-ASSY			A115			
3	1	PL 1/2 x 54	91'-10 5/16	6.02WA			101-13	CVN2
4	1	PL 1 x 18	91'-8 3/8	6.02TA			108-5	
5	1	PL 1 1/2 x 18	91'-8 3/8	6.02BA			103-20	CVN2
6								
7								
8								
9	1	GIRDER SUB-ASSY			B115			
10	1	PL 9/16 x 54	71'-0 1/2	7.02WA			101-14	CVN2
11	1	PL 1/2 x 54	63'-4 1/4	7.02WB			101-15	CVN2
12	1	PL 1 x 18	12'-0 1/8	7.02TA			104-2	CVN2
13	1	PL 1 1/2 x 18	10'-0	7.02TB			104-3	CVN2
14	1	PL 2 1/4 x 18	20'-0	7.02TC			106-7	CVN3
15	1	PL 1 1/2 x 18	10'-0	7.02TD			104-3	CVN2
16	1	PL 1 x 18	80'-2 3/4	7.02TE			104-4	CVN2
17	1	PL 1 x 18	12'-0 1/8	7.02BA			108-6	
18	1	PL 1 1/2 x 18	10'-0	7.02BB			108-7	
19	1	PL 2 1/4 x 18	20'-0	7.02BC			108-8	
20	1	PL 1 1/2 x 18	10'-0	7.02BD			108-7	
21	1	PL 1 x 18	82'-2 3/4	7.02BE			104-5	CVN2
22								
23								
24								
25								
26								
27								
28								
29								
30								
31								
32								
33								
34								
35								
36								
37								
38								
39								
40								
41								
42								
43								
44								
45								
46								
47								
48								
49								
50								
51								
52								
53								
54								
55								
56								
57								
58								
59								
60								

TEXAS DEPARTMENT OF TRANSPORTATION
APPROVED
DIVISION OF BRIDGES AND STRUCTURES
DEC 08 1992
APPROVAL OF THIS DRAWING DOES NOT RELIEVE THE CONTRACTOR OF THE RESPONSIBILITY FOR THE CORRECTNESS OF DETAIL.

REVISION	DATE	DESCRIPTION OF REVISION
NO. 1		FOR APPROVAL
NO. 2		OCT 27 '92
NO. 3		
NO. 4		NOT FOR CONSTRUCTION
NO. 5		

PRINTING		
Reqd	For	Date

Bolts: Holes: Unless Noted

Shop Paint SEE SHT GN1

Fab. Spec. A572:50 LW. Inspection

Architect

Erection By Field Connections

HIRSCHFELD STEEL CO. INC.
112 WEST 29TH SAN ANGELO, TEXAS 76903
PHONE (915) 653-3211

DESCRIPTION	584'-0 PLATE GIRDER UNIT
STRUCTURE	US 83/281 INTERCHANGE RAMP "2"
LOCATION	HIDALGO COUNTY
CUSTOMER	GILBERT TEXAS CONSTRUCTION
SHIP TO	
Customer's Order No.	
Dwg. By CRT	Date 7-92
Checked By DLT	Date 8-92

SHEET 115 OF
JOB NO. 92-107

CE92-12 (LINE #2)

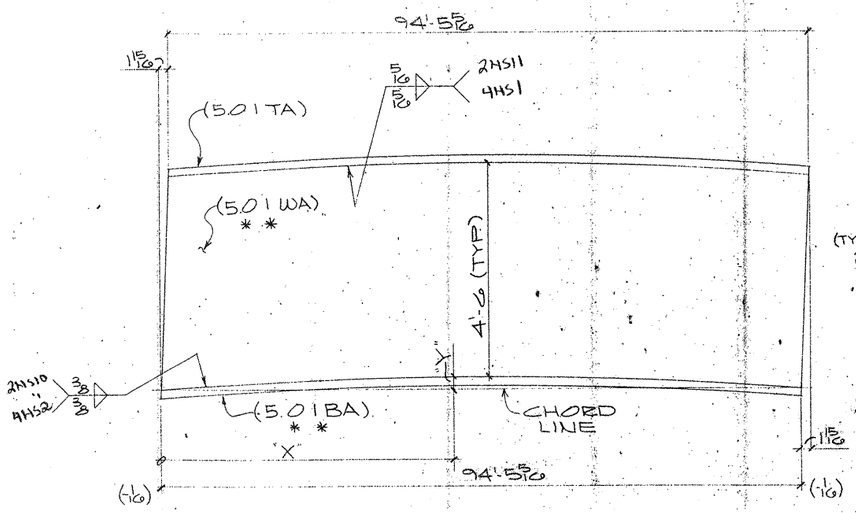

ONE GIRDER SUB-ASSY. MK-A114

(FOR GIRDER - 130PG5.01)

MK-A114							
"X"	0'-10	21'-9 1/2	36'-8 15/16	51'-8 7/16	66'-7 7/8	81'-7 5/16	
"Y"	3/16	3/4	1 1/4	1 9/16	1 1/2	7/8	

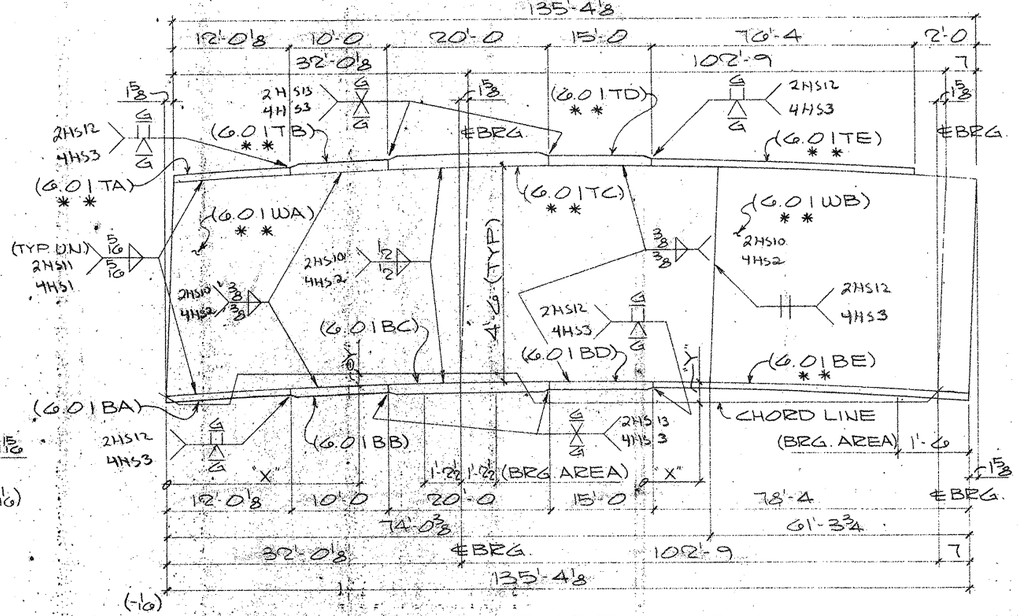

ONE GIRDER SUB-ASSY. MK-B114

(FOR GIRDER - 140PG6.01)

MK-B114											
"X"	2'-1 1/4	17'-0 15/16	32'-0 1/16	46'-8 1/4	61'-4 1/16	74'-0 3/8	76'-0 5/8	90'-8 3/4	105'-4 15/16	120'-1 1/16	
"Y"	0'-0	0'-1/8	0'-1/8	1/8	9/16	1 5/16	1"	1 5/16	1 1/4	3/4	
			℄BRG			℄WEB SPLICE					

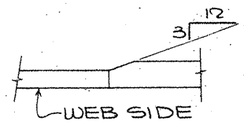

TYP. FLG. THKNESS TRANSITION

SHOP NOTES:

1) FOR GENERAL NOTES SEE SHT. GN1
2) MATERAL NOTED * * * MUST MEET CHARPY V-NOTCH REQUIREMENTS
3) FOR HEAT CURVE DIAGRAM SEE SHT. #145

BILL OF MATERIAL

	Qnty.	Material	Length	Mark Temp.	Mark Ship.	Wt.	Cut From	Remarks
1								
2	1	GIRDER SUB-ASSY			A114			
3	1	PL 1/2 x 54	94'-7 1/4	5.01WA			101-6	CVN2
4	1	PL 1 x 18	94'-5 5/16	5.01TA			107-10	
5	1	PL 1 3/4 x 18	94'-5 5/16	5.01BA			103-5	CVN2
6								
7								
8								
9	1	GIRDER SUB-ASSY			B114			
10	1	PL 9/16 x 54	74'-0 1/2	6.01WA			101-7	CVN2
11	1	PL 1/2 x 54	61'-5 1/16	6.01WB			101-8	CVN2
12	1	PL 1 x 18	12'-0 1/8	6.01TA			103-6	CVN2
13	1	PL 1 3/4 x 18	10'-0	6.01TB			103-7	CVN2
14	1	PL 2 1/2 x 18	20'-0	6.01TC			106-3	CVN3
15	1	PL 1 3/4 x 18	15'-0	6.01TD			103-8	CVN2
16	1	PL 1 x 18	76'-4	6.01TE			103-9	CVN2
17	1	PL 1 x 18	12'-0 1/8	6.01BA			107-11	
18	1	PL 1 3/4 x 18	10'-0	6.01BB			107-12	
19	1	PL 2 1/2 x 18	20'-0	6.01BC			107-13	
20	1	PL 1 3/4 x 18	15'-0	6.01BD			107-14	
21	1	PL 1 x 18	78'-4	6.01BE			103-10	CVN2
22								
23								
24								
25								
26								
27								
28								
29								
30								
31								
32								
33								
34								
35								
36								
37								
38								
39								
40								
41								
42								
43								
44								
45								
46								
47								
48								
49								
50								
51								
52								
53								
54								
55								
56								
57								
58								
59								
60								

TEXAS DEPARTMENT OF TRANSPORTATION
APPROVED
DIVISION OF BRIDGES AND STRUCTURES
DEC 08 1992
APPROVAL OF THIS DRAWING DOES NOT RELIEVE THE CONTRACTOR OF THE RESPONSIBILITY FOR THE CORRECTNESS OF DETAIL.

FOR APPROVAL

REVISION	DATE	DESCRIPTION OF REVISION
NO. 1		OCT 27 '92
NO. 2		NOT FOR CONSTRUCTION
NO. 3		
NO. 4		
NO. 5		

PRINTING Reqd	For	Date

Bolts Holes: Unless Noted
Shop Paint SEE SHT GN1
Fab Spec ASTM-50 UN. Inspection
Architect
Erection By Field Connections

HIRSCHFELD STEEL CO. INC.
112 WEST 29TH SAN ANGELO, TEXAS 76903
PHONE (915) 653-3211

DESCRIPTION 584'-0 PLATE GIRDER UNIT
STRUCTURE US 83/281 INTERCHANGE RAMP #2
LOCATION HIDALGO COUNTY
CUSTOMER GILBERT TEXAS CONSTRUCTION
SHIP TO
Customer's Order No.
Dwg By CRT Date 7-92
Checked By DLT Date 8-92
SHEET 114 OF
JOB NO. 92-107

G0107

FED. ROAD DIV. NO.	STATE	FEDERAL AID PROJECT NO.			
6	TX.	NHPP (50) M			
STATE DIST. NO.	COUNTY	CONTROL NO.	SECTION NO.	JOB NO.	HIGHWAY NO.
21	HIDALGO	39	17	97	83/281

— APV 10-27

CE 92-12 (LINE # 1)

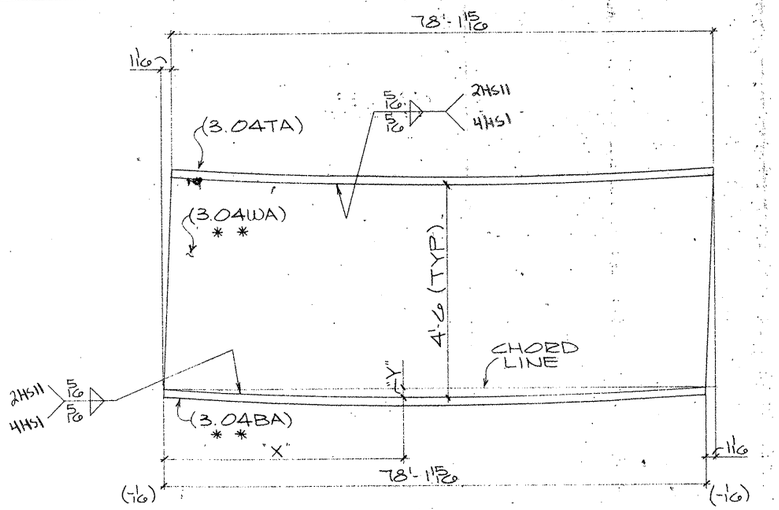

ONE GIRDER SUB-ASSY. MK-A113

(FOR GIRDER - 131PG3.04)

MK-A113						
"X"	2'-4 13/16	16'-10 7/16	31'-4 1/8	45'-9 3/4	60'-3 7/16	74'-9 1/16
"Y"	1/16	1/16	1/16	1/16	1/16	1/16

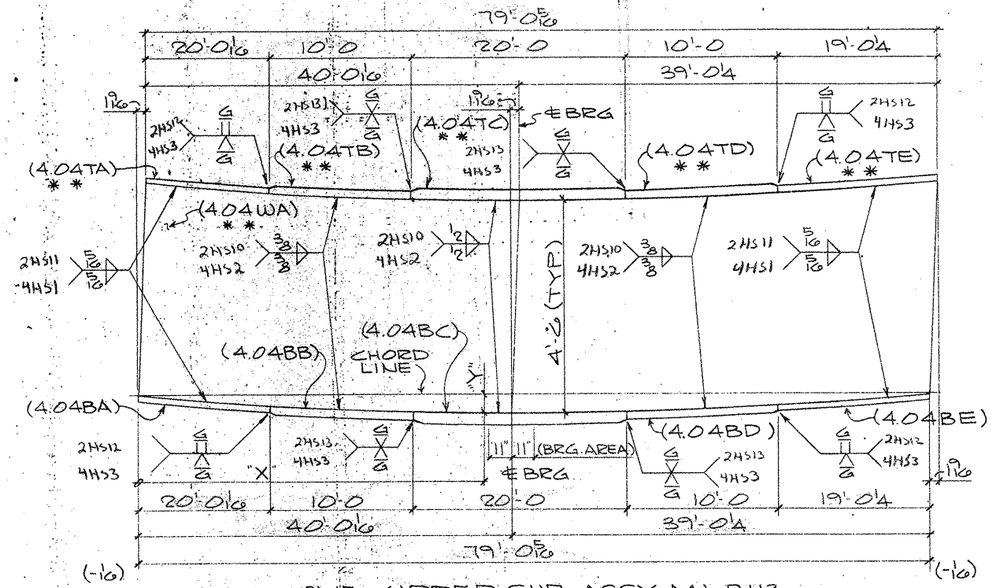

ONE GIRDER SUB-ASSY. MK-B113

(FOR GIRDER - 135PG4.04)

MK-B113						
"X"	11'-0 1/16	25'-0 3/8	40'-0 1/16	54'-5 3/4	68'-11 1/2	
"Y"	1/16	2 1/16	2 3/8	2	1"	
			℄BRG			

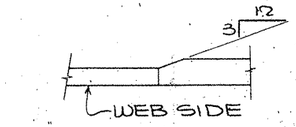

TYP. FLG. THKNESS TRANSITION

SHOP NOTES:

1) FOR GENERAL NOTES SEE SHT. GN1
2) MATERAL NOTED " * * " MUST MEET CHARPY V-NOTCH REQUIREMENTS
3) FOR HEAT CURVE DIAGRAM SEE SHT. 144 & 145

BILL OF MATERIAL

	Qnty.	Material	Length	Mark Temp.	Mark Ship.	Wt.	Cut From	Remarks
1								
2	1	GIRDER SUB-ASSY			A113			
3	1	PL 1/2 x 54	78'-3	3.04WA			102-6	CVN2
4	1	PL 1 x 18	78'-11 15/16	3.04TA			109-9	
5	1	PL 1 x 18	78'-11 15/16	3.04BA			105-8	CVN2
6								
7								
8								
9								
10	1	GIRDER SUB-ASSY			B113			
11	1	PL 9/16 x 54	79'-1 7/8	4.04WA			102-7	CVN2
12	1	PL 1 x 18	20'-0 1/16	4.04TA			105-9	CVN2
13	1	PL 1 3/4 x 18	10'-0	4.04TB			105-5	CVN2
14	1	PL 2 1/2 x 18	20'-0	4.04TC			106-10	CVN3
15	1	PL 1 3/4 x 18	10'-0	4.04TD			105-5	CVN2
16	1	PL 1 x 18	19'-0 1/4	4.04TE			105-10	CVN2
17	1	PL 1 x 18	20'-0 1/16	4.04BA			109-10	
18	1	PL 1 3/4 x 18	10'-0	4.04BB			109-5	
19	1	PL 2 1/2 x 18	20'-0	4.04BC			109-6	
20	1	PL 1 3/4 x 18	10'-0	4.04BD			109-5	
21	1	PL 1 x 18	19'-0 1/4	4.04BE			109-11	
22								
23								
24								
25								
26								
27								
28								
29								
30								
31								
32								
33								
34								
35								
36								
37								
38								
39								
40								
41								
42								
43								
44								
45								
46								
47								
48								
49								
50								
51								
52								
53								
54								
55								
56								
57								
58								
59								
60								

TEXAS DEPARTMENT OF TRANSPORTATION
APPROVED
DIVISION OF BRIDGES AND STRUCTURES
DEC 08 1992
APPROVAL OF THIS DRAWING DOES NOT RELIEVE THE CONTRACTOR OF THE RESPONSIBILITY FOR THE CORRECTNESS OF DETAIL.

FOR APPROVAL

REVISION	DATE	DESCRIPTION OF REVISION
NO. 1		OCT 27 '92
NO. 2		NOT FOR CONSTRUCTION
NO. 3		
NO. 4		
NO. 5		

PRINTING Req'd	For	Date

Bolts: Holes: Unless Noted
Shop Paint SEE SHT. GN1
Fab Spec. A572-50 UN. Inspection
Architect
Erection By Field Connections

HIRSCHFELD STEEL CO. INC.
112 WEST 29TH SAN ANGELO, TEXAS 76903
PHONE (915) 653-3211

DESCRIPTION 584'-0 PLATE GIRDER UNIT
STRUCTURE US 83/281 INTERCHANGE RAMP "S"
LOCATION HIDALGO COUNTY
CUSTOMER GILBERT TEXAS CONSTRUCTION
SHIP TO
Customer's Order No.
Dwg. By CRT Date 7-92
Checked By DLT Date 8-92
SHEET 113 OF
JOB NO. 92-107

- APV 10-29

60107

FED. ROAD DIV. NO.	STATE	FEDERAL AID PROJECT NO.			
6	TX.	NH92 (50) M			
STATE DIST. NO.	COUNTY	CONTROL NO.	SECTION NO.	JOB NO.	HIGHWAY NO.
21	HIDALGO	39	17	97	83/281

CE 92-12 (LINE #4)

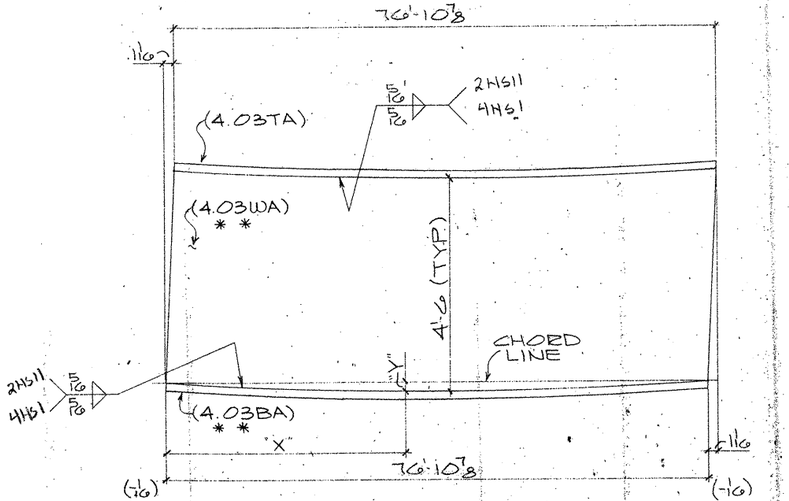

ONE GIRDER SUB-ASSY MK-A112

(FOR GIRDER - 130PG4.03)

MK-A112						
"X"	10'2	15'-6 1/16	30'-1 5/8	44'-9 3/8	59'-4 3/4	74'-0 5/16
"Y"	0	1/16	1/16	0	1/16	1/16

TYP. FLG. THKNESS TRANSITION

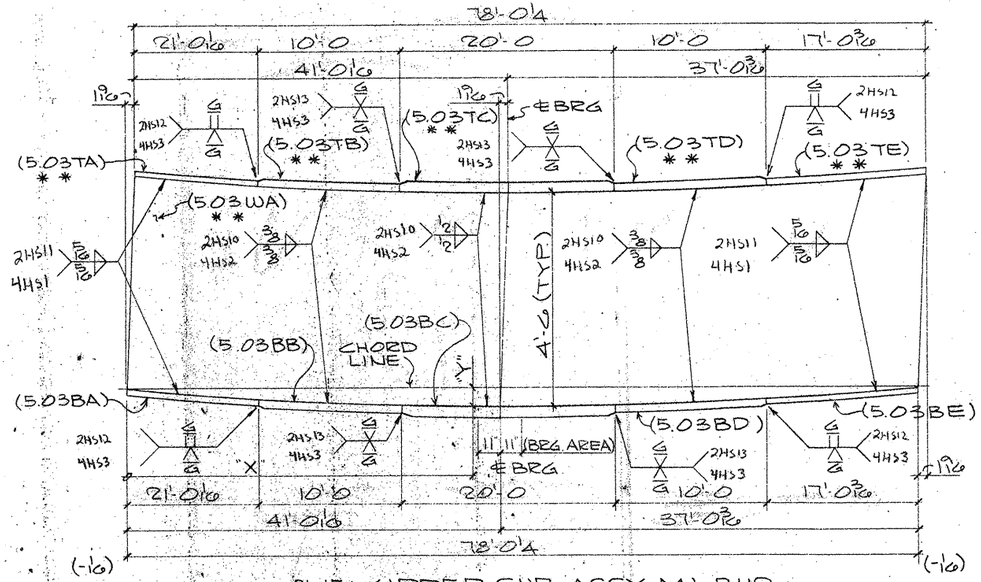

ONE GIRDER SUB-ASSY MK-B112

(FOR GIRDER - 134PG5.03

MK-B112						
X	11'-8 3/8	26'-4 1/2	41'-0 1/16	55'-7 1/16	70'-3 5/16	
"Y"	1 3/16	2 1/8	2 3/8	1 15/16	1 3/16	
			℄BRG			

SHOP NOTES:

1) FOR GENERAL NOTES SEE SHT. GN1
2) MATERAL NOTED * * MUST MEET CHARPY V-NOTCH REQUIREMENTS
3) FOR HEAT CURVE DIAGRAM SEE SHT. 144 & 145

BILL OF MATERIAL

	Qnty	Material	Length	Mark Temp	Mark Ship.	Wt	Cut From	Remarks
1								
2	1	GIRDER SUB-ASSY			A112			
3	1	PL 1/2 x 54	76'-11 5/16	4.03WA			101-18	CVN2
4	1	PL 1 x 18	76'-10 7/8	4.03TA			108-15	
5	1	PL 1 x 18	76'-10 7/8	4.03BA			104-12	CVN2
6								
7								
8								
9								
10	1	GIRDER SUB-ASSY			B112			
11	1	PL 9/16 x 54	78'-11 5/16	5.03WA			101-19	CVN2
12	1	PL 1 x 18	21'-0 1/16	5.03TA			104-13	CVN2
13	1	PL 1 3/4 x 18	10'-0	5.03TB			104-9	CVN2
14	1	PL 2 3/4 x 18	20'-0	5.03TC			106-9	CVN3
15	1	PL 1 3/4 x 18	10'-0	5.03TD			104-9	CVN2
16	1	PL 1 x 18	17'-0 3/16	5.03TE			104-8	CVN2
17	1	PL 1 x 18	21'-0 1/16	5.03BA			108-16	
18	1	PL 1 3/4 x 18	10'-0	5.03BB			108-11	
19	1	PL 2 3/4 x 18	20'-0	5.03BC			108-12	
20	1	PL 1 3/4 x 18	10'-0	5.03BD			108-11	
21	1	PL 1 x 18	17'-0 3/16	5.03BE			108-17	
22								
23								
24								
25								
26								
27								
28								
29								
30								
31								
32								
33								
34								
35								
36								
37								
38								
39								
40								
41								
42								
43								
44								
45								
46								
47								
48								
49								
50								
51								
52								
53								
54								
55								
56								
57								
58								
59								
60								

TEXAS DEPARTMENT OF TRANSPORTATION
APPROVED
AS NOTED
DIVISION OF BRIDGES AND STRUCTURES
DEC 08 1992
APPROVAL OF THIS DRAWING DOES NOT RELIEVE THE CONTRACTOR OF THE RESPONSIBILITY FOR THE CORRECTNESS OF DETAIL

FOR APPROVAL

REVISION	DATE	DESCRIPTION OF REVISION
NO. 1		OCT 27 '92
NO. 2		
NO. 3		NOT FOR CONSTRUCTION
NO. 4		
NO. 5		

PRINTING: Read | For | Date

Bolts Holes: Unless Noted
Shop Paint SEE SHT GN1
Fab Spec A572-50 UU, Inspection
Architect
Erection By Field Connections

HIRSCHFELD STEEL CO. INC.
112 WEST 29TH SAN ANGELO, TEXAS 76903
PHONE (915) 653-3211

DESCRIPTION 584'-0 PLATE GIRDER UNIT
STRUCTURE US 83/281 INTERCHANGE RAMP *2
LOCATION HIDALGO COUNTY
CUSTOMER GILBERT TEXAS CONSTRUCTION
SHIP TO
Customer's Order No.
Dwg. By CRT Date 7-92
Checked By DLT Date 8-92
SHEET 112 OF
JOB NO. 92-107

FED. ROAD DIV. NO.	STATE	FEDERAL AID PROJECT NO.			
6	TX.	NH92 (50) M			
STATE DIST. NO.	COUNTY	CONTROL NO.	SECTION NO.	JOB NO.	HIGHWAY NO.
21	HIDALGO	39	17	97	83/281

G0107

APV 10-29

CE 92-12 (LINE #3)

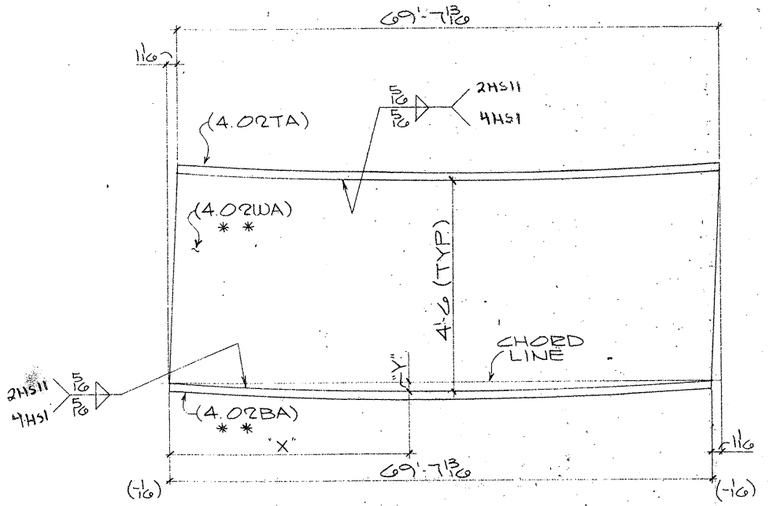

ONE GIRDER SUB-ASSY MK-A111
(FOR GIRDER - 129PG4.02)

MK-A111						
"X"	11'-11/16	25'-11 3/16	40'-8 5/8	55'-6 1/8		
"Y"	1/8	1/8	1/8	1/8		

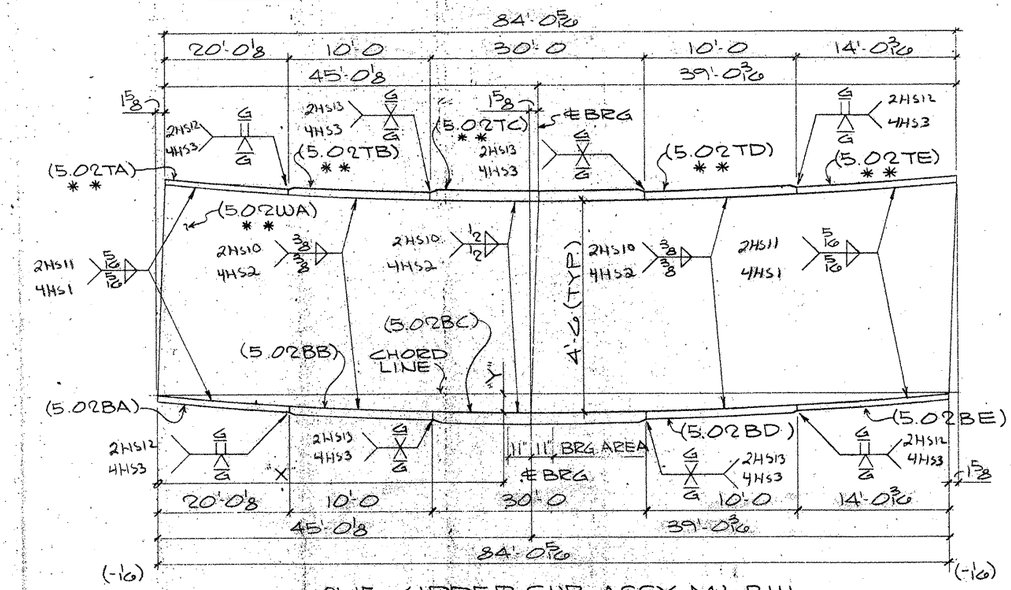

ONE GIRDER SUB-ASSY. MK-B111
(FOR GIRDER - 133PG5.02)

MK-B111						
"X"	7/8	15-5/8	30-0 3/8	45'-0 1/8	59'-9 5/8	74'-7 3/16
"Y"	1/16	1/16	2 1/4	2 1/2	2	15/16
				℄ BRG		

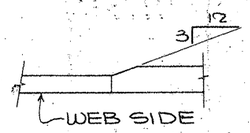

TYP. FLG. THKNESS TRANSITION

SHOP NOTES:
1) FOR GENERAL NOTES SEE SHT. GN1
2) MATERAL NOTED " * * " MUST MEET CHARPY V-NOTCH REQUIREMENTS
3) FOR HEAT CURVE DIAGRAM SEE SHT. 144 & 145

G0107

FED. ROAD DIV. NO.	STATE	FEDERAL AID PROJECT NO.			
6	TX.	NH92 (50) M			
STATE DIST. NO.	COUNTY	CONTROL NO.	SECTION NO.	JOB NO.	HIGHWAY NO.
21	HIDALGO	39	17	97	83/281

BILL OF MATERIAL

	Only	Material	Length	Mark Temp.	Mark Ship.	Wt.	Cut From	Remarks
1								
2	1	GIRDER SUB-ASSY			A111			
3	1	PL 1/2 x 54	69'-8 1/8	4.02WA			101-11	CVN2
4	1	PL 1 x 18	69'-7 13/16	4.02TA			108-2	
5	1	PL 1 x 18	69'-7 13/16	4.02BA			103-17	CVN2
6								
7								
8								
9								
10	1	GIRDER SUB-ASSY			B111			
11	1	PL 9/16 x 54	84'-1 5/16	5.02WA			101-12	CVN2
12	1	PL 1 x 18	20'-0 1/8	5.02TA			103-18	CVN2
13	1	PL 2 x 18	10'-0	5.02TB			103-14	CVN2
14	1	PL 3 x 18	30'-0	5.02TC			106-6	CVN3
15	1	PL 2 x 18	10'-0	5.02TD			103-14	CVN2
16	1	PL 1 x 18	14'-0 3/16	5.02TE			103-19	CVN2
17	1	PL 1 x 18	20'-0 1/8	5.02BA			108-3	
18	1	PL 2 x 18	10'-0	5.02BB			107-17	
19	1	PL 3 x 18	30'-0	5.02BC			107-18	
20	1	PL 2 x 18	10'-0	5.02BD			107-17	
21	1	PL 1 x 18	14'-0 3/16	5.02BE			108-4	
22								
23								
24								
25								
26								
27								
28								
29								
30								
31								
32								
33								
34								
35								
36								
37								
38								
39								
40								
41								
42								
43								
44								
45								
46								
47								
48								
49								
50								
51								
52								
53								
54								
55								
56								
57								
58								
59								
60								

TEXAS DEPARTMENT OF TRANSPORTATION
APPROVED
DIVISION OF BRIDGES AND STRUCTURES
DEC 08 1992
APPROVAL OF THIS DRAWING DOES NOT RELIEVE THE CONTRACTOR OF THE RESPONSIBILITY FOR THE CORRECTNESS OF DETAIL

FOR APPROVAL

REVISION	DATE	DESCRIPTION OF REVISION
NO. 1		OCT 27 92
NO. 2		
NO. 3		NOT FOR CONSTRUCTION
NO. 4		
NO. 5		

PRINTING Req'd	For	Date

Bolts Holes Unless Noted
Shop Paint SEE SHT GN1
Fab. Spec. A572-50W, Inspection
Architect
Erection By Field Connections

HIRSCHFELD STEEL CO. INC.
112 WEST 29TH SAN ANGELO, TEXAS 76903
PHONE (915) 653-3211

DESCRIPTION 584'-0 PLATE GIRDER UNIT
STRUCTURE US 83/281 INTERCHANGE RAMP "R"
LOCATION HIDALGO COUNTY
CUSTOMER GILBERT TEXAS CONSTRUCTION
SHIP TO
Customer's Order No.
Dwg. By CRT Date 7-92
Checked By DLT Date 8-92
SHEET 111 OF
JOB NO. 92-107

APV 10/27

CE 92-12 (LINE "R")

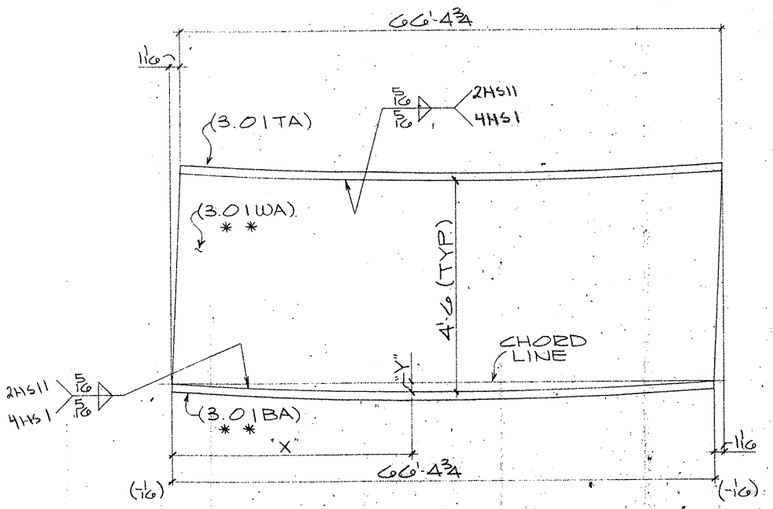

ONE GIRDER SUB-ASSY. MK-A110
(FOR GIRDER - 128PG3.01)

MK-A110						
"X"	8'-9 5/16	23'-8 1/16	38'-8 1/16	53'-7 1/16		
"Y"	1/8	3/16	3/16	1/8		

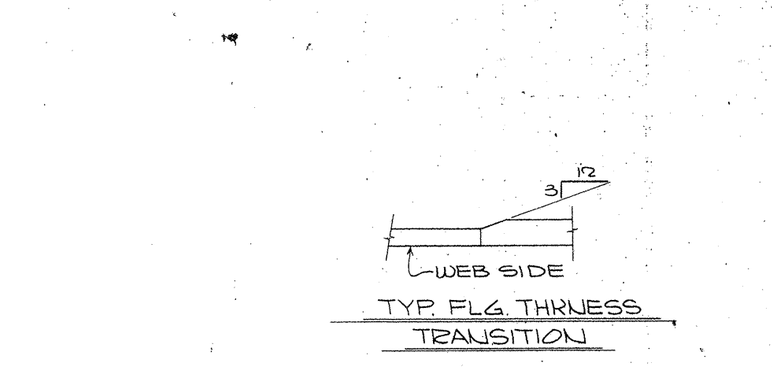

TYP. FLG. THKNESS TRANSITION

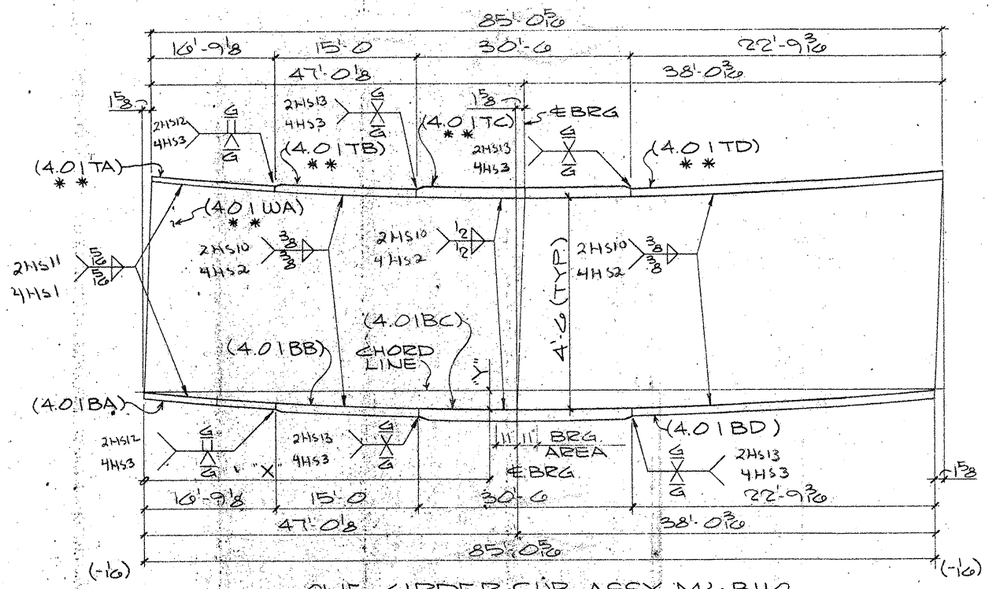

ONE GIRDER SUB-ASSY. MK-B110
(FOR GIRDER - 132PG4.01)

MK-B110							
"X"	12'-1 5/16	17'-1 5/16	32'-0 1/16	47'-0 1/8	61'-11 3/16	76'-11	
"Y"	1/4	1/16	2 5/16	2 7/16	1 15/16	1 3/16	
				℄BRG			

TYP. FLG. WIDTH TRANSITION

SHOP NOTES:
1) FOR GENERAL NOTES SEE SHT. GN1
2) MATERAL NOTED "* *" MUST MEET CHARPY V-NOTCH REQUIREMENTS
3) FOR HEAT CURVE DIAGRAM SEE SHT. 144 & 145

BILL OF MATERIAL

	Qnty	Material	Length	Mark Temp.	Mark Ship.	Wt.	Cut From	Remarks
1								
2	1	GIRDER SUB-ASSY			A110			
3	1	PL 1/2 x 54	66'-5 5/16	3.01WA			101-4	CVN2
4	1	PL 1 x 18	66'-4 3/4	3.01TA			107-7	
5	1	PL 1 1/4 x 18	66'-4 3/4	3.01BA			103-2	CVN2
6								
7								
8								
9								
10	1	GIRDER SUB-ASSY			B110			
11	1	PL 9/16 x 54	85'-1 5/16	4.01WA			101-5	CVN2
12	1	PL 1 x 18	16'-9 1/8	4.01TA			103-3	CVN2
13	1	PL 2 x 18	15'-0	4.01TB			102-19	CVN2
14	1	PL 3 x 20	30'-6	4.01TC			106-11	CVN3
15	1	PL 2 x 18	22'-9 3/16	4.01TD			103-4	CVN2
16								
17	1	PL 1 x 18	16'-9 1/8	4.01BA			107-8	
18	1	PL 2 x 18	15'-0	4.01BB			107-5	
19	1	PL 3 x 20	30'-6	4.01BC			109-18	
20	1	PL 2 x 18	22'-9 3/16	4.01BD			107-9	
21								
22								
23								
24								
25								
26								
27								
28								
29								
30								
31								
32								
33								
34								
35								
36								
37								
38								
39								
40								
41								
42								
43								
44								
45								
46								
47								
48								
49								
50								
51								
52								
53								
54								
55								
56								
57								
58								
59								
60								

TEXAS DEPARTMENT OF TRANSPORTATION
APPROVED
DIVISION OF BRIDGES AND STRUCTURES
DEC 06 1992
APPROVAL OF THIS DRAWING DOES NOT RELIEVE THE CONTRACTOR OF THE RESPONSIBILITY FOR THE CORRECTNESS OF DETAIL

FOR APPROVAL
DEC 27 '92
NOT FOR CONSTRUCTION

REVISION	DATE	DESCRIPTION OF REVISION
NO. 1		
NO. 2		
NO. 3		
NO. 4		
NO. 5		

PRINTING Req'd	For	Date

Bolts: Holes: Unless Noted
Shop Paint SEE SHT. GN1
Fab Spec A572-50U Inspection
Architect
Erection By Field Connections

HIRSCHFELD STEEL CO. INC.
112 WEST 29TH SAN ANGELO TEXAS 76903
PHONE (915) 653-3211

DESCRIPTION	584'-0 PLATE GIRDER UNIT
STRUCTURE	US 83/281 INTERCHANGE RAMP "Z"
LOCATION	HIDALGO COUNTY
CUSTOMER	GILBERT TEXAS CONSTRUCTION
SHIP TO	
Customer's Order No.	
Dwg. By CRT Date 7-92	SHEET 110 OF
Checked By DLT Date 8-92	JOB NO. 92-107

G0107

FED. ROAD DIV. NO.	STATE	FEDERAL AID PROJECT NO.			
6	TX.	NH92 (50) M			
STATE DIST. NO.	COUNTY	CONTROL NO.	SECTION NO.	JOB NO.	HIGHWAY NO.
21	HIDALGO	39	17	97	83/281

APV 10-27

CE 92-12 (LINE # 1)

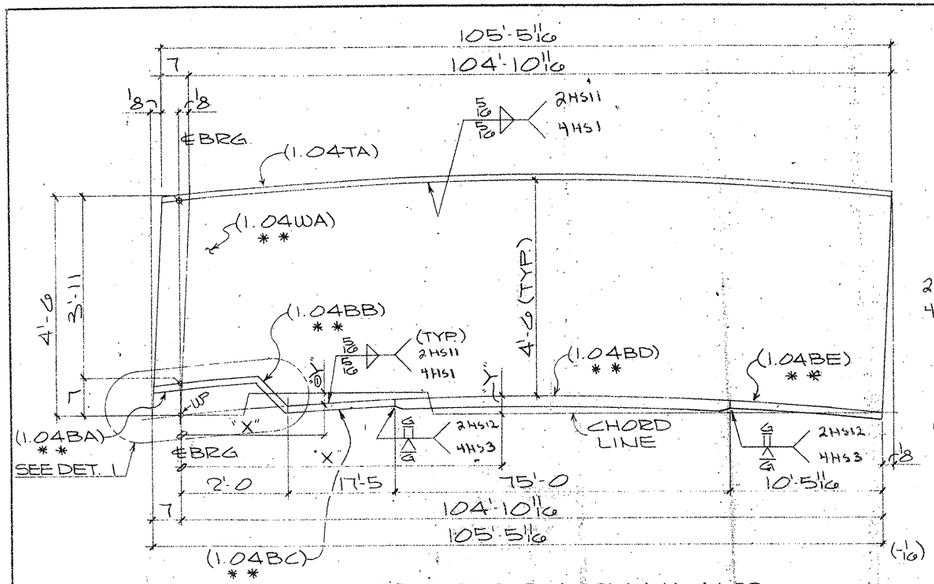

ONE GIRDER SUB-ASSY MK-A109
(FOR GIRDER-121PG1.04)

MK-A109								
"X"	13'-10 3/8	28'-1 15/16	42'-4	56'-2 1/16	70'-9 5/16	85'-0	99'-2 1/16
"Y"	0 1/8	1/16	7/16	1/2	13/16	1/2	1/16

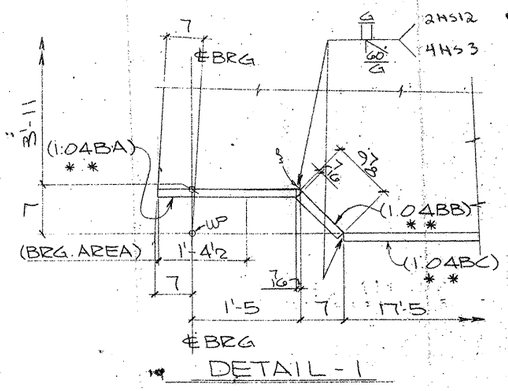

DETAIL-1

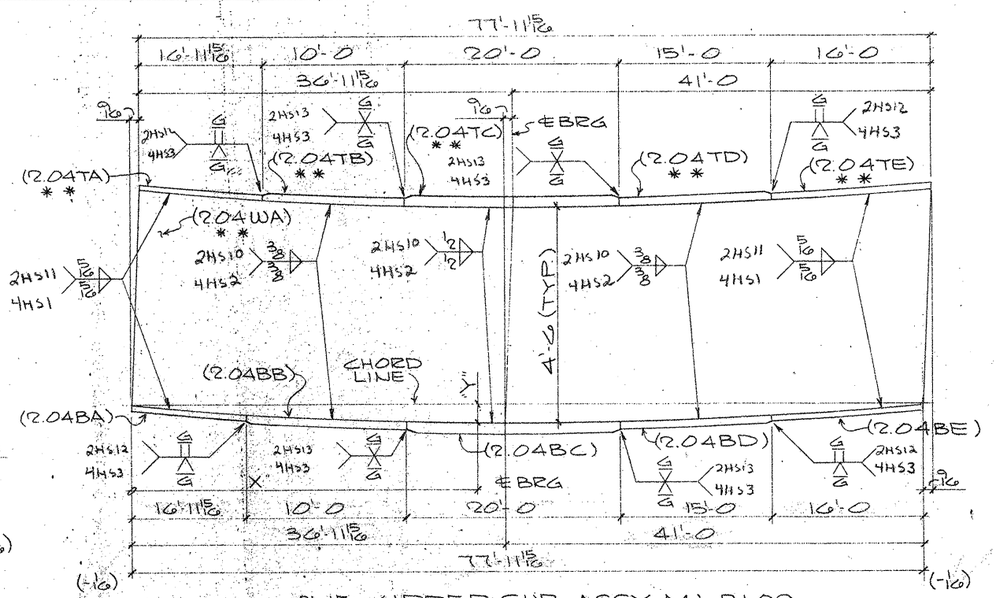

ONE GIRDER SUB-ASSY MK-B109
(FOR GIRDER-125PG2.04)

MK-B109							
"X"	8'-6 9/16	22'-9 1/4	36'-11 15/16	51'-5 9/16	65'-11 3/8		
"Y"	15/16	1 1/16	2 3/8	2 1/16	1 1/8		
			℄BRG.				

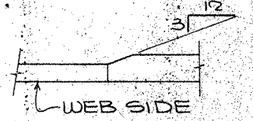

TYP. FLG. THKNESS TRANSITION

SHOP NOTES:
1) FOR GENERAL NOTES SEE SHT. GN1
2) MATERAL NOTED * * MUST MEET CHARPY V-NOTCH REQUIREMENTS
3) FOR HEAT CURVE DIAGRAM SEE SHT. 144

BILL OF MATERIAL

	Qnty	Material	Length	Mark Temp	Mark Ship.	Wt.	Cut From	Remarks
1								
2	1	GIRDER SUB-ASSY			A109			
3	1	PL 1/2 × 54	105'-5 11/16	1.04WA			102-4	CVN2
4	1	PL 1 × 18	105'-5 11/16	1.04TA			109-3	
5	1	PL 1 × 18	1'-1 15/16	1.04BA			102-14	CVN2
6	1*	PL 1 × 18	0'-9 7/16	1.04BB			102-15	CVN2
7	1	PL 1 × 18	17'-5	1.04BC			102-16	CVN2
8	1	PL 1 1/2 × 18	75'-0	1.04BD			105-2	CVN2
9	1	PL 1 × 18	10'-5 11/16	1.04BE			105-3	CVN2
10								
11								
12								
13								
14	1	GIRDER SUB-ASSY			B109			
15	1	PL 9/16 × 54	78'-0 1/2	2.04WA			102-5	CVN2
16	1	PL 1 × 18	16'-11 15/16	2.04TA			105-4	CVN2
17	1	PL 1 3/4 × 18	10'-0	2.04TB			105-5	CVN2
18	1	PL 2 1/2 × 18	20'-0	2.04TC			106-10	CVN3
19	1	PL 1 3/4 × 18	15'-0	2.04TD			105-6	CVN2
20	1	PL 1 × 18	16'-0	2.04TE			105-7	CVN2
21	1	PL 1 × 18	16'-11 15/16	2.04BA			109-4	
22	1	PL 1 3/4 × 18	10'-0	2.04BB			109-5	
23	1	PL 2 1/2 × 18	20'-0	2.04BC			109-6	
24	1	PL 1 3/4 × 18	15'-0	2.04BD			109-7	
25	1	PL 1 × 18	16'-0	2.04BE			109-8	
26								
27								
28								
29								
30								
31								
32								
33								
34								
35								
36								
37								
38								
39								
40								
41								
42								
43								
44								
45								
46								
47								
48								
49								
50								
51								
52								
53								
54								
55								
56								
57								
58								
59								
60								

TEXAS DEPARTMENT OF TRANSPORTATION
APPROVED
DIVISION OF BRIDGES AND STRUCTURES
DEC 08 1992
APPROVAL OF THIS DRAWING DOES NOT RELIEVE THE CONTRACTOR OF THE RESPONSIBILITY FOR THE CORRECTNESS OF DETAIL.

FOR APPROVAL

REVISION	DATE	DESCRIPTION OF REVISION
NO 1*		OCT 27 '92
NO 2		NOT FOR CONSTRUCTION
NO 3		
NO 4		
NO 5		

PRINTING Req'd	For	Date

Bolts: Holes: Unless Noted
Shop Paint SEE SHT. GN1
Fab Spec A572-50 UN Inspection
Architect
Erection By Field Connections

HIRSCHFELD STEEL CO. INC.
112 WEST 29TH SAN ANGELO, TEXAS 76903
PHONE (915) 653-3211

DESCRIPTION 584'-0 PLATE GIRDER UNIT
STRUCTURE US 83/281 INTERCHANGE RAMP *2
LOCATION HIDALGO COUNTY
CUSTOMER GILBERT TEXAS CONSTRUCTION
SHIP TO
Customer's Order No.
Dwg. By CRT Date 7-92
Checked By DLT Date 8-92
SHEET 109 OF
JOB NO. 92-107

G0107

FED. ROAD DIV. NO	STATE	FEDERAL AID PROJECT NO.			
6	TX.	NH92 (50) M			
STATE DIST. NO	COUNTY	CONTROL NO	SECTION NO	JOB NO	HIGHWAY NO
21	HIDALGO	39	17	97	83/281

— APV 10-7

CE*92-12 (LINE*4)

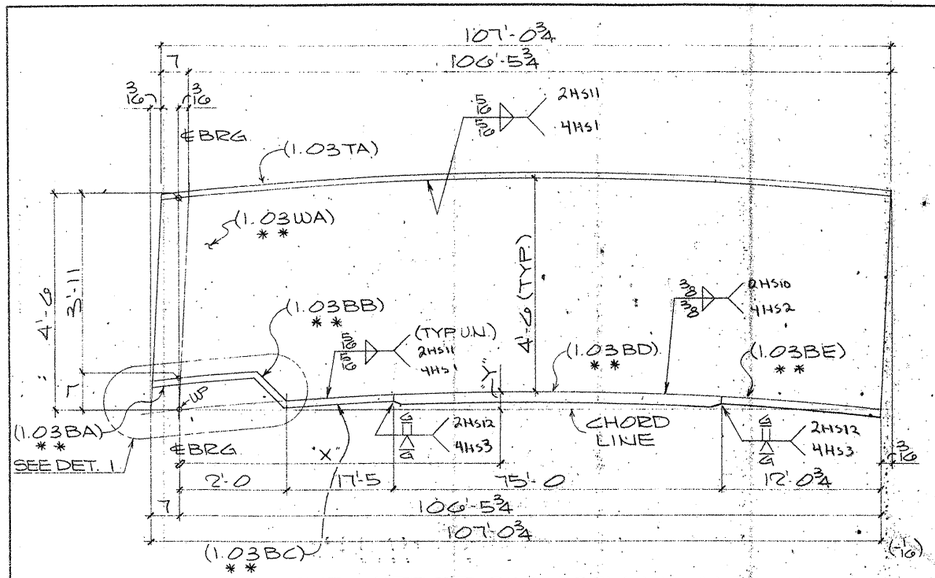

ONE GIRDER SUB-ASSY. MK-A108

(FOR GIRDER-120PG 1.03)

MK-A108							
"X"	14'-0 13/16	28'-5 3/8	42'-9 15/16	57'-2 1/2	71'-7 1/16	85'-11 9/16	100'-4 1/8
"Y"	7/16	15/16	1/16	1/16	1/16	15/16	1/4

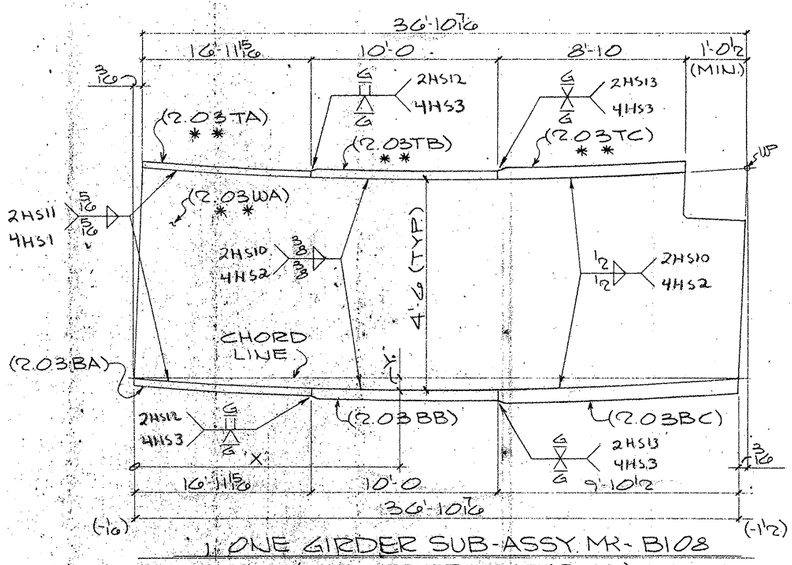

1 ONE GIRDER SUB-ASSY. MK-B108

(FOR GIRDER-124PG2.03)

MK-B108		
"X"	8'-2 13/16	22'-7 3/8
"Y"	5/16	1/2

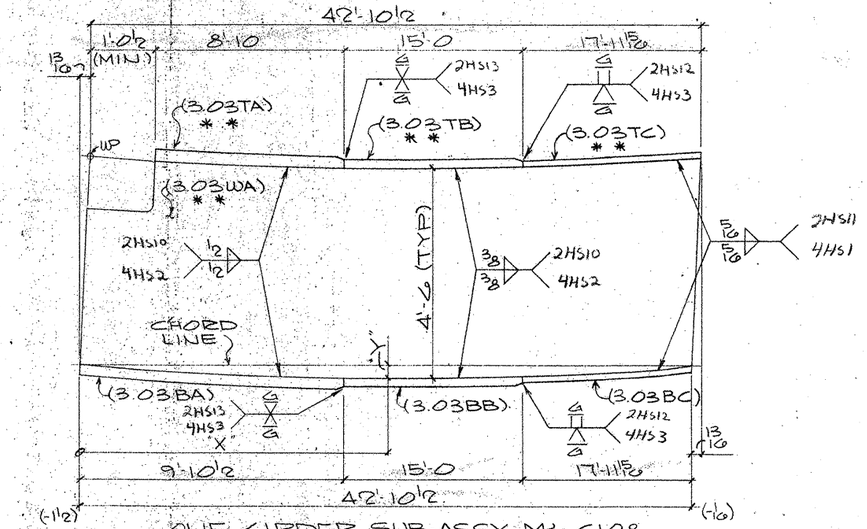

ONE GIRDER SUB-ASSY. MK-C108

(FOR GIRDER-127PG3.03)

MK-C108			
"X"	14'-6 1/16	29'-1 9/16	
"Y"	5/8	9/16	

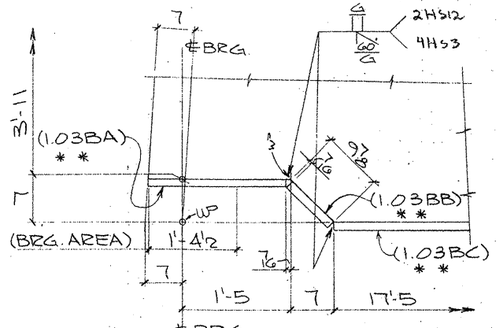

DETAIL-1

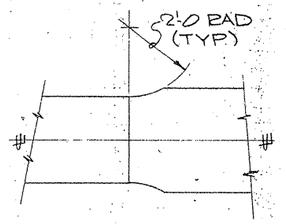

TYP. FLG WIDTH TRANSITION

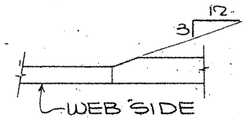

TYP. FLG. THKNESS TRANSITION

SHOP NOTES:

1) FOR GENERAL NOTES SEE SHT. GN1
2) MATERAL NOTED "**" MUST MEET CHARPY V-NOTCH REQUIREMENTS
3) FOR HEAT CURVE DIAGRAM SEE SHT. 144

BILL OF MATERIAL

	Qnty	Material	Length	Mark Temp.	Mark Ship.	Wt.	Cut From	Remarks
1								
2	1	GIRDER SUB-ASSY			A108			
3	1	PL 1/2 x 54	107'-0 15/16	1.03WA			101-16	CVN2
4	1	PL 1 x 18	107'-0 3/4	1.03TA			108-9	
5	1	PL 1 x 18	1'-11 9/16	1.03BA			102-14	CVN2
6	1	PL 1 x 18	0'-9 1/16	1.03BB			102-15	CVN2
7	1	PL 1 x 18	17'-5	1.03BC			102-16	CVN2
8	1	PL 1 3/4 x 18	75'-0	1.03BD			104-6	CVN2
9	1	PL 1 x 18	12'-0 3/4	1.03BE			104-7	CVN2
10								
11								
12								
13								
14	1	GIRDER SUB-ASSY			B108			
15	1	PL 9/16 x 54	36'-10 7/8	2.03WA			101-17	CVN2
16	1	PL 1 x 18	16'-11 15/16	2.03TA			104-8	CVN2
17	1	PL 1 3/4 x 18	10'-0	2.03TB			104-9	CVN2
18	1	PL 3 x 20	8'-10	2.03TC			106-8	CVN3
19	1	PL 1 x 18	16'-11 15/16	2.03BA			108-10	
20	1	PL 1 3/4 x 18	10'-0	2.03BB			108-11	
21	1	PL 2 3/4 x 18	9'-10 1/2	2.03BC			109-17	
22								
23								
24								
25								
26	1	GIRDER SUB-ASSY			C108			
27	1	PL 9/16 x 54	42'-11 7/16	3.03WA			102-12	CVN2
28	1	PL 3 x 20	8'-10	3.03TA			106-8	CVN3
29	1	PL 1 3/4 x 18	15'-0	3.03TB			104-10	CVN2
30	1	PL 1 x 18	17'-11 15/16	3.03TC			104-11	CVN2
31	1	PL 2 3/4 x 18	9'-10 1/2	3.03BA			109-17	
32	1	PL 1 3/4 x 18	15'-0	3.03BB			108-13	
33	1	PL 1 x 18	17'-11 15/16	3.03BC			108-14	
34								
35								
36								
37								
38								
39								
40								
41								
42								
43								
44								
45								
46								
47								
48								
49								
50								
51								
52								
53								
54								
55								
56								
57								
58								
59								
60								

TEXAS DEPARTMENT OF TRANSPORTATION
APPROVED
DIVISION OF BRIDGES AND STRUCTURES
DEC 08 1992
APPROVAL OF THIS DRAWING DOES NOT RELIEVE THE CONTRACTOR OF THE RESPONSIBILITY FOR THE CORRECTNESS OF DETAIL

REVISION	DATE	DESCRIPTION OF REVISION
NO. 1		FOR APPROVAL
NO. 2		OCT 27 '92
NO. 3		
NO. 4		NOT FOR CONSTRUCTION
NO. 5		

PRINTING Req'd	For	Date

Bolts Holes Unless Noted
Shop Paint SEE SHT. GN1
Fab Spec. A572-50 UN. Inspection
Architect
Erection By Field Connections

HIRSCHFELD STEEL CO. INC.
112 WEST 29TH SAN ANGELO, TEXAS 76903
PHONE (915) 653-3211

DESCRIPTION	584'-0 PLATE GIRDER UNIT
STRUCTURE	DS 83/281 INTERCHANGE RAMP "Z"
LOCATION	HIDALGO COUNTY
CUSTOMER	GILBERT TEXAS CONSTRUCTION
SHIP TO	
Customer's Order No.	
Dwg. By CRT	Date 7-92
Checked By DCT	Date 8-92

SHEET 108 OF
JOB NO. 92-107

G0107

FED. ROAD DIV. NO.	STATE	FEDERAL AID PROJECT NO.			
6	TX.	NH92 (50) M			
STATE DIST. NO.	COUNTY	CONTROL NO.	SECTION NO.	JOB NO.	HIGHWAY NO.
21	HIDALGO	39	17	97	83/281

APV 10-29

CE #92-12 (LINE #3)

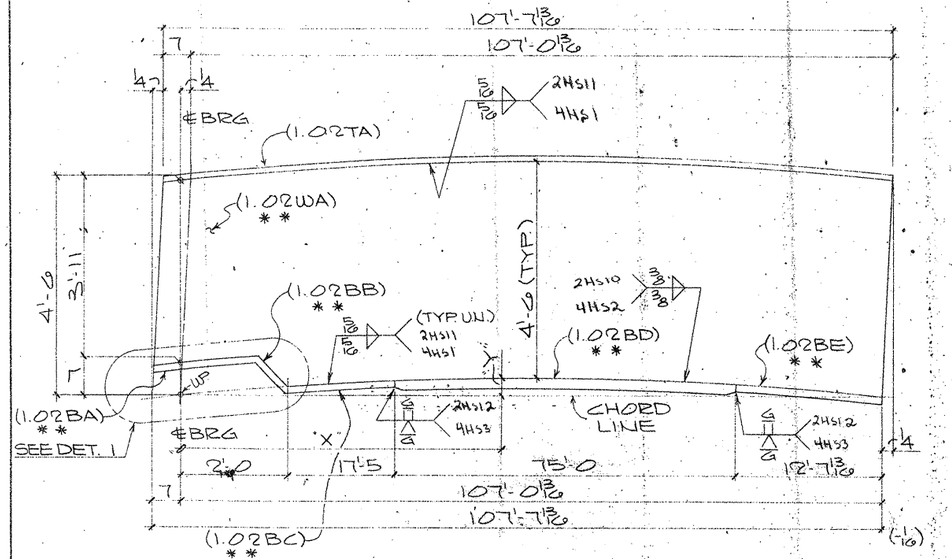

ONE GIRDER SUB-ASSY MK-A107

(FOR GIRDER - 119PG1.02)

MK-A107							
"X"	14'-3	28'-9 7/16	43'-3 3/8	57'-10 5/16	72'-4 3/4	86'-11 3/8	101'-5 9/16
"Y"	15/16	1 13/16	2 1/16	2 5/8	2 1/4	1 3/8	3/8

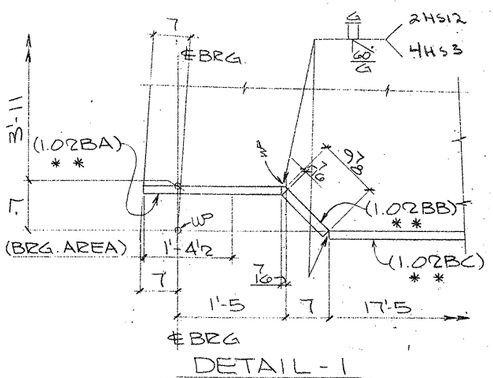

DETAIL-1

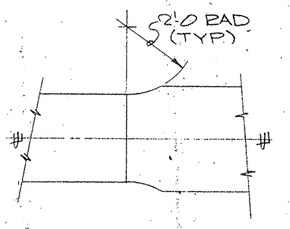

TYP FLG WIDTH TRANSITION

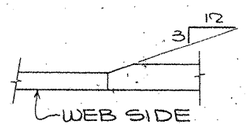

TYP FLG THKNESS TRANSITION

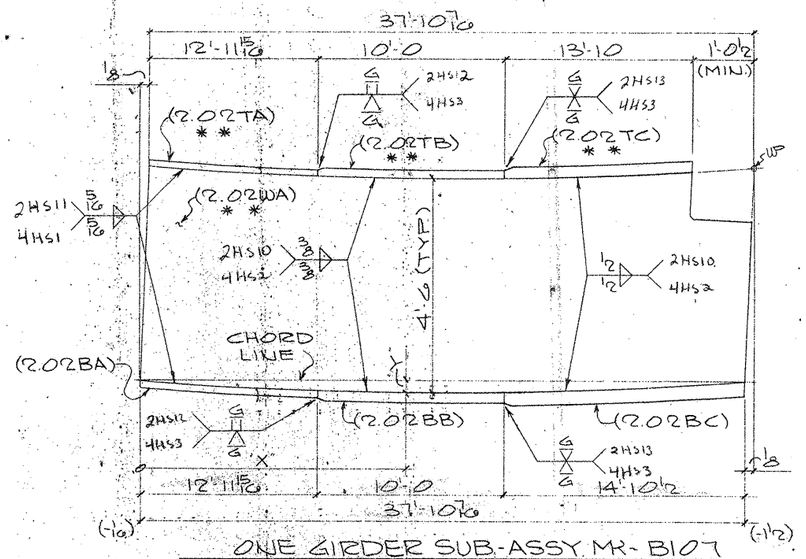

ONE GIRDER SUB-ASSY MK-B107

(FOR GIRDER - 123PG2.02)

MK-B107		
"X"	8'-11 3/8	23-5 1/2
"Y"	3/8	1/2

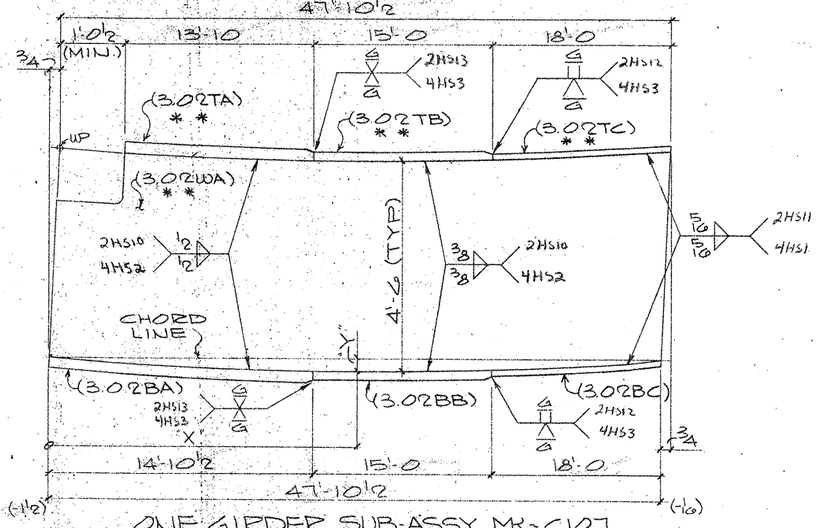

ONE GIRDER SUB-ASSY MK-C107

(FOR GIRDER - 126PG3.02)

MK-C107			
"X"	14'-7 15/16	29'-5 3/8	44'-2 3/8
"Y"	3/4	3/4	1/4

SHOP NOTES:

1) FOR GENERAL NOTES SEE SHT. GN1
2) MATERAL NOTED " * * " MUST MEET CHARPY V-NOTCH REQUIREMENTS
3) FOR HEAT CURVE DIAGRAM SEE SHT. 144

BILL OF MATERIAL

	Qnty	Material	Length	Mark Temp.	Mark Ship.	Wt.	Cut From	Remarks
1								
2	1	GIRDER SUB-ASSY			A107			
3	1	PL 1/2 x 54	107'-8 1/16	1.02WA			101-9	CVN2
4	1	PL 1 x 18	107'-7 13/16	1.02TA			107-15	
5	1	PL 1 x 18	1'-1 9/16	1.02BA			102-14	CVN2
6	1	PL 1 x 18	0'-9 7/16	1.02BB			102-15	CVN2
7	1	PL 1 x 18	17'-5	1.02BC			102-16	CVN2
8	1	PL 1 3/4 x 18	75'-0	1.02BD			103-11	CVN2
9	1	PL 1 x 18	12'-7 13/16	1.02BE			103-12	CVN2
10								
11								
12								
13								
14	1	GIRDER SUB-ASSY			B107			
15	1	PL 9/16 x 54	37'-10 7/16	2.02WA			101-10	CVN2
16	1	PL 1 x 18	12'-11 15/16	2.02TA			103-13	CVN2
17	1	PL 2 x 18	10'-0	2.02TB			103-14	CVN2
18	1	PL 3 x 20	13'-10	2.02TC			106-5	CVN3
19	1	PL 1 x 18	12'-11 15/16	2.02BA			107-16	
20	1	PL 2 x 18	10'-0	2.02BB			107-17	
21	1	PL 3 x 18	14'-10 1/2	2.02BC			109-16	
22								
23								
24								
25								
26	1	GIRDER SUB-ASSY			C107			
27	1	PL 9/16 x 54	47'-11 1/4	3.02WA			102-11	CVN2
28	1	PL 3 x 20	13'-10	3.02TA			106-5	CVN3
29	1	PL 2 x 18	15'-0	3.02TB			103-15	CVN2
30	1	PL 1 x 18	18'-0	3.02TC			103-16	CVN2
31	1	PL 3 x 18	14'-10 1/2	3.02BA			109-16	
32	1	PL 2 x 18	15'-0	3.02BB			107-19	
33	1	PL 1 x 18	18'-0	3.02BC			107-20	
34								
35								
36								
37								
38								
39								
40								
41								
42								
43								
44								
45								
46								
47								
48								
49								
50								
51								
52								
53								
54								
55								
56								
57								
58								
59								
60								

TEXAS DEPARTMENT OF TRANSPORTATION
APPROVED
DIVISION OF BRIDGES AND STRUCTURES
DEC 08 1992
APPROVAL OF THIS DRAWING DOES NOT RELIEVE THE CONTRACTOR OF THE RESPONSIBILITY FOR THE CORRECTNESS OF DETAIL.

FOR APPROVAL

REVISION	DATE	DESCRIPTION OF REVISION
NO. 1		OCT 27 '92
NO. 2		
NO. 3		NOT FOR CONSTRUCTION
NO. 4		
NO. 5		

PRINTING		
Req'd	For	Date

Bolts: Holes: * Unless Noted
Shop Paint SEE SHT. GN1
Fab. Spec A572-50 DN. Inspection
Architect
Erection By Field Connections

HIRSCHFELD STEEL CO. INC.
112 WEST 29TH SAN ANGELO, TEXAS 76903
PHONE (915) 653-3211

DESCRIPTION 584'-0 PLATE GIRDER UNIT
STRUCTURE US 83/281 INTERCHANGE RAMP "Z"
LOCATION HIDALGO COUNTY
CUSTOMER GILBERT TEXAS CONSTRUCTION
SHIP TO
Customer's Order No.
Dwg By CET Date 7-92
Checked By DCT Date 8-92
SHEET 107 OF
JOB NO. 92-107

G0107

FED. ROAD DIV. NO.	STATE	FEDERAL AID PROJECT NO.			
6	TX.	NH92 (50) M			
STATE DIST. NO.	COUNTY	CONTROL NO.	SEC. SUB-SEC. NO.	JOB NO.	HIGHWAY NO.
21	HIDALGO	39	17	97	83/281

APV 10-27

CE # 92-12 (LINE # 2)

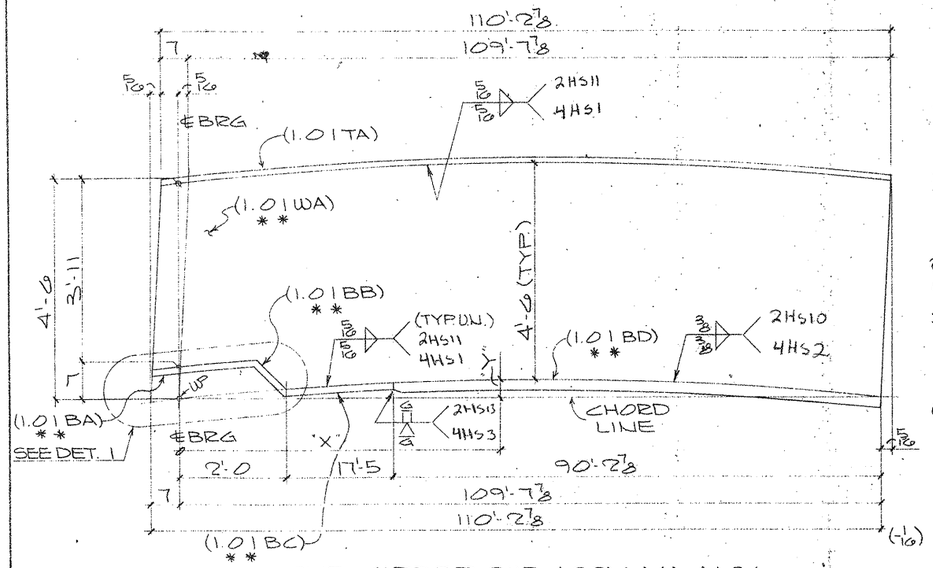

ONE GIRDER SUB-ASSY. MK-A106
(FOR GIRDER-118PG1.01)

MK-A106							
"X"	14'-5 4	29'-1 1/16	43'-9 3/8	58'-6 8	73'-9 7/16	87'-10 3/8	102'-7
"Y"	1 1/2	2 3/8	3 5/16	3 1/16	2 15/16	1 7/8	9/16

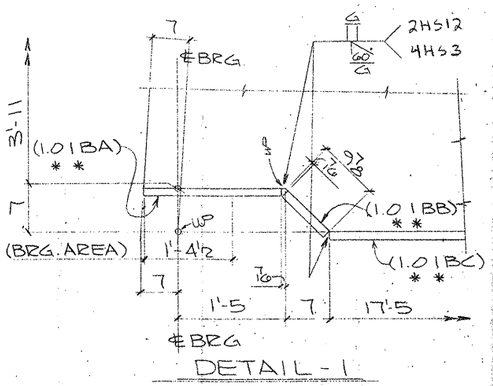

DETAIL-1

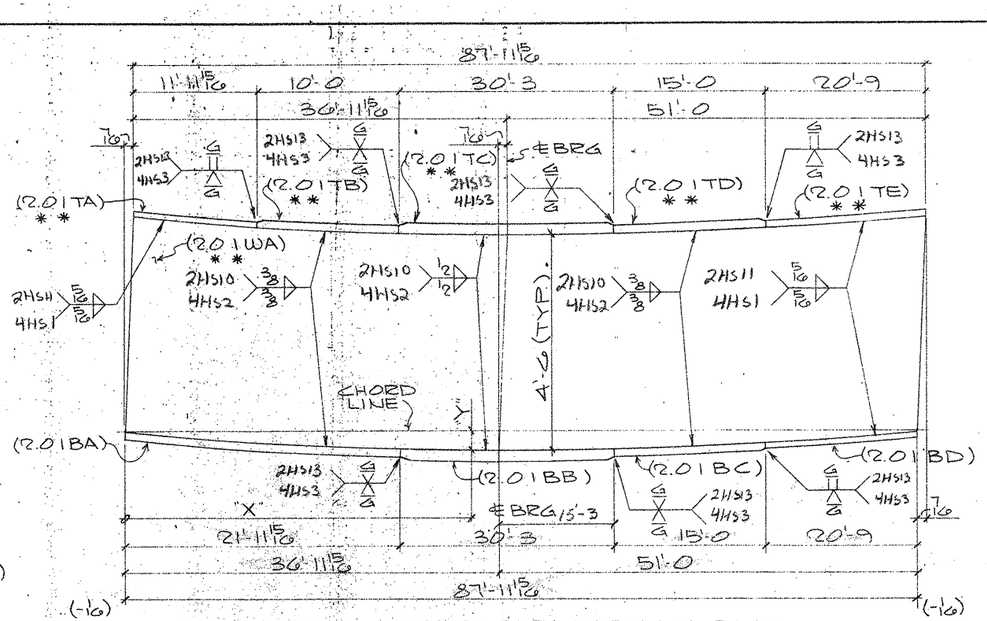

ONE GIRDER SUB-ASSY. MK-B106
(FOR GIRDER-122PG2.01)

MK-B106						
"X"	7'-7 8/16	22'-3 5/8	36'-11 15/16	51'-11 4	66'-10 5/8	81'-10
"Y"	7/8	2 3/16	2 3/16	2 1/8	2 1/16	3/4
			℄BRG			

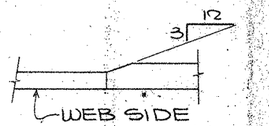

TYP. FLG. THKNESS TRANSITION

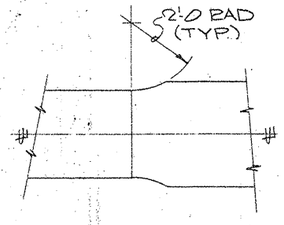

TYP. FLG. WIDTH TRANSITION

SHOP NOTES:
1) FOR GENERAL NOTES SEE SHT. GN1
2) MATERAL NOTED * * MUST MEET CHARPY V-NOTCH REQUIREMENTS
3) FOR HEAT CURVE DIAGRAM SEE SHT. 144

G0107

FED. ROAD DIV. NO.	STATE	FEDERAL AID PROJECT NO.				
6	TX.	NH92 (50) M				
STATE DIST. NO.	COUNTY	CONTROL NO.	SECTION NO.	JOB NO.	HIGHWAY NO.	
21	HIDALGO	39	17	97	83/281	

— APV 10-27

BILL OF MATERIAL

	Qnty.	Material	Length	Mark Temp.	Mark Ship.	Wt	Cut From	Remarks
1								
2	1	GIRDER SUB-ASSY			A106			
3	1	PL 1/2 x 54	110'-3 3/16	1.01WA			101-2	CVN2
4	1	PL 1 x 18	110'-2 7/8	1.01TA			107-2	
5	1	PL 1 x 18	1'-1 11/16	1.01BA			102-14	CVN2
6	1	PL 1 x 18	0'-9 7/16	1.01BB			102-15	CVN2
7	1	PL 1 x 18	17'-5	1.01BC			102-16	CVN2
8	1	PL 24 x 18	90'-2 7/8	1.01BD			106-4	CVN3
9								
10								
11								
12								
13								
14	1	GIRDER SUB-ASSY			B106			
15	1	PL 9/16 x 54	88'-0 3/8	2.01WA			101-3	CVN2
16	1	PL 1 x 18	11'-11 15/16	2.01TA			102-17	CVN2
17	1	PL 2 x 18	10'-0	2.01TB			102-18	CVN2
18	1	PL 3 x 20	30'-3	2.01TC			106-2	CVN3
19	1	PL 2 x 18	15'-0	2.01TD			102-19	CVN2
20	1	PL 1 x 18	20'-9	2.01TE			102-20	CVN2
21	1	PL 24 x 18	21'-11 15/16	2.01BA			107-3	
22	1	PL 3 x 20	30'-3	2.01BB			107-4	
23	1	PL 2 x 18	15'-0	2.01BC			107-5	
24	1	PL 1 x 18	20'-9	2.01BD			107-6	
25								
26								
27								
28								
29								
30								
31								
32								
33								
34								
35								
36								
37								
38								
39								
40								
41								
42								
43								
44								
45								
46								
47								
48								
49								
50								
51								
52								
53								
54								
55								
56								
57								
58								
59								
60								

TEXAS DEPARTMENT OF TRANSPORTATION
APPROVED
DIVISION OF BRIDGES AND STRUCTURES
DEC 08 1992
APPROVAL OF THIS DRAWING DOES NOT RELIEVE THE CONTRACTOR OF THE RESPONSIBILITY FOR THE CORRECTNESS OF DETAIL.

FOR APPROVAL

REVISION	DATE	DESCRIPTION OF REVISION
NO. 1		OCT 27 '92
NO. 2		NOT FOR CONSTRUCTION
NO. 3		
NO. 4		
NO. 5		

PRINTING Reqd	For	Date

Bolts Holes Unless Noted
Shop Paint SEE SHT. GN1
Fab Spec. A572-50 UU Inspection
Architect
Erection By Field Connections

HIRSCHFELD STEEL CO. INC.
112 WEST 29TH SAN ANGELO TEXAS 76903
PHONE (915) 653-3211

DESCRIPTION	584'-0 PLATE GIRDER UNIT
STRUCTURE	US 83/281 INTERCHANGE RAMPS 2
LOCATION	HIDALGO COUNTY
CUSTOMER	GILBERT TEXAS CONSTRUCTION
SHIP TO	
Customer's Order No.	
Dwg By CRT	Date 7-92
Checked By DCT	Date 8-92

SHEET 106 OF
JOB NO. 92-107

CE # 92-12 (LINE # 1)

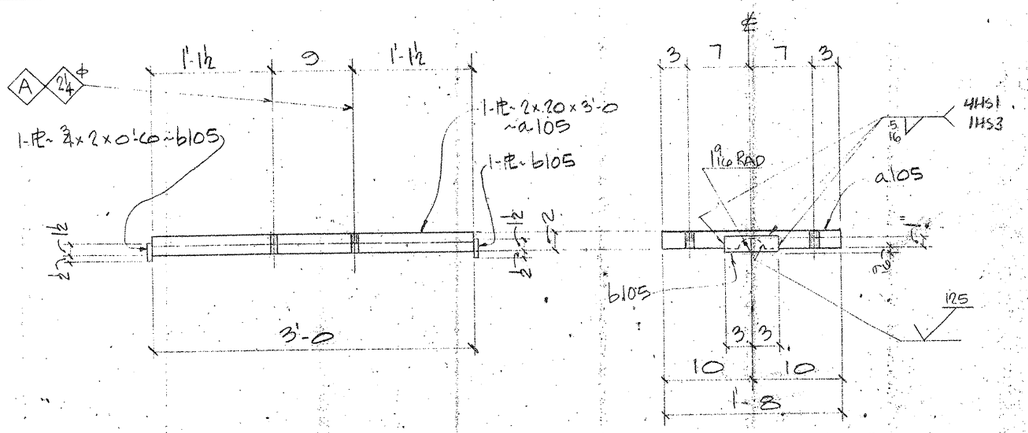

2- SOLE PLATES~105BS1
(SHOP WELD TO BENT CAP 103SB1.13)

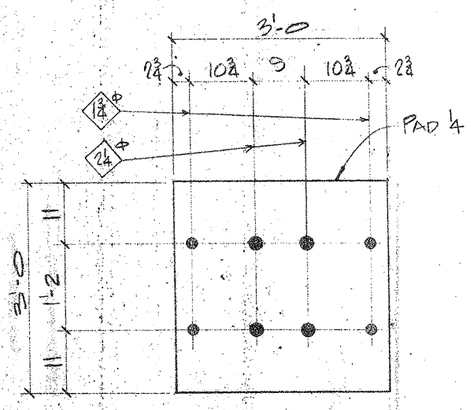

2- PREFORMED FABRIC PAD~105BS3
(PER SDH & PT ITEM 441.33)

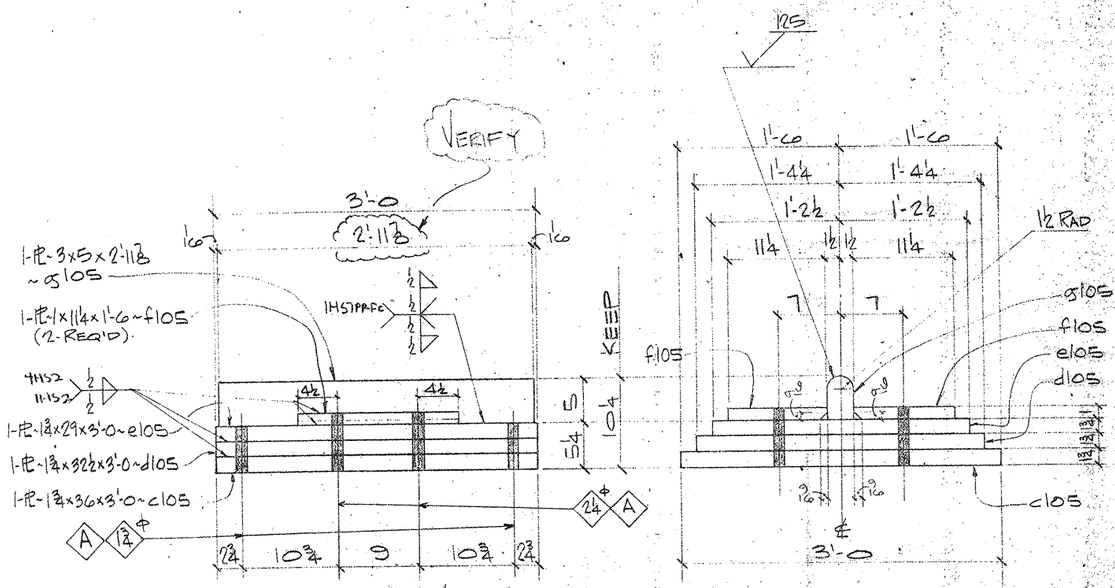

2- MASONRY PLATES~105BS2

NOTE:
FOR GENERAL NOTES, SEE SHT. GN1.

M0107

FED. ROAD DIV. NO.	STATE	FEDERAL AID PROJECT NO.			
6	TX.	NH92 (50) M			
STATE DIST. NO.	COUNTY	CONTROL NO.	SECTION NO.	JOB NO.	HIGHWAY NO.
21	HIDALGO	39	17	97	83/281

BILL OF MATERIAL

	Qnty	Material	Length	Mark Temp	Mark Ship	Wt.	Cut From	Remarks
4	2	SOLE PLATES			105BS1			
5	2	PL 2x20	3'-0	a105			112-6	
6	4	PL 3/4x2	0'-6	b105			112-7	
10	2	MASONRY PLATES			105BS2			
11	2	PL 1 3/4x36	3'-0	c105			112-1	
12	2	PL 1 3/4x32 1/2	3'-0	d105			112-2	
13	2	PL 1 3/4x29	3'-0	e105			112-3	
14	4	PL 1x11 1/4	1'-6	f105			112-4	
15	2	PL 3x5	2'-11 7/8	g105			112-5	
24	2	PREFORMED FABRIC PAD			105BS3			
25	2	PAD 1/4x36	3'-0				113-14	
26		(PER SDH & PT ITEM 441.33)						

TEXAS DEPARTMENT OF TRANSPORTATION
APPROVED
DIVISION OF BRIDGES AND STRUCTURES
DEC 08 1992
APPROVAL OF THIS DRAWING DOES NOT RELIEVE THE CONTRACTOR OF THE RESPONSIBILITY FOR THE CORRECTNESS OF DETAIL

FOR APPROVAL
OCT 27 '92
NOT FOR CONSTRUCTION

REVISION	DATE	DESCRIPTION OF REVISION
NO. 1		
NO. 2		
NO. 3		
NO. 4		
NO. 5		

PRINTING

Rev'd	Fix	Date

Notes: Holes: NTD. Unless Noted
Shop Paint: SEE SHT GN1
Fab Spec: A572-50 Inspection
Architect
Erection By: Field Connections

HIRSCHFELD STEEL CO. INC.
112 WEST 29TH SAN ANGELO, TEXAS 76903
PHONE (915) 653-3211

DESCRIPTION: 584'-0 PLATE GIRDER UNIT
STRUCTURE: US 83/281 INTERCHANGE RAMP #2
LOCATION: HIDALGO COUNTY
CUSTOMER: GILBERT TEXAS CONSTRUCTION
SHIP TO
Customer's Order No.
Dwg. By: JPC Date: 8/92
Checked By: DCT Date: 8-92
SHEET 105 OF
JOB NO. 92-107
APV 10-27
CE 92-12

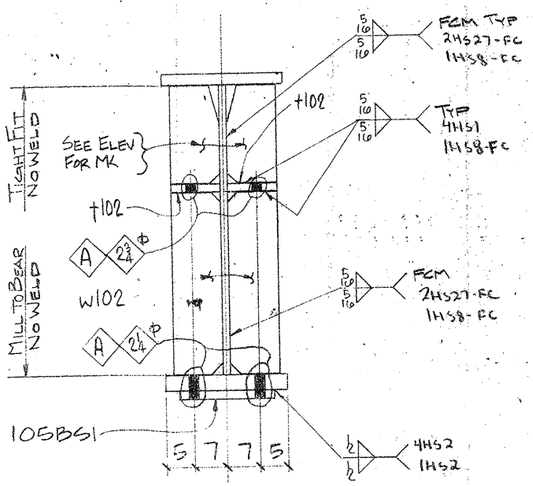

SECTION ~ A

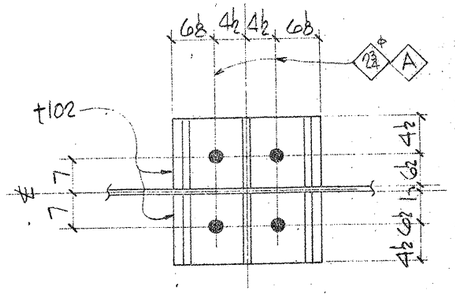

SECTION ~ B

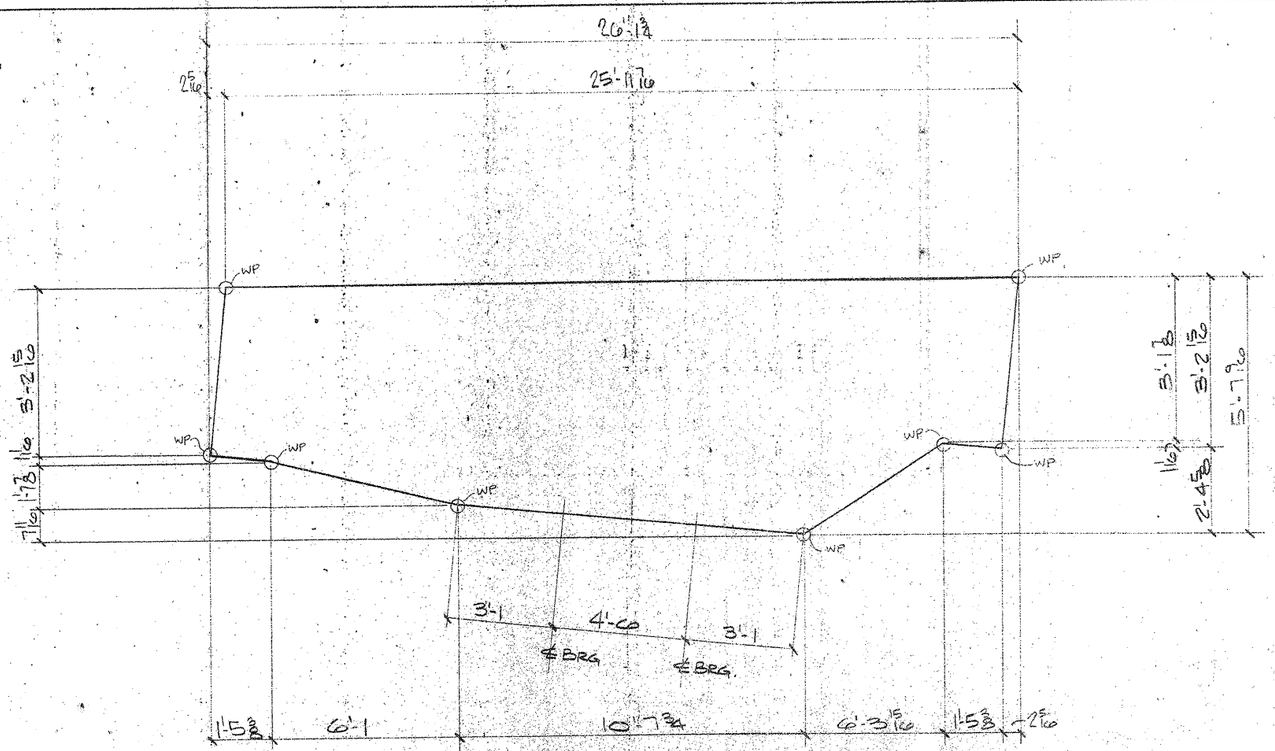

DETAIL WEB PL ~ 1.13WA

BILL OF MATERIAL

	Qnty	Material	Length	Mark Temp	Mark Ship	Wt	Cut From	Remarks
1								
2								
3								
4	ONE	STEEL BENT CAP			103SB1.13			
5	ONE	PL 1 x 67 7/16	26'-1 3/4	1.13WA			111-1	FCM1
6	ONE	PL 2 x 24	25'-11 7/16	1.13TA			111-2	FCM1
7	ONE	PL 2 x 24	6'-3 5/8	1.13BA			111-4	CVN2
8	ONE	PL 3 x 24	10'-8	1.13BB			111-5	CVN3
9	ONE	PL 2 x 24	6'-9 9/16	1.13BC			111-3	CVN2
10	2	ANGLE		d102				
11	2			e102				
12	2			f102				
13	2			g102				
14	ONE	STIFF		h102R				
15	ONE			h102L				
16	ONE			k102R				
17	ONE			k102L				
18	ONE			m102R				
19	ONE			m102L				
20	ONE			n102R				
21	ONE			n102L				
22	ONE			p102R				
23	ONE			p102L				
24	ONE			s102R				
25	ONE			s102L				
26	4	BRG PLATE		t102				
27	2	STIFF		w102				
28	2	SOLE PLATE		105BS1				
29	56	HS BOLT 1Φ	0'-4				114-15	A325
30	56	HS WASH 1Φ					114-16	A325
31	ONE	PL 2 x 24	1'-5 7/16	1.13BD			111-12	CVN2
32	ONE	PL 2 x 24	1'-5 7/16	1.13BE			111-12	CVN2

TEXAS DEPARTMENT OF TRANSPORTATION
APPROVED
DIVISION OF BRIDGES AND STRUCTURES
DEC 08 1992
APPROVAL OF THIS DRAWING DOES NOT RELIEVE THE CONTRACTOR OF THE RESPONSIBILITY FOR THE CORRECTNESS OF DETAIL.

FOR APPROVAL
OCT 27 '92
NOT FOR CONSTRUCTION

REVISION	DATE	DESCRIPTION OF REVISION
NO. 1		
NO. 2		
NO. 3		
NO. 4		
NO. 5		

PRINTING

Req'd	For	Date

Bolts A325 TY1 Holes 1/16 Unless Noted
Shop Paint SEE SHT. GN1
Fab Subs. A572 50 U.N. Inspection
Architect
Erection By Field Connections

HIRSCHFELD STEEL CO. INC.
112 WEST 29TH SAN ANGELO, TEXAS 76903
PHONE (915) 653-3211

DESCRIPTION 584'-0 PLATE GIRDER UNIT
STRUCTURE US 83/281 INTERCHANGE RAMP#2
LOCATION HIDALGO COUNTY
CUSTOMER GILBERT TEXAS CONSTRUCTION
SHIP TO
Customer's Order No.
Dwg By [illegible] Date 8/92
Checked By DLT Date 8-92

SHEET 1038 OF
JOB NO. 92-107

BG107

REV. ROAD DIV. NO.	STATE	FEDERAL AID PROJECT NO.			
6	TX.	NH92 (50) M			
STATE DIST. NO.	COUNTY	CONTROL NO.	SECTION NO.	JOB NO.	HIGHWAY NO.
21	HIDALGO	39	17	97	83/281

CE92-12

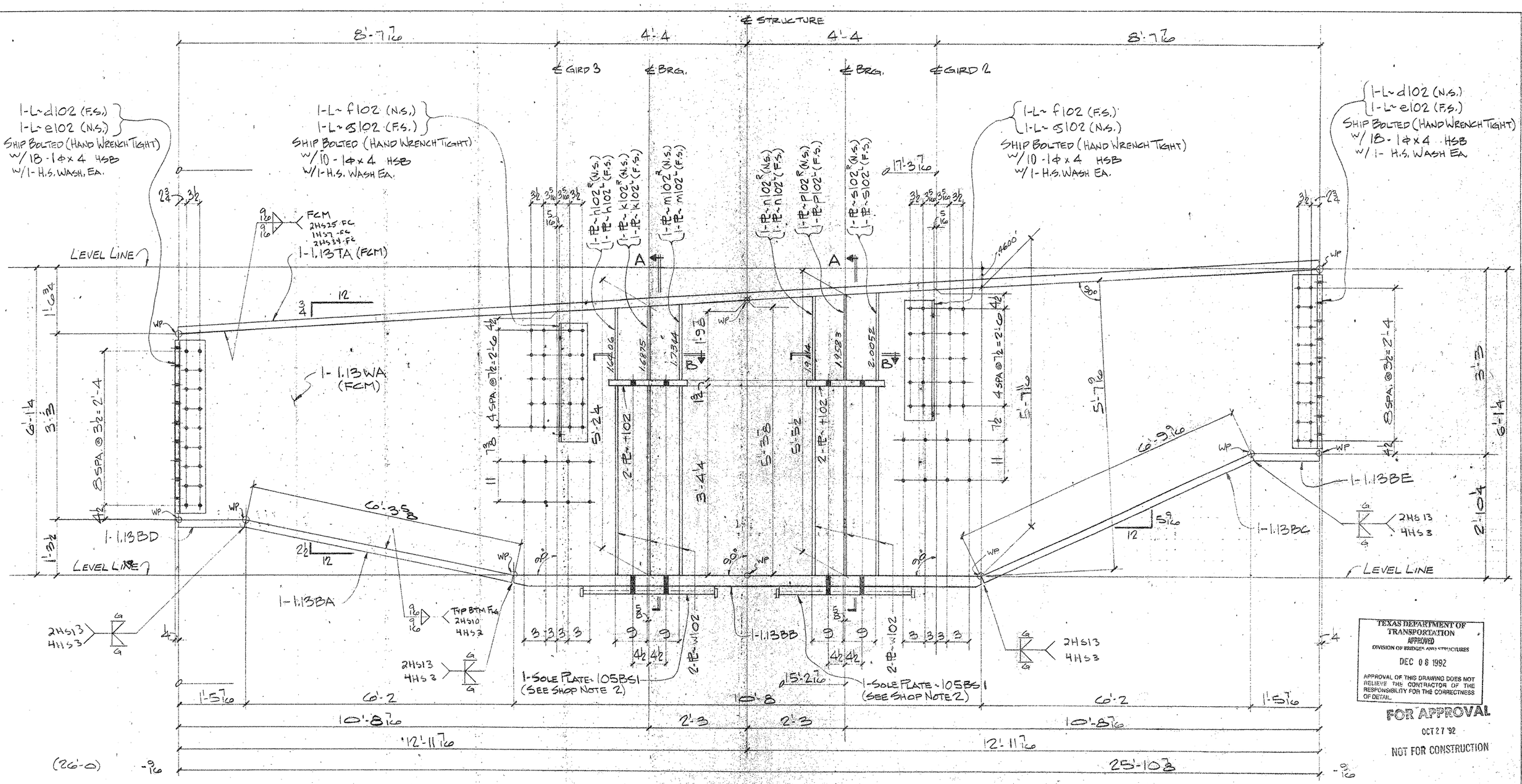

TEXAS DEPARTMENT OF TRANSPORTATION
APPROVED
DIVISION OF BRIDGES AND STRUCTURES
DEC 08 1992
APPROVAL OF THIS DRAWING DOES NOT RELIEVE THE CONTRACTOR OF THE RESPONSIBILITY FOR THE CORRECTNESS OF DETAIL.

FOR APPROVAL
OCT 27 '92
NOT FOR CONSTRUCTION

APV 10-27

SHOP NOTE:

1. WORK THIS SHT. W/SHT. 103B.
2. SPACING & ALIGNMENT OF SOLE PLATES 105BS1 IS CRITICAL & MUST BE EXACT.
3. FOR GENERAL NOTES SEE SHT. GN1.

ONE - STEEL BENT CAP ~ 103SB1.13
(APPROX. WT. = TONS)

BG 107

FED. ROAD DIV. NO.	STATE	FEDERAL AID PROJECT NO.			
6	TX.	NH92 (50) M			
STATE DIST. NO.	COUNTY	CONTROL NO.	SECTION NO.	JOB NO.	HIGHWAY NO.
21	HIDALGO	39	17	97	83/281

HOLES 1 1/16 U.N. FOR APVL.
BOLTS ___ U.N. RETURNED
WELDS ___ U.N. TO SHOP
PAINT

REVISIONS

NO.	DATE	REMARKS
1		
2		
3		
4		

HIRSCHFELD STEEL CO. INC.
112 WEST 29TH SAN ANGELO, TEXAS 76903
PHONE (915) 653-3211

CUSTOMER GILBERT TEXAS CONSTRUCTION
ARCHITECT
PROJECT US 83/281 INTERCHANGE RAMP #2
LOCATION HIDALGO COUNTY

DRAWN [illegible] DATE 8/92
CHECKED DLT DATE 8/92
JOB NO. 92-107
SHEET NO. 103A/B of

CE 92-12

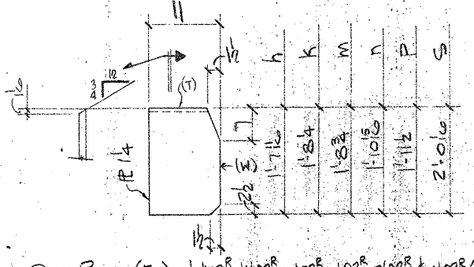

ONE PLATE (EA.) ~ h102R, k102R, m102R, n102R, p102R, & s102R (AS SHN. & NTD.)

ONE PLATE (EA.) ~ h102L, k102L, m102L, n102L, p102L, & s102L (OPP. HD.)

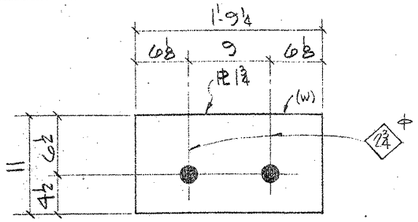

4-PLATES~ t102

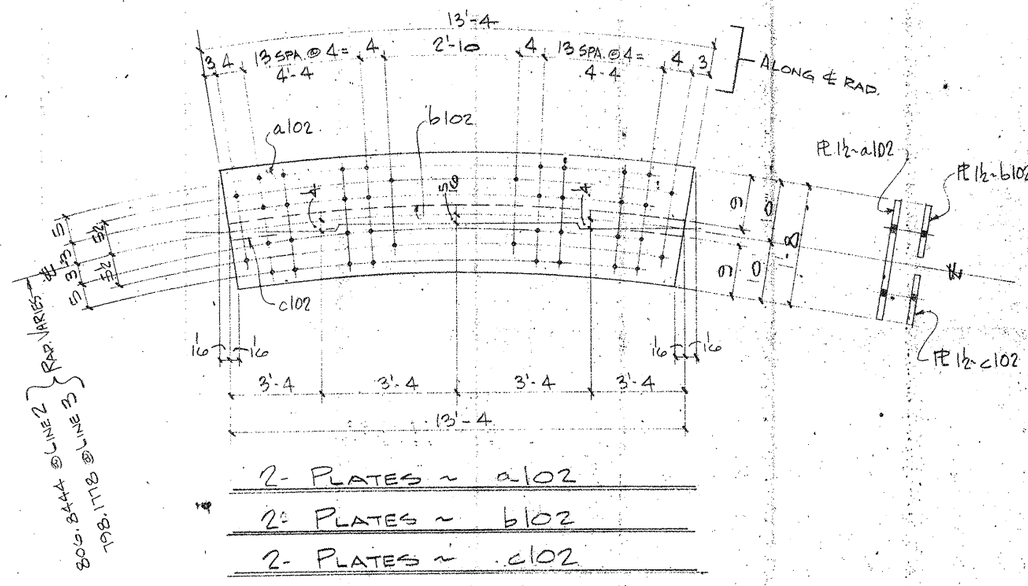

2- PLATES ~ a102

2- PLATES ~ b102

2- PLATES ~ c102

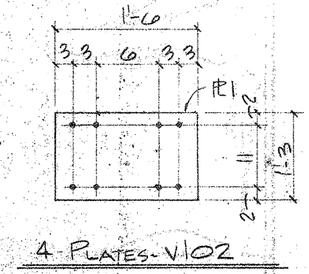

4-PLATES~ v102

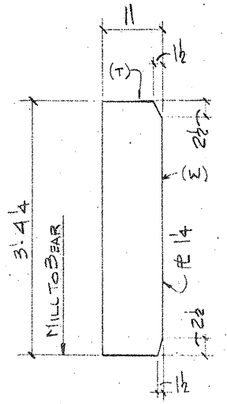

12- PLATES~W102

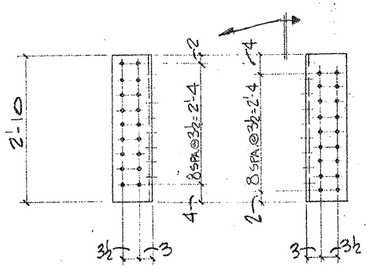

2-ANGLES~d102

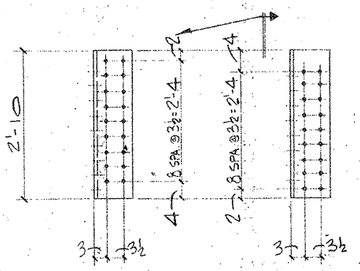

2-ANGLES~e102

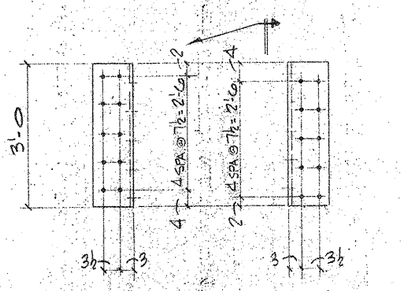

4-ANGLES~f102

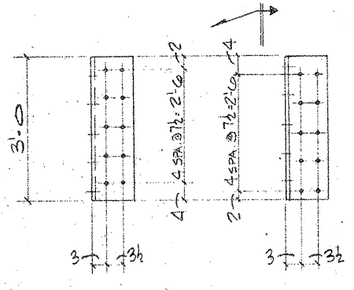

4-ANGLES~g102

NOTE:
FOR GENERAL NOTES, SEE SHEET GN1.

BILL OF MATERIAL

	Qnty	Material	Length	Mark Temp.	Mark Ship.	Wt.	Cut From	Remarks
1								
2								
3								
4	2	PL 1½ x 20 9/16	13'-4⅜	a102			III-9	CVN 2
5	2	PL 1½ x 9 5/16	13'-4⅜	b102			III-10	CVN 2
6	2	PL 1½ x 9 5/16	13'-4	c102			III-10	CVN 2
7	2	L 8 x 8 x ¾	2'-10	d102			III-7	CVN 2
8	2	L 8 x 8 x ¾	2'-10	e102			III-7	CVN 2
9	4	L 8 x 8 x ¾	3'-0	f102			III-8	CVN 2
10	4	L 8 x 8 x ¾	3'-0	g102			III-8	CVN 2
11	ONE	PL 1¼ x 11	1'-7 11/16	h102R			III-15	
12	ONE	PL 1¼ x 11	1'-7 11/16	h102L			III-15	
13	ONE	PL 1¼ x 11	1'-8¼	k102R			III-15	
14	ONE	PL 1¼ x 11	1'-8¼	k102L			III-15	
15	ONE	PL 1¼ x 11	1'-8¾	m102R			III-15	
16	ONE	PL 1¼ x 11	1'-8¾	m102L			III-15	
17	ONE	PL 1¼ x 11	1'-10 15/16	n102R			III-14	
18	ONE	PL 1¼ x 11	1'-10 15/16	n102L			III-14	
19	ONE	PL 1¼ x 11	1'-11½	p102R			III-14	
20	ONE	PL 1¼ x 11	1'-11½	p102L			III-14	
21	ONE	PL 1¼ x 11	2'-0 1/16	s102R			III-14	
22	ONE	PL 1¼ x 11	2'-0 1/16	s102L			III-14	
23	4	PL 1¾ x 11	1'-9¼	t102			III-6	
24	4	PL 1 x 15	1'-6	v102			III-11	CVN 2
25	12	PL 1¼ x 11	3'-4¼	w102			III-13	
26								
27								
28								
29								
30								
31								
32								
33								
34								
35								
36								
37								
38								
39								
40								
41								
42								
43								
44								
45								
46								
47								
48								
49								
50								
51								
52								
53								
54								
55								
56								
57								
58								
59								
60								

TEXAS DEPARTMENT OF TRANSPORTATION
APPROVED
DIVISION OF BRIDGES AND STRUCTURES
DEC 08 1992
APPROVAL OF THIS DRAWING DOES NOT RELIEVE THE CONTRACTOR OF THE RESPONSIBILITY FOR THE CORRECTNESS OF DETAIL.

FOR APPROVAL
OCT 21 92

REVISION	DATE	DESCRIPTION OF REVISION
NO. 1		NOT FOR CONSTRUCTION
NO. 2		
NO. 3		
NO. 4		
NO. 5		

PRINTING Req'd	For	Date

Basis: Holes 1/16 ℄ Unless Noted
Shop Paint: SEE SHT. GN1
Fab. Spec: AS72-50 Inspection
Architect
Erection By: Field Connections

HIRSCHFELD STEEL CO. INC.
112 WEST 29TH SAN ANGELO TEXAS 76903
PHONE (915) 653-3211

DESCRIPTION: PLATE GIRDER UNIT
STRUCTURE: US 83/281 INTERCHANGE RAMP #2
LOCATION: HIDALGO COUNTY
CUSTOMER: GILBERT TEXAS CONSTRUCTION
SHIP TO:
Customer's Order No:
Dwg. By: JBC Date: 8/92
Checked By: DLF Date: 8-92

SHEET 102 OF
JOB NO. 92-107

— APV 10-07

Q0107

DIST.	COUNTY	SECTION NO.	JOB NO.	HIGHWAY NO.
21	HIDALGO	39	17	97	83/281

KEY SHEET BRIDGE NO.	STATE	FEDERAL AID PROJECT NO.	
6	TX.	NH92 (50) H	
STATE DIST. NO.	STATE	CONTROL NO.	SECTION NO.	JOB NO.	HIGHWAY NO.
21	DETAIL				

CE92-12

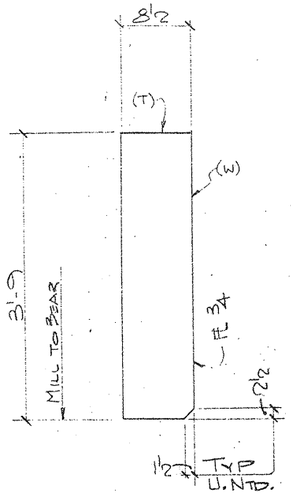

8 - PLATES ~ a101
(END BRG.)

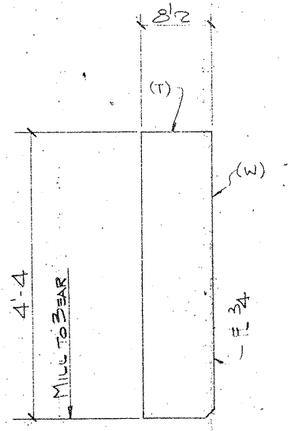

8 - PLATES ~ b101
(END BRG.)

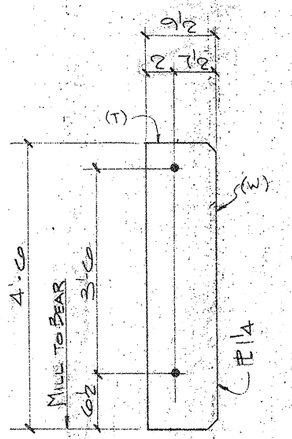

ONE - PLATE ~ c101
(INT. BRG. BNT. 14)

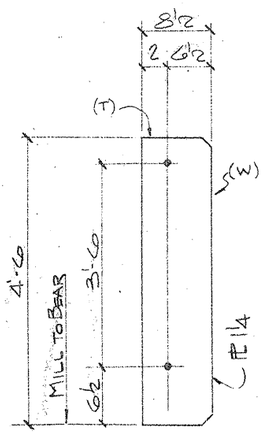

6 - PLATES ~ d101
(INT. BRG. BNTS 14 & 15)

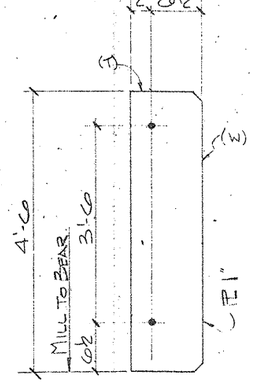

5 - PLATES ~ e101
(INT. BRG. BNT 15)

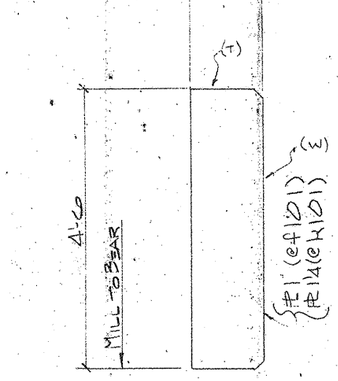

ONE - PLATE ~ f101 (AS NTD)
(INT BRG BNT 15)
3 - PLATES ~ k101 (AS NTD)
(INT. BRG. BNTS. 13, 14 & 15)

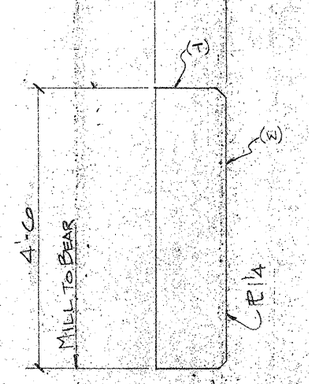

2 - PLATES ~ g101
(INT. BRG. BNTS 13 & 14)

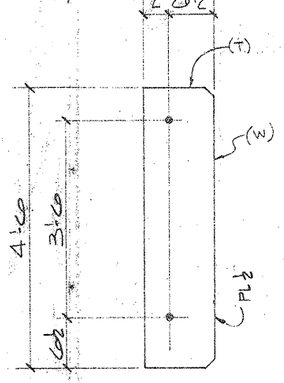

210 - PLATE ~ h101
(INT. STIFF)

BILL OF MATERIAL

	Qnty	Material	Length	Mark Temp.	Mark Ship.	Wt	Cut From	Remarks
1								
2								
3								
4								
5	8	FL 3/4 x 8 1/2	3'-9	a101			110-1	
6	8	FL 3/4 x 8 1/2	4'-4	b101			110-2	
7	1	PL 1 1/4 x 9 1/2	4'-6	c101			110-5	
8	6	PL 1 1/4 x 8 1/2	4'-6	d101			110-4	
9	5	PL 1 x 8 1/2	4'-6	e101			110-3	
10	1	PL 1 x 8 1/2	4'-6	f101			110-3	
11	2	PL 1 1/4 x 9 1/2	4'-6	g101			110-5	
12	210	PL 1/2 x 8 1/2	4'-6	h101			110-7	
13	3	PL 1 1/4 x 8 1/2	4'-6	k101			110-4	
14								
15								
16								
17								
18								
19								
20								
21								
22								
23								
24								
25								
26								
27								
28								
29								
30								
31								
32								
33								
34								
35								
36								
37								
38								
39								
40								
41								
42								
43								
44								
45								
46								
47								
48								
49								
50								
51								
52								
53								
54								
55								
56								
57								
58								
59								
60								

SHOP NOTES:
1. FOR GENERAL NOTES: SEE SHT GN1.
2. (T) INDICATES "TOP"
3. (W) INDICATES "WEB"

Q0107

FED. ROAD DIV. NO.	STATE	FEDERAL AID PROJECT NO.				
6	TX.	NH92 (50) M				
STATE DIST. NO.	COUNTY	CONTROL NO.	SECTION NO.	JOB NO.	HIGHWAY NO.	
21	HIDALGO	39	17	97	83/281	

TEXAS DEPARTMENT OF TRANSPORTATION
APPROVED
DIVISION OF BRIDGES AND STRUCTURES
DEC 08 1992
APPROVAL OF THIS DRAWING DOES NOT RELIEVE THE CONTRACTOR OF THE RESPONSIBILITY FOR THE CORRECTNESS OF DETAIL

FOR APPROVAL
OCT 27 '92

REVISION	DATE	DESCRIPTION OF REVISION
NO. 1		NOT FOR CONSTRUCTION
NO. 2		
NO. 3		
NO. 4		
NO. 5		

PRINTING

Board	For	Date

Bolts: Holes: Unless Noted
Shop Paint: SEE SHT GN1
Fab. Spec: A36 Inspection
Architect
Erection By: Field Connections

HIRSCHFELD STEEL CO. INC.
112 WEST 29TH SAN ANGELO TEXAS 76903
PHONE (915) 653-3211

DESCRIPTION	584'-0 PLATE GIRDER UNIT
STRUCTURE	US 83/281 INTERCHANGE RAMP "Z"
LOCATION	HIDALGO COUNTY
CUSTOMER	GILBERT TEXAS CONSTRUCTION
SHIP TO	
Customer's Order No.	
Dwg. By: CRT Date: 8-92	SHEET 101 OF
Checked By: OCT Date: 8-92	JOB NO. 92-107

CE92-12

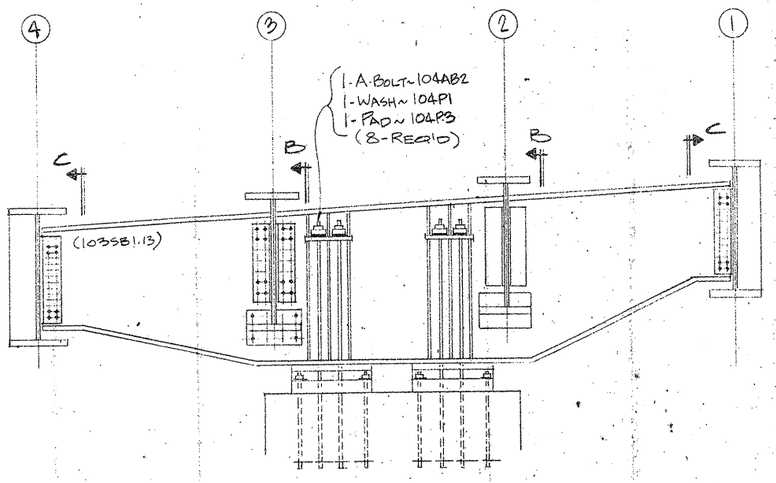

SECTION~A-A

GENERAL NOTES:

THE STEEL BENT CAP SHALL BE ERECTED WITH THE WEB SET VERTICAL AND ALL ANCHOR BOLTS UNIFORMLY TIGHTENED. ADJUSTMENT OF GIRDERS FOR PROPER SPLICE ALIGNMENT CAN BE MADE BY LOOSENING NUTS ON ONE SIDE OF THE CAP WHILE TIGHTENING NUTS ON THE OTHER SIDE BY AN EQUAL AMOUNT. AFTER THE SLAB AND RAIL HAVE BEEN PLACED AND DEAD LOAD DEFLECTION HAS OCCURRED, ALL ANCHOR BOLTS SHALL BE LOOSENED AND UNIFORMLY RETIGHTENED TO A SNUG FIT PLUS 1/4 TURN CONDITION.

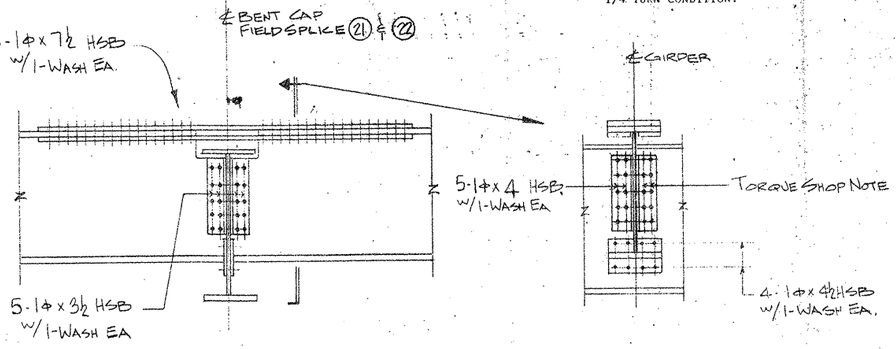

SECTION~B

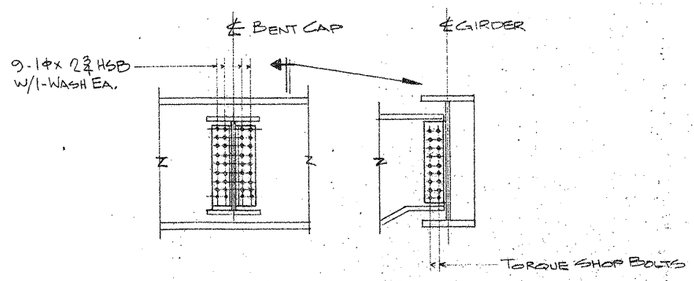

SECTION~C

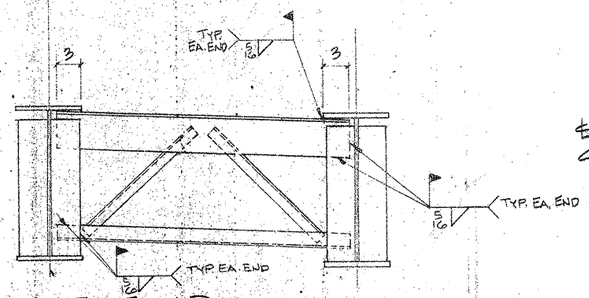

TYP. END DIAFRAMS (TYPE B) @ BENT 12

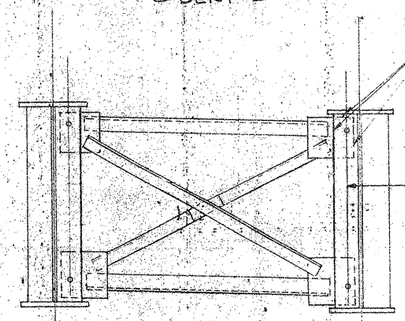

TYP. INT. DIAFRAMS

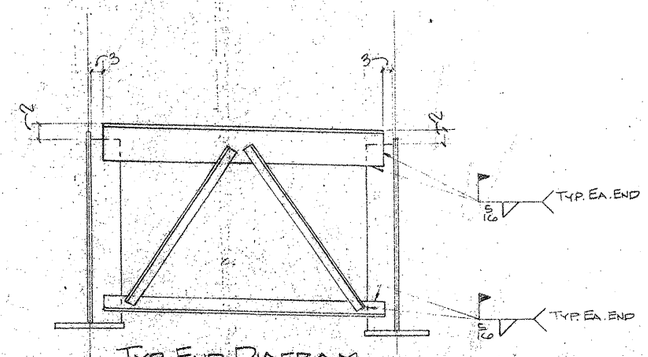

TYP. END DIAFRAM (TYPE B MOD.) @ BENT 100

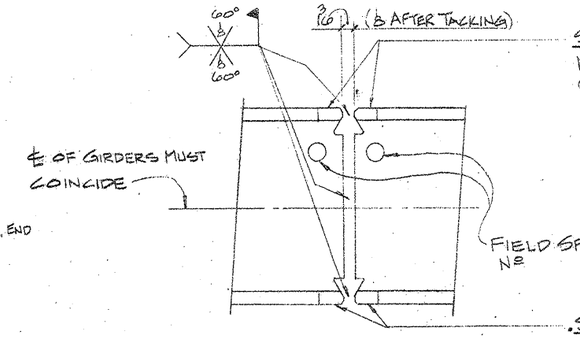

SPLICE EXT. BARS
MK~139WB1 (4-REQ'D PER SPLICE)
@ SPLICE'S (1) THRU (20)

SPLICE EXT. BARS
MK~139WB1 (4-REQ'D PER SPLICE)
@ SPLICE'S (2) THRU (12) & (14) THRU (20)

TYP FIELD SPLICE DETAIL

MK~139WB2 (4-REQ'D PER SPLICE)
@ SPLICE (1)
MK~139WB3 (4-REQ'D PER SPLICE)
@ SPLICE (13)

2-¾⌀x2½ A325 W/2-WASH EA. (TYP. U.N.)
2-¾⌀x3¼ A325 W/2-WASH EA. @ GIRD LINE'S (1) (2) (3) & (4) @ BENT 14
2-¾⌀x3 A325 W/2-WASH EA. @ GIRD LINE'S (2) (3) & (4) @ BENT 15
2-¾⌀x3¼ A325 W/2 WASH EA. @ GIRD (1) @ BENT 15

NOTE: WORK THIS SHEET W/SHEET E101

TEXAS DEPARTMENT OF TRANSPORTATION
APPROVED
DIVISION OF BRIDGES AND STRUCTURES
DEC 08 1992
APPROVAL OF THIS DRAWING DOES NOT RELIEVE THE CONTRACTOR OF THE RESPONSIBILITY FOR THE CORRECTNESS OF DETAIL

FOR APPROVAL
OCT 27 '92
NOT FOR CONSTRUCTION

APV 10-27

FED ROAD DIV. NO	STATE	FEDERAL AID PROJECT NO			
6	TX.	NHSY2 (50) M			
STATE DIST. NO	COUNTY	CONTROL NO	SECTION NO	JOB NO	HIGHWAY NO
21	HIDALGO	39	17	97	83/281

HOLES	U.N.	FOR AP'VL	
BOLTS	U.N.	RETURNED	
WELDS	U.N.	TO SHOP	
PAINT			

REVISIONS		
NO.	DATE	REMARKS
1		
2		
3		
4		

HIRSCHFELD STEEL CO. INC.
112 WEST 29TH SAN ANGELO, TEXAS 76903
PHONE (915) 653-3211

CUSTOMER: GILBERT TEXAS CONSTRUCTION
ARCHITECT:
PROJECT: US 83/281 INTERCHANGE RAMP #2
LOCATION: HIDALGO COUNTY

DRAWN JBK DATE 7/92
CHECKED DLT DATE 9/92
JOB NO 92-107
SHEET NO. E102 of

CE 92-12

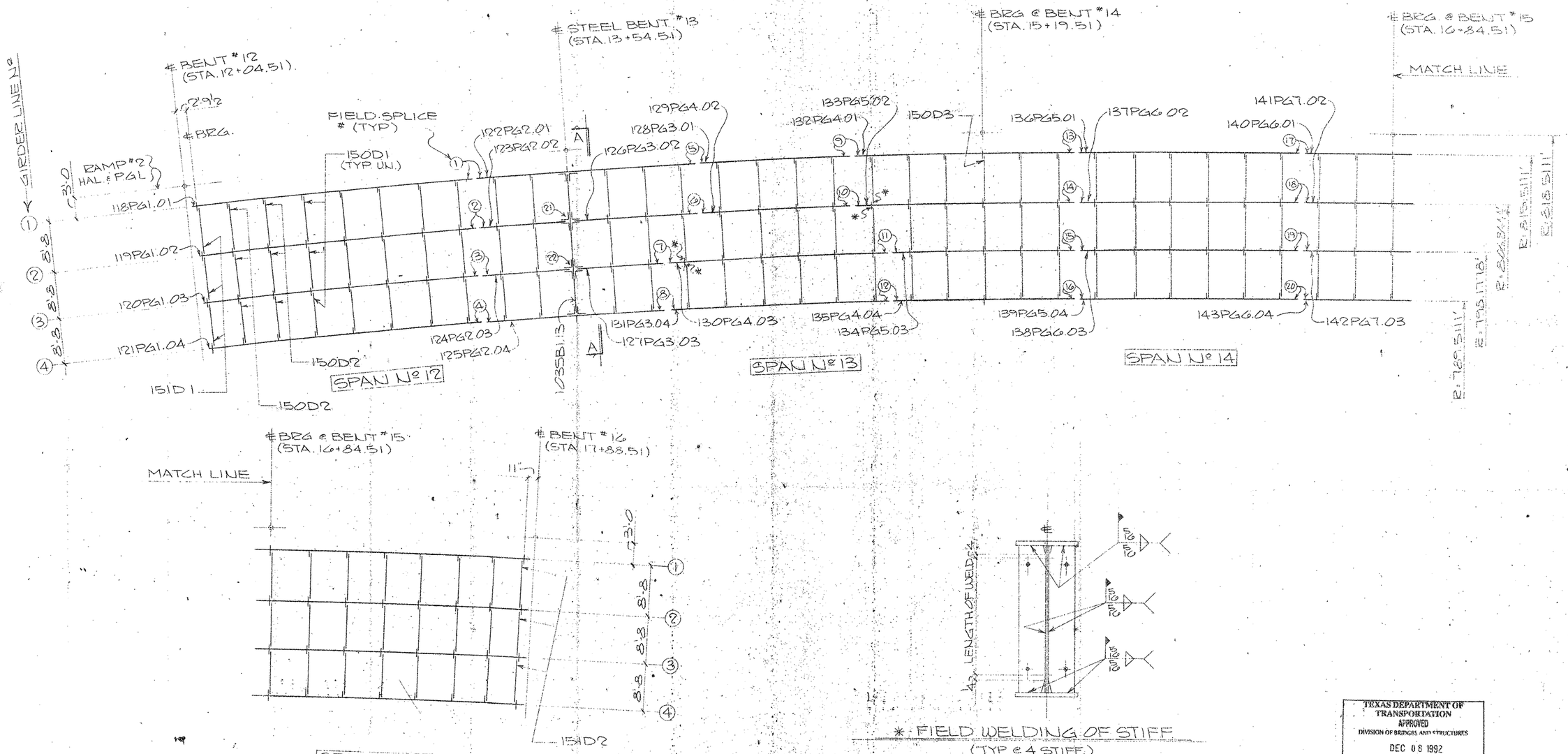

FRAMING PLAN
(UNIT #5 / RAMP 2)

NOTE:
1) WORK THIS SHT. WITH SHT. E102

118 PG 1 .01
SHEET# — LINE#
PLATE GIRDER — GIRDER#
GIRDER SHIPPING MARK LEGEND

TEXAS DEPARTMENT OF TRANSPORTATION
APPROVED
DIVISION OF BRIDGES AND STRUCTURES
DEC 08 1992
APPROVAL OF THIS DRAWING DOES NOT RELIEVE THE CONTRACTOR OF THE RESPONSIBILITY FOR THE CORRECTNESS OF DETAIL.

FOR APPROVAL
OCT 27 '92
NOT FOR CONSTRUCTION

APV 10-27

FED. ROAD DIV. NO.	STATE	FEDERAL AID PROJECT NO.			
6	TX.	NH 92(50)M			
STATE DIST. NO.	COUNTY	CONTROL NO.	SECTION NO.	JOB NO.	HIGHWAY NO.
21	HIDALGO	39	17	97	83/281

HOLES ____ U.N. FOR APV'L ____
BOLTS ____ U.N. RETURNED ____
WELDS ____ U.N. TO SHOP ____
PAINT ____

REVISIONS

NO.	DATE	REMARKS
1		
2		
3		
4		

HIRSCHFELD STEEL CO. INC.
112 WEST 29TH SAN ANGELO TEXAS 76903
PHONE (915) 553-3211

CUSTOMER: GILBERT TEXAS CONSTRUCTION
ARCHITECT:
PROJECT: US 83/281 INTERCHANGE RAMP #2
LOCATION: HIDALGO COUNTY

DRAWN CRT DATE 8-92 | JOB NO. 92-107 | SHEET NO. E101
CHECKED DCT DATE 8-92

CE 92-12

7020

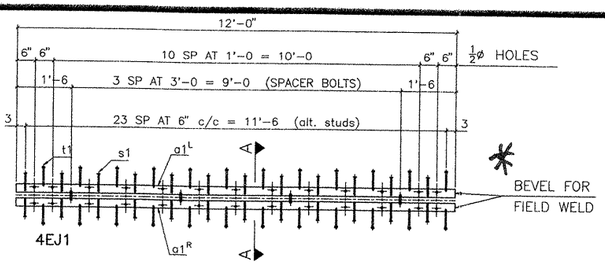

4 – EXP. JOINT Mk 4EJ1

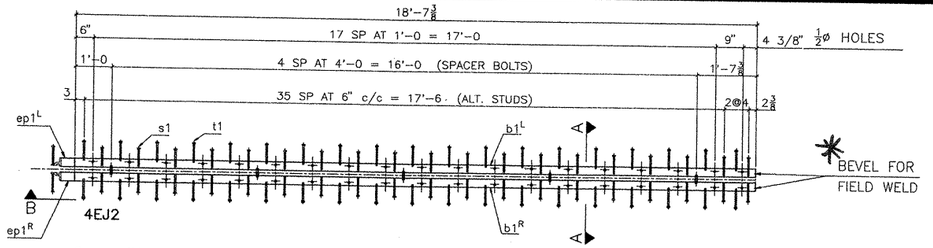

2 – EXP. JOINT Mk 4EJ2

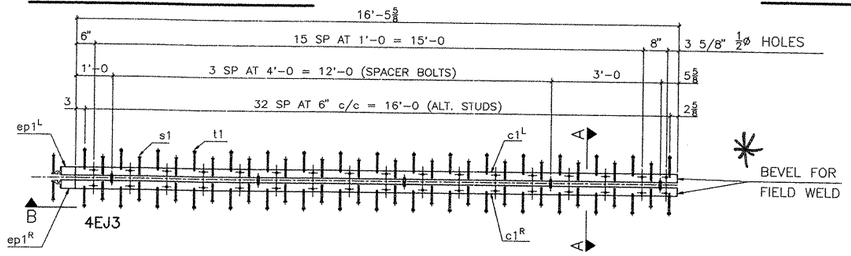

1 – EXP. JOINT Mk 4EJ3

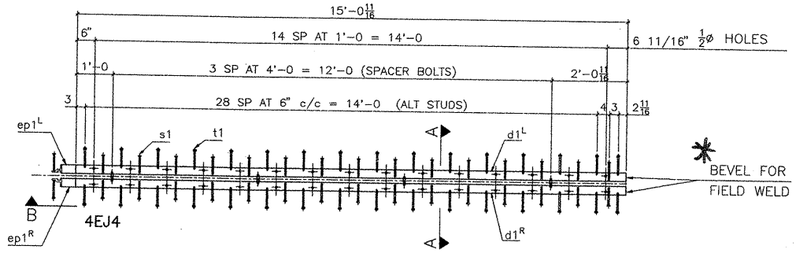

1 – EXP. JOINT Mk 4EJ4

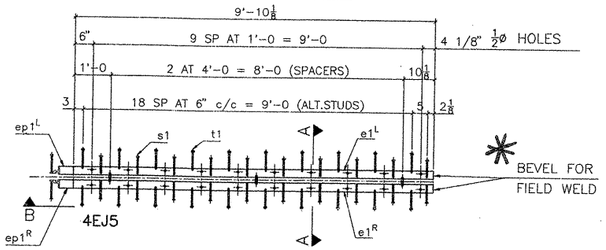

14 – EXP. JOINT Mk 4EJ5

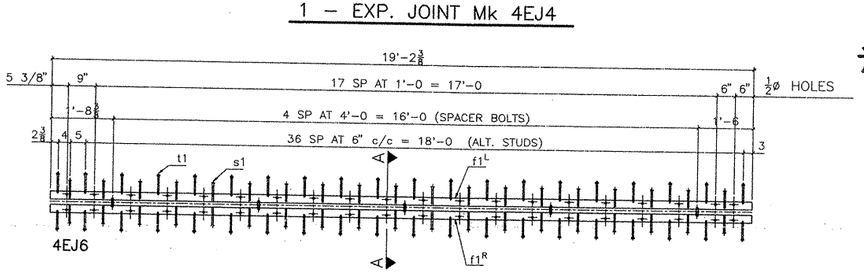

9 – EXP. JOINT Mk 4EJ6

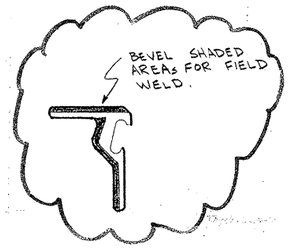

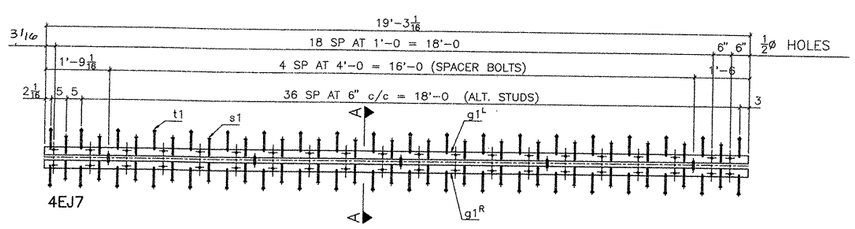

3 – EXP. JOINT Mk 4EJ7

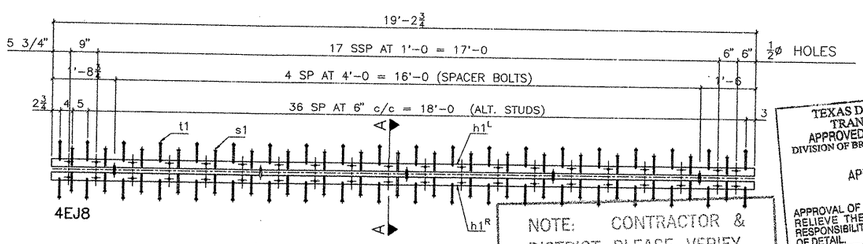

2 – EXP. JOINT Mk 4EJ8

TEXAS DEPARTMENT OF TRANSPORTATION
APPROVED EXCEPT AS NOTED
DIVISION OF BRIDGES AND STRUCTURES

APR 22 1994

APPROVAL OF THIS DRAWING DOES NOT RELIEVE THE CONTRACTOR OF THE RESPONSIBILITY FOR THE CORRECTNESS OF DETAIL.

NOTE: CONTRACTOR & DISTRICT PLEASE VERIFY BEFORE FABRICATION

PRODUCTION NOTE: THERE ARE NO SHEETS 1,2,OR 3 ON THIS JOB
THESE ARE REPLACEMENT PIECES AND OLD SHEET NO'S COULD NOT BE USED.

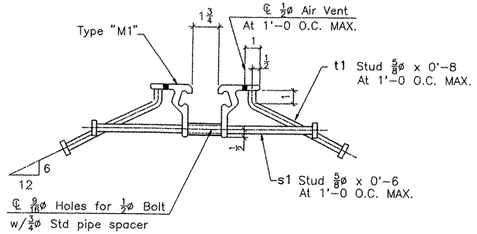

SECTION A–A

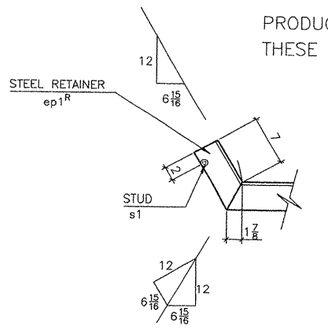

V I E W B

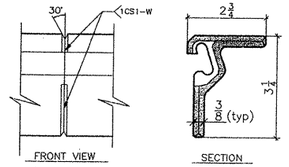

SHOP WELD DETAIL

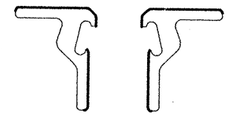

PAINT LIMITS
PAINT DARKENED AREAS. DO NOT PAINT SEAL CAVITY

APPROVED / REVIEW AUTHORITY PLEASE REVIEW THIS DRAWING CAREFULLY
Acceptance of Contract Documents by Seller constitutes acceptance of the Contract Documents. However, the Seller assumes no responsibility for errors, omissions, ambiguities, or conflicts in the Contract Documents. Seller is not responsible for the contractor system of construction, means, methods, techniques, sequences, or procedures, or for safety precautions and programs in connection with the work. Seller's review of shop drawings does not relieve the contractor from responsibility for deviations from the Contract Documents not brought to the attention of the Seller in writing. By approving and submitting shop drawings, the contractor represents that he has determined and verified all field measurements, field construction criteria, materials, catalog numbers, and similar data or will do so, and that he has checked and coordinated each shop drawing with the requirements of the work and of the Contract Documents.

BACKCHARGES:
Back charges of any nature for corrective work or replacement material will not be accepted unless authorized by Seller. Costs that are incurred without the Seller's prior approval will be for the Buyer's account.

Rev.	Date	Description
1		
2		
3		
4		

Print Record

#	To	Date
7	Appv	3/24/94
7	Appv	4/18/94
	Appv	
	Check	
	Back ✓	
	Shop	
	Shop	
1	Purch	3/24/94
	Purch	
	Const	
	Const	
	PLOTTED	
	Apr 18, 1994 – 08:42:57	

Bill of Material

Detail Mark	#	SECTION	LENGTH	SHIPPING #	SHIPPING Mark	REMARKS	
	3"	SEALED EXP JOINT	12'–0	4	4EJ1	12.00'	95
a1 LR	8	TYPE M1 EXT.	12'–0			* 4L & 4R	72
s1	96	5/8ø HD STUD	0'–6				72
t1	96	5/8ø HD STUD	0'–8			BENT	72
	3"	SEALED EXP JOINT	19'–2 3/8	2	4EJ2	19.20'	95
b1 RL	4	TYPE M1 EXT.	18'–9 1/4			* 2L & 2R	72
ep1 LR	4	TYPE M1 EXT.	0'–8 7/8			* 2L & 2R	72
s1	76	5/8ø HD STUD	0'–6				72
t1	72	5/8ø HD STUD	0'–8			BENT	72
	3"	SEALED EXP JOINT	17'–0 5/8	1	4EJ3	17.05'	95
c1 RL	2	TYPE M1 EXT.	16'–7 1/2			* 1L & 1R	72
ep1 LR	2	TYPE M1 EXT.	0'–8 7/8			* 1L & 1R	72
s1	36	5/8ø HD STUD	0'–6				72
t1	32	5/8ø HD STUD	0'–8			BENT	72
	3"	SEALED EXP JOINT	15'–7 11/16	1	4EJ4	15.59'	95
d1 RL	2	TYPE M1 EXT.	15'–2 9/16			* 1L & 1R	72
ep1 LR	2	TYPE M1 EXT.	0'–8 7/8			* 1L & 1R	72
s1	34	5/8ø HD STUD	0'–6				72
t1	30	5/8ø HD STUD	0'–8			BENT	72
	3"	SEALED EXP JOINT	10'–5 1/8	14	4EJ5	10.43'	95
e1 RL	28	TYPE M1 EXT.	10'–0			* 14L & 14R	72
ep1 LR	28	TYPE M1 EXT.	0'–8 7/8			* 14L & 14R	72
s1	588	5/8ø HD STUD	0'–6				72
t1	588	5/8ø HD STUD	0'–8			BENT	72
	3"	SEALED EXP JOINT	19'–2 3/8	9	4EJ6	19.20'	95
f1 RL	18	TYPE M1 EXT.	19'–2 3/8			* 9L & 9R	72
s1	360	5/8ø HD STUD	0'–6				72
t1	342	5/8ø HD STUD	0'–8			BENT	72
	3"	SEALED EXP JOINT	19'–3 1/16	3	4EJ7	19.26'	95
g1 RL	6	TYPE M1 EXT.	19'–3 1/16			* 3L & 3R	72
s1	120	5/8ø HD STUD	0'–6				72
t1	114	5/8ø HD STUD	0'–8			BENT	72
	3"	SEALED EXP JOINT	19'–3 3/4	2	4EJ8	19.23'	95
h1 RL	4	TYPE M1 EXT.	19'–2 3/4			* 2L & 2R	72
s1	80	5/8ø HD STUD	0'–6				72
t1	76	5/8ø HD STUD	0'–8			BENT	72
za1	147	1/2ø BOLT	0'–3 3/4			FOR SPACER	72
zb1	147	1/2ø NUT				FOR SPACER	72
zc1	147	3/4ø PIPE	0'–2 1/4			SPACER	72
		NEOPRENE SEAL					
		TYPE SE400	30'–0	14	3N1	*	
		TYPE SE400	57'–0	1	1N2	*	
		TYPE SE400	63'–0	1	1N3	*	

GENERAL NOTES:
1– Studs are to be elec. arc welded with complete fusion.
2– All steel to be A588 or A36 and DOMESTIC.
3– Material for studs shall conform to ASTM–A108, grades 1015, 1018, or 1020.
4– One shop splice will be permitted in each shipping length provided no piece is less than 2'–0 in length and sufficient studs are added to limit the stud to shop splice distance to 2' minimum 4' maximum.
5– Shop and field splices shall be made by butt welding with areas in contact with preformed joint sealer to be ground smooth.
6– Corresponding sections shall be match marked and bolted together for shipment.
7– Painting of System II will cover only surfaces not embeded in concrete.

FOR APPROVAL ONLY
Capitol City Steel Co., Inc.

* – BY WATSON BOWMAN & ACME

HOLES (U.N.) / 9/16ø SHOP PAINT / SYS II

CAPITOL CITY STEEL
COMPANY INC.
REINFORCING & STRUCTURAL STEEL FABRICATORS
SUPPLIER OF CONSTRUCTION MATERIALS
P.O. BOX 3185 AUSTIN TX 78764 512-282-8820
FAX: 512-295-2500

CUSTOMER: McALLEN CONST. FOR GILBERT TEXAS
PROJECT: NH 92(50)M CSJ 0039 17 097
LOCATION: US 83 US 281 DIST 21 HILDAGO County
ARCH/ENG: TEXAS DOT SHOP PLAN #:

JOB # 94-872
DATE: 3-24-94
DWN: PC CHK:
SHEET # 4

SEJ–S(1) ~ SHOP DETAILS

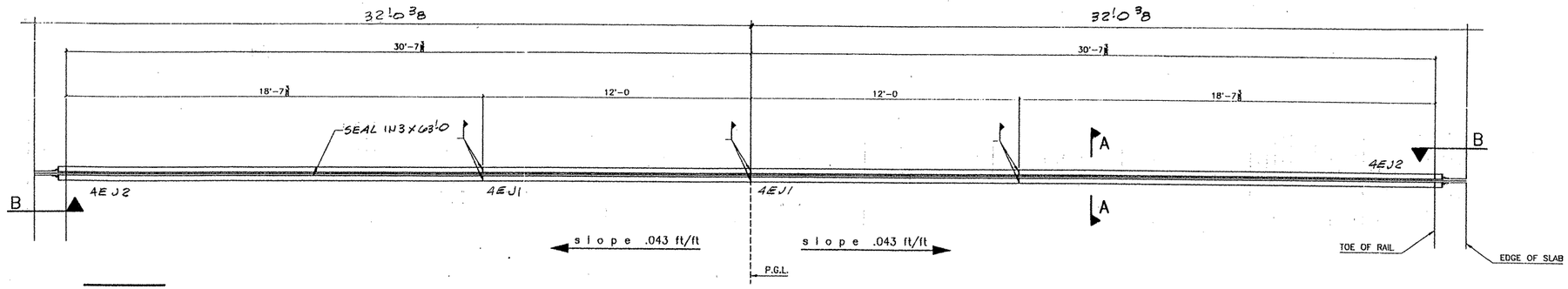

BENT 12

US 83/281 INTERCHANGE RAMPS 1 & 2

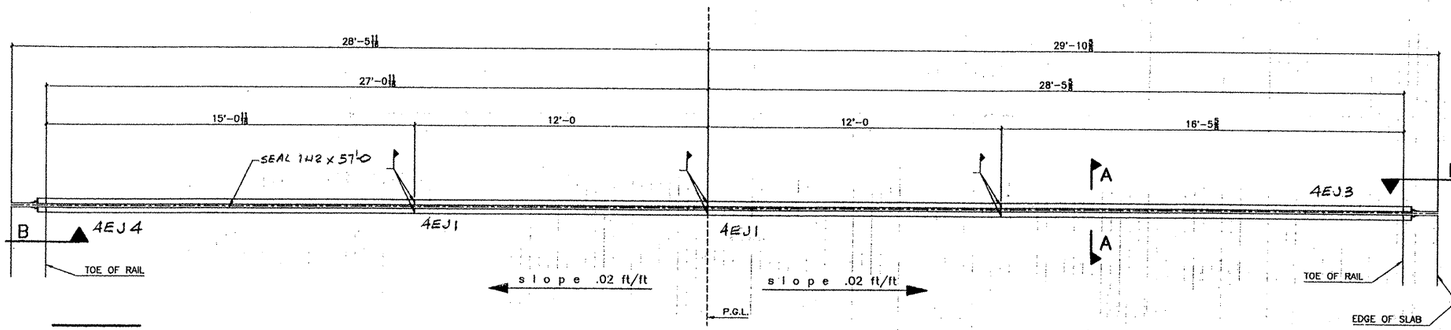

BENT 10

US 83/281 INTERCHANGE RAMPS 3 & 4

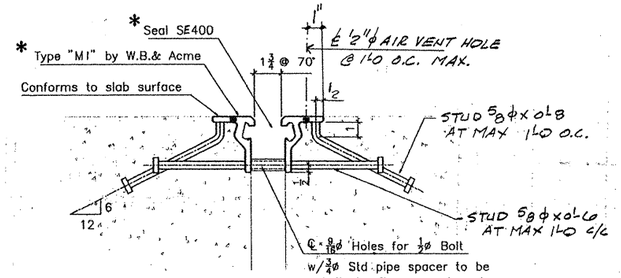

SECTION A–A

TEXAS DEPARTMENT OF TRANSPORTATION
APPROVED EXCEPT AS NOTED
DIVISION OF BRIDGES AND STRUCTURES
APR 22 1994
APPROVAL OF THIS DRAWING DOES NOT RELIEVE THE CONTRACTOR OF THE RESPONSIBILITY FOR THE CORRECTNESS OF DETAIL.

NOTE: CONTRACTOR & DISTRICT PLEASE VERIFY BEFORE FABRICATION

4/18/94 NOTE: JOINTS PICTURED ON THIS SHEET ARE REPLACEMENTS - NOT DUPLICATIONS

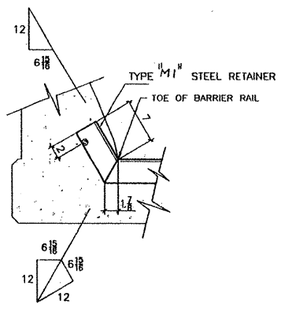

SECTION B

OUT

APPROVER / REVIEW AUTHORITY PLEASE REVIEW THIS DRAWING CAREFULLY

This drawing represents the Seller's interpretation of the intent of the contract documents. However, the Seller assumes no responsibility for the basic design elements copied from the contract drawings.

Unless noted to the contrary upon the drawings returned from approval, it will be assumed that all information shown herein has the affirmation of the approval authority. However, accuracy of all dimensions remains responsibility of the seller.

BACKCHARGES:
Back charges of any nature for corrective work or replacement material will not be accepted unless authorized by Seller. Costs that are incurred without the Seller's prior approval will be for the Buyer's account.

Rev.	Date	Description
1		
2		
3		
4		

Print Record		
#	To	Date
7	Appv	3/24/94
7	Appv	4/18/94
	Appv	
	Check	
	Back ✓	
	Shop	
	Shop	
1	Purch	3/24/94
	Purch	
	Const	
	Const	

FOR APPROVAL ONLY
Capitol City Steel Co., Inc.

CAPITOL CITY STEEL
COMPANY INC.
REINFORCING & STRUCTURAL STEEL FABRICATORS
SUPPLIER OF CONSTRUCTION MATERIALS
P.O. BOX 3195 AUSTIN TX 78784 512-282-8820
FAX: 512-295-2500

CRSI

CUSTOMER: McALLEN CONST	JOB # 94-872
PROJECT: NH 92 (50) M CSJ 0039 17 097	DATE: 3/24/94
LOCATION: US 83 US 281 DIST 21 HILDAGO CO.	DWN: PC CHK: RA
ARCH/ENG: TEXAS DOT SHOP FILE: 7020	SHEET # E5

SEJ-5(1) @ US 83/US281 INTERCHANGE

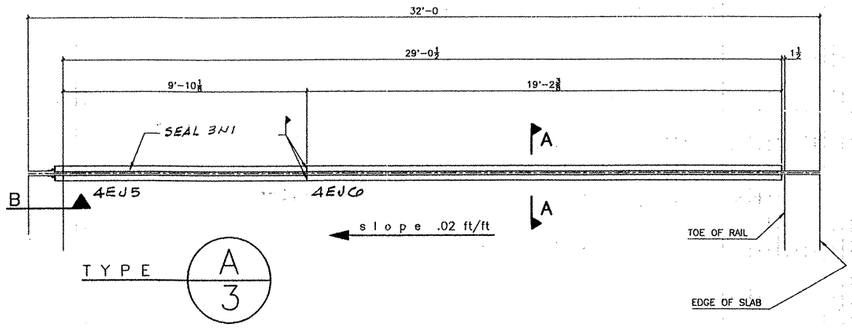

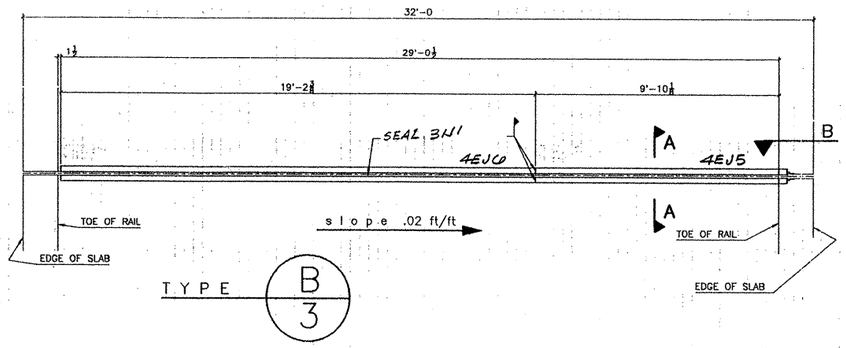

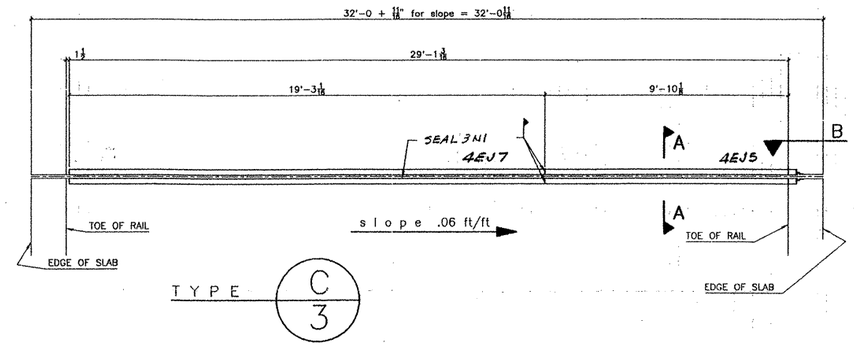

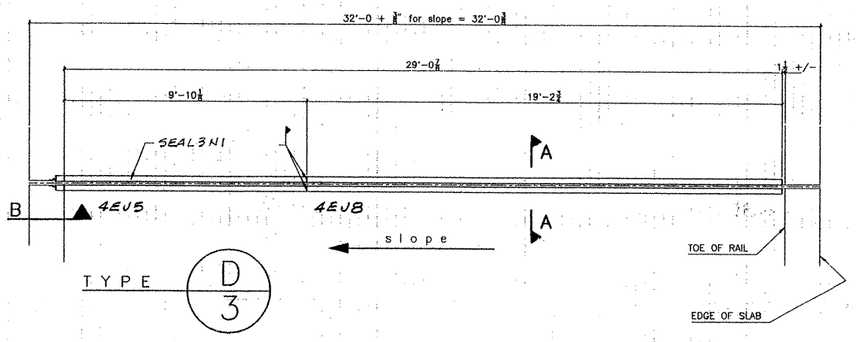

NOTE: CONTRACTOR & DISTRICT PLEASE VERIFY BEFORE FABRICATION

TEXAS DEPARTMENT OF TRANSPORTATION
APPROVED EXCEPT AS NOTED
DIVISION OF BRIDGES AND STRUCTURES
APR 22 1994
APPROVAL OF THIS DRAWING DOES NOT RELIEVE THE CONTRACTOR OF THE RESPONSIBILITY FOR THE CORRECTNESS OF DETAIL

4-18-94 ~ JOINTS LISTED BELOW ARE REPLACEMENTS (NOT DUPLICATIONS)

JOINT SCHEDULE

RAMP 1		TYPE	SEAL
BENT 18	SEJ(4")	D/3	3N1
BENT 20	SEJ(4")	A/3	3N1
BENT 22	SEJ(4")	A/3	3N1
BENT 25	SEJ(4")	A/3	3N1
ABUT 27	SEJ(4")	A/3	3N1
RAMP 2			
BENT 20	SEJ(4")	C/3	3N1
BENT 22	SEJ(4")	B/3	3N1
BENT 24	SEJ(4")	B/3	3N1
~~BENT 27~~	~~SEJ(4")~~	~~B/3~~	~~3N1~~
~~ABUT 30~~	~~SEJ(4")~~	~~D/3~~	~~3N1~~

RAMP 3		TYPE	SEAL
BENT 20	SEJ(4")	D/3	3N1
ABUT 22	SEJ(4")	A/3	3N1
RAMP 4			
BENT 15	SEJ(4")	C/3	3N1
BENT 19	SEJ(4")	C/3	3N1
BENT 22	SEJ(4")	B/3	3N1
ABUT 25	SEJ(4")	B/3	3N1

US 83/US 281 INTERCHANGE RAMPS 1, 2, 3, & 4

SEJ PLACEMENT GUIDE (PLAN LAYOUT)

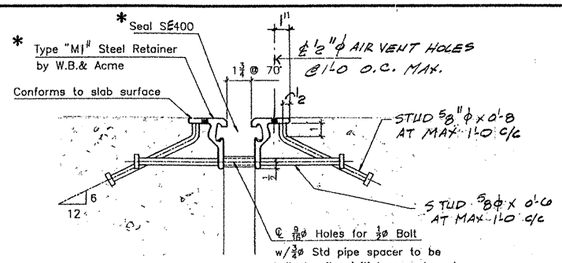

SECTION A–A

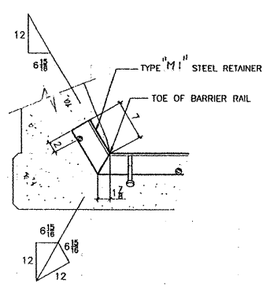

SECTION B

SEAL SCHEDULE

SEAL 3N1 X 30'-0"

BACKCHARGES:
Back charges of any nature for corrective work or replacement material will not be accepted unless authorized by Seller. Costs that are incurred without the Seller's prior approval will be for the Buyer's account.

Rev.	Date	Description
1		
2		
3		
4		

Print Record		
#	To	Date
7	Appv	3/24/94
7	Appv	4/18/94
	Appv	
	Check	
	Back ✓	
	Shop	
	Shop	
1	Purch	3/24/94
	Purch	
	Const	
	Const	
	Plotted	

Jan 15, 1993 - 17:49:33

GENERAL NOTES:

1– Studs are to be elec. arc welded with complete fusion.
2– All steel to be A36 or A588 and DOMESTIC.
3– Material for studs shall conform to ASTM–A108, grades 1015, 1018, or 1020.
4– One shop splice will be permitted in each shipping length provided no piece is less than 2'–0 in length and sufficient studs are added to limit the stud to shop splice distance to 2" MIN. and 4" MAX.
5– Shop and field splices shall be made by butt welding with areas in contact with preformed joint sealer to be ground smooth.
6– Corresponding sections shall be match marked and bolted together for shipment.

FOR APPROVAL ONLY
Capitol City Steel Co., Inc.

* = BY Watson Bowman & Acme

FIELD PAINT / none

RECEIVED
APR 18 1994
DESIGN DIVISION

CAPITOL CITY STEEL
COMPANY INC.
REINFORCING & STRUCTURAL STEEL FABRICATORS
SUPPLIER OF CONSTRUCTION MATERIALS
P.O. BOX 3195 AUSTIN TX 78764 512-282-8820
FAX: 512-295-2500

CUSTOMER: McALLEN CONST.
PROJECT: NH 92(50)M CSJ: 0039 17 097
LOCATION: HILDAGO CO US 83 US 281 DIST 21
ARCH/ENG: Texas DOT SHOP PLAN #: 7020

JOB # 94-872
DATE: 3-24-94
DWN: PC CHK: RA
SHEET # E4

4" SEJ–S(1) @ US 83/281 INTERCHANCE RAMPS 1, 2, 3, & 4

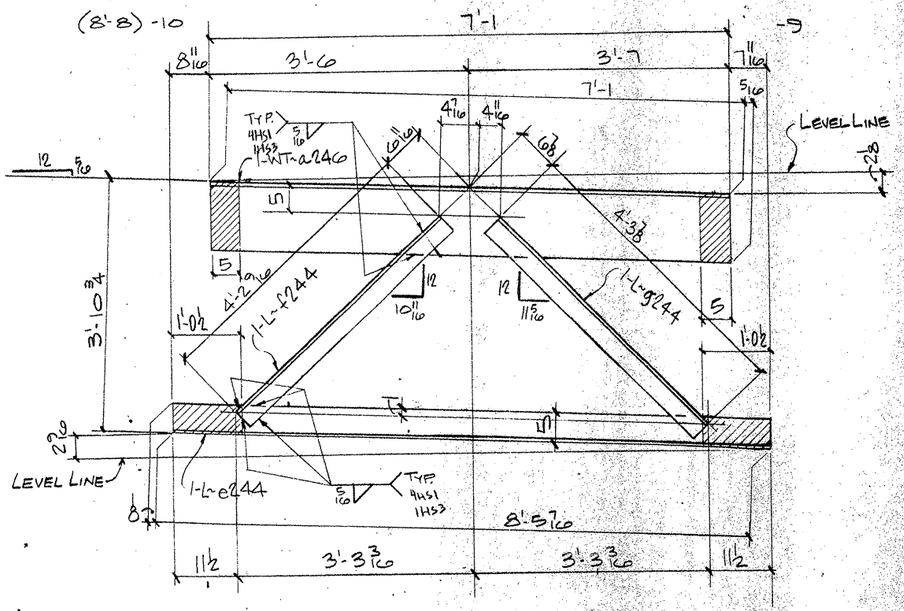

ONE - END DIAFRAM - 246D1

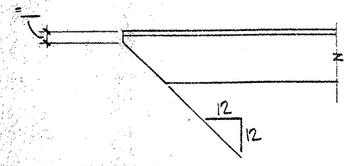

TYP. CLIP ON ALL OUTSTANDING ANGLE LEGS

NOTES:
1. FOR GENERAL NOTES SEE SHT. GN1
2. ▨ INDICATES OIL, NO PAINT (N.S./F.S. & EDGES)

BILL OF MATERIAL

	Qnty.	Material	Length	Mark Temp	Mark Ship.	Wt.	Cut From	Remarks
4	ONE	DIAFRAM			246D1			
5	ONE	WT 12 X 42	7'-1 5/16	a246			216-2	
6	ONE	L 5 X 3½ X ⅜	8'-5 7/16	e244			216-5	
7	ONE	L 3½ X 3½ X ⅜	4'-2 9/16	f244			216-6	
8	ONE	L 3½ X 3½ X ⅜	4'-3 3/8	g244			216-6	

TEXAS DEPARTMENT OF TRANSPORTATION
APPROVED
DIVISION OF BRIDGES AND STRUCTURES
FEB 11 1993

FOR APPROVAL
JAN 22 '93
NOT FOR CONSTRUCTION

APPROVAL OF THIS DRAWING DOES NOT RELIEVE THE CONTRACTOR OF THE RESPONSIBILITY FOR THE CORRECTNESS OF DETAIL.

REVISION	DATE	DESCRIPTION OF REVISION
NO. 1		
NO. 2		
NO. 3		
NO. 4		
NO. 5		

PRINTING: Reqd | For | Date

Bolts: Holes: Unless Noted
Shop Paint SEE SHT GN1
Fab Spec. A36 Inspection
Architect
Erection By Field Connections

HIRSCHFELD STEEL CO. INC.
112 WEST 29TH SAN ANGELO, TEXAS 76903
PHONE (915) 653-3211

DESCRIPTION	645'-0 PLATE GIRDER UNIT
STRUCTURE	US 83/281 INTERCHANGE RAMP "A"
LOCATION	HIDALGO COUNTY
CUSTOMER	GILBERT TEXAS CONSTRUCTION
SHIP TO	
Customer's Order No.	
Dwg. By JZ	Date 10/92
Checked By JC	Date 11-92

SHEET 24.6 OF
JOB NO. 92-109
CE 92-14

F0209

FED. ROAD DIV. NO.	STATE	FEDERAL AID PROJECT NO.			
6	TX.	NH 92(50)M			
STATE DIST. NO.	COUNTY	CONTROL NO.	SECTION NO.	JOB NO.	HIGHWAY NO.
21	HIDALGO	39	17	97	83/281

APV JAN 22 '93

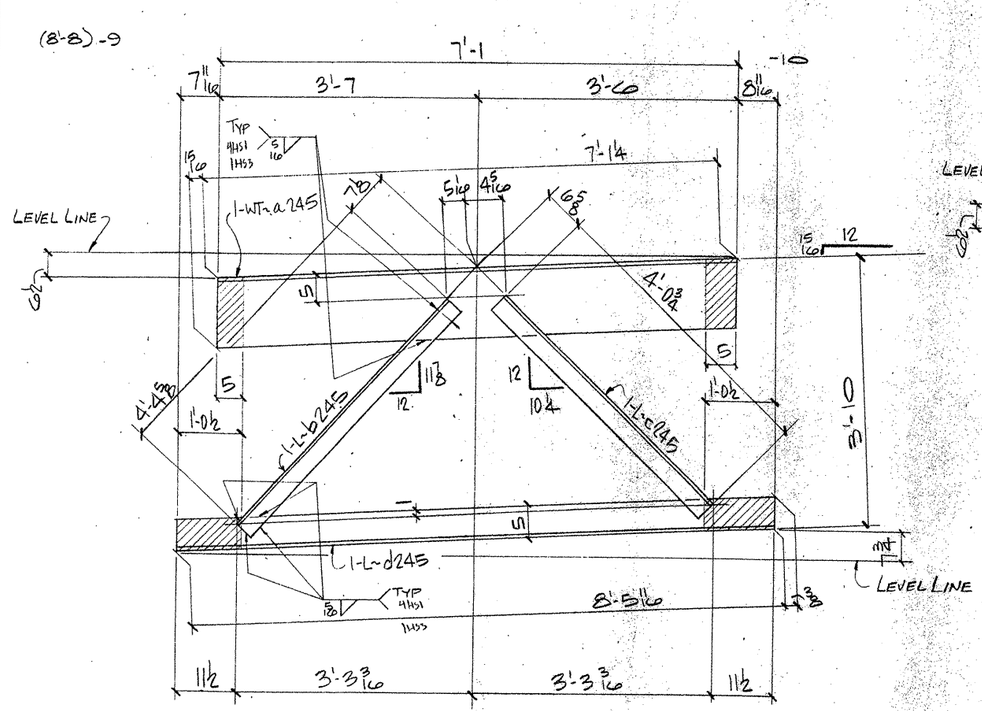

ONE - DIAFRAM ~ 245D1

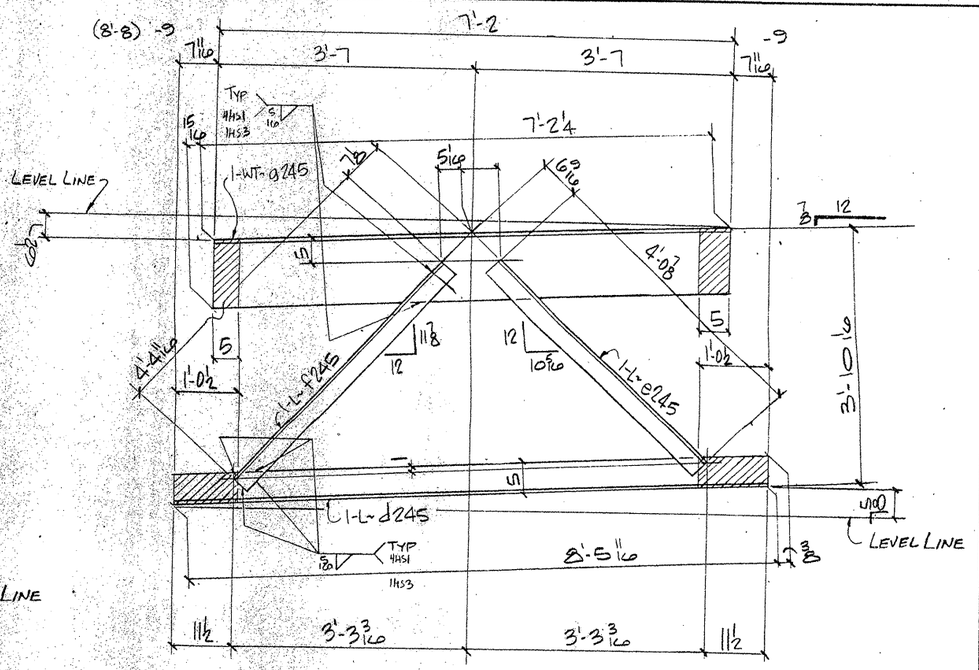

2 - END DIAFRAMS ~ 245D2

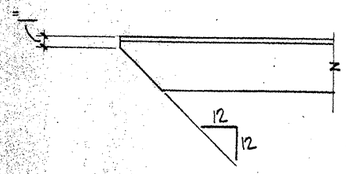

TYP. CLIP ON ALL OUTSTANDING ANGLE LEGS

NOTES:

1. FOR GENERAL NOTES SEE SHT. GN1
2. ▨ INDICATES OIL, NO PAINT (N.S./F.S. & EDGES)

BILL OF MATERIAL

	Qnty	Material	Length	Mark Temp	Mark Ship	Wt.	Cut From	Remarks
4	ONE	DIAFRAM			245D1			
5	ONE	WT 12 x 42	7'-2 3/16	a245			216-3	
6	ONE	L 5 x 3 1/2 x 3/8	8'-0 1/16	d245			216-5	
7	ONE	L 3 1/2 x 3 1/2 x 3/8	4'-4 5/8	b245			216-7	
8	ONE	L 3 1/2 x 3 1/2 x 3/8	4'-0 3/4	c245			216-7	
15	2	DIAFRAM			245D2			
16	2	WT 12 x 42	7'-3 3/16	a245			216-4	
17	2	L		d245			216-5	
18	2	L 3 1/2 x 3 1/2 x 3/8	4'-4 11/16	f245			216-7	
19	2	L 3 1/2 x 3 1/2 x 3/8	4'-0 3/8	e245			216-7	
45		FIELD BOLT LIST (0% ADDED) A325 TY 1						
46	28	HS BOLT 3/4 ϕ	0'-3 1/2				214-5	
47	429	HS BOLT 3/4 ϕ	0'-2 1/2				214-6	
48	914	HS WASH 3/4 ϕ					214-7	

FOR APPROVAL

TEXAS DEPARTMENT OF TRANSPORTATION APPROVED DIVISION OF BRIDGES AND STRUCTURES FEB 11 1993

JAN 22 93

NOT FOR CONSTRUCTION

APPROVAL OF THIS DRAWING DOES NOT RELIEVE THE CONTRACTOR OF THE RESPONSIBILITY FOR THE CORRECTNESS

REVISION	DATE	DESCRIPTION OF REVISION
NO. 1		
NO. 2		
NO. 3		
NO. 4		
NO. 5		

PRINTING: Reqd | For | Date

Bolts Holes: Unless Noted
Shop Paint SEE SHT GN1
Fab Spec. A36 Inspection
Architect
Erection By Field Connections

HIRSCHFELD STEEL CO. INC.
112 WEST 29TH SAN ANGELO, TEXAS 76903
PHONE (915) 653-3211

DESCRIPTION	G45'-0 PLATE GIRDER UNIT
STRUCTURE	US 83/281 INTERCHANGE RAMP
LOCATION	HIDALGO COUNTY
CUSTOMER	GILBERT TEXAS CONSTRUCTION
SHIP TO	
Customer's Order No.	
Dwg. By JBE	Date 10/92
Checked By JC	Date 11-92

SHEET 245 OF
JOB NO. 92-109

FO209

FED. ROAD DIV. NO.	STATE	FEDERAL AID PROJECT NO.			
6	TX.	NH 92(50)M			
STATE DIST. NO.	COUNTY	CONTROL NO.	SECTION NO.	JOB NO.	HIGHWAY NO.
21	HIDALGO	39	17	97	83/281

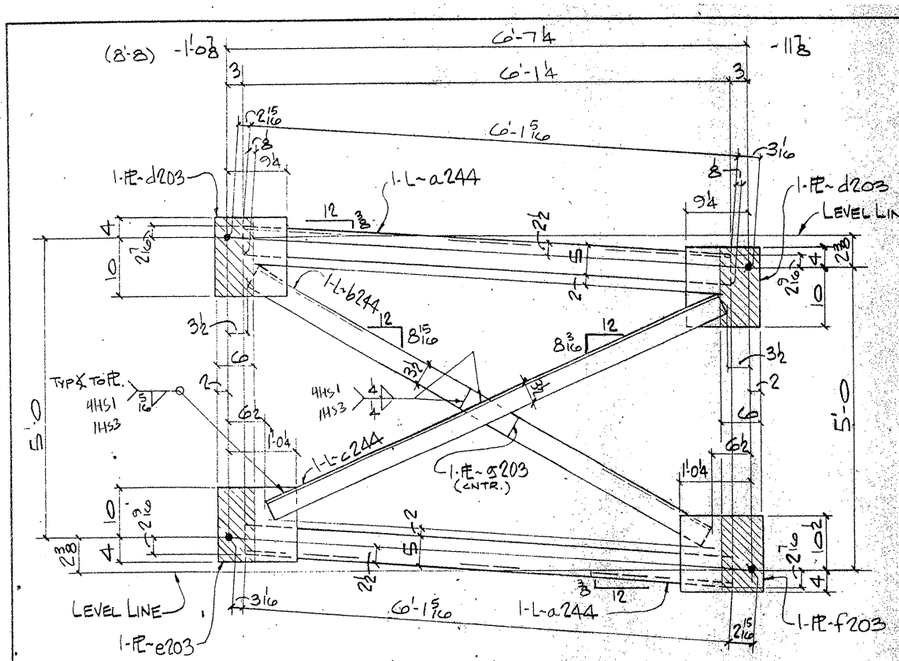

ONE - DIAFRAM ~244D1

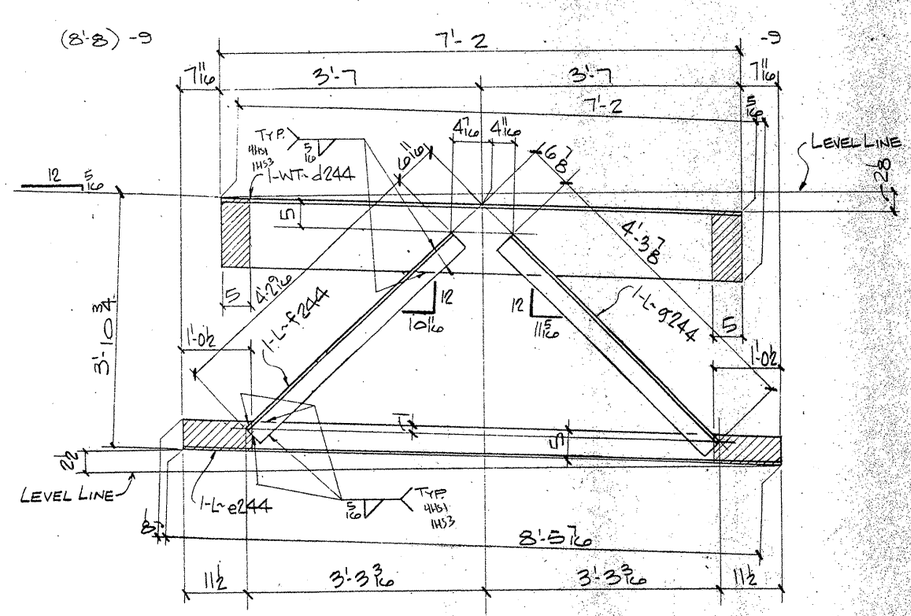

2 - END DIAFRAM ~244D2

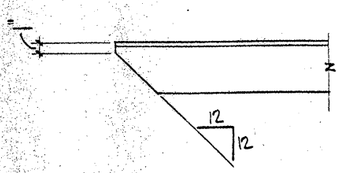

TYP. CLIP ON ALL OUTSTANDING ANGLE LEGS

NOTES:
1. FOR GENERAL NOTES SEE SHT. GN1
2. ▨ INDICATES OIL, NO PAINT (N.S./FS. & EDGES)

F0209

FED. ROAD DIV. NO.	STATE	FEDERAL AID PROJECT NO.			
6	TX.	NH 92(50)M			
STATE DIST. NO.	COUNTY	CONTROL NO.	SECTION NO.	JOB NO.	HIGHWAY NO.
21	HIDALGO	39	17	97	83/281

BILL OF MATERIAL

	Qnty	Material	Length	Mark Temp	Mark Ship	Wt.	Cut From	Remarks
4	ONE	DIAFRAM			244D1			
5	2	L 5 x 3½ x ½	6'-1 7/16	a244			215-5	
6	ONE	L 5 x 3½ x ½	6'-11 13/16	b244			215-9	
7	ONE	L 5 x 3½ x ½	6'-9½	c244			215-9	
8	2	PL ½ x 11¼	1'-2	d203			215-10	
9	ONE	PL ½ x 14	1'-2¼	e203			215-11	
10	ONE	PL ½ x 14'4	1'-2½	f203			215-12	
11	ONE	FL ½ x 3½	0'-9	g203			215-13	
17	2	DIAFRAMS			244D2			
18	2	WT 12 x 42	7'-2 9/16	d244			216-3	
19	2	L 5 x 3½ x 3/8	8'-5 9/16	e244			216-5	
20	2	L 3½ x 3½ x 3/8	4'-2 9/16	f244			216-6	
21	2	L 3½ x 3½ x 3/8	4'-3⅞	g244			216-6	

TEXAS DEPARTMENT OF TRANSPORTATION
APPROVED
DIVISION OF BRIDGES AND STRUCTURES
FEB 11 1993

APPROVAL OF THIS DRAWING DOES NOT RELIEVE THE CONTRACTOR OF THE RESPONSIBILITY FOR THE CORRECTNESS OF DETAILS

FOR APPROVAL
JAN 22 93
NOT FOR CONSTRUCTION

REVISION	DATE	DESCRIPTION OF REVISION
NO 1		
NO 2		
NO 3		
NO 4		
NO 5		

PRINTING Req'd	For	Date

Bolts Holes 15/16ø Unless Noted
Shop Paint SEE SHT GN1
Fab Spec A36 Inspection
Architect
Erection By Field Connections

HIRSCHFELD STEEL CO. INC.
112 WEST 29TH SAN ANGELO, TEXAS 76903
PHONE (915) 653-3211

DESCRIPTION G45'-0 PLATE GIRDER UNIT
STRUCTURE US 83/281 INTERCHANGE RAMP "A"
LOCATION HIDALGO COUNTY
CUSTOMER GILBERT TEXAS CONSTRUCTION
SHIP TO
Customer's Order No
Dwg By JRC Date 10/92
Checked By JC Date 11-92

SHEET 244 OF
JOB NO 92-109

CE92-14

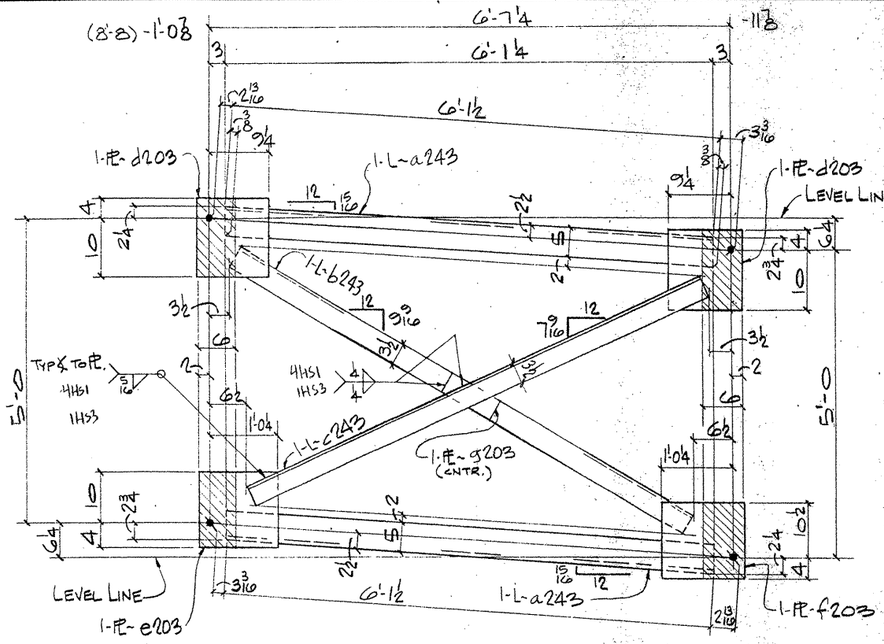

ONE - DIAFRAM ~ 243D1

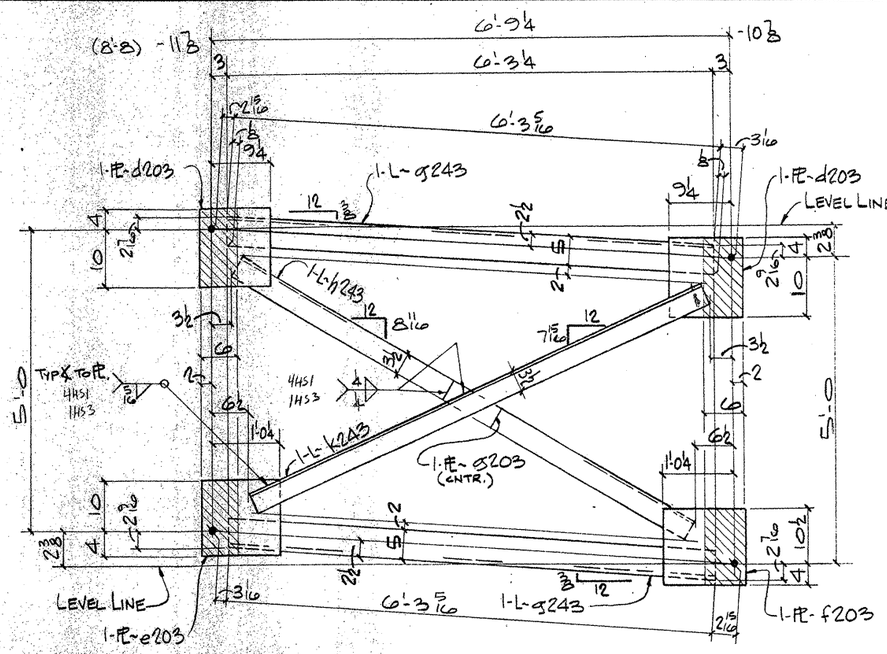

ONE - DIAFRAM ~ 243D3

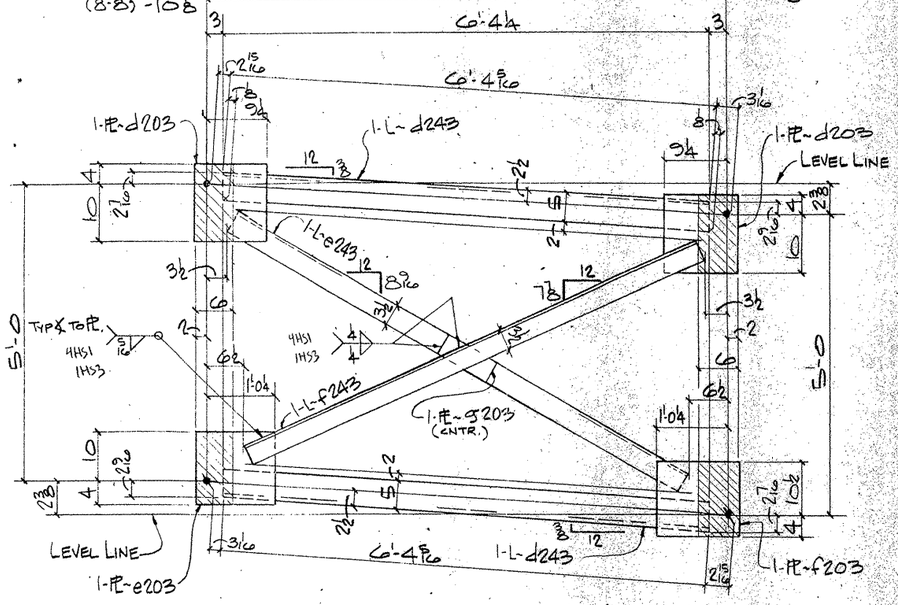

ONE - DIAFRAM ~ 243D2

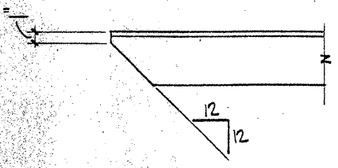

TYP. CLIP ON ALL OUTSTANDING ANGLE LEGS

NOTES:

1. FOR GENERAL NOTES SEE SHT. GN1
2. ▨ INDICATES OIL, NO PAINT (N.S./F.S. & EDGES)

F0209

FED. ROAD DIV. NO.	STATE	FEDERAL AID PROJECT NO.				
6	TX.	NH 92(50)M				
STATE DIST. NO.	COUNTY	CONTROL NO.	SECTION NO.	JOB NO.	HIGHWAY NO.	
21	HIDALGO	39	17	97	83/281	

BILL OF MATERIAL

	Only	Material	Length	Mark Temp	Mark Ship	Wt.	Cut From	Remarks
1								
2								
3	ONE	DIAFRAM			243D1			
4	2	L 5x3½x½	6'-1⅞	a243			215-5	
5	ONE	L 5x3½x½	7'-1¾	b243			215-9	
6	ONE	L 5x3½x½	6'-7 11/16	c243			215-9	
7	2	PL ½x11¼	1'-2	d203			215-10	
8	ONE	PL ½x14	1'-2¼	e203			215-11	
9	ONE	PL ½x14¼	1'-2½	f203			215-12	
10	ONE	FL ½x3½	0'-9	g203			215-13	
11								
12								
13								
14								
15								
16								
17								
18								
19								
20								
21								
22								
23	ONE	DIAFRAM			243D2			
24	2	L 5x3½x½	6'-4 11/16	d243			215-4	
25	ONE	L 5x3½x½	7'-2¼	e243			215-8	
26	ONE	L 5x3½x½	7'-0 11/16	f243			215-8	
27	2	PL		d203				
28	ONE	PL		e203				
29	ONE	PL		f203				
30	ONE	FL		g203				
31								
32								
33								
34								
35								
36								
37								
38	ONE	DIAFRAM			243D3			
39	2	L 5x3½x½	6'-3 11/16	g243			215-4	
40	ONE	L 5x3½x½	7'-1 11/16	h243			215-8	
41	ONE	L 5x3½x½	6'-11 5/16	k243			215-8	
42	2	PL		d203				
43	ONE	PL		e203				
44	ONE	PL		f203				
45	ONE	FL		g203				
46								
47								
48								
49								
50								
51								
52		TEXAS DEPARTMENT OF TRANSPORTATION APPROVED DIVISION OF BRIDGES AND STRUCTURES FEB 11 1993						
53								
54								
55		FOR APPROVAL JAN 22 '93						
56								
57								
58		APPROVAL OF THIS DRAWING DOES NOT RELIEVE THE CONTRACTOR OF THE RESPONSIBILITY FOR THE CORRECTNESS OF DETAIL. FOR CONSTRUCTION						
59								
60								

REVISION	DATE	DESCRIPTION OF REVISION
NO. 1		
NO. 2		
NO. 3		
NO. 4		
NO. 5		

PRINTING Req'd	For	Date

Bolts Holes 15/16ø Unless Noted
Shop Paint SEE SHT GN1
Fab. Spec. A36 Inspection
Architect
Erection By Field Connections

HIRSCHFELD STEEL CO. INC.
112 WEST 29TH SAN ANGELO TEXAS 76903
PHONE (915) 653-3211

DESCRIPTION 645'-0 PLATE GIRDER UNIT
STRUCTURE US 83/281 INTERCHANGE RAMP #4
LOCATION HIDALGO COUNTY
CUSTOMER GILBERT TEXAS CONSTRUCTION
SHIP TO
Customer's Order No.
Dwg. By JBR Date 10/92
Checked By JC Date 11-92

SHEET 243 OF
JOB NO 92-109

CE92-14

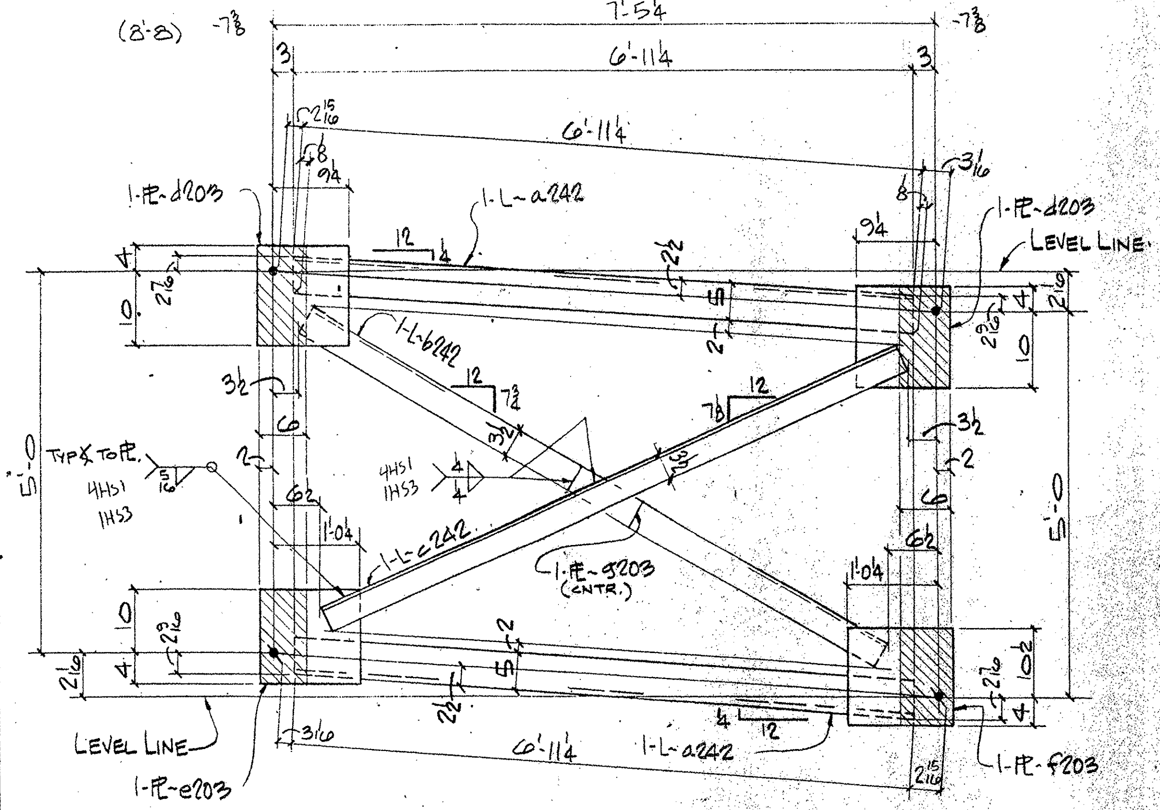

27 - DIAFRAMS - 242D1

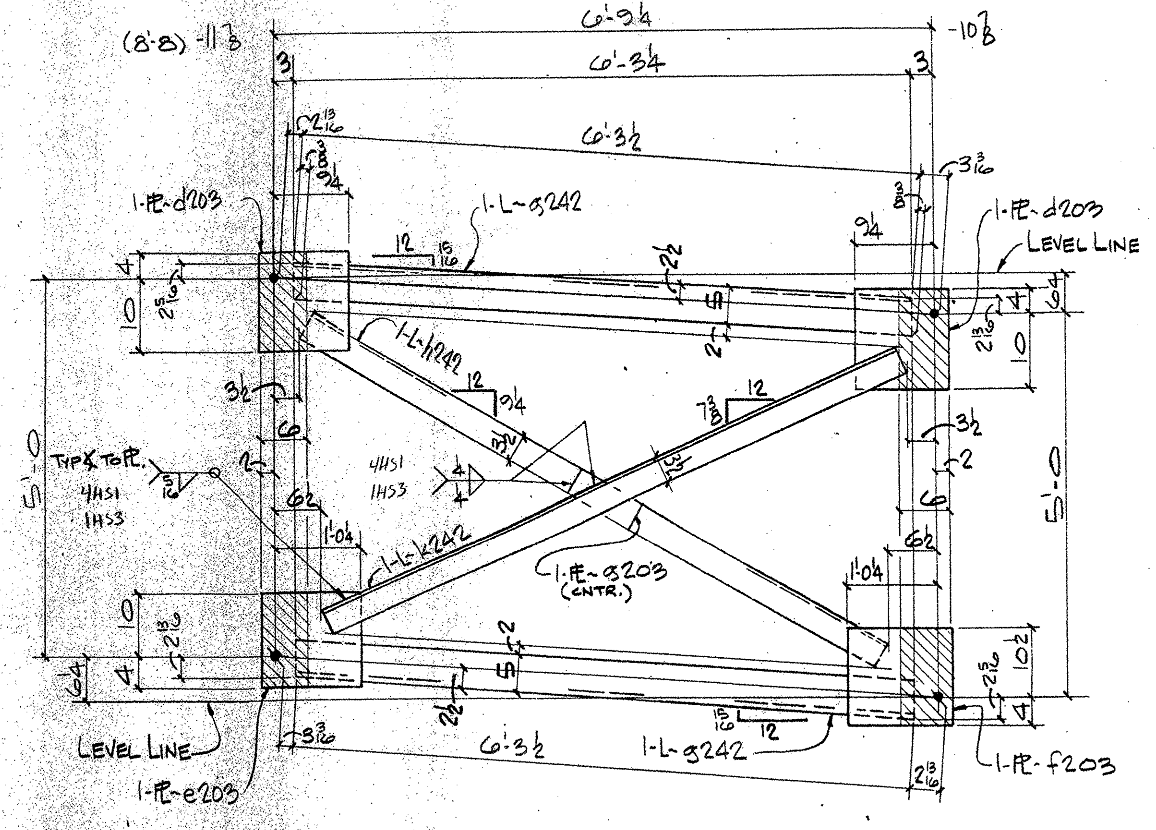

ONE - DIAFRAM ~ 242D3

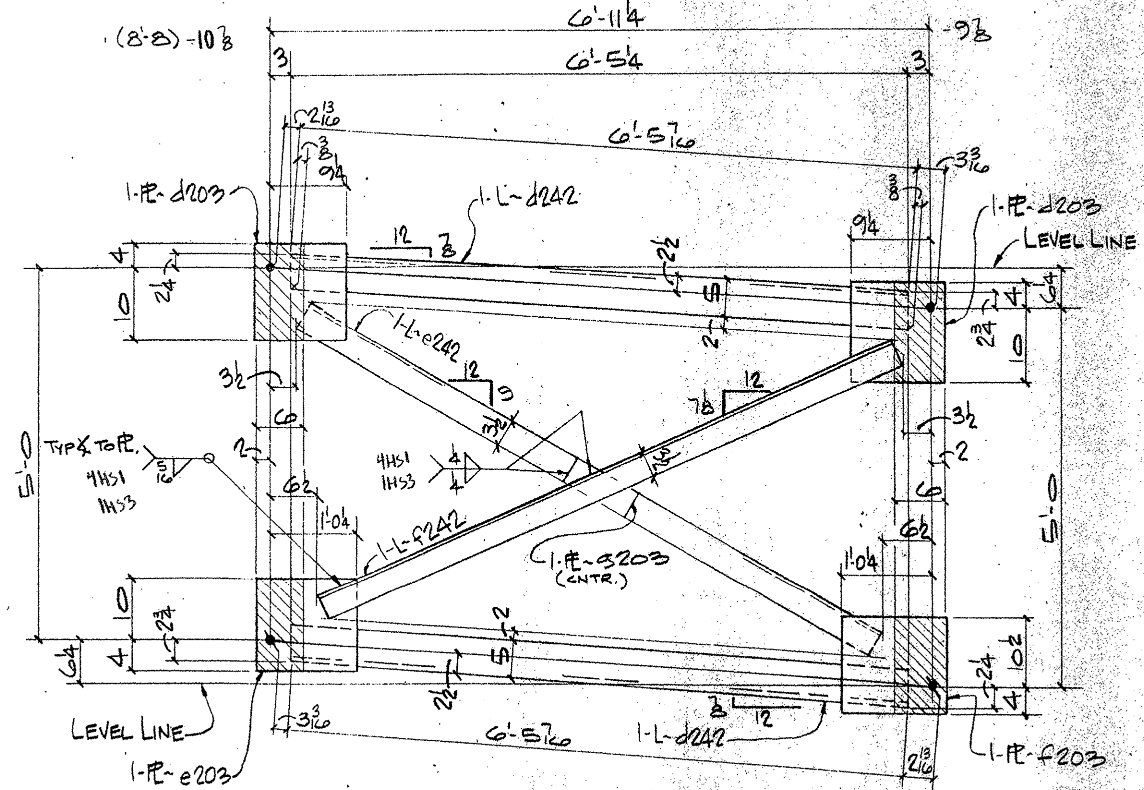

ONE - DIAFRAM ~ 242D2

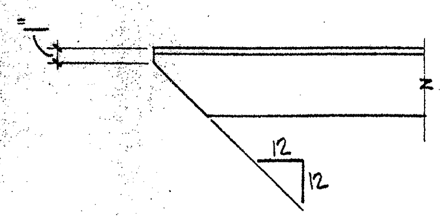

TYP. CLIP ON ALL OUTSTANDING ANGLE LEGS

NOTES:
1. FOR GENERAL NOTES SEE SHT. GN1
2. ▨ INDICATES OIL, NO PAINT (N.S./F.S. & EDGES)

BILL OF MATERIAL

	Qnty.	Material	Length	Mark Temp	Mark Ship.	Wt.	Cut From	Remarks
1								
2								
3	27	DIAFRAM			242D1			
4	54	L5x3½x½	6'-11 3/8	a242			215-2	
5	27	L5x3½x½	7'-8	b242			215-6	
6	27	L5x3½x½	7'-6 3/16	c242			215-6	
7	54	PL½x11¼	1'-2	d203			215-10	
8	27	PL½x14	1'-2¼	e203			215-11	
9	27	PL½x14¼	1'-2½	f203			215-12	
10	27	FL½x3½	0'-9	g203			215-13	
11								
12								
13								
14								
15								
16								
17								
18								
19								
20								
21								
22								
23	ONE	DIAFRAM			242D2			
24	2	L5x3½x½	6'-5 13/16	d242			215-3	
25	ONE	L5x3½x½	7'-4 15/16	e242			215-7	
26	ONE	L5x3½x½	6'-11 1/8	f242			215-7	
27	2	PL		d203				
28	ONE	PL		e203				
29	ONE	PL		f203				
30	ONE	FL		g203				
31								
32								
33								
34								
35								
36								
37								
38	ONE	DIAFRAM			242D3			
39	2	L5x3½x½	6'-3 7/8	g242			215-4	
40	ONE	L5x3½x½	7'-3 5/16	h242			215-8	
41	ONE	L5x3½x½	6'-9 7/16	k242			215-8	
42	2	PL		d203				
43	ONE	PL		e203				
44	ONE	PL		f203				
45	ONE	FL		g203				
46								
47								
48								
49								
50								
51								
52								
53								
54								
55								
56								
57								
58								
59								
60								

TEXAS DEPARTMENT OF TRANSPORTATION
APPROVED
DIVISION OF BRIDGES AND STRUCTURES
FEB 11 1993
APPROVAL OF THIS DRAWING DOES NOT RELIEVE THE CONTRACTOR OF THE RESPONSIBILITY FOR THE CORRECTNESS OF DETAIL

FOR APPROVAL
JAN 22 '93
NOT FOR CONSTRUCTION

REVISION	DATE	DESCRIPTION OF REVISION
NO 1		
NO. 2		
NO. 3		
NO 4		
NO 5		

PRINTING — Req'd | For | Date

Bolts — Holes: 15/16 φ Unless Noted
Shop Paint SEE SHT GN1
Fab. Spec A36 — Inspection
Architect
Erection By — Field Connections

HIRSCHFELD STEEL CO. INC.
112 WEST 29TH SAN ANGELO, TEXAS 76903
PHONE (915) 653-3211

DESCRIPTION	645'-0 PLATE GIRDER UNIT
STRUCTURE	US 83/281 INTERCHANGE RAMP #4
LOCATION	HIDALGO COUNTY
CUSTOMER	GILBERT TEXAS CONSTRUCTION
SHIP TO	
Customer's Order No	SHEET 242 OF
Dwg. By JRC — Date 10/92	
Checked By JC — Date 11-92	JOB NO. 92-109

APV JAN 22

F0209

FED. ROAD DIV. NO.	STATE	FEDERAL AID PROJECT NO.			
6	TX.	NH 92(50)M			
STATE DIST. NO.	COUNTY	CONTROL NO.	SECTION NO.	JOB NO.	HIGHWAY NO.
21	HIDALGO	39	17	97	83/281

CE 92-14

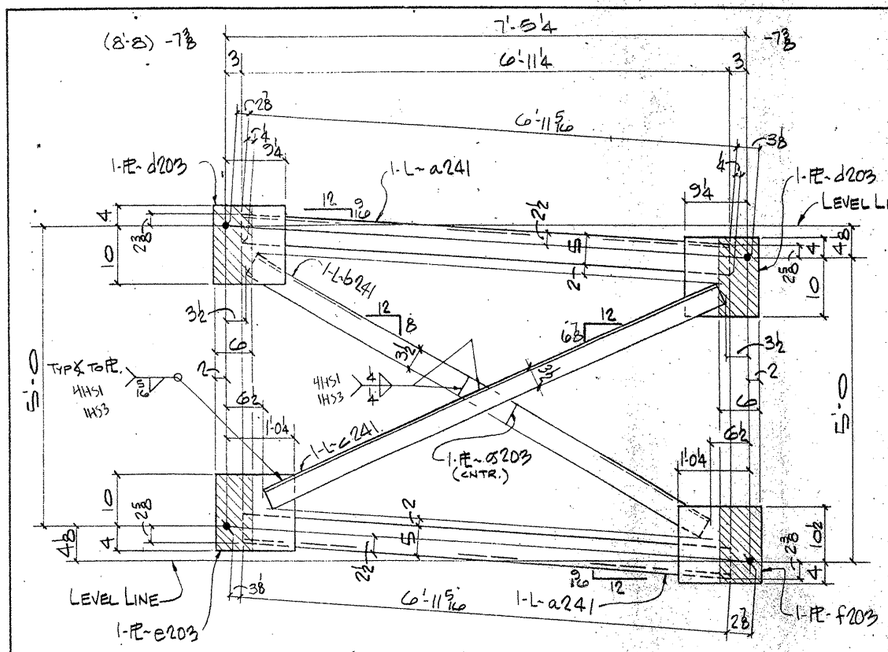

3 - DIAFRAMS ~ 241D1

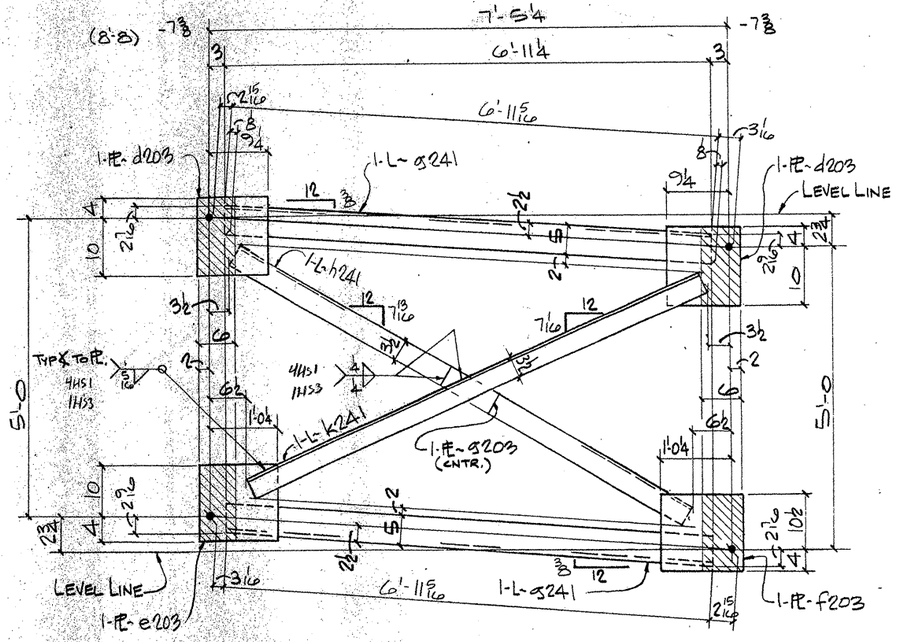

3 - DIAFRAMS ~ 241D3

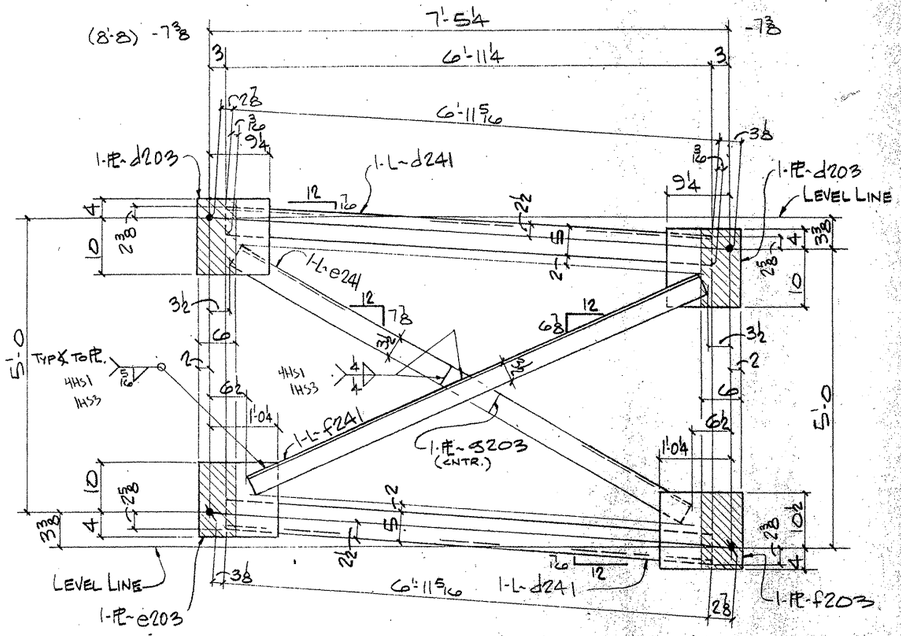

3 - DIAFRAMS ~ 241D2

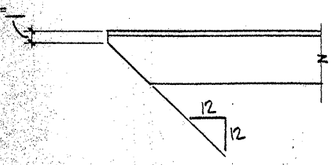

TYP. CLIP ON ALL OUTSTANDING ANGLE LEGS

NOTES:

1. FOR GENERAL NOTES SEE SHT. GN1
2. ▨ INDICATES OIL, NO PAINT (N.S./F.S. & EDGES)

F0209

FED. ROAD DIV. NO.	STATE	FEDERAL AID PROJECT NO.				
6	TX.	NH 92(50)M				
STATE DIST. NO.	COUNTY	CONTROL NO.	SECTION NO.	JOB NO.	HIGHWAY NO.	
21	HIDALGO	39	17	97	83/281	

APV JRE 2 2

BILL OF MATERIAL

	Qnty	Material	Length	Mark Temp.	Mark Ship.	Wt.	Cut From	Remarks
1								
2								
3	3	DIAFRAMS			241D1			
4	6	L 5x3½x½	6'-11 9/16	a241			215-2	
5	3	L 5x3½x½	7'-8 9/16	b241			215-6	
6	3	L 5x3½x½	7'-5¼	c241			215-6	
7	6	PL ½ x 11¼	1'-2	d203			215-10	
8	3	PL ½ x 14	1'-2¼	e203			215-11	
9	3	PL ½ x 14 1/4	1'-2½	f203			215-12	
10	3	FL ½ x 3½	0'-9	g203			215-13	
11								
12								
13								
14								
15								
16								
17								
18								
19								
20								
21								
22								
23	3	DIAFRAMS			241D2			
24	6	L 5x3½x½	6'-11½	d241			215-2	
25	3	L 5x3½x½	7'-8 9/16	e241			215-6	
26	3	L 5x3½x½	7'-5 5/8	f241			215-6	
27	6	PL		d203				
28	3	PL		e203				
29	3	PL		f203				
30	3	FL		g203				
31								
32								
33								
34								
35								
36								
37								
38	3	DIAFRAMS			241D3			
39	6	L 5x3½x½	6'-11 5/16	g241			215-2	
40	3	L 5x3½x½	7'-8 5/16	h241			215-6	
41	3	L 5x3½x½	7'-5⅜	k241			215-6	
42	6	PL		d203				
43	3	PL		e203				
44	3	PL		f203				
45	3	PL		g203				
46								
47								
48								
49								
50								
51								
52								
53								
54								
55								
56								
57								
58								
59								
60								

TEXAS DEPARTMENT OF TRANSPORTATION
APPROVED
DIVISION OF BRIDGES AND STRUCTURES
FEB 11 1993

APPROVAL OF THIS DRAWING DOES NOT RELIEVE THE CONTRACTOR OF THE RESPONSIBILITY FOR THE CORRECTNESS OF DETAIL.

FOR APPROVAL
JAN 22 '93
NOT FOR CONSTRUCTION

REVISION	DATE	DESCRIPTION OF REVISION
NO. 1		
NO. 2		
NO. 3		
NO. 4		
NO. 5		

PRINTING Read	For	Date

Bolts Holes: 15/16ø Unless Noted
Shop Paint SEE SHT GN1
Fab Spec A36 Inspection
Architect
Erection By Field Connections

HIRSCHFELD STEEL CO. INC.
112 WEST 29TH SAN ANGELO, TEXAS 76903
PHONE (915) 653-3211

DESCRIPTION 645'-0 PLATE GIRDER UNIT
STRUCTURE DS 83/281 INTERCHANGE RAMP "A"
LOCATION HIDALGO COUNTY
CUSTOMER GILBERT TEXAS CONSTRUCTION
SHIP TO
Customer's Order No.
Dwg. By JRE Date 10/92
Checked By JC Date 11-92

SHEET 24 OF
JOB NO. 92-109

CE92-14

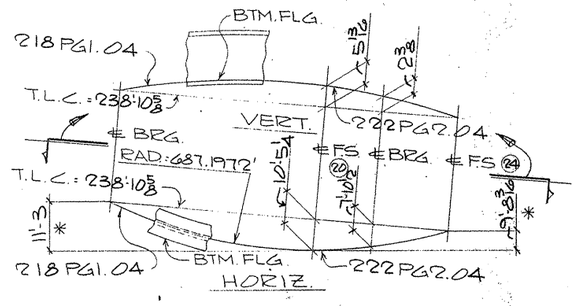

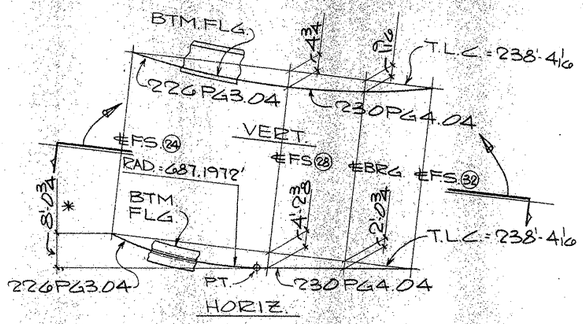

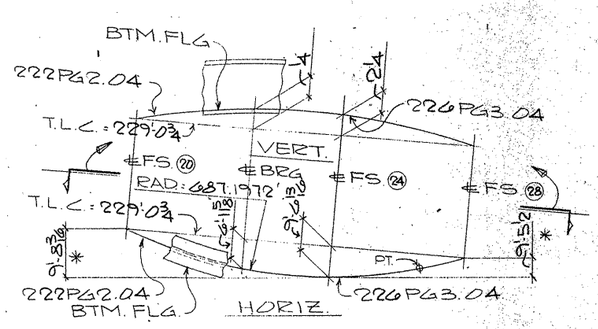

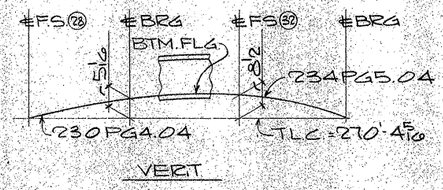

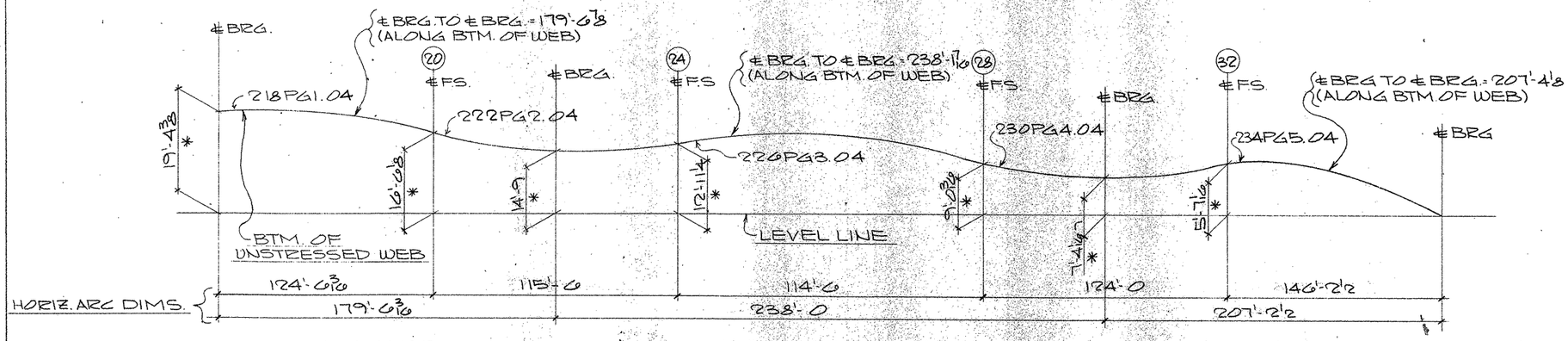

VERTICAL BLOCKING DIAGRAM
(LINE "4")

TEXAS DEPARTMENT OF TRANSPORTATION
APPROVED ~~SUBJECT TO NOTES~~
DIVISION OF BRIDGES AND STRUCTURES
FEB 11 1993
APPROVAL OF THIS DRAWING DOES NOT RELIEVE THE CONTRACTOR OF THE RESPONSIBILITY FOR THE CORRECTNESS OF DETAIL.

FOR APPROVAL
JAN 22 '93
NOT FOR CONSTRUCTION

NOTES:
1. T.L.C.= TRUE LENGTH CHORD.
2. DIMENSIONS ARE GIVEN ALONG OR NORMAL TO THE TRUE LENGTH CHORD UNL. NTD.
3. DIMENSIONS NOTED "*" ARE GIVEN ALONG OR NORMAL TO THE LEVEL LINE.
4. FOR GENERAL NOTES SEE SHT. GN1.

APV JAN 22

FED. ROAD DIV. NO.	STATE	FEDERAL AID PROJECT NO.			
6	TX.	NH 92(50)M			
STATE DIST. NO.	COUNTY	CONTROL NO.	SECTION NO.	JOB NO.	HIGHWAY NO.
21	HIDALGO	39	17	97	83/281

G0209

HOLES ____ U.N.	FOR AP'VL ____		
BOLTS ____ U.N.	RETURNED ____		
WELDS ____ U.N.	TO SHOP ____		
PAINT ____			

REVISIONS		
NO.	DATE	REMARKS
1		
2		
3		
4		

HIRSCHFELD STEEL CO. INC.
112 WEST 29TH SAN ANGELO, TEXAS 76903
PHONE (915) 653-3211

CUSTOMER GILBERT TEXAS CONSTRUCTION
ARCHITECT
PROJECT US 83/281 INTERCHANGE RAMP "4 UNIT 5.
LOCATION HIDALGO COUNTY

DRAWN CRT DATE 10-92 | JOB NO 92-109 | SHEET NO 240 of
CHECKED JC DATE 11-92

CE-92-14 (LINE "4")

a b c d e f g h i j k l m n o p q r s t u v w x y z

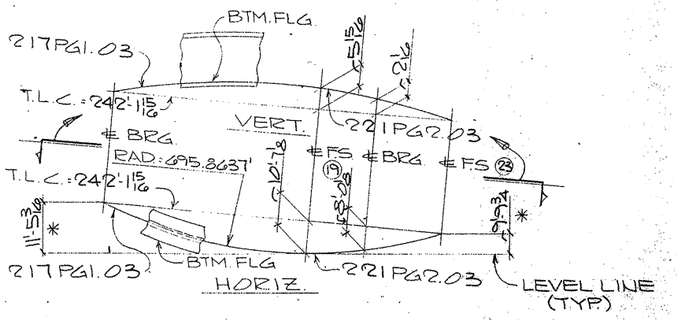

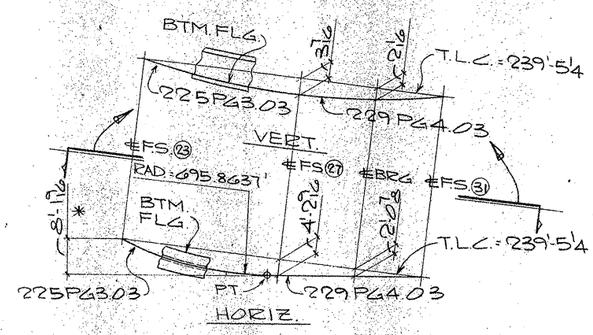

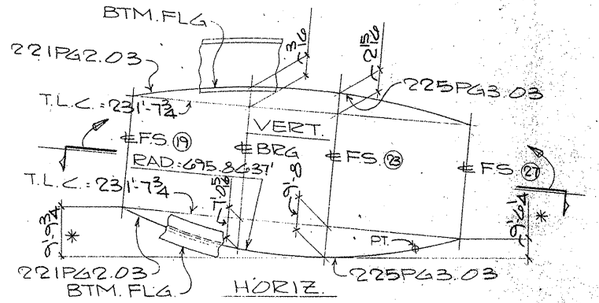

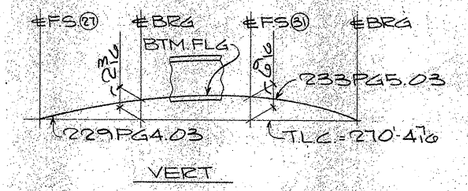

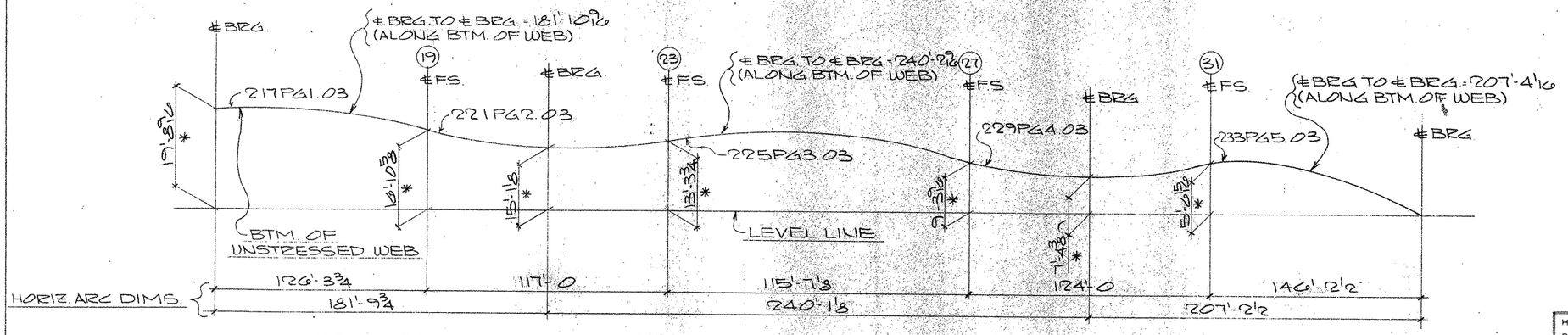

VERTICAL BLOCKING DIAGRAM
(LINE # 3)

TEXAS DEPARTMENT OF TRANSPORTATION
APPROVED ~~EXCEPTIONS NOTED~~
DIVISION OF BRIDGES AND STRUCTURES
FEB 11 1993
APPROVAL OF THIS DRAWING DOES NOT RELIEVE THE CONTRACTOR OF THE RESPONSIBILITY FOR THE CORRECTNESS OF DETAIL.

FOR APPROVAL
JAN 22 '93
NOT FOR CONSTRUCTION

NOTES:
1. T.L.C.= TRUE LENGTH CHORD.
2. DIMENSIONS ARE GIVEN ALONG OR NORMAL TO THE TRUE LENGTH CHORD UNL. NTD.
3. DIMENSIONS NOTED "*" ARE GIVEN ALONG OR NORMAL TO THE LEVEL LINE.
4. FOR GENERAL NOTES SEE SHT. GN1.

G0209

FED. ROAD DIV. NO.	STATE	FEDERAL AID PROJECT NO.			
6	TX.	NH 92(50)M			
STATE DIST. NO.	COUNTY	CONTROL NO.	SECTION NO.	JOB NO.	HIGHWAY NO.
21	HIDALGO	39	17	97	83/281

HOLES ____ U.N.	FOR AP'VL. ____
BOLTS ____ U.N.	RETURNED ____
WELDS ____ U.N.	TO SHOP ____
PAINT ____	

REVISIONS		
NO.	DATE	REMARKS
1		
2		
3		
4		

APV JAN 22

HIRSCHFELD STEEL CO. INC.
112 WEST 29TH SAN ANGELO, TEXAS 76903
PHONE (915) 653-3211

CUSTOMER GILBERT TEXAS CONSTRUCTION
ARCHITECT
PROJECT US 83/281 INTERCHANGE RAMP #4
LOCATION HIDALGO COUNTY

DRAWN CET DATE 10-92 | JOB NO. 92-109 | SHEET NO. 239 of
CHECKED JG DATE 11-92

CE92-14 (LINE # 3)

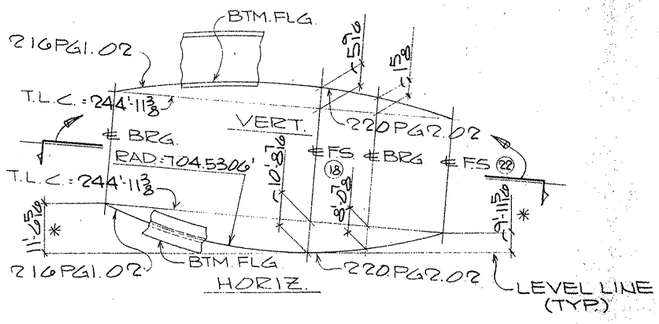

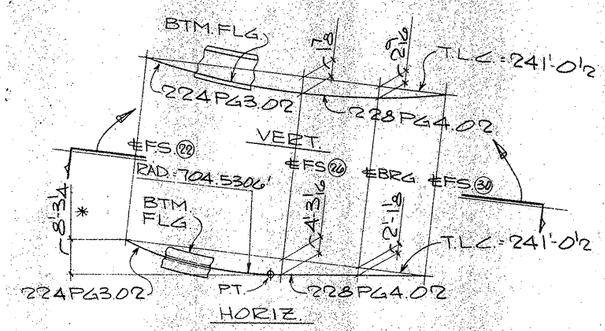

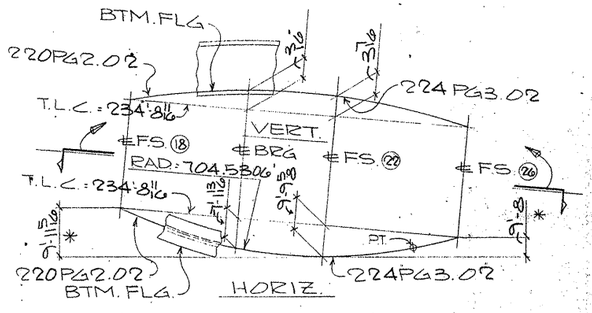

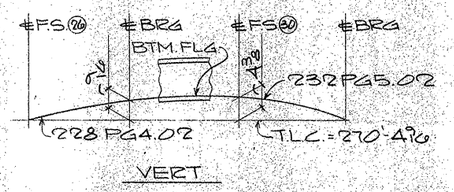

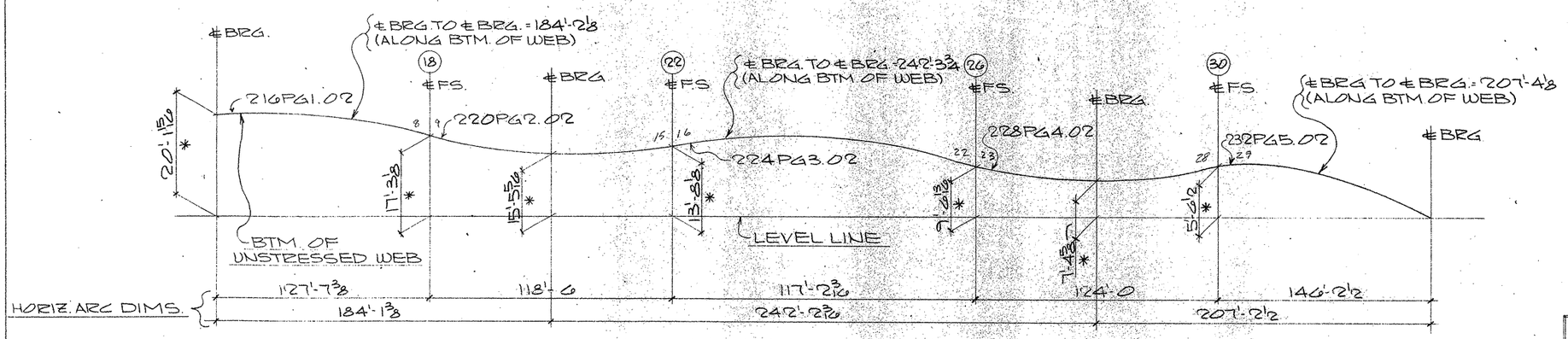

VERTICAL BLOCKING DIAGRAM
(LINE * 2)

60209

FED. ROAD DIV. NO.	STATE	FEDERAL AID PROJECT NO.			
6	TX.	NH 92(50)M			
STATE DIST. NO.	COUNTY	CONTROL NO.	SECTION NO.	JOB NO.	HIGHWAY NO.
21	HIDALGO	39	17	97	83/281

TEXAS DEPARTMENT OF TRANSPORTATION
APPROVED ~~UNDER CONTRACT NO.~~
DIVISION OF BRIDGES AND STRUCTURES
FEB 11 1993
APPROVAL OF THIS DRAWING DOES NOT RELIEVE THE CONTRACTOR OF THE RESPONSIBILITY FOR THE CORRECTNESS OF DETAIL.

FOR APPROVAL
JAN 22 '93
NOT FOR CONSTRUCTION

NOTES:
1. T.L.C.= TRUE LENGTH CHORD.
2. DIMENSIONS ARE GIVEN ALONG OR NORMAL TO THE TRUE LENGTH CHORD UNL. NTD.
3. DIMENSIONS NOTED * ARE GIVEN ALONG OR NORMAL TO THE LEVEL LINE.
4. FOR GENERAL NOTES SEE SHT. GN1.

APV. JAN 22

HOLES ____ U.N.	FOR APVL.
BOLTS ____ U.N.	RETURNED
WELDS ____ U.N.	TO SHOP
PAINT	

REVISIONS		
NO.	DATE	REMARKS
1		
2		
3		
4		

HIRSCHFELD STEEL CO. INC.
112 WEST 29TH SAN ANGELO, TEXAS 76903
PHONE (915) 653-3211

CUSTOMER GILBERT TEXAS CONSTRUCTION
ARCHITECT
PROJECT US 83/281 INTERCHANGE RAMP #4
LOCATION HIDALGO COUNTY

DRAWN CRT DATE 10-92	JOB NO 92-109	SHEET NO 238 of ____
CHECKED JC DATE 11-92		

CE92-14 (LINE * 2)

a b c d e f g h i j k l m n o p q r s t u v w x y z

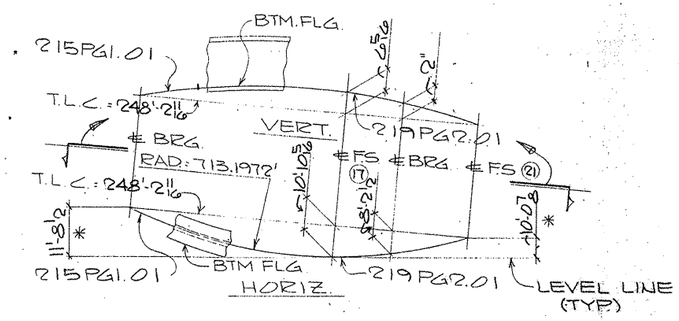

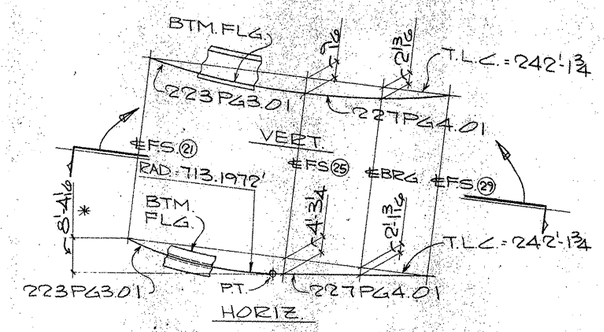

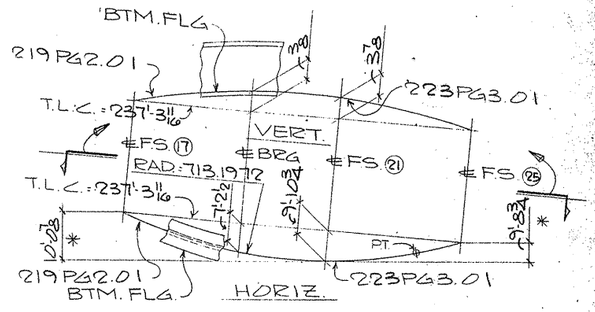

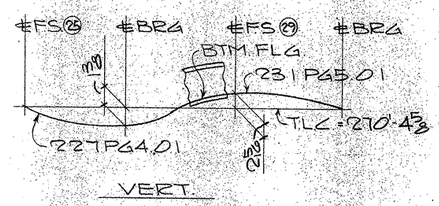

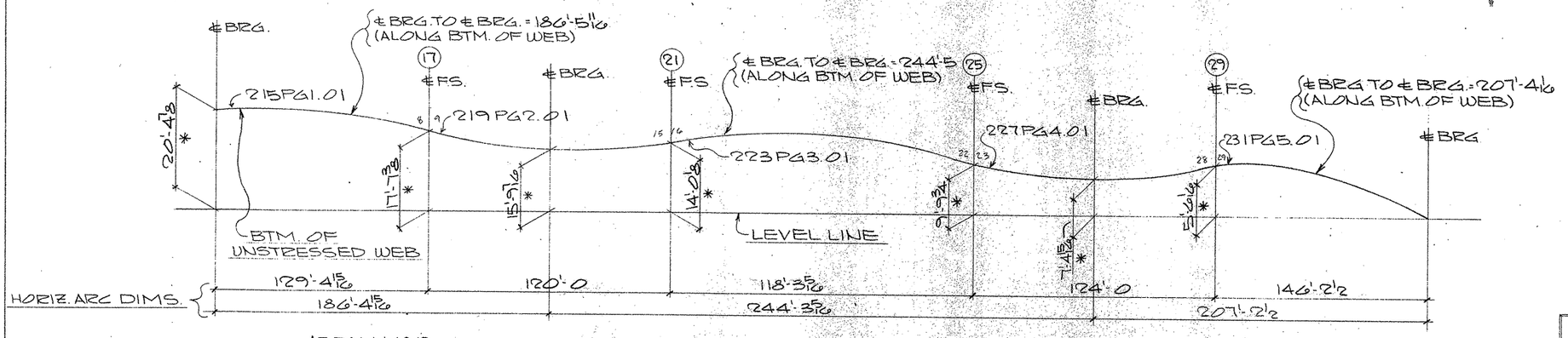

VERTICAL BLOCKING DIAGRAM
(LINE* 1)

TEXAS DEPARTMENT OF TRANSPORTATION
APPROVED
DIVISION OF BRIDGES AND STRUCTURES
FEB 11 1993
APPROVAL OF THIS DRAWING DOES NOT RELIEVE THE CONTRACTOR OF THE RESPONSIBILITY FOR THE CORRECTNESS OF DETAIL.

FOR APPROVAL
JAN 22 '93
NOT FOR CONSTRUCTION

NOTES:
1. T.L.C.= TRUE LENGTH CHORD.
2. DIMENSIONS ARE GIVEN ALONG OR NORMAL TO THE TRUE LENGTH CHORD UNL. NTD.
3. DIMENSIONS NOTED "*" ARE GIVEN ALONG OR NORMAL TO THE LEVEL LINE.
4. FOR GENERAL NOTES SEE SHT. GN1.

FED. ROAD DIV. NO.	STATE	FEDERAL AID PROJECT NO.			
6	TX.	NH 92(50)M			
STATE DIST. NO.	COUNTY	CONTROL NO.	SECTION NO.	JOB NO.	HIGHWAY NO.
21	HIDALGO	39	17	97	83/281

G0209

HOLES ____ U.N.	FOR AP'VL		
BOLTS ____ U.N.	RETURNED		
WELDS ____ U.N.	TO SHOP		
PAINT			

REVISIONS		
NO.	DATE	REMARKS
1		
2		
3		
4		

APV JAN 22

HIRSCHFELD STEEL CO. INC.
112 WEST 29TH SAN ANGELO. TEXAS 76903
PHONE (915) 653-3211

CUSTOMER GILBERT TEXAS CONSTRUCTION
ARCHITECT
PROJECT US 83/281 INTERCHANGE RAMP *4
LOCATION HIDALGO COUNTY

DRAWN CRT DATE 10/92	JOB NO 92-109	SHEET NO 237 of ____
CHECKED JC DATE 11-92		

CE92-14 (LINE* 1)

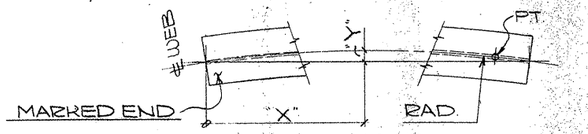

HEAT CURVE DIAGRAM
(ALONG TOP FLG.)

THIS SHEET NOT
DETAIL CHECKED

GIRDER MK	VARIABLES													RADIUS
223PG3.01	"X"	8'-9 1/16	18'-9 1/16	28'-9 1/16	38'-9 1/16	48'-9 1/16	58'-9 1/16	68'-9 1/16	78'-9 1/16	88'-9 1/16	98'-9 1/16	108'-9 1/16	118'-2 1/2	713.1972'
	"Y"	8/16	1'-3 5/8	1'-9 1/2	2'-1 3/4	2'-4 1/4	2'-5 1/16	2'-4 1/4	2'-1 3/4	1'-9 1/2	1'-3 5/8	8/16	0"	
224PG3.02	"X"	8'-2 7/16	18'-2 7/16	28'-2 7/16	38'-2 7/16	48'-2 7/16	58'-2 7/16	68'-2 7/16	78'-2 7/16	88'-2 7/16	98'-2 7/16	108'-2 7/16	117'-1 3/8	704.5306'
	"Y"	7/16	1'-3 1/4	1'-9 1/4	2'-1 1/2	2'-4 1/16	2'-4 3/8	2'-4 1/16	2'-1 1/2	1'-9 1/4	1'-3 1/4	7/16	0"	
225PG3.03	"X"	7'-4 7/8	17'-4 7/8	27'-4 7/8	37'-4 7/8	47'-4 7/8	57'-4 7/8	67'-4 7/8	77'-4 7/8	87'-4 7/8	97'-4 7/8	107'-4 7/8	115'-6 1/4	695.8637'
	"Y"	6 7/8	1'-2 5/8	1'-8 1/16	2'-1	2'-3 5/8	2'-4 7/16	2'-3 5/8	2'-1	1'-8 1/16	1'-2 5/8	6 7/8	0"	
226PG3.04	"X"	6'-10 1/4	16'-10 1/4	26'-10 1/4	36'-10 1/4	46'-10 1/4	56'-10 1/4	66'-10 1/4	76'-10 1/4	86'-10 1/4	96'-10 1/4	106'-10 1/4	114'-5 3/8	687.1972'
	"Y"	6 7/16	1'-2 5/16	1'-8 7/16	2'-0 3/4	2'-3 3/8	2'-4 1/4	2'-3 3/8	2'-0 3/4	1'-8 7/16	1'-2 5/16	6 7/16	0"	

NOTE:
FOR GENERAL NOTES SEE SEE GN1

TEXAS DEPARTMENT OF TRANSPORTATION
APPROVED EXCEPT AS NOTED
DIVISION OF BRIDGES AND STRUCTURES

FEB 11 1993

APPROVAL OF THIS DRAWING DOES NOT RELIEVE THE CONTRACTOR OF THE RESPONSIBILITY FOR THE CORRECTNESS OF DETAIL

FOR APPROVAL
JAN 22 '93
NOT FOR CONSTRUCTION

THIS SHEET NOT
DETAIL CHECKED

APV JAN 22

HOLES ____ U.N.	FOR AP'VL		
BOLTS ____ U.N.	RETURNED		
WELDS ____ U.N.	TO SHOP		
PAINT			

REVISIONS		
NO.	DATE	REMARKS
1		
2		
3		
4		

HIRSCHFELD STEEL CO. INC.
112 WEST 29TH SAN ANGELO, TEXAS 76903
PHONE (915) 653-3211

CUSTOMER GILBERT TEXAS CONSTRUCTION
ARCHITECT
PROJECT US 83/281 INTERCHANGE RAMP #4
LOCATION HIDALGO COUNTY

DRAWN CRT DATE 10-92 | JOB NO. 92-109 | SHEET NO. 236 of ____
CHECKED JC DATE 11-92

G0209

FED. ROAD DIV. NO.	STATE	FEDERAL AID PROJECT NO.			
6	TX.	NH 92(50)M			
STATE DIST. NO.	COUNTY	CONTROL NO.	SECTION NO.	JOB NO.	HIGHWAY NO.
21	HIDALGO	39	17	97	83/281

a b c d e f g h i j k l m n o p q r s t u v w x y z

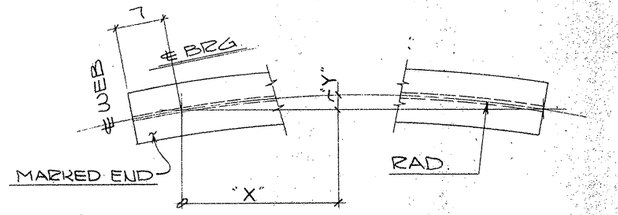

HEAT CURVE DIAGRAM
(ALONG TOP FLG.)

THIS SHEET NOT
DETAIL CHECKED

GIRDER MK		VARIABLES													RADIUS
215PG1.01	"X"	4'-7 7/16	14'-7 7/16	24'-7 7/16	34'-7 7/16	44'-7 7/16	54'-7 7/16	64'-7 7/16	74'-7 7/16	84'-7 7/16	94'-7 7/16	104'-7 7/16	114'-7 7/16	124'-7 7/16	127'-3 3/8	713.1972'
	"Y"	4 3/8	1'-2 1/8	1'-9 3/4	2'-3 5/8	2'-7 3/8	2'-10 3/8	2'-11 3/16	2'-10 3/8	2'-7 3/8	2'-3 5/8	1'-9 3/4	1'-2 1/8	4 3/8	0"	
216PG1.02	"X"	3'-8 13/16	13'-8 13/16	23'-8 13/16	33'-8 13/16	43'-8 13/16	53'-8 13/16	63'-8 13/16	73'-8 13/16	83'-8 13/16	93'-8 13/16	103'-8 13/16	113'-8 13/16	123'-8 13/16	127'-5 5/8	704.5306'
	"Y"	3 5/16	1'-1 3/8	1'-9	2'-3	2'-7 1/4	2'-9 13/16	2'-10 11/16	2'-9 13/16	2'-7 1/4	2'-3	1'-9	1'-1 3/8	3 5/16	0"	
217PG1.03	"X"	3'-1	13'-1	23'-1	33'-1	43'-1	53'-1	63'-1	73'-1	83'-1	93'-1	103'-1	113'-1	123'-1	126'-2	695.8637'
	"Y"	3 5/16	1'-0 13/16	1'-8 1/16	2'-2 5/8	2'-6 15/16	2'-9 1/2	2'-10 3/8	2'-9 1/2	2'-6 15/16	2'-2 5/8	1'-8 1/16	1'-0 13/16	3 5/16	0"	
218PG1.04	"X"	2'-2 1/4	12'-2 1/4	22'-2 1/4	32'-2 1/4	42'-2 1/4	52'-2 1/4	62'-2 1/4	72'-2 1/4	82'-2 1/4	92'-2 1/4	102'-2 1/4	112'-2 1/4	122'-2 1/4	124'-4 7/16	687.1972'
	"Y"	2 5/16	1'-0	1'-7 3/8	2'-2	2'-6 5/16	2'-8 15/16	2'-9 13/16	2'-8 15/16	2'-6 5/16	2'-2	1'-7 3/8	1'-0	2 5/16	0"	

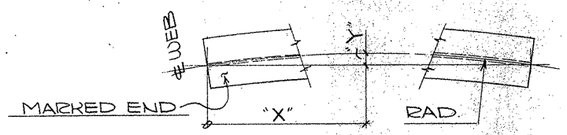

HEAT CURVE DIAGRAM
(ALONG TOP FLG.)

THIS SHEET NOT
DETAIL CHECKED

GIRDER MK		VARIABLES											RADIUS
219PG2.01	"X"	9'-11 7/16	19'-11 7/16	29'-11 7/16	39'-11 7/16	49'-11 7/16	59'-11 7/16	69'-11 7/16	79'-11 7/16	89'-11 7/16	99'-11 7/16	109'-11 7/16	119'-10 3/8	713.1972'
	"Y"	9 1/4	1'-4 3/8	1'-10 11/16	2'-2 15/16	2'-5 1/16	2'-6 5/8	2'-5 7/16	2'-2 15/16	1'-10 11/16	1'-4 3/8	9 1/4	0"	
220PG2.02	"X"	9'-2 7/16	19'-2 7/16	29'-2 7/16	39'-2 7/16	49'-2 7/16	59'-2 7/16	69'-2 7/16	79'-2 7/16	89'-2 7/16	99'-2 7/16	109'-2 7/16	118'-4 7/8	704.5306'
	"Y"	8 9/16	1'-4 1/4	1'-10 1/4	2'-2 1/2	2'-5 1/16	2'-5 7/8	2'-5 1/16	2'-2 1/2	1'-10 1/4	1'-4 1/4	8 9/16	0"	
221PG2.03	"X"	8'-5 7/16	18'-5 7/16	28'-5 7/16	38'-5 7/16	48'-5 7/16	58'-5 7/16	68'-5 7/16	78'-5 7/16	88'-5 7/16	98'-5 7/16	108'-5 7/16	116'-10 3/8	695.8637'
	"Y"	7 15/16	1'-3 1/16	1'-9 3/4	2'-2 1/16	2'-4 5/8	2'-5 1/2	2'-4 5/8	2'-2 1/16	1'-9 3/4	1'-3 1/16	7 15/16	0"	
222PG2.04	"X"	7'-8 7/16	17'-8 7/16	27'-8 7/16	37'-8 7/16	47'-8 7/16	57'-8 7/16	67'-8 7/16	77'-8 7/16	87'-8 7/16	97'-8 7/16	107'-8 7/16	115'-4 7/8	687.1972'
	"Y"	7 1/4	1'-3 3/8	1'-9 1/4	2'-1 5/8	2'-4 1/4	2'-5 1/8	2'-4 1/4	2'-1 5/8	1'-9 1/4	1'-3 3/8	7 1/4	0"	

NOTE:
FOR GENERAL NOTES SEE SHT. 6A

FOR APPROVAL

JAN 22 '93

TEXAS DEPARTMENT OF TRANSPORTATION
APPROVED EXCEPT AS NOTED NOT FOR CONSTRUCTION
DIVISION OF BRIDGES AND STRUCTURES

FEB 11 1993

APPROVAL OF THIS DRAWING DOES NOT RELIEVE THE CONTRACTOR OF THE RESPONSIBILITY FOR THE CORRECTNESS OF DETAIL

THIS SHEET NOT
DETAIL CHECKED

APV JAN 22

FED. ROAD DIV. NO.	STATE	FEDERAL AID PROJECT NO.			
6	TX.	NH 92(50)M			
STATE DIST. NO.	COUNTY	CONTROL NO.	SECTION NO.	JOB NO.	HIGHWAY NO.
21	HIDALGO	39	17	97	83/281

G0209

NO.	DATE	REMARKS
1		
2		
3		
4		

HOLES ____ U.N. | FOR AP'VL ____
BOLTS ____ U.N. | RETURNED ____
WELDS ____ U.N. | TO SHOP ____
PAINT ____

HIRSCHFELD STEEL CO. INC.
112 WEST 29TH SAN ANGELO, TEXAS 76903
PHONE (915) 653-3211

CUSTOMER GILBERT TEXAS CONSTRUCTION
ARCHITECT
PROJECT US 83/281 INTERCHANGE RAMP "4
LOCATION HIDALGO COUNTY

DRAWN CRT DATE 10-92
CHECKED JC DATE 11-92
JOB NO. 92-109
SHEET NO. 235 of ____

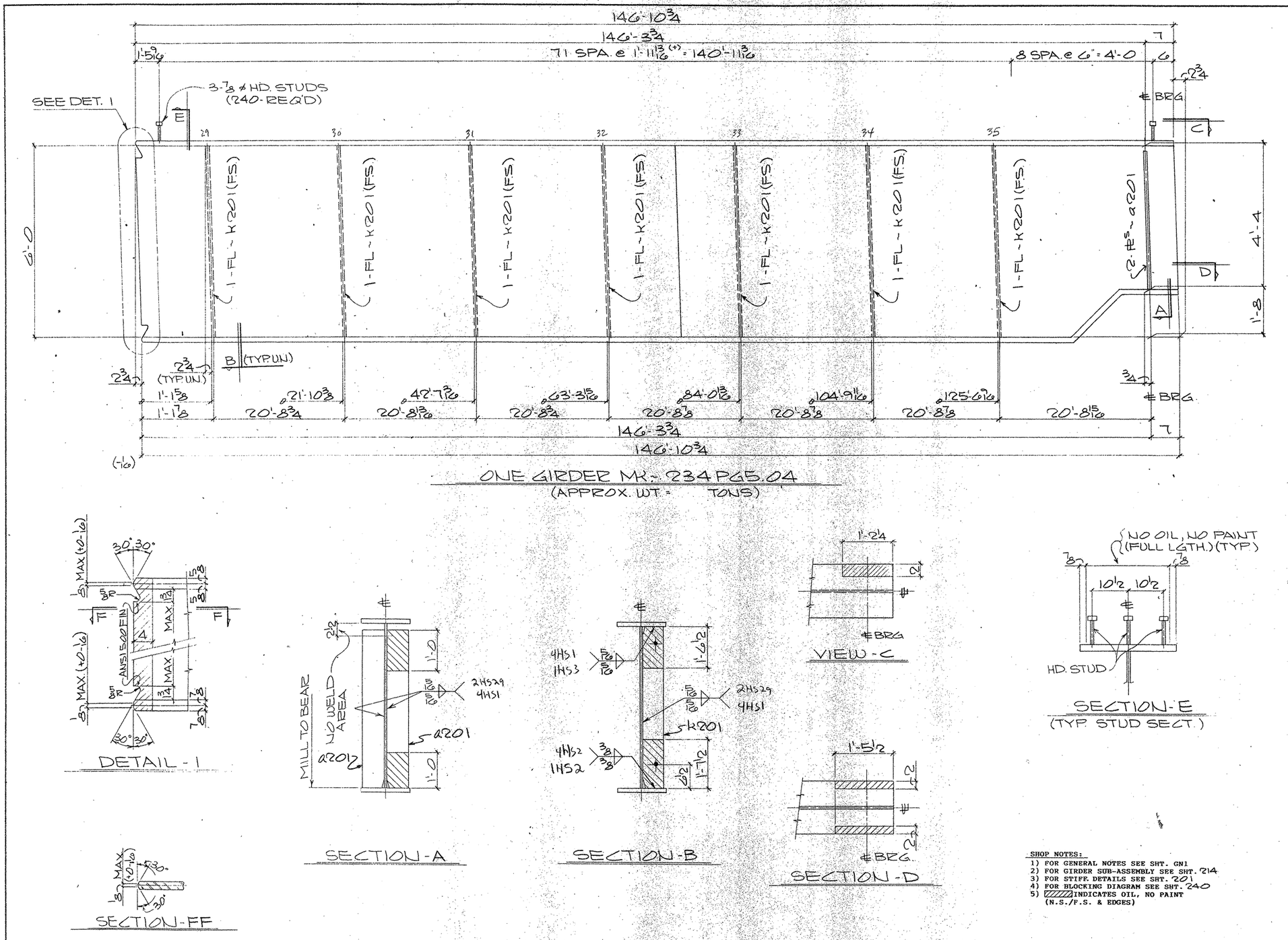

SHOP NOTES:
1) FOR GENERAL NOTES SEE SHT. GN1
2) FOR GIRDER SUB-ASSEMBLY SEE SHT. 214
3) FOR STIFF. DETAILS SEE SHT. 201
4) FOR BLOCKING DIAGRAM SEE SHT. 240
5) ▨ INDICATES OIL, NO PAINT (N.S./F.S. & EDGES)

BILL OF MATERIAL

Qnty	Material	Length	Mark Temp	Mark Ship	Wt.	Cut From	Remarks
1	GIRDER		234	PG5.04			
1	GIRDER SUB-ASSY		B214				
2	BRG STIFF		a201				
7	DIAF STIFF		K201				
240	HD STUD 7/8	0'-7				214-1	A108

TEXAS DEPARTMENT OF TRANSPORTATION
APPROVED
DIVISION OF BRIDGES AND STRUCTURES
FEB 11 1993
APPROVAL OF THIS DRAWING DOES NOT RELIEVE THE CONTRACTOR OF THE RESPONSIBILITY FOR THE CORRECTNESS OF DETAIL.

FOR APPROVAL
JAN 22 93
NOT FOR CONSTRUCTION

REVISION	DATE	DESCRIPTION OF REVISION
NO. 1		
NO. 2		
NO. 3		
NO. 4		
NO. 5		

PRINTING

Req'd	For	Date

Bolts 4 Holes 15/16 ø Unless Noted
Shop Paint SEE SHT GN1
Fab. Spec. AS NTD. Inspection
Architect
Erection By Field Connections

HIRSCHFELD STEEL CO. INC.
112 WEST 29TH SAN ANGELO, TEXAS 76903
PHONE (915) 653-3211

DESCRIPTION 645'-0 PLATE GIRDER UNIT
STRUCTURE US 83/281 INTERCHANGE RAMP #4
LOCATION HIDALGO COUNTY
CUSTOMER GILBERT TEXAS CONSTRUCTION
SHIP TO
Customer's Order No.
Dwg. By CRT Date 10/92
Checked By JC Date 11-92
SHEET 234 OF
JOB NO. 92-109

APV JAN 22

G0209

FED. ROAD DIV. NO.	STATE	FEDERAL AID PROJECT NO.			
6	TX.	NH 92(50)M			
STATE DIST. NO.	COUNTY	CONTROL NO.	SECTION NO.	JOB NO.	HIGHWAY NO.
21	HIDALGO	39	17	97	83/281

CE 92-14 (LINE #4)

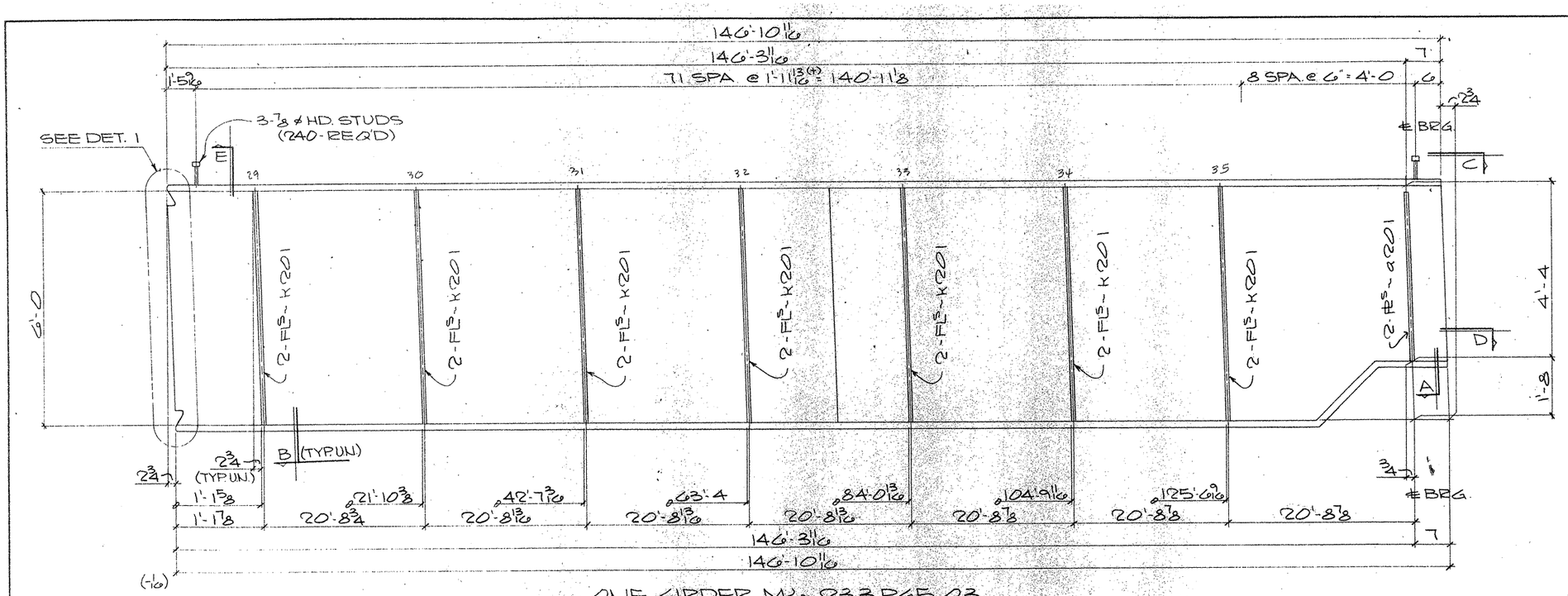

ONE GIRDER MK- 233PG5.03
(APPROX. WT - TONS)

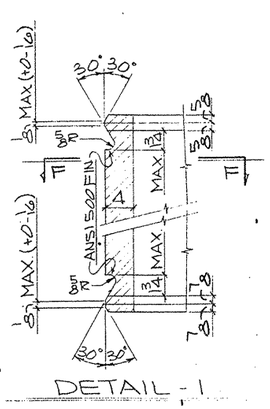

DETAIL - 1

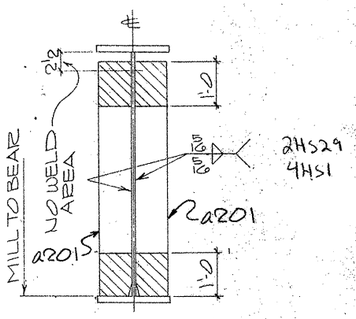

SECTION - A

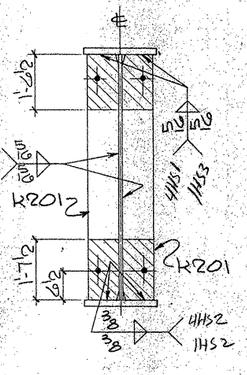

SECTION - B

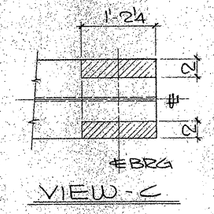

VIEW - C

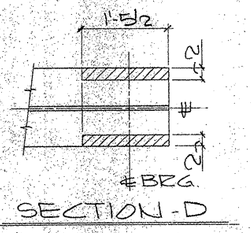

SECTION - D

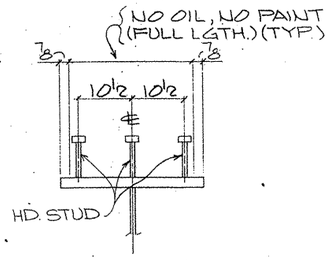

SECTION - E
(TYP. STUD SECT.)

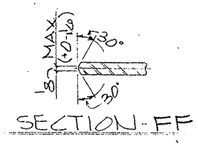

SECTION - FF

SHOP NOTES:
1) FOR GENERAL NOTES SEE SHT. GN1
2) FOR GIRDER SUB-ASSEMBLY SEE SHT. 214
3) FOR STIFF. DETAILS SEE SHT. 201
4) FOR BLOCKING DIAGRAM SEE SHT. 239
5) ▨ INDICATES OIL, NO PAINT (N.S./F.S. & EDGES)

BILL OF MATERIAL

	Qnty.	Material	Length	Mark Temp.	Mark Ship.	Wt.	Cut From	Remarks
2	1	GIRDER		233PG5.03				
3	1	GIRDER SUB-ASSY		A214				
4	2	BRG STIFF		a201				
5	14	DIAF STIFF		H201				
7	240	HD STUD 7/8	0'-7				214-1	A108

TEXAS DEPARTMENT OF TRANSPORTATION
APPROVED
DIVISION OF BRIDGES AND STRUCTURES
FEB 11 1993

FOR APPROVAL
JAN 22 '93
NOT FOR CONSTRUCTION

APPROVAL OF THIS DRAWING DOES NOT RELIEVE THE CONTRACTOR OF THE RESPONSIBILITY FOR THE CORRECTNESS OF DETAIL

REVISION	DATE	DESCRIPTION OF REVISION
NO 1		
NO 2		
NO 3		
NO 4		
NO 5		

PRINTING: Reqd | For | Date

Bolts Holes: 15/16 ø Unless Noted
Shop Paint SEE SHT GN1
Fab. Spec. AS NTD. Inspection
Architect
Erection By Field Connections

HIRSCHFELD STEEL CO. INC.
112 WEST 29TH SAN ANGELO, TEXAS 76903
PHONE (915) 653-3211

DESCRIPTION 645'-0 PLATE GIRDER UNIT
STRUCTURE US 83/281 INTERCHANGE RAMP #4
LOCATION HIDALGO COUNTY
CUSTOMER GILBERT TEXAS CONSTRUCTION
SHIP TO
Customer's Order No
Dwg. By CRT Date 10/92
Checked By JC Date 11-92
SHEET 233 OF
JOB NO. 92-109

G0209

FED. ROAD DIV. NO.	STATE	FEDERAL AID PROJECT NO.			
6	TX.	NH 92(50)M			
STATE DIST. NO	COUNTY	CONTROL NO.	SECTION NO	JOB NO.	HIGHWAY NO
21	HIDALGO	39	17	97	83/281

CE 92-14 (LINE # 3)

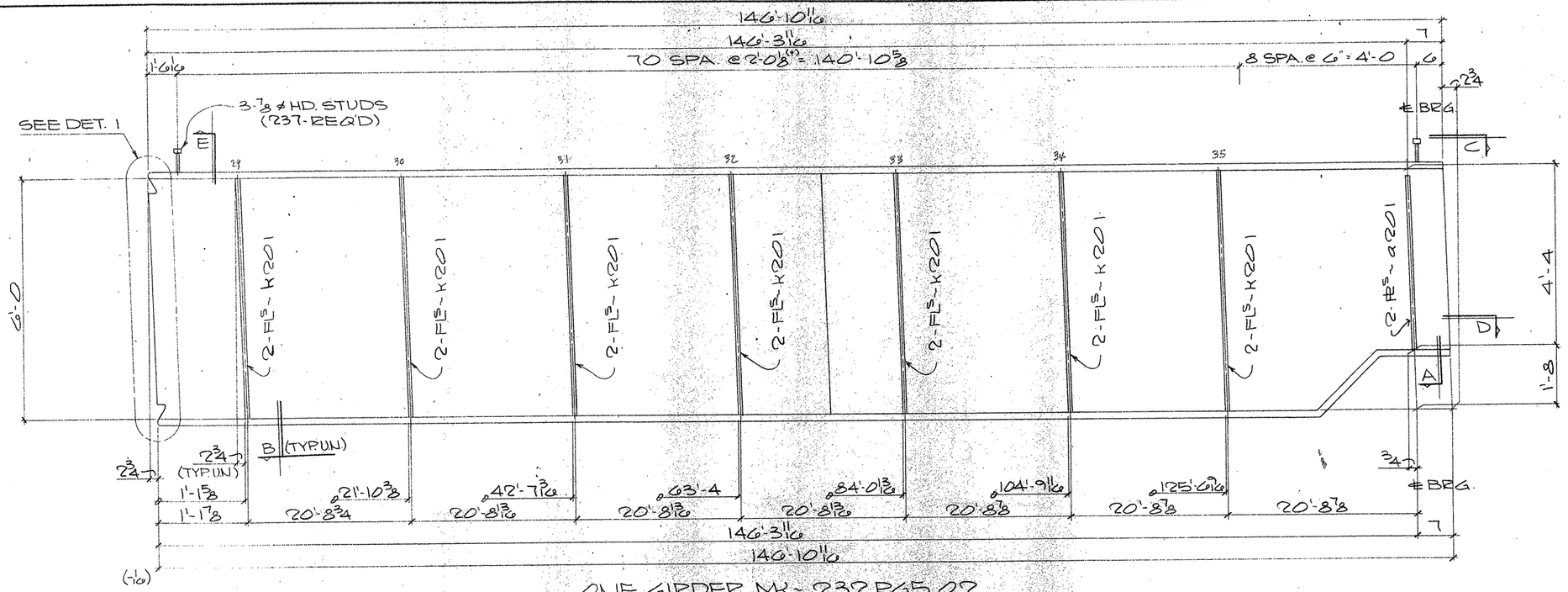

ONE GIRDER MK- 232PG5.02
(APPROX. WT. = TONS)

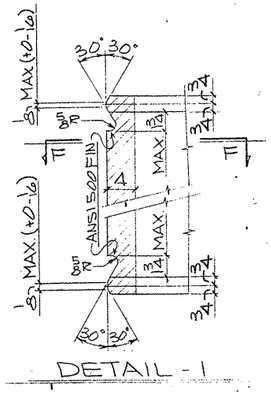

DETAIL - 1

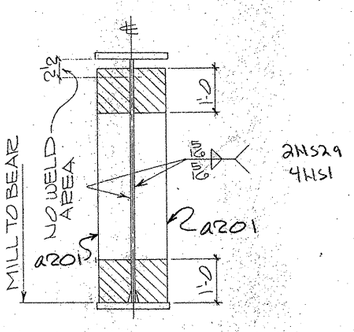

SECTION - A

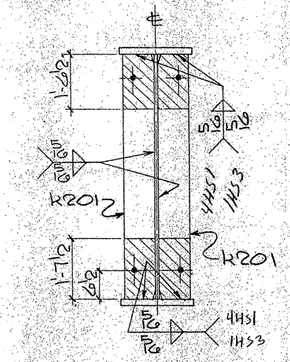

SECTION - B

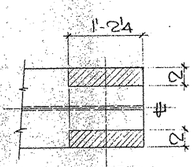

VIEW - C

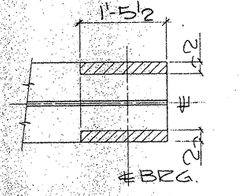

SECTION - D

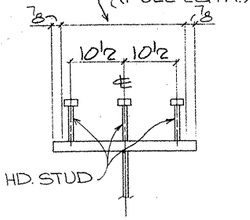

SECTION - E
(TYP. STUD SECT.)

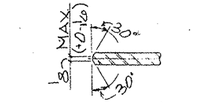

SECTION - FF

SHOP NOTES:

1) FOR GENERAL NOTES SEE SHT. GN1
2) FOR GIRDER SUB-ASSEMBLY SEE SHT. 213
3) FOR STIFF. DETAILS SEE SHT. 201
4) FOR BLOCKING DIAGRAM SEE SHT. 238
5) ▨ INDICATES OIL, NO PAINT (N.S./F.S. & EDGES)

BILL OF MATERIAL

	Qnty.	Material	Length	Mark Temp.	Mark Ship.	Wt.	Cut From	Remarks
2	1	GIRDER		232PG5.02				
3	1	GIRDER SUB-ASSY		B213				
4	2	BRG STIFF		W201				
5	14	DIAF STIFF		W201				
7	237	HD STUD 7/8	0'-7				214-1	A108

TEXAS DEPARTMENT OF TRANSPORTATION
APPROVED
DIVISION OF BRIDGES AND STRUCTURES
FEB 11 1993

FOR APPROVAL
JAN 22 '93
NOT FOR CONSTRUCTION

APPROVAL OF THIS DRAWING DOES NOT RELIEVE THE CONTRACTOR OF THE RESPONSIBILITY FOR THE CORRECTNESS

REVISION	DATE	DESCRIPTION OF REVISION
NO. 1		
NO. 2		
NO. 3		
NO. 4		
NO. 5		

PRINTING

Req'd	For	Date

Bolts. Holes: 15/16 ø Unless Noted
Shop Paint SEE SHT GN1
Fab Spec. AS NTD. Inspection
Architect
Erection By Field Connections

HIRSCHFELD STEEL CO. INC.
112 WEST 29TH SAN ANGELO, TEXAS 76903
PHONE (915) 653-3211

DESCRIPTION	045'-0 PLATE GIRDER UNIT
STRUCTURE	US 83/281 INTERCHANGE RAMP "A"
LOCATION	HIDALGO COUNTY
CUSTOMER	GILBERT TEXAS CONSTRUCTION
SHIP TO	
Customer's Order No.	
Dwg. By CRT	Date 10/92
Checked By JC	Date 11-92

SHEET 232 OF
JOB NO. 92-109

ARV JAN 22

60209

FED. ROAD DIV. NO.	STATE	FEDERAL AID PROJECT NO.			
6	TX.	NH 92(50)M			
STATE DIST. NO.	COUNTY	CONTROL NO.	SECTION NO.	JOB NO.	HIGHWAY NO.
21	HIDALGO	39	17	97	83/281

CE 92-14 (LINE #2)

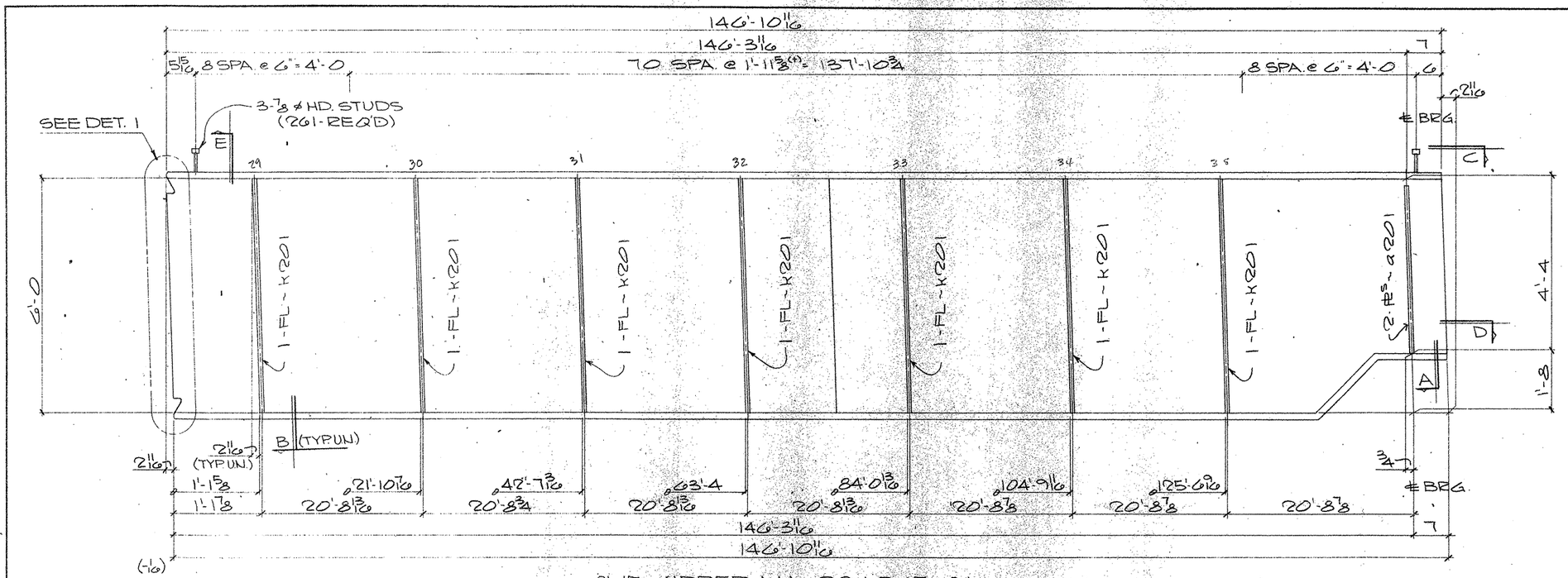

ONE GIRDER MK - 231PG5.01
(APPROX. WT. = TONS)

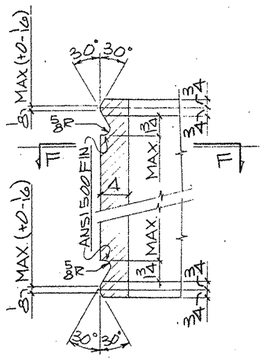

DETAIL - 1

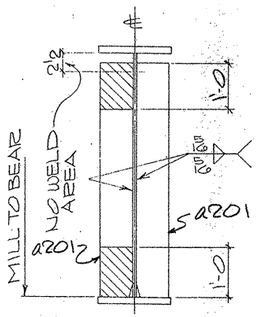

SECTION-A

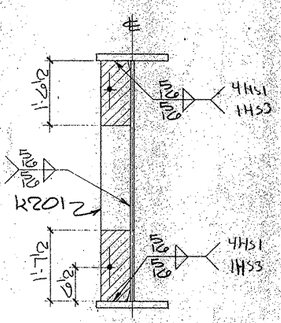

SECTION-B

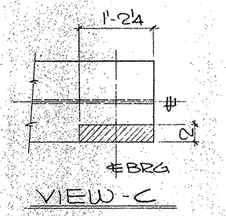

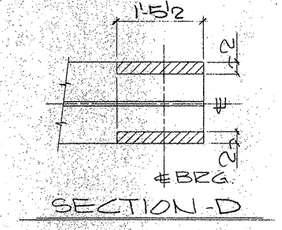

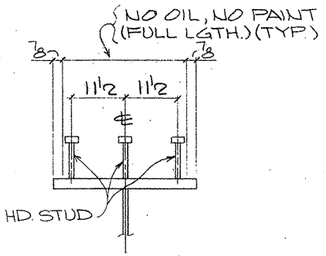

SECTION-E
(TYP. STUD SECT.)

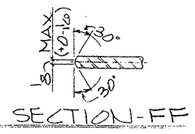

SECTION-FF

SHOP NOTES:

1) FOR GENERAL NOTES SEE SHT. GN1
2) FOR GIRDER SUB-ASSEMBLY SEE SHT. 213
3) FOR STIFF. DETAILS SEE SHT. 201
4) FOR BLOCKING DIAGRAM SEE SHT. 237
5) ▨ INDICATES OIL, NO PAINT (N.S./F.S. & EDGES)

BILL OF MATERIAL

	Qnty.	Material	Length	Mark Temp.	Mark Ship.	Wt.	Cut From	Remarks
2	1	GIRDER		231PG5.01				
3	1	GIRDER SUB-ASSY		A213				
4	2	BRG STIFF		a201				
5	7	DIAF STIFF		k201				
7	261	HD STUD 7/8	0'-7				214-1	A108

TEXAS DEPARTMENT OF TRANSPORTATION
APPROVED
DIVISION OF BRIDGES AND STRUCTURES
FEB 11 1993

APPROVAL OF THIS DRAWING DOES NOT RELIEVE THE CONTRACTOR OF THE RESPONSIBILITY FOR THE CORRECTNESS OF DETAIL.

FOR APPROVAL
JAN 22 '93
NOT FOR CONSTRUCTION

REVISION	DATE	DESCRIPTION OF REVISION
NO. 1		
NO. 2		
NO. 3		
NO. 4		
NO. 5		

PRINTING Req'd For Date

Bolts. Holes: 15/16 ø Unless Noted
Shop Paint SEE SHT GN1
Fab Spec. AS NTD. Inspection
Architect
Erection By Field Connections

HIRSCHFELD STEEL CO. INC.
112 WEST 29TH SAN ANGELO, TEXAS 76903
PHONE (915) 653-3211

DESCRIPTION G45'-0 PLATE GIRDER UNIT
STRUCTURE US 83/281 INTERCHANGE RAMP "4"
LOCATION HIDALGO COUNTY
CUSTOMER GILBERT TEXAS CONSTRUCTION
SHIP TO
Customer's Order No.
Dwg. By CRT Date 10/92
Checked By JC Date 11-92
SHEET 231 OF
JOB NO. 92-109

CE 92-14 (LINE # 1)

G0209

FED. ROAD DIV. NO.	STATE	FEDERAL AID PROJECT NO.			
6	TX.	NH 92(50)M			
STATE DIST. NO.	COUNTY	CONTROL NO.	SECTION NO.	JOB NO.	HIGHWAY NO.
21	HIDALGO	39	17	97	83/281

APP. MM 3-2

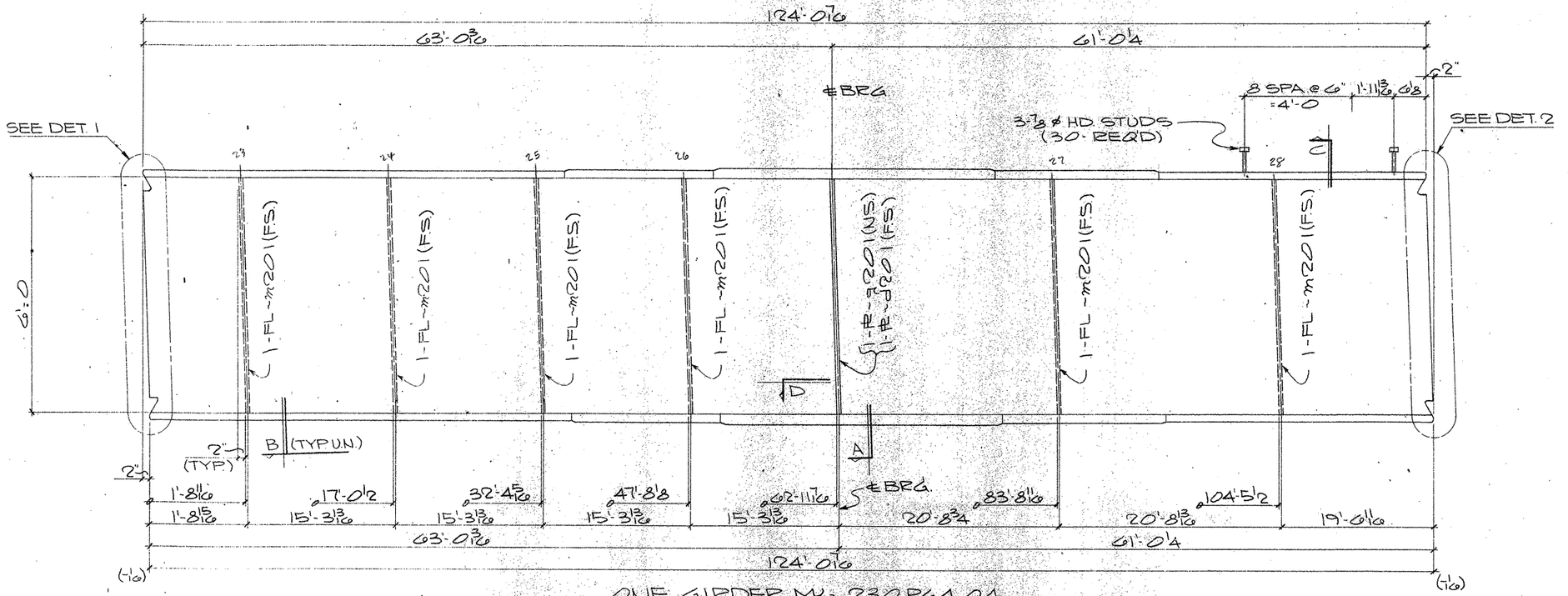

ONE GIRDER MK~ 230PG4.04

(APPROX. WT. = TONS)

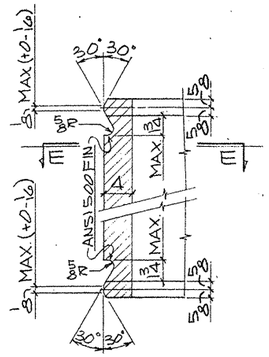

DETAIL - 1

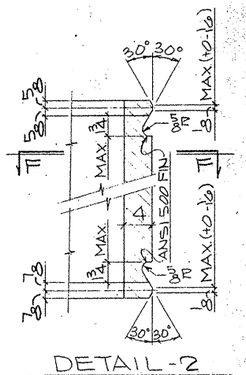

DETAIL - 2

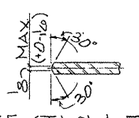

SECTION-EE

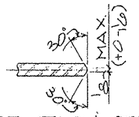

SECTION-FF

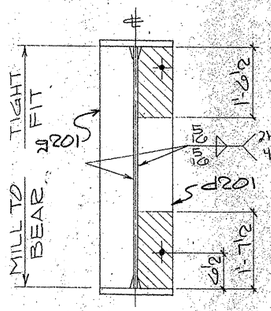

SECTION-A

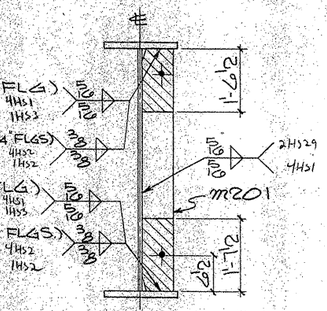

SECTION-B

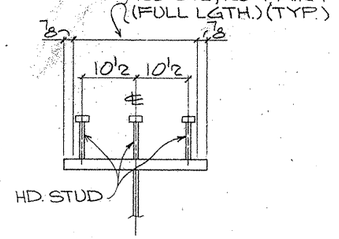

SECTION-C

(TYP. STUD SECT.)

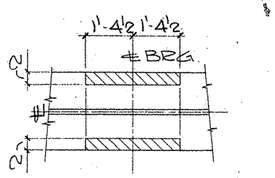

SECTION-D

SHOP NOTES:

1) FOR GENERAL NOTES SEE SHT. GN1
2) FOR GIRDER SUB-ASSEMBLY SEE SHT. 212
3) FOR STIFF. DETAILS SEE SHT. 201
4) FOR BLOCKING DIAGRAM SEE SHT. 240
5) ▨ INDICATES OIL, NO PAINT (N.S./F.S. & EDGES)

BILL OF MATERIAL

	Qnty.	Material	Length	Mark Temp.	Mark Ship	Wt.	Cut From	Remarks
1								
2	1	GIRDER		230PG4.04				
3	1	GIRDER SUB-ASSY		B212				
4	1	BRG STIFF		d201				
5	1	BRG STIFF		g201				
6	6	DIAF STIFF		m201				
7	30	HD STUD 7/8ø	0'-7"				214-1	A108
8–60								

TEXAS DEPARTMENT OF TRANSPORTATION
APPROVED
DIVISION OF BRIDGES AND STRUCTURES
FEB 11 1993

APPROVAL OF THIS DRAWING DOES NOT RELIEVE THE CONTRACTOR OF THE RESPONSIBILITY FOR THE CORRECTNESS OF DETAIL

FOR APPROVAL
JAN 22 93
NOT FOR CONSTRUCTION

REVISION	DATE	DESCRIPTION OF REVISION
NO. 1		
NO. 2		
NO. 3		
NO. 4		
NO. 5		

PRINTING Req'd	For	Date

Bolts: Holes: 15/16ø Unless Noted
Shop Paint: SEE SHT. GN1
Fab. Spec.: AS NTD Inspection
Architect
Erection By: Field Connections

HIRSCHFELD STEEL CO. INC.
112 WEST 29TH SAN ANGELO. TEXAS 76903
PHONE (915) 653-3211

DESCRIPTION 045'-0 PLATE GIRDER UNIT
STRUCTURE US 83/281 INTERCHANGE RAMP #4
LOCATION HIDALGO COUNTY
CUSTOMER GILBERT TEXAS CONSTRUCTION
SHIP TO
Customer's Order No.
Dwg. By CRT Date 10/92
Checked By JC Date 11-92
SHEET 230 OF
JOB NO. 92-109

G0209

FED. ROAD DIV. NO.	STATE	FEDERAL AID PROJECT NO.				
6	TX.	NH 92(50)M				
STATE DIST. NO.	COUNTY	CONTROL NO.	SECTION NO.	JOB NO.	HIGHWAY NO.	
21	HIDALGO	39	17	97	83/281	

APV JAN 22

CE 92-14 (LINE # 4)

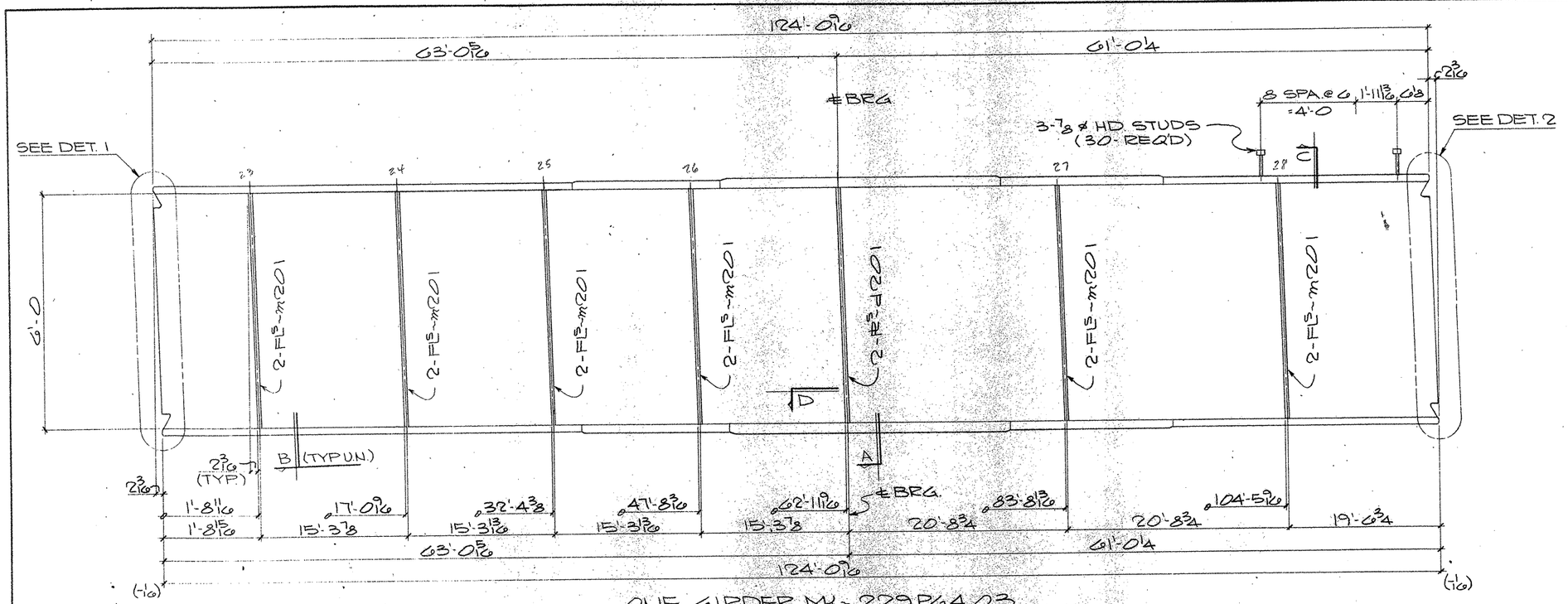

ONE GIRDER MK- 229PG4.03
(APPROX WT. = TONS)

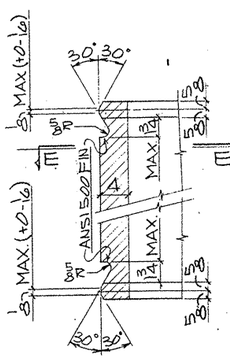

DETAIL-1

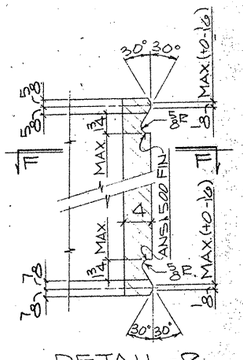

DETAIL-2

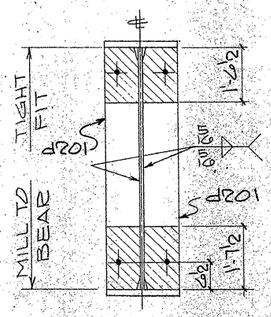

SECTION-A

SECTION-B

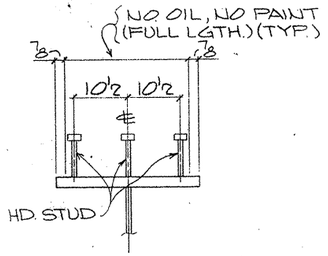

SECTION-C
(TYP. STUD SECT.)

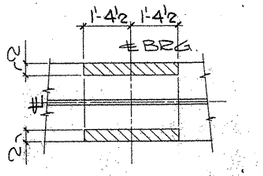

SECTION-D

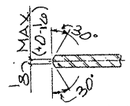

SECTION-EE

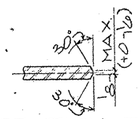

SECTION-FF

SHOP NOTES:

1) FOR GENERAL NOTES SEE SHT. GN1
2) FOR GIRDER SUB-ASSEMBLY SEE SHT. 211
3) FOR STIFF. DETAILS SEE SHT. 201
4) FOR BLOCKING DIAGRAM SEE SHT. 239
5) ▨ INDICATES OIL, NO PAINT (N.S./F.S. & EDGES)

BILL OF MATERIAL

	Qnty.	Material	Length	Mark Temp.	Mark Ship.	Wt.	Cut From	Remarks
1								
2	1	GIRDER		229PG4.03				
3	1	GIRDER SUB-ASSY		B211				
4	2	BRG STIFF		d201				
5								
6	12	DIAF STIFF		m201				
7	30	HD STUD 7/8	0'-7				214-1	A108
8–60								

TEXAS DEPARTMENT OF TRANSPORTATION
APPROVED
DIVISION OF BRIDGE AND STRUCTURES
FEB 11 1993

APPROVAL OF THIS DRAWING DOES NOT RELIEVE THE CONTRACTOR OF THE RESPONSIBILITY FOR THE CORRECTNESS OF DETAIL.

FOR APPROVAL
JAN 27 '93
NOT FOR CONSTRUCTION

REVISION	DATE	DESCRIPTION OF REVISION
NO 1		
NO 2		
NO 3		
NO 4		
NO 5		

PRINTING

Req'd	For	Date

Bolts Holes 15/16 ø Unless Noted
Shop Paint SEE SHT. GN1
Fab. Spec. AS NTD Inspection
Architect
Erection By Field Connections

HIRSCHFELD STEEL CO. INC.
112 WEST 29TH SAN ANGELO, TEXAS 76903
PHONE (915) 653-3211

DESCRIPTION 645'-0 PLATE GIRDER UNIT
STRUCTURE US 83/281 INTERCHANGE RAMP "4"
LOCATION HIDALGO COUNTY
CUSTOMER GILBERT TEXAS CONSTRUCTION
SHIP TO
Customer's Order No.
Dwg. By CRT Date 10/92
Checked By JC Date 11-92
SHEET 229 OF
JOB NO. 92-109

60209

FED. ROAD DIV. NO.	STATE	FEDERAL AID PROJECT NO.			
6	TX.	NB 92(50)M			
STATE DIST. NO.	COUNTY	CONTROL NO.	SECTION NO.	JOB NO.	HIGHWAY NO.
21	HIDALGO	39	17	97	83/281

APV. JAN. 22

CE 92-14 (LINE # 3)

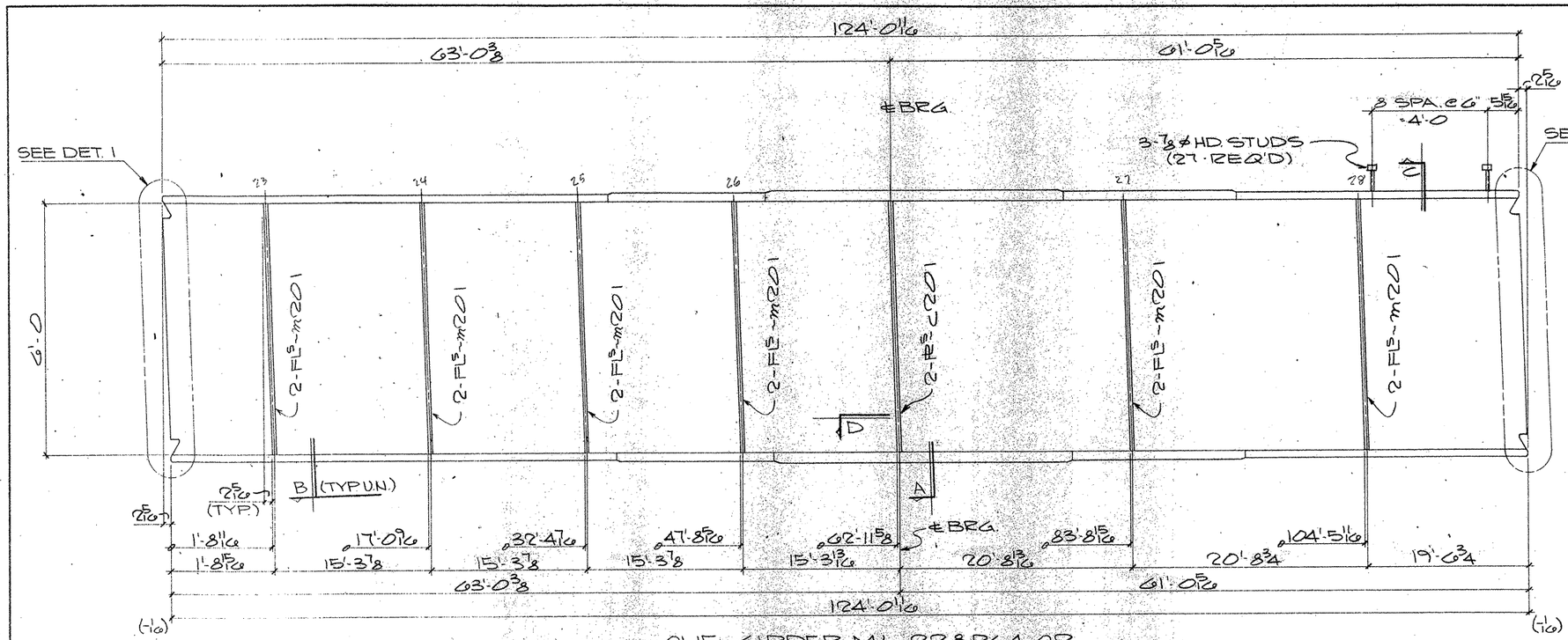

ONE GIRDER MK- 228PG4.02

(APPROX. WT. = TONS)

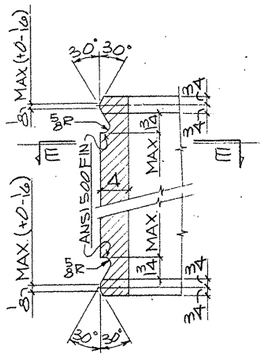

DETAIL - 1

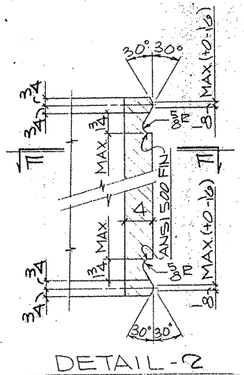

DETAIL - 2

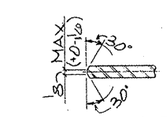

SECTION - EE

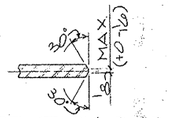

SECTION - FF

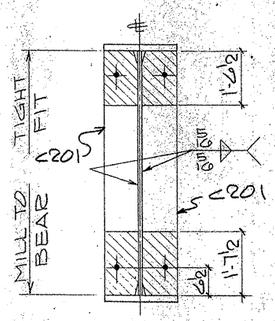

SECTION - A

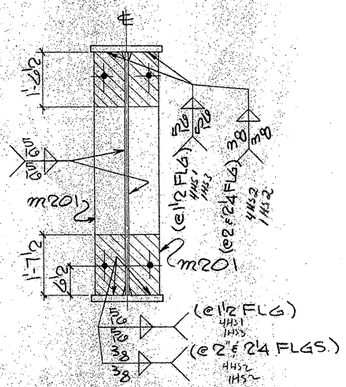

SECTION - B

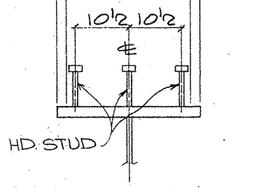

SECTION - C
(TYP. STUD SECT.)

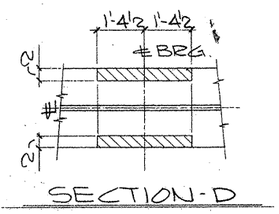

SECTION - D

SHOP NOTES:

1) FOR GENERAL NOTES SEE SHT. GN1
2) FOR GIRDER SUB-ASSEMBLY SEE SHT. 210
3) FOR STIFF. DETAILS SEE SHT. 201
4) FOR BLOCKING DIAGRAM SEE SHT. 238
5) ▨ INDICATES OIL, NO PAINT (N.S./F.S. & EDGES)

BILL OF MATERIAL

	Qnty.	Material	Length	Mark Temp	Mark Ship	Wt.	Cut From	Remarks
2	1	GIRDER		228PG4.02				
3	1	GIRDER SUB-ASSY		B210				
4	2	BRG STIFF		C201				
6	12	DIAF STIFF		M201				
7	27	HD STUD ⅞	0'-7				214-1	A108

TEXAS DEPARTMENT OF TRANSPORTATION
APPROVED
DIVISION OF BRIDGES AND STRUCTURES
FEB 11 1993

FOR APPROVAL
JAN 22 93

APPROVAL OF THIS DRAWING DOES NOT RELIEVE THE CONTRACTOR OF THE RESPONSIBILITY FOR THE CORRECTNESS OF DETAIL.

NOT FOR CONSTRUCTION

REVISION	DATE	DESCRIPTION OF REVISION
NO. 1		
NO. 2		
NO. 3		
NO. 4		
NO. 5		

PRINTING Req'd	For	Date

Bolts Holes: ⅞ø Unless Noted
Shop Paint SEE SHT. GN1
Fab Spec AS NTD Inspection
Architect
Erection By Field Connections

HIRSCHFELD STEEL CO. INC.
112 WEST 29TH SAN ANGELO, TEXAS 76903
PHONE (915) 653-3211

DESCRIPTION G45'-0 PLATE GIRDER UNIT
STRUCTURE US 83/281 INTERCHANGE RAMP "A"
LOCATION HIDALGO COUNTY
CUSTOMER GILBERT TEXAS CONSTRUCTION
SHIP TO
Customer's Order No.
Dwg. By CRT Date 10/92
Checked By JC Date 11-92

SHEET 228 OF
JOB NO. 92-109

G0209

FED. ROAD DIV. NO.	STATE	FEDERAL AID PROJECT NO.			
6	TX.	NH 92(50)M			
STATE DIST. NO.	COUNTY	CONTROL NO.	SECTION NO.	JOB NO.	HIGHWAY NO.
21	HIDALGO	39	17	97	83/281

APV. MAY 22

CE 92-14 (LINE #7)

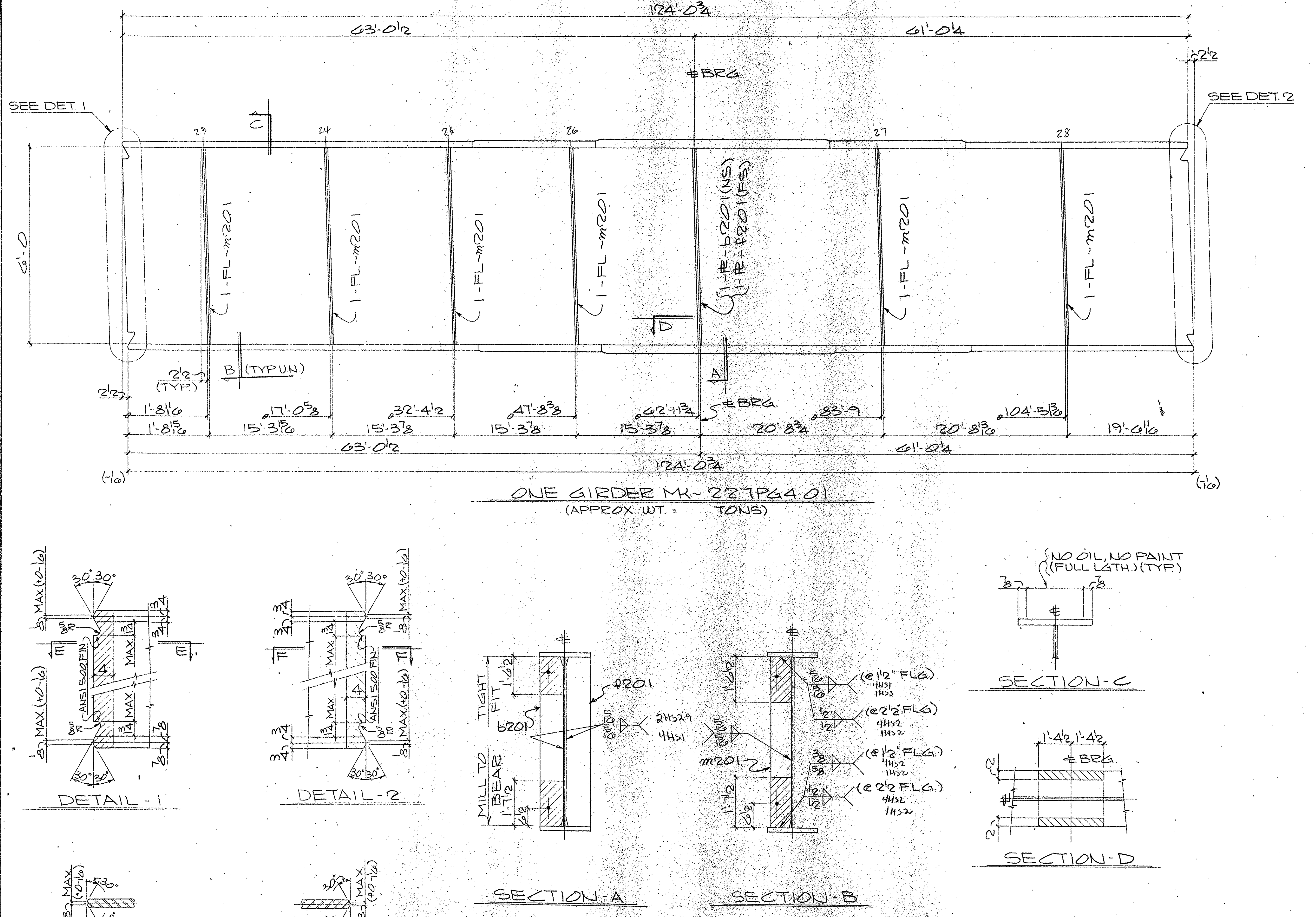

SHOP NOTES:
1) FOR GENERAL NOTES SEE SHT. GN1
2) FOR GIRDER SUB-ASSEMBLY SEE SHT. 209
3) FOR STIFF. DETAILS SEE SHT. 201
4) FOR BLOCKING DIAGRAM SEE SHT. 237
5) ▨ INDICATES OIL, NO PAINT (N.S./F.S. & EDGES)

BILL OF MATERIAL

	Qnty	Material	Length	Mark Temp.	Mark Ship.	Wt.	Cut From	Remarks
1								
2	1	GIRDER		227PG4.01				
3	1	GIRDER SUB-ASSY		B209				
4	1	BRG STIFF		b201				
5	1	BRG STIFF		f201				
6	6	DIAF STIFF		m201				
7								
8								
9								
10								
11								
12								
13								
14								
15								
16								
17								
18								
19								
20								
21								
22								
23								
24								
25								
26								
27								
28								
29								
30								
31								
32								
33								
34								
35								
36								
37								
38								
39								
40								
41								
42								
43								
44								
45								
46								
47								
48								
49								
50								
51								
52								
53								
54								
55								
56								
57								
58								
59								
60								

TEXAS DEPARTMENT OF TRANSPORTATION
APPROVED
DIVISION OF BRIDGES AND STRUCTURES
FEB 11 1993
APPROVAL OF THIS DRAWING DOES NOT RELIEVE THE CONTRACTOR OF THE RESPONSIBILITY FOR THE CORRECTNESS OF DETAIL

FOR APPROVAL
JAN 22 '93
NOT FOR CONSTRUCTION

REVISION	DATE	DESCRIPTION OF REVISION
NO 1		
NO 2		
NO 3		
NO 4		
NO 5		

PRINTING: Req'd | For | Date

Bolts — Holes 15/16 Ø — Unless Noted
Shop Paint SEE SHT. GN1
Fab Spec. AS NTD — Inspection
Architect
Erection By — Field Connections

HIRSCHFELD STEEL CO. INC.
112 WEST 29TH SAN ANGELO, TEXAS 76903
PHONE (915) 653-3211

DESCRIPTION 645'-0 PLATE GIRDER UNIT
STRUCTURE. US 83/281 INTERCHANGE RAMP #4
LOCATION HIDALGO COUNTY
CUSTOMER GILBERT TEXAS CONSTRUCTION
SHIP TO
Customer's Order No — SHEET 227 OF
Dwg. By CRT — Date 10/92
Checked By JC — Date 11-92 — JOB NO. 92-109

40209

FED. ROAD DIV. NO.	STATE	FEDERAL AID PROJECT NO.			
6	TX.	NH 92(50)M			
STATE DIST. NO.	COUNTY	CONTROL NO.	SECTION NO.	JOB NO.	HIGHWAY NO.
21	HIDALGO	39	17	97	83/281

APV JAN 22

CE 92-14 (LINE # 1)

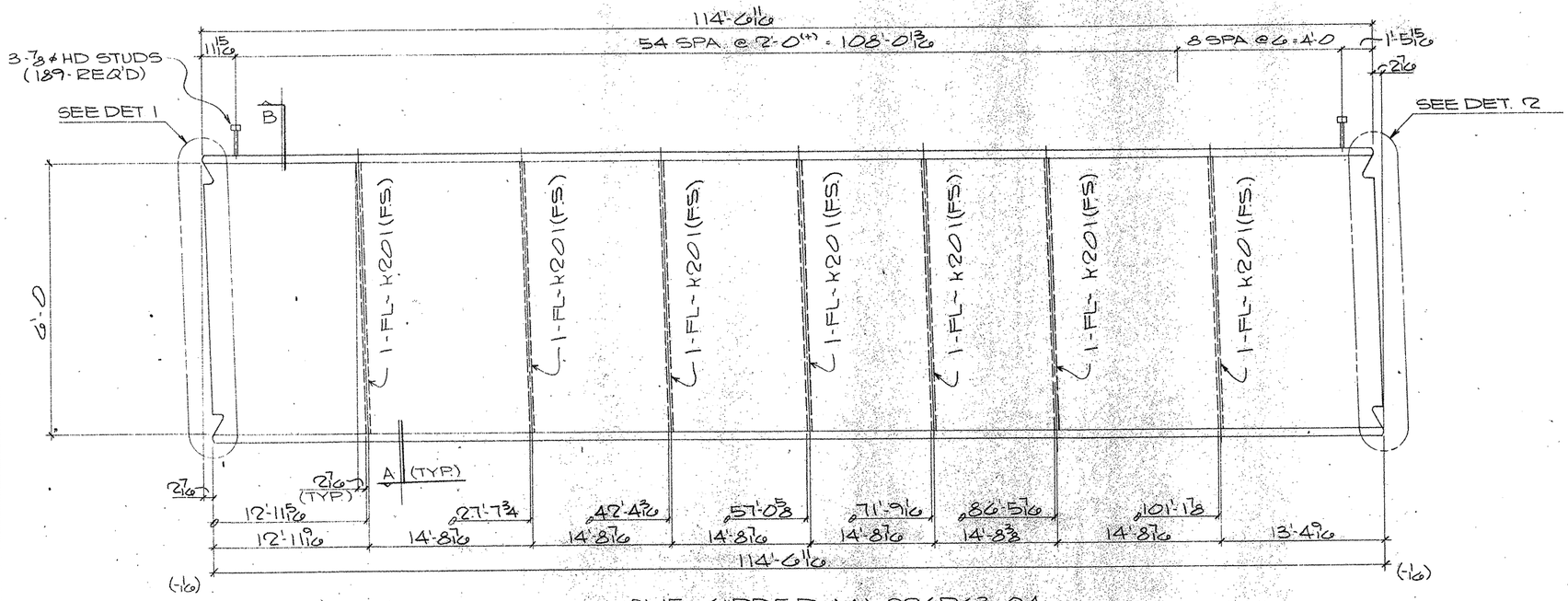

ONE GIRDER MK-226PG3.04
(APPROX. WT. = TONS)

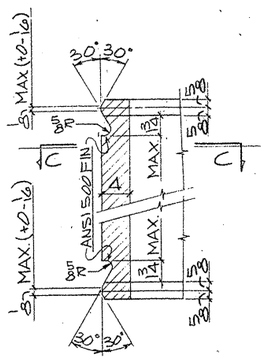

DETAIL-1

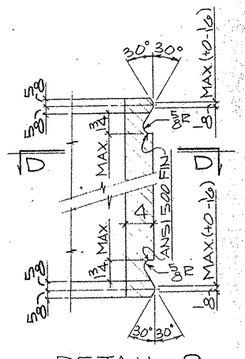

DETAIL-2

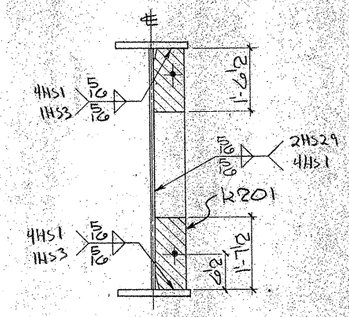

SECTION-A

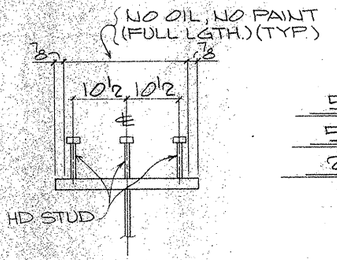

SECTION-B
(TYP STUD SECT.)

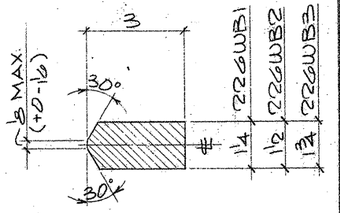

56 - WELD BARS MK-226WB1
52 - WELD BARS MK-226WB2
20 - WELD BARS MK-226WB3

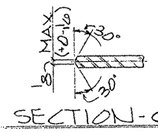

SECTION-CC

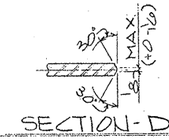

SECTION-DD

SHOP NOTES:
1) FOR GENERAL NOTES SEE SHT. GN1
2) FOR GIRDER SUB-ASSEMBLY SEE SHT. 212
3) FOR STIFF. DETAILS SEE SHT. 201
4) FOR BLOCKING DIAGRAM SEE SHT. 240
5) FOR HEAT CURVE DIAGRAM SEE SHT. 230
6) ▨ INDICATES OIL, NO PAINT (N.S./F.S. & EDGES)

BILL OF MATERIAL

	Qnty.	Material	Length	Mark Temp	Mark Ship	Wt.	Cut From	Remarks
2	1	GIRDER		226PG3.04				
3	1	GIRDER SUB-ASSY		A212				
4	7	DIAF STIFF		K201				
6	189	HD STUDS 7/8	0'-7				214-1	A108
28		WELD BARS						
29	56	PL 1/4 x 1	0'-3	226WB1				STR
30	52	PL 1/2 x 1	0'-3	226WB2				STR
31	20	PL 3/4 x 1	0'-3	226WB3				STR

TEXAS DEPARTMENT OF TRANSPORTATION
APPROVED
DIVISION OF BRIDGES AND STRUCTURES
FEB 11 1993
APPROVAL OF THIS DRAWING DOES NOT RELIEVE THE CONTRACTOR OF THE RESPONSIBILITY FOR THE CORRECTNESS OF DETAILS

FOR APPROVAL
JAN 22 '93
NOT FOR CONSTRUCTION

REVISION	DATE	DESCRIPTION OF REVISION
NO. 1		
NO. 2		
NO. 3		
NO. 4		
NO. 5		

PRINTING Req'd	For	Date

Bolts Holes: 15/16 ø Unless Noted
Shop Paint SEE SHT. GN1
Fab. Spec AS NTD Inspection
Architect
Erection By Field Connections

HIRSCHFELD STEEL CO. INC.
112 WEST 29TH SAN ANGELO, TEXAS 76903
PHONE (915) 653-3211

DESCRIPTION	645-0 PLATE GIRDER UNIT
STRUCTURE	US 83/281 INTERCHANGE RAMP #4
LOCATION	HIDALGO COUNTY
CUSTOMER	GILBERT TEXAS CONSTRUCTION
SHIP TO	
Customer's Order No.	
Dwg. By CRT Date	10/92
Checked By JC Date	11-92

SHEET 226 OF
JOB NO. 92-109

60209

FED. ROAD DIV. NO.	STATE	FEDERAL AID PROJECT NO.				
6	TX.	NH 92(50)M				
STATE DIST. NO.	COUNTY	CONTROL NO.	SECTION NO.	JOB NO.	HIGHWAY NO.	
21	HIDALGO	39	17	97	83/281	

CE 92-14 (LINE #4)

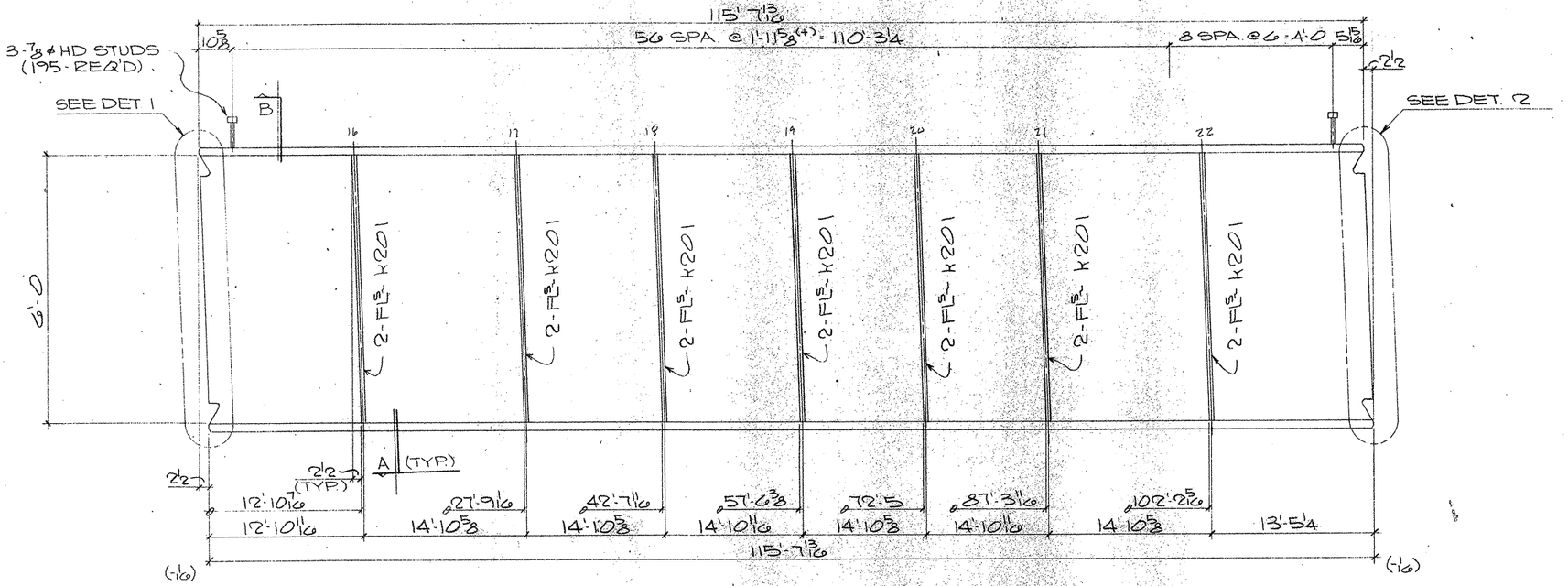

ONE GIRDER MK-225PG3.03

(APPROX. WT. = TONS)

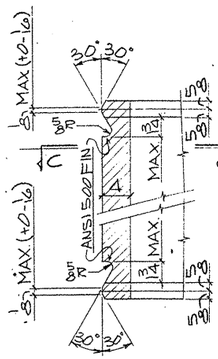

DETAIL-1

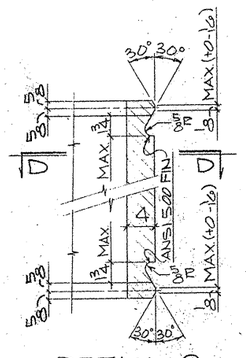

DETAIL-2

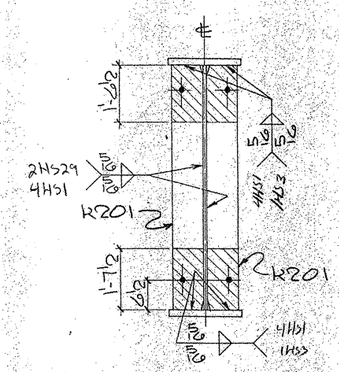

SECTION-A

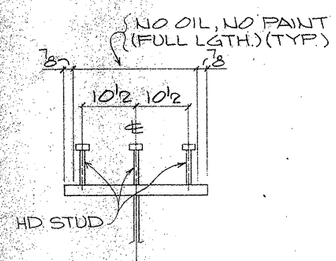

SECTION-B
(TYP STUD SECT.)

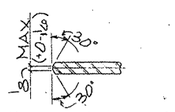

SECTION-CC

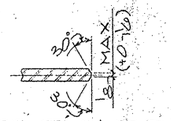

SECTION-DD

SHOP NOTES:

1) FOR GENERAL NOTES SEE SHT. GN1
2) FOR GIRDER SUB-ASSEMBLY SEE SHT. 211
3) FOR STIFF. DETAILS SEE SHT. 201
4) FOR BLOCKING DIAGRAM SEE SHT. 239
5) FOR HEAT CURVE DIAGRAM SEE SHT. 236
6) ▨ INDICATES OIL, NO PAINT (N.S./F.S. & EDGES)

BILL OF MATERIAL

	Qnty	Material	Length	Mark Temp	Mark Ship	Wt	Cut From	Remarks
1								
2	1	GIRDER		225PG3.03				
3	1	GIRDER SUB-ASSY		A211				
4	14	DIAF STIFF		K201				
5								
6	195	HD STUDS 7/8	0'-7				214-1	A108
7								
8								
9								
10								
11								
12								
13								
14								
15								
16								
17								
18								
19								
20								
21								
22								
23								
24								
25								
26								
27								
28								
29								
30								
31								
32								
33								
34								
35								
36								
37								
38								
39								
40								
41								
42								
43								
44								
45								
46								
47								
48								
49								
50								
51								
52								
53								
54								
55								
56								
57								
58								
59								
60								

TEXAS DEPARTMENT OF TRANSPORTATION
APPROVED
DIVISION OF BRIDGES AND STRUCTURES
FEB 11 1995

FOR APPROVAL
JAN 22 '93
NOT FOR CONSTRUCTION

APPROVAL OF THIS DRAWING DOES NOT RELIEVE THE CONTRACTOR OF THE RESPONSIBILITY FOR THE CORRECTNESS OF DETAIL

REVISION	DATE	DESCRIPTION OF REVISION
NO. 1		
NO. 2		
NO. 3		
NO. 4		
NO. 5		

PRINTING Req'd	For	Date

Bolts. Holes. 15/16 ø Unless Noted
Shop Paint SEE SHT. GN1
Fab Spec. AS NTD Inspection
Architect
Erection By Field Connections

HIRSCHFELD STEEL CO. INC.
112 WEST 29TH SAN ANGELO, TEXAS 76903
PHONE (915) 653-3211

DESCRIPTION 645'-0 PLATE GIRDER UNIT
STRUCTURE US 83/281 INTERCHANGE RAMP # 4
LOCATION HIDALGO COUNTY
CUSTOMER GILBERT TEXAS CONSTRUCTION
SHIP TO
Customer's Order No.
Dwg. By ERT Date 10/92
Checked By JC Date 11-92
SHEET 225 OF
JOB NO. 92-109

40209

FED. ROAD DIV. NO.	STATE	FEDERAL AID PROJECT NO.			
6	TX.	NH 92(50)M			
STATE DIST. NO.	COUNTY	CONTROL NO.	SECTION NO.	JOB NO.	HIGHWAY NO.
21	HIDALGO	39	17	97	83/281

CE 92-14 (LINE # 3)

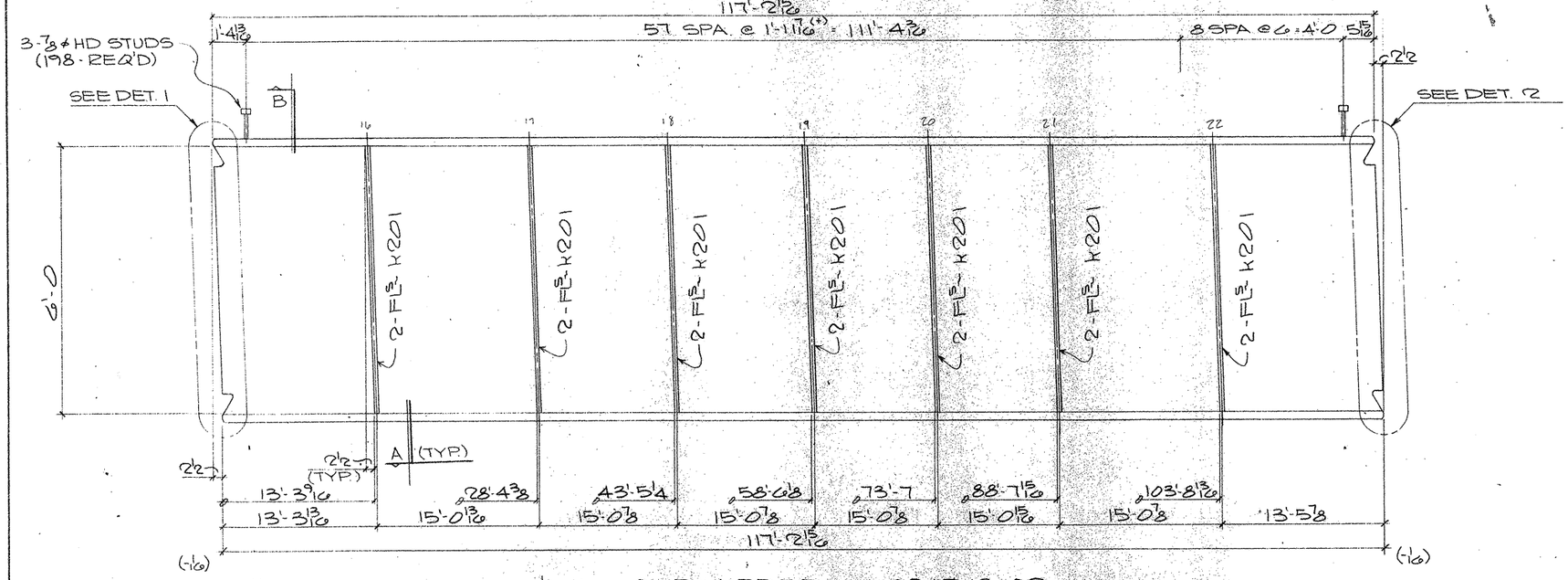

ONE GIRDER MK-224PG3.02

(APPROX. WT. = TONS)

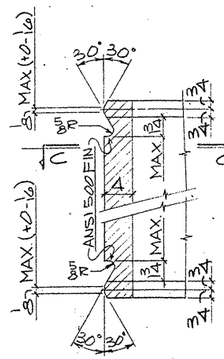

DETAIL-1

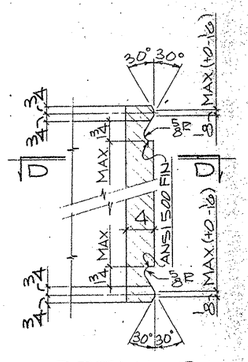

DETAIL-2

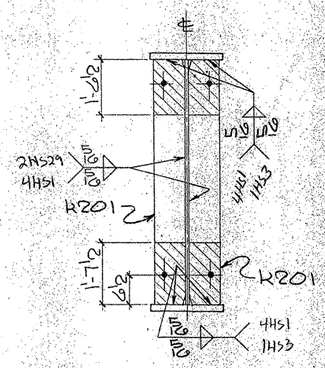

SECTION-A

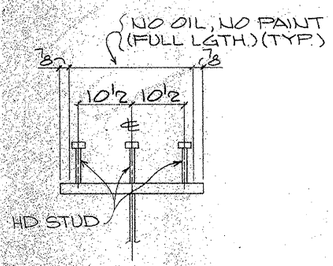

SECTION-B

(TYP. STUD SECT.)

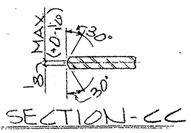

SECTION-CC

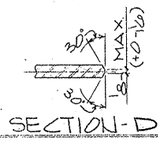

SECTION-DD

SHOP NOTES:

1) FOR GENERAL NOTES SEE SHT. GN1
2) FOR GIRDER SUB-ASSEMBLY SEE SHT. 210
3) FOR STIFF. DETAILS SEE SHT. 201
4) FOR BLOCKING DIAGRAM SEE SHT. 238
5) FOR HEAT CURVE DIAGRAM SEE SHT. 230
6) ▨ INDICATES OIL, NO PAINT (N.S./F.S. & EDGES)

BILL OF MATERIAL

	Qnty.	Material	Length	Mark Temp.	Mark Ship	Wt.	Cut From	Remarks
1								
2	1	GIRDER		224PG3.02				
3	1	GIRDER SUB-ASSY		A210				
4	14	DIAF STIFF		K201				
5								
6	198	HD STUDS 7/8	0'-7				214-1	A108
7								
8								
9								
10								
11								
12								
13								
14								
15								
16								
17								
18								
19								
20								
21								
22								
23								
24								
25								
26								
27								
28								
29								
30								
31								
32								
33								
34								
35								
36								
37								
38								
39								
40								
41								
42								
43								
44								
45								
46								
47								
48								
49								
50								
51								
52								
53								
54								
55								
56								
57								
58								
59								
60								

TEXAS DEPARTMENT OF TRANSPORTATION
APPROVED
DIVISION OF BRIDGES AND STRUCTURES
FEB 11 1993

FOR APPROVAL
JAN 22 '93
NOT FOR CONSTRUCTION

APPROVAL OF THIS DRAWING DOES NOT RELIEVE THE CONTRACTOR OF THE RESPONSIBILITY FOR THE CORRECTNESS OF DETAILS.

REVISION	DATE	DESCRIPTION OF REVISION
NO. 1		
NO. 2		
NO. 3		
NO. 4		
NO. 5		

PRINTING Req'd	For	Date

Bolts Holes: 15/16 ø Unless Noted
Shop Paint SEE SHT. GN1
Fab Spec AS NTD Inspection
Architect
Erection By Field Connections

HIRSCHFELD STEEL CO. INC.
112 WEST 29TH SAN ANGELO, TEXAS 76903
PHONE (915) 653-3211

DESCRIPTION 645'-0 PLATE GIRDER UNIT
STRUCTURE US 83/281 INTERCHANGE RAMP "4"
LOCATION HIDALGO COUNTY
CUSTOMER GILBERT TEXAS CONSTRUCTION
SHIP TO
Customer's Order No.
Dwg. By CRT Date 10/92
Checked By Date 11-92
SHEET 224 OF
JOB NO. 92-109

G0209

FED. ROAD DIV. NO.	STATE	FEDERAL AID PROJECT NO.				
6	TX.	NH 92(50)M				
STATE DIST. NO.	COUNTY	CONTROL NO.	SECTION NO.	JOB NO.	HIGHWAY NO.	
21	HIDALGO	39	17	97	83/281	

BPV JAN 22

CE 92-14 (LINE #2)

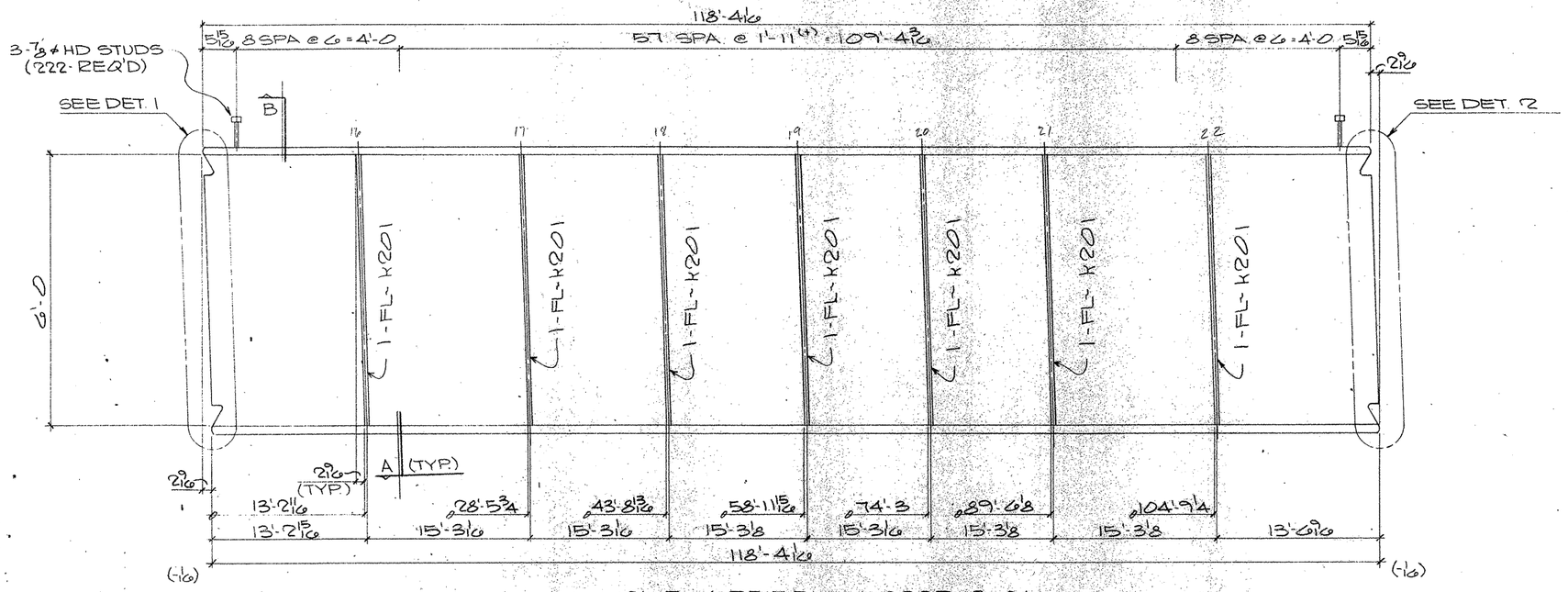

ONE GIRDER MK-223PG3.01
(APPROX. WT. = TONS)

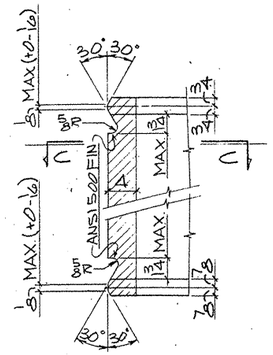

DETAIL-1

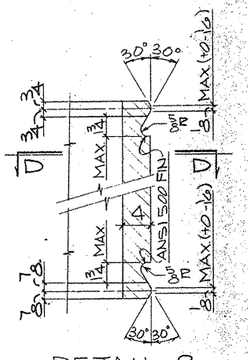

DETAIL-2

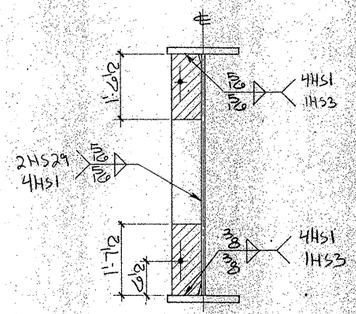

SECTION-A

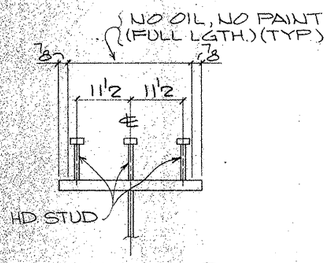

SECTION-B
(TYP. STUD SECT.)

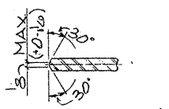

SECTION-CC

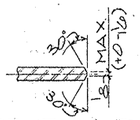

SECTION-DD

SHOP NOTES:
1) FOR GENERAL NOTES SEE SHT. GN1
2) FOR GIRDER SUB-ASSEMBLY SEE SHT. 209
3) FOR STIFF. DETAILS SEE SHT. 201
4) FOR BLOCKING DIAGRAM SEE SHT. 237
5) FOR HEAT CURVE DIAGRAM SEE SHT. 236
6) ▨ INDICATES OIL, NO PAINT (N.S./F.S. & EDGES)

BILL OF MATERIAL

	Qnty.	Material	Length	Mark Temp.	Mark Ship.	Wt	Cut From	Remarks
1								
2	1	GIRDER		223PG3.01				
3	1	GIRDER SUB-ASSY	ASSY	A209				
4	7	DIAF STIFF		K201				
5								
6	222	HD STUDS 7/8	0'-7				214-1	A108

TEXAS DEPARTMENT OF TRANSPORTATION
APPROVED
DIVISION OF BRIDGES AND STRUCTURES
FEB 11 1993

APPROVAL OF THIS DRAWING DOES NOT RELIEVE THE CONTRACTOR OF THE RESPONSIBILITY FOR THE CORRECTNESS OF DETAIL.

FOR APPROVAL
MAR 22 '93
NOT FOR CONSTRUCTION

REVISION	DATE	DESCRIPTION OF REVISION
NO. 1		
NO. 2		
NO. 3		
NO. 4		
NO. 5		

PRINTING Req'd	For	Date

Bolts Holes: 15/16 ø Unless Noted
Shop Paint SEE SHT. GN1
Fab. Spec. AS NTD Inspection
Architect
Erection By Field Connections

HIRSCHFELD STEEL CO. INC.
112 WEST 29TH SAN ANGELO, TEXAS 76903
PHONE (915) 653-3211

DESCRIPTION	645'-0 PLATE GIRDER UNIT
STRUCTURE	US 83/281 INTERCHANGE RAMP #4
LOCATION	HIDALGO COUNTY
CUSTOMER	GILBERT TEXAS CONSTRUCTION
SHIP TO	
Customer's Order No	
Dwg. By CRT	Date 10/92
Checked By JC	Date 11-92

SHEET 223 OF
JOB NO. 92-109

APV JAN 22

G0209

FED. ROAD DIV. NO.	STATE	FEDERAL AID PROJECT NO.				
6	TX.	NH 92(50)M				
STATE DIST. NO.	COUNTY	CONTROL NO.	SECTION NO.	JOB NO.		HIGHWAY NO.
21	HIDALGO	39	17	97		83/281

CE 92-14 (LINE # 1)

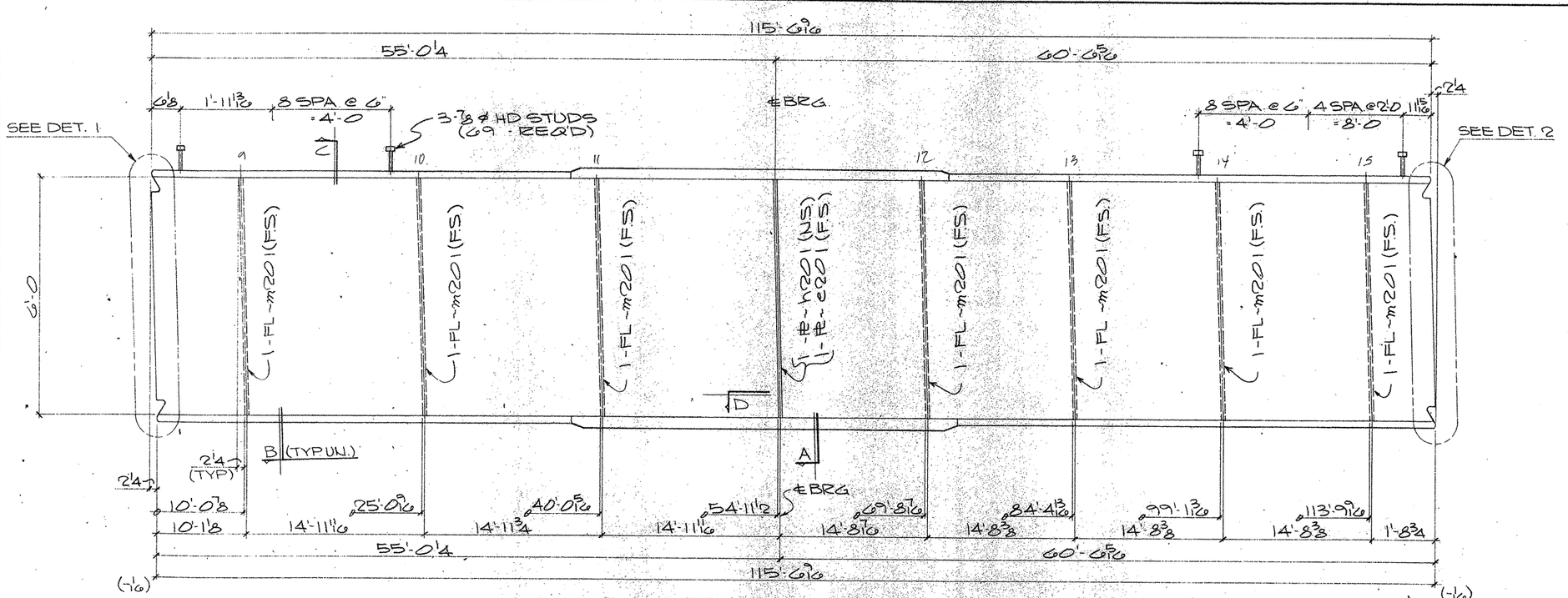

ONE GIRDER MK~ 222PG2.04
(APPROX WT. = TONS)

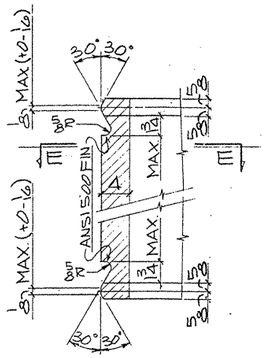

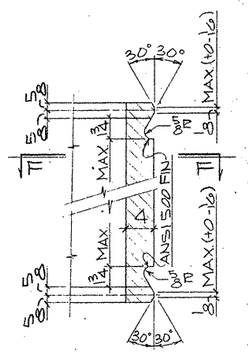

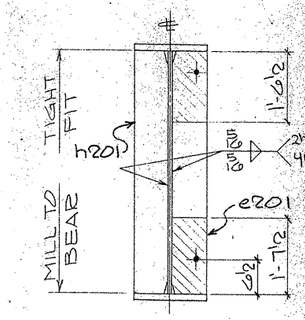

SECTION-A

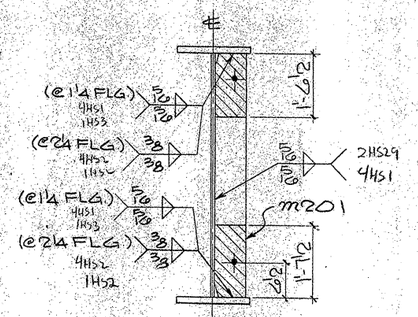

SECTION-B

NO OIL, NO PAINT (FULL LGTH.) (TYP.)

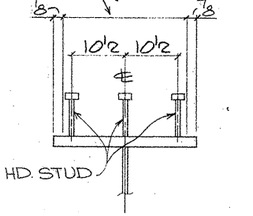

SECTION-C
(TYP STUD SECT.)

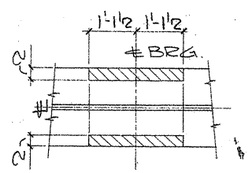

SECTION-D

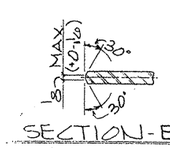

SECTION-EE

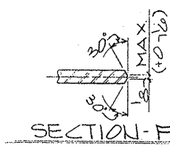

SECTION-FF

SHOP NOTES:

1) FOR GENERAL NOTES SEE SHT. GN1
2) FOR GIRDER SUB-ASSEMBLY SEE SHT. 208
3) FOR STIFF. DETAILS SEE SHT. 221
4) FOR BLOCKING DIAGRAM SEE SHT. 240
5) FOR HEAT CURVE DIAGRAM SEE SHT. 235
6) ▨ INDICATES OIL, NO PAINT (N.S./F.S. & EDGES)

BILL OF MATERIAL

	Qnty	Material	Length	Mark Temp.	Mark Ship.	Wt.	Cut From	Remarks
2	1	GIRDER		222PG2.04				
3	1	GIRDER SUB-ASSY		B208				
4	1	BRG. STIFF.		e201				
5	1	BRG. STIFF.		h201				
6	7	DIAF. STIFF.		m201				
7	69	HD STUDS 7/8	0'-7				24-1	A108

TEXAS DEPARTMENT OF TRANSPORTATION
APPROVED
DIVISION OF BRIDGES AND STRUCTURES
FEB 11 1993

APPROVAL OF THIS DRAWING DOES NOT RELIEVE THE CONTRACTOR OF THE RESPONSIBILITY FOR THE CORRECTNESS OF DETAIL

FOR APPROVAL
JAN 22 '93
NOT FOR CONSTRUCTION

REVISION	DATE	DESCRIPTION OF REVISION
NO. 1		
NO. 2		
NO. 3		
NO. 4		
NO. 5		

PRINTING Req'd	For	Date

Bolts Holes 15/16 ϕ Unless Noted
Shop Paint SEE SHT GN1
Fab Spec AS NTD Inspection
Architect
Erection By Field Connections

HIRSCHFELD STEEL CO. INC.
112 WEST 29TH SAN ANGELO, TEXAS 76903
PHONE (915) 653-3211

DESCRIPTION 645'-0 PLATE GIRDER UNIT
STRUCTURE US 83/281 INTERCHANGE RAMP #4
LOCATION HIDALGO COUNTY
CUSTOMER GILBERT TEXAS CONSTRUCTION
SHIP TO
Customer's Order No.
Dwg By CRT Date 10/92
Checked By JC Date 11-92
SHEET 222 OF
JOB NO 92-109

40209

FED. ROAD DIV. NO.	STATE	FEDERAL AID PROJECT NO.			
5	TX.	NH 92(50)M			
STATE DIST. NO.	COUNTY	CONTROL NO	SECTION NO	JOB NO	HIGHWAY NO.
21	HIDALGO	39	17	97	83/281

CE 92-14 (LINE # 4)

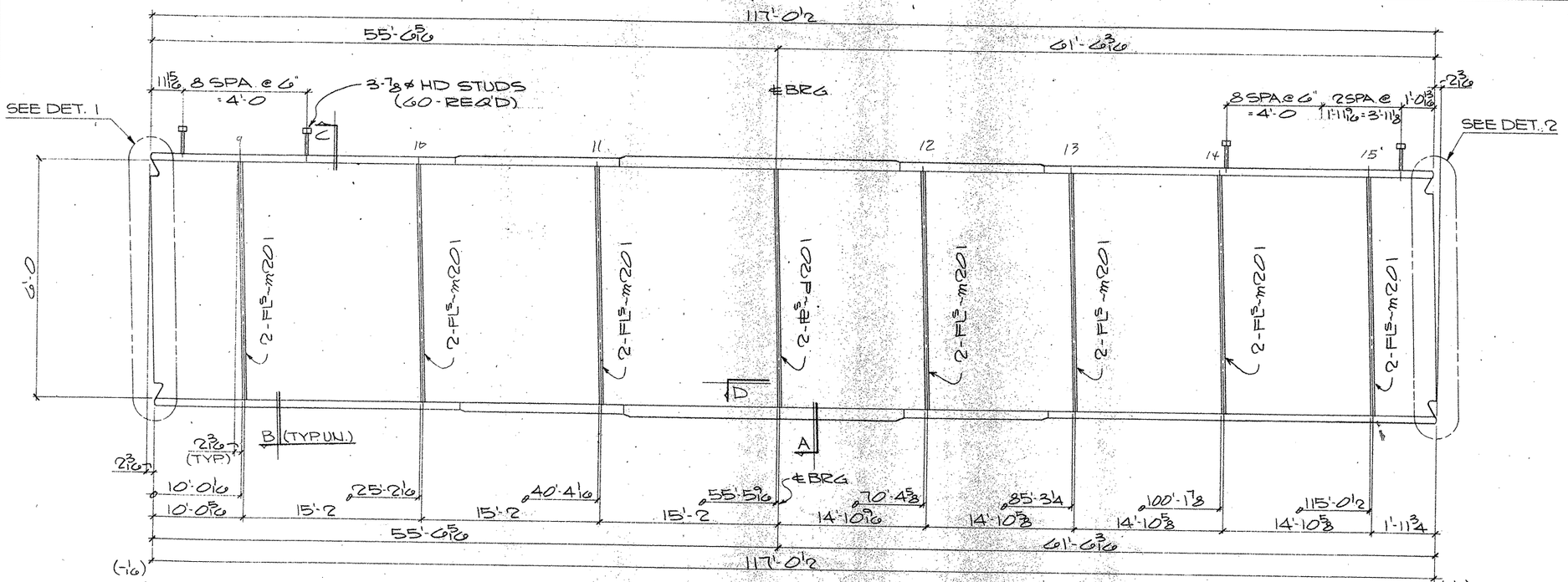

ONE GIRDER MK- 221PG2.03
(APPROX. WT. = TONS)

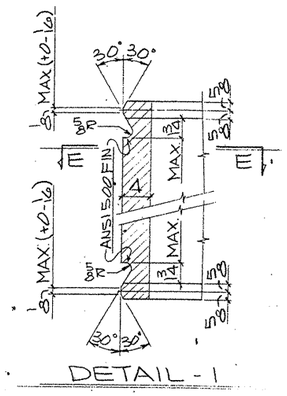

DETAIL-1

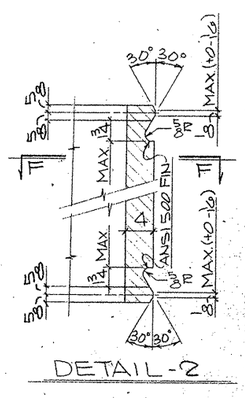

DETAIL-2

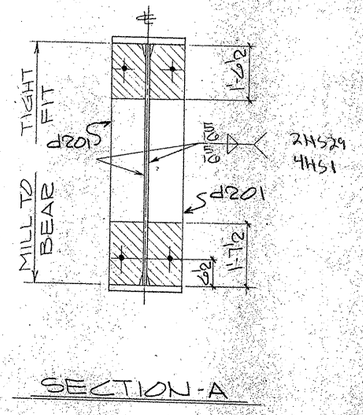

SECTION-A

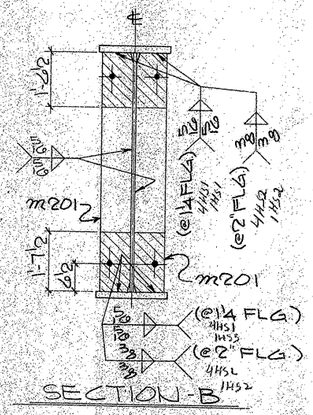

SECTION-B

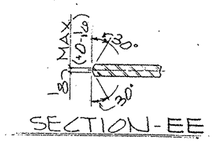

SECTION-EE

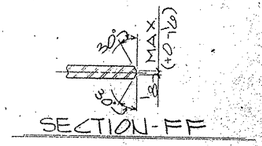

SECTION-FF

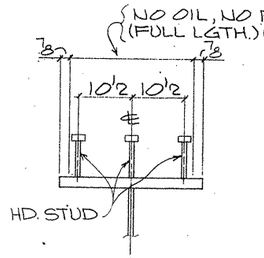

SECTION-C
(TYP. STUD SECT.)

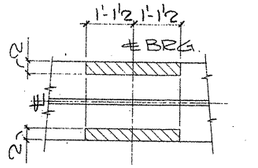

SECTION-D

SHOP NOTES:
1) FOR GENERAL NOTES SEE SHT. GN1
2) FOR GIRDER SUB-ASSEMBLY SEE SHT. 207
3) FOR STIFF. DETAILS SEE SHT. 201
4) FOR BLOCKING DIAGRAM SEE SHT. 239
5) FOR HEAT CURVE DIAGRAM SEE SHT. 235
6) ////// INDICATES OIL, NO PAINT (N.S./F.S. & EDGES)

BILL OF MATERIAL

	Qnty	Material	Length	Mark Temp	Mark Ship	Wt.	Cut From	Remarks
2	1	GIRDER		221PG2.03				
3	1	GIRDER SUB-ASSY		B207				
4	2	BRG. STIFF.		d201				
6	14	DIAF. STIFF.		m201				
7	60	HD. STUDS 7/8	0'-7				214-1	A108

TEXAS DEPARTMENT OF TRANSPORTATION
APPROVED
DIVISION OF BRIDGES AND STRUCTURES
FEB 11 1993
FOR APPROVAL
JAN 22 '93
APPROVAL OF THIS DRAWING DOES NOT RELIEVE THE CONTRACTOR OF THE RESPONSIBILITY FOR THE CORRECTNESS OF DETAIL.
NOT FOR CONSTRUCTION

REVISION	DATE	DESCRIPTION OF REVISION
NO. 1		
NO. 2		
NO. 3		
NO. 4		
NO. 5		

PRINTING Req'd	For	Date

Bolts: Holes, 15/16 ø Unless Noted
Shop Paint SEE SHT. GN1
Fab. Spec. AS NTD Inspection
Architect
Erection By Field Connections

HIRSCHFELD STEEL CO. INC.
112 WEST 29TH SAN ANGELO. TEXAS 76903
PHONE (915) 653-3211

DESCRIPTION 045'-0 PLATE GIRDER UNIT
STRUCTURE US 83/281 INTERCHANGE RAMP #4
LOCATION HIDALGO COUNTY
CUSTOMER GILBERT TEXAS CONSTRUCTION
SHIP TO
Customer's Order No.
Dwg By CRT Date 10/92
Checked By JC Date 11-92
SHEET 221 OF
JOB NO. 92-109

60209

FED. ROAD DIV. NO.	STATE	FEDERAL AID PROJECT NO.			
6	TX.	NH 92(50)M			
STATE DIST. NO.	COUNTY	CONTROL NO.	SECTION NO.	JOB NO.	HIGHWAY NO.
21	HIDALGO	39	17	97	83/281

APV JAN 22

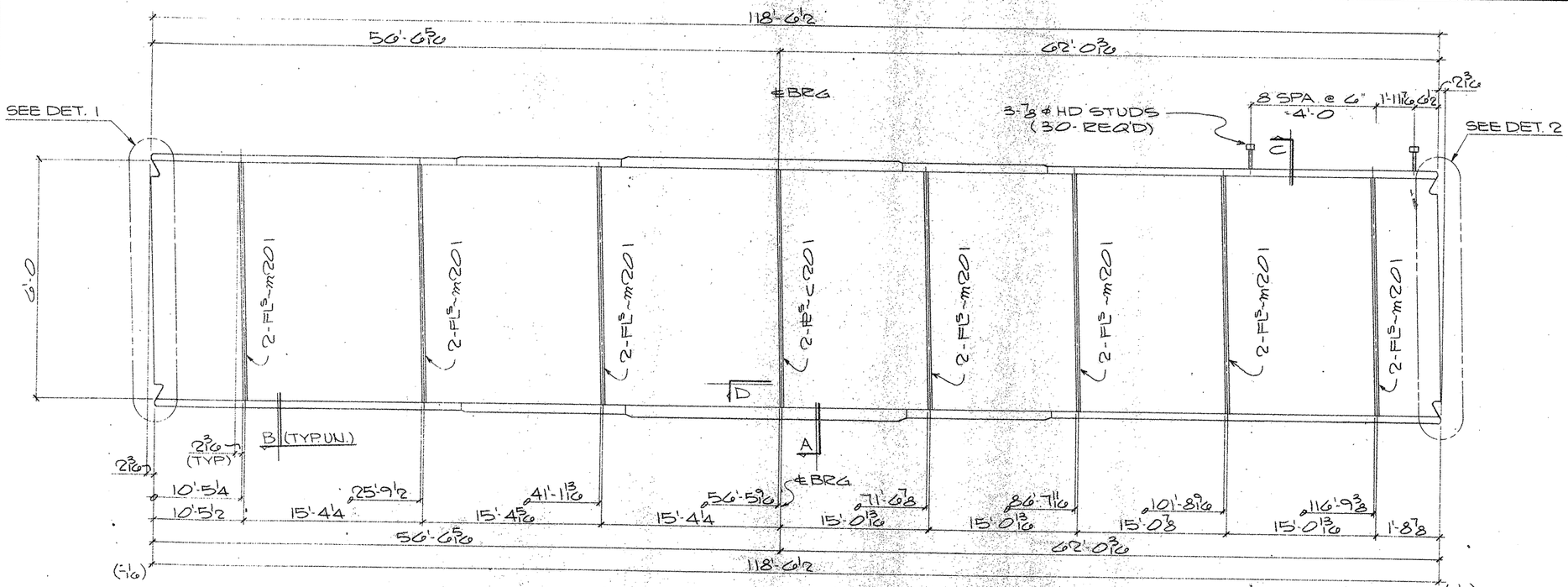

ONE GIRDER MK- 220P62.02
(APPROX. WT.: TONS)

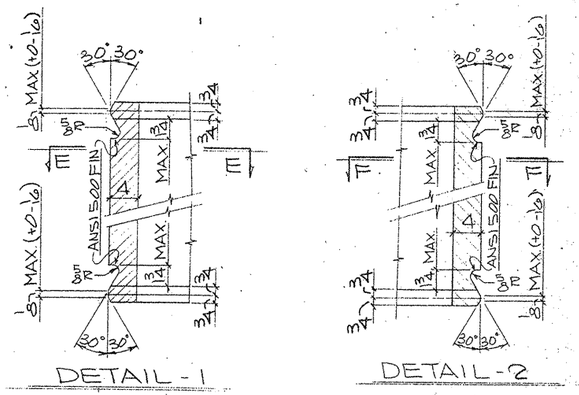

DETAIL - 1

DETAIL - 2

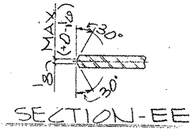

SECTION-EE

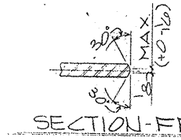

SECTION-FF

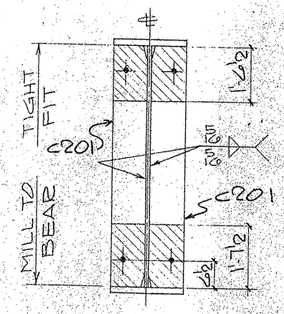

SECTION-A

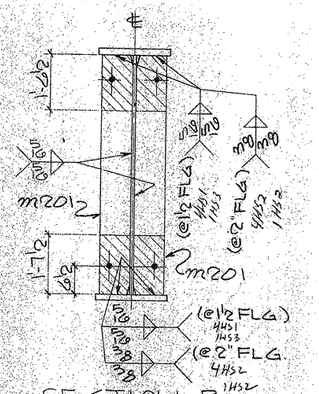

SECTION-B

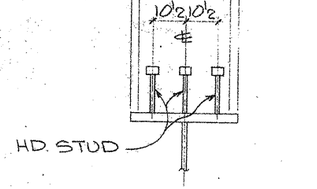

SECTION-C

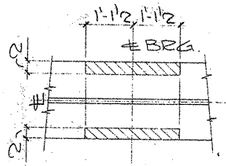

SECTION-D

SHOP NOTES:

1) FOR GENERAL NOTES SEE SHT. GN1
2) FOR GIRDER SUB-ASSEMBLY SEE SHT. 200
3) FOR STIFF. DETAILS SEE SHT. 201
4) FOR BLOCKING DIAGRAM SEE SHT. 238
5) FOR HEAT CURVE DIAGRAM SEE SHT. 235
6) ▨ INDICATES OIL, NO PAINT (N.S./F.S. & EDGES)

BILL OF MATERIAL

	Qnty.	Material	Length	Mark Temp.	Mark Ship.	Wt.	Cut From	Remarks
1								
2	1	GIRDER		220P62.02				
3	1	GIRDER SUB-ASSY		B200				
4	2	BRG. STIFF.		c201				
5								
6	14	DIAF. STIFF.		m201				
7	30	HD STUDS 7/8	0'-7				214-1	A108
8–60								

TEXAS DEPARTMENT OF TRANSPORTATION
APPROVED
DIVISION OF BRIDGES AND STRUCTURES
FEB 11 1993

FOR APPROVAL
JAN 22 '93
NOT FOR CONSTRUCTION

APPROVAL OF THIS DRAWING DOES NOT RELIEVE THE CONTRACTOR OF THE RESPONSIBILITY FOR THE CORRECTNESS OF DETAIL.

REVISION	DATE	DESCRIPTION OF REVISION
NO. 1		
NO. 2		
NO. 3		
NO. 4		
NO. 5		

PRINTING Req'd	For	Date

Bolts: Holes: 15/16 ø Unless Noted
Shop Paint: SEE SHT. GN1
Fab. Spec: AS NTD
Inspection
Architect
Erection By: Field Connections

HIRSCHFELD STEEL CO. INC.
112 WEST 29TH SAN ANGELO, TEXAS 76903
PHONE (915) 653-3211

DESCRIPTION	645'-0 PLATE GIRDER UNIT
STRUCTURE	US 83/281 INTERCHANGE RAMP "A"
LOCATION	HIDALGO COUNTY
CUSTOMER	GILBERT TEXAS CONSTRUCTION
SHIP TO	
Customer's Order No	
Dwg. By CRT Date 10/92	SHEET 220 OF
Checked By JC Date 11-92	JOB NO. 92-109

G0209

FED. ROAD DIV. NO.	STATE	FEDERAL AID PROJECT NO.			
6	TX.	NH 92(50)M			
STATE DIST. NO.	COUNTY	CONTROL NO	SECTION NO	JOB NO	HIGHWAY NO.
21	HIDALGO	39	17	97	83/281

CE92-14 (LINE #2)

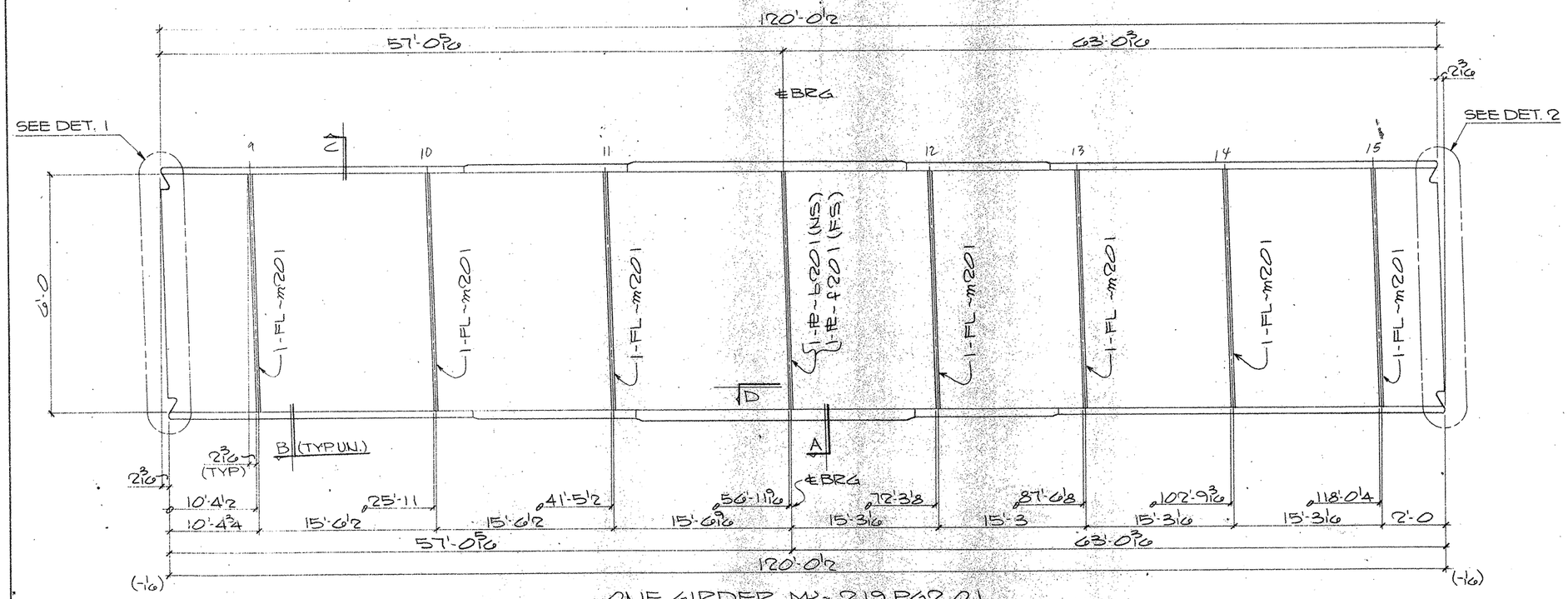

ONE GIRDER MK~ 219 PG2.01
(APPROX WT. = TONS)

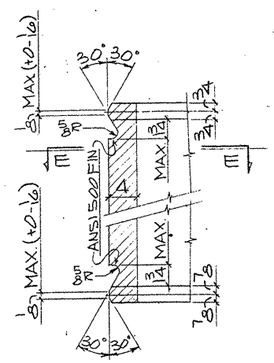

DETAIL-1

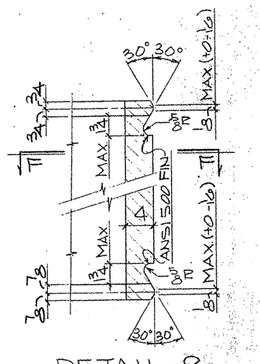

DETAIL-2

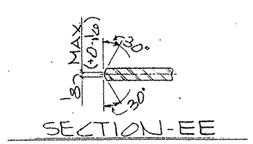

SECTION-EE

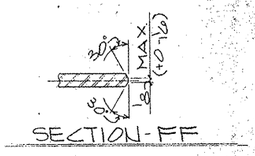

SECTION-FF

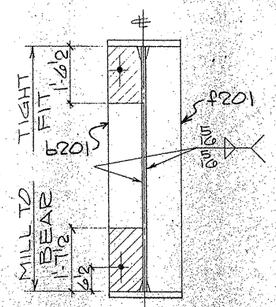

SECTION-A

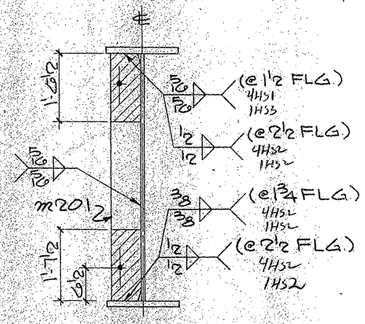

SECTION-B

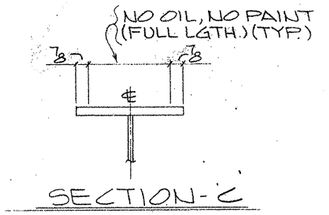

SECTION-C

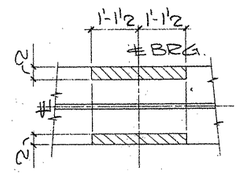

SECTION-D

SHOP NOTES:
1) FOR GENERAL NOTES SEE SHT. GN1
2) FOR GIRDER SUB-ASSEMBLY SEE SHT. 205
3) FOR STIFF. DETAILS SEE SHT. 201
4) FOR BLOCKING DIAGRAM SEE SHT. 237
5) FOR HEAT CURVE DIAGRAM SEE SHT. 235
6) ▨ INDICATES OIL, NO PAINT (N.S./F.S. & EDGES)

BILL OF MATERIAL

	Only.	Material	Length	Mark Temp.	Mark Ship.	Wt	Cut From	Remarks
2	1	GIRDER		219PG2.01				
3	1	GIRDER SUB-ASSY		B205				
4	1	BRG. STIFF.		b201				
5	1	BRG. STIFF.		f201				
6	7	DIAF. STIFF.		m201				

TEXAS DEPARTMENT OF TRANSPORTATION
APPROVED
DIVISION OF BRIDGES AND STRUCTURES
FEB 11 1993

FOR APPROVAL
JAN 22 '93
NOT FOR CONSTRUCTION

APPROVAL OF THIS DRAWING DOES NOT RELIEVE THE CONTRACTOR OF THE RESPONSIBILITY FOR THE CORRECTNESS OF DETAIL.

REVISION	DATE	DESCRIPTION OF REVISION
NO. 1		
NO. 2		
NO. 3		
NO. 4		
NO. 5		

PRINTING Req'd	For	Date

Bolts Holes: 15/16 ϕ Unless Noted
Shop Paint SEE SHT GN1
Fab Spec AS NTD Inspection
Architect
Erection By Field Connections

HIRSCHFELD STEEL CO. INC.
112 WEST 29TH SAN ANGELO, TEXAS 76903
PHONE (915) 653-3211

DESCRIPTION	645'-0 PLATE GIRDER UNIT
STRUCTURE	US 83/281 INTERCHANGE RAMP #4
LOCATION	HIDALGO COUNTY
CUSTOMER	GILBERT TEXAS CONSTRUCTION
SHIP TO	
Customer's Order No.	
Dwg. By CRT	Date 10/92
Checked By JC	Date 11-92

SHEET 219 OF
JOB NO. 92-109

40209

FED. ROAD DIV. NO.	STATE	FEDERAL AID PROJECT NO.			
6	TX.	NH 92(50)M			
STATE DIST. NO.	COUNTY	CONTROL NO.	SECTION NO.	JOB NO.	HIGHWAY NO.
21	HIDALGO	39	17	97	83/281

APR JAN 22

CE92-14 (LINE # 1)

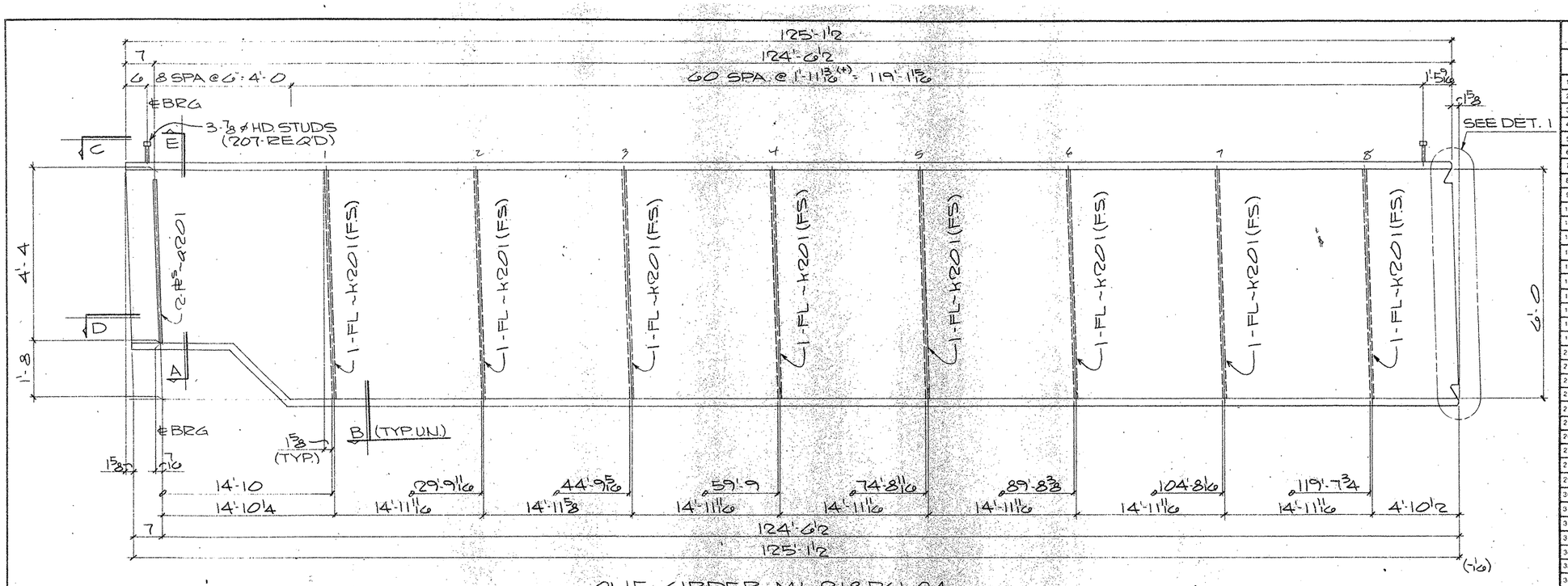

ONE GIRDER MK~218PG1.04
(APPROX. WT. = TONS)

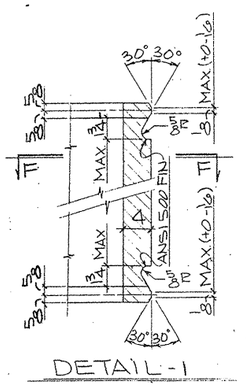

DETAIL-1

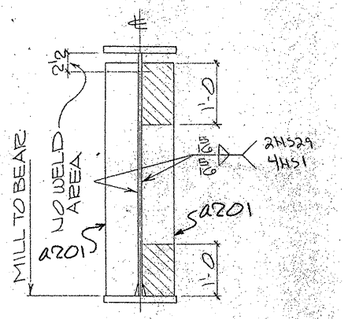

SECTION-A

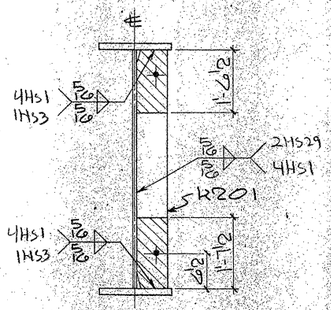

SECTION-B

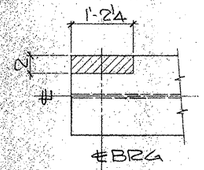

VIEW-C

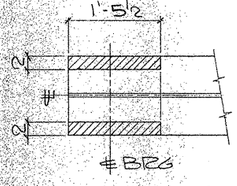

SECTION-D

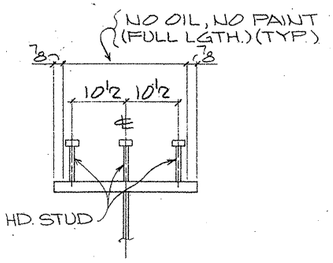

SECTION-E
(TYP. STUD SECT.)

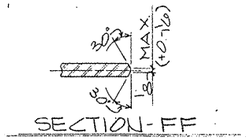

SECTION-FF

SHOP NOTES:
1) FOR GENERAL NOTES SEE SHT. GN1
2) FOR GIRDER SUB-ASSEMBLY SEE SHT. 208
3) FOR STIFF. DETAILS SEE SHT. 201
4) FOR BLOCKING DIAGRAM SEE SHT. 240
5) FOR HEAT CURVE DIAGRAM SEE SHT. 235
6) ▨ INDICATES OIL, NO PAINT (N.S./F.S. & EDGES)

BILL OF MATERIAL

	Qnty.	Material	Length	Mark Temp.	Mark Ship.	Wt.	Cut From	Remarks
2	1	GIRDER		218PG1.04				
3	1	GIRDER SUB-ASSY		A208				
4	2	BRG STIFF		A201				
5	8	DIAF STIFF		A201				
7	207	HD STUD 7/8	0'-7				214-1	A108

TEXAS DEPARTMENT OF TRANSPORTATION
APPROVED
DIVISION OF BRIDGES AND STRUCTURES
FEB 11 1993

FOR APPROVAL
JAN 22 93
NOT FOR CONSTRUCTION

APPROVAL OF THIS DRAWING DOES NOT RELIEVE THE CONTRACTOR OF THE RESPONSIBILITY FOR THE CORRECTNESS OF DETAIL.

REVISION	DESCRIPTION OF REVISION
NO. 1	
NO. 2	
NO. 3	
NO. 4	
NO. 5	

PRINTING Reqd	For	Date

Bolts: Holes: 15/16 ø Unless Noted
Shop Paint: SEE SHT. GN1
Fab. Spec.: AS NTD. Inspection
Architect
Erection By: Field Connections

HIRSCHFELD STEEL CO. INC.
112 WEST 29TH SAN ANGELO, TEXAS 76903
PHONE (915) 653-3211

DESCRIPTION: 64SLO PLATE GIRDER UNIT
STRUCTURE: US 83/281 INTERCHANGE RAMP "A"
LOCATION: HIDALGO COUNTY
CUSTOMER: GILBERT TEXAS CONSTRUCTION
SHIP TO
Customer's Order No.
Dwg. By: CRT Date: 10/92
Checked By: JC Date: 11-92
SHEET 218 OF
JOB NO. 92-109

40209

FED. ROAD DIV. NO.	STATE	FEDERAL AID PROJECT NO.			
6	TX.	NH 92(50)M			
STATE DIST. NO.	COUNTY	CONTROL NO.	SECTION NO.	JOB NO.	HIGHWAY NO.
21	HIDALGO	39	17	97	83/281

APV JAN 22

CE92-14 (LINE #4)

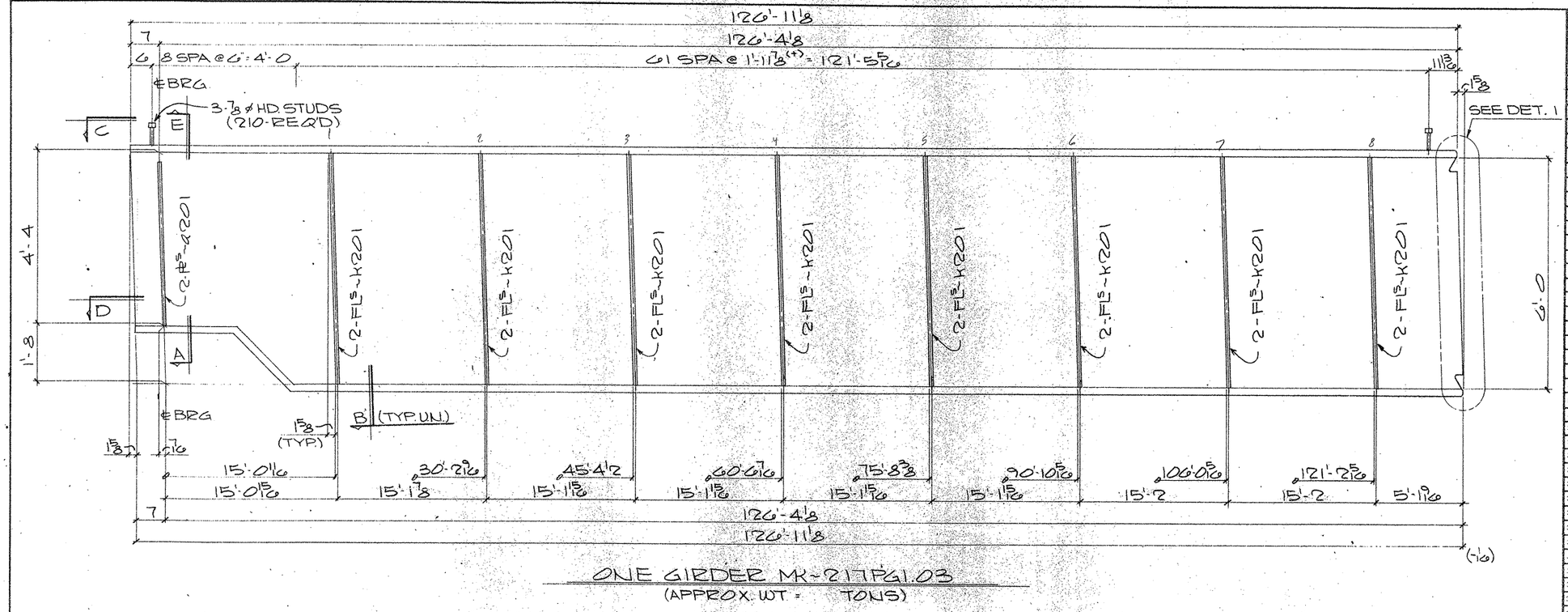

ONE GIRDER MK-217PG1.03

(APPROX. WT = TONS)

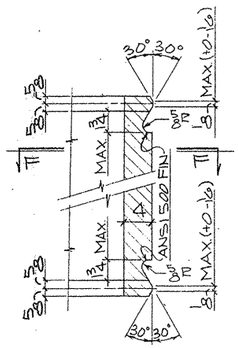

DETAIL-1

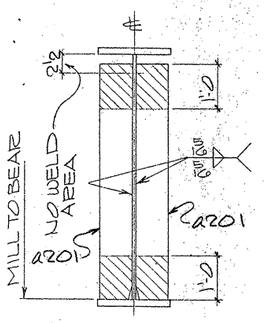

SECTION-A

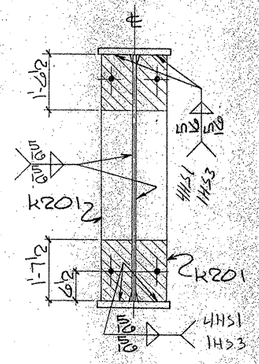

SECTION-B

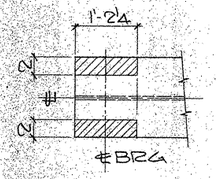

VIEW-C

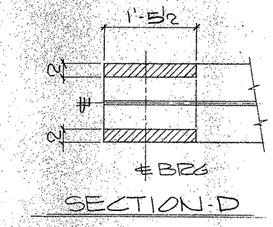

SECTION-D

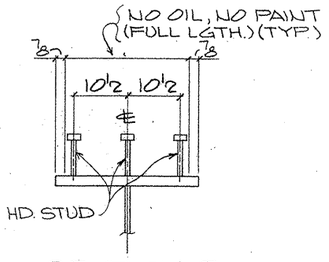

SECTION-E

(TYP. STUD SECT.)

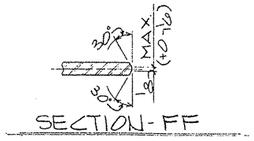

SECTION-FF

SHOP NOTES:

1) FOR GENERAL NOTES SEE SHT. GN1
2) FOR GIRDER SUB-ASSEMBLY SEE SHT. 207
3) FOR STIFF. DETAILS SEE SHT. 201
4) FOR BLOCKING DIAGRAM SEE SHT. 239
5) FOR HEAT CURVE DIAGRAM SEE SHT. 235
6) ▨ INDICATES OIL, NO PAINT (N.S./F.S. & EDGES)

BILL OF MATERIAL

	Qnty.	Material	Length	Mark Temp	Mark Ship.	Wt.	Cut From	Remarks
2	1	GIRDER		217PG1.03				
3	1	GIRDER SUB-ASSY		A207				
4	2	BRG STIFF		K201				
5	16	DIAF STIFF		K201				
7	210	HD STUD ⅞	0'-7				214-1	A108

TEXAS DEPARTMENT OF TRANSPORTATION
APPROVED
DIVISION OF BRIDGES AND STRUCTURES
FEB 11 1993

FOR APPROVAL
JAN 22 '93

APPROVAL OF THIS DRAWING DOES NOT RELIEVE THE CONTRACTOR OF THE RESPONSIBILITY FOR THE CORRECTNESS OF DETAIL.

NOT FOR CONSTRUCTION

REVISION	DATE	DESCRIPTION OF REVISION
NO. 1		
NO. 2		
NO. 3		
NO. 4		
NO. 5		

PRINTING Req'd	For	Date

Bolts Holes: 15/16 ø Unless Noted
Shop Paint SEE SHT GN1
Fab Spec. AS NTD. Inspection
Architect
Erection By Field Connections

HIRSCHFELD STEEL CO. INC.
112 WEST 29TH SAN ANGELO, TEXAS 76903
PHONE (915) 653-3211

DESCRIPTION	045'-0 PLATE GIRDER UNIT
STRUCTURE	US 83/281 INTERCHANGE RAMP "A"
LOCATION	HIDALGO COUNTY
CUSTOMER	GILBERT TEXAS CONSTRUCTION
SHIP TO	
Customer's Order No.	
Dwg. By CRT Date 10/92	SHEET 217 OF
Checked By JC Date 11-92	JOB NO. 92-109

40209

FED. ROAD DIV. NO.	STATE	FEDERAL AID PROJECT NO.			
6	TX.	NH 92(50)M			
STATE DIST. NO.	COUNTY	CONTROL NO.	SECTION NO.	JOB NO.	HIGHWAY NO.
21	HIDALGO	39	17	97	83/281

CE92-14 (LINE #3)

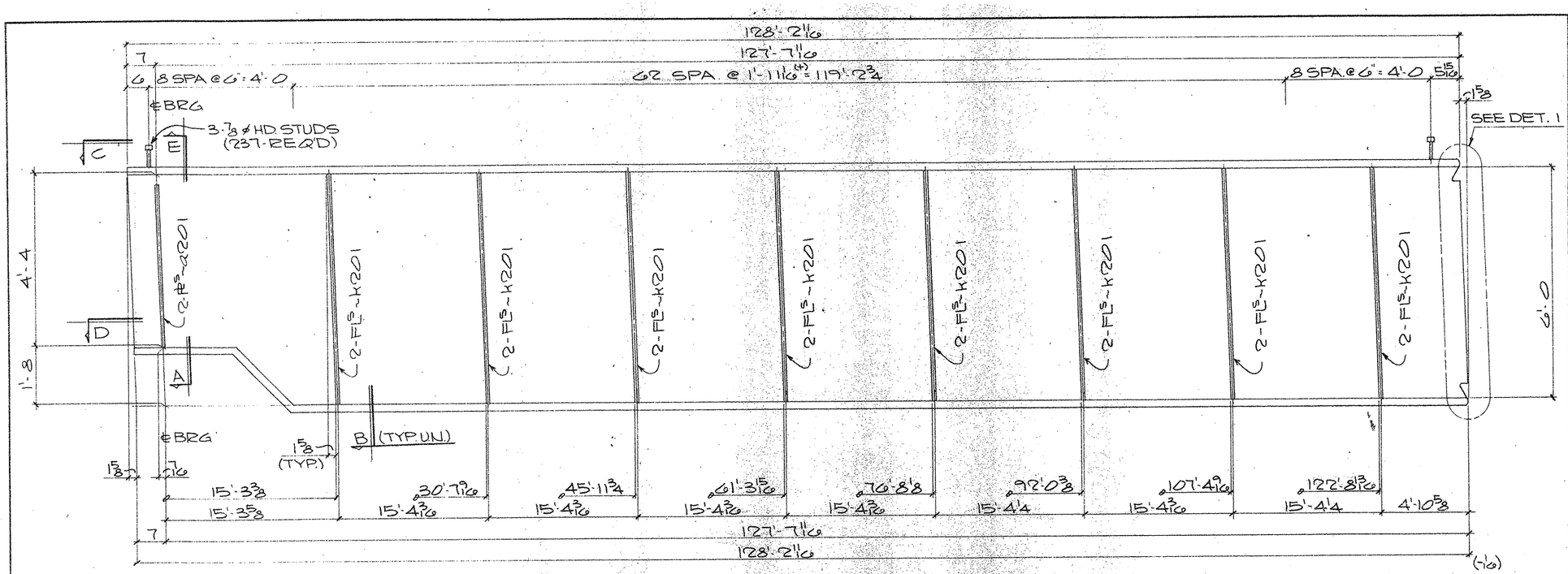

ONE GIRDER MK-216PG1.02

(APPROX. WT. = TONS)

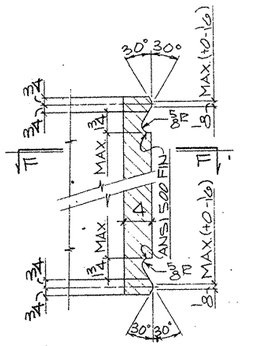

DETAIL-1

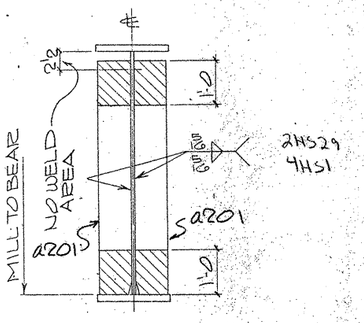

SECTION-A

SECTION-B

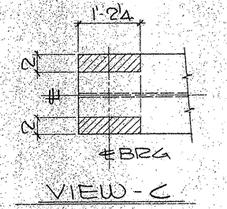

VIEW-C

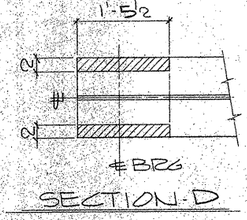

SECTION-D

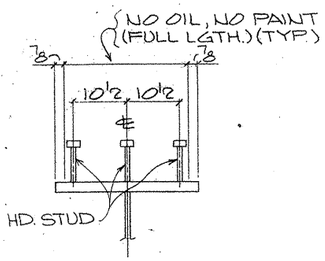

SECTION-E

(TYP. STUD SECT.)

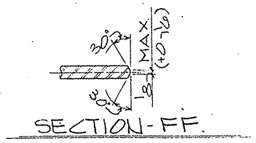

SECTION-FF

SHOP NOTES:

1) FOR GENERAL NOTES SEE SHT. GN1
2) FOR GIRDER SUB-ASSEMBLY SEE SHT. 200
3) FOR STIFF. DETAILS SEE SHT. 201
4) FOR BLOCKING DIAGRAM, SEE SHT. 238
5) FOR HEAT CURVE DIAGRAM SEE SHT. 235
6) ▨ INDICATES OIL, NO PAINT (N.S./F.S. & EDGES)

BILL OF MATERIAL

	Qnty	Material	Length	Mark Temp	Mark Ship	Wt.	Cut From	Remarks
2	1	GIRDER		216PG1.02				
3	1	GIRDER SUB-ASSY		A206				
4	2	BRG STIFF		A201				
5	16	DIAF STIFF		K201				
7	237	HD STUD 7/8	0'-7				214-1	A108

TEXAS DEPARTMENT OF TRANSPORTATION
APPROVED
DIVISION OF BRIDGES AND STRUCTURES
FEB 1 1993

FOR APPROVAL
JAN 22 93
NOT FOR CONSTRUCTION

APPROVAL OF THIS DRAWING DOES NOT RELIEVE THE CONTRACTOR OF THE RESPONSIBILITY FOR THE CORRECTNESS THEREOF

REVISION	DATE	DESCRIPTION OF REVISION
NO. 1		
NO. 2		
NO. 3		
NO. 4		
NO. 5		

PRINTING: Reqd | For | Date

Bolts Holes: 15/16 ø Unless Noted
Shop Paint SEE SHT. GN1
Fab Spec. AS NTD. Inspection
Architect
Erection By Field Connections

HIRSCHFELD STEEL CO. INC.
112 WEST 29TH SAN ANGELO, TEXAS 76903
PHONE (915) 653-3211

DESCRIPTION	645-0 PLATE GIRDER UNIT
STRUCTURE	US 83/281 INTERCHANGE RAMP "A"
LOCATION	HIDALGO COUNTY
CUSTOMER	GILBERT TEXAS CONSTRUCTION
SHIP TO	
Customer's Order No.	
Dwg. By	CRT Date 10/92
Checked By	JC Date 11-92

SHEET 216 OF
JOB NO. 92-109

60209

FED. ROAD DIV. NO.	STATE	FEDERAL AID PROJECT NO.				
6	TX.	NH 92(50)M				
STATE DIST. NO.	COUNTY	CONTROL NO.	SECTION NO.	JOB NO.	HIGHWAY NO.	
21	HIDALGO	39	17	97	83/281	

APV JAN 22

CE92-14 (LINE #2)

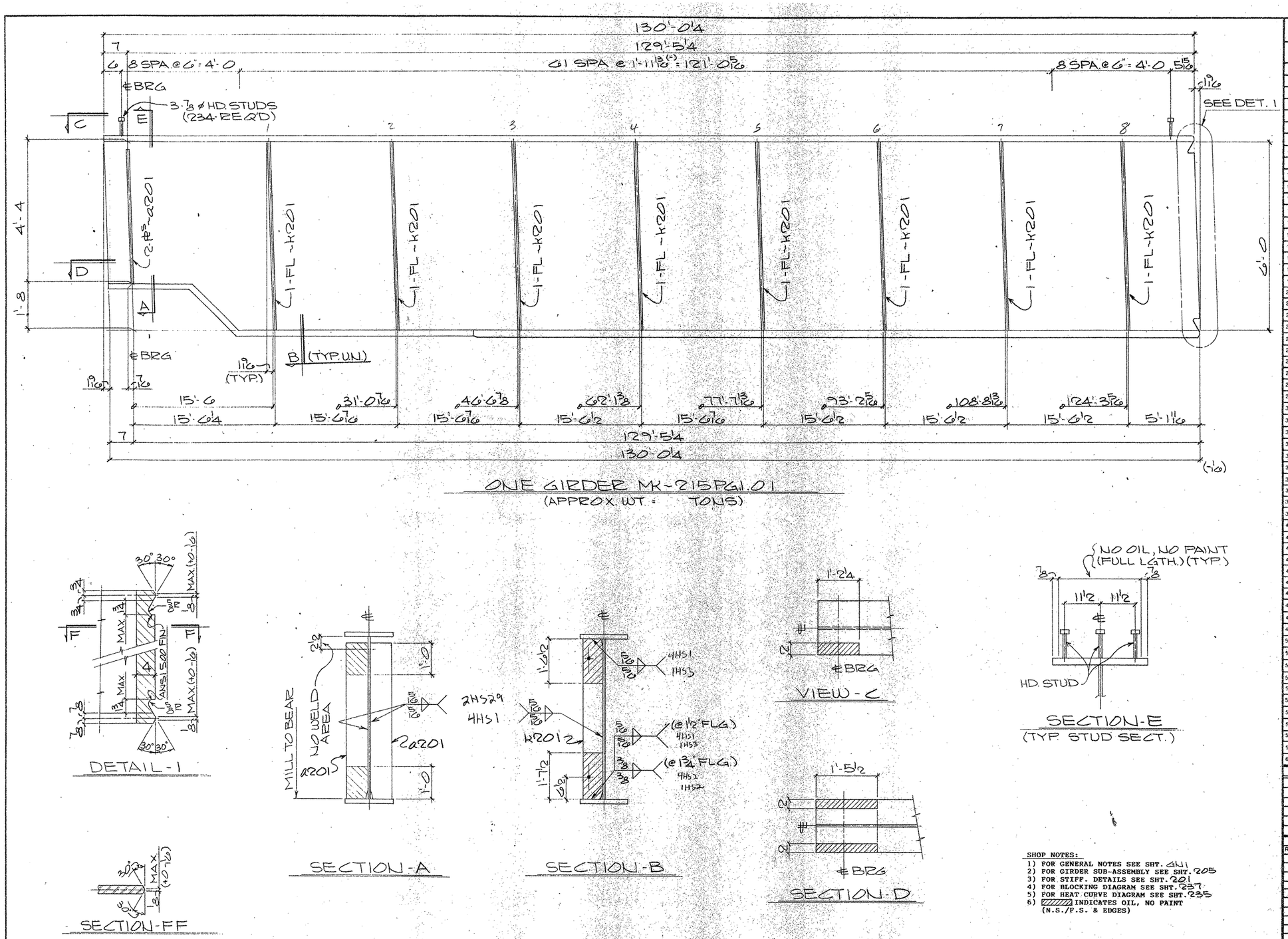

BILL OF MATERIAL

Qnty.	Material	Length	Mark Temp.	Mark Ship.	Wt.	Cut From	Remarks
1	GIRDER		215PG1.01				
1	GIRDER SUB-ASSY		A205				
2	BRG STIFF		a201				
8	DIAF. STIFF		K201				
234	HD STUD 7/8	0'-7				214-1	A108

TEXAS DEPARTMENT OF TRANSPORTATION
APPROVED
DIVISION OF BRIDGES AND STRUCTURES
FEB 11 1993
APPROVAL OF THIS DRAWING DOES NOT RELIEVE THE CONTRACTOR OF THE RESPONSIBILITY FOR THE CORRECTNESS OF DETAIL.

FOR APPROVAL
JAN 22 '93
NOT FOR CONSTRUCTION

REVISION	DATE	DESCRIPTION OF REVISION
NO. 1		
NO. 2		
NO. 3		
NO. 4		
NO. 5		

SHOP NOTES:
1) FOR GENERAL NOTES SEE SHT. GN1
2) FOR GIRDER SUB-ASSEMBLY SEE SHT. 205
3) FOR STIFF. DETAILS SEE SHT. 201
4) FOR BLOCKING DIAGRAM SEE SHT. 237
5) FOR HEAT CURVE DIAGRAM SEE SHT. 235
6) ▨ INDICATES OIL, NO PAINT (N.S./F.S. & EDGES)

PRINTING: Req'd | For | Date

Bolts: Holes: 15/16 ø Unless Noted
Shop Paint: SEE SHT. GN1
Fab. Spec.: AS NTD. Inspection
Architect
Erection By: Field Connections

HIRSCHFELD STEEL CO. INC.
112 WEST 29TH SAN ANGELO, TEXAS 76903
PHONE (915) 653-3211

DESCRIPTION: 645'-0 PLATE GIRDER UNIT
STRUCTURE: US 83/281 INTERCHANGE RAMP #4
LOCATION: HIDALGO COUNTY
CUSTOMER: GILBERT TEXAS CONSTRUCTION
SHIP TO:
Customer's Order No.
Dwg. By: CRT Date: 10/92
Checked By: JC Date: 11-92
SHEET 215 OF
JOB NO. 92-109

G0209

FED. ROAD DIV. NO.	STATE	FEDERAL AID PROJECT NO.			
6	TX.	NH 92(50)M			
STATE DIST. NO.	COUNTY	CONTROL NO.	SECTION NO.	JOB NO.	HIGHWAY NO.
21	HIDALGO	39	17	97	83/281

APV. JAN 22

CE92-14 (LINE # 1)

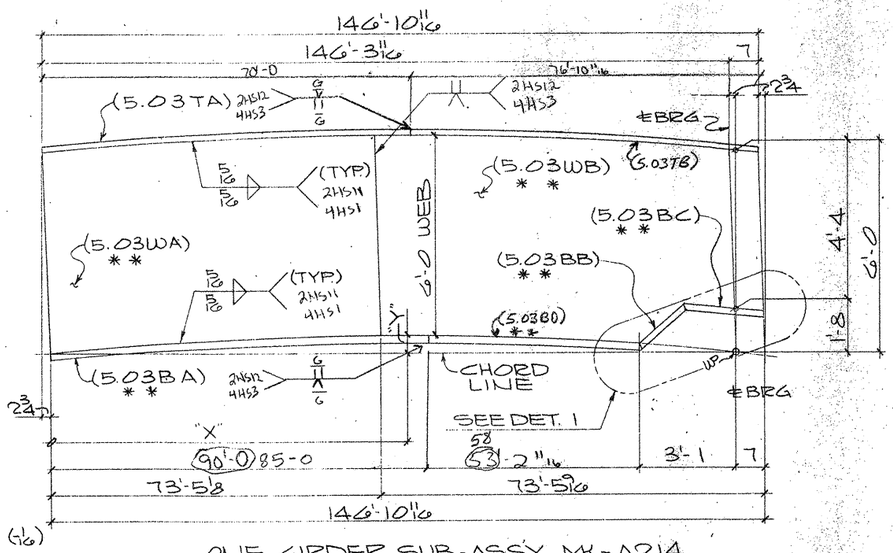

ONE GIRDER SUB-ASSY MK-A214
(FOR GIRDER - 233PG5.03)

MK - A214									
"X"	1'-1 7/8	21'-10 3/8	42'-7 7/16	63'-4 1/4	73'-5 1/8	84'-1 1/16	104'-9 15/16	125'-6 13/16	146'-3 11/16
"Y"	1/8	2 7/16	4 1/8	5"	4 15/16 ℄ WEB SPLICE	4 15/16	3 15/16	2 3/16	0"

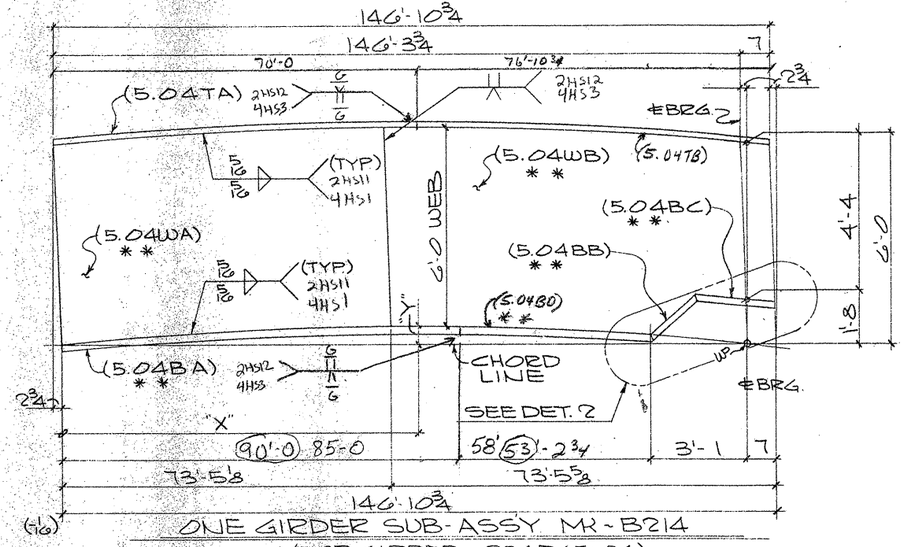

ONE GIRDER SUB-ASSY MK-B214
(FOR GIRDER - 234PG5.04)

MK - B214									
"X"	1'-1 7/8	21'-10 5/8	42'-7 1/16	63'-4 7/16	73'-5 1/8	84'-1 1/16	104'-9 1/8	125'-6 3/16	146'-3 3/4
"Y"	1/8	2 7/16	4 3/16	5 1/16	5" ℄ WEB	4 15/16	3 15/16	2 3/8	0"

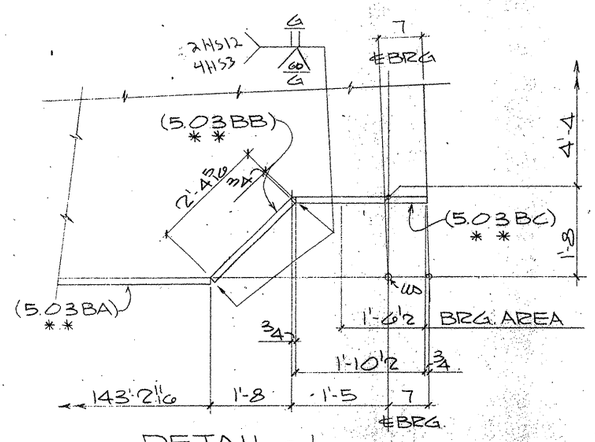

DETAIL - 1

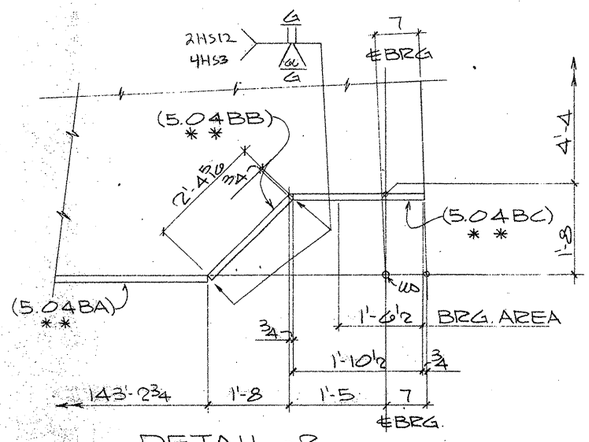

DETAIL - 2

SHOP NOTES:
1) FOR GENERAL NOTES, SEE SHT. GN1
2) MATERIAL NOTED "* *" MUST MEET CHARPY V-NOTCH REQUIREMENTS

60209

FED. ROAD DIV. NO.	STATE	FEDERAL AID PROJECT NO.				
6	TX.	NH 92(50)M				
STATE DIST. NO.	COUNTY	CONTROL NO.	SECTION NO.	JOB NO.	HIGHWAY NO.	
21	HIDALGO	39	17	97	83/281	

BILL OF MATERIAL

	Qnty.	Material	Length	Mark Temp.	Mark Ship.	Wt.	Cut From	Remarks
3	1	GIRDER SUB-ASSY			A214			
4	1	PL 5/8 x 72	73'-7 1/8	5.03WA			205-18	CVN2
5	1	PL 5/8 x 72	73'-6	5.03WB			205-19	CVN2
6	1	PL 1/4 x 24	70'-0	5.03TA			211-13	
7	1	PL 1 3/4 x 24	85'-0	5.03BA			208-6	CVN2
8	1	PL 1 3/4 x 24	2'-3 9/16	5.03BB			206-18	CVN2
9	1	PL 1 3/4 x 24	1'-10 1/2	5.03BC			206-17	CVN2
10	1	PL 1 3/4 x 24	58'-2 11/16	5.03BO				CVN2
11	1	PL 1/4 x 24	76'-10 11/16	5.03TB				
18	1	GIRDER SUB-ASSY			B214			
19	1	PL 5/8 x 72	73'-7 7/8	5.04WA			206-6	CVN2
20	1	PL 5/8 x 72	73'-6	5.04WB			206-7	CVN2
21	1	PL 1/4 x 24	70'-0	5.04TA			212-5	
22	1	PL 1 3/4 x 24	85'-0	5.04BA			208-14	CVN2
23	1	PL 1 3/4 x 24	2'-3 9/16	5.04BB			206-18	CVN2
24	1	PL 1 3/4 x 24	1'-10 1/2	5.04BC			206-17	CVN2
25	1	PL 1 3/4 x 24	58'-2 3/4	5.04BO				CVN2
26	1	PL 1/4 x 24	76'-10 3/4	5.04TB				

TEXAS DEPARTMENT OF TRANSPORTATION
APPROVED EXCEPT AS NOTED.
DIVISION OF BRIDGES AND STRUCTURES
FEB 11 1998

FOR APPROVAL
JAN 22 '98
NOT FOR CONSTRUCTION

APPROVAL OF THIS DRAWING DOES NOT RELIEVE THE CONTRACTOR OF THE RESPONSIBILITY FOR THE CORRECTNESS OF DETAIL

REVISION	DATE	DESCRIPTION OF REVISION
NO 1		
NO 2		
NO 3		
NO 4		
NO 5		

PRINTING

Req'd	For	Date

Bolts Holes Unless Noted
Shop Paint SEE SHT GN1
Fab Spec A572-50 UN Inspection
Architect
Erection By Field Connections

HIRSCHFELD STEEL CO. INC.
112 WEST 29TH SAN ANGELO, TEXAS 76903
PHONE (915) 653-3211

DESCRIPTION	64'-0 PLATE GIRDER UNIT
STRUCTURE	US 83/281 INTERCHANGE RAMP #4
LOCATION	HIDALGO COUNTY
CUSTOMER	GILBERT TEXAS CONSTRUCTION
SHIP TO	
Customer's Order No.	
Dwg. By CRT Date 10/97	SHEET 214 OF
Checked By JC Date 11-97	JOB NO. 97-109

CE92-14 (LINE #3 #4) X

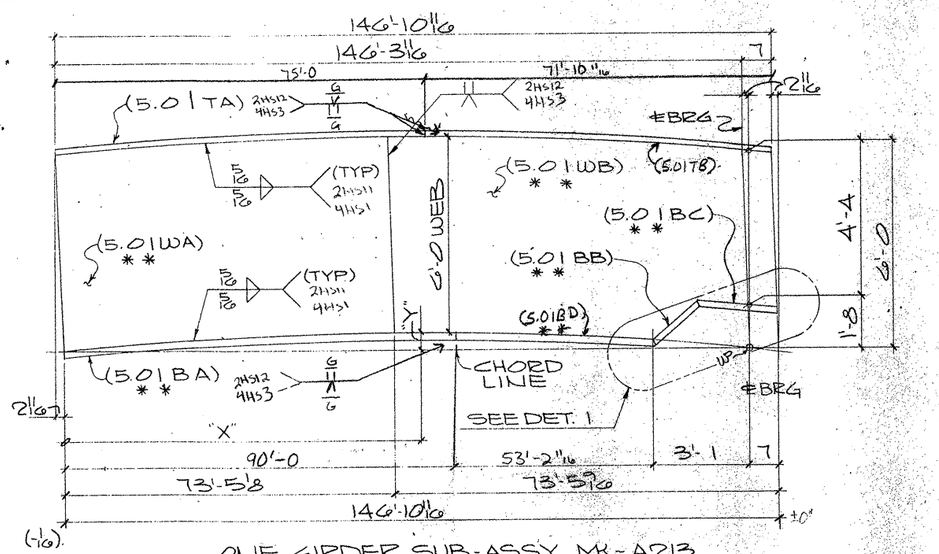

ONE GIRDER SUB-ASSY MK-A213
(FOR GIRDER - 231PG5.01)

MK-A213									
"X"	1'-1 7/8	21'-10 1/16	42'-7 1/16	63'-4 1/4	73'-5 1/8	84'-1 1/16	104'-9 15/16	125'-6 13/16	146'-3 1/16
"Y"	1/8	2 1/16	3 9/16	4 3/8	4 3/8	4 5/16	3 7/16	1 15/16	0"
					℄ WEB SPLICE				

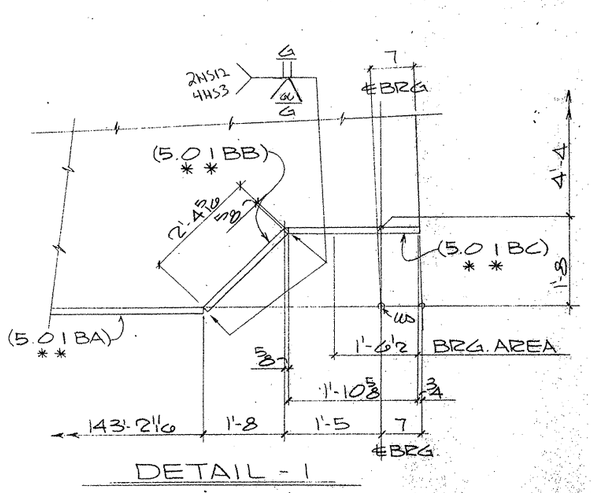

DETAIL - 1

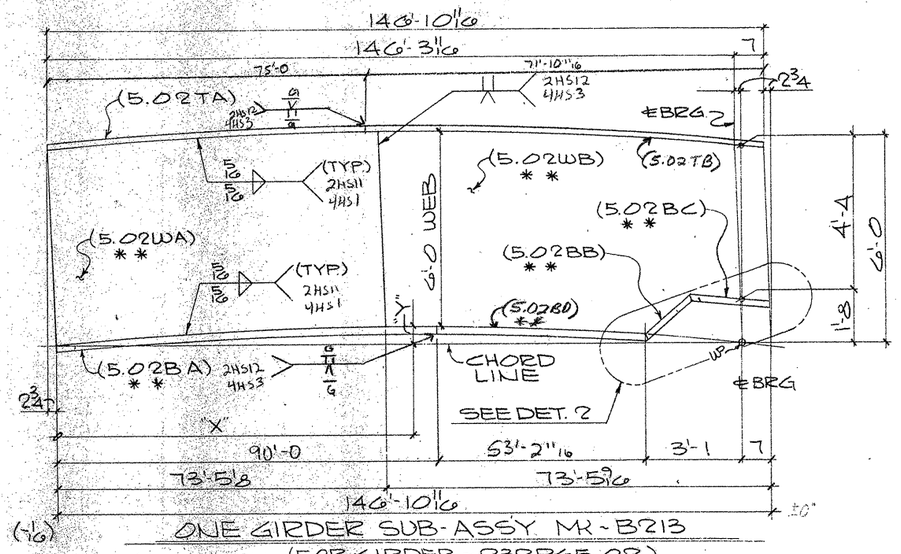

ONE GIRDER SUB-ASSY MK-B213
(FOR GIRDER - 232PG5.02)

MK-B213									
"X"	1'-1 7/8	21'-10 5/8	42'-7 1/16	63'-4 1/4	73'-5 1/8	84'-1 1/16	104'-9 15/16	125'-6 13/16	146'-3 1/16
"Y"	1/8	2 5/16	3 15/16	4 3/4	4 3/4	4 3/4	3 3/4	2 1/8	0"
					℄ WEB SPLICE				

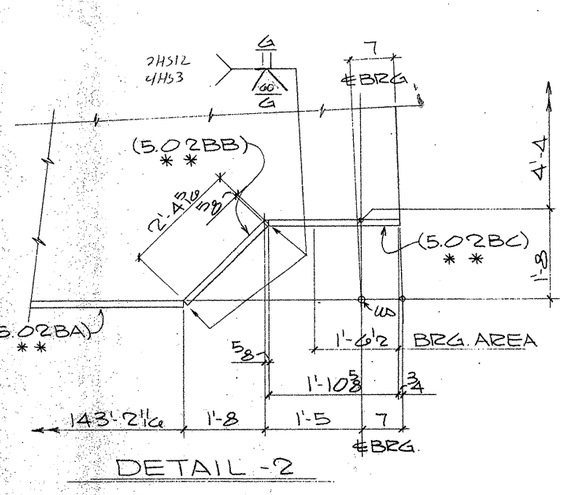

DETAIL - 2

SHOP NOTES:
1) FOR GENERAL NOTES, SEE SHT. GN1
2) MATERIAL NOTED "* *" MUST MEET CHARPY V-NOTCH REQUIREMENTS

60209

FED. ROAD DIV. NO.	STATE	FEDERAL AID PROJECT NO.			
6	TX.	NH 92(50)M			
STATE DIST. NO.	COUNTY	CONTROL NO.	SECTION NO.	JOB NO.	HIGHWAY NO.
21	HIDALGO	39	17	97	83/281

BILL OF MATERIAL

	Qnty	Material	Length	Mark Temp	Mark Ship.	Wt.	Cut From	Remarks
1								
2								
3	1	GIRDER SUB-ASSY		A213				
4	1	PL 5/8 x 72	73'-7 7/8	5.01WA			205-6	CVN2
5	1	PL 5/8 x 72	73'-5 5/8	5.01WB			205-7	CVN2
6	1	PL 1 1/2 x 26	75'-0	5.01TA			210-9	
7	1	PL 1 1/2 x 26	90'-0	5.01BA			207-8	CVN2
8	1	PL 1 1/2 x 26	2'-3 11/16	5.01BB			206-12	CVN2
9	1	PL 1 1/2 x 26	1'-10 5/8	5.01BC			206-11	CVN2
10	1	PL 1 1/2 x 26	53'-2 11/16	5.01BD				CVN2
11	1	PL 1 1/2 x 26	71'-10 11/16	5.01TB				
12								
13								
14								
15								
16								
17								
18	1	GIRDER SUB-ASSY		B213				
19	1	PL 5/8 x 72	73'-7 7/8	5.02WA			205-12	CVN2
20	1	PL 5/8 x 72	73'-5 15/16	5.02WB			205-13	CVN2
21	1	PL 1 1/2 x 24	75'-0	5.02TA			210-20	
22	1	PL 1 1/2 x 24	90'-0	5.02BA			207-16	CVN2
23	1	PL 1 1/2 x 24	2'-3 11/16	5.02BB			206-14	CVN2
24	1	PL 1 1/2 x 24	1'-10 5/8	5.02BC			206-13	CVN2
25	1	PL 1 1/2 x 24	53'-2 11/16	5.02BD				CVN2
26	1	PL 1 1/2 x 24	71'-10 11/16	5.02TB				
27								
28								
29								
30								
31								
32								
33								
34								
35								
36								
37								
38								
39								
40								
41								
42								
43								
44								
45								
46								
47								
48								
49								
50								
51								
52								
53								
54		TEXAS DEPARTMENT OF TRANSPORTATION APPROVED DIVISION OF BRIDGES AND STRUCTURES FEB 11 1993						FOR APPROVAL JAN 22 '93 NOT FOR CONSTRUCTION
55								
56								
57								
58								
59		APPROVAL OF THIS DRAWING DOES NOT RELIEVE THE CONTRACTOR OF THE RESPONSIBILITY FOR THE CORRECTNESS OF DETAIL.						
60								

REVISION	DATE	DESCRIPTION OF REVISION
NO. 1		
NO. 2		
NO. 3		
NO. 4		
NO. 5		

PRINTING Req'd	For	Date

Bolts Holes: Unless Noted
Shop Paint SEE SHT GN1
Fab. Spec A572-50 UN Inspection
Architect
Erection By: Field Connections

HIRSCHFELD STEEL CO. INC.
112 WEST 29TH SAN ANGELO, TEXAS, 76903
PHONE (915) 653-3211

DESCRIPTION	645'-0" PLATE GIRDER UNIT
STRUCTURE	US 83/281 INTERCHANGE RAMP "A"
LOCATION	HIDALGO COUNTY
CUSTOMER	GILBERT TEXAS CONSTRUCTION
SHIP TO:	
Customer's Order No.	
Dwg. By ERT	Date 10/92
Checked By JC	Date 11-92

SHEET 213 OF
JOB NO. 92-109

CE92-14 (LINE #182)

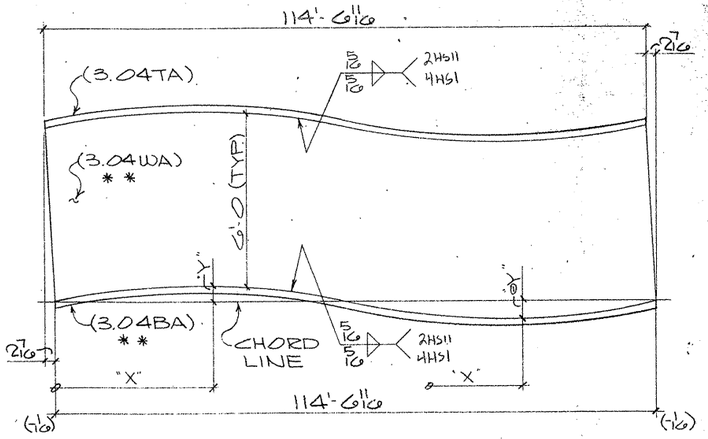

ONE GIRDER SUB-ASSY. MK-A212
(FOR GIRDER-230PG3.04)

MK-A212								
"X"	12'-11 9/16	27'-8	42'-4 7/16	57'-0 7/8	71'-9 5/16	86'-5 1/16	101'-2 1/8	114'-6 11/16
"Y"	3/8	1/2	1/4	0 5/16	0 13/16	0 1"	0 3/4	0"

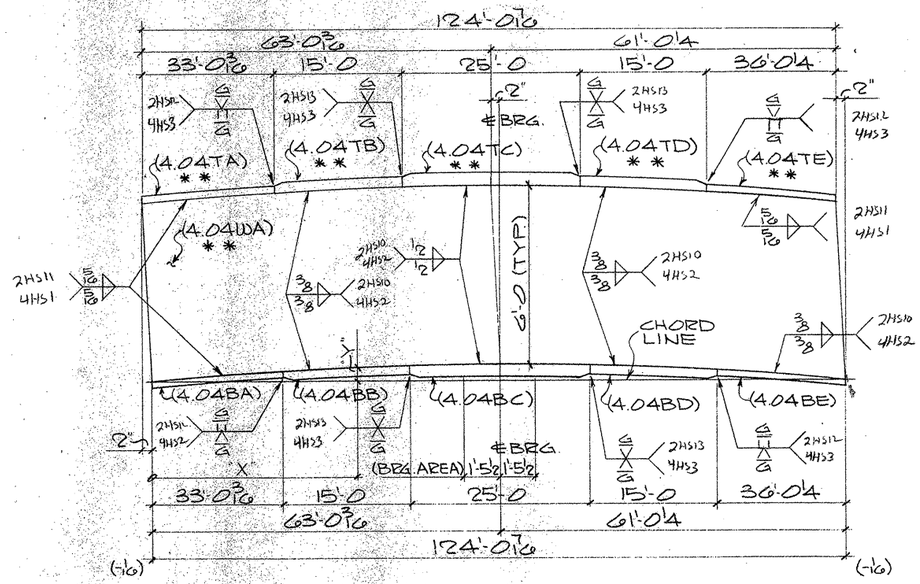

ONE GIRDER SUB-ASSY. MK-B212
(FOR GIRDER-230PG4.04)

MK-B212									
"X"	1-8 15/16	17'-0 3/4	32'-4 9/16	47'-8 3/8	63'-0 3/16	83'-8 5/16	104'-5 3/4	124'-0 7/16	
"Y"	0"	1/4	11/16	1 13/16	3/4	1/2	1/8	0"	
					℄BRG				

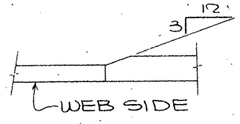

TYP. FLG. THKNESS TRANSITION

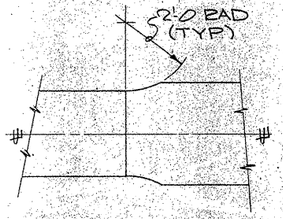

TYP. FLG. WIDTH TRANSITION

SHOP NOTES:
1) FOR GENERAL NOTES, SEE SHT. GN1
2) MATERIAL NOTED "**" MUST MEET CHARPY V-NOTCH REQUIREMENTS
3) FOR HEAT CURVE DIAGRAM, SEE SHT. 236

BILL OF MATERIAL

	Qnty.	Material	Length	Mark Temp.	Mark Ship.	Wt.	Cut From	Remarks
3	1	GIRDER SUB-ASSY		A212				
4	1	PL 5/8 x 72	114'-9 1/8	3.04WA			206-4	CVN2
5	1	PL 1 1/4 x 24	114'-6 11/16	3.04TA			211-18	
6	1	PL 1 1/4 x 24	114'-6 11/16	3.04BA			208-10	CVN2
15	1	GIRDER SUB-ASSY			B212			
16	1	PL 11/16 x 72	124'-2 7/16	4.04WA			206-5	CVN2
17	1	PL 1 1/4 x 24	33'-0 3/16	4.04TA			208-11	CVN2
18	1	PL 2 x 26	15'-0	4.04TB			208-12	CVN2
19	1	PL 3 x 26	25'-0	4.04TC			209-11	CVN3
20	1	PL 2 1/4 x 24	15'-0	4.04TD			209-12	CVN3
21	1	PL 1 1/4 x 24	36'-0 1/4	4.04TE			208-13	CVN2
22	1	PL 1 1/4 x 24	33'-0 3/16	4.04BA			211-19	
23	1	PL 2 x 26	15'-0	4.04BB			211-20	
24	1	PL 3 x 26	25'-0	4.04BC			212-2	
25	1	PL 2 1/4 x 24	15'-0	4.04BD			212-3	
26	1	PL 1 3/4 x 24	36'-0 1/4	4.04BE			212-4	

TEXAS DEPARTMENT OF TRANSPORTATION
APPROVED
DIVISION OF BRIDGES AND STRUCTURES
FEB 11 1993

FOR APPROVAL
JAN 22 93
NOT FOR CONSTRUCTION

APPROVAL OF THIS DRAWING DOES NOT RELIEVE THE CONTRACTOR OF THE RESPONSIBILITY FOR THE CORRECTNESS OF DETAIL.

REVISION	DATE	DESCRIPTION OF REVISION
NO. 1		
NO. 2		
NO. 3		
NO. 4		
NO. 5		

PRINTING Req'd	For	Date

Bolts Holes Unless Noted
Shop Paint SEE SHT. GN1
Fab Spec A572-50 DN. Inspection
Architect
Erection By Field Connections

HIRSCHFELD STEEL CO. INC.
112 WEST 29TH SAN ANGELO. TEXAS 76903
PHONE (915) 653-3211

DESCRIPTION 245'-0 PLATE GIRDER UNIT
STRUCTURE US 83/281 INTERCHANGE RAMP "A"
LOCATION HIDALGO COUNTY
CUSTOMER GILBERT TEXAS CONSTRUCTION
SHIP TO
Customer's Order No.
Dwg. By CRT Date 10/92
Checked By JC Date 11-92
SHEET 212 OF
JOB NO. 92-109

60209

FED. ROAD DIV. NO.	STATE	FEDERAL AID PROJECT NO.			
6	TX.	NH 92(50)M			
STATE DIST. NO.	COUNTY	CONTROL NO.	SECTION NO.	JOB NO.	HIGHWAY NO.
21	HIDALGO	39	17	97	83/281

CE 92-14 (LINE #4)

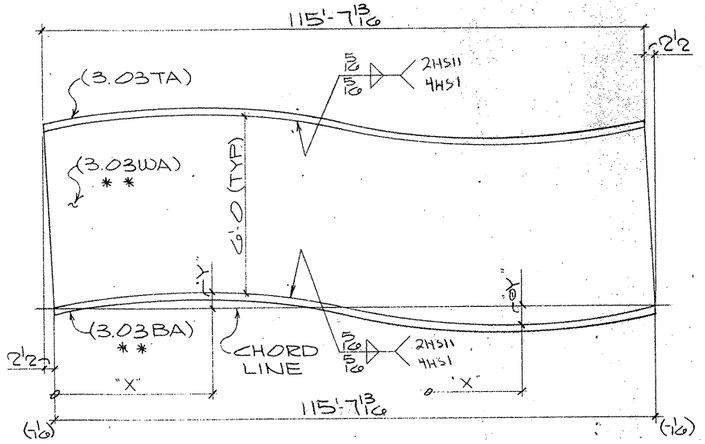

ONE GIRDER SUB-ASSY. MK-A211
(FOR GIRDER ~ 225PG3.03)

MK ~ A211								
"X"	12'-10 11/16	27'-9 5/16	42'-7 15/16	57'-6 5/8	72'-5 1/4	87'-3 5/16	102'-2 9/16	115'-7 13/16
"Y"	11/16	1/8	1/16	7/8	1/16	1/16	0 3/16	0"

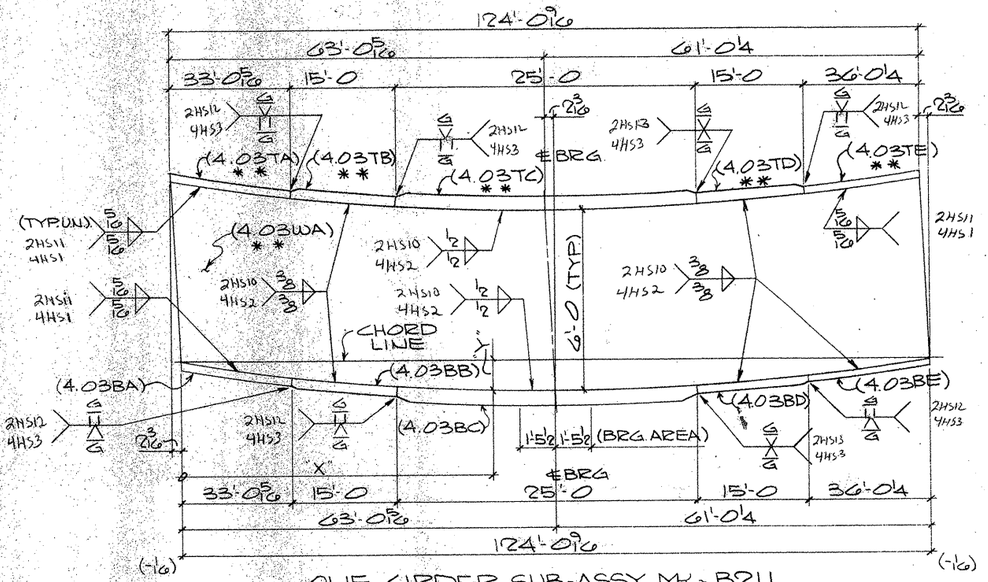

ONE GIRDER SUB-ASSY. MK ~ B211
(FOR GIRDER ~ 229PG4.03)

MK ~ B211									
"X"	1'-8 5/16	17'-0 13/16	32'-4 5/8	47'-8 7/16	63'-0 5/16	83'-9 1/16	104'-5 13/16	124'-0 9/16	
"Y"	1/16	5/16	3/8	7/16	9/16	9/16	7/16	0"	
					℄ BRG				

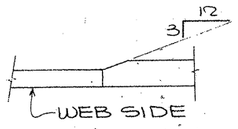

TYP. FLG. THKNESS TRANSITION

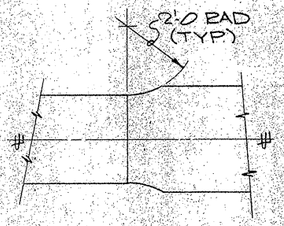

TYP. FLG WIDTH TRANSITION

SHOP NOTES:
1) FOR GENERAL NOTES, SEE SHT. GN1
2) MATERIAL NOTED "* *" MUST MEET CHARPY V-NOTCH REQUIREMENTS
3) FOR HEAT CURVE DIAGRAM, SEE SHT. 236

BILL OF MATERIAL

	Qnty	Material	Length	Mark Temp.	Mark Ship.	Wt.	Cut From	Remarks
3	1	GIRDER SUB-ASSY			A211			
4	1	PL 5/8 x 72	115'-10 9/16	3.03WA			205-16	CVN 2
5	1	PL 1 1/4 x 24	115'-7 13/16	3.03TA			211-7	
6	1	PL 1 1/4 x 24	115'-7 13/16	3.03BA			208-2	CVN 2
15	1	GIRDER SUB-ASSY			B211			
16	1	PL 11/16 x 72	124'-2 3/4	4.03WA			205-17	CVN 2
17	1	PL 1 1/4 x 24	33'-0 5/16	4.03TA			208-3	CVN 2
18	1	PL 2 x 26	15'-0	4.03TB			208-4	CVN 2
19	1	PL 3 x 26	25'-0	4.03TC			209-8	CVN 3
20	1	PL 2 1/4 x 24	15'-0	4.03TD			209-9	CVN 3
21	1	PL 1 1/4 x 24	36'-0 1/4	4.03TE			208-5	CVN 2
22	1	PL 1 1/4 x 24	33'-0 5/16	4.03BA			211-8	
23	1	PL 2 x 26	15'-0	4.03BB			211-9	
24	1	PL 3 x 26	25'-0	4.03BC			211-10	
25	1	PL 2 1/4 x 24	15'-0	4.03BD			211-11	
26	1	PL 1 3/4 x 24	36'-0 1/4	4.03BE			211-12	

TEXAS DEPARTMENT OF TRANSPORTATION
APPROVED
DIVISION OF BRIDGES AND STRUCTURES
FEB 11 1993
APPROVAL OF THIS DRAWING DOES NOT RELIEVE THE CONTRACTOR OF THE RESPONSIBILITY FOR THE CORRECTNESS OF DETAIL.

FOR APPROVAL
JAN 22 '93
NOT FOR CONSTRUCTION

REVISION	DATE	DESCRIPTION OF REVISION
NO. 1		
NO. 2		
NO. 3		
NO. 4		
NO. 5		

PRINTING

Req'd	For	Date

Bolts Holes Unless Noted
Shop Paint SEE SHT. GN1
Fab. Spec. A572-50 UN. Inspection
Architect
Erection By Field Connections

HIRSCHFELD STEEL CO. INC.
112 WEST 29TH SAN ANGELO, TEXAS 76903
PHONE (915) 653-3211

DESCRIPTION 045'-0 PLATE GIRDER UNIT
STRUCTURE US 83/281 INTERCHANGE RAMP "A"
LOCATION HIDALGO COUNTY
CUSTOMER GILBERT TEXAS CONSTRUCTION
SHIP TO
Customer's Order No.
Dwg. By CBT Date 10/92
Checked By JC Date 11-92
SHEET 21 OF
JOB NO. 92-109

FED. ROAD DIV. NO.	STATE	FEDERAL AID PROJECT NO.			
6	TX.	NH 92(50)M			
STATE DIST. NO.	COUNTY	CONTROL NO.	SECTION NO.	JOB NO.	HIGHWAY NO.
21	HIDALGO	39	17	97	83/281

G0209

APV JAN 22

CE 92-14 (LINE #3)

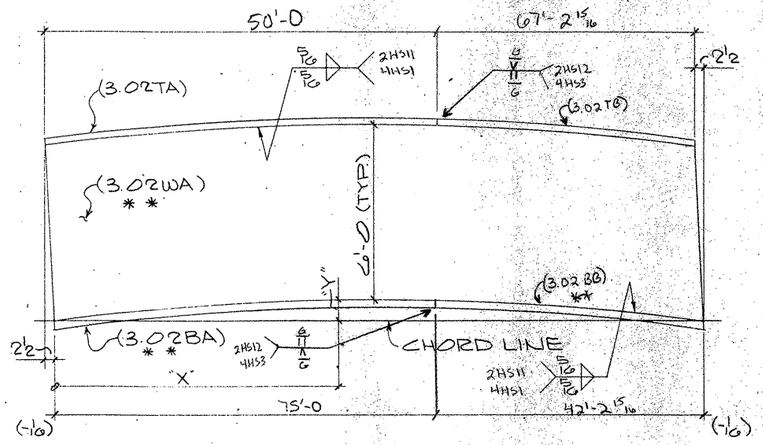

ONE GIRDER SUB-ASSY. MK-A210
(FOR GIRDER - 224PG3.02)

MK - A210								
"X"	13'-3 15/16	28'-4 5/8	43'-5 1/2	58'-6 3/8	73'-7 1/4	88'-8 9/16	103'-9 11/16	117'-2 15/16
"Y"	15/16	1 5/8	1 7/8	1 15/16	1 3/8	7/8	3/8	0"

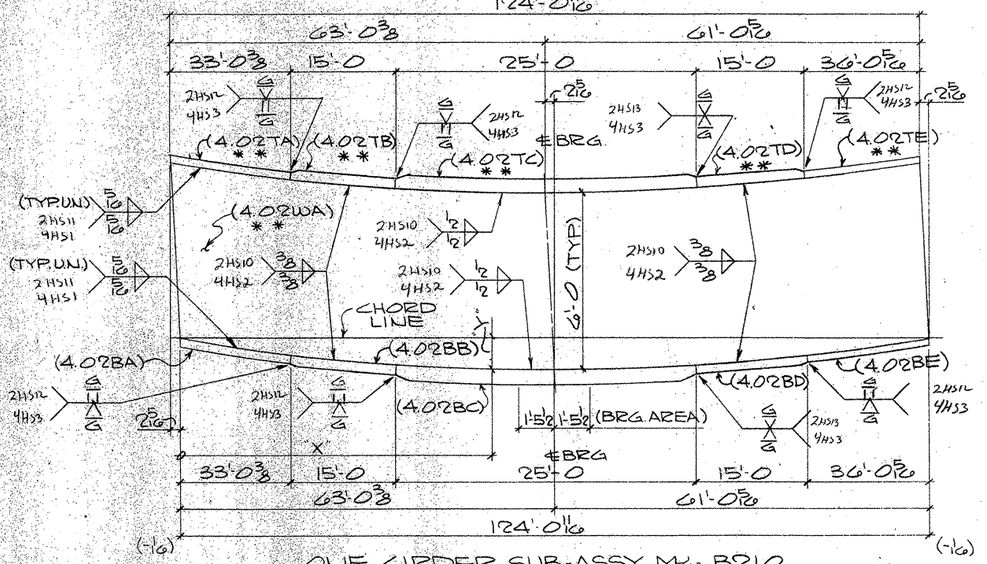

ONE GIRDER SUB-ASSY. MK - B210
(FOR GIRDER - 228PG4.02)

MK - B210									
"X"	1'-8 15/16	17'-0 13/16	32'-4 11/16	47'-8 9/16	63'-0 3/8	83'-9 3/16	104'-5 15/16	124'-0 11/16	
"Y"	1/8	3/4	1 15/16	1 1/2	1 5/8 ℄ BRG	1 1/2	7/8	0"	

BILL OF MATERIAL

	Qnty	Material	Length	Mark Temp	Mark Ship.	Wt.	Cut From	Remarks
3	1	GIRDER SUB-ASSY			A210			
4	1	PL 5/8 x 72	117'-5 11/16	3.02WA			205-10	CVN2
5	1	PL 1 1/2 x 24	50'-0	3.02TA			210-15	
6	1	PL 1 1/2 x 24	75'-0	3.02BA			207-13	CVN2
7	1	PL 1 1/2 x 24	42'-2 15/16	3.02BB				CVN2
8	1	PL 1 1/2 x 24	67'-2 15/16	3.02TB				
15	1	GIRDER SUB-ASSY			B210			
16	1	PL 11/16 x 72	124'-3	4.02WA			205-11	CVN2
17	1	PL 1 1/2 x 24	33'-0 3/8	4.02TA			207-14	CVN2
18	1	PL 2 x 28	15'-0	4.02TB			207-11	CVN2
19	1	PL 3 x 28	25'-0	4.02TC			209-5	CVN3
20	1	PL 2 1/4 x 28	15'-0	4.02TD			209-6	CVN3
21	1	PL 1 1/2 x 24	36'-0 5/16	4.02TE			207-15	CVN2
22	1	PL 1 1/2 x 24	33'-0 3/8	4.02BA			210-16	
23	1	PL 2 x 28	15'-0	4.02BB			210-12	
24	1	PL 3 x 28	25'-0	4.02BC			210-17	
25	1	PL 2 1/4 x 28	15'-0	4.02BD			210-18	
26	1	PL 1 1/2 x 24	36'-0 5/16	4.02BE			210-19	

TEXAS DEPARTMENT OF TRANSPORTATION
APPROVED
DIVISION OF BRIDGES AND STRUCTURES
FEB 11 1993

APPROVAL OF THIS DRAWING DOES NOT RELIEVE THE CONTRACTOR OF THE RESPONSIBILITY FOR THE CORRECTNESS OF DETAIL

FOR APPROVAL
JAN 22 93
NOT FOR CONSTRUCTION

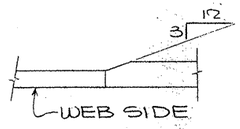

TYP. FLG. THKNESS TRANSITION

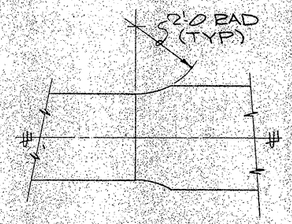

TYP FLG WIDTH TRANSITION

SHOP NOTES:
1) FOR GENERAL NOTES, SEE SHT. GN1
2) MATERIAL NOTED "* *" MUST MEET CHARPY V-NOTCH REQUIREMENTS
3) FOR HEAT CURVE DIAGRAM, SEE SHT. 230

60209

FED. ROAD DIV. NO.	STATE	FEDERAL AID PROJECT NO.			
6	TX.	NH 92(50)M			
STATE DIST. NO.	COUNTY	CONTROL NO.	SECTION NO.	JOB NO.	HIGHWAY NO.
21	HIDALGO	39	17	97	83/281

REVISION	DATE	DESCRIPTION OF REVISION
NO. 1		
NO. 2		
NO. 3		
NO. 4		
NO. 5		

PRINTING: Reqd | For | Date

Bolts: Holes: Unless Noted
Shop Paint SEE SHT. GN1
Fab Spec A572-50 UN Inspection
Architect
Erection By Field Connections

HIRSCHFELD STEEL CO. INC.
112 WEST 29TH SAN ANGELO, TEXAS 76903
PHONE (915) 653-3211

DESCRIPTION G45'-0 PLATE GIRDER UNIT
STRUCTURE US 83/281 INTERCHANGE RAMP "A"
LOCATION HIDALGO COUNTY
CUSTOMER GILBERT TEXAS CONSTRUCTION
SHIP TO:
Customer's Order No.
Dwg. By CRT Date 10/92
Checked By JC Date 11-92
SHEET 210 OF
JOB NO. 92-109

CE92-14 (LINE "2")

323540

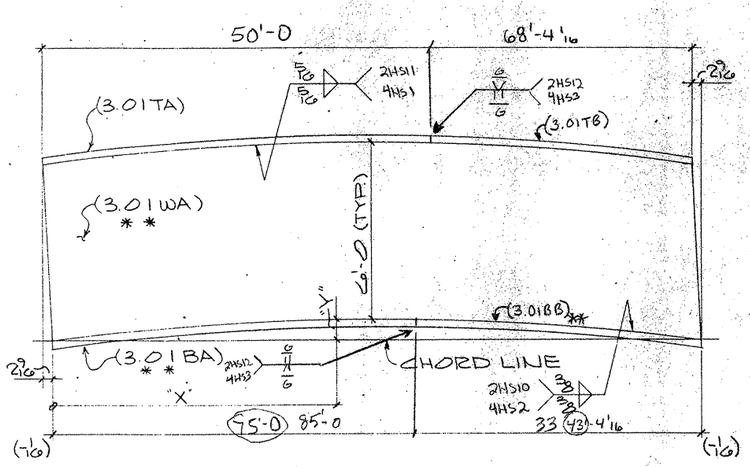

ONE GIRDER SUB-ASSY. MK-A209
(FOR GIRDER - 223PG3.01)

MK - A209								
"X"	13'-2 15/16	28'-6	43'-9 1/16	59'-0 3/16	74'-3 1/4	89'-6 3/8	104'-9 1/2	118'-4 1/16
"Y"	1 1/16	2"	2 7/16	2 9/16	2 1/4	1 5/8	1 3/16	0"

TYP. FLG. THKNESS TRANSITION

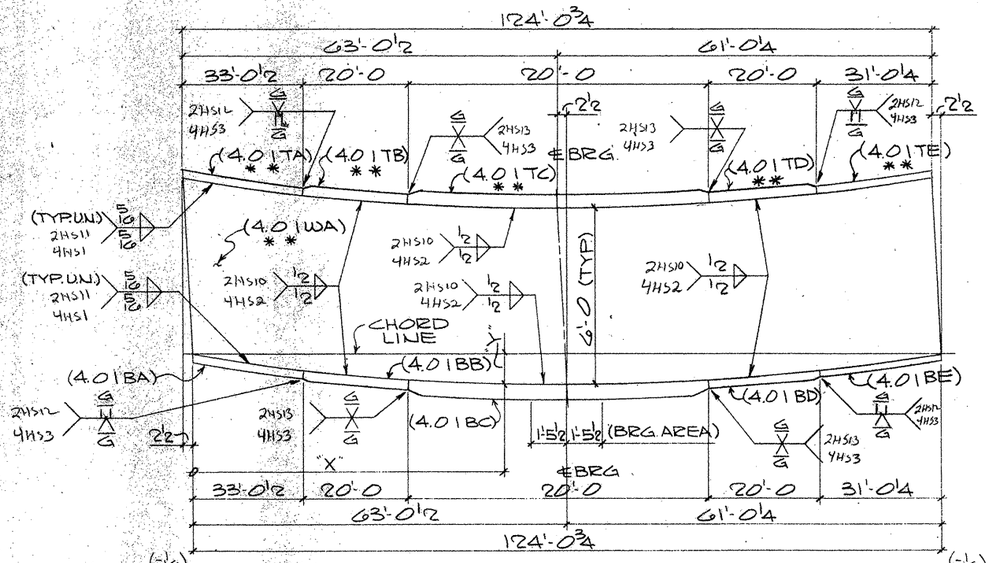

ONE GIRDER SUB-ASSY. MK - B209
(FOR GIRDER - 227PG4.01)

MK - B209									
"X"	1'-8 15/16	17'-0 7/8	32'-4 3/4	47'-8 5/8	63'-0 1/2 ℄BRG	83'-9 1/4	104'-6 1/16	124'-0 3/4	
"Y"	1/8	1 1/8	1 7/8	2 3/8	2 9/16	2 3/16	1 1/4	0"	

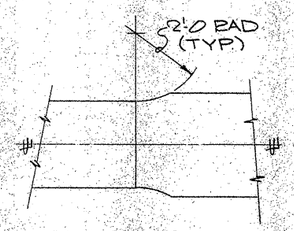

TYP. FLG WIDTH TRANSITION

SHOP NOTES:

1) FOR GENERAL NOTES, SEE SHT. GN1
2) MATERIAL NOTED "**" MUST MEET CHARPY V-NOTCH REQUIREMENTS
3) FOR HEAT CURVE DIAGRAM, SEE SHT. 236

BILL OF MATERIAL

	Qnty.	Material	Length	Mark Temp	Mark Ship	Wt.	Cut From	Remarks
3	1	GIRDER SUB-ASSY			A209			
4	1	PL 5/8 x 72	118'-6 5/8	3.01WA			205-4	CVN2
5	1	PL 1 1/2 x 26	50'-0	3.01TA			210-7	
6	1	PL 1 3/4 x 26	83'-0	3.01BA			207-6	CVN2
7	1	PL 1 3/4 x 2 1/2	43'-4 1/16	3.01BB				CVN2
8	1	PL 1 1/2 x 26	68'-4 1/16	3.01TB			-	
15	1	GIRDER SUB-ASSY			B209			
16	1	PL 3/4 x 72	124'-3 1/4	4.01WA			205-5	CVN2
17	1	PL 1 1/2 x 26	33'-0 1/2	4.01TA			207-5	CVN2
18	1	PL 2 1/2 x 30	20'-0	4.01TB			209-2	CVN3
19	1	PL 3 x 30	20'-0	4.01TC			209-3	CVN3
20	1	PL 2 1/2 x 30	20'-0	4.01TD			209-2	CVN3
21	1	PL 1 1/2 x 26	31'-0 1/4	4.01TE			207-7	CVN2
22	1	PL 1 3/4 x 26	33'-0 1/2	4.01BA			210-6	
23	1	PL 2 1/2 x 30	20'-0	4.01BB			210-4	
24	1	PL 3 x 30	20'-0	4.01BC			210-5	
25	1	PL 2 1/2 x 30	20'-0	4.01BD			210-4	
26	1	PL 1 1/2 x 26	31'-0 1/4	4.01BE			210-8	

TEXAS DEPARTMENT OF TRANSPORTATION
APPROVED EXCEPT AS NOTED
DIVISION OF BRIDGES AND STRUCTURES
FEB 11 1993

FOR APPROVAL
JAN 22 '93

APPROVAL OF THIS DRAWING DOES NOT RELIEVE THE CONTRACTOR OF THE RESPONSIBILITY FOR THE CORRECTNESS OF DETAIL

NOT FOR CONSTRUCTION

REVISION	DATE	DESCRIPTION OR REVISION
NO. 1		
NO. 2		
NO. 3		
NO. 4		
NO. 5		

PRINTING Req'd	For	Date

Bolts, Holes, Unless Noted
Shop Paint SEE SHT. GN1
Fab. Spec. A572-50 DN Inspection
Architect
Erection By Field Connections

HIRSCHFELD STEEL CO. INC.
112 WEST 29TH SAN ANGELO, TEXAS 76903
PHONE (915) 653-3211

DESCRIPTION	645'-0 PLATE GIRDER UNIT
STRUCTURE	US 83/281 INTERCHANGE RAMP "A"
LOCATION	HIDALGO COUNTY
CUSTOMER	GILBERT TEXAS CONSTRUCTION
SHIP TO	
Customer's Order No.	
Dwg. By CRT Date 10/92	SHEET 209 OF
Checked By JC Date 11-92	JOB NO. 92-109

APV JAN 22

G0209

FED. ROAD DIV. NO.	STATE	FEDERAL AID PROJECT NO.			
6	TX.	NH 92(50)M			
STATE DIST. NO.	COUNTY	CONTROL NO.	SECTION NO.	JOB NO.	HIGHWAY NO.
21	HIDALGO	39	17	97	83/281

CE92-14 (LINE # 1.) X

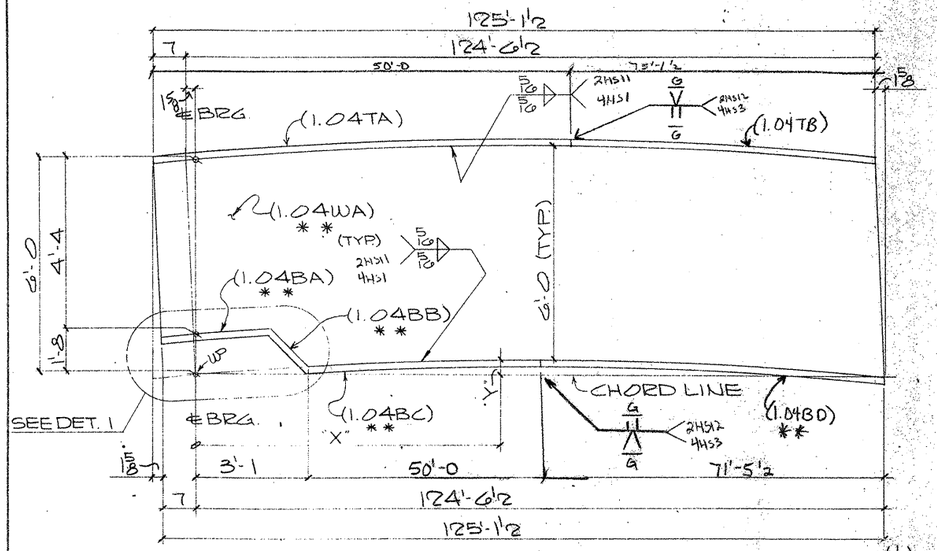

ONE GIRDER SUB-ASSY. MK-A208
(FOR GIRDER-218PG1.04)

MK-A208									
"X"	14'-10 4	29'-9 15/16	44'-9 9/16	59'-9 1/4	74'-8 15/16	89'-8 5/8	104'-8 5/16	119'-8	124'-6 1/2
"Y"	1 15/16	2 1/16	3 1/8	3 1/16	3 5/16	2 13/16	1 15/16	1/2	0"

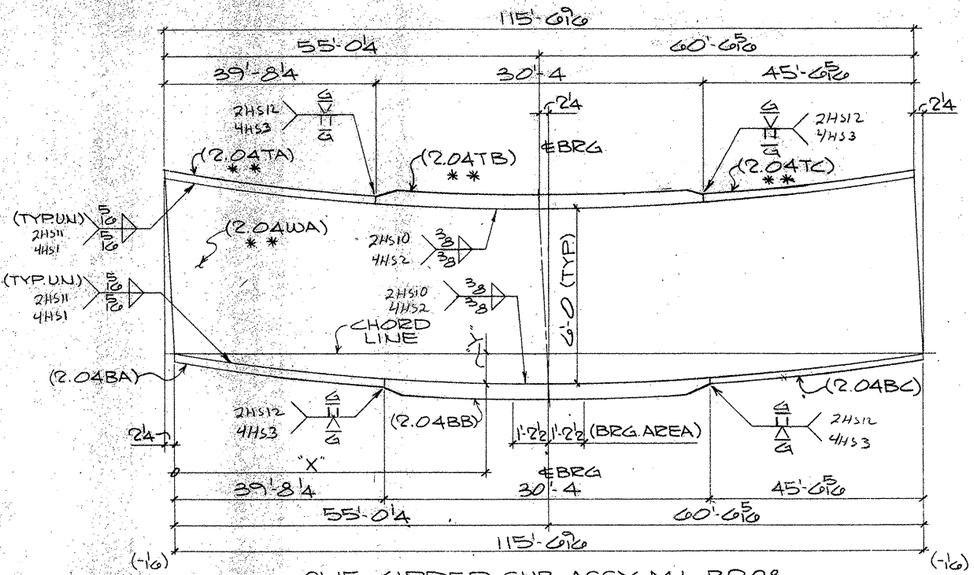

ONE GIRDER SUB-ASSY. MK-B208
(FOR GIRDER-222PG2.04)

MK-B208										
"X"	10'-1 8	25'-0 13/16	40'-0 9/16	55'-0 1/4	69'-8 11/16	84'-5 1/16	99'-1 7/16	113'-9 13/16	115'-6 9/16
"Y"	1/16	3/8	5/8	3/4	5/8	3/8	1/8	0"	0"
				℄BRG					

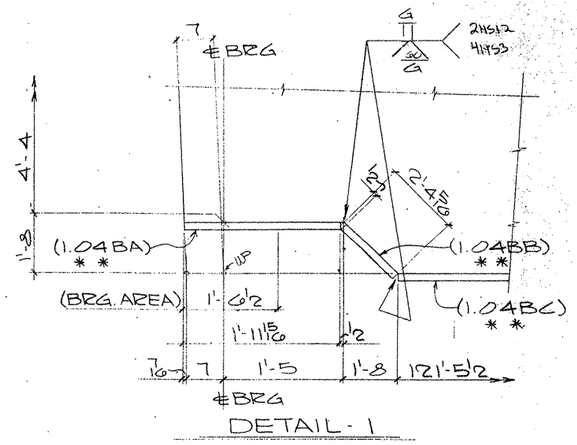

DETAIL-1

TYP. FLG. THKNESS TRANSITION

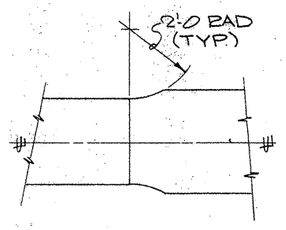

TYP. FLG. WIDTH TRANSITION

SHOP NOTES:
1) FOR GENERAL NOTES, SEE SHT. GN1
2) MATERIAL NOTED "**" MUST MEET CHARPY V-NOTCH REQUIREMENTS
3) FOR HEAT CURVE DIAGRAM, SEE SHT. 235

BILL OF MATERIAL

	Qnty.	Material *	Length	Mark Temp.	Mark Ship.	Wt.	Cut From	Remarks
1								
2	1	GIRDER SUB-ASSY			A208			
3	1	PL 5/8 x 72	125-3 3/8	1.04WA			206-2	CVN2
4	1	PL 1 1/4 x 24	50'-0	1.04TA			211-14	
5	1	PL 1 1/4 x 24	1'-11 15/16	1.04BA			206-15	CVN2
6	1	PL 1 1/4 x 24	2'-3 15/16	1.04BB			206-16	CVN2
7	1	PL 1 1/4 x 24	50'-0	1.04BC			208-7	CVN2
8	1	PL 1 1/4 x 24	71'-5 1/2	1.04BD				CVN2
9	1	PL 1 1/4 x 24	75'-1 1/2	1.04TB				
10								
11								
12								
13								
14								
15	1	GIRDER SUB-ASSY			B208			
16	1	PL 11/16 x 72	115'-8 15/16	2.04WA			206-3	CVN2
17	1	PL 1 1/4 x 24	39'-8 1/4	2.04TA			208-8	CVN2
18	1	PL 2 1/4 x 24	30'-4	2.04TB			209-10	CVN3
19	1	PL 1 1/4 x 24	45'-6 5/16	2.04TC			208-9	CVN2
20	1	PL 1 1/4 x 24	39'-8 1/4	2.04BA			211-15	
21	1	PL 2 1/4 x 24	30'-4	2.04BB			211-16	
22	1	PL 1 1/4 x 24	45'-6 5/16	2.04BC			211-17	
23								
24								
25								
26								
27								
28								
29								
30								
31								
32								
33								
34								
35								
36								
37								
38								
39								
40								
41								
42								
43								
44								
45								
46								
47								
48								
49								
50								
51								
52								
53								
54								
55								
56								
57								
58								
59								
60								

TEXAS DEPARTMENT OF TRANSPORTATION
APPROVED
DIVISION OF BRIDGES AND STRUCTURES
FEB 11 1993
APPROVAL OF THIS DRAWING DOES NOT RELIEVE THE CONTRACTOR OF THE RESPONSIBILITY FOR THE CORRECTNESS OF DETAIL.

FOR APPROVAL
JAN 22 93
NOT FOR CONSTRUCTION

REVISION	DATE	DESCRIPTION OF REVISION
NO. 1		
NO. 2		
NO. 3		
NO. 4		
NO. 5		

PRINTING Req'd	For	Date

Bolts Holes: Unless Noted
Shop Paint SEE SHT GN1
Fab Spec. A572-50 UN Inspection
Architect
Erection By Field Connections

HIRSCHFELD STEEL CO. INC.
112 WEST 29TH SAN ANGELO, TEXAS 76903
PHONE (915) 653-3211

DESCRIPTION	645'-0 PLATE GIRDER UNIT
STRUCTURE	US 83/281 INTERCHANGE RAMP "A"
LOCATION	HIDALGO COUNTY
CUSTOMER	GILBERT TEXAS CONSTRUCTION
SHIP TO	
Customer's Order No.	
Dwg. By CBT	Date 10/93
Checked By JC	Date 11-92

SHEET 208 OF
JOB NO. 92-109

60209

FED. ROAD DIV. NO.	STATE	FEDERAL AID PROJECT NO.			
6	TX.	NH 92(50)M			
STATE DIST. NO.	COUNTY	CONTROL NO.	SECTION NO.	JOB NO.	HIGHWAY NO.
21	HIDALGO	39	17	97	83/281

APV JAN 22

(CE92-14) (LINE "A")

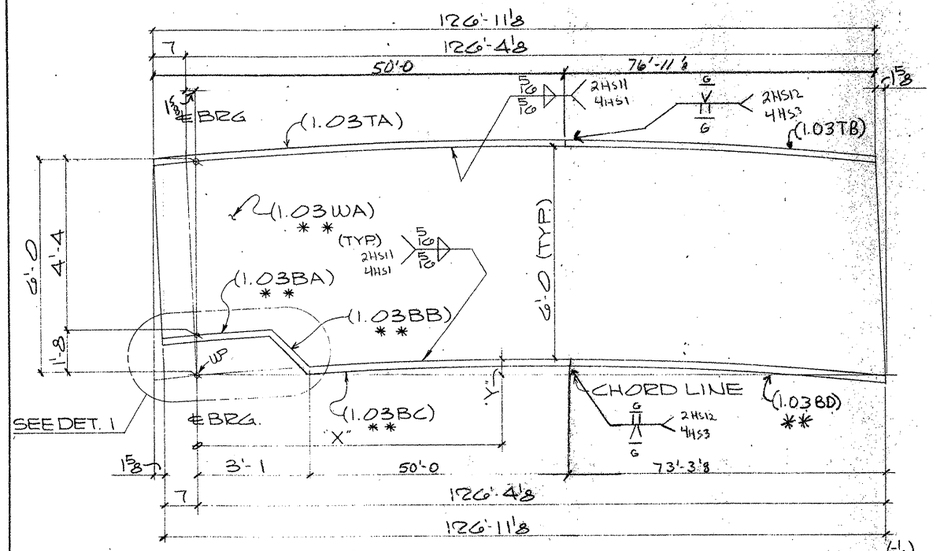

ONE GIRDER SUB-ASSY. MK-A207
(FOR GIRDER-217PG1.03)

MK-A207									
"X"	15'-0 15/16	30'-2 3/16	45'-4 3/4	60'-6 11/16	75'-8 5/8	90'-10 9/16	106'-0 9/16	121'-2 3/16	126'-4⅞
"Y"	1⅝	2⅞	3 13/16	4⅛	4"	3 5/16	2 1/16	⅝	0"

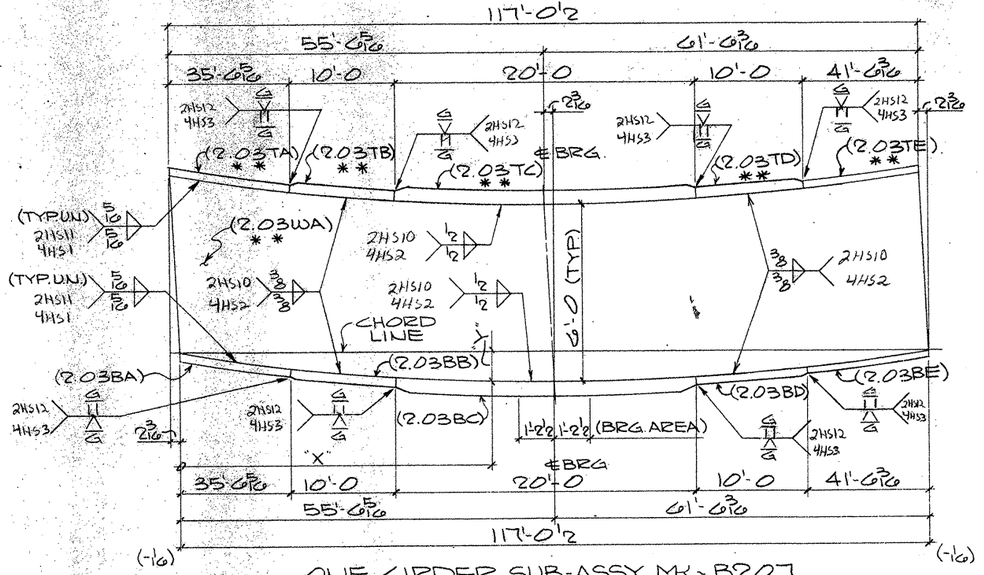

ONE GIRDER SUB-ASSY. MK-B207
(FOR GIRDER-221PG2.03)

MK-B207										
"X"	10'-0 5/16	25'-2 5/16	40'-4 5/16	55'-6 5/16	70'-4⅞	85'-3½	100'-2⅛	115'-0¾	117'-0½
"Y"	¼	1 1/16	1"	1⅛	1"	1 1/16	5/16	0"	0"
				℄BRG					

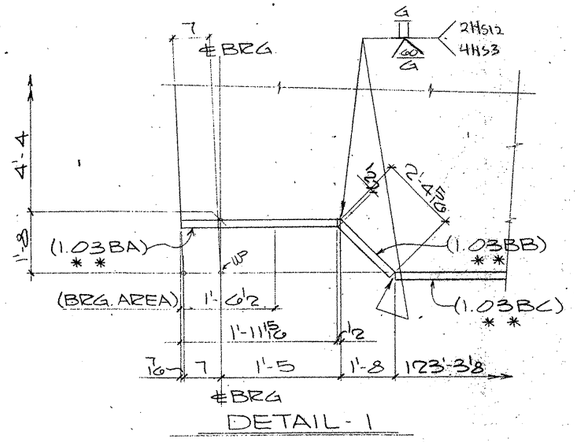

DETAIL-1

TYP FLG THKNESS TRANSITION

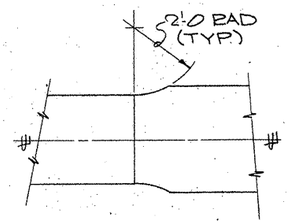

TYP. FLG. WIDTH TRANSITION

SHOP NOTES:

1) FOR GENERAL NOTES, SEE SHT. GN1
2) MATERIAL NOTED "**" MUST MEET CHARPY V-NOTCH, REQUIREMENTS
3) FOR HEAT CURVE DIAGRAM, SEE SHT. 335

BILL OF MATERIAL

	Qnty	Material	Length	Mark Temp	Mark Ship	Wt	Cut From	Remarks
1								
2	1	GIRDER SUB-ASSY			A207			
3	1	PL 5/8 x 72	127'-0 3/4	1.03WA			205-14	CVN2
4	1	PL 1¼ x 24	50'-0	1.03TA			211-2	
5	1	PL 1¼ x 24	1'-11 5/8	1.03BA			206-15	CVN2
6	1	PL 1¼ x 24	2'-3 5/16	1.03BB			206-16	CVN2
7	1	PL 1¼ x 24	50'-0	1.03BC			207-17	CVN2
8	1	PL 1¼ x 24	73'-3⅜	1.03BD				CVN2
9	1	PL 1¼ x 24	76'-11⅞	1.03TB				
10								
11								
12								
13								
14								
15	1	GIRDER SUB-ASSY			B207			
16	1	PL 11/16 x 72	117'-2 1/16	2.03WA			205-15	CVN2
17	1	PL 1¼ x 24	35'-6 5/16	2.03TA			207-18	CVN2
18	1	PL ½ x 24	10'-0	2.03TB			207-19	CVN2
19	1	PL 2½ x 26	20'-0	2.03TC			209-7	CVN3
20	1	PL 2 x 24	10'-0	2.03TD			207-19	CVN2
21	1	PL 1¼ x 24	41'-6 3/16	2.03TE			207-20	CVN2
22	1	PL 1¼ x 24	35'-6 5/16	2.03BA			211-3	
23	1	PL 2 x 24	10'-0	2.03BB			211-4	
24	1	PL 2½ x 26	20'-0	2.03BC			211-5	
25	1	PL 2 x 24	10'-0	2.03BD			211-4	
26	1	PL 1¼ x 24	41'-6 3/16	2.03BE			211-6	
27								
28								
29								
30								
31								
32								
33								
34								
35								
36								
37								
38								
39								
40								
41								
42								
43								
44								
45								
46								
47								
48								
49								
50								
51								
52								
53		TEXAS DEPARTMENT OF TRANSPORTATION APPROVED						
54		DIVISION OF BRIDGES AND STRUCTURES						FOR APPROVAL
55		FEB 11 1993						
56								
57								NOT FOR CONSTRUCTION
58		APPROVAL OF THIS DRAWING DOES NOT						
59		RELIEVE THE CONTRACTOR OF THE RESPONSIBILITY FOR THE CORRECTNESS						
60		OF DETAIL.						

REVISION	DATE	DESCRIPTION OF REVISION
NO. 1		
NO. 2		
NO. 3		
NO. 4		
NO. 5		

PRINTING Req'd	For	Date

Bolts Holes: Unless Noted
Shop Paint SEE SHT GN1
Fab. Spec A572-50 UN. Inspection
Architect
Erection By Field Connections

HIRSCHFELD STEEL CO. INC.
112 WEST 29TH SAN ANGELO. TEXAS 76903
PHONE (915) 653-3211

DESCRIPTION	G45'-0 PLATE GIRDER UNIT
STRUCTURE	US 83/281 INTERCHANGE RAMP "A"
LOCATION	HIDALGO COUNTY
CUSTOMER	GILBERT TEXAS CONSTRUCTION
SHIP TO	
Customer's Order No.	
Dwg. By CRT	Date 10/92
Checked By JC	Date 11-92

SHEET 207 OF
JOB NO. 92-109

G0209

FED. ROAD DIV. NO.	STATE	FEDERAL AID PROJECT NO.			
6	TX.	NH 92(50)M			
STATE DIST. NO.	COUNTY	CONTROL NO.	SECTION NO.	JOB NO.	HIGHWAY NO.
21	HIDALGO	39	17	97	83/281

APV JPN 2 2

(CE92-14) (LINE #3)

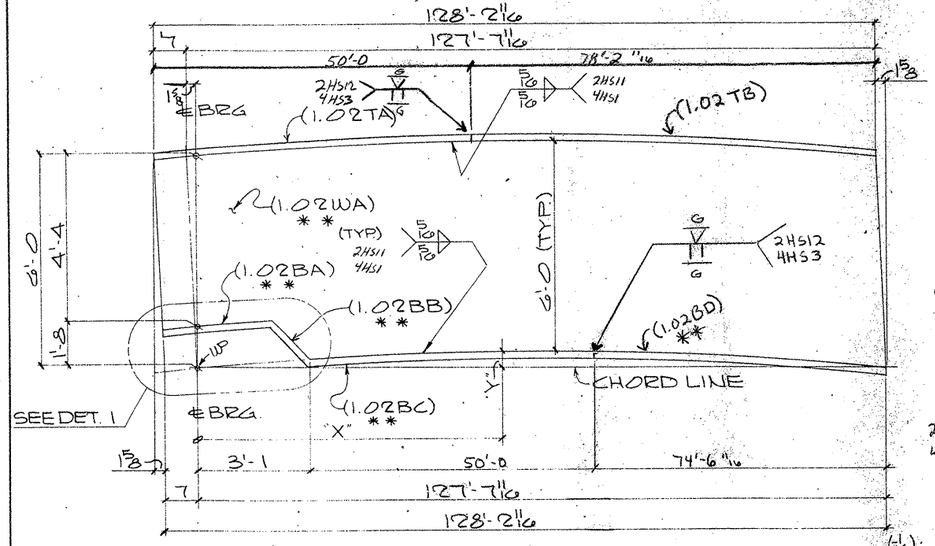

ONE GIRDER SUB-ASSY. MK-A206
(FOR GIRDER-210PG1.02)

MK-A206										
"X"	15'-3 5/8	30'-7 13/16	46'-0	61'-4 3/16	76'-8 3/8	92'-0 5/8	107'-4 13/16	122'-9 1/16	127'-7 11/16
"Y"	1/16	2 1/4	3 3/8	3 15/16	3 3/8	3 1/4	2 1/8	9/16	0"

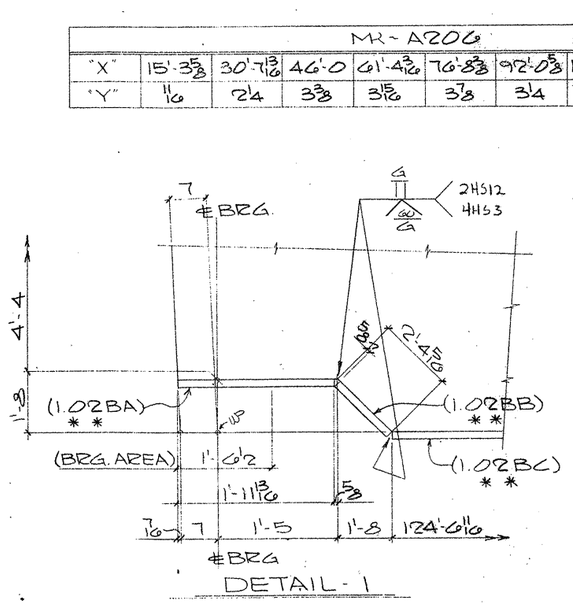

DETAIL-1

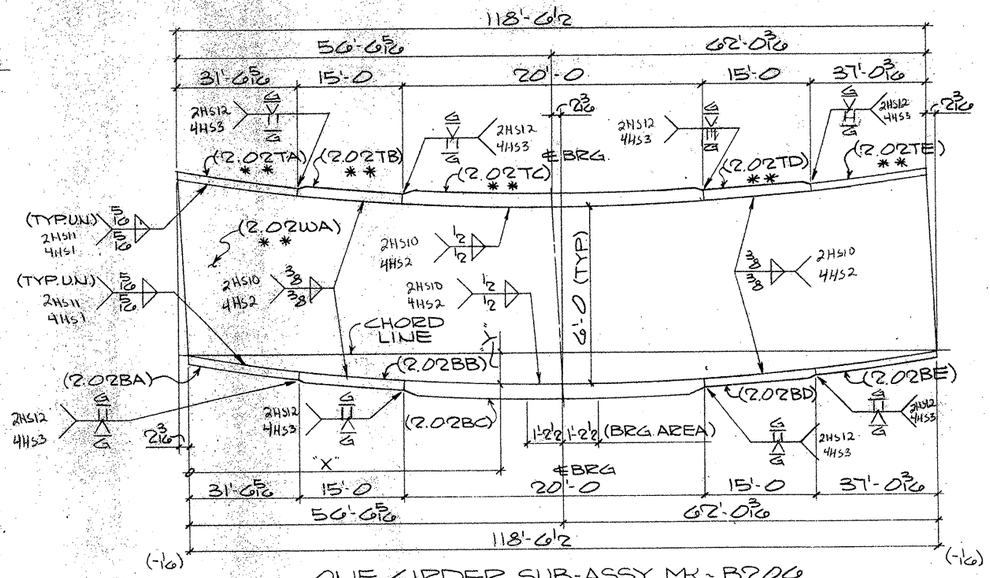

ONE GIRDER SUB-ASSY. MK-B206
(FOR GIRDER-220PG2.02)

MK-B206										
"X"	10'-5 1/2	25'-9 3/4	41'-2 1/16	56'-6 5/16	71'-7 1/8	86'-7 15/16	101'-8 13/16	116'-9 5/8	118'-6 1/2
"Y"	5/16	3/4	1 1/8	1 15/16	1 13/16	7/8	7/16	0"	0"

℄BRG

TYP. FLG. THKNESS TRANSITION

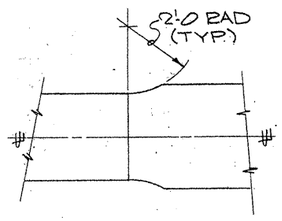

TYP. FLG. WIDTH TRANSITION

SHOP NOTES:
1) FOR GENERAL NOTES, SEE SHT. GN1
2) MATERIAL NOTED "**" MUST MEET CHARPY V-NOTCH REQUIREMENTS
3) FOR HEAT CURVE DIAGRAM, SEE SHT. 235

BILL OF MATERIAL

	Qnty.	Material	Length	Mark Temp	Mark Ship	Wt.	Cut From	Remarks
1								
2	1	GIRDER SUB-ASSY			A206			
3	1	PL 5/8 x 72	128'-4 5/16	1.02WA			205-8	CVN2
4	1	PL 1 1/2 x 24	50'-0	1.02TA			210-10	
5	1	PL 1 1/2 x 24	1'-11 13/16	1.02BA			206-13	CVN2
6	1	PL 1 1/2 x 24	2'-3 1/16	1.02BB			206-14	CVN2
7	1	PL 1 1/2 x 24	50'-0	1.02BC			207-9	CVN2
8	1	PL 1 1/2 x 24	74'-6 11/16	1.02BD				CVN2
9	1	PL 1 1/2 x 24	78'-2 11/16	1.02TB				
10								
11								
12								
13								
14								
15	1	GIRDER SUB-ASSY			B206			
16	1	PL 1 1/16 x 72	118'-8 11/16	2.02WA			205-9	CVN2
17	1	PL 1 1/2 x 24	31'-6 5/16	2.02TA			207-10	CVN2
18	1	PL 2 x 28	15'-0	2.02TB			207-11	CVN2
19	1	PL 2 3/4 x 28	20'-0	2.02TC			209-4	CVN3
20	1	PL 2 x 28	15'-0	2.02TD			207-11	CVN2
21	1	PL 1 1/2 x 24	37'-0 3/16	2.02TE			207-12	CVN2
22	1	PL 1 1/2 x 24	31'-6 5/16	2.02BA			210-11	
23	1	PL 2 x 28	15'-0	2.02BB			210-12	
24	1	PL 2 3/4 x 28	20'-0	2.02BC			210-13	
25	1	PL 2 x 28	15'-0	2.02BD			210-12	
26	1	PL 1 1/2 x 24	37'-0 3/16	2.02BE			210-14	
27								
28								
29								
30								
31								
32								
33								
34								
35								
36								
37								
38								
39								
40								
41								
42								
43								
44								
45								
46								
47								
48								
49								
50								
51								
52								
53		TEXAS DEPARTMENT OF TRANSPORTATION APPROVED						FOR APPROVAL
54		DIVISION OF BRIDGES AND STRUCTURES						JAN 22 93
55		FEB 17 1993						
56								NOT FOR CONSTRUCTION
57								
58		APPROVAL OF THIS DRAWING DOES NOT RELIEVE THE CONTRACTOR OF THE RESPONSIBILITY FOR THE CORRECTNESS OF DETAIL.						
59								
60								

REVISION	DATE	DESCRIPTION OF REVISION
NO. 1		
NO. 2		
NO. 3		
NO. 4		
NO. 5		

PRINTING Req'd	For	Date

Bolts Holes Unless Noted
Shop Paint SEE SHT GN1
Fab. Spec. A572-50 UN. Inspection
Architect
Erection By Field Connections

HIRSCHFELD STEEL CO. INC.
112 WEST 29TH SAN ANGELO, TEXAS 76903
PHONE (915) 653-3211

DESCRIPTION	645'-0 PLATE GIRDER UNIT
STRUCTURE	US 83/281 INTERCHANGE RAMP "A"
LOCATION	HIDALGO COUNTY
CUSTOMER	GILBERT TEXAS CONSTRUCTION
SHIP TO	
Customer's Order No.	
Dwg. By CRT	Date 10/92
Checked By JC	Date 11-92

SHEET 206 OF
JOB NO. 92-109

G0209

FED. ROAD DIV. NO.	STATE	FEDERAL AID PROJECT NO.			
6	TX.	NH 92(50)M			
STATE DIST. NO.	COUNTY	CONTROL NO.	SECTION NO.	JOB NO.	HIGHWAY NO.
21	HIDALGO	39	17	97	83/281

APV JAN 22

(CE92-14) (LINE*2)

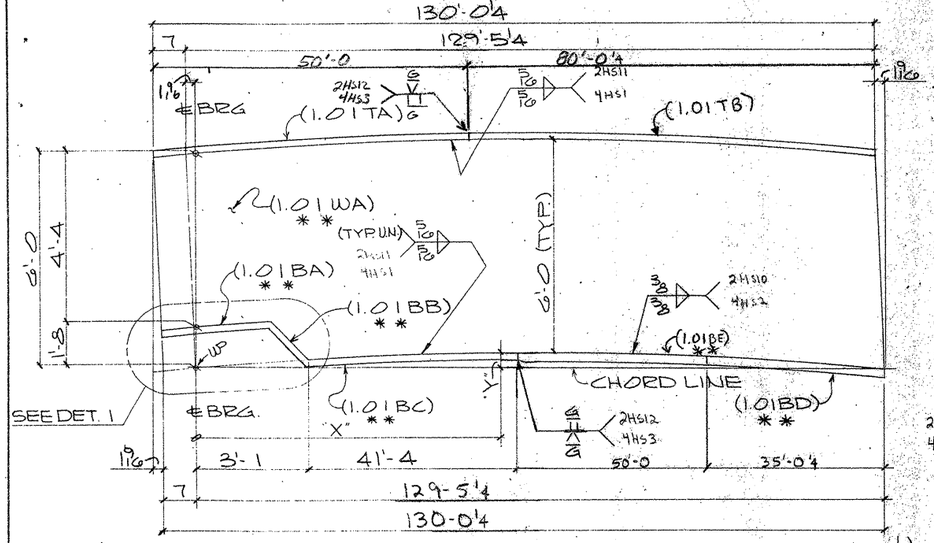

ONE GIRDER SUB-ASSY. MK-A205
(FOR GIRDER-215PG1.01)

MK-A205										
"X"	15'-6 1/4	31'-0 1/16	46'-7 1/8	62'-1 3/8	77'-8 1/16	93'-2 1/16	108'-9 1/16	124'-3 3/16	129'-5 1/4
"Y"	1 7/8	3 7/16	4 7/16	4 7/8	4 5/8	3 7/8	2 7/16	1 1/16	0"

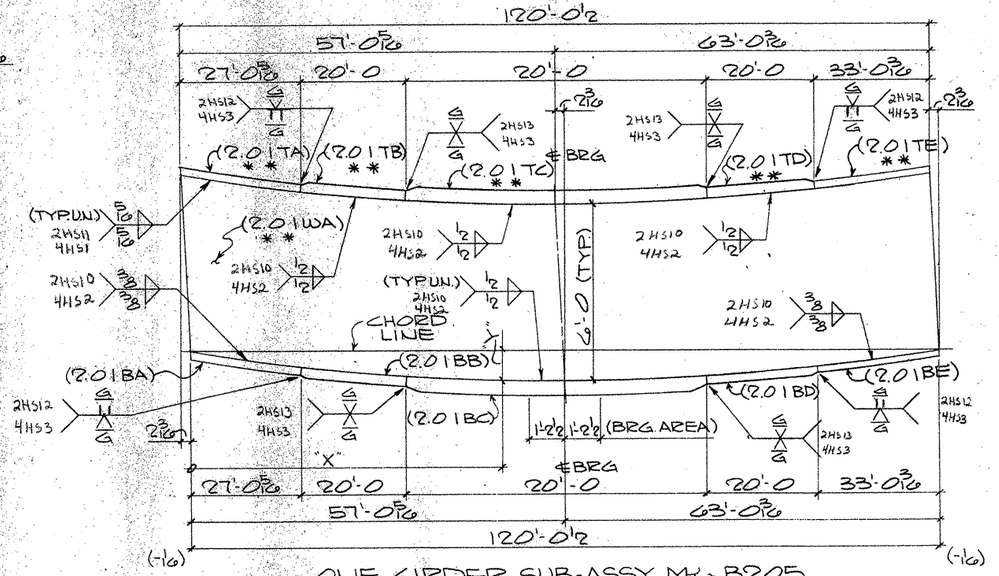

ONE GIRDER SUB-ASSY. MK-B205
(FOR GIRDER-219PG2.01)

MK-B205										
"X"	10'-4 3/4	25'-11 1/4	41'-5 3/4	57'-0 5/16	72'-3 3/8	87'-0 3/8	102'-9 7/16	118'-0 1/2	120'-0 1/2
"Y"	5/16	1 9/16	1 7/16	1 3/8 ℄BRG	1 1/4	1 5/16	1/2	1/16	0"

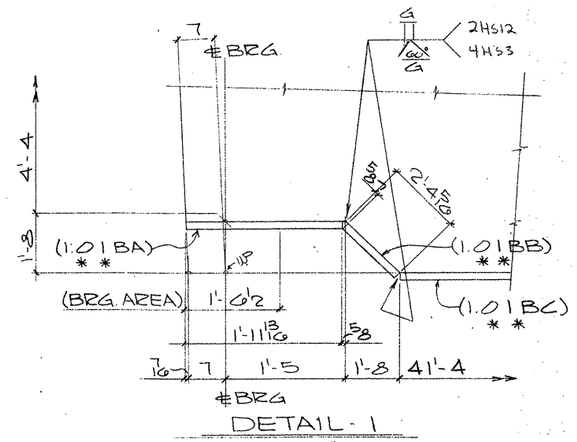

DETAIL-1

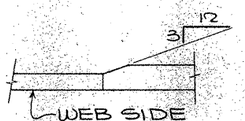

TYP. FLG. THKNESS TRANSITION

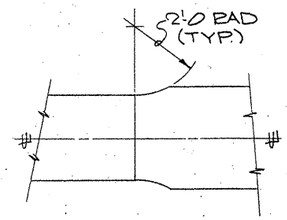

TYP. FLG. WIDTH TRANSITION

SHOP NOTES:

1) FOR GENERAL NOTES, SEE SHT. GN1
2) MATERIAL NOTED "**" MUST MEET CHARPY V-NOTCH REQUIREMENTS
3) FOR HEAT CURVE DIAGRAM, SEE SHT. 235

BILL OF MATERIAL

	Qnty.	Material	Length	Mark Temp.	Mark Ship.	Wt	Cut From	Remarks
2	1	GIRDER SUB-ASSY			A205			
3	1	PL 5/8 x 72	130'-1 7/16	1.01WA			205-2	CVN2
4	1	PL 1 1/2 x 26	50'-0	1.01TA			210-2	
5	1	PL 1 1/2 x 26	1'-11 13/16	1.01BA			206-11	CVN2
6	1	PL 1 1/2 x 26	72'-3 1/16	1.01BB			206-12	CVN2
7	1	PL 1 1/2 x 26	41'-4	1.01BC			207-2	CVN2
8	1	PL 1 3/4 x 26	35'-0 1/4	1.01BD			207-3	CVN2
9	1	PL 1 3/4 x 26	50'-0	1.01BE				CVN2
10	1	PL 1 1/2 x 26	80'-0 1/4	1.01TB				
11								
12								
13								
14								
15	1	GIRDER SUB-ASSY			B205			
16	1	PL 3/4 x 72	120'-2 1/16	2.01WA			205-3	CVN2
17	1	PL 1 1/2 x 26	27'-0 5/16	2.01TA			207-4	CVN2
18	1	PL 2 1/2 x 30	20'-0	2.01TB			209-2	CVN3
19	1	PL 3 x 30	20'-0	2.01TC			209-3	CVN3
20	1	PL 2 1/2 x 30	20'-0	2.01TD			209-2	CVN3
21	1	PL 1 1/2 x 26	33'-0 3/16	2.01TE			207-5	CVN2
22	1	PL 1 3/4 x 26	27'-0 5/16	2.01BA			210-3	
23	1	PL 2 1/2 x 30	20'-0	2.01BB			210-4	
24	1	PL 3 x 30	20'-0	2.01BC			210-5	
25	1	PL 2 1/2 x 30	20'-0	2.01BD			210-4	
26	1	PL 1 3/4 x 26	33'-0 3/16	2.01BE			210-6	
27								
28								
29								
30								
31								
32								
33								
34								
35								
36								
37								
38								
39								
40								
41								
42								
43								
44								
45								
46								
47								
48								
49								
50								
51								
52								
53								
54								
55								
56								
57								
58								
59								
60								

TEXAS DEPARTMENT OF TRANSPORTATION
APPROVED
DIVISION OF BRIDGES AND STRUCTURES
FEB 11 1993

FOR APPROVAL
JAN 22 93
NOT FOR CONSTRUCTION

APPROVAL OF THIS DRAWING DOES NOT RELIEVE THE CONTRACTOR OF THE RESPONSIBILITY FOR THE CORRECTNESS OF DETAIL

REVISION	DATE	DESCRIPTION OF REVISION
NO. 1		
NO. 2		
NO. 3		
NO. 4		
NO. 5		

PRINTING Req'd	For	Date

Bolts: Holes: Unless Noted
Shop Paint SEE SHT GN1
Fab. Spec. A572-50 UN. Inspection
Architect
Erection By Field Connections

HIRSCHFELD STEEL CO. INC.
112 WEST 29TH SAN ANGELO, TEXAS 76903
PHONE (915) 653-3211

DESCRIPTION	045'-0 PLATE GIRDER UNIT
STRUCTURE	US 83/281 INTERCHANGE RAMP #4
LOCATION	HIDALGO COUNTY
CUSTOMER	GILBERT TEXAS CONSTRUCTION
SHIP TO	
Customer's Order No.	
Dwg. By CRT Date 10/92	SHEET 205 OF
Checked By JC Date 11-92	JOB NO. 92-109

APV 1/93 2.2

G0209

FED. ROAD DIV. NO.	STATE	FEDERAL AID PROJECT NO.			
6	TX.	NH 92(50)M			
STATE DIST. NO.	COUNTY	CONTROL NO.	SECTION NO.	JOB NO.	HIGHWAY NO.
21	HIDALGO	39	17	97	83/281

(CE92-14) (LINE # 1)

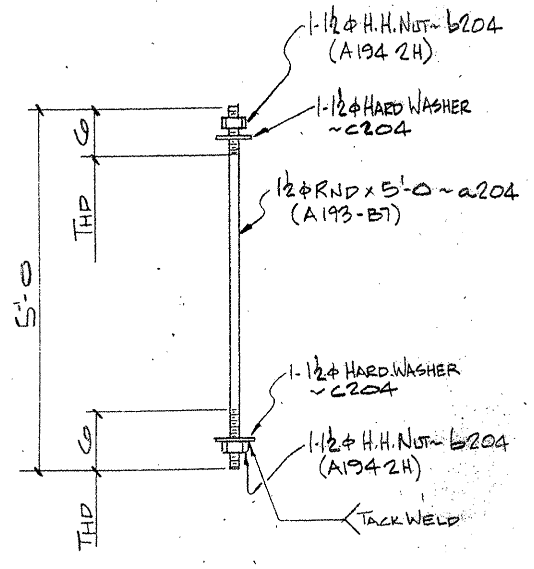

8- ANCHOR BOLTS ~ 204AB1
(GALV. SEE GALV. NOTE)

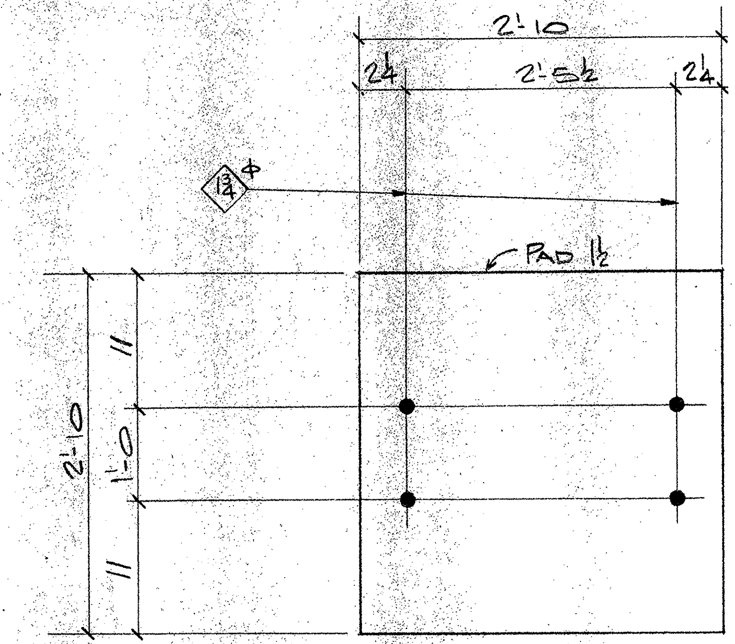

2- PREFORMED FABRIC PAD - 204P1
(PER SDH & PT ITEM 441.33)

GALV. NOTE:
HOT DIP GALVANIZE AFTER FABRICATION.
ALL NUTS SHALL BE RETAPPED
AFTER GALVANIZING FOR CLASS 2B FIT.

NOTE:
FOR GENERAL NOTES, SEE SHT. GN1.

FED. ROAD DIV. NO.	STATE	FEDERAL AID PROJECT NO.				
6	TX.	NH (50) M				
STATE DIST. NO.	COUNTY	CONTROL NO.	SECTION NO.	JOB NO.	HIGHWAY NO.	
21	HIDALGO	39	17	97	83/281	

BILL OF MATERIAL

Bayouts

	Qnty.	Material	Length	Mark Temp	Mark Ship.	Wt.	Cut From	Remarks
1								
2								
3								
4	8	ANCHOR BOLTS			204AB1			
5	8	1½ϕ RND	5'-0	a204			201-2	A193-B7
6	16	1½ϕ H.H. NUT		b204			201-3	A194 2H
7	16	1½ϕ HARD WASH		c204			201-4	A325
8								
9								
10								
11								
12								
13								
14								
15	2	PREFORMED PAD			204P1			
16	2	PAD 1½ x 34	2'-10				201-8	
17		(PER SDH & PT ITEM 441.33)						
18								
19								
20								
21								
22								
23								
24								
25								
26								
27								
28								
29								
30								
31								
32								
33								
34								
35								
36								
37								
38								
39								
40								
41								
42								
43								
44								
45								
46								
47								
48								
49								
50								
51								
52								
53								
54								
55								
56								
57								
58								
59								
60								

TEXAS DEPARTMENT OF TRANSPORTATION
APPROVED
DIVISION OF BRIDGES AND STRUCTURES
FEB 11 1993
APPROVAL OF THIS DRAWING DOES NOT RELIEVE THE CONTRACTOR OF THE RESPONSIBILITY FOR THE CORRECTNESS OF DETAIL.

FOR APPROVAL
JAN 22 93
NOT FOR CONSTRUCTION

REVISION	DATE	DESCRIPTION OF REVISION
NO. 1		
NO. 2		
NO. 3		
NO. 4		
NO. 5		

PRINTING: Req'd | For | Date
— APV JAN 22

Bolts. Holes: NTD
Shop Paint: NO PAINT
Fab Spec.: NTD Inspection
Architect
Erection By Field Connections

HIRSCHFELD STEEL CO. INC.
112 WEST 29TH SAN ANGELO, TEXAS 76903
PHONE (915) 653-3211

DESCRIPTION: 645'-0 PLATE GIRDER UNIT
STRUCTURE: US 83/281 INTERCHANGE RAMP #4
LOCATION: HIDALGO COUNTY
CUSTOMER: GILBERT TEXAS CONSTRUCTION
SHIP TO
Customer's Order No. SHEET 204 OF
Dwg. By JPC Date 8/92
Checked By DLT Date 8/92 JOB NO. 92-109

CE 92-14

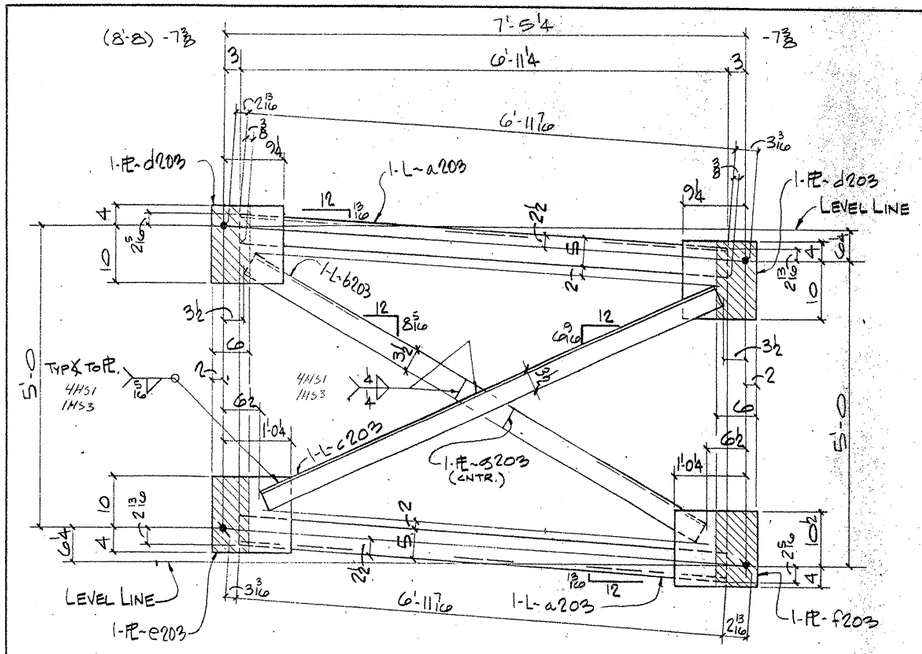

60 - DIAFRAMS - 203D1

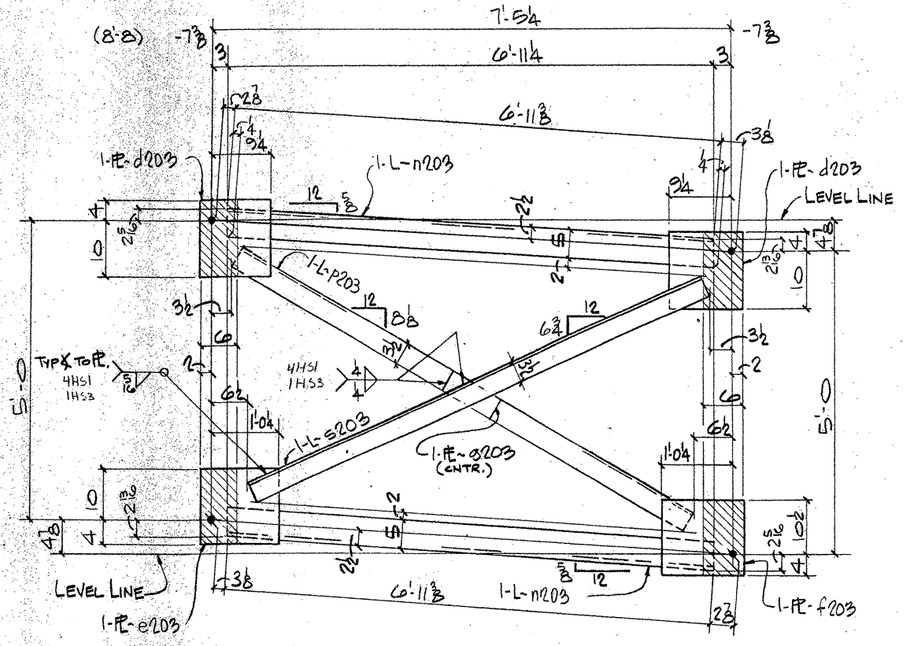

3 - DIAFRAM - 203D3

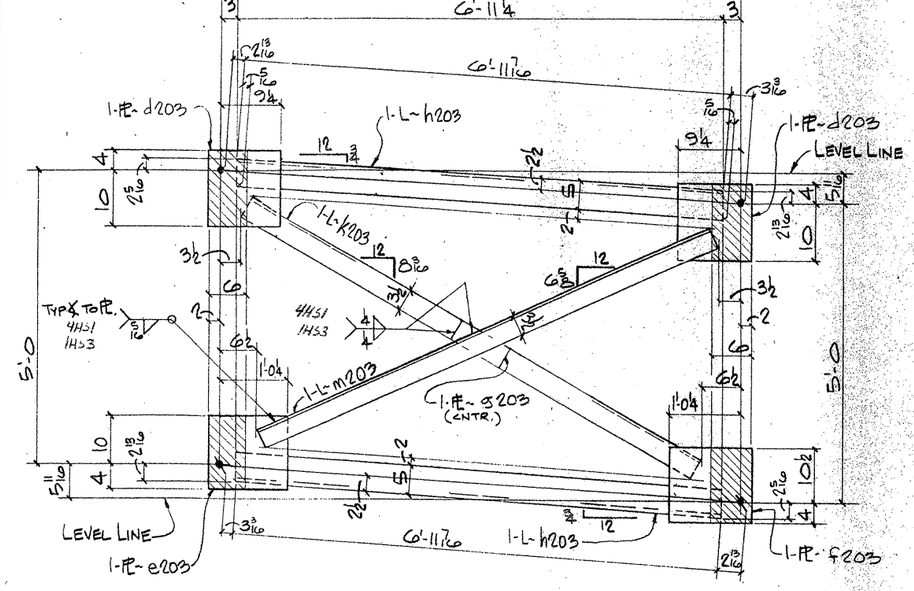

6 - DIAFRAMS - 203D2

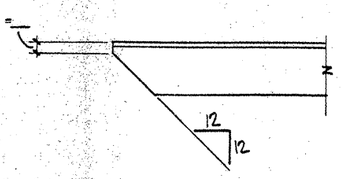

TYP. CLIP ON ALL OUTSTANDING ANGLE LEGS

NOTES:
1. FOR GENERAL NOTES SEE SHT. GN1
2. ▨ INDICATES OIL, NO PAINT (N.S./F.S. & EDGES)

BILL OF MATERIAL

	Qnty.	Material	Length	Mark Temp.	Mark Ship.	Wt.	Cut From	Remarks
3	60	DIAFRAMS			203D1			
4	120	L 5x3½x½	6'-11 13/16	a203			215-2	
5	60	L 5x3½x½	7'-9 15/16	b203			215-6	
6	60	L 5x3½x½	7'-4 3/8	c203			215-6	
7	120	PL ½x 11¼	1'-2	d203			215-10	
8	60	PL ½x 14	1'-2¼	e203			215-11	
9	60	PL ½x 14¼	1'-2½	f203			215-12	
10	60	PL ½x 3½	0'-5	g203			215-13	
23	6	DIAFRAMS			203D2			
24	12	L 5x3½x½	6'-11 3/4	h203			215-2	
25	6	L 5x3½x½	7'-9 5/8	k203			215-6	
26	6	L 5x3½x½	7'-4 5/8	m203			215-6	
27	12	PL		d203				
28	6	PL		e203				
29	6	PL		f203				
30	6	FL		g203				
38	3	DIAFRAMS			203D3			
39	6	L 5x3½x½	6'-11 5/8	n203			215-2	
40	3	L 5x3½x½	7'-9¼	p203			215-6	
41	3	L 5x3½x½	7'-4 15/16	s203			215-6	
42	6	PL		d203				
43	3	PL		e203				
44	3	PL		f203				
45	3	FL		g203				

TEXAS DEPARTMENT OF TRANSPORTATION
APPROVED
DIVISION OF BRIDGES AND STRUCTURES
FEB 11 1993

FOR APPROVAL
JAN 22 93

APPROVAL OF THIS DRAWING DOES NOT RELIEVE THE CONTRACTOR OF THE RESPONSIBILITY FOR THE CORRECTNESS OF DETAIL

NOT FOR CONSTRUCTION

REVISION	DATE	DESCRIPTION OF REVISION
NO. 1		
NO. 2		
NO. 3		
NO. 4		
NO. 5		

PRINTING Req'd	For	Date

Bolts: Holes: 15/16ø Unless Noted
Shop Paint SEE SHT GN1
Fab. Spec. A36 Inspection
Architect
Erection By Field Connections

HIRSCHFELD STEEL CO. INC.
112 WEST 29TH SAN ANGELO, TEXAS 76903
PHONE (915) 653-3211

DESCRIPTION 65'-0 PLATE GIRDER UNIT
STRUCTURE US 83/281 INTERCHANGE RAMP #4
LOCATION HIDALGO COUNTY
CUSTOMER GILBERT TEXAS CONSTRUCTION
SHIP TO
Customer's Order No.
Dwg. By JRE Date 10/92
Checked By JC Date 11-92

SHEET 203 OF
JOB NO 92-109

APR JAN 22

FED. ROAD DIV. NO.	STATE	FEDERAL AID PROJECT NO.			
6	TX.	NH 92(50)M			
STATE DIST. NO.	COUNTY	CONTROL NO.	SECTION NO.	JOB NO.	HIGHWAY NO.
21	HIDALGO	39	17	97	83/281

F0209

CE 92-14

BILL OF MATERIAL

	Only.	Material	Length	Mark Temp	Mark Ship.	Wt.	Cut From	Remarks
1	ONE	BOX GIRDER			202BG1.21			
2	2	PL 3/4 x 49 1/2	41'-0		1.21WA		202-1	FCM-1
3	1	PL 2 1/4 x 42	41'-0		1.21TA		202-2	-2
4	1	PL 2 1/4 x 42	41'-0		1.21BA		202-3	-2
5								
6	12	PL 1 x 38 1/2	4'-1 1/2		a		203-1	
7	4	PL 2 1/2 x 26	2'-10		b		203-2	
8	8	FL 1 x 1 1/2	2'-0		c		203-3	
9	4	FL 3/4 x 1	2'-6		d		203-4	
10	4	FL 1 x 3 1/2	2'-6		e		203-5	**
11	16	HS BOLT 3/4 ϕ	0'-3				204-3	A325
12	2	PL 1 x 8 5/8	2'-7		g		203-6	FCM-1
13	2	PL 1 x 6 1/4	2'-7		h		203-7	
14	2	PL 1 x 3 7/8	2'-7		k		203-8	
15	2	FL 1 x 1 1/2	2'-7		m		203-9	
16	3	PL 1 x 8 5/8	1'-11		n		203-10	
17	3	PL 1 x 6 1/4	1'-11		p		203-11	
18	3	PL 1 x 3 7/8	1'-11		s		203-12	
19	3	FL 1 x 1 1/2	1'-11		t		203-13	
20	6	PL 1 1/4 x 38 1/2	4'-1 1/2		v		203-14	
21	8	PL 2 1/2 x 9	0'-10 3/4		w		203-15	**
22	16	FL 1 x 4	0'-7		y		203-16	
23	2	PL 1/2 x 42	4'-4		aa		203-17	
24	2	PL 1/4 x 30	3'-1		ab		203-18	
25	4	FL 3/8 x 1 1/2	0'-5 3/8		ac		203-19	
26	4	FL 3/8 x 1 1/2	0'-1 3/4		ad		203-20	
27	32	HS BOLT 1/2 ϕ	0'-1 3/4				204-1	A325
28	2	1/2 ϕ BAR	0'-8 1/2		af		204-2	
29								
30	32	HS WASHER 1/2 ϕ					204-4	A325
31	16	HS WASHER 3/4 ϕ					204-5	
32								
33	2	PL 3/8 X 1	41-0			BACKING STRIP		
34								
35								
36								
37								
38								
39								
40								
41								
42								
43								
44								
45								
46								
47								
48								
49								
50								
51								
52								
53								
54								
55								
56								
57								
58								
59								
60								

TEXAS DEPARTMENT OF TRANSPORTATION
APPROVED EXCEPT AS NOTED
DIVISION OF BRIDGES AND STRUCTURES
FEB 11 1993

FOR APPROVAL
JAN 22 '93

APPROVAL OF THIS DRAWING DOES NOT RELIEVE THE CONTRACTOR OF THE RESPONSIBILITY FOR THE CORRECTNESS OF DETAIL

NOT FOR CONSTRUCTION

** Plate must be drilled.

Q8209

FED. ROAD DIV. NO.	STATE	FEDERAL AID PROJECT NO.			
6	TX.	NH 92(50)M			
STATE DIST. NO.	COUNTY	CONTROL NO.	SECTION NO.	JOB NO.	HIGHWAY NO.
21	HIDALGO	39	17	97	83/281

REVISION	DATE	DESCRIPTION OF REVISION
NO. 1		
NO. 2		
NO. 3		
NO. 4		
NO. 5		

PRINTING: Reqd | For | Date

Bolts A325N Holes: 3/16" I.N. Unless Noted
Shop Paint SYSTEM II INSIDE & OUT
Fab Spec A572-50 Inspection
Architect
Erection By Field Connections

HIRSCHFELD STEEL CO. INC.
112 WEST 29TH SAN ANGELO, TEXAS 76903
PHONE (915) 653-3211

DESCRIPTION PLATE GIRDER UNIT
STRUCTURE US 83/281 INTERCHANGE RAMP #4
LOCATION HIDALGO COUNTY
CUSTOMER GILBERT TEXAS CONSTRUCTION
SHIP TO
Customer's Order No.
Dwg. By JC Date 5/92
Checked By OCT Date 10/92
SHEET 202B OF
JOB NO. 92-109

APV JAN 22

X

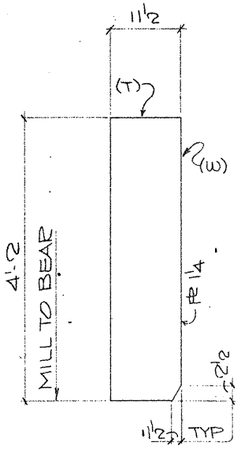

16-PLATES ~ a201
(END BRG.)

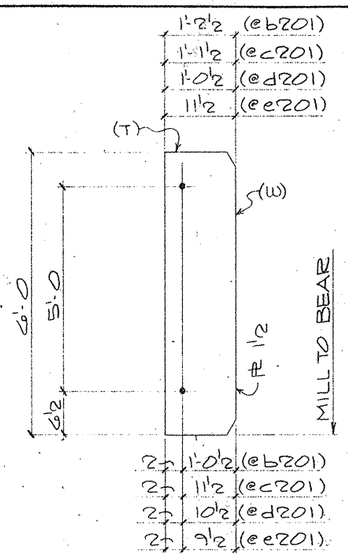

2-PLATES ~ b201 (AS NTD)
4-PLATES ~ c201
5-PLATES ~ d201
ONE-PLATE ~ e201
(INT. BRG.)

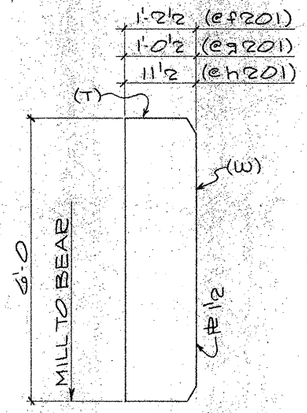

2-PLATES ~ f201 (AS NTD)
ONE-PLATE ~ g201
ONE-PLATE ~ h201
(INT. BRG.)

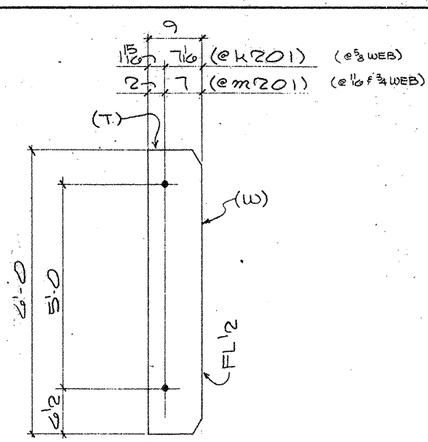

132-PLATES ~ k201 (AS NTD)
78-PLATES ~ m201
(INT. STIFF.)

SHOP NOTES:
1) FOR GENERAL NOTES, SEE SHT. GN1.
2) (T) INDICATES "TOP"
3) (W) INDICATES "WEB"

** Plate must be drilled.

BILL OF MATERIAL

	Qnty	Material	Length	Mark Temp.	Mark Ship.	Wt.	Cut From	Remarks
1								
2								
3	16	PL 1¼ x 11½	4'-2	a201			213-1	
4								
5	2	PL 1½ x 14½	6'-0	b201			213-2	**
6	4	PL 1½ x 13½	6'-0	c201			213-3	**
7	5	PL 1½ x 12½	6'-0	d201			213-4	**
8	1	PL 1½ x 11½	6'-0	e201			213-5	**
9								
10	2	PL 1½ x 14½	6'-0	f201			213-2	
11	1	PL 1½ x 12½	6'-0	g201			213-4	
12	1	PL 1½ x 11½	6'-0	h201			213-5	
13								
14	132	FL ½ x 9	6'-0	k201			213-6	
15	78	FL ½ x 9	6'-0	m201			213-6	

TEXAS DEPARTMENT OF TRANSPORTATION
APPROVED
DIVISION OF BRIDGES AND STRUCTURES
FEB 11 1993
APPROVAL OF THIS DRAWING DOES NOT RELIEVE THE CONTRACTOR OF THE RESPONSIBILITY FOR THE CORRECTNESS OF DETAIL

FOR APPROVAL
JAN 22 '93
NOT FOR CONSTRUCTION

REVISION	DATE	DESCRIPTION OF REVISION
NO. 1		
NO. 2		
NO. 3		
NO. 4		
NO. 5		

PRINTING

Req'd	For	Date

Bolts Holes 15/16 ϕ Unless Noted
Shop Paint SEE SHT. GN1
Fab Spec. A36 Inspection
Architect
Erection By Field Connections

HIRSCHFELD STEEL CO. INC.
112 WEST 29TH SAN ANGELO, TEXAS 76903
PHONE (915) 653-3211

DESCRIPTION PLATE GIRDER UNIT
STRUCTURE US 83/281 INTERCHANGE RAMP
LOCATION HIDALGO COUNTY
CUSTOMER GILBERT TEXAS CONSTRUCTION
SHIP TO
Customer's Order No.
Dwg. By CRT Date 10/92
Checked By JC Date 11-12
SHEET 201 OF
JOB NO. 92-109

Q0209

FED. ROAD DIV. NO.	STATE	FEDERAL AID PROJECT NO.			
6	TX.	NH 92(50)M			
STATE DIST. NO.	COUNTY	CONTROL NO.	SECTION NO.	JOB NO.	HIGHWAY NO.
21	HIDALGO	39	17	97	83/281

APV JAN 22

CE 92-14

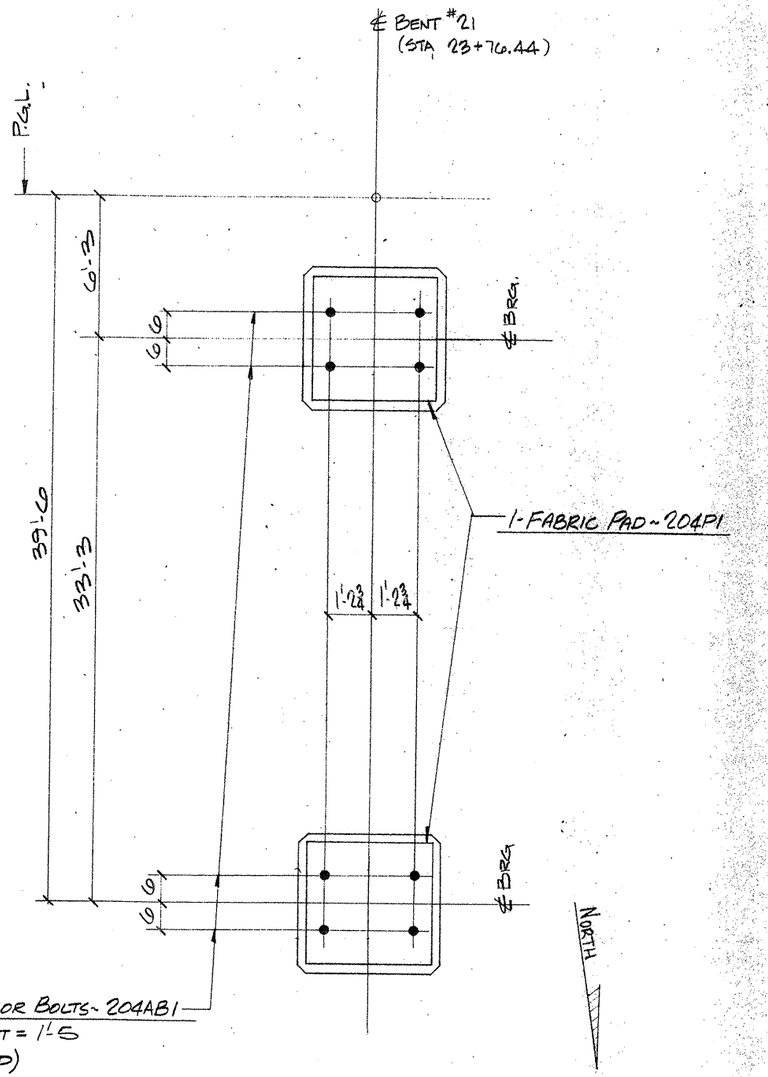

ANCHOR SETTING PLAN @ BENT # 21

a b c d e f g h i j k l m n o p q r s t u v w x y z

TEXAS DEPARTMENT OF TRANSPORTATION
APPROVED
DIVISION OF BRIDGES AND STRUCTURES
FEB 11 1993
APPROVAL OF THIS DRAWING DOES NOT RELIEVE THE CONTRACTOR OF THE RESPONSIBILITY FOR THE CORRECTNESS OF DETAIL.

FOR APPROVAL
JAN 27 '93
NOT FOR CONSTRUCTION

APV JAN 22

FED ROAD DIV NO	STATE	FEDERAL AID PROJECT NO.			
6	TX.	NH (50) M			
STATE DIST NO.	COUNTY	CONTROL NO	SECTION NO	JOB NO	HIGHWAY NO
21	HIDALGO	39	17	97	83/281

HOLES ____ U.N.	FOR APVL		
BOLTS ____ U.N.	RETURNED		
WELDS ____ U.N.	TO SHOP		
PAINT			

REVISIONS		
NO.	DATE	REMARKS
1		
2		
3		
4		

HIRSCHFELD STEEL CO. INC.
112 WEST 29TH SAN ANGELO, TEXAS 76903
PHONE (915) 653-3211

CUSTOMER GILBERT TEXAS CONSTRUCTION
ARCHITECT
PROJECT US 83/281 INTERCHANGE RAMP #4
LOCATION HIDALGO COUNTY

DRAWN JSL DATE 8/92 | JOB NO. 92-109 | SHEET NO. 1 of 2202
CHECKED DLT DATE 8/92

CE 92-14

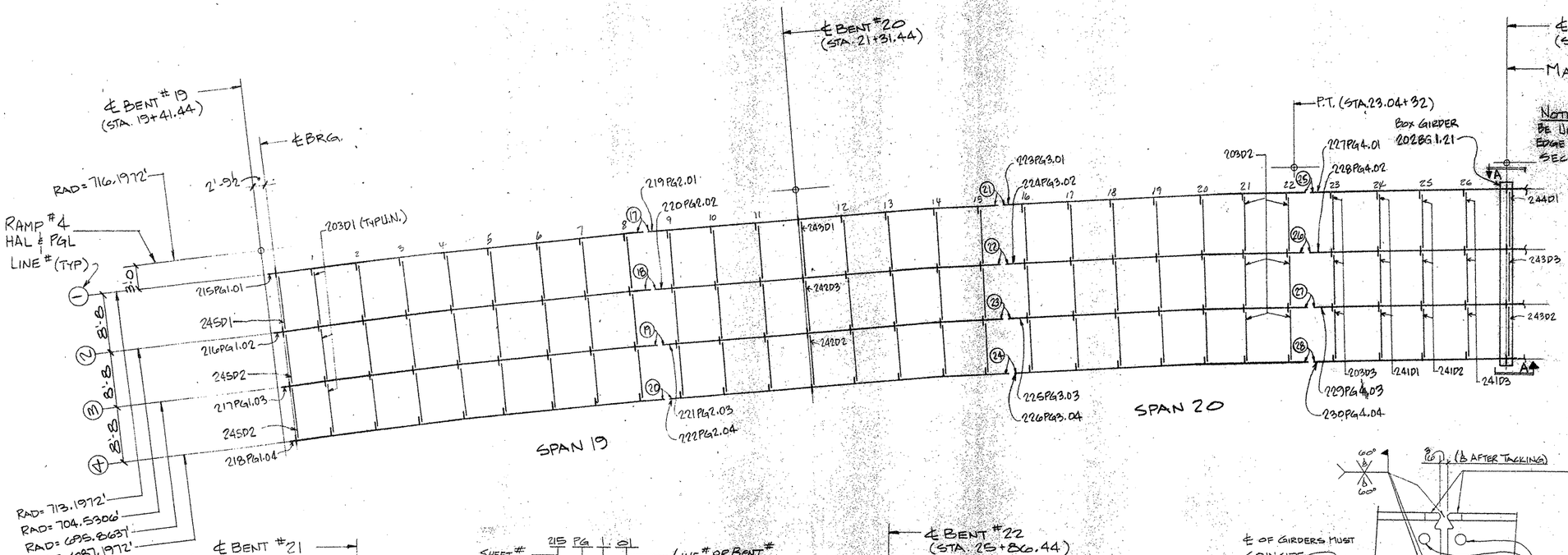

NOTE: SILICONE BEAD SHALL BE UNIFORMLY APPLIED AROUND EDGE OF DOOR PLATE BEFORE SECURING.

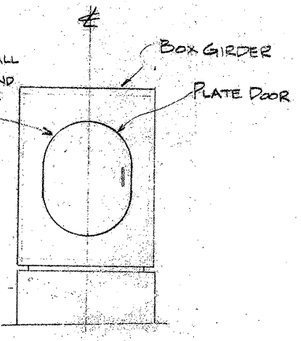

VIEW-A

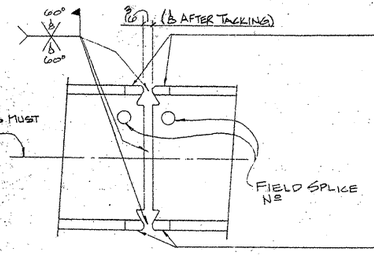

SPLICE EXT. BARS
MK~ 226WB1 (4-REQ'D PER SPLICE)
@ SPLICE'S (19)(20)(23)(24)(27) & (28)
MK~ 226WB2 (4-REQ'D PER SPLICE)
@ SPLICE'S (17)(18)(21)(22)(25)(26)(29) & (30)

SPLICE EXT. BARS
MK~ 226WB1 (4-REQ'D PER SPLICE)
@ SPLICE'S (19)(20)(23)(24)(27) & (28)
MK~ 226WB2 (4-REQ'D PER SPLICE)
@ SPLICE'S (18)(22)(26)(29) & (30)
MK~ 226WB3 (4-REQ'D PER SPLICE)
@ SPLICE'S (17)(21)(25)(31) & (32)

TYP. FIELD SPLICE DETAIL

SHEET # 215 PG 1 SL LINE # OR BENT #
PLATE GIRDER OR BOX GIRDER (BGA) GIRDER #
GIRDER SHIPPING MARK LEGEND

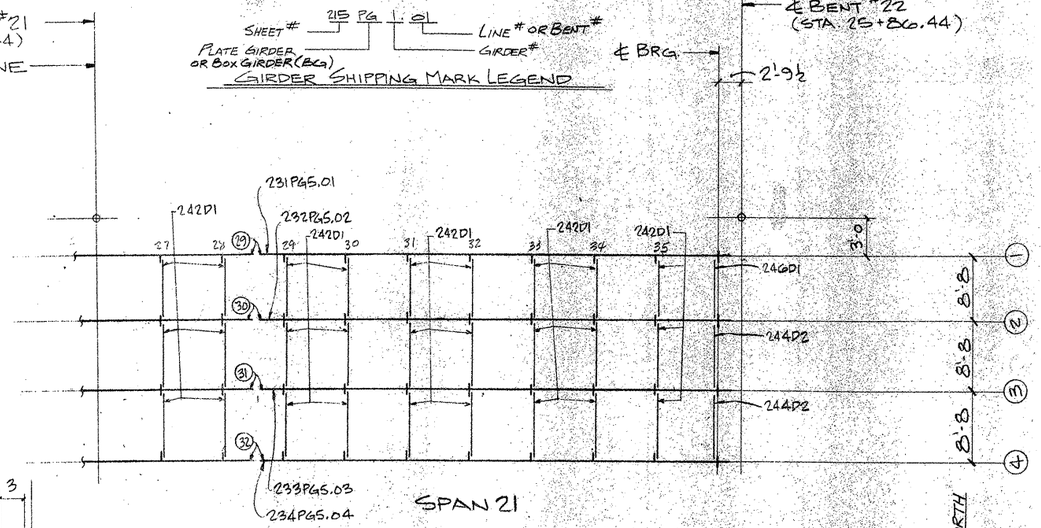

FRAMING PLAN
(UNIT NO7 RAMP 4)

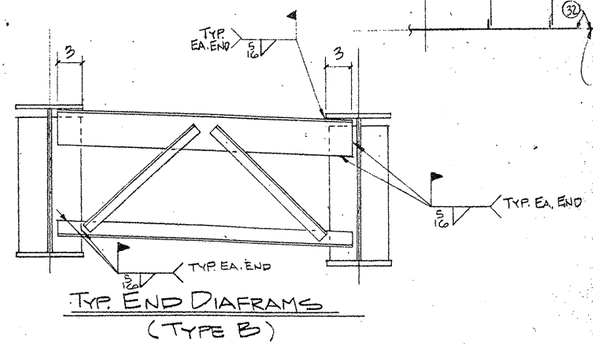

TYP. END DIAFRAMS
(TYPE B)

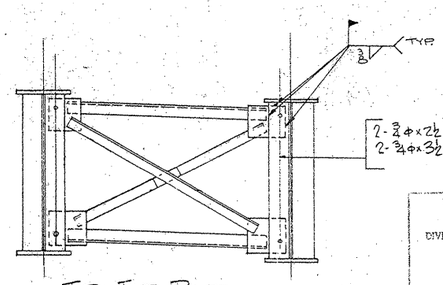

TYP. INT. DIAFRAMS

TEXAS DEPARTMENT OF TRANSPORTATION
APPROVED
DIVISION OF BRIDGES AND STRUCTURES
FEB 11 1993
APPROVAL OF THIS DRAWING DOES NOT RELIEVE THE CONTRACTOR OF THE RESPONSIBILITY FOR THE CORRECTNESS OF DETAIL.

FOR APPROVAL
JAN 22 '93
NOT FOR CONSTRUCTION

FED. ROAD DIV. NO.	STATE	FEDERAL AID PROJECT NO.			
6	TX.	NH 92(50)M			
STATE DIST. NO.	COUNTY	CONTROL NO.	SECTION NO.	JOB NO.	HIGHWAY NO.
21	HIDALGO	39	17	97	83/281

HOLES ____ U.N.	FOR AP'VL ____		
BOLTS ____ U.N.	RETURNED ____		
WELDS ____ U.N.	TO SHOP ____		
PAINT ____			
REVISIONS			
NO.	DATE	REMARKS	
1			
2			
3			
4			

HIRSCHFELD STEEL CO. INC.
112 WEST 29TH SAN ANGELO, TEXAS 76903
PHONE (915) 653-3211

CUSTOMER GILBERT TEXAS CONSTRUCTION
ARCHITECT
PROJECT US 83/281 INTERCHANGE RAMP #4
LOCATION HIDALGO COUNTY

DRAWN JRL DATE
CHECKED JC DATE 11-92
JOB NO. 92-109
SHEET NO. E201 of

CE. 92-11

a b c d e f g h i j k l m n o p q r s t u w x y z

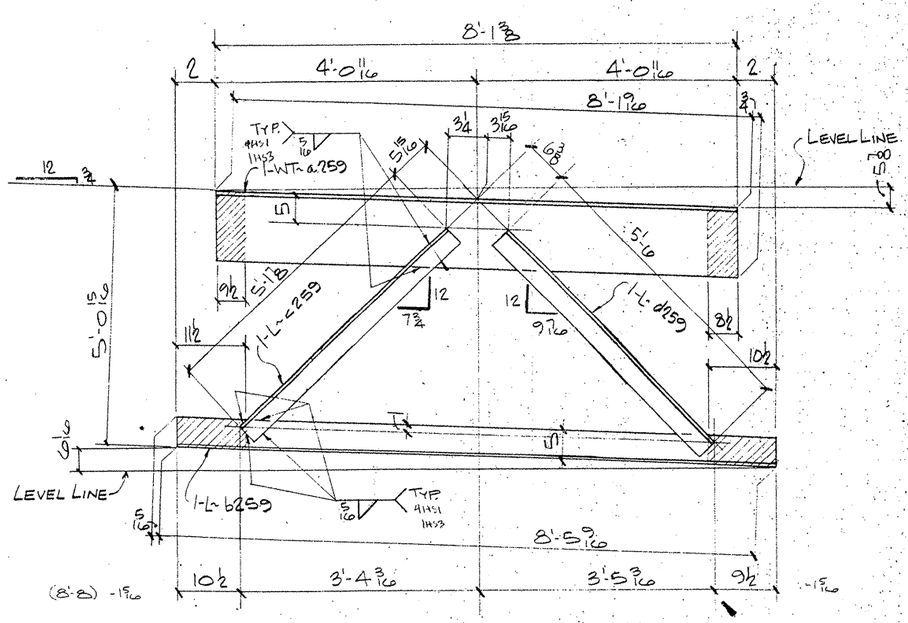

ONE - END DIAFRAM ~ 259D1

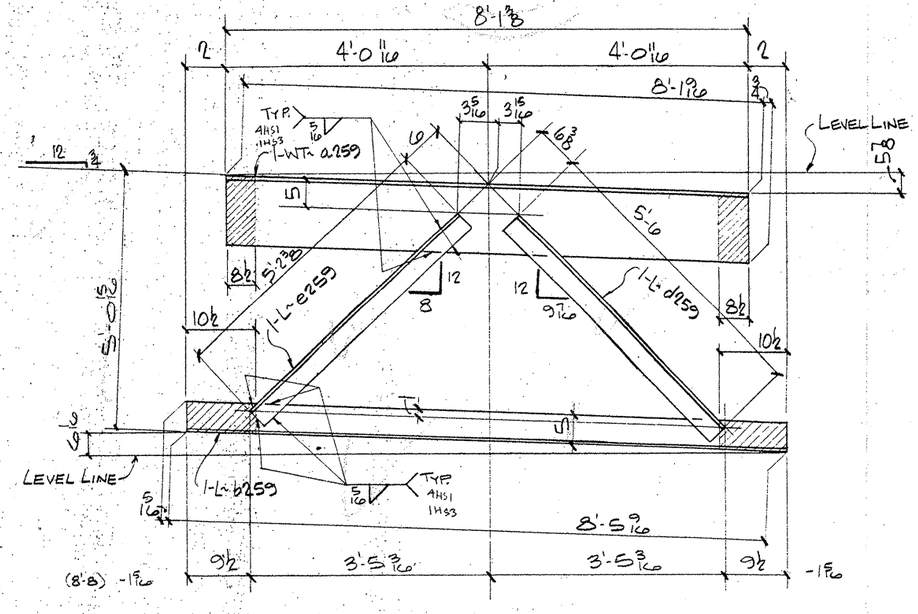

2 - END DIAFRAMS ~ 259D2

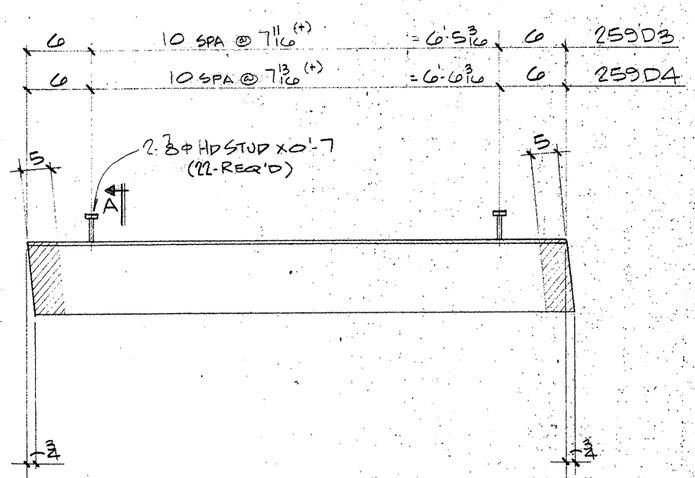

ONE REQ'D	END DIAFRAM "AS NTD" (W12x42x7'-5 15/16)	7'-5 3/16	259D3
2 REQ'D	END DIAFRAM "AS NTD" (W12x42x7'-6 15/16)	7'-6 3/16	259D4

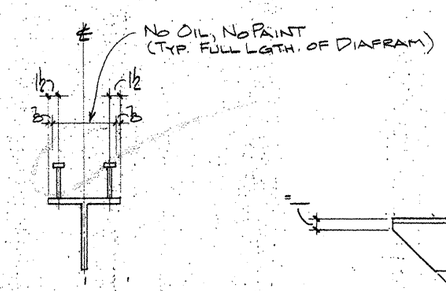

SECTION ~ A

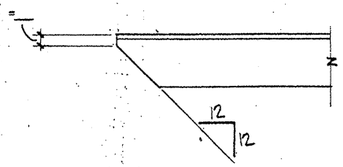

TYP. CLIP ON ALL OUTSTANDING ANGLE LEGS

NOTES:
1. FOR GENERAL NOTES SEE SHT. GN1
2. ▨ INDICATES OIL, NO PAINT (N.S./F.S./℄ EDGES)

BILL OF MATERIAL

	Qnty	Material	Length	Mark Temp	Mark Ship	Wt	Cut From	Remarks
4	ONE	DIAFRAM			259D1			
5	ONE	WT 12 x 42	8'-2 5/16	a259			206-2	
6	ONE	L 5 x 3 1/2 x 3/8	8'-5 7/8	b259			206-4	
7	ONE	L 3 1/2 x 3 1/2 x 3/8	5'-1 7/8	c259			206-5	
8	ONE	L 3 1/2 x 3 1/2 x 3/8	5'-6	d259			206-5	
16	2	DIAFRAMS			259D2			
17	2	WT		a259			206-2	
18	2	L		b259			206-4	
19	2	L		d259			206-5	
20	2	L 3 1/2 x 3 1/2 x 3/8	5'-2 3/8	e259			206-5	
26	ONE	DIAFRAM			259D3			
27	ONE	WT 12 x 42	7'-5 15/16				206-3	
28	22	HD STUD 7/8φ	0'-7				205-1	A108
34	2	DIAFRAMS			259D4			
35	2	WT 12 x 42	7'-6 15/16				206-3	
36	44	HD STUD 7/8φ	0'-7				205-1	A108
41		FIELD BOLT LIST (9% ADDED) A325 T1						
42	551	HS BOLT 3/4φ	0'-2 1/2				205-4	
43	12	HS BOLT 3/4φ	0'-3				205-5	
44	17	HS BOLT 3/4φ	0'-3 1/2				205-6	
45	1160	HS WASHER 3/4φ					205-7	
47	101	HS BOLT 1φ	0'-3				205-9	
48	61	HS BOLT 1φ	0'-3 1/2				205-10	
49	32	HS BOLT 1φ	0'-4 1/2				205-11	
50	19	HS BOLT 1φ	0'-4 3/4				205-12	
51	351	HS BOLT 1φ	0'-8 1/2				205-13	
52	564	HS WASHER 1φ					205-14	

TEXAS DEPARTMENT OF TRANSPORTATION
APPROVED
DIVISION OF BRIDGES AND STRUCTURES
APR 06 1995

FOR APPROVAL
MAR 15 '95
NOT FOR CONSTRUCTION

APPROVAL OF THIS DRAWING DOES NOT RELIEVE THE CONTRACTOR OF THE RESPONSIBILITY FOR THE CORRECTNESS OF DETAIL

REVISION	DATE	DESCRIPTION OF REVISION
NO. 1		
NO. 2		
NO. 3		
NO. 4		
NO. 5		

PRINTING Req'd	For	Date

Bolts Holes Unless Noted
Shop Paint SEE SHT GN1
Fab Spec A36 Inspection
Architect
Erection By Field Connections

HIRSCHFELD STEEL CO. INC.
112 WEST 29TH SAN ANGELO, TEXAS 76903
PHONE (915) 653-3211

DESCRIPTION 150'-0 PLATE GIRDER UNIT
STRUCTURE US 83/281 INTERCHANGE RAMP F3
LOCATION HIDALGO COUNTY
CUSTOMER GILBERT TEXAS CONSTRUCTION
SHIP TO
Customer's Order No.
Dwg. By JDC Date 9/92
Checked By DLT Date 9/92
SHEET 259 OF
JOB NO 92-108

CE92-13

F0108

FED. ROAD DIV. NO.	STATE	FEDERAL AID PROJECT NO.				
6	TX.	NH 92(50)H				
STATE DIST. NO.	COUNTY	CONTROL NO.	SECTION NO.	JOB NO.	HIGHWAY NO.	
21	HIDALGO	39	17	97.	83/281	

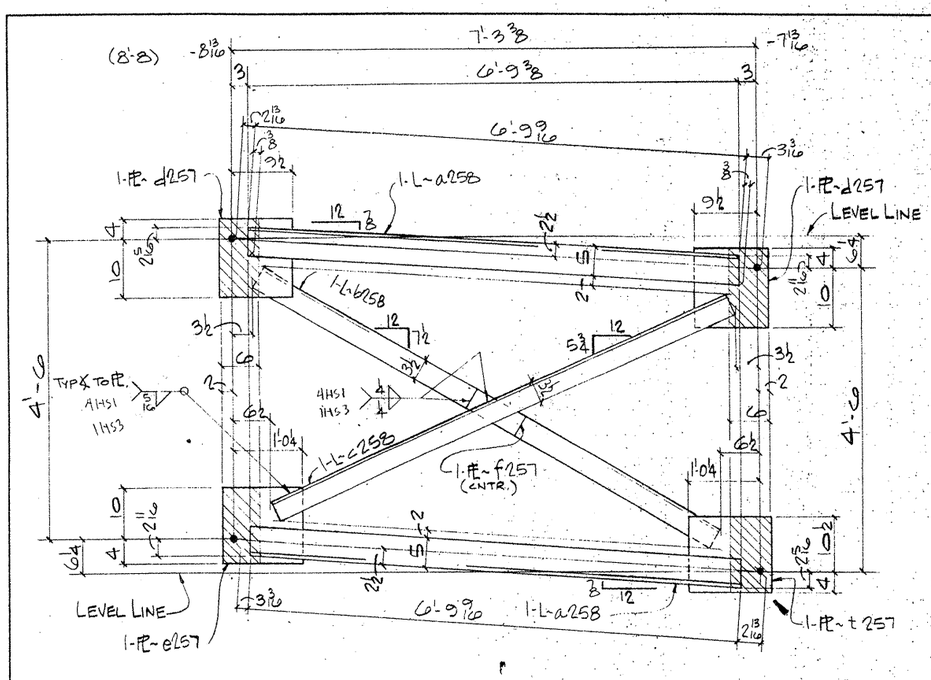

ONE - DIAFRAM ~ 258D1

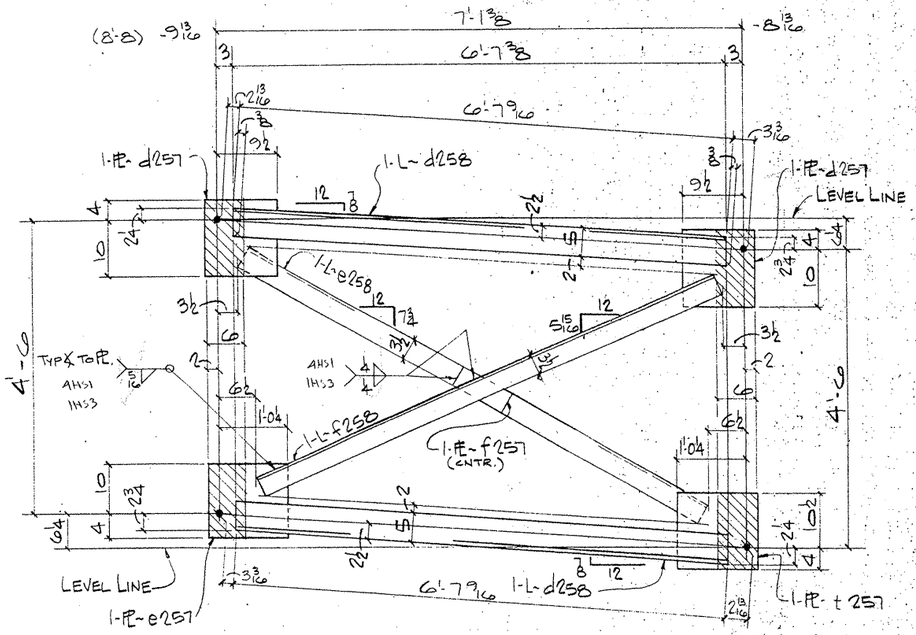

ONE - DIAFRAM ~ 258D2

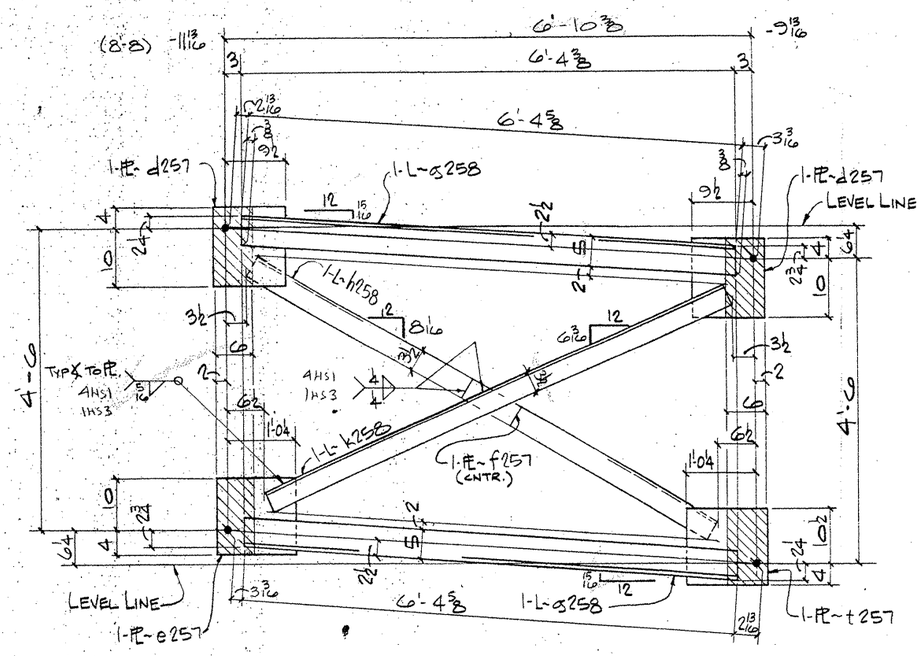

ONE - DIAFRAM ~ 258D3

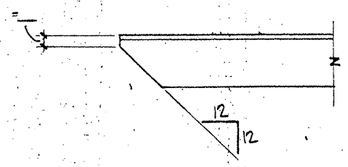

TYP. CLIP ON ALL OUTSTANDING ANGLE LEGS

NOTES:

1. FOR GENERAL NOTES SEE SHT. GN1
2. ▨ INDICATES OIL, NO PAINT (N.S./F.S. & EDGES)

Former Co.

NH 73(19)M
0918-11-022

BILL OF MATERIAL

	Qnty.	Material	Length	Mark Temp.	Mark Ship.	Wt.	Cut From	Remarks
1								
2								
3	ONE	DIAFRAM			258D1			
4	2	L5x3½x½	6'-9 15/16	a258			206-10	
5	ONE	L5x3½x½	7'-5⅜	b258			206-13	
6	ONE	L5x3½x½	7'-0⅜	c258			206-13	
7	2	PL½x11½	1'-2	d257			206-16	
8	ONE	PL½x14	1'-2¼	e257			206-17	
9	ONE	FL½x3½	0'-9	f257			206-18	
10	ONE	PL½x14¼	1'-2½	t257			206-17	
11								
12								
13								
14	ONE	DIAFRAM			258D2			
15	2	L5x3½x½	6'-7 15/16	d258			206-11	
16	ONE	L5x3½x½	7'-3⅜	e258			206-14	
17	ONE	L5x3½x½	6'-10 9/16	f258			206-14	
18	2	PL		d257				
19	ONE	PL		e257				
20	ONE	FL		f257				
21	ONE	PL		t257				
22								
23								
24								
25	ONE	DIAFRAM			258D3			
26	2	L5x3½x½	6'-5	g258			206-12	
27	ONE	L5x3½x½	7'-0 15/16	h258			206-15	
28	ONE	L5x3½x½	6'-7 15/16	k258			206-15	
29	2	PL		d257				
30	ONE	PL		e257				
31	ONE	FL		f257				
32	ONE	PL		t257				
33								
34								
35								
36								
37								
38								
39								
40								
41								
42								
43								
44								
45								
46								
47								
48								
49								
50								
51								
52								
53								
54								
55								
56								
57								
58								
59								
60								

TEXAS DEPARTMENT OF TRANSPORTATION
APPROVED
~~DIVISION OF BRIDGES AND STRUCTURES~~
APR 06 1993
APPROVAL OF THIS DRAWING DOES NOT RELIEVE THE CONTRACTOR OF THE RESPONSIBILITY FOR THE CORRECTNESS OF DETAIL

FOR APPROVAL
MAY 15 '93
NOT FOR CONSTRUCTION

REVISION	DATE	DESCRIPTION OF REVISION
NO. 1		
NO. 2		
NO. 3		
NO. 4		
NO. 5		

PRINTING		
Req'd	For	Date

Bolts ____ Holes. 15/16ø Unless Noted
Shop Paint SEE SHT GN1
Fab. Spec A36 Inspection
Architect
Erection By Field Connections

HIRSCHFELD STEEL CO. INC.
112 WEST 29TH SAN ANGELO, TEXAS 76903
PHONE (915) 653-3211

DESCRIPTION	75'-0 PLATE GIRDER UNIT
STRUCTURE	US 83/281 INTERCHANGE RAMP #3
LOCATION	HIDALGO COUNTY
CUSTOMER	GILBERT TEXAS CONSTRUCTION
SHIP TO	
Customer's Order No.	
Dwg. By JDC	Date 9/92
Checked By DLT	Date 9/92

SHEET 258 OF
JOB NO. 92-108
CE 92-13

F0108

FED. ROAD DIV. NO.	STATE	FEDERAL AID PROJECT NO.			
6	TX.	NH 92(50)M			
STATE DIST. NO.	COUNTY	CONTROL NO.	SECTION NO.	JOB NO.	HIGHWAY NO.
21	HIDALGO	39	17	97	83/281

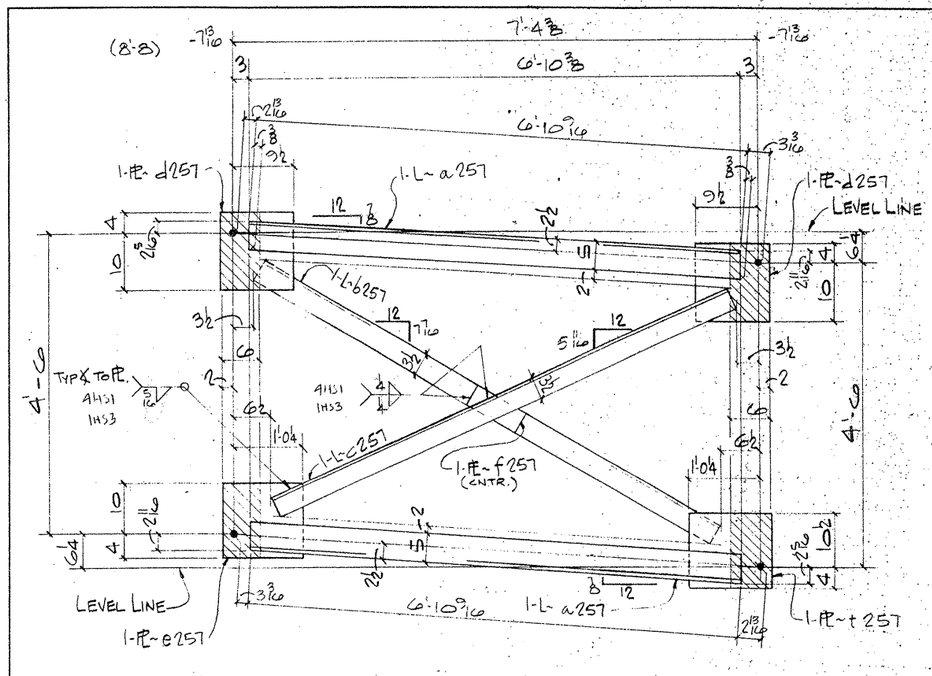

134 - DIAFRAMS~ 257D1

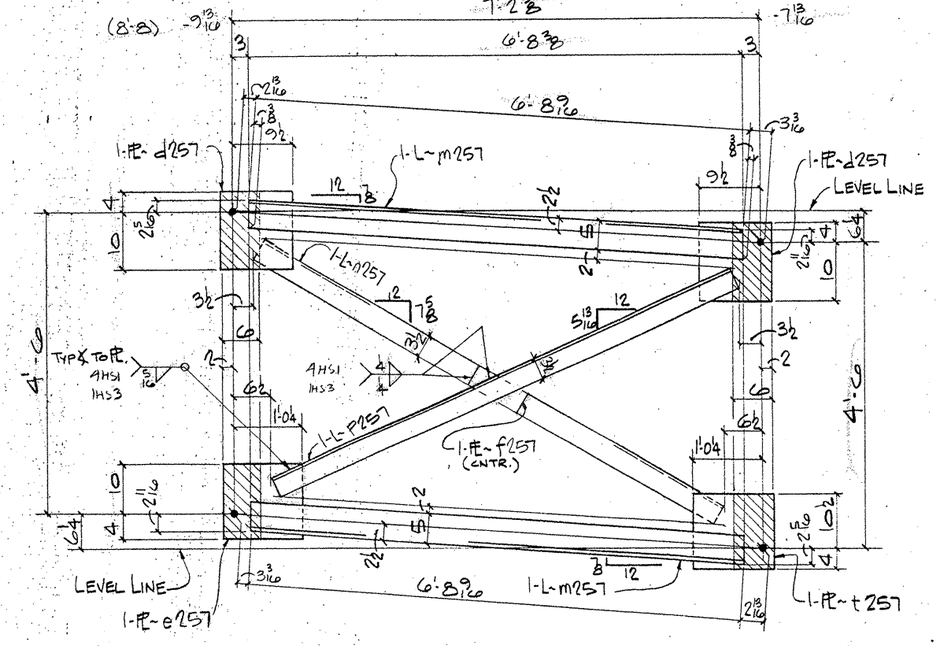

ONE - DIAFRAM ~ 257D3

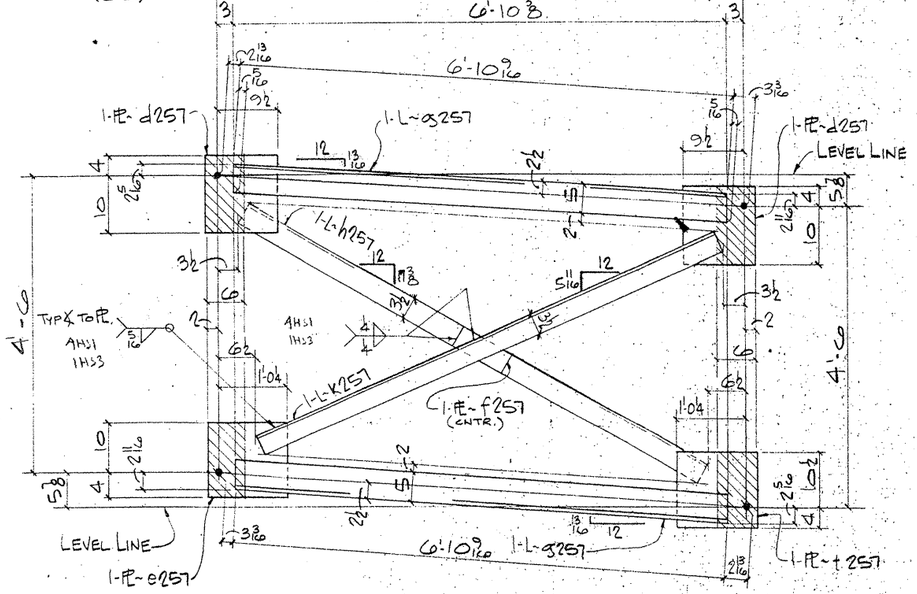

3 - DIAFRAMS~ 257D2

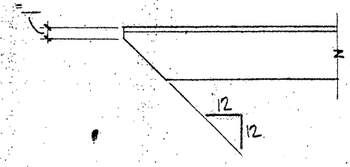

TYP. CLIP ON ALL OUTSTANDING ANGLE LEGS

NOTES:

1. FOR GENERAL NOTES SEE SHT. GN1
2. ▨ INDICATES OIL, NO PAINT (N.S./FS. & EDGES)

F0108

FED. ROAD DIV. NO.	STATE	FEDERAL AID PROJECT NO.			
6	TX.	NH 92(50)M			
STATE DIST. NO.	COUNTY	CONTROL NO.	SECTION NO.	JOB NO.	HIGHWAY NO.
21	HIDALGO	39	17	97	83/281

BILL OF MATERIAL

	Qnty	Material	Length	Mark Temp	Mark Ship	Wt.	Cut From	Remarks
1								
2								
3	134	DIAFRAMS			257D1			
4	268	L5x3½x½	6'-10 15/16	a257			206-10	
5	134	L5x3½x½	7'-6	b257			206-13	
6	134	L5x3½x½	7'-1	c257			206-13	
7	268	PL½x11½	1'-2	d257			206-16	
8	134	PL½x14	1'-2¼	e257			206-17	
9	134	FL½x3½	0'-9	f257			206-18	
10	134	PL½x14¼	1'-2½	t257			206-17	
11								
12								
13								
14	3	DIAFRAMS			257D2			
15	6	L5x3½x½	6'-10 3/8	g257			206-10	
16	3	L5x3½x½	7'-5 15/16	h257			206-13	
17	3	L5x3½x½	7'-1 3/8	k257			206-13	
18	6	PL		d257			206-16	
19	3	PL		e257				
20	3	FL		f257				
21	3	PL		t257				
22								
23								
24								
25	ONE	DIAFRAM			257D3			
26	2	L5x3½x½	6'-8 15/16	m257			206-11	
27	ONE	L5x3½x½	7'-4	n257			206-14	
28	ONE	L5x3½x½	6'-11 3/16	p257			206-12	
29	2	PL		d257				
30	ONE	PL		e257				
31	ONE	FL		f257				
32	ONE	PL		t257				
33								
34								
35								
36								
37								
38								
39								
40								
41								
42								
43								
44								
45								
46								
47								
48								
49								
50								
51								
52								
53								
54								
55								
56								
57								
58								
59								
60								

TEXAS DEPARTMENT OF TRANSPORTATION
APPROVED
DIVISION OF BRIDGES AND STRUCTURES
APR 06 1993

APPROVAL OF THIS DRAWING DOES NOT RELIEVE THE CONTRACTOR OF THE RESPONSIBILITY FOR THE CORRECTNESS OF DETAIL

FOR APPROVAL
MAR 15 '93
NOT FOR CONSTRUCTION

REVISION	DATE	DESCRIPTION OF REVISION
NO. 1		
NO. 2		
NO. 3		
NO. 4		
NO. 5		

PRINTING Req'd	For	Date

Bolts: Holes 15/16 Ø Unless Noted
Shop Paint: SEE SHT GN1
Fab Spec: A36 Inspection
Architect:
Erection By: Field Connections

HIRSCHFELD STEEL CO. INC.
112 WEST 29TH SAN ANGELO TEXAS 76903
PHONE (915) 653-3211

DESCRIPTION	150'-0 PLATE GIRDER UNIT
STRUCTURE	US 83/281 INTERCHANGE RAMP E-S
LOCATION	HIDALGO COUNTY
CUSTOMER	GILBERT TEXAS CONSTRUCTION
SHIP TO	
Customer's Order No.	
Dwg. By JDL	Date 3/92
Checked By DLT	Date 3/92

SHEET 25 OF
JOB NO. 92-108
CE 92-13

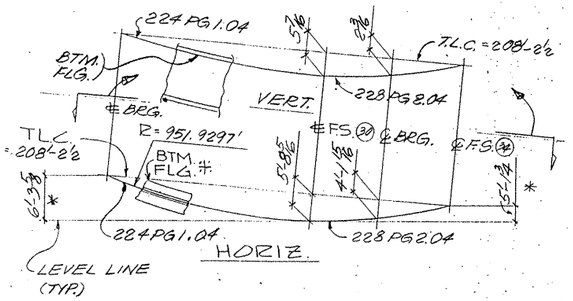

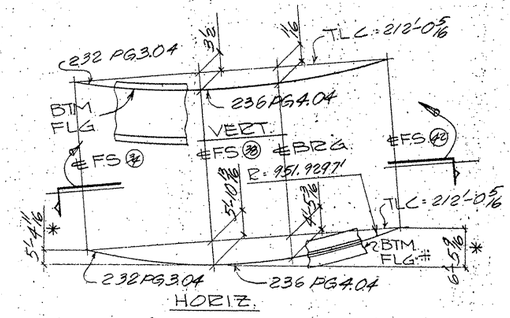

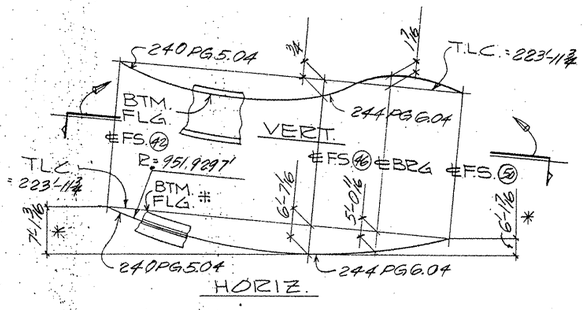

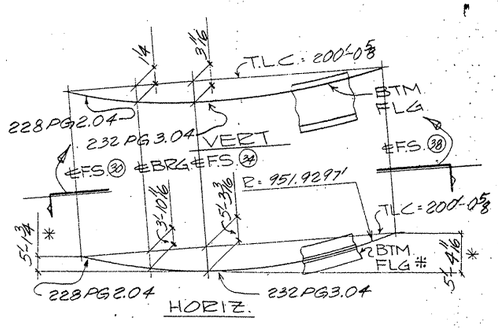

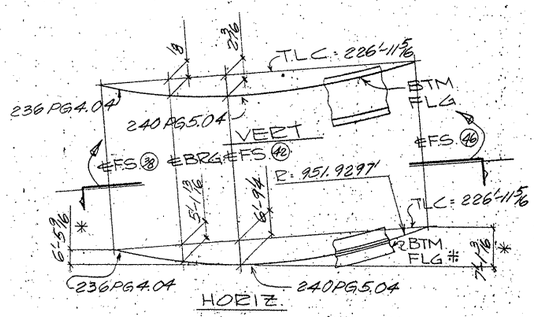

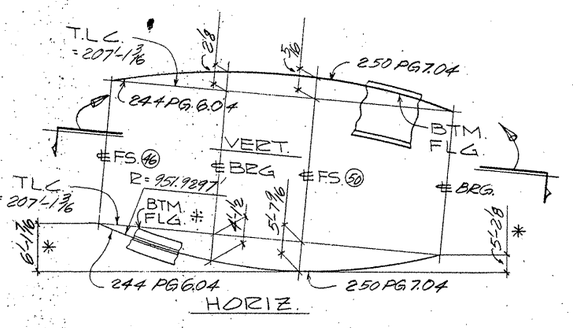

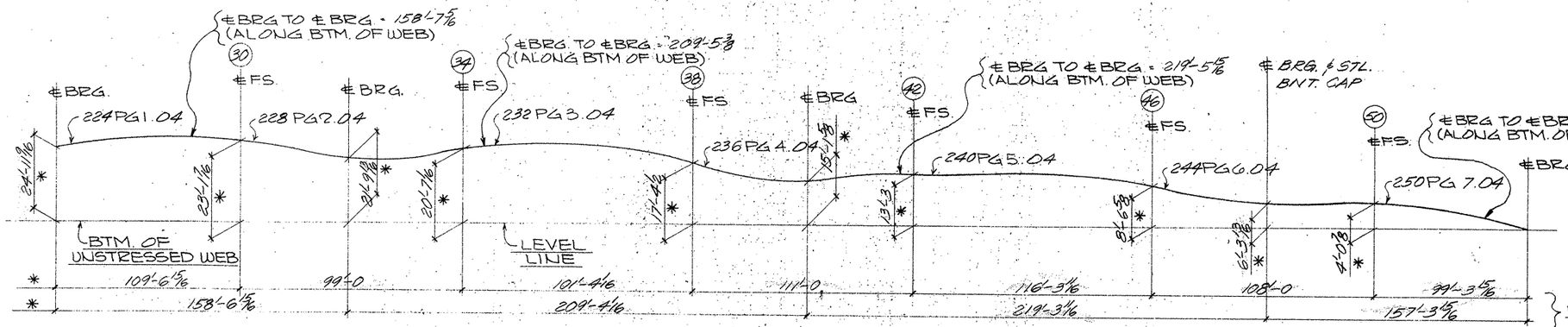

VERTICAL BLOCKING DIAGRAM
(LINE # 4)

TEXAS DEPARTMENT OF TRANSPORTATION
APPROVED
DIVISION OF BRIDGES AND STRUCTURES
APR 06 1993
APPROVAL OF THIS DRAWING DOES NOT RELIEVE THE CONTRACTOR OF THE RESPONSIBILITY FOR THE CORRECTNESS OF DETAIL

FOR APPROVAL
MAR 15 '93
NOT FOR CONSTRUCTION

NOTES:
1. T.L.C. = TRUE LENGTH CHORD.
2. DIMENSIONS ARE GIVEN ALONG OR NORMAL TO THE TRUE LENGTH CHORD UNL. NTD.
3. DIMENSIONS NOTED "*" ARE GIVEN ALONG OR NORMAL TO THE LEVEL LINE.
4. FOR GENERAL NOTES, SEE SHT. GN1.
5. #: = TOP FLG. (N.S.) NOT SHOWN FOR CLARITY.

FED. ROAD DIV. NO.	STATE	FEDERAL AID PROJECT NO.			
6	TX.	NH 92(50)N			
STATE DIST. NO.	COUNTY	CONTROL NO.	SECTION NO.	JOB NO.	HIGHWAY NO.
21	HIDALGO	39	17	97	83/281

HOLES ____ U.N.	FOR AP'VL ____		
BOLTS ____ U.N.	RETURNED ____		
WELDS ____ U.N.	TO SHOP ____		
PAINT ____			
REVISIONS			
NO.	DATE	REMARKS	
1			
2			
3			
4			

HIRSCHFELD STEEL CO. INC.
112 WEST 29TH SAN ANGELO, TEXAS 76903
PHONE (915) 653-3211

CUSTOMER GILBERT TEXAS CONSTRUCTION
ARCHITECT
PROJECT US 83/281 INTERCHANGE RAMP #3
LOCATION HIDALGO COUNTY
DRAWN PEG DATE 9-29-92
CHECKED DLT DATE 10-9-92
JOB NO. 92-108
SHEET NO. 256 of

CE 92-13 (BLKG. LINE 4)

a b c d e f g h i j k l m n o p q r s t u v w x y z

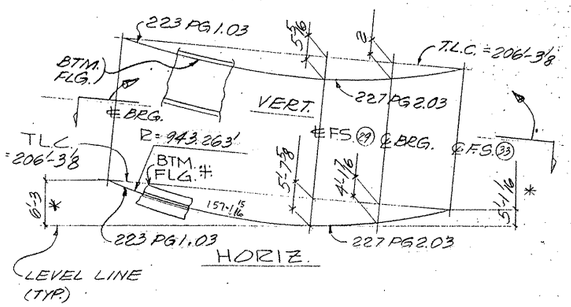

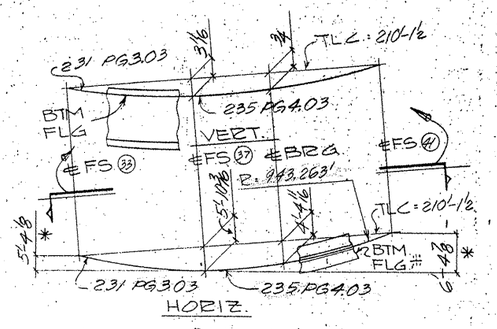

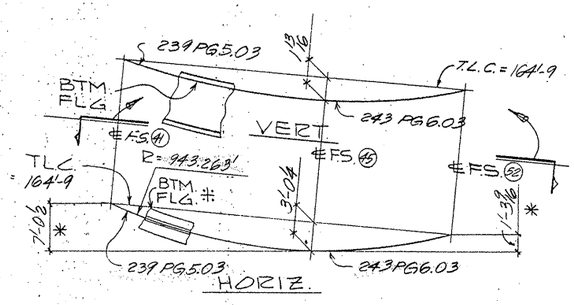

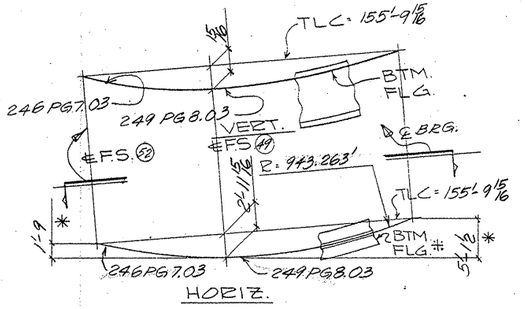

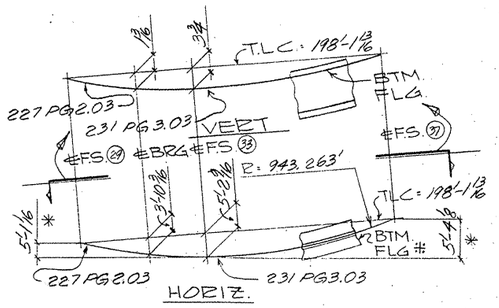

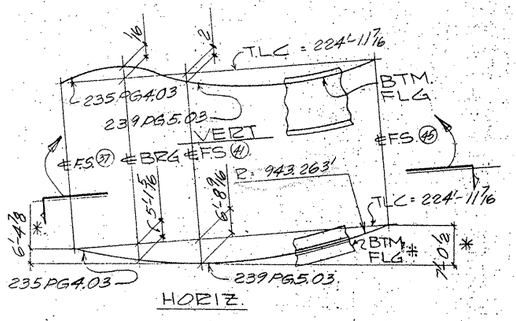

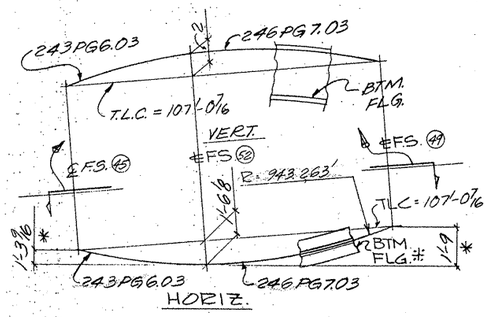

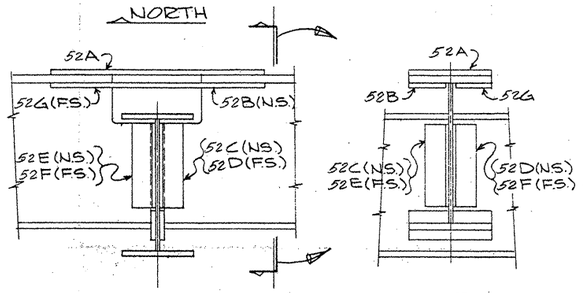

DETAIL OF FIELD SPLICE (52)

FIELD SPLICES MARKED THUS (52) ARE MATCHMARKS. ALL GIRDERS TO BE ERECTED WITH MATCHING MARKS AS SHOWN. FOR FIELD SPLICES (51) & (52) ONLY.

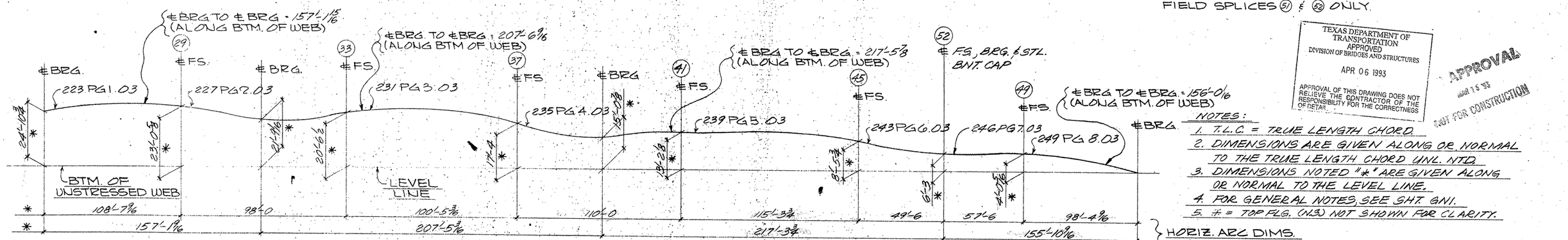

VERTICAL BLOCKING DIAGRAM
(LINE # 3)

TEXAS DEPARTMENT OF TRANSPORTATION
APPROVED
DIVISION OF BRIDGES AND STRUCTURES
APR 06 1993
APPROVAL OF THIS DRAWING DOES NOT RELIEVE THE CONTRACTOR OF THE RESPONSIBILITY FOR THE CORRECTNESS OF DETAIL

APPROVAL
MAR 15 '93
PART FOR CONSTRUCTION

NOTES:
1. T.L.C. = TRUE LENGTH CHORD.
2. DIMENSIONS ARE GIVEN ALONG OR NORMAL TO THE TRUE LENGTH CHORD UNL. NTD.
3. DIMENSIONS NOTED "*" ARE GIVEN ALONG OR NORMAL TO THE LEVEL LINE.
4. FOR GENERAL NOTES, SEE SHT. GN1.
5. # = TOP FLG. (N.S.) NOT SHOWN FOR CLARITY.

FED. ROAD DIV. NO.	STATE	FEDERAL AID PROJECT NO.			
6	TX.	NH 92(50)M			
STATE DIST. NO.	COUNTY	CONTROL NO.	SECTION NO.	JOB NO.	HIGHWAY NO.
21	HIDALGO	39	17	97	83/281

HOLES ____ U.N.	FOR AP'VL		
BOLTS ____ U.N.	RETURNED		
WELDS ____ U.N.	TO SHOP		
PAINT			

REVISIONS

NO.	DATE	REMARKS
1		
2		
3		
4		

HIRSCHFELD STEEL CO. INC.
112 WEST 29TH SAN ANGELO, TEXAS 76903
PHONE (915) 653-3211

CUSTOMER: GILBERT TEXAS CONSTRUCTION
ARCHITECT
PROJECT: US 83/281 INTERCHANGE RAMP #3
LOCATION: HIDALGO COUNTY

DRAWN PGC DATE 9-29-92
CHECKED DLT DATE 10-92
JOB NO. 92-108
SHEET NO. 255 61

CE 92-13 (BLKG. LINE 3)

APV MAR 15

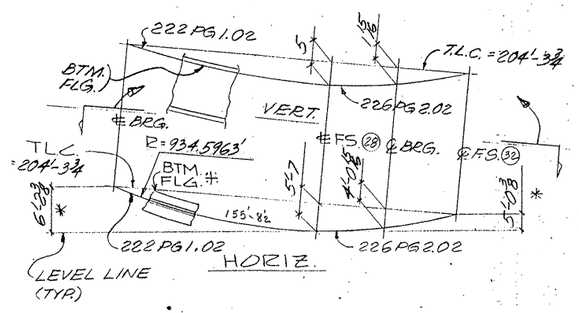

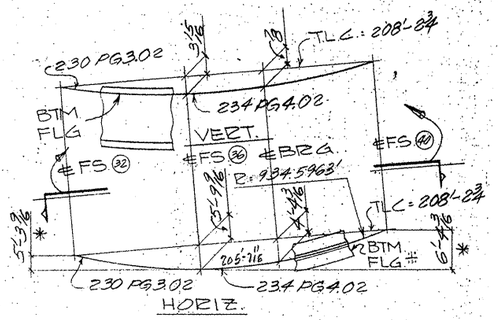

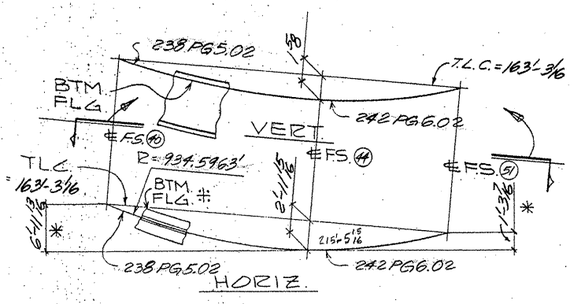

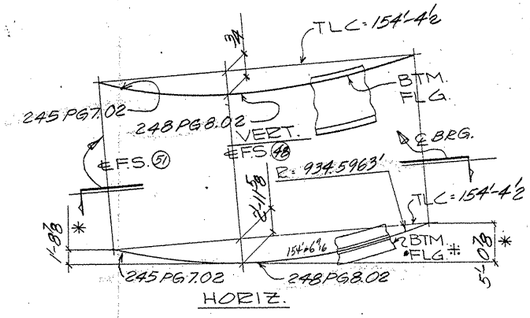

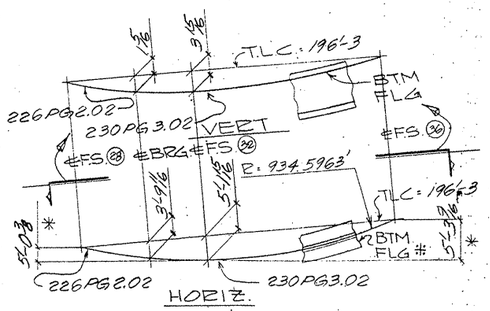

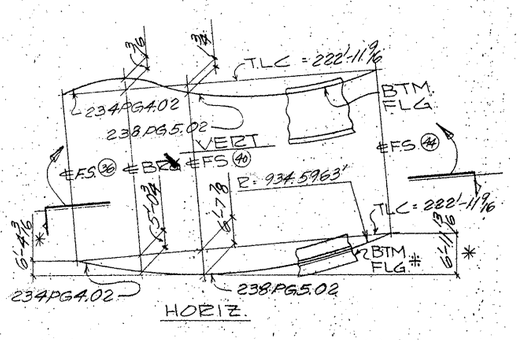

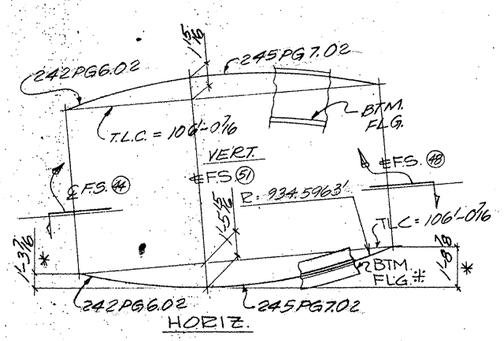

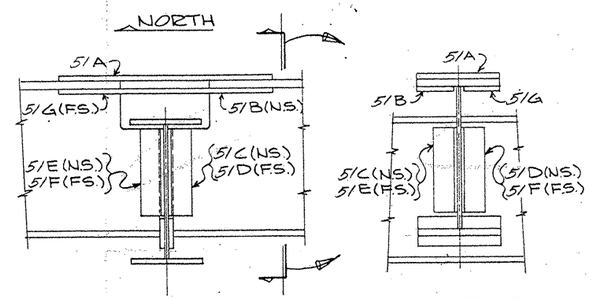

DETAIL OF FIELD SPLICE (51)

FIELD SPLICES MARKED THUS (51) ARE MATCHMARKS. ALL GIRDERS TO BE ERECTED WITH MATCHING MARKS AS SHOWN. FOR FIELD SPLICES (51) & (52) ONLY.

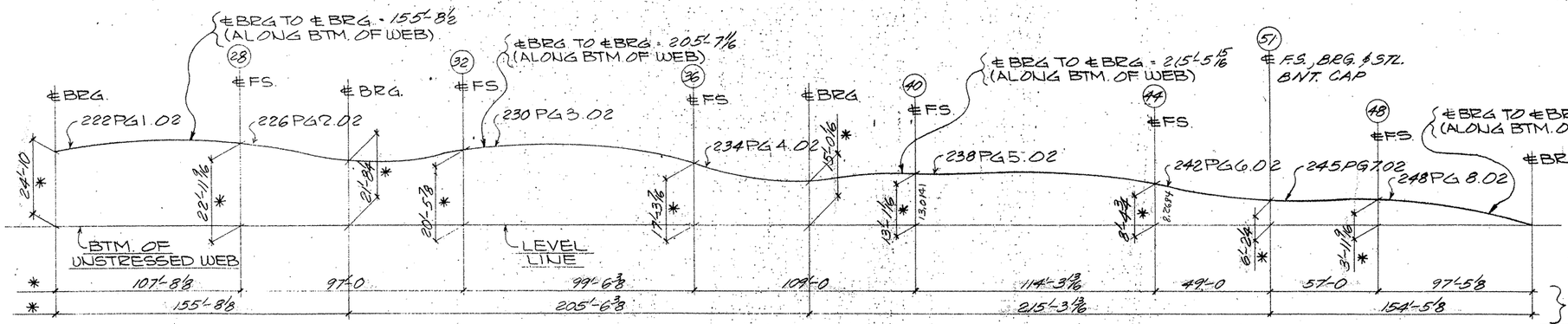

VERTICAL BLOCKING DIAGRAM

(LINE * 2)

TEXAS DEPARTMENT OF TRANSPORTATION
APPROVED
DIVISION OF BRIDGES AND STRUCTURES
APR 06 1993
APPROVAL OF THIS DRAWING DOES NOT RELIEVE THE CONTRACTOR OF THE RESPONSIBILITY FOR THE CORRECTNESS OF DETAIL.

FOR APPROVAL
MAR 15 '93
NOT FOR CONSTRUCTION

NOTES:
1. T.L.C. = TRUE LENGTH CHORD.
2. DIMENSIONS ARE GIVEN ALONG OR NORMAL TO THE TRUE LENGTH CHORD UNL. NTD.
3. DIMENSIONS NOTED "*" ARE GIVEN ALONG OR NORMAL TO THE LEVEL LINE.
4. FOR GENERAL NOTES, SEE SHT. GN1.
5. # = TOP FLG. (N.S.) NOT SHOWN FOR CLARITY.

HORIZ. ARC DIMS.

— Apv MAR 15

FED. ROAD DIV. NO.	STATE	FEDERAL AID PROJECT NO.			
6	TX.	NH 92(50)M			
STATE DIST. NO.	COUNTY	CONTROL NO.	SECTION NO.	JOB NO.	HIGHWAY NO.
21	HIDALGO	39	17	97	83/281

HOLES ____ U.N.	FOR AP'VL. ____
BOLTS ____ U.N.	RETURNED ____
WELDS ____ U.N.	TO SHOP ____
PAINT ____	

REVISIONS		
NO.	DATE	REMARKS
1		
2		
3		
4		

HIRSCHFELD STEEL CO. INC.
112 WEST 29TH SAN ANGELO, TEXAS 76903
PHONE (915) 653-3211

CUSTOMER GILBERT TEXAS CONSTRUCTION
ARCHITECT
PROJECT US 83/281 INTERCHANGE RAMP #3
LOCATION HIDALGO COUNTY

DRAWN PGC DATE 9-29-92
CHECKED DCT DATE 10-92
JOB NO 92-108
SHEET NO 254 of ____

CE 92-13 (BLKG. LINE 2)

a b c d e f g h i j k l m n o p q r s t u v w x y z

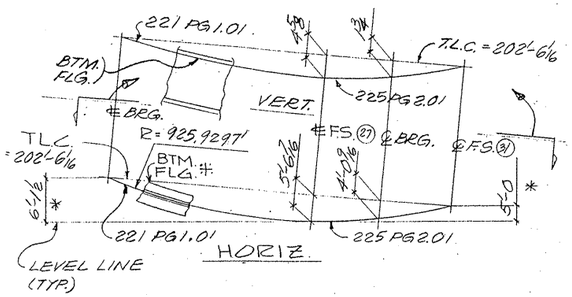

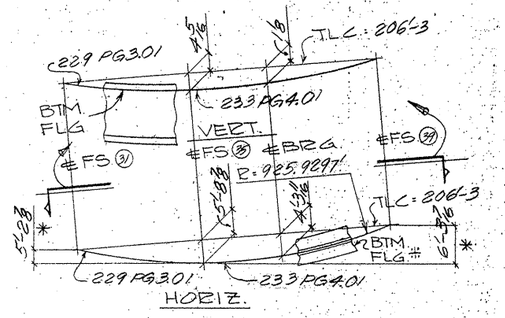

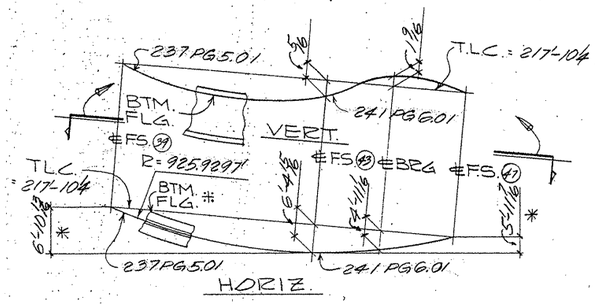

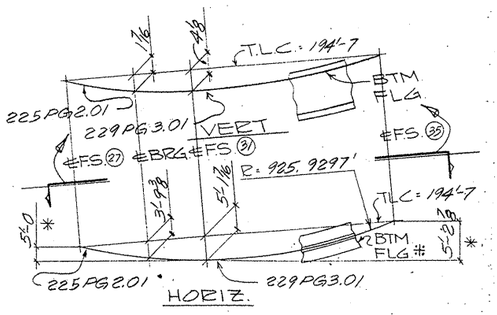

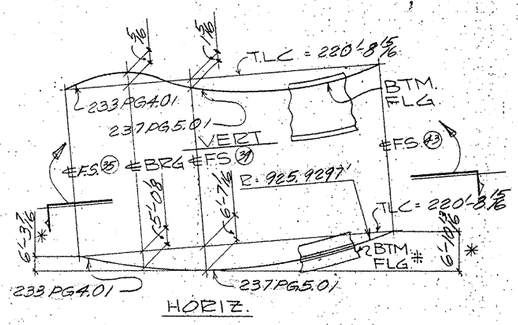

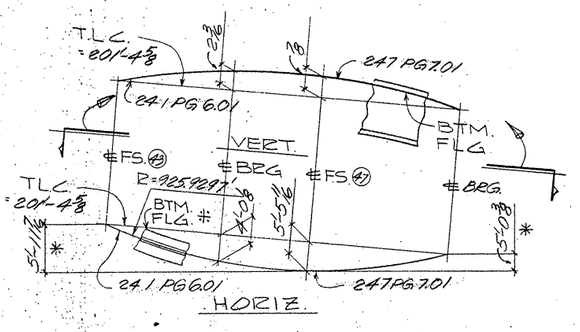

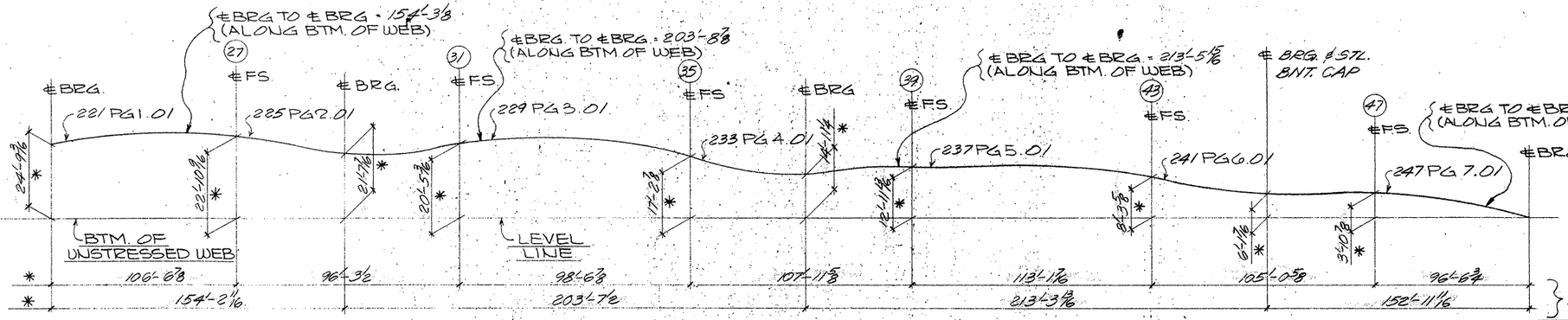

HORIZ. ARC DIMS.

VERTICAL BLOCKING DIAGRAM
(LINE * /)

TEXAS DEPARTMENT OF TRANSPORTATION
APPROVED
DIVISION OF BRIDGES AND STRUCTURES
APR 06 1993
APPROVAL OF THIS DRAWING DOES NOT RELIEVE THE CONTRACTOR OF THE RESPONSIBILITY FOR THE CORRECTNESS OF DETAIL.

FOR APPROVAL
MAR 15 '93
NOT FOR CONSTRUCTION

NOTES:
1. T.L.C. = TRUE LENGTH CHORD.
2. DIMENSIONS ARE GIVEN ALONG OR NORMAL TO THE TRUE LENGTH CHORD UNL. NOTED.
3. DIMENSIONS NOTED "*" ARE GIVEN ALONG OR NORMAL TO THE LEVEL LINE.
4. FOR GENERAL NOTES, SEE SHT. GN1.
5. # = TOP FLG. (N.S.) NOT SHOWN FOR CLARITY.

APV MAR 15

FED. ROAD DIV. NO.	STATE	FEDERAL AID PROJECT NO.			
6	TX.	NH 92(50)M			
STATE DIST. NO.	COUNTY	CONTROL NO.	SECTION NO.	JOB NO.	HIGHWAY NO.
21	HIDALGO	39	17	97	83/281

HOLES ____ U.N.	FOR AP'VL.
BOLTS ____ U.N.	RETURNED
WELDS ____ U.N.	TO SHOP
PAINT	

REVISIONS		
NO.	DATE	REMARKS
1		
2		
3		
4		

HIRSCHFELD STEEL CO. INC.
112 WEST 29TH SAN ANGELO, TEXAS 76903
PHONE (915) 653-3211

CUSTOMER GILBERT TEXAS CONSTRUCTION
ARCHITECT
PROJECT DS 83/281 INTECHANGE RAMP #3
LOCATION HIDALGO COUNTY

DRAWN PCG DATE 9-29-92
CHECKED DLT DATE 10/92
JOB NO. 92-108
SHEET NO. 253 of

CE 92-13 (BLKG. LINE 1)

a b c d e f g h i j k l m n o p q r s t u v w x y z

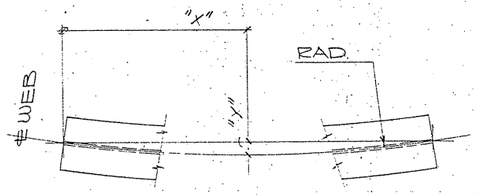

HEAT CURVE DIAGRAM
(ALONG TOP FLG.)

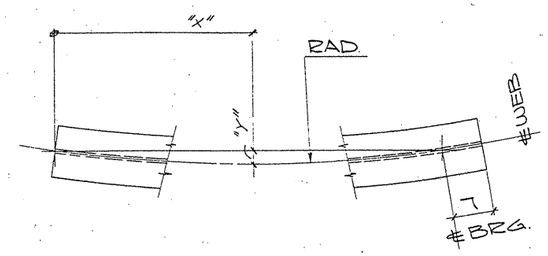

HEAT CURVE DIAGRAM
(ALONG TOP FLG.)

GIRDER MK		VARIABLES												RADIUS
227PG2.03	"X"	8'-11 7/8	18'-11 7/8	28'-11 7/8	38'-11 7/8	48'-11 7/8	58'-11 7/8	68'-11 7/8	78'-11 7/8	88'-11 7/8			97'-11 3/4	
	"Y"	5/8	9 9/16	1'-0 3/4	1'-2 5/8	1'-3 1/4	1'-2 5/8	1'-0 3/4	9 9/16	5/8			0"	943.2630'
231PG3.03	"X"	10'-2 9/16	20'-2 9/16	30'-2 9/16	40'-2 9/16	50'-2 9/16	60'-2 9/16	70'-2 9/16	80'-2 9/16	90'-2 9/16			100'-5 5/8	
	"Y"	5/8	10 5/16	1'-1 1/2	1'-3 7/16	1'-4 1/16	1'-3 7/16	1'-1 1/2	10 5/16	5/8			0"	943.2630'
235PG4.03	"X"	5'-0	15'-0	25'-0	35'-0	45'-0	55'-0	65'-0	75'-0	85'-0	95'-0	105'-0	110'-0 1/16	
	"Y"	3 3/8	9 1/16	1'-1 9/16	1'-4 11/16	1'-6 5/8	1'-7 1/4	1'-6 5/8	1'-4 11/16	1'-1 9/16	9/16	3 3/8	0"	943.2630'
239PG5.03	"X"	7'-7 15/16	17'-7 15/16	27'-7 15/16	37'-7 15/16	47'-7 15/16	57'-7 15/16	67'-7 15/16	77'-7 15/16	87'-7 15/16	97'-7 15/16	107'-7 15/16	115'-3 3/8	
	"Y"	5 4	11	1'-3 1/16	1'-6 7/8	1'-8 9/16	1'-9 3/16	1'-8 9/16	1'-6 7/8	1'-3 1/16	11	5 4	0"	943.2630'
243PG6.03	"X"	4'-8 7/16	14'-8 7/16	24'-8 7/16	34'-8 7/16	44'-8 7/16							49'-4 7/8	
	"Y"	1 5/16	3 4	3 7/8	3 4	1 5/16							0"	943.2630'
246PG7.03	"X"	8'-8 3/8	18'-8 3/8	28'-8 3/8	38'-8 3/8	48'-8 3/8							57'-4 11/16	
	"Y"	2 1/16	4 5/8	5 4	4 5/8	2 1/16							0"	943.2630'
228PG2.04	"X"	9'-5 3/4	19'-5 3/4	29'-5 3/4	39'-5 3/4	49'-5 3/4	59'-5 3/4	69'-5 3/4	79'-5 3/4	89'-5 3/4			98'-11 1/2	
	"Y"	5 3/8	9 3/4	1'-0 15/16	1'-2 13/16	1'-3 7/16	1'-2 13/16	1'-0 15/16	9 3/4	5 3/8			0"	951.9297'
232PG3.04	"X"	10'-8	20'-8	30'-8	40'-8	50'-8	60'-8	70'-8	80'-8	90'-8			101'-4	
	"Y"	6 8	10 2	1'-1 1/16	1'-3 9/16	1'-4 3/16	1'-3 9/16	1'-1 1/16	10 2	6 8			0"	951.9297'
236PG4.04	"X"	5'-6	15'-6	25'-6	35'-6	45'-6	55'-6	65'-6	75'-6	85'-6	95'-6	105'-6	111'-0 1/16	
	"Y"	3 1/16	9 5/16	1'-1 3/4	1'-4 15/16	1'-6 13/16	1'-7 1/16	1'-6 13/16	1'-4 15/16	1'-1 3/4	9 5/16	3 1/16	0"	951.9297'
240PG5.04	"X"	8'-1 15/16	18'-1 15/16	28'-1 15/16	38'-1 15/16	48'-1 15/16	58'-1 15/16	68'-1 15/16	78'-1 15/16	88'-1 15/16	98'-1 15/16	108'-1 15/16	116'-3 3/8	
	"Y"	5 3/16	11 4	1'-3 1/16	1'-6 13/16	1'-8 1/16	1'-9 5/16	1'-8 1/16	1'-6 13/16	1'-3 1/16	11 4	5 9/16	0"	951.9297'
244PG6.04	"X"	4'-0 1/8	14'-0 1/8	24'-0 1/8	34'-0 1/8	44'-0 1/8	54'-0 1/8	64'-0 1/8	74'-0 1/8	84'-0 1/8	94'-0 1/8	104'-0 1/8	108'-0 5/16	
	"Y"	2 5/8	8 5/16	1'-0 3/4	1'-3 3/8	1'-5 1/4	1'-6 3/8	1'-5 1/4	1'-3 3/8	1'-0 3/4	8 5/16	2 5/8	0"	951.9297'

GIRDER MK		VARIABLES												RADIUS
247PG7.01	"X"	8'-3 3/16	18'-3 3/16	28'-3 3/16	38'-3 3/16	48'-3 3/16	58'-3 3/16	68'-3 3/16	78'-3 3/16	88'-3 3/16			96'-7 7/8	
	"Y"	4 3/4	9 5/16	1'-0 7/16	1'-2 1/2	1'-3 1/8	1'-2 1/2	1'-0 7/16	9 5/16	4 3/4			0"	925.9297'
248PG8.02	"X"	8'-8 3/4	18'-8 3/4	28'-8 3/4	38'-8 3/4	48'-8 3/4	58'-8 3/4	68'-8 3/4	78'-8 3/4	88'-8 3/4			97'-5 1/2	
	"Y"	5	9 1/2	1'-0 7/16	1'-2 5/8	1'-3 1/4	1'-2 5/8	1'-0 1/16	9 1/2	5			0"	934.5963'
249PG8.03	"X"	9'-2 7/16	19'-2 7/16	29'-2 7/16	39'-2 7/16	49'-2 7/16	59'-2 7/16	69'-2 7/16	79'-2 7/16	89'-2 7/16			98'-4 5/16	
	"Y"	5 4	9 1/16	1'-0 7/8	1'-2 3/4	1'-3 7/16	1'-2 3/4	1'-0 7/8	9 1/16	5 4			0"	943.2630'
250PG7.04	"X"	9'-8 3/16	19'-8 3/16	29'-8 3/16	39'-8 3/16	49'-8 3/16	59'-8 3/16	69'-8 3/16	79'-8 3/16	89'-8 3/16			99'-4 3/8	
	"Y"	5 2	9 7/8	1'-1 1/16	1'-2 15/16	1'-3 1/16	1'-2 15/16	1'-1 1/16	9 7/8	5 2			0"	951.9297'

SHOP NOTE :
FOR GENERAL NOTES, SEE SHT. GN1.

FED. ROAD DIV. NO.	STATE	FEDERAL AID PROJECT NO.			
6	TX.	NH 92(50)M			
STATE DIST. NO.	COUNTY	CONTROL NO.	SECTION NO.	JOB NO.	HIGHWAY NO.
21	HIDALGO	39	17	97	83/281

FOR APPROVAL
MAR 15 '93
NOT FOR CONSTRUCTION

TEXAS DEPARTMENT OF TRANSPORTATION
APPROVED EXCEPT AS NOTED
DIVISION OF BRIDGES AND STRUCTURES
APR 06 1993
APPROVAL OF THIS DRAWING DOES NOT RELIEVE THE CONTRACTOR OF THE RESPONSIBILITY FOR THE CORRECTNESS OF DETAIL.
— APP MAR 15

HOLES ____ U.N	FOR AP'VL ____		
BOLTS ____ U.N.	RETURNED ____		
WELDS ____ U.N.	TO SHOP ____		
PAINT ____			

REVISIONS		
NO.	DATE	REMARKS
1		
2		
3		
4		

HIRSCHFELD STEEL CO. INC.
112 WEST 29TH SAN ANGELO, TEXAS 76903
PHONE (915) 653-3211

CUSTOMER GILBERT TEXAS CONSTRUCTION
ARCHITECT
PROJECT US 83/281 INTERCHANGE RAMP
LOCATION HIDALGO COUNTY

DRAWN PCC DATE 10-2-92
CHECKED DLT DATE 10-7-92
JOB NO. 92-108
SHEET NO. 252 of

CE 92-13

a b c d e f g h i j k l m n o p q r s t u v w x y z

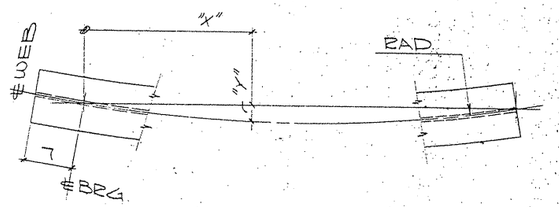

HEAT CURVE DIAGRAM
(ALONG TOP FLG.)

GIRDER MK		VARIABLES												RADIUS
221PG1.01	"X"	3'-3 3/16	13'-3 3/16	23'-3 3/16	33'-3 3/16	43'-3 3/16	53'-3 3/16	63'-3 3/16	73'-3 3/16	83'-3 3/16	93'-3 3/16	103'-3 3/16	106'-6 3/8	925.9897'
	"Y"	2 3/16	8	1'-0 9/16	1'-3 13/16	1'-5 3/4	1'-6 3/8	1'-5 3/4	1'-3 13/16	1'-0 9/16	8	2 3/16	0"	
222PG1.02	"X"	3'-9 3/4	13'-9 3/4	23'-9 3/4	33'-9 3/4	43'-9 3/4	53'-9 3/4	63'-9 3/4	73'-9 3/4	83'-9 3/4	93'-9 3/4	103'-9 3/4	107'-7 9/16	934.5963'
	"Y"	2 9/16	8 5/16	1'-0 13/16	1'-4 1/16	1'-5 15/16	1'-6 5/8	1'-5 15/16	1'-4 1/16	1'-0 13/16	8 5/16	2 9/16	0"	
223PG1.03	"X"	4'-3 1/2	14'-3 1/2	24'-3 1/2	34'-3 1/2	44'-3 1/2	54'-3 1/2	64'-3 1/2	74'-3 1/2	84'-3 1/2	94'-3 1/2	104'-3 1/2	108'-6 15/16	943.2630'
	"Y"	2 7/8	8 9/16	1'-1 1/16	1'-4 1/4	1'-6 1/8	1'-6 3/4	1'-6 1/8	1'-4 1/4	1'-1 1/16	8 9/16	2 7/8	0"	
224PG1.04	"X"	4'-9 3/16	14'-9 3/16	24'-9 3/16	34'-9 3/16	44'-9 3/16	54'-9 3/16	64'-9 3/16	74'-9 3/16	84'-9 3/16	94'-9 3/16	104'-9 3/16	109'-6 5/16	951.9297'
	"Y"	3 1/8	8 13/16	1'-1 1/4	1'-4 3/8	1'-6 5/16	1'-6 15/16	1'-6 5/16	1'-4 3/8	1'-1 1/4	8 13/16	3 1/8	0"	

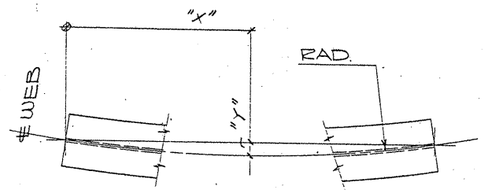

HEAT CURVE DIAGRAM
(ALONG TOP FLG.)

GIRDER MK		VARIABLES												RADIUS
225PG2.01	"X"	8'-1 5/8	18'-1 5/8	28'-1 5/8	38'-1 5/8	48'-1 5/8	58'-1 5/8	68'-1 5/8	78'-1 5/8	88'-1 5/8			96'-3 1/4	925.9297'
	"Y"	4 5/8	9 3/16	1'-0 7/16	1'-2 7/8	1'-3	1'-2 3/8	1'-0 7/16	9 3/16	4 5/8			0"	
229PG3.01	"X"	9'-3 7/16	19'-3 7/16	29'-3 7/16	39'-3 7/16	49'-3 7/16	59'-3 7/16	69'-3 7/16	79'-3 7/16	89'-3 7/16			98'-6 1/16	925.9297'
	"Y"	5 7/8	9 15/16	1'-1 13/16	1'-3 7/8	1'-3 7/8	1'-3 7/8	1'-1 13/16	9 15/16	5 7/8			0"	
233PG4.01	"X"	3'-11 7/8	13'-11 7/8	23'-11 7/8	33'-11 7/8	43'-11 7/8	53'-11 7/8	63'-11 7/8	73'-11 7/8	83'-11 7/8	93'-11 7/8	103'-11 7/8	107'-1 1/4	925.9297'
	"Y"	2 1/16	8 9/16	1'-1 1/16	1'-4 5/16	1'-6 1/8	1'-6 1/8	1'-6 1/8	1'-4 5/16	1'-1 1/16	8 9/16	2 1/16	0"	
237PG5.01	"X"	6'-6 13/16	16'-6 13/16	26'-6 13/16	36'-6 13/16	46'-6 13/16	56'-6 13/16	66'-6 13/16	76'-6 13/16	86'-6 13/16	96'-6 13/16	106'-6 13/16	113'-4 7/16	925.9297'
	"Y"	4 9/16	10 3/8	1'-2 15/16	1'-6 3/16	1'-8 1/8	1'-8 3/4	1'-8 1/8	1'-6 3/16	1'-2 15/16	10 3/8	4 9/16	0"	
241PG6.01	"X"	2'-6 7/16	12'-6 7/16	22'-6 7/16	32'-6 7/16	42'-6 7/16	52'-6 7/16	62'-6 7/16	72'-6 7/16	82'-6 7/16	92'-6 7/16	102'-6 7/16	105'-0 7/8	925.9297'
	"Y"	1 1/16	7/2	1'-0 1/16	1'-3 5/16	1'-5 4	1'-5 7/8	1'-5 4	1'-3 5/16	1'-0 1/16	7/2	1 1/16	0"	
226PG2.02	"X"	8'-5 7/8	18'-5 7/8	28'-5 7/8	38'-5 7/8	48'-5 7/8	58'-5 7/8	68'-5 7/8	78'-5 7/8	88'-5 7/8			96'-11 3/4	934.5963'
	"Y"	4 13/16	9 5/16	1'-0 9/16	1'-2 7/16	1'-3 1/8	1'-2 7/16	1'-0 9/16	9 5/16	4 13/16			0"	
230PG3.02	"X"	9'-9 1/8	19'-9 1/8	29'-9 1/8	39'-9 1/8	49'-9 1/8	59'-9 1/8	69'-9 1/8	79'-9 1/8	89'-9 1/8			99'-6 1/4	934.5963'
	"Y"	5 5/8	10 1/8	1'-1 5/16	1'-3 1/4	1'-3 15/16	1'-3 1/4	1'-1 5/16	10 1/8	5 5/8			0"	
234PG4.02	"X"	4'-6 1/16	14'-6 1/16	24'-6 1/16	34'-6 1/16	44'-6 1/16	54'-6 1/16	64'-6 1/16	74'-6 1/16	84'-6 1/16	94'-6 1/16	104'-6 1/16	109'-0 1/16	934.5963'
	"Y"	3	8 13/16	1'-1 5/16	1'-4 1/2	1'-6 7/16	1'-7 1/16	1'-6 7/16	1'-4 1/2	1'-1 5/16	8 13/16	3	0"	
238PG5.02	"X"	7'-2	17'-2	27'-2	37'-2	47'-2	57'-2	67'-2	77'-2	87'-2	97'-2	107'-2	114'-3 7/16	934.5963'
	"Y"	4 5/16	10 7/8	1'-3 1/4	1'-6 7/16	1'-8 3/8	1'-9	1'-8 3/8	1'-6 7/16	1'-3 1/4	10 7/8	4 5/16	0"	
242PG6.02	"X"	4'-5 7/16	14'-5 7/16	24'-5 7/16	34'-5 7/16	44'-5 7/16							48'-10 3/8	934.5963'
	"Y"	1/4	3 3/16	3 3/16	3 3/16	1/4							0"	
245PG7.02	"X"	8'-5 3/8	18'-5 3/8	28'-5 3/8	38'-5 3/8	48'-5 3/8							56'-10 1/16	934.5963'
	"Y"	2 5/8	4 9/16	5 3/16	4 9/16	2 5/8							0"	

FOR APPROVAL
NOT FOR CONSTRUCTION
MAR 14 '93

TEXAS DEPARTMENT OF TRANSPORTATION
APPROVED EXCEPT AS NOTED
DIVISION OF BRIDGES AND STRUCTURES
APR 06 1993
APPROVAL OF THIS DRAWING DOES NOT RELIEVE THE CONTRACTOR OF THE RESPONSIBILITY FOR THE CORRECTNESS OF DETAIL.

APV MAR 15

SHOP NOTE :
FOR GENERAL NOTES, SEE SHT. GN1.

FED RDAD DIV. NO.	STATE	FEDERAL AID PROJECT NO.				
6	TX.	NH 92(50)M				
STATE DIST. NO.	COUNTY	CONTROL NO.	SECTION NO.	JOB NO.	HIGHWAY NO.	
21	HIDALGO	39	17	97	83/281	

HOLES ____ U.N. FOR AP'VL ____
BOLTS ____ U.N. RETURNED ____
WELDS ____ U.N. TO SHOP ____
PAINT ____

REVISIONS

NO	DATE	REMARKS
1		
2		
3		
4		

HIRSCHFELD STEEL CO. INC.
112 WEST 29TH SAN ANGELO, TEXAS 76903
PHONE (915) 653-3211

CUSTOMER GILBERT TEXAS CONSTRUCTION
ARCHITECT ____
PROJECT US 83/281 INTERCHANGE RAMP
LOCATION HIDALGO COUNTY

DRAWN PCC DATE 10-1-92 | JOB NO. 92-108 | SHEET NO. 251 of ____
CHECKED DLT DATE 10-9-92

FED-12

a b c d e f g h i j k l m n o p q r s t u v w x y z

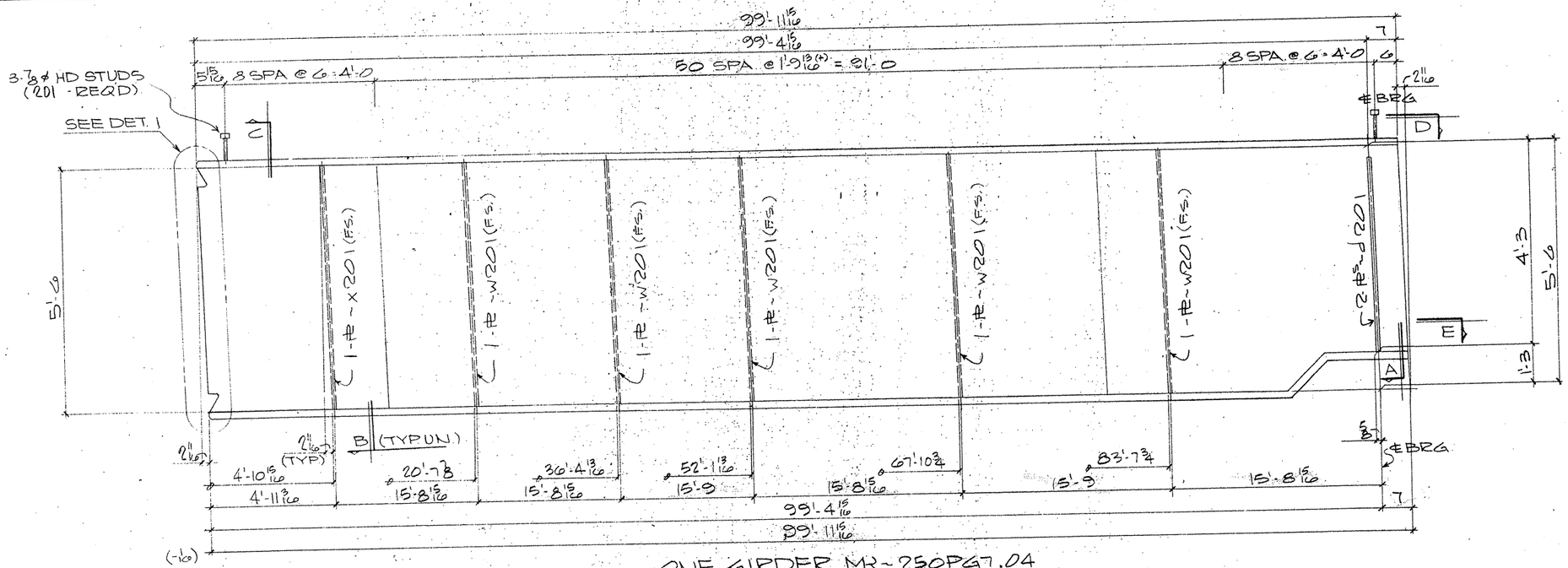

ONE GIRDER MK-250PG7.04
(APPROX. WT= TONS)

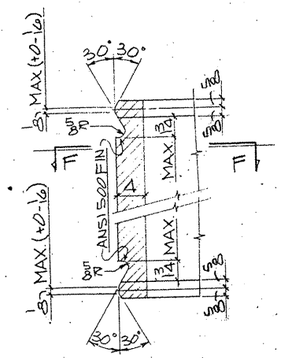

DETAIL - 1

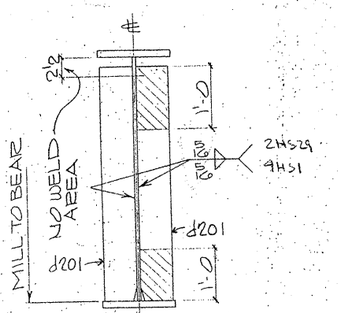

SECTION - A

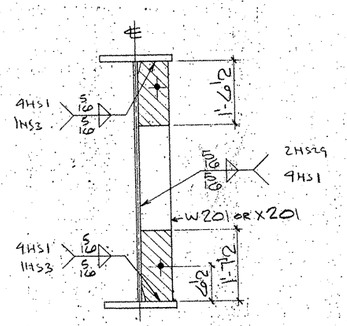

SECTION - B

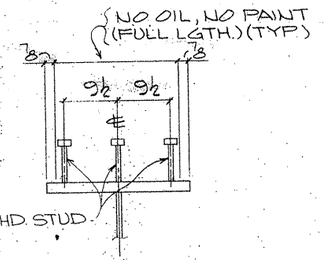

SECTION - C
(TYP. STUD SECT.)

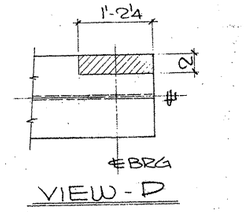

VIEW - D

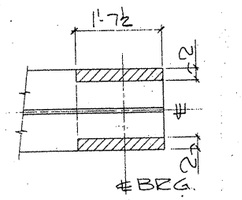

SECTION - E

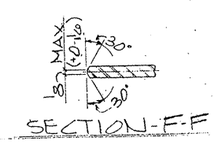

SECTION - F - F

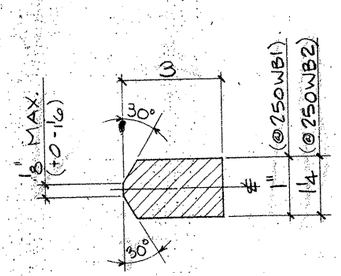

144 - WELD BARS MK-250WB1
48 - WELD BARS MK-250WB2

SHOP NOTES:
1) FOR GENERAL NOTES SEE SHT. GN1
2) FOR GIRDER SUB-ASSEMBLY SEE SHT. 220
3) FOR STIFF. DETAILS SEE SHT. 201
4) FOR BLOCKING DIAGRAM SEE SHT. 256
5) FOR HEAT CURVE DIAGRAM SEE SHT. 252
6) ▨ INDICATES OIL, NO PAINT (N.S./F.S. & EDGES)

BILL OF MATERIAL

	Only	Material	Length	Mark Temp	Mark Ship	Wt.	Cut From	Remarks
1								
2	1	GIRDER			250PG7.04			
3	1	GIRDER SUB-ASSY		B220				
4	2	BRG STIFF		d201				
5	5	DIAF STIFF		W201				
6	1	DIAF STIFF		X201				
7	201	HD STUD 7/8	0'-7				205-1	A108
8								
9								
10								
11								
12								
13								
14								
15								
16								
17								
18								
19								
20								
21								
22								
23								
24								
25								
26								
27								
28		WELD BARS						
29	144	PL 1" x 1"	0'-3		250WB1		STK	
30	48	PL 1/4 x 1"	0'-3		250WB2		STK	
31								
32								
33								
34								
35								
36								
37								
38								
39								
40								
41								
42								
43								
44								
45								
46								
47								
48								
49								
50								
51								
52								
53								
54								
55								
56								
57								
58								
59								
60								

TEXAS DEPARTMENT OF ~~TRANSPORTATION~~
APPROVED
DIVISION OF BRIDGES AND STRUCTURES
~~APR 06 1993~~
APPROVAL OF THIS DRAWING DOES NOT RELIEVE THE CONTRACTOR OF THE RESPONSIBILITY FOR THE CORRECTNESS OF DETAIL.

FOR APPROVAL MAY 7 '93
NOT FOR CONSTRUCTION

REVISION	DATE	DESCRIPTION OF REVISION
NO. 1		
NO. 2		
NO. 3		
NO. 4		
NO. 5		

PRINTING

Req'd	For	Date

Bolts Holes 5/8 ØN Unless Noted
Shop Paint SEE SHT GN1
Fab Spec AS LTD Inspection
Architect
Erection By Field Connections

HIRSCHFELD STEEL CO. INC.
112 WEST 29TH SAN ANGELO, TEXAS 76903
PHONE (915) 653-3211

DESCRIPTION	750'-0 PLATE GIRDER UNIT
STRUCTURE	US 83/281 INTERCHANGE RAMP #3
LOCATION	HIDALGO COUNTY
CUSTOMER	GILBERT TEXAS CONSTRUCTION
SHIP TO	
Customer's Order No.	
Dwg. By JDC Date	9/92
Checked By JC Date	10/92

SHEET 250 OF
JOB NO. 92-108

G0208

FED. ROAD DIV. NO.	STATE	FEDERAL AID PROJECT NO.				
6	TX.	NH 92(50)M				
STATE DIST. NO.	COUNTY	CONTROL NO.	SECTION NO.	JOB NO.	HIGHWAY NO.	
21	HIDALGO	39	17	97	83/281	

CE 92-13 (LINE # 4)

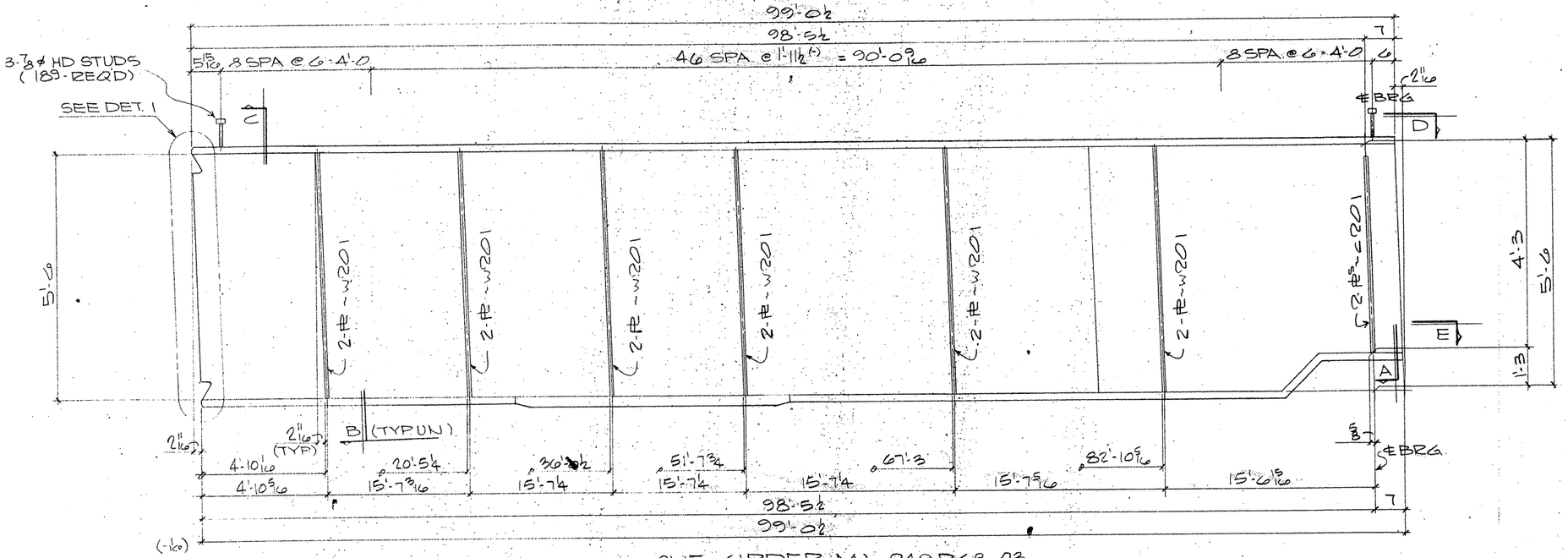

ONE GIRDER MK-249PG8.03
(APPROX. WT= TONS)

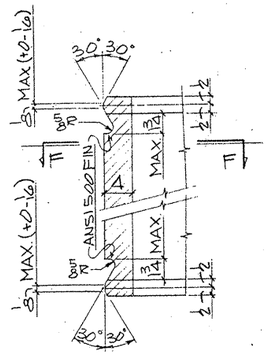

DETAIL-1

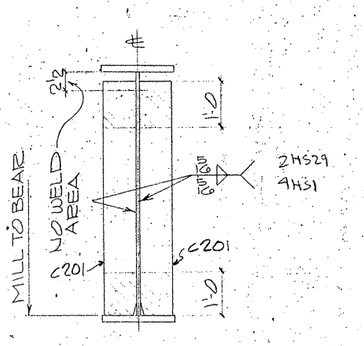

SECTION-A

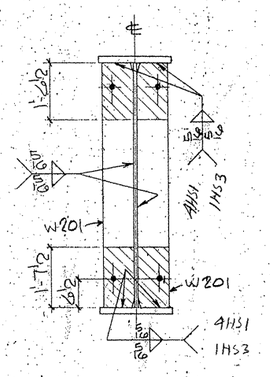

SECTION-B

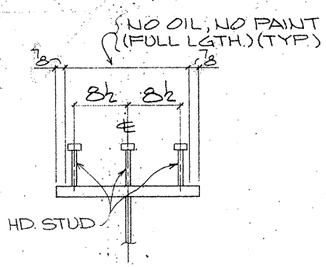

SECTION-C
(TYP. STUD SECT.)

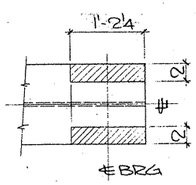

VIEW-D

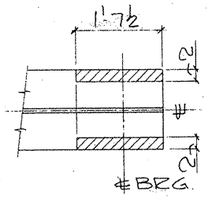

SECTION-E

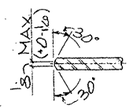

SECTION-F-F

SHOP NOTES:
1) FOR GENERAL NOTES SEE SHT. GN1
2) FOR GIRDER SUB-ASSEMBLY SEE SHT. 220
3) FOR STIFF. DETAILS SEE SHT. 201
4) FOR BLOCKING DIAGRAM SEE SHT. 255
5) FOR HEAT CURVE DIAGRAM SEE SHT. 252
6) ▨ INDICATES OIL, NO PAINT (N.S./F.S. & EDGES)

G0208

FED. ROAD DIV. NO.	STATE	FEDERAL AID PROJECT NO.			
6	TX.	NH 92(50)M			
STATE DIST. NO.	COUNTY	CONTROL NO.	SECTION NO.	JOB NO.	HIGHWAY NO.
21	HIDALGO	39	17	97	83/281

BILL OF MATERIAL

Qnty.	Material	Length	Mark Temp	Mark Ship	Wt	Cut From	Remarks
1	GIRDER			249PG8.03			
1	GIRDER SUB-ASSY		A220				
2	BRG STIFF		C201				
12	DIAF STIFF		W201				
189	HD STUD 7/8	0'-7				205-1	A108

TEXAS DEPARTMENT OF TRANSPORTATION
APPROVED
DIVISION OF BRIDGES AND STRUCTURES
APR 06 1993
APPROVAL OF THIS DRAWING DOES NOT RELIEVE THE CONTRACTOR OF THE RESPONSIBILITY FOR THE CORRECTNESS OF DETAIL

FOR APPROVAL
MAR 15 93
NOT FOR CONSTRUCTION

REVISION	DATE	DESCRIPTION OF REVISION
NO 1		
NO 2		
NO 3		
NO 4		
NO 5		

PRINTING: Req'd | For | Date

Bolts Holes 5/16 UN Unless Noted
Shop Paint SEE SHT GN1
Fab Spec AS NTD Inspection
Architect
Erection By Field Connections

HIRSCHFELD STEEL CO. INC.
112 WEST 29TH SAN ANGELO TEXAS 76903
PHONE (915) 653-3211

DESCRIPTION 750'-0 PLATE GIRDER UNIT
STRUCTURE US 83/281 INTERCHANGE RAMP #3
LOCATION HIDALGO COUNTY
CUSTOMER GILBERT TEXAS CONSTRUCTION
SHIP TO
Customer's Order No.
Dwg By JDC Date 9/92
Checked By JC Date 10/92
SHEET 249 OF
JOB NO 92-108

APV MAR 15

CE 92-13 (LINE # 3)

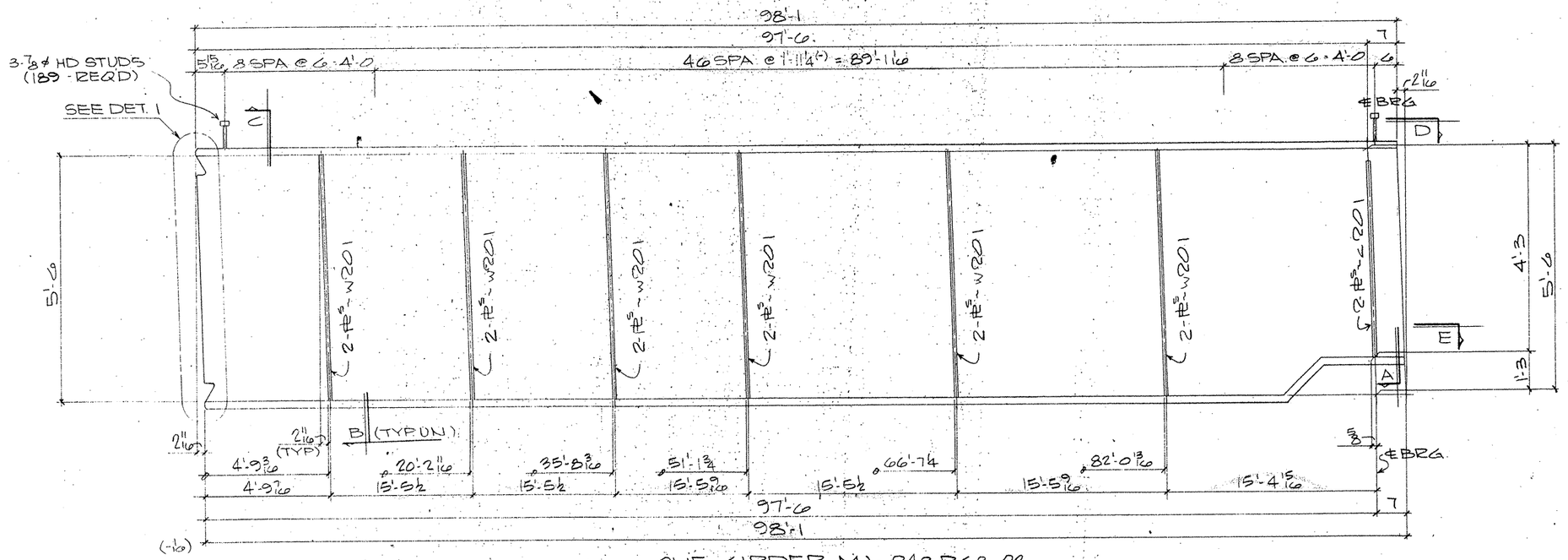

ONE GIRDER MK-248PG8.02
(APPROX. WT.= TONS)

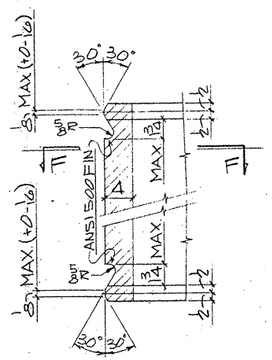

DETAIL-1

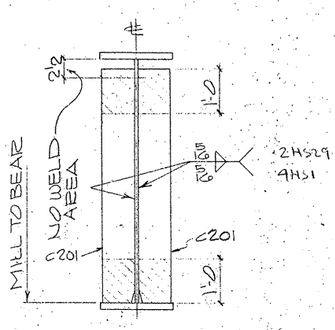

SECTION-A

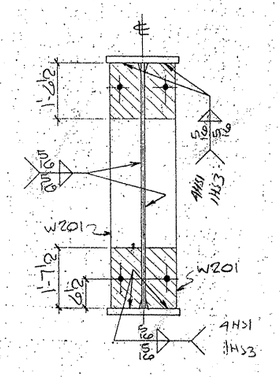

SECTION-B

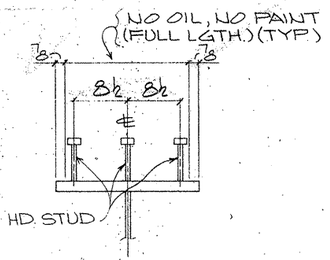

SECTION-C
(TYP. STUD SECT.)

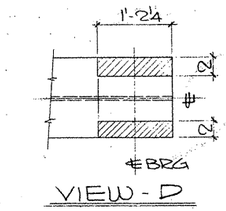

VIEW-D

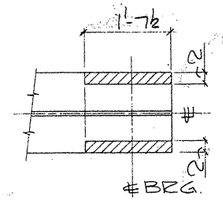

SECTION-E

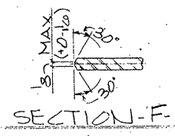

SECTION-F-F

SHOP NOTES:
1) FOR GENERAL NOTES SEE SHT. GN1
2) FOR GIRDER SUB-ASSEMBLY SEE SHT. 219
3) FOR STIFF. DETAILS SEE SHT. 251
4) FOR BLOCKING DIAGRAM SEE SHT. 254
5) FOR HEAT CURVE DIAGRAM SEE SHT. 252
6) ▨ INDICATES OIL, NO PAINT (N.S./F.S. & EDGES)

BILL OF MATERIAL

	Qnty	Material	Length	Mark Temp	Mark Ship	Wt	Cut From	Remarks
2	1	GIRDER			248PG8.02			
3	1	GIRDER SUB-ASSY		B219				
4	8	BRG STIFF		G201				
5	12	DIAF STIFF		W201				
7	189	HD STUD 7/8	0'-7				205-1	A108

TEXAS DEPARTMENT OF TRANSPORTATION
APPROVED
DIVISION OF BRIDGES AND STRUCTURES
APR 06 1993
APPROVAL OF THIS DRAWING DOES NOT RELIEVE THE CONTRACTOR OF THE RESPONSIBILITY FOR THE CORRECTNESS OF DETAIL

FOR APPROVAL
MAR 15 '93
NOT FOR CONSTRUCTION

REVISION	DATE	DESCRIPTION OF REVISION
NO. 1		
NO. 2		
NO. 3		
NO. 4		
NO. 5		

PRINTING Req'd	For	Date

Bolts. Holes: 15/16 ØN Unless Noted
Shop Paint SEE SHT GN1
Fab. Spec AS LTD Inspection
Architect
Erection By Field Connections

HIRSCHFELD STEEL CO. INC.
112 WEST 29TH SAN ANGELO, TEXAS 76903
PHONE (915) 653-3211

DESCRIPTION	150'-0 PLATE GIRDER UNIT
STRUCTURE	US 83/281 INTERCHANGE RAMP #3
LOCATION	HIDALGO COUNTY
CUSTOMER	GILBERT TEXAS CONSTRUCTION
SHIP TO	
Customer's Order No.	
Dwg. By JDC	Date 3/92
Checked By JC	Date 3/92

SHEET 248 OF
JOB NO 92-108

G0208

FED. ROAD DIV. NO.	STATE	FEDERAL AID PROJECT NO.			
6	TX.	NH 92(50)M			
STATE DIST. NO.	COUNTY	CONTROL NO.	SECTION NO.	JOB NO.	HIGHWAY NO.
21	HIDALGO	39	17	97	83/281

APR MAR 15

CE 92-13 (LINE # 2)

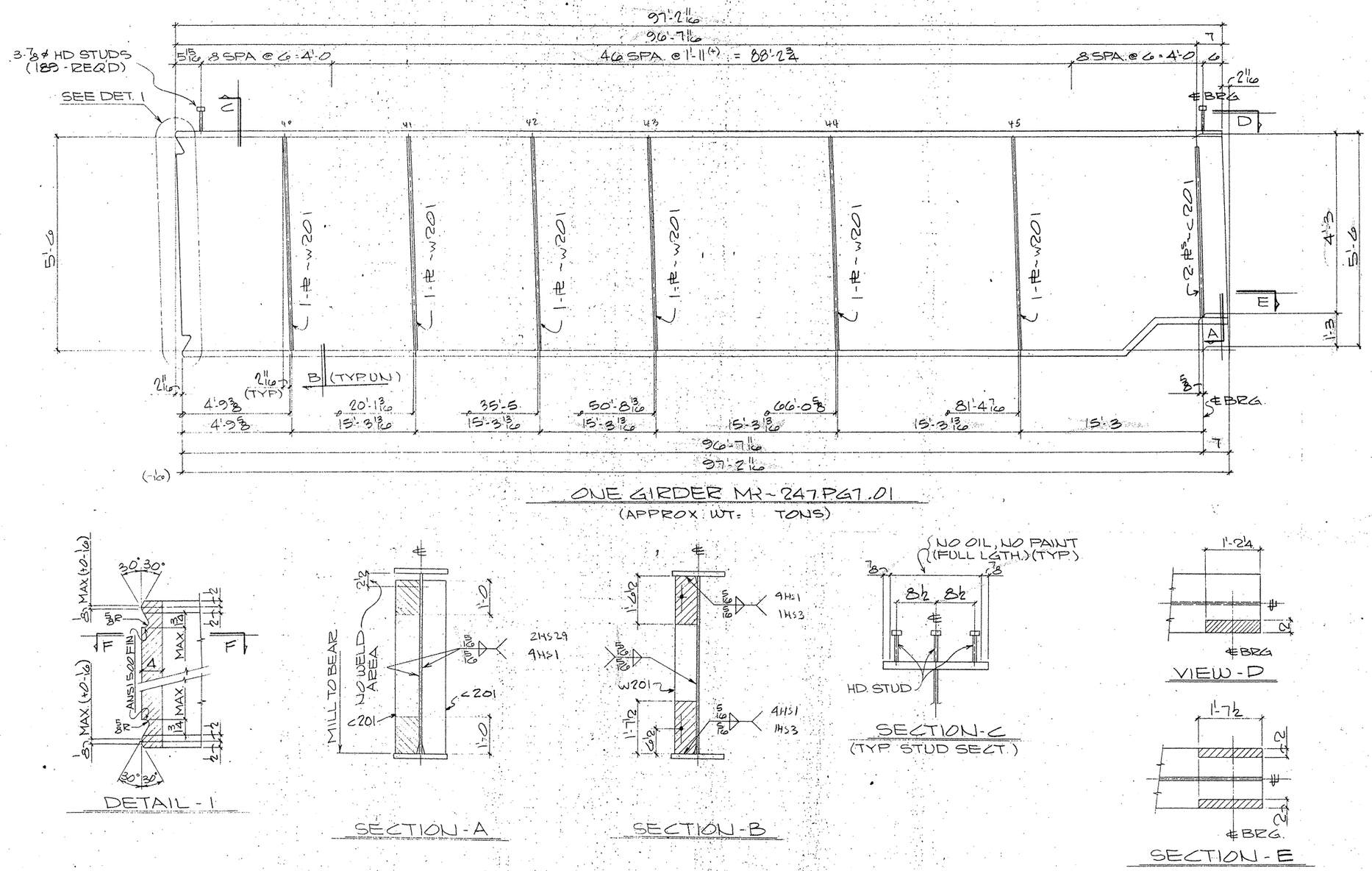

BILL OF MATERIAL

Qnty	Material	Length	Mark Temp	Mark Ship	Wt	Cut From	Remarks
1	GIRDER			247PG7.01			
1	GIRDER SUB-ASSY		A219				
2	BRG STIFF		C201				
6	DIAF STIFF		W201				
189	HD STUD 7/8	0'-7				205-1	A108

TEXAS DEPARTMENT OF TRANSPORTATION
APPROVED
DIVISION OF BRIDGES AND STRUCTURES
APR 06 1993
APPROVAL OF THIS DRAWING DOES NOT RELIEVE THE CONTRACTOR OF THE RESPONSIBILITY FOR THE CORRECTNESS OF DETAIL.

FOR APPROVAL
MAR 15 93
NOT FOR CONSTRUCTION

REVISION	DATE	DESCRIPTION OF REVISION
NO. 1		
NO. 2		
NO. 3		
NO. 4		
NO. 5		

SHOP NOTES:
1) FOR GENERAL NOTES SEE SHT. GN1
2) FOR GIRDER SUB-ASSEMBLY SEE SHT. 219
3) FOR STIFF. DETAILS SEE SHT. 201
4) FOR BLOCKING DIAGRAM SEE SHT. 253
5) FOR HEAT CURVE DIAGRAM SEE SHT. 252
6) ▨ INDICATES OIL, NO PAINT (N.S./F.S. & EDGES)

G0208

FED. ROAD DIV. NO.	STATE	FEDERAL AID PROJECT NO.			
6	TX.	NH 92(50)M			
STATE DIST. NO.	COUNTY	CONTROL NO.	SECTION NO.	JOB NO.	HIGHWAY NO.
21	HIDALGO	39	17	97	83/281

Bolts: Holes 15/16 UN Unless Noted
Shop Paint SEE SHT GN1
Fab Spec AS NTD Inspection
Architect
Erection By Field Connections

HIRSCHFELD STEEL CO. INC.
112 WEST 29TH SAN ANGELO, TEXAS 76903
PHONE (915) 653-3211

DESCRIPTION 750'-0 PLATE GIRDER UNIT
STRUCTURE US 83/281 INTERCHANGE RAMP #3
LOCATION HIDALGO COUNTY
CUSTOMER GILBERT TEXAS CONSTRUCTION
SHIP TO
Customer's Order No
Dwg By JDC Date 9/92
Checked By VC Date 10/92
SHEET 247 OF
JOB NO. 92-108

CE 92-13 (LINE # 1)

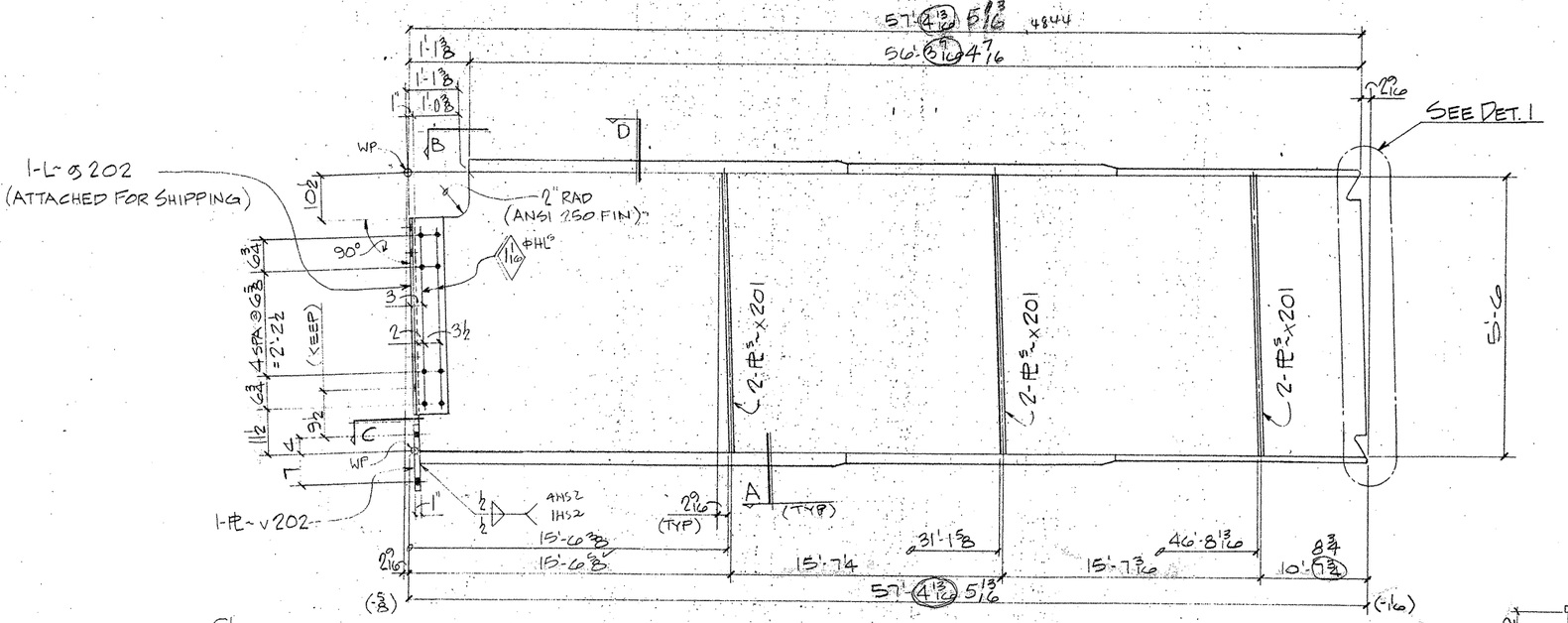

ONE GIRDER MK~246PG7.03
(APPROX. WT = TONS)

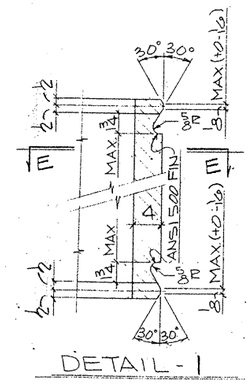

DETAIL-1

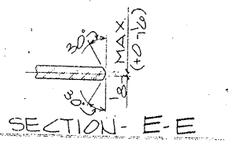

SECTION-E-E

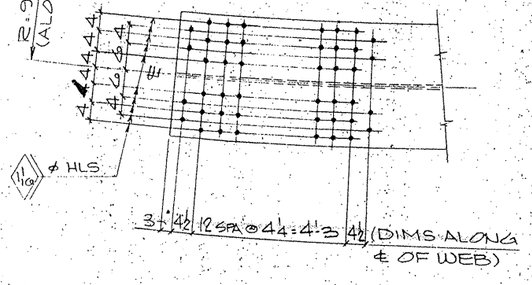

VIEW-B

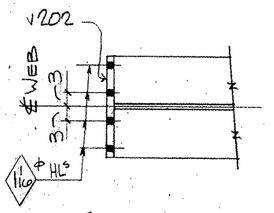

SECTION-C

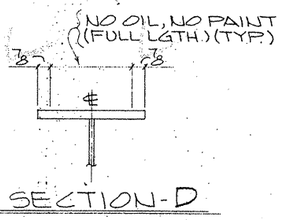

SECTION-D

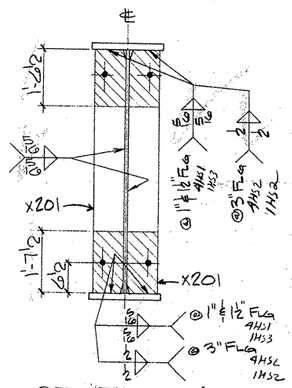

SECTION-A

SHOP NOTES:
1) FOR GENERAL NOTES SEE SHT. GN1
2) FOR GIRDER SUB-ASSEMBLY SEE SHT. 217
3) FOR STIFF. DETAILS SEE SHT. 201
4) FOR BLOCKING DIAGRAM SEE SHT. 255
5) FOR HEAT CURVE DIAGRAM SEE SHT. 252
6) ▨ INDICATES OIL, NO PAINT (N.S./F.S. & EDGES)

G0208

FED. ROAD DIV. NO.	STATE	FEDERAL AID PROJECT NO.			
6	TX.	NH 92(50)M			
STATE DIST. NO.	COUNTY	CONTROL NO.	SECTION NO.	JOB NO.	HIGHWAY NO.
21	HIDALGO	39	17	97	83/281

BILL OF MATERIAL

	Qnty	Material	Length	Mark Temp	Mark Ship	Wt.	Cut From	Remarks
3	1	GIRDER			246PG7.03			
4	1	GIRDER SUB-ASSY		G217				
5	6	DIAF STIFF		X201				
6	1	ANGLE		S202				
7	1	CONN PL		V202				

TEXAS DEPARTMENT OF TRANSPORTATION
APPROVED EXCEPT AS NOTED
DIVISION OF BRIDGES AND STRUCTURES
APR 06 1993
APPROVAL OF THIS DRAWING DOES NOT RELIEVE THE CONTRACTOR OF THE RESPONSIBILITY FOR THE CORRECTNESS OF DETAIL.

FOR APPROVAL
NOT TO BE USED FOR CONSTRUCTION

REVISION	DATE	DESCRIPTION OF REVISION
NO. 1		
NO. 2		
NO. 3		
NO. 4		
NO. 5		

PRINTING

Reqd	For	Date

Bolts: Holes 15/16ø Unless Noted
Shop Paint: SEE SHT. GN1
Fab. Spec: Inspection
Architect:
Erection By: Field Connections

HIRSCHFELD STEEL CO. INC.
112 WEST 29TH SAN ANGELO, TEXAS 76903
PHONE (915) 653-3211

DESCRIPTION: 150'-0 PLATE GIRDER UNIT
STRUCTURE: US. 83/281 INTERCHANGE RAMP #3
LOCATION: HIDALGO COUNTY
CUSTOMER: GILBERT TEXAS CONSTRUCTION
SHIP TO:
Customer's Order No.:
Dwg. By: JPC Date: 3/92
Checked By: JC Date: 10/92
SHEET 246 OF
JOB NO. 92-108

CE-92-13 (LINE #3) X

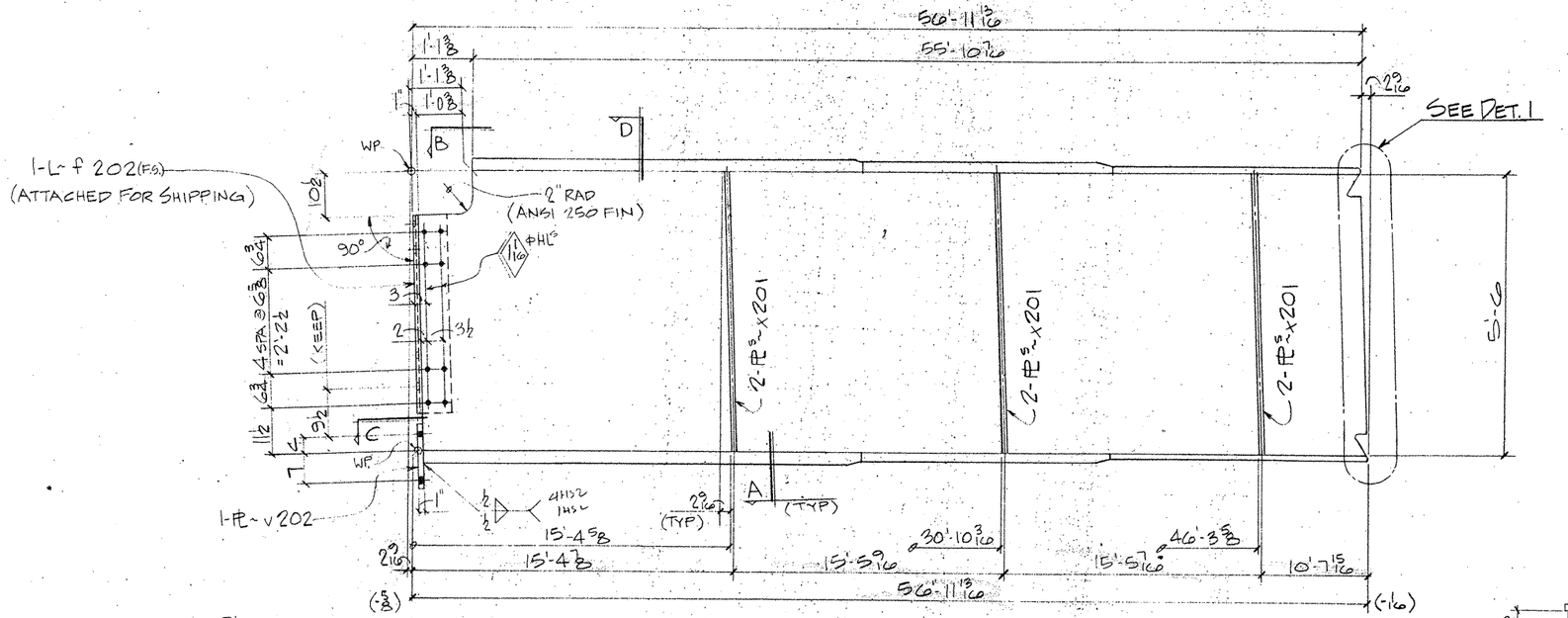

ONE GIRDER MK~245PG7.02
(APPROX. WT= TONS)

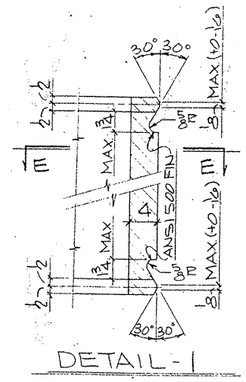

DETAIL-1

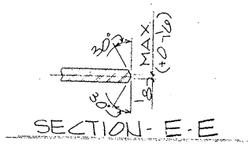

SECTION-E-E

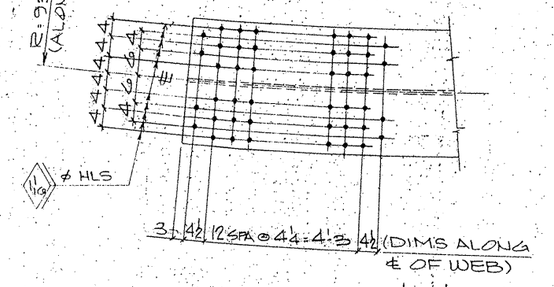

VIEW-B

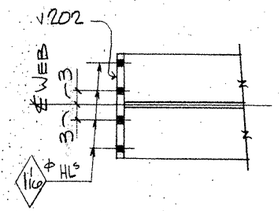

SECTION-C

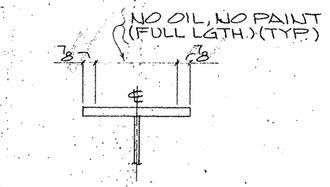

SECTION-D

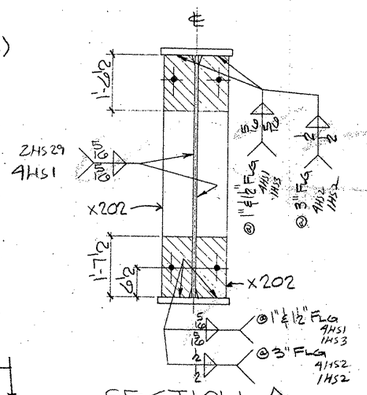

SECTION-A

SHOP NOTES:

1) FOR GENERAL NOTES SEE SHT. GN1
2) FOR GIRDER SUB-ASSEMBLY SEE SHT. 216
3) FOR STIFF. DETAILS SEE SHT. 201
4) FOR BLOCKING DIAGRAM SEE SHT. 254
5) FOR HEAT CURVE DIAGRAM SEE SHT. 252
6) ▨ INDICATES OIL, NO PAINT (N.S./F.S. & EDGES)

G0208

FED. ROAD DIV. NO.	STATE	FEDERAL AID PROJECT NO.			
6	TX.	NH 92(50)M			
STATE DIST. NO.	COUNTY	CONTROL NO.	SECTION NO.	JOB NO.	HIGHWAY NO.
21	HIDALGO	39	17	97	83/281

BILL OF MATERIAL

	Qnty.	Material	Length	Mark Temp.	Mark Ship.	Wt.	Cut From	Remarks
3	1	GIRDER			245PG7.02			
4	1	GIRDER SUB-ASSY		C216				
5	60	DIAF STIFF		x201				
6	1	ANGLE		f202				
7	1	CONN PL		v202				

TEXAS DEPARTMENT OF TRANSPORTATION
APPROVED
DIVISION OF BRIDGES AND STRUCTURES
APR 06 1993
APPROVAL OF THIS DRAWING DOES NOT RELIEVE THE CONTRACTOR OF THE RESPONSIBILITY FOR THE CORRECTNESS OF DETAIL.

FOR APPROVAL
MAR 15 '93
NOT FOR CONSTRUCTION

REVISION	DATE	DESCRIPTION OF REVISION
NO. 1		
NO. 2		
NO. 3		
NO. 4		
NO. 5		

PRINTING

Req'd	For	Date

Bolts Holes: 15/16 ℄ Unless Noted
Shop Paint SEE SHT. GN1
Fab. Spec Inspection
Architect
Erection By Field Connections

HIRSCHFELD STEEL CO. INC.
112 WEST 29TH SAN ANGELO TEXAS 76903
PHONE (915) 653-3211

DESCRIPTION 150'-0 PLATE GIRDER UNIT
STRUCTURE US 83/281 INTERCHANGE RAMP #3
LOCATION HIDALGO COUNTY
CUSTOMER GILBERT TEXAS CONSTRUCTION
SHIP TO
Customer's Order No.
Dwg. By JBC Date 9/92
Checked By JC Date 10/92

SHEET 245 OF
JOB NO. 92-108

CE-92-13 (LINE #2)

332440

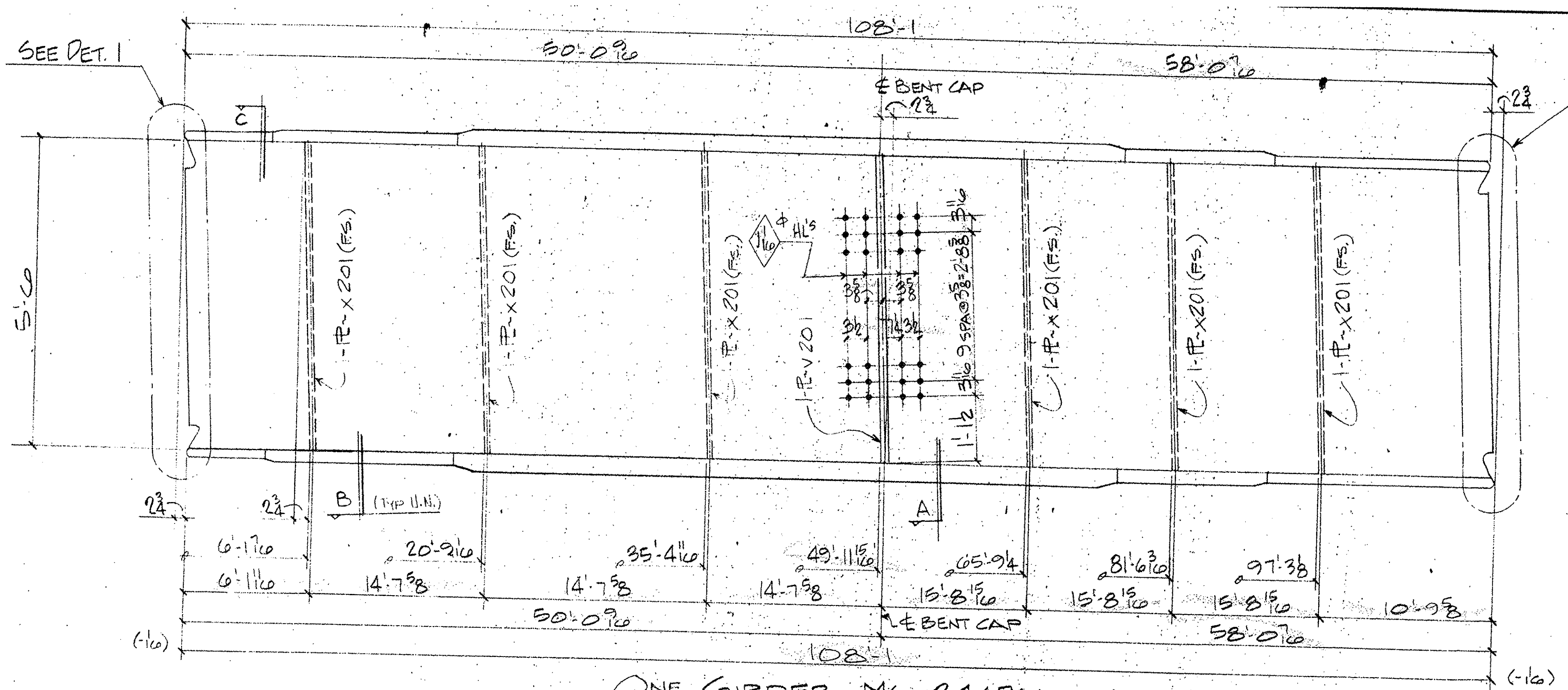

ONE GIRDER MK~ 244PG6.04
(APPROX WT. = TONS)

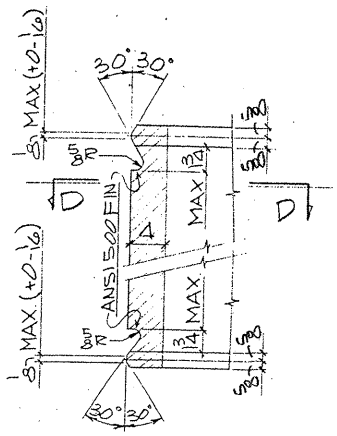

DETAIL - 1

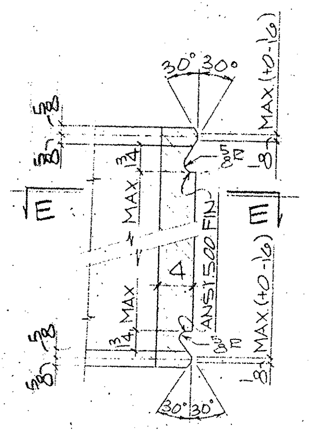

DETAIL - 2

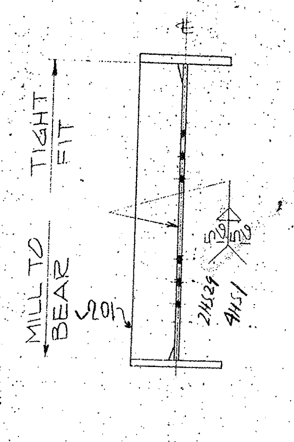

SECTION - A

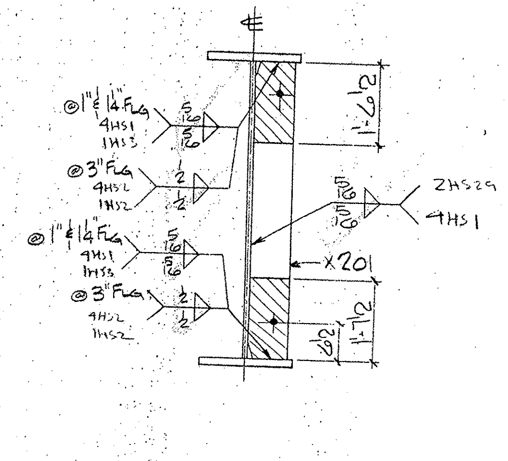

SECTION - B

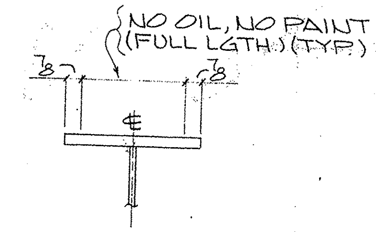

SECTION - C

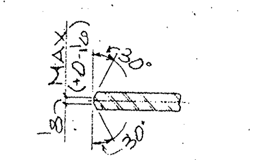

SECTION - D-D

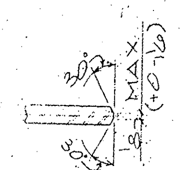

SECTION - E-E

BILL OF MATERIAL

	Qnty.	Material	Length	Mark Temp	Mark Ship	Wt.	Cut From	Remarks
1								
2	1	GIRDER		244PG6.04				
3	1	GIRDER SUB-ASSY		B218				
4	1	BRG STIFF		V201				
5	6	DIAF STIFF		X201				
6								
7								
8								
9								
10								
11								
12								
13								
14								
15								
16								
17								
18								
19								
20								
21								
22								
23								
24								
25								
26								
27								
28								
29								
30								
31								
32								
33								
34								
35								
36								
37								
38								
39								
40								
41								
42								
43								
44								
45								
46								
47								
48								
49								
50								
51								
52								
53								
54								
55								
56								
57								
58								
59								
60								

TEXAS DEPARTMENT OF TRANSPORTATION
APPROVED
DIVISION OF BRIDGES AND STRUCTURES
APR 06 1993
APPROVAL OF THIS DRAWING DOES NOT RELIEVE THE CONTRACTOR OF THE RESPONSIBILITY FOR THE CORRECTNESS OF DETAIL.

FOR APPROVAL
MAR 15 '93
NOT FOR CONSTRUCTION

REVISION	DATE	DESCRIPTION OF REVISION
NO 1		
NO 2		
NO 3		
NO 4		
NO 5		

SHOP NOTES:
1) FOR GENERAL NOTES SEE SHT. GN1
2) FOR GIRDER SUB-ASSEMBLY SEE SHT. 218
3) FOR STIFF. DETAILS SEE SHT. 201
4) FOR BLOCKING DIAGRAM SEE SHT. 256
5) FOR HEAT CURVE DIAGRAM SEE SHT. 252
6) ▨ INDICATES OIL, NO PAINT (N.S./F.S. & EDGES)

G0208

FED. ROAD DIV. NO.	STATE	FEDERAL AID PROJECT NO.			
6	TX.	NH 92(50)M			
STATE DIST. NO.	COUNTY	CONTROL NO.	SECTION NO.	JOB NO.	HIGHWAY NO.
21	HIDALGO	39	17	97	83/281

PRINTING — Req'd / For / Date

Bolts. Holes. 15/16 Φ Unless Noted
Shop Paint: SEE SHT. GN1
Fab Spec: AS NTD Inspection
Architect
Erection By Field Connections

HIRSCHFELD STEEL CO. INC.
112 WEST 29TH SAN ANGELO, TEXAS 76903
PHONE (915) 653-3211

DESCRIPTION: 150'-0 PLATE GIRDER UNIT
STRUCTURE: US 83/281 INTERCHANGE RAMP #3
LOCATION: HIDALGO COUNTY
CUSTOMER: GILBERT TEXAS CONSTRUCTION
SHIP TO
Customer's Order No.
Dwg. By: JPC Date: 9/92
Checked By: JC Date: 10/92
SHEET 244 OF
JOB NO. 92-108

APV MAR 15

CE 92-13 (LINE #4)

322640

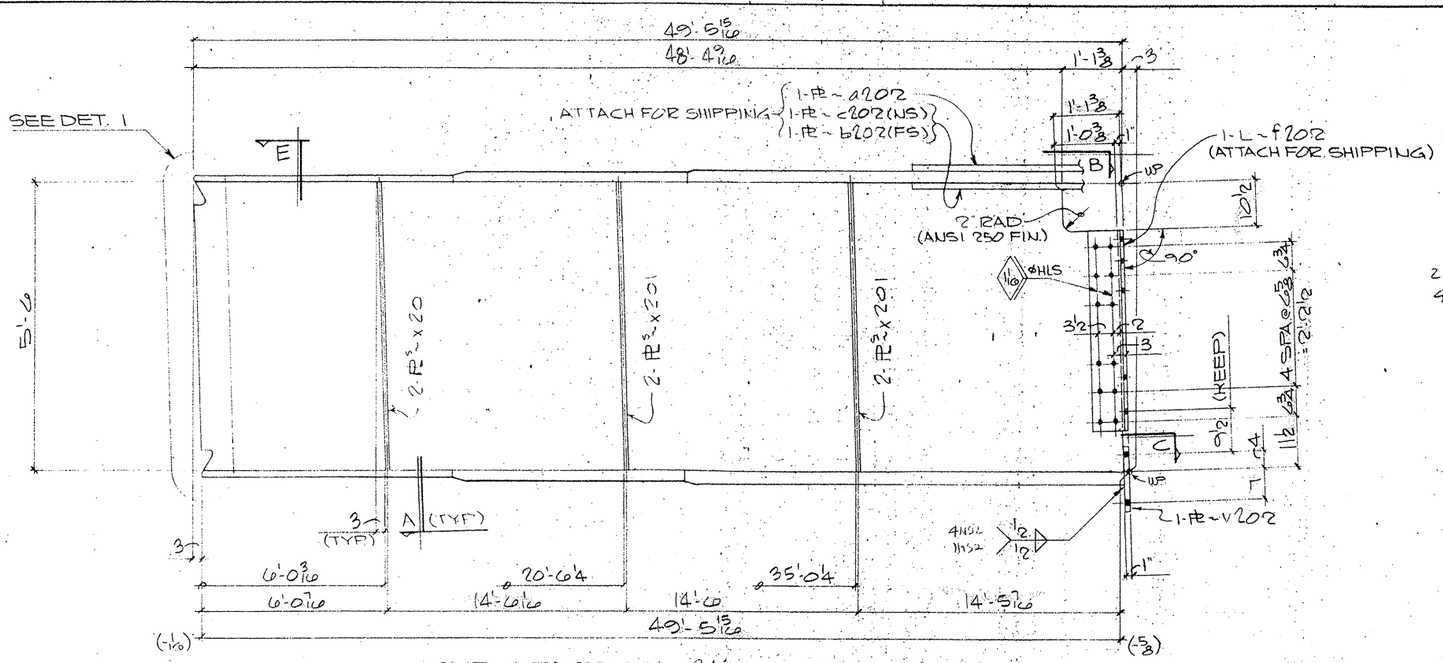

ONE GIRDER MK ~ 243PG6.03
(APPROX WT: TONS)

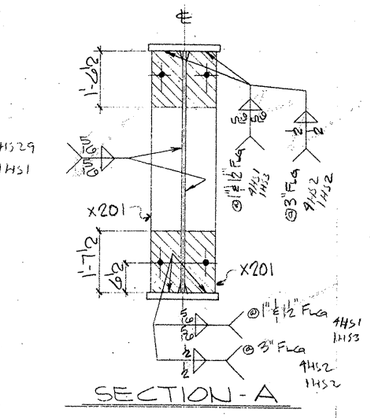

SECTION - A

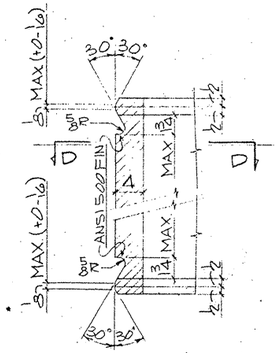

DETAIL - 1

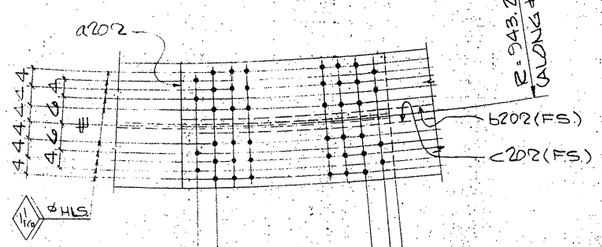

DIMS ALONG ℄ OF WEB: 12 SPA. @ 4 1/2 = 4'-3

VIEW B

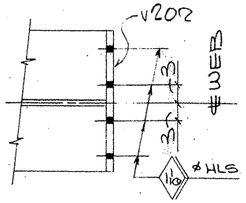

SECTION - C

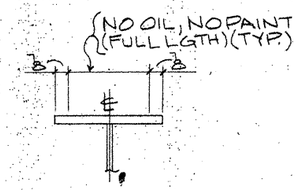

SECTION - E

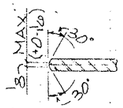

SECTION - D-D

SHOP NOTES:

1) FOR GENERAL NOTES SEE SHT. GN1
2) FOR GIRDER SUB-ASSEMBLY SEE SHT. 217
3) FOR STIFF. DETAILS SEE SHT. 201
4) FOR BLOCKING DIAGRAM SEE SHT. 255
5) FOR HEAT CURVE DIAGRAM SEE SHT. 252
6) FOR SPLICE ATTACHMENTS SEE SHT. 202
7) ▨ INDICATES OIL, NO PAINT (N.S./F.S. & EDGES)

G0208

FED. ROAD DIV. NO.	STATE	FEDERAL AID PROJECT NO.			
6	TX.	NH 92(50)M			
STATE DIST. NO.	COUNTY	CONTROL NO.	SECTION NO.	JOB NO.	HIGHWAY NO.
21	HIDALGO	39	17	97	83/281

BILL OF MATERIAL

	Qty	Material	Length	Mark Temp	Mark Ship	Wt.	Cut From	Remarks
3	1	GIRDER			243PG6.03			
4	1	GIRDER SUB-ASSY		B217				
5	1	SPLICE PL		a202				
6	1	SPLICE PL		b202				
7	1	SPLICE PL		c202				
8	6	DIAF STIFF		x201				
9	1	ANGLE		f202				
10	1	CONN. PL		v202				

TEXAS DEPARTMENT OF TRANSPORTATION
APPROVED
DIVISION OF BRIDGES AND STRUCTURES
APR 06 1993
APPROVAL OF THIS DRAWING DOES NOT RELIEVE THE CONTRACTOR OF THE RESPONSIBILITY FOR THE CORRECTNESS OF DETAIL.

FOR APPROVAL
MAR 19 93
NOT FOR CONSTRUCTION

REVISION	DATE	DESCRIPTION OF REVISION
NO. 1		
NO. 2		
NO. 3		
NO. 4		
NO. 5		

PRINTING: Reqd | For | Date

Holes: Holes 15/16 ⌀ Unless Noted
Shop Paint: SEE SHT. GN1
Fab Spec: Inspection
Architect:
Erection By: Field Connections

HIRSCHFELD STEEL CO. INC.
112 WEST 29TH SAN ANGELO TEXAS 76903
PHONE (915) 653-3211

DESCRIPTION	750'-0 PLATE GIRDER UNIT
STRUCTURE	US 83/281 INTERCHANGE RAMP #3
LOCATION	HIDALGO COUNTY
CUSTOMER	GILBERT TEXAS CONSTRUCTION
SHIP TO	
Customer's Order No.	
Dwg. By JSZ	Date 3/92
Checked By JC	Date 10/92
SHEET	243 OF
JOB NO.	92-108

CE 92-13 (LINE # 3)

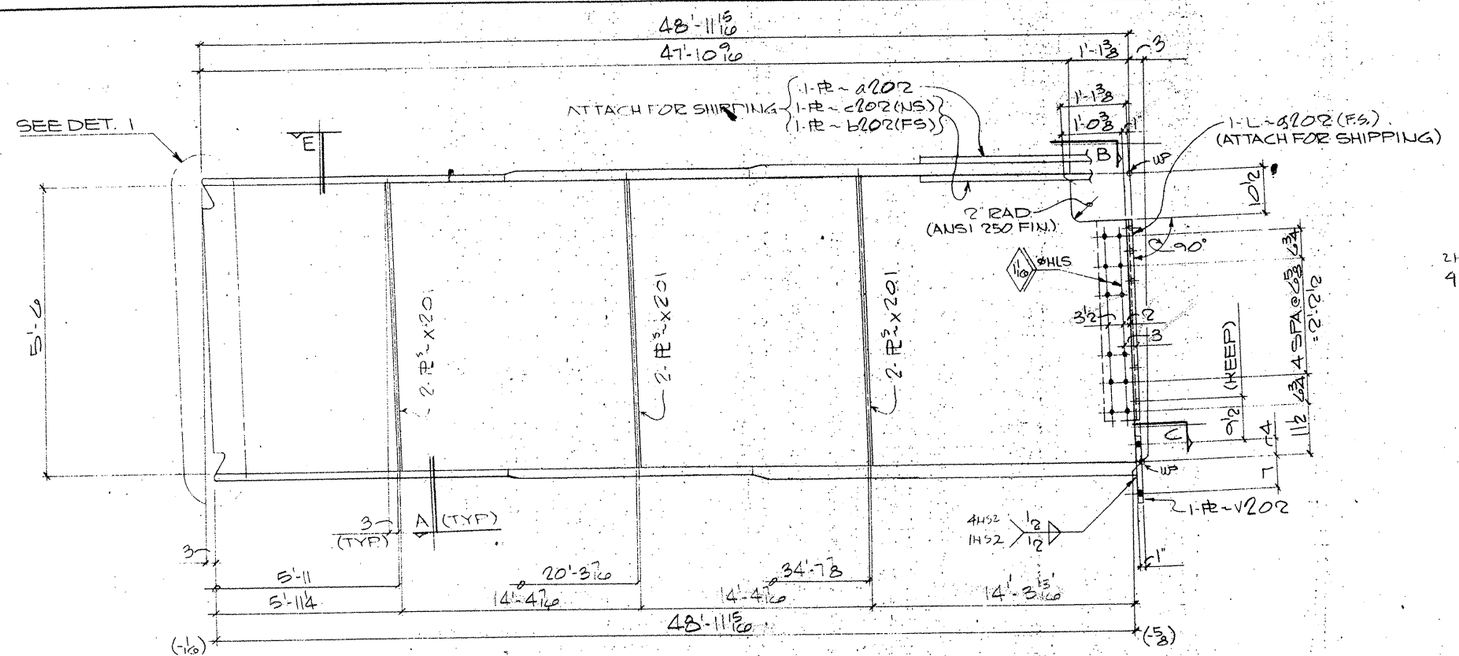

ONE GIRDER MK ~ 242PG6.02
(APPROX WT. TONS)

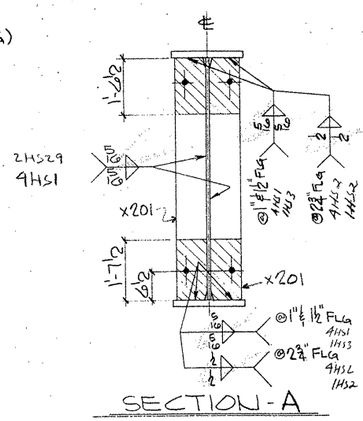

SECTION - A

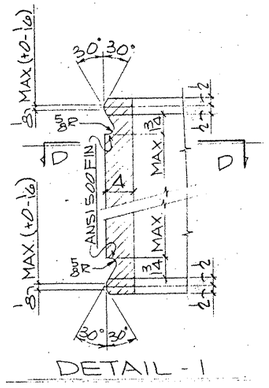

DETAIL - 1

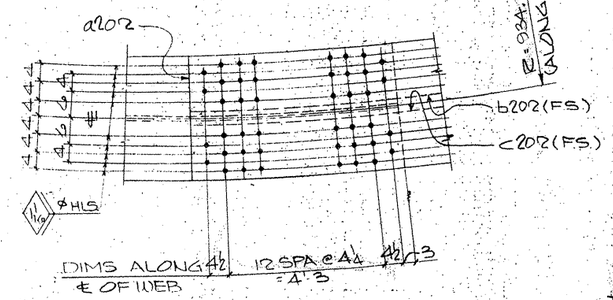

VIEW - B

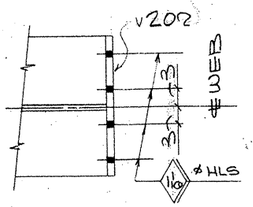

SECTION - C

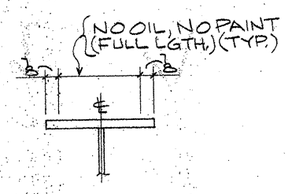

SECTION - E

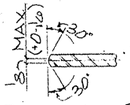

SECTION - D-D

SHOP NOTES:

1) FOR GENERAL NOTES SEE SHT. GN1
2) FOR GIRDER SUB-ASSEMBLY SEE SHT. 216
3) FOR STIFF. DETAILS SEE SHT. 201
4) FOR BLOCKING DIAGRAM SEE SHT. 254
5) FOR HEAT CURVE DIAGRAM SEE SHT. 252
6) FOR SPLICE ATTACHMENTS SEE SHT. 202
7) ▨ INDICATES OIL, NO PAINT (N.S./F.S. & EDGES)

G0208

FED. ROAD DIV. NO.	STATE	FEDERAL AID PROJECT NO.			
6	TX.	NH 92(50)M			
STATE DIST. NO.	COUNTY	CONTROL NO.	SECTION NO.	JOB NO.	HIGHWAY NO.
21	HIDALGO	39	17	97	83/281

BILL OF MATERIAL

	Qnty	Material	Length	Mark Temp	Mark Ship	Wt.	Cut From	Remarks
1								
2								
3	1	GIRDER			242 PG6.02			
4	1	GIRDER SUB-ASSY		B216				
5	1	SPLICE PL		a202				
6	1	SPLICE PL		b202				
7	1	SPLICE PL		c202				
8	6	DIAF STIFF		x201				
9	1	ANGLE		g202				
10	1	CONN. PL		v202				
11								
12								
13								
14								
15								
16								
17								
18								
19								
20								
21								
22								
23								
24								
25								
26								
27								
28								
29								
30								
31								
32								
33								
34								
35								
36								
37								
38								
39								
40								
41								
42								
43								
44								
45								
46								
47								
48								
49								
50								
51								
52								
53								
54								
55								
56								
57								
58								
59								
60								

TEXAS DEPARTMENT OF TRANSPORTATION
APPROVED
DIVISION OF BRIDGES AND STRUCTURES
APR 06 1993

APPROVAL OF THIS DRAWING DOES NOT RELIEVE THE CONTRACTOR OF THE RESPONSIBILITY FOR THE CORRECTNESS OF DETAIL

FOR APPROVAL
NOT FOR CONSTRUCTION

REVISION	DATE	DESCRIPTION OF REVISION
NO. 1		
NO. 2		
NO. 3		
NO. 4		
NO. 5		

PRINTING Reqd	For	Date

Bolts Holes 15/16 ø Unless Noted
Shop Paint SEE SHT. GN1
Fab Spec Inspection
Architect
Erection By Field Connections

HIRSCHFELD STEEL CO. INC.
112 WEST 29TH SAN ANGELO, TEXAS 76903
PHONE (915) 653-3211

DESCRIPTION	750'-0 PLATE GIRDER UNIT
STRUCTURE	US 83/281 INTERCHANGE RAMP #3
LOCATION	HIDALGO COUNTY
CUSTOMER	GILBERT TEXAS CONSTRUCTION
SHIP TO	
Customer's Order No	
Dwg. By JR	Date 9/92
Checked By JC	Date 10/92

SHEET 242 OF
JOB NO 92-108

CE 92-13 (LINE # 2)

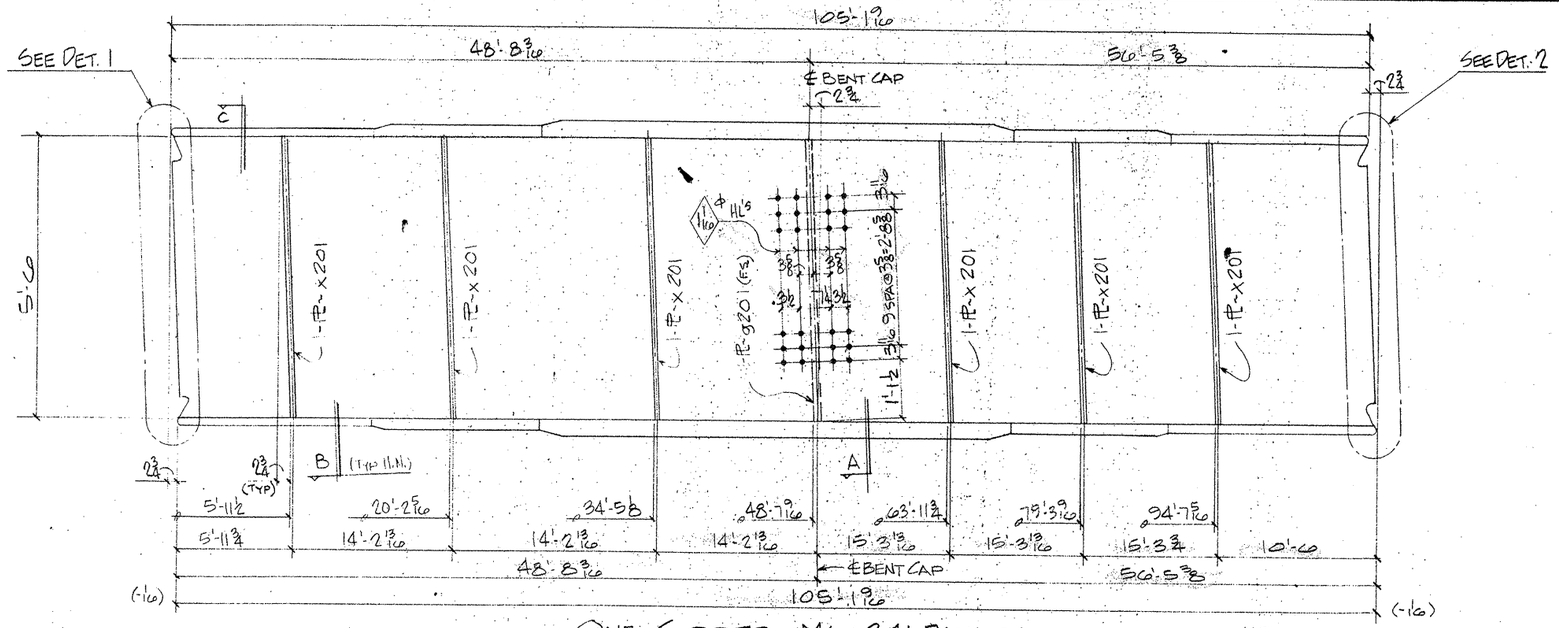

ONE GIRDER MK~ 241 PG6.01

(APPROX. WT. = TONS)

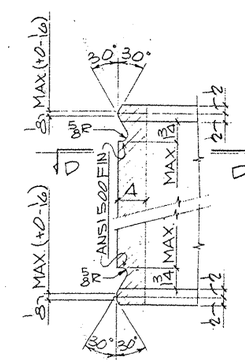

DETAIL - 1

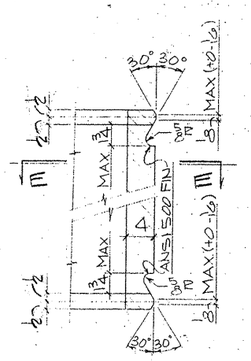

DETAIL - 2

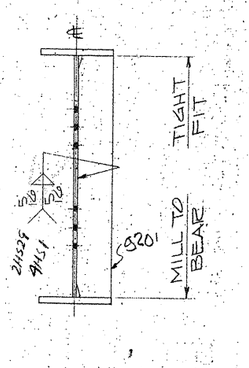

SECTION - A

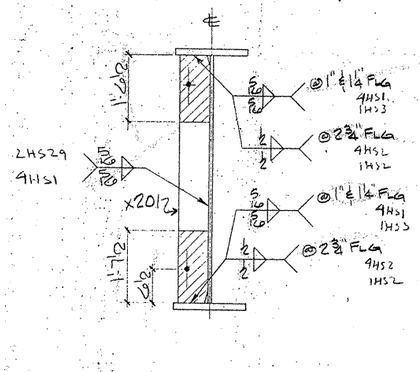

SECTION - B

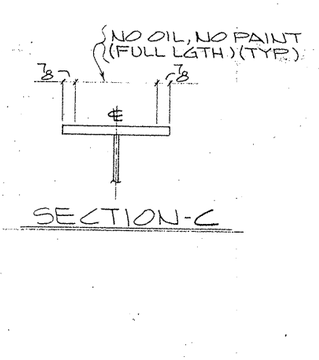

SECTION - C

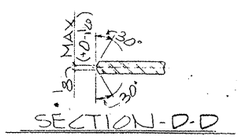

SECTION - D-D

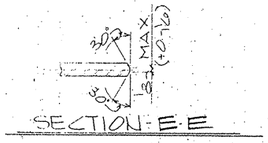

SECTION - E-E

BILL OF MATERIAL

	Qnty	Material	Length	Mark Temp	Mark Ship.	Wt.	Cut From	Remarks
2	1	GIRDER		241 PG6.01				
3	1	GIRDER SUB-ASSY		B215				
4	1	BRG STIFF		S201				
5	6	DIAF STIFF		x201				

TEXAS DEPARTMENT OF TRANSPORTATION
APPROVED
DIVISION OF BRIDGES AND STRUCTURES
APR 06 1993

APPROVAL OF THIS DRAWING DOES NOT RELIEVE THE CONTRACTOR OF THE RESPONSIBILITY FOR THE CORRECTNESS OF DETAIL.

FOR APPROVAL
MAR 19 93
NOT FOR CONSTRUCTION

SHOP NOTES:

1) FOR GENERAL NOTES SEE SHT. GN1
2) FOR GIRDER SUB-ASSEMBLY SEE SHT. 215
3) FOR STIFF. DETAILS SEE SHT. 201
4) FOR BLOCKING DIAGRAM SEE SHT. 253
5) FOR HEAT CURVE DIAGRAM SEE SHT. 252
6) ▨ INDICATES OIL, NO PAINT (N.S./F.S. & EDGES)

G0208

FED. ROAD DIV. NO.	STATE	FEDERAL AID PROJECT NO.			
6	TX.	NH 92(50)M			
STATE DIST. NO.	COUNTY	CONTROL NO.	SECTION NO.	JOB NO.	HIGHWAY NO.
21	HIDALGO	39	17	97	83/281

REVISION	DATE	DESCRIPTION OF REVISION
NO. 1		
NO. 2		
NO. 3		
NO. 4		
NO. 5		

PRINTING Req'd	For	Date

Bolts Holes 13/16 ℄ Unless Noted
Shop Paint SEE SHT. GN1
Fab Spec AS NTD Inspection
Architect
Erection By Field Connections

HIRSCHFELD STEEL CO. INC.
112 WEST 29TH SAN ANGELO, TEXAS 76903
PHONE (915) 653-3211

DESCRIPTION	750'-0 PLATE GIRDER UNIT
STRUCTURE	US 83/281 INTERCHANGE RAMP #3
LOCATION	HIDALGO COUNTY
CUSTOMER	GILBERT TEXAS CONSTRUCTION
SHIP TO	
Customer's Order No.	
Dwg By JRC	Date 9/92
Checked By	Date 10/92

SHEET 24 OF
JOB NO. 92-108

CE 92-13 (LINE #1)

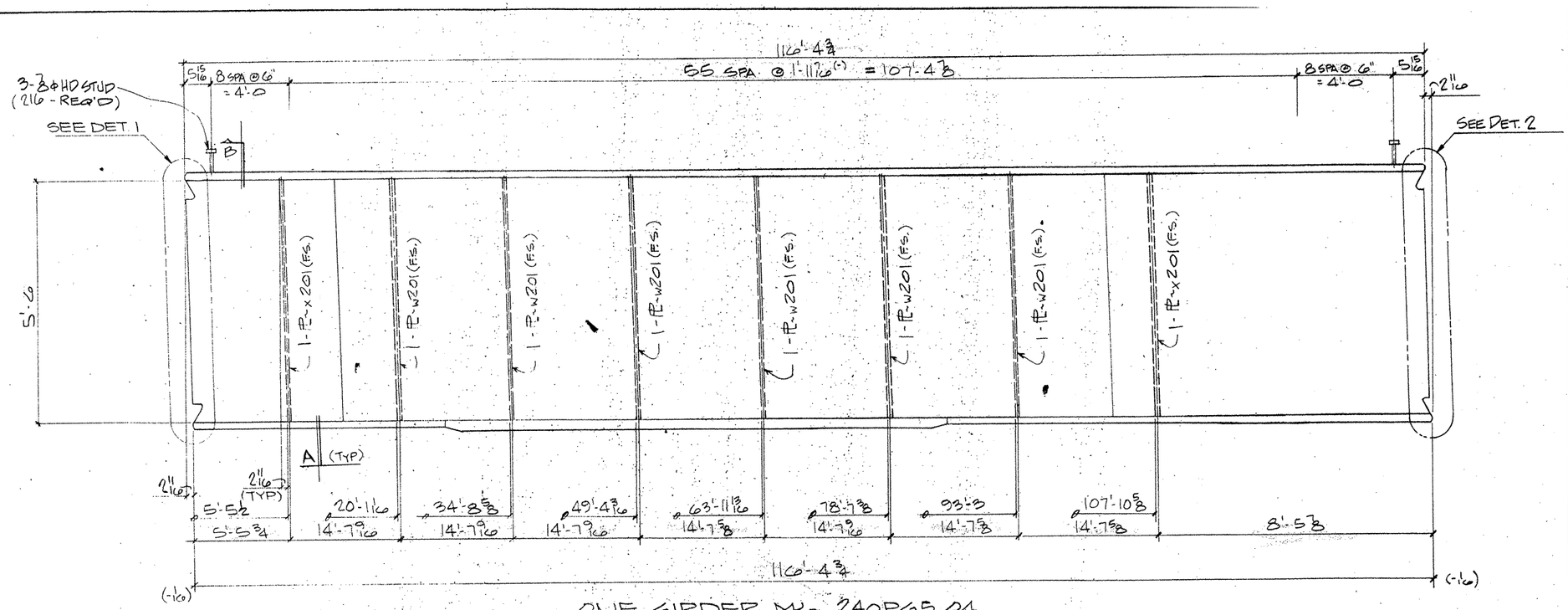

ONE GIRDER MK- 240PG5.04

(APPROX. WT. = TONS)

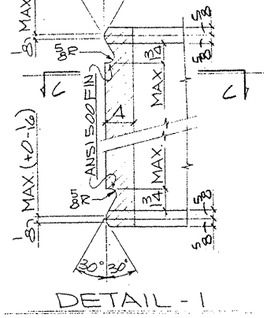

DETAIL - 1

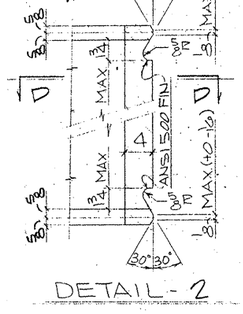

DETAIL - 2

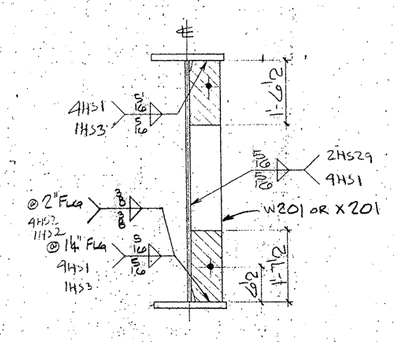

SECTION - A

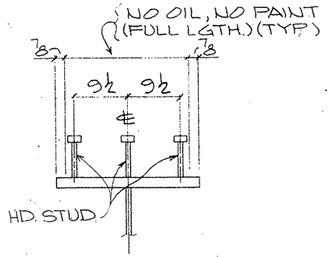

SECTION - B

(TYP. STUD SECT.)

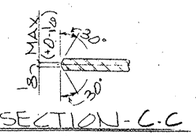

SECTION - C-C

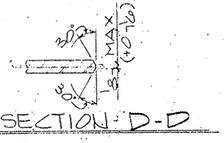

SECTION - D-D

SHOP NOTES:

1) FOR GENERAL NOTES SEE SHT. GN1
2) FOR GIRDER SUB-ASSEMBLY SEE SHT. 21B
3) FOR STIFF. DETAILS SEE SHT. 201
4) FOR BLOCKING DIAGRAM SEE SHT. 256
5) FOR HEAT CURVE DIAGRAM SEE SHT. 252
6) ▨ INDICATES OIL, NO PAINT (N.S./F.S. & EDGES)

G0208

FED. ROAD DIV. NO.	STATE	FEDERAL AID PROJECT NO.			
6	TX.	NH 92(50)M			
STATE DIST. NO.	COUNTY	CONTROL NO.	SECTION NO.	JOB NO.	HIGHWAY NO.
21	HIDALGO	39	17	97	83/281

BILL OF MATERIAL

	Qnty.	Material	Length	Mark Temp	Mark Ship.	Wt.	Cut From	Remarks
1								
2	1	GIRDER			240PG5.04			
3	1	GIRDER SUB-ASSY.		A21B				
4	6	DIAF STIFF		W201				
5	2	DIAF STIFF		X201				
6	216	HDSTUD 3/4	0'-7				205-1	A108
7								
8								
9								
10								
11								
12								
13								
14								
15								
16								
17								
18								
19								
20								
21								
22								
23								
24								
25								
26								
27								
28								
29								
30								
31								
32								
33								
34								
35								
36								
37								
38								
39								
40								
41								
42								
43								
44								
45								
46								
47								
48								
49								
50								
51								
52								
53								
54								
55								
56								
57								
58								
59								
60								

TEXAS DEPARTMENT OF TRANSPORTATION
APPROVED
DIVISION OF BRIDGES AND STRUCTURES
APR 06 1993

APPROVAL OF THIS DRAWING DOES NOT RELIEVE THE CONTRACTOR OF THE RESPONSIBILITY FOR THE CORRECTNESS OF DETAIL.

FOR APPROVAL
MAR 19 '93
NOT FOR CONSTRUCTION

REVISION	DATE	DESCRIPTION OF REVISION
NO. 1		
NO. 2		
NO. 3		
NO. 4		
NO. 5		

PRINTING

Read	For	Date

Bolts Holes 15/16 ϕ Unless Noted
Shop Paint SEE SHT GN1
Fab Spec. AS NTD Inspection
Architect
Erection By Field Connections

HIRSCHFELD STEEL CO. INC.
112 WEST 29TH SAN ANGELO, TEXAS 76903
PHONE (915) 653-3211

DESCRIPTION 750" PLATE GIRDER UNIT
STRUCTURE US 83/281 INTERCHANGE RAMP "B"
LOCATION HIDALGO COUNTY
CUSTOMER GILBERT TEXAS CONSTRUCTION
SHIP TO
Customer's Order No.
Dwg. By JDL Date 9/92
Checked By NC Date 10/92
SHEET 240 OF
JOB NO 92-108

CE 92-13 (LINE #4)

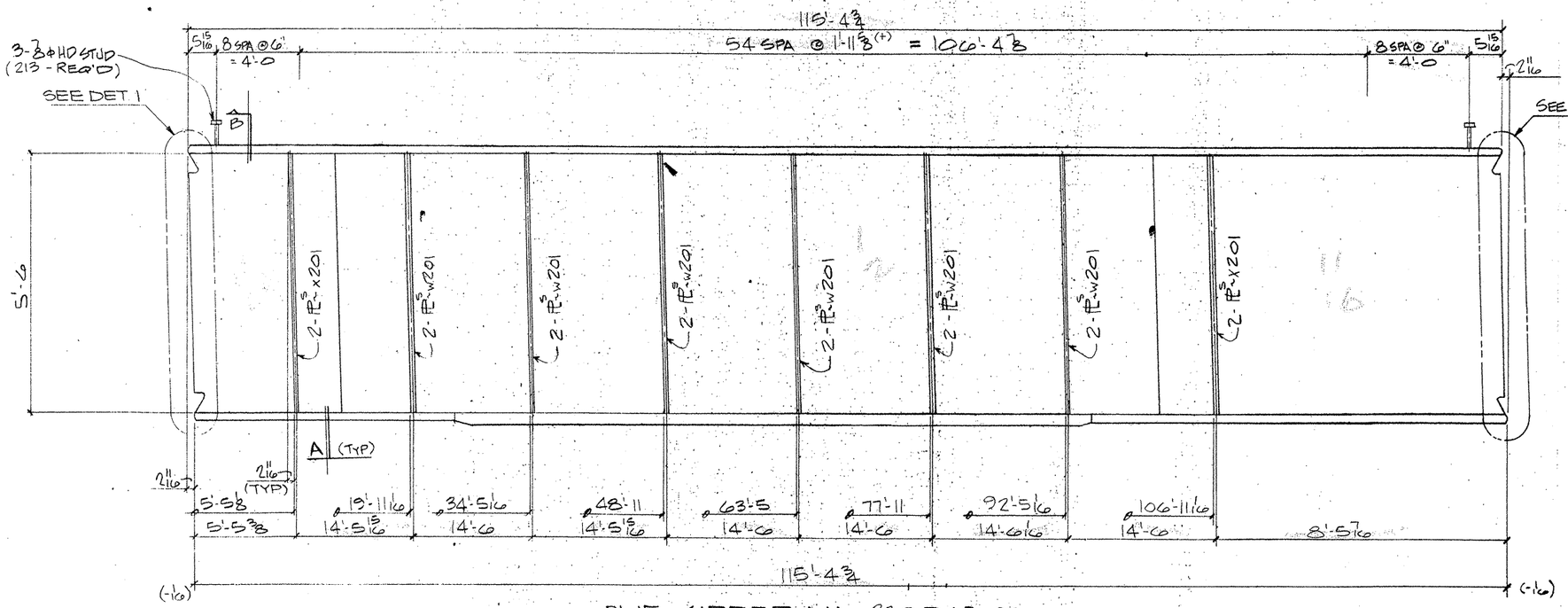

ONE GIRDER MK- 239 PG5.03

(APPROX. WT. = TONS)

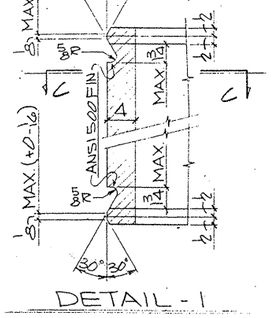

DETAIL - 1

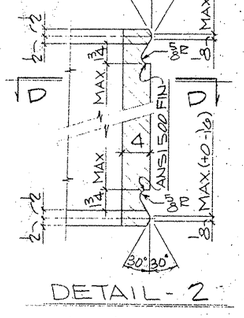

DETAIL - 2

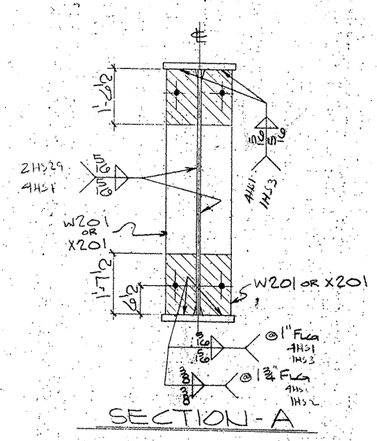

SECTION - A

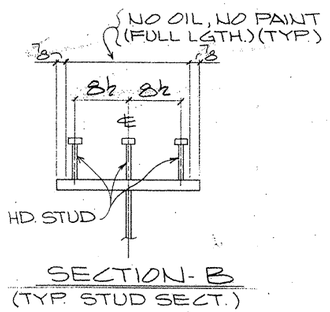

SECTION - B

(TYP. STUD SECT.)

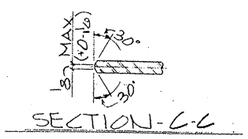

SECTION - C-C

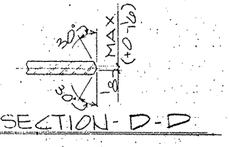

SECTION - D-D

SHOP NOTES:

1) FOR GENERAL NOTES SEE SHT. GN1
2) FOR GIRDER SUB-ASSEMBLY SEE SHT. 217
3) FOR STIFF. DETAILS SEE SHT. 201
4) FOR BLOCKING DIAGRAM SEE SHT. 255
5) FOR HEAT CURVE DIAGRAM SEE SHT. 252
6) ////// INDICATES OIL, NO PAINT (N.S./F.S. & EDGES)

BILL OF MATERIAL

	Qty.	Material	Length	Mark Temp	Mark Ship.	Wt.	Cut From	Remarks
2	1	GIRDER			239P65.03			
3	1	GIRDER SUB-ASSY		A217				
4	12	DIAF STIFF		W201				
5	4	DIAF STIFF		X201				
6	213	HDSTUD 3/4ϕ	0'-7				205-1	A108

TEXAS DEPARTMENT OF TRANSPORTATION
APPROVED
DIVISION OF BRIDGES AND STRUCTURES
APR 06 1993

APPROVAL OF THIS DRAWING DOES NOT RELIEVE THE CONTRACTOR OF THE RESPONSIBILITY FOR THE CORRECTNESS OF DETAIL.

FOR APPROVAL
MAR 15 93
NOT FOR CONSTRUCTION

REVISION	DATE	DESCRIPTION OF REVISION
NO 1		
NO 2		
NO 3		
NO 4		
NO 5		

PRINTING

Req'd	For	Date

Bolts Holes: 15/16ϕ Unless Noted
Shop Paint SEE SHT. GN1
Fab. Spec. AS NTD Inspection
Architect
Erection By Field Connections

HIRSCHFELD STEEL CO. INC.
112 WEST 29TH SAN ANGELO, TEXAS 76903
PHONE (915) 653-3211

DESCRIPTION	760'-0 PLATE GIRDER UNIT
STRUCTURE	US 83/281 INTERCHANGE RAMP #3
LOCATION	HIDALGO COUNTY
CUSTOMER	GILBERT TEXAS CONSTRUCTION
SHIP TO	
Customer's Order No.	
Dwg. By JDZ	Date 9/92
Checked By JC	Date 10/92

SHEET 239 OF
JOB NO. 92-108

G0208

FED. ROAD DIV. NO.	STATE	FEDERAL AID PROJECT NO.			
6	TX.	NH 92(50)M			
STATE DIST. NO.	COUNTY	CONTROL NO.	SECTION NO.	JOB NO.	HIGHWAY NO.
21	HIDALGO	39	17	97	83/281

CE 92-13 (LINE #3)

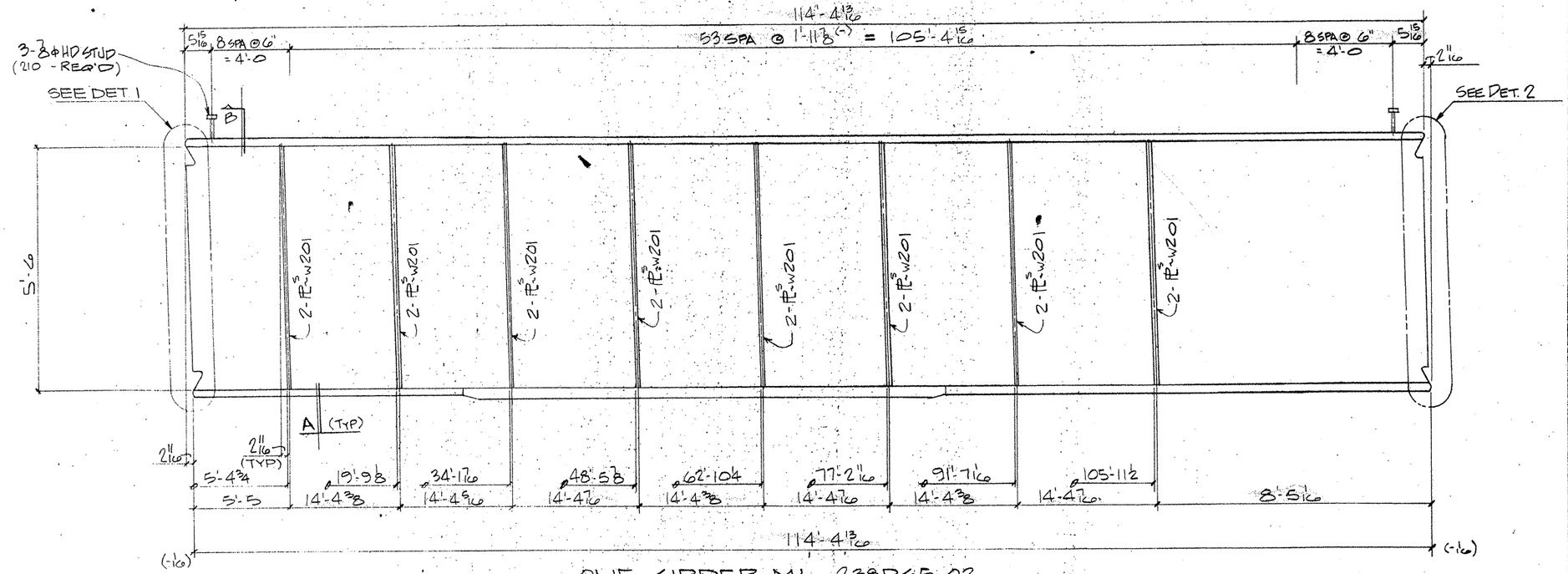

ONE GIRDER MK- 238PG5.02

(APPROX WT. = TONS)

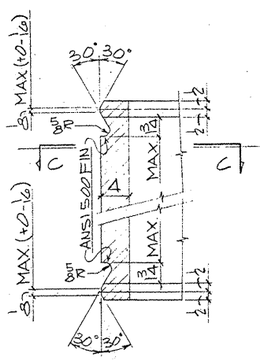

DETAIL - 1

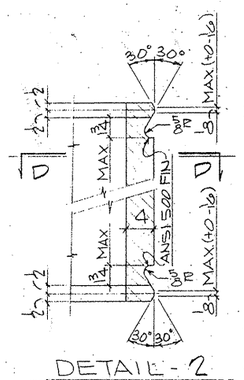

DETAIL - 2

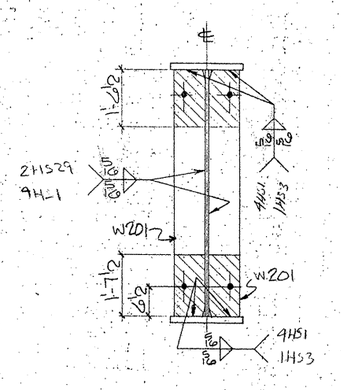

SECTION - A

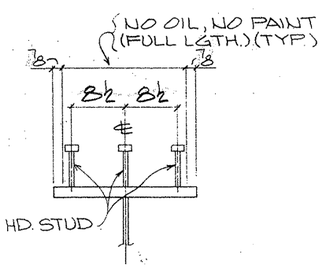

SECTION - B

(TYP. STUD SECT.)

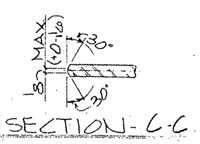

SECTION - C-C

SECTION - D-D

SHOP NOTES:

1) FOR GENERAL NOTES SEE SHT. GN1.
2) FOR GIRDER SUB-ASSEMBLY SEE SHT. 216
3) FOR STIFF. DETAILS SEE SHT. 201
4) FOR BLOCKING DIAGRAM SEE SHT. 254
5) FOR HEAT CURVE DIAGRAM SEE SHT. 252
6) ////// INDICATES OIL, NO PAINT (N.S./F.S. & EDGES)

G0208

FED. ROAD DIV. NO.	STATE	FEDERAL AID PROJECT NO.			
6	TX.	NH 92(50)M			
STATE DIST. NO.	COUNTY	CONTROL NO.	SECTION NO.	JOB NO.	HIGHWAY NO.
21	HIDALGO	39	17	97	83/281

BILL OF MATERIAL

	Qnty.	Material	Length	Mark Temp	Mark Ship	Wt.	Cut From	Remarks
2	1	GIRDER			238PG5.02			
3	1	GIRDER SUB-ASSY		A216				
4	106	DIAF STIFF		W201				
6	210	HDSTUD 3/4ϕ	1' 0-7					205-1 A108

TEXAS DEPARTMENT OF ~~TRANSPORTATION~~
APPROVED
DIVISION OF BRIDGES AND STRUCTURES
APR 06 1993

APPROVAL OF THIS DRAWING DOES NOT RELIEVE THE CONTRACTOR OF THE RESPONSIBILITY FOR THE CORRECTNESS OF DETAIL

FOR APPROVAL
MAR 15 '93
NOT FOR CONSTRUCTION

REVISION	DATE	DESCRIPTION OF REVISION
NO 1		
NO 2		
NO 3		
NO 4		
NO 5		

PRINTING Reqd	For	Date

Bolts Holes 15/16ϕ Unless Noted
Shop Paint SEE SHT GN1
Fab Spec AS NTD Inspection
Architect
Erection By Field Connections

HIRSCHFELD STEEL CO. INC.
112 WEST 29TH SAN ANGELO, TEXAS 76903
PHONE (915) 653-3211

DESCRIPTION	150'-0 PLATE GIRDER UNIT
STRUCTURE	US 83/281 INTERCHANGE RAMP "B"
LOCATION	HIDALGO COUNTY
CUSTOMER	GILBERT TEXAS CONSTRUCTION
SHIP TO	
Customer's Order No.	
Dwg By JDE Date 9/92	SHEET 238 OF
Checked By JC Date 10/92	JOB NO. 92-108

CE 92-13 (LINE # 2)

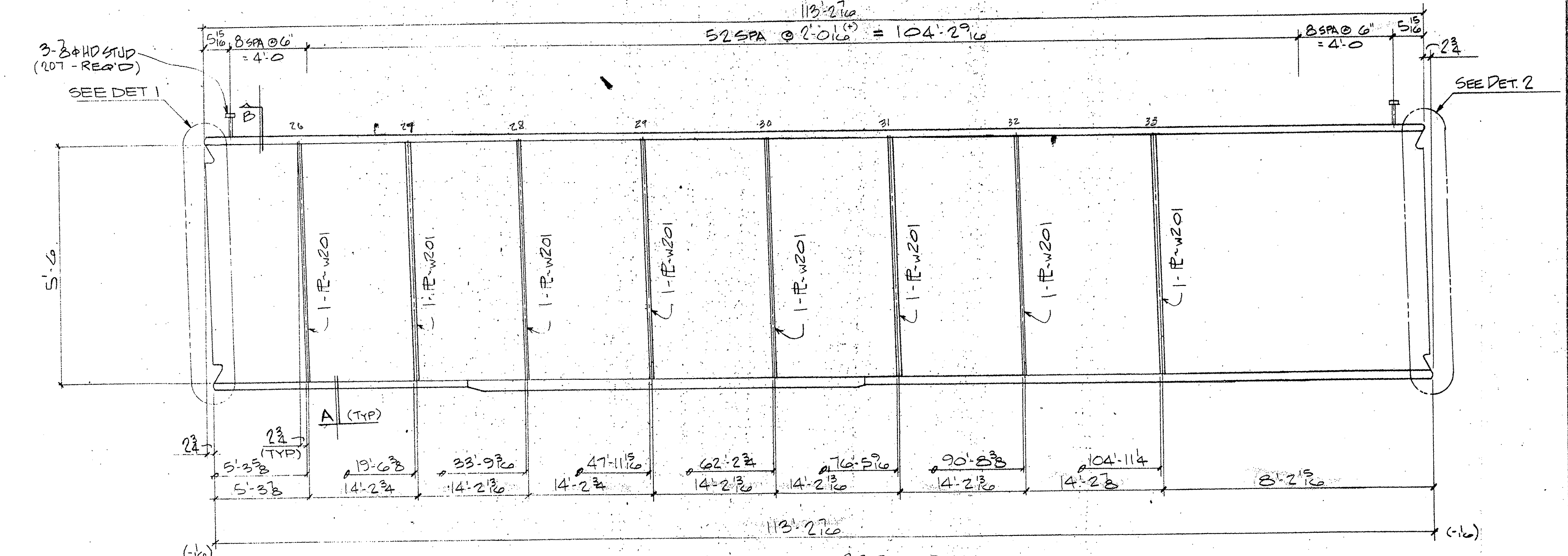

ONE GIRDER MK~237PG5.01
(APPROX. WT. = TONS)

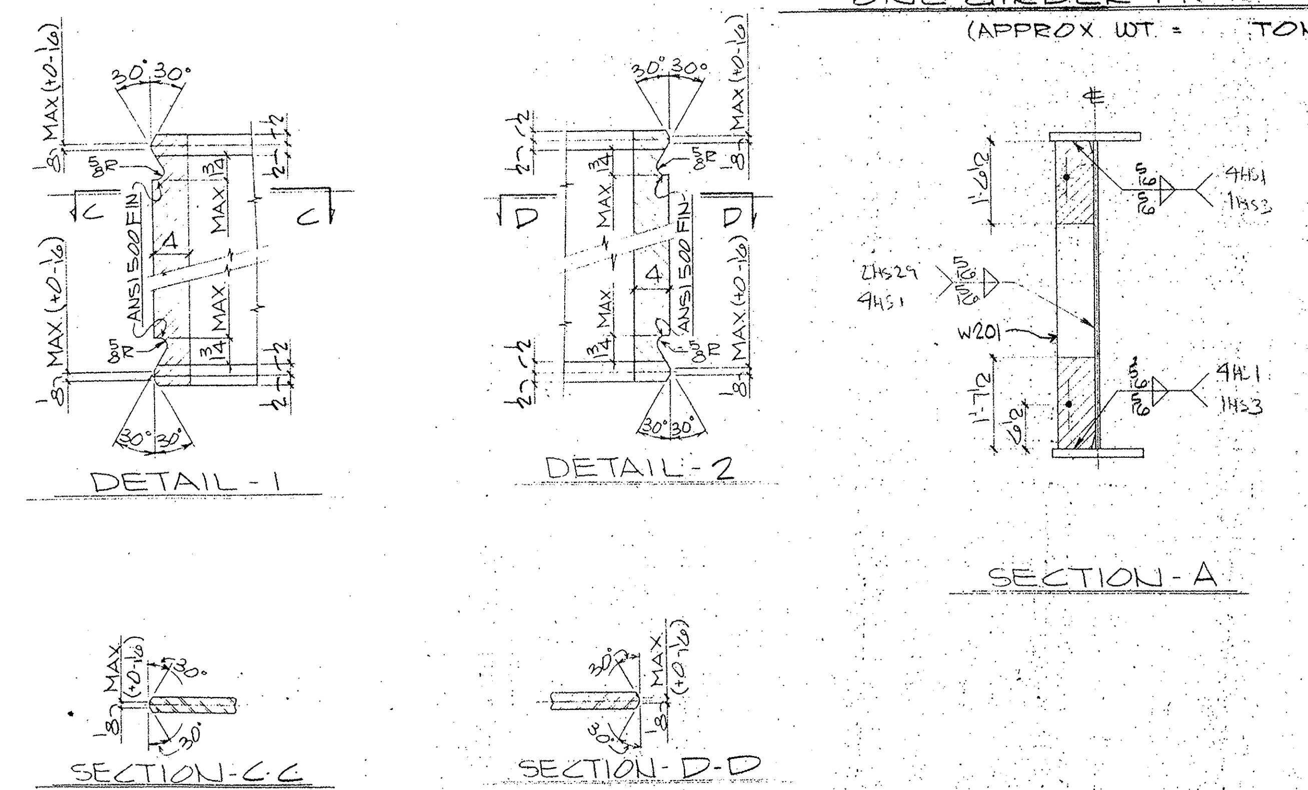

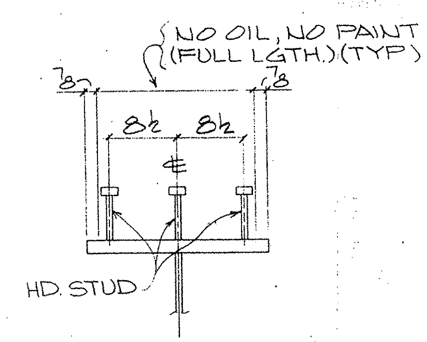

SECTION - B
(TYP. STUD SECT.)

SHOP NOTES:
1) FOR GENERAL NOTES SEE SHT. GN1
2) FOR GIRDER SUB-ASSEMBLY SEE SHT. 215
3) FOR STIFF. DETAILS SEE SHT. 201
4) FOR BLOCKING DIAGRAM SEE SHT. 253
5) FOR HEAT CURVE DIAGRAM SEE SHT. 252
6) ▨ INDICATES OIL, NO PAINT (N.S./F.S. & EDGES)

BILL OF MATERIAL

	Qnty	Material	Length	Mark Temp	Mark Ship	Wt.	Cut From	Remarks
1								
2	1	GIRDER			237PG5.01			
3	1	GIRDER SUB-ASSY		A215				
4	8	DIAF STIFF		W201				
5								
6	207	HDSTUD 7/8 φ	0'-7				205-1	A108
7								
8								
9								
10								
11								
12								
13								
14								
15								
16								
17								
18								
19								
20								
21								
22								
23								
24								
25								
26								
27								
28								
29								
30								
31								
32								
33								
34								
35								
36								
37								
38								
39								
40								
41								
42								
43								
44								
45								
46								
47								
48								
49								
50								
51								
52								
53								
54								
55								
56								
57								
58								
59								
60								

TEXAS DEPARTMENT OF TRANSPORTATION
APPROVED
DIVISION OF BRIDGES AND STRUCTURES
APR 06 1993
APPROVAL OF THIS DRAWING DOES NOT RELIEVE THE CONTRACTOR OF THE RESPONSIBILITY FOR THE CORRECTNESS OF DETAIL

FOR APPROVAL
MAR 15 '93
NOT FOR CONSTRUCTION

REVISION	DATE	DESCRIPTION OF REVISION
NO 1		
NO 2		
NO 3		
NO 4		
NO 5		

PRINTING: Req'd | For | Date

Bolts — Holes: 15/16 φ Unless Noted
Shop Paint: SEE SHT GN1
Fab Spec: AS NTD — Inspection
Architect
Erection By — Field Connections

HIRSCHFELD STEEL CO. INC.
112 WEST 29TH SAN ANGELO, TEXAS 76903
PHONE (915) 653-3211

DESCRIPTION: 750'-0 PLATE GIRDER UNIT
STRUCTURE: US 83/281 INTERCHANGE RAMP #3
LOCATION: HIDALGO COUNTY
CUSTOMER: GILBERT TEXAS CONSTRUCTION
SHIP TO
Customer's Order No — SHEET 237 OF
Dwg By JDC — Date 9/92 — JOB NO. 92-108
Checked By JC — Date 10/92
APV MAR 15

G0208

FED. ROAD DIV. NO.	STATE	FEDERAL AID PROJECT NO.			
6	TX.	NH 92(50)M			
STATE DIST. NO.	COUNTY	CONTROL NO.	SECTION NO.	JOB NO.	HIGHWAY NO.
21	HIDALGO	39	17	97	83/281

CE 92-13 (LINE #1)

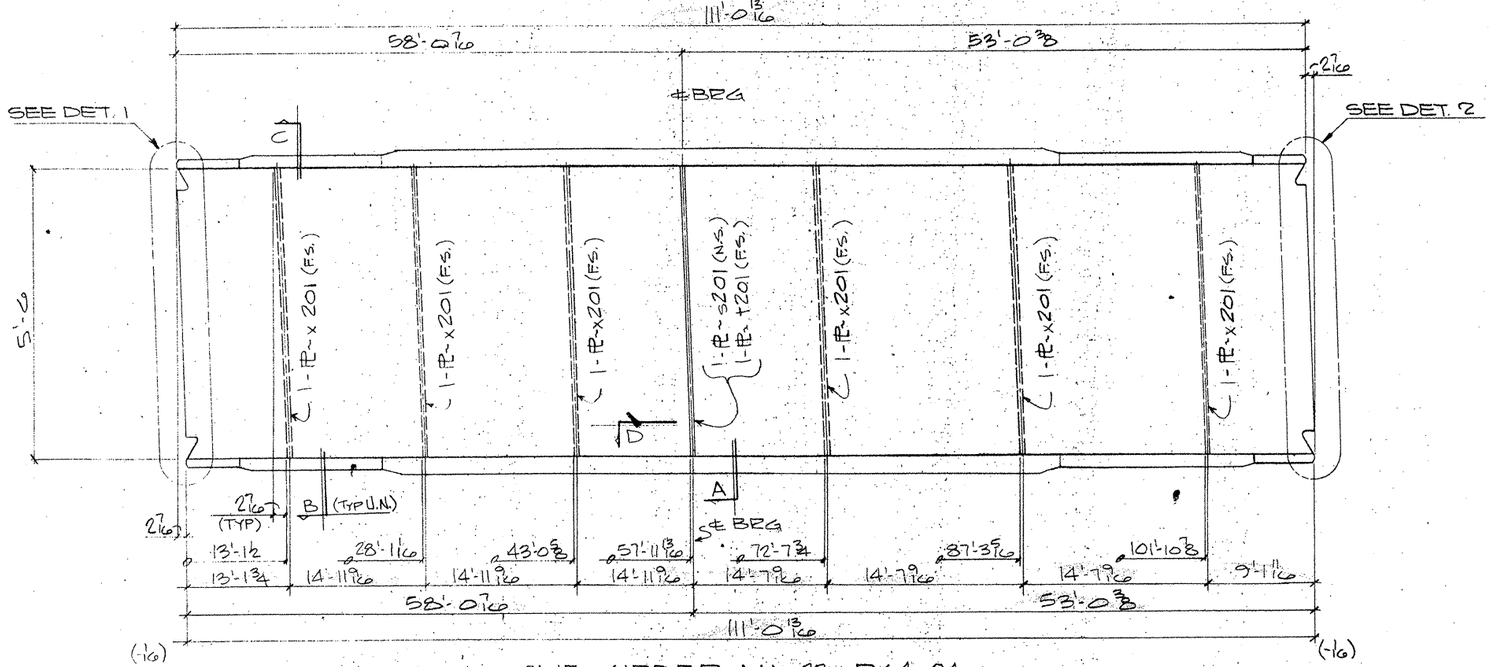

ONE GIRDER MK-236PG4.04

(APPROX. WT = TONS)

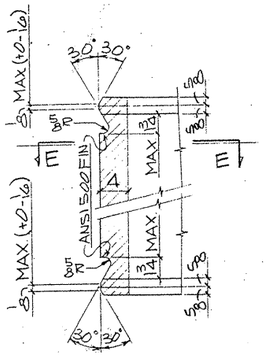

DETAIL-1

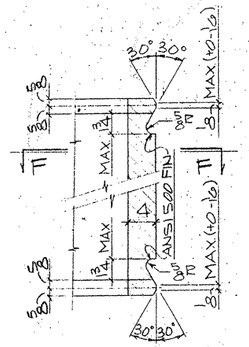

DETAIL-2

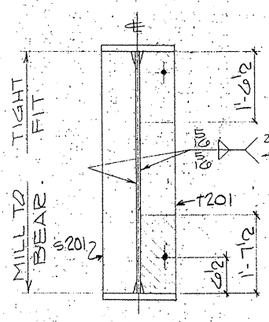

SECTION-A

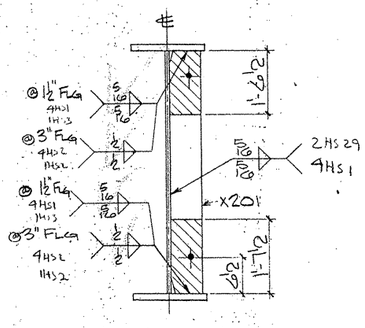

SECTION-B

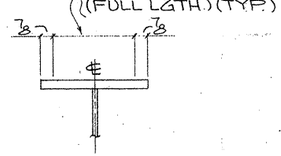

SECTION-C

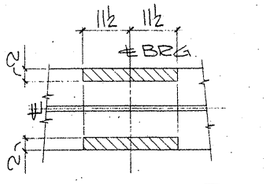

SECTION-D

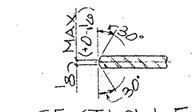

SECTION-E-E

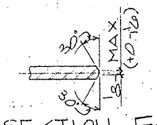

SECTION-F-F

SHOP NOTES:

1) FOR GENERAL NOTES SEE SHT. GN1
2) FOR GIRDER SUB-ASSEMBLY SEE SHT. 214
3) FOR STIFF. DETAILS SEE SHT. 201
4) FOR BLOCKING DIAGRAM SEE SHT. 256
5) FOR HEAT CURVE DIAGRAM SEE SHT. 252
6) ▨ INDICATES OIL, NO PAINT (N.S./F.S. & EDGES)

G0208

FED. ROAD DIV. NO.	STATE	FEDERAL AID PROJECT NO.				
6	TX.	NH 92(50)M				
STATE DIST. NO.	COUNTY	CONTROL NO.	SECTION NO.	JOB NO.	HIGHWAY NO.	
21	HIDALGO	39	17	97	83/281	

BILL OF MATERIAL

	Qnty.	Material	Length	Mark Temp.	Mark Ship.	Wt.	Cut From	Remarks
1								
2	1	GIRDER			236PG4.04			
3	1	GIRDER SUB-	ASSY	B214				
4	1	BRG STIFF		S201				
5	1	BRG STIFF		T201				
6	6	DIAF STIFF		X201				
7–60								

TEXAS DEPARTMENT OF TRANSPORTATION
APPROVED
DIVISION OF BRIDGES AND STRUCTURES
APR 06 1993
APPROVAL OF THIS DRAWING DOES NOT RELIEVE THE CONTRACTOR OF THE RESPONSIBILITY FOR THE CORRECTNESS OF DETAIL

FOR APPROVAL
MAR 15 93
NOT FOR CONSTRUCTION

REVISION	DATE	DESCRIPTION OF REVISION
NO. 1		
NO. 2		
NO. 3		
NO. 4		
NO. 5		

PRINTING: Req'd | For | Date

Bolts — Holes: 15/16 ø Unless Noted
Shop Paint: SEE SHT. GN1
Fab. Spec: AS NTD. Inspection
Architect
Erection By: Field Connections

HIRSCHFELD STEEL CO. INC.
112 WEST 29TH SAN ANGELO, TEXAS 76903
PHONE (915) 653-3211

DESCRIPTION	750'-0 PLATE GIRDER UNIT
STRUCTURE	US 83/281 INTERCHANGE RAMP #3
LOCATION	HIDALGO COUNTY
CUSTOMER	GILBERT TEXAS CONSTRUCTION
SHIP TO	
Customer's Order No.	
Dwg. By JDE	Date 9/92
Checked By JC	Date 10/92

SHEET 236 OF
JOB NO. 92-108

CE92-13 (LINE #4)

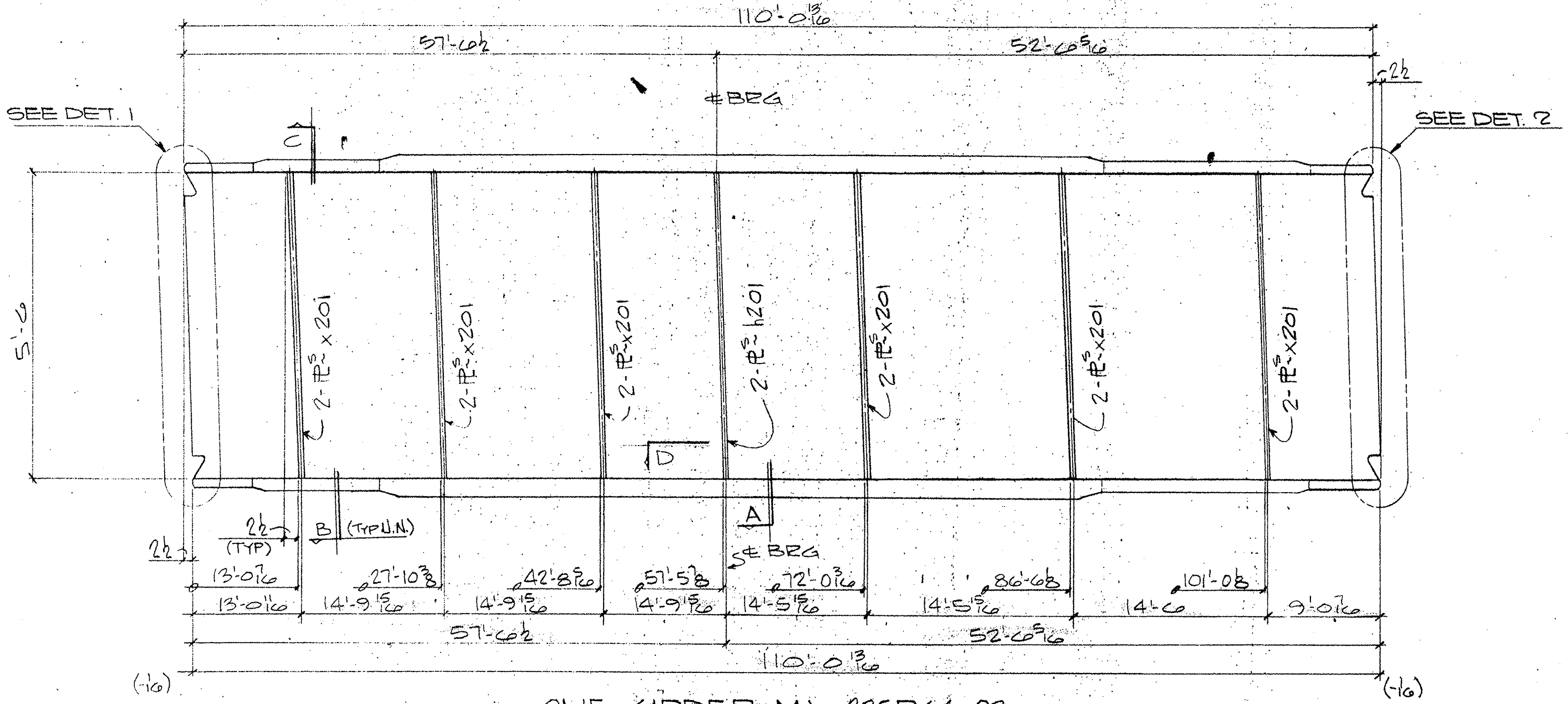

ONE GIRDER MK- 235PG4.03

(APPROX. WT = TONS)

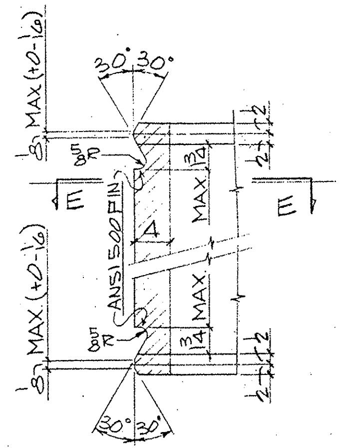

DETAIL - 1

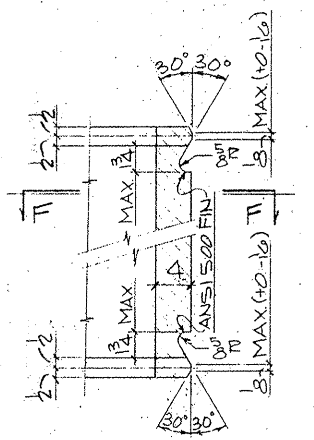

DETAIL - 2

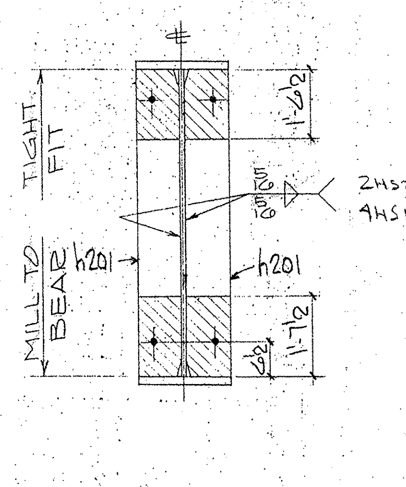

SECTION - A

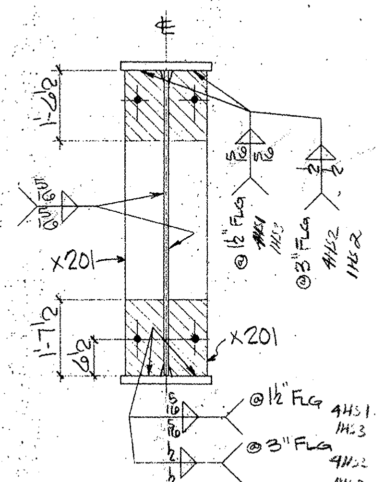

SECTION - B

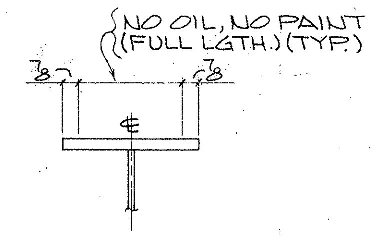

SECTION - C

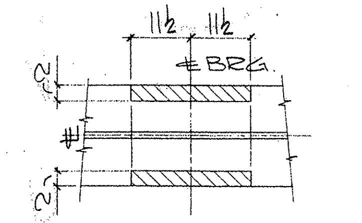

SECTION - D

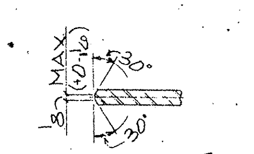

SECTION - E-E

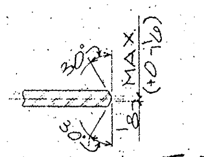

SECTION - F-F

SHOP NOTES:
1) FOR GENERAL NOTES SEE SHT. GN1.
2) FOR GIRDER SUB-ASSEMBLY SEE SHT.213
3) FOR STIFF. DETAILS SEE SHT. 201
4) FOR BLOCKING DIAGRAM SEE SHT.255
5) FOR HEAT CURVE DIAGRAM SEE SHT.252
6) ▨ INDICATES OIL, NO PAINT (N.S./F.S. & EDGES)

G0208

FED. ROAD DIV. NO.	STATE	FEDERAL AID PROJECT NO.			
6	TX.	NH 92(50)M			
STATE DIST. NO.	COUNTY	CONTROL NO.	SECTION NO.	JOB NO.	HIGHWAY NO.
21	HIDALGO	39	17	97	83/281

BILL OF MATERIAL

	Qnty.	Material	Length	Mark Temp	Mark Ship	Wt	Cut From	Remarks
1								
2	1	GIRDER			235PG4.03			
3	1	GIRDER SUB-	ASSY	B213				
4	2	BRG STIFF		h201				
5								
6	12	DIAF STIFF		x201				
7								
8								
9								
10								
11								
12								
13								
14								
15								
16								
17								
18								
19								
20								
21								
22								
23								
24								
25								
26								
27								
28								
29								
30								
31								
32								
33								
34								
35								
36								
37								
38								
39								
40								
41								
42								
43								
44								
45								
46								
47								
48								
49								
50								
51								
52								
53								
54								
55								
56								
57								
58								
59								
60								

TEXAS DEPARTMENT OF TRANSPORTATION
APPROVED
DIVISION OF BRIDGES AND STRUCTURES
APR 06 1993
APPROVAL OF THIS DRAWING DOES NOT RELIEVE THE CONTRACTOR OF THE RESPONSIBILITY FOR THE CORRECTNESS OF DETAIL

FOR APPROVAL
MAR 15 93
NOT FOR CONSTRUCTION

REVISION	DATE	DESCRIPTION OF REVISION
NO. 1		
NO. 2		
NO. 3		
NO. 4		
NO. 5		

PRINTING — Req'd / For / Date

Bolts — Holes: 15/16 ⌀ Unless Noted
Shop Paint: SEE SHT. GN1
Fab Spec: AS NTD. — Inspection
Architect
Erection By — Field Connections

HIRSCHFELD STEEL CO. INC.
112 WEST 29TH SAN ANGELO, TEXAS 76903
PHONE (915) 653-3211

DESCRIPTION	750'-0 PLATE GIRDER UNIT
STRUCTURE	US 83/281 INTERCHANGE RAMP #3
LOCATION	HIDALGO COUNTY
CUSTOMER	GILBERT TEXAS CONSTRUCTION
SHIP TO	
Customer's Order No.	SHEET 235 OF
Dwg. By JRC — Date 9/92	
Checked By JC — Date 10/92	JOB NO. 92-108

CE 92-13 (LINE # 3)

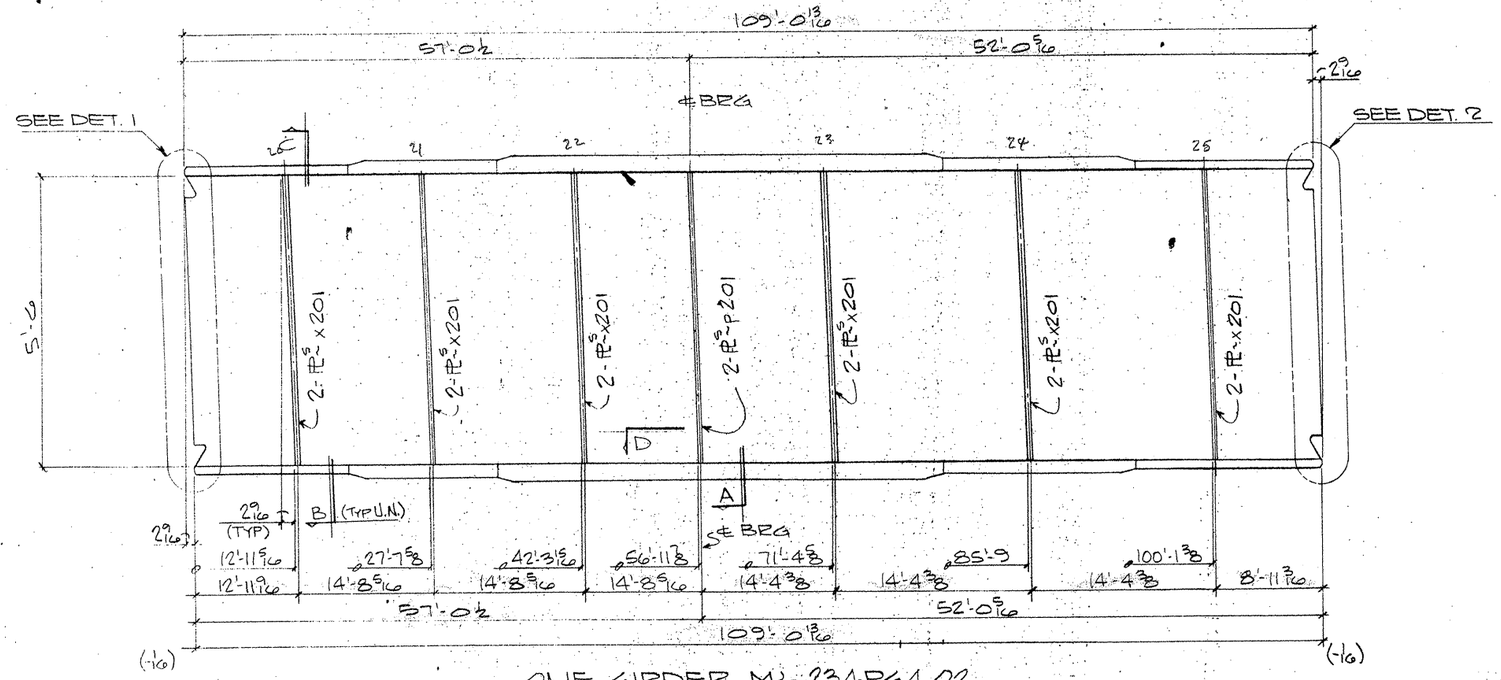

ONE GIRDER MK-234PG4.02

(APPROX. WT. = TONS)

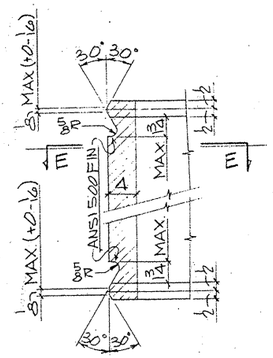

DETAIL - 1

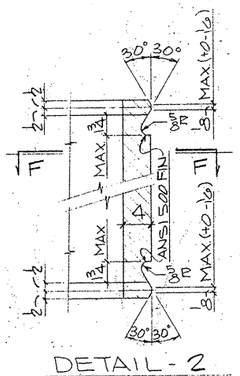

DETAIL - 2

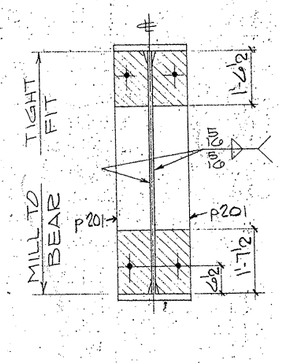

SECTION - A

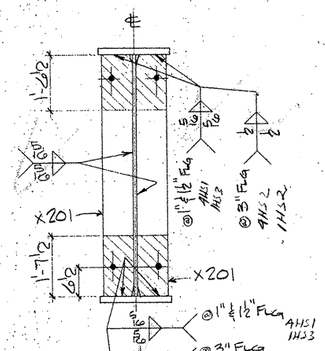

SECTION - B

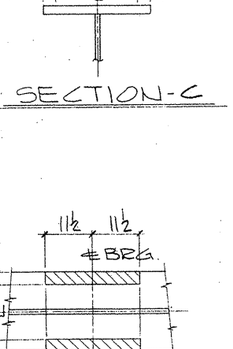

SECTION - C

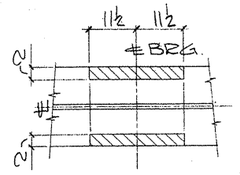

SECTION - D

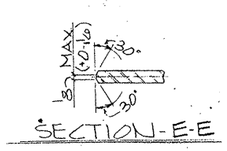

SECTION - E-E

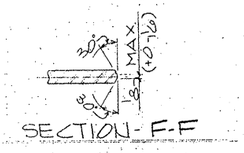

SECTION - F-F

SHOP NOTES:

1) FOR GENERAL NOTES SEE SHT. GN1
2) FOR GIRDER SUB-ASSEMBLY SEE SHT. 212
3) FOR STIFF. DETAILS SEE SHT. 201
4) FOR BLOCKING DIAGRAM SEE SHT. 254
5) FOR HEAT CURVE DIAGRAM SEE SHT. 252
6) ▨ INDICATES OIL, NO PAINT (N.S./F.S. & EDGES)

G0208

FED. ROAD DIV. NO.	STATE	FEDERAL AID PROJECT NO.			
6	TX.	NH 92(50)M			
STATE DIST. NO.	COUNTY	CONTROL NO.	SECTION NO.	JOB NO.	HIGHWAY NO.
21	HIDALGO	39	17	97	83/281

BILL OF MATERIAL

	Qnty.	Material	Length	Mark Temp	Mark Ship	Wt.	Cut From	Remarks
1								
2	1	GIRDER			234 PG4.02			
3	1	GIRDER SUB-ASSY		B212				
4	2	BRG STIFF		P201				
5								
6	12	DIAF STIFF		X201				
7–60								

TEXAS DEPARTMENT OF TRANSPORTATION
APPROVED
DIVISION OF BRIDGES AND STRUCTURES
APR 06 1993

APPROVAL OF THIS DRAWING DOES NOT RELIEVE THE CONTRACTOR OF THE RESPONSIBILITY FOR THE CORRECTNESS OF DETAIL

FOR APPROVAL
MAR 15 93
NOT FOR CONSTRUCTION

REVISION	DATE	DESCRIPTION OF REVISION
NO. 1		
NO. 2		
NO. 3		
NO. 4		
NO. 5		

PRINTING		
Req'd	For	Date

Bolts Holes 15/16 ø Unless Noted
Shop Paint SEE SHT. GN1
Fab Spec AASHTO Inspection
Architect
Erection By Field Connections

HIRSCHFELD STEEL CO. INC.
112 WEST 29TH SAN ANGELO, TEXAS 76903
PHONE (915) 653-3211

DESCRIPTION	750'-0 PLATE GIRDER UNIT
STRUCTURE	US 83/281 INTERCHANGE RAMP #3
LOCATION	HIDALGO COUNTY
CUSTOMER	GILBERT TEXAS CONSTRUCTION
SHIP TO	
Customer's Order No.	
Dwg. By JTC	Date 9/92
Checked By VC	Date 10/92

SHEET 234 OF
JOB NO. 92-108

APR MAR 15

CE92-13 (LINE #2)

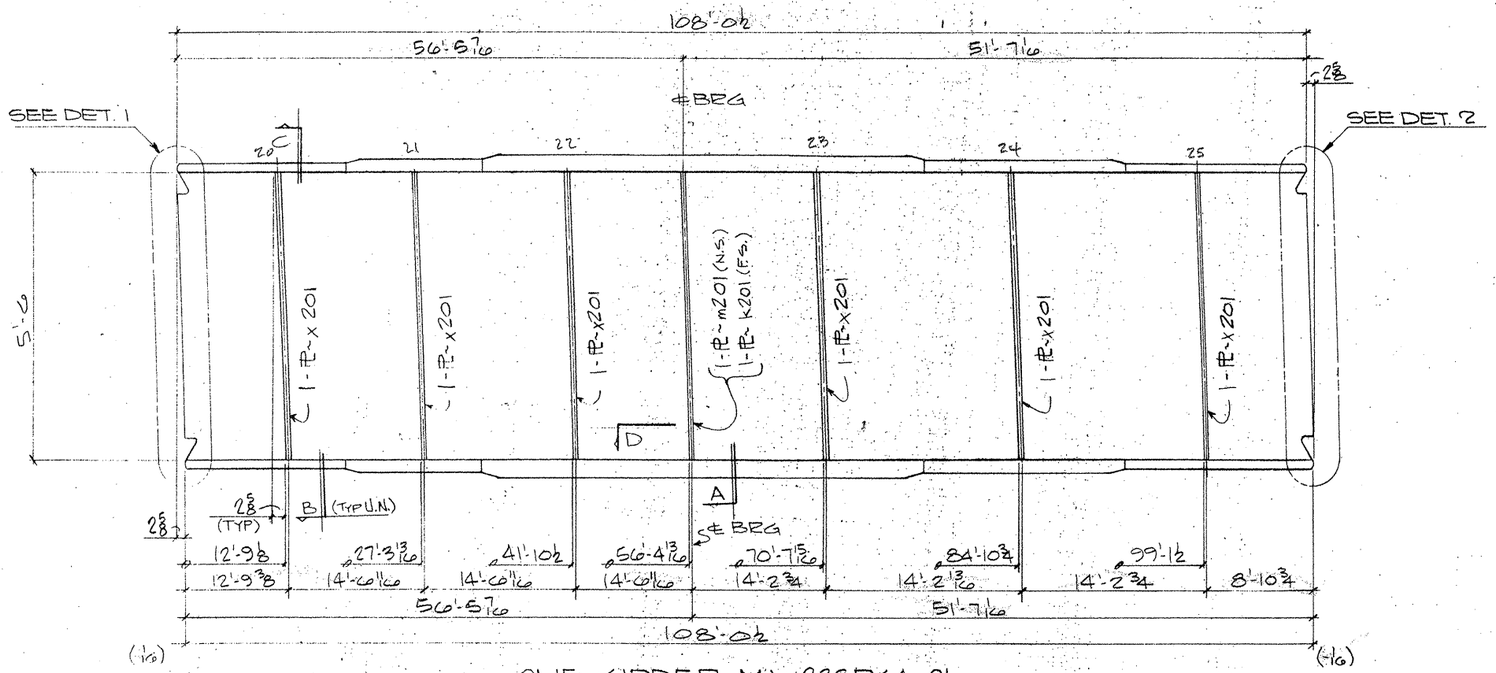

ONE GIRDER MK~ 233PG4.01

(APPROX. WT. = TONS)

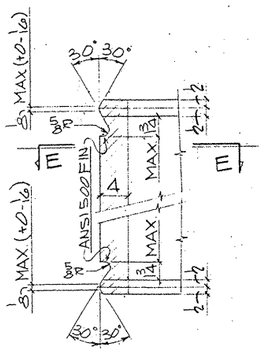

DETAIL - 1

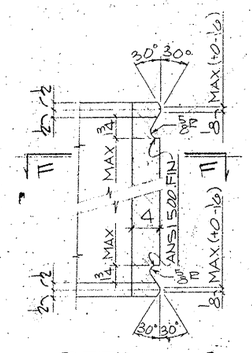

DETAIL - 2

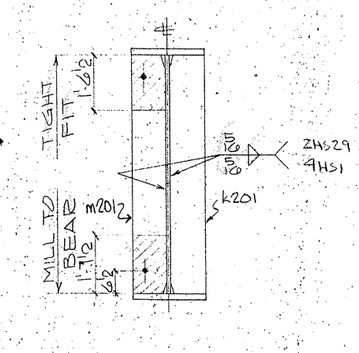

SECTION - A

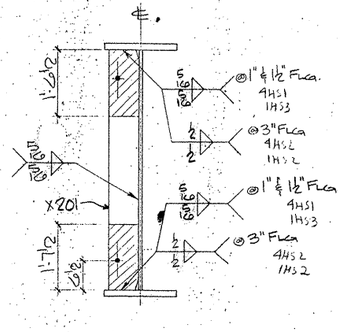

SECTION - B

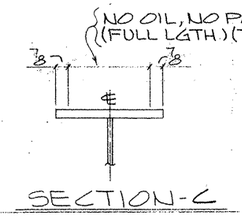

SECTION - C

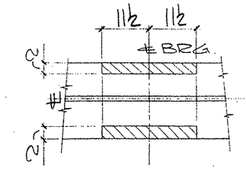

SECTION - D

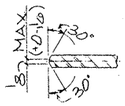

SECTION - E-E

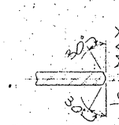

SECTION - F-F

SHOP NOTES:

1) FOR GENERAL NOTES SEE SHT. GN1
2) FOR GIRDER SUB-ASSEMBLY SEE SHT. 211
3) FOR STIFF. DETAILS SEE SHT. 201
4) FOR BLOCKING DIAGRAM SEE SHT. 253
5) FOR HEAT CURVE DIAGRAM SEE SHT. 252
6) ▨ INDICATES OIL, NO PAINT (N.S./F.S. & EDGES)

G0208

FED. ROAD DIV. NO.	STATE	FEDERAL AID PROJECT NO.				
6	TX.	NH 92(50)M				
STATE DIST. NO.	COUNTY	CONTROL NO.	SECTION NO.	JOB NO.	HIGHWAY NO.	
21	HIDALGO	39	17	97	83/281	

BILL OF MATERIAL

	Qnty	Material	Length	Mark Temp	Mark Ship	Wt	Cut From	Remarks
2	1	GIRDER			233PG4.01			
3	1	GIRDER SUB-ASSY		B211				
4	1	BRG STIFF		k201				
5	1	BRG STIFF		m201				
6	6	DIAF STIFF		x201				

TEXAS DEPARTMENT OF TRANSPORTATION
APPROVED
DIVISION OF BRIDGES AND STRUCTURES
APR 06 1993

APPROVAL OF THIS DRAWING DOES NOT RELIEVE THE CONTRACTOR OF THE RESPONSIBILITY FOR THE CORRECTNESS OF DETAIL.

FOR APPROVAL
JAN 15 93
NOT FOR CONSTRUCTION

REVISION	DATE	DESCRIPTION OF REVISION
NO. 1		
NO. 2		
NO. 3		
NO. 4		
NO. 5		

PRINTING Req'd	For	Date

Bolts Holes: 15/16 ø Unless Noted
Shop Paint SEE SHT. GN1
Fab Spec AS NTD. Inspection
Architect
Erection By Field Connections

HIRSCHFELD STEEL CO. INC.
112 WEST 29TH SAN ANGELO, TEXAS 76903
PHONE (915) 653-3211

DESCRIPTION	750'-0 PLATE GIRDER UNIT
STRUCTURE	US 83/281 INTERCHANGE RAMP E3
LOCATION	HIDALGO COUNTY
CUSTOMER	GILBERT TEXAS CONSTRUCTION
SHIP TO	
Customer's Order No.	
Dwg By JRR	Date 9/92
Checked By JC	Date 10/92

SHEET 233 OF
JOB NO 92-108

CE92-13 (LINE # 1)

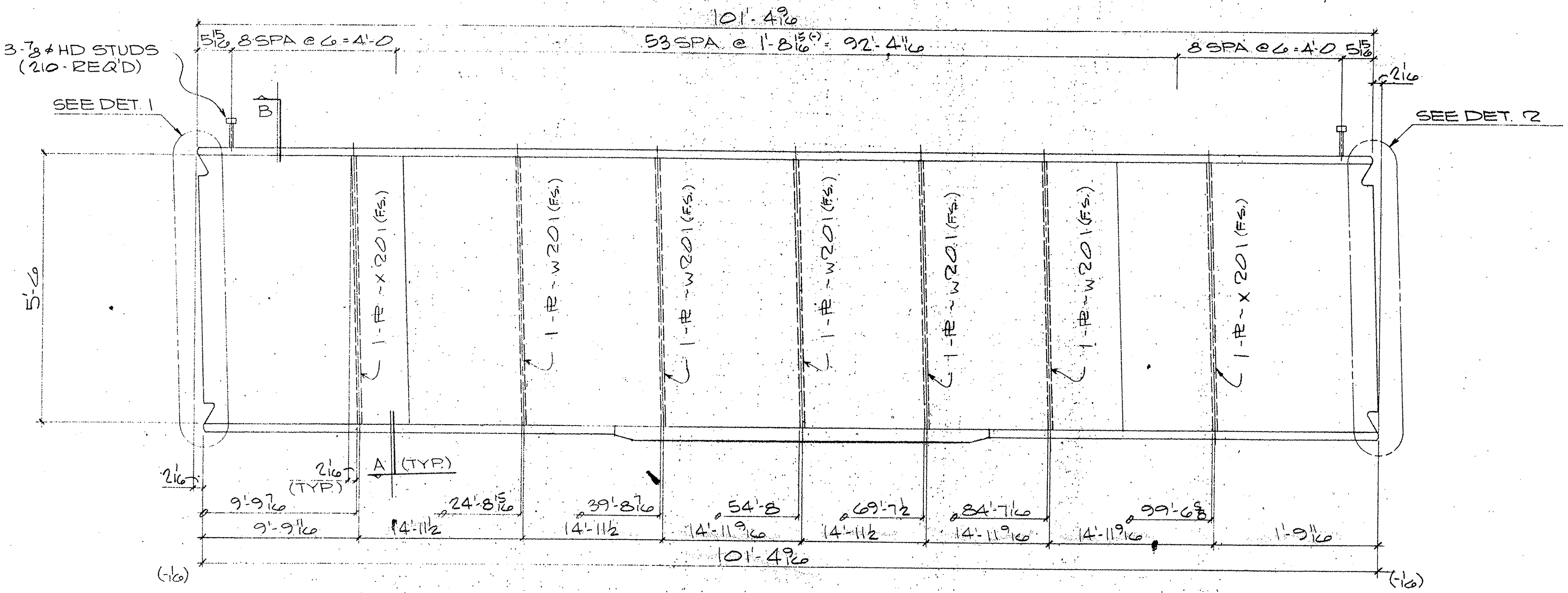

ONE GIRDER MK-232PG3.04
(APPROX WT = TONS)

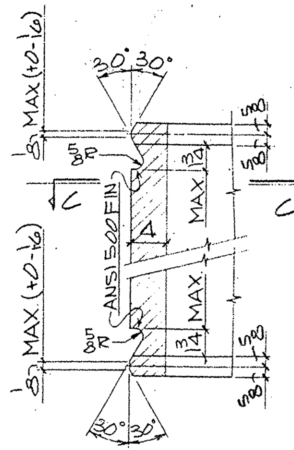

DETAIL - 1

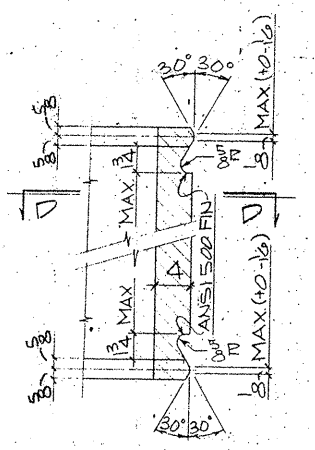

DETAIL - 2

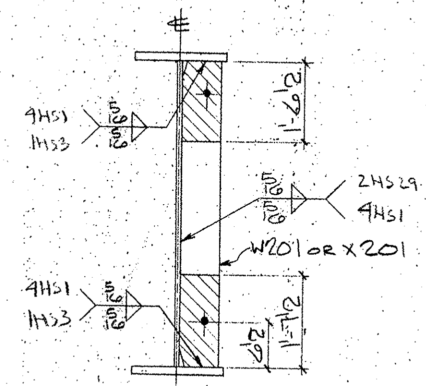

SECTION - A

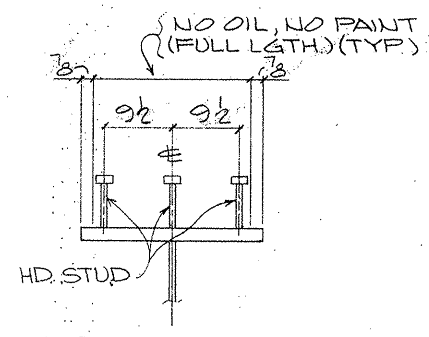

SECTION - B
(TYP. STUD SECT.)

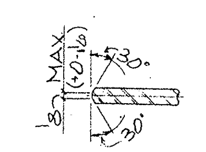

SECTION - C-C

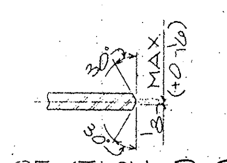

SECTION - D-D

BILL OF MATERIAL

	Qnty	Material	Length	Mark Temp	Mark Ship	Wt.	Cut From	Remarks
1								
2	1	GIRDER		232PG3.04				
3	1	GIRDER SUB-ASSY		A214				
4	5	DIAF STIFF		W201				
5	2	DIAF STIFF		X201				
6	210	HD STUDS 7/8	0'-7				205-1	A108
7								
8								
9								
10								
11								
12								
13								
14								
15								
16								
17								
18								
19								
20								
21								
22								
23								
24								
25								
26								
27								
28								
29								
30								
31								
32								
33								
34								
35								
36								
37								
38								
39								
40								
41								
42								
43								
44								
45								
46								
47								
48								
49								
50								
51								
52								
53								
54								
55								
56								
57								
58								
59								
60								

TEXAS DEPARTMENT OF TRANSPORTATION
APPROVED
DIVISION OF BRIDGES AND STRUCTURES
APR 06 1993
APPROVAL OF THIS DRAWING DOES NOT RELIEVE THE CONTRACTOR OF THE RESPONSIBILITY FOR THE CORRECTNESS OF DETAIL.

FOR APPROVAL
MAR 15 '93
NOT FOR CONSTRUCTION

REVISION	DATE	DESCRIPTION OF REVISION
NO 1		
NO 2		
NO 3		
NO 4		
NO 5		

SHOP NOTES:
1) FOR GENERAL NOTES SEE SHT. GN1
2) FOR GIRDER SUB-ASSEMBLY SEE SHT. 214
3) FOR STIFF. DETAILS SEE SHT. 201
4) FOR BLOCKING DIAGRAM SEE SHT. 256
5) FOR HEAT CURVE DIAGRAM SEE SHT. 251
6) ▨ INDICATES OIL, NO PAINT (N.S./F.S. & EDGES)

G0208

FED. ROAD DIV. NO.	STATE	FEDERAL AID PROJECT NO.			
6	TX.	NH 92(50)M			
STATE DIST. NO.	COUNTY	CONTROL NO.	SECTION NO.	JOB NO.	HIGHWAY NO.
21	HIDALGO	39	17	97	83/281

PRINTING: Req'd | For | Date — REV MAR 15

Bolts: Holes 15/16 ϕ Unless Noted
Shop Paint: SEE SHT. GN1
Fab Spec: AS NTD. Inspection
Architect
Erection By: Field Connections

HIRSCHFELD STEEL CO. INC.
112 WEST 29TH SAN ANGELO, TEXAS 76903
PHONE (915) 653-3211

DESCRIPTION: 750'-0 PLATE GIRDER UNIT
STRUCTURE: US 83/281 INTERCHANGE RAMP #3
LOCATION: HIDALGO COUNTY
CUSTOMER: GILBERT TEXAS CONSTRUCTION
SHIP TO
Customer's Order No.
SHEET 232 OF
Dwg By JDC Date 9/92
Checked By JC Date 10/92
JOB NO. 92-108

CE 92-13 (LINE #4)

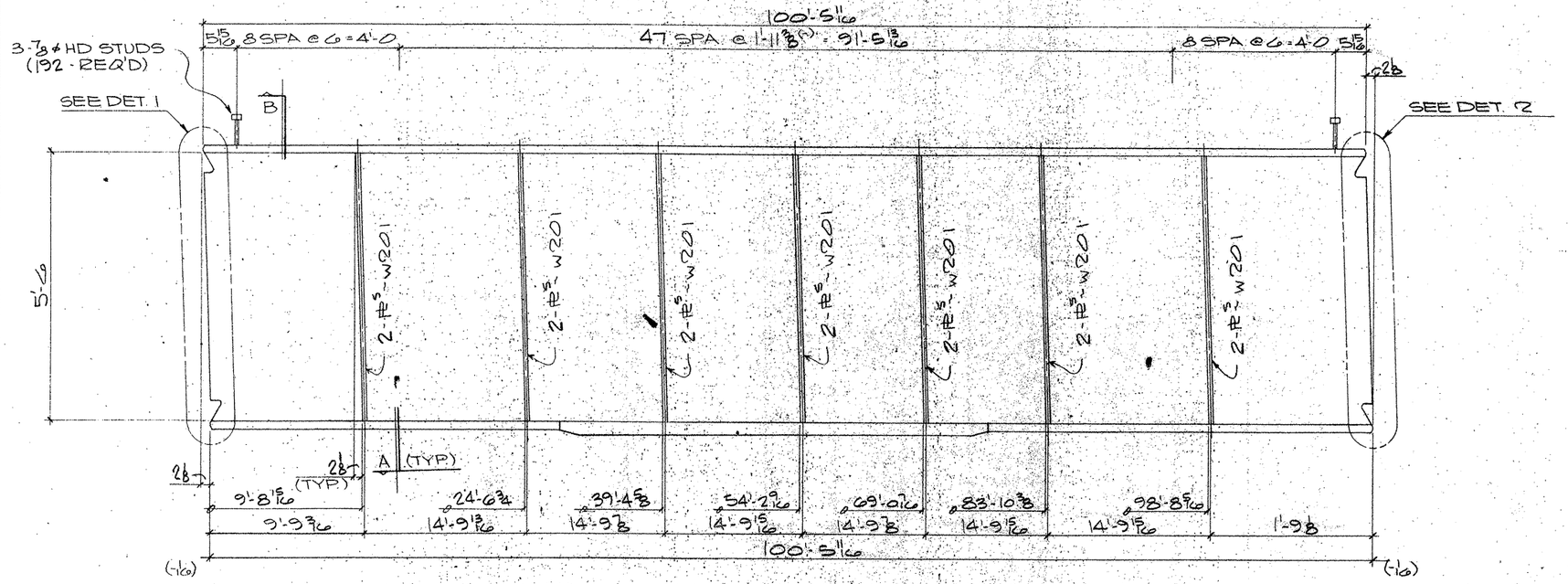

ONE GIRDER MK-231PG3.03
(APPROX WT = TONS)

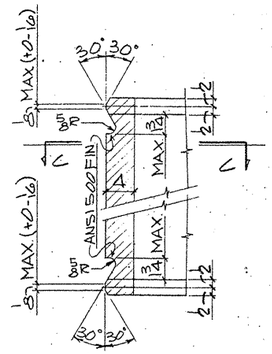

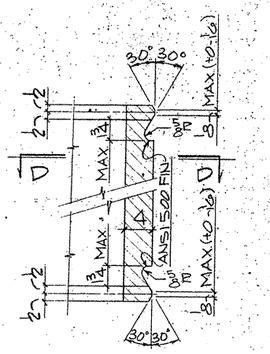

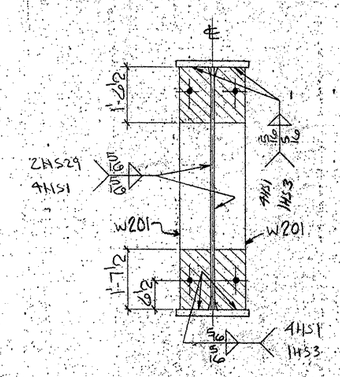

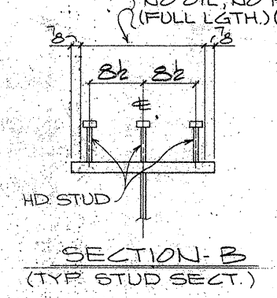

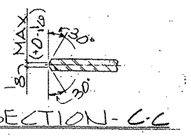

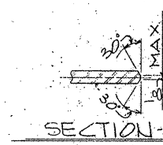

SHOP NOTES:

1) FOR GENERAL NOTES SEE SHT. GN1
2) FOR GIRDER SUB-ASSEMBLY SEE SHT. 213
3) FOR STIFF. DETAILS SEE SHT. 201
4) FOR BLOCKING DIAGRAM SEE SHT. 255
5) FOR HEAT CURVE DIAGRAM SEE SHT. 261
6) ▨ INDICATES OIL, NO PAINT (N.S./F.S. & EDGES)

BILL OF MATERIAL

	Qnty.	Material	Length	Mark Temp.	Mark Ship	Wt	Cut From	Remarks
1								
2	1	GIRDER		231PG3.03				
3	1	GIRDER SUB-ASSY		A213				
4	14	DIAF STIFF		W201				
5								
6	192	HD STUDS 7/8	0'-7				205-1	A108
7								
8								
9								
10								
11								
12								
13								
14								
15								
16								
17								
18								
19								
20								
21								
22								
23								
24								
25								
26								
27								
28								
29								
30								
31								
32								
33								
34								
35								
36								
37								
38								
39								
40								
41								
42								
43								
44								
45								
46								
47								
48								
49								
50								
51								
52								
53								
54								
55								
56								
57								
58								
59								
60								

TEXAS DEPARTMENT OF TRANSPORTATION
APPROVED
DIVISION OF BRIDGES AND STRUCTURES
APR 06 1993
APPROVAL OF THIS DRAWING DOES NOT RELIEVE THE CONTRACTOR OF THE RESPONSIBILITY FOR THE CORRECTNESS OF DETAIL.

FOR APPROVAL
MAR 15 '93
NOT FOR CONSTRUCTION

REVISION	DATE	DESCRIPTION OF REVISION
NO. 1		
NO. 2		
NO. 3		
NO. 4		
NO. 5		

PRINTING

Req'd	For	Date

Bolts — Holes: 15/16 ϕ — Unless Noted
Shop Paint: SEE SHT GN1
Fab Spec: AS NTD — Inspection
Architect
Erection By — Field Connections

HIRSCHFELD STEEL CO. INC.
112 WEST 29TH SAN ANGELO, TEXAS 76903
PHONE (915) 653-3211

DESCRIPTION: 130'-0 PLATE GIRDER UNIT
STRUCTURE: US 83/281 INTERCHANGE RAMP #3
LOCATION: HIDALGO COUNTY
CUSTOMER: GILBERT TEXAS CONSTRUCTION
SHIP TO:
Customer's Order No.
Dwg. By: JDG — Date: 9/92
Checked By: JC — Date: 10/92
SHEET 23 OF
JOB NO. 92-108

APR MAR 15

G0208

FED. ROAD DIV. NO.	STATE	FEDERAL AID PROJECT NO.				
6	TX.	NH 92(50)M				
STATE DIST. NO.	COUNTY	CONTROL NO.	SECTION NO.	JOB NO.	HIGHWAY NO.	
21	HIDALGO	39	17	97	83/281	

CE 92-13 (LINE #3)

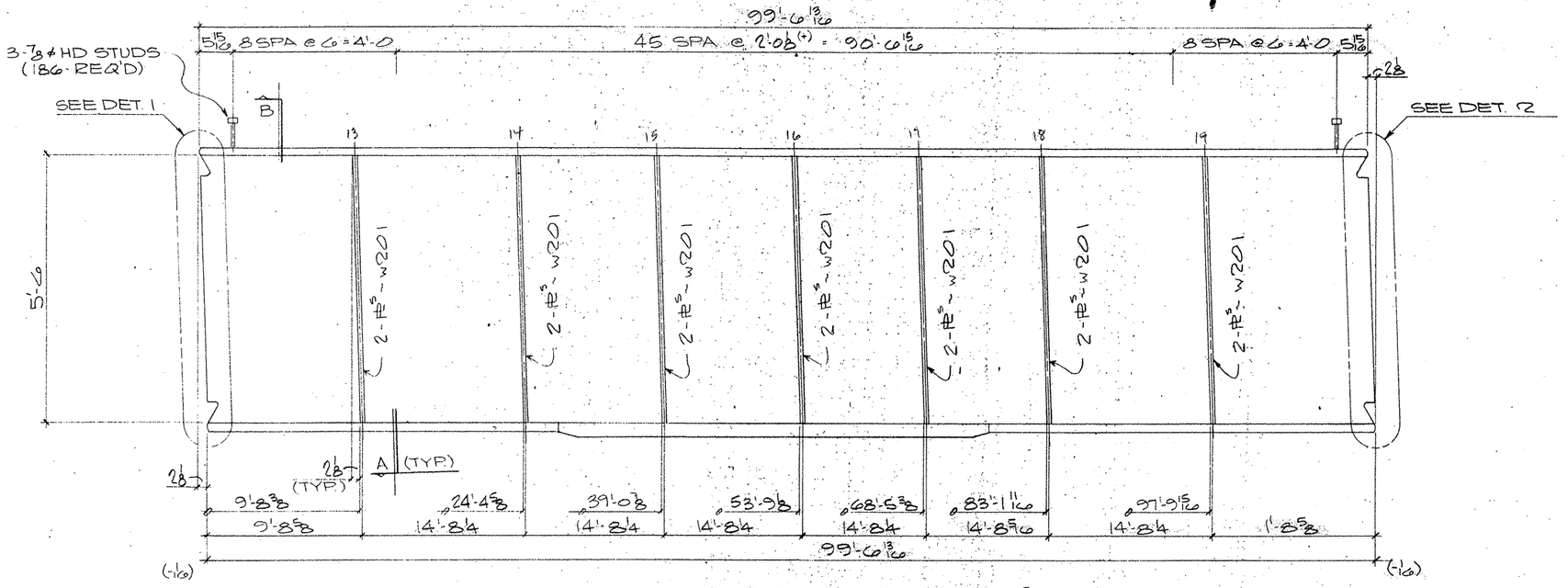

ONE GIRDER MK-230PG3.02
(APPROX. WT. = TONS)

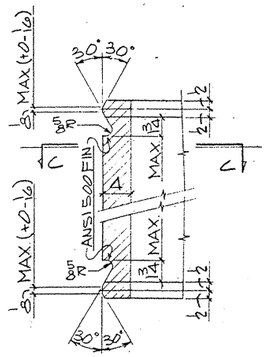

DETAIL - 1

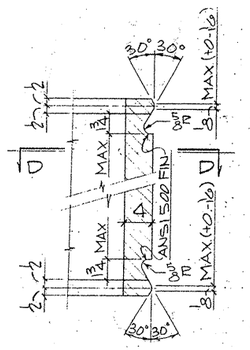

DETAIL - 2

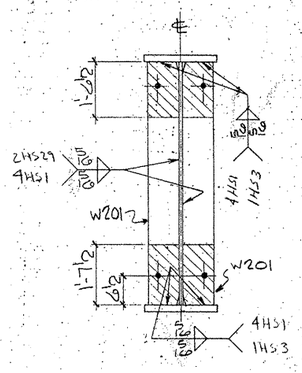

SECTION - A

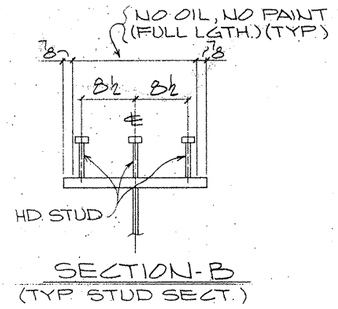

SECTION - B
(TYP STUD SECT.)

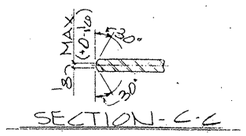

SECTION - C-C

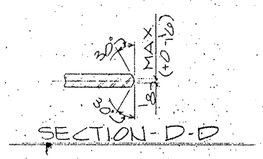

SECTION - D-D

SHOP NOTES:

1) FOR GENERAL NOTES SEE SHT. GN1
2) FOR GIRDER SUB-ASSEMBLY SEE SHT. A212
3) FOR STIFF. DETAILS SEE SHT. 201
4) FOR BLOCKING DIAGRAM SEE SHT. 254
5) FOR HEAT CURVE DIAGRAM SEE SHT. 251
6) ////// INDICATES OIL, NO PAINT (N.S./F.S. & EDGES)

G0208

FED. ROAD DIV. NO.	STATE	FEDERAL AID PROJECT NO.				
6	TX.	NH 92(50)M				
STATE DIST. NO.	COUNTY	CONTROL NO.	SECTION NO.	JOB NO.	HIGHWAY NO.	
21	HIDALGO	39	17	97	83/281	

BILL OF MATERIAL

	Qnty	Material	Length	Mark Temp	Mark Ship	Wt	Cut From	Remarks
1								
2	1	GIRDER		230PG3.02				
3	1	GIRDER SUB-ASSY		A212				
4	14	DIAF. STIFF		W201				
5								
6	186	HD STUDS 7/8	0'-7				205-1	A108

TEXAS DEPARTMENT OF TRANSPORTATION
APPROVED
DIVISION OF BRIDGES AND ~~STRUCTURES~~
APR 06 1993
APPROVAL OF THIS DRAWING DOES NOT RELIEVE THE CONTRACTOR OF THE RESPONSIBILITY FOR THE CORRECTNESS OF DETAIL.

FOR APPROVAL
MAY 5 93
NOT FOR CONSTRUCTION

REVISION	DATE	DESCRIPTION OF REVISION
NO. 1		
NO. 2		
NO. 3		
NO. 4		
NO. 5		

PRINTING Req'd	For	Date

Bolts ~~A325~~ Holes: 15/16 ø Unless Noted
Shop Paint SEE SHT. GN1
Fab Spec. AS NTD Inspection
Architect
Erection By Field Connections

HIRSCHFELD STEEL CO. INC.
112 WEST 29TH SAN ANGELO, TEXAS 76903
PHONE (915) 653-3211

DESCRIPTION	150'-0 PLATE GIRDER UNIT
STRUCTURE	US 83/281 INTERCHANGE RAMP #3
LOCATION	HIDALGO COUNTY
CUSTOMER	GILBERT TEXAS CONSTRUCTION
SHIP TO	
Customer's Order No.	
Dwg. By JDC	Date 3/92
Checked By JC	Date 10/92

SHEET 230 OF
JOB NO 92-108

CE 92-13 (LINE #2)

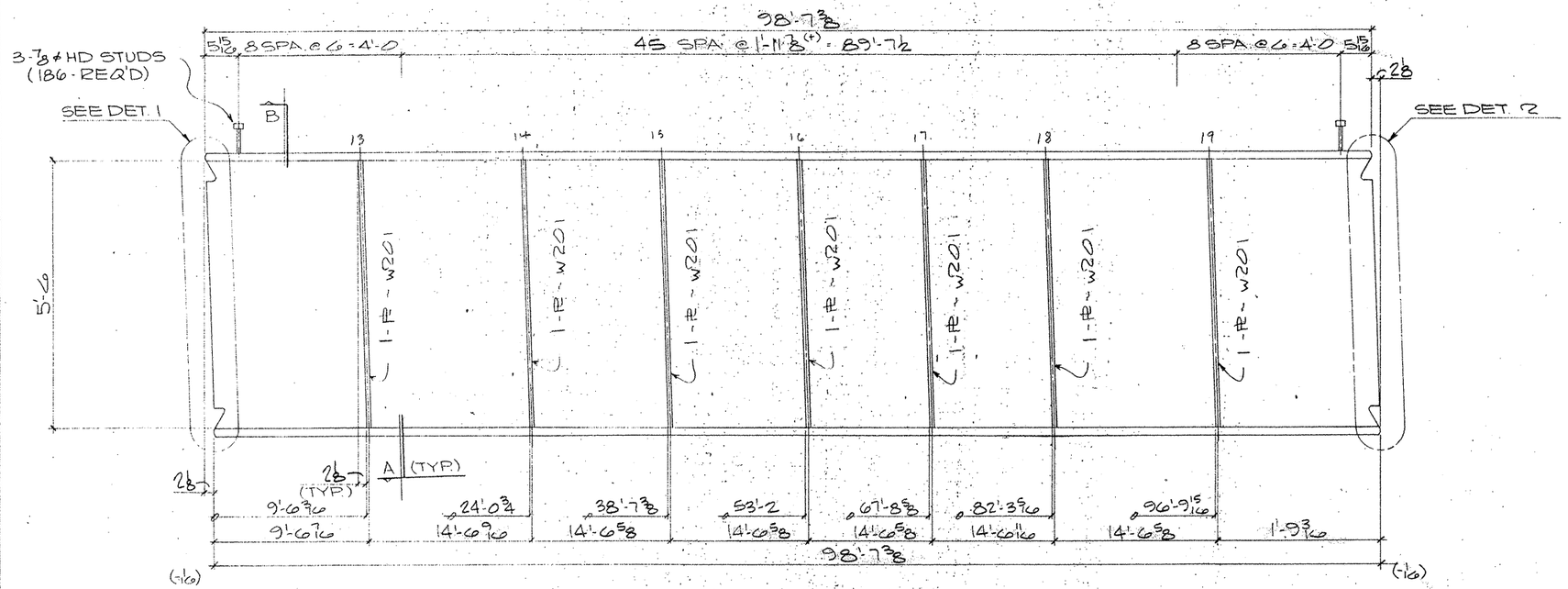

ONE GIRDER MK~229PG3.01

(APPROX. WT. = TONS)

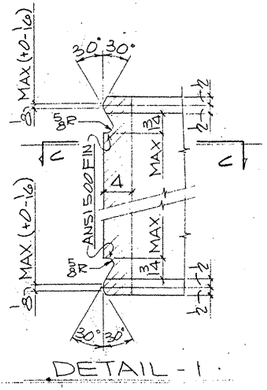

DETAIL - 1

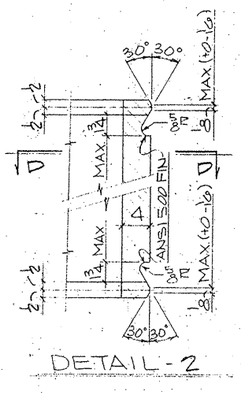

DETAIL - 2

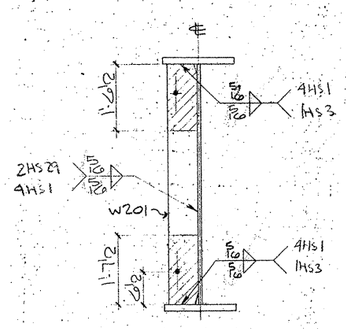

SECTION - A

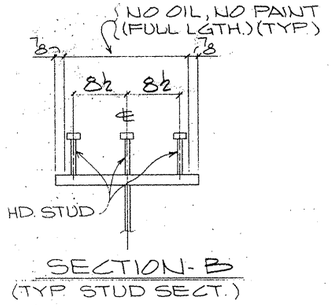

SECTION - B

(TYP. STUD SECT.)

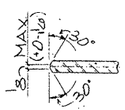

SECTION - C - C

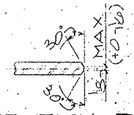

SECTION - D - D

SHOP NOTES:

1) FOR GENERAL NOTES SEE SHT. GN1
2) FOR GIRDER SUB-ASSEMBLY SEE SHT. A211
3) FOR STIFF. DETAILS SEE SHT. 201
4) FOR BLOCKING DIAGRAM SEE SHT. 253
5) FOR HEAT CURVE DIAGRAM SEE SHT. 251
6) ▨ INDICATES OIL, NO PAINT (N.S./F.S. & EDGES)

G0208

FED. ROAD DIV. NO.	STATE	FEDERAL AID PROJECT NO.				
6	TX.	NH 92(50)M				
STATE DIST. NO.	COUNTY	CONTROL NO.	SECTION NO.	JOB NO.	HIGHWAY NO.	
21	HIDALGO	39	17	97	83/281	

BILL OF MATERIAL

	Qnty	Material	Length	Mark Temp	Mark Ship	Wt.	Cut From	Remarks
1								
2	1	GIRDER		229PG3.01				
3	1	GIRDER SUB-ASSY		A211				
4	7	DIAF STIFF		W201				
5								
6	186	HD STUDS 7/8	0'-7				205-1	A108
7–60								

TEXAS DEPARTMENT OF TRANSPORTATION
APPROVED
DIVISION OF BRIDGES AND STRUCTURES
APR 06 1993

APPROVAL OF THIS DRAWING DOES NOT RELIEVE THE CONTRACTOR OF THE RESPONSIBILITY FOR THE CORRECTNESS OF DETAIL

FOR APPROVAL
MAR 15 '93
NOT FOR CONSTRUCTION

REVISION	DATE	DESCRIPTION OF REVISION
NO 1		
NO 2		
NO 3		
NO 4		
NO 5		

PRINTING Req'd	For	Date
APR MAR 15		

Bolts: Holes 15/16 ø Unless Noted
Shop Paint: SEE SHT GN1
Fab Spec: AS NTD — Inspection
Architect
Erection By — Field Connections

HIRSCHFELD STEEL CO. INC.
112 WEST 29TH SAN ANGELO, TEXAS 76903
PHONE (915) 653-3211

DESCRIPTION	150'-0 PLATE GIRDER UNIT
STRUCTURE	US 83/281 INTERCHANGE RAMP #3
LOCATION	HIDALGO COUNTY
CUSTOMER	GILBERT TEXAS CONSTRUCTION
SHIP TO	
Customer's Order No.	
Dwg By JDC — Date 9/92	SHEET 229 OF
Checked By JR — Date 10/92	JOB NO 92-108

CE-92-13 (LINE # 1)

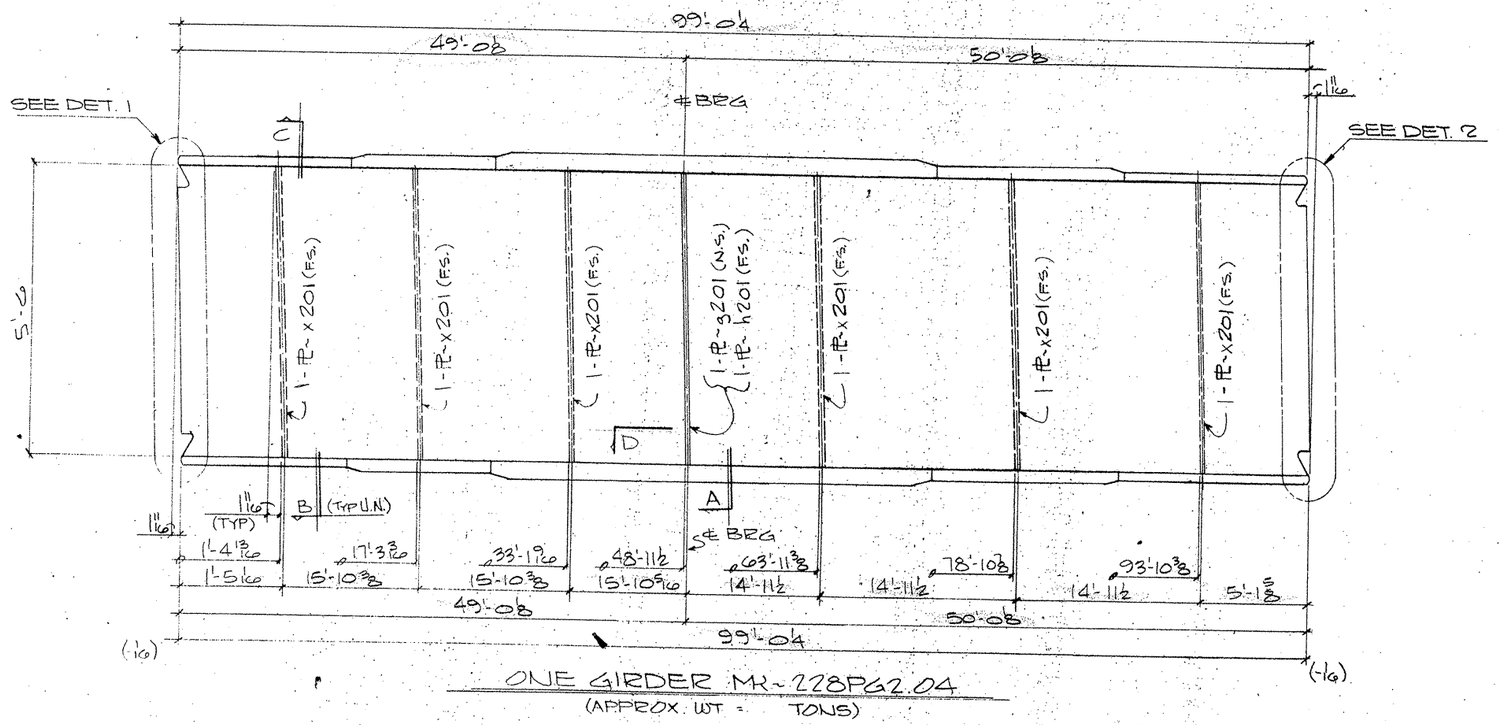

ONE GIRDER MK-228PG2.04
(APPROX. WT = TONS)

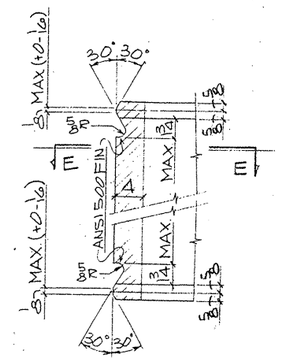

DETAIL - 1

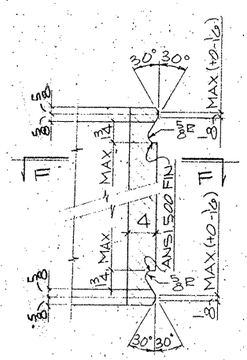

DETAIL - 2

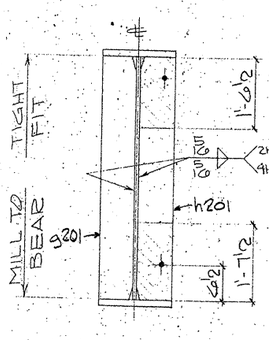

SECTION - A

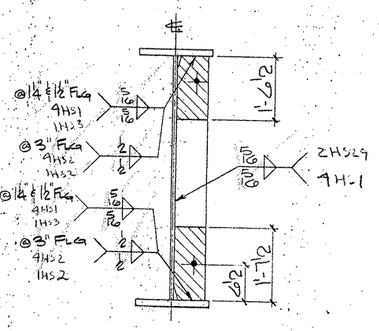

SECTION - B

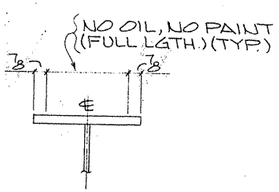

SECTION - C

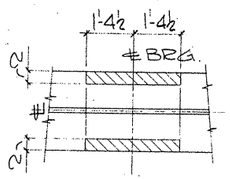

SECTION - D

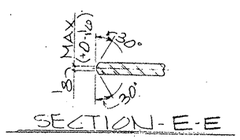

SECTION - E-E

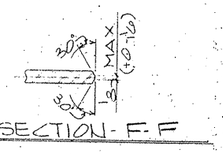

SECTION - F-F

SHOP NOTES:

1) FOR GENERAL NOTES SEE SHT. GN1
2) FOR GIRDER SUB-ASSEMBLY SEE SHT.210
3) FOR STIFF. DETAILS SEE SHT.201
4) FOR BLOCKING DIAGRAM SEE SHT.256
5) FOR HEAT CURVE DIAGRAM SEE SHT.251
6) ▨ INDICATES OIL, NO PAINT (N.S./F.S. & EDGES)

G0208

FED. ROAD DIV. NO.	STATE	FEDERAL AID PROJECT NO.			
6	TX.	NH 92(50)M			
STATE DIST. NO.	COUNTY	CONTROL NO.	SECTION NO.	JOB NO.	HIGHWAY NO.
21	HIDALGO	39	17	97	83/281

BILL OF MATERIAL

	Qnty	Material	Length	Mark Temp	Mark Ship	Wt.	Cut From	Remarks
1								
2	1	GIRDER			228 PG2.04			
3	1	GIRDER SUB-ASSY		B210				
4	1	BRG STIFF		B201				
5	1	BRG STIFF		H201				
6	6	DIAF STIFF		X201				
7–60								

TEXAS DEPARTMENT OF TRANSPORTATION
APPROVED
~~DIVISION OF BRIDGES AND STRUCTURES~~
APR 06 1993
APPROVAL OF THIS DRAWING DOES NOT ~~RELIEVE THE CONTRACTOR OF~~ THE RESPONSIBILITY FOR THE CORRECTNESS OF DETAIL.

FOR APPROVAL MAR 15 '93
NOT FOR CONSTRUCTION

REVISION	DATE	DESCRIPTION OF REVISION
NO. 1		
NO. 2		
NO. 3		
NO. 4		
NO. 5		

PRINTING

Req'd	For	Date

Bolts Holes: 15/16 ø Unless Noted
Shop Paint SEE SHT. GN1
Fab. Spec. AS.NTD. Inspection
Architect
Erection By Field Connections

HIRSCHFELD STEEL CO. INC.
112 WEST 29TH SAN ANGELO TEXAS 76903
PHONE (915) 653-3211

DESCRIPTION	750'-0 PLATE GIRDER UNIT
STRUCTURE	US 83/281 INTERCHANGE RAMP E-S
LOCATION	HIDALGO COUNTY
CUSTOMER	GILBERT TEXAS CONSTRUCTION
SHIP TO	
Customer's Order No.	
Dwg. By JRR	Date 3/92
Checked By JC	Date 10/92

SHEET 228 OF
JOB NO. 92-108

CE92-13 (LINE #4)

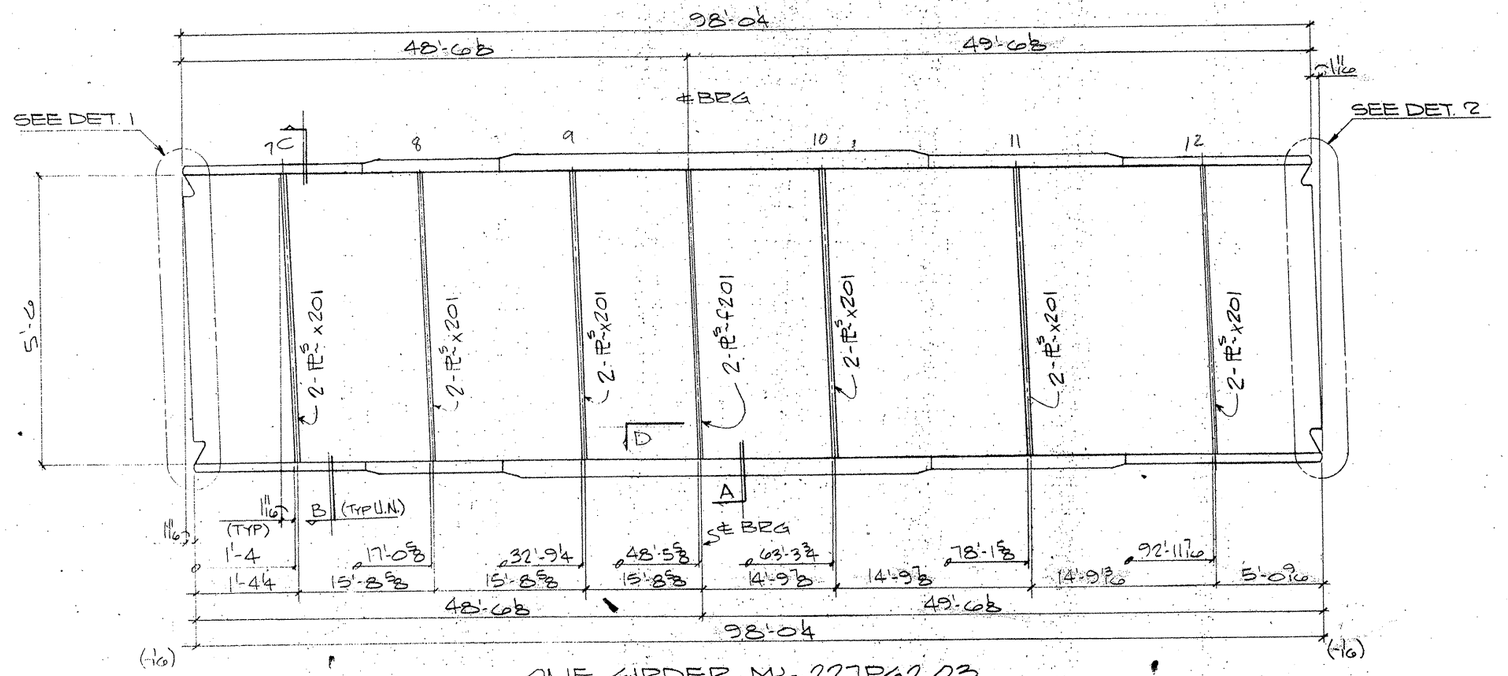

ONE GIRDER MK-227PG2.03
(APPROX. WT. = TONS)

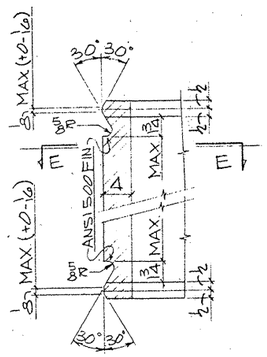

DETAIL-1

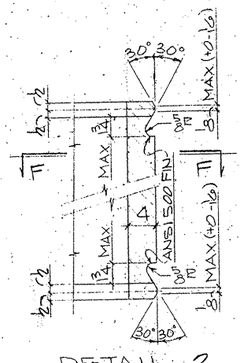

DETAIL-2

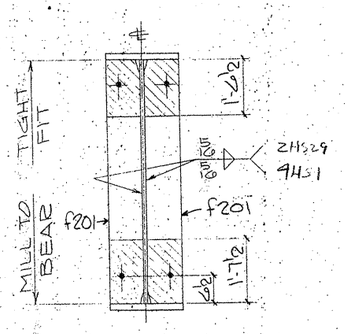

SECTION-A

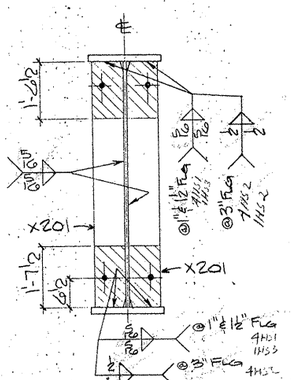

SECTION-B

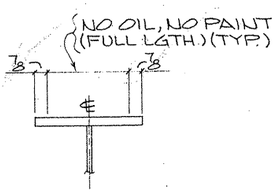

SECTION-C

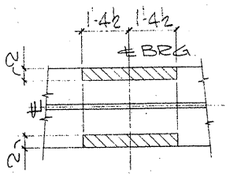

SECTION-D

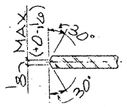

SECTION-E-E

SECTION-F-F

SHOP NOTES:
1) FOR GENERAL NOTES SEE SHT. GN1
2) FOR GIRDER SUB-ASSEMBLY SEE SHT. 209
3) FOR STIFF. DETAILS SEE SHT. 201
4) FOR BLOCKING DIAGRAM SEE SHT. 255
5) FOR HEAT CURVE DIAGRAM SEE SHT. 251
6) ▨ INDICATES OIL, NO PAINT (N.S./F.S. & EDGES)

G0208

FED. ROAD DIV. NO.	STATE	FEDERAL AID PROJECT NO.			
6	TX.	NH 92(50)M			
STATE DIST. NO.	COUNTY	CONTROL NO.	SECTION NO.	JOB NO.	HIGHWAY NO.
21	HIDALGO	39	17	97	83/281

BILL OF MATERIAL

	Qnty.	Material	Length	Mark Temp	Mark Ship	Wt	Cut From	Remarks
1								
2	1	GIRDER			227PG2.03			
3	1	GIRDER SUB-ASSY		B209				
4	2	BRG STIFF		f201				
5								
6	12	DIAF STIFF		x201				

TEXAS DEPARTMENT OF TRANSPORTATION
APPROVED
DIVISION OF BRIDGES AND STRUCTURES
APR 06 1993
APPROVAL OF THIS DRAWING DOES NOT RELIEVE THE CONTRACTOR OF THE RESPONSIBILITY FOR THE CORRECTNESS OF DETAIL.

FOR APPROVAL
MAR 15 '93
NOT FOR CONSTRUCTION

REVISION	DATE	DESCRIPTION OF REVISION
NO. 1		
NO. 2		
NO. 3		
NO. 4		
NO. 5		

PRINTING

Req'd	For	Date

Bolts Holes 15/16 ⌀ Unless Noted
Shop Paint SEE SHT. GN1
Fab. Spec. AS NTD. Inspection
Architect
Erection By Field Connections

HIRSCHFELD STEEL CO. INC.
112 WEST 29TH SAN ANGELO, TEXAS 76903
PHONE (915) 653-3211

DESCRIPTION 750'-0 PLATE GIRDER UNIT
STRUCTURE US 83/281 INTERCHANGE RAMP #3
LOCATION HIDALGO COUNTY
CUSTOMER GILBERT TEXAS CONSTRUCTION
SHIP TO
Customer's Order No.
Dwg By JDC Date 9/92
Checked By JC Date 10/92
SHEET 227 OF
JOB NO. 92-108

CE 92-13 (LINE # 3)

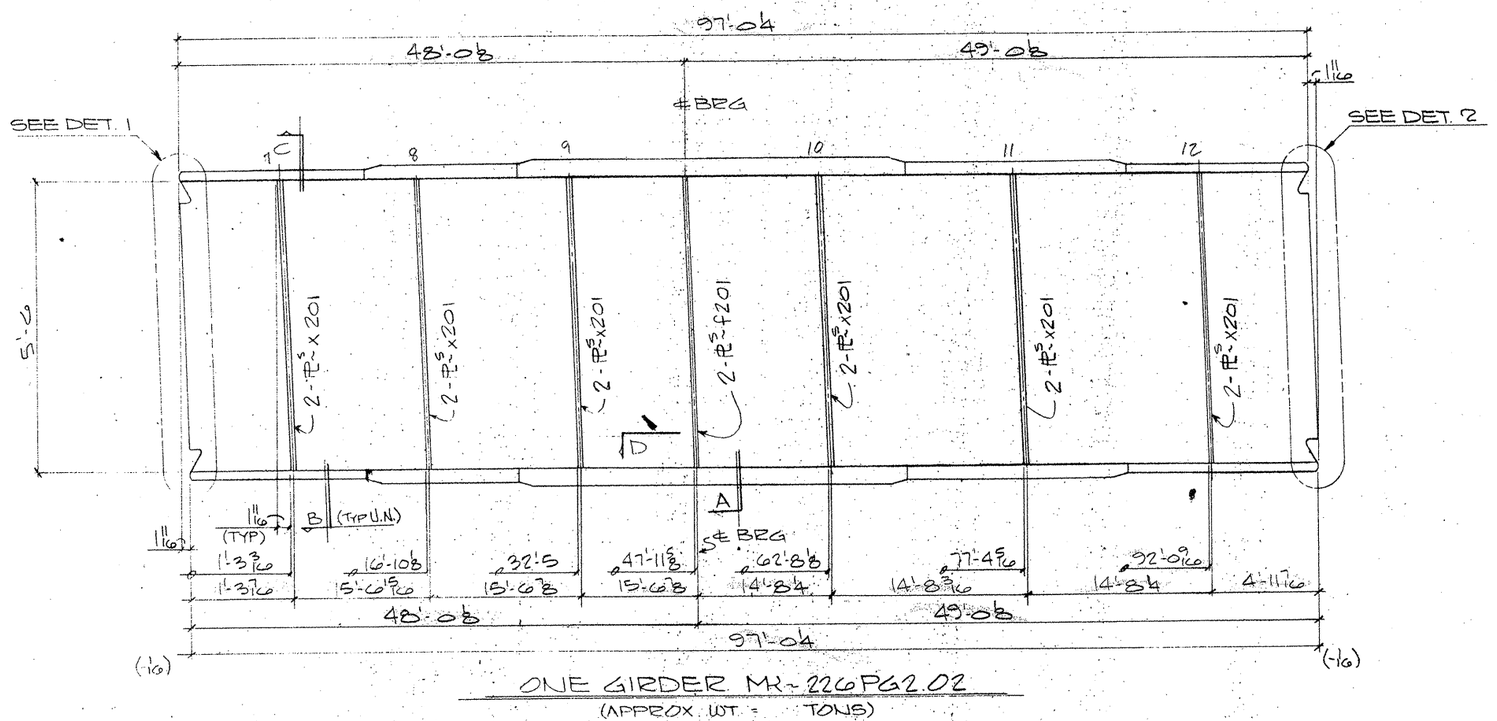

ONE GIRDER MK-226PG2.02

(APPROX. WT. = TONS)

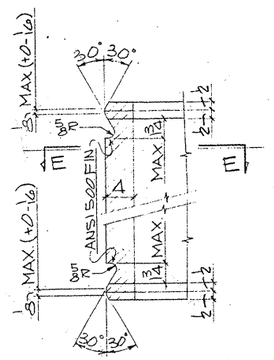

DETAIL - 1

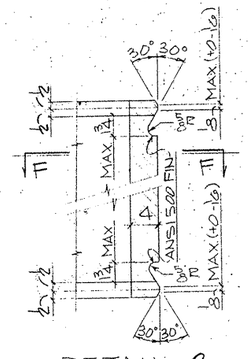

DETAIL - 2

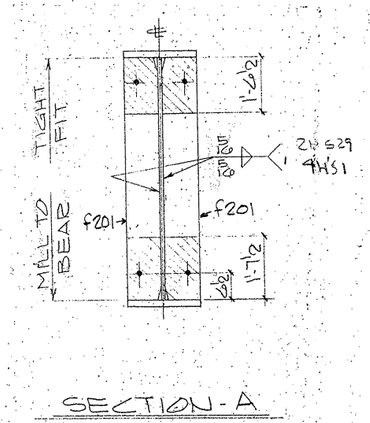

SECTION - A

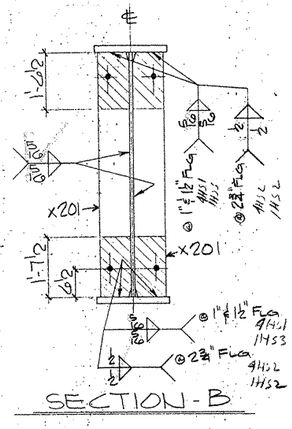

SECTION - B

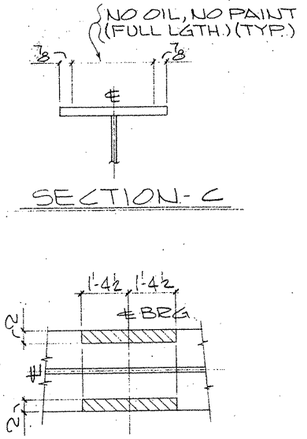

SECTION - C

SECTION - D

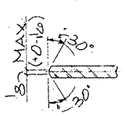

SECTION - E-E

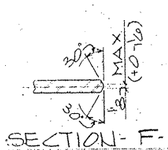

SECTION - F-F

SHOP NOTES:

1) FOR GENERAL NOTES SEE SHT. GN1
2) FOR GIRDER SUB-ASSEMBLY SEE SHT. 208
3) FOR STIFF. DETAILS SEE SHT. 201
4) FOR BLOCKING DIAGRAM SEE SHT. 254
5) FOR HEAT CURVE DIAGRAM SEE SHT. 251
6) ▨ INDICATES OIL, NO PAINT (N.S./F.S. & EDGES)

90208

FED. ROAD DIV. NO.	STATE	FEDERAL AID PROJECT NO.			
6	TX.	NH 92(50)M			
STATE DIST. NO.	COUNTY	CONTROL NO.	SECTION NO.	JOB NO.	HIGHWAY NO.
21	HIDALGO	39	17	97	83/281

BILL OF MATERIAL

	Qnty	Material	Length	Mark Temp	Mark Ship	Wt	Cut From	Remarks
1								
2	1	GIRDER			226PG2.02			
3	1	GIRDER SUB-ASSY		B208				
4	2	BRG STIFF		f201				
5								
6	12	DIAF STIFF		x201				
7								
8								
9								
10								
11								
12								
13								
14								
15								
16								
17								
18								
19								
20								
21								
22								
23								
24								
25								
26								
27								
28								
29								
30								
31								
32								
33								
34								
35								
36								
37								
38								
39								
40								
41								
42								
43								
44								
45								
46								
47								
48								
49								
50								
51								
52								
53								
54								
55								
56								
57								
58								
59								
60								

TEXAS DEPARTMENT OF TRANSPORTATION
APPROVED
DIVISION OF BRIDGES AND STRUCTURES
APR 06 1995
APPROVAL OF THIS DRAWING DOES NOT RELIEVE THE CONTRACTOR OF THE RESPONSIBILITY FOR THE CORRECTNESS OF DETAIL.

FOR APPROVAL
MAR 15 '93
NOT FOR CONSTRUCTION

REVISION	DATE	DESCRIPTION OF REVISION
NO. 1		
NO. 2		
NO. 3		
NO. 4		
NO. 5		

PRINTING Req'd	For	Date

Bolts Holes 13/16 ø Unless Noted
Shop Paint SEE SHT. GN1
Fab. Spec AS NTD Inspection
Architect
Erection By Field Connections

KIRSCHFELD STEEL CO. INC.
112 WEST 29TH SAN ANGELO, TEXAS 76903
PHONE (915) 653-3211

DESCRIPTION	750'-0 PLATE GIRDER UNIT
STRUCTURE	US. 83/281 INTERCHANGE RAMP #3
LOCATION	HIDALGO COUNTY
CUSTOMER	GILBERT TEXAS CONSTRUCTION
SHIP TO	
Customer's Order No.	
Dwg By JTC Date 9/92	SHEET 226 OF
Checked By JC Date 10/92	JOB NO. 92-108

APV MAR 15

CE92-13 (LINE #2)

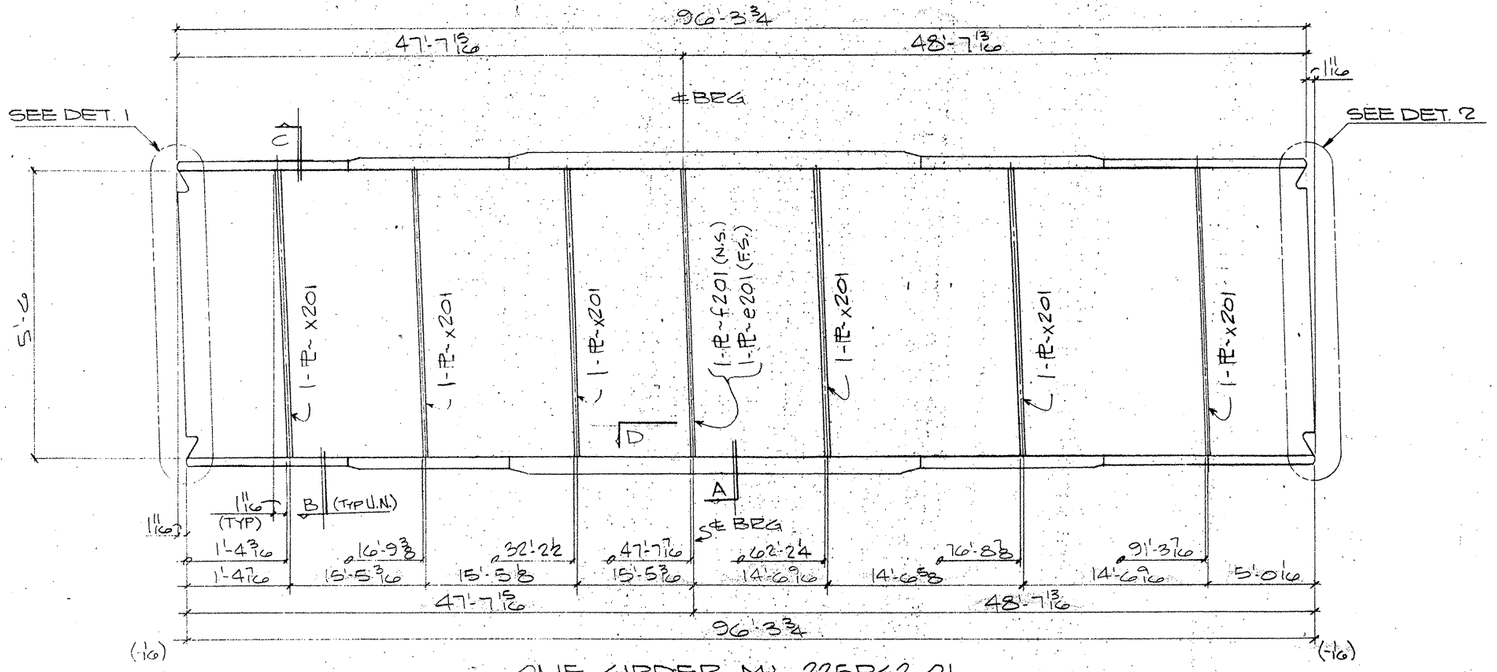

ONE GIRDER MK-225PG2.01

(APPROX. WT = TONS)

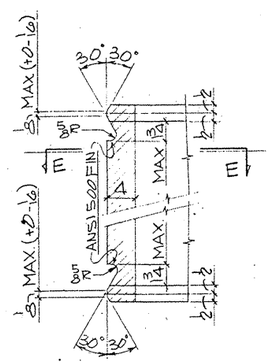

DETAIL - 1

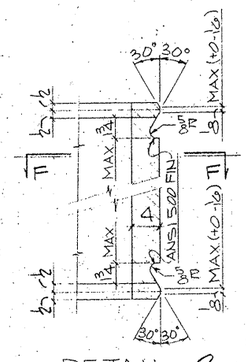

DETAIL - 2

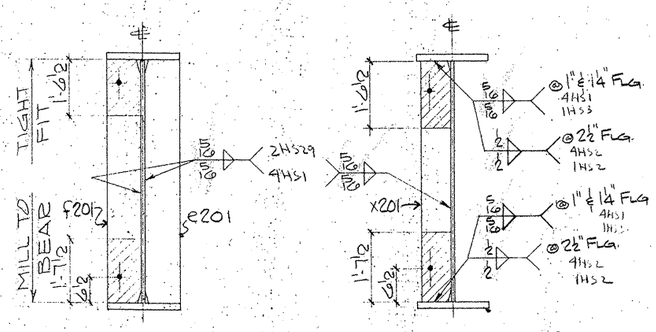

SECTION - A

SECTION - B

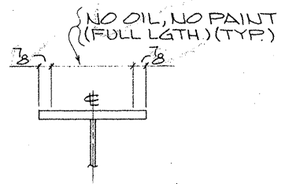

SECTION - C

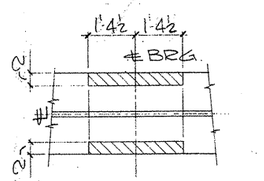

SECTION - D

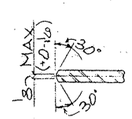

SECTION - E-E

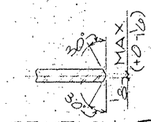

SECTION - F-F

SHOP NOTES:

1) FOR GENERAL NOTES SEE SHT. GN1
2) FOR GIRDER SUB-ASSEMBLY SEE SHT. 207
3) FOR STIFF. DETAILS SEE SHT. 201
4) FOR BLOCKING DIAGRAM SEE SHT. 253
5) FOR HEAT CURVE DIAGRAM SEE SHT. 251
6) ▨ INDICATES OIL, NO PAINT (N.S./F.S. & EDGES)

BILL OF MATERIAL

	Qnty.	Material	Length	Mark Temp	Mark Shp	Wt.	Cut From	Remarks
2	1	GIRDER			225PG2.01			
3	1	GIRDER SUB-ASSY		B207				
4	1	BRG STIFF		f201				
5	1	BRG STIFF		e201				
6	6	DIAF STIFF		x201				

TEXAS DEPARTMENT OF TRANSPORTATION
APPROVED
DIVISION OF BRIDGES AND STRUCTURES
APR 06 1993
APPROVAL OF THIS DRAWING DOES NOT RELIEVE THE CONTRACTOR OF THE RESPONSIBILITY FOR THE CORRECTNESS OF DETAIL.

APPROVAL MAR 19 '93 NOT FOR CONSTRUCTION

REVISION	DATE	DESCRIPTION OF REVISION
NO. 1		
NO. 2		
NO. 3		
NO. 4		
NO. 5		

PRINTING

Req'd	For	Date

Bolts Holes 15/16 ø Unless Noted
Shop Paint SEE SHT. GN1
Fab Spec AS NTD Inspection
Architect
Erection By Field Connections

HIRSCHFELD STEEL CO. INC.
112 WEST 29TH SAN ANGELO, TEXAS 76903
PHONE (915) 653-3211

DESCRIPTION	750'-0 PLATE GIRDER UNIT
STRUCTURE	US 83/281 INTERCHANGE RAMP #3
LOCATION	HIDALGO COUNTY
CUSTOMER	GILBERT TEXAS CONSTRUCTION
SHIP TO	
Customer's Order No	
Dwg By JEE	Date 9/92
Checked By JC	Date 10/92

SHEET 225 OF
JOB NO 92-108

APR MAR 15

FED. ROAD DIV. NO.	STATE	FEDERAL AID PROJECT NO.			
6	TX.	NH 92(50)M			
STATE DIST. NO.	COUNTY	CONTROL NO.	SECTION NO.	JOB NO.	HIGHWAY NO.
21	HIDALGO	39	17	97	83/281

60208

CE92-13 (LINE # 1)

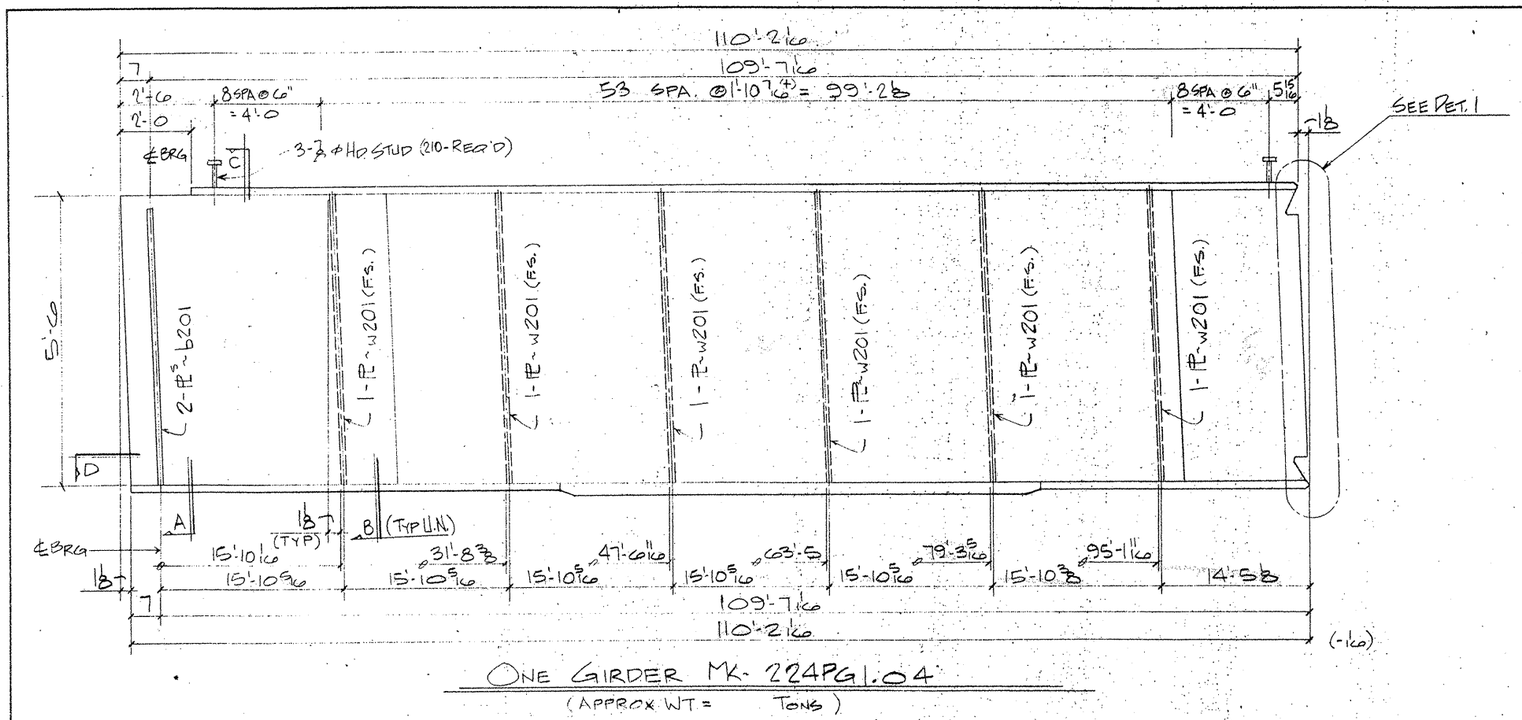

ONE GIRDER MK. 224PG1.04

(APPROX WT = TONS)

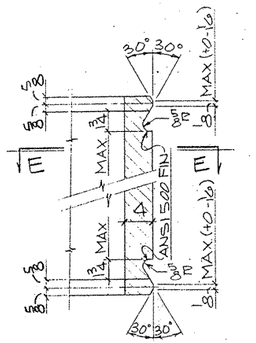

DETAIL - 1

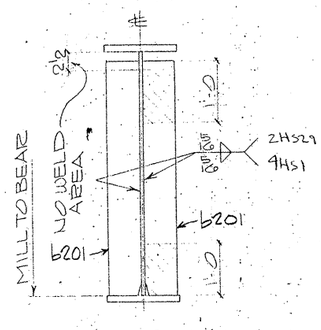

SECTION - A

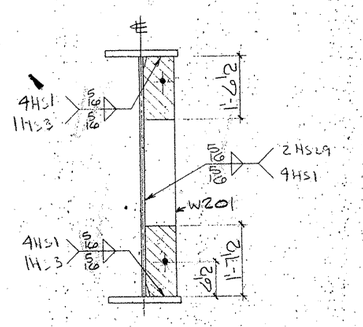

SECTION - B

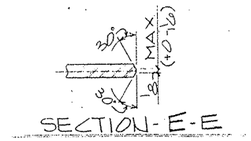

SECTION - E - E

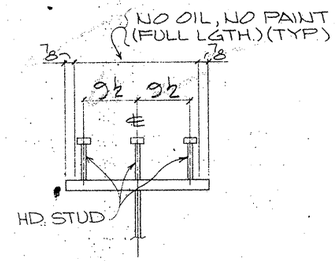

SECTION - C

(TYP STUD SECT.)

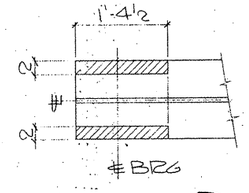

SECTION - D

SHOP NOTES:

1) FOR GENERAL NOTES SEE SHT. GN1
2) FOR GIRDER SUB-ASSEMBLY SEE SHT. 210
3) FOR STIFF. DETAILS SEE SHT. 201
4) FOR BLOCKING DIAGRAM SEE SHT. 256
5) FOR HEAT CURVE DIAGRAM SEE SHT. 251
6) ▨ INDICATES OIL, NO PAINT (N.S./F.S. & EDGES)

BILL OF MATERIAL

	Qnty	Material	Length	Mark Temp.	Mark Ship.	Wt	Cut From	Remarks
1								
2	1	GIRDER		224PG1.04				
3	1	GIRDER SUB-ASSY		A210				
4	2	BRG STIFF		b201				
5	6	DIAF STIFF		w201				
6								
7	210	HD STUD 7/8 ϕ	0'-7				205-1	A108
8								
9								
10								
11								
12								
13								
14								
15								
16								
17								
18								
19								
20								
21								
22								
23								
24								
25								
26								
27								
28								
29								
30								
31								
32								
33								
34								
35								
36								
37								
38								
39								
40								
41								
42								
43								
44								
45								
46								
47								
48								
49								
50								
51								
52								
53								
54								
55								
56								
57								
58								
59								
60								

TEXAS DEPARTMENT OF TRANSPORTATION
APPROVED
DIVISION OF BRIDGES AND STRUCTURES
APR 06 1993
APPROVAL OF THIS DRAWING DOES NOT RELIEVE THE CONTRACTOR OF THE RESPONSIBILITY FOR THE CORRECTNESS OF DETAIL.

FOR APPROVAL
MAR 15 93
NOT FOR CONSTRUCTION

REVISION	DATE	DESCRIPTION OF REVISION
NO. 1		
NO. 2		
NO. 3		
NO. 4		
NO. 5		

PRINTING

Read	For	Date

Bolts Holes 15/16 ϕ Unless Noted
Shop Paint SEE SHT GN1
Fab Spec ASNTD Inspection
Architect
Erection By Field Connections

HIRSCHFELD STEEL CO. INC.
112 WEST 29TH SAN ANGELO, TEXAS 76903
PHONE (915) 653-3211

DESCRIPTION 750'-0 PLATE GIRDER UNIT
STRUCTURE US 83/281 INTERCHANGE RAMP #3
LOCATION HIDALGO COUNTY
CUSTOMER GILBERT TEXAS CONSTRUCTION
SHIP TO
Customer's Order No
Dwg By JDL Date 9/92
Checked By JC Date 9/92

SHEET 224 OF
JOB NO. 92-108

G0208

FED. ROAD DIV. NO.	STATE	FEDERAL AID PROJECT NO.			
6	TX.	NH 92(50)M			
STATE DIST. NO.	COUNTY	CONTROL NO.	SECTION NO.	JOB NO.	HIGHWAY NO.
21	HIDALGO	39	17	97	83/281

(LINE #4) CE92-13

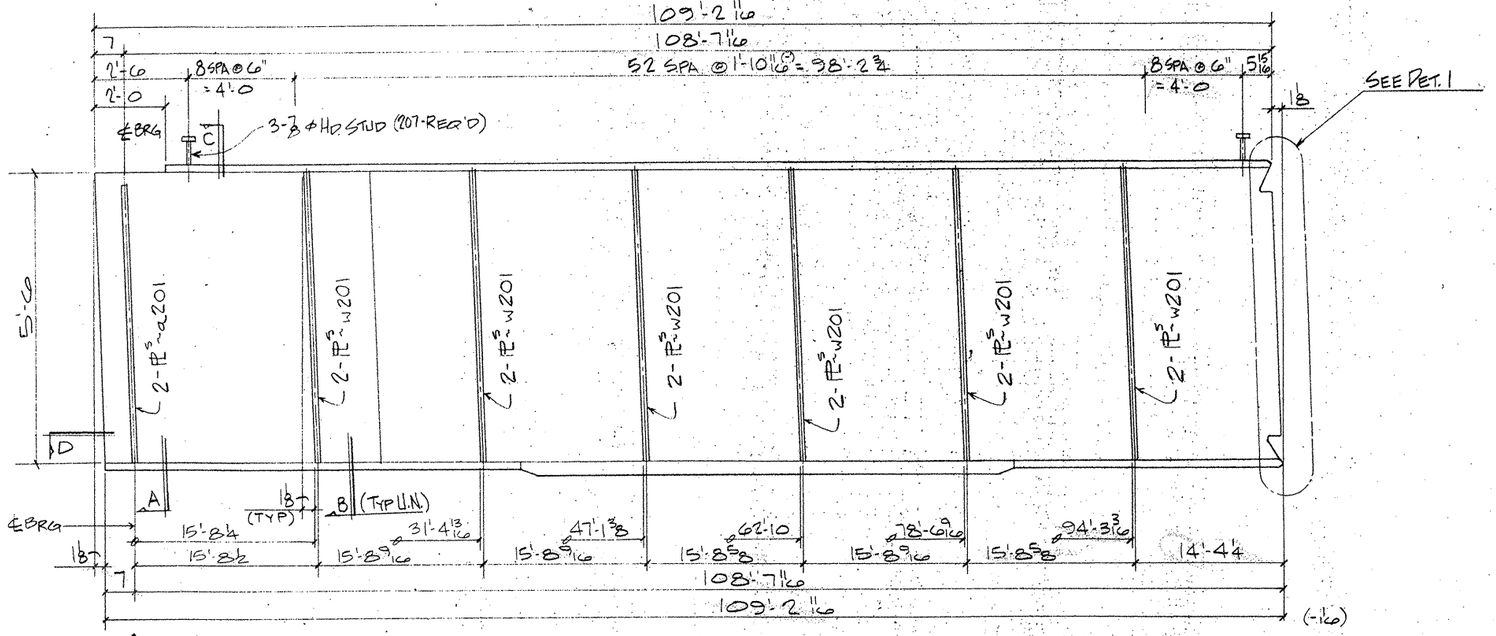

ONE GIRDER MK- 223PG1.03

(APPROX WT = TONS)

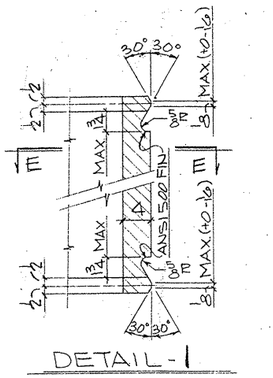

DETAIL-1

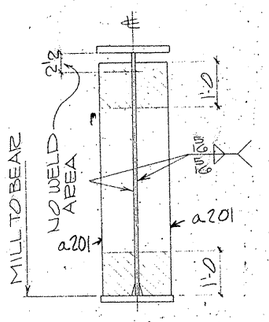

2HS29
4HS1

SECTION-A

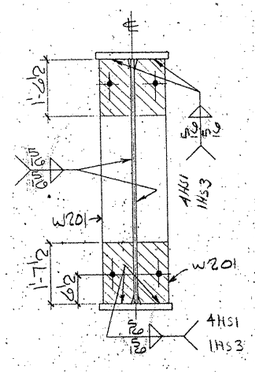

SECTION-B

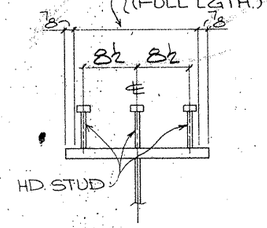

SECTION-C
(TYP STUD SECT.)

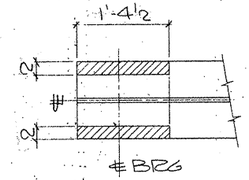

SECTION-D

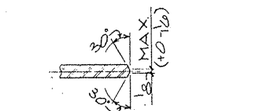

SECTION-E-E

SHOP NOTES:

1) FOR GENERAL NOTES SEE SHT. GN1
2) FOR GIRDER SUB-ASSEMBLY SEE SHT. 209
3) FOR STIFF. DETAILS SEE SHT. 201
4) FOR BLOCKING DIAGRAM SEE SHT. 255
5) FOR HEAT CURVE DIAGRAM SEE SHT. 251
6) ▨ INDICATES OIL, NO PAINT (N.S./F.S. & EDGES)

G0208

FED. ROAD DIV. NO.	STATE	FEDERAL AID PROJECT NO.				
6	TX.	NH 92(50)M				
STATE DIST. NO.	COUNTY	CONTROL NO.	SECTION NO.	JOB NO.	HIGHWAY NO.	
21	HIDALGO	39	17	97	83/281	

BILL OF MATERIAL

	Qnty.	Material	Length	Mark Temp.	Mark Ship	Wt.	Cut From	Remarks
1								
2	1	GIRDER		223PG1.03				
3	1	GIRDER SUB-ASSY		A209				
4	2	BRG STIFF		a201				
5	12	DIAF STIFF		W201				
6								
7	207	HD STUD 7/8ϕ	0'-7				205-1	A108
8–60								

TEXAS DEPARTMENT OF TRANSPORTATION
APPROVED
DIVISION OF BRIDGES AND STRUCTURES
APR 06 1993
APPROVAL OF THIS DRAWING DOES NOT RELIEVE THE CONTRACTOR OF THE RESPONSIBILITY FOR THE CORRECTNESS OF DETAIL.

FOR APPROVAL
MAR 15 93
NOT FOR CONSTRUCTION

REVISION	DATE	DESCRIPTION OF REVISION
NO. 1		
NO. 2		
NO. 3		
NO. 4		
NO. 5		

PRINTING Req'd	For	Date

Bolts Holes: 15/16ϕ Unless Noted
Shop Paint SEE SHT GN1
Fab Spec AASHTO Inspection
Architect
Erection By Field Connections

HIRSCHFELD STEEL CO. INC.
112 WEST 29TH SAN ANGELO, TEXAS 76903
PHONE (915) 653-3211

DESCRIPTION 750'-0 PLATE GIRDER UNIT
STRUCTURE US-83/281 INTERCHANGE RAMP #3
LOCATION HIDALGO COUNTY
CUSTOMER GILBERT TEXAS CONSTRUCTION
SHIP TO
Customer's Order No.
Dwg. By JJC Date 9/92
Checked By JC Date 9/92

SHEET 223 OF
JOB NO. 92-108

(LINE #3)
CE92-13

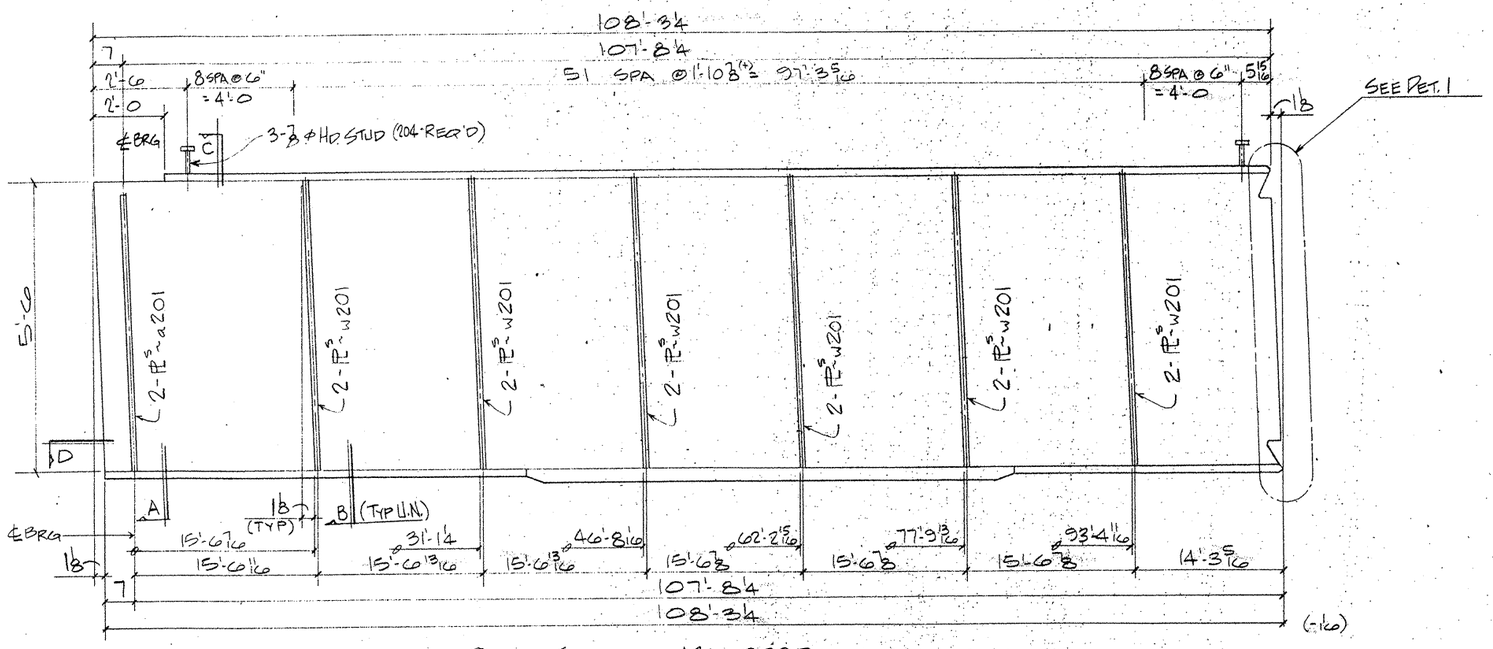

ONE GIRDER MK. 222PG1.02
(APPROX WT = TONS)

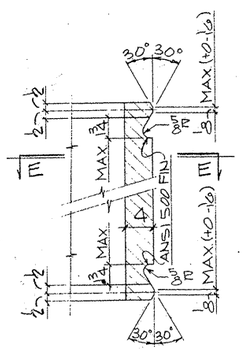

DETAIL-1

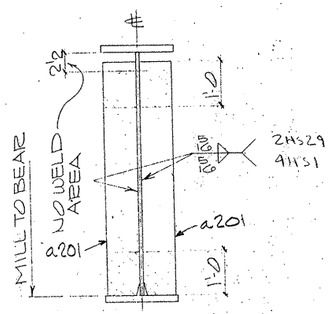

SECTION-A

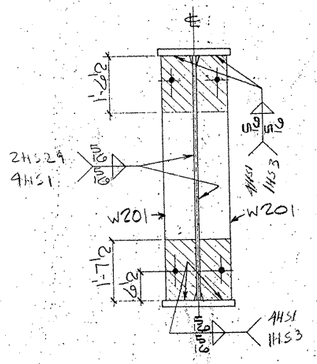

SECTION-B

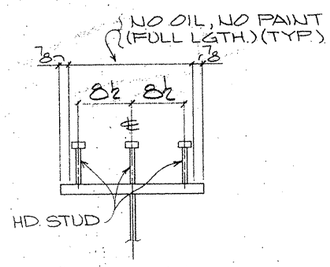

SECTION-C
(TYP. STUD SECT.)

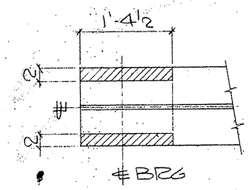

SECTION-D

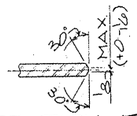

SECTION-E-E

SHOP NOTES:
1) FOR GENERAL NOTES SEE SHT. GN1
2) FOR GIRDER SUB-ASSEMBLY SEE SHT. 208
3) FOR STIFF. DETAILS SEE SHT. 201
4) FOR BLOCKING DIAGRAM SEE SHT. 254
5) FOR HEAT CURVE DIAGRAM SEE SHT. 251
6) ▨ INDICATES OIL, NO PAINT (N.S./F.S. & EDGES)

G0208

FED. ROAD DIV. NO.	STATE	FEDERAL AID PROJECT NO.			
6	TX.	NH 92(50)M			
STATE DIST. NO.	COUNTY	CONTROL NO.	SECTION NO.	JOB NO.	HIGHWAY NO.
21	HIDALGO	39	17	97	83/281

BILL OF MATERIAL

	Qnty	Material	Length	Mark Temp	Mark Ship	Wt.	Cut From	Remarks
1								
2	1	GIRDER		222PG1.02				
3	1	GIRDER SUB-ASSY		A208				
4	2	BRG STIFF		a201				
5	12	DIAF STIFF		W201				
6								
7	204	HD STUD ⅞ϕ	0'-7				205-1	A108

TEXAS DEPARTMENT OF TRANSPORTATION
APPROVED
DIVISION OF BRIDGES AND STRUCTURES
APR 06 1993
APPROVAL OF THIS DRAWING DOES NOT RELIEVE THE CONTRACTOR OF THE RESPONSIBILITY FOR THE CORRECTNESS OF DETAIL

FOR APPROVAL
MAR 15 93
NOT FOR CONSTRUCTION

REVISION	DATE	DESCRIPTION OF REVISION
NO. 1		
NO. 2		
NO. 3		
NO. 4		
NO. 5		

PRINTING: Req'd | For | Date

Bolts Holes 15/16 ϕ Unless Noted
Shop Paint SEE SHT GN1
Fab Spec AS NTD Inspection
Architect
Erection By Field Connections

HIRSCHFELD STEEL CO. INC.
112 WEST 29TH SAN ANGELO TEXAS 76903
PHONE (915) 653-3211

DESCRIPTION 750'-0 PLATE GIRDER UNIT
STRUCTURE US 83/281 INTERCHANGE RAMP #3
LOCATION HIDALGO COUNTY
CUSTOMER GILBERT TEXAS CONSTRUCTION
SHIP TO
Customer's Order No.
Dwg. By JDC Date 9/92
Checked By JC Date 9/92
SHEET 222 OF
JOB NO. 92-108

APR MAR 1 8

(LINE # 2) CE92-13

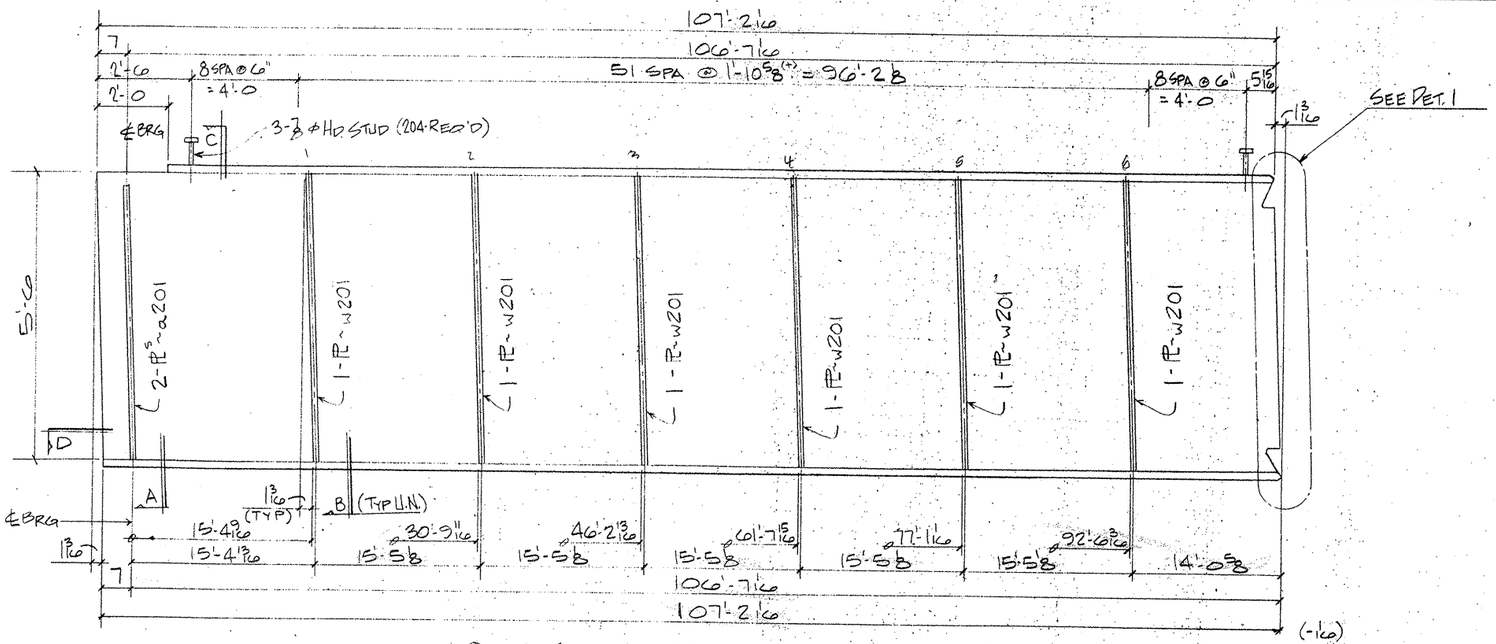

ONE GIRDER MK- 221 PG1.0

(APPROX WT = TONS)

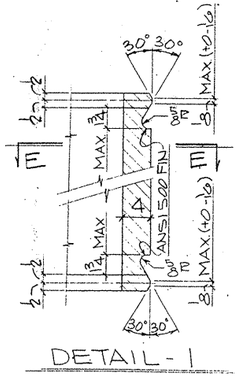

DETAIL - 1

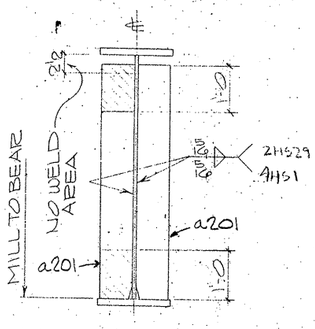

SECTION - A

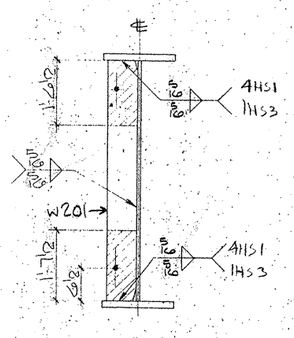

SECTION - B

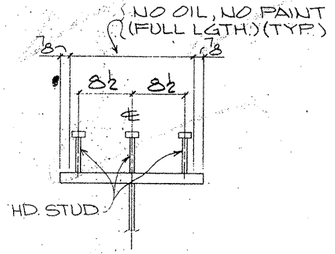

SECTION - C
(TYP. STUD SECT.)

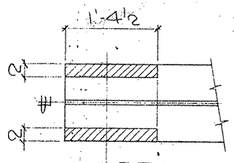

SECTION - D

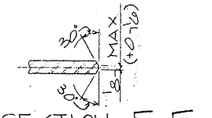

SECTION - E - E

SHOP NOTES:

1) FOR GENERAL NOTES SEE SHT. GN1
2) FOR GIRDER SUB-ASSEMBLY SEE SHT. 207
3) FOR STIFF. DETAILS SEE SHT. 201
4) FOR BLOCKING DIAGRAM SEE SHT. 253
5) FOR HEAT CURVE DIAGRAM SEE SHT. 251
6) ▨ INDICATES OIL, NO PAINT (N.S./F.S. & EDGES)

BILL OF MATERIAL

	Qnty	Material	Length	Mark Temp	Mark Ship	Wt	Cut From	Remarks
1								
2	1	GIRDER		221 PG1.01				
3	1	GIRDER SUB-ASSY		A207				
4	2	BRG STIFF		a201				
5	6	DIAF STIFF		W201				
6								
7	204	HD STUD ϕ	0'-7				205-1	A108
8–60								

TEXAS DEPARTMENT OF TRANSPORTATION
APPROVED
DIVISION OF BRIDGES AND STRUCTURES
APR 06 1993
APPROVAL OF THIS DRAWING DOES NOT RELIEVE THE CONTRACTOR OF THE RESPONSIBILITY FOR THE CORRECTNESS OF DETAIL.

FOR APPROVAL MAR 15 '93
NOT FOR CONSTRUCTION

REVISION	DATE	DESCRIPTION OF REVISION
NO 1		
NO 2		
NO 3		
NO 4		
NO 5		

PRINTING: Reqd | For | Date

Bolts Holes: STD Unless Noted
Shop Paint: SEE SHT GN1
Fab Spec: AASHTO Inspection
Architect
Erection By: Field Connections

HIRSCHFELD STEEL CO. INC.
112 WEST 29TH SAN ANGELO, TEXAS 76903
PHONE (915) 653-3211

DESCRIPTION: 750'-0 PLATE GIRDER UNIT
STRUCTURE: US 83/281 INTERCHANGE RAMP #3
LOCATION: HIDALGO COUNTY
CUSTOMER: GILBERT TEXAS CONSTRUCTION
SHIP TO
Customer's Order No:
Dwg. By: JR Date: 9/92
Checked By: JC Date: 9/92
SHEET 221 OF
JOB NO. 92-108

APV MAR 15

G0208

FED. ROAD DIV. NO.	STATE	FEDERAL AID PROJECT NO.			
6	TX.	NH 92(50)M			
STATE DIST. NO.	COUNTY	CONTROL NO.	SECTION NO.	JOB NO.	HIGHWAY NO.
21	HIDALGO	39	17	97	83/281

(LINE #1) CE92-13

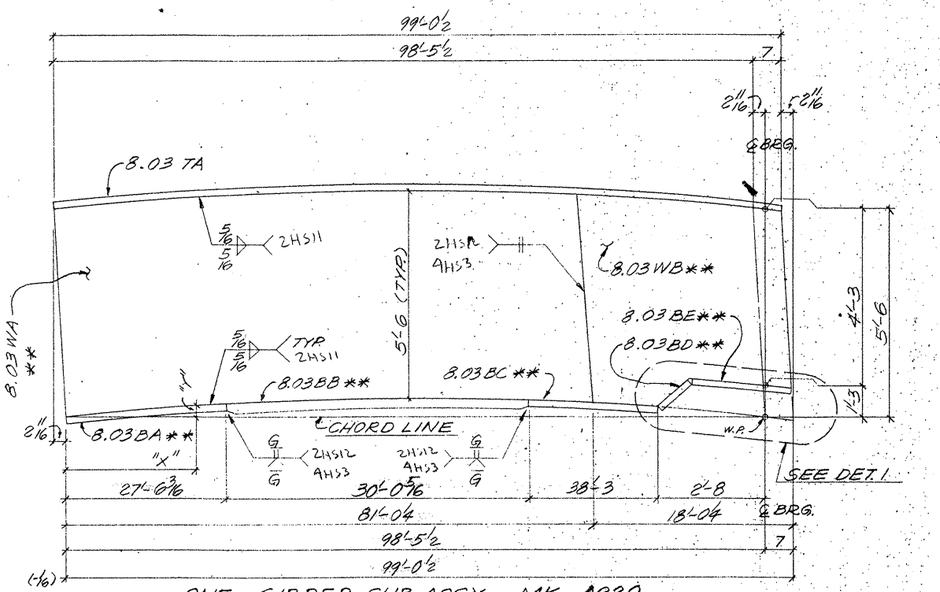

ONE ~ GIRDER SUB-ASSY. ~ MK A220

(FOR GIRDER ~ 249PG8.03)

MK A220									
"X"	4'-10 5/16	20'-5 1/2	36'-0 3/4	51'-8	67'-3/4	81'-04	82'-10 9/16		98'-5 1/2
"Y"	4	1/8	1 1/16	1/8	3/4	5/16 ℄ WEB SPLICE	4		0" ℄ BRG.

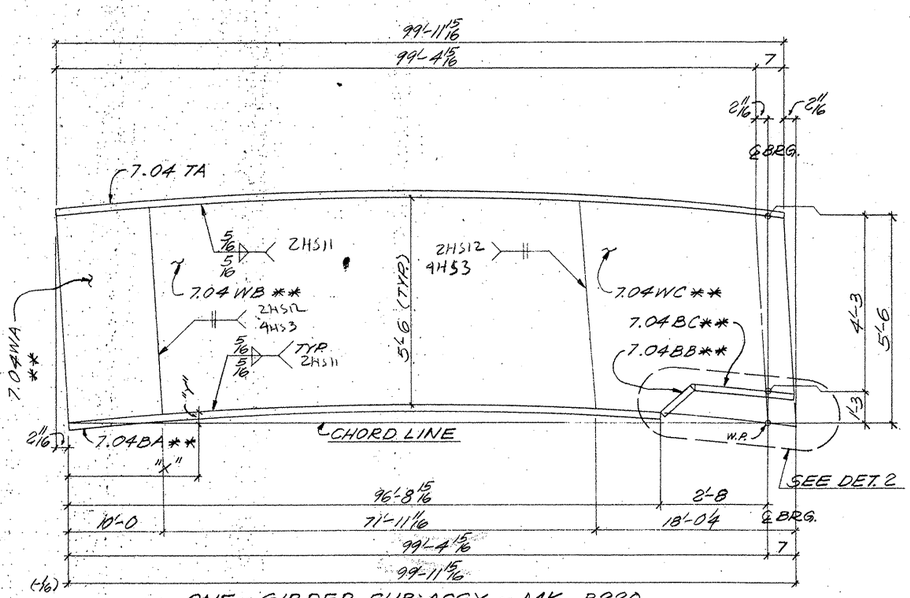

ONE ~ GIRDER SUB-ASSY. ~ MK B220

(FOR GIRDER ~ 250PG7.04)

MK B220										
"X"	4'-11 3/16	10'-0	20'-8 1/8	36'-5 1/16	52'-2 1/16	67'-11	81'-11 11/16	83'-8	99'-4 15/16	
"Y"	4	7/16 ℄ WEB SPLICE	15/16	1 5/16	1 3/8	1/16	9/16 ℄ WEB SPLICE	1/2	0" ℄ BRG.	

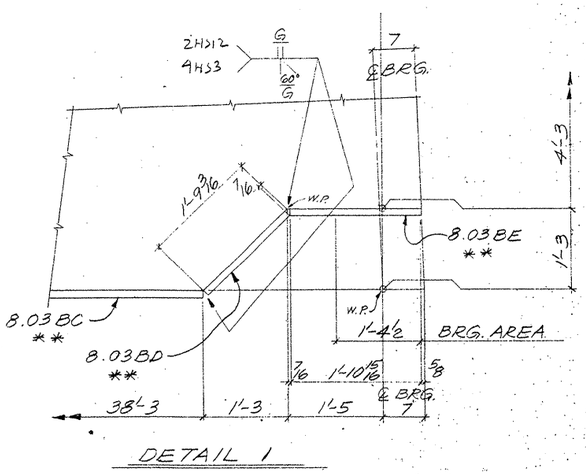

DETAIL 1

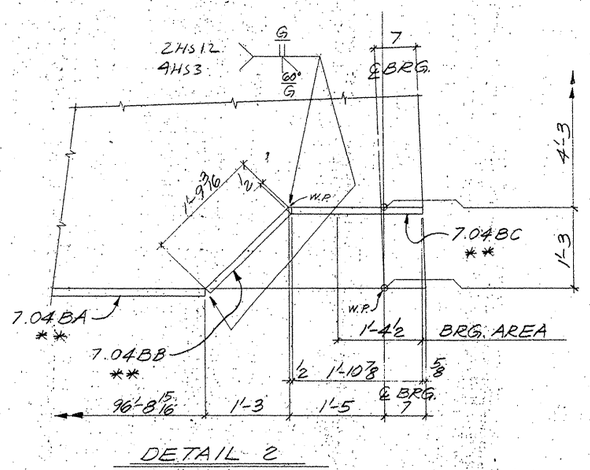

DETAIL 2

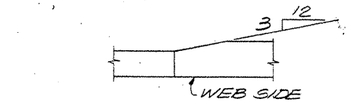

TYP. FLG. THICKNESS TRANSITION

SHOP NOTES:

1) FOR GENERAL NOTES, SEE SHT. GN1
2) MATERIAL NOTED "**" MUST MEET CHARPY V-NOTCH REQUIREMENTS
3) FOR HEAT CURVE DIAGRAM, SEE SHT. 252.

G0208

FED. ROAD DIV. NO.	STATE	FEDERAL AID PROJECT NO.			
6	TX.	NH 92(50)M			
STATE DIST. NO.	COUNTY	CONTROL NO.	SECTION NO.	JOB NO.	HIGHWAY NO.
21	HIDALGO	39	17	97	83/281

BILL OF MATERIAL

	Qnty	Material	Length	Mark Temp.	Mark Ship	Wt.	Cut From	Remarks
1								
2	1	GIRDER SUB-ASSY.			A220			
3	1	PL 1/2x66	81'-3	8.03WA			210-8	CVN2
4	1	PL 9/16x66	18'-04	8.03WB			210-9	CVN2
5	1	PL 1x20	99'-0 1/2	8.03TA			219-17	
6	1	PL 1x20	27'-6 3/16	8.03BA			214-9	CVN2
7	1	PL 14x20	30'-0 5/16	8.03BB			214-10	CVN2
8	1	PL 1x20	38'-3	8.03BC			214-11	CVN2
9	1	PL 1x20	1'-8 3/4	8.03BD			212-6	CVN2
10	1	PL 1x20	1'-10 5/16	8.03BE			212-7	CVN2
11								
12								
13								
14	1	GIRDER SUB-ASSY.			B220			
15	1	PL 11/16x66	10'-2 3/16	7.04WA			211-3	CVN2
16	1	PL 1/2x66	71'-11 15/16	7.04WB			211-4	CVN2
17	1	PL 9/16x66	18'-0 5/16	7.04WC			211-5	CVN2
18	1	PL 14x22	99'-11 15/16	7.04TA			220-16	
19	1	PL 14x22	96'-8 15/16	7.04BA			215-10	CVN2
20	1	PL 14x22	1'-8 15/16	7.04BB			212-8	CVN2
21	1	PL 14x22	1'-10 7/8	7.04BC			212-9	CVN2
22								
23								
24								
25								
26								
27								
28								
29								
30								
31								
32								
33								
34								
35								
36								
37								
38								
39								
40								
41								
42								
43								
44								
45								
46								
47								
48								
49								
50								
51								
52		TEXAS DEPARTMENT OF TRANSPORTATION APPROVED DIVISION OF BRIDGES AND STRUCTURES APR 06 1993						FOR APPROVAL MAR 15 '93 NOT FOR CONSTRUCTION.
53								
54								
55								
56								
57		APPROVAL OF THIS DRAWING DOES NOT RELIEVE THE CONTRACTOR OF THE RESPONSIBILITY FOR THE CORRECTNESS OF DETAIL.						
58								
59								
60								

REVISION	DATE	DESCRIPTION OF REVISION
NO. 1		
NO. 2		
NO. 3		
NO. 4		
NO. 5		

PRINTING Req'd For Date

Bolts Holes Unless Noted
Shop Paint SEE SHT. GN1
Fab Spec. A572-50 U.N. Inspection
Architect
Erection By Field Connections

HIRSCHFELD STEEL CO. INC.
312 WEST 29TH SAN ANGELO, TEXAS 76903
PHONE (915) 653-3211

DESCRIPTION 350'-0 PLATE GIRDER UNIT
STRUCTURE US 83/281 INTERCHANGE RAMP "S"
LOCATION HIDALGO COUNTY
CUSTOMER GILBERT TEXAS CONSTRUCTION
SHIP TO
Customer's Order No
Dwg. By RSC Date 9-24-92
Checked By DLT Date 9-92
SHEET 220 OF
JOB NO. 92-108

AFV SHR 1:1

CE 92-13 (LINES 364)

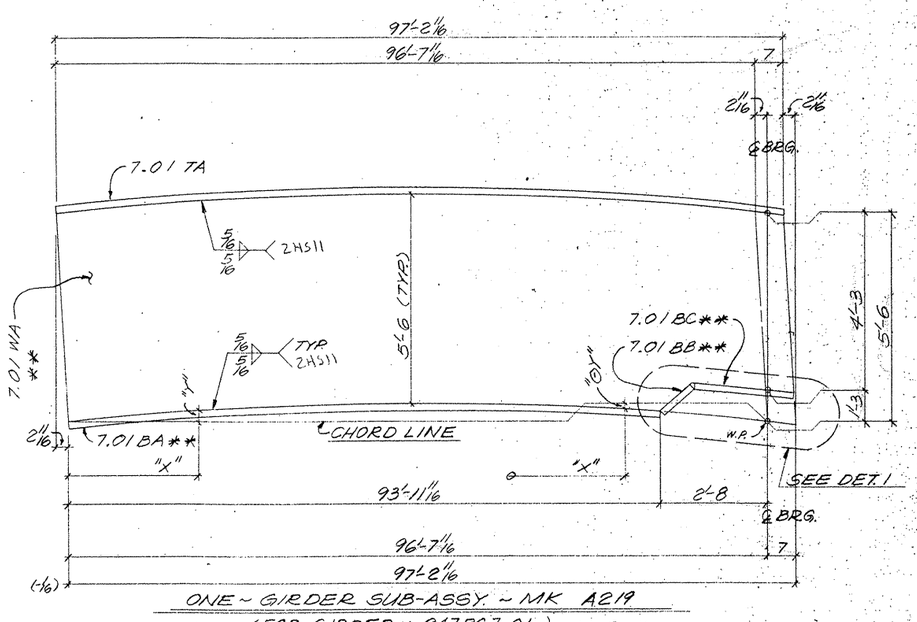

ONE ~ GIRDER SUB-ASSY. ~ MK A219

(FOR GIRDER ~ 247PG7.01)

MK A219									
"X"	4'-9 5/8	20'-1 7/16	35'-5 4	50'-9 1/16	66'-0 3/8	81'-4 1/16			96'-7 1/16
"Y"	1/8	7/16	3/8	0"	⊖ 3/16	⊖ 1/2			0"
									℄ BRG.

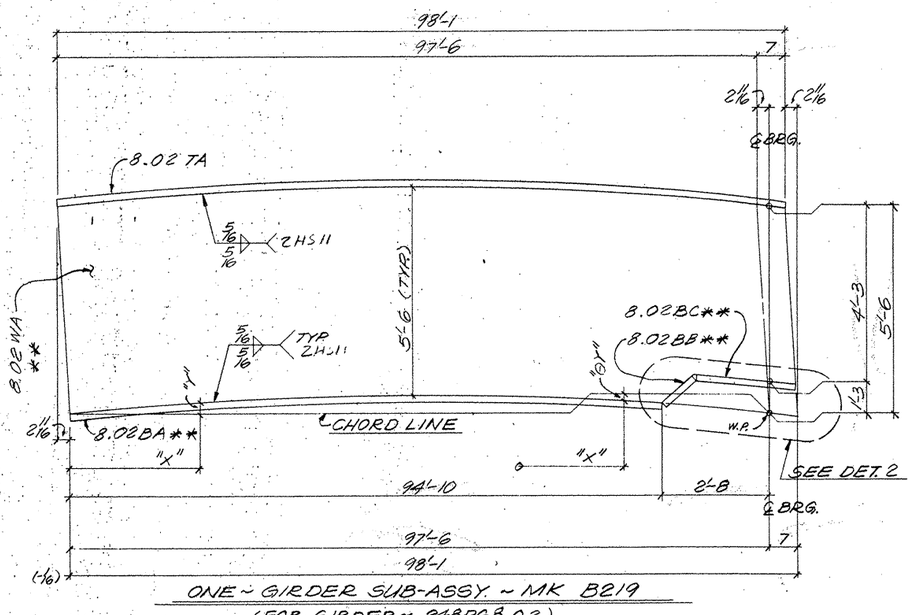

ONE ~ GIRDER SUB-ASSY. ~ MK B219

(FOR GIRDER ~ 248PG8.02)

MK B219									
"X"	4'-9 7/16	20'-2 7/16	35'-8 7/16	51'-2	66'-7 2	82'-1 1/16			97'-6
"Y"	3/16	1/16	1/16	5/8	3/16	⊖ 1/8			0"
									℄ BRG.

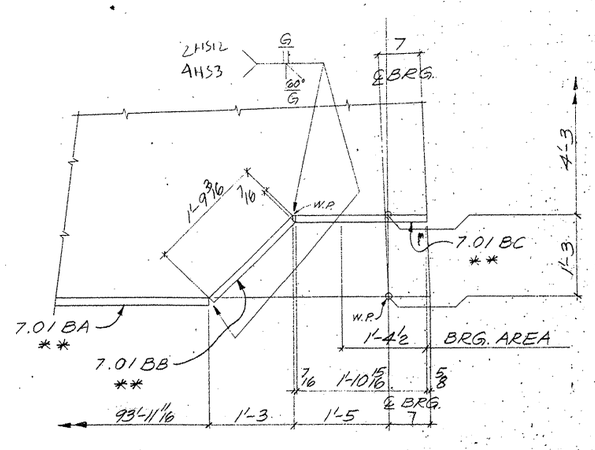

DETAIL 1

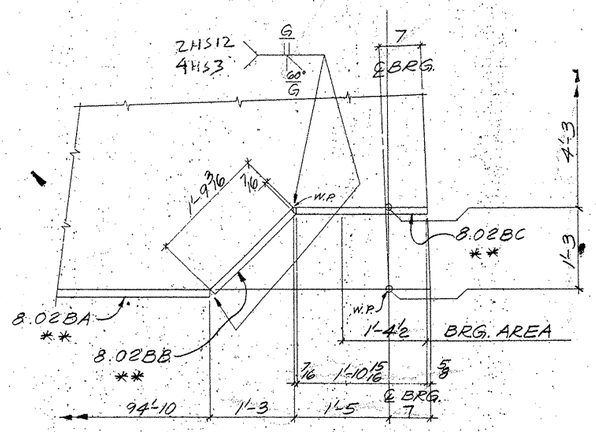

DETAIL 2

SHOP NOTES:

1) FOR GENERAL NOTES, SEE SHT. GN1
2) MATERIAL NOTED '**' MUST MEET CHARPY V-NOTCH REQUIREMENTS
3) FOR HEAT CURVE DIAGRAM, SEE SHT. 252.

G0208

FED. ROAD DIV. NO.	STATE	FEDERAL AID PROJECT NO.				
6	TX.	NH 92(50)M				
STATE DIST. NO.	COUNTY	CONTROL NO.	SECTION NO.	JOB NO.	HIGHWAY NO.	
21	HIDALGO	39	17	97	83/281	

BILL OF MATERIAL

	Qnty.	Material	Length	Mark Temp	Mark Ship	Wt.	Cut From	Remarks
1								
2	1	GIRDER SUB-ASSY.			A219			
3	1	PL 2x66	97'-4 3/4	7.01WA			209-8	CVN2
4	1	PL 1x20	97'-2 1/16	7.01TA			217-17	
5	1	PL 1x20	93'-11 11/16	7.01BA			212-5	CVN2
6	1	PL 1x20	1'-8 3/4	7.01BB			212-6	CVN2
7	1	PL 1x20	1'-10 15/16	7.01BC			212-7	CVN2
8								
9								
10								
11								
12	1	GIRDER SUB-ASSY.			B219			
13	1	PL 6x66	98'-3 1/16	8.02WA			209-16	CVN2
14	1	PL 1x20	98'-1	8.02TA			218-17	
15	1	PL 1x20	94'-10	8.02BA			213-9	CVN2
16	1	PL 1x20	1'-8 3/4	8.02BB			212-6	CVN2
17	1	PL 1x20	1'-10 15/16	8.02BC			212-7	CVN2
18								
19								
20								
21								
22								
23								
24								
25								
26								
27								
28								
29								
30								
31								
32								
33								
34								
35								
36								
37								
38								
39								
40								
41								
42								
43								
44								
45								
46								
47								
48								
49								
50								
51								
52								
53								
54								
55								
56								
57								
58								
59								
60								

TEXAS DEPARTMENT OF TRANSPORTATION
APPROVED
DIVISION OF BRIDGES AND STRUCTURES
APR 06 1993

APPROVAL OF THIS DRAWING DOES NOT RELIEVE THE CONTRACTOR OF THE RESPONSIBILITY FOR THE CORRECTNESS OF DETAIL

FOR APPROVAL
MAR 15 '93
NOT FOR CONSTRUCTION

REVISION	DATE	DESCRIPTION OF REVISION
NO. 1		
NO. 2		
NO. 3		
NO. 4		
NO. 5		

PRINTING: Reg'd | For | Date

Bolts: Holes: Unless Noted
Shop Paint SEE SHT. GN1
Fab. Spec A572-50 U.N. Inspection
Architect
Erection By: Field Connections

HIRSCHFELD STEEL CO. INC.
312 WEST 29TH SAN ANGELO, TEXAS 76903
PHONE (915) 653-3211

DESCRIPTION	750'-0" PLATE GIRDER UNIT
STRUCTURE	US 83/281 INTERCHANGE RAMP "J"
LOCATION	HIDALGO COUNTY
CUSTOMER	GILBERT TEXAS CONSTRUCTION
SHIP TO	
Customer's Order No.	
Dwg. By FLC	Date 9-24-92
Checked By DLT	Date 9-92

SHEET 219 OF
JOB NO. 92-108

CE 92-13
(LINE 182)

APV MAR 15

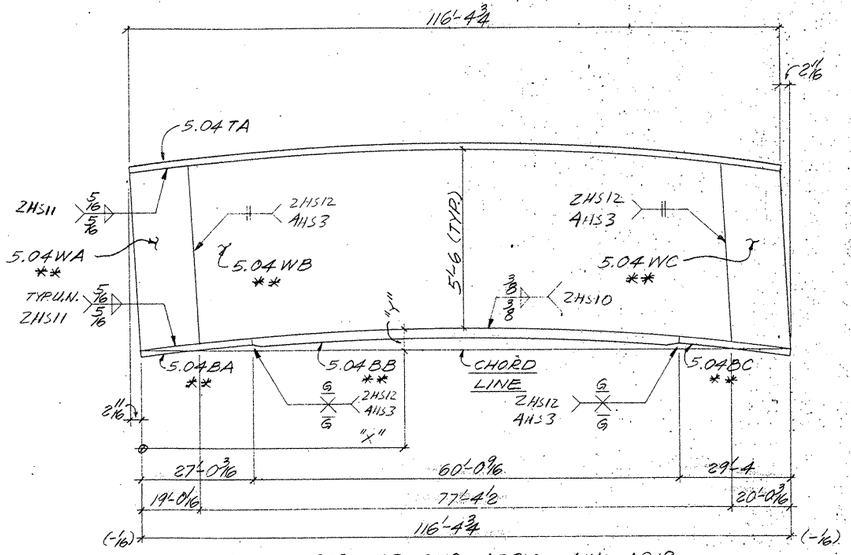

ONE ~ GIRDER SUB-ASSY. ~ MK A218

(FOR GIRDER 240 PG 5.04)

MK A218											
"X"	5'-5 3/4	19'-0 1/16	20'-1 5/16	34'-8 3/8	49'-4 7/16	64'-0 1/16	78'-7 5/8	93'-3 1/4	96'-4 5/16	107'-10 3/8	116'-4 3/4
"Y"	3/8	1 5/16	1 3/8	2 3/8	2 1/2	2 3/16	2 1/4	1 1/2	1 5/16	5/8	0"
		℄ WEB SPLICE							℄ WEB SPLICE		

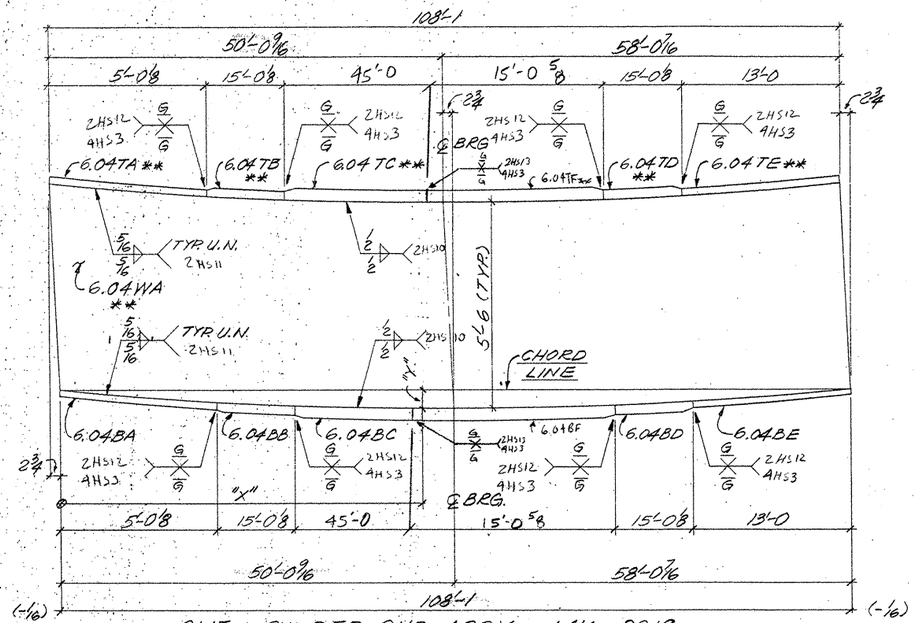

ONE ~ GIRDER SUB-ASSY. ~ MK B218

(FOR GIRDER ~ 244 PG 6.04)

MK B218								
"X"	6'-1 1/16	20'-9 5/16	35'-4 7/16	50'-0 9/16	65'-9 1/2	81'-6 7/16	97'-3 3/8	108'-1
"Y"	3/8	1 1/8	1 5/8	1 15/16	1 13/16	1 3/8	5/8	0"
				℄ BRG.				

BILL OF MATERIAL

	Qnty	Material	Length	Mark Temp	Mark Ship	Wt.	Cut From	Remarks
1								
2	1	GIRDER SUB-ASSY.			A218			
3	1	R 1/16 x 66	19'-2 1/16	5.04 WA			210-18	CVN2
4	1	R 2 x 66	77'-4 1/8	5.04 WB			210-19	CVN2
5	1	R 1/16 x 66	20'-0 3/8	5.04 WC			210-20	CVN2
6	1	R 14 x 22	116'-4 3/4	5.04 TA			220-12	
7	1	R 14 x 22	27'-0 3/16	5.04 BA			215-5	CVN2
8	1	R 2 x 22	60'-0 9/16	5.04 BB			215-6	CVN2
9	1	R 14 x 22	29'-4	5.04 BC			215-7	CVN2
10								
11								
12								
13								
14	1	GIRDER SUB-ASSY.			B218			
15	1	R 1/16 x 66	108'-3 3/4	6.04 WA			211-2	CVN2
16	1	R 14 x 22	5'-0 1/8	6.04 TA			215-11	CVN2
17	1	R 1 1/2 x 22	15'-0 1/8	6.04 TB			215-8	CVN2
18	1	R 3 x 26	60'-0 5/8	6.04 TC			216-13	CVN3
19	1	R 1 1/2 x 22	15'-0 1/8	6.04 TD			215-8	CVN2
20	1	R 14 x 22	13'-0	6.04 TE			215-9	CVN2
21	1	R 14 x 22	5'-0 1/8	6.04 BA			220-17	
22	1	R 1 1/2 x 22	15'-0 1/8	6.04 BB			220-13	
23	1	R 3 x 26	60'-0 5/8	6.04 BC			220-14	
24	1	R 1 1/2 x 22	15'-0 1/8	6.04 BD			220-13	
25	1	R 14 x 22	13'-0	6.04 BE			220-15	
26	1	R 3 X 26	15'-0 5/8	6.04 BF			22014	
27	1	R 3 X 26	15'-0 5/8	6.04 TF			216-13	CVN3
28								
29								
30								
31								
32								
33								
34								
35								
36								
37								
38								
39								
40								
41								
42								
43								
44								
45								
46								
47								
48								
49								
50								
51								
52								
53								
54								
55								
56								
57								
58								
59	1							
60								

TEXAS DEPARTMENT OF TRANSPORTATION
APPROVED
DIVISION OF BRIDGES AND STRUCTURES
APR 06 1993

APPROVAL OF THIS DRAWING DOES NOT RELIEVE THE CONTRACTOR OF THE RESPONSIBILITY FOR THE CORRECTNESS OF DETAIL

FOR APPROVAL
MAR 15 96
NOT FOR CONSTRUCTION

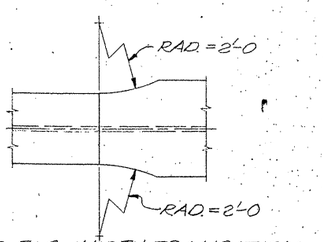

TYP. FLG. WIDTH TRANSITION

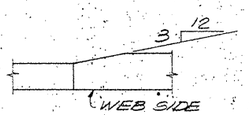

TYP. FLG. THICKNESS TRANSITION

SHOP NOTES:

1) FOR GENERAL NOTES, SEE SHT. GN1
2) MATERIAL NOTED "**" MUST MEET CHARPY V-NOTCH REQUIREMENTS
3) FOR HEAT CURVE DIAGRAM, SEE SHT. 252.

G0208

FED. ROAD DIV. NO.	STATE	FEDERAL AID PROJECT NO.			
6	TX.	NH 92(50)M			
STATE DIST. NO.	COUNTY	CONTROL NO.	SECTION NO.	JOB NO.	HIGHWAY NO.
21	HIDALGO	39	17	97	83/281

REVISION	DATE	DESCRIPTION OF REVISION
NO. 1		
NO. 2		
NO. 3		
NO. 4		
NO. 5		

PRINTING Req'd	For	Date

Bolts Holes Unless Noted
Shop Paint SEE SHT. GN1
Fab. Spec. A572-50 U.N. Inspection
Architect
Erection By Field Connections

HIRSCHFELD STEEL CO. INC.
112 WEST 29TH SAN ANGELO, TEXAS 76903
PHONE (915) 653-3211

DESCRIPTION	750-0 PLATE GIRDER UNIT
STRUCTURE	US 83/281 INTERCHANGE RAMP #3
LOCATION	HIDALGO COUNTY
CUSTOMER	GILBERT TEXAS CONSTRUCTION
SHIP TO	
Customer's Order No.	
Dwg. By PEL Date 9-28-92	SHEET 218 OF
Checked By DLT Date 9-92	JOB NO. 92-108

APV MAR 15

CE 92-13 (LINE 4)

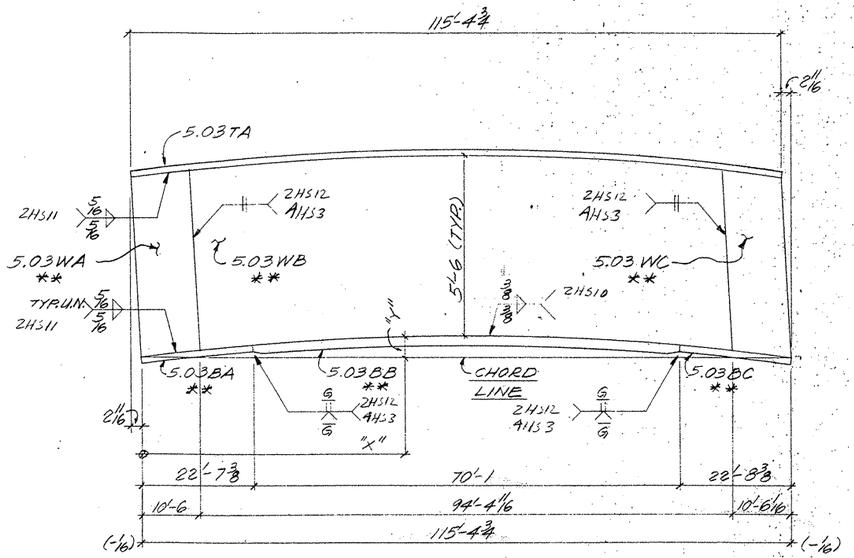

ONE ~ GIRDER SUB-ASSY. ~ MK A217

(FOR GIRDER 239 PG 5.03)

MK A217											
"X"	5'-5 3/8"	10'-6	19'-11 5/16"	34'-5 5/16"	48'-11 1/4"	63'-5 7/8"	77'-4 1/4"	92'-5 5/16"	104'-10 1/16"	106'-11 5/16"	115'-4 3/4"
"Y"	3/8	3/4 (℄ WEB SPLICE)	1/8	2/8	2 9/16	2 5/8	2 1/4	1 9/16	3/4 (℄ WEB SPLICE)	5/8	0"

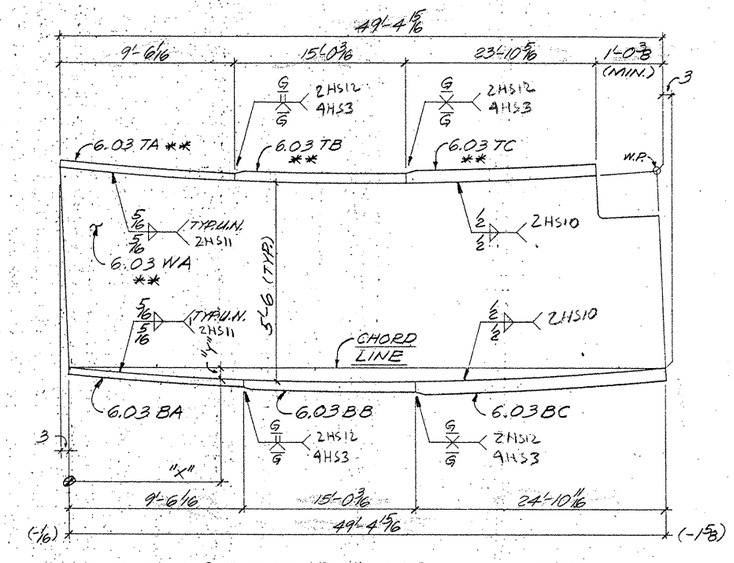

ONE ~ GIRDER SUB-ASSY. - MK B217

(FOR GIRDER 243 PG 6.03)

MK B217				
"X"	6'-0 7/16"	20'-6 1/2"	35'-0 1/2"	49'-4 15/16"
"Y"	1/8	5/16	5/16	0"

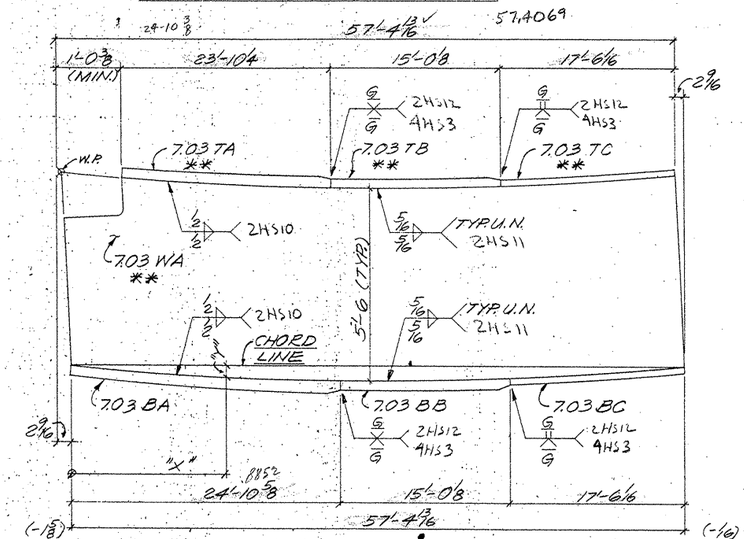

ONE ~ GIRDER SUB-ASSY. ~ MK C217

(FOR GIRDER ~ 246 PG 7.03-3)

MK C217					
"X"	15'-5 7/8"	31'-0 7/8"	46'-8 1/16"	57'-4 13/16"	
"Y"	7/16	1/2	4	0"	

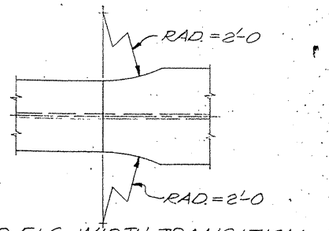

TYP. FLG. WIDTH TRANSITION

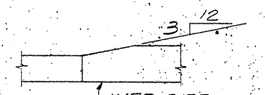

TYP. FLG. THICKNESS TRANSITION

SHOP NOTES:

1) FOR GENERAL NOTES, SEE SHT. GN1
2) MATERIAL NOTED "**" MUST MEET CHARPY V-NOTCH REQUIREMENTS
3) FOR HEAT CURVE DIAGRAM, SEE SHT. 252.

60208

FED. ROAD DIV. NO.	STATE	FEDERAL AID PROJECT NO.			
6	TX.	NH 92(50)M			
STATE DIST. NO.	COUNTY	CONTROL NO.	SECTION NO.	JOB NO.	HIGHWAY NO.
21	HIDALGO	39	17	97	83/281

BILL OF MATERIAL

	Qnty.	Material	Length	Mark Temp.	Mark Ship.	Wt.	Cut From	Remarks
1								
2	1	GIRDER SUB-ASSY.			A217			
3	1	PL 5/8"x66"	10'-8 1/2"	5.03WA			210-3	CVN2
4	1	PL 1/2"x66"	94'-5 11/16"	5.03WB			210-4	CVN2
5	1	PL 5/8"x66"	10'-6 1/4"	5.03WC			210-5	CVN2
6	1	PL 1"x20"	115'-4 3/4"	5.03TA			219-12	
7	1	PL 1"x20"	22'-7 3/8"	5.03BA			214-3	CVN2
8	1	PL 1 3/4"x20"	70'-1"	5.03BB			214-4	CVN2
9	1	PL 1"x20"	22'-8 3/8"	5.03BC			214-5	CVN2
10								
11								
12								
13								
14	1	GIRDER SUB-ASSY.			B217			
15	1	PL 5/8"x66"	49'-7 5/16"	6.03WA			210-6	CVN2
16	1	PL 1"x20"	9'-6 1/16"	6.03TA			214-6	CVN2
17	1	PL 1 1/2"x20"	15'-0 3/16"	6.03TB			214-7	CVN2
18	1	PL 3"x28"	23'-10 5/16"	6.03TC			216-10	CVN3
19	1	PL 1"x20"	9'-6 1/16"	6.03BA			219-13	
20	1	PL 1 1/2"x20"	15'-0 3/16"	6.03BB			219-14	
21	1	PL 3"x24"	24'-10 11/16"	6.03BC			219-15	
22								
23								
24								
25								
26	1	GIRDER SUB-ASSY.			C217			
27	1	PL 5/8"x66"	57'-7 3/8"	7.03WA			210-7	CVN2
28	1	PL 3"x28"	23'-10 1/4"	7.03TA			216-10	CVN3
29	1	PL 1 1/2"x20"	15'-0 1/8"	7.03TB			214-7	CVN2
30	1	PL 1"x20"	17'-6 1/16"	7.03TC			214-8	CVN2
31	1	PL 3"x24"	24'-10 5/8"	7.03BA			219-15	
32	1	PL 1 1/2"x20"	15'-0 1/8"	7.03BB			219-14	
33	1	PL 1"x20"	17'-6 1/16"	7.03BC			219-16	
34								
35								
36								
37								
38								
39								
40								
41								
42								
43								
44								
45								
46								
47								
48								
49								
50								
51								
52								
53								
54								
55								
56								
57								
58								
59								
60								

TEXAS DEPARTMENT OF TRANSPORTATION
APPROVED
DIVISION OF BRIDGES AND STRUCTURES
APR 06 1993

APPROVAL OF THIS DRAWING DOES NOT RELIEVE THE CONTRACTOR OF THE RESPONSIBILITY FOR THE CORRECTNESS OF DETAIL.

FOR APPROVAL
MAR 15 93
NOT FOR CONSTRUCTION

REVISION	DATE	DESCRIPTION OF REVISION
NO. 1		
NO. 2		
NO. 3		
NO. 4		
NO. 5		

PRINTING Req'd	For	Date
	APV	MAR 15

Bolts Holes Unless Noted
Shop Paint SEE SHT. GN1
Fab. Spec. A572-50 U.N. Inspection
Architect
Erection By Field Connections

HIRSCHFELD STEEL CO. INC.
112 WEST 29TH SAN ANGELO, TEXAS 76903
PHONE (915) 653-3211

DESCRIPTION 750'-0" PLATE GIRDER UNIT
STRUCTURE US 83/281 INTERCHANGE RAMP #3
LOCATION HIDALGO COUNTY
CUSTOMER GILBERT TEXAS CONSTRUCTION
SHIP TO
Customer's Order No.
Dwg. By PLC Date 9-24-92
Checked By DLT Date 9-92
SHEET 217 OF
JOB NO. 92-108

CE 92-13 (LINE 3)

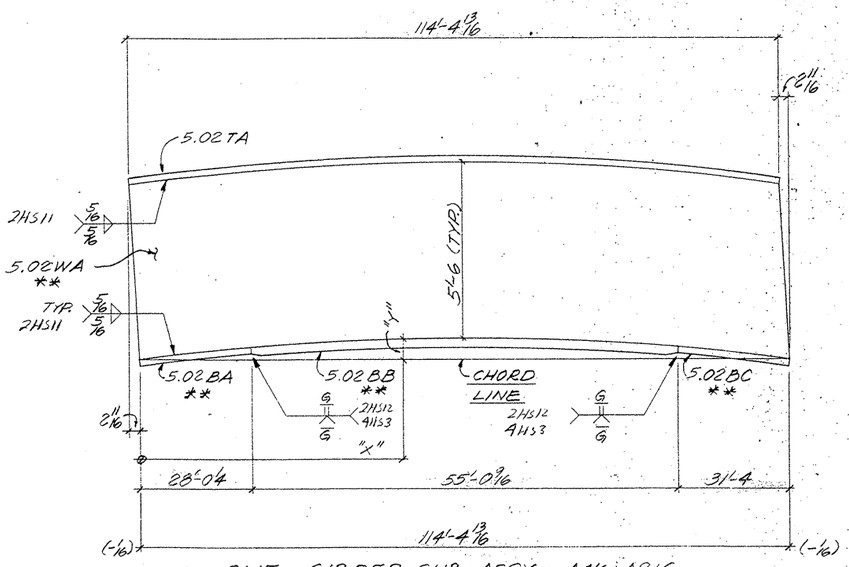

ONE ~ GIRDER SUB-ASSY. ~ MK A216

(FOR GIRDER 238 PG 5.02)

MK A21											
"X"	5'-5	19'-9 3/8	34'-1 1/16	48'-6 7/8	62'-10 1/2	77'-2 15/16	91'-7 5/16	105'-11 3/4			144'-4 13/16
"Y"	3/8	1/4	2	2 5/16	2 3/8	2 1/16	1 1/16	9/16			0"

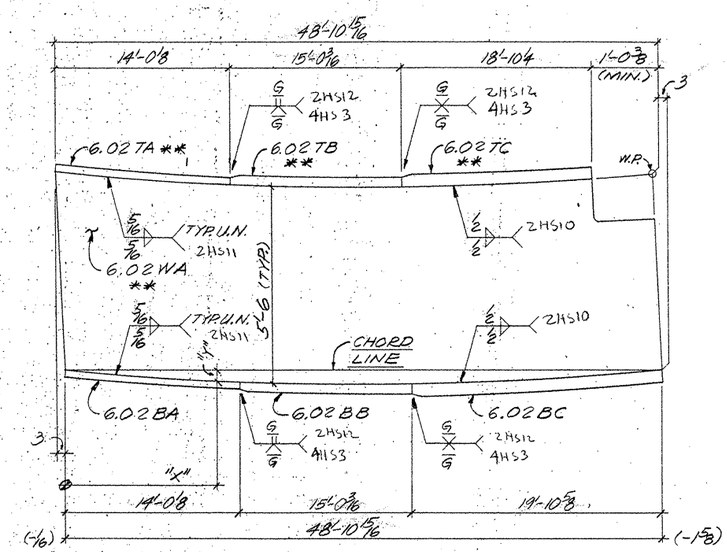

ONE ~ GIRDER SUB-ASSY. ~ MK B216

(FOR GIRDER 242 PG 6.02)

MK B216				
"X"	5'-11 1/4	20'-3 1/16	34'-8 1/8	48'-10 15/16
"Y"	1/8	5/16	5/16	0"

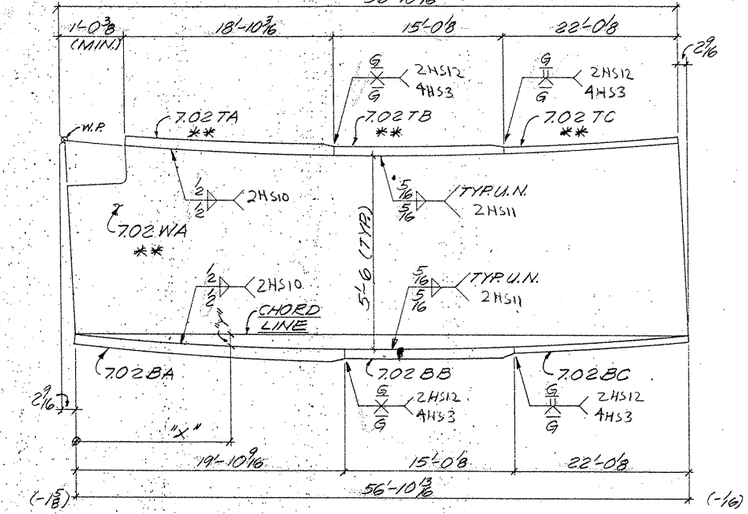

ONE ~ GIRDER SUB-ASSY. ~ MK C216

(FOR GIRDER ~ 245 PG 7.02)

MK C216				
"X"	15'-3 7/8	30'-9 7/16	46'-2 7/8	56'-10 13/16
"Y"	5/8	7/16	3/16	0"

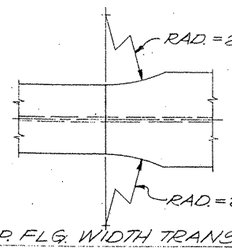

TYP. FLG. WIDTH TRANSITION

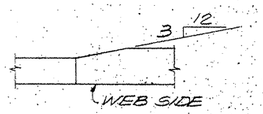

TYP. FLG. THICKNESS TRANSITION

SHOP NOTES:

1) FOR GENERAL NOTES, SEE SHT. GN1
2) MATERIAL NOTED "**" MUST MEET CHARPY V-NOTCH REQUIREMENTS
3) FOR HEAT CURVE DIAGRAM, SEE SHT. 251.

BILL OF MATERIAL

	Qnty.	Material	Length	Mark Temp.	Mark Ship.	Wt	Cut From	Remarks
1								
2	1	GIRDER SUB-ASSY.			A216			
3	1	R 1/2 x 66	114'-7 1/16	5.02 WA			209-13	CVN2
4	1	R 1 x 20	114'-4 13/16	5.02 TA			218-12	
5	1	R 1 x 20	28'-0 1/4	5.02 BA			213-3	CVN2
6	1	R 1 1/2 x 20	55'-0 9/16	5.02 BB			213-4	CVN2
7	1	R 1 x 20	31'-4	5.02 BC			213-5	CVN2
8								
9								
10								
11								
12	1	GIRDER SUB-ASSY.			B216			
13	1	R 5/8 x 66	49'-1 15/16	6.02 WA			209-14	CVN2
14	1	R 1 x 20	14'-0 1/8	6.02 TA			213-6	CVN2
15	1	R 1 1/2 x 20	15'-0 3/16	6.02 TB			213-7	CVN2
16	1	R 3 x 28	18'-10 1/4	6.02 TC			216-7	CVN3
17	1	R 1 x 20	14'-0 1/8	6.02 BA			218-13	
18	1	R 1 1/2 x 20	15'-0 3/16	6.02 BB			218-14	
19	1	R 3 x 24	19'-10 5/8	6.02 BC			218-15	
20								
21								
22								
23								
24	1	GIRDER SUB-ASSY.			C216			
25	1	R 5/8 x 66	57'-1 3/8	7.02 WA			209-15	CVN2
26	1	R 3 x 28	18'-10 3/16	7.02 TA			216-7	CVN3
27	1	R 1 1/2 x 20	15'-0 1/8	7.02 TB			213-7	CVN2
28	1	R 1 x 20	22'-0 1/8	7.02 TC			213-8	CVN2
29	1	R 3 x 24	19'-10 9/16	7.02 BA			218-15	
30	1	R 1 1/2 x 20	15'-0 1/8	7.02 BB			218-14	
31	1	R 1 x 20	22'-0 1/8	7.02 BC			218-16	
32								
33								
34								
35								
36								
37								
38								
39								
40								
41								
42								
43								
44								
45								
46								
47								
48								
49								
50								
51								
52								
53								
54								
55								
56								
57								
58								
59								
60								

TEXAS DEPARTMENT OF TRANSPORTATION
APPROVED
DIVISION OF BRIDGES AND STRUCTURES
APR 06 1993
APPROVAL OF THIS DRAWING DOES NOT RELIEVE THE CONTRACTOR OF THE RESPONSIBILITY FOR THE CORRECTNESS OF DETAIL

FOR APPROVAL
MAR 15 '93
NOT FOR CONSTRUCTION

REVISION	DATE	DESCRIPTION OF REVISION
NO. 1		
NO. 2		
NO. 3		
NO. 4		
NO. 5		

PRINTING Read	For	Date

Bolts: Holes: Unless Noted
Shop Paint: SEE SHT. GN1
Fab Spec: A572-50 U.N. Inspection
Architect
Erection By: Field Connections

HIRSCHFELD STEEL CO. INC.
112 WEST 29TH SAN ANGELO, TEXAS 76903
PHONE (915) 653-3211

DESCRIPTION	250'-0 PLATE GIRDER UNIT
STRUCTURE	US 83/281 INTERCHANGE RAMP "3
LOCATION	HIDALGO COUNTY
CUSTOMER	GILBERT TEXAS CONSTRUCTION
SHIP TO	
Customer's Order No.	
Dwg. By PZC	Date 9-23-92
Checked By DLT	Date 9-92

SHEET 216 OF
JOB NO. 92-108

FED. ROAD DIV. NO.	STATE	FEDERAL AID PROJECT NO.			
6	TX.	NH 92(50)M			
STATE DIST. NO.	COUNTY	CONTROL NO.	SECTION NO.	JOB NO.	HIGHWAY NO.
21	HIDALGO	39	17	97	83/281

G0208

CF 92-12 (LINE 2)

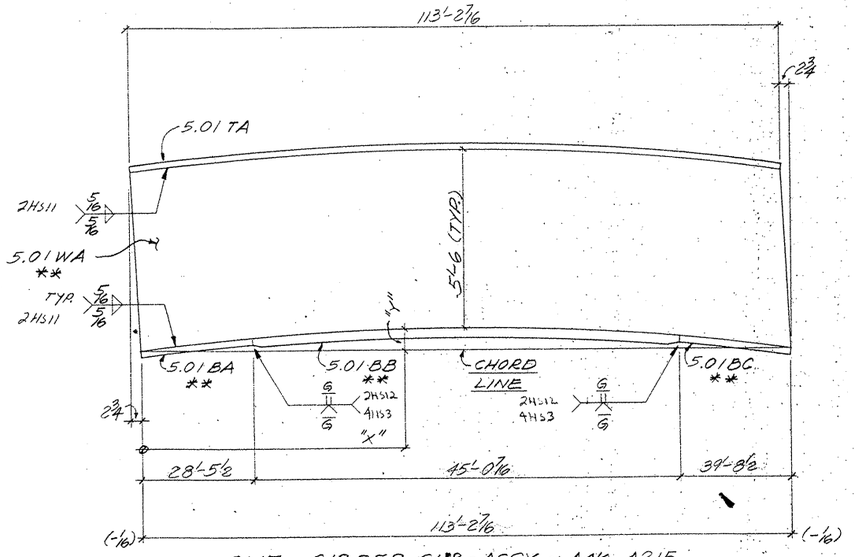

ONE ~ GIRDER SUB-ASSY. ~ MK A215

(FOR GIRDER 237 PG 5.01)

MK A215											
"X"	5'-3 3/8	19'-6 5/8	33'-9 9/16	48'-0 7/16	62'-3	76'-5 13/16	90'-8 5/8	104'-11 1/2			113'-2 7/16
"Y"	5/16	1/8	1/16	2	2 1/16	1 1/16	1/4	1/2			0"

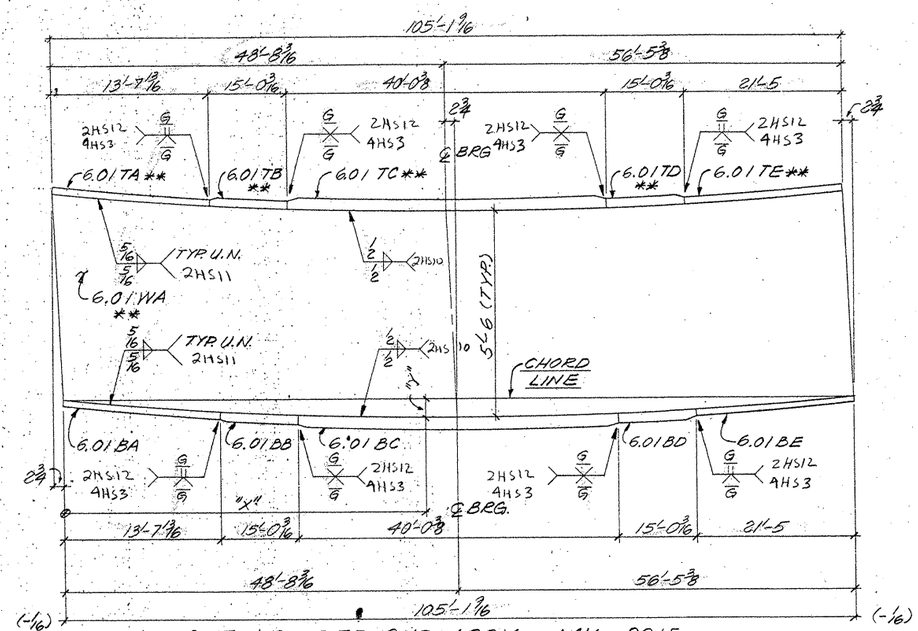

ONE ~ GIRDER SUB-ASSY. ~ MK B215

(FOR GIRDER ~ 241 PG 6.01)

MK B215									
"X"	5'-11 3/4	20'-2 7/16	34'-5 3/8	48'-8 3/16	64'-0	79'-3 13/16	94'-7 9/16	105'-1 9/16	
"Y"	5/16	1 1/16	1 1/2	1 3/4	1 5/8	1 1/8	1/2	0"	
				℄ BRG.					

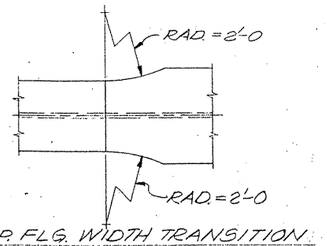

TYP. FLG. WIDTH TRANSITION

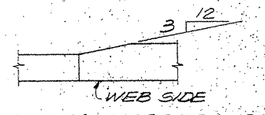

TYP. FLG. THICKNESS TRANSITION

SHOP NOTES:

1) FOR GENERAL NOTES, SEE SHT. GN1
2) MATERIAL NOTED "**" MUST MEET CHARPY V-NOTCH REQUIREMENTS
3) FOR HEAT CURVE DIAGRAM, SEE SHT. 251.

G0208

FED. ROAD DIV. NO.	STATE	FEDERAL AID PROJECT NO.			
6	TX.	NH 92(50)M			
STATE DIST. NO.	COUNTY	CONTROL NO.	SECTION NO.	JOB NO.	HIGHWAY NO.
21	HIDALGO	39	17	97	83/281

BILL OF MATERIAL

	Qnty.	Material	Length	Mark Temp.	Mark Ship.	Wt.	Cut From	Remarks
1								
2	1	GIRDER SUB-ASSY.			A215			
3	1	R 1'2x66	113'-5 3/16	5.01WA			209-6	CVN2
4	1	R 1'x20	113'-2 7/16	5.01TA			217-12	
5	1	R 1'x20	28'-5 1/2	5.01BA			211-18	CVN2
6	1	R 1'4x20	45'-0 7/16	5.01BB			211-19	CVN2
7	1	R 1'x20	39'-8 1/2	5.01BC			211-20	CVN2
8								
9								
10								
11								
12	1	GIRDER SUB-ASSY.			B215			
13	1	R 1'3x66	105'-4 5/16	6.01WA			209-7	CVN2
14	1	R 1'x20	13'-7 13/16	6.01TA			212-2	CVN2
15	1	R 1'2x20	15'-0 3/16	6.01TB			212-3	CVN2
16	1	R 2'3/4x24	40'-0 3/8	6.01TC			216-4	CVN3
17	1	R 1'2x20	15'-0 3/16	6.01TD			212-3	CVN2
18	1	R 1'x20	21'-5	6.01TE			212-4	CVN2
19	1	R 1'x20	13'-7 13/16	6.01BA			217-13	
20	1	R 1'2x20	15'-0 3/16	6.01BB			217-14	
21	1	R 2'3/4x24	40'-0 3/8	6.01BC			217-15	
22	1	R 1'2x20	15'-0 3/16	6.01BD			217-14	
23	1	R 1'x20	21'-5	6.01BE			217-16	
24								
25								
26								
27								
28								
29								
30								
31								
32								
33								
34								
35								
36								
37								
38								
39								
40								
41								
42								
43								
44								
45								
46								
47								
48								
49								
50								
51								
52								
53								
54								
55								
56								
57								
58								
59								
60								

TEXAS DEPARTMENT OF TRANSPORTATION
APPROVED
DIVISION OF BRIDGES AND STRUCTURES
APR 06 1993
APPROVAL OF THIS DRAWING DOES NOT RELIEVE THE CONTRACTOR OF THE RESPONSIBILITY FOR THE CORRECTNESS OF DETAIL.

FOR APPROVAL
MAR 15 '93
NOT FOR CONSTRUCTION

REVISION	DATE	DESCRIPTION OF REVISION
NO. 1		
NO. 2		
NO. 3		
NO. 4		
NO. 5		

PRINTING Req'd	For	Date

Bolts Holes Unless Noted
Shop Paint SEE SHT. GN1
Fab. Spec. A572-50 U.N. Inspection
Architect
Erection By Field Connections

HIRSCHFELD STEEL CO. INC.
112 WEST 29TH SAN ANGELO, TEXAS 76903
PHONE (915) 653-3211

DESCRIPTION: 250'-0 PLATE GIRDER UNIT
STRUCTURE: US 83/281 INTERCHANGE RAMP "S"
LOCATION: HIDALGO COUNTY
CUSTOMER: GILBERT TEXAS CONSTRUCTION
SHIP TO
Customer's Order No.
Dwg. By PLG Date 9-23-92
Checked By DLT Date 9-92
SHEET 215 OF
JOB NO. 92-108

CE 92-13 (LINE 1)

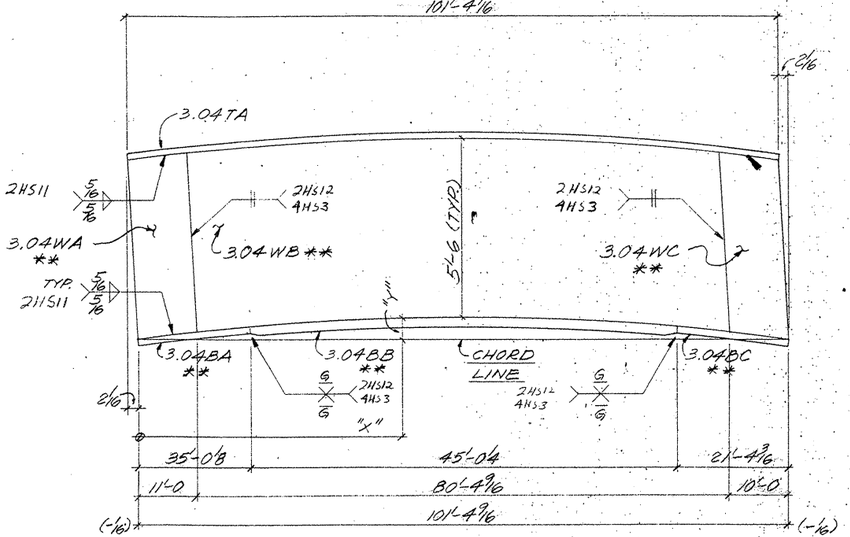

ONE ~ GIRDER SUB-ASSY. ~ MK A214

(FOR GIRDER 232 PG 3.04)

MK A214											
"X"	9'-9 11/16	11'-0	24'-9 3/16	39'-8 1/16	54'-8 1/4	69'-7 3/4	84'-7 5/16	91'-4 3/16	99'-6 7/8		101'-4 9/16
"Y"	13/16	15/16	1 13/16	2 7/16	2 5/8	2 1/8	1 5/16	13/16	3/16		0"
		℄ WEB SPLICE						℄ WEB SPLICE			

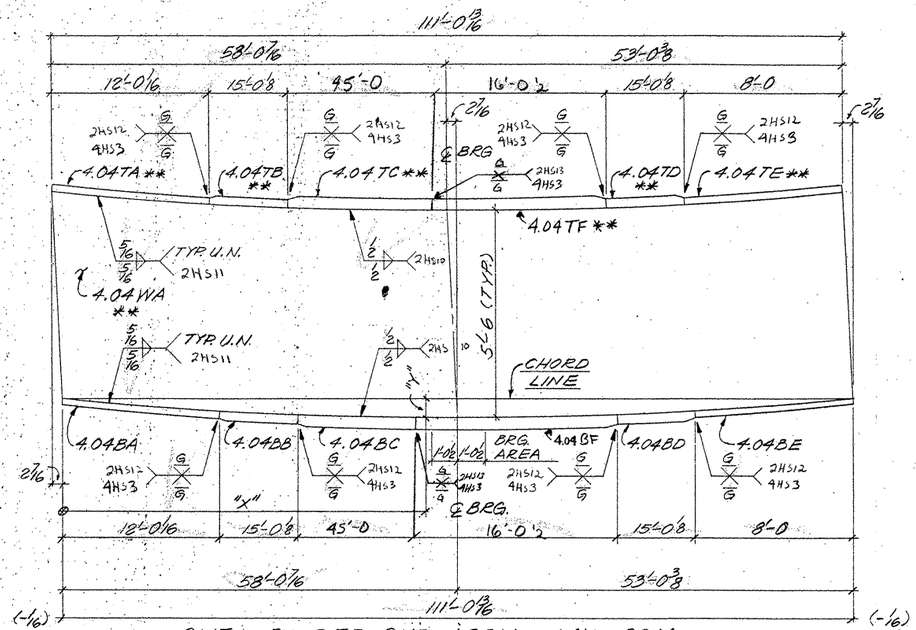

ONE ~ GIRDER SUB-ASSY. ~ MK B214

(FOR GIRDER ~ 236 PG 4.04)

MK B214									
"X"	13'-1 3/4	28'-1 5/16	43'-0 7/8	58'-0 7/16	72'-8	87'-3 9/16	101'-11 1/8	111'-0 13/16
"Y"	5/16	5/8	3/8	1"	3/8	1/16	5/16	0"
				℄ BRG.				

BILL OF MATERIAL

	Qnty.	Material	Length	Mark Temp.	Mark Ship.	Wt.	Cut From	Remarks
1								
2	1	GIRDER SUB-ASSY.			A214			
3	1	PL 5/8 x 66	11'-1 3/8	3.04WA			210-14	CVN2
4	1	PL 2 x 66	80'-5	3.04WB			210-15	CVN2
5	1	PL 9/16 x 66	10'-0 3/16	3.04WC			210-16	CVN2
6	1	PL 1/4 x 22	101'-4 9/16	3.04TA			220-7	
7	1	PL 1/4 x 22	35'-0 1/8	3.04BA			214-18	CVN2
8	1	PL 1/2 x 22	45'-0 1/4	3.04BB			214-19	CVN2
9	1	PL 1/4 x 22	21'-4 3/16	3.04BC			214-20	CVN2
10								
11								
12								
13								
14	1	GIRDER SUB-ASSY.			B214			
15	1	PL 9/16 x 66	111'-3 1/4	4.04WA			210-17	CVN2
16	1	PL 1/4 x 22	12'-0 1/16	4.04TA			215-2	CVN2
17	1	PL 1/2 x 22	15'-0 1/8	4.04TB			215-3	CVN2
18	1	PL 3 x 28	45'-0	4.04TC			216-12	CVN3
19	1	PL 1/2 x 22	15'-0 1/8	4.04TD			215-3	CVN2
20	1	PL 1/4 x 22	8'-0	4.04TE			215-4	CVN2
21	1	PL 1/4 x 22	12'-0 1/16	4.04BA			220-8	
22	1	PL 1/2 x 22	15'-0 1/8	4.04BB			220-9	
23	1	PL 3 x 28	45'-0	4.04BC			220-10	
24	1	PL 1/2 x 22	15'-0 1/8	4.04BD			220-9	
25	1	PL 1/4 x 22	8'-0	4.04BE			220-11	
26	1	PL 3 x 28	16'-0 1/2	4.04BF			220-10	
27	1	PL 3 x 28	16'-0 1/2	4.04TF			216-12	CVN3
28								
29								
30								
31								
32								
33								
34								
35								
36								
37								
38								
39								
40								
41								
42								
43								
44								
45								
46								
47								
48								
49								
50								
51								
52								
53								
54								
55								
56								
57								
58								
59								
60								

TEXAS DEPARTMENT OF TRANSPORTATION
APPROVED
DIVISION OF BRIDGES AND STRUCTURES
APR 06 1993
APPROVAL OF THIS DRAWING DOES NOT RELIEVE THE CONTRACTOR OF THE RESPONSIBILITY FOR THE CORRECTNESS OF DETAIL

FOR APPROVAL
MAR 15 93
NOT FOR CONSTRUCTION

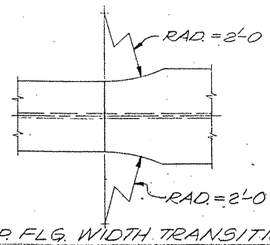

TYP. FLG. WIDTH TRANSITION

TYP. FLG. THICKNESS TRANSITION

SHOP NOTES:

1) FOR GENERAL NOTES, SEE SHT. GN1
2) MATERIAL NOTED "**" MUST MEET CHARPY V-NOTCH REQUIREMENTS
3) FOR HEAT CURVE DIAGRAM, SEE SHT. 252.

60208

FED. ROAD DIV. NO.	STATE	FEDERAL AID PROJECT NO.			
6	TX.	NH 92(50)M			
STATE DIST. NO.	COUNTY	CONTROL NO.	SECTION NO.	JOB NO.	HIGHWAY NO.
21	HIDALGO	39	17	97	83/281

REVISION	DATE	DESCRIPTION OF REVISION
NO. 1		
NO. 2		
NO. 3		
NO. 4		
NO. 5		

PRINTING Req'd For Date — APV MAR 15

Bolts Holes Unless Noted
Shop Paint SEE SHT. GN1
Fab Spec A572-50 U.N. Inspection
Architect
Erection By Field Connections

HIRSCHFELD STEEL CO. INC.
112 WEST 29TH SAN ANGELO, TEXAS 76903
PHONE (915) 653-3211

DESCRIPTION 750'-0" PLATE GIRDER UNIT
STRUCTURE US 83/281 INTERCHANGE RAMP "3"
LOCATION HIDALGO COUNTY
CUSTOMER GILBERT TEXAS CONSTRUCTION
SHIP TO
Customer's Order No
Dwg. By PEC Date 9-23-92
Checked By DLT Date 9-92
SHEET 214 OF
JOB NO. 92-108

CE 92-13 (LINE 4)

392540

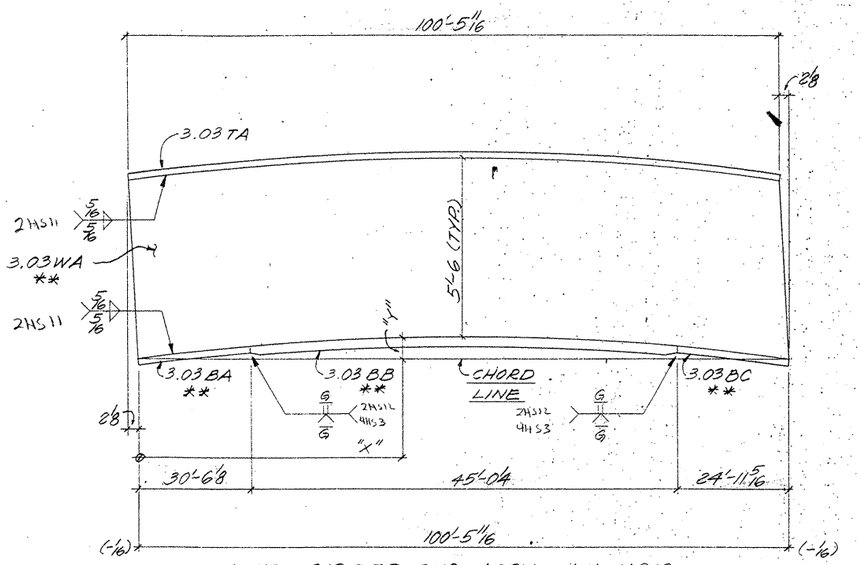

ONE ~ GIRDER SUB-ASSY. ~ MK A213

(FOR GIRDER 231 PG3.03)

MK A213											
"X"	9'-9 3/16	24'-7	39'-4 3/8	54'-2 13/16	69'-0 1/16	83'-10 5/8	98'-8 9/16				100'-5 11/16
"Y"	7/8	1 15/16	2 9/16	2 11/16	2 4	1 3/8	3/16				0"

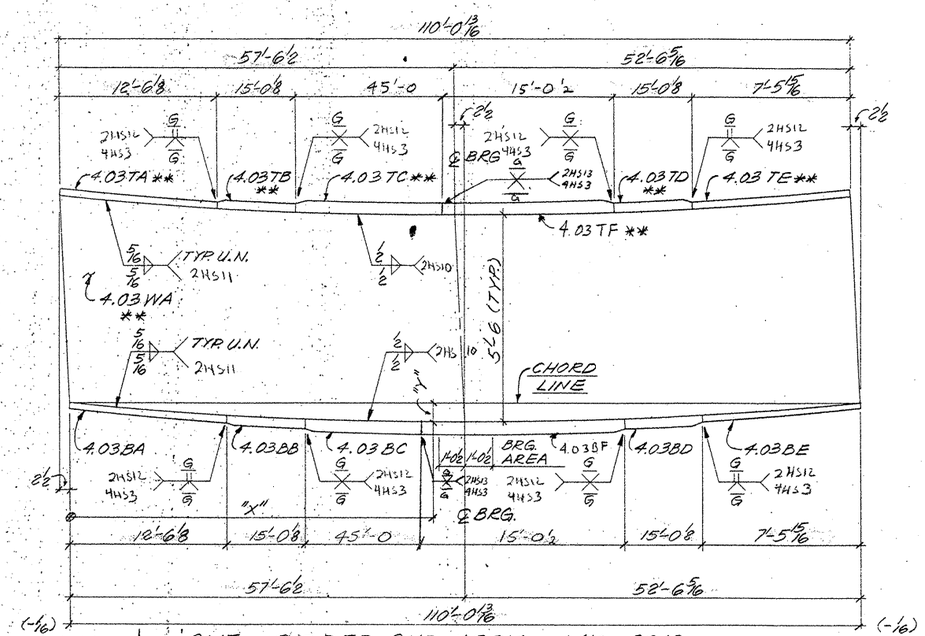

ONE ~ GIRDER SUB-ASSY. ~ MK B213

(FOR GIRDER ~ 235 PG 4.03)

MK B213								
"X"	13'-0 1/16	27'-10 5/8	42'-8 9/16	57'-6 1/2	72'-0 7/16	86'-6 3/8	101'-0 3/8	110'-0 13/16
"Y"	5/16	1/16	5/16	1/16	5/16	3/4	5/16	0"
				℄ BRG.				

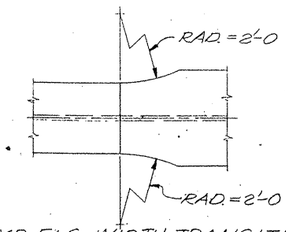

TYP FLG. WIDTH TRANSITION

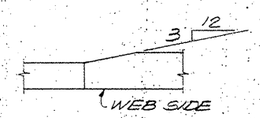

TYP FLG. THICKNESS TRANSITION

SHOP NOTES:

1) FOR GENERAL NOTES, SEE SHT. GN1
2) MATERIAL NOTED "**" MUST MEET CHARPY V-NOTCH REQUIREMENTS
3) FOR HEAT CURVE DIAGRAM, SEE SHT. 252

G0208

FED. ROAD DIV. NO.	STATE	FEDERAL AID PROJECT NO.			
6	TX.	NH 92(50)M			
STATE DIST. NO.	COUNTY	CONTROL NO.	SECTION NO.	JOB NO.	HIGHWAY NO.
21	HIDALGO	39	17	97	83/281

BILL OF MATERIAL

	Qnty.	Material	Length	Mark Temp	Mark Ship	Wt	Cut From	Remarks
1								
2	1	GIRDER SUB-ASSY.			A213			
3	1	R 1/2 x 66	100'-7 13/16	3.03WA			209-20	CVN2
4	1	R 1 x 20	100'-5 11/16	3.03TA			219-7	
5	1	R 1 x 20	30'-6 8	3.03BA			213-16	CVN2
6	1	R 1 1/4 x 20	45'-0 4	3.03BB			213-17	CVN2
7	1	R 1 x 20	24'-11 5/16	3.03BC			213-18	CVN2
8								
9								
10								
11								
12								
13								
14	1	GIRDER SUB-ASSY			B213			
15	1	R 5/8 x 66	110'-3 5/16	4.03WA			210-2	CVN2
16	1	R 1 x 20	12'-6 8	4.03TA			213-19	CVN2
17	1	R 1 1/8 x 20	15'-0 8	4.03TB			213-20	CVN2
18	1	R 3 x 24	45'-0	4.03TC			216-9	CVN3
19	1	R 1 1/2 x 20	15'-0 1/2	4.03TD			213-20	CVN2
20	1	R 1 x 20	7'-5 15/16	4.03TE			214-2	CVN2
21	1	R 1 x 20	12'-6 8	4.03BA			219-8	
22	1	R 1 1/8 x 20	15'-0 8	4.03BB			219-9	
23	1	R 3 x 24	45'-0	4.03BC			219-10	
24	1	R 1 1/8 x 20	15'-0 8	4.03BD			219-9	
25	1	R 1 x 20	7'-5 15/16	4.03BE			219-11	
26	1	R 3 x 24	15'-0 1/2	4.03BF			219-10	
27	1	R 3 x 24	15'-0 1/2	4.03TF			216-9	CVN3
28								
29								
30								
31								
32								
33								
34								
35								
36								
37								
38								
39								
40								
41								
42								
43								
44								
45								
46								
47								
48								
49								
50								
51								
52								
53								
54								
55								
56								
57								
58								
59								
60								

TEXAS DEPARTMENT OF TRANSPORTATION
APPROVED
DIVISION OF BRIDGES AND STRUCTURES
APR 06 1993
APPROVAL OF THIS DRAWING DOES NOT RELIEVE THE CONTRACTOR OF THE RESPONSIBILITY FOR THE CORRECTNESS OF DETAIL.

FOR APPROVAL
MAR 15 93
NOT FOR CONSTRUCTION

REVISION	DATE	DESCRIPTION OF REVISION
NO. 1		
NO. 2		
NO. 3		
NO. 4		
NO. 5		

PRINTING

Req'd	For	Date

Bolts Holes Unless Noted
Shop Paint SEE SHT. GN1
Fab Spec. A572-50 U.N. Inspection
Architect
Erection By Field Connections

HIRSCHFELD STEEL CO. INC.
112 WEST 29TH SAN ANGELO, TEXAS 76903
PHONE (915) 653-3211

DESCRIPTION	750'-0 PLATE GIRDER UNIT
STRUCTURE	US 83/281 INTERCHANGE RAMP #3
LOCATION	HIDALGO COUNTY
CUSTOMER	GILBERT TEXAS CONSTRUCTION
SHIP TO	
Customer's Order No.	
Dwg. By RG	Date 9-22-92
Checked By DLT	Date 9-92

SHEET 213 OF
JOB NO. 92-108

AFV MAR 15

CE 92-13 (LINE 3)

332640

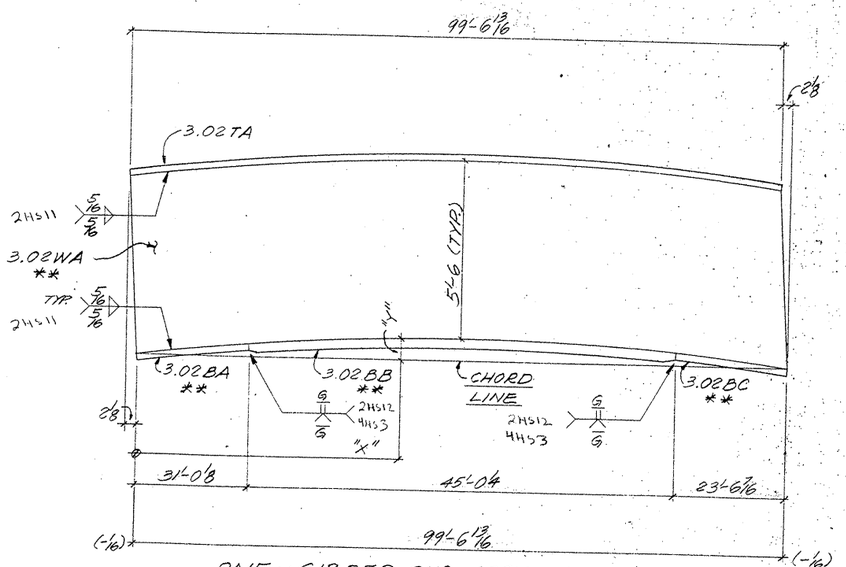

ONE ~ GIRDER SUB-ASSY. ~ MK A212

(FOR GIRDER 230 PG 3.02)

MK A212											
"X"	9'-8 5/8	24'-4 3/8	39'-1 1/8	53'-9 7/8	68'-5 5/8	83'-1 15/16	97'-10 3/16				99'-6 13/16
"Y"	7/8	1 15/16	2 1/2	2 5/8	2 1/4	1 7/16	3/16				0"

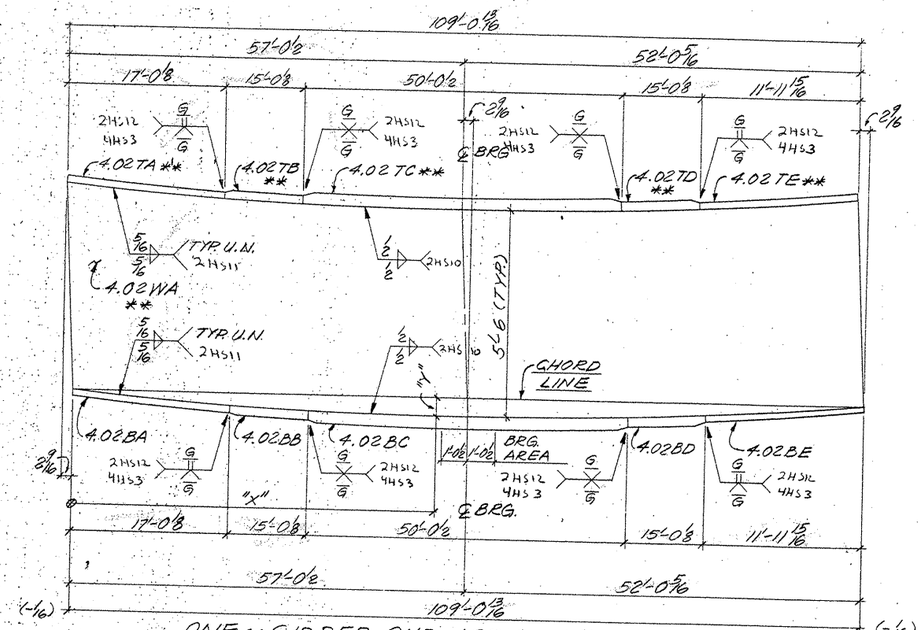

ONE ~ GIRDER SUB-ASSY. ~ MK B212

(FOR GIRDER ~ 234 PG 4.02)

MK B212									
"X"	12'-11 7/16	27'-7 3/8	42'-4 3/8	57'-0 1/2	71'-4 3/8	85'-9 1/4	100'-1 5/8	109'-0 13/16
"Y"	5/16	1/16	7/8	1" ℄ BRG.	15/16	1/16	3/8	0"

BILL OF MATERIAL

	Qnty	Material	Length	Mark Temp	Mark Ship	Wt	Cut From	Remarks
2	1	GIRDER SUB-ASSY.			A212			
3	1	PL 1'-2"x66	99'-8 15/16	3.02WA			209-11	CVN2
4	1	PL 1"x20	99'-6 13/16	3.02TA			218-7	
5	1	PL 1"x20	31'-0 1/8	3.02BA			212-16	CVN2
6	1	PL 1 1/4"x20	45'-0 4	3.02BB			212-17	CVN2
7	1	PL 1"x20	23'-6 7/16	3.02BC			212-18	CVN2
8								
9								
10								
11								
12	1	GIRDER SUB-ASSY.			B212			
13	1	PL 3'-3 3/8"x66	109'-3 3/8	4.02WA			209-12	CVN2
14	1	PL 1"x20	17'-0 1/8	4.02TA			218-19	CVN2
15	1	PL 1'-6"x20	15'-0 1/8	4.02TB			218-20	CVN2
16	1	PL 3"x22	50'-0 1/2	4.02TC			216-6	CVN3
17	1	PL 1'-2"x20	15'-0 1/8	4.02TD			212-20	CVN2
18	1	PL 1"x20	11'-11 15/16	4.02TE			213-2	CVN2
19	1	PL 1"x20	17'-0 1/8	4.02BA			218-8	
20	1	PL 1'-0"x20	15'-0 1/8	4.02BB			218-9	
21	1	PL 3"x22	50'-0 1/2	4.02BC			218-10	
22	1	PL 1'-2"x20	15'-0 1/8	4.02BD			218-9	
23	1	PL 1"x20	11'-11 15/16	4.02BE			218-11	
24								
25								
26								
27								
28								
29								
30								
31								
32								
33								
34								
35								
36								
37								
38								
39								
40								
41								
42								
43								
44								
45								
46								
47								
48								
49								
50								
51								
52								
53								
54								
55								
56								
57								
58								
59								
60								

TEXAS DEPARTMENT OF TRANSPORTATION
APPROVED
DIVISION OF BRIDGES AND STRUCTURES
APR 06 1993
APPROVAL OF THIS DRAWING DOES NOT RELIEVE THE CONTRACTOR OF THE RESPONSIBILITY FOR THE CORRECTNESS OF DETAIL

FOR APPROVAL
MAY 1 '92
NOT FOR CONSTRUCTION

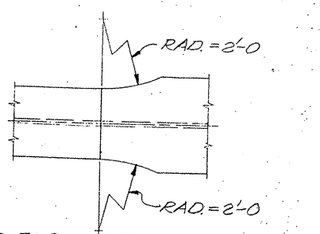

TYP. FLG. WIDTH TRANSITION

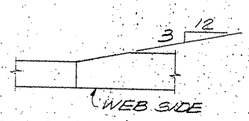

TYP. FLG. THICKNESS TRANSITION

SHOP NOTES:

1) FOR GENERAL NOTES, SEE SHT. GN1
2) MATERIAL NOTED "** MUST MEET CHARPY V-NOTCH REQUIREMENTS
3) FOR HEAT CURVE DIAGRAM, SEE SHT. 251

G0208

FED. ROAD DIV. NO.	STATE	FEDERAL AID PROJECT NO.				
6	TX.	NH 92(50)M				
STATE DIST. NO.	COUNTY	CONTROL NO.	SECTION NO.	JOB NO.	HIGHWAY NO.	
21	HIDALGO	39	17	97	83/281	

REVISION	DATE	DESCRIPTION OF REVISION
NO. 1		
NO. 2		
NO. 3		
NO. 4		
NO. 5		

PRINTING

Req'd	For	Date

Bolts Holes. Unless Noted
Shop Paint SEE SHT. GN1
Fab. Spec. A572-50 U.N. Inspection
Architect
Erection By Field Connections

HIRSCHFELD STEEL CO. INC.
112 WEST 29TH SAN ANGELO, TEXAS 76903
PHONE (915) 653-3211

DESCRIPTION: 750'-0 PLATE GIRDER UNIT
STRUCTURE US 83/281 INTERCHANGE RAMP #3
LOCATION HIDALGO COUNTY
CUSTOMER GILBERT TEXAS CONSTRUCTION
SHIP TO
Customer's Order No.
Dwg. By PEC Date 9-22-92
Checked By DLT Date 9-92
SHEET 2/2 OF
JOB NO. 92-108

CE 92-13 (LINE 2)

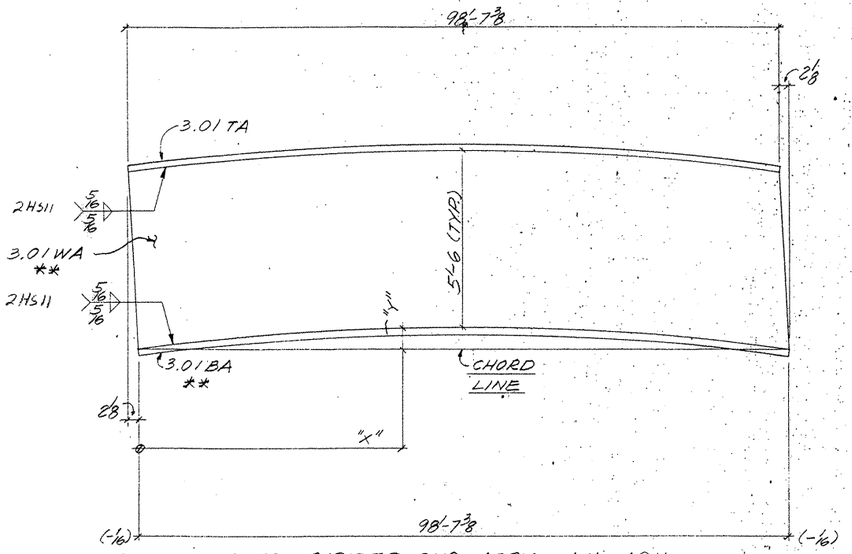

ONE ~ GIRDER SUB-ASSY. ~ MK A211

(FOR GIRDER 229 PG 3.01)

MK A211											
"X"	9'-6 7/16	24'-1	38'-7 5/8	53'-2 1/4	67'-8 3/8	82'-3 3/16	96'-10 3/16				98'-7 3/8
"Y"	7/8	1 3/8	2 1/2	2 5/8	2 1/4	1 3/8	3/16				0"

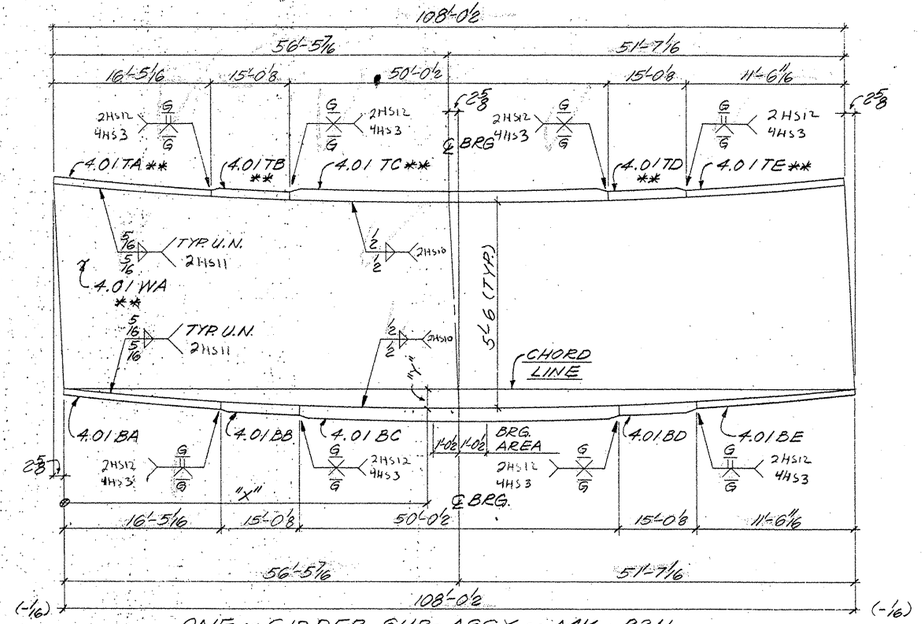

ONE ~ GIRDER SUB-ASSY. ~ MK B211

(FOR GIRDER ~ 233 PG 4.01)

MK B211								
"X"	12'-4 3/8	27'-4 1/16	41'-10 3/4	56'-5 7/16	70'-8 3/16	84'-11	99'-1 3/4	108'-0 1/2
"Y"	1/4	9/16	1 3/16	1 5/16	7/8	1 1/16	5/16	0"

℄ BRG.

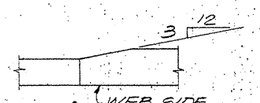

TYP FLG. THICKNESS TRANSITION

SHOP NOTES:

1) FOR GENERAL NOTES, SEE SHT. GN1
2) MATERIAL NOTED "* *" MUST MEET CHARPY V-NOTCH REQUIREMENTS
3) FOR HEAT CURVE DIAGRAM, SEE SHT. 251

G0208

FED. ROAD DIV. NO.	STATE	FEDERAL AID PROJECT NO.			
6	TX.	NH 92(50)M			
STATE DIST. NO.	COUNTY	CONTROL NO.	SECTION NO.	JOB NO.	HIGHWAY NO.
21	HIDALGO	39	17	97	83/281

BILL OF MATERIAL

	Qnty	Material	Length	Mark Temp	Mark Ship	Wt.	Cut From	Remarks
1								
2	1	GIRDER SUB-ASSY.			A211			
3	1	PL 1/2 x 66	98'-9 1/2	3.01 WA			209-4	CVN2
4	1	PL 1 x 20	98'-7 3/8	3.01 TA			217-7	
5	1	PL 1 x 20	98'-7 3/8	3.01 BA			211-14	CVN2
6								
7								
8								
9								
10								
11								
12	1	GIRDER SUB-ASSY.			B211			
13	1	PL 5/16 x 66	108'-3 3/8	4.01 WA			209-5	CVN2
14	1	PL 1 x 20	16'-5 1/16	4.01 TA			211-15	CVN2
15	1	PL 1 1/2 x 20	15'-0 1/8	4.01 TB			211-16	CVN2
16	1	PL 3 x 20	50'-0 1/2	4.01 TC			216-3	CVN3
17	1	PL 1 1/2 x 20	15'-0 1/8	4.01 TD			211-16	CVN2
18	1	PL 1 x 20	11'-6 1/16	4.01 TE			211-17	CVN2
19	1	PL 1 x 20	16'-5 1/16	4.01 BA			217-8	
20	1	PL 1 1/2 x 20	15'-0 1/8	4.01 BB			217-9	
21	1	PL 3 x 20	50'-0 1/2	4.01 BC			217-10	
22	1	PL 1 1/2 x 20	15'-0 1/8	4.01 BD			217-9	
23	1	PL 1 x 20	11'-6 1/16	4.01 BE			217-11	
24								
25								
26								
27								
28								
29								
30								
31								
32								
33								
34								
35								
36								
37								
38								
39								
40								
41								
42								
43								
44								
45								
46								
47								
48								
49								
50								
51								
52								
53								
54								
55								
56								
57								
58								
59								
60								

TEXAS DEPARTMENT OF TRANSPORTATION
APPROVED
DIVISION OF BRIDGES AND STRUCTURES
APR 06 1993

APPROVAL OF THIS DRAWING DOES NOT RELIEVE THE CONTRACTOR OF THE RESPONSIBILITY FOR THE CORRECTNESS OF DETAIL.

FOR APPROVAL MAR 15 93
NOT FOR CONSTRUCTION

REVISION	DATE	DESCRIPTION OF REVISION
NO. 1		
NO. 2		
NO. 3		
NO. 4		
NO. 5		

PRINTING Req'd	For	Date

Bolts: Holes: Unless Noted
Shop Paint SEE SHT. GN1
Fab. Spec A572-50 U.N. Inspection
Architect
Erection By Field Connections

HIRSCHFELD STEEL CO. INC.
112 WEST 29TH SAN ANGELO, TEXAS 76903
PHONE (915) 653-3211

DESCRIPTION 750'-0 PLATE GIRDER UNIT
STRUCTURE US 83/281 INTERCHANGE RAMP "3"
LOCATION HIDALGO COUNTY
CUSTOMER GILBERT TEXAS CONSTRUCTION
SHIP TO
Customer's Order No.
Dwg. By PCC Date 9-22-92
Checked By DLT Date 9-92

SHEET 211 OF
JOB NO. 92-108

APV MAR 15

CE 92-13 (LINE 1)

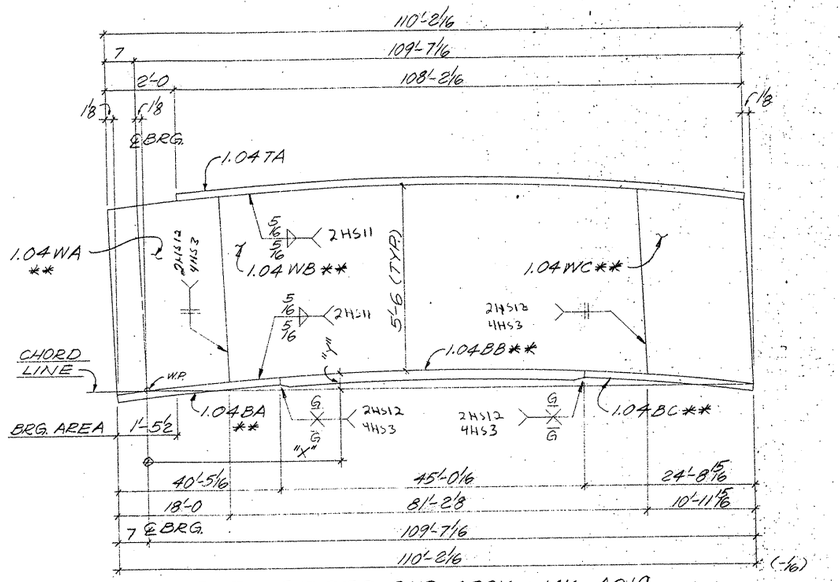

ONE ~ GIRDER SUB-ASSY. ~ MK A210

(FOR GIRDER ~ 224PG1.04)

MK A210									
"X"	15'-10 5/16	17'-5	31'-8 5/8	47'-6 15/16	63'-5 1/4	79'-3 3/16	95'-1 15/16	98'-7 1/8	109'-7 1/16
"Y"	1 9/16	1 1/16 ℄ WEB SPLICE	2 13/16	3 3/16	3 3/16	2 3/4	1 1/2	1/8 ℄ WEB SPLICE	0"

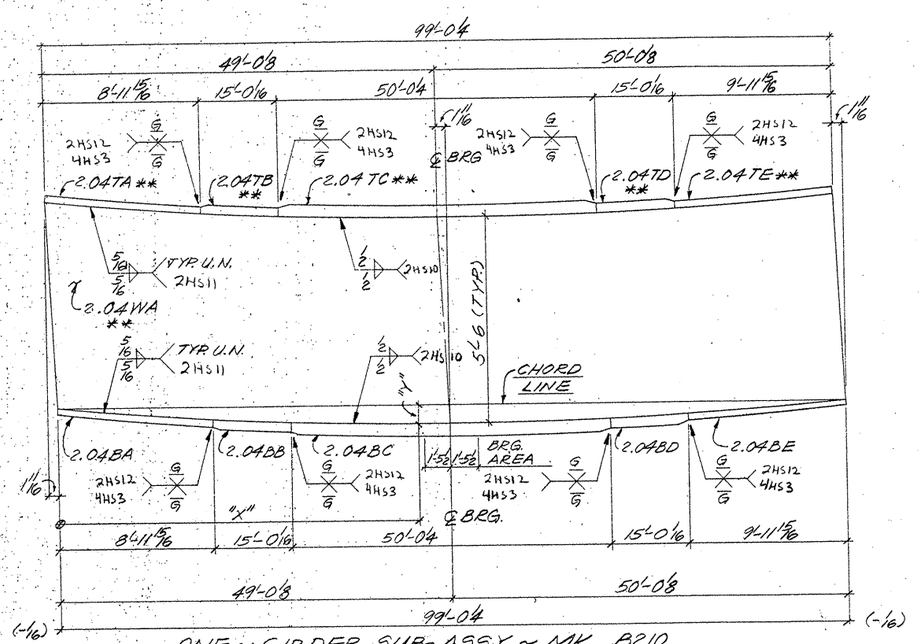

ONE ~ GIRDER SUB-ASSY. ~ MK B210

(FOR GIRDER ~ 228PG2.04)

MK B210								
"X"	1'-5 1/16	17'-3 7/16	33'-1 13/16	49'-0 8	63'-11 5/8	78'-11 1/8	93'-10 5/8	99'-04
"Y"	0"	1/4	7/16	9/16 ℄ BRG.	1/2	5/16	1/16	0"

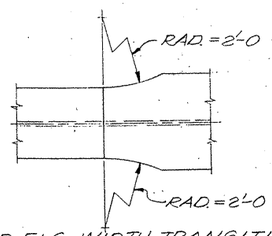

TYP. FLG. WIDTH TRANSITION

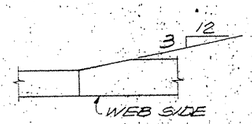

TYP. FLG. THICKNESS TRANSITION

SHOP NOTES:

1) FOR GENERAL NOTES, SEE SHT. GN1
2) MATERIAL NOTED "**" MUST MEET CHARPY V-NOTCH REQUIREMENTS
3) FOR HEAT CURVE DIAGRAM, SEE SHT. 251 & 252.

BILL OF MATERIAL

	Qnty	Material	Length	Mark Temp	Mark Ship	Wt.	Cut From	Remarks
1								
2	1	GIRDER SUB-ASSY.			A210			
3	1	PL 5/8 x 66	18'-0 7/8	1.04WA			210-10	CVN2
4	1	PL 1/2 x 66	8'-1 2/16	1.04WB			210-11	CVN2
5	1	PL 5/8 x 66	11'-0 3/16	1.04WC			210-12	CVN2
6	1	PL 1/4 x 22	108'-2 1/16	1.04TA			220-2	
7	1	PL 1/4 x 22	40'-5 1/16	1.04BA			214-12	CVN2
8	1	PL 1 1/2 x 22	45'-0 1/16	1.04BB			214-13	CVN2
9	1	PL 1/4 x 22	24'-8 15/16	1.04BC			214-14	CVN2
10								
11								
12								
13								
14	1	GIRDER SUB-ASSY.			B210			
15	1	PL 5/8 x 66	99'-1 1/16	2.04WA			210-13	CVN2
16	1	PL 1/4 x 22	8'-11 15/16	2.04TA			214-15	CVN2
17	1	PL 1 1/2 x 22	15'-0 1/16	2.04TB			214-16	CVN2
18	1	PL 3 x 24	50'-0 4	2.04TC			216-11	CVN3
19	1	PL 1 1/2 x 22	15'-0 1/16	2.04TD			214-16	CVN2
20	1	PL 1/4 x 22	9'-11 15/16	2.04TE			214-17	CVN2
21	1	PL 1/4 x 22	8'-11 15/16	2.04BA			220-3	
22	1	PL 1 1/2 x 22	15'-0 1/16	2.04BB			220-4	
23	1	PL 3 x 24	50'-0 4	2.04BC			220-5	
24	1	PL 1 1/2 x 22	15'-0 1/16	2.04BD			220-4	
25	1	PL 1/4 x 22	9'-11 15/16	2.04BE			220-6	
26								
27								
28								
29								
30								
31								
32								
33								
34								
35								
36								
37								
38								
39								
40								
41								
42								
43								
44								
45								
46								
47								
48								
49								
50								
51								
52								
53								
54								
55								
56								
57								
58								
59								
60								

TEXAS DEPARTMENT OF TRANSPORTATION
APPROVED
DIVISION OF BRIDGES AND STRUCTURES
APR 06 1993
APPROVAL OF THIS DRAWING DOES NOT RELIEVE THE CONTRACTOR OF THE RESPONSIBILITY FOR THE CORRECTNESS OF DETAIL.

FOR APPROVAL
MAR 15 93
NOT FOR CONSTRUCTION

REVISION	DATE	DESCRIPTION OF REVISION
NO. 1		
NO. 2		
NO. 3		
NO. 4		
NO. 5		

PRINTING

Req'd	For	Date

Bolts: Unless Noted
Shop Paint SEE SHT. GN1
Fab Spec A572-50 U.N. Inspection
Architect
Erection By: Field Connections

HIRSCHFELD STEEL CO. INC.
112 WEST 29TH SAN ANGELO, TEXAS 76903
PHONE (915) 653-3211

DESCRIPTION 750'-0 PLATE GIRDER UNIT
STRUCTURE US 83/281 INTERCHANGE RAMP #3
LOCATION HIDALGO COUNTY
CUSTOMER: GILBERT TEXAS CONSTRUCTION
SHIP TO:
Customer's Order No.
Dwg. By PLC Date 9-22-92
Checked By DLT Date 9-92
SHEET 210 OF
JOB NO. 92-108
CE 92-13 (LINE 4)

APV MAR 15

FED. ROAD DIV. NO.	STATE	FEDERAL AID PROJECT NO.			
6	TX.	NH 92(50)M			
STATE DIST. NO.	COUNTY	CONTROL NO.	SECTION NO.	JOB NO.	HIGHWAY NO.
21	HIDALGO	39	17	97	83/281

G0208

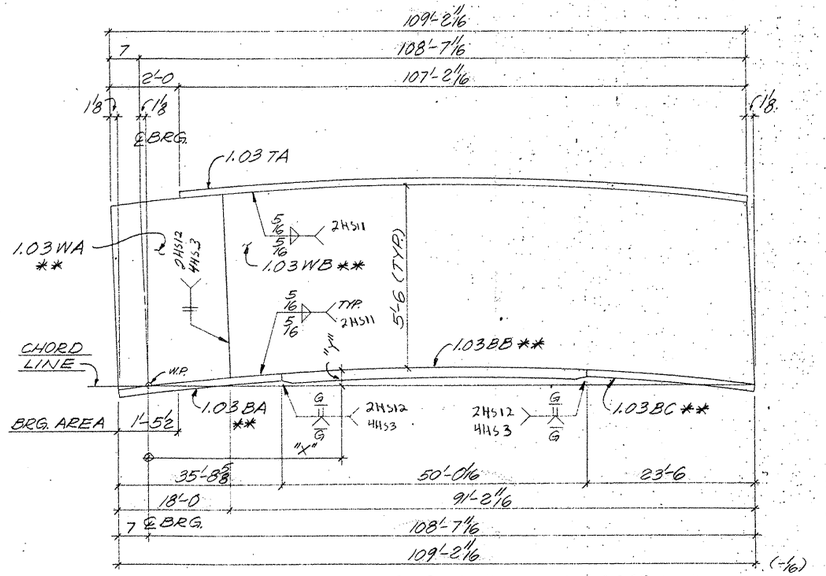

ONE ~ GIRDER SUB-ASSY. ~ MK A209

(FOR GIRDER ~ 223 PG 1.03)

MK A209									
"X"	15'-8 1/2	17'-5	31'-5 1/16	47'-1 5/8	62'-10 4	78'-6 13/16	94'-3 7/16		108'-7 1/16
"Y"	1 5/8	1 3/4 ℄ WEB SPLICE	2 7/8	3 1/2	3 1/2	2 1/16	1 9/16		0"

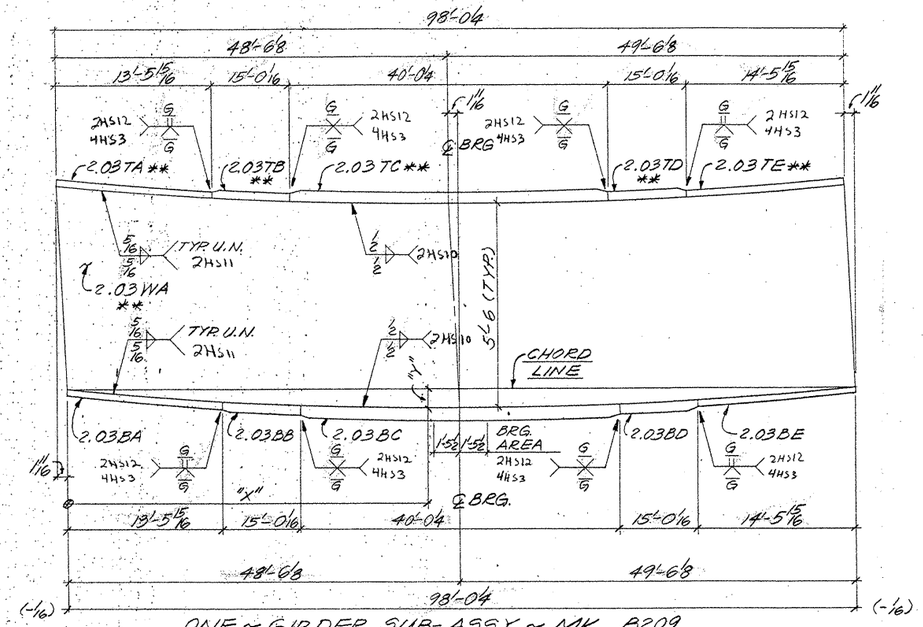

ONE ~ GIRDER SUB-ASSY. ~ MK B209

(FOR GIRDER ~ 227 PG 2.03)

MK B209									
			32'-9 1/2						
"X"	1'-4 4	17'-0 7/8	(39'-9 1/2)	48'-6 1/8	63'-1 4	78'-1 3/8	92'-11 1/16	98'-0 4	
"Y"	0"	5/16	9/16	1/16 ℄ BRG.	5/8	3/8	1/16	0"	

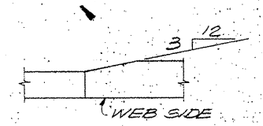

TYP. FLG. THICKNESS TRANSITION

SHOP NOTES:

1) FOR GENERAL NOTES, SEE SHT. GN1
2) MATERIAL NOTED "*" MUST MEET CHARPY V-NOTCH REQUIREMENTS.
3) FOR HEAT CURVE DIAGRAM, SEE SHT. 251 & 252.

G0208

FED. ROAD DIV. NO.	STATE	FEDERAL AID PROJECT NO.			
6	TX.	NH 92(50)M			
STATE DIST. NO.	COUNTY	CONTROL NO.	SECTION NO.	JOB NO.	HIGHWAY NO.
21	HIDALGO	39	17	97	83/281

BILL OF MATERIAL

	Qnty.	Material	Length	Mark Temp.	Mark Ship	Wt.	Cut From	Remarks
1								
2	1	GIRDER SUB-ASSY.			A209			
3	1	PL 9/16 x 66	18'-0 8	1.03WA			209-17	CVN2
4	1	PL 8 x 66	91'-3	1.03WB			209-18	CVN2
5	1	PL 1 x 20	107'-2 1/16	1.03TA			219-2	
6	1	PL 1 x 20	35'-8 7/8	1.03BA			213-10	CVN2
7	1	PL 1 1/2 x 20	50'-0 1/16	1.03BB			213-11	CVN2
8	1	PL 1 x 20	23'-6	1.03BC			213-12	CVN2
9								
10								
11								
12								
13								
14	1	GIRDER SUB-ASSY.			B209			
15	1	PL 3/8 x 66	98'-1 15/16	2.03WA			209-19	CVN2
16	1	PL 1 x 20	13'-5 15/16	2.03TA			213-13	CVN2
17	1	PL 1 1/2 x 20	15'-0 1/16	2.03TB			213-14	CVN2
18	1	PL 3 x 20	40'-0 4	2.03TC			216-8	CVN3
19	1	PL 1 1/2 x 20	15'-0 1/16	2.03TD			213-14	CVN2
20	1	PL 1 x 20	14'-5 15/16	2.03TE			213-15	CVN2
21	1	PL 1 x 20	13'-5 15/16	2.03BA			219-3	
22	1	PL 1 1/2 x 20	15'-0 1/16	2.03BB			219-4	
23	1	PL 3 x 20	40'-0 4	2.03BC			219-5	
24	1	PL 1 1/2 x 20	15'-0 1/16	2.03BD			219-4	
25	1	PL 1 x 20	14'-5 15/16	2.03BE			219-6	
26								
27								
28								
29								
30								
31								
32								
33								
34								
35								
36								
37								
38								
39								
40								
41								
42								
43								
44								
45								
46								
47								
48								
49								
50								
51								
52								
53								
54								
55								
56								
57								
58								
59								
60								

TEXAS DEPARTMENT OF TRANSPORTATION
APPROVED EXCEPT AS NOTED
DIVISION OF BRIDGES AND STRUCTURES
APR 06 1993
APPROVAL OF THIS DRAWING DOES NOT RELIEVE THE CONTRACTOR OF THE RESPONSIBILITY FOR THE CORRECTNESS OF DETAIL.

FOR APPROVAL
MAR 1 5 93
NOT FOR CONSTRUCTION

REVISION	DATE	DESCRIPTION OF REVISION
NO. 1		
NO. 2		
NO. 3		
NO. 4		
NO. 5		

PRINTING

Req'd	For	Date

Bolts: Holes: Unless Noted
Shop Paint: SEE SHT. GN1
Fab. Spec.: A572-50 U.N. Inspection
Architect
Erection By: Field Connections

HIRSCHFELD STEEL CO. INC.
112 WEST 29TH SAN ANGELO, TEXAS 76903
PHONE (915) 653-3211

DESCRIPTION	750'-0 PLATE GIRDER UNIT
STRUCTURE	US 83/281 INTERCHANGE RAMP "S"
LOCATION	HIDALGO COUNTY
CUSTOMER	GILBERT TEXAS CONSTRUCTION
SHIP TO	
Customer's Order No.	
Dwg. By: PGC	Date: 9-21-92
Checked By: DLT	Date: 9-92

SHEET 209 OF
JOB NO. 92-108

APV MAR 15

CE 92-13 (LINE 3)

X

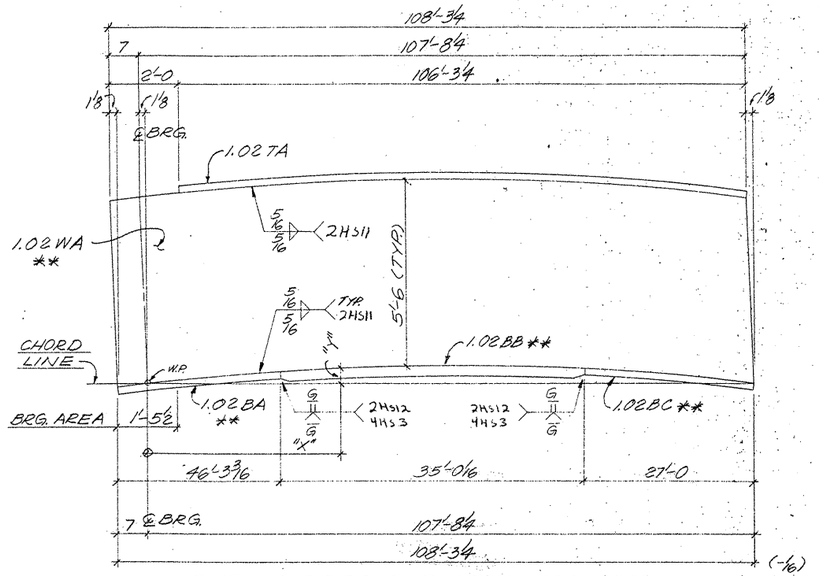

ONE ~ GIRDER SUB-ASSY. ~ MK A208
(FOR GIRDER ~ 222 PG 1.02)

MK A208									
"X"	15'-6 11/16	31'-1½	46'-8 5/16	62'-3 3/16	77'-10 1/16	93'-4 15/16			107'-8¾
"Y"	1½	2 1/16	¾	¾	2 5/8	1 7/16			0"

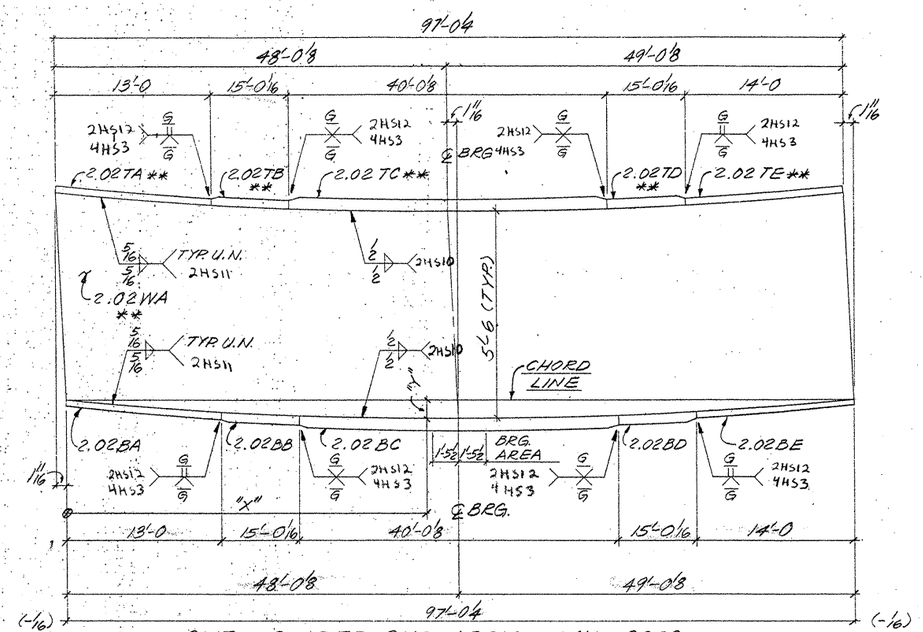

ONE ~ GIRDER SUB-ASSY. ~ MK B208
(FOR GIRDER ~ 226 PG 2.02)

MK B208									
"X"	1'-3 7/16	16'-10 3/8	32'-5¼	48'-0⅛	62'-8 3/8	77'-4 7/16	92'-0 13/16	97'-0¼	
"Y"	0"	4	½	5/8	½	5/16	1/16	0"	
				℄ BRG.					

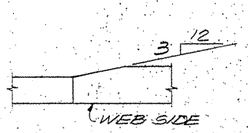

TYP. FLG. THICKNESS TRANSITION

SHOP NOTES:

1) FOR GENERAL NOTES, SEE SHT. GN1
2) MATERIAL NOTED "**" MUST MEET CHARPY V-NOTCH REQUIREMENTS
3) FOR HEAT CURVE DIAGRAM, SEE SHT. 25.

G0208

FED. ROAD DIV. NO.	STATE	FEDERAL AID PROJECT NO.			
6	TX.	NH 92(50)M			
STATE DIST. NO.	COUNTY	CONTROL NO.	SECTION NO.	JOB NO.	HIGHWAY NO.
21	HIDALGO	39	17	97	83/281

BILL OF MATERIAL

	Qnty.	Material	Length	Mark Temp.	Mark Ship	Wt.	Cut From	Remarks
1								
2	1	GIRDER SUB-ASSY.			A208			
3	1	PL ½x66	108'-4⅞	1.02WA			209-9	CVN2
4	1	PL 1x20	106'-3¾	1.02TA			218-2	
5	1	PL 1x20	46'-3 3/16	1.02BA			212-10	CVN2
6	1	PL 1¼x20	35'-0 1/16	1.02BB			212-11	CVN2
7	1	PL 1x20	27'-0	1.02BC			212-12	CVN2
8								
9								
10								
11								
12	1	GIRDER SUB-ASSY.			B208			
13	1	PL ⅝x66	97'-1 15/16	2.02WA			209-10	CVN2
14	1	PL 1x20	13'-0	2.02TA			218-13	CVN2
15	1	PL 1½x20	15'-0 1/16	2.02TB			212-14	CVN2
16	1	PL 2¾x20	40'-0⅛	2.02TC			216-5	CVN3
17	1	PL 1½x20	15'-0 1/16	2.02TD			212-14	CVN2
18	1	PL 1x20	14'-0	2.02TE			212-15	CVN2
19	1	PL 1x20	13'-0	2.02BA			218-3	
20	1	PL 1½x20	15'-0 1/16	2.02BB			218-4	
21	1	PL 2¾x20	40'-0⅛	2.02BC			218-5	
22	1	PL 1½x20	15'-0 1/16	2.02BD			218-4	
23	1	PL 1x20	14'-0	2.02BE			218-6	
24								
25								
26								
27								
28								
29								
30								
31								
32								
33								
34								
35								
36								
37								
38								
39								
40								
41								
42								
43								
44								
45								
46								
47								
48								
49								
50								
51								
52								
53								
54								
55								
56								
57								
58								
59								
60								

TEXAS DEPARTMENT OF TRANSPORTATION
APPROVED
DIVISION OF BRIDGES AND STRUCTURES
APR 06 1993
APPROVAL OF THIS DRAWING DOES NOT RELIEVE THE CONTRACTOR OF THE RESPONSIBILITY FOR THE CORRECTNESS OF DETAIL.

FOR APPROVAL MAR 15 '93
NOT FOR CONSTRUCTION

REVISION	DATE	DESCRIPTION OF REVISION
NO. 1		
NO. 2		
NO. 3		
NO. 4		
NO. 5		

PRINTING Req'd	For	Date
	APV MAR 15	

Bolts Holes Unless Noted
Shop Paint SEE SHT. GN1
Fab Spec A572-50 U.N. Inspection
Architect
Erection By Field Connections

HIRSCHFELD STEEL CO. INC.
112 WEST 29TH SAN ANGELO TEXAS 76903
PHONE (915) 653-3211

DESCRIPTION	750'-0 PLATE GIRDER UNIT
STRUCTURE	US 83/281 INTERCHANGE RAMP "S
LOCATION	HIDALGO COUNTY
CUSTOMER	GILBERT TEXAS CONSTRUCTION
SHIP TO	
Customer's Order No.	
Dwg. By PCC	Date 9-21-92
Checked By OLT	Date 9-92

SHEET 208 OF
JOB NO. 92-108

CE 92-13 (LINE 2)

332440

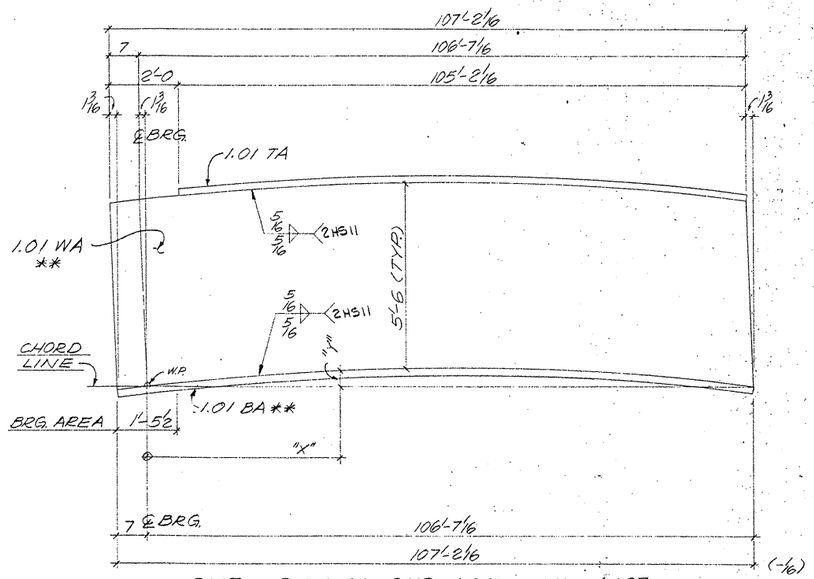

ONE ~ GIRDER SUB-ASSY. ~ MK A207

(FOR GIRDER ~ 221 PG 1.01)

MK A207									
"X"	15'-4 13/16	30'-9 15/16	46'-3/16	61'-8 3/16	77'-1 5/16	92'-6 7/16			106'-7/16
"Y"	1/8	2/16	2 5/16	3	2 7/16	1 5/16			0"

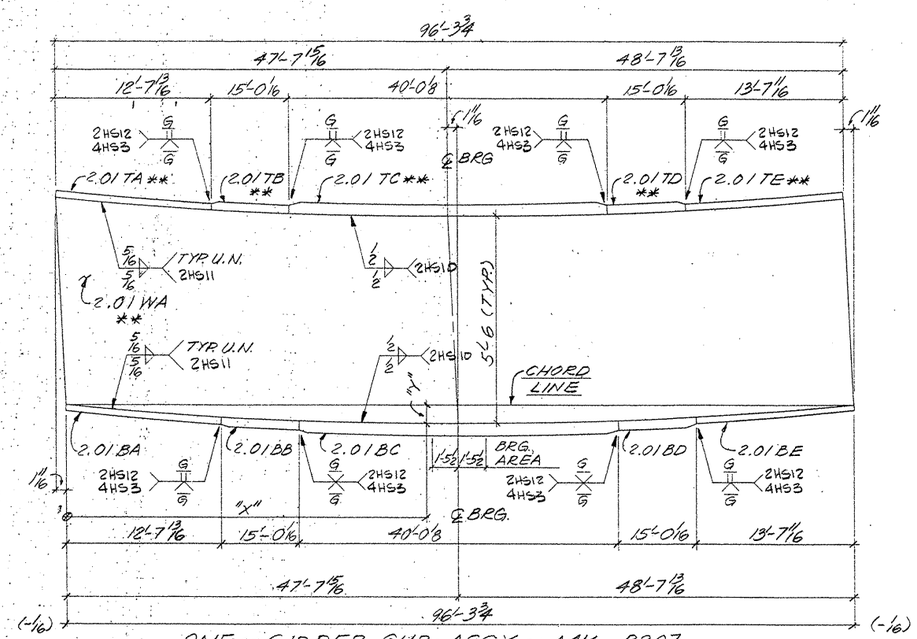

ONE ~ GIRDER SUB-ASSY. ~ MK B207

(FOR GIRDER ~ 225 PG 2.01)

MK B207									
"X"	1'-4 7/16	16'-9 5/8	32'-2 3/4	47'-7 15/16 ℄ BRG.	62'-2 2	76'-9 1/8	91'-3 1/16	96'-3 3/4	
"Y"	0"	4	1/2	9/16	1/2	4	1/16	0"	

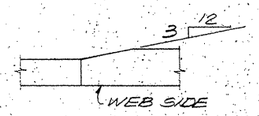

TYP. FLG. THICKNESS TRANSITION

SHOP NOTES:

1) FOR GENERAL NOTES, SEE SHT. GN1
2) MATERIAL NOTED "**" MUST MEET CHARPY V-NOTCH REQUIREMENTS
3) FOR HEAT CURVE DIAGRAM, SEE SHT. 251.

G0208

FED. ROAD DIV. NO.	STATE	FEDERAL AID PROJECT NO.			
6	TX.	NH 92(50)M			
STATE DIST. NO.	COUNTY	CONTROL NO.	SECTION NO.	JOB NO.	HIGHWAY NO.
21	HIDALGO	39	17	97	83/281

BILL OF MATERIAL

	Qnty	Material	Length	Mark Temp	Mark Ship	Wt	Cut From	Remarks
2	1	GIRDER SUB-ASSY.			A207			
3	1	R 7/8x66	107'-3 1/4	1.01WA			209-2	CVN2
4	1	R 1x20	105'-2 1/16	1.01TA			217-2	
5	1	R 1x20	107'-2 1/16	1.01BA			211-10	CVN2
12	1	GIRDER SUB-ASSY.			B207			
13	1	R 3/8x66	96'-5 7/16	2.01WA			209-3	CVN2
14	1	R 1x20	12'-7 13/16	2.01TA			211-11	CVN2
15	1	R 14x20	15'-0 1/16	2.01TB			211-12	CVN2
16	1	R 2 1/2x20	40'-0 1/8	2.01TC			216-2	CVN3
17	1	R 14x20	15'-0 1/16	2.01TD			211-12	CVN2
18	1	R 1x20	13'-7 1/16	2.01TE			211-13	CVN2
19	1	R 1x20	12'-7 13/16	2.01BA			217-3	
20	1	R 14x20	15'-0 1/16	2.01BB			217-4	
21	1	R 2 1/2x20	40'-0 1/8	2.01BC			217-5	
22	1	R 14x20	15'-0 1/16	2.01BD			217-4	
23	1	R 1x20	13'-7 1/16	2.01BE			217-6	

TEXAS DEPARTMENT OF TRANSPORTATION
APPROVED
DIVISION OF BRIDGES AND STRUCTURES
APR 06 1993

APPROVAL OF THIS DRAWING DOES NOT RELIEVE THE CONTRACTOR OF THE RESPONSIBILITY FOR THE CORRECTNESS OF DETAIL

NOT FOR CONSTRUCTION
FOR APPROVAL
MAY 7 '93

REVISION	DATE	DESCRIPTION OF REVISION
NO. 1		
NO. 2		
NO. 3		
NO. 4		
NO. 5		

PRINTING

Req'd	For	Date

Bolts: Holes: Unless Noted
Shop Paint SEE SHT. GN1
Fab Spec A572-50 U.N. Inspection
Architect
Erection By Field Connections

HIRSCHFELD STEEL CO. INC.
112 WEST 29TH SAN ANGELO, TEXAS 76903
PHONE (915) 653-3211

DESCRIPTION	750'-0 PLATE GIRDER UNIT
STRUCTURE	US 83/281 INTERCHANGE RAMP "B"
LOCATION	HIDALGO COUNTY
CUSTOMER	GILBERT TEXAS CONSTRUCTION
SHIP TO	
Customer's Order No.	
Dwg. By PJC	Date 9-21-92
Checked By DLT	Date 9/92

SHEET 207 OF
JOB NO. 92-108

CE 92-13 (LINE 1)

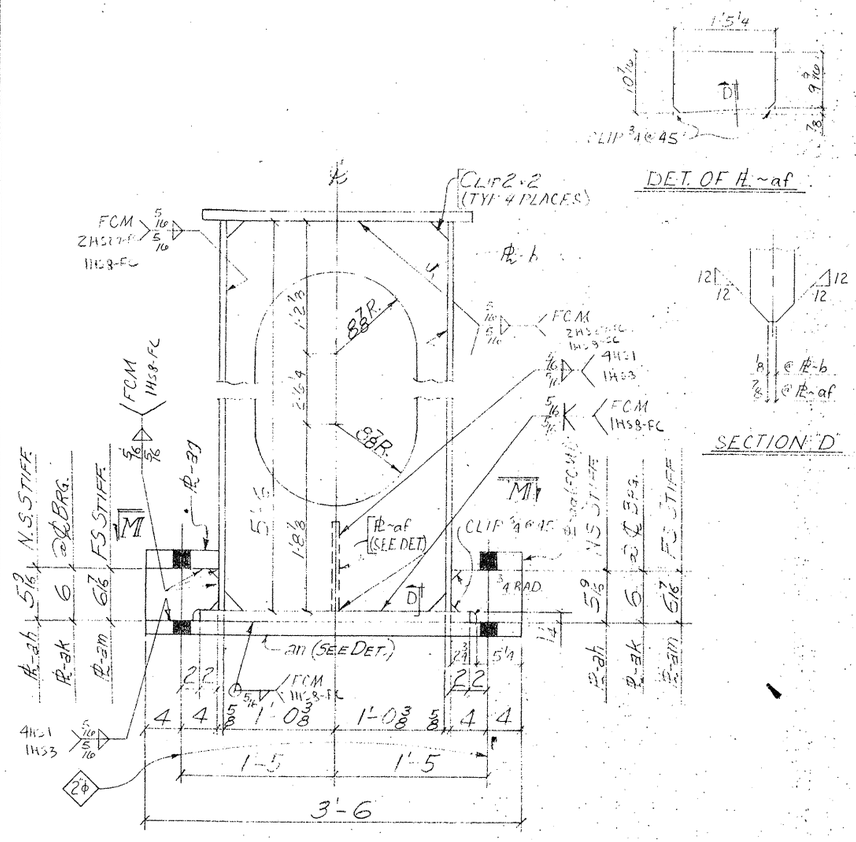

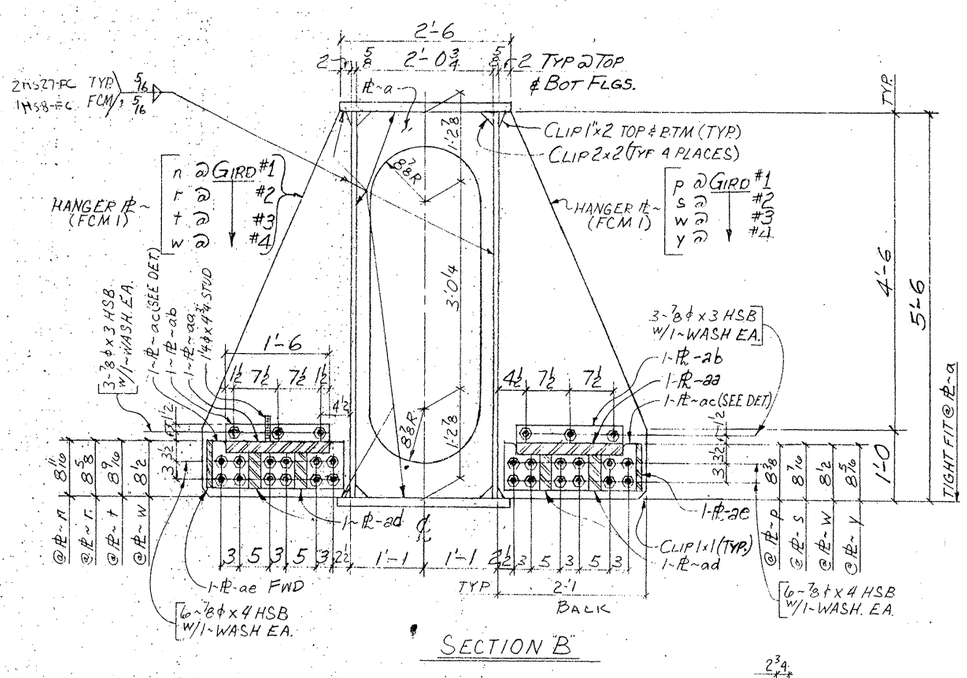

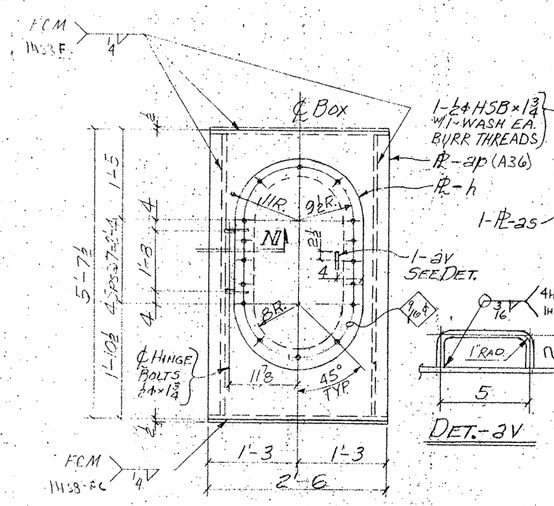

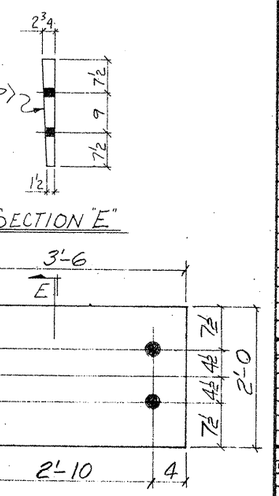

SHOP NOTES:
1. FOR GENERAL NOTES SEE SHEET GN1.
2. DUPLICATION OF PIECE MARK INDICATES DUPLICATION OF WELDING.
3. A SILICONE BEAD SHALL BE UNIFORMLY APPLIED AROUND EDGE OF DOOR PLATE BEFORE SECURING.
4. AFTER THE HANGER PLATES AND THE BEAM SEAT SHELF PLATES HAVE BEEN WELDED AND BOLTED INTO THEIR FINAL POSITIONS, EACH BEAM SEAT ASSEMBLY SHALL BE TRIMMED TO FIT IN ORDER TO PROVIDE NO LESS THAN 1/16" CLEARANCE AND NO MORE THAN 1/8" CLEARANCE BETWEEN THE BEAM SEAT ASSEMBLY AND THE HANGER OR SHELF PLATES. AFTER THE BEAM SEAT ASSEMBLY IS IN ITS FINAL POSITION THE HOLD-DOWN PLATE SHALL BE BOLTED INTO POSITION. THE NUTS SHALL BE SNUG TIGHT PLUS ONE HALF TURN. BURR THREADS OR TACK WELD NUT.

BILL OF MATERIAL

	Qnty.	Material	Length	Mark Temp	Mark Ship	Wt	Cut From	Remarks
1	ONE	BOX GIRDER			206BGVD			
2	2	PL 5/8 x 66	50'-10 1/4	1.20WA			221-2	FCM-1
3	1	PL 1/4 x 30	50'-6 13/16	1.20TA			221-5	FCM-1
4	1	PL 1/4 x 30	50'-6 13/16	1.20BA			221-5	FCM-1
5	8	PL 3/4 x 24 3/4	5'-6	a			207-3	
6	4	PL 3/4 x 24 3/4	5'-6	b			207-3	
7	1	PL 3/4 x 25	5'-6	c			207-1	SEE SHT FCM-1
8	1		5'-6	d				
9	1		5'-6	e				
10	2		5'-6	f				
11	2		5'-6	g				
12								
13	1		5'-6	k				
14								
15	1		5'-6	n				
16	1		5'-6	p				
17	1		5'-6	r				
18	1		5'-6	s				
19	1		5'-6	t				
20								
21	2		5'-6	w				
22	1		5'-6	y				
23	8	PL 2 x 17 7/8	3'-3 7/8	aa			201-6	
24	16	PL 1 x 3	1'-6	ab			207-4	
25	16	PL 2 x 8	1'-10	ac			207-5	
26	16	PL 2 x 6	2'-11 7/8	ad			207-7	
27	8	PL 1 x 8	3'-1 1/4	ae			207-8	
28	2	PL 1 1/2 x 10 7/16	1'-5 9/16	af			207-14	
29	4	PL 2 x 8	1'-9	ag			207-2	
30	4	PL 1 x 5 9/16	0'-8	ah			207-11	
31	4	PL 1 x 6	0'-6	ak			207-12	
32	4	PL 1 x 6 7/16	0'-8	am			207-13	
33	8	1/4 ϕ FULL THD STUD	0'-4 3/4				208-9	A108
34	60	7/8 ϕ HD STUD	0'-4				208-8	A108
35								
36								
37	48	7/8 ϕ HSB	0'-3				208-2	A325 Tv1
38	192	7/8 ϕ HSB	0'-4				208-3	
39	240	7/8 ϕ HS WASHER					208-4	
40	36	1 2/8 ϕ HSB	0'-1 3/4				208-5	
41	36	1 2/8 ϕ HS WASHER					208-6	
42								
43								
44	2	PL 2 3/4 x 24	3'-6	an			207-15	
45	2	PL 1/2 x 30	5'-7 1/2	ap			207-9	A36
46	2	PL 1/4 x 22	4'-2	h			207-10	
47	4	FL 3/8 x 1 1/2	0'-1 3/4	as			207-17	
48	4	FL 3/8 x 1'-0	0'-3 5/8	at			207-16	
49	2	1 2/8 ϕ BAR	0'-8 1/8	av			207-18	
50								
51								
52								
53								
54								
55								
56								
57								
58								
59								
60								

TEXAS DEPARTMENT OF TRANSPORTATION
APPROVED
DIVISION OF BRIDGES AND STRUCTURES
APR 06 1993

FOR APPROVAL
MAY BE
NOT FOR CONSTRUCTION

APPROVAL OF THIS DRAWING DOES NOT RELIEVE THE CONTRACTOR OF THE RESPONSIBILITY FOR THE CORRECTNESS OF DETAIL

REVISION	DATE	DESCRIPTION OF REVISION
NO. 1		
NO. 2		
NO. 3		
NO. 4		
NO. 5		

PRINTING Req'd	For	Date

Bolts 7/8 ϕ HSB U.N. Holes 15/16 ϕ Unless Noted
Shop Paint SYSTEM II INSIDE & OUT
Fab Spec A572 50 U.N. Inspection
Architect
Erection By Field Connections

HIRSCHFELD STEEL CO. INC.
112 WEST 29TH SAN ANGELO, TEXAS 76903
PHONE (915) 653-3211

DESCRIPTION 750'0 PLATE GIRDER UNIT
STRUCTURE US 83/281 INTERCHANGE RAMP #3
LOCATION HIDALGO COUNTY
CUSTOMER GILBERT TEXAS CONSTRUCTION
SHIP TO
Customer's Order No.
Dwg. By JC Date 9-92
Checked By MSG Date 10-9-92

SHEET 206B OF
JOB NO. 92-108

FED. ROAD DIV. NO.	STATE	FEDERAL AID PROJECT NO.			
6	TX.	NH 92(50)M			
STATE DIST. NO.	COUNTY	CONTROL NO.	SECTION NO.	JOB NO.	HIGHWAY NO.
21	HIDALGO	39	17	97	83/281

QB208

CE 92-13

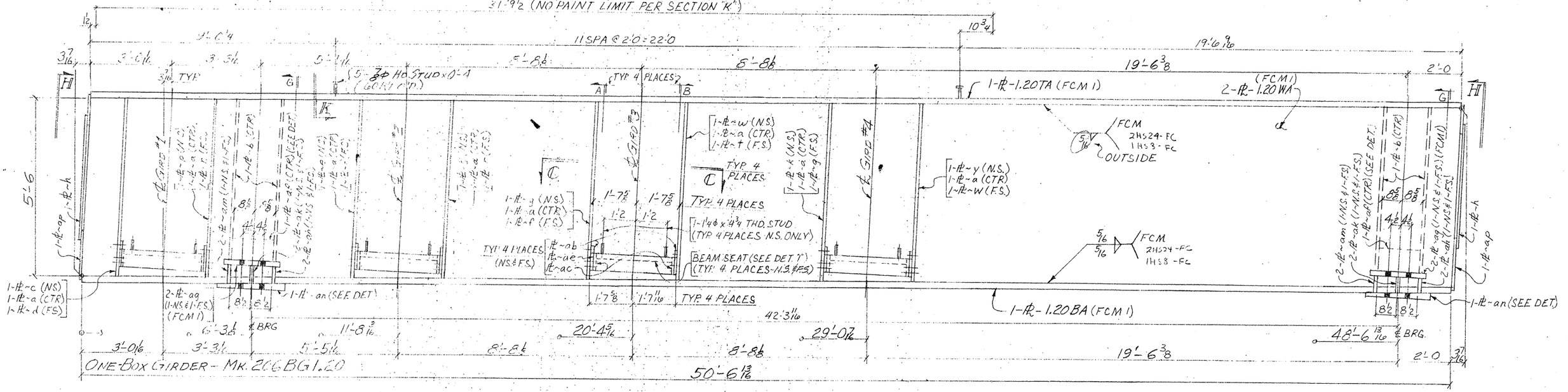

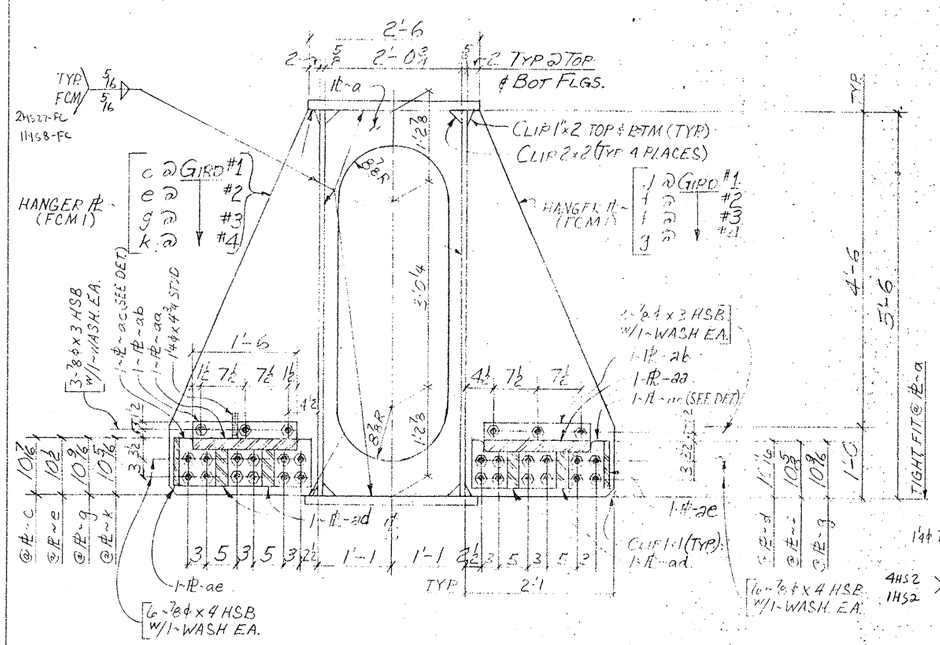

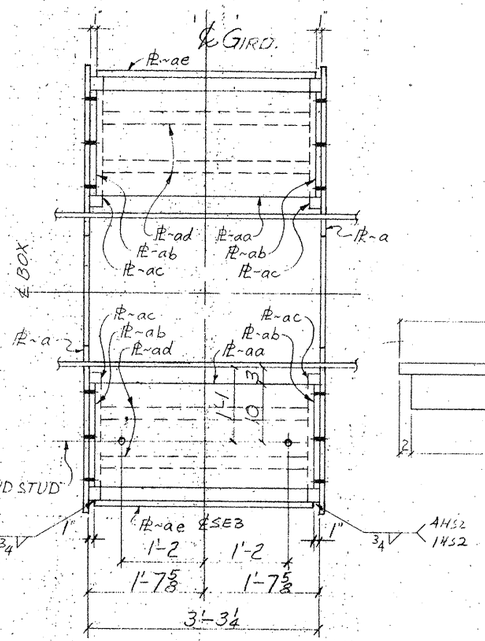

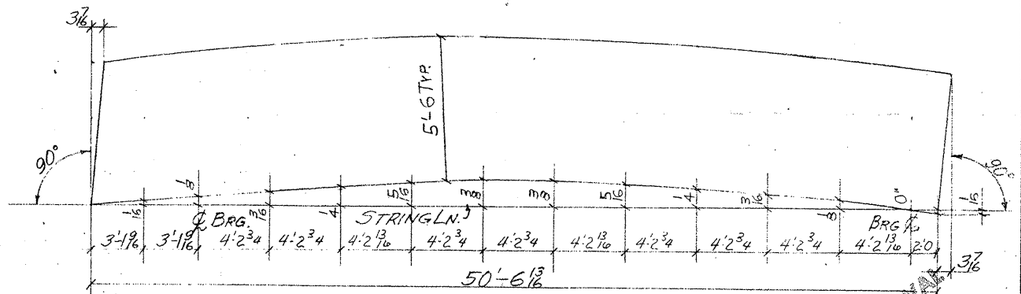

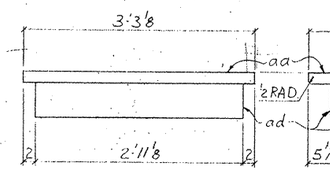

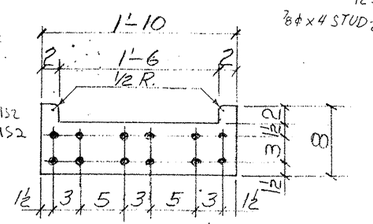

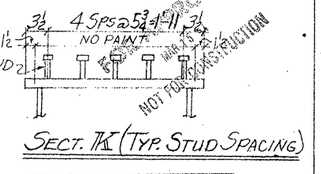

TEXAS DEPARTMENT OF TRANSPORTATION
APPROVED
DIVISION OF BRIDGES AND STRUCTURES
APR 06 1993
APPROVAL OF THIS DRAWING DOES NOT RELIEVE THE CONTRACTOR OF THE RESPONSIBILITY FOR THE CORRECTNESS OF DETAIL

AS APPROVED FOR CONSTRUCTION
NOT FOR CONSTRUCTION

BG208

FED. ROAD DIV. NO.	STATE	FEDERAL AID PROJECT NO.			
6	TX.	NH 92(50)M			
STATE DIST. NO.	COUNTY	CONTROL NO.	SECTION NO.	JOB NO.	HIGHWAY NO.
21	HIDALGO	39	17	97	83/281

HOLES 13/16ø U.N. FOR AP'VL
BOLTS 7/8ø U.N. RETURNED
WELDS ____ U.N. TO SHOP
PAINT SYSTEM II INSIDE & OUT

REVISIONS

NO.	DATE	REMARKS
1		
2		
3		
4		

HIRSCHFELD STEEL CO. INC.
112 WEST 29TH SAN ANGELO, TEXAS 76903
PHONE (915) 653-3211

CUSTOMER GILBERT TEXAS CONSTRUCTION
ARCHITECT
PROJECT US 83/281 INTERCHANGE RAMP #3
LOCATION HIDALGO COUNTY
DRAWN JC DATE 9-92
CHECKED MSG DATE 10-9-92
JOB NO. 92-108
SHEET NO. 206AB 01

CE 92-13

A B C D E F G H I J K L M N O P Q R S T U V W X Y Z

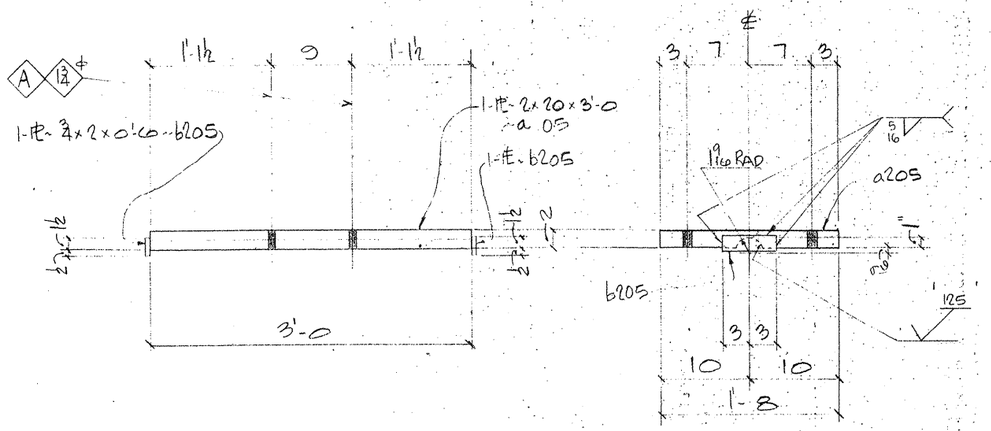

2- SOLE PLATES - 205BS1
(SHOP WELD TO BENT CAP 203SB1.19)

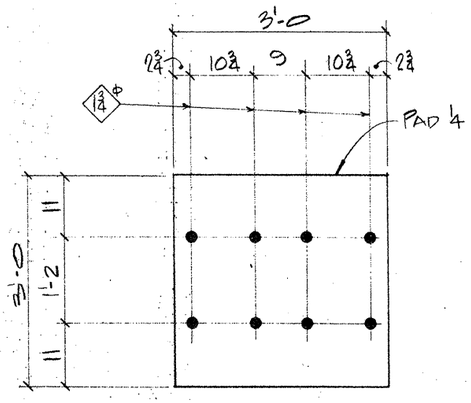

2- PREFORMED FABRIC PAD - 205BS3
(PER SDH & PT ITEM 441.33)

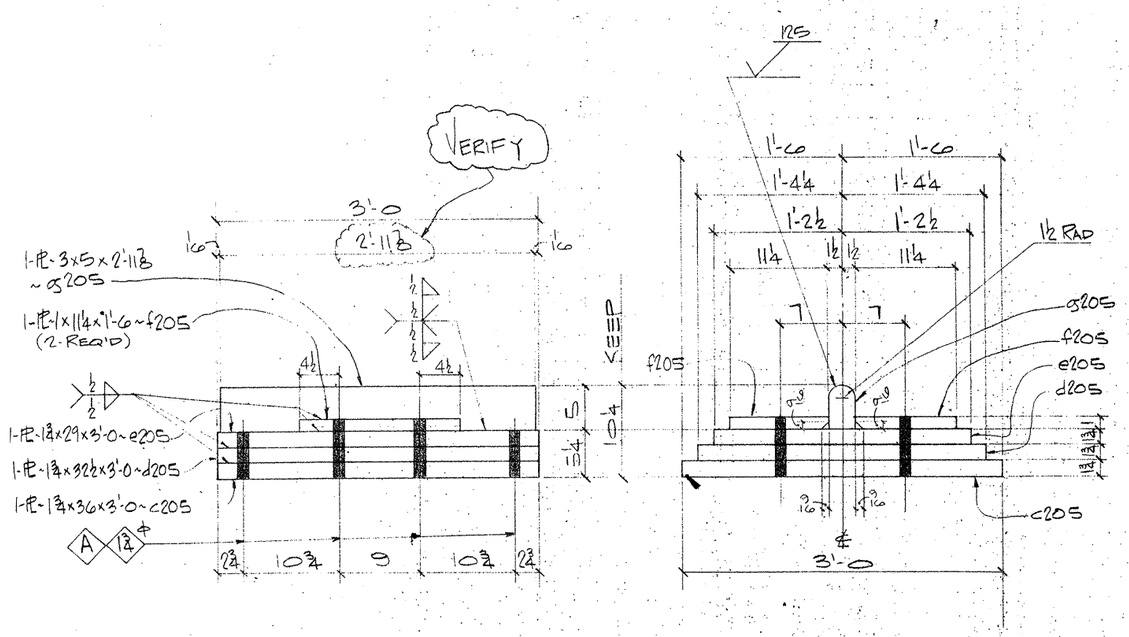

2- MASONRY PLATES - 205BS2

NOTE:
FOR GENERAL NOTES, SEE SHT. GN1.

FED. ROAD DIV. NO.	STATE	FEDERAL AID PROJECT NO.			
6	TX.	NH 92(50)M			
STATE DIST. NO.	COUNTY	CONTROL NO.	SECTION NO.	JOB NO.	HIGHWAY NO.
21	HIDALGO	39	17	97	83/281

BILL OF MATERIAL

Qnty	Material	Length	Mark Temp	Mark Ship	Wt	Cut From	Remarks
2	SOLE PLATES			205BS1			
2	PL 2x20	3'-0	a205			204-6	
4	PL 3/4x2	0'-6	b205			204-7	
2	MASONRY PLATES			205BS2			
2	PL 1 3/4x36	3'-0	c205			204-1	
2	PL 1 3/4x32 1/2	3'-0	d205			204-2	
2	PL 1 3/4x29	3'-0	e205			204-3	
4	PL 1x11 1/4	1'-6	f205			204-4	
2	PL 3x5	2'-11 7/8	g205			204-5	
2	PREFORMED FABRIC PAD			205BS3			
2	PAD 1/4x36	3'-0				204-14	
	(PER SDH & PT ITEM 441.33)						

TEXAS DEPARTMENT OF TRANSPORTATION
APPROVED
DIVISION OF BRIDGES AND STRUCTURES
APR 06 1993
APPROVAL OF THIS DRAWING DOES NOT RELIEVE THE CONTRACTOR OF THE RESPONSIBILITY FOR THE CORRECTNESS OF DETAIL

FOR APPROVAL
MAR 1 8 93
NOT FOR CONSTRUCTION

REVISION	DATE	DESCRIPTION OF REVISION
NO. 1		
NO. 2		
NO. 3		
NO. 4		
NO. 5		

PRINTING

Req'd	For	Date
—	0	11/6

Bolts Holes NTD. ~~Unassembled~~
Shop Paint SEE SHT GN1
Fab Spec. A572-50 Inspection
Architect
Erection By Field Connections

HIRSCHFELD STEEL CO. INC.
112 WEST 29TH SAN ANGELO, TEXAS 76903
PHONE (915) 653-3211

DESCRIPTION 750'-0 PLATE GIRDER UNIT
STRUCTURE US 83/281 INTERCHANGE RAMP #3
LOCATION HIDALGO COUNTY
CUSTOMER GILBERT TEXAS CONSTRUCTION
SHIP TO
Customer's Order No.
Dwg By JPC Date 9/92
Checked By DLT Date 9/92
SHEET 205 OF
JOB NO. 92-108
APV MAR 15
CE 92-13

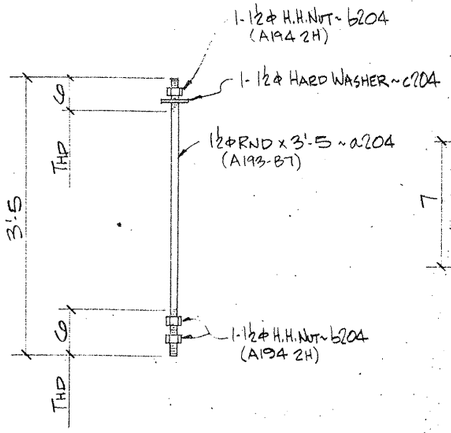

8 - ANCHOR BOLTS ~ 204AB1

(GALV. SEE GALV. NOTE)

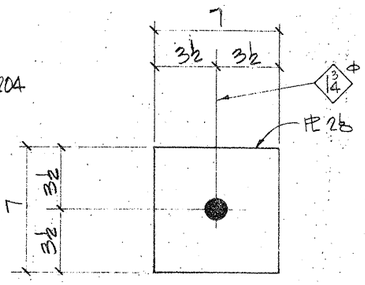

8 - PLATE WASHER ~ 204P1

(GALV.)

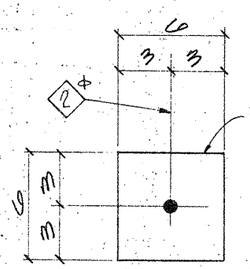

8 - PREFORMED FABRIC PAD ~ 204P3

(PER SDH & PT ITEM 441.33)

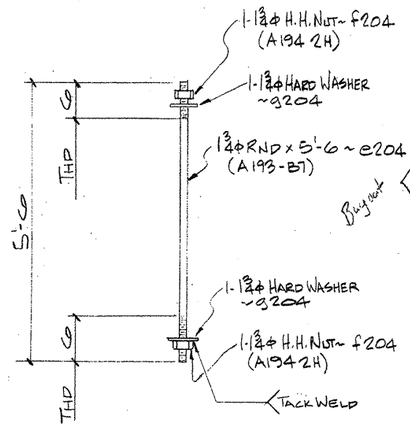

8 - ANCHOR BOLTS ~ 204AB3

(GALV. SEE GALV. NOTE)

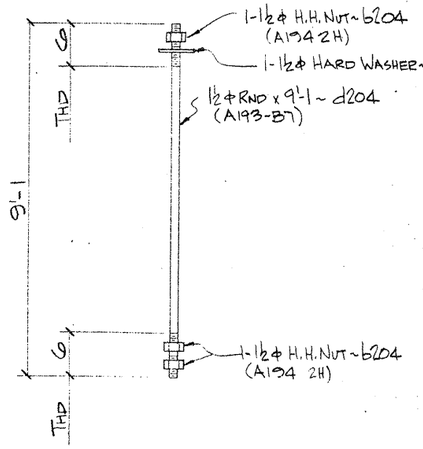

8 - HOLD DOWN BOLTS ~ 204AB2

(GALV. SEE GALV. NOTE)

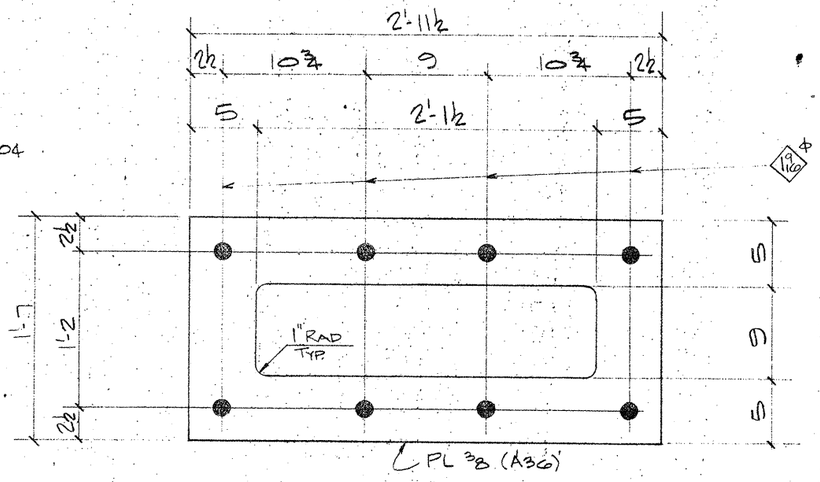

2 - BOLT TEMPLATE ~ 204P2

(NO PAINT)

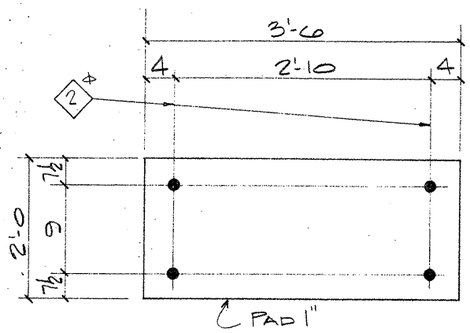

2 - PREFORMED FABRIC PAD ~ 204P4

GALV. NOTE:

HOT DIP GALVANIZE AFTER FABRICATION. ALL NUTS SHALL BE RETAPPED AFTER GALVANIZING FOR CLASS 2B FIT.

NOTE:
FOR GENERAL NOTES, SEE SHT. GN1.

BILL OF MATERIAL

	Qnty	Material	Length	Mark Temp	Mark Ship.	Wt.	Cut From	Remarks
4	8	ANCHOR BOLTS			204AB1			
5	8	1½ϕ RND	3'-5	a204			202-3	A193-B7
6	24	1½ϕ H.H. NUT		b204			202-4	A194 2H
7	8	1½ϕ HARD WASH.		c204			202-5	A325
12	8	ANCHOR BOLTS			204AB2			
13	8	1½ϕ RND	9'-1	d204			202-2	A193-B7
14	24	1½ϕ H.H. NUT		b204			202-4	A194 2H
15	8	1½ϕ HARD WASH		c104			202-5	A325
19	8	PLATE WASHER			204P1			
20	8	PL ⅜ x 7	0'-7"				202-14	
24	2	BOLT TEMPLATE			204P2			
25	2	PL ⅜ x 19	2'-11½				202-11	A36
29	8	PREFORMED PAD			204P3			
30	8	PAD 1 x 6 (PER SDH & PT ITEM 441.33)	0'-6				202-17	
35	8	ANCHOR BOLTS			204AB3			
36	8	1¾ϕ RND	5'-6	e204			202-6	A193-B7
37	16	1¾ϕ H.H. NUT		f204			202-7	A194 2H
38	16	1¾ϕ HARD WASH		g204			202-8	A325
42	2	PREFORMED PAD		204P4				
43	2	PAD 1 x 24 (PER SDH & PT ITEM 441.33)	3'-6				202-18	

TEXAS DEPARTMENT OF TRANSPORTATION
APPROVED
DIVISION OF BRIDGES AND STRUCTURES
APR 06 1993
APPROVAL OF THIS DRAWING DOES NOT RELIEVE THE CONTRACTOR OF THE RESPONSIBILITY FOR THE CORRECTNESS OF THE DETAILS

KCS APPROVAL JAN 13 '93
NOT FOR CONSTRUCTION

REVISION	DATE	DESCRIPTION OF REVISION
NO. 1		
NO. 2		
NO. 3		
NO. 4		
NO. 5		

PRINTING

Req'd	For	Date
—	SUB	8/92
—	APP	MAR '93

Bolts Holes NTD
Shop Paint NO PAINT
Fab Spec ASTM 50 U.N. Inspection
Architect
Erection By Field Connections

HIRSCHFELD STEEL CO. INC.
112 WEST 29TH SAN ANGELO, TEXAS 76903
PHONE (915) 653-3211

DESCRIPTION	750'-0 PLATE GIRDER UNIT
STRUCTURE	US 83/281 INTERCHANGE RAMP #3
LOCATION	HIDALGO COUNTY
CUSTOMER	GILBERT TEXAS CONSTRUCTION
SHIP TO	
Customer's Order No.	
Dwg By JDL Date	8/92
Checked By DLT Date	8/92

SHEET 204 OF
JOB NO. 92-108
CE 92-13

M0208

FED ROAD DIV. NO.	STATE	FEDERAL AID PROJECT NO.			
6	TX.	NH (50) M			
STATE DIST. NO.	COUNTY	CONTROL NO.	SECTION NO.	JOB NO.	HIGHWAY NO.
21	HIDALGO	39	17	97	83/281

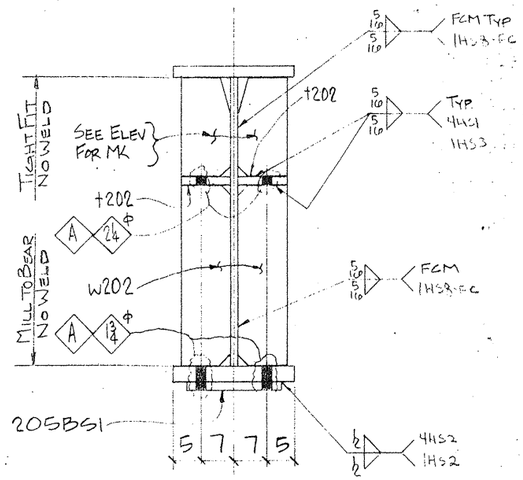

SECTION ~ A

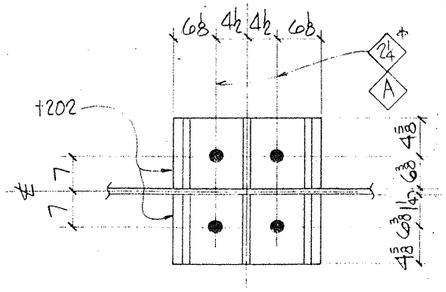

SECTION ~ B

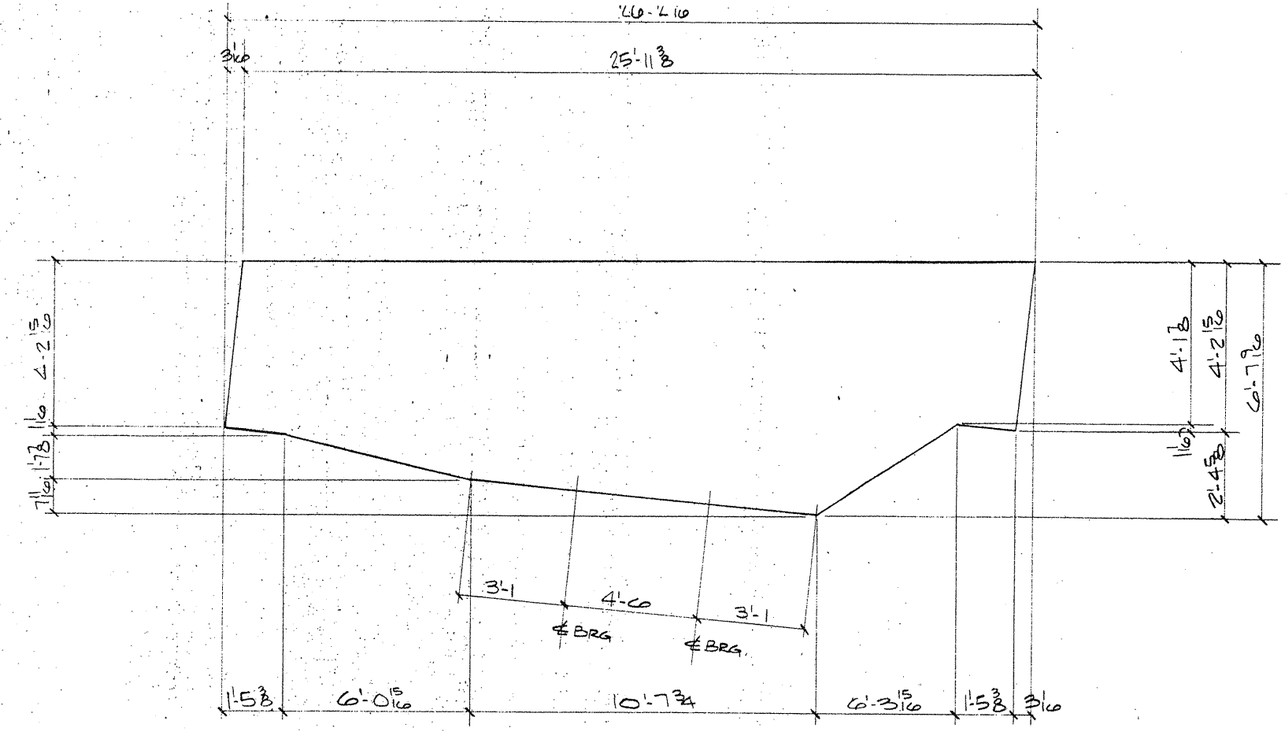

DETAIL WEB PL ~ 1.19 WA

BILL OF MATERIAL

	Qnty	Material	Length	Mark Temp	Mark Ship	Wt.	Cut From	Remarks
1								
2								
3								
4	ONE	STEEL BENT CAP			203SB1.19			
5	ONE	PL 1 1/4 x 79 9/16	26'-2 7/16	1.19WA			201-1	FCM1
6	ONE	PL 2 x 24	25'-11 3/8	1.19TA			201-2	FCM1
7	ONE	PL 2 x 24	6'-3 5/8	1.19BA			201-4	CVN2
8	ONE	PL 3 x 24	10'-8	1.19BB			201-3	CVN3
9	ONE	PL 2 x 24	6'-9 9/16	1.19BC			201-5	CVN2
10	2	ANGLE		d202				
11	2			e202				
12	2			f202				
13	2			g202				
14	ONE	STIFF		h202R				
15	ONE			h202L				
16	ONE			k202R				
17	ONE			k202L				
18	ONE			m202R				
19	ONE			m202L				
20	ONE			n202R				
21	ONE			n202L				
22	ONE			p202R				
23	ONE			p202L				
24	ONE			s202R				
25	ONE			s202L				
26	4	BRG PLATE		t202				
27	12	STIFF		w202				
28	2	SOLE PLATE		205BS1				
29	76	HS BOLT 1φ	0'-4 1/4				205-17	A325
30	76	HS WASH 1φ					205-18	A325
31	ONE	PL 2 x 24	1'-5 7/16	1.19BD			201-6	CVN2
32	ONE	PL 2 x 24	1'-5 3/8	1.19BE			201-6	CVN2
33								
34								
35								
36								
37								
38								
39								
40								
41								
42								
43								
44								
45								
46								
47								
48								
49								
50								
51								
52								
53								
54								
55								
56								
57								
58								
59								
60								

TEXAS DEPARTMENT OF TRANSPORTATION
APPROVED
DIVISION OF BRIDGES AND STRUCTURES
APR 06 1993
APPROVAL OF THIS DRAWING DOES NOT RELIEVE THE CONTRACTOR OF THE RESPONSIBILITY FOR THE CORRECTNESS OF DETAIL

FOR APPROVAL
MAR 15 '93
NOT FOR CONSTRUCTION

REVISION	DATE	DESCRIPTION OF REVISION
NO. 1		
NO. 2		
NO. 3		
NO. 4		
NO. 5		

PRINTING

Req'd	For	Date

Bolts A325 TY1 Holes 1 1/16 φ Unless Noted
Shop Paint SEE SHT. GN1
Fab. Spec. A572 50 U.N. Inspection
Architect
Erection By Field Connections

HIRSCHFELD STEEL CO. INC.
112 WEST 29TH SAN ANGELO, TEXAS 76903
PHONE (915) 653-3211

DESCRIPTION 750'-0 PLATE GIRDER UNIT
STRUCTURE US 83/281 INTERCHANGE RAMP #3
LOCATION HIDALGO COUNTY
CUSTOMER GILBERT TEXAS CONSTRUCTION
SHIP TO
Customer's Order No.
Dwg By [signature] Date 9/92
Checked By DCT Date 9/92
SHEET 203B OF
JOB NO. 92-108

AFV MAR 15

CE92-13

BG208

FED. ROAD DIV. NO.	STATE	FEDERAL AID PROJECT NO.			
6	TX.	NH 92(50)M			
STATE DIST. NO.	COUNTY	CONTROL NO.	SECTION NO.	JOB NO.	HIGHWAY NO.
21	HIDALGO	39	17	97	83/281

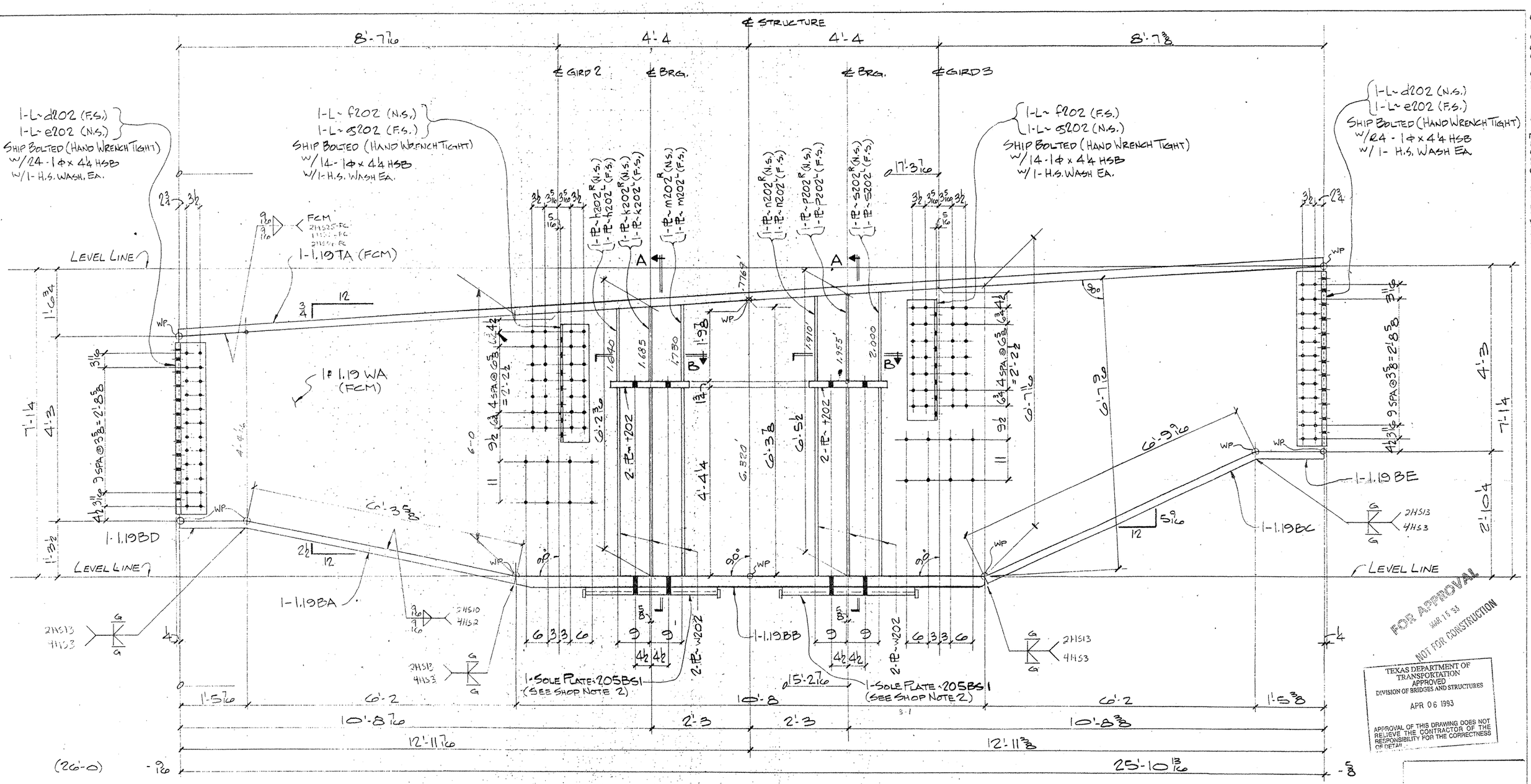

SHOP NOTES:

1. WORK THIS SHT. W/SHT. 203B.
2. SPACING & ALIGNMENT OF SOLE PLATES 205BS1 IS CRITICAL & MUST BE EXACT.
3. FOR GENERAL NOTES SEE SHT. GN1.

ONE - STEEL BENT CAP ~ 203SB1.19

(APPROX. WT. = TONS)

BG208

FED. ROAD DIV. NO.	STATE	FEDERAL AID PROJECT NO.				
6	TX.	NH 92(50)M				
STATE DIST. NO.	COUNTY	CONTROL NO.	SECTION NO.	JOB NO.	HIGHWAY NO.	
21	HIDALGO	39	17	97	83/281	

HOLES 1/16	UN	FOR AP'VL	
BOLTS	UN	RETURNED	
WELDS	UN	TO SHOP	
PAINT			

REVISIONS		
NO.	DATE	REMARKS
1		
2		
3		
4		

HIRSCHFELD STEEL CO. INC.
112 WEST 29TH SAN ANGELO, TEXAS 76903
PHONE (915) 653-3211

CUSTOMER GILBERT TEXAS CONSTRUCTION
ARCHITECT
PROJECT US 83/281 INTERCHANGE RAMP #3
LOCATION HIDALGO COUNTY

DRAWN JJR DATE 9/92
CHECKED DLT DATE 9/92

JOB NO 92-108

SHEET NO. 203A/B of

CE 92-13

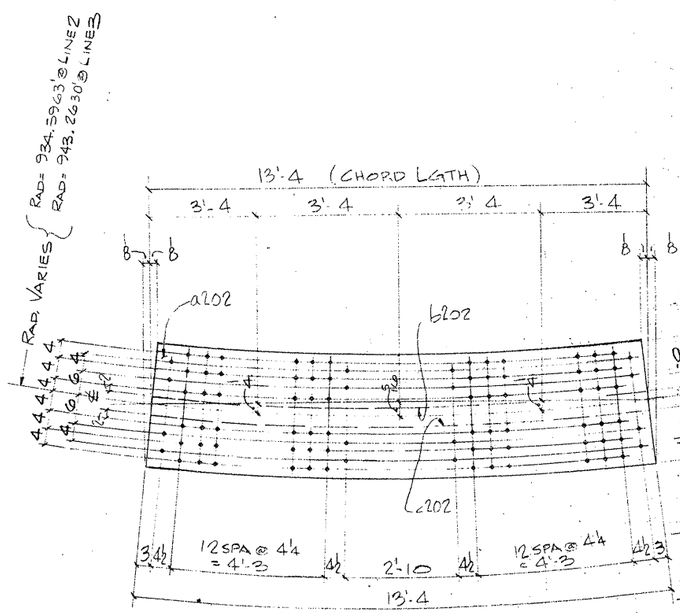

2 - PLATES ~ a202

2 - PLATES ~ b202

2 - PLATES ~ c202

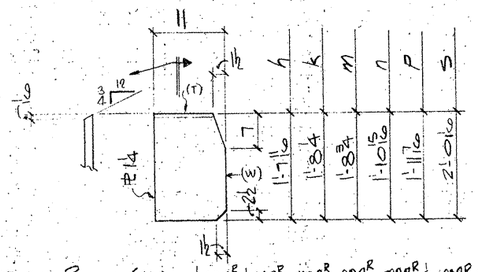

ONE - PLATE (EA.) ~ h202R, k202R, m202R, n202R, p202R & s202R (AS SHN & NTD)

ONE - PLATE (EA.) ~ h202L, k202L, m202L, n202L, p202L & s202L (OPP. HD.)

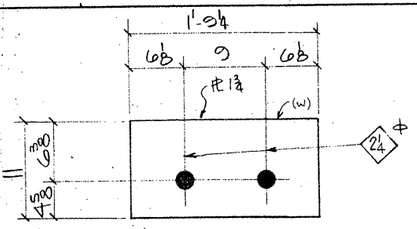

4 - PLATES ~ t202

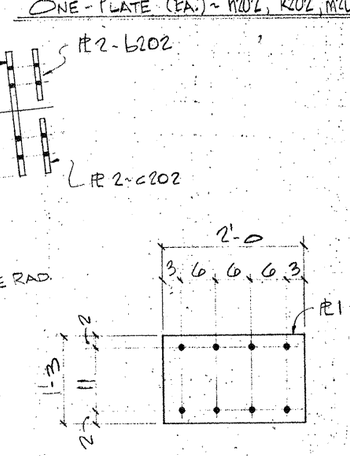

4 - PLATES ~ v202

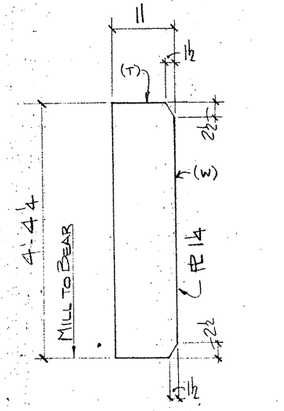

12 - PLATES ~ w202

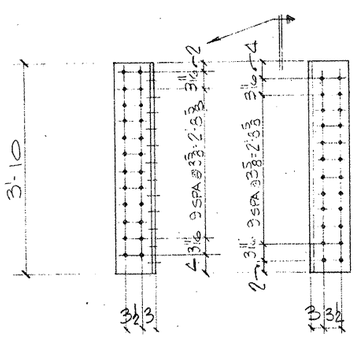

2 - ANGLES ~ d202

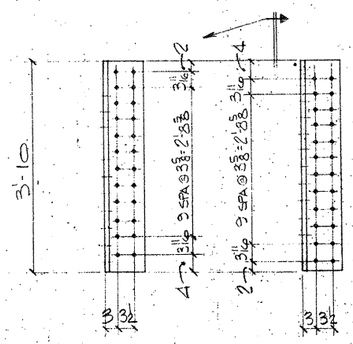

2 - ANGLES ~ e202

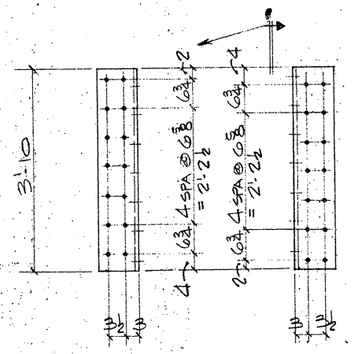

4 - ANGLES ~ f202

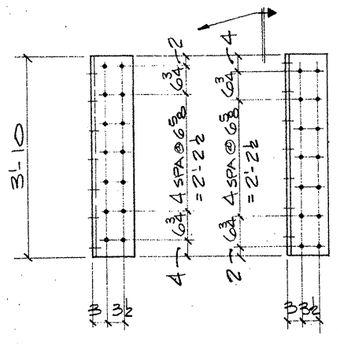

4 - ANGLES ~ s202

NOTE:
1. FOR GENERAL NOTES, SEE SHT. GN1.
2. (W) = WEBSIDE
3. (T) = TOPSIDE

Q0208

FED. ROAD DIV. NO.	STATE	FEDERAL AID PROJECT NO.				
6	TX.	NH 92(50)M				
STATE DIST. NO.	COUNTY	CONTROL NO.	SECTION NO.	JOB NO.	HIGHWAY NO.	
21	HIDALGO	39	17	97	83/281	

BILL OF MATERIAL

	Qnty	Material	Length	Mark Temp	Mark Ship	Wt.	Cut From	Remarks
1								
2								
3								
4	2	PL 2 x 28 5/16	13'-4¼	a202			201-10	CVN 2
5	2	PL 2 x 12 5/16	13'-4	b202			201-11	CVN 2
6	2	PL 2 x 12 5/16	13'-4¼	c202			201-11	CVN 2
7	2	L 8 x 8 x ¾	3'-10	d202			201-9	CVN 2
8	2	L 8 x 8 x ¾	3'-10	e202			201-9	CVN 2
9	4	L 8 x 8 x ¾	3'-10	f202			201-9	CVN 2
10	4	L 8 x 8 x ¾	3'-10	g202			201-9	CVN 2
11	ONE	PL 14 x 11	1'-7 11/16	h202R			201-15	
12	ONE	PL 14 x 11	1'-7 11/16	h202L			201-15	
13	ONE	PL 14 x 11	1'-8¼	k202R			201-15	
14	ONE	PL 14 x 11	1'-8¼	k202L			201-15	
15	ONE	PL 14 x 11	1'-8 3/4	m202R			201-15	
16	ONE	PL 14 x 11	1'-8 3/4	m202L			201-15	
17	ONE	PL 14 x 11	1'-10 15/16	n202R			201-14	
18	ONE	PL 14 x 11	1'-10 15/16	n202L			201-14	
19	ONE	PL 14 x 11	1'-11 7/16	p202R			201-14	
20	ONE	PL 14 x 11	1'-11 7/16	p202L			201-14	
21	ONE	PL 14 x 11	2'-0 1/16	s202R			201-14	
22	ONE	PL 14 x 11	2'-0 1/16	s202L			201-14	
23	4	PL 1¾ x 11	1'-5¼	t202			201-7	
24	4	PL 1 x 15	2'-0	v202			201-12	CVN 2
25	12	PL 14 x 11	4'-4¼	w202			201-13	
26								
27								
28								
29								
30								
31								
32								
33								
34								
35								
36								
37								
38								
39								
40								
41								
42								
43								
44								
45								
46								
47								
48								
49								
50								
51								
52								
53								
54								
55								
56								
57								
58								
59								
60								

TEXAS DEPARTMENT OF TRANSPORTATION
APPROVED
~~DIVISION OF BRIDGES AND STRUCTURES~~
APR 06 1993
APPROVAL OF THIS DRAWING DOES NOT ~~RELIEVE THE CONTRACTOR OF THE~~ RESPONSIBILITY FOR THE CORRECTNESS OF DETAIL.

FOR APPROVAL
NOT FOR CONSTRUCTION

REVISION	DATE	DESCRIPTION OF REVISION
NO. 1		
NO. 2		
NO. 3		
NO. 4		
NO. 5		

PRINTING: Reqd | For | Date

Bolts
Shop Paint SEE SHT. GN1
Fab. Spec A572-50
Architect
Erection By
Holes 11/16ø Unless Noted
Inspection
Field Connections

HIRSCHFELD STEEL CO. INC.
112 WEST 29TH SAN ANGELO TEXAS 76903
PHONE (915) 653-3211

DESCRIPTION	750'-0 PLATE GIRDER UNIT
STRUCTURE	US 83/281 INTERCHANGE RAMP #3
LOCATION	HIDALGO COUNTY
CUSTOMER	GILBERT TEXAS CONSTRUCTION
SHIP TO	
Customer's Order No.	
Dwg. By JR	Date 3/92
Checked By DCT	Date 3/92

SHEET 202 OF
JOB NO. 92-108
CE 92-18

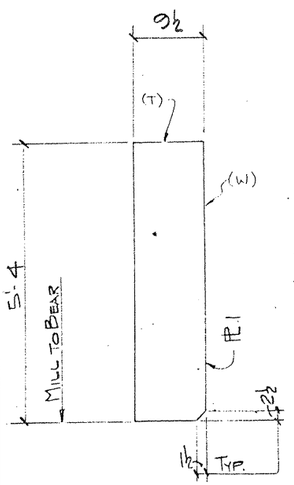

6 - PLATES ~ a201
(END BRG.)

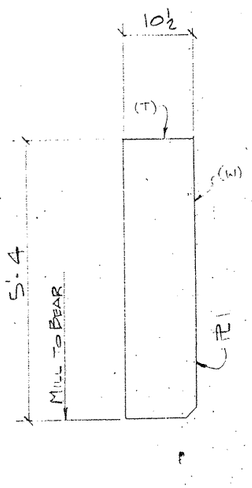

2 - PLATES ~ b201
(END BRG.)

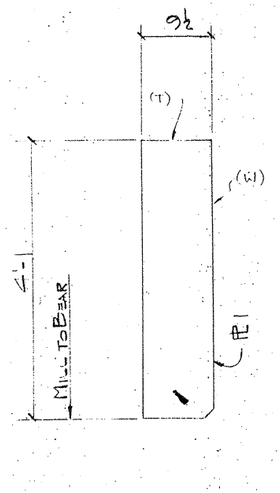

6 - PLATES ~ c201
(END BRG.)

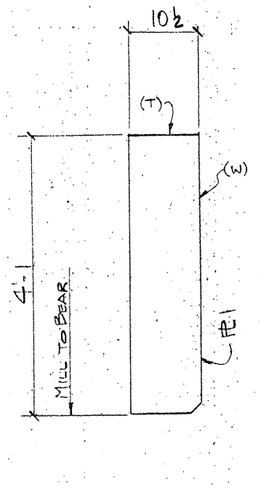

2 - PLATES ~ d201
(END BRG.)

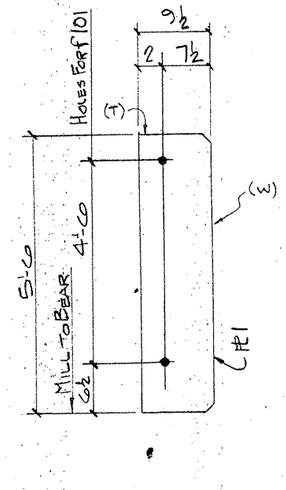

ONE - PLATE ~ e201
(INT. BRG.)

5 - PLATE ~ f201 "AS NTD"
(INT. BRG.)

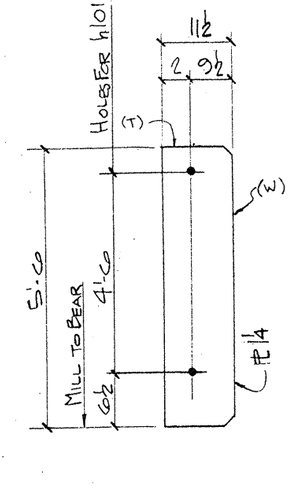

2 - PLATES ~ g201
(INT. BRG.)

3 - PLATES ~ h201 "AS NTD."
(INT. BRG.)

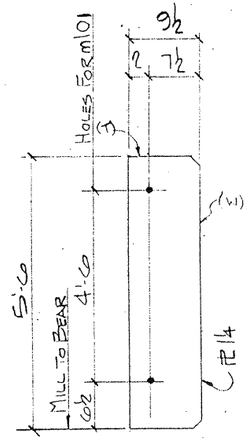

ONE - PLATE ~ k201
(INT. BRG.)

ONE - PLATE ~ m201 "AS NTD."
(INT. BRG.)

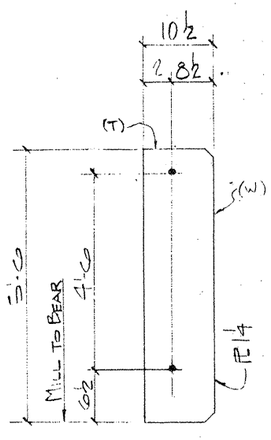

2 - PLATES ~ p201
(INT. BRG.)

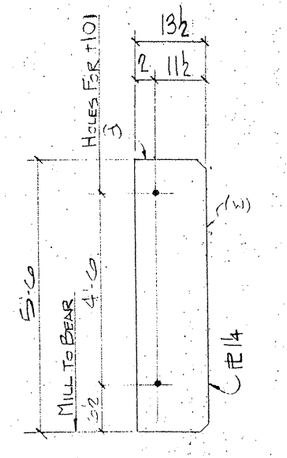

ONE - PLATE ~ s201
(INT. BRG.)

ONE - PLATE ~ t201 "AS NTD."
(INT. BRG.)

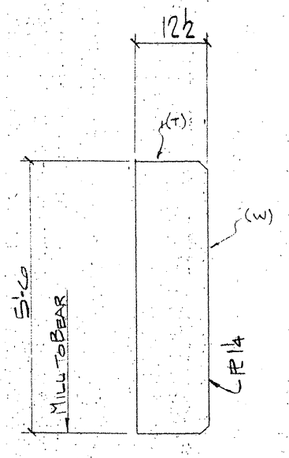

ONE - PLATE ~ v201
(INT. BRG.)

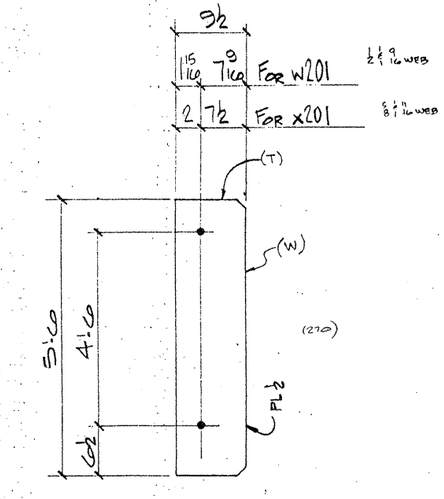

153 - PLATES ~ w201 "AS NTD."
(INT. STIFF)

117 - PLATES ~ x201 "AS NTD."
(INT. STIFF)

SHOP NOTES:

1. FOR GENERAL NOTES; SEE SHT GN 1.
2. (T) INDICATES "TOP"
3. (W) INDICATES "WEB"
4. All holes on this sheet to be drilled unless Noted.

BILL OF MATERIAL

	Qnty	Material	Length	Mark Temp	Mark Ship	Wt	Cut From	Remarks
3	6	PL 1 x 9½	5'-4	a201			203-1	
4	2	PL 1 x 10½	5'-4	b201			203-3	
5	6	PL 1 x 9½	4'-1	c201			203-2	
6	2	PL 1 x 10½	4'-1	d201			203-4	
7	ONE	PL 1 x 9½	5'-0	e201			203-5	
8	5	PL 1 x 9½	5'-0	f201			203-5	
9	2	PL ¼ x 11½	5'-0	g201			203-8	
10	3	PL ¼ x 11½	5'-0	h201			203-8	
11	ONE	PL ¼ x 9½	5'-0	k201			203-6	
12	ONE	PL ¼ x 9½	5'-0	m201			203-6	
13	2	PL ¼ x 10½	5'-0	p201			203-7	
14	ONE	PL ¼ x 13½	5'-0	s201			203-10	
15	ONE	PL ¼ x 13½	5'-0	t201			203-10	
16	ONE	PL ¼ x 12½	5'-0	v201			203-9	
17	153	PL ½ x 9½	5'-0	w201			203-13	punch
18	117	PL ½ x 9½	5'-0	x201			203-13	punch

TEXAS DEPARTMENT OF TRANSPORTATION
APPROVED
DIVISION OF BRIDGES AND STRUCTURES
APR 06 1993

APPROVAL OF THIS DRAWING DOES NOT RELIEVE THE CONTRACTOR OF THE RESPONSIBILITY FOR THE CORRECTNESS OF DETAIL

FOR APPROVAL
JAN 15 '93
NOT FOR CONSTRUCTION

REVISION	DATE	DESCRIPTION OF REVISION
NO. 1		
NO. 2		
NO. 3		
NO. 4		
NO. 5		

PRINTING

Read	For	Date

Bolts Holes STD Unless Noted
Shop Paint SEE SHEET GN1
Fab Spec A36 Inspection
Architect
Erection By Field Connections

HIRSCHFELD STEEL CO. INC.
112 WEST 29TH SAN ANGELO TEXAS 76903
PHONE (915) 653-3211

DESCRIPTION	750'-0 PLATE GIRDER UNIT # 6
STRUCTURE	US 83/281 INTERCHANGE RAMP #3
LOCATION	HIDALGO COUNTY
CUSTOMER	GILBERT TEXAS CONSTRUCTION
SHIP TO	
Customer's Order No.	
Dwg. By JRE	Date 9/92
Checked By DLT	Date 9/92

SHEET 201 OF
JOB NO 92-108

CE. 92-13

Q0208

FED. ROAD DIV. NO.	STATE	FEDERAL AID PROJECT NO.			
6	TX.	NH 92(50)M			
STATE DIST. NO.	COUNTY	CONTROL NO.	SECTION NO.	JOB NO.	HIGHWAY NO.
21	HIDALGO	39	17	97	83/281

322640

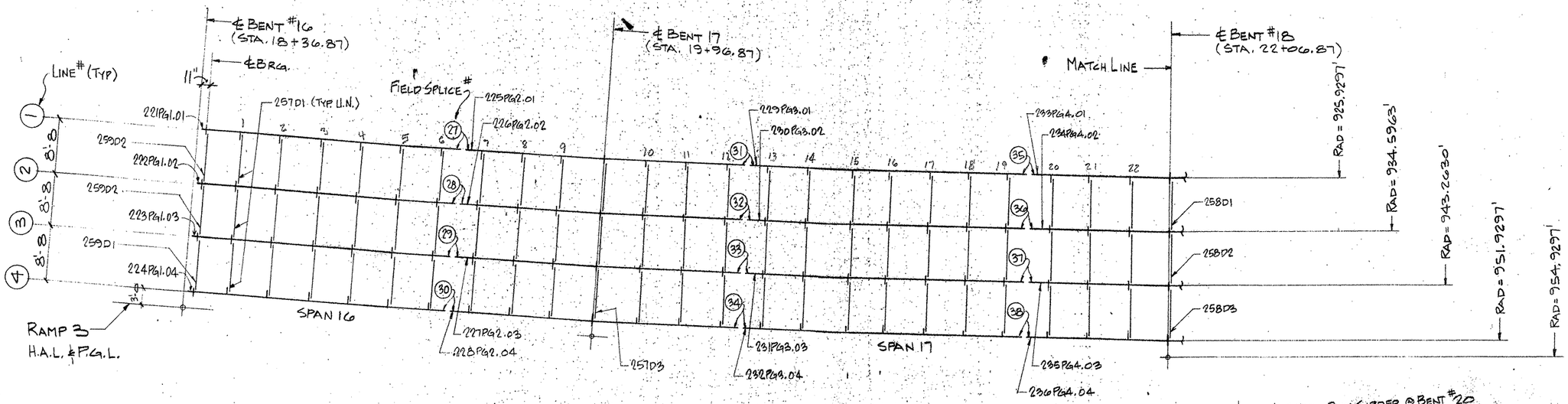

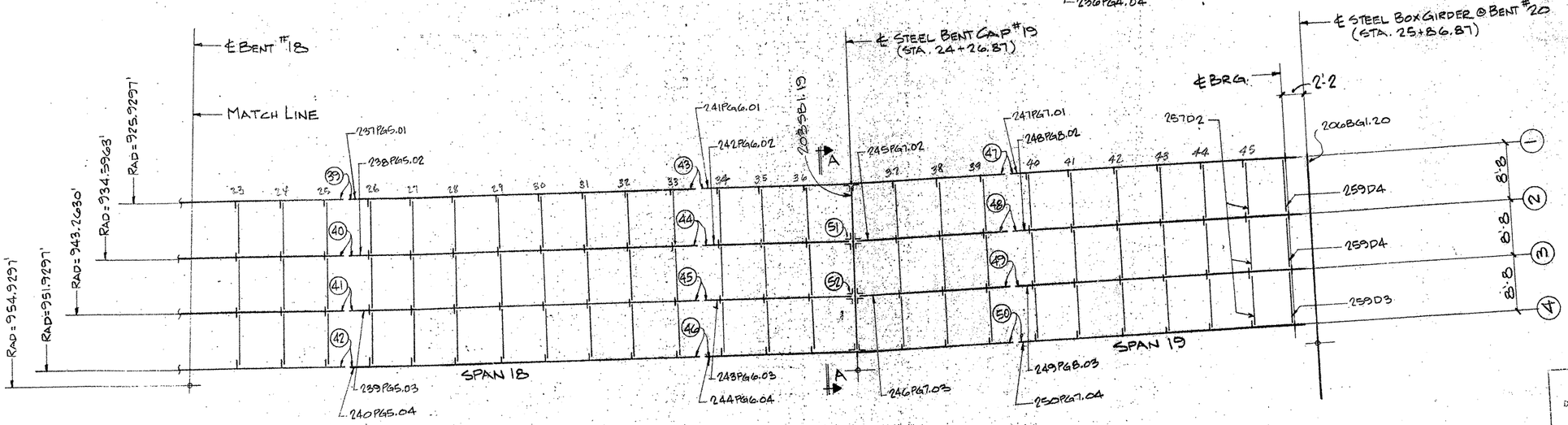

NORTH

FRAMING PLAN
(UNIT Nº 6 RAMP 3)

SHEET # 221 PG 1 .01 LINE # OR BENT #
PLATE GIRDER OR STEEL BENT (SB) OR BOX GIRDER (BG)
GIRDER #

GIRDER SHIPPING MARK LEGEND

TEXAS DEPARTMENT OF TRANSPORTATION
APPROVED
DIVISION OF BRIDGES AND STRUCTURES
APR 06 1993
APPROVAL OF THIS DRAWING DOES NOT RELIEVE THE CONTRACTOR OF THE RESPONSIBILITY FOR THE CORRECTNESS OF DETAIL.

FOR APPROVAL
MAR 15 '93
NOT FOR CONSTRUCTION

NOTE: WORK THIS SHEET W/ SHEET E202.

FED. ROAD DIV. NO.	STATE	FEDERAL AID PROJECT NO.			
6	TX.	NH 92(50)M			
STATE DIST. NO.	COUNTY	CONTROL NO.	SECTION NO.	JOB NO.	HIGHWAY NO.
21	HIDALGO	39	17	97	83/281

HOLES ____ U.N. FOR AP'VL.
BOLTS ____ U.N. RETURNED
WELDS ____ U.N. TO SHOP
PAINT

APV MAR 15

HIRSCHFELD STEEL CO. INC.
112 WEST 29TH SAN ANGELO, TEXAS 76903
PHONE (915) 653-3211

REVISIONS

NO.	DATE	REMARKS
1		
2		
3		
4		

CUSTOMER GILBERT TEXAS CONSTRUCTION
ARCHITECT
PROJECT US 83/281 INTERCHANGE RAMP #3
LOCATION HIDALGO COUNTY

DRAWN JRC DATE 3/92
CHECKED DCT DATE 3/92
JOB NO. 92-108
SHEET NO. E201 of

592-13

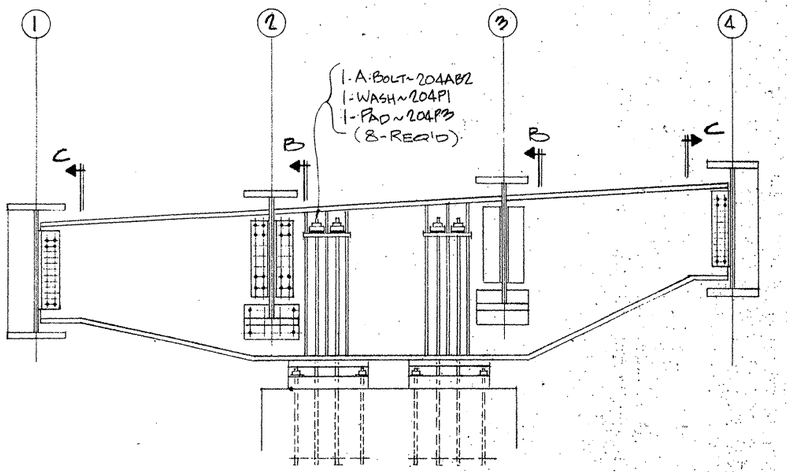

SECTION~A-A

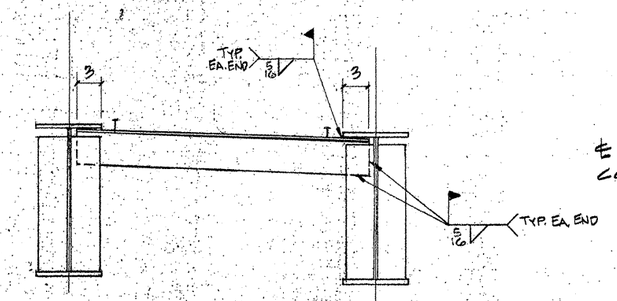

TYP. END DIAFRAMS @ BENT 20

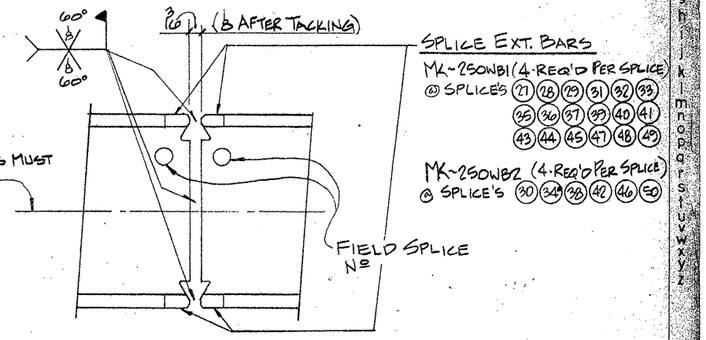

TYP. FIELD SPLICE DETAIL

GENERAL NOTES:

THE STEEL BENT CAP SHALL BE ERECTED WITH THE WEB SET VERTICAL AND ALL ANCHOR BOLTS UNIFORMLY TIGHTENED. ADJUSTMENT OF GIRDERS FOR PROPER SPLICE ALIGNMENT CAN BE MADE BY LOOSENING NUTS ON ONE SIDE OF THE CAP WHILE TIGHTENING NUTS ON THE OTHER SIDE BY AN EQUAL AMOUNT. AFTER THE SLAB AND RAIL HAVE BEEN PLACED AND DEAD LOAD DEFLECTION HAS OCCURRED, ALL ANCHOR BOLTS SHALL BE LOOSENED AND UNIFORMLY RETIGHTENED TO A SNUG FIT PLUS 1/4 TURN CONDITION.

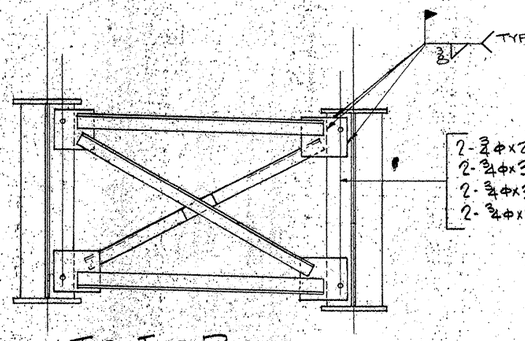

2-¾Φx2½ A325 W/2-WASH EA. (TYP. U.N.)
2-¾Φx3 A325 W/2-WASH EA. @ GIRD. LINE'S ① ② & ③ @ BENT 17
2-¾Φx3¼ A325 W/2-WASH EA. @ GIRD. LINE ④ @ BENT 17
2-¾Φx3¼ A325 W/2-WASH EA. @ GIRD. LINE ① ② ③ & ④ @ BENT 18

TYP. INT. DIAFRAMS

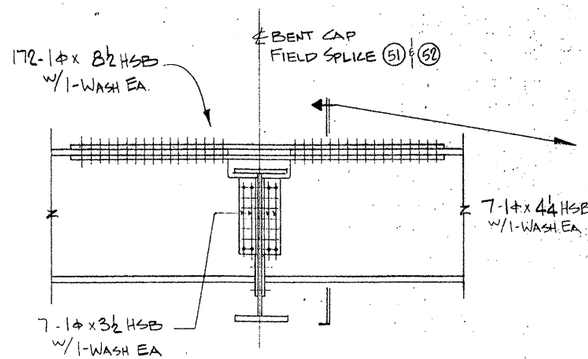

SECTION~B

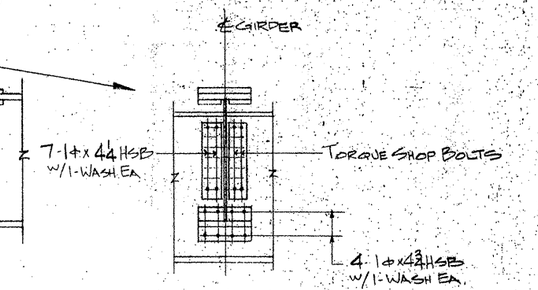

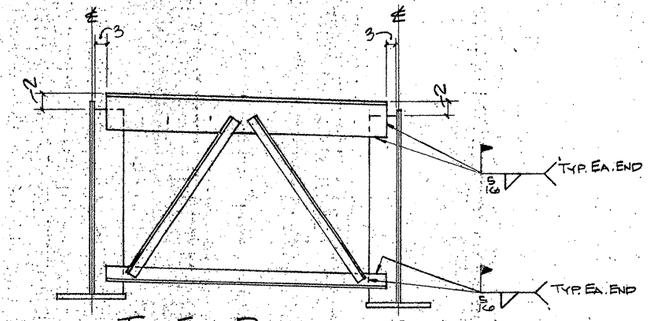

TYP. END DIAFRAM @ BENT 16
(TYPE B MOD.)

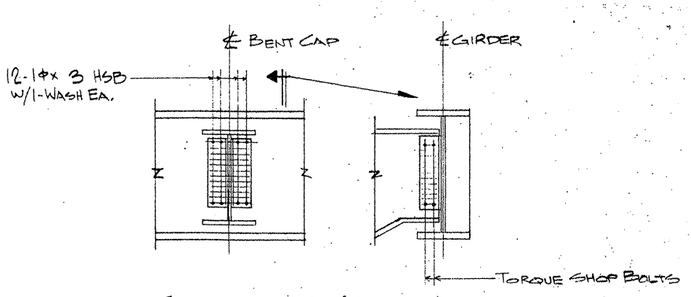

SECTION~C

TEXAS DEPARTMENT OF TRANSPORTATION
APPROVED
DIVISION OF BRIDGES AND STRUCTURES
APR 06 1993
APPROVAL OF THIS DRAWING DOES NOT RELIEVE THE CONTRACTOR OF THE RESPONSIBILITY FOR THE CORRECTNESS OF DETAIL

FOR APPROVAL
MAR 15 '93
NOT FOR CONSTRUCTION

NOTE: WORK THIS SHEET W/SHEET E201

FED. ROAD DIV. NO.	STATE	FEDERAL AID PROJECT NO.			
6	TX.	NH 92(50)M			
STATE DIST. NO.	COUNTY	CONTROL NO.	SECTION NO.	JOB NO.	HIGHWAY NO.
21	HIDALGO	39	17	97	83/281

HOLES ____ U.N. | FOR AP'VL ____
BOLTS ____ U.N. | RETURNED ____
WELDS ____ U.N. | TO SHOP ____
PAINT ____

REVISIONS		
NO.	DATE	REMARKS
1		
2		
3		
4		

APV 15 MAR 93

HIRSCHFELD STEEL CO. INC.
112 WEST 29TH SAN ANGELO, TEXAS 76903
PHONE (915) 653-3211

CUSTOMER GILBERT TEXAS CONSTRUCTION
ARCHITECT
PROJECT US 83/281 INTERCHANGE RAMP #3
LOCATION HIDALGO COUNTY

DRAWN JAE DATE 3/92
CHECKED DLT DATE 9/92
JOB NO 92-108
SHEET NO. E202 OF

a b c d e f g h i j k l m n o p q r s t u v w x y z

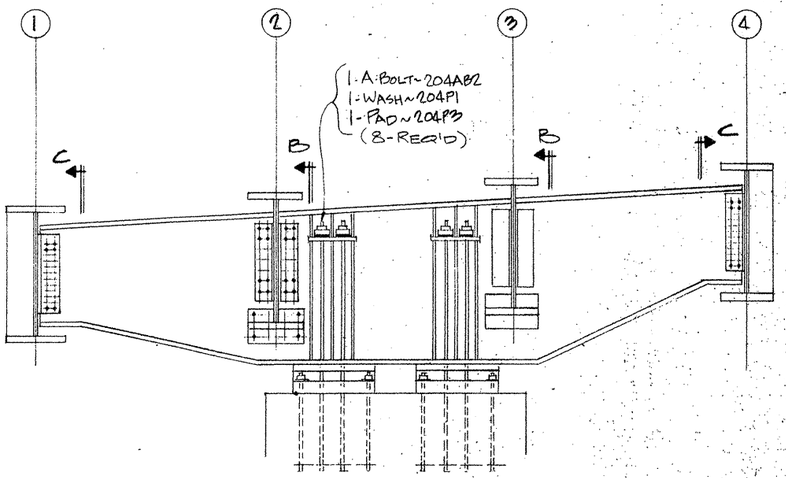

SECTION~A-A

GENERAL NOTES:

THE STEEL BENT CAP SHALL BE ERECTED WITH THE WEB SET VERTICAL AND ALL ANCHOR BOLTS UNIFORMLY TIGHTENED. ADJUSTMENT OF GIRDERS FOR PROPER SPLICE ALIGNMENT CAN BE MADE BY LOOSENING NUTS ON ONE SIDE OF THE CAP WHILE TIGHTENING NUTS ON THE OTHER SIDE BY AN EQUAL AMOUNT. AFTER THE SLAB AND RAIL HAVE BEEN PLACED AND DEAD LOAD DEFLECTION HAS OCCURRED, ALL ANCHOR BOLTS SHALL BE LOOSENED AND UNIFORMLY RETIGHTENED TO A SNUG FIT PLUS 1/4 TURN CONDITION.

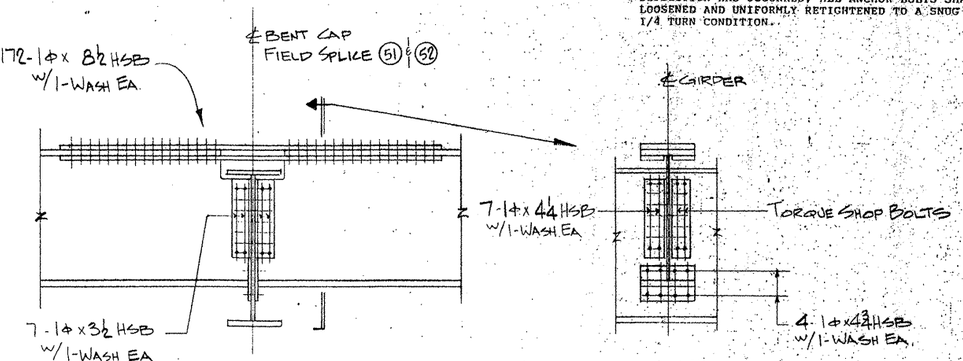

SECTION~B

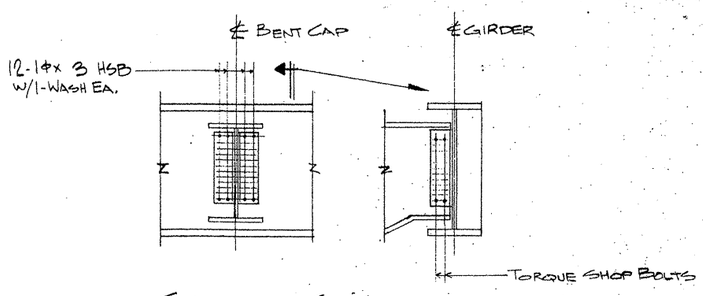

SECTION~C

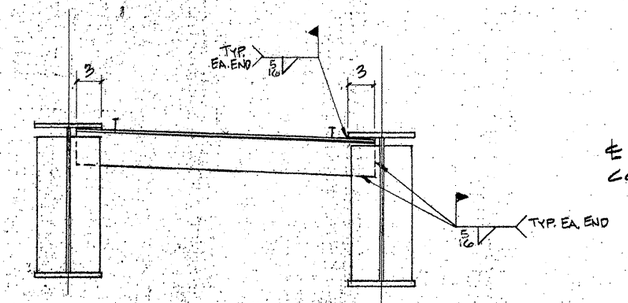

TYP. END DIAFRAMS @ BENT 20

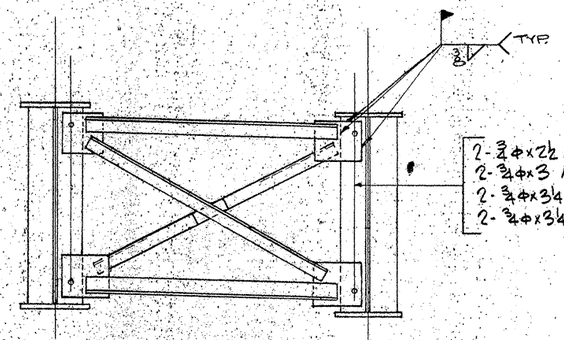

TYP. INT. DIAFRAMS

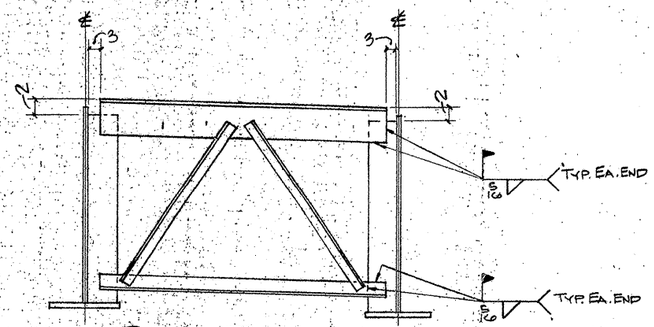

TYP. END DIAFRAM @ BENT 16
(TYPE B MOD.)

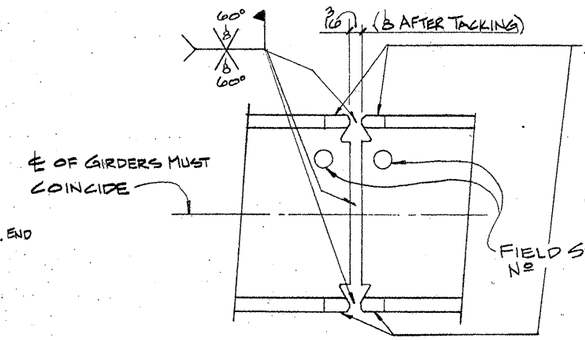

TYP. FIELD SPLICE DETAIL

TEXAS DEPARTMENT OF TRANSPORTATION
APPROVED
DIVISION OF BRIDGES AND STRUCTURES
APR 06 1993
APPROVAL OF THIS DRAWING DOES NOT RELIEVE THE CONTRACTOR OF THE RESPONSIBILITY FOR THE CORRECTNESS OF DETAIL

FOR APPROVAL
MAR 19 93
NOT FOR CONSTRUCTION

NOTE: WORK THIS SHEET W/SHEET E201

FED. ROAD DIV. NO.	STATE	FEDERAL AID PROJECT NO.			
6	TX.	NH 92(50)M			
STATE DIST. NO.	COUNTY	CONTROL NO.	SECTION NO.	JOB NO.	HIGHWAY NO.
21	HIDALGO	39	17	97	83/281

HOLES ____ U.N.	FOR AP'VL ____		
BOLTS ____ U.N.	RETURNED ____		
WELDS ____ U.N.	TO SHOP ____		
PAINT ____			

REVISIONS

NO.	DATE	REMARKS
1		
2		
3		
4		

APV MAR 1

HIRSCHFELD STEEL CO. INC.
112 WEST 29TH SAN ANGELO, TEXAS 76903
PHONE (915) 653-3211

CUSTOMER GILBERT TEXAS CONSTRUCTION
ARCHITECT ____
PROJECT US 83/281 INTERCHANGE RAMP #3
LOCATION HIDALGO COUNTY

DRAWN JDL DATE 9/92
CHECKED DLT DATE 9/92
JOB NO 92-108
SHEET NO. E202 of ____

SEJ PLACEM

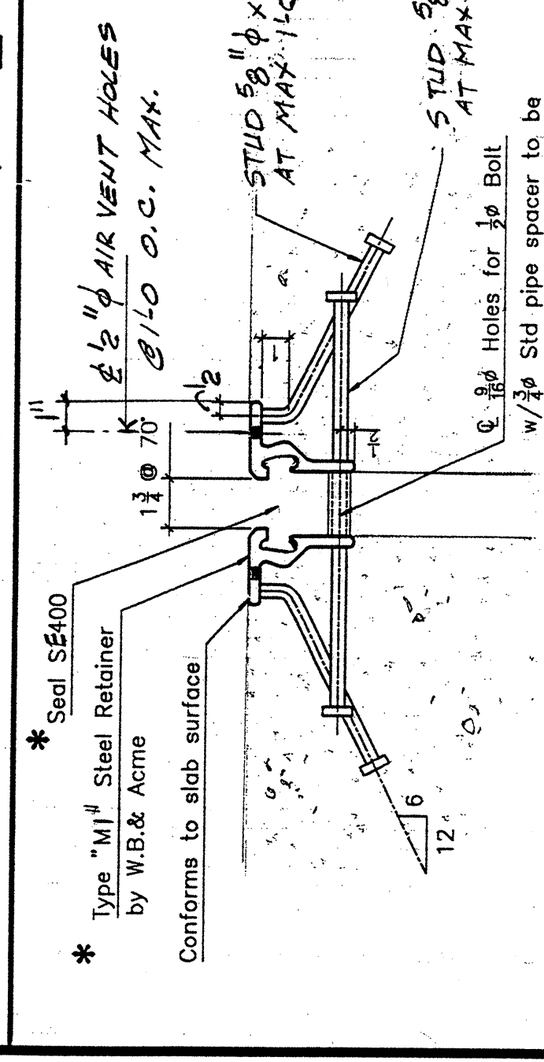

SECTION A–A

Fax Transmittal Memo

To: RAUL PALMA	From: GREG KINDLE
Co.: PHARR AREA	Co.: DESIGN
Dept.:	Phone # (512) 416-2221
Fax # 210-702-6266	Fax # 416-2557

# of Pages

RCFX14

B

&

Y

RAUL, PLEASE VERIFY LOCATIONS

4-18-94 ~ JOINTS LISTED BELOW ARE REPLACEMENTS (NOT DUPLICATIONS)

JOINT SCHEDULE

RAMP 1		TYPE	SEAL
BENT 18	SEJ(4")	D/3	3N1
BENT 20	SEJ(4")	A/3	3N1
BENT 22	SEJ(4")	A/3	3N1
BENT 25	SEJ(4")	A/3	3N1
ABUT 27	SEJ(4")	A/3	3N1
RAMP 2			
BENT 20	SEJ(4")	C/3	3N1
BENT 22	SEJ(4")	B/3	3N1
BENT 24	SEJ(4")	B/3	3N1
~~BENT 27~~	~~SEJ(4")~~	~~B/3~~	~~3N1~~
~~ABUT 30~~	~~SEJ(4")~~	~~D/3~~	~~3N1~~

RAMP 3		TYPE	SEAL
BENT 20	SEJ(4")	D/3	3N1
ABUT 22	SEJ(4")	A/3	3N1
RAMP 4			
BENT 15	SEJ(4")	C/3	3N1
BENT 19	SEJ(4")	C/3	3N1
BENT 22	SEJ(4")	B/3	3N1
ABUT 25	SEJ(4")	B/3	3N1

Fax Transmittal Memo

# of Pages

To: RAUL PALMA	From: GREG KINDLE
Co.:	Co.:
Dept.:	Phone # 512-416-2221
Fax # 210-702-6266	Fax # 512-416-2557

RCFX14

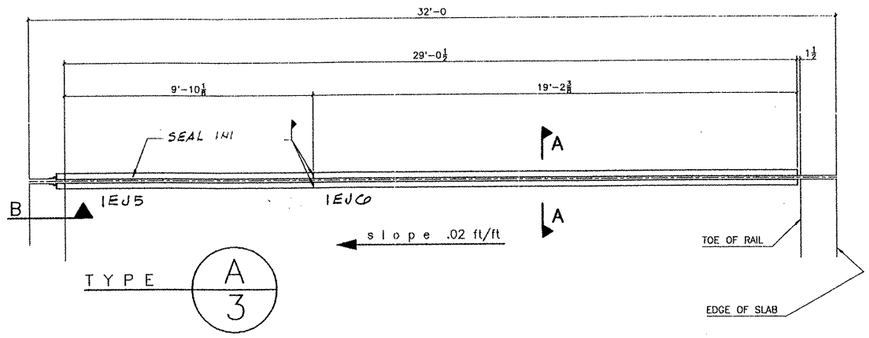

TYPE A 3

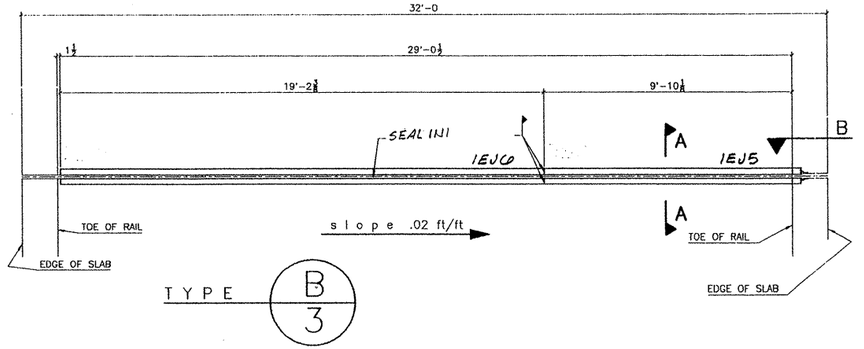

TYPE B 3

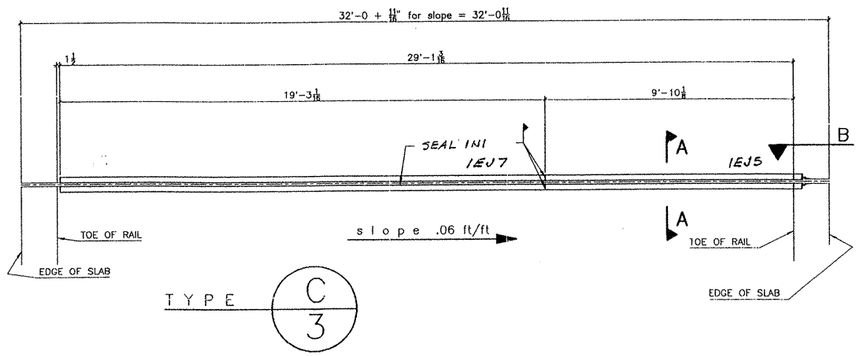

TYPE C 3

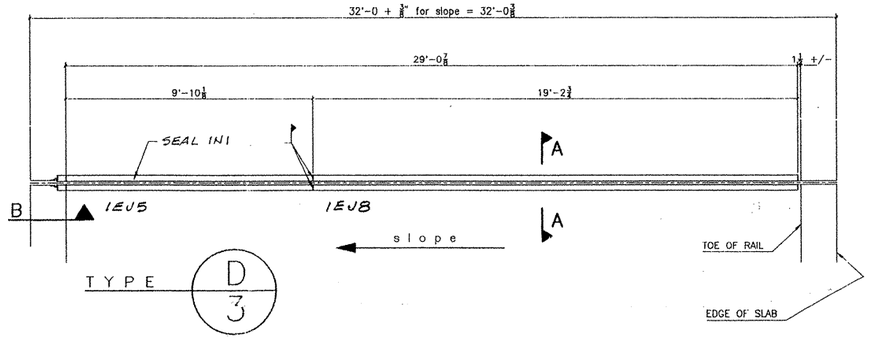

TYPE D 3

JOINT SCHEDULE

RAMP 1		TYPE	SEAL
BENT 18	SEJ(4")	D/3	3N1
BENT 20	SEJ(4")	A/3	3N1
BENT 22	SEJ(4")	A/3	3N1
BENT 25	SEJ(4")	A/3	3N1
ABUT 27	SEJ(4")	A/3	3N1
RAMP 2			
BENT 20	SEJ(4")	C/3	3N1
BENT 22	SEJ(4")	B/3	3N1
BENT 24	SEJ(4")	B/3	3N1
~~BENT 27~~	~~SEJ(4")~~	~~B/3~~	~~3N1~~
~~ABUT 30~~	~~SEJ(4")~~	~~D/3~~	~~3N1~~

RAMP 3		TYPE	SEAL
BENT 20	SEJ(4")	D/3	3N1
ABUT 22	SEJ(4")	A/3	3N1
RAMP 4			
BENT 15	SEJ(4")	C/3	3N1
BENT 19	SEJ(4")	C/3	3N1
BENT 22	SEJ(4")	B/3	3N1
ABUT 25	SEJ(4")	B/3	3N1

US 83/US 281 INTERCHANGE RAMPS 1, 2, 3, & 4

SEJ PLACEMENT GUIDE (PLAN LAYOUT)

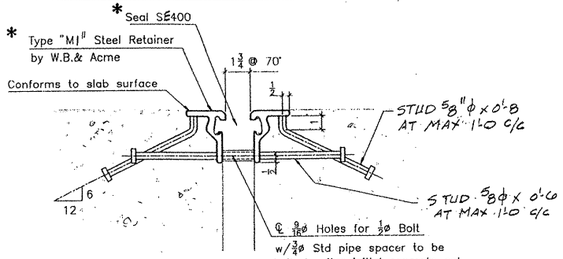

SECTION A–A

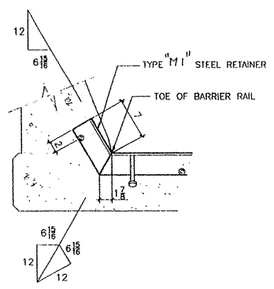

SECTION B

SEAL SCHEDULE

SEAL 3N1 X 30'-0"

GENERAL NOTES:

1– Studs are to be elec. arc welded with complete fusion.
2– All steel to be A36 or A588 and DOMESTIC.
3– Material for studs shall conform to ASTM–A108, grades 1015, 1018, or 1020.
4– One shop splice will be permitted in each shipping length provided no piece is less than 2'–0 in length and sufficient studs are added to limit the stud to shop splice distance to 2" MIN. and 4" MAX.
5– Shop and field splices shall be made by butt welding with areas in contact with preformed joint sealer to be ground smooth.
6– Corresponding sections shall be match marked and bolted together for shipment.

FOR APPROVAL ONLY
Capitol City Steel Co., Inc.

* = BY Watson Bowman & Acme

FIELD PAINT / none

BACKCHARGES:
Back charges of any nature for corrective work or replacement material will not be accepted unless authorized by Seller. Costs that are incurred without the Seller's prior approval will be for the Buyer's account.

Rev.	Date	Description
1		
2		
3		
4		

Print Record

#	To	Date
7	Appv	3/24/94
	Appv	
	Appv	
	Check	
	Back ✓	
	Shop	
	Shop	
1	Purch	3/28/94
	Purch	
	Const	
	Const	
	Plotted	

Jan 15, 1993 – 17:49:33

CAPITOL CITY STEEL
COMPANY INC.
REINFORCING & STRUCTURAL STEEL FABRICATORS
SUPPLIER OF CONSTRUCTION MATERIALS
P.O. BOX 3195 AUSTIN, TX 78764 512-282-8820
FAX: 512-295-2500

CUSTOMER: McALLEN CONST.
PROJECT: NH 92(50)M CSJ: 0039 17 097
LOCATION: HILDAGO CO US 83 US 281 DIST 21
ARCH/ENG: Texas DOT SHOP PLAN #: ~~XXXX~~ 7020
JOB # 94-872
DATE: 3-24-94
DWN: PC CHK: RA
SHEET ~~# 1 OF 2~~ E10

4" SEJ–S(1) @ US 83/281 INTERCHANGE RAMPS ~~1, 2, 3, & 4~~

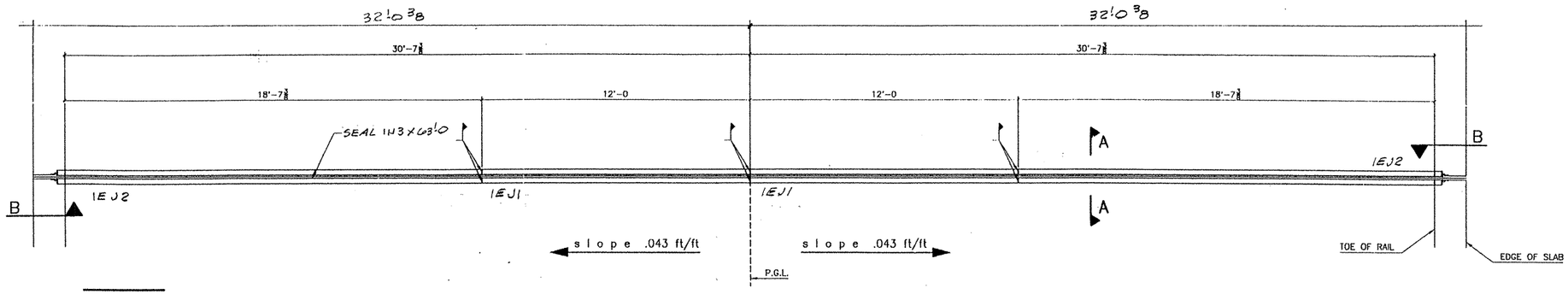

BENT 12

US 83/281 INTERCHANGE RAMPS 1 & 2

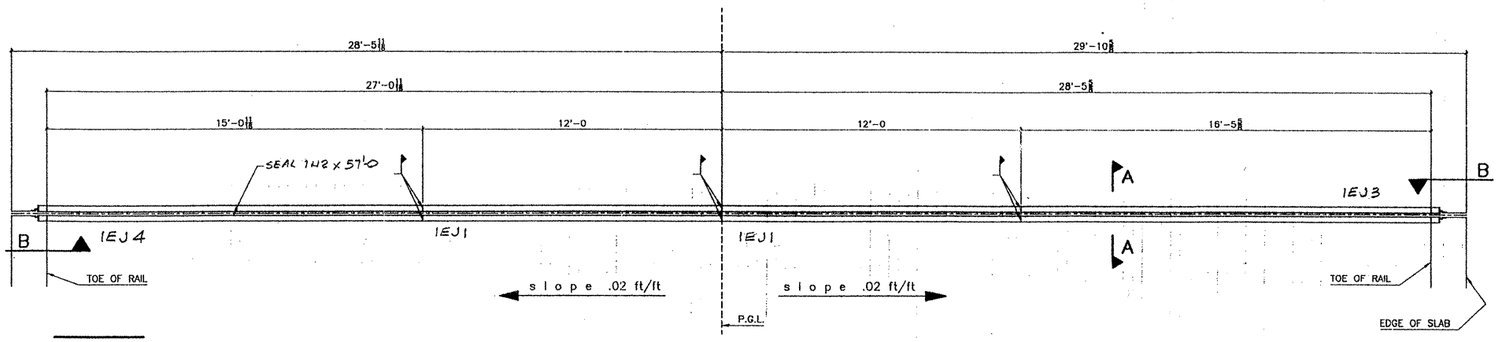

BENT 10

US 83/281 INTERCHANGE RAMPS 3 & 4

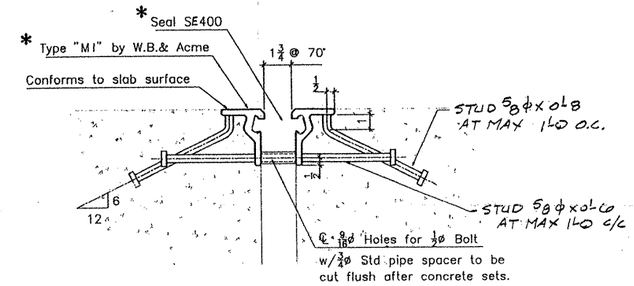

SECTION A–A

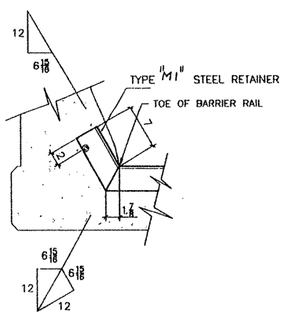

SECTION B

FOR APPROVAL ONLY
Capitol City Steel Co., Inc.

APPROVER / REVIEW AUTHORITY PLEASE REVIEW THIS DRAWING CAREFULLY

This drawing represents the Seller's interpretation of the intent of the contract documents. However, the Seller assumes no responsibilityth for the basic design elements copied from the contract drawings.

Unless noted to the contrary upon the drawings returned from aproval, it will be assumed that all information shown hereon has the affirmation of the approval authority. However, accuracy of all dimensions remains responsibility of the seller.

BACKCHARGES:

Back charges of any nature for corrective work or replacement material will not be accepted unless authorized by Seller. Costs that are incurred without the Seller's prior approval will be for the Buyer's account.

Rev.	Date	Description
1		
2		
3		
4		

Print Record #	To	Date
7	Appv	3/24/94
	Appv	
	Appv	
	Check	
	Back ✓	
	Shop	
	Shop	
1	Purch	3/24/94
	Purch	
	Const	
	Const	

CAPITOL CITY STEEL
COMPANY INC.
REINFORCING & STRUCTURAL STEEL FABRICATORS
SUPPLIER OF CONSTRUCTION MATERIALS
P.O. BOX 3195 AUSTIN TX 78764 512-282-8820
FAX: 512-295-2500

CUSTOMER: McALLEN CONST
PROJECT: NH 92 (50) M CSJ 0039 17 097
LOCATION: US 83 US 281 DIST 21 HIDALGO CO.
ARCH/ENG: TEXAS DOT

JOB # 94-872
DATE: 3/24/94
DWN: PC CHK:
SHEET # E2 OF 2

SEJ-5(1) @ US 83/US281 INTERCHANGE

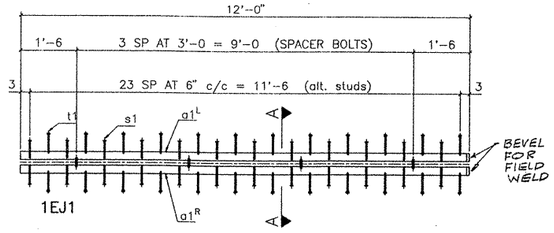

4 – EXP. JOINT Mk 1EJ1

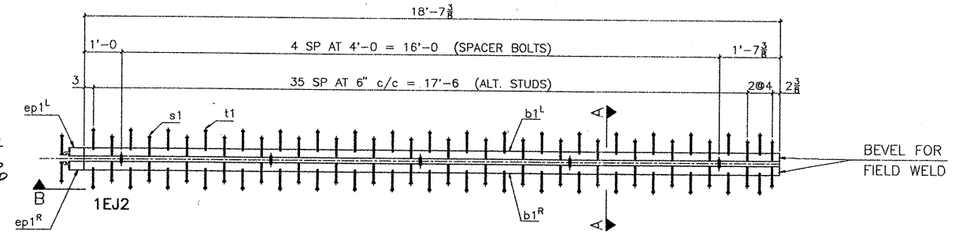

2 – EXP. JOINT Mk 1EJ2

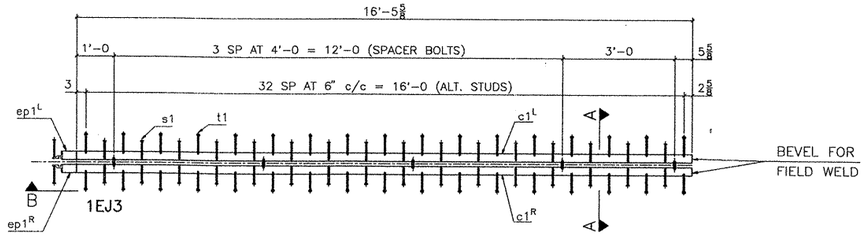

1 – EXP. JOINT Mk 1EJ3

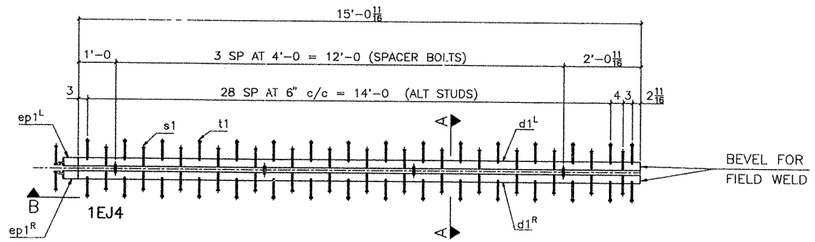

1 – EXP. JOINT Mk 1EJ4

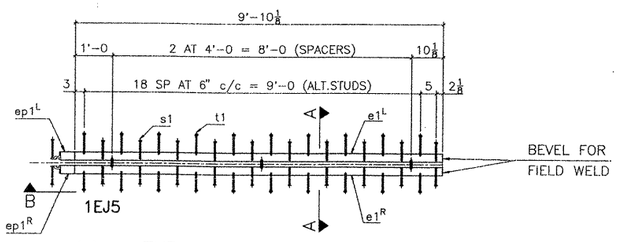

14 – EXP. JOINT Mk 1EJ5

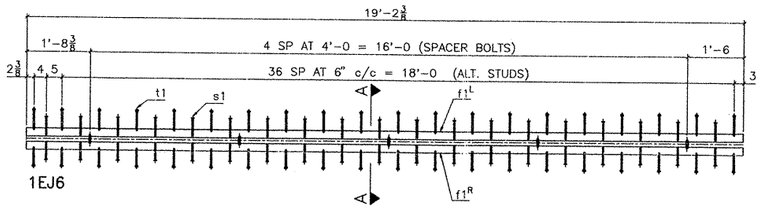

9 – EXP. JOINT Mk 1EJ6

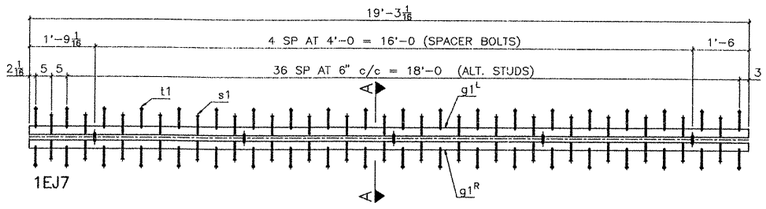

3 – EXP. JOINT Mk 1EJ7

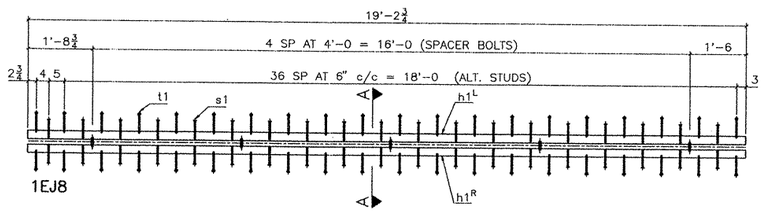

2 – EXP. JOINT Mk 1EJ8

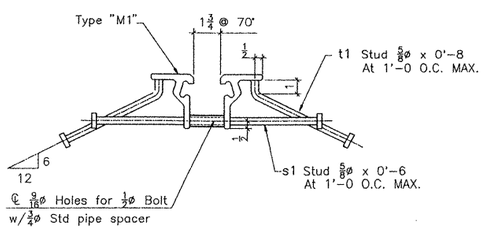

SECTION A–A

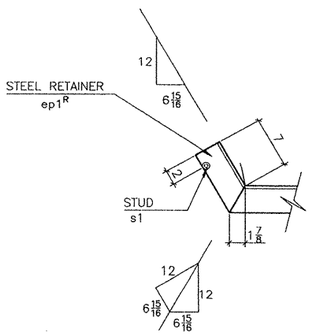

V I E W B

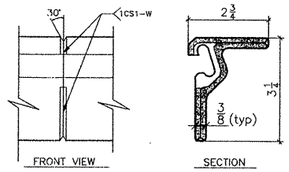

SHOP WELD DETAIL

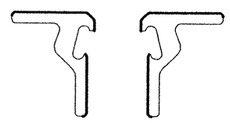

PAINT LIMITS

PAINT DARKENED AREAS. DO NOT PAINT SEAL CAVITY

Bill of Material

Detail Mark	#	SECTION	LENGTH	SHIPPING #	SHIPPING Mark	REMARKS	
	3"	SEALED EXP JOINT	12'-0	4	1EJ1	12.00'	95
a1 LR	8	TYPE M1 EXT.	12'-0			* 4L & 4R	72
s1	96	5/8ø HD STUD	0'-6				72
t1	96	5/8ø HD STUD	0'-8			BENT	72
	3"	SEALED EXP JOINT	19'-2 3/8	2	1EJ2	1920'	95
b1 RL	4	TYPE M1 EXT.	18'-9 1/4			* 2L & 2R	72
ep1 LR	4	TYPE M1 EXT.	0'-8 7/8			* 2L & 2R	72
s1	76	5/8ø HD STUD	0'-6				72
t1	72	5/8ø HD STUD	0'-8			BENT	72
	3"	SEALED EXP JOINT	17'-0 5/8	1	1EJ3	17.05'	95
c1 RL	2	TYPE M1 EXT.	16'-7 1/2			* 1L & 1R	72
ep1 LR	2	TYPE M1 EXT.	0'-8 7/8			* 1L & 1R	72
s1	36	5/8ø HD STUD	0'-6				72
t1	32	5/8ø HD STUD	0'-8			BENT	72
	3"	SEALED EXP JOINT	15'-7 11/16	1	1EJ4	15.59'	95
d1 RL	2	TYPE M1 EXT.	15'-2 9/16			* 1L & 1R	72
ep1 LR	2	TYPE M1 EXT.	0'-8 7/8			* 1L & 1R	72
s1	34	5/8ø HD STUD	0'-6				72
t1	30	5/8ø HD STUD	0'-8			BENT	72
	3"	SEALED EXP JOINT	10'-5 1/8	14	1EJ5	10.43'	95
e1 RL	28	TYPE M1 EXT.	10'-0			* 14L & 14R	72
ep1 LR	28	TYPE M1 EXT.	0'-8 7/8			* 14L & 14R	72
s1	588	5/8ø HD STUD	0'-6				72
t1	588	5/8ø HD STUD	0'-8			BENT	72
	3"	SEALED EXP JOINT	19'-2 3/16	9	1EJ6	19.20'	95
f1 RL	18	TYPE M1 EXT.	19'-2 3/16			* 9L & 9R	72
s1	360	5/8ø HD STUD	0'-6				72
t1	342	5/8ø HD STUD	0'-8			BENT	72
	3"	SEALED EXP JOINT	19'-3 1/16	3	1EJ7	19.26'	95
g1 RL	6	TYPE M1 EXT.	0'-6 13/16			* 3L & 3R	72
s1	120	5/8ø HD STUD	0'-6				72
t1	114	5/8ø HD STUD	0'-8			BENT	72
	3"	SEALED EXP JOINT	19'-3 1/16	2	1EJ8	19.31'	95
h1 RL	4	TYPE M1 EXT.	0'-6 13/16			* 2L & 2R	72
s1	80	5/8ø HD STUD	0'-6				72
t1	76	5/8ø HD STUD	0'-8			BENT	72
za1	147	1/2ø BOLT	0'-3 3/4			FOR SPACER	72
zb1	147	1/2ø NUT				FOR SPACER	72
zc1	147	3/4ø PIPE	0'-2 1/4			SPACER	72
		NEOPRENE SEAL					
		TYPE SE400	30'-0	14	BN1	*	
		TYPE SE400	57'-0	1	1N2	*	
		TYPE SE400	63'-0	1	1N3	*	

GENERAL NOTES:

1– Studs are to be elec. arc welded with complete fusion.
2– All steel to be A588 or A36 and DOMESTIC.
3– Material for studs shall conform to ASTM–A108, grades 1015, 1018, or 1020.
4– One shop splice will be permitted in each shipping length provided no piece is less than 2'–0 in length and sufficient studs are added to limit the stud to shop splice distance to 2" minimum 4" maximum.
5– Shop and field splices shall be made by butt welding with areas in contact with preformed joint sealer to be ground smooth.
6– Corresponding sections shall be match marked and bolted together for shipment.
7– Painting of System II will cover only surfaces not embeded in concrete.

FOR APPROVAL ONLY
Capitol City Steel Co., Inc.
9

* – BY WATSON BOWMAN & ACME

HOLES (U.N.)/ 9/16ø SHOP PAINT/ SYS II

APPROVER / REVIEW AUTHORITY PLEASE REVIEW THIS DRAWING CAREFULLY

This drawing represents the Seller's interpretation of the intent of the contract documents. However, the Seller assumes no responsibility for the basic design elements copied from the contract drawings.

Unless noted to the contrary upon the drawings returned from aproval, it will be assumed that all information shown hereon has the affirmation of the approval authority. However, accuracy of all dimensions remains responsibility of the seller.

BACKCHARGES:

Back charges of any nature for corrective work or replacement material will not be accepted unless authorized by Seller. Costs that are incurred without the Seller's prior approval will be for the Buyer's account.

Rev.	Date	Description
1		
2		
3		
4		

Print Record #	To	Date
7	Appv	3/24/94
	Appv	
	Appv	
	Check	
	Back ✓	
	Shop	
	Shop	
1	Purch	3/24/94
	Purch	
	Const	
	Const	
	PLOTTED	

Mar 24, 1994 – 10:15:38

CAPITOL CITY STEEL
COMPANY INC.
REINFORCING & STRUCTURAL STEEL FABRICATORS
SUPPLIER OF CONSTRUCTION MATERIALS
P.O. BOX 3185 AUSTIN TX 78764 512-282-8820
FAX: 512-295-2500

CUSTOMER: McALLEN CONST.
PROJECT: NH 92(50)M CSJ 0039 17 097
LOCATION: US 83 US 281 DIST 21 HILDAGO County
ARCH/ENG: TEXAS DOT SHOP PLAN #:

JOB # 94-872
DATE: 3-24-94
DWN: PC CHK:
SHEET # 1 of 1

SEJ–S(1) ~ SHOP DETAILS