MG 2003(689)

(0255-08-091) FILE: I:\PROJECTS\ 22322A\CADD\GENERAL\TITLE1.DGN

US 281

HIDALGO

COUNTY HIDALGO PROJ NO.
HWY NO. US 281 LETTING DATE
DATE ACCEPTED

VOLUME I

SEE SHEET NO. 2-4
FOR INDEX OF SHEETS

SUPPLEMENTAL AGREEMENTS:

ATTACHMENT NO. 1 TO SPECIAL AGREEMENT FOR CONSTRUCTION, MAINTENANCE AND OPERATION OF CONTINUOUS HIGHWAY LIGHTING SYSTEMS WITHIN A MUNICIPALITY, (BLANKET)

THE CITY-STATE CONSTRUCTION, MAINTENANCE AND OPERATION RESPONSIBILITIES SHALL BE AS HERETOFORE AGREED TO, ACCEPTED, AND SPECIFIED IN THE AGREEMENT TO WHICH THESE PLANS ARE MADE A PART.

CITY OF EDINBURG PLANS APPROVED: DATE :

NAME TITLE

CITY OF PHARR PLANS APPROVED: DATE :

NAME TITLE

STATE OF TEXAS
DEPARTMENT OF TRANSPORTATION

PLANS OF PROPOSED
STATE HIGHWAY IMPROVEMENT

FEDERAL AID PROJECT MG
CSJ: 0255-08-091
NET LENGTH OF PROJECT = 21,624.00 ft = 4.095 mi

RDWY = 20,495.08 ft = 3.882 mi
BRIDGE = 1,128.92 ft = 0.213 mi
TOTAL = 21,624.00 ft = 4.095 mi

HIDALGO COUNTY
US 281

LIMITS: FROM: TRENTON RD. TO: TEXAS 495

RECONSTRUCTION AND WIDENING OF EXISTING MAIN LANES, BRIDGES, APPROACHES, AND FRONTAGE ROADS, RECONFIGURATION OF INTERSECTIONS & FRONTAGE ROADS. WORK TO CONSIST OF GRADING, LIME TREATED SUBGRADE, FLEXIBLE BASE, HDSM & SUPERPAVE HM ASPHALTIC CONCRETE PAVEMENT, CONCRETE CURB, CONCRETE CURB AND GUTTER, RETAINING WALLS, DRAINAGE IMPROVEMENTS, TRAFFIC SIGNALS, ILLUMINATION, SIGNING, PAVEMENT MARKINGS, SIDEWALKS, WHEELCHAIR RAMPS AND LANDSCAPING.

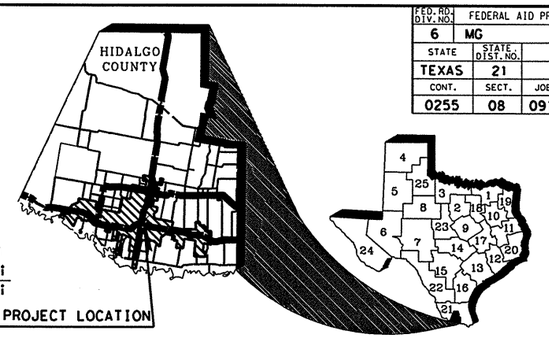

FED. RD. DIV. NO.	FEDERAL AID PROJECT NO.		SHEET NO.
6	MG		1
STATE	STATE DIST. NO.	COUNTY	
TEXAS	21	HIDALGO	
CONT.	SECT.	JOB	HIGHWAY NO.
0255	08	091	US 281

STA 61614+00.00
BEG INCIDENTAL
CONSTRUCTION
SBFR

STA 630+00.00
BEG PROJECT
CONTROL 0255-08-091
RM= 778.3

STA 10+30.00
BEG INCIDENTAL
CONSTRUCTION
TRENTON RD

STA 7+77.15
BEG INCIDENTAL
CONSTRUCTION
NB BUS. 281

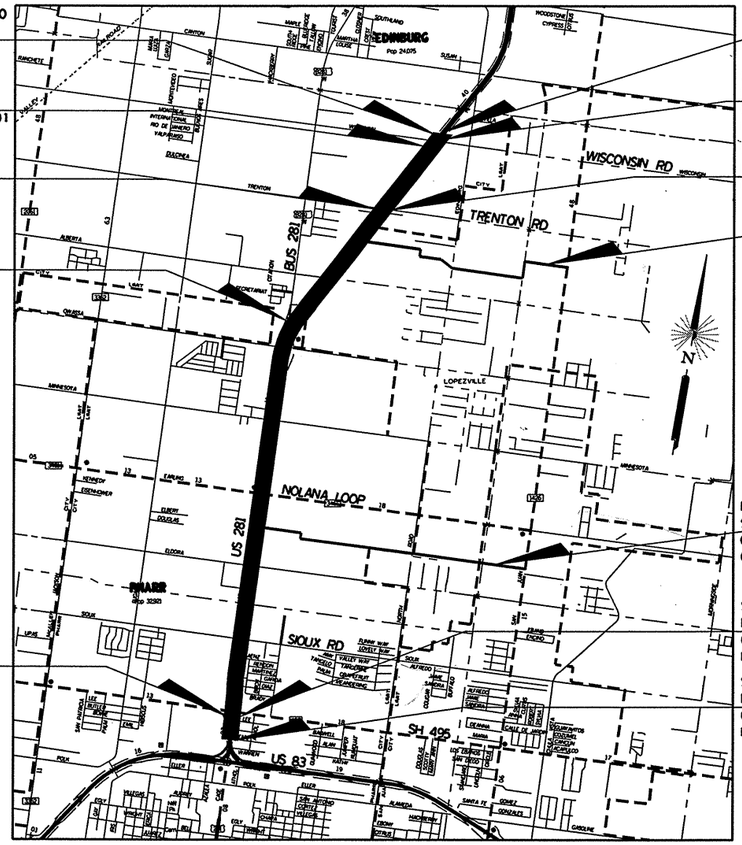

STA 620+00.00
BEG INCIDENTAL CONSTRUCTION
NB & SB MAINLANES

STA 50613+00.00
BEG INCIDENTAL
CONSTRUCTION
NBFR

STA 30+00.00
END INCIDENTAL
CONSTRUCTION
TRENTON RD

PROPOSED
NORTH MAIN
OUTFALL
CHANNEL

PROPOSED
SOUTH MAIN
OUTFALL
CHANNEL

STA 846+24.00
END PROJECT
CONTROL 0255-08-091
RM = 782.4

STA 50853+15.00
END INCIDENTAL
CONSTRUCTION
NBFR

STA 62849+90.00
END INCIDENTAL
CONSTRUCTION
SBFR

0 ½ 1 2
SCALE IN MILES

FINAL PLAN DATA :

FINAL CONTRACT PRICE: _____
CONTRACTORS NAME: _____
CONTRACTORS ADDRESS: _____
LETTING DATE: _____
DATE WORK BEGAN: _____
DATE WORK COMPLETED: _____
DATE OF ACCEPTANCE: _____

CHANGE ORDERS & SUPP. AGREEMENTS :

LOCAL ENTITIES

CITY OF EDINBURG CONCURRENCE: DATE : 7/16/03
NAME: [signature] TITLE: City Mgr.

CITY OF PHARR CONCURRENCE: DATE : 7/15/03
NAME: Beto Lopez TITLE: City Mgr.

COUNTY OF HIDALGO CONCURRENCE: DATE : 7/22/03
NAME: [signature] TITLE: Pct. 4

DATE :
NAME TITLE

HIDALGO CO IRR DIST #2 CONCURRENCE: DATE : 8/15/03
NAME: Sonny Urnoza TITLE: GEN. MGR.

HIDALGO CO DRAIN DIST #1 CONCURRENCE: DATE : 7/2/03
NAME: [signature] TITLE: Dist. Mgr.

TDLR INSPECTION REQ'D

PREPARED BY:
PARSONS BRINCKERHOFF QUADE & DOUGLAS, INC.
[signature]
PROJECT MANAGER
6/26/03
DATE

STATE OF TEXAS
JOHN M. PEREZ
66425
REGISTERED
PROFESSIONAL ENGINEER

PREPARED BY:
PARSONS BRINCKERHOFF QUADE & DOUGLAS, INC.
[signature]
DEPUTY PROJECT MANAGER
6/26/03
DATE

STATE OF TEXAS
JAIME AGUILAR
87606
REGISTERED
PROFESSIONAL ENGINEER

SPECIFICATIONS ADOPTED BY THE TEXAS DEPARTMENT OF TRANSPORTATION ON MARCH 1, 1993 AND SPECIFICATION ITEMS LISTED AND DATED AS FOLLOWS, SHALL GOVERN ON THIS PROJECT. REQUIRED CONTRACT PROVISIONS FOR FEDERAL- AID CONSTRUCTION CONTRACTS (FORM FHWA 1273, DECEMBER 1993)

PROJECT DATA
DESIGN SPEED:

MAIN LANES	:	70 MPH
FRONTAGE ROADS	:	50 MPH
RAMPS	:	40 MPH (MIN)
		50 MPH (USUAL)
CROSS STREETS	:	30 MPH
DIRECT CONNECTOR	:	45 MPH

EXCEPTION: NONE
EQUATION: NONE
RAILROAD CROSSING: NONE

TEXAS DEPARTMENT OF TRANSPORTATION

RECOMMEND FOR LETTING : 8-15-03
[signature] P.E.
DISTRICT ENGINEER

SUBMITTED FOR LETTING : 7-1-03
[signature]
AREA ENGINEER

APPROVED FOR LETTING :
DIRECTOR OF T.P. & DEVELOPMENT

APPROVED FOR LETTING : 8/22/03
[signature], P.E.
FOR DIRECTOR, DESIGN DIVISION

© TxDOT 2003 by Texas Department of Transportation (512) 416-2055; all rights reserved

FED.RD. DIV.NO.	FEDERAL AID PROJECT NO.		SHEET NO.
6	MG		1A
STATE	STATE DIST.NO.	COUNTY	
TEXAS	21	HIDALGO	
CONT.	SECT.	JOB	HIGHWAY NO.
0255	08	091	US 281

VOLUME 1

THE STANDARD SHEETS 183 THROUGH 225A HAVE BEEN SELECTED BY ME OR UNDER MY RESPONSIBLE SUPERVISION AS BEING APPLICABLE TO THIS PROJECT.

6/26/03
DATE

JOHN M. PEREZ, P.E.

STATE OF TEXAS — JOHN M. PEREZ — 66425 — REGISTERED PROFESSIONAL ENGINEER

THE STANDARD SHEETS 445 THROUGH 448 AND 482 THROUGH 510A HAVE BEEN SELECTED BY ME OR UNDER MY RESPONSIBLE SUPERVISION AS BEING APPLICABLE TO THIS PROJECT.

6/25/03
DATE

JAIME AGUILAR, P.E.

STATE OF TEXAS — JAIME AGUILAR — 87606 — REGISTERED PROFESSIONAL ENGINEER

THE STANDARD SHEETS 479 THROUGH 481 HAVE BEEN SELECTED BY ME OR UNDER MY RESPONSIBLE SUPERVISION AS BEING APPLICABLE TO THIS PROJECT.

6/24/03
DATE

DEEPAK MANGLORKAR, P. E.

STATE OF TEXAS — DEEPAK MANGLORKAR — 89613 — REGISTERED PROFESSIONAL ENGINEER

STATE OF TEXAS
DEPARTMENT OF TRANSPORTATION

PLANS OF PROPOSED
STATE HIGHWAY IMPROVEMENT

FEDERAL AID PROJECT MG
CSJ: 0255-08-091
NET LENGTH OF PROJECT = 21,624.00 ft = 4.095 mi

HIDALGO COUNTY
US 281

LIMITS: FROM: TRENTON RD. TO: TEXAS 495

RDWY = 20,495.08 ft = 3.882 mi
BRIDGE = 1,128.92 ft = 0.213 mi
TOTAL = 21,624.00 ft = 4.095 mi

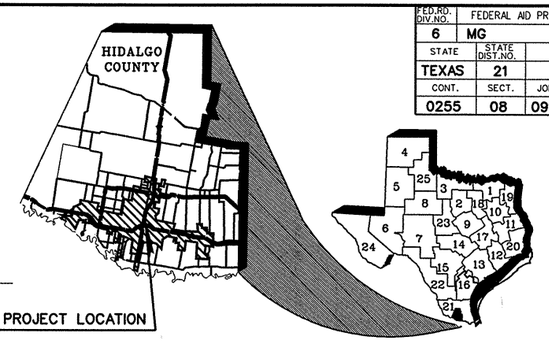

RECONSTRUCTION AND WIDENING OF EXISTING MAIN LANES, BRIDGES, APPROACHES, AND FRONTAGE ROADS, RECONFIGURATION OF INTERSECTIONS & FRONTAGE ROADS. WORK TO CONSIST OF GRADING, LIME TREATED SUBGRADE, FLEXIBLE BASE, HDSM & SUPERPAVE HM ASPHALTIC CONCRETE PAVEMENT, CONCRETE CURB, CONCRETE CURB AND GUTTER, RETAINING WALLS, DRAINAGE IMPROVEMENTS, TRAFFIC SIGNALS, ILLUMINATION, SIGNING, PAVEMENT MARKINGS, SIDEWALKS, WHEELCHAIR RAMPS AND LANDSCAPING.

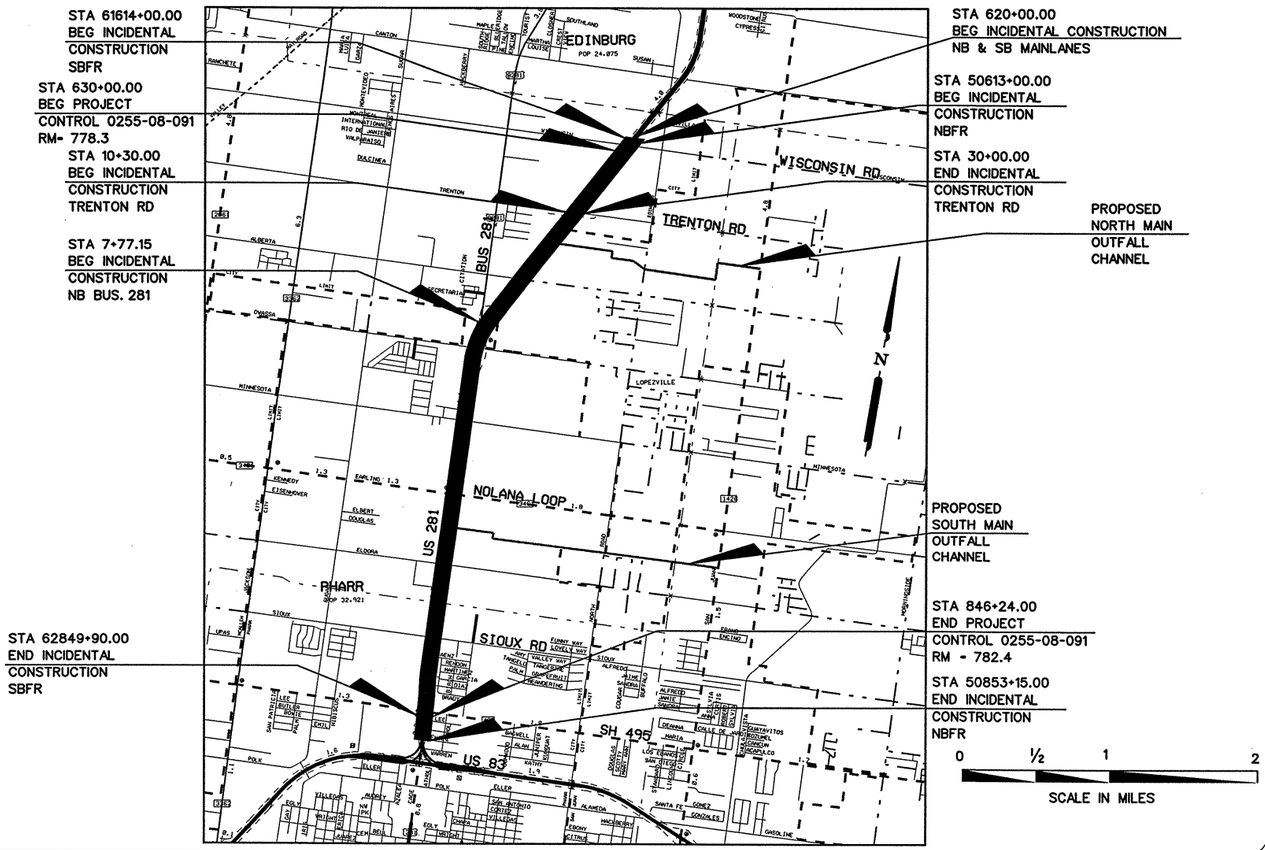

© TxDOT 2003 by Texas Department of Transportation (512) 416-2055: all rights reserved

SPECIFICATIONS ADOPTED BY THE TEXAS DEPARTMENT OF TRANSPORTATION ON MARCH 1, 1993 AND SPECIFICATION ITEMS LISTED AND DATED AS FOLLOWS, SHALL GOVERN ON THIS PROJECT. REQUIRED CONTRACT PROVISIONS FOR FEDERAL- AID CONSTRUCTION CONTRACTS (FORM FHWA 1273, DECEMBER 1993)

PROJECT DATA
DESIGN SPEED:

MAIN LANES : 70 MPH
FRONTAGE ROADS : 50 MPH
RAMPS : 40 MPH (MIN)
50 MPH (USUAL)
CROSS STREETS : 30 MPH
DIRECT CONNECTOR: 45 MPH

EXCEPTION: NONE
EQUATION: NONE
RAILROAD CROSSING: NONE

(0255-08-091) FILE: I:\PROJECTS\ 22322A\CADD\GENERAL\TITLE1.DGN

US 281

COUNTY HIDALGO PROJ NO.
HWY NO. US 281 LETTING DATE
DATE ACCEPTED

$NAME$

$TIME$

$DATE$

$FILE$

INDEX OF SHEETS

SHEET NO.	DESCRIPTION
VOLUME I	
	GENERAL
1	TITLE SHEET
1A	TITLE SHEET EXTENSION FOR ENGINEER'S SEALS
2-4	INDEX OF SHEETS
5-6	PROJECT LAYOUT
7-21	TYPICAL SECTIONS
22, 22A-22Q	GENERAL NOTES AND SPECIFICATION DATA
23-35	US 281 ESTIMATE & QUANTITY
36, 36A, 36B, 37-39	US 281 ESTIMATE & QUANTITY: EARTHWORK SUMMARY
39A-39G	ESTIMATE & QUANTITY SUMMARY SHEETS
	TRAFFIC CONTROL PLAN
40-41, 41A, 42-54	TRAFFIC CONTROL SUMMARY SHEETS
55-57	TRAFFIC CONTROL GENERAL NOTES
58	TRAFFIC CONTROL PLAN SEQUENCE OF CONSTRUCTION
59	TCP TEMP EXIT SIGNS RAMP CLOSURES
60	TCP TYP DETOUR FOR CLOSED STREET
61	TCP TRENTON ROAD DETOUR LAYOUT
62	TCP NIGHTTIME CLOSURE FRTG RDS & TRENTON ROAD
63	TCP CLOSURE OF ML AND OWASSA ROAD
63A	TCP CLOSURE OF SB FRTG RD DETOUR LAYOUT
64	TCP MINOR STREET CLOSURE
65-67	TCP TYPCIAL SECTIONS PHASE 1A
68-69	TCP LAYOUT PHASE 1A
70-80	TCP PHASE 1A
81	TCP TYPICAL SECTIONS PHASE 1B
82-83	TCP LAYOUT PHASE 1B
84-90	TCP PHASE 1B
91-92	TCP TYPCIAL SECTIONS PHASE 2
93-94	TCP LAYOUT PHASE 2
95-105	TRAFFIC CONTROL PLAN PHASE 2
106-117	TCP TYPCIAL SECTIONS PHASE 3
118-119	TCP LAYOUT PHASE 3
120-155	TRAFFIC CONTROL PLAN PHASE 3
156	TCP TYPICAL SECTIONS PHASE 4
157-158	TCP LAYOUT PHASE 4
159-172	TRAFFIC CONTROL PLAN PHASE 4
173	TCP TYPICAL SECTIONS PHASE 5
174-175	TCP LAYOUT PHASE 5
176-182	TRAFFIC CONTROL PLAN PHASE 5
	STANDARDS
183-194	[S] BC(1)-03 - BC(12)-03
195	[S] WZ(TD)-03
196	[S] WZ(STPM)-03
197	[S] WZ(DERD)-03
198	[S] WZ(BRK)-03
199-200	[S] TCP(1-3)-(1-4)-98
201-206	[S] TCP(2-1)-98, TCP(2-2)-TCP(2-5)-03, TCP(2-6)-98
207-209	[S] TCP(3-1)-(3-3)-98
210-217	[S] TCP(6-1)-TCP(6-7)-98A & TCP(6-8)-98
218	[S] TCP(7-1)-98
219	[S] CBR(P&P)-87
220-221	[S] REACT (N)-03
222-223	[S] LPCB(1) & LPCB(2)-92
224-225	[S] PCTB(1)-02 & PCTB(3)-94
225A	[S] WORKSHEET FOR EDGE CONDITION TREATMENT TYPES
	ROADWAY
226-233, 233A, 234-247	US 281 REMOVAL ITEM DETAILS
248-261	ROADWAY DATA SHEET
262-272	HORIZONTAL CONTROL LAYOUT
	ROADWAY PLAN & PROFILE
273-292	NORTHBOUND MAINLANE PLAN & PROFILE
293-312	SOUTHBOUND MAINLANE PLAN & PROFILE
313-332	NORTHBOUND FRONTAGE ROAD PLAN & PROFILE
333-354	SOUTHBOUND FRONTAGE ROAD PLAN & PROFILE
355-372	RAMPS PLAN & PROFILE (NORTHBOUND)
373-390	RAMPS PLAN & PROFILE (SOUTHBOUND)
391-400	TRENTON ROAD PLAN & PROFILE, TURNAROUNDS, INTERSECTION LAYOUT
401-406	NB BUSINESS 281 PLAN & PROFILE
407-413	OWASSA ROAD PLAN & PROFILE, TURNAROUNDS, INTERSECTION LAYOUT
414-418	NOLANA LOOP PLAN & PROFILE, TURNAROUNDS, INTERSECTION LAYOUT
419-426	SIOUX ROAD PLAN & PROFILE, TURNAROUNDS, INTERSECTION LAYOUT
427-431	TEXAS 495 PLAN & PROFILE, TURNAROUNDS, INTERSECTION LAYOUT
432	WISCONSIN ROAD PLAN & PROFILE
433	ALBERTA ROAD PLAN & PROFILE
434	SBFR CONNECTOR PLAN & PROFILE
435	NB BUS. 281 CONNECTOR PLAN & PROFILE
436	NB BUS. 281 TURN-AROUND PLAN & PROFILE
437	MINNESOTA ROAD PLAN & PROFILE
438-439	DRIVEWAY SUMMARY
439	TURNOUT TABLE AND DETAIL
441	GORE NOSE DETAIL
442	MISC ROADWAY DETAILS
443-444	NB BUS. 281 GORE DETAILS
	STANDARDS
445	[D] DRIVEWAY DETAILS
446	[D] DRIVEWAYS & TURNOUTS
447	[D] TURNOUT DETAILS
448	[D] PAVEMENT RECONNECT AREA DETAILS
	RETAINING WALLS
449	RETAINING WALL LAYOUT SHEET
450-467	RETAINING WALL PLAN & PROFILES "A" - "F", "H", "K", "L" - "R"
468	RETAINING WALL TYPICAL SECTIONS & DETAILS
469-471, 471A, 472-473	US 281 TEST HOLE DATA
474	TYPCIAL MSE FORM LINER FINISH
475	ATTACHED TYPICAL MSE COLUMN TREATMENT
476	RW(MSE)(MOD)
477-478	OMITTED
	STANDARDS
479	[S] EMRW-94
480	[S] RW(MSE)
481	[S] RW(TRF)
482	[S] SSCB (1)-99
483	[S] SSCB (2)-00A
484	[S] SSCB (3)-02
485	[S] SSCB (4)-00
486-487	[S] SSTR
488	[S] MBGF-03
489	MBGF (TR)-03
	ROADWAY PLAN & PROFILE (CONTINUED)
490	MBGF (T101)-01
491	[S] SGT (7)-02
492	[S] SGT(8)-02
493-495A	[S] MB-03
496	[S] CRR
497-498	[S] D & OM (1) & (2)-95
499	[S] D & OM (VIA)-98
500-501	[D] SHORT RADIUS RAIL END TREATMENT DETAIL
502	[D] SIDEWALK & WHEEL CHAIR RAMP DETAILS
503	OMITTED
504	[D] SAFETY END TREATMENT (TYPE II) & SIDE DRAIN DETAILS
505	[S] BED-02
506	[S] TRF(MOD)
507-509	[S] PED-02
510	[S] BWI-99
510A	[S] QUAD(N)-99
VOLUME II	
	DRAINAGE SHEETS
511-521	DRAINAGE AREA MAP
522-538	HYDRAULIC DATA SHEETS
539-560	UTILITY & DRAINAGE SHEETS NFBR
561-583	UTILITY & DRAINAGE SHEETS SFBR
584-593	UTILITY & DRAINAGE SHEETS SIDE STREETS
594-606	NBFR LATERAL PROFILES
607-618	SBFR LATERAL PROFILES
619-620	STORM DRAIN CROSSING CULVERT LAYOUTS
621-622	DRAINAGE DITCH ANALYSIS
623	PROPOSED OUTFALL TYPICAL SECTIONS
624-630	PROPOSED NORTH DRAINAGE DITCH PLAN & PROFILE
631-639	PROPOSED SOUTH DRAINAGE DITCH PLAN & PROFILE

LEGEND

[D] DENOTES DISTRICT STANDARD

[S] DENOTES STATE STANDARD

Parsons Brinckerhoff Quade & Douglas Inc.

Texas Department of Transportation

© 2003 by TxDOT

INDEX OF SHEETS

VOLUME I

SHEET 1 OF 3				281INDEXSH1.DGN	
DESIGNED: TT	FED. RD DIV. No.	STATE	FEDERAL AID PROJECT No.	HIGHWAY No.	
CHECKED: DM	6	TEXAS		US 281	
DRAWN: DBR	STATE DISTRICT	COUNTY	CONTROL No.	SECTION No.	JOB No.	SHEET No.
CHECKED: DM	PHARR	HIDALGO	0255	08	091	2

.../jleal2/Desktop/281indexsh1.dgn 8/20/2003 5:59:16 PM

$NAME$

$TIME$

$DATE$

$FILE$

INDEX OF SHEETS

SHEET NO.	DESCRIPTION
VOLUME I	
	GENERAL
1	TITLE SHEET
1A	TITLE SHEET EXTENSION FOR ENGINEER'S SEALS
2-4	INDEX OF SHEETS
5-6	PROJECT LAYOUT
7-21	TYPICAL SECTIONS
22, 22A-22Q	GENERAL NOTES AND SPECIFICATION DATA
23-35	US 281 ESTIMATE & QUANTITY
36, 36A, 36B, 37-39	US 281 ESTIMATE & QUANTITY: EARTHWORK SUMMARY
39A-39G	ESTIMATE & QUANTITY SUMMARY SHEETS
	TRAFFIC CONTROL PLAN
40-41, 41A, 42-54	TRAFFIC CONTROL SUMMARY SHEETS
55-57	TRAFFIC CONTROL GENERAL NOTES
58	TRAFFIC CONTROL PLAN SEQUENCE OF CONSTRUCTION
59	TCP TEMP EXIT SIGNS RAMP CLOSURES
60	TCP TYP DETOUR FOR CLOSED STREET
61	TCP TRENTON ROAD DETOUR LAYOUT
62	TCP NIGHTTIME CLOSURE FRTG RDS & TRENTON ROAD
63	TCP CLOSURE OF ML AND OWASSA ROAD
63A	TCP CLOSURE OF SB FRTG RD DETOUR LAYOUT
64	TCP MINOR STREET CLOSURE
65-67	TCP TYPCIAL SECTIONS PHASE 1A
68-69	TCP LAYOUT PHASE 1A
70-80	TCP PHASE 1A
81	TCP TYPICAL SECTIONS PHASE 1B
82-83	TCP LAYOUT PHASE 1B
84-90	TCP PHASE 1B
91-92	TCP TYPCIAL SECTIONS PHASE 2
93-94	TCP LAYOUT PHASE 2
95-105	TRAFFIC CONTROL PLAN PHASE 2
106-117	TCP TYPCIAL SECTIONS PHASE 3
118-119	TCP LAYOUT PHASE 3
120-155	TRAFFIC CONTROL PLAN PHASE 3
156	TCP TYPICAL SECTIONS PHASE 4
157-158	TCP LAYOUT PHASE 4
159-172	TRAFFIC CONTROL PLAN PHASE 4
173	TCP TYPICAL SECTIONS PHASE 5
174-175	TCP LAYOUT PHASE 5
176-182	TRAFFIC CONTROL PLAN PHASE 5
	STANDARDS
183-194	[S] BC(1)-03 - BC(12)-03
195	[S] WZ(TD)-03
196	[S] WZ(STPM)-03
197	[S] WZ(DERD)-03
198	[S] WZ(BRK)-03
199-200	[S] TCP(1-3)-(1-4)-98
201-206	[S] TCP(2-1)-98, TCP(2-2)-TCP(2-5)-03, TCP(2-6)-98
207-209	[S] TCP(3-1)-(3-3)-98
210-217	[S] TCP(6-1)-TCP(6-7)-98A & TCP(6-8)-98
218	[S] TCP(7-1)-98
219	[S] CBR(P&P)-87
220-221	[S] REACT (N)-03
222-223	[S] LPCB(1) & LPCB(2)-92
224-225	[S] PCTB(1)-02 & PCTB(3)-94
225A	[S] WORKSHEET FOR EDGE CONDITION TREATMENT TYPES

SHEET NO.	DESCRIPTION
	ROADWAY
226-233, 233A, 234-247	US 281 REMOVAL ITEM DETAILS
248-261	ROADWAY DATA SHEET
262-272	HORIZONTAL CONTROL LAYOUT
	ROADWAY PLAN & PROFILE
273-292	NORTHBOUND MAINLANE PLAN & PROFILE
293-312	SOUTHBOUND MAINLANE PLAN & PROFILE
313-332	NORTHBOUND FRONTAGE ROAD PLAN & PROFILE
333-354	SOUTHBOUND FRONTAGE ROAD PLAN & PROFILE
355-372	RAMPS PLAN & PROFILE (NORTHBOUND)
373-390	RAMPS PLAN & PROFILE (SOUTHBOUND)
391-400	TRENTON ROAD PLAN & PROFILE, TURNAROUNDS, INTERSECTION LAYOUT
401-406	NB BUSINESS 281 PLAN & PROFILE
407-413	OWASSA ROAD PLAN & PROFILE, TURNAROUNDS, INTERSECTION LAYOUT
414-418	NOLANA LOOP PLAN & PROFILE, TURNAROUNDS, INTERSECTION LAYOUT
419-426	SIOUX ROAD PLAN & PROFILE, TURNAROUNDS, INTERSECTION LAYOUT
427-431	TEXAS 495 PLAN & PROFILE, TURNAROUNDS, INTERSECTION LAYOUT
432	WISCONSIN ROAD PLAN & PROFILE
433	ALBERTA ROAD PLAN & PROFILE
434	SBFR CONNECTOR PLAN & PROFILE
435	NB BUS. 281 CONNECTOR PLAN & PROFILE
436	NB BUS. 281 TURN-AROUND PLAN & PROFILE
437	MINNESOTA ROAD PLAN & PROFILE
438-439	DRIVEWAY SUMMARY
439	TURNOUT TABLE AND DETAIL
441	GORE NOSE DETAIL
442	MISC ROADWAY DETAILS
443-444	NB BUS. 281 GORE DETAILS
444A	4' VALLEY GUTTER DETAILS
	STANDARDS
445	[D] DRIVEWAY DETAILS
446	[D] DRIVEWAYS & TURNOUTS
447	[D] TURNOUT DETAILS
448	[D] PAVEMENT RECONNECT AREA DETAILS
	RETAINING WALLS
449	RETAINING WALL LAYOUT SHEET
450-467	RETAINING WALL PLAN & PROFILES "A" - "F", "H", "K", "L" - "R"
468	RETAINING WALL TYPICAL SECTIONS & DETAILS
469-471, 471A, 472-473	US 281 TEST HOLE DATA
474	TYPCIAL MSE FORM LINER FINISH
475	ATTACHED TYPICAL MSE COLUMN TREATMENT
476	RW(MSE)(MOD)
477-478	OMITTED
	STANDARDS
479	[S] EMRW-94
480	[S] RW(MSE)
481, 481A	[S] RW(TRF), RW(TEW)
482	[S] SSCB (1)-99
483	[S] SSCB (2)-00A
484	[S] SSCB (3)-02
485	[S] SSCB (4)-00
486-487	[S] SSTR
488	[S] MBGF-03
489	MBGF (TR)-03

SHEET NO.	DESCRIPTION
	ROADWAY PLAN & PROFILE (CONTINUED)
490	MBGF (T101)-01
491	[S] SGT (7)-02
492	[S] SGT(8)-02
493-495A	[S] MB-03
496	[S] CRR
497-498	[S] D & OM (1) & (2)-95
499	[S] D & OM (VIA)-98
500-501	[D] SHORT RADIUS RAIL END TREATMENT DETAIL
502	[D] SIDEWALK & WHEEL CHAIR RAMP DETAILS
503	OMITTED
504	[D] SAFETY END TREATMENT (TYPE II) & SIDE DRAIN DETAILS
505	[S] BED-02
506	[S] TRF(MOD)
507-509	[S] PED-02
510	[S] BWI-99
510A	[S] QUAD(N)-99
VOLUME II	
	DRAINAGE SHEETS
511-521	DRAINAGE AREA MAP
522-538	HYDRAULIC DATA SHEETS
539-560	UTILITY & DRAINAGE SHEETS NFBR
561-583	UTILITY & DRAINAGE SHEETS SFBR
584-593	UTILITY & DRAINAGE SHEETS SIDE STREETS
594-606	NBFR LATERAL PROFILES
607-618	SBFR LATERAL PROFILES
619-620	STORM DRAIN CROSSING CULVERT LAYOUTS
621-622	DRAINAGE DITCH ANALYSIS
623	PROPOSED OUTFALL TYPICAL SECTIONS
624-630	PROPOSED NORTH DRAINAGE DITCH PLAN & PROFILE
631-639	PROPOSED SOUTH DRAINAGE DITCH PLAN & PROFILE

LEGEND

[D] DENOTES DISTRICT STANDARD

[S] DENOTES STATE STANDARD

REVISED 9-26-03

Parsons Brinckerhoff Quade & Douglas Inc.

Texas Department of Transportation

© 2003 by TxDOT

INDEX OF SHEETS

VOLUME I

SHEET 1 OF 3 | 281INDEXSH1.DGN

DESIGNED: TT	FED. RD DIV. No.	STATE	FEDERAL AID PROJECT No.		HIGHWAY No.
CHECKED: DM	6	TEXAS			US 281
DRAWN: DBB	STATE DISTRICT	COUNTY	CONTROL No.	SECTION No.	JOB No.	SHEET No.
CHECKED: DM	PHARR	HIDALGO	0255	08	091	2

INDEX OF SHEETS

SHEET NO.	DESCRIPTION
VOLUME II (CONTINUED)	
	DRAINAGE SHEETS (CONTINUED)
640-647	CULVERT LAYOUT NORTH
648-654	IRRIGATION AERIAL CROSSING
655-664, 664A	IRRIGATION LINE MODIFICATIONS
665	OUTFALL DETAILS
666	TY "L1" DROP INLET DETAIL
667	10" THROUGH 36" STEEL PIPE BRIDGE DETAIL & CONCRETE SUPPORT COLLAR DETAIL
668	MISC. DETAILS FOR IRRIG. AND DRAINAGE STRUCTURE
	STANDARDS
669	[D] CONCRETE PIPE COLLAR
670	[D] INLET TY "A"
671	[D] INLET TY "C" (COMPLETE)
672	[D] INLET TY "CC"
673	[D] INLET TY "F"
674	[D] INLET TY "L1" & "L2" GRATE INLETS
675	[D] MANHOLE TY "M"
676	[D] TY "A" & TYPE" A1" MANHOLE (COMPLETE)
677	[D] INLET & MANHOLE CAPPING DETAIL
678	[D] SINGLE BOX CULVERTS PRECAST 7'-0" SPAN SCP-7
679	[D] SINGLE BOX CULVERTS PRECAST 5'-0" SPAN SCP-5
680	[D] SINGLE BOX CULVERTS PRECAST MISCELLANEOUS DETAILS
681	[D] INLET TY "F" (SPL)
682	[D] INLET TY "L2" GRATED DETAILS
683	[D] SAFETY END TREATMENT DETAILS
684	[S] PSET-RC
685	[S] PSET-RP
686	[S] PSET-RR
687	[S] PSET-SP
688	[S] PSET-SC
689-699	OMITTED
	TRAFFIC SIGNALS & ILLUMINATION
700-711	TRAFFIC SIGNAL DETAILS
	STANDARDS
712	[D] TRAFFIC SIGNAL CONSTRUCTION DETAILS
713	[D] TRAFFIC SIGNAL CONSTRUCTION DETAILS
714-715	[S] SMA-100 (1)-99 & (2)-96
716-718	[S] DMA-100 (1)-96, (2)-96 & (3)-96
719	[S] MA-C-96
720	[S] TS-CF
721	[S] MA-D-00
722	[S] TS-FD-99
723	[S] LUM-A-99
724	[S] CFA-99
725-728	[S] LMA(1)-01 THROUGH LMA(4)-01
729	OMITTED
730	[S] LD1-03
731-732	[S] SP-100(1)-96 - SP-100(2)-96
733	ELECTRICAL SERVICE DATA SHEET AND ILLUMINATION QUANTITIES
734-752	ILLUMINATION LAYOUTS
753-756, 756A-756B	[S] ED (1)-03 THROUGH ED (6)-03
757-757A-757B	[S] ED (7)-03 THROUGH ED (9)-03
758, 758A-758B	[S] ED (10)-03 THROUGH ED (12)-03
759-761, 761A	[S] RID (1) THROUGH (4)-98
762-770	[S] HMID(1)-03 THROUGH HMID(9)-03
771-772	[S] HMIP(1)-98 THROUGH HMIP(2)-98
773-774	[S] HMIF(1)-98 THROUGH HMIF(2)-98
775-782	ITS SYSTEM LAYOUT
783-784	SUREILLANCE LOOP DETECTOR INSTALLATION DETAILS
785	VARIABLE MESSAGE SIGNS TYPE 1 & 2 MOUNTING DETAILS
786	MISCELLANEOUS ROADWAY DETAILS FOR ITS
	SIGNING
787-796	SIGNING REMOVALS
797-806	SIGNING INSTALLATIONS
807-809	SIGNING DETAILS (INSTALLATIONS) LARGE SIGNS
810	SIGNING DETAILS (INSTALLATIONS) SMALL SIGNS
811-826	OVERHEAD SIGN DETAILS
827-829	SUMMARY OF SMALL SIGNS: SIGNS TO BE REMOVED ITEM 649
830-836, 836A	SUMMARY OF SMALL SIGNS: SIGNS TO BE INSTALLED ITEM 644
836B	SMALL ROADSIDE SIGNS: DESCRIPTIVE CODES
837-838	SUMMARY OF LARGE SIGNS: SIGNS TO BE REMOVED
839-843	SUMMARY OF LARGE SIGNS: NEW SIGNS
	STANDARDS
844	[S] IE (1)-95
845	[S] IE (4)-95
846	[S] IM (1)-95
847	[S] IM (2)-93
848	[S] M (1)-01
848A	[S] M (2)-01
849	[S] M (3)-01
850	[S] M (4)-01
851-854	[S] R (1)-(4)-01
855-857	[S] W (1)-(3)-95
858	[S] SMD(GEN)-02
859-861	[S] SMD(SLIP-1)-02 THROUGH SMD(SLIP-3)-02
862	OMITTED
863-864	[S] SMD (2-1)-(2-2)-98
865	[S] SMD (2-4)-95
866	[S] SMD (2-5)-95
867	[S] SMD (TY G)-97
867A	[S] SMD (TWT)
868	[S] WV&IZ-96
869	[S] COSS-SE
870	[S] COSS-Z1
871	[S] HCOSS-Z1
872	[S] COSSD
873	[S] COSSF
874	[S] COSS-FD
875	[S] OSB-SE
876	[S] OSB-Z1
877	[S] HOSB-Z1
878	[S] OSBT
	SIGNING AND PAVEMENT MARKINGS (CONTINUED)
879	[S] OSBC
880	OMITTED
881	[S] OSB-FD
882	[S] OSB-FD-SC
883	OMITTED
884	OMITTED
885	[S] SWW (1)
886	[S] SB (SWL-1)
	PAVEMENT MARKINGS
887-906	PAVEMENT MARKING DETAILS
907-908	OMITTED
909	PAVEMENT MARKING DETAILS
910-912	PAVEMENT MARKING DETAILS: TRENTON ROAD
913	OMITTED
914-916	PAVEMENT MARKING DETAILS: BUSINESS 281 CONNECTOR RD
917	PAVEMENT MARKING DETAILS: OWASSA ROAD
918-919	PAVEMENT MARKING DETAILS: NOLANA LOOP
920-921	PAVEMENT MARKING DETAILS: SIOUX ROAD
922	PAVEMENT MARKING DETAILS: TEXAS 495
	STANDARDS
923-924	[D] PAVEMENT MARKING DETAILS
925	[S] PM (1)-03
926-927	[S] PM (2)-(3)-00A
928	[S] PM (4)-03
928A	[S] PM (6)-01
929-932	[S] FPM (1)-(4)-00A
	ENVIRONMENTAL
933	EPIC
933A	STORMWATER POLLUTION PREVENTION PLAN
934-936	[S] EC (1)-(3)-93
	MISCELLANEOUS
937	BRICK PAVER LAYOUT: TRENTON ROAD
938	BRICK PAVER LAYOUT: OWASSA ROAD
939	BRICK PAVER LAYOUT: NOLANA LOOP
940	BRICK PAVER LAYOUT: SIOUX ROAD
941	[D] DISTRICT STANDARD FOR CONCRETE PAVER DETAILS
942	[D] PALM PLANTING & BRACING BY TREE SPADE

LEGEND

[D] DENOTES DISTRICT STANDARD

[S] DENOTES STATE STANDARD

Parsons Brinckerhoff Quade & Douglas Inc.

Texas Department of Transportation

© 2003 by TxDOT

INDEX OF SHEETS

VOLUME I

SHEET 2 OF 3 | 281INDEXSH2.DGN

DESIGNED: TT	FED. RD DIV. NO.	STATE	FEDERAL AID PROJECT NO.			HIGHWAY NO.	
CHECKED: DM	6	TEXAS				US 281	
DRAWN: DBB	STATE DISTRICT	COUNTY	CONTROL No.	SECTION No.	JOB No.	SHEET No.	
CHECKED: DM	PHARR	HIDALGO	0255	08	091	3	

NAME

03:11:46 PM

08/07/2003

T:\22322a\CADD\Sheets\General\281indexsh2.dgn

$NAME$

$TIME$

$DATE$

INDEX OF SHEETS

SHEET NO.	DESCRIPTION
VOLUME III	
	BRIDGE DETAILS
	TRENTON ROAD
943	TRENTON ROAD OVERPASS BRIDGE LAYOUT - NBML
944	TRENTON ROAD OVERPASS BRIDGE LAYOUT - SBML
945	TRENTON ROAD OVERPASS TYPICAL SECTION
946-947	TRENTON ROAD BRIDGE QUANTITY & BEARING SEAT ELEVATIONS
948	OMITTED
949-950	ABUTMENT DETAILS NB & SB
951-954	BENT DETAILS NB
955-956	SLAB DETAILS NB
957-960	BENT DETAILS SB
961-962	SLAB DETAILS SB
	BUSINESS 281 NB DIRECT CONNECT
963-969	BUS 281 NB DIRECT CONNECT BRIDGE LAYOUT
970	BUS 281 NB DIRECT CONNECT QUANTITY & BEARING SEAT ELEV.
971-972	ABUTMENT DETAILS
973, 973A, 974-983	BENT DETAILS
984-987	BEAM LAYOUT
988-991	SLAB DETAILS
992-997	CONTINUOUS PLATE GIRDER UNIT DETAILS
998-1001	SLAB DETAILS
1002-1003	BRIDGE DECK DRAIN DETAILS
	OWASSA ROAD
1004	OWASSA ROAD OVERPASS BRIDGE LAYOUT - NBML
1005	OWASSA ROAD OVERPASS BRIDGE LAYOUT - SBML
1006	OWASSA ROAD OVERPASS TYPICAL SECTION
1007-1008	OWASSA ROAD BRIDGE QUANTITY & BEARING SEAT ELEVATIONS
1009	OMITTED
1010-1011	ABUTMENT DETAILS NB
1012-1015	BENT DETAILS NB
1016	BEAM LAYOUTS NB
1017-1018	SLAB DETAILS NB
1019-1020	ABUTMENT DETAILS SB
1021-1024	BENT DETAILS SB
1025	BEAM LAYOUTS SB
1026-1027	SLAB DETAILS SB
	NOLANA LOOP
1028	NOLANA LOOP OVERPASS WIDENING BRIDGE LAYOUT - NBML
1029	NOLANA LOOP OVERPASS WIDENING BRIDGE LAYOUT - SBML
1030	NOLANA LOOP TYPICAL SECTIONS
1031	NOLANA LOOP CONSTRUCTION SEQUENCE
1032	NOLANA LOOP BRIDGE QUANTITY & BEARING SEAT ELEVATIONS
1033	OMITTED
1034-1035	ABUTMENT DETAILS
1036-1037	BENT DETAILS
1038-1039	SLAB DETAILS

SHEET NO.	DESCRIPTION
	BRIDGE DETAILS (CONTINUED)
	PHARR MCALLEN LATERAL
1040	PHARR/MCALLEN DRAIN DITCH BRIDGE WIDENING BRIDGE LAYOUT
1041	PHARR/MCALLEN DRAIN DITCH BRIDGE WIDENING TYPICAL SECTIONS
1042	PHARR/MCALLEN DRAIN DITCH BRIDGE WIDENING CONSTR. SEQ.
1043	PHARR/MCALLEN BRIDGE QUANTITY & ELEVATIONS
1044-1045	ABUTMENT DETAILS
1046	BENT DETAILS
1047	SLAB DETAILS
1048	PHARR/MCALLEN DRAIN DITCH BRIDGE WIDENING BRIDGE LAYOUT - NB
1049	PHARR/MCALLEN DRAIN DITCH BRIDGE WIDENING TYP. SECTIONS - NB
1050	PHARR/MCALLEN DRAIN DITCH BRIDGE WIDENING CONSTR. SEQ. - NB
1051	PHARR/MCALLEN BRIDGE LAYOUT WIDENING - SB ML & FR
1052	PHARR/MCALLEN DRAIN DITCH BRIDGE TYPICAL SECTIONS - SB
1053	PHARR/MCALLEN DRAIN DITCH BRIDGE WIDENING CONSTR. SEQ. - SB
1054	PHARR/MCALLEN DRAIN DITCH BRIDGE WIDENING QTY & ELEV. - SB
1055-1058	ABUTMENT DETAILS
1059-1062	BENT DETAILS
1063-1064	SLAB DETAILS
	SIOUX ROAD
1065	SIOUX ROAD OVERPASS WIDENING BRIDGE LAYOUT - NBML
1066	SIOUX ROAD OVERPASS WIDENING BRIDGE LAYOUT - SBML
1067	SIOUX ROAD TYPICAL SECTION
1068	SIOUX ROAD CONSTRUCTION OF SEQUENCE
1069	SIOUX ROAD BRIDGE QUANTITY & BEARING SEAT ELEVATIONS
1070	OMITTED
1071-1072	ABUTMENT DETAILS
1073-1074	BENT DETAILS
1075-1076	SLAB DETAILS
	STANDARDS
1077	[S] IBA (MOD)
1078	[S] IBB (MOD)
1079-1080	[S] IBMS (MOD)
1081	[S] IBNS (MOD)
1082	[S] IBTS (MOD)
1083	THICKENED SLAB END DETAILS FOR PRESTR I-BEAM SPANS
1084	THICKENED SLAB END DETAILS FOR STEEL PLATE GIRDER SPANS
1085	ARMOR JOINT (SPL) (WITH JOINT SEALANT)
1086-1087	[S] MEBR(S)
1088	[S] MEBR (C)-1

SHEET NO.	DESCRIPTION
	BRIDGE STANDARDS (CONTINUED)
1089-1091	[S] PCP (C)(MOD)
1092	[S] PMDF(S)
1093	[S] SBMS(MOD)
1094	[S] SEB(MOD)
1095-1096	[S] SPGD(MOD)
1097	[S] SEJ-P (WITHOUT OVERLAY)
1098	[S] FD (MOD)
1099	[S] CP (S)
1100	[S] BPA-1
1101	[S] BPA-2
1102	[S] ODSR
1103	[S] CRR
1104-1105	[S] SINGLE SLOPE TRAFFIC RAILING TYPE SSTR
1106	SSTR RETROFIT DETAILS FOR SSTR
	GENERAL ARCHITECTURAL BRIDGE DETAILS
1107	TYPICAL FORM LINER DETAILS FOR 3'X5' COLUMNS
1108	TYPICAL FORM LINER DETAILS FOR 4'X8' COLUMNS
1109	TYPICAL FORM LINER DETAILS FOR 4'X8' COLUMNS (OVER 22')
1110	TYPICAL FORM LINER DETAILS FRO BENT NO. 7

LEGEND

[D] DENOTES DISTRICT STANDARD

[S] DENOTES STATE STANDARD

Parsons Brinckerhoff Quade & Douglas Inc.

Texas Department of Transportation

© 2003 by TxDOT

INDEX OF SHEETS

VOLUME I

SHEET 3 OF 3				281INDEXSH3.DGN	
DESIGNED: TT	FED. RD DIV. NO.	STATE	FEDERAL AID PROJECT No.		HIGHWAY No.
CHECKED: DM	6	TEXAS			US 281
DRAWN: DBB	STATE DISTRICT	COUNTY	CONTROL No.	SECTION No.	JOB No.	SHEET No.
CHECKED: DM	PHARR	HIDALGO	0255	08	091	4

$FILE$

NAME
01:59:34 PM
06/23/2003

BEGIN INCIDENTAL CONSTRUCTION
NORTH BOUND FRONTAGE ROAD
STA 50613+00

WISCONSIN RD

BEGIN INCIDENTAL
CONSTRUCTION
NORTHBOUND AND
SOUTHBOUND
MAIN LANES
STA 620+00

BEGIN PROJECT
CSJ: 0255-08-091
STA 630+00
RM= 778.3

TRENTON RD

END CONSTRUCTION
TRENTON ROAD
STA 30+00.00

PROPOSED OUTFALL

PROP RAMP RN17

PROP RAMP RN15

PROP RAMP RN13

MATCH LINE STA 673+00

50615+00 50620+00 50625+00 50630+00 50635+00 50640+00 50645+00 50650+00 50655+00 50660+00 50665+00 50670+00
615+00 620+00 625+00 630+00 635+00 640+00 645+00 650+00 655+00 660+00 665+00 670+00
61615+00 61620+00 61625+00 61630+00 61635+00 61640+00 61645+00 61650+00 61655+00 61660+00 61665+00 61670+00

PROP RAMP RS18

PROP RAMP RS16

EXISTING UNDERPASS
STRUCTURE TO BE
REMOVED

PROP RAMP RS14

NORTH MAIN
DRAIN DITCH

H.C.I.D. #1 EASEMENT

BEGIN INCIDENTAL CONSTRUCTION
SOUTH BOUND FRONTAGE ROAD
STA 61614+00

EXISTING OUTFALL

BEGIN CONSTRUCTION
TRENTON ROAD
STA 10+34.00

MATCH LINE STA 673+00

PROP RAMP RN13

ALBERTA RD

EXISTING WATER EASEMENT

PROP RAMP RN11

EXISTING STRUCTURE
TO BE REMOVED

OWASSA RD

END CONSTRUCTION
OWASSA ROAD
STA 23+56.52

PROP RAMP RN09

MATCH LINE STA 733+00

50675+00 50680+00 50685+00 50690+00 50695+00 50700+00 50705+00 50710+00 50715+00 50720+00 50725+00 50730+00
675+00 680+00 685+00 690+00 695+00 700+00 705+00 710+00 715+00 720+00 725+00 730+00
61675+00 61680+00 61685+00 61690+00 61695+00 61700+00 61705+00 61710+00 61715+00 61720+00 61725+00 61730+00

PROP RAMP RS12

PROP RAMP RS10

BUS 281

EDINBURG CITY LIMITS

PHARR CITY LIMITS

OWASSA RD

BEGIN CONSTRUCTION
OWASSA ROAD
STA 12+50.00

BEGIN CONSTRUCTION
NB BUS. 281
STA 7+77.15

THE SEAL APPEARING ON THIS
DOCUMENT WAS AUTHORIZED
BY JAIME AGUILAR, P.E. 87606
ON 06/23/2003.

STATE OF TEXAS
JAIME AGUILAR
87606
REGISTERED
PROFESSIONAL ENGINEER

Parsons Brinckerhoff
Quade & Douglas Inc.

Texas Department of Transportation

© 2003 by TxDOT

PROJECT LAYOUT

US 281

BEGIN PROJECT TO
STA 733+00 "BL1"

PLAN 1"= 500' HORIZ

SHEET 1 OF 2 | 281LAY01.DGN

DESIGNED: PAF	FED. RD DIV. No.	STATE	FEDERAL AID PROJECT No.			HIGHWAY No.	
CHECKED: JP	6	TEXAS				US 281	
DRAWN: JA	STATE DISTRICT	COUNTY	CONTROL No.	SECTION No.	JOB No.	SHEET No.	
CHECKED: JDH	PHARR	HIDALGO	0255	08	091	5	

I:\22322a\CADD\Sheets\General\281lay01.dgn

NAME
02:00:05 PM
06/23/2003
I:\22322a\CADD\Sheets\General\281layout02.dgn

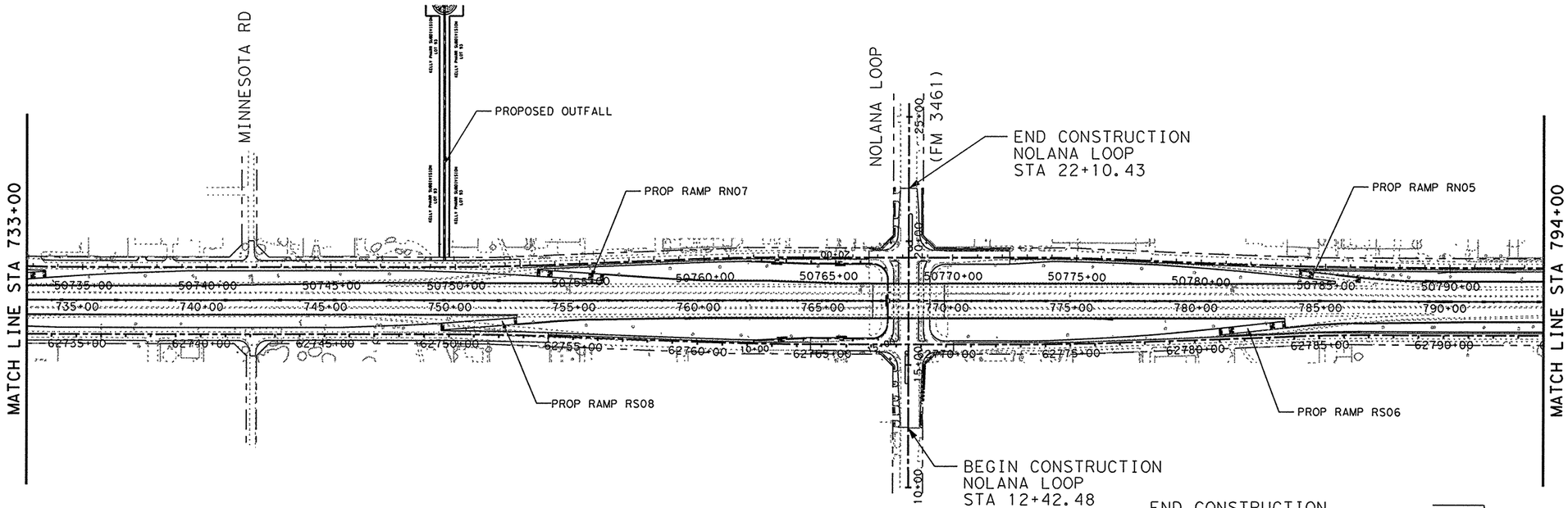

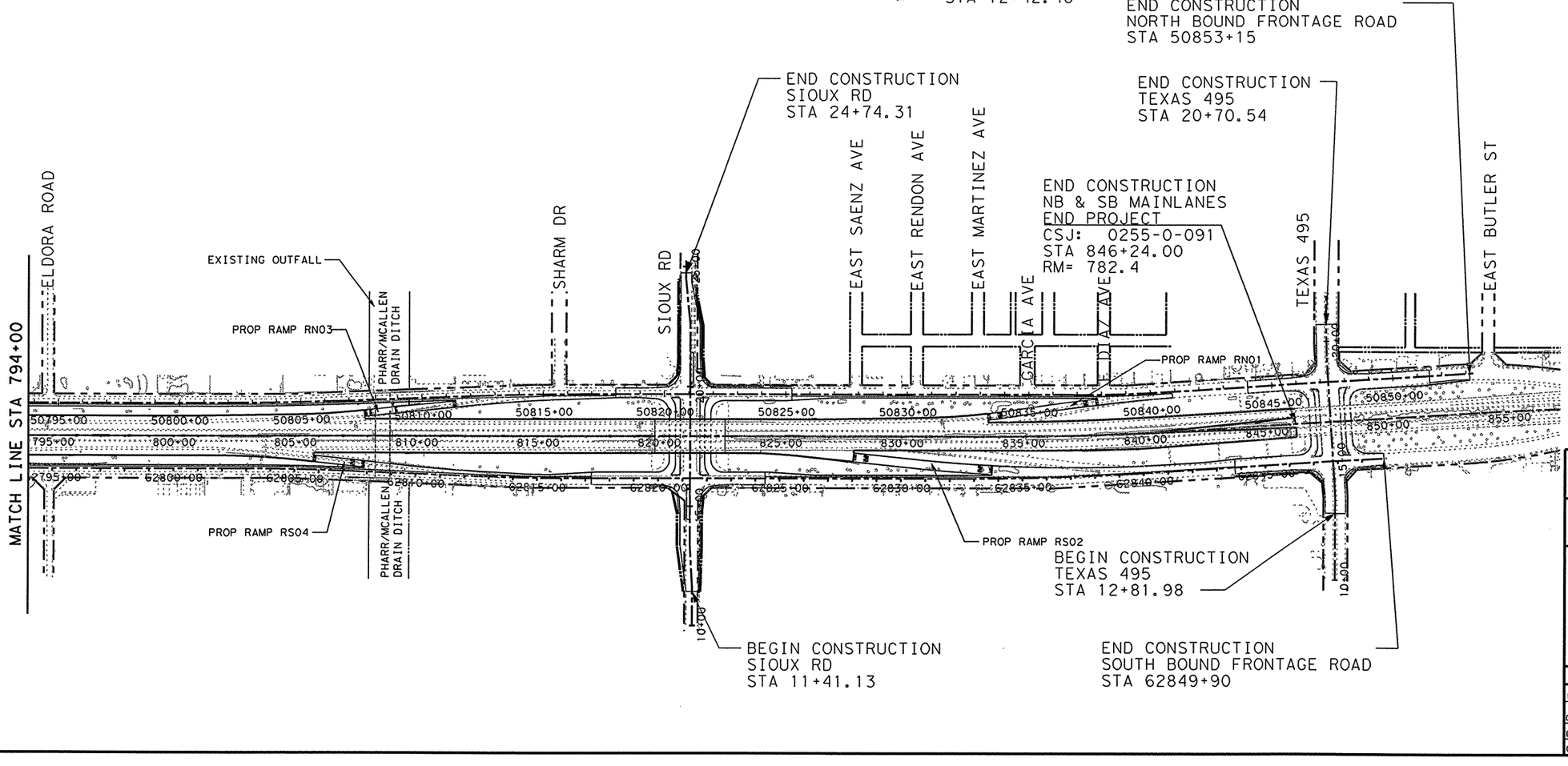

THE SEAL APPEARING ON THIS DOCUMENT WAS AUTHORIZED BY JAIME AGUILAR, P.E. 87606 ON 06/23/2003.

STATE OF TEXAS
JAIME AGUILAR
87606
REGISTERED PROFESSIONAL ENGINEER

Parsons Brinckerhoff Quade & Douglas Inc.

Texas Department of Transportation

© 2003 by TxDOT

PROJECT LAYOUT

US 281

STA 733+00 "BL1" TO
END OF PROJECT

PLAN 1"= 500' HORIZ

SHEET 2 OF 2 | 281LAY02.DGN

DESIGNED: PAF	FED. RD DIV. No.	STATE	FEDERAL AID PROJECT No.			HIGHWAY No.	
CHECKED: JP	6	TEXAS				US 281	
DRAWN: JA	STATE DISTRICT	COUNTY	CONTROL No.	SECTION No.	JOB No.	SHEET No.	
CHECKED: JDH	PHARR	HIDALGO	0255	08	091	6	

NAME
02:05:39 PM
06/23/2003
I:\22322o\CADD\Sheets\Roadway\Typ\281typ01.dgn

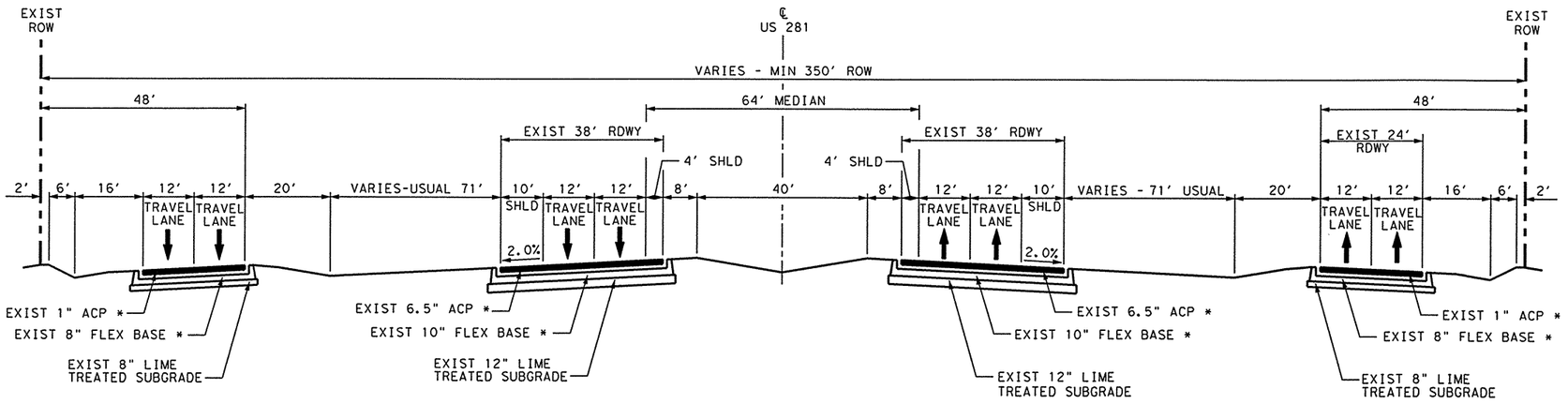

US 281
EXISTING TYPICAL SECTION

BEG PROJECT TO STA 700+00.00

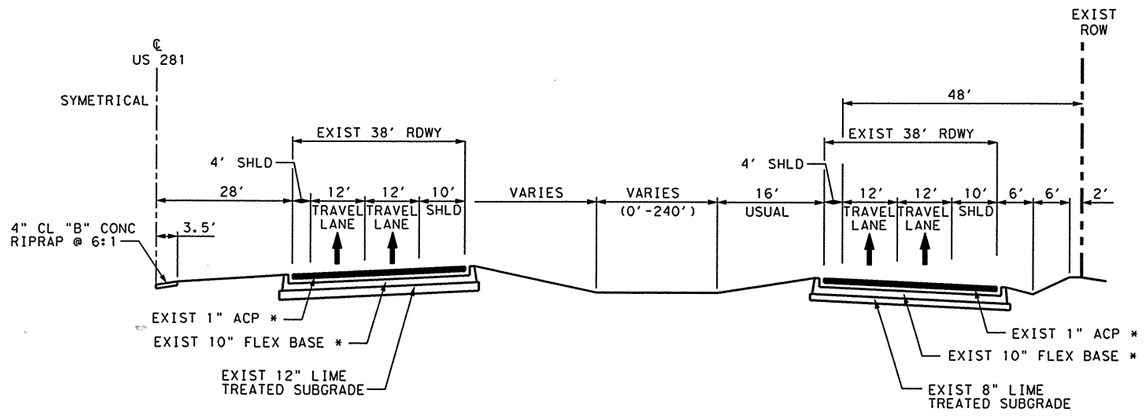

US 281
EXISTING TYPICAL SECTION

SUPERELEVATED HALF SECTION
STA 700+00 TO STA 718+00

NOTES:

EXISTING PAVEMENT TYPICAL SECTIONS BASED ON RECORD DRAWINGS FOR CSJ NUMBERS 255-08-44, 255-08-52, 255-08-63 AND FROM CORE SAMPLE DATA FURNISHED BY TxDOT ON 01/18/02.

* FOR SALVAGE MATERIAL QUANTITY SEE "REMOVAL ITEM DETAILS" SHEETS

THE SEAL APPEARING ON THIS DOCUMENT WAS AUTHORIZED BY PHAISARN CWATANAPHOL, P.E. 89252 ON 06/23/2003.

STATE OF TEXAS
PHAISARN CWATANAPHOL
89252
REGISTERED PROFESSIONAL ENGINEER

Parsons Brinckerhoff Quade & Douglas Inc.

Texas Department of Transportation

© 2003 by TxDOT

TYPICAL ROADBED AND GRADING SECTION

EXISTING US 281

SCALE: NTS

SHEET 1 OF 15				281TYP01.DGN			
DESIGNED: PAF	FED. RD DIV. No.	STATE	FEDERAL AID PROJECT No.			HIGHWAY No.	
CHECKED: JP	6	TEXAS				US 281	
DRAWN:	STATE DISTRICT	COUNTY	CONTROL No.	SECTION No.	JOB No.	SHEET No.	
CHECKED: JDH	PHARR	HIDALGO	0255	08	091	7	

NAME
02:05:42 PM
06/23/2003
i:\22322o\cadd\sheets\roadway\typ\281typ02.dgn

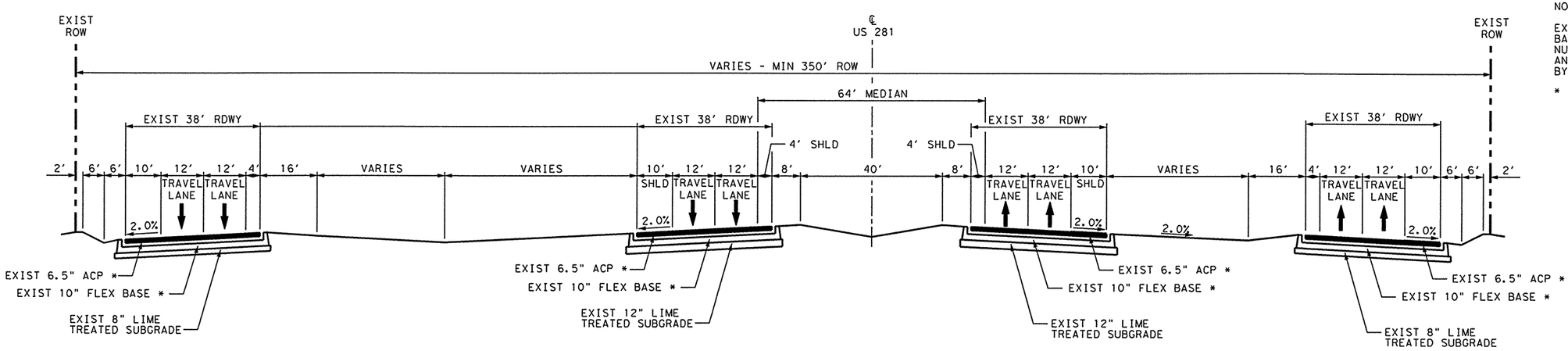

NOTES:

EXISTING PAVEMENT TYPICAL SECTIONS BASED ON RECORD DRAWINGS FOR CSJ NUMBERS 255-08-44, 255-08-52, 255-08-63 AND FROM CORE SAMPLE DATA FURNISHED BY TxDOT ON 01/18/02.

* FOR SALVAGE MATERIAL QUANTITY SEE "REMOVAL ITEM DETAILS" SHEETS

US 281
EXISTING TYPICAL SECTION
STA 718+00 TO STA 751+50

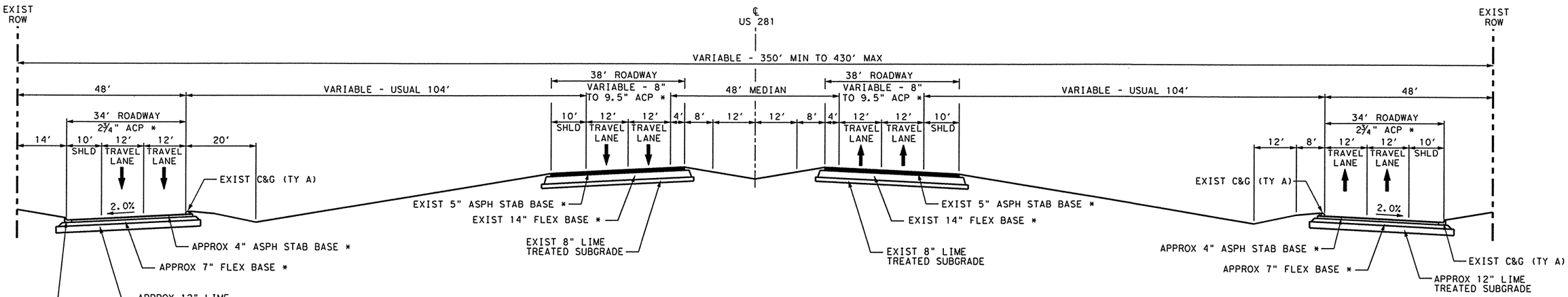

US 281
EXISTING TYPICAL SECTION
STA 751+50 TO END OF PROJECT

THE SEAL APPEARING ON THIS DOCUMENT WAS AUTHORIZED BY PHAISARN CWATANAPHOL, P.E. 89252 ON 06/23/2003.

STATE OF TEXAS
PHAISARN CWATANAPHOL
89252
REGISTERED PROFESSIONAL ENGINEER

Parsons Brinckerhoff Quade & Douglas Inc.

Texas Department of Transportation

© 2003 by TxDOT

TYPICAL ROADBED AND GRADING SECTION

EXISTING US 281

SCALE: NTS

SHEET 2 OF 15 | 281TYP02.DGN

DESIGNED: PAF	FED. RD DIV. NO.	STATE	FEDERAL AID PROJECT No.			HIGHWAY No.	
CHECKED: JP	6	TEXAS				US 281	
DRAWN:	STATE DISTRICT	COUNTY	CONTROL No.	SECTION No.	JOB No.	SHEET No.	
CHECKED: JDH	PHARR	HIDALGO	0255	08	091	8	

NAME
02:05:43 PM
06/23/2003

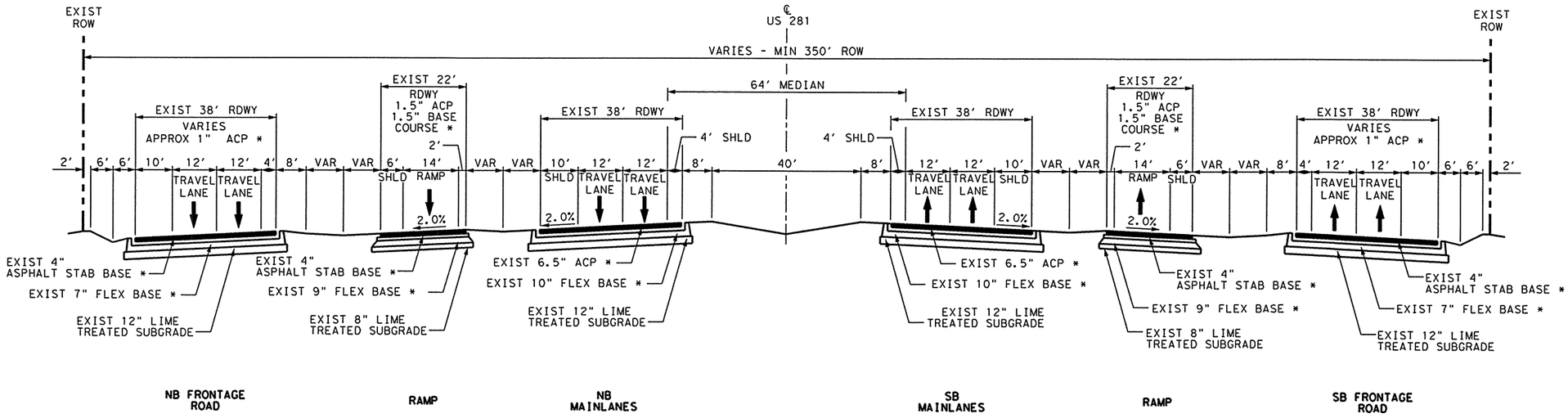

US 281
EXISTING TYPICAL SECTION WITH RAMPS

USED THROUGHOUT PROJECT

NOTES:

EXISTING PAVEMENT TYPICAL SECTIONS BASED ON RECORD DRAWINGS FOR CSJ NUMBERS 255-08-44, 255-08-52, 255-08-63 AND FROM CORE SAMPLE DATA FURNISHED BY TxDOT ON 01/18/02.

* FOR SALVAGE MATERIAL QUANTITY SEE "REMOVAL ITEM DETAILS" SHEETS

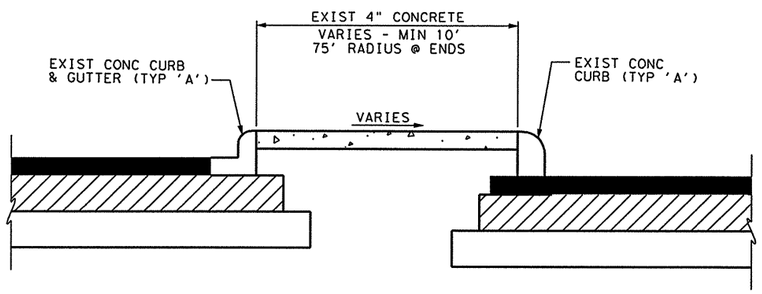

US 281
DETAIL OF EXISTING CURBED RAMP ENDS

THE SEAL APPEARING ON THIS DOCUMENT WAS AUTHORIZED BY PHAISARN CWATANAPHOL, P.E. 89252 ON 06/23/2003.

STATE OF TEXAS
PHAISARN CWATANAPHOL
89252
REGISTERED
PROFESSIONAL ENGINEER

Parsons Brinckerhoff Quade & Douglas Inc.

Texas Department of Transportation

© 2003 by TxDOT

TYPICAL ROADBED AND GRADING SECTION

EXISTING US 281

SCALE: NTS

SHEET 3 OF 15				281TYP03.DGN			
DESIGNED: PAF	FED. RD DIV. NO.	STATE	FEDERAL AID PROJECT No.			HIGHWAY No.	
CHECKED: JP	6	TEXAS				US 281	
DRAWN:	STATE DISTRICT	COUNTY	CONTROL No.	SECTION No.	JOB No.	SHEET No.	
CHECKED: JDH	PHARR	HIDALGO	0255	08	091	9	

i:\22322a\cadd\sheets\roadway\typ\281typ03.dgn

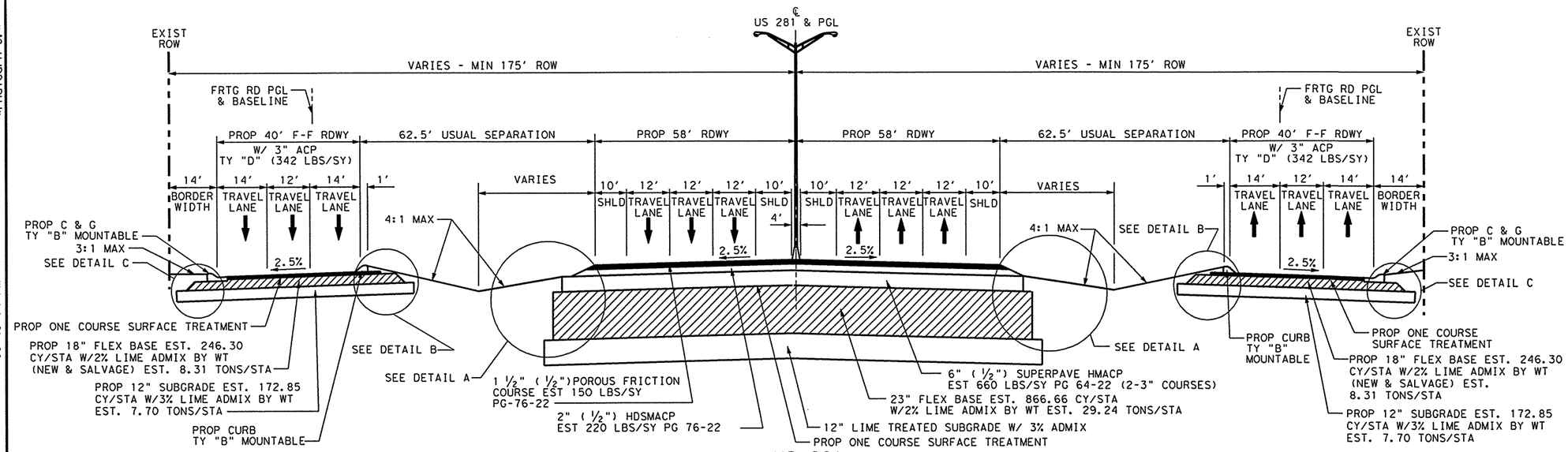

US 281
PROPOSED TYPICAL SECTION

NB MAINLANES

STA 630+00.00 TO 638+40.00 (TRANS 3 TO 2 LANES)
STA 638+40.00 TO 643+57.48
STA 643+57.48 TO 648+44.30 (TRANS 58' TO 70')
STA 671+67.49 TO 694+81.40
STA 694+81.40 TO 703+39.44 (TRANS 58' TO 70')
STA 730+58.16 TO 738+60.00
STA 738+60.00 TO 747+00.00 (TRANS 58' TO 70')
STA 833+56.44 TO 840+00.00 (TRANSITION)

SB MAINLANES

STA 630+00.00 TO 638+41.88 (TRANS 2 TO 3 LANES)
STA 638+41.88 TO 639+43.77
STA 639+43.77 TO 647+01.01 (TRANS 58' TO 70')
STA 670+86.65 TO 695+37.71
STA 695+37.71 TO 702+73.89 (TRANS 58' TO 70')
STA 727+52.95 TO 752+73.05
STA 752+73.05 TO 760+18.49 (TRANS 58' TO 70')
STA 828+03.63 TO 840+00.00 (TRANSITION)

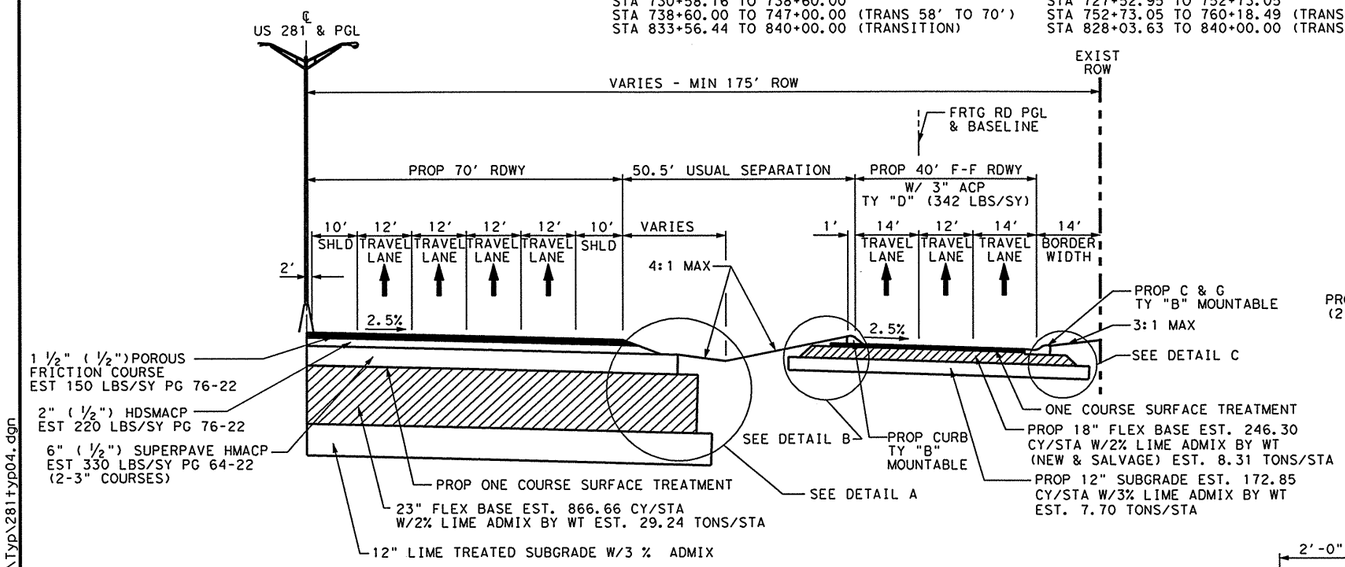

US 281
PROPOSED TYPICAL SECTION

NB MAINLANES

STA 664+08.38 TO 671+67.49 (TRANS 70' TO 58')
STA 703+39.44 TO 714+47.60
* STA 716+82.10 TO 722+99.08
* STA 722+99.08 TO 730+58.16 (TRANS 70' TO 58')
STA 747+00.00 TO 756+20.42
STA 756+20.42 TO 761+06.55 (TRANS 70' TO 80')
STA 765+99.45 TO 767+06.21
STA 769+91.41 TO 785+63.13
STA 785+63.13 TO 789+67.97 (TRANS 70' TO 82')
STA 807+89.70 TO 808+32.60
STA 808+92.60 TO 819+85.39
STA 822+70.61 TO 826+35.54
STA 826+35.54 TO 833+56.44 (TRANS 70' TO 58')

SB MAINLANES

STA 666+50.00 TO 670+86.65 (TRANS 70' TO 58')
STA 702+73.89 TO 714+47.60
STA 720+19.05 TO 727+52.95 (TRANS 70' TO 58')
STA 760+18.49 TO 767+06.21
STA 769+91.41 TO 783+60.73
STA 783+60.73 TO 790+81.16 (TRANS 70' TO 82')
STA 805+77.69 TO 808+32.60
STA 808+92.60 TO 819+85.39
STA 822+70.61 TO 824+06.35
STA 824+06.35 TO 828+03.63 (TRANS 70' TO 58')

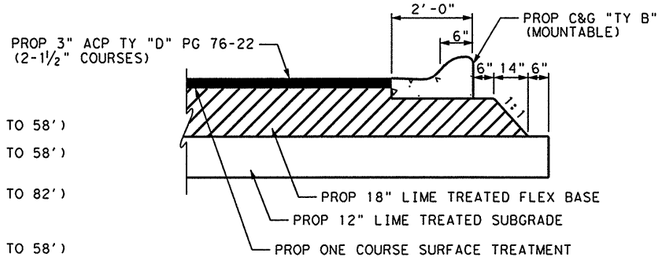

DETAIL C

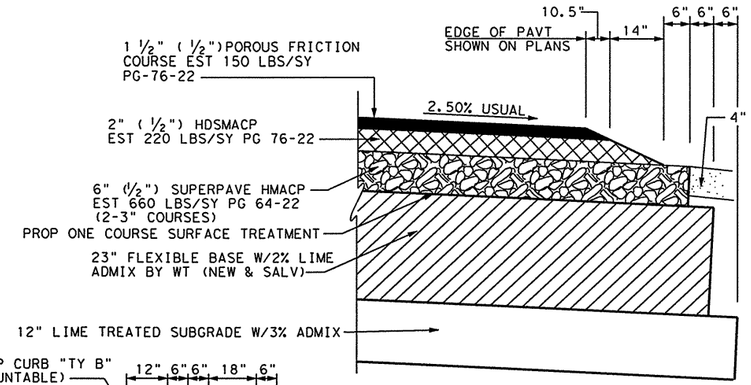

DETAIL A

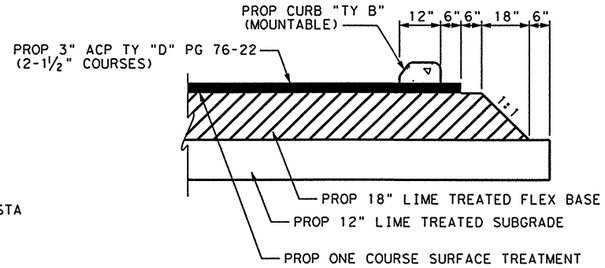

DETAIL B

GENERAL NOTES:

WHERE REQUIRED BY FIXTURES OR UNUSUAL CONDITIONS, THE GOVERNING SLOPES MAY BE VARIED AS DIRECTED BY THE ENGINEER.

THE TOP 4" OF FLEX BASE SHALL BE NEW WHERE SALVAGE IS PART OF FLEX BASE.

THE 2% LIME SHOWN ON TYPICAL SECTIONS FOR ITEM 247 "FLEX BASE" IS SEPARATE FROM LIME WHICH MAY BE REQUIRED TO MEET P.I. AND TRIAXIAL REQUIREMENTS ADDED AT CONTRACTOR'S EXPENSE.

PGL - DENOTES PROFILE GRADE LINE

THE COMPLETE BASE SHALL BE ROLLED BEFORE THE EARTH SHOULDER IS SHAPED AND FINAL COMPACTION SHALL BE DONE OVER BASE AND EDGE OF SHOULDER. ALL GRADING SHALL BE WITHIN THE ROW LIMITS.

A STATION IS EQUIVALENT TO 100 FT.

114 LBS/YD2 IS EQUIVALENT TO 1" DEPTH.

* SEE SUPERELEVATION SECTION

Δ MATCH EXIST CROSS SLOPE

HDSMACP = HEAVY DUTY STONE MATRIX ASPHALT CONCRETE PAVEMENT

SUPERPAVE HMACP = SUPERPAVE HOT MIX ASPHALT CONCRETE PAVEMENT

THE SEAL APPEARING ON THIS DOCUMENT WAS AUTHORIZED BY PHAISARN CWATANAPHOL, P.E. 89252 ON 07/01/2003.

STATE OF TEXAS
PHAISARN CWATANAPHOL
89252
REGISTERED PROFESSIONAL ENGINEER

Parsons Brinckerhoff Quade & Douglas Inc.

Texas Department of Transportation

© 2003 by TxDOT

TYPICAL ROADBED AND GRADING SECTION

PROPOSED US 281

SCALE: NTS

SHEET 4 OF 15				281TYP04.DGN			
DESIGNED: DM	FED. RD DIV. No.	STATE	FEDERAL AID PROJECT No.			HIGHWAY No.	
CHECKED: JP	6	TEXAS				US 281	
DRAWN: RLJ	STATE DISTRICT	COUNTY	CONTROL No.	SECTION No.	JOB No.	SHEET No.	
CHECKED: DM	PHARR	HIDALGO	0255	08	091	10	

Phaisarn C.
05:43:14 PM
07/01/2003
I:\22322a\CADD\Sheets\Roadway\Typ\281typ04.dgn

Phaisorn C.
05:40:46 PM
07/01/2003

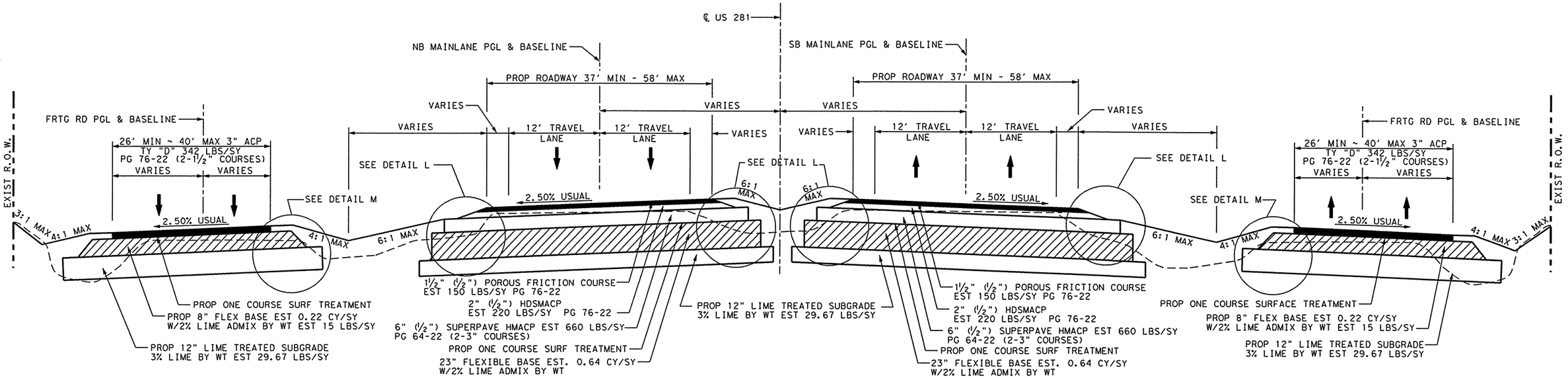

PROPOSED TYPICAL PAVEMENT : INTERIM

MAINLANES	STA 620+00.00 TO STA 630+00.00 STA 840+00.00 TO STA 846+24.00
NB FRTG	STA 50613+00.00 TO STA 50619+00.00
SB FRTG	STA 61614+00.00 TO STA 61619+00.00

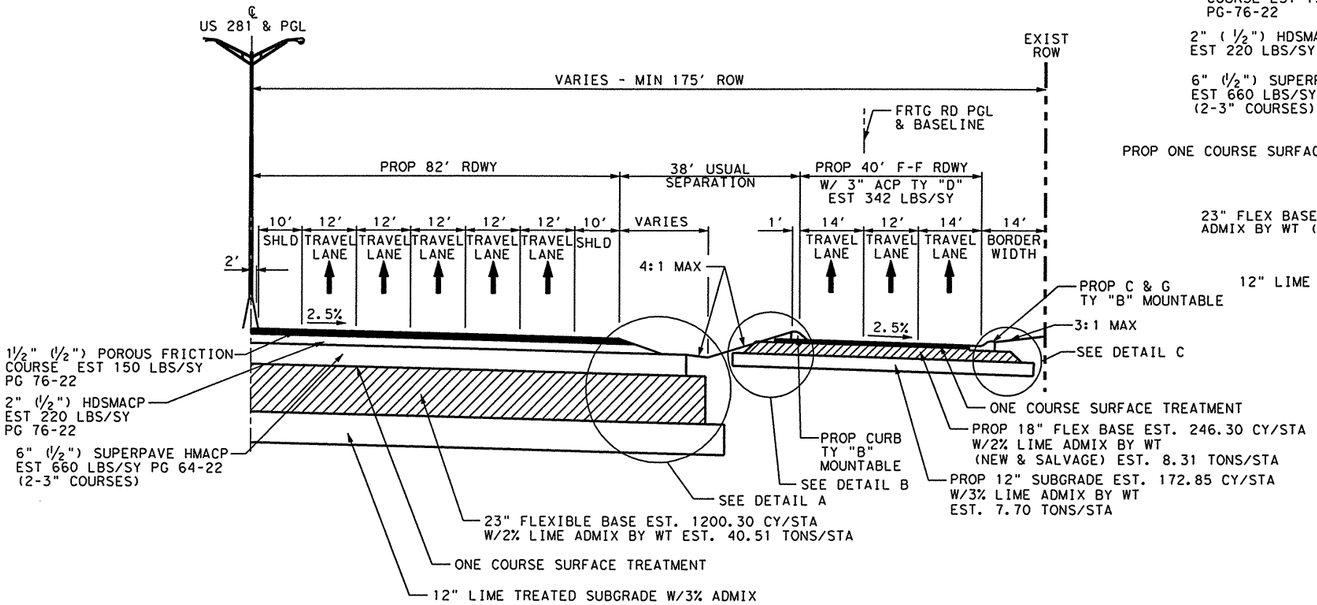

US 281
PROPOSED TYPICAL SECTION

NB MAINLANES

STA 761+06.55 TO 762+99.38 (8' OUTSIDE SHD)
STA 762+99.38 TO 765+99.45 (TRANS 80' TO 70')
STA 789+67.97 TO 800+61.45
STA 800+61.45 TO 807+89.70 (TRANS 82' TO 70')

SB MAINLANES

STA 790+81.16 TO 801+74.14
STA 801+74.14 TO 805+77.69

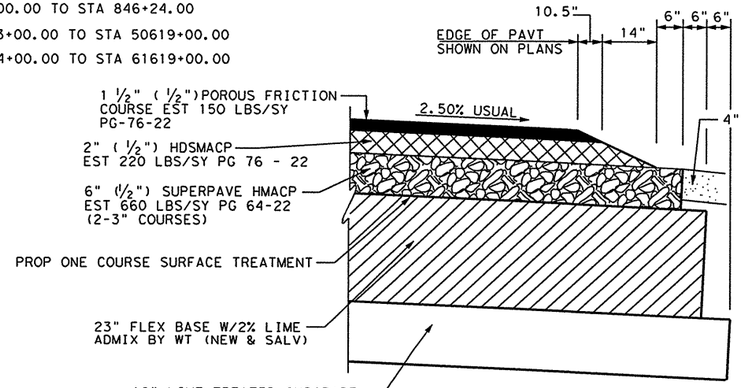

DETAIL A

GENERAL NOTES:

WHERE REQUIRED BY FIXTURES OR UNUSUAL CONDITIONS, THE GOVERNING SLOPES MAY BE VARIED AS DIRECTED BY THE ENGINEER.

THE TOP 4" OF FLEX BASE SHALL BE NEW WHERE SALVAGE IS PART OF FLEX BASE.

THE 2% LIME SHOWN ON TYPICAL SECTIONS FOR ITEM 247 "FLEX BASE" IS SEPARATE FROM LIME WHICH MAY BE REQUIRED TO MEET P.I. AND TRIAXIAL REQUIREMENTS ADDED AT CONTRACTOR'S EXPENSE.

PGL - DENOTES PROFILE GRADE LINE

THE COMPLETE BASE SHALL BE ROLLED BEFORE THE EARTH SHOULDER IS SHAPED AND FINAL COMPACTION SHALL BE DONE OVER BASE AND EDGE OF SHOULDER. ALL GRADING SHALL BE WITHIN THE ROW LIMITS.

A STATION IS EQUIVALENT TO 100 FT.

114 LBS/YD2 IS EQUIVALENT TO 1" DEPTH.

* SEE SUPERELEVATION SECTION

△ MATCH EXIST CROSS SLOPE

HDSMACP = HEAVY DUTY STONE MATRIX ASPHALT CONCRETE PAVEMENT

SUPERPAVE HMACP = SUPERPAVE HOT MIX ASPHALT CONCRETE PAVEMENT

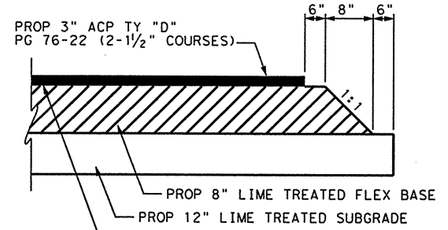

DETAIL M

THE SEAL APPEARING ON THIS DOCUMENT WAS AUTHORIZED BY PHAISARN CWATANAPHOL, P.E. 89252 ON 07/01/2003.

STATE OF TEXAS
PHAISARN CWATANAPHOL
89252
REGISTERED
PROFESSIONAL ENGINEER

Parsons Brinckerhoff Quade & Douglas Inc.

Texas Department of Transportation

© 2003 by TxDOT

TYPICAL ROADBED AND GRADING SECTION

PROPOSED US 281

SCALE: NTS

SHEET 5 OF 15				281TYP16.DGN			
DESIGNED: DM	FED. RD DIV. No.	STATE	FEDERAL AID PROJECT No.				HIGHWAY No.
CHECKED: JP	6	TEXAS					US 281
DRAWN: RLJ	STATE DISTRICT	COUNTY	CONTROL No.	SECTION No.	JOB No.	SHEET No.	
CHECKED: DM	PHARR	HIDALGO	0255	08	091	11	

i:\22322a\cadd\sheets\roadway\typ\281typ16.dgn

Phaisarn C.
05:40:48 PM
07/01/2003

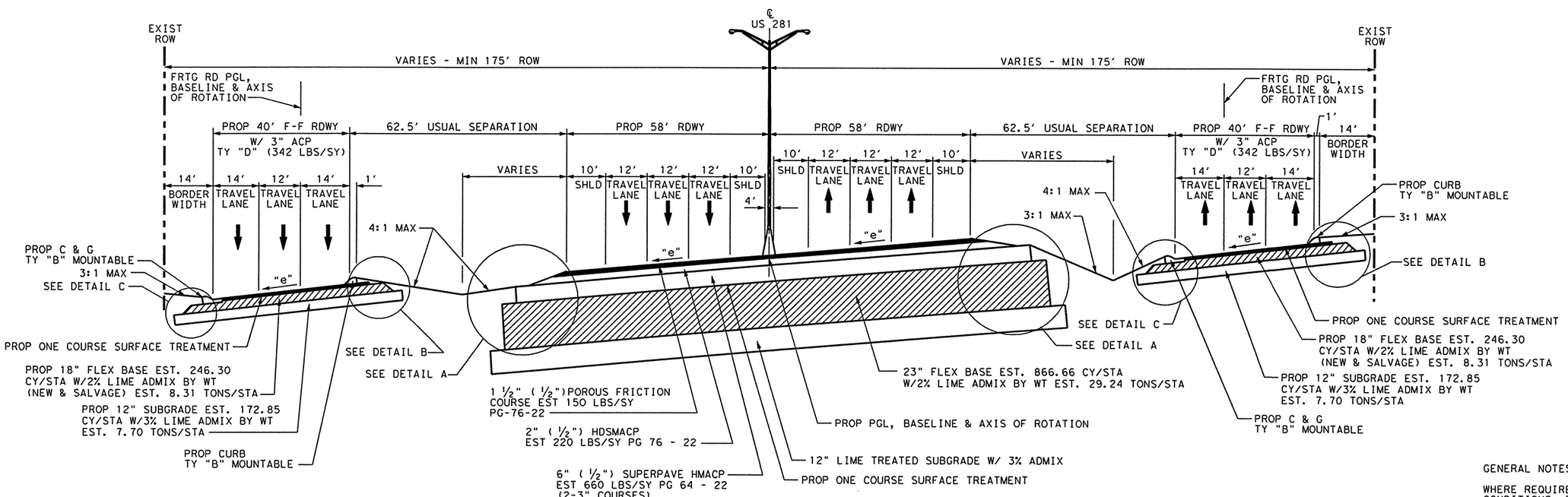

US 281
SUPERELEVATED SECTION

STATIONING SHOWN FOR SUPERELEVATION RATES ONLY

STA 630+00.00 TO 694+79.00 ("e"= .50%(NC))
STA 694+79.00 TO 705+44.00 (TRANSITION FROM "e"=2.50%(NC) TO "e"=4.60%(RC))
STA 705+44.00 TO 718+63.00 ("e"=4.60%(RC))
STA 718+63.00 TO 729+28.00 (TRANS FROM "e"=4.60%(RC) TO "e"=2.50%(NC))
STA 729+28.00 TO 840+00.00 ("e"=2.50%(NC))

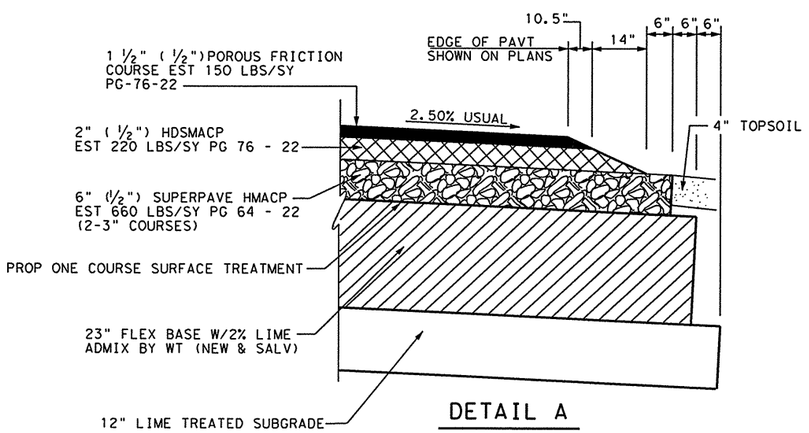

DETAIL A

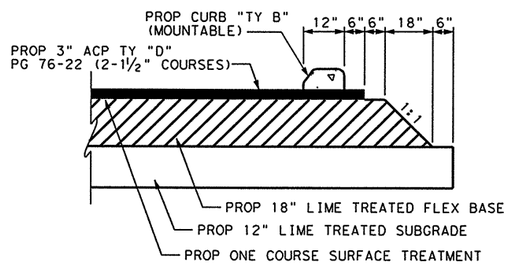

DETAIL B

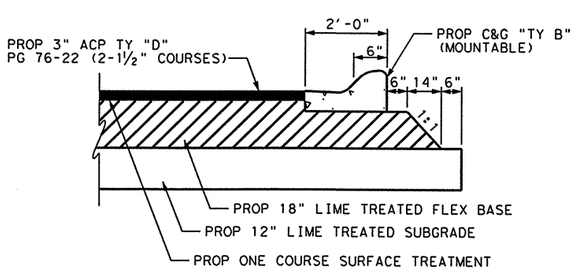

DETAIL C

GENERAL NOTES:

WHERE REQUIRED BY FIXTURES OR UNUSUAL CONDITIONS, THE GOVERNING SLOPES MAY BE VARIED AS DIRECTED BY THE ENGINEER.

THE TOP 4" OF FLEX BASE SHALL BE NEW WHERE SALVAGE IS PART OF FLEX BASE.

THE 2% LIME SHOWN ON TYPICAL SECTIONS FOR ITEM 247 "FLEX BASE" IS SEPARATE FROM LIME WHICH MAY BE REQUIRED TO MEET P.I. AND TRIAXIAL REQUIREMENTS ADDED AT CONTRACTOR'S EXPENSE.

PGL - DENOTES PROFILE GRADE LINE

THE COMPLETE BASE SHALL BE ROLLED BEFORE THE EARTH SHOULDER IS SHAPED AND FINAL COMPACTION SHALL BE DONE OVER BASE AND EDGE OF SHOULDER. ALL GRADING SHALL BE WITHIN THE ROW LIMITS.

A STATION IS EQUIVALENT TO 100 FT.

114 LBS/YD2 IS EQUIVALENT TO 1" DEPTH.

* SEE SUPERELEVATION SECTION

Δ MATCH EXIST CROSS SLOPE

HDSMACP = HEAVY DUTY STONE MATRIX ASPHALT CONCRETE PAVEMENT

SUPERPAVE HMACP = SUPERPAVE HOT MIX ASPHALT CONCRETE PAVEMENT

THE SEAL APPEARING ON THIS DOCUMENT WAS AUTHORIZED BY PHAISARN CWATANAPHOL, P.E. 89252 ON 07/01/2003.

STATE OF TEXAS
PHAISARN CWATANAPHOL
89252
REGISTERED PROFESSIONAL ENGINEER

Parsons Brinckerhoff Quade & Douglas Inc.

Texas Department of Transportation

© 2003 by TxDOT

TYPICAL ROADBED AND GRADING SECTION

PROPOSED US 281

SCALE: NTS

SHEET 6 OF 15					281TYP05.DGN	
DESIGNED: DM	FED. RD DIV. NO.	STATE	FEDERAL AID PROJECT NO.		HIGHWAY NO.	
CHECKED: JP	6	TEXAS			US 281	
DRAWN:	STATE DISTRICT	COUNTY	CONTROL NO.	SECTION NO.	JOB NO.	SHEET NO.
CHECKED: DM	PHARR	HIDALGO	0255	08	091	12

i:\22322o\cadd\sheets\roadway\typ\281typ05.dgn

Phaisarn C.
05:40:49 PM
07/01/2003
i:\22322a\cadd\sheets\roadway\typ\281typ06.dgn

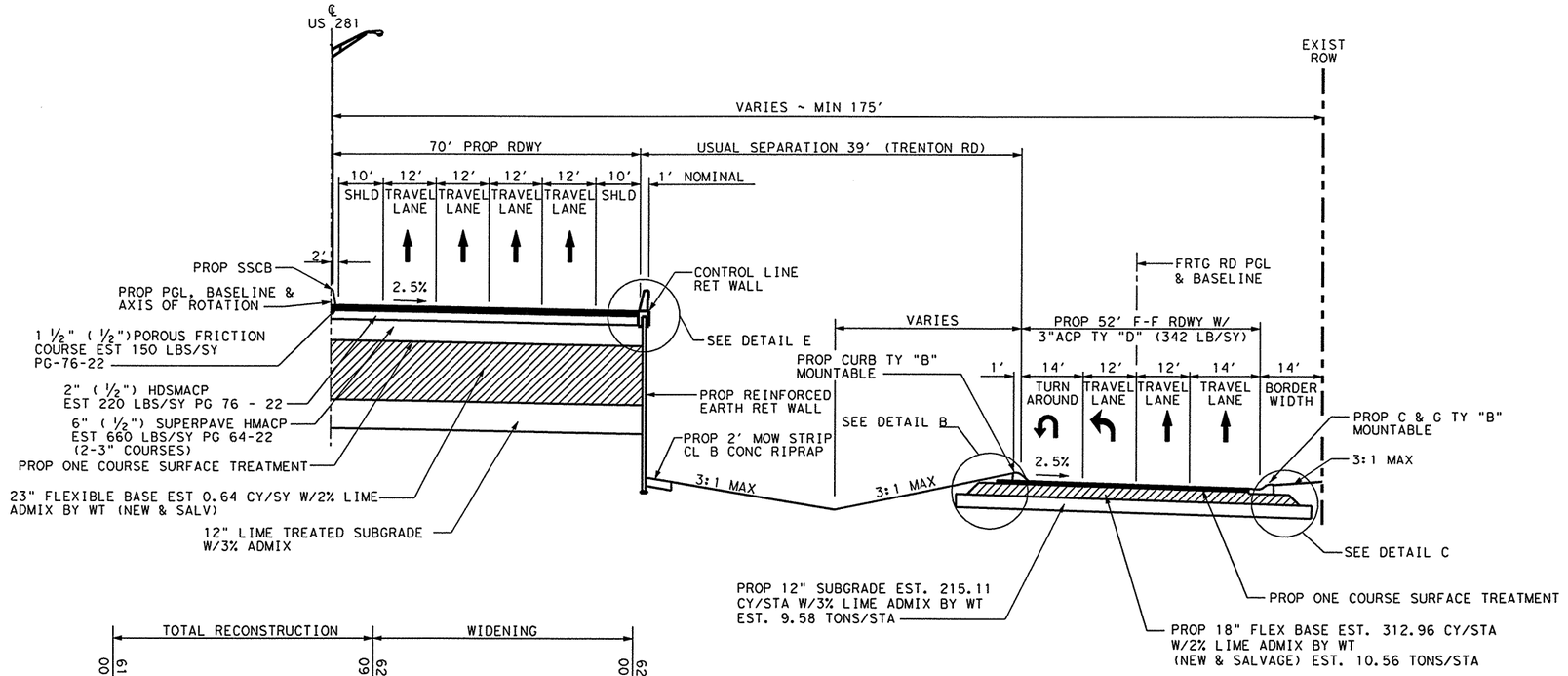

US 281
PROPOSED TYPICAL SECTION WITH RETAINING WALL

NB MAINLANES

*STA 648+44.30 TO 653+98+.37
*STA 656+62.37 TO 664+08.38

SB MAINLANES

STA 647+01.01 TO 653+98.37
STA 656+62.37 TO 666+50.00
*STA 716+82.10 TO 720+19.05

BRIDGE

STA 653+98.37 TO 656+62.37
STA 714+47.60 TO 716+82.10
STA 767+06.21 TO 769+91.41
STA 819+85.39 TO 822+70.61

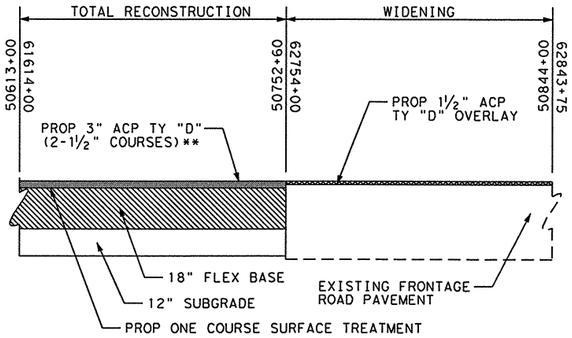

FRONTAGE ROAD PAVEMENT PROFILE

NB FRTG STA 50613+00 TO 50844+00

SB FRTG STA 61614+00 TO 62843+75

SEE NB FRONTAGE ROAD AND SB FRONTAGE ROAD P&P'S FOR MORE DETAILS.
** PAID UNDER ITEM 1½" ACP TY "D"

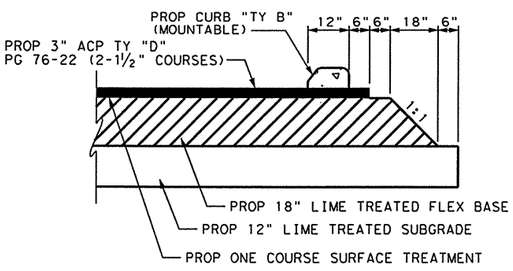

DETAIL B

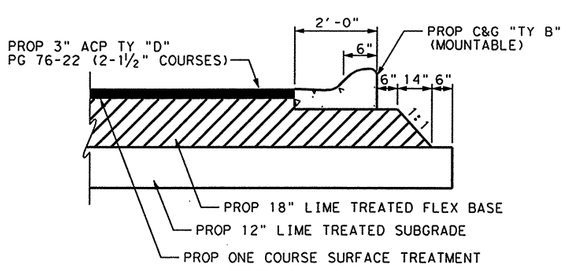

DETAIL C

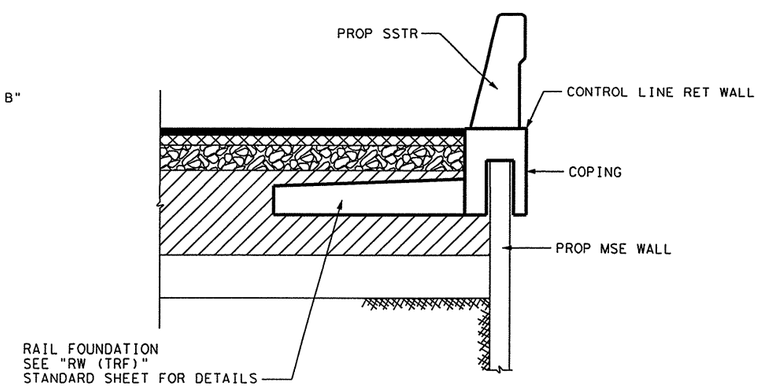

DETAIL E

GENERAL NOTES:

WHERE REQUIRED BY FIXTURES OR UNUSUAL CONDITIONS, THE GOVERNING SLOPES MAY BE VARIED AS DIRECTED BY THE ENGINEER.

THE TOP 4" OF FLEX BASE SHALL BE NEW WHERE SALVAGE IS PART OF FLEX BASE.

THE 2% LIME SHOWN ON TYPICAL SECTIONS FOR ITEM 247 "FLEX BASE" IS SEPARATE FROM LIME WHICH MAY BE REQUIRED TO MEET P.I. AND TRIAXIAL REQUIREMENTS ADDED AT CONTRACTOR'S EXPENSE.

PGL - DENOTES PROFILE GRADE LINE

THE COMPLETE BASE SHALL BE ROLLED BEFORE THE EARTH SHOULDER IS SHAPED AND FINAL COMPACTION SHALL BE DONE OVER BASE AND EDGE OF SHOULDER. ALL GRADING SHALL BE WITHIN THE ROW LIMITS.

A STATION IS EQUIVALENT TO 100 FT.

114 LBS/YD2 IS EQUIVALENT TO 1" DEPTH.

* SEE SUPERELEVATION SECTION

△ MATCH EXIST CROSS SLOPE

HDSMACP = HEAVY DUTY STONE MATRIX ASPHALT CONCRETE PAVEMENT

SUPERPAVE HMACP = SUPERPAVE HOT MIX ASPHALT CONCRETE PAVEMENT

THE SEAL APPEARING ON THIS DOCUMENT WAS AUTHORIZED BY PHAISARN CWATANAPHOL, P.E. 89252 ON 07/01/2003.

STATE OF TEXAS
PHAISARN CWATANAPHOL
89252
REGISTERED PROFESSIONAL ENGINEER

Parsons Brinckerhoff Quade & Douglas Inc.

Texas Department of Transportation

© 2003 by TxDOT

TYPICAL ROADBED AND GRADING SECTION

PROPOSED US 281

SCALE: NTS

SHEET 7 OF 15				281TYP06.DGN			
DESIGNED: DM	FED. RD DIV. No.	STATE	FEDERAL AID PROJECT No.				HIGHWAY No.
CHECKED: JP	6	TEXAS					US 281
DRAWN: RLJ	STATE DISTRICT	COUNTY	CONTROL No.	SECTION No.	JOB No.	SHEET No.	
CHECKED: DM	PHARR	HIDALGO	0255	08	091	13	

Phaisarn C.
05:40:51 PM
07/01/2003
i:\22322a\cadd\sheets\roadway\typ\281typ08.dgn

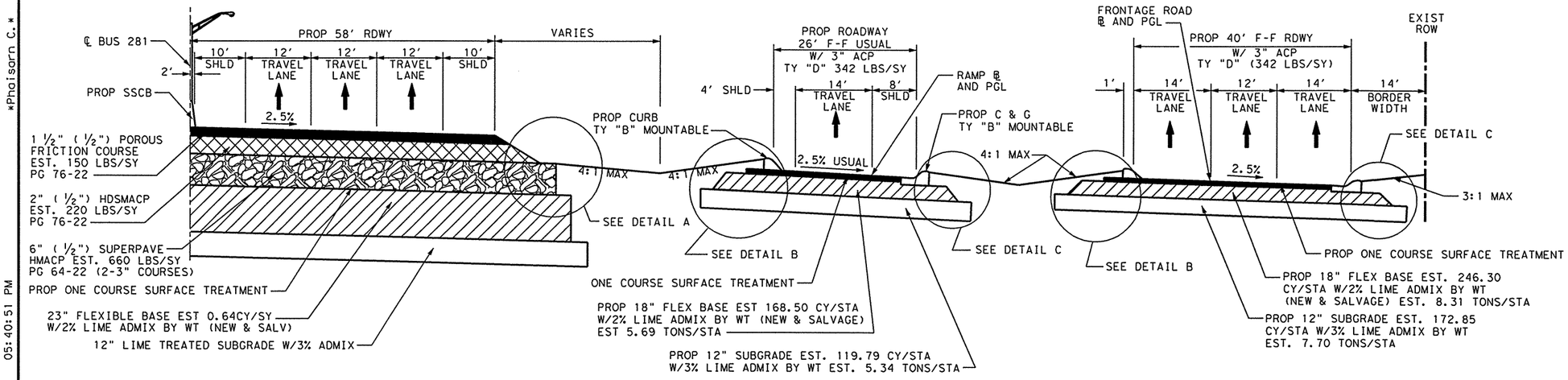

US 281 RAMPS
PROPOSED TYPICAL SECTION

GENERAL NOTES:

WHERE REQUIRED BY FIXTURES OR UNUSUAL CONDITIONS, THE GOVERNING SLOPES MAY BE VARIED AS DIRECTED BY THE ENGINEER.

THE TOP 4" OF FLEX BASE SHALL BE NEW WHERE SALVAGE IS PART OF FLEX BASE.

THE 2% LIME SHOWN ON TYPICAL SECTIONS FOR ITEM 247 "FLEX BASE" IS SEPARATE FROM LIME WHICH MAY BE REQUIRED TO MEET P.I. AND TRIAXIAL REQUIREMENTS ADDED AT CONTRACTOR'S EXPENSE.

PGL - DENOTES PROFILE GRADE LINE

THE COMPLETE BASE SHALL BE ROLLED BEFORE THE EARTH SHOULDER IS SHAPED AND FINAL COMPACTION SHALL BE DONE OVER BASE AND EDGE OF SHOULDER. ALL GRADING SHALL BE WITHIN THE ROW LIMITS.

A STATION IS EQUIVALENT TO 100 FT.

114 LBS/YD2 IS EQUIVALENT TO 1" DEPTH.

* SEE SUPERELEVATION SECTION

Δ MATCH EXIST CROSS SLOPE

HDSMACP = HEAVY DUTY STONE MATRIX ASPHALT CONCRETE PAVEMENT

SUPERPAVE HMACP = SUPERPAVE HOT MIX ASPHALT CONCRETE PAVEMENT

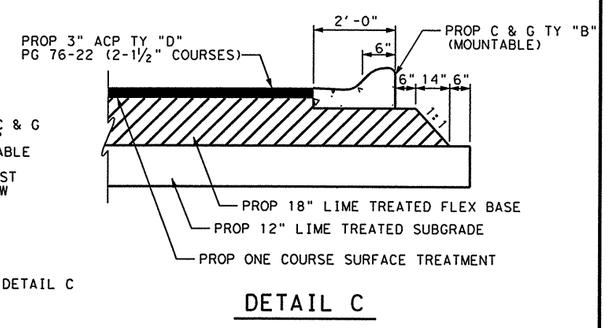

DETAIL C

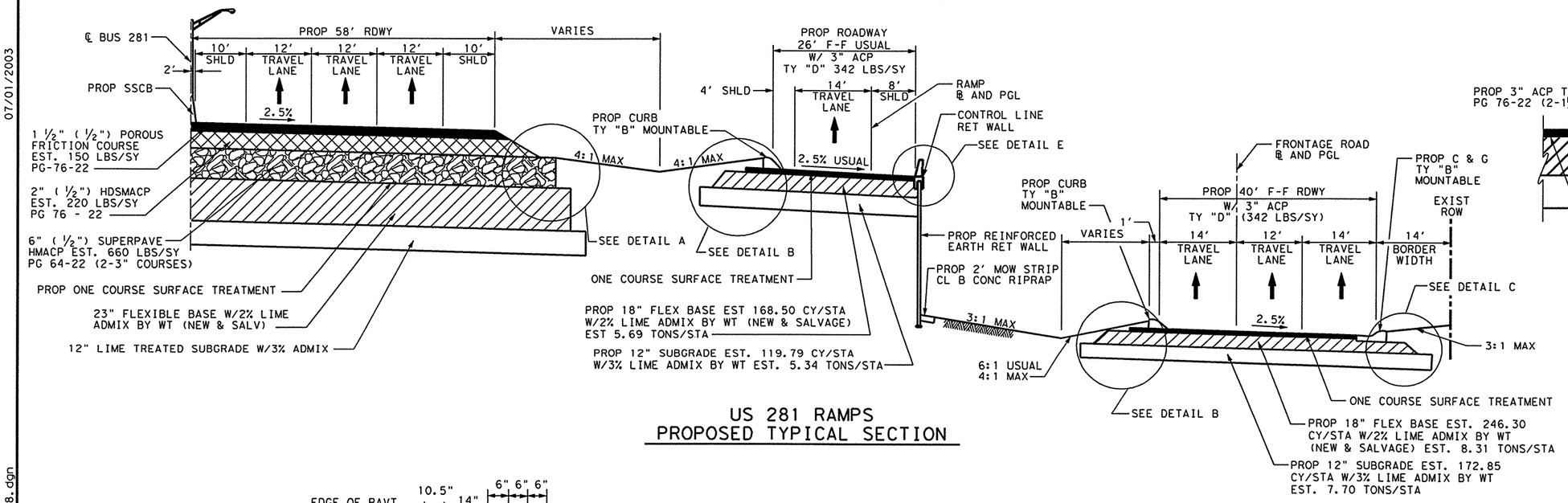

US 281 RAMPS
PROPOSED TYPICAL SECTION

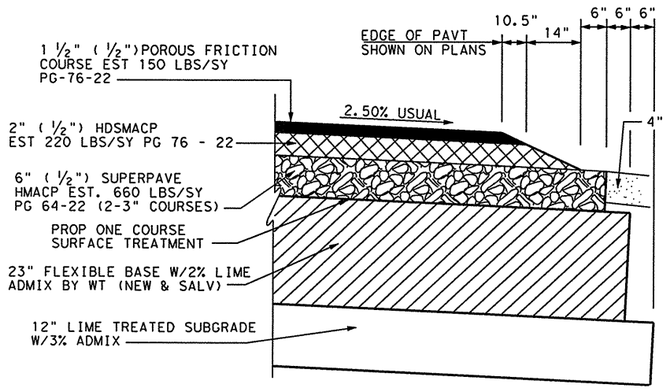

DETAIL A

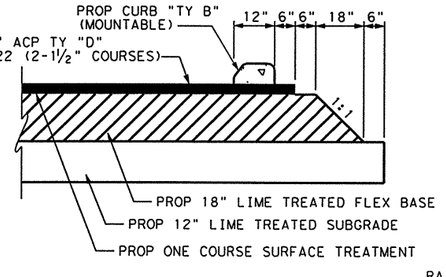

DETAIL B

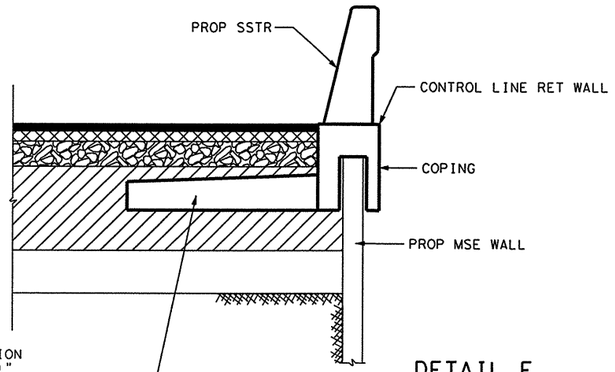

DETAIL E

THE SEAL APPEARING ON THIS DOCUMENT WAS AUTHORIZED BY PHAISARN CWATANAPHOL, P.E. 89252 ON 07/01/2003.

STATE OF TEXAS
PHAISARN CWATANAPHOL
89252
REGISTERED
PROFESSIONAL ENGINEER

PB Parsons Brinckerhoff Quade & Douglas Inc.

Texas Department of Transportation

© 2003 by TxDOT

TYPICAL ROADBED AND GRADING SECTION

PROPOSED US 281

SCALE: NTS

SHEET 8 OF 15 — 281TYP08.DGN

DESIGNED: DM	FED. RD DIV. No.	STATE	FEDERAL AID PROJECT No.	HIGHWAY No.
CHECKED: JP	6	TEXAS		US 281

DRAWN: RLJ	STATE DISTRICT	COUNTY	CONTROL No.	SECTION No.	JOB No.	SHEET No.
CHECKED: DM	PHARR	HIDALGO	0255	08	091	14

NAME
02:05:59 PM
06/23/2003

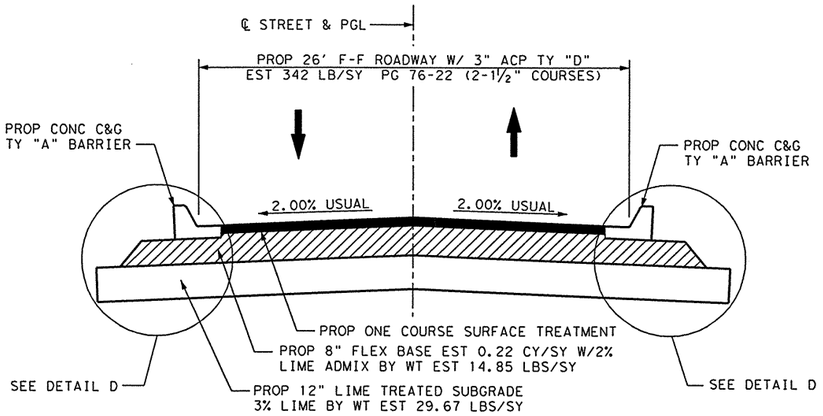

PROPOSED TYPICAL SECTION PAVEMENT : MINOR CROSS STREETS

WISCONSIN RD (TYPICAL 2)

ALBERTA RD (TYPICAL 2)

OWASSA RD (TYPICAL 2)
*STA 12+50 TO 14+22.53
PROP 27' F-F ROADWAY

MINNESOTA RD (TYPICAL 2)

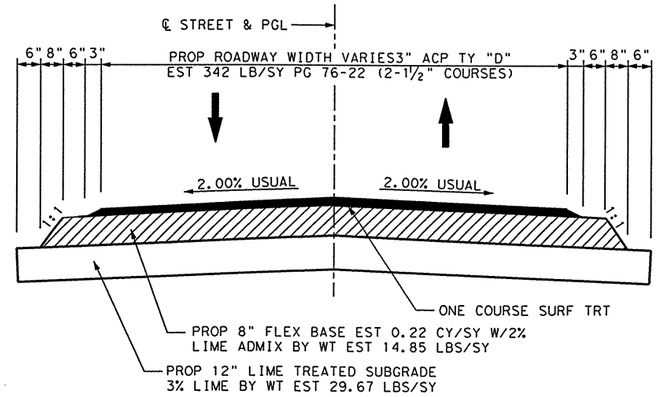

PROPOSED TYPICAL SECTION PAVEMENT: MINOR CROSS STREETS TRANSITIONS

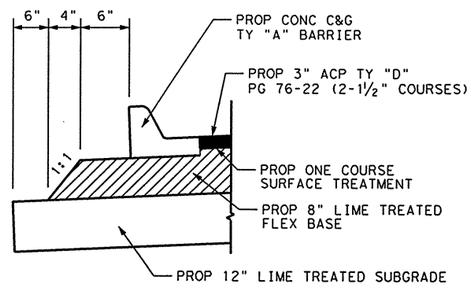

DETAIL D

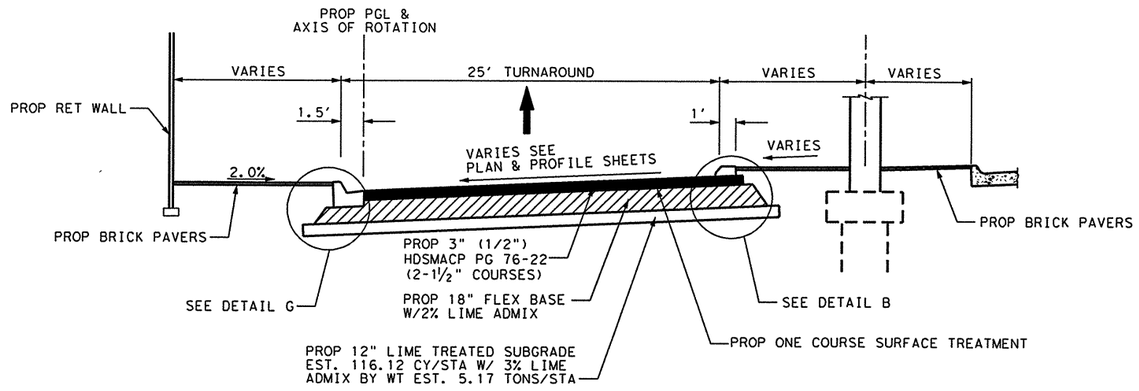

PROPOSED TYPICAL SECTION: TURNAROUNDS

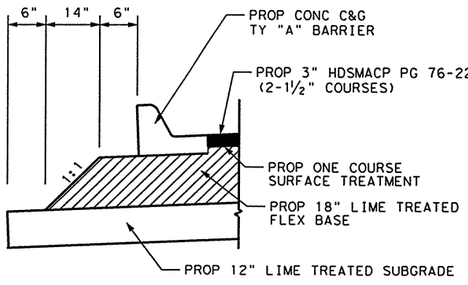

DETAIL G

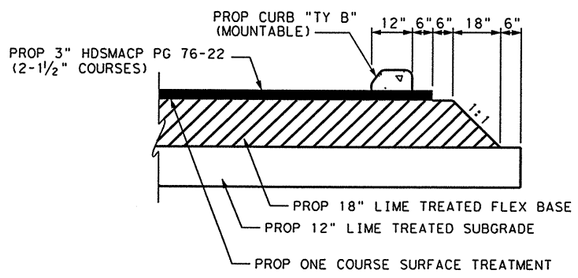

DETAIL B

GENERAL NOTES:

WHERE REQUIRED BY FIXTURES OR UNUSUAL CONDITIONS, THE GOVERNING SLOPES MAY BE VARIED AS DIRECTED BY THE ENGINEER.

THE TOP 4" OF FLEX BASE SHALL BE NEW WHERE SALVAGE IS PART OF FLEX BASE.

THE 2% LIME SHOWN ON TYPICAL SECTIONS FOR ITEM 247 "FLEX BASE" IS SEPARATE FROM LIME WHICH MAY BE REQUIRED TO MEET P.I. AND TRIAXIAL REQUIREMENTS ADDED AT CONTRACTOR'S EXPENSE.

PGL - DENOTES PROFILE GRADE LINE

THE COMPLETE BASE SHALL BE ROLLED BEFORE THE EARTH SHOULDER IS SHAPED AND FINAL COMPACTION SHALL BE DONE OVER BASE AND EDGE OF SHOULDER. ALL GRADING SHALL BE WITHIN THE ROW LIMITS.

A STATION IS EQUIVALENT TO 100 FT.

114 LBS/YD2 IS EQUIVALENT TO 1" DEPTH.

* SEE SUPERELEVATION SECTION

Δ MATCH EXIST CROSS SLOPE

HDSMACP = HEAVY DUTY STONE MATRIX ASPHALT CONCRETE PAVEMENT

SUPERPAVE HMACP = SUPERPAVE HOT MIX ASPHALT CONCRETE PAVEMENT

THE SEAL APPEARING ON THIS DOCUMENT WAS AUTHORIZED BY PHAISARN CWATANAPHOL, P.E. 89252 ON 06/23/2003.

STATE OF TEXAS
PHAISARN CWATANAPHOL
89252
REGISTERED
PROFESSIONAL ENGINEER

Parsons Brinckerhoff Quade & Douglas Inc.

Texas Department of Transportation

© 2003 by TxDOT

TYPICAL ROADBED AND GRADING SECTION

PROPOSED US 281

SCALE: NTS

SHEET 9 OF 15					281TYP15.DGN	
DESIGNED: PAF	FED. RD. DIV. No.	STATE	FEDERAL AID PROJECT No.		HIGHWAY No.	
CHECKED: JP	6	TEXAS			US 281	
DRAWN: RLJ	STATE DISTRICT	COUNTY	CONTROL No.	SECTION No.	JOB No.	SHEET No.
CHECKED: JDH	PHARR	HIDALGO	0255	08	091	15

i:\22322a\cadd\sheets\roadway\typ\281typ15.dgn

NAME
02:06:00 PM
06/23/2003
i:\22322a\cadd\sheets\roadway\typ\281typ09.dgn

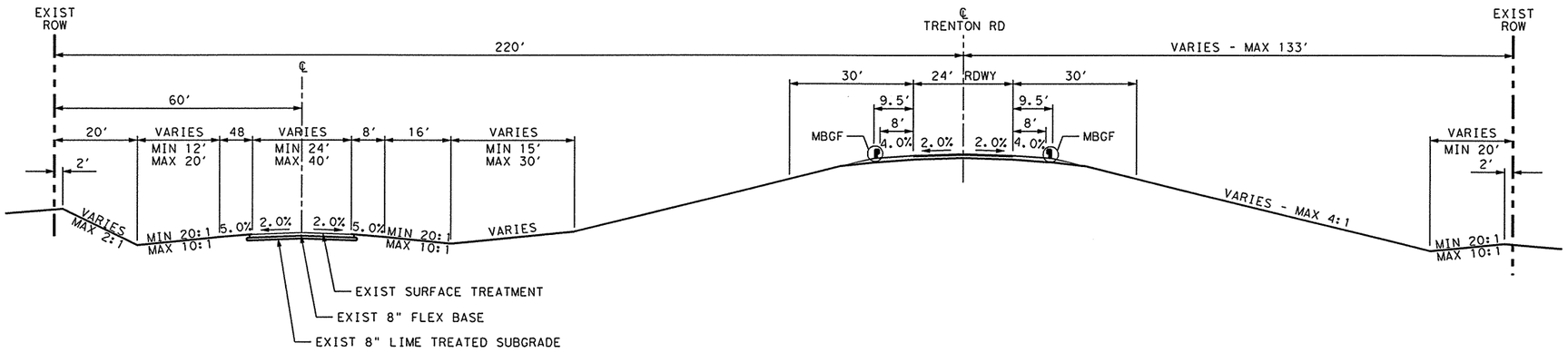

EXISTING TYPICAL SECTION

TRENTON RD UNDERPASS AND CONNECTING ROADWAY

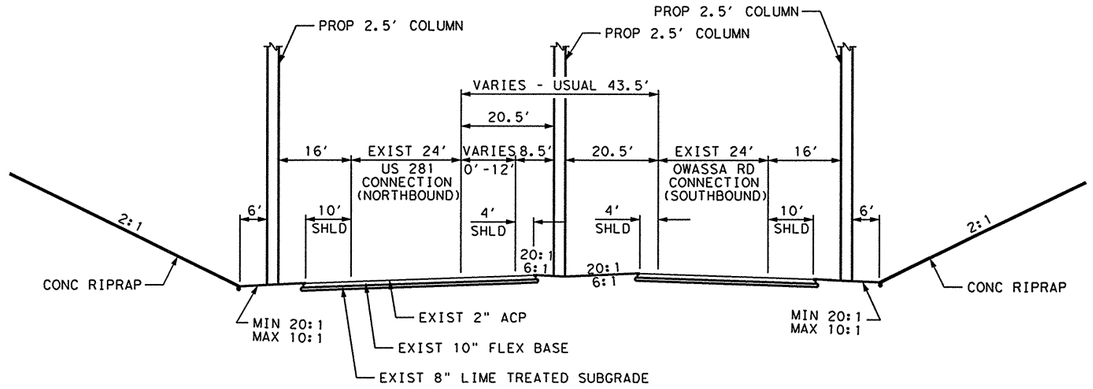

EXISTING TYPICAL SECTION

BUSINESS US 281

GENERAL NOTES:

WHERE REQUIRED BY FIXTURES OR UNUSUAL CONDITIONS, THE GOVERNING SLOPES MAY BE VARIED AS DIRECTED BY THE ENGINEER.

THE TOP 4" OF FLEX BASE SHALL BE NEW WHERE SALVAGE IS PART OF FLEX BASE.

THE 2% LIME SHOWN ON TYPICAL SECTIONS FOR ITEM 247 "FLEX BASE" IS SEPARATE FROM LIME WHICH MAY BE REQUIRED TO MEET P.I. AND TRIAXIAL REQUIREMENTS ADDED AT CONTRACTOR'S EXPENSE.

PGL - DENOTES PROFILE GRADE LINE

THE COMPLETE BASE SHALL BE ROLLED BEFORE THE EARTH SHOULDER IS SHAPED AND FINAL COMPACTION SHALL BE DONE OVER BASE AND EDGE OF SHOULDER. ALL GRADING SHALL BE WITHIN THE ROW LIMITS.

A STATION IS EQUIVALENT TO 100 FT.

114 LBS/YD2 IS EQUIVALENT TO 1" DEPTH.

* SEE SUPERELEVATION SECTION

Δ MATCH EXIST CROSS SLOPE

HDSMACP = HEAVY DUTY STONE MATRIX ASPHALT CONCRETE PAVEMENT

SUPERPAVE HMACP = SUPERPAVE HOT MIX ASPHALT CONCRETE PAVEMENT

ALL FLEX BASE AND TOP 2.5" ACP FROM EXIST TYPICAL SECTIONS THAT IS IN THE CUT PLANE OF THE PROPOSED TYPICAL SECTIONS IS TO BE REMOVED UNDER ITEM 251 AND ITEM 305. RESPECTIVELY THESE CAN BE USED FOR PROP FLEX BASE. THE REMAINING ACP MAY BE USED AS RAP MATERIAL (RECLAIMED ASPHALT PAVEMENT). SEE REMOVAL SHEETS & REWORKED BASE MATERIAL TABLE (E&Q'S) FOR ADDITIONAL INFORMATION.

THE SEAL APPEARING ON THIS DOCUMENT WAS AUTHORIZED BY PHAISARN CWATANAPHOL, P.E. 89252 ON 06/23/2003.

STATE OF TEXAS
PHAISARN CWATANAPHOL
89252
REGISTERED PROFESSIONAL ENGINEER

Parsons Brinckerhoff Quade & Douglas Inc.

Texas Department of Transportation

© 2003 by TxDOT

TYPICAL ROADBED AND GRADING SECTION

EXISTING TRENTON RD
EXISTING OWASSA RD

SCALE: NTS

SHEET 10 OF 15 | 281TYP09.DGN

DESIGNED: PAF	FED. RD DIV. No.	STATE	FEDERAL AID PROJECT No.				HIGHWAY No.
CHECKED: JP	6	TEXAS					US 281
DRAWN:	STATE DISTRICT	COUNTY	CONTROL No.	SECTION No.	JOB No.	SHEET No.	
CHECKED: JDH	PHARR	HIDALGO	0255	08	091	16	

NAME
02:06:04 PM
06/23/2003
i:\22322g\cadd\sheets\roadway\typ\281typ11.dgn

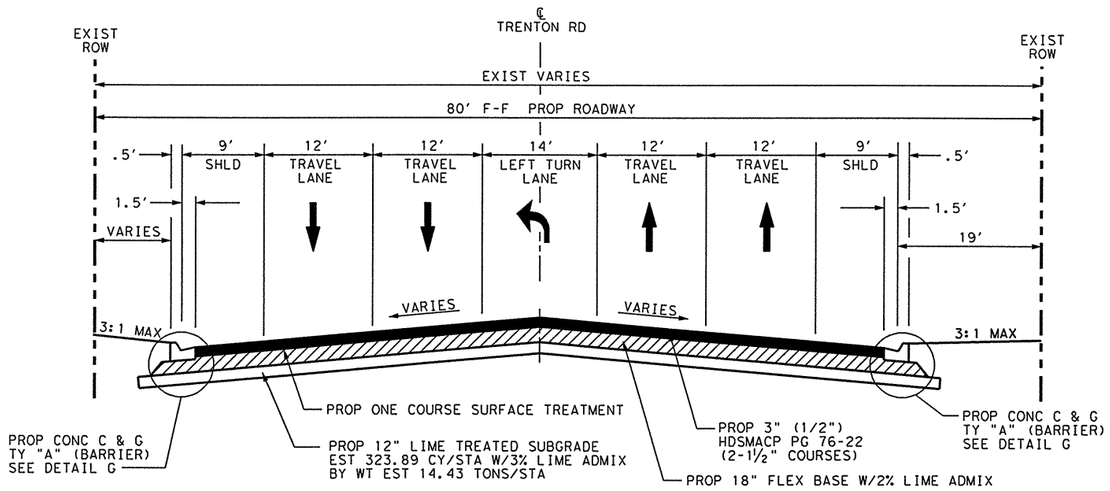

TRENTON ROAD
PROPOSED TYPICAL SECTION

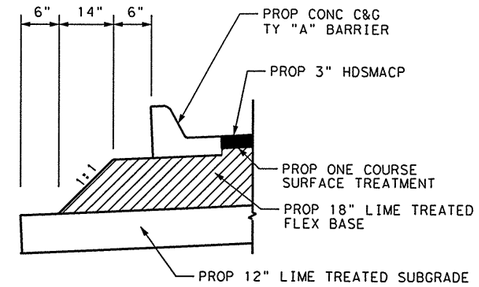

DETAIL G

GENERAL NOTES:

WHERE REQUIRED BY FIXTURES OR UNUSUAL CONDITIONS, THE GOVERNING SLOPES MAY BE VARIED AS DIRECTED BY THE ENGINEER.

THE TOP 4" OF FLEX BASE SHALL BE NEW WHERE SALVAGE IS PART OF FLEX BASE.

THE 2% LIME SHOWN ON TYPICAL SECTIONS FOR ITEM 247 "FLEX BASE" IS SEPARATE FROM LIME WHICH MAY BE REQUIRED TO MEET P.I. AND TRIAXIAL REQUIREMENTS ADDED AT CONTRACTOR'S EXPENSE.

PGL - DENOTES PROFILE GRADE LINE

THE COMPLETE BASE SHALL BE ROLLED BEFORE THE EARTH SHOULDER IS SHAPED AND FINAL COMPACTION SHALL BE DONE OVER BASE AND EDGE OF SHOULDER. ALL GRADING SHALL BE WITHIN THE ROW LIMITS.

A STATION IS EQUIVALENT TO 100 FT.

114 LBS/YD2 IS EQUIVALENT TO 1" DEPTH.

* SEE SUPERELEVATION SECTION

Δ MATCH EXIST CROSS SLOPE

HDSMACP = HEAVY DUTY STONE MATRIX ASPHALT CONCRETE PAVEMENT

SUPERPAVE HMACP = SUPERPAVE HOT MIX ASPHALT CONCRETE PAVEMENT

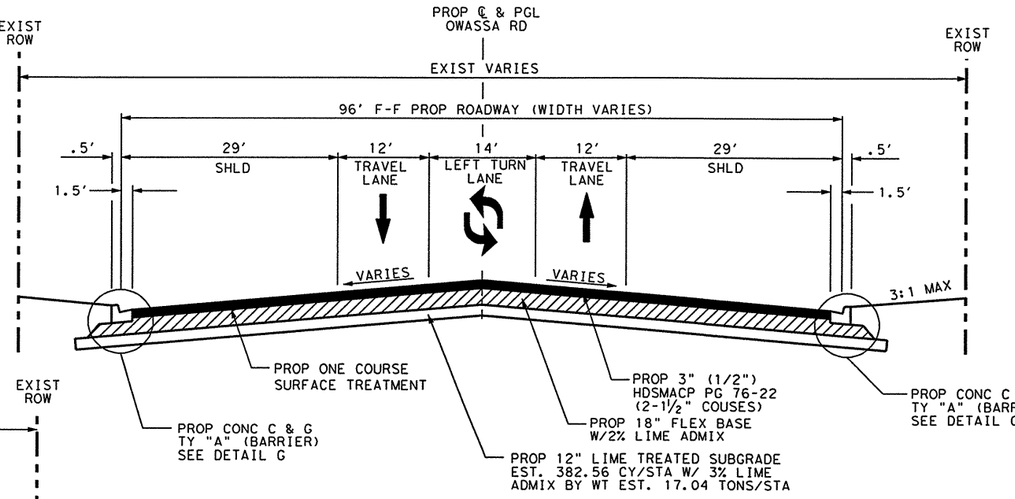

OWASSA ROAD
PROPOSED TYPICAL SECTION

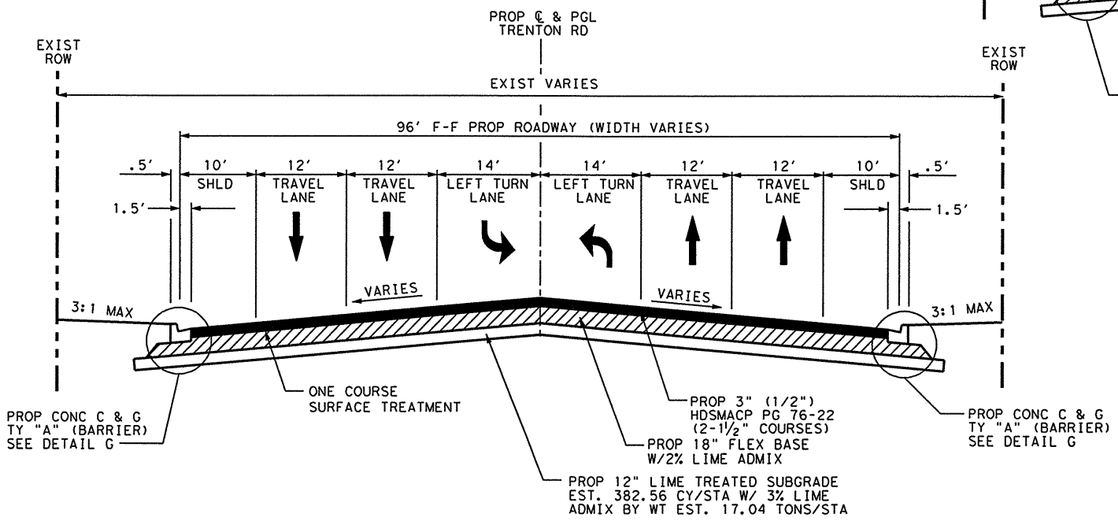

TRENTON ROAD
PROPOSED TYPICAL SECTION

STA. 19+04.70 TO 22+17.52

THE SEAL APPEARING ON THIS DOCUMENT WAS AUTHORIZED BY PHAISARN CWATANAPHOL, P.E. 89252 ON 06/23/2003.

STATE OF TEXAS
PHAISARN CWATANAPHOL
89252
PROFESSIONAL ENGINEER

Parsons Brinckerhoff Quade & Douglas Inc.

Texas Department of Transportation

© 2003 by TxDOT

TYPICAL ROADBED AND GRADING SECTION

PROPOSED TRENTON ROAD & OWASSA ROAD

SCALE: NTS

SHEET 11 OF 15						281TYP11.DGN	
DESIGNED: PAF	FED. RD DIV. No.	STATE	FEDERAL AID PROJECT No.			HIGHWAY No.	
CHECKED: JP	6	TEXAS				US 281	
DRAWN: RLJ	STATE DISTRICT	COUNTY	CONTROL No.	SECTION No.	JOB No.	SHEET No.	
CHECKED: JDH	PHARR	HIDALGO	0255	08	091	17	

NAME
02:06:06 PM
06/23/2003
i:\223220\cadd\sheets\roadway\typ\281typ18.dgn

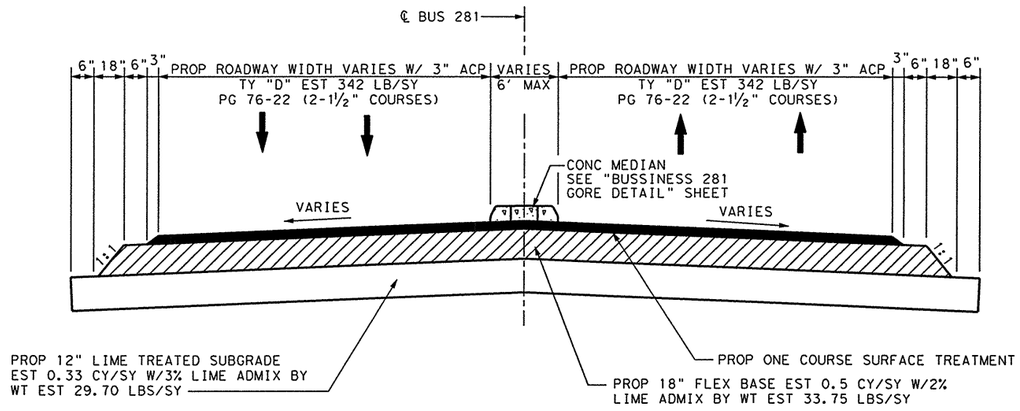

BUSINESS 281
PROPOSED TYPICAL SECTION

STA 7+77.15 TO STA 10+77.30

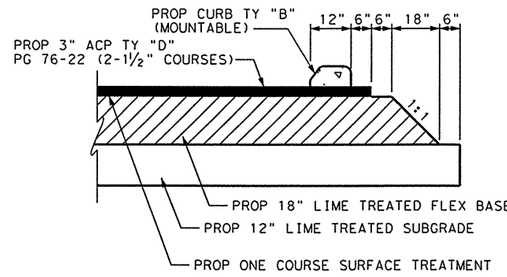

DETAIL B

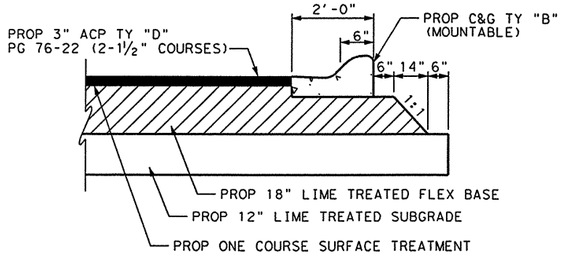

DETAIL C

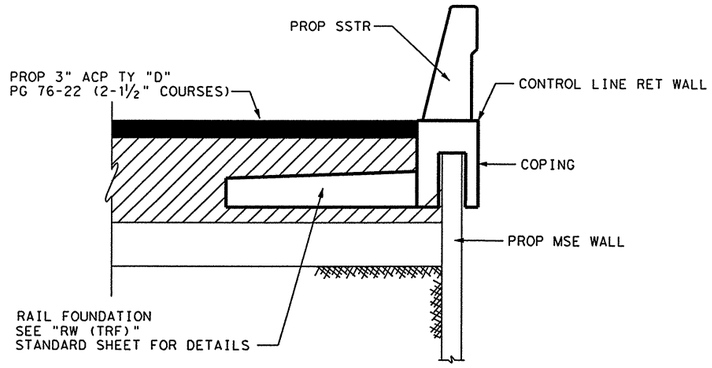

DETAIL F

GENERAL NOTES:

WHERE REQUIRED BY FIXTURES OR UNUSUAL CONDITIONS, THE GOVERNING SLOPES MAY BE VARIED AS DIRECTED BY THE ENGINEER.

THE TOP 4" OF FLEX BASE SHALL BE NEW WHERE SALVAGE IS PART OF FLEX BASE.

THE 2% LIME SHOWN ON TYPICAL SECTIONS FOR ITEM 247 "FLEX BASE" IS SEPARATE FROM LIME WHICH MAY BE REQUIRED TO MEET P.I. AND TRIAXIAL REQUIREMENTS ADDED AT CONTRACTOR'S EXPENSE.

PGL - DENOTES PROFILE GRADE LINE

THE COMPLETE BASE SHALL BE ROLLED BEFORE THE EARTH SHOULDER IS SHAPED AND FINAL COMPACTION SHALL BE DONE OVER BASE AND EDGE OF SHOULDER. ALL GRADING SHALL BE WITHIN THE ROW LIMITS.

A STATION IS EQUIVALENT TO 100 FT.

114 LBS/YD2 IS EQUIVALENT TO 1" DEPTH.

* SEE SUPERELEVATION SECTION

Δ MATCH EXIST CROSS SLOPE

HDSMACP = HEAVY DUTY STONE MATRIX ASPHALT CONCRETE PAVEMENT

SUPERPAVE HMACP = SUPERPAVE HOT MIX ASPHALT CONCRETE PAVEMENT

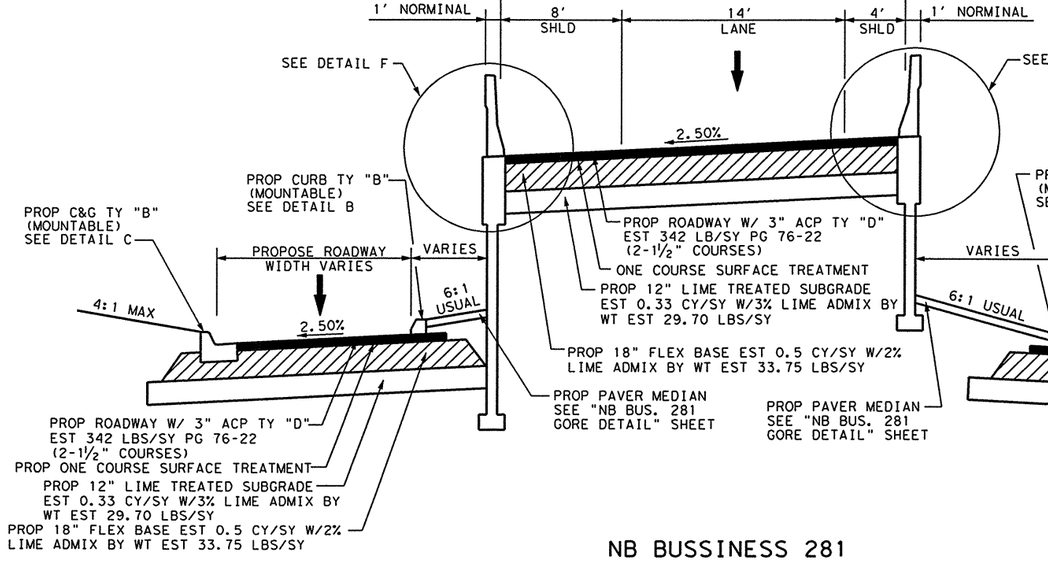

TURNAROUND
PROPOSED TYPICAL SECTION

NB BUSSINESS 281
PROPOSED TYPICAL SECTION

STA 10+77.30 TO STA 16+16.62

SB FRONTAGE ROAD
PROPOSED TYPICAL SECTION

THE SEAL APPEARING ON THIS DOCUMENT WAS AUTHORIZED BY PHAISARN CWATANAPHOL, P.E. 89252 ON 06/23/2003.

STATE OF TEXAS
PHAISARN CWATANAPHOL
89252
REGISTERED
PROFESSIONAL ENGINEER

Parsons Brinckerhoff Quade & Douglas Inc.

Texas Department of Transportation

© 2003 by TxDOT

TYPICAL ROADBED AND GRADING SECTION

PROPOSED BUSINESS 281

SCALE: NTS

SHEET 12 OF 15 | 281TYP18.DGN

DESIGNED: PAF	FED. RD DIV. No.	STATE	FEDERAL AID PROJECT No.	HIGHWAY No.
CHECKED: JP	6	TEXAS		US 281

DRAWN: RLJ	STATE DISTRICT	COUNTY	CONTROL No.	SECTION No.	JOB No.	SHEET No.
CHECKED: JDH	PHARR	HIDALGO	0255	08	091	18

NAME
06:46:54 PM
08/06/2003
T:\22322o\CADD\Sheets\Roadway\Typ\281typ18a.dgn

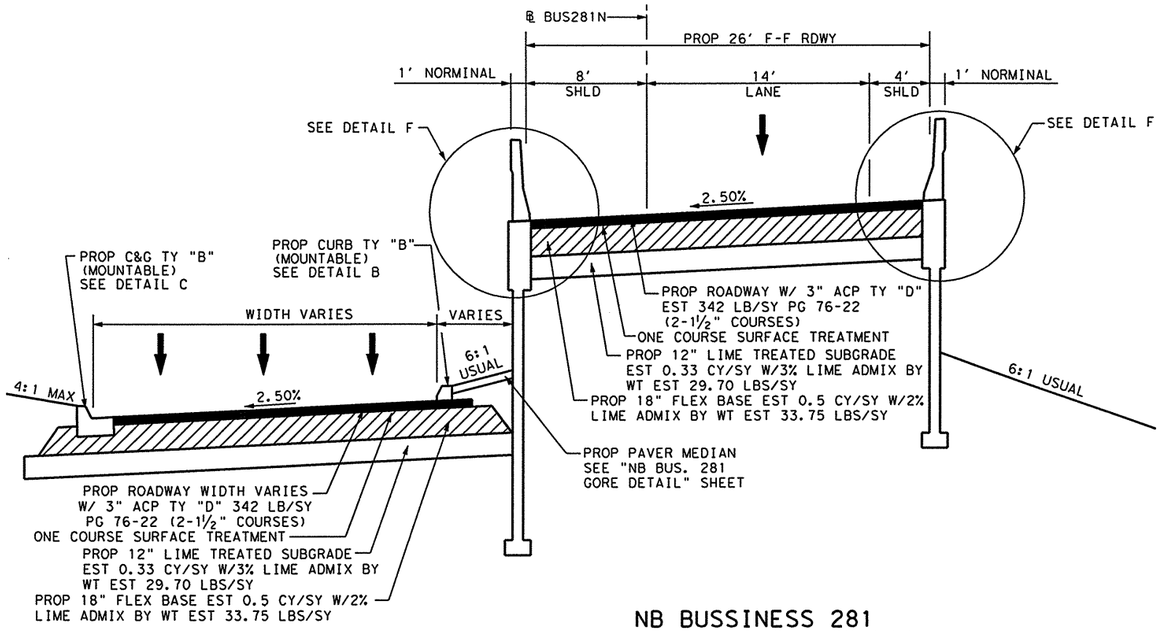

NB FRONTAGE ROAD
PROPOSED TYPICAL SECTION

NB BUSSINESS 281
PROPOSED TYPICAL SECTION

STA 31+10.42 TO STA 36+17.60

BRIDGE

STA 16+16.62 TO STA 31+10.42

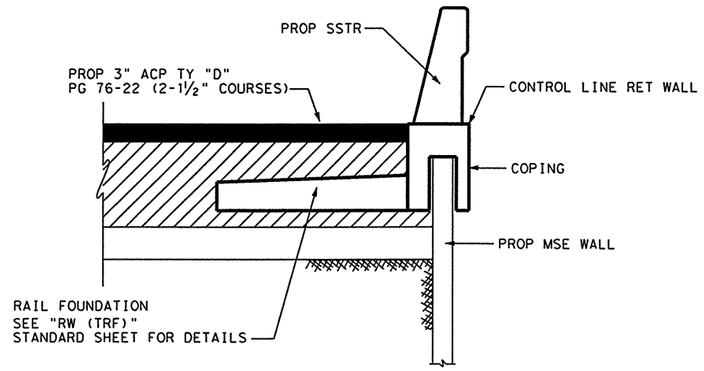

DETAIL F

GENERAL NOTES:

WHERE REQUIRED BY FIXTURES OR UNUSUAL CONDITIONS, THE GOVERNING SLOPES MAY BE VARIED AS DIRECTED BY THE ENGINEER.

THE TOP 4" OF FLEX BASE SHALL BE NEW WHERE SALVAGE IS PART OF FLEX BASE.

THE 2% LIME SHOWN ON TYPICAL SECTIONS FOR ITEM 247 "FLEX BASE" IS SEPARATE FROM LIME WHICH MAY BE REQUIRED TO MEET P.I. AND TRIAXIAL REQUIREMENTS ADDED AT CONTRACTOR'S EXPENSE.

PGL - DENOTES PROFILE GRADE LINE

THE COMPLETE BASE SHALL BE ROLLED BEFORE THE EARTH SHOULDER IS SHAPED AND FINAL COMPACTION SHALL BE DONE OVER BASE AND EDGE OF SHOULDER. ALL GRADING SHALL BE WITHIN THE ROW LIMITS.

A STATION IS EQUIVALENT TO 100 FT.

114 LBS/YD2 IS EQUIVALENT TO 1" DEPTH.

* SEE SUPERELEVATION SECTION

Δ MATCH EXIST CROSS SLOPE

HDSMACP = HEAVY DUTY STONE MATRIX ASPHALT CONCRETE PAVEMENT

SUPERPAVE HMACP = SUPERPAVE HOT MIX ASPHALT CONCRETE PAVEMENT

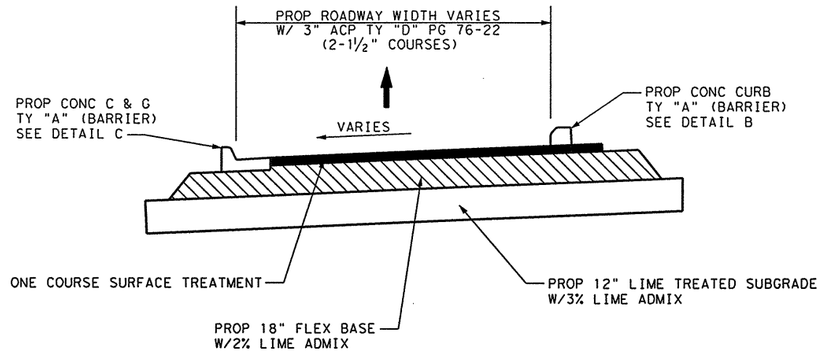

FRONTAGE ROAD CONNECTOR
PROPOSED TYPICAL SECTION

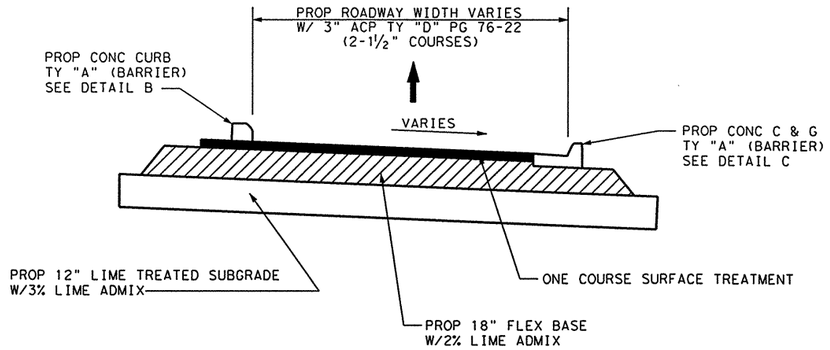

NB TURNAROUND
PROPOSED TYPICAL SECTION

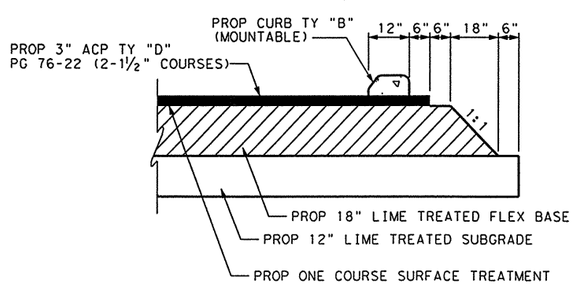

DETAIL B

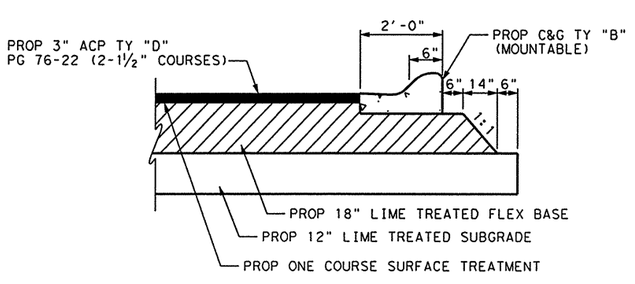

DETAIL C

THE SEAL APPEARING ON THIS DOCUMENT WAS AUTHORIZED BY PHAISARN CWATANAPHOL, P.E. 89252 ON 08/06/2003.

STATE OF TEXAS
PHAISARN CWATANAPHOL
89252
REGISTERED PROFESSIONAL ENGINEER

Parsons Brinckerhoff Quade & Douglas Inc.

Texas Department of Transportation

© 2003 by TxDOT

TYPICAL ROADBED AND GRADING SECTION

PROPOSED BUSINESS 281

SCALE: NTS

SHEET 13 OF 15 | 281TYP18a.DGN

DESIGNED: DM	FED. RD DIV. NO.	STATE	FEDERAL AID PROJECT No.			HIGHWAY No.	
CHECKED: JP	6	TEXAS				US 281	
DRAWN: RLJ	STATE DISTRICT	COUNTY	CONTROL No.	SECTION No.	JOB No.	SHEET No.	
CHECKED: DM	PHARR	HIDALGO	0255	08	091	19	

NAME
02:06:09 PM
06/23/2003
i:\22322a\cadd\sheets\roadway\typ\281typ10.dgn

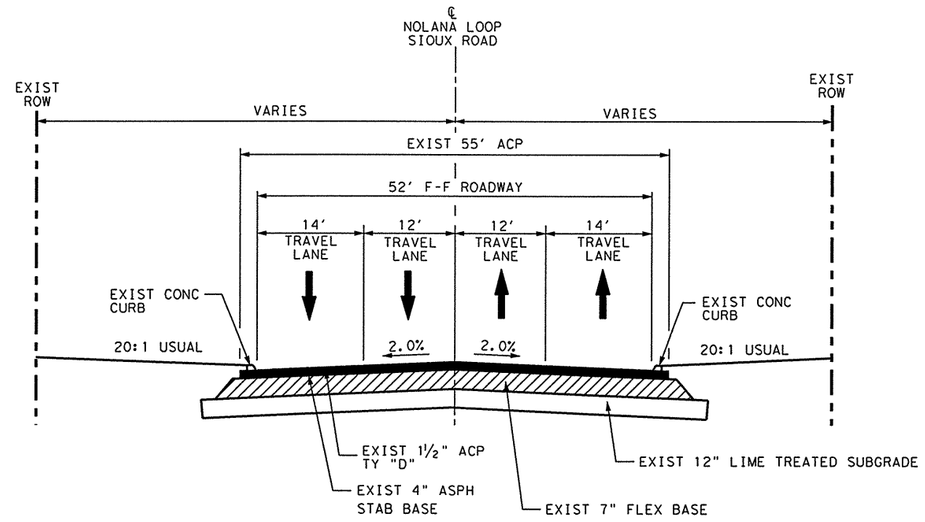

EXISTING TYPICAL SECTION
NOLANA LOOP
SIOUX ROAD

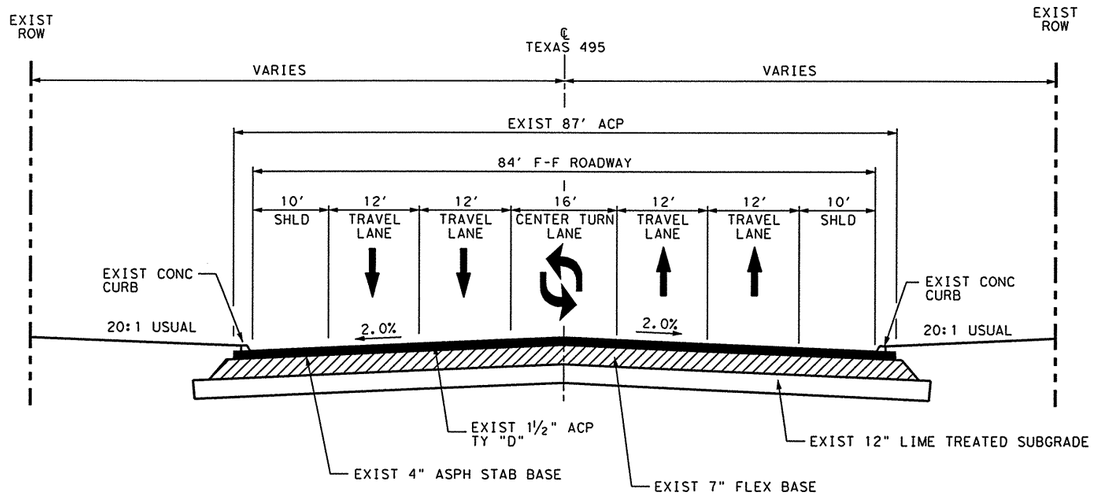

EXISTING TYPICAL SECTION
TEXAS 495

GENERAL NOTES:

WHERE REQUIRED BY FIXTURES OR UNUSUAL CONDITIONS, THE GOVERNING SLOPES MAY BE VARIED AS DIRECTED BY THE ENGINEER.

THE TOP 4" OF FLEX BASE SHALL BE NEW WHERE SALVAGE IS PART OF FLEX BASE.

THE 2% LIME SHOWN ON TYPICAL SECTIONS FOR ITEM 247 "FLEX BASE" IS SEPARATE FROM LIME WHICH MAY BE REQUIRED TO MEET P.I. AND TRIAXIAL REQUIREMENTS ADDED AT CONTRACTOR'S EXPENSE.

PGL - DENOTES PROFILE GRADE LINE

THE COMPLETE BASE SHALL BE ROLLED BEFORE THE EARTH SHOULDER IS SHAPED AND FINAL COMPACTION SHALL BE DONE OVER BASE AND EDGE OF SHOULDER. ALL GRADING SHALL BE WITHIN THE ROW LIMITS.

A STATION IS EQUIVALENT TO 100 FT.

114 LBS/YD2 IS EQUIVALENT TO 1" DEPTH.

* SEE SUPERELEVATION SECTION

Δ MATCH EXIST CROSS SLOPE

HDSMACP = HEAVY DUTY STONE MATRIX ASPHALT CONCRETE PAVEMENT

SUPERPAVE HMACP = SUPERPAVE HOT MIX ASPHALT CONCRETE PAVEMENT

THE SEAL APPEARING ON THIS DOCUMENT WAS AUTHORIZED BY PHAISARN CWATANAPHOL, P.E. 89252 ON 06/23/2003.

STATE OF TEXAS
PHAISARN CWATANAPHOL
89252
PROFESSIONAL REGISTERED ENGINEER

Parsons Brinckerhoff Quade & Douglas Inc.

Texas Department of Transportation

© 2003 by TxDOT

TYPICAL ROADBED AND GRADING SECTION
EXISTING NOLANA LOOP
EXISTING SIOUX RD
EXISTING TEXAS 495

SCALE: NTS

SHEET 14 OF 15 | 281TYP10.DGN

DESIGNED: PAF	FED. RD DIV. No.	STATE	FEDERAL AID PROJECT No.			HIGHWAY No.	
CHECKED: JP	6	TEXAS				US 281	
DRAWN:	STATE DISTRICT	COUNTY	CONTROL No.	SECTION No.	JOB No.	SHEET No.	
CHECKED: JDH	PHARR	HIDALGO	0255	08	091	20	

NAME
02:06:11 PM
06/23/2003
i:\22322a\cadd\sheets\roadway\typ\281typ13.dgn

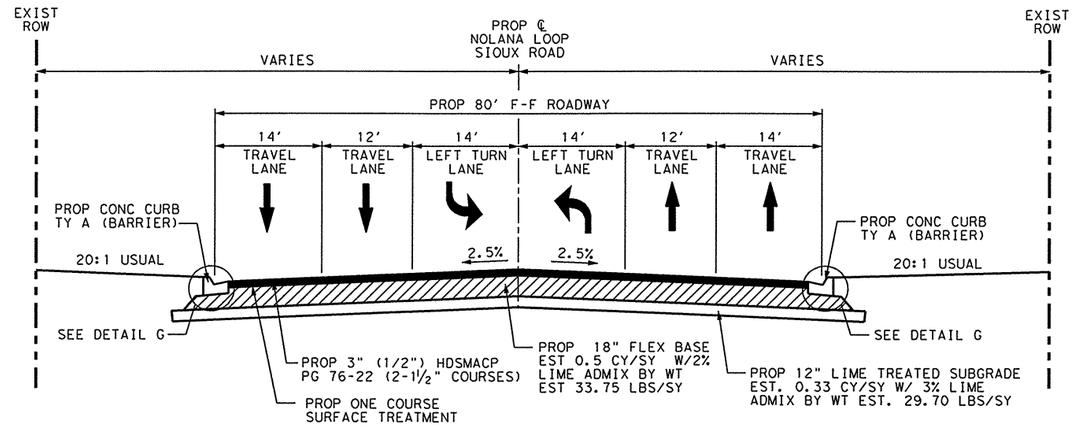

PROPOSED TYPICAL SECTION
NOLANA LOOP
SIOUX ROAD

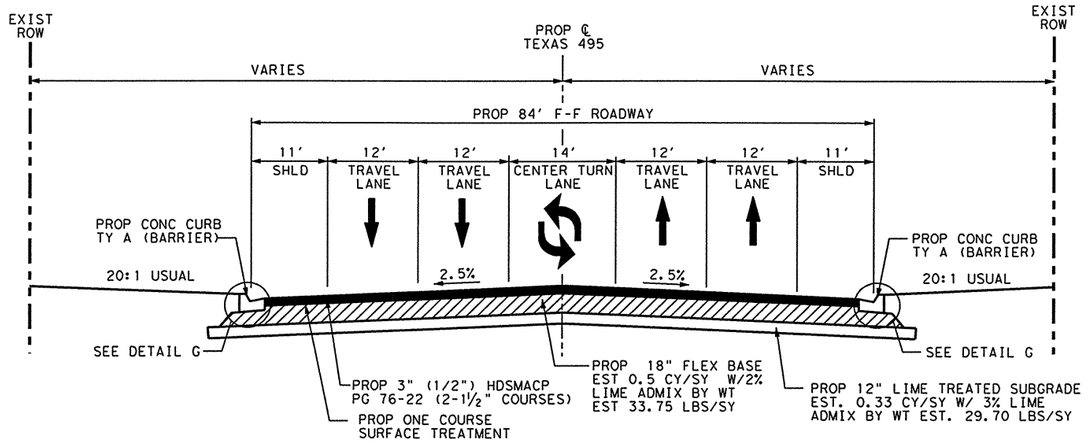

PROPOSED TYPICAL SECTION
TEXAS 495

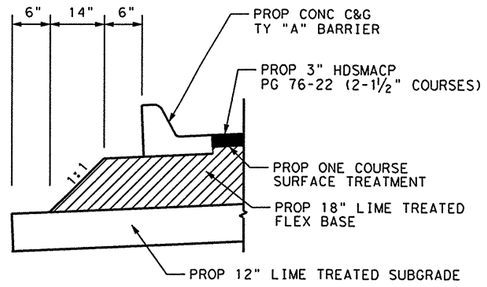

DETAIL G

GENERAL NOTES:

WHERE REQUIRED BY FIXTURES OR UNUSUAL CONDITIONS, THE GOVERNING SLOPES MAY BE VARIED AS DIRECTED BY THE ENGINEER.

THE TOP 4" OF FLEX BASE SHALL BE NEW WHERE SALVAGE IS PART OF FLEX BASE.

THE 2% LIME SHOWN ON TYPICAL SECTIONS FOR ITEM 247 "FLEX BASE" IS SEPARATE FROM LIME WHICH MAY BE REQUIRED TO MEET P.I. AND TRIAXIAL REQUIREMENTS ADDED AT CONTRACTOR'S EXPENSE.

PGL - DENOTES PROFILE GRADE LINE

THE COMPLETE BASE SHALL BE ROLLED BEFORE THE EARTH SHOULDER IS SHAPED AND FINAL COMPACTION SHALL BE DONE OVER BASE AND EDGE OF SHOULDER. ALL GRADING SHALL BE WITHIN THE ROW LIMITS.

A STATION IS EQUIVALENT TO 100 FT.

114 LBS/YD2 IS EQUIVALENT TO 1" DEPTH.

* SEE SUPERELEVATION SECTION

△ MATCH EXIST CROSS SLOPE

HDSMACP = HEAVY DUTY STONE MATRIX ASPHALT CONCRETE PAVEMENT

SUPERPAVE HMACP = SUPERPAVE HOT MIX ASPHALT CONCRETE PAVEMENT

THE SEAL APPEARING ON THIS DOCUMENT WAS AUTHORIZED BY PHAISARN CWATANAPHOL, P.E. 89252 ON 06/23/2003.

STATE OF TEXAS
PHAISARN CWATANAPHOL
89252
REGISTERED PROFESSIONAL ENGINEER

PB Parsons Brinckerhoff Quade & Douglas Inc.

Texas Department of Transportation

© 2003 by TxDOT

TYPICAL ROADBED AND GRADING SECTION
PROPOSED NOLANA LOOP
PROPOSED SIOUX ROAD
PROPOSED TEXAS 495

SCALE: NTS

SHEET 15 OF 15 | 281TYP13.DGN

DESIGNED: PAF	FED. RD DIV. No.	STATE	FEDERAL AID PROJECT No.		HIGHWAY No.	
CHECKED: JP	6	TEXAS			US 281	
DRAWN:	STATE DISTRICT	COUNTY	CONTROL No.	SECTION No.	JOB No.	SHEET No.
CHECKED: JDH	PHARR	HIDALGO	0255	08	091	21

GENERAL NOTES:

The following standard detail sheets have been modified:

Traffic Railing Foundations and Miscellaneous Details – TRF (MOD)

Bridge Standards Modified to HS 25 Loading Requirements

- Prestressed Concrete I-Beam Details - IBA(MOD)
- Elastomeric Bearing and Beam End Detail (for Prestr Conc I-Beams) - IBB(MOD)
- Miscellaneous Slab Details (for Prestressed I-Beams) - IBMS(MOD)
- Thickened Slab End Details (for Prestr I-Beam Spans) - IBTS(MOD)
- Prestressed Concrete I-Beams (Non-Standard Spans) - IBNS(MOD)
- Prestressed Concrete Panels (Optional Deck Details for Prestressed Conc Beam Spans) - PCP(C)(MOD)
- Miscellaneous Slab Details For Plate Girders and Steel Beams – SBMS(MOD)
- Elastomeric Bearing Details (For Steel Girders & Beams) – SEB(MOD)
- Plate Girder Details – SPGD(MOD)
- Common Foundation Details - FD(MOD)

This project will have Calendar Day (CD) Definition for working day and Milestones with an Incentive/Disincentive construction strategy using Road User Cost (RUC). The calendar day definition for this project will be based on a five-day workweek. Contractor will be required to do night time work during certain construction phases identified in the plans.

Contractor will be required to substantially complete each phase of construction with the following milestones:

- Phase 1 construction as identified in the plans shall be completed no later than June 2004
- Phase 1A construction as identified in the plans shall be completed no later than September 2004
- Phase 1B construction as identified in the plans shall be completed no later than January 2005
- Phase 2 construction as identified in the plans shall be completed no later than September 2004
- Phase 3 construction as identified in the plans shall be completed no later than April 2006
- Phase 4 construction, as identified in the plans, shall be completed no later than January 2007
- Phase 5 construction, as identified in the plans, shall be completed no later than September 2007
- Project shall be complete by December 2007.

Project Number: MG 2003 (689) **Sheet** 22

County: Hidalgo **Control:** 0255-08-091

Highway: US 281

Where the Department has acquired additional Right of Way for this project which results in the perimeter of an existing quarry or materials pit to be located 200 ft. Or less from the edge of the nearest travel lane, the safety treatment of the pit or quarry shall be addressed in accordance with the plans or as required by H.B. 451 Legislation. Any necessary treatment shall be addressed and paid for under special specification Item, "pit and quarry treatment". The Contractor will be responsible for informing the Department of any such pits not identified in the plans which are encountered during construction.

The schedule for this project shall be prepared by the Critical Path Method (CPM) format.

The Contractor shall be responsible for maintaining an accurate vertical and horizontal control throughout the contract.

Upon the request of the Engineer, the Contractor shall furnish to the Engineer a typed narrative report, signed and dated by the Contractor, outlining the manner of prosecution of work that he intends to follow in subsequent thirty-day period.

The Contractor shall provide on a weekly basis a list of equipment, including idle equipment, utilized on the project that week.

The Contractor shall contact the local power companies prior to commencing construction. The Contractor shall coordinate with the power companies for the raising/relocation of power lines where deemed necessary by the Engineer or the Contractor to effect the proposed construction (subsidiary to the various bid Items).

Erection of poles, luminaries, and structures located near any overhead or underground utilities shall be accomplished using established industry and utility safety practices. The Contractor shall consult with the appropriate utility companies prior to beginning such work.

The Contractor's attention is directed to the possible presence of underground utilities on the Right of Way on this project. It is the responsibility of the Contractor to call for locates 48 hours in the advance of excavation or drilling.

The Contractor shall take extreme care when excavating or drilling in the vicinity of utilities.

The Contractor shall coordinate the clearing and grubbing, excavation and removal and replacement of culverts/structures along the outfall channels with any utility companies whose facilities are encountered. The Contractor shall not increase the unsupported length of any utilities spanning the outfall channels without prior notification to the affected utility companies so that they will have adequate opportunity to design and construct any required supports for the spanning utility lines. The Contractor shall be solely responsible for coordinating with any affected utility companies and for any damages to existing utilities caused by his operations.

GENERAL NOTES:

The following standard detail sheets have been modified:

Traffic Railing Foundations and Miscellaneous Details – TRF (MOD)

Bridge Standards Modified to HS 25 Loading Requirements

- Prestressed Concrete I-Beam Details - IBA(MOD)
- Elastomeric Bearing and Beam End Detail (for Prestr Conc I-Beams) - IBB(MOD)
- Miscellaneous Slab Details (for Prestressed I-Beams) - IBMS(MOD)
- Thickened Slab End Details (for Prestr I-Beam Spans) - IBTS(MOD)
- Prestressed Concrete I-Beams (Non-Standard Spans) - IBNS(MOD)
- Prestressed Concrete Panels (Optional Deck Details for Prestressed Conc Beam Spans) - PCP(C)(MOD)
- Miscellaneous Slab Details For Plate Girders and Steel Beams – SBMS(MOD)
- Elastomeric Bearing Details (For Steel Girders & Beams) – SEB(MOD)
- Plate Girder Details – SPGD(MOD)
- Common Foundation Details - FD(MOD)

This project will have Calendar Day (CD) Definition for working day and Milestones with an Incentive/Disincentive construction strategy using Road User Cost (RUC). The calendar day definition for this project will be based on a five-day workweek. Contractor will be required to do night time work during certain construction phases identified in the plans.

Contractor will be required to substantially complete each phase of construction with the following milestones:

- Phase 1 construction as identified in the plans shall be completed no later than June 2004
- Phase 1A construction as identified in the plans shall be completed no later than September 2004
- Phase 1B construction as identified in the plans shall be completed no later than January 2005
- Phase 2 construction as identified in the plans shall be completed no later than September 2005
- Phase 3 construction as identified in the plans shall be completed no later than April 2006
- Phase 4 construction, as identified in the plans, shall be completed no later than January 2007
- Phase 5 construction, as identified in the plans, shall be completed no later than September 2007

Where the Department has acquired additional Right of Way for this project which results in the perimeter of an existing quarry or materials pit to be located 200 ft. Or less from the edge of the

Project Number: MG 2003 (689) **Sheet** 22

County: Hidalgo **Control:** 0255-08-091

Highway: US 281

nearest travel lane, the safety treatment of the pit or quarry shall be addressed in accordance with the plans or as required by H.B. 451 Legislation. Any necessary treatment shall be addressed and paid for under special specification Item, "pit and quarry treatment". The Contractor will be responsible for informing the Department of any such pits not identified in the plans which are encountered during construction.

The schedule for this project shall be prepared by the Critical Path Method (CPM) format.

The Contractor shall be responsible for maintaining an accurate vertical and horizontal control throughout the contract.

Upon the request of the Engineer, the Contractor shall furnish to the Engineer a typed narrative report, signed and dated by the Contractor, outlining the manner of prosecution of work that he intends to follow in subsequent thirty-day period.

The Contractor shall provide on a weekly basis a list of equipment, including idle equipment, utilized on the project that week.

The Contractor shall contact the local power companies prior to commencing construction. The Contractor shall coordinate with the power companies for the raising/relocation of power lines where deemed necessary by the Engineer or the Contractor to effect the proposed construction (subsidiary to the various bid Items).

Erection of poles, luminaries, and structures located near any overhead or underground utilities shall be accomplished using established industry and utility safety practices. The Contractor shall consult with the appropriate utility companies prior to beginning such work.

The Contractor's attention is directed to the possible presence of underground utilities on the Right of Way on this project. It is the responsibility of the Contractor to call for locates 48 hours in the advance of excavation or drilling.

The Contractor shall take extreme care when excavating or drilling in the vicinity of utilities.

The Contractor shall coordinate the clearing and grubbing, excavation and removal and replacement of culverts/structures along the outfall channels with any utility companies whose facilities are encountered. The Contractor shall not increase the unsupported length of any utilities spanning the outfall channels without prior notification to the affected utility companies so that they will have adequate opportunity to design and construct any required supports for the spanning utility lines. The Contractor shall be solely responsible for coordinating with any affected utility companies and for any damages to existing utilities caused by his operations.

The Contractor shall coordinate with Hidalgo County Irrigation District No. 2 and Hidalgo County Drainage District No. 1 for the construction of modifications to the existing irrigation lines as shown in the plans. The Contractor shall provide at least two weeks notice to Hidalgo

1 REVISED 9-26-03

The Contractor shall coordinate with Hidalgo County Irrigation District No. 2 and Hidalgo County Drainage District No. 1 for the construction of modifications to the existing irrigation lines as shown in the plans. The Contractor shall provide at least two weeks notice to Hidalgo County Irrigation District No. 2 and Hidalgo County Drainage District No. 1 prior to the anticipated date of construction of each modification. The Contractor is hereby notified that Hidalgo County Irrigation District No. 2 and Hidalgo County Drainage District No. 1 retains the right to delay said construction for seven days and the Contractor shall not be entitled to additional compensation for such delay. Construction of each modification shall be completed within 48 hours.

The Contractor shall make every effort to preserve existing trees designated by the Engineer to remain following construction. The Contractor is required to follow the TXDOT's pruning guidelines and observe recognized tree surgery practices. Additionally, care shall be taken to minimize disruption or damage to the root system of these designed trees.

ITEM 5. Control of the Work

To ensure accurate measurement for final pay quantities and to facilitate the Engineer's check on the Contractor's survey work, the Contractor shall be required to set construction stakes based on plan stations and at 100 ft. Maximum intervals or as directed by the Engineer.

ITEM 6. Control of Materials

The Contractor will be required to furnish the area Engineer the maximum gross weights, including loads, for all vehicles, including trucks, truck-tractors, trailers, semi-trailers or any combination of such vehicles used to deliver materials to the project. Maximum gross weights are to be determined in accordance with Item 6, Article 6.7 of the Standard Specifications.

ITEM 8. Prosecution and Progress

The Contractor shall prepare, maintain and submit to the Engineer, for approval a critical path method (CPA) project schedule, using the latest version available at time the Contractor is awarded, of Primavera Project Planner Computer Software.

This project will have liquidated damages/incentive for the Trenton Road Bridge.

ITEM 100. Preparing Right of Way

Removal of all existing drainage structures and appurtenances thereto, and removal of all old concrete shall be considered as part of this Item. All Items to be removed are not necessarily shown on the plans. Existing drainage structures shown to be removed in the plans but deemed

Project Number: MG 2003 (689) **Sheet** 22A

County: Hidalgo **Control:** 0255-08-091

Highway: US 281

by the Engineer to be necessary for adequate drainage during various phases of construction shall remain in place until otherwise directed by the Engineer.

The Contractor shall not begin any clearing operations before the Project Engineer has established and defined the trees and areas of vegetation that shall not be removed or disturbed by construction activities.

This protection work shall be considered subsidiary to this Item.

Acceptable fencing material for tree protection shall be "Fence It Plus", 46"h x 150'l, new orange color, as manufactured by
Weathashade
3000 W. Orange Ave.
Apopka, Florida, 32703
(407) 889-3692
or approved equal. All trees to be preserved are not necessarily shown on the plans.

Unless otherwise authorized by the Engineer, all obstructions, objectionable material and concrete shall be disposed of by hauling it to disposal sites arranged for by the Contractor and satisfactory to the Engineer.

Pruning: All trees within the limits of the contract and at the Right of Way line shall be pruned by the Contractor to the satisfaction of the Engineer. Pruning shall be done in accordance with accepted pruning practices as set forth by the National Arborist Association in pruning standards for shade trees (current edition). Dead or damaged limbs on trees, including sucker-growth on trunks of trees, are to be removed. Such removed vegetative material shall become the property of the Contractor and shall be removed from the site in a manner acceptable to the Engineer. Unless otherwise noted on the plans, pruning shall be accomplished once during the term of this contract, at dates specified in the plans or as directed by the Engineer.

In accordance with Migratory Bird Treaty Act, during the months of March 1st thru September 1st, the Contractor shall conduct a survey to determine if nests are present within the ROW. If migratory bird nests are found, the Contractor shall not disturb the nesting area until the young have fledged. Pruning, mowing, or any activities that can disturb the nests shall not be conducted until after September 1st or birds have fledged.

ITEM 110. Excavation

Prior to contract letting, earthwork cross sections will be available at the area Engineer's office for review by the prospective bidders.

County Irrigation District No. 2 and Hidalgo County Drainage District No. 1 prior to the anticipated date of construction of each modification. The Contractor is hereby notified that Hidalgo County Irrigation District No. 2 and Hidalgo County Drainage District No. 1 retains the right to delay said construction for seven days and the Contractor shall not be entitled to additional compensation for such delay. Construction of each modification shall be completed within 48 hours.

The Contractor shall make every effort to preserve existing trees designated by the Engineer to remain following construction. The Contractor is required to follow the TXDOT's pruning guidelines and observe recognized tree surgery practices. Additionally, care shall be taken to minimize disruption or damage to the root system of these designed trees.

ITEM 5. Control of the Work

To ensure accurate measurement for final pay quantities and to facilitate the Engineer's check on the Contractor's survey work, the Contractor shall be required to set construction stakes based on plan stations and at 100 ft. Maximum intervals or as directed by the Engineer.

ITEM 6. Control of Materials

The Contractor will be required to furnish the area Engineer the maximum gross weights, including loads, for all vehicles, including trucks, truck-tractors, trailers, semi-trailers or any combination of such vehicles used to deliver materials to the project. Maximum gross weights are to be determined in accordance with Item 6, Article 6.7 of the Standard Specifications.

ITEM 8. Prosecution and Progress

The Contractor shall prepare, maintain and submit to the Engineer, for approval a critical path method (CPA) project schedule, using the latest version available at time the Contractor is awarded, of Primavera Project Planner Computer Software.

This project will have liquidated damages/incentive for the Trenton Road Bridge.

1 The Contractor can not begin incentive/disincentive phase until agreed by both parties.

ITEM 100. Preparing Right of Way

Removal of all existing drainage structures and appurtenances thereto, and removal of all old concrete shall be considered as part of this Item. All Items to be removed are not necessarily shown on the plans. Existing drainage structures shown to be removed in the plans but deemed

by the Engineer to be necessary for adequate drainage during various phases of construction shall remain in place until otherwise directed by the Engineer.

Project Number: MG 2003 (689) **Sheet** 22A

County: Hidalgo **Control:** 0255-08-091

Highway: US 281

The Contractor shall not begin any clearing operations before the Project Engineer has established and defined the trees and areas of vegetation that shall not be removed or disturbed by construction activities.

This protection work shall be considered subsidiary to this Item.

Acceptable fencing material for tree protection shall be "Fence It Plus", 46"h x 150'l, new orange color, as manufactured by
Weathashade
3000 W. Orange Ave.
Apopka, Florida, 32703
(407) 889-3692
or approved equal. All trees to be preserved are not necessarily shown on the plans.

Unless otherwise authorized by the Engineer, all obstructions, objectionable material and concrete shall be disposed of by hauling it to disposal sites arranged for by the Contractor and satisfactory to the Engineer.

Pruning: All trees within the limits of the contract and at the Right of Way line shall be pruned by the Contractor to the satisfaction of the Engineer. Pruning shall be done in accordance with accepted pruning practices as set forth by the National Arborist Association in pruning standards for shade trees (current edition). Dead or damaged limbs on trees, including sucker-growth on trunks of trees, are to be removed. Such removed vegetative material shall become the property of the Contractor and shall be removed from the site in a manner acceptable to the Engineer. Unless otherwise noted on the plans, pruning shall be accomplished once during the term of this contract, at dates specified in the plans or as directed by the Engineer.

In accordance with Migratory Bird Treaty Act, during the months of March 1st thru September 1st, the Contractor shall conduct a survey to determine if nests are present within the ROW. If migratory bird nests are found, the Contractor shall not disturb the nesting area until the young have fledged. Pruning, mowing, or any activities that can disturb the nests shall not be conducted until after September 1st or birds have fledged.

ITEM 110. Excavation

Prior to contract letting, earthwork cross sections will be available at the area Engineer's office for review by the prospective bidders.

ITEM 132. Embankment

1 REVISED 9-26-03

ITEM 132. Embankment

The percent of density, as determined by Test Method Tex-113-E, shall be a minimum of 95 percent. Density tolerances will be permitted.

The Contractor's attention is called to the fact that the following note for this Item applies to any material used for embankment other than that which was excavated from the roadway.

The securing of embankment material by the excavation of ditches for beneficial drainage purposes, the removal of spoil banks, and the removal of hills for land leveling within 200 feet of any public road will be permitted, provided that selection criteria is met.

Embankment (DENS CONT) shall be Type C with a max. PI of 40. Borrow used as embankment material in the top two feet below the bottom of Flexible Base shall meet the following requirements based on preliminary tests and such other tests found necessary by the Engineer.

1. The material shall be such as to produce a well-bonded embankment and shall have a minimum PI of 8 and a maximum PI of 30.

The Contractor's attention is called to the fact that the preliminary test will require approximately 15 days and it is the Contractor's responsibility to advise the Engineer of the location of the source sufficiently in advance to avoid delay.

ITEM 164. Seeding for Erosion Control

Cellulose fiber mulch seeding shall be applied in areas designated on the plans or as directed by the Engineer. Prior to seeding, the areas designated shall be finished to a smooth surface for a uniform application of seed.

Seeding shall be accomplished by the Hydromulch method in two applications as shown below:

1st application –
Grass seed and fertilizer
2nd application –
Cellulose Fiber Mulch shall be applied according to the
Rate shown in the Standard Specification Book.

<u>Reseeding</u>

Project Number: MG 2003 (689) **Sheet** 22B

County: Hidalgo **Control:** 0255-08-091

Highway: US 281

Areas requiring reseeding due to the non-establishment of sufficient vegetative cover, shall be reseeded in accordance with Items 164 and 168. The cost for reseeding shall be paid for by the State provided that the Contractor has followed the seeding and watering requirements as specified in Items 164 and 168.

<u>Seed mixture</u>

Seed mixture shall be as specified under Item 164.

Cool season or warm season grasses shall be included as part of Item 164 (See Table 4A or 5 in the Standard Specification Manual for dates and seed type).

ITEM 166. FERTILIZER

Areas to receive fertilizer are the same as shown for Item 164.

Fertilizer rate is based on a rate of 100 Lbs. of Nitrogen per acre. The Nitrogen-Phosphorous-Potassium (NPK) ratio shall include a minimum of 5 percent Phosphorous and 5 percent Potassium. Fertilizer shall be homogenized.

ITEM 168. Vegetative Watering

Water shall be applied uniformly over areas after seeding or sodding as directed by the Engineer in accordance with applicable provisions of Item 168, "Vegetative Watering". In addition, the Contractor shall be responsible for a 70% grass coverage in order to comply with stabilization requirements. Vegetative coverage shall be uniform. During this period, water equipment shall be metered and operated under pumping pressure capable of delivering the required quantities of water necessary. Each cycle shall be executed every two (2) days, or as directed by the Engineer. Water shall be applied in such a manner as to ensure adequate moisture and be maintained on the grass seeding and not erode the soil in place. During periods of adequate moisture as determined by the Engineer, mechanical watering may not be required. In addition to metering the water equipment, the Contractor shall upon request of the Engineer, provide a logbook showing daily water usage and receipts of water applied.

Upon establishment of 70% vegetative coverage as determined by the Engineer, the Engineer shall have the option to require the Contractor to continue watering as specified for a period not to exceed 30 days.

The basis of the estimate below establishes the approximate quantity of water required completing one (1) full watering cycle:

*Grass Areas	Gallons/Acre	Acre	Total Gallons (Minimum)

Highway: US 281
The percent of density, as determined by Test Method Tex-113-E, shall be a minimum of 95 percent. Density tolerances will be permitted.

The Contractor's attention is called to the fact that the following note for this Item applies to any material used for embankment other than that which was excavated from the roadway.

The securing of embankment material by the excavation of ditches for beneficial drainage purposes, the removal of spoil banks, and the removal of hills for land leveling within 200 feet of any public road will be permitted, provided that selection criteria is met.

Embankment (DENS CONT) shall be Type C with a max. PI of 40. Borrow used as embankment material in the top two feet below the bottom of Flexible Base shall meet the following requirements based on preliminary tests and such other tests found necessary by the Engineer.

1. The material shall be such as to produce a well-bonded embankment and shall have a minimum PI of 8 and a maximum PI of 30.

The Contractor's attention is called to the fact that the preliminary test will require approximately 15 days and it is the Contractor's responsibility to advise the Engineer of the location of the source sufficiently in advance to avoid delay.

ITEM 164. Seeding for Erosion Control

Cellulose fiber mulch seeding shall be applied in areas designated on the plans or as directed by the Engineer. Prior to seeding, the areas designated shall be finished to a smooth surface for a uniform application of seed.

Seeding shall be accomplished by the Hydromulch method in two applications as shown below:

1st application –
Grass seed and fertilizer
2nd application –
Cellulose Fiber Mulch shall be applied according to the
Rate shown in the Standard Specification Book.

Reseeding

Areas requiring reseeding due to the non-establishment of sufficient vegetative cover, shall be reseeded in accordance with Items 164 and 168. The cost for reseeding shall be paid for by the

Project Number: MG 2003 (689) **Sheet** 22B

County: Hidalgo **Control:** 0255-08-091

Highway: US 281
State provided that the Contractor has followed the seeding and watering requirements as specified in Items 164 and 168.

Seed mixture

Seed mixture shall be as specified under Item 164.

Cool season or warm season grasses shall be included as part of Item 164 (See Table 4A or 5 in the Standard Specification Manual for dates and seed type).

ITEM 166. FERTILIZER

Areas to receive fertilizer are the same as shown for Item 164.

Fertilizer rate is based on a rate of 100 Lbs. of Nitrogen per acre. The Nitrogen-Phosphorous-Potassium (NPK) ratio shall include a minimum of 5 percent Phosphorous and 5 percent Potassium. Fertilizer shall be homogenized.
ITEM 168. Vegetative Watering

Water shall be applied uniformly over areas after seeding or sodding as directed by the Engineer in accordance with applicable provisions of Item 168, "Vegetative Watering". In addition, the Contractor shall be responsible for a 70% grass coverage in order to comply with stabilization requirements. Vegetative coverage shall be uniform. During this period, water equipment shall be metered and operated under pumping pressure capable of delivering the required quantities of water necessary. Each cycle shall be executed every two (2) days, or as directed by the Engineer. Water shall be applied in such a manner as to ensure adequate moisture and be maintained on the grass seeding and not erode the soil in place. During periods of adequate moisture as determined by the Engineer, mechanical watering may not be required. In addition to metering the water equipment, the Contractor shall upon request of the Engineer, provide a logbook showing daily water usage and receipts of water applied.

Upon establishment of 70% vegetative coverage as determined by the Engineer, the Engineer shall have the option to require the Contractor to continue watering as specified for a period not to exceed 30 days.

The basis of the estimate below establishes the approximate quantity of water required completing one (1) full watering cycle:

*Grass Areas	Gallons/Acre	Acre	Total Gallons (Minimum)
	3394	82.70	280,684

REVISED
9-26-03

	3394	82.70	280,684

ITEM 247. FLEXIBLE BASE

Flexible Base Type D will be composed of caliche (argillaceous Limestone, calcareous or calcareous clay particles) and may contain stone, conglomerate, gravel, sand or granular materials when these materials are in situ with the caliche.

Flexible Base TY D GR 6 (caliche base) does not meet the requirements of TY A GR 1 base material.

Blended material for Flexible Base TY D GR 6

The Contractor may blend base material with another caliche source or with crushed concrete, provided a minimum of 50% caliche is used. The crushed concrete may contain sand or granular materials. Stabilizing additives will not be allowed in the raw crushed concrete base.

Acceptance will be under the following conditions:

Condition One (1): When both components of the blend in their individual stockpiles meet all the physical requirements of this Item, then field blending will be allowed.

Condition Two (2): When only one component of the blend passes the physical requirements of this Item, the materials shall be blended through a plant for stockpile testing and approval.

Flexible Base (TY D GR 6) shall conform to the following requirements:

BEFORE LIME IS ADDED

Retained on Sq. Sieve	Percent Retained
2"	0
½"	20-60
No. 4	40-75
No. 40	70-90
Max. PI:	15
Max. Wet Ball PI:	15
Wet Ball Mill Max Amount:	50
Min. Comp. Strength PSI:	150 at 15 psi lateral pressure

Project Number: MG 2003 (689) **Sheet** 22C

County: Hidalgo **Control:** 0255-08-091

Highway: US 281

The Wet Ball Test (Tex-116-E) shall be run and the Plasticity Index of the material passing the No. 40 sieve shall be determined (Wet Ball PI).

After 1% lime (laboratory) is added to unlimed material

Max PI	12
Min. Comp. Strength PSI:	180 at 15 psi Lateral Pressure
Triaxial Test (Lime Treated)	Tex-121-E

Two (2) percent lime (by weight) will be incorporated into the Flexible Base in the field at the State's expense in accordance with the provisions of Items 262 and 264.

The percent of density as determined by Compaction Ratio (Tex-113-E) for the new Flexible Base shall be a minimum of 98%. Density, gradation and PI tolerances will be permitted.

Samples for testing the material for soil constants, gradation and wet ball mill shall be taken from production or stockpile as directed by the Engineer.

The Contractor's attention is called to the fact that certain existing and/or proposed structures may be within the limits of the Flexible Base. It shall be the Contractor's responsibility to perform construction operations without damage to these structures.

ITEM 251. Reworking Base Material

Quantities of Flexible Base to be salvaged, shown on the typical sections, are for estimating purposes only. All acceptable base material encountered in existing base is to be salvaged as directed by the Engineer regardless of the quantities involved.

Salvaged base shall be used in the bottom course on any of the proposed roadway and/or turnout sections. The salvaged Flexible Base shall be laid to a compacted thickness that will allow a minimum cover of 4 inches of new Flexible Base on the proposed roadway and/or turnout sections.

Salvaged base may be used on any of the proposed driveway sections.

ITEM 260. Lime Treatment for Materials Used as Subgrade

The Contractor's attention is called to the fact that certain existing and/or proposed structures are within the limits of the lime-treated Subgrade. Unless otherwise directed by the Engineer, these structures shall be installed before the final rolling of this Subgrade. It shall be the Contractor's responsibility to perform the proper lime treating operation without damage to these structures.

ITEM 247. FLEXIBLE BASE

Flexible Base Type D will be composed of caliche (argillaceous Limestone, calcareous or calcareous clay particles) and may contain stone, conglomerate, gravel, sand or granular materials when these materials are in situ with the caliche.

Flexible Base TY D GR 6 (caliche base) does not meet the requirements of TY A GR 1 base material.

Blended material for Flexible Base TY D GR 6

The Contractor may blend base material with another caliche source or with crushed concrete, provided a minimum of 50% caliche is used. The crushed concrete may contain sand or granular materials. Stabilizing additives will not be allowed in the raw crushed concrete base. Acceptance will be under the following conditions:

Condition One (1): When both components of the blend in their individual stockpiles meet all the physical requirements of this Item, then field blending will be allowed.

Condition Two (2): When only one component of the blend passes the physical requirements of this Item, the materials shall be blended through a plant for stockpile testing and approval.

Flexible Base (TY D GR 6) shall conform to the following requirements:

BEFORE LIME IS ADDED

Retained on Sq. Sieve	Percent Retained
2"	0
½"	20-60
No. 4	40-75
No. 40	70-90
Max. PI:	15
Max. Wet Ball PI:	15
Wet Ball Mill Max Amount:	50
Min. Comp. Strength PSI:	150 at 15 psi lateral pressure

The Wet Ball Test (Tex-116-E) shall be run and the Plasticity Index of the material passing the No. 40 sieve shall be determined (Wet Ball PI).

Project Number: MG 2003 (689) **Sheet** 22C

County: Hidalgo **Control:** 0255-08-091

Highway: US 281

After 1% lime (laboratory) is added to unlimed material

Max PI	12
Min. Comp. Strength PSI:	180 at 15 psi Lateral Pressure
Triaxial Test (Lime Treated)	Tex-121-E

Two (2) percent lime (by weight) will be incorporated into the Flexible Base in the field at the State's expense in accordance with the provisions of Items 262 and 264.

The percent of density as determined by Compaction Ratio (Tex-113-E) for the new Flexible Base shall be a minimum of 98%. Density, gradation and PI tolerances will be permitted.

Samples for testing the material for soil constants, gradation and wet ball mill shall be taken from production or stockpile as directed by the Engineer.

The Contractor's attention is called to the fact that certain existing and/or proposed structures may be within the limits of the Flexible Base. It shall be the Contractor's responsibility to perform construction operations without damage to these structures.

ITEM 251. Reworking Base Material

Quantities of Flexible Base to be salvaged, shown on the typical sections, are for estimating purposes only. All acceptable base material encountered in existing base is to be salvaged as directed by the Engineer regardless of the quantities involved.

Salvaged base shall be used in the bottom course on any of the proposed roadway and/or turnout sections. The salvaged Flexible Base shall be laid to a compacted thickness that will allow a minimum cover of 4 inches of new Flexible Base on the proposed roadway and/or turnout sections.

Salvaged base may be used on any of the proposed driveway sections.

ITEM 260. Lime Treatment for Materials Used as Subgrade

The Contractor's attention is called to the fact that certain existing and/or proposed structures are within the limits of the lime-treated Subgrade. Unless otherwise directed by the Engineer, these structures shall be installed before the final rolling of this Subgrade. It shall be the Contractor's responsibility to perform the proper lime treating operation without damage to these structures.

Soft spots in the Subgrade are to receive lime stabilization as directed by the Engineer. Adding, mixing, etc., Of the lime for soft spots will not be paid for directly, but shall be considered subsidiary to the bid Item, "Lime Treatment for Materials Used as Subgrade".

REVISED
9-26-03

Soft spots in the Subgrade are to receive lime stabilization as directed by the Engineer. Adding, mixing, etc., Of the lime for soft spots will not be paid for directly, but shall be considered subsidiary to the bid Item, "Lime Treatment for Materials Used as Subgrade".

ITEMS 260-262. Lime Treatment for Materials Used as Subgrade and Lime Treatment for Base Courses

The slurry method of applying lime will be required, except when the lime is to be added to naturally wet materials as directed by the Engineer.

For this project, the Engineer will direct a random number of lime trucks to be check weighed.

The minimum seven-day curing period and the minimum two-day requirement before opening to traffic shall not apply to this project. The lime treated material shall be kept moist until the treated material is sealed or covered by other material.

ITEM 262. Lime Treatment for Base

A lime spreader box will not be required if lime can be distributed without it, at a uniform rate, to the satisfaction of the Engineer.

ITEM 300. Asphalts, Oils and Emulsions

Asphalt binder used for detours, driveways, temporary ramps, and base courses of Super Pave asphaltic concrete mixtures shall meet the requirements of a Performance Grade 64-22, unless otherwise noted in the plans.

Asphalt binder used for the surface course of TY "D", Heavy Duty Stone Matrix and Crumb Rubber Friction Course asphaltic concrete mixtures shall meet the requirements of a Performance Grade 76-22, (Modifiers L, S, TR, RET or others as approved by materials & test section shall be required as per SP 300), unless otherwise noted in the plans.

ITEM 301. Asphalt Antistripping

Lime TY A or B shall be added as an Antistripping additive between the rates of 1 % minimum – 1.5% maximum by weight. If TEX-531-C cannot be met within these limits, Liquid Antistripping agents as approved by the Engineer may be used in conjunction with lime, at the maximum allowable lime content, in order to meet the specified requirement.

If the Contractor elects to use lime slurry, a pug mill will be used to ensure thorough mixing of the lime and aggregates.

Project Number: MG 2003 (689) **Sheet** 22D

County: Hidalgo **Control:** 0255-08-091

Highway: US 281

Moisture susceptibility testing will be required.

ITEM 302. Aggregate for Surface Treatments

This project will require a Minimum Aggregate Classification of "B".

The aggregate for the surface treatment shall be surface dry before application unless otherwise directed by the Engineer.

ITEM 310. Prime Coat (Cutback Asphaltic Material)

The Contractor shall exercise diligence in the application of asphalt by the use of flagging and rolling procedures to keep from spraying or splattering the traveling public with asphaltic material.

All existing Flexible Base, which may become exposed by the planing operation, shall be primed at the rate of 0.2 Gal/SY.

ITEM 316. Surface treatments

In addition to cleaning by brooming of paved surfaces to be sealed as required by this Item, blading may also be necessary to clean dirt and grass from edges of the pavement and/or turnout areas. The cost of this blading will not be paid for directly, but will be considered subsidiary to the various bid Items of the project.

When applying surface treatment at railroad crossings, a strip of paper shall be placed over the rail and flange areas across the pavement.

The rates of application and the estimated quantities of aggregate are based on the usual or average gradation of known materials. Prior to shipping aggregate to the project, the Contractor shall furnish the Engineer with samples of the proposed aggregate, which is intended to be used so that the gradation may be determined and rate of application changed if necessary.

Surface treatments with unheated aggregate shall not be applied when the air temperature is below 70 degrees F and is falling but it may be applied when the air temperature is above 60 degrees F and is rising. Asphaltic material may be placed by preheating aggregate to 280 degrees F when the air temperature is 70 degrees F and falling or when the air temperature is 50 degrees F and rising.

To minimize windshield damage, sealed sections of roadways and all paved surfaces adjacent to sealed sections shall be broomed and cleaned of surplus aggregate before opening to traffic. All

Highway: US 281
ITEMS 260-262. Lime Treatment for Materials Used as Subgrade and Lime Treatment for Base Courses

The slurry method of applying lime will be required, except when the lime is to be added to naturally wet materials as directed by the Engineer.

For this project, the Engineer will direct a random number of lime trucks to be check weighed.

The minimum seven-day curing period and the minimum two-day requirement before opening to traffic shall not apply to this project. The lime treated material shall be kept moist until the treated material is sealed or covered by other material.

ITEM 262. Lime Treatment for Base

A lime spreader box will not be required if lime can be distributed without it, at a uniform rate, to the satisfaction of the Engineer.

ITEM 300. Asphalts, Oils and Emulsions

Asphalt binder used for detours, driveways, temporary ramps, and base courses of Super Pave asphaltic concrete mixtures shall meet the requirements of a Performance Grade 64-22, unless otherwise noted in the plans.

Asphalt binder used for the surface course of TY "D", Heavy Duty Stone Matrix and Crumb Rubber Friction Course asphaltic concrete mixtures shall meet the requirements of a Performance Grade 76-22, (Modifiers L, S, TR, RET or others as approved by materials & test section shall be required as per SP 300), unless otherwise noted in the plans.

ITEM 301. Asphalt Antistripping

Lime TY A or B shall be added as an Antistripping additive between the rates of 1 % minimum – 1.5% maximum by weight. If TEX-531-C cannot be met within these limits, Liquid Antistripping agents as approved by the Engineer may be used in conjunction with lime, at the maximum allowable lime content, in order to meet the specified requirement.

If the Contractor elects to use lime slurry, a pug mill will be used to ensure thorough mixing of the lime and aggregates

Moisture susceptibility testing will be required.

Project Number: MG 2003 (689) **Sheet** 22D

County: Hidalgo **Control:** 0255-08-091

Highway: US 281
ITEM 302. Aggregate for Surface Treatments

This project will require a Minimum Aggregate Classification of "B".

The aggregate for the surface treatment shall be surface dry before application unless otherwise directed by the Engineer.

ITEM 310. Prime Coat (Cutback Asphaltic Material)

The Contractor shall exercise diligence in the application of asphalt by the use of flagging and rolling procedures to keep from spraying or splattering the traveling public with asphaltic material.

All existing Flexible Base, which may become exposed by the planing operation, shall be primed at the rate of 0.2 Gal/SY.

ITEM 316. Surface treatments

In addition to cleaning by brooming of paved surfaces to be sealed as required by this Item, blading may also be necessary to clean dirt and grass from edges of the pavement and/or turnout areas. The cost of this blading will not be paid for directly, but will be considered subsidiary to the various bid Items of the project.

When applying surface treatment at railroad crossings, a strip of paper shall be placed over the rail and flange areas across the pavement.

The rates of application and the estimated quantities of aggregate are based on the usual or average gradation of known materials. Prior to shipping aggregate to the project, the Contractor shall furnish the Engineer with samples of the proposed aggregate, which is intended to be used so that the gradation may be determined and rate of application changed if necessary.

Surface treatments with unheated aggregate shall not be applied when the air temperature is below 70 degrees F and is falling but it may be applied when the air temperature is above 60 degrees F and is rising. Asphaltic material may be placed by preheating aggregate to 280 degrees F when the air temperature is 70 degrees F and falling or when the air temperature is 50 degrees F and rising.

To minimize windshield damage, sealed sections of roadways and all paved surfaces adjacent to sealed sections shall be broomed and cleaned of surplus aggregate before opening to traffic. All surfaces sealed during a working day and adjacent paved surfaces will be broomed before the end of the day as directed by the Engineer. This brooming shall be subsidiary to this bid Item.

The Type and grade of asphalt as shown on the plans and/or as directed by the Engineer, shall be used on these projects. Asphalt cement will be used during the warm season (usually April 15th

REVISED
9-26-03

surfaces sealed during a working day and adjacent paved surfaces will be broomed before the end of the day as directed by the Engineer. This brooming shall be subsidiary to this bid Item.

The Type and grade of asphalt as shown on the plans and/or as directed by the Engineer, shall be used on these projects. Asphalt cement will be used during the warm season (usually April 15th to September 15th). An emulsified asphalt will be used during the cooler season (usually September 15th to April 15th), if permitted in writing by the Engineer. The emulsified asphalt, if used, shall be HFRS-2. Estimated quantities shown for the bid Item is based on an average of the estimated rates of application for asphaltic cement and emulsified asphalt. These rates should be used for estimating and comparison purposes only.

The one or two-course surface treatment shall be in place for a sufficient period of time in the opinion of the Engineer, for the surface treatment to properly dry and cure before placing the Asphaltic Concrete Pavement.

Traffic will not be permitted on the surface treatment unless authorized by the Engineer.

ITEM 354. Planing and/or Texturing Pavement

Planing to be done on all bridge approaches shall be done as necessary to achieve the 1-1/2" called for in the plan details. All other planing locations and dimensions will be done as shown in the plans and/or as directed by the Engineer.

ITEM 400. Excavation and Backfill for Structures

Cement stabilized backfill shall contain aggregate, water and a minimum of 2 sacks of Portland Cement per cubic yard of material. Cement and water shall conform to the requirements of Item 421, "Portland Cement Concrete". Aggregate shall be clean sand or other suitable material and shall be subject to the approval of the Engineer.

Aggregate shall be clean sand or other suitable material and shall be subject to the approval of the Engineer.

If the Contractor elects to cut pavement (existing/detour) for structural work beyond that required by the construction phasing shown in the plans and approved by the Engineer, it shall be restored at his expense and backfilled to its original condition or better in accordance with Item 400.

ITEM 403. Temporary Special Shoring

Temporary Special Shoring shall be in accordance with Specification Item 403.
The use of Temporary Earth Walls and Sheet Piling shall be permitted and bid under this item.

Project Number: MG 2003 (689) **Sheet** 22E

County: Hidalgo **Control:** 0255-08-091

Highway: US 281

Any Temporary Earth Walls used for temporary shoring shall conform to the Special Specification "Temporary Earth Walls" and the details shown on the RW(TEW) Standard. Pay limits shall be as shown on "Temporary Special Shoring Wall" details.

Any Sheet Piling used for temporary shoring shall conform to Specification Item 407, except for measurement and payment. The Contractor shall be responsible for the adequacy of the design for the Sheet Piling and any necessary tie-backs and shall submit, to the Engineer, details and design calculations bearing the seal of a Registered Professional Engineer for review and approval. Pay limits shall be as shown on "Temporary Special Shoring Wall" details.

All Temporary Special Shoring including Temporary Earth Walls or Sheet Piling shall be bid as "Temporary Special Shoring" Item 403.

ITEM 416. Drilled Shaft Foundations

The Contractor's attention is directed to the possible presence of underground utilities on the Right of Way on this project. It is the responsibility of the Contractor to call for locates 48 hours in the advance of excavation or drilling.

ITEM 420. Concrete Structures

Bent concrete and slab concrete for prestressed concrete beam units shall be paid as plan quantity.

The Contractor shall not be allowed the splicing, cut and jointing, gluing etc. of form liner panels. Each form liner panel shall be fabricated to form a one-piece unit to the size and specifications set forth in the plans. Form liners made of multi-use material shall be washed and cleaned after each usage. Form liners that have in the opinion of the Engineer become damaged or worn shall be replaced by the Contractor. Replacement of form liners shall be considered Incidental to the work and shall not entitle the Contractor to additional compensation.

The Contractor shall pour and finish a 3'x3' sample panel of all typical form liner finishes specified. The panels shall meet with the requirements of the plans and specifications and be approved by the Engineer before any form liners may be ordered, obtained or used. The sample panel shall be considered typical for the finish, any deviation of color, grade, or depth from the sample panel shall be grounds for rejection of the form liner finish and shall be removed and replaced as specified by the contract. The form liners and sample panel or any required replacement of the form liner treatment shall not be paid for directly but shall be considered subsidiary to the various bid Items.

ITEM 421. Portland Cement Concrete

to September 15th). An emulsified asphalt will be used during the cooler season (usually September 15th to April 15th), if permitted in writing by the Engineer. The emulsified asphalt, if used, shall be HFRS-2. Estimated quantities shown for the bid Item is based on an average of the estimated rates of application for asphaltic cement and emulsified asphalt. These rates should be used for estimating and comparison purposes only.

The one or two-course surface treatment shall be in place for a sufficient period of time in the opinion of the Engineer, for the surface treatment to properly dry and cure before placing the Asphaltic Concrete Pavement.

Traffic will not be permitted on the surface treatment unless authorized by the Engineer.

ITEM 354. Planing and/or Texturing Pavement

Planing to be done on all bridge approaches shall be done as necessary to achieve the 1-1/2" called for in the plan details. All other planing locations and dimensions will be done as shown in the plans and/or as directed by the Engineer.

ITEM 400. Excavation and Backfill for Structures

Cement stabilized backfill shall contain aggregate, water and a minimum of 2 sacks of Portland Cement per cubic yard of material. Cement and water shall conform to the requirements of Item 421, "Portland Cement Concrete". Aggregate shall be clean sand or other suitable material and shall be subject to the approval of the Engineer.

Aggregate shall be clean sand or other suitable material and shall be subject to the approval of the Engineer.

If the Contractor elects to cut pavement (existing/detour) for structural work beyond that required by the construction phasing shown in the plans and approved by the Engineer, it shall be restored at his expense and backfilled to its original condition or better in accordance with Item 400.

ITEM 403. Temporary Special Shoring

Temporary Special Shoring shall be in accordance with Specification Item 403.
The use of Temporary Earth Walls and Sheet Piling shall be permitted and bid under this item.

Any Temporary Earth Walls used for temporary shoring shall conform to the Special Specification "Temporary Earth Walls" and the details shown on the RW(TEW) Standard. Pay limits shall be as shown on "Temporary Special Shoring Wall" details.

Any Sheet Piling used for temporary shoring shall conform to Specification Item 407, except for measurement and payment. The Contractor shall be responsible for the adequacy of the design

for the Sheet Piling and any necessary tie-backs and shall submit, to the Engineer, details and design calculations bearing the seal of a Registered Professional Engineer for review and approval. Pay limits shall be as shown on "Temporary Special Shoring Wall" details.

All Temporary Special Shoring including Temporary Earth Walls or Sheet Piling shall be bid as "Temporary Special Shoring" Item 403.

ITEM 416. Drilled Shaft Foundations

The Contractor's attention is directed to the possible presence of underground utilities on the Right of Way on this project. It is the responsibility of the Contractor to call for locates 48 hours in the advance of excavation or drilling.

ITEM 420. Concrete Structures

Bent concrete and slab concrete for prestressed concrete beam units shall be paid as plan quantity.

The Contractor shall not be allowed the splicing, cut and jointing, gluing etc. of form liner panels. Each form liner panel shall be fabricated to form a one-piece unit to the size and specifications set forth in the plans. Form liners made of multi-use material shall be washed and cleaned after each usage. Form liners that have in the opinion of the Engineer become damaged or worn shall be replaced by the Contractor. Replacement of form liners shall be considered Incidental to the work and shall not entitle the Contractor to additional compensation.

The Contractor shall pour and finish a 3'x3' sample panel of all typical form liner finishes specified. The panels shall meet with the requirements of the plans and specifications and be approved by the Engineer before any form liners may be ordered, obtained or used. The sample panel shall be considered typical for the finish, any deviation of color, grade, or depth from the sample panel shall be grounds for rejection of the form liner finish and shall be removed and replaced as specified by the contract. The form liners and sample panel or any required replacement of the form liner treatment shall not be paid for directly but shall be considered subsidiary to the various bid Items.

ITEM 421. Portland Cement Concrete

Transverse construction joints for box culverts and/or box siphons will be allowed at changes of grade and/or alignment. These joints will be required at intervals not greater than 60 feet nor less than 40 feet, unless otherwise approved by the Engineer.

Class "A" Concrete used in the structural application within the limits of the paved roadway, will require a minimum of one (1) set of beams per each day of production.

Type II Cement will be required for the following concrete elements:

REVISED
9-26-03

Transverse construction joints for box culverts and/or box siphons will be allowed at changes of grade and/or alignment. These joints will be required at intervals not greater than 60 feet nor less than 40 feet, unless otherwise approved by the Engineer.

Class "A" Concrete used in the structural application within the limits of the paved roadway, will require a minimum of one (1) set of beams per each day of production.

Type II Cement will be required for the following concrete elements:

(1) Abutment caps, backwalls and wingwalls;
(2) Columns, footings and tie beams;
(3) Piling and drilled shafts;
(4) Retaining wall footings and any row of MSE panels in contact with natural soil;
(5) Gravity, soil nail and drill shaft retaining walls;
(6) Box culverts; and
(7) Box siphons.

The Contractor will furnish for the duration of the project and keep a compression testing machine meeting the requirements of test method Tex 418-A. The compression machine shall have a minimum 250,000 lb capacity and be capable of testing cylinders to their full strength while operating within 90% of its full capacity. The contractor will provide calibration by a commercial laboratory at a frequency not to exceed 6 months. The engineer may request calibration any time if results of compression machine are in question. The calibration will be done in accordance with ASTM designation E-4 with calibration equipment calibrated in accordance and meeting the requirements of ASTM E-74. The contractor will furnish housing at a site determined by the engineer and suitable of storing compression machine as well as storage tank(s) for cylinders. Curing and storage of specimens shall conform to Tex 447-A. All outlets will be compatible with the electrical requirements of the equipment to be used for testing. The items furnished under this general note will be subsidiary to Item 421.

The Contractor shall provide equipment for concrete batch plant inspection for determining the free moisture and/or absorption of aggregates in accordance with applicable TXDOT Test Methods and this specification for use by the Contractor during production and for verification by the Engineer.

The Contractor shall provide for the Department's use one (1) laptop computer system for concrete batch plant inspection and shall be subsidiary to the various bid Items.

The following software and hardware listed below or approved equal or better shall be provided:

Software: 1 ea. MS-DOS, 1 ea. Windows XP, 1 ea. Microsoft Office XP, Email access to TxDOT's Intranet system, and 1 ea. Antivirus Software. All software shall be the most current version available on the market or what is currently being used by TxDOT.

Hardware: 1 ea. Pentium IV with a 2.0 GHz-processor, 15" SXGA+ TFT display, 128 MB SDRAM, 20GB Ultra ATA Hard Drive and 32MB DDR NVIDIA GeForce2 Go AGP 4x Graphics. Laptop to include 56k v.90 Fax Modem, 3.5 inch 1.44 Mb floppy drive, CD-RW, Ethernet connection, HP 812c Inkjet printer or equivalent and all incidentals necessary for hardware connections and operations of the system.

The Contractor shall deliver the specified software and hardware to be used by the Department prior to the commencement of any work on the project. The Contractor shall provide carrying cases for both the laptop computer and printer. The Contractor shall purchase and provide to the Department updates to the software as required to remain compatible with TxDOT's currently used software. In the case of needed repairs for the software or hardware, the Contractor shall provide a backup computer system meeting the same Specifications within twenty-four (24) hours. At the completion of the project, all hardware and software shall be retained by the Contractor.

ITEM 423. Retaining Wall

The following Mechanical Stabilized Earth (MSE) Wall Systems are approved for this project:

Reinforced Earth Walls
The Reinforced Earth Company
1331 Airport Freeway, Suite 302
Euless, Texas 76040-4150
(817) 283-5503

Tensar Panel Wall
Tensar Earth Technologies, Inc.
5775-B Glen Ridge Dr. Ste. 450
Atlanta, Georgia 30328
(404) 250-1290

Retained Earth Wall
Foster Geotechnical
901 North Highway 77
Hillsboro, Texas 76645
(254) 580-9100

Strengthened Earth Walls
Hanson Concrete Products
3500 Maple Ave.
Dallas, Texas 75219
(214) 525-5877

Reinforced Soil Embankment Walls
Texas Welded Wire, Inc.
645 W. Hurst Blvd.
Hurst, Texas 76053
(817) 282-4560

VP Wall System
Valley Prestress Products, Inc.
P.O. Box 1367
Mission, Texas 78573
(956) 584-5701

Highway: US 281

(1) Abutment caps, backwalls and wingwalls;
(2) Columns, footings and tie beams;
(3) Piling and drilled shafts;
(4) Retaining wall footings and any row of MSE panels in contact with natural soil;
(5) Gravity, soil nail and drill shaft retaining walls;
(6) Box culverts; and
(7) Box siphons.

The Contractor will furnish for the duration of the project and keep a compression testing machine meeting the requirements of test method Tex 418-A. The compression machine shall have a minimum 250,000 lb capacity and be capable of testing cylinders to their full strength while operating within 90% of its full capacity. The contractor will provide calibration by a commercial laboratory at a frequency not to exceed 6 months. The engineer may request calibration any time if results of compression machine are in question. The calibration will be done in accordance with ASTM designation E-4 with calibration equipment calibrated in accordance and meeting the requirements of ASTM E-74. The contractor will furnish housing at a site determined by the engineer and suitable of storing compression machine as well as storage tank(s) for cylinders. Curing and storage of specimens shall conform to Tex 447-A. All outlets will be compatible with the electrical requirements of the equipment to be used for testing. The items furnished under this general note will be subsidiary to Item 421.

The Contractor shall provide equipment for concrete batch plant inspection for determining the free moisture and/or absorption of aggregates in accordance with applicable TXDOT Test Methods and this specification for use by the Contractor during production and for verification by the Engineer.

The Contractor shall provide for the Department's use one (1) laptop computer system for concrete batch plant inspection and shall be subsidiary to the various bid Items.

The following software and hardware listed below or approved equal or better shall be provided:

Software: 1 ea. MS-DOS, 1 ea. Windows XP, 1 ea. Microsoft Office XP, Email access to TxDOT's Intranet system, and 1 ea. Antivirus Software. All software shall be the most current version available on the market or what is currently being used by TxDOT.

Hardware: 1 ea. Pentium IV with a 2.0 GHz-processor, 15" SXGA+ TFT display, 128 MB SDRAM, 20GB Ultra ATA Hard Drive and 32MB DDR NVIDIA GeForce2 Go AGP 4x Graphics. Laptop to include 56k v.90 Fax Modem, 3.5 inch 1.44 Mb floppy drive, CD-RW, Ethernet connection, HP 812c Inkjet printer or equivalent

Project Number: MG 2003 (689) **Sheet** 22F

County: Hidalgo **Control:** 0255-08-091

Highway: US 281

and all incidentals necessary for hardware connections and operations of the system.

The Contractor shall deliver the specified software and hardware to be used by the Department prior to the commencement of any work on the project. The Contractor shall provide carrying cases for both the laptop computer and printer. The Contractor shall purchase and provide to the Department updates to the software as required to remain compatible with TxDOT's currently used software. In the case of needed repairs for the software or hardware, the Contractor shall provide a backup computer system meeting the same Specifications within twenty-four (24) hours. At the completion of the project, all hardware and software shall be retained by the Contractor.

ITEM 423. Retaining Wall

The following Mechanical Stabilized Earth (MSE) Wall Systems are approved for this project:

Reinforced Earth Walls
The Reinforced Earth Company
1331 Airport Freeway, Suite 302
Euless, Texas 76040-4150
(817) 283-5503

Tensar Panel Wall
Tensar Earth Technologies, Inc.
5775-B Glen Ridge Dr. Ste. 450
Atlanta, Georgia 30328
(404) 250-1290

Retained Earth Wall
Foster Geotechnical
901 North Highway 77
Hillsboro, Texas 76645
(254) 580-9100

Strengthened Earth Walls
Hanson Concrete Products
3500 Maple Ave.
Dallas, Texas 75219
(214) 525-5877

Reinforced Soil Embankment Walls
Texas Welded Wire, Inc.
645 W. Hurst Blvd.
Hurst, Texas 76053
(817) 282-4560

VP Wall System
Valley Prestress Products, Inc.
P.O. Box 1367
Mission, Texas 78573
(956) 584-5701

Strengthened Soil Walls
Shaw Technologies, Inc.
P.O. Box 654
Colleyville, Texas 76034
(817) 427-0997

Tricon Retained Soil Walls
Tricon Precast, Inc.
15055 Henry Rd.
Houston, Texas 77060
(713) 931-9832

(*) SSL MSE Plus Wall System

REVISED
9-26-03

Strengthened Soil Walls
Shaw Technologies, Inc.
P.O. Box 654
Colleyville, Texas 76034
(817) 427-0997

Tricon Retained Soil Walls
Tricon Precast, Inc.
15055 Henry Rd.
Houston, Texas 77060
(713) 931-9832

(*) SSL MSE Plus Wall System
SSL,LLC
4740-E Scotts Valley Drive
Scotts Valley, Ca 95066
(831) 430-9340

(*) Use of this system is limited to 50,000 SF of wall per project and walls less than 25 feet in height and will be subject to monitoring in accordance with pertinent specifications.

The Contractor is advised that a coping and anchor slab will be required for the full length of the wall as shown on standard RW(TRF). In addition, if precast coping is used, ¾" chamfers will be required on all outside corners of the precast coping.

Backfill for Mechanical Stabilized Earth (MSE) Walls on this project shall be Type "A". Type "B" Backfill stabilized with five-(5) percent cement will not be permitted as an option.

Placement of embankment material behind MSE walls shall closely follow the placement of the MSE backfill. At no time shall the difference in elevation between the embankment material and the MSE backfill material exceed two feet. Completion of the embankment prior to construction of the retaining wall will not be allowed.

ITEM 425. Prestressed Concrete Structural Members

Where road closures or detours around structures are necessary to accomplish proposed work, the removal of existing structures and/or cutting of existing pavement will not be permitted until all precast and/or prestressed members for the proposed structure have been cast, tested and approved for use.

ITEM 427. Surface Finishes for Concrete

Finish color for Colored-Texturized Concrete shall be mesa beige. Pattern type shall be Ashlar Stone. Color and pattern shall be approved by the Engineer.

Surfaces finishes for concrete shall be provided as follows:

(1) Bridge overpass and underpass structures – surface area I, special architectural stain finish (color to be determined by the Engineer).
(2) Bridge waterway crossings and bridge class box culvert structures – surface area III, special architectural stain finish (color to be determined by the Engineer).
(3) Concrete traffic barrier/railing (roadway and bridge) and retaining wall coping – special architectural stain finish (color to be determined by the Engineer) to all exposed surfaces.

The surface finish for all proposed retaining walls shall be the Ashlar Stone Finish. Architectural Concrete Stain (color to be determined by the Engineer).

The Contractor shall pour and stain finish a 3' x 3' sample panel of the proposed retaining walls. The panel shall meet with the requirements of the plans and specifications and be approved by the Engineer before further retaining wall panels may be poured. The sample panel may be considered typical for all finishes. Any deviation of color, grade, or depth from the sample panel shall be grounds for rejection and it shall be removed and replaced as specified by the Engineer. The sample panel shall not be paid for, but shall be considered subsidiary to the various bid Items.

ITEM 430. Extending Concrete Structures

Old concrete shall be disposed of by hauling it off the project and out of sight from State highways to disposal sites arranged for by the Contractor and satisfactory to the Engineer.

ITEM 432. Riprap

All concrete riprap, except concrete that used on safety end treatments, shall be 4" thick unless otherwise shown on the plans.

ITEM 450. Railing

Metal beam guard fence terminal connectors are required.

ITEM 462. Concrete Box Culverts and Sewers

Joints in precast concrete box culverts shall be made using any of the methods specified in the Item 464, except mortar joints or rubber gasket joints.

The concrete box culvert shall be precast, except as noted on plans, to expedite handling of traffic.

Aggregate for cement stabilized backfill shall be clean sand or other suitable material and shall be subject to the approval of the Engineer.

Highway: US 281
SSL,LLC
4740-E Scotts Valley Drive
Scotts Valley, Ca 95066
(831) 430-9340

(*) Use of this system is limited to 50,000 SF of wall per project and walls less than 25 feet in height and will be subject to monitoring in accordance with pertinent specifications.

The Contractor is advised that a coping and anchor slab will be required for the full length of the wall as shown on standard RW(TRF). In addition, if precast coping is used, ¾" chamfers will be required on all outside corners of the precast coping.

Backfill for Mechanical Stabilized Earth (MSE) Walls on this project shall be Type "A". Type "B" Backfill stabilized with five-(5) percent cement will not be permitted as an option.

Placement of embankment material behind MSE walls shall closely follow the placement of the MSE backfill. At no time shall the difference in elevation between the embankment material and the MSE backfill material exceed two feet. Completion of the embankment prior to construction of the retaining wall will not be allowed.

ITEM 425. Prestressed Concrete Structural Members

Where road closures or detours around structures are necessary to accomplish proposed work, the removal of existing structures and/or cutting of existing pavement will not be permitted until all precast and/or prestressed members for the proposed structure have been cast, tested and approved for use.

ITEM 427. Surface Finishes for Concrete

Finish color for Colored-Texturized Concrete shall be mesa beige. Pattern type shall be Ashlar Stone. Color and pattern shall be approved by the Engineer.

Surfaces finishes for concrete shall be provided as follows:

(1) Bridge overpass and underpass structures – surface area I, special architectural stain finish (color to be determined by the Engineer).
(2) Bridge waterway crossings and bridge class box culvert structures – surface area III, special architectural stain finish (color to be determined by the Engineer).
(3) Concrete traffic barrier/railing (roadway and bridge) and retaining wall coping – special architectural stain finish (color to be determined by the Engineer) to all exposed surfaces.

The surface finish for all proposed retaining walls shall be the Ashlar Stone Finish. Architectural Concrete Stain (color to be determined by the Engineer).

Project Number: MG 2003 (689) **Sheet** 22 G

County: Hidalgo **Control:** 0255-08-091

Highway: US 281

The Contractor shall pour and stain finish a 3' x 3' sample panel of the proposed retaining walls. The panel shall meet with the requirements of the plans and specifications and be approved by the Engineer before further retaining wall panels may be poured. The sample panel may be considered typical for all finishes. Any deviation of color, grade, or depth from the sample panel shall be grounds for rejection and it shall be removed and replaced as specified by the Engineer. The sample panel shall not be paid for, but shall be considered subsidiary to the various bid Items.

ITEM 430. Extending Concrete Structures

Old concrete shall be disposed of by hauling it off the project and out of sight from State highways to disposal sites arranged for by the Contractor and satisfactory to the Engineer.

ITEM 432. Riprap

All concrete riprap, except concrete that used on safety end treatments, shall be 4" thick unless otherwise shown on the plans.

ITEM 450. Railing

Metal beam guard fence terminal connectors are required.

ITEM 462. Concrete Box Culverts and Sewers

Joints in precast concrete box culverts shall be made using any of the methods specified in the Item 464, except mortar joints or rubber gasket joints.

The concrete box culvert shall be precast, except as noted on plans, to expedite handling of traffic.
Aggregate for cement stabilized backfill shall be clean sand or other suitable material and shall be subject to the approval of the Engineer.

On single and/or multiple box culvert construction, the Contractor shall work expeditiously to complete all work on the structure including placement of pipe runners, required safety treatment or railing, backfilling, etc. The portion of roadway which is not handling traffic due to the culvert construction will not be opened to traffic until all work as described above and shown on the TCP has been completed.

ITEM 464. Reinforced Concrete Pipe

Tongue and groove pipe will be required for installations where part of the structure may protrude into the Lime Treated Subgrade.

REVISED
9-26-03

On single and/or multiple box culvert construction, the Contractor shall work expeditiously to complete all work on the structure including placement of pipe runners, required safety treatment or railing, backfilling, etc. The portion of roadway which is not handling traffic due to the culvert construction will not be opened to traffic until all work as described above and shown on the TCP has been completed.

ITEM 464. Reinforced Concrete Pipe

Tongue and groove pipe will be required for installations where part of the structure may protrude into the Lime Treated Subgrade.

The 4-foot depth restriction for heavy equipment passage over pipe structures is voided. The Contractor will be responsible for any construction damage to these facilities.

Cold Applied, Plastic Asphalt Sewer Joint Compound may be used on this project.

ITEM 467. Safety End Treatment

All Type II SET's shall have riprap aprons as shown on the plans. The contractor may submit an alternate precast SET design for approval by the Engineer.

ITEM 471. Frames, Grates, Rings and Covers

All grates will be welded to the frames in a manner satisfactory to the Engineer.

All manholes located on paved surfaces will be constructed with a cover of the type that will enable it to be bolted to the ring.

ITEM 502. Barricades, Signs and Traffic Handling

The Traffic Control Plan for this project shall be as shown in the plans, as detailed on the "Barricade and Construction Standard" Sheets and as provided for in the "Texas Manual on Uniform Traffic Control Devices".

Shadow vehicles equipped with Truck-Mounted Attenuators are required, as shown on Traffic Control Plan (TCP) standards. The Contractor shall provide to the Engineer a letter certifying that all Truck-Mounted Attenuators (TMA) used on this project that were purchased on or after October 1, 1998, have been found to be crashworthy using the criteria outlined in the National Cooperative Highway Research Program (NCHRP) Report 350. If the TMA was purchased prior to October 1, 1998, a letter certifying crashworthiness using the criteria outlined in either NCHRP Reports 230 or 350 shall be provided to the Engineer.

Project Number: MG 2003 (689) **Sheet** 22 H

County: Hidalgo **Control:** 0255-08-091

Highway: US 281

The Contractor shall replace/relocate all regulatory signs removed due to construction operations with a same sign on fixed support(s) immediately upon its removal. The Contractor will first obtain project Engineer approval before removing any regulatory roadway sign. Required flaggers are to be available to direct traffic during sign intermediate down time.

The Contractor shall also be required to relocate any Directional Sign Assemblies removed during construction operations immediately upon their removal.

These signs shall be relocated to a location in accordance with the Latest Version of the "Texas Manual on Uniform Traffic Control Devices". In no case will a sign be removed without a replaceable sign and support(s) being readily available and a location established. Removal and relocation of these signs required for traffic control will not be paid for directly, but shall be considered subsidiary to Item 502.

Plastic drums shall be used in accordance with the plans and manufacturer's recommendations as approved by the Engineer.

Threaded sleeves shall not be used for lifting.

ITEM 504. Facilities for Field Office and Laboratory

The Contractor shall furnish one air-conditioned Field Office (TY E) at a location satisfactory to the Engineer. This building shall not be less than 12 feet by 60 feet and 8 feet high or an approved equivalent and shall not have less than four glass windows and one door. (2) desks, (4) chairs, (2) filing cabinets, and a table and workbench, each 3 feet wide and 6 feet long, shall be provided. In addition, the Contractor shall provide, at his expense and for the Department's use, a fully operational cellular phone, fax machine, regular telephone, (separate) copy machine capable of copying 11"x17" sheets, and indoor plumbing facilities.

The Contractor shall provide at his expense and for the Department's use two (2) laptop computer systems for the Project Engineer and shall be subsidiary to the various bid Items.

The following software and hardware listed below or approved equal or better shall be provided:

Software: 2 ea. MS-DOS, 2 ea. Windows XP, 2 ea. Microsoft Office XP, and 2 ea. Antivirus Software. All software shall be the most current version available on the market or what is currently being used by TxDOT.

Hardware: 2 ea. Pentium 4 with a 2.0 GHz, w/512 Mb ram, 60.0 Gigabyte hard drive, 24x CD RW, 56k v.90 Fax Modem, 3.5 inch 1.44 Mb floppy drive, HP 812c Inkjet

The 4-foot depth restriction for heavy equipment passage over pipe structures is voided. The Contractor will be responsible for any construction damage to these facilities.

Cold Applied, Plastic Asphalt Sewer Joint Compound may be used on this project.

ITEM 467. Safety End Treatment

All Type II SET's shall have riprap aprons as shown on the plans. The contractor may submit an alternate precast SET design for approval by the Engineer.

ITEM 471. Frames, Grates, Rings and Covers

All grates will be welded to the frames in a manner satisfactory to the Engineer.

All manholes located on paved surfaces will be constructed with a cover of the type that will enable it to be bolted to the ring.

ITEM 502. Barricades, Signs and Traffic Handling

The Traffic Control Plan for this project shall be as shown in the plans, as detailed on the "Barricade and Construction Standard" Sheets and as provided for in the "Texas Manual on Uniform Traffic Control Devices".

Shadow vehicles equipped with Truck-Mounted Attenuators are required, as shown on Traffic Control Plan (TCP) standards. The Contractor shall provide to the Engineer a letter certifying that all Truck-Mounted Attenuators (TMA) used on this project that were purchased on or after October 1, 1998, have been found to be crashworthy using the criteria outlined in the National Cooperative Highway Research Program (NCHRP) Report 350. If the TMA was purchased prior to October 1, 1998, a letter certifying crashworthiness using the criteria outlined in either NCHRP Reports 230 or 350 shall be provided to the Engineer.

The Contractor shall replace/relocate all regulatory signs removed due to construction operations with a same sign on fixed support(s) immediately upon its removal. The Contractor will first obtain project Engineer approval before removing any regulatory roadway sign. Required flaggers are to be available to direct traffic during sign intermediate down time.

The Contractor shall also be required to relocate any Directional Sign Assemblies removed during construction operations immediately upon their removal.

These signs shall be relocated to a location in accordance with the Latest Version of the "Texas Manual on Uniform Traffic Control Devices". In no case will a sign be removed without a replaceable sign and support(s) being readily available and a location established. Removal and

Project Number: MG 2003 (689) **Sheet** 22H

County: Hidalgo **Control:** 0255-08-091

Highway: US 281

relocation of these signs required for traffic control will not be paid for directly, but shall be considered subsidiary to Item 502.

Plastic drums shall be used in accordance with the plans and manufacturer's recommendations as approved by the Engineer.

Threaded sleeves shall not be used for lifting.

ITEM 504. Facilities for Field Office and Laboratory

The Contractor shall furnish one air-conditioned Field Office (TY E) at a location satisfactory to the Engineer. This building shall not be less than 12 feet by 60 feet and 8 feet high or an approved equivalent and shall not have less than four glass windows and one door. (2) desks, (4) chairs, (2) filing cabinets, and a table and workbench, each 3 feet wide and 6 feet long, shall be provided. In addition, the Contractor shall provide, at his expense and for the Department's use, a fully operational cellular phone, fax machine, regular telephone, (separate) copy machine capable of copying 11"x17" sheets, and indoor plumbing facilities.

The Contractor shall provide at his expense and for the Department's use two (3) laptop computer systems for the Project Engineer and shall be subsidiary to the various bid Items.

The following software and hardware listed below or approved equal or better shall be provided:

⚠1

Min Software: 3 ea. MS-DOS, 3 ea. Windows XP, 3 ea. Microsoft Office XP, and 3 ea. Antivirus Software. All software shall be the most current version available on the market or what is currently being used by TxDOT.

Min Hardware: 3 ea. Pentium 4 with a 2.0 GHz, w/512 Mb ram, 60.0 Gigabyte hard drive, 24x CD RW, 56k v.90 Fax Modem, 3.5 inch 1.44 Mb floppy drive, HP 812c Inkjet printer or equivalent and all incidentals necessary for hardware connections and operations of the system.

Internet Access: High speed internet access via Internet Service Provider (DSL, Broadband Cable, Direct Satellite, Broadband Wireless network, etc.), or locally available Dedicated Network circuit (T1, DS1, Contractors Ethernet LAN, etc.) with any incidental access software and cabling.

The Contractor shall deliver the specified software and hardware to be used by the Department to the location specified by the Project Engineer prior to the commencement of any work on the project. Internet access equipment shall be installed and energized at field office within 30 days of beginning work. The Contractor shall provide carrying cases for both the laptop computer and printer. The Contractor shall purchase and provide to the Department updates to the software as required to remain compatible with TxDOT's currently used software. In the case of needed

⚠1 REVISED 9-26-03

printer or equivalent and all incidentals necessary for hardware connections and operations of the system.

The Contractor shall purchase and deliver the specified software and hardware to be used by the Department to the location specified by the Project Engineer prior to the commencement of any work on the project. The Contractor shall provide carrying cases for both the laptop computer and printer. The Contractor shall purchase and provide to the Department updates to the software as required to remain compatible with TxDOT's currently used software. In the case of needed repairs for the software or hardware, the Contractor shall provide a backup computer system meeting the same Specifications within twenty-four (24) hours. At the completion of the project, all hardware and software shall be retained by the Contractor.

The Contractor shall furnish 120-240 volt single-phase electricity to the field office. The Contractor shall pay for the electricity and sewer installation service charges.

Electricity and plumbing provided to the field office needs to be connected within 30 days of beginning work.

The Contractor will furnish a Type D Structure (Asphalt Mix Laboratory) for the Engineer, meeting the requirements of Item 504. The Contractor is responsible for locating this laboratory at the plant site. The laboratory shall be available to the Engineer prior to the paving operations. Building and its contents will be subject to the approval of the Engineer. The building will be not less than 12 feet by 32 feet and 8 feet high. The building will be partitioned into a minimum of two rooms, each room furnished with an exterior door and a door between rooms. All doors will have a minimum width of 36 inches and 80 inches high. All exterior openings will be secured with burglar bars. Adequate parking area will be provided for at least two full size vehicles.

Storage room:

One room will be used for sample storage and will be 9 ft. 12 ft. It will have counters 24 inches in width and 30 inches high placed along the walls. The storage room will have a minimum total counter length of 13 ft. The room will be equipped with 1-wall light switch, 1-ceiling light and 1-20 amp-110 volt outlet.

Laboratory room:

The other room of this building will be used as a laboratory and will include access to a bathroom facility from the interior. The laboratory and bathroom facility will have the walls, ceiling and floor insulated such that the air temperature can be maintained at 76 degrees Fahrenheit at all times. The Contractor is responsible for maintaining all mechanical, electrical and plumbing facilities at all times. The top of the workbench shall not be less than 36 inches by

60 inches and will be constructed of expanded metal reinforced to support required testing equipment. A fresh air intake shall be located so solvent vapors are drawn away from the workers and prevent removal of air from the temperature-controlled space. The ovens used to dry aggregate, cure, and ignite asphalt mixes will be vented upward to the outside. The Contractor will connect the vent ducts to the ovens. The laboratory will be furnished with work counters measuring 36 inches in width and 36 inches in height along the walls. The laboratory will have a minimum total work counter length of 20 ft. A desk measuring 36 inches by 6 ft will be furnished. The laboratory portion will have two windows. A laboratory sink measuring 24 inches by 30 inches and 12 inches deep will be provided. The laboratory portion will be equipped with at least seven 20 amp-110 volt outlets, four (4) 30 amp-220 volt outlets, Two light switches on the wall and fluorescent ceiling lights capable of providing lighting meeting ANSI standards for industrial lighting. All outlets will be compatible with the electrical requirements of the equipment to be used for testing.

The Contractor shall provide for the Department's use one (1) desktop computer system to be placed in the Engineer's laboratory for asphalt mix testing. The following software and hardware listed below or approved equal shall be provided:

Software: 1 ea. MS-DOS, 1 ea. Windows XP, 1 ea. Microsoft Office XP, Email access to TxDOT's Intranet system, and 1 ea. Antivirus Software. All software shall be the most current version available on the market or what is currently being used by TxDOT.

Hardware: 1 ea. Pentium 4 with a 1.8 GHz-M processor, 2GB RDRAM memory, 20GB Ultra ATA/100 Hard Drive, 17" SVGA Color Monitor, 128 MB NVIDIA GeForce4 Graphics Card, 56k v.90 Fax Modem, 3.5 inch 1.44 Mb floppy drive, CD-RW, Ethernet connection, keyboard, serial mouse and pad, flatbed scanner/copier with OCR software,HP 812c Inkjet printer or equivalent and all incidentals necessary for hardware connections and operations of the system.

The Contractor shall deliver the specified software and hardware to be used by the Department prior to the commencement of any work on the project. The Contractor shall purchase and provide to the Department updates to the software as required to remain compatible with TxDOT's currently used software. In the case of needed repairs for the software or hardware, the Contractor shall provide a backup computer system meeting the same Specifications within twenty-four (24) hours. At the completion of the project, all hardware and software shall be returned to the Contractor.

The Contractor will provide and pay for the electrical, other utilities, telephone installations and the monthly service charges, and the email monthly access charges. The telephone line provided will be separate from other lines.

repairs for the software, ~~or~~ hardware, or Internet access, the Contractor shall provide a backup computer system meeting the same Specifications within twenty-four (24) hours. At the completion of the project, all hardware and software shall be retained by the Contractor.

The Contractor shall furnish 120-240 volt single-phase electricity to the field office. The Contractor shall pay for the electricity and sewer installation service charges.

Electricity and plumbing provided to the field office needs to be connected within 30 days of beginning work.

The Contractor will furnish a Type D Structure (Asphalt Mix Laboratory) for the Engineer, meeting the requirements of Item 504. The Contractor is responsible for locating this laboratory at the plant site. The laboratory shall be available to the Engineer prior to the paving operations. Building and its contents will be subject to the approval of the Engineer. The building will be not less than 12 feet by 32 feet and 8 feet high. The building will be partitioned into a minimum of two rooms, each room furnished with an exterior door and a door between rooms. All doors will have a minimum width of 36 inches and 80 inches high. All exterior openings will be secured with burglar bars. Adequate parking area will be provided for at least two full size vehicles.

Storage room:

One room will be used for sample storage and will be 9 ft. 12 ft. It will have counters 24 inches in width and 30 inches high placed along the walls. The storage room will have a minimum total counter length of 13 ft. The room will be equipped with 1-wall light switch, 1-ceiling light and 1-20 amp-110 volt outlet.

Laboratory room:

The other room of this building will be used as a laboratory and will include access to a bathroom facility from the interior. The laboratory and bathroom facility will have the walls, ceiling and floor insulated such that the air temperature can be maintained at 76 degrees

Fahrenheit at all times. The Contractor is responsible for maintaining all mechanical, electrical and plumbing facilities at all times. The top of the workbench shall not be less than 36 inches by 60 inches and will be constructed of expanded metal reinforced to support required testing equipment. A fresh air intake shall be located so solvent vapors are drawn away from the workers and prevent removal of air from the temperature-controlled space. The ovens used to dry aggregate, cure, and ignite asphalt mixes will be vented upward to the outside. The Contractor will connect the vent ducts to the ovens. The laboratory will be furnished with work counters measuring 36 inches in width and 36 inches in height along the walls. The laboratory will have a minimum total work counter length of 20 ft. A desk measuring 36 inches by 6 ft will be furnished. The laboratory portion will have two windows. A laboratory sink measuring 24

Project Number: MG 2003 (689) Sheet 22S

County: Hidalgo **Control:** 0255-08-091

Highway: US 281

inches by 30 inches and 12 inches deep will be provided. The laboratory portion will be equipped with at least seven 20 amp-110 volt outlets, four (4) 30 amp-220 volt outlets, Two light switches on the wall and fluorescent ceiling lights capable of providing lighting meeting ANSI standards for industrial lighting. All outlets will be compatible with the electrical requirements of the equipment to be used for testing.

The Contractor shall provide for the Department's use one (1) desktop computer system to be placed in the Engineer's laboratory for asphalt mix testing. The following software and hardware listed below or approved equal shall be provided:

Software: 1 ea. MS-DOS, 1 ea. Windows XP, 1 ea. Microsoft Office XP, Email access to TxDOT's Intranet system, and 1 ea. Antivirus Software. All software shall be the most current version available on the market or what is currently being used by TxDOT.

Hardware: 1 ea. Pentium 4 with a 1.8 GHz-M processor, 2GB RDRAM memory, 20GB Ultra ATA/100 Hard Drive, 17" SVGA Color Monitor, 128 MB NVIDIA GeForce4 Graphics Card, 56k v.90 Fax Modem, 3.5 inch 1.44 Mb floppy drive, CD-RW, Ethernet connection, keyboard, serial mouse and pad, flatbed scanner/copier with OCR software,HP 812c Inkjet printer or equivalent and all incidentals necessary for hardware connections and operations of the system.

The Contractor shall deliver the specified software and hardware to be used by the Department prior to the commencement of any work on the project. The Contractor shall purchase and provide to the Department updates to the software as required to remain compatible with TxDOT's currently used software. In the case of needed repairs for the software or hardware, the Contractor shall provide a backup computer system meeting the same Specifications within twenty-four (24) hours. At the completion of the project, all hardware and software shall be returned to the Contractor.

The Contractor will provide and pay for the electrical, other utilities, telephone installations and the monthly service charges, and the email monthly access charges. The telephone line provided will be separate from other lines.

ITEM 508. Constructing Detours

After the detour is no longer needed for traffic, the materials, including base, shall be removed and utilized as directed by the Engineer.

Flexible Base, prime coat, and Asphaltic Concrete Pavement used for detours shall meet the requirements of Items 247, 310, and 3146 respectively, except for measurement and payment.

REVISED
9-26-03

ITEM 508. Constructing Detours

After the detour is no longer needed for traffic, the materials, including base, shall be removed and utilized as directed by the Engineer.

Flexible Base, prime coat, and Asphaltic Concrete Pavement used for detours shall meet the requirements of Items 247, 310, and 3146 respectively, except for measurement and payment.

ITEM 529. Concrete Curb, Gutter and Combined Curb and Gutter

Membrane curing, Type 2, will be required.

In the event that an extrusion machine is not used, application of mortar paste to accurately shape the face of the concrete curb or curb and gutter shall normally be placed within 15 minutes and not later than 25 minutes after the concrete is placed in the forms.

The entrained air requirement shall not apply to this Item.

Before final acceptance of the project, discoloration caused by tire marks, mud, asphalt, paint or other similar material shall be removed by any method satisfactory to the Engineer to achieve a uniform color and texture of the finished surface exposed to view.

ITEM 530. Driveways and Turnouts

Flexible Base shall meet the requirements of Item 247, prime coat shall meet the requirements of Item 310, and Asphaltic Concrete Pavement shall meet the requirements of Item 3146, except for measurement and payment.

Flexible Base used to construct private and/or commercial driveways will not require lime admixture.

Daily testing requirements for Hot Mix Asphaltic Concrete Pavements for drives, commercial entrances and/or turnouts may be waived by the Engineer.

The rate of prime shall be 0.10 Gal/SY for private and/or commercial driveways and 0.20 Gal/SY for public turnouts.

The concrete driveway work to be done on this project consists of reconnecting existing concrete driveways.

ITEM 531. Sidewalks

Project Number: MG 2003 (689) **Sheet** 22J

County: Hidalgo **Control:** 0255-08-091

Highway: US 281

Concrete sidewalks on this project shall be 4 in depth. Concrete reinforcement shall be 6" x 6" - w2.9 x w2.9 (no. 6 gauge) welded wire fabric or #3 bars at 18" c.c. Unless otherwise shown on the plans.

ITEM 540. Metal Beam Guard Fence

The optional terminal anchor post with the terminal connector will be required as shown on the Metal Beam Guard Fence Standard.

ITEM 542. Removing Metal Beam Guard Fence

Contractor shall deliver all salvageable metal beam guard fence materials to the TXDOT maintenance yard located in Pharr, Texas.

ITEM 560. Mailbox Assemblies

Posts for single and/or multiple mailbox installations shall be driven unless otherwise approved by the Engineer. Mailbox post length to be used will be determined by the Engineer during project construction.

New mailbox winged channel supports should be marked with a vertical type 2 marker. Reflective tape, which simulates a vertical Type 2 Marker should be used on all steel tube supports. The tape shall meet Departmental Materials Specification D-9-8600 and may be purchased on the open market, or may be picked up at the district warehouse and there will be no shipping and handling charges. The tape prices are as follows:

DHT No.	Tape Description	Unit Price
3936	Reflective Tape 2 ¾" x 2 ¾"	$0.18 ea.

ITEM 610. Roadway Illumination Assemblies

The Contractor shall provide shop drawings for luminaire poles in accordance with this Item and Item 441. An Engineer licensed in the State of Texas shall seal the shop drawings.

In addition to the requirements for lamps shown on the RID(3), High Pressure Sodium lamps for this project shall meet ANSI C78 requirements and shall be the type that extinguishes at the end of usable lamp life and remains extinguished without cycling. 400 watt lamps shall contain less than 4.0 MG of mercury and 250 watt lamps shall contain 3.0 MG of mercury. Lamps shall be lead free and shall pass the Federal Toxic Characteristic Leachate Procedure (TCLP). Lamp examples: Osram-Sylvania LU400/ECO Plus.

ITEM 529. Concrete Curb, Gutter and Combined Curb and Gutter

Membrane curing, Type 2, will be required.

In the event that an extrusion machine is not used, application of mortar paste to accurately shape the face of the concrete curb or curb and gutter shall normally be placed within 15 minutes and not later than 25 minutes after the concrete is placed in the forms.

The entrained air requirement shall not apply to this Item.

Before final acceptance of the project, discoloration caused by tire marks, mud, asphalt, paint or other similar material shall be removed by any method satisfactory to the Engineer to achieve a uniform color and texture of the finished surface exposed to view.

ITEM 530. Driveways and Turnouts

Flexible Base shall meet the requirements of Item 247, prime coat shall meet the requirements of Item 310, and Asphaltic Concrete Pavement shall meet the requirements of Item 3146, except for measurement and payment.

Flexible Base used to construct private and/or commercial driveways will not require lime admixture.

Daily testing requirements for Hot Mix Asphaltic Concrete Pavements for drives, commercial entrances and/or turnouts may be waived by the Engineer.

The rate of prime shall be 0.10 Gal/SY for private and/or commercial driveways and 0.20 Gal/SY for public turnouts.

The concrete driveway work to be done on this project consists of reconnecting existing concrete driveways.

ITEM 531. Sidewalks

Concrete sidewalks on this project shall be 4 in depth. Concrete reinforcement shall be 6" x 6" - w2.9 x w2.9 (no. 6 gauge) welded wire fabric or #3 bars at 18" c.c. Unless otherwise shown on the plans.

ITEM 540. Metal Beam Guard Fence

The optional terminal anchor post with the terminal connector will be required as shown on the Metal Beam Guard Fence Standard.

Project Number: MG 2003 (689) **Sheet** 22T

County: Hidalgo **Control:** 0255-08-091

Highway: US 281

ITEM 542. Removing Metal Beam Guard Fence

Contractor shall deliver all salvageable metal beam guard fence materials to the TXDOT maintenance yard located in Pharr, Texas.

ITEM 560. Mailbox Assemblies

Posts for single and/or multiple mailbox installations shall be driven unless otherwise approved by the Engineer. Mailbox post length to be used will be determined by the Engineer during project construction.

New mailbox winged channel supports should be marked with a vertical type 2 marker. Reflective tape, which simulates a vertical Type 2 Marker should be used on all steel tube supports. The tape shall meet Departmental Materials Specification D-9-8600 and may be purchased on the open market, or may be picked up at the district warehouse and there will be no shipping and handling charges. The tape prices are as follows:

DHT No.	Tape Description	Unit Price
3936	Reflective Tape 2 ¾" x 2 ¾"	$0.18 ea.

ITEM 610. Roadway Illumination Assemblies

The Contractor shall provide shop drawings for luminaire poles in accordance with this Item and Item 441. An Engineer licensed in the State of Texas shall seal the shop drawings.

In addition to the requirements for lamps shown on the RID(3), High Pressure Sodium lamps for this project shall meet ANSI C78 requirements and shall be the type that extinguishes at the end of usable lamp life and remains extinguished without cycling. 400 watt lamps shall contain less than 4.0 MG of mercury and 250 watt lamps shall contain 3.0 MG of mercury. Lamps shall be lead free and shall pass the Federal Toxic Characteristic Leachate Procedure (TCLP). Lamp examples: Osram-Sylvania LU400/ECO Plus.

Special Provision 610-002(English) allows for the use of pre-approved shop drawings for certain illumination poles. The following shop drawings have been pre-approved at the time of letting.

Valmont English DWG. No. DB00388 Sheet 1 of 2, Revised 6/24/02,
Valmont English DWG. No. DB00388 Sheet 2 of 2, Revised 6/24/02.
Union Metal DWG. No. T1406-B3 Sheet 1 of 2, Revised 11/08/02
Union Metal DWG. No. T1406-B3 Sheet 2 of 2, Revised 1/14/00
Union Metal DWG. No. T1406-B4 Sheet 1 of 2, Revised 11/08/02
Union Metal DWG. No. T1406-B4 Sheet 2 of 2, Drawn 1/26/00

REVISED
9-26-03

Special Provision 610-002(English) allows for the use of pre-approved shop drawings for certain illumination poles. The following shop drawings have been pre-approved at the time of letting.

Valmont English DWG. No. DB00388 Sheet 1 of 2, Revised 6/24/02,
Valmont English DWG. No. DB00388 Sheet 2 of 2, Revised 6/24/02.
Union Metal DWG. No. T1406-B3 Sheet 1 of 2, Revised 11/08/02
Union Metal DWG. No. T1406-B3 Sheet 2 of 2, Revised 1/14/00
Union Metal DWG. No. T1406-B4 Sheet 1 of 2, Revised 11/08/02
Union Metal DWG. No. T1406-B4 Sheet 2 of 2, Drawn 1/26/00
Union Metal DWG. No. T1408-B2 Sheet 1 of 2, Revised 11/08/02
Union Metal DWG. No. T1408-B2 Sheet 2 of 2, Drawn 1/11/00
Union Metal DWG. No. A2A and A2D, Revised 11/08/02
Union Metal DWG. No. AA9 and AA2A, Revised 11/08/02
Union Metal DWG. No. AA8 and AA3A, Drawing Not Dated

The Engineer may allow other fabricator's shop drawings and updated (newer revision date) standard shop drawings to be used on this project that have been approved since the project letting date provided that the standard shop drawings can be properly identified by a letter of approval from the Traffic Operations Division.

All luminaries on traffic signal poles shall rated for 120 vac.

Luminaries shown on the proposed installation layout sheets may be shown at an angle for clarity. The Contractor shall install all luminaries shown perpendicular to the main roadway under construction.

Luminaries installed on traffic signal poles will not be paid for directly, but shall be considered subsidiary to the various bid Items of the project.

All luminarie poles mounted on Single Slope Concrete Barriers (SSCB) shall use 42 inch anchor bolts in lieu of the varying lengths of anchor bolts shown on the table of Standard Sheet SSCB(4)-00.

Item 614, High Mast Illumination Assemblies

The following Shop Drawings for High Mast Illumination Assemblies are pre-approved in accordance with Item 614, special provision 001. Copies of the Standard Shop Drawings are on file with Traffic Operations Division, Bridge Division and the Materials Section of the Construction Division. Additional Shop Drawings for High Mast Illumination Assemblies built in accordance with these drawings are not required. Submit additional Shop Drawings for High Mast Illumination Assemblies not covered by these pre-approved Standard Shop Drawings,

Project Number: MG 2003 (689) **Sheet** 22K

County: Hidalgo **Control:** 0255-08-091

Highway: US 281

Approved Standard Shop Drawings

Traffic Control Devices, Inc. #E-90000-01 Sheets 1 through 10, Dated 3-19-2001.

Brookfield Fabricating Corp. Std. Dwg. Sheets 1 through 4, Revised 4-08-1996.

In addition to the cord connectors for the Type W power cord specified on the HMID Standard Sheet for connectors in the base of the High Mast Pole, the following will also be approved:
Arrow Hart pin and sleeve watertight connectors UL listed,
Catalog Numbers AH330C7W and AH330P7W.
Bryant watertight pin and sleeve connectors UL listed, Catalog Numbers 330C6W and 330P7W.
Hubbell pin and sleeve connectors UL listed, Catalog Numbers HBL330C7W and HBL330P7W.

The Contractor shall provide Shop Drawings for High Mast Illumination Assemblies in accordance with Item 614 and Item 441. An Engineer licensed in the State of Texas shall seal the Shop Drawings.

High Mast Illumination fixture housing shall be constructed separate from the fixture reflector. High Mast fixtures shall be natural aluminum or shall be painted gray.

In addition to the requirements for lamps shown on HMID (9)-96, high pressure sodium lamps for this project shall meet ANSI C78 requirements and shall be the type that extinguishes at the end of usable lamp life and remains extinguished without cycling. 400 watt lamps shall contain less than 4.0mg of mercury. 250 watt lamps shall contain less than 3.0mg of mercury. Lamps shall be lead free. Lamps shall pass the Federal Toxic Characteristic Leachate Procedure (TCLP). Lamp examples: Osram-Sylvania LU400/ECO Plus.

ITEM 618. Conduit

All conduit ends in pole bases, controllers and ground boxes shall be plugged with 4 to 6 inches of polyurethane sealant or its equivalent after cables are in place.

Conduit shall be placed in a straight line not to exceed 2.0 feet in any direction. The depth of the conduit shall be 2.0 feet except when crossing a roadway where the depth shall not be more than 3.0 feet nor less than 1.0 foot below the bottom of the base material in the roadway when placed by the jacking or boring method. Any evidence of damage to the roadway during the jacking or boring operation shall be sufficient grounds to stop the method being used.

Conduit runs under paved roadways or driveways shall be jacked or bored and then pushed across. At these locations, galvanized rigid metal may be used. All other runs shall be made by trenching. The contractor may trench across existing pavement which will either be removed, reconstructed or overlayed with new pavement.

Union Metal DWG. No. T1408-B2 Sheet 1 of 2, Revised 11/08/02
Union Metal DWG. No. T1408-B2 Sheet 2 of 2, Drawn 1/11/00
Union Metal DWG. No. A2A and A2D, Revised 11/08/02
Union Metal DWG. No. AA9 and AA2A, Revised 11/08/02
Union Metal DWG. No. AA8 and AA3A, Drawing Not Dated

The Engineer may allow other fabricator's shop drawings and updated (newer revision date) standard shop drawings to be used on this project that have been approved since the project letting date provided that the standard shop drawings can be properly identified by a letter of approval from the Traffic Operations Division.

All luminaries on traffic signal poles shall rated for 120 vac.

Luminaries shown on the proposed installation layout sheets may be shown at an angle for clarity. The Contractor shall install all luminaries shown perpendicular to the main roadway under construction.

Luminaries installed on traffic signal poles will not be paid for directly, but shall be considered subsidiary to the various bid Items of the project.

All luminarie poles mounted on Single Slope Concrete Barriers (SSCB) shall use 42 inch anchor bolts in lieu of the varying lengths of anchor bolts shown on the table of Standard Sheet SSCB(4)-00.

Item 614, High Mast Illumination Assemblies

The following Shop Drawings for High Mast Illumination Assemblies are pre-approved in accordance with Item 614, special provision 001. Copies of the Standard Shop Drawings are on file with Traffic Operations Division, Bridge Division and the Materials Section of the Construction Division. Additional Shop Drawings for High Mast Illumination Assemblies built in accordance with these drawings are not required. Submit additional Shop Drawings for High Mast Illumination Assemblies not covered by these pre-approved Standard Shop Drawings,

Approved Standard Shop Drawings

Traffic Control Devices, Inc. #E-90000-01 Sheets 1 through 10, Dated 3-19-2001.

Brookfield Fabricating Corp. Std. Dwg. Sheets 1 through 4, Revised 4-08-1996.

In addition to the cord connectors for the Type W power cord specified on the HMID Standard Sheet for connectors in the base of the High Mast Pole, the following will also be approved: Arrow Hart pin and sleeve watertight connectors UL listed,

Project Number: MG 2003 (689) Sheet 22K

County: Hidalgo **Control:** 0255-08-091

Highway: US 281

Catalog Numbers AH330C7W and AH330P7W.
Bryant watertight pin and sleeve connectors UL listed, Catalog Numbers 330C6W and 330P7W.
Hubbell pin and sleeve connectors UL listed, Catalog Numbers HBL330C7W and HBL330P7W.

The Contractor shall provide Shop Drawings for High Mast Illumination Assemblies in accordance with Item 614 and Item 441. An Engineer licensed in the State of Texas shall seal the Shop Drawings.

High Mast Illumination fixture housing shall be constructed separate from the fixture reflector. High Mast fixtures shall be natural aluminum or shall be painted gray.

In addition to the requirements for lamps shown on HMID (9)-96, high pressure sodium lamps for this project shall meet ANSI C78 requirements and shall be the type that extinguishes at the end of usable lamp life and remains extinguished without cycling. 400 watt lamps shall contain less than 4.0mg of mercury. 250 watt lamps shall contain less than 3.0mg of mercury. Lamps shall be lead free. Lamps shall pass the Federal Toxic Characteristic Leachate Procedure (TCLP). Lamp examples: Osram-Sylvania LU400/ECO Plus.

ITEM 618. Conduit

All conduit ends in pole bases, controllers and ground boxes shall be plugged with 4 to 6 inches of polyurethane sealant or its equivalent after cables are in place.

Conduit shall be placed in a straight line not to exceed 2.0 feet in any direction. The depth of the conduit shall be 2.0 feet except when crossing a roadway where the depth shall not be more than 3.0 feet nor less than 1.0 foot below the bottom of the base material in the roadway when placed by the jacking or boring method. Any evidence of damage to the roadway during the jacking or boring operation shall be sufficient grounds to stop the method being used.

Conduit runs under paved roadways or driveways shall be jacked or bored and then pushed across. At these locations, galvanized rigid metal may be used. All other runs shall be made by trenching. The contractor may trench across existing pavement which will either be removed, reconstructed or overlayed with new pavement.

Trenches for conduit runs shall be a minimum 2 feet deep and 4 inches wide. The conduit shall be placed on a 2-inch sand cushion and then backfilled with a minimum of 6 inches sand fill. The remainder of the trench shall be backfilled with flexible base, soil or two-sack concrete as required by location of conduit on the project or as directed by the engineer. The top 3 inches shall match the existing surface material.

PVC conduit systems that snap or lock together without glue that are designed and UL listed to be used for bored PVDC electrical conduit applications will be allowed for bored PVC schedule

REVISED
9-26-03

Trenches for conduit runs shall be a minimum 2 feet deep and 4 inches wide. The conduit shall be placed on a 2-inch sand cushion and then backfilled with a minimum of 6 inches sand fill. The remainder of the trench shall be backfilled with flexible base, soil or two-sack concrete as required by location of conduit on the project or as directed by the engineer. The top 3 inches shall match the existing surface material.

PVC conduit systems that snap or lock together without glue that are designed and UL listed to be used for bored PVDC electrical conduit applications will be allowed for bored PVC schedule 40, and when approved by the Engineer, will be allowed for bored PVC schedule 80. No additional compensation will be paid to the contractor when these specific purpose conduit systems are substituted for this purpose.

Conduit shall be paid for under Item 618, "Conduit".

ITEM 620. Electrical Conductors

Grounding conductors that share the same conduit, junction box, ground box or structure shall be bonded together at every accessible point in accordance with the latest edition of the national electrical code.

ITEM 628. Electrical Service

The contractor shall arrange for and cooperate with the utility company to provide power service to the signals. A meter will not be necessary.

ITEM 636. Aluminum Signs

Complete sign blanks and panels shall be handled and stored at the job site in such a manner that corners, edges and faces are not damaged. Finished sign blanks shall be stored in either a weatherproof warehouse or outside and off the ground in a vertical position. All paper, cardboard and chemically treated separators and packaging shall be removed prior to outside storage.

ITEM 644. Small Roadside Sign Assemblies

All signs shall be installed in accordance with the "Texas Manual on Uniform Traffic Control Devices".

Project Number: MG 2003 (689) Sheet 22L

County: Hidalgo **Control:** 0255-08-091

Highway: US 281

Any detail that conflicts with the standard plan sheets shall be brought to the attention of the Engineer prior to construction unless a note is placed adjacent to the detail to indicate an intentional deviation from the standard plan sheets.

All excess excavation shall be spread uniformly inside the Right of Way as directed by the Engineer and shall be included in the price of these Items.

All signs shall be erected according to the locations shown on the signing layout sheets except that the Engineer may shift a sign in order to secure a more desirable location. The Contractor will stake all sign locations as shown in the plans and approved by the Engineer. It is the intent of the plans to erect all roadside traffic signs with the sign edge a minimum of 6 feet from the edge of the shoulder, or if none, 12 feet from the edge of travel lane. In curb and gutter sections the sign edge shall be a minimum of 2 feet from the face of the curb.

For this project, the Contractor will be required to provide aluminum type of sign blanks as provided for under Item 636 for all proposed signing installed under Item 644. Aluminum sign blanks less than 7.5 square feet shall be 0.08 inch thick, sign blanks 7.5 to 15 square feet shall be 0.100 inch thick and sign blanks greater than 15 square feet shall be 0.125 inch thick.

Sign types for which design details are not shown on the plans shall conform with the latest edition of the Department's "Standard Highway Sign Designs for Texas" Manual.

ITEM 647. Large Roadside Sign Supports

New sign foundation stubs, when left overnight without installed signs and posts, shall be protected by the Contractor with flashing electric lights.

ITEM 649. Removing or Relocating Roadside Sign Assemblies

The Contractor shall remove the complete sign installation and separate the sign post at the concrete foundation. The Contractor shall dispose of the concrete foundation in accordance with this bid Item. Except for concrete foundations, all removed sign panels, sign posts, and hardware shall remain the property of the Department. All removed sign installations shall be completely disassembled. All salvageable sections of the sign panels shall be recycled by TxDOT. The Contractor will be required to haul the removed sign material to the closest maintenance yard. No signs shall be removed without prior approval of the Engineer.

All excess excavation shall be spread uniformly inside the right of way as directed by the Engineer and shall be included in the price of this item.

ITEM 656. Foundations for Signs, Traffic Signals and Roadway Illumination Assemblies

40, and when approved by the Engineer, will be allowed for bored PVC schedule 80. No additional compensation will be paid to the contractor when these specific purpose conduit systems are substituted for this purpose.

Conduit shall be paid for under Item 618, "Conduit".

ITEM 620. Electrical Conductors

Grounding conductors that share the same conduit, junction box, ground box or structure shall be bonded together at every accessible point in accordance with the latest edition of the national electrical code.

ITEM 628. Electrical Service

The contractor shall arrange for and cooperate with the utility company to provide power service to the signals. A meter will not be necessary.

ITEM 636. Aluminum Signs

Complete sign blanks and panels shall be handled and stored at the job site in such a manner that corners, edges and faces are not damaged. Finished sign blanks shall be stored in either a weatherproof warehouse or outside and off the ground in a vertical position. All paper, cardboard and chemically treated separators and packaging shall be removed prior to outside storage.

ITEM 644. Small Roadside Sign Assemblies

All signs shall be installed in accordance with the "Texas Manual on Uniform Traffic Control Devices".

Any detail that conflicts with the standard plan sheets shall be brought to the attention of the Engineer prior to construction unless a note is placed adjacent to the detail to indicate an intentional deviation from the standard plan sheets.

All excess excavation shall be spread uniformly inside the Right of Way as directed by the Engineer and shall be included in the price of these Items.

All signs shall be erected according to the locations shown on the signing layout sheets except that the Engineer may shift a sign in order to secure a more desirable location. The Contractor

Project Number: MG 2003 (689) **Sheet** 22L

County: Hidalgo **Control:** 0255-08-091

Highway: US 281

will stake all sign locations as shown in the plans and approved by the Engineer. It is the intent of the plans to erect all roadside traffic signs with the sign edge a minimum of 6 feet from the edge of the shoulder, or if none, 12 feet from the edge of travel lane. In curb and gutter sections the sign edge shall be a minimum of 2 feet from the face of the curb.

For this project, the Contractor will be required to provide aluminum type of sign blanks as provided for under Item 636 for all proposed signing installed under Item 644. Aluminum sign blanks less than 7.5 square feet shall be 0.08 inch thick, sign blanks 7.5 to 15 square feet shall be 0.100 inch thick and sign blanks greater than 15 square feet shall be 0.125 inch thick.

Sign types for which design details are not shown on the plans shall conform with the latest edition of the Department's "Standard Highway Sign Designs for Texas" Manual.

ITEM 647. Large Roadside Sign Supports

New sign foundation stubs, when left overnight without installed signs and posts, shall be protected by the Contractor with flashing electric lights.

ITEM 649. Removing or Relocating Roadside Sign Assemblies

The Contractor shall remove the complete sign installation and separate the sign post at the concrete foundation. The Contractor shall dispose of the concrete foundation in accordance with this bid Item. Except for concrete foundations, all removed sign panels, sign posts, and hardware shall remain the property of the Department. All removed sign installations shall be completely disassembled. All salvageable sections of the sign panels shall be recycled by TxDOT. The Contractor will be required to haul the removed sign material to the closest maintenance yard. No signs shall be removed without prior approval of the Engineer.

All excess excavation shall be spread uniformly inside the right of way as directed by the Engineer and shall be included in the price of this item.

ITEM 656. Foundations for Signs, Traffic Signals and Roadway Illumination Assemblies

The dimensions shown on the plans for location of signal pole foundations, conduit and other items maybe varied to meet existing conditions subject to approval by the Engineer.

All concrete for traffic signal pole foundations shall be Class “C”.

The contractor shall clean up and remove from the work area all loose material resulting from the contract operations each day before work is suspended.

No traffic signal pole shall be placed on the foundations prior to seven (7) days following placement of concrete.

REVISED
9-26-03

The dimensions shown on the plans for location of signal pole foundations, conduit and other items maybe varied to meet existing conditions subject to approval by the Engineer.

All concrete for traffic signal pole foundations shall be Class "C".

The contractor shall clean up and remove from the work area all loose material resulting from the contract operations each day before work is suspended.

No traffic signal pole shall be placed on the foundations prior to seven (7) days following placement of concrete.

The Contractor's attention is directed to the possible presence of underground utilities on the Right of Way on this project. It is the responsibility of the Contractor to call for locates 48 hours in the advance of excavation or drilling.

Foundations shall be paid for under Item 656, "Foundations for Signs, Traffic Signals and Roadway Illumination Assemblies".

ITEM 658. Delineator and Object Marker Assemblies

Delineator assemblies shall be installed 8 feet from the edge of the shoulder unless restricted by some obstruction, in which case, the delineator assembly shall be placed between 2 and 8 feet from the edge of the shoulder.

ITEMS 662 AND 666. Work Zone Pavement Markings and Reflectorized Pavement Markings

All permanent pavement markings and work zone pavement markings for this project under these Items shall be 0.090 inches (90 mil) thick thermoplastic.

Any permanent markings or non-removal work zone pavement markings lacking reflectivity in accordance with Test Method Tex 828-B, will not be paid for, as per district policy. The contractor will be required to restripe at his own expense.

Pavement surface preparation for markings and markers will not be paid for directly, but shall be considered subsidiary to Item 666.

Prior to any striping operations, an on-site coordination meeting between the prime and SubContractor superintendents and the TxDOT inspector will be required to review striping details and requirements to ensure quality work. This does not relieve the striping Contractor from required adherence to plans and Specifications.

Project Number: MG 2003 (689) **Sheet** 22M

County: Hidalgo **Control:** 0255-08-091

Highway: US 281

The beads used on this project shall meet the requirements of departmental materials specification DMS-8290, glass traffic beads Texas Type III.

ITEM 677. Eliminating Existing Pavement Markings and Markers

Asphalt and aggregate types and grades shall be as approved in writing by the Engineer when a surface treatment is used to eliminate existing pavement markings.

ITEM 680. Installation of Highway Traffic Signals

The installation of highway traffic signals shall consist of the following principal Items:

1. Furnishing and installing 8-phase full traffic actuated controllers, base mounted cabinets, conflict monitors, load switches and loop amplifiers.
2. Furnishing and installing either steel mast arm poles, or steel strain poles and span wire and pedestal poles (as shown on plans), electrical service, signal heads, signal cables, pedestrian heads and pedestrian push buttons with signs that meet the "Americans with Disabilities Act" Standards, loop detectors, ground boxes, conduit runs and controller conc. foundations.
3. Removal and disposal of existing signal material specified in the plans.
4. The Contractor shall also furnish and install all other Items not listed above which are needed to provide for complete traffic signal installations and for proper signal operation as called for in the plans and specifications.

Any deviation of location for proposed signal work shall be as approved by the Engineer.

Signal controller

The signal installations shall be wired in accordance with the phase diagrams in the plans. The proposed base mounted cabinet shall contain 8-phase conflict monitor which display the "R-Y-G" and "Walk" phases. In addition to detecting phasing conflicts, the conflict monitor shall also be able to detect multiple signal head indications within every phase. The conflict monitor shall continue to operate in the event of a power supply failure in the timer and shall be able to retain in memory the time and date of the failure detection. Time changes shall be programmable in the field without replacing components or use of external devices. The ful-actuated controller shall meet N.E.M.A. Specifications.

The Contractor shall arrange for a controller manufacturer's technician to load initial timing programs into the controllers as called for in the plans. Once the traffic signals are turned on, The same technician shall monitor the signal operation and traffic movement and shall adjust settings for best signal operation and to the satisfaction of the Engineer in the field. The technician shall provide the State with a certification that the timing plan and coordination has

The Contractor's attention is directed to the possible presence of underground utilities on the Right of Way on this project. It is the responsibility of the Contractor to call for locates 48 hours in the advance of excavation or drilling.

Foundations shall be paid for under Item 656, "Foundations for Signs, Traffic Signals and Roadway Illumination Assemblies".

ITEM 658. Delineator and Object Marker Assemblies.

Delineator assemblies shall be installed 8 feet from the edge of the shoulder unless restricted by some obstruction, in which case, the delineator assembly shall be placed between 2 and 8 feet from the edge of the shoulder.

ITEMS 662 AND 666. Work Zone Pavement Markings and Reflectorized Pavement Markings

All permanent pavement markings and work zone pavement markings for this project under these Items shall be 0.090 inches (90 mil) thick thermoplastic.

Any permanent markings or non-removal work zone pavement markings lacking reflectivity in accordance with Test Method Tex 828-B, will not be paid for, as per district policy. The contractor will be required to restripe at his own expense.

Pavement surface preparation for markings and markers will not be paid for directly, but shall be considered subsidiary to Item 666.

Prior to any striping operations, an on-site coordination meeting between the prime and SubContractor superintendents and the TxDOT inspector will be required to review striping details and requirements to ensure quality work. This does not relieve the striping Contractor from required adherence to plans and Specifications.
The beads used on this project shall meet the requirements of departmental materials specification DMS-8290, glass traffic beads Texas Type III.

ITEM 677. Eliminating Existing Pavement Markings and Markers

Asphalt and aggregate types and grades shall be as approved in writing by the Engineer when a surface treatment is used to eliminate existing pavement markings.

ITEM 680. Installation of Highway Traffic Signals

The installation of highway traffic signals shall consist of the following principal Items:

Project Number: MG 2003 (689) **Sheet** 22 M

County: Hidalgo **Control:** 0255-08-091

Highway: US 281

1. Furnishing and installing 8-phase full traffic actuated controllers, base mounted cabinets, conflict monitors, load switches and loop amplifiers.
2. Furnishing and installing either steel mast arm poles, or steel strain poles and span wire and pedestal poles (as shown on plans), electrical service, signal heads, signal cables, pedestrian heads and pedestrian push buttons with signs that meet the "Americans with Disabilities Act" Standards, loop detectors, ground boxes, conduit runs and controller conc. foundations.
3. Removal and disposal of existing signal material specified in the plans.
4. The Contractor shall also furnish and install all other Items not listed above which are needed to provide for complete traffic signal installations and for proper signal operation as called for in the plans and specifications.

Any deviation of location for proposed signal work shall be as approved by the Engineer.

Signal controller

The signal installations shall be wired in accordance with the phase diagrams in the plans. The proposed base mounted cabinet shall contain 8-phase conflict monitor which display the "R-Y-G" and "Walk" phases. In addition to detecting phasing conflicts, the conflict monitor shall also be able to detect multiple signal head indications within every phase. The conflict monitor shall continue to operate in the event of a power supply failure in the timer and shall be able to retain in memory the time and date of the failure detection. Time changes shall be programmable in the field without replacing components or use of external devices. The ful-actuated controller shall meet N.E.M.A. Specifications.

The Contractor shall arrange for a controller manufacturer's technician to load initial timing programs into the controllers as called for in the plans. Once the traffic signals are turned on, The same technician shall monitor the signal operation and traffic movement and shall adjust settings for best signal operation and to the satisfaction of the Engineer in the field. The technician shall provide the State with a certification that the timing plan and coordination has been established according to the plans. This certification shall include a record showing all settings and functions programmed into the timer and any related units.

The controller must be delivered with two sets of wiring diagrams and operating manuals enclosed in a weatherproof bag.

All wiring not covered by the plans and specifications shall be in accordance with the National Electrical Code, latest edition.

Grounding and bonding

REVISED
9-26-03

been established according to the plans. This certification shall include a record showing all settings and functions programmed into the timer and any related units.

The controller must be delivered with two sets of wiring diagrams and operating manuals enclosed in a weatherproof bag.

All wiring not covered by the plans and specifications shall be in accordance with the National Electrical Code, latest edition.

Grounding and bonding

A continuous bare or green insulated copper wire no. 8 or larger shall be installed in every conduit throughout the electrical and traffic signal system in accordance with Item 680, the Electrical Detail Sheets and the latest edition of the National Electrical Code, except for conduit with loop detectors only.

Luminaries

Each cable for luminaries shall be identified in each ground box, pole base, or other accessible locations with yellow electrical tape wrapped around the cable. The tape marking shall be at least 2 inches.

Existing utilities

All fees and costs for permits and work done by the utility companies for any utility adjustments will be considered subsidiary to the various bid Items of this project and will not be paid for directly.
The Contractor shall verify with the utility companies the exact location of existing underground utilities prior to construction to avoid conflict with or damage to these utilities.

The Contractor shall coordinate with the utility companies to make any adjustments, due to utility conflicts, as defined in the specifications or deemed necessary by the Engineer.

The Contractor shall contact the local Power Company prior to beginning of signal construction. The Contractor shall also coordinate with the Power Company for the raising of power lines Where deemed necessary.

References

References to manufacturers' trade names or catalog numbers are for the purpose of identification only and the Contractor will be permitted to furnish like materials of other

Project Number: MG 2003 (689) **Sheet** 22N

County: Hidalgo **Control:** 0255-08-091

Highway: US 281

manufacturers provided they are of equal quality and comply with the specifications and are approved by the Engineer.

Uniformity in Equipment

1. All traffic signal heads furnished by Contractor shall be by the same manufacturer.
2. All signal fittings and pipe brackets shall be of an approved metallic material and of the same design and manufacturer.
3. All traffic signal poles furnished by the Contractor shall be by the same manufacturer.
4. All loop detector amplifiers furnished by the Contractor shall be by the same manufacturer.

Handling of Traffic

Roads and streets shall be kept open to traffic at all times. The Contractor shall arrange the setting of loop detectors so as to close only one lane of a roadway at a time. The Contractor shall arrange the installation of signal heads, poles and conduit so as to permit the continuous movement of traffic in both directions at all times.

All construction operations shall be conducted to provide the least possible interference to traffic as shown on the plans, as provided for in the specifications and/or as directed by the Engineer. All signing, barricading and handling of traffic shall conform to the " Texas Manual on Uniform Traffic Control Devices".

Sequence of work

1. The existing traffic signal installations shall remain in operation at all times during construction of the proposed traffic signal installations or modifications.
2. The Contractor shall completely remove the specified existing traffic signal installations or specified Items when the proposed traffic signal installations are in place and operational.
3. All labor, tools, and materials used to remove the specified traffic signal material shall be done in accordance with Item 6010, "Salvaging Traffic Signals".
4. Final inspection shall be done in conjunction with the district signal shop.

ITEM 682. Vehicle And Pedestrian Signal Heads

All signal heads shall be covered with burlap from the time of installation until the signal is placed in operation. All signal heads shall be of polycarbonate material and yellow in color. Signal heads shall have standard detachable visors. The contractor shall furnish new long life 135-watt traffic signal lamps for all traffic signal heads.

A continuous bare or green insulated copper wire no. 8 or larger shall be installed in every conduit throughout the electrical and traffic signal system in accordance with Item 680, the Electrical Detail Sheets and the latest edition of the National Electrical Code, except for conduit with loop detectors only.

Luminaries

Each cable for luminaries shall be identified in each ground box, pole base, or other accessible locations with yellow electrical tape wrapped around the cable. The tape marking shall be at least 2 inches.

Existing utilities

All fees and costs for permits and work done by the utility companies for any utility adjustments will be considered subsidiary to the various bid Items of this project and will not be paid for directly.
The Contractor shall verify with the utility companies the exact location of existing underground utilities prior to construction to avoid conflict with or damage to these utilities.

The Contractor shall coordinate with the utility companies to make any adjustments, due to utility conflicts, as defined in the specifications or deemed necessary by the Engineer.

The Contractor shall contact the local Power Company prior to beginning of signal construction. The Contractor shall also coordinate with the Power Company for the raising of power lines Where deemed necessary.

References

References to manufacturers' trade names or catalog numbers are for the purpose of identification only and the Contractor will be permitted to furnish like materials of other manufacturers provided they are of equal quality and comply with the specifications and are approved by the Engineer.

Uniformity in Equipment

1. All traffic signal heads furnished by Contractor shall be by the same manufacturer.
2. All signal fittings and pipe brackets shall be of an approved metallic material and of the same design and manufacturer.
3. All traffic signal poles furnished by the Contractor shall be by the same manufacturer.
4. All loop detector amplifiers furnished by the Contractor shall be by the same manufacturer.

Project Number: MG 2003 (689) **Sheet** 22 N

County: Hidalgo **Control:** 0255-08-091

Highway: US 281

Handling of Traffic

Roads and streets shall be kept open to traffic at all times. The Contractor shall arrange the setting of loop detectors so as to close only one lane of a roadway at a time. The Contractor shall arrange the installation of signal heads, poles and conduit so as to permit the continuous movement of traffic in both directions at all times.

All construction operations shall be conducted to provide the least possible interference to traffic as shown on the plans, as provided for in the specifications and/or as directed by the Engineer. All signing, barricading and handling of traffic shall conform to the " Texas Manual on Uniform Traffic Control Devices".

Sequence of work

1. The existing traffic signal installations shall remain in operation at all times during construction of the proposed traffic signal installations or modifications.
2. The Contractor shall completely remove the specified existing traffic signal installations or specified Items when the proposed traffic signal installations are in place and operational.
3. All labor, tools, and materials used to remove the specified traffic signal material shall be done in accordance with Item 6010, "Salvaging Traffic Signals".
4. Final inspection shall be done in conjunction with the district signal shop.

ITEM 682. Vehicle And Pedestrian Signal Heads

All signal heads shall be covered with burlap from the time of installation until the signal is placed in operation. All signal heads shall be of polycarbonate material and yellow in color. Signal heads shall have standard detachable visors. The contractor shall furnish new long life 135-watt traffic signal lamps for all traffic signal heads.

Signal heads shall be positioned carefully to provide the best view of signal indications to motorists. All signal heads shall be installed to a neat overall appearance.

Nominal height for signal heads above pavement surface shall be 18 feet 6 inches, plus/minus 3 inches.

Pedestrian signal heads shall be positioned carefully to provide the best view to pedestrians.

The traffic signal heads and pedestrian heads shall be paid for under Item 682 “Vehicle and Pedestrian Signal Heads”.

ITEM 684 Traffic Signal Cable

REVISED
9-26-03

Signal heads shall be positioned carefully to provide the best view of signal indications to motorists. All signal heads shall be installed to a neat overall appearance.

Nominal height for signal heads above pavement surface shall be 18 feet 6 inches, plus/minus 3 inches.

Pedestrian signal heads shall be positioned carefully to provide the best view to pedestrians.

The traffic signal heads and pedestrian heads shall be paid for under Item 682 "Vehicle and Pedestrian Signal Heads".

ITEM 684 Traffic Signal Cable

All signal cable shall be #12 AWG, 2/c loop Lead-In shall be #14 AWG shielded and loop wires in pavement shall be #14 AWG.

All signal cable shall be #12 AWG and shall be paid for under Item 684 "Traffic Signal Cable."

ITEM 686 Traffic Signal Pole Assemblies (Steel)

The locations for the proposed traffic signal poles are approximate. The exact locations will be determined in the field by the Engineer in coordination with the Pharr District Signal Shop.

Erection and/or removal of poles and luminaries located near any overhead electrical powerlines shall be accomplished using established industry and utility safety practices. The contractor shall consult with the appropriate utility company prior to beginning such work.

Signal poles shall be paid under Item 686 "Traffic Signal Pole Assemblies (Steel)".

ITEM 688 Traffic Signal Detectors

The Engineer shall install Loop vehicle detectors in accordance with the Intersection layouts in the plans or as directed. Each loop detector Lead-In cable shall be tagged inside the controller cabinet with its loop number. The loop amplifiers shall indicate the loop and phase of control or direction of control. Loop wires in street shall be #14 AWG. Pedestrian detectors shall meet the minimum requirements called for by the "Americans with Disabilities Act".

Loop detector Lead-In cable shall be continuous from ground box to the controller.

Splices for loop wire will be permitted only at ground boxes or pole base with Scotchcast or Hysol electrical insulating resin weatherproof splice kits or approved equal.

A minimum length of 2.0 feet for each cable shall be left in each ground box.

Vehicle and pedestrian detectors shall be paid for under Item 688, "Traffic Signal Detectors".

ITEM 1057 Transplanting Palm Trees

All palms shall be set with the terminal bud plumb in the locations indicated on the plans. All palms should be set at least six (6) to twelve (12) inches deeper than the top most surface of the ball after planting. A soil watering ring shall be formed at the outside edge of the plant pit with a minimum depth of eight (8) inches.

All palms shall be secured by staking as shown in the plans in the event that the palm is closer than the total height of the palm to any travel lane, sidewalk or structure as determined by the Engineer. The Contractor shall use four (4) inch or larger peeled posts as the main supports and pressure treated 2 x 4 blocks to secure peeled posts to the palm. Nail blocks shall be secured to the trunk with nylon straps or metal bands. No nails shall be driven directly into the trunks of the palms. In the event that some palms have curved trunks the palms require additional support.

ITEM 1507. LED DYNAMIC MESSAGE SIGN SYSTEM

The contractor shall furnish and install one DMS controller foundation and pad as detailed in the plans and in accordance with item 656. The DMS controller foundation and pad shall not be paid for directly but shall be considered subsidiary to item 1507.

ITEM 3146. QC/QA of Hot Mix Asphalt

The contractor shall exercise diligence in the application of "Tack Coat" by the use of flagging and rolling procedures to keep from spraying or splattering the travelling public with asphaltic material.

Blading may also be necessary to clean dirt and grass from pavement edges and turnout areas as work under this bid Item. The cost of this blading will not be paid for directly, but shall be considered subsidiary to this bid Item.

This project will require a Minimum Aggregate Classification of "A" as published in the aggregate monitoring program.

Crushed gravel fine aggregate (screenings) will be allowed.

All signal cable shall be #12 AWG, 2/c loop Lead-In shall be #14 AWG shielded and loop wires in pavement shall be #14 AWG.

All signal cable shall be #12 AWG and shall be paid for under Item 684 "Traffic Signal Cable."

ITEM 686 Traffic Signal Pole Assemblies (Steel)

The locations for the proposed traffic signal poles are approximate. The exact locations will be determined in the field by the Engineer in coordination with the Pharr District Signal Shop.

Erection and/or removal of poles and luminaries located near any overhead electrical powerlines shall be accomplished using established industry and utility safety practices. The contractor shall consult with the appropriate utility company prior to beginning such work.

Signal poles shall be paid under Item 686 "Traffic Signal Pole Assemblies (Steel)".

ITEM 688 Traffic Signal Detectors

The Engineer shall install Loop vehicle detectors in accordance with the Intersection layouts in the plans or as directed. Each loop detector Lead-In cable shall be tagged inside the controller cabinet with its loop number. The loop amplifiers shall indicate the loop and phase of control or direction of control. Loop wires in street shall be #14 AWG. Pedestrian detectors shall meet the minimum requirements called for by the "Americans with Disabilities Act".

Loop detector Lead-In cable shall be continuous from ground box to the controller.

Splices for loop wire will be permitted only at ground boxes or pole base with Scotchcast or Hysol electrical insulating resin weatherproof splice kits or approved equal.

A minimum length of 2.0 feet for each cable shall be left in each ground box.

Vehicle and pedestrian detectors shall be paid for under Item 688, "Traffic Signal Detectors".

ITEM 1057 Transplanting Palm Trees

All palms shall be set with the terminal bud plumb in the locations indicated on the plans. All palms should be set at least six (6) to twelve (12) inches deeper than the top most surface of the ball after planting. A soil watering ring shall be formed at the outside edge of the plant pit with a minimum depth of eight (8) inches.

All palms shall be secured by staking as shown in the plans in the event that the palm is closer than the total height of the palm to any travel lane, sidewalk or structure as determined by the Engineer. The Contractor shall use four (4) inch or larger peeled posts as the main supports and pressure treated 2 x 4 blocks to secure peeled posts to the palm. Nail blocks shall be secured to the trunk with nylon straps or metal bands. No nails shall be driven directly into the trunks of the palms. In the event that some palms have curved trunks the palms require additional support.

ITEM 1507. LED DYNAMIC MESSAGE SIGN SYSTEM

The contractor shall furnish and install one DMS controller foundation and pad as detailed in the plans and in accordance with item 656. The DMS controller foundation and pad shall not be paid for directly but shall be considered subsidiary to item 1507.

ITEM 3146. QC/QA of Hot Mix Asphalt

The contractor shall exercise diligence in the application of "Tack Coat" by the use of flagging and rolling procedures to keep from spraying or splattering the travelling public with asphaltic material.

Blading may also be necessary to clean dirt and grass from pavement edges and turnout areas as work under this bid Item. The cost of this blading will not be paid for directly, but shall be considered subsidiary to this bid Item.

This project will require a Minimum Aggregate Classification of "A" as published in the aggregate monitoring program.

Crushed gravel fine aggregate (screenings) will be allowed.

Shoulders and/or ramps will require in-place air void testing and pay adjustments.

Lime shall be used as an antistripping agent for this project.

ITEM 3241. Superpave Hot Mix Asphalt Concrete Pavement (SPHMACP)

For superpave base courses requiring PG 64-22, the Hamburg Wheel Test requirements of Test Method Tex-242-F will not be required.

ITEM 4003. Concrete Low-Head Pressure Pipe.

If the Contractor elects, a larger size Item may be furnished and installed at no extra cost to the State.

REVISED
9-26-03

Shoulders and/or ramps will require in-place air void testing and pay adjustments.

Lime shall be used as an antistripping agent for this project.

ITEM 4003. Concrete Low-Head Pressure Pipe.

If the Contractor elects, a larger size Item may be furnished and installed at no extra cost to the State.

ITEM 5004. Temporary Erosion, Sediment and Water Pollution Prevention and Control

The SW3P for this project shall consist of using the following Items as directed by the Engineer:
Temporary Sediment Control Fence
Construction Exits
Earthwork for Erosion Control

ITEM 5519. Transportable Cellular Phones

Payment to the contractor for providing transportable cellular telephones will be made by "Force Account Work". Number of transportable cellular phones to be established by the Engineer.

ITEM 5788. Landscape Pavers

Part I - General

The work shall include all labor, materials, equipment, and transportation required to install interlocking modular concrete paving units.

The paving units shall be delivered to the job site on pallets and bound in such a manner that no damage occurs to the product during handling, hauling, and unloading.

Part II - Materials

Paving units shall be of the type specified in the plan sheets. Color shall be approved by the Engineer prior to any installation of paving units. The paving units shall be supplied from one of the following companies, or a comparable equal, as determined by the Engineer.

(A) Pavestone Co.
P.O. Box 1868
Grapevine, Texas 76051.
Grapevine Po. No. 817-481-5802

Project Number: MG 2003 (689) **Sheet** 22P

County: Hidalgo **Control:** 0255-08-091

Highway: US 281

(B) Alamo Concrete Tile Inc.
1008 Hoefgen
San Antonio Texas 78210.
Po. No. 210-534-8821

The paving unit thickness shall be 2-3/8inches (6 cm.). Paving unit shall conform to A.S.T.M. Designation - C-936-82.

If the Contractor chooses to use an interlocking concrete paving units other than those specified or one listed above it shall be his responsibility to furnish the State with a professional laboratory test certifying that the same materials used and their fabrication methods meet or exceed the properties of the material herein specified.

All paving units shall be free of any defects that would interfere with the proper placement or impair the strength or performance of the units. Minor cracks incidental to the usual method of manufacturing or shipping resulting from customary methods of handling in shipment and delivery, shall be left to the decision of the Engineer for acceptance.

During the execution of the work, utmost care shall be exercised to prevent damage to any utilities, structures or Right of Way. The Contractor shall be responsible for contacting, locating, and protecting all underground utilities and structures. The Engineer may assist the Contractor in locating underground utilities and Structures. However, any damage to existing utilities or structures shall be repaired at the Contractors expense. If in the course of the work, underground utilities or structures are encountered and are in conflict with the work, the Contractor shall contact the Engineer who will direct the necessary adjustments. Changes of this nature are considered incidental to the contract work and shall not entitle the Contractor to additional compensation.

Sand-laying course:

The sand-laying course shall be well-graded clean washed sharp sand with 100% passing a 3/8 inch sieve and a maximum of 3% passing a no. 200 sieve size. Commonly known as manufactured concrete sand or limestone screening. Do not use mason sand. The sand-laying course shall be the responsibility of the paving unit installer.

Edge restraint:
All edges of the installed paving units shall be restrained. Edge restraints shall be cast-in-place concrete grade beams (4" x 8" as shown on the plans) or existing concrete curb and gutter as shown on the plans. Concrete shall be Class "A" Concrete, five (5) sack cement per cubic yard mix. Edge restraints shall be subsidiary to Item 5019.

ITEM 5004. Temporary Erosion, Sediment and Water Pollution Prevention and Control

The SW3P for this project shall consist of using the following Items as directed by the Engineer:
Temporary Sediment Control Fence
Construction Exits
Earthwork for Erosion Control

ITEM 5519. Transportable Cellular Phones

Payment to the contractor for providing transportable cellular telephones will be made by "Force Account Work". Number of transportable cellular phones to be established by the Engineer.

ITEM 5788. Landscape Pavers

Part I - General

The work shall include all labor, materials, equipment, and transportation required to install interlocking modular concrete paving units.

The paving units shall be delivered to the job site on pallets and bound in such a manner that no damage occurs to the product during handling, hauling, and unloading.

Part II - Materials

Paving units shall be of the type specified in the plan sheets. Color shall be approved by the Engineer prior to any installation of paving units. The paving units shall be supplied from one of the following companies, or a comparable equal, as determined by the Engineer.

(A) Pavestone Co.
P.O. Box 1868
Grapevine, Texas 76051.
Grapevine Po. No. 817-481-5802

(B) Alamo Concrete Tile Inc.
1008 Hoefgen
San Antonio Texas 78210.
Po. No. 210-534-8821

The paving unit thickness shall be 2-3/8inches (6 cm.). Paving unit shall conform to A.S.T.M. Designation - C-936-82.

Project Number: MG 2003 (689) Sheet 22P

County: Hidalgo **Control:** 0255-08-091

Highway: US 281

If the Contractor chooses to use an interlocking concrete paving units other than those specified or one listed above it shall be his responsibility to furnish the State with a professional laboratory test certifying that the same materials used and their fabrication methods meet or exceed the properties of the material herein specified.

All paving units shall be free of any defects that would interfere with the proper placement or impair the strength or performance of the units. Minor cracks incidental to the usual method of manufacturing or shipping resulting from customary methods of handling in shipment and delivery, shall be left to the decision of the Engineer for acceptance.

During the execution of the work, utmost care shall be exercised to prevent damage to any utilities, structures or Right of Way. The Contractor shall be responsible for contacting, locating, and protecting all underground utilities and structures. The Engineer may assist the Contractor in locating underground utilities and Structures. However, any damage to existing utilities or structures shall be repaired at the Contractors expense. If in the course of the work, underground utilities or structures are encountered and are in conflict with the work, the Contractor shall contact the Engineer who will direct the necessary adjustments. Changes of this nature are considered incidental to the contract work and shall not entitle the Contractor to additional compensation.

Sand-laying course:

The sand-laying course shall be well-graded clean washed sharp sand with 100% passing a 3/8 inch sieve and a maximum of 3% passing a no. 200 sieve size. Commonly known as manufactured concrete sand or limestone screening. Do not use mason sand. The sand-laying course shall be the responsibility of the paving unit installer.

Edge restraint:
All edges of the installed paving units shall be restrained. Edge restraints shall be cast-in-place concrete grade beams (4" x 8" as shown on the plans) or existing concrete curb and gutter as shown on the plans. Concrete shall be Class "A" Concrete, five (5) sack cement per cubic yard mix. Edge restraints shall be subsidiary to Item 5788.

Part III - Execution

Construction of the sand-laying course:

The compacted sand laying course shall be spread evenly over the area to be paved and then screeded to a level that will produce a minimum one (1) inch (25mm) thickness when the paving units have been placed and vibrated. The final elevation of paving units shall be 1/4 inch higher than the adjacent curb, gutter, paving, etc. To allow for minor settling that may occur within the base.

1 REVISED
9-26-03

Part III - Execution

Installation Contractor is to have a minimum of 3 years experience in the installation of interlocking concrete pavers.

Construction of the sand-laying course:

The compacted sand laying course shall be spread evenly over the area to be paved and then screeded to a level that will produce a minimum one (1) inch (25mm) thickness when the paving units have been placed and vibrated. The final elevation of paving units shall be 1/4 inch higher than the adjacent curb, gutter, paving, etc. To allow for minor settling that may occur within the base.

Once screeded and leveled to the desired elevation, the sand-laying course shall not be disturbed in any way.

Laying of the concrete paving units:
The paving units shall be laid in the pattern as noted in the plan sheets and manufacturer's details and specifications. The Contractor shall lay a sample area 20'x 20' for pattern approval by the Engineer before continuing. The paving units shall be laid in
Such a manner that the desired pattern is maintained and the joints between the units are tight as possible. The joints between the units shall not exceed 1/8 inch (3mm).

String lines shall be used to hold all pattern lines true relative to the back of curb and gutter or as directed by the Engineer.

The gaps at the edge of the paver surface shall be filled with standard edge units or units cut to fit. Cutting shall be accomplished to leave a clean edge to the traffic surface using a masonry saw. No cuts should result with a paver unit less than 1/3 of the original unit's dimension.

Paving units shall be vibrated into the sand laying course using a vibrator capable of 3,000 to 5,000 pounds compaction force with the surface clean and joints open. After vibration, clean masonry type sand at least 30% of 1/8 inch (3mm) particles shall be spread over the paving unit surface, allowed to dry, and vibrated into joints with additional vibrator passes and brushing so as to completely fill the joints.

The Contractor shall bring all manhole covers, signage poles, junction pull boxes, and drainage inlets to the finish grade of the paving stone as directed by the Engineer. The State Department of Transportation may assist the Contractor. However, the Contractor shall be responsible for the final finish grade of these Items.

Project Number: MG 2003 (689) Sheet 22Q

County: Hidalgo **Control:** 0255-08-091

Highway: US 281

Surplus material shall be left on the surface during construction time to insure complete filling of joints during initial use. Upon completion of all construction work the paver surface shall be swept and cleaned of all excess soil, foreign material, and/or stains.

ITEM 5880. Ride Quality for Pavement Surfaces

Ride quality shall be measured utilizing Surface Test Type "B" for mainlanes and frontage roads. Payment adjustment schedule 1 (for mainlanes) and schedule 2 (for frontage roads) with a $500.00 bump penalty will be used.

Inertial profiler results shall be submitted to TxDOT the next working day after each day's paving.

Pavement areas with consecutive public turnout intersections less than 350 ft. In spacing and/or with structures creating discontinuity of paving operations will not be subjected to inertial profiler testing. These areas shall be evaluated using the 10-ft. Straightedge.

ITEM 5559. Colored-Texturized Concrete

The Contractor shall pour and finish a 3' x 3' sample panel of "Colored-Texturized Concrete". The panel shall meet with the requirements of the plans and Specifications and be approved by the Engineer before further "Colored-Texturized Concrete" may be poured. The sample panel shall be considered typical for the finish, any deviation of color, grade, or depth from the sample panel shall be grounds for rejection of "Color Texturized Concrete" and shall be removed and replaced as specified by the Contractor. The sample panel or any required replacement of "Color Texturized Concrete" shall not be paid for directly but shall be considered subsidiary to Item 5559, "Colored-Texturized Concrete".

Once screeded and leveled to the desired elevation, the sand-laying course shall not be disturbed in any way.

Laying of the concrete paving units:
The paving units shall be laid in the pattern as noted in the plan sheets and manufacturer's details and specifications. The Contractor shall lay a sample area 20'x 20' for pattern approval by the Engineer before continuing. The paving units shall be laid in
Such a manner that the desired pattern is maintained and the joints between the units are tight as possible. The joints between the units shall not exceed 1/8 inch (3mm).

String lines shall be used to hold all pattern lines true relative to the back of curb and gutter or as directed by the Engineer.

The gaps at the edge of the paver surface shall be filled with standard edge units or units cut to fit. Cutting shall be accomplished to leave a clean edge to the traffic surface using a masonry saw. No cuts should result with a paver unit less than 1/3 of the original unit's dimension.

Paving units shall be vibrated into the sand laying course using a vibrator capable of 3,000 to 5,000 pounds compaction force with the surface clean and joints open. After vibration, clean masonry type sand at least 30% of 1/8 inch (3mm) particles shall be spread over the paving unit surface, allowed to dry, and vibrated into joints with additional vibrator passes and brushing so as to completely fill the joints.

The Contractor shall bring all manhole covers, signage poles, junction pull boxes, and drainage inlets to the finish grade of the paving stone as directed by the Engineer. The State Department of Transportation may assist the Contractor. However, the Contractor shall be responsible for the final finish grade of these Items.

Surplus material shall be left on the surface during construction time to insure complete filling of joints during initial use. Upon completion of all construction work the paver surface shall be swept and cleaned of all excess soil, foreign material, and/or stains.

ITEM 5880. Ride Quality for Pavement Surfaces

Ride quality shall be measured utilizing Surface Test Type "B" for mainlanes and frontage roads. Payment adjustment schedule 1 (for mainlanes) and schedule 2 (for frontage roads) with a $500.00 bump penalty will be used.

Inertial profiler results shall be submitted to TxDOT the next working day after each day's paving.

Pavement areas with consecutive public turnout intersections less than 350 ft. In spacing and/or with structures creating discontinuity of paving operations will not be subjected to inertial profiler testing. These areas shall be evaluated using the 10-ft. Straightedge.

ITEM 5559. Colored-Texturized Concrete

The Contractor shall pour and finish a 3' x 3' sample panel of "Colored-Texturized Concrete". The panel shall meet with the requirements of the plans and Specifications and be approved by the Engineer before further "Colored-Texturized Concrete" may be poured. The sample panel shall be considered typical for the finish, any deviation of color, grade, or depth from the sample panel shall be grounds for rejection of "Color Texturized Concrete" and shall be removed and replaced as specified by the Contractor. The sample panel or any required replacement of "Color Texturized Concrete" shall not be paid for directly but shall be considered subsidiary to Item 5559, "Colored-Texturized Concrete".

REVISED
9-26-03

BASIS OF ESTIMATE

ITEM	DESCRIPTION	RATE	UNIT	QUANTITY EST.	QUANTITY FIN.
204	SPRINKLING	4 MG / STA.	MG	866	
	(EROSION CONTROL)				
260	LIME (TY A SLRY) OR (TY B) OR (TY C SLRY) LIME TREAT. SUBGR. (12 IN)	3% BY WT.	TON	9783	
	LIME (TY A SLRY) OR (TY B) OR (TY C SLRY) UNSTABLE AREAS	25 TON / MI	TON		
	TOTAL FOR ITEM 260:		TON	9783	
262	LIME (TY A SLRY) OR (TY B) OR (TY C SLRY)				
	NEW FLEX BASE (188972 CY)	* 2% BY WT.	TON	6378	
	REWORKED FLEX BASE (169232 CY)	2% BY WT.	TON	5712	
	TOTAL FOR ITEM 262:		TON	12090	

EST. WT. OF NEW & SALVAGE FLEXIBLE BASE - 125 LB/CF (3375*/CY)(COMPACTED DRY WT.
EST. WT. OF SUBGRADE - 110 LB / CF (2970 LB / CY COMPACTED)

* THIS LIME IS SEPARATE FROM LIME WHICH MAY BE REQUIRED TO MEET PI AND TRIAXIAL REQUIREMENTS ADDED AT CONTRACTORS EXPENSE.

ITEM 100 SUMMARY OF "PREP. R.O.W."

DESCRIPTION	ROADWAY TOTAL (STA) EST.	ROADWAY TOTAL (STA) FIN.	TREES TOTAL (EA) EST.	TREES TOTAL (EA) FIN.	CHANNEL (STA) EST.	CHANNEL (STA) FIN.
US 281	226.2					
OUTFALLS					128.8	
TOTAL:	226.2				128.8	

ITEM 110 CHANNEL EXCAVATION

ITEM	QUANTITY (CY) EST.	QUANTITY (CY) FIN.
OUTFALLS		
	196813	
TOTAL:	196813	

SUMMARY OF AREAS (SY)

ITEM	DESCRIPTION		RATE	UNIT	QUANTITY EST.	QUANTITY FIN.
262	LIME TREAT FOR BASE COURSE (NEW / EXT.) (DC) 8 IN			SY	33387	
262	LIME TREAT FOR BASE COURSE (NEW / EXT.) (DC) 18 IN			SY	261399	
262	LIME TREAT FOR BASE COURSE (NEW / EXT.) (DC) 23 IN			SY	344859	
260	LIME TREAT. SUBGR. (DENS. CONT. 12 IN)			SY	655264	
⊗310	ASPH. MATERIAL (MC-30)		0.2 GAL / SY	SY	639648	
⊗•••	ONE COAT SURFACE TREATMENT			SY	639648	
⊗3146	ASPH. CONC. PAV. TY "D" (1.5 IN)		171 LB / SY	SY	98778	
⊗3146	ASPH. CONC. PAV. TY "D" (3 IN)		342 LB / SY	SY	155215	
$3293	ASPH. CONC. PAV. (1.5 IN)(PFC)(PG 76-22)	{MAINLANES}	142.5 LB / SY	SY	330868	
⊗3248	ASPH. CONC. PAV. (2 IN)	{HDSMACP}	220 LB / SY	SY	336180	
⊗3248	ASPH. CONC. PAV. (3 IN)	{HDSMACP}	330 LB / SY	SY	97098	
⊗3241	ASPH. CONC. PAV. (6 IN)	{SP HMACP}	660 LB / SY	SY	342179	
354	PLANING AND/OR TEXTURING PAVEMENT			SY	54025	

⊗ FOR CONTRACTOR'S INFORMATION ONLY (NON - PAY)

$ FOR CONTRACTOR'S INFORMATION ONLY (NON - PAY). ITEM TO BE PAID AS ASPHALT (TY I OR II, CRM) AND AGGREGATE (CLA)

⊗ TRAVELERS INFORMATION STATION / HIGHWAY ADVISORY RADIO

DESCRIPTION	QUANTITY (EA) EST.	QUANTITY (EA) FIN.
PHARR MAINTENANCE YARD	1	
TOTAL:	1	

⊗ FOR CONTRACTOR'S INFORMATION ONLY (NON - PAY)

ITEM 1057 TRANSPLANTING TREES AND PALMS BY TREE SPADE

DESCRIPTION	TOTAL (EA) ITEM 1057 EST.	TOTAL (EA) ITEM 1057 FIN.
US 281		
NB Frontage Rd.	148	
SB Frontage Rd.	131	
TOTAL:	279	

DATA FOR ASPHALTIC CONCRETE PAVEMENT

ITEM	DESCRIPTION	RATE	UNIT	QUANTITY EST.	QUANTITY FIN.
310	ASPH. MATERIAL (MC - 30)	0.2 GAL / SY	GAL	127930	
316	ASPH (AC - 10)	0.3 GAL / SY	GAL	191894	
316	AGGR (TY PB, GR 4)	1 CY / 120 SY	CY	5330	
3146	ASPH. CONC. PAV. TY "D" (1.5 IN)	171 LB / SY	TON	8446	
3146	ASPH. CONC. PAV. TY "D" (3.0 IN)	342 LB / SY	TON	26542	
3146	ASPH. CONC. PAV. TY "D" TOTAL:		TON	34987	
3248	ASPH. CONC. PAV. TY "B" (2 IN)	220 LB / SY	TON	36980	
3248	ASPH. CONC. PAV. TY "B" (3 IN)	330 LB / SY	TON	16021	
3241	ASPH. CONC. PAV. TY "B" (6 IN)	660 LB / SY	TON	112919	
	ASPH. CONC. PAV. TY "B" TOTAL:		TON	165920	
3293	PFC AGGR (CLA)	11.4 LB / SY	TON	21688	
3343	PFC ASPH (TY I OR II)	131.1 LB / SY	TON	1886	
	TACK COAT (NON - PAY)	(AS REQUIRED)			

ITEM 247 SUMMARY OF FLEXIBLE BASE

STATION LIMITS	TOTAL (CY) EST.	TOTAL (CY) FIN.
FLEX. BASE (RDWY DEL) (TY D GR 6 CL 4)	188972	
US 281		
TOTAL:	188972	

ITEM 5190 REMOVE & SALVG LANDSCAPE PAVRS

DESCRIPTION	QUANTITY (SY) EST.	QUANTITY (SY) FIN.
US 281	4520	
TOTAL:	4520	

SUMMARY OF ALTERNATE TO FLEXIBLE BASE

ITEM	DESCRIPTION	RATE	UNIT	QUANTITY EST.	QUANTITY FIN.
247	FLEX BASE (COMP. IN PLACE) (TY A, GR 1, CL 4)		CY	188972	
262	LIME (TY A SLURRY), TY B OR TY C (SLURRY)	2% BY WT	TON	5712	
262	LIME TRT BS CRSE (EXT. BS) (DC) (VAR)		SY	639,645	

Parsons Brinckerhoff Quade & Douglas Inc.

Texas Department of Transportation

© 2002 BY TxDOT

US 281
ESTIMATE & QUANTITY

SHEET 1 of 7

DESIGNED: XXX	FED. ROAD DIV. NO.	STATE	FEDERAL AID PROJECT No.			HIGHWAY No.
CHECKED: XXX	6	TEXAS				US 281
DRAWN: XXX	STATE DISTRICT	COUNTY	CONTROL NO.	SECTION NO.	JOB No.	SHEET No.
CHECKED: XXX	PHARR	HIDALGO	0255	08	091	23

7/2/03 12:11 PM

I:\Projects\22322a\CADD\Sheets\Summary Sheets\281eq01.xls

BASIS OF ESTIMATE

ITEM	DESCRIPTION	RATE	UNIT	QUANTITY EST.	QUANTITY FIN.
204	SPRINKLING	4 MG / STA.	MG	866	
	(EROSION CONTROL)				
260	LIME (TY A SLRY) OR (TY B) OR (TY C SLRY) LIME TREAT. SUBGR. (12 IN)	3% BY WT.	TON	9787	
	LIME (TY A SLRY) OR (TY B) OR (TY C SLRY) UNSTABLE AREAS	25 TON / MI	TON	107	
	TOTAL FOR ITEM 260:		TON	9894	
262	LIME (TY A SLRY) OR (TY B) OR (TY C SLRY)				
	NEW FLEX BASE (189127CY)	* 2% BY WT.	TON	6383	
	REWORKED FLEX BASE (169232 CY)	2% BY WT.	TON	5712	
	TOTAL FOR ITEM 262:		TON	12095	

EST. WT. OF NEW & SALVAGE FLEXIBLE BASE - 125 LB/CF (3375#/CY)(COMPACTED DRY WT.
EST. WT. OF SUBGRADE - 110 LB / CF (2970 LB / CY COMPACTED)

* THIS LIME IS SEPARATE FROM LIME WHICH MAY BE REQUIRED TO MEET PI AND TRIAXIAL REQUIREMENTS ADDED AT CONTRACTORS EXPENSE.

ITEM 100 SUMMARY OF "PREP. R.O.W."

DESCRIPTION	ROADWAY TOTAL (STA) EST.	ROADWAY TOTAL (STA) FIN.	TREES TOTAL (EA) EST.	TREES TOTAL (EA) FIN.	CHANNEL (STA) EST.	CHANNEL (STA) FIN.
US 281	226.2					
OUTFALLS					128.8	
TOTAL:	226.2				128.8	

ITEM 110 CHANNEL EXCAVATION

ITEM	QUANTITY (CY) EST.	QUANTITY (CY) FIN.
OUTFALLS		
	196813	
TOTAL:	196813	

SUMMARY OF AREAS (SY)

ITEM	DESCRIPTION		RATE	UNIT	QUANTITY EST.	QUANTITY FIN.
262	LIME TREAT FOR BASE COURSE (NEW / EXT.) (DC) 8 IN			SY	33387	
262	LIME TREAT FOR BASE COURSE (NEW / EXT.) (DC) 18 IN			SY	261399	
262	LIME TREAT FOR BASE COURSE (NEW / EXT.) (DC) 23 IN			SY	345101	
260	LIME TREAT. SUBGR. (DENS. CONT. 12 IN)			SY	655506	
⊗310	ASPH. MATERIAL (MC-30)		0.2 GAL / SY	SY	639890	
⊗***	ONE COAT SURFACE TREATMENT			SY	639890	
⊗3146	ASPH. CONC. PAV. TY "D" (1.5 IN)		171 LB / SY	SY	98778	
⊗3146	ASPH. CONC. PAV. TY "D" (3 IN)		342 LB / SY	SY	155215	
$3358	ASPH. CONC. PAV. (1.5 IN)(PFC)(PG 76-22)	{MAINLANES}	142.5 LB / SY	SY	331110	
⊗3248	ASPH. CONC. PAV. (2 IN)	{HDSMACP}	220 LB / SY	SY	336422	
⊗3248	ASPH. CONC. PAV. (3 IN)	{HDSMACP}	330 LB / SY	SY	97098	
⊗3241	ASPH. CONC. PAV. (6 IN)	{SP HMACP}	660 LB / SY	SY	342421	
354	PLANING AND/OR TEXTURING PAVEMENT			SY	54025	

⊗ FOR CONTRACTOR'S INFORMATION ONLY (NON - PAY)
$ FOR CONTRACTOR'S INFORMATION ONLY (NON - PAY). ITEM TO BE PAID AS ASPHALT (TY I OR II, CRM) AND AGGREGATE (CLA)

⊗ TRAVELERS INFORMATION STATION / HIGHWAY ADVISORY RADIO

DESCRIPTION	QUANTITY (EA) EST.	QUANTITY (EA) FIN.
PHARR MAINTENANCE YARD	1	
TOTAL:	1	

⊗ FOR CONTRACTOR'S INFORMATION ONLY (NON - PAY)

ITEM 1057 TRANSPLANTING TREES AND PALMS BY TREE SPADE

DESCRIPTION	TOTAL (EA) ITEM 1057 EST.	TOTAL (EA) ITEM 1057 FIN.
US 281		
NB Frontage Rd.	148	
SB Frontage Rd.	131	
TOTAL:	279	

DATA FOR ASPHALTIC CONCRETE PAVEMENT

ITEM	DESCRIPTION	RATE	UNIT	QUANTITY EST.	QUANTITY FIN.
310	ASPH. MATERIAL (MC - 30)	0.2 GAL / SY	GAL	127978	
316	ASPH (AC - 10)	0.3 GAL / SY	GAL	191967	
316	AGGR (TY PB, GR 4)	1 CY / 120 SY	CY	5332	
3146	ASPH. CONC. PAV. TY "D" (1.5 IN)	171 LB / SY	TON	8446	
3146	ASPH. CONC. PAV. TY "D" (3.0 IN)	342 LB / SY	TON	26542	
3146	ASPH. CONC. PAV. TY "D" TOTAL:		TON	34987	
3248	ASPH. CONC. PAV. TY "B" (2 IN)	220 LB / SY	TON	37006	
3248	ASPH. CONC. PAV. TY "B" (3 IN)	330 LB / SY	TON	16021	
3241	ASPH. CONC. PAV. TY "B" (6 IN)	660 LB / SY	TON	112999	
	ASPH. CONC. PAV. TY "B" TOTAL:		TON	166027	
3358	PFC AGGR (CLA)	131.1 LB / SY	TON	21704	
3358	PFC ASPH (TY I OR II)	11.4 LB / SY	TON	1887	
	TACK COAT (NON - PAY)	(AS REQUIRED)			
580	PROJ MAINT MOWING	3CYC/YR	CYC	13	
580	PROJ MAINT LITTER PICKUP	3CYC/YR	CYC	13	
580	PROJ MAINT SWEEPING	3CYC/YR	CYC	13	

ITEM 247 SUMMARY OF FLEXIBLE BASE

STATION LIMITS	TOTAL (CY) EST.	TOTAL (CY) FIN.
FLEX. BASE (RDWY DEL) (TY D GR 6 CL 4)		
US 281	189127	
TOTAL:	189127	

ITEM 5190 REMOVE & SALVG LANDSCAPE PAVRS

DESCRIPTION	QUANTITY (SY) EST.	QUANTITY (SY) FIN.
US 281	4520	
TOTAL:	4520	

SUMMARY OF ALTERNATE TO FLEXIBLE BASE

ITEM	DESCRIPTION	RATE	UNIT	QUANTITY EST.	QUANTITY FIN.
247	FLEX BASE (COMP IN PLACE) (TY A GR 1 CL 4)		CY	189,127	
262	LIME (TY A SLURRY) TY B OR TY C (SLURRY)	2% BY WT	TON	5712	
262	LIME TRT (6" CRSE (EXT. OR) (DC) (VAR)		SY	639,887	

REVISED
9-26-03

Parsons Brinckerhoff Quade & Douglas Inc.

Texas Department of Transportation

© 2002 by TxDOT

US 281
ESTIMATE & QUANTITY

SHEET 1 of 7

DESIGNED: XXX	FED. RD. DIV. No.	STATE	FEDERAL AID PROJECT No.	HIGHWAY No.
CHECKED: XXX	6	TEXAS		US 281
DRAWN: XXX	STATE DISTRICT	COUNTY	CONTROL No.	SECTION No.	JOB No.	SHEET No.
CHECKED: XXX	PHARR	HIDALGO	0255	08	091	23

9/10/03 1:18 PM

I:\Projects\22322a\CADD\Sheets\Summary\281eq01.xls

ITEM 251
SUMMARY

REMOVAL SHEET NO.	ITEM 251 7 IN FLEX. BASE REWORK BASE MAT'L. TOTAL (CY)		ITEM 251 8 IN FLEX. BASE REWORK BASE MAT'L. TOTAL (CY)		ITEM 251 9 IN FLEX. BASE REWORK BASE MAT'L. TOTAL (CY)		ITEM 251 10 IN FLEX. BASE REWORK BASE MAT'L. TOTAL (CY)		ITEM 251 14 IN FLEX. BASE REWORK BASE MAT'L. TOTAL (CY)	
	EST.	FIN.	EST.	FIN.	EST.	FIN.	EST.	FIN.	EST.	FIN.
SHEET 1			1380				1333			
SHEET 2			1329				2571			
SHEET 3			1146				3012			
SHEET 4			2101				2856			
SHEET 5			1289				3352			
SHEET 6			1172				2670			
SHEET 7			1665				3318			
SHEET 8			1023				4448			
SHEET 8A							1203			
SHEET 9			193				5676			
SHEET 10			383				4743			
SHEET 11			551		437		2099		1537	
SHEET 12	526				1249				4008	
SHEET 13	847								3099	
SHEET 14	2160								2856	
SHEET 15	521				269				3977	
SHEET 16	400								3686	
SHEET 17	556				371				3635	
SHEET 18	2106								2644	
SHEET 19	532								5001	
SHEET 20	2693								1749	
SHEET 21			2069							
SHEET 22	635									
TOTAL:	10976		14300		2325		37280		32190	

NOTE: TOTAL FOR ITEM 305 AND 251 SHOULD BE ADDED TO REFLECT TOTAL REWORK BASE MAT'L QUANTITY.

ITEM 514
PERMANENT CONCRETE TRAFFIC BARRIER

DESCRIPTION	ITEM 514 (SSCB) FURNISH & INSTALL TYPE 2 (FT)		ITEM 514 (SSCB) FURNISH & INSTALL TYPE 3 (FT)		ITEM 514 (SSCB) FURNISH & INSTALL TYPE 4 (FT)	
	EST.	FIN.	EST.	FIN.	EST.	FIN.
US 281	18606		590		770	
TOTAL:	18606		590		770	

ITEM 420

DESCRIPTION	CL C CONC. (FOOTING) (CY)		CL S CONC. (MISC) (CY)	
	EST.	FIN.	EST.	FIN.
US 281	72		8	
TOTAL:	72		8	

ITEM 251
REWORK BASE MAT'L
TCP CONSTRUCTED DETOURS *
TOTAL (CY)

	EST.	FIN.
US 281	17359	
TOTAL	17359	

* SEE TCP SHEET NO. 40 FOR ADDITIONAL INFORMATION.

METAL BEAM GUARD FENCE

DESCRIPTION	ITEM 540 (BLK OUT) (12 GA) (TIM POST) (FT)		ITEM 540 (12 GA) (TIM POST) (FT)		ITEM 540 TRANS (12 GA) (EA)	
	EST.	FIN.	EST.	FIN.	EST.	FIN.
US 281	901		12463		29	
TOTAL:	901		12463		29	

ITEM 540
TERMINAL ANCHOR SECTION

DESCRIPTION	ITEM 540 INSTALL (EA)	
	EST.	FIN.
US 281	19	
TOTAL:	19	

ITEM 5453
QUADGUARD SYSTEM (2')(TY A)(4 BAY)

DESCRIPTION	ITEM 5453 INSTALL (EA)	
	EST.	FIN.
US 281	2	
TOTAL:	2	

SINGLE GUARDRAIL TERMINAL

DESCRIPTION	ITEM 5819 INSTALL (EA)	
	EST.	FIN.
US 281	26	
TOTAL:	26	

ITEM 4438
FLOWABLE BACKFILL
TOTAL (CY)

	EST.	FIN.
US 281	862	
TOTAL:	862	

ITEM 450
SINGLE SLOPE TRAFFIC RAIL

DESCRIPTION	ITEM 450 (SSTR) FURNISH & INSTALL (FT)	
	EST.	FIN.
US 281	204	
RETAINING WALLS	7525	
TOTAL:	7729	

Parsons Brinckerhoff Quade & Douglas Inc.

Texas Department of Transportation

© 2002 by TxDOT

US 281
ESTIMATE & QUANTITY

SHEET 2 of 7

DESIGNED: PAF	FED. RD DIV. NO.	STATE	FEDERAL AID PROJECT No.		HIGHWAY No.
CHECKED: JP	6	TEXAS			US 281
DRAWN:	STATE DISTRICT	COUNTY	CONTROL No.	SECTION No.	JOB No.	SHEET No.
CHECKED:	PHARR	HIDALGO	0255	08	091	24

8/6/03 6:35 PM

I:\Projects\22322a\CADD\Sheets\Summary Sheets\281eq02.xls

ITEM 251
SUMMARY

REMOVAL SHEET NO.	ITEM 251 7 IN FLEX. BASE REWORK BASE MAT'L. TOTAL (CY)		ITEM 251 8 IN FLEX. BASE REWORK BASE MAT'L. TOTAL (CY)		ITEM 251 9 IN FLEX. BASE REWORK BASE MAT'L. TOTAL (CY)		ITEM 251 10 IN FLEX. BASE REWORK BASE MAT'L. TOTAL (CY)		ITEM 251 14 IN FLEX. BASE REWORK BASE MAT'L. TOTAL (CY)	
	EST.	FIN.	EST.	FIN.	EST.	FIN.	EST.	FIN.	EST.	FIN.
SHEET 1			1380				1333			
SHEET 2			1329				2571			
SHEET 3			1146				3012			
SHEET 4			2101				2856			
SHEET 5			1289				3352			
SHEET 6			1172				2670			
SHEET 7			1665				3318			
SHEET 8			1023				4448			
SHEET 8A							1203			
SHEET 9			193				5676			
SHEET 10			383				4743			
SHEET 11			551		437		2099		1537	
SHEET 12	526				1249				4008	
SHEET 13	847								3099	
SHEET 14	2160								2856	
SHEET 15	521				269				3977	
SHEET 16	400								3686	
SHEET 17	556				371				3635	
SHEET 18	2106								2644	
SHEET 19	532								5001	
SHEET 20	2693								1749	
SHEET 21			2069							
SHEET 22	635									
TOTAL:	10976		14300		2325		37280		32190	

NOTE: SALVAGE ACP & FLEXBASE SHOULD BE ADDED TO REFLECT TOTAL REWORK BASE MAT'L QUANTITY.

ITEM 514
PERMANENT CONCRETE TRAFFIC BARRIER

DESCRIPTION	ITEM 514 (SSCB) FURNISH & INSTALL TYPE 2 (FT)		ITEM 514 (SSCB) FURNISH & INSTALL TYPE 3 (FT)		ITEM 514 (SSCB) FURNISH & INSTALL TYPE 4 (FT)	
	EST.	FIN.	EST.	FIN.	EST.	FIN.
US 281	18606		590		770	
TOTAL:	18606		590		770	

ITEM 420

DESCRIPTION	CL C CONC. (FOOTING) (CY)		CL S CONC. (MISC) (CY)	
	EST.	FIN.	EST.	FIN.
US 281	72		8	
TOTAL:	72		8	

ITEM 251
REWORK BASE MAT'L
TCP CONSTRUCTED DETOURS *
TOTAL (CY)

	EST.	FIN.
US 281	17359	
TOTAL	17359	

* SEE TCP SHEET NO. 40 FOR ADDITIONAL INFORMATION.

METAL BEAM GUARD FENCE

DESCRIPTION	ITEM 540 (BLK OUT) (12 GA) (TIM POST) (FT)		ITEM 540 (12 GA) (TIM POST) (FT)		ITEM 540 TRANS (12 GA) (EA)	
	EST.	FIN.	EST.	FIN.	EST.	FIN.
US 281	901		12463		29	
TOTAL:	901		12463		29	

ITEM 540
TERMINAL ANCHOR SECTION

DESCRIPTION	ITEM 540 INSTALL (EA)	
	EST.	FIN.
US 281	19	
TOTAL:	19	

ITEM 5453
QUADGUARD SYSTEM (2')(TY A)(4 BAY)

DESCRIPTION	ITEM 5453 INSTALL (EA)	
	EST.	FIN.
US 281	2	
TOTAL:	2	

SINGLE GUARDRAIL TERMINAL

DESCRIPTION	ITEM 5819 INSTALL (EA)	
	EST.	FIN.
US 281	26	
TOTAL:	26	

ITEM 4438
FLOWABLE BACKFILL
TOTAL (CY)

	EST.	FIN.
US 281	862	
TOTAL:	862	

ITEM 450
SINGLE SLOPE TRAFFIC RAIL

DESCRIPTION	ITEM 450 (SSTR) FURNISH & INSTALL (FT)	
	EST.	FIN.
US 281	204	
RETAINING WALLS	7525	
TOTAL:	7729	

1 REVISED 9-26-03

Parsons Brinckerhoff Quade & Douglas Inc.

Texas Department of Transportation

© 2002 by TxDOT

US 281
ESTIMATE & QUANTITY

SHEET 2 of 7

DESIGNED: PAF	FED. RD. DIV. NO.	STATE	FEDERAL AID PROJECT No.		HIGHWAY No.	
CHECKED: JP	6	TEXAS			US 281	
DRAWN:	STATE DISTRICT	COUNTY	CONTROL No.	SECTION No.	JOB No.	SHEET No.
CHECKED:	PHARR	HIDALGO	0255	08	091	24

8/6/03 6:35 PM

I:\Projects\22322a\CADD\Sheets\Summary Sheets\281eq02.xls

ITEM 305 SALVAGE ACP										
REMOVAL SHEET NO.	** ITEM 305 SALVAGE ACP (8.75 IN)		** ITEM 305 SALVAGE ACP (5.5 IN)		** ITEM 305 SALVAGE ACP (6.75 IN)		** ITEM 305 SALVAGE ACP (2.75 IN)		** ITEM 305 SALVAGE ACP (6.5 IN)	
	(SY) EST.	(CY)* EST.	(SY) EST.	(CY)* EST.	(SY) EST.	(CY)* EST.	(SY) EST.	(CY)* EST.	(SY) EST.	(CY)* EST.
Sheet 1									5645	866
Sheet 2									10890	1671
Sheet 3									12757	1958
Sheet 4									12095	1856
Sheet 5									14194	2178
Sheet 6									11307	1735
Sheet 7									14051	2156
Sheet 8									9238	1418
Sheet 9									8526	1309
Sheet 10									13404	2057
Sheet 11	4649	960					2055	133	5958	914
Sheet 12	12124	2505	437	57	3182	507	4817	313	622	95
Sheet 13	9374	1937			5124	817				
Sheet 14	8640	1785			13064	2082				
Sheet 15	12030	2485	426	55	3148	502			837	128
Sheet 16	11149	2303			2414	385				
Sheet 17	10995	2272	362	47	3364	536			1379	212
Sheet 18	7998	1652			12739	2030				
Sheet 19	15126	3125	1334	173	1885	300				
Sheet 20	5291	1093	16289	2115						
Sheet 21										
Sheet 22					3842	612				
TOTAL:	97376	20118	18848	2448	48762	7771	6872	446	120903	18555

* FOR CONTRACTOR'S INFORMATION ONLY. QUANTITIES REFLECT 85% SALVAGEABLE RATE.

** THESE QUANTITIES ARE TO BE USED AS REWORK BASE MATERIAL (ITEM 251).

ITEM 423 RETAINING WALLS		
DESCRIPTION	MSE QUANTITY (SF)	
	EST.	FIN.
THROUGHOUT PROJECT	117932	
TOTAL:	117932	

ITEM 305 SALVAGE ACP		
DESCRIPTION	(3 IN)	
	(SY) EST.	(CY) EST.
TCP CONSTR DETOURS*	40865	2895
TOTAL:	40865	2895

* SEE TCP SHEET NO. 40 FOR ADDITIONAL INFORMATION.

Parsons Brinckerhoff Quade & Douglas Inc.

Texas Department of Transportation

© 2002 by TxDOT

US 281
ESTIMATE & QUANTITY

SHEET 3 of 7

	FED. RD. DIV. NO.	STATE	FEDERAL AID PROJECT NO.		HIGHWAY NO.	
DESIGNED:	6	TEXAS			US 281	
CHECKED:	STATE DISTRICT	COUNTY	CONTROL NO.	SECTION NO.	JOB NO.	SHEET NO.
DRAWN:						
CHECKED:	PHARR	HIDALGO	0255	08	091	25

7/2/03 12:13 PM

I:\Projects\22322a\CADD\Sheets\Summary Sheets\281eq03.xls

ITEM 251
SALVAGE ACP

REMOVAL SHEET NO.	** ITEM ~~305~~ 251 SALVAGE ACP (8.75 IN)		** ITEM ~~305~~ 251 SALVAGE ACP (5.5 IN)		** ITEM ~~305~~ 251 SALVAGE ACP (6.75 IN)		** ITEM ~~305~~ 251 SALVAGE ACP (2.75 IN)		** ITEM ~~305~~ 251 SALVAGE ACP (6.5 IN)	
	(SY) EST.	(CY)* EST.	(SY) EST.	(CY)* EST.	(SY) EST.	(CY)* EST.	(SY) EST.	(CY)* EST.	(SY) EST.	(CY)* EST.
Sheet 1									5645	866
Sheet 2									10890	1671
Sheet 3									12757	1958
Sheet 4									12095	1856
Sheet 5									14194	2178
Sheet 6									11307	1735
Sheet 7									14051	2156
Sheet 8									9238	1418
Sheet 9									8526	1309
Sheet 10									13404	2057
Sheet 11	4649	960					2055	133	5958	914
Sheet 12	12124	2505	437	57	3182	507	4817	313	622	95
Sheet 13	9374	1937			5124	817				
Sheet 14	8640	1785			13064	2082				
Sheet 15	12030	2485	426	55	3148	502			837	128
Sheet 16	11149	2303			2414	385				
Sheet 17	10995	2272	362	47	3364	536			1379	212
Sheet 18	7998	1652			12739	2030				
Sheet 19	15126	3125	1334	173	1885	300				
Sheet 20	5291	1093	16289	2115						
Sheet 21										
Sheet 22					3842	612				
TOTAL:	97376	20118	18848	2448	48762	7771	6872	446	120903	18555

* ~~FOR CONTRACTOR'S INFORMATION ONLY~~. QUANTITIES REFLECT 85% SALVAGEABLE RATE.

** THESE QUANTITIES ARE TO BE USED AS REWORK BASE MATERIAL (ITEM 251).

ITEM 423
RETAINING WALLS

DESCRIPTION	MSE QUANTITY (SF) EST.	FIN.
THROUGHOUT PROJECT	126,551	
TOTAL:	126,551	

ITEM 251
SALVAGE ACP

DESCRIPTION	(3 IN) (SY) EST.	(CY) EST.
TCP CONSTR DETOURS*	40865	2895
TOTAL:	40865	2895

* SEE TCP SHEET NO. 40 FOR ADDITIONAL INFORMATION.

ITEM 403
TEMPORARY SPECIAL SHORING

DESCRIPTION	QUANTITY (SF) EST	FIN
RETAINING WALLS H,K,L	6,905	
SHEET 970 & 974	2,340	
TOTAL	9,245	

REVISED
9-26-03

Parsons Brinckerhoff Quade & Douglas Inc.

Texas Department of Transportation

© 2002 by TxDOT

US 281
ESTIMATE & QUANTITY

SHEET 3 of 7

DESIGNED:	FED. RD. DIV. No.	STATE	FEDERAL AID PROJECT No.	HIGHWAY No.
CHECKED:	6	TEXAS		US 281

DRAWN:	STATE DISTRICT	COUNTY	CONTROL No.	SECTION No.	JOB No.	SHEET No.
CHECKED:	PHARR	HIDALGO	0255	08	091	25

7/2/03 12:13 PM
I:\Projects\22322a\CADD\Sheets\Summary Sheets\281eq03.xls

REMOVAL ITEMS
SUMMARY

SHEET NO.	ITEM 104 REMOV CONC SIDEWALK (SY)		ITEM 104 REMOV CONC CURB & GUTTER (FT)		ITEM 104 REMOV CONC CURB (FT)		ITEM 104 REMOV CONC DRAIN (SY)		ITEM 104 REMOV CONC RIPRAP (SY)		ITEM 104 REMOV CONC MEDIAN (SY)	
	EST.	FIN.	EST.	FIN.	EST.	FIN.	EST.	FIN.	EST.	FIN.	EST.	FIN.
1												
2												
3												
4									2394			
5												
6												
7												
8							774		1922			
9							694		2155			
10							303					
11												
12					1640		91				248	
13	14		879		2640		795					
14	84		2120		3121		690					
15					2661		188				261	
16					2759		0		114			
17					2400		501		67		344	
18	289		936		2905		626					
19					2809		841				358	
20			2198		2906		546					
21												
22	188		1256									
TOTAL:	575		7389		23841		6049		6652		1211	

REMOVAL ITEMS
SUMMARY

SHEET NO.	ITEM 542 REMOV METAL BEAM GUARD FENCE (LF)		ITEM 542 REMOV TERM ANCHOR SECTION (EA)		ITEM 542 REMOV SNGL GDRAIL TERM (TY I, II, OR III)							
	EST.	FIN.	EST.	FIN.	EST.	FIN.	EST.	FIN.	EST.	FIN.	EST.	FIN.
1	150		1									
2	125				1							
3												
4	2350		8		6							
5												
6												
7												
8	1275		3		2							
9	1725		3		4							
10												
11												
12												
13	450				2							
14	450				2							
15												
16	500		3		2							
17	1725				7							
18	1825		1		4							
19	375		1									
20	400				2							
21												
22												
TOTAL:	11350		20		32		0		0		0	

Parsons Brinckerhoff Quade & Douglas Inc.

Texas Department of Transportation

© 2002 by TxDOT

US 281
ESTIMATE & QUANTITY

SHEET 4 of 7

DESIGNED:	FED. RD DIV. NO.	STATE	FEDERAL AID PROJECT NO.			HIGHWAY NO.
CHECKED:	6	TEXAS				US 281
DRAWN:	STATE DISTRICT	COUNTY	CONTROL NO.	SECTION NO.	JOB NO.	SHEET NO.
CHECKED:	PHARR	HIDALGO	0255	08	091	26

6/27/03 10:30 AM

I:\Projects\22322a\CADD\Sheets\Summary Sheets\281 eq04.xls

ITEM 496

SHEET NO.	ITEM 496 REMOVE OLD STR (LARGE) (BRIDGE) (EA)	
	EST.	FIN.
233	2	
TOTAL:	2	

ITEM 164

SHEET NO.	CELL FIB SEED (TEMP) (WARM) (AC)		CELL FIB SEED (TEMP) (COOL) (AC)		CELL FIB SEED (PERM) (URBAN) (CLAY) (AC)	
	EST.	FIN.	EST.	FIN.	EST.	FIN.
	81.6		81.6		81.6	
TOTAL:	81.6		81.6		81.6	

ITEM 168

SHEET NO.	VEGETATIVE WATERING MG	
	EST.	FIN.
	866	
TOTAL:	866	

ITEM 432
SUMMARY OF CONCRETE RIPRAP

SHEET NO.	CONC. RIPRAP 4 IN CL B CONC (CY)		CONC. RIPRAP 6 IN CL B CONC (CY)	
	EST.	FIN.	EST.	FIN.
US 281				
MAIN LANES	22			
NB FRONTAGE				
SB FRONTAGE				
RAMPS	143			
TURN AROUNDS				
RETAINING WALLS	387			
TOTAL:	552			

ITEM 530
SUMMARY OF DRIVEWAYS AND TURNOUTS

LOCATION	DRIVEWAYS (SY)										TURNOUTS (SY)			
	P - I		TY PRB - I		TY PB - I		CONC. 4 IN		CONC. 6 IN		TY PRB - I		CONC. 6 IN	
	EST.	FIN.	EST.	FIN.	EST.	FIN.	EST.	FIN.	EST.	FIN.	EST.	FIN.	EST.	FIN.
US 281														
NB FRONTAGE	746.8				1208.8				968.7		1323.7			
SB FRONTAGE	424.0				742.3				461.4		1450.5			
TRENTON					638.9									
OWASSA					263.9				88.9					
NOLANA									559.9					
SIOUX RD									309.0					
TEXAS 495									103.7					
TOTAL:	1170.8		0.0		2853.9		0.0		2491.6		2774.2			

⊖ FOR ADDITIONAL DRIVEWAYS THAT ARISE DURING CONSTRUCTION.
EST. 5 DRIVEWAYS / MI. @ 18 SY / DRIVEWAY.

ITEM 5559
COLORED-TEXTURIZED CONCRETE

SHEET	SY
301	1813

ITEM 5190
REMOVING AND RELAYING LANDSCAPE PAVING UNITS

SHEET	SY
239	1280
245	3240
TOTAL	4520

ITEM 5788
LANDSCAPE PAVERS

SHEET	SF
	30422
	28007
	40887
	48013
TOTAL	147329

Parsons Brinckerhoff Quade & Douglas Inc.

Texas Department of Transportation

© 2002 by TxDOT

US 281
ESTIMATE & QUANTITY

SHEET 5 of 7

	FED. RD DIV. NO.	STATE	FEDERAL AID PROJECT No.	HIGHWAY NO.
DESIGNED:				
CHECKED:	6	TEXAS		US 281

	STATE DISTRICT	COUNTY	CONTROL NO.	SECTION NO.	JOB NO.	SHEET NO.
DRAWN:						
CHECKED:	PHARR	HIDALGO	0255	08	091	27

8/7/03 9:40 AM

I:\Projects\22322a\CADD\Sheets\Summary Sheets\281eq05.xls

ITEM 529

DESCRIPTION	CONC. CURB TY "A"(BARRIER) (FT)		CONC. CURB TY "B" (MOUNTABLE) (FT)		CONC. C & G TY "A" (BARRIER) (FT)		CONC. C & G TY "B" (MOUNTABLE) (FT)		4 FT CONC. VALLEY GUTTER TY "A" (FT)		2 FT CONC. VALLEY GUTTER (FT)		CONC. CURB TY "A" (MOUNTABLE) (FT)		CONC. C & G TY "A" (MOUNTABLE) (FT)	
	EST.	FIN.	EST.	FIN.	EST.	FIN.	EST.	FIN.	EST.	FIN.	EST.	FIN.	EST.	FIN.	EST.	FIN.
US 281																
MAIN LANES											2465					
NB FRONTAGE			21390		2615		11324		587							
SB FRONTAGE			22838		2255		12839		586							
RAMPS													5937		5779	
TURN AROUNDS	7158				3624											
WISCONSIN RD			527													
TRENTON RD	2170				2484											
ALBERTA RD			468													
NB BUSINESS 281			541													
OWASSA RD					709											
MINNESOTA RD			280													
NOLANA LOOP	606				1240											
SIOUX RD	633				1921											
TEXAS 495					920											
TOTAL:	**10567**	**0**	**46044**	**0**	**15768**	**0**	**24163**	**0**	**1173**	**0**	**2465**	**0**	**5937**	**0**	**5779**	**0**

ITEM 531 AND 5866
SUMMARY OF CONC. SIDEWALKS AND CURB RAMP & LANDING

SHEET NO.	5 FT CONC. SIDEWALK (SY)		RAMP TY 1 (EA)		RAMP TY 7 (EA)		RAMP TY 8 (EA)		RAMP TY 21 (EA)		RAMP TY 22 (EA)	
	EST.	FIN.	EST.	FIN.	EST.	FIN.	EST.	FIN.	EST.	FIN.	EST.	FIN.
US 281												
MAIN LANES												
NB FRONTAGE												
SB FRONTAGE												
RAMPS												
TURN AROUNDS												
TRENTON RD	250.6						7		2		2	
NB BUSINESS 281												
OWASSA RD												
NOLANA LOOP	732.7				28		4		2			
SIOUX RD	728.4				4		4		2			
TEXAS 495	468.7				4		4					
TOTAL:	**2180.4**	**0.0**	**0**	**0**	**36**	**0**	**19**	**0**	**6**	**0**	**2**	**0**

ITEM 560
SUMMARY OF MAILBOXES

DESCRIPTION	SINGLE (EA)		DOUBLE (EA)		MULTIPLE (EA)	
	EST.	FIN.	EST.	FIN.	EST.	FIN.
US 281						
NB FRONTAGE ROAD	8		1		13	
SB FRONTAGE ROAD	7				2	
TOTAL:	15		1		15	

Parsons Brinckerhoff Quade & Douglas Inc.

Texas Department of Transportation

© 2002 by TxDOT

US 281
ESTIMATE & QUANTITY

SHEET 6 of 17

DESIGNED:	FED. DIV. NO.	STATE	FEDERAL AID PROJECT No.		HIGHWAY No.	
CHECKED:	6	TEXAS			US 281	
DRAWN:	STATE DISTRICT	COUNTY	CONTROL No.	SECTION No.	JOB No.	SHEET No.
CHECKED:	PHARR	HIDALGO	0255	08	091	28

7/2/03 12:14 PM

I:\Projects\22322a\CADD\Sheets\Summary Sheets\281eq06.xls

ITEM 529

DESCRIPTION	CONC. CURB TY "A"(BARRIER) (FT)		CONC. CURB TY "B" (MOUNTABLE) (FT)		CONC. C & G TY "A" (BARRIER) (FT)		CONC. C & G TY "B" (MOUNTABLE) (FT)		4 FT CONC. VALLEY GUTTER TY "A" (FT)		4'-2" CONC. VALLEY GUTTER TY "B" (FT)		CONC. CURB TY "A" (MOUNTABLE) (FT)		CONC. C & G TY "A" (MOUNTABLE) (FT)	
	EST.	FIN.	EST.	FIN.	EST.	FIN.	EST.	FIN.	EST.	FIN.	EST.	FIN.	EST.	FIN.	EST.	FIN.
US 281																
MAIN LANES									2464		4459					
NB FRONTAGE			21390		2615		11324		587							
SB FRONTAGE			22838		2255		12839		587							
RAMPS													5937		5779	
TURN AROUNDS	7158				3624											
WISCONSIN RD			527													
TRENTON RD	2170				2484											
ALBERTA RD			468													
NB BUSINESS 281			541								970					
OWASSA RD					709											
MINNESOTA RD			280													
NOLANA LOOP	606				1240											
SIOUX RD	633				1921											
TEXAS 495					920											
TOTAL:	**10567**	**0**	**46044**	**0**	**15768**	**0**	**24163**	**0**	**3638**	**0**	**5429**	**0**	**5937**	**0**	**5779**	**0**

ITEM 531 AND 5866
SUMMARY OF CONC. SIDEWALKS AND CURB RAMP & LANDING

SHEET NO.	5 FT CONC. SIDEWALK (SY)		RAMP TY 1 (EA)		RAMP TY 7 (EA)		RAMP TY 8 (EA)		RAMP TY 21 (EA)		RAMP TY 22 (EA)	
	EST.	FIN.	EST.	FIN.	EST.	FIN.	EST.	FIN.	EST.	FIN.	EST.	FIN.
US 281												
MAIN LANES												
NB FRONTAGE												
SB FRONTAGE												
RAMPS												
TURN AROUNDS												
TRENTON RD	250.6						7		2		2	
NB BUSINESS 281												
OWASSA RD												
NOLANA LOOP	732.7				28		4		2			
SIOUX RD	728.4				4		4		2			
TEXAS 495	468.7				4		4					
TOTAL:	**2180.4**	**0.0**	**0**	**0**	**36**	**0**	**19**	**0**	**6**	**0**	**2**	**0**

ITEM 560
SUMMARY OF MAILBOXES

DESCRIPTION	SINGLE (EA)		DOUBLE (EA)		MULTIPLE (EA)	
	EST.	FIN.	EST.	FIN.	EST.	FIN.
US 281						
NB FRONTAGE ROAD	8		1		13	
SB FRONTAGE ROAD	7				2	
TOTAL:	15		1		15	

⚠1 REVISED 9-26-03

Parsons Brinckerhoff Quade & Douglas Inc.

Texas Department of Transportation

© 2002 by TxDOT

US 281
ESTIMATE & QUANTITY

SHEET 6 of 17

DESIGNED:	FED. RD DIV. NO.	STATE	FEDERAL AID PROJECT No.			HIGHWAY No.
CHECKED:	6	TEXAS				US 281
DRAWN:	STATE DISTRICT	COUNTY	CONTROL No.	SECTION No.	JOB No.	SHEET No.
CHECKED:	PHARR	HIDALGO	0255	08	091	28

9/29/03 4:12 PM

I:\Projects\22322a\CADD\Sheets\Summary Sheets\281eq06.xls

ITEM 658
SUMMARY OF DELINEATORS & OBJECT MARKERS

LOCATION	DELINEATORS (OM - 2SR) (B) (BI - DIR) (EA)		DELINEATORS ASM TY B (D-SW) (EA)		OBJECT MARKER TY 3 OM - 3R (EA)	
	EST.	FIN.	EST.	FIN.	EST.	FIN.
MAINLANES			79		9	
NB FRONTAGE RD			6		3	
SB FRONTAGE RD			7		2	
RAMPS			2		2	
NB BUS 281			-		-	
TOTAL:			94		16	

OBJECT MARKERS SHALL BE MOUNTED ON MAILBOX SUPPORTS
IF WINGED CHANNEL POSTS ARE USED.
IF TUBE IS USED, OBJECT MARKER SHALL BE MOUNTED ON A DELINEATOR POST.

ITEM 618

LOCATION	CONDUIT (PVC)(SCHD 40)(2") TOTAL (LF)	
	EST.	FIN.
BRIDGES		
TRENTON	254.0	
NOLANA	285.2	
PHARR/MCALLEN	60.0	
SIOUX	285.2	
TOTAL:	884.4	

ITS SUMMARY

SHEET NO	STATION TO STATION	6180511	6180526	6180575	6200511	6200510	6840544	60310502	60310506	6240503	1248-****	****					6880512	
		CONDT PVC (2IN)	CONDT RMC (2IN) BORED	CONDT RMC (2IN) CONCRETE ENCASED	ELEC CONDR (NO. 4) INSULATED	ELEC CONDR (NO. 6) INSULATED	TRAF SIG CBL (TY C) (2 CONDR) (14 AWG)	COMM. CABLE (6 PAIR) #22	COMM. CABLE (25 PAIR) #22	GROUND BOX (TYC) WITH APRON	LED DYANAMIC MESSAGSE SIGN SYSTEM	REMOVE EXIST VARIABLE MESSAGE SIGN SYSTEM					DIGITAL LOOP VEHICLE DETECTOR UNIT	FINAL ACCEPTANCE PLAN
		LF	LF	LF	LF	LF	LF	LF	LF	EA	EA	EA					EA	LS
5	816+00 - 828+00	1410	608		392			935		4	1	1						
6	828+00 - 840+00	3001	324			480	3138	1323	118	7							10	
7	840+00 - 852+00	1904	500						1217	3								
8	852+00 - 860+00	380							195									
	TOTALS	6695	1432	0	392	480	3138	2258	1530	14	1	1					10	0

Parsons Brinckerhoff Quade & Douglas Inc.

Texas Department of Transportation

© 2002 by TxDOT

US 281
ESTIMATE & QUANTITY

SHEET 7 of 7

DESIGNED: XXX	FED. DIV. NO.	STATE	FEDERAL AID PROJECT NO.	HIGHWAY NO.
CHECKED: XXX	6	TEXAS		US 281

DRAWN: XXX	STATE DISTRICT	COUNTY	CONTROL NO.	SECTION NO.	JOB NO.	SHEET NO.
CHECKED: XXX	PHARR	HIDALGO	0255	08	091	29

7/16/03 2:44 PM

I:\Projects\22322a\CADD\Sheets\Summary Sheets\281eq07.xls

SUMMARY OF DRAINAGE STRUCTURES

SHEET No.	CEMENT STABLIZED BACKFILL ITEM 400		*SEWER EXCAV. (ITEM 400) (CY) EST	FIN	TRENCH EXC. PROTECTION (ITEM 402) (FT) EST	FIN	ITEM 481 6 IN PVC (FT) EST	FIN	RCP SEW (CL III) (ITEM 464) 18 IN (FT) EST	FIN	24 IN (FT) EST	FIN	30 IN (FT) EST	FIN	36 IN (FT) EST	FIN	42 IN (FT) EST	FIN
N.B.FRONTAGE ROAD																		
540			181		300		-		286		40		-		-		-	
541			126		168		-		108		56		-		-		-	
542			270		-		-		357		48		-		-		-	
543			2244		1200		-		155		-		222		467		648	
544			4418		1200		-		108		-		-		-		-	
545			4205		1200		-		182		-		-		-		-	
546			6313		1200		-		326		-		-		-		1117	
547			3872		1453		-		463		-		-		709		446	
548			2352		845		415		190		338		332		354		-	
549			3134		1200		-		158		-		-		240		925	
550			1583		1200		-		152		76		-		-		457	
551			4196		1308		-		-		50		-		888		-	
552			1659		1082		-		114		77		600		344		-	
553			1617		457		-		142		75		769		196		-	
554			2617		1200		—		61		-		-		226		1157	
555			2528		1200		-		103		-		-		-		893	
556			5633		1166		-		107		70		-		-		-	
557			3731		1316		-		50		58		-		-		-	
558			2350		1443		-		235		-		-		260		-	
559			910		842		-		-		255		157		320		-	
560			-		-		-		280		-		-		-		-	
TOTAL			53,939		19,980		415		3,577		1,143		2,080		4,004		5,643	
S.B.FRONTAGE ROAD																		
561			515		248		-		-		-		-		266		-	
562			2764		1342		-		72		70		-		1331		-	
563			1724		1500		-		175		455		684		-		-	
564			920		913		-		81		993		-		-		-	
565			1820		1344		-		120		60		276		438		-	
566			2566		1383		-		183		36		-		-		-	
567			3284		1248		-		68		108		-		-		346	
568			3243		1310		-		94		115		-		519		522	
569			1800		633		-		95		47		277		396		-	
570			1794		1211		64		518		366		386		-		-	
571			717		862		317		360		296		-		-		-	
572			1854		1177		-		210		-		-		428		407	
573			2383		1069		-		146		-		-		-		1091	
574			3153		1510		-		211		120		-		-		-	
575			3704		1315		-		-		129		-		-		-	
576			1825		1207		-		59		50		324		350		400	
577			30		-		-		36		7		-		-		-	
578			70		49		-		-		107		-		-		-	
579			110		91		-		91		-		-		-		-	
580			10		9		-		-		9		-		-		-	
581			152		122		-		56		66		-		-		-	
582			40		44		-		44		-		-		-		-	
583			260		184		-		184		-		-		-		-	
TOTAL			34,738		18,771		381		2,712		3,081		1,947		3,728		2,766	

SHEET No.	RCP SEW (CL III) (ITEM 464) 48 IN (FT) EST	FIN	54 IN (FT) EST	FIN	60 IN (FT) EST	FIN	66 IN (FT) EST	FIN	72 IN (FT) EST	FIN	ITEM 467 S.E.T. 18"-6:1 (EA) EST	FIN	ITEM 471 DECK DRAIN EST	FIN	INLET (COMPL) (ITEM 465) TY A (EA) EST	FIN	TY F SPL (EA) EST	FIN	TY C (EA) EST	FIN	TY CC (EA) EST	FIN	TY A2 (EA) EST	FIN
N.B.FRONTAGE ROAD																								
540	-		-		-		-				-		-		1		-		4		1		-	
541	-		-		-		-				-		-		-		-		-		3		-	
542	-		-		-		-				-		-		1		-		1		-		-	
543	-		-		-		-				-		-		-		-		2		-		-	
544	-		892		394		-				-		-		-		-		-		2		-	
545	143		693		361		-				-		-		-		-		-		3		1	
546	199		-		-		-				-		-		1		-		2		2		-	
547	-		-		-		-				-		-		-		-				3		-	
548	-		-		-		-				-		6		2		1		1		1		-	
549	-		-		-		-				-		-		-		-		-		3		-	
550	722		-		-		-				-		-		-		-		2		2		1	
551	484		-		-		-				-		-		1		-		1		2		-	
552	-		-		-		-				-		-		2		-		1		2		-	
553	-		-		-		-				-		-		-		-		3		-		-	
554	-		-		-		-				-		-		2		-		-		1		-	
555	-		-		-		-				-		-		-		-		-		3		-	
556	316		-		741		341				-		-		-		-		-		3		1	
557	542		559		110		-				-		-		2		-		-		1		-	
558	817		-		-		-				-		-		-		-		-		2		-	
559	-		-		-		-				-		-		-		-		2		-		-	
560	-		-		-		-				13		-		-						-		-	
TOTAL	3,223		2,144		1,606		341				13		6		12		1		19		34		3	
S.B.FRONTAGE ROAD																								
561	-		-		-				-				-		-				-		-		-	
562	-		-		-				-				-		1				1		2		-	
563	-		-		-				-				-		1				4		-		-	
564	-		-		-				-				-		-				2		-		-	
565	403		-		-				-				-		-				1		1		-	
566	84		342		342				346				-		-				-		2		1	
567	952		-		-				-				-		-				-		2		-	
568	-		-		-				-				-		1				2		2		-	
569	-		-		-				-				-		2				4		-		-	
570	-		-		-				-				1		2				2		-		-	
571	-		-		-				-				4		1				3		-		-	
572	-		-		-				-				-		2				-		2		-	
573	-		-		-				-				-		1				-		-		-	
574	742		296		-				-				-		-				2		3		-	
575	801		490		-				-				-		1				-		2		-	
576	-		-		-				-				-		1				-		1		-	
577	-		-		-				-				-		1				-		2		-	
578	-		-		-				-				-		-				-		2		-	
579	-		-		-				-				-		-				-		2		-	
580	-		-		-				-				-		-				1		2		-	
581	-		-		-				-				-		-				-		1		-	
582	-		-		-				-				-						-		1		-	
583	-		-		-				-				-		2				-		1		-	
TOTAL	2,982		1,128		342				346				5		16				22		28		1	

SHEET No.	INLET (COMPL) (ITEM 465) TY F (EA) EST	FIN	TY AI (EA) EST	FIN	TY LI (EA) EST	FIN	ITEM 465 - JUNC.BOX 8'x8' (EA) EST	FIN	6'x6' (EA) EST	FIN	5'x5' (EA) EST	FIN	ITEM 465 INLET EXT. EST	FIN	MANHOLE (COMPL) (ITEM 465) TY M (EA) EST	FIN	TY A (EA) EST	FIN	TY AI (EA) EST	FIN	ITEM 479 ADJUST INLET (JUNC.BOX) (EA) EST	FIN	ITEM 496 REMOV OLD STR. (SMALL) (EA) EST	FIN	ITEM 496 REMOV OLD STR. (PIPE) (LF) EST	FIN
N.B.FRONTAGE ROAD																										
540	1		-		-				2		-		1		1		-		-		2		-		-	
541	3		-		-				-		-		4		-		-		-		1		3		66	
542	2		-		1				-		2		2		-		-		-		1		2		-	
543	2		-		1				-		1		2		2		-		-		-		4		80	
544	2		-		2				-		2		1		-		-		1		-		2		-	
545	4		-		-				-		-		4		-		-		-		-		3		-	
546	2		-		-				-		1		2		-		-		2		-		2		-	
547	3		-		2				-		-		3		-		2		-		-		1		-	
548	1		-		1				-		-		3		-		1		-		-		7		-	
549	2		-		1				-		-		1		1		-		-		-		3		-	
550	2		-		-				-		-		1		1		-		-		-		-		-	
551	3		-		-				-		-		-		1		-		-		-		-		-	
552	3		-		-				-		-		2		-		-		-		-		3		-	
553	2		-		-				-		-		1		-		-		-		-		2		67	
554	1		-		-				-		-		3		-		1		-		-		-		-	
555	2		-		-				-		-		4		-		-		-		-		1		-	
556	2		-		-				-		-		2		-		-		-		-		3		60	
557	2		-		-				-		-		-		2		-		-		-		1		-	
558	-		1		-				-		-		1		-		-		-		-		1		70	
559	2		-		-				-		1		-		-		1		-		-		-		-	
560	-		-		-				-		-		-		-		-		-		-		-		-	
TOTAL	41		1		8				2		7		37		8		5		3		4		38		343	
S.B.FRONTAGE ROAD																										
561	-				-						-		-		-		-		-		-		-		-	
562	1				-						-		1		-		1		-		-		-		-	
563	3				-						-		1		-		1		-		-		2		-	
564	2				1						-		-		-		1		-		-		5		594	
565	2				2						-		2		-		3		-		-		7		1401	
566	3				1						2		2		-		-		-		-		5		974	
567	3				-						-		2		1		-		-		-		4		1586	
568	3				-						1		2		-		1		-		-		5		920	
569	1				-						-		1		-		-		-		2		-		355	
570	1				1						1		1		-		1		-		-		1		177	
571	3				-						1		5		-		-		-		-		4		-	
572	2				1						2		1		-		2		-		-		2		-	
573	1				1						-		-		-		1		-		-		2		-	
574	3				-						-		3		-		-		1		-		2		-	
575	2				-						2		4				-		-		-		2		445	
576	2				-						-		1		-		1		-		-		6		1401	
577	1				-						2		5		-		-		-		-		3		-	
578	2				-						1		4		1		-		-		1		4		-	
579	2				-						-		5		-		-		-		3		2		-	
580	-				-						-		2		-		-		-		2		3		-	
581	2				-						1		3		1		-		-		2		1		-	
582	2				-						-		1		-		-		-		2		4		-	
583	3				-						3		1		-		1		-		1		1		-	
TOTAL	44				7						16		47		3		13		1		13		65		7,853	

* FOR CONTRACTORS INFORMATION ONLY (NON-PAY)

PB Parsons Brinckerhoff Quade & Douglas Inc.

R. Gutierrez Engineering Corporation

Texas Department of Transportation

© 2001 by TxDOT

ESTIMATE & QUANTITY SHEETS

SHEET 1 OF 3

DESIGNED:	FED. RD DIV. No.	STATE	FEDERAL AID PROJECT No.		HIGHWAY No.	
CHECKED:	6	TEXAS			US 281	
DRAWN:	STATE DISTRICT	COUNTY	CONTROL No.	SECTION No.	JOB No.	SHEET No.
CHECKED:	21	HIDALGO	0255	08	091	30

SUMMARY OF DRAINAGE STRUCTURES

SHEET No.	CEMENT STABLIZED BACKFILL ITEM 400		*SEWER EXCAV. (ITEM 400) (CY)		TRENCH EXC. PROTECTION (ITEM 402) (FT)		ITEM 481 6 IN PVC (FT)		RCP SEW (CL III) (ITEM 464) 18 IN (FT)		24 IN (FT)		30 IN (FT)		36 IN (FT)		42 IN (FT)		48 IN (FT)	
			EST	FIN	EST	FIN	EST	FIN	EST	FIN	EST	FIN	EST	FIN	EST	FIN	EST	FIN	EST	FIN
N.B. FRONTAGE ROAD																				
540			181		300		-		286		40		-		-		-		-	
541			126		168		-		108		56		-		-		-		-	
542			270		-		-		357		48		-		-		-		-	
543			2244		1200		-		155		-		222		467		648		-	
544			4418		1200		-		108		-		-		-		-		-	
545			4205		1200		-		182		-		-		-		-		143	
546			6313		1200		-		326		-		-		-		1117		199	
547			3872		1453		-		463		-		-		709		446		-	
548			2352		845		415		190		338		332		354		-		-	
549			3134		1200		-		158		-		-		240		925		-	
550			1583		1200		-		152		76		-		-		457		722	
551			4196		1308		-		-		50		-		888		-		484	
552			1659		1082		-		114		77		600		344		-		-	
553			1617		457		-		142		75		769		196		-		-	
554			2617		1200		-		61		-		-		226		1157		-	
555			2528		1200		-		103		-		-		-		893		-	
556			5633		1166		-		107		70		-		-		-		316	
557			3731		1316		-		50		58		-		-		-		542	
558			2350		1443		-		235		-		-		260		-		817	
559			910		842		-		-		255		157		320		-		-	
560			-		-		-		280		-		-		-		-		-	
TOTAL			53,939		19,980		415		3,577		1,143		2,080		4,004		5,643		3,223	
S.B. FRONTAGE ROAD																				
561			515		248		-		-		-		-		266		-		-	
562			2764		1342		-		72		70		-		1331		-		-	
563			1724		1500		-		175		455		684		-		-		-	
564			920		913		-		81		993		-		-		-		-	
565			1820		1344		-		120		60		276		438		-		403	
566			2566		1383		-		183		36		-		-		-		84	
567			3284		1248		-		68		108		-		-		346		952	
568			3243		1310		-		94		115		-		519		522		-	
569			1800		633		-		95		47		277		396		-		-	
570			1794		1211		64		518		366		386		-		-		-	
571			717		862		317		360		296		-		-		-		-	
572			1854		1177		-		210		-		-		428		407		-	
573			2383		1069		-		146		-		-		-		1091		-	
574			3153		1510		-		211		120		-		-		-		742	
575			3704		1315		-		-		129		-		-		-		801	
576			1825		1207		-		59		50		324		350		400		-	
577			30		-		-		36		7		-		-		-		-	
578			70		49		-		-		107		-		-		-		-	
579			110		91		-		91		-		-		-		-		-	
580			10		9		-		-		9		-		-		-		-	
581			152		122		-		56		66		-		-		-		-	
582			40		44		-		44		-		-		-		-		-	
583			260		184		-		184		-		-		-		-		-	
TOTAL:			34738		18771		381		2712		3,081		1,947		3,728		2,766		2,982	

SHEET No.	RCP SEW (CL III) (ITEM 464) 54 IN (FT)		60 IN (FT)		66 IN (FT)		72 IN (FT)		ITEM 467 S.E.T. 18"-6:1 (EA)		ITEM 471 DECK DRAIN		INLET (COMPL) (ITEM 465) TY A (EA)		TY F SPL (EA)		TY C (EA)		TY CC (EA)	
	EST	FIN	EST	FIN	EST	FIN	EST	FIN	EST	FIN	EST	FIN	EST	FIN	EST	FIN	EST	FIN	EST	FIN
N.B. FRONTAGE ROAD																				
540	-		-		-				-		-		1		-		4		1	
541	-		-		-				-		-		-		-		-		3	
542	-		-		-				-		-		1		-		1		-	
543	-		-		-				-		-		-		-		2		-	
544	892		394		-				-		-		-		-		-		2	
545	693		361		-				-		-		-		-		-		3	
546	-		-		-				-		-		1		-		2		2	
547	-		-		-				-		-		-		-				3	
548	-		-		-				-		6		2		1		1		1	
549	-		-		-				-		-		-		-		-		3	
550	-		-		-				-		-		-		-		2		2	
551	-		-		-				-		-		1		-		1		2	
552	-		-		-				-		-		2		-		1		2	
553	-		-		-				-		-		-		-		3		-	
554	-		-		-				-		-		2		-		-		1	
555	-		-		-				-		-		-		-		-		3	
556	-		741		341				-		-		-		-		-		3	
557	559		110		-				-		-		2		-		-		1	
558	-		-		-				-		-		-		-		-		2	
559	-		-		-				-		-		-		-		2		-	
560	-		-		-				13		-		-						-	
TOTAL	2,144		1,606		341				13		6		12		1		19		34	
S.B. FRONTAGE ROAD																				
561	-		-				-				-		-				-		-	
562	-		-				-				-		1				1		2	
563	-		-				-				-		1				4		-	
564	-		-				-				-		-				2		-	
565	-		-				-				-		-				1		1	
566	342		342				346				-		-				-		2	
567	-		-				-				-		-				-		2	
568	-		-				-				-		1				2		2	
569	-		-				-				-		2				4		-	
570	-		-				-				1		2				2		-	
571	-		-				-				4		1				3		-	
572	-		-				-				-		2				-		2	
573	-		-				-				-		1				-		-	
574	296		-				-				-		-				2		3	
575	490		-				-				-		1				-		2	
576	-		-				-				-		1				-		1	
577	-		-				-				-		1				-		2	
578	-		-				-				-		-				-		2	
579	-		-				-				-		-				-		2	
580	-		-				-				-		-				1		2	
581	-		-				-				-		-				-		1	
582	-		-				-				-						-		1	
583	-		-				-				-		2				-		1	
TOTAL:	1,128		342				346				5		16				22		28	

SHEET No.	INLET (COMPL) (ITEM 465) TY A2 (EA)		TY F (EA)		TY AI (EA)		TY LI (EA)		ITEM 465 - JUNC. BOX 8'x8' (EA)		6'x6' (EA)		5'x5' (EA)		ITEM 465 INLET EXT.		MANHOLE (COMPL) (ITEM 465) TY M (EA)		TY A (EA)		TY AI (EA)		ITEM 479 ADJUST INLET (JUNC. BOX) (EA)		ITEM 496 REMOV OLD STR. (SMALL) (EA)		ITEM 496 REMOV OLD STR. (PIPE) (LF)	
	EST	FIN	EST	FIN	EST	FIN	EST	FIN	EST	FIN	EST	FIN	EST	FIN	EST	FIN	EST	FIN	EST	FIN	EST	FIN	EST	FIN	EST	FIN	EST	FIN
N.B. FRONTAGE ROAD																												
540	-		1		-		-				2		-		1		1		-		-		2		-		-	
541	-		3		-		-				-		-		4		-		-		-		1		3		66	
542	-		2		-		1				-		2		2		-		-		-		1		2		-	
543	-		2		-		1				-		1		2		2		-		-		-		4		80	
544	-		2		-		2				-		2		1		-		-		1		-		2		-	
545	1		4		-		-				-		-		4		-		-		-		-		3		-	
546	-		2		-		-				-		1		2		-		-		2		-		2		-	
547	-		3		-		2				-		-		3		-		2		-		-		1		-	
548	-		1		-		1				-		-		3		-		1		-		-		7		-	
549	-		2		-		1				-		-		1		1		-		-		-		3		-	
550	1		2		-		-				-		-		1		1		-		-		-		-		-	
551	-		3		-		-				-		-		-		1		-		-		-		-		-	
552	-		3		-		-				-		-		2		-		-		-		-		3		-	
553	-		2		-		-				-		-		1		-		-		-		-		2		67	
554	-		1		-		-				-		-		3		-		1		-		-		-		-	
555	-		2		-		-				-		-		4		-		-		-		-		1		-	
556	1		2		-		-				-		-		2		-		-		-		-		3		60	
557	-		2		-		-				-		-		-		2		-		-		-		1		-	
558	-		-		1		-				-		-		1		-		-		-		-		1		70	
559	-		2		-		-				-		1		-		-		1		-		-		-		-	
560	-		-		-		-				-		-		-		-		-		-		-		-		-	
TOTAL	3		41		1		8				2		7		37		8		5		3		4		38		343	
S.B. FRONTAGE ROAD																												
561	-		-				-						-		-		-		-		-		-		-		-	
562	-		1				-						-		1		-		1		-		-		-		-	
563	-		3				-						-		1		-		1		-		-		2		-	
564	-		2				1						-		-		-		1		-		-		5		594	
565	-		2				2						-		2		-		3		-		-		7		1401	
566	1		3				1						2		2		-		-		-		-		5		974	
567	-		3				-						-		2		1		-		-		-		4		1586	
568	-		3				-						1		2		-		1		-		-		5		920	
569	-		1				-						-		1		-		-		-		2		-		355	
570	-		1				1						1		1		-		1		-		-		1		177	
571	-		3				-						1		5		-		-		-		-		4		-	
572	-		2				1						2		1		-		2		-		-		2		-	
573	-		1				1						-		-		-		1		-		-		2		-	
574	-		3				-						-		3		-		-		1		-		2		-	
575	-		2				-						2		4				-		-		-		2		445	
576	-		2				-						-		1		-		1		-		-		6		1401	
577	-		1				-						2		5		-		-		-		-		3		-	
578	-		2				-						1		4		1		-		-		1		4		-	
579	-		2				-						-		5		-		-		-		3		2		-	
580	-		-				-						-		2		-		-		-		2		3		-	
581	-		2				-						1		3		1		-		-		2		1		-	
582	-		2				-						-		1		-		-		-		2		4		-	
583	-		3				-						3		1		-		1		-		1		1		-	
TOTAL:	1		44				7						16		47		3		13		1		13		65		7,853	

* FOR CONTRACTORS INFORMATION ONLY (NON-PAY)

SUMMARY OF ALTERNATE TO 66" RCP				
ITEM	DESCRIPTION	UNIT	EST	FIN
462	CONC BOX SEWER (5 FT X 5 FT)	LF	341	

△1

△1 REVISED 9-26-03

Parsons Brinckerhoff Quade & Douglas Inc.

R. Gutierrez Engineering Corporation

Texas Department of Transportation

© 2001 by TxDOT

ESTIMATE & QUANTITY SHEETS

SHEET 1 OF 3

DESIGNED:	FED. RD DIV. No.	STATE	FEDERAL AID PROJECT No.		HIGHWAY No.
CHECKED:	6	TEXAS			US 281
DRAWN:	STATE DISTRICT	COUNTY	CONTROL No.	SECTION No.	JOB No. / SHEET No.
CHECKED:	21	HIDALGO	0255	08	091 / 30

SUMMARY OF DRAINAGE STRUCTURES (CONTINUED)

SHEET No.	CEMENT STABLIZED BACKFILL ITEM 400		*SEWER EXCAV. (ITEM 400) (CY) EST	FIN	TRENCH EXC. PROTECTION (ITEM 402) (FT) EST	FIN	ITEM 481 6 IN PVC (FT) EST	FIN	RCP SEW (CL III) (ITEM 464) 18 IN (FT) EST	FIN	24 IN (FT) EST	FIN	30 IN (FT) EST	FIN	36 IN (FT) EST	FIN
INTERSECTION CROSSING																
584			799		788				-		556		-		228	
585			570		266				-		96		266		-	
586			355		384				202		275		-		-	
587			772		592				88		224		276		-	
588			458		303				105		194		-		-	
589			806		408				-		78		326		-	
590			460		440				-		76		360		-	
591			258		300				-		364		-		-	
592			242		222				104		130		-		-	
593			257		306				226		72		-		-	
TOTAL			4,977		4,009				725		2,065		1,228		228	
CULVERT LAYOUT - MAINLANES																
619	300		586		344											
620	268		526		288											
TOTAL	568		1,112		632											
GRAND TOTAL	568		94,766		43,392		796		7,221		6,126		5,255		7,960	

SHEET No.	RCP SEW (CL III) (ITEM 464) 42 IN (FT) EST	FIN	48 IN (FT) EST	FIN	54 IN (FT) EST	FIN	60 IN (FT) EST	FIN	66 IN (FT) EST	FIN	72 IN (FT) EST	FIN	ITEM 467 S.E.T. 18"-6:1 (EA) EST	FIN	ITEM 471 DECK DRAIN EST	FIN
INTERSECTION CROSSING																
584–593																
TOTAL																
CULVERT LAYOUT - MAINLANES																
619											338					
620											242					
TOTAL											580					
GRAND TOTAL	8,409		6,205		3,272		1,948		341		926		13		11	

SHEET No.	INLET (COMPL) (ITEM 465) TY A (EA) EST	FIN	TY F SPL (EA) EST	FIN	TY C (EA) EST	FIN	TY CC (EA) EST	FIN	TY A2 (EA) EST	FIN	TY F (EA) EST	FIN	TY AI (EA) EST	FIN	TY U (EA) EST	FIN
INTERSECTION CROSSING																
584	4				-						-					
585	2				-						-					
586	5				-						1					
587	-				4						-					
588	4				-						-					
589	2				-						-					
590	2				-						-					
591	2				-						-					
592	2				-						-					
593	4				-						1					
TOTAL	27				4						2					
CULVERT LAYOUT - MAINLANES																
619																
620																
TOTAL																
GRAND TOTAL	55		1		45		62		4		87		1		16	

SHEET No.	ITEM 465 - JUNC.BOX 8'x8' (EA) EST	FIN	6'x6' (EA) EST	FIN	5'x5' (EA) EST	FIN	ITEM 465 INLET EXT. EST	FIN	MANHOLE (COMPL) (ITEM 465) TY M (EA) EST	FIN	TY A (EA) EST	FIN	TY AI (EA) EST	FIN	ITEM 479 ADJUST INLET (JUNC.BOX) (EA) EST	FIN	ITEM 496 REMOV OLD STR. (SMALL) (EA) EST	FIN	ITEM 496 REMOV OLD STR. (PIPE) (LF) EST	FIN
INTERSECTION CROSSING																				
584							2													
585							1													
586							4													
587							-													
588							1													
589							3													
590							4													
591							2													
592							1													
593							2													
TOTAL							20													
CULVERT LAYOUT - MAINLANES																				
619																				
620	1																			
TOTAL	1																			
GRAND TOTAL	1		2		24		104		11		18		4		17		103		8,196	

* FOR CONTRACTORS INFORMATION ONLY (NON-PAY)

SUMMARY OF DRAINAGE DITCHES

SHEET NO.	ITEM 110 CHANNEL EXCAVATION (CY)	* ITEM 400 STR.EXC. (CULV)(LARGE) (CY) EST	FIN	ITEM 400 CEMENT STABL. BACKFILL (CY) EST	FIN	ITEM 402 TRENCH EXC. PROTECTION (FT) EST	FIN	ITEM 462 CONC.BOX CULVERT (7'x5') (FT) EST	FIN	ITEM 462 CONC.BOX CULVERT (7'x7') (FT) EST	FIN	ITEM 464 RC PIPE (CL III) (60 IN) (LF) EST	FIN	CUT & REST. PAVEMENT (ITEM 400) (SF) EST	FIN	REMOVE OLD STR.(PIPE) (ITEM 496) (FT) EST	FIN
624	104,960	-		-		-		-		-		-		-		65	
640	-	264		103		138		138		-		-		-		-	
641	-	287		111		160		160		-		-		-		-	
642	-	504		195		244		244		-		-		-		-	
643	-	772		299		350		350		-		-		26		-	
644	-	820		318		402		402		-		-		-		-	
645	-	319		280		166		-		-		166		-		-	
631	93,187	6,954		2,256		1,022		-		1,022		-		-		-	
646	-	664		257		294		294		-		-		31		-	
647	-	262		51		138		-		-		138		-		-	
TOTAL:	198,147	10,846		3,870		2,914		1,588		1,022		304		57		65	

* FOR CONTRACTORS INFORMATION ONLY (NON-PAY)

Parsons Brinckerhoff Quade & Douglas Inc.

R. Gutierrez Engineering Corporation

Texas Department of Transportation

© 2001 by TxDOT

ESTIMATE & QUANTITY SHEETS

SHEET 2 OF 3

DESIGNED:	FED. RD DIV. No.	STATE	FEDERAL AID PROJECT No.	HIGHWAY No.
CHECKED:	6	TEXAS	XXXXXXXX	US 281

DRAWN:	STATE DISTRICT	COUNTY	CONTROL No.	SECTION No.	JOB No.	SHEET No.
CHECKED:	21	HIDALGO	0255	08	091	31

SUMMARY OF DRAINAGE STRUCTURES (CONTINUED)

SHEET No.	CEMENT STABLIZED BACKFILL ITEM 400		*SEWER EXCAV. (ITEM 400) (CY)		TRENCH EXC. PROTECTION (ITEM 402) (FT)		ITEM 481 6 IN PVC (FT)		RCP SEW (CL III) (ITEM 464) 18 IN (FT)		24 IN (FT)		30 IN (FT)		36 IN (FT)	
			EST	FIN	EST	FIN	EST	FIN	EST	FIN	EST	FIN	EST	FIN	EST	FIN
INTERSECTION CROSSING																
584			799		788				-		556		-		228	
585			570		266				-		96		266		-	
586			355		384				202		275		-		-	
587			772		592				88		224		276		-	
588			458		303				105		194		-		-	
589			806		408				-		78		326		-	
590			460		440				-		76		360		-	
591			258		300				-		364		-		-	
592			242		222				104		130		-		-	
593			257		306				226		72		-		-	
TOTAL			4,977		4,009				725		2,065		1,228		228	
CULVERT LAYOUT - MAINLANES																
+619	300		586		344											
+620	268		526		288											
TOTAL	568		1,112		632											
GRAND TOTAL	568		94,766		43,392		796		7,221		6,126		5,255		7,960	

SHEET No.	RCP SEW (CL III) (ITEM 464) 42 IN (FT)		48 IN (FT)		54 IN (FT)		60 IN (FT)		66 IN (FT)		72 IN (FT)		ITEM 467 S.E.T. 18"-6:1 (EA)		ITEM 471 DECK DRAIN	
	EST	FIN	EST	FIN	EST	FIN	EST	FIN	EST	FIN	EST	FIN	EST	FIN	EST	FIN
INTERSECTION CROSSING																
584																
585																
586																
587																
588																
589																
590																
591																
592																
593																
TOTAL																
CULVERT LAYOUT - MAINLANES																
+619											338					
+620											242					
TOTAL											580					
GRAND TOTAL	8,409		6,205		3,272		1,948		341		926		13		11	

SHEET No.	INLET (COMPL) (ITEM 465) TY A (EA)		TY F SPL (EA)		TY C (EA)		TY CC (EA)		TY A2 (EA)		TY F (EA)		TY AI (EA)		TY LI (EA)	
	EST	FIN	EST	FIN	EST	FIN	EST	FIN	EST	FIN	EST	FIN	EST	FIN	EST	FIN
INTERSECTION CROSSING																
584	4				-						-					
585	2				-						-					
586	5				-						1					
587	-				4						-					
588	4				-						-					
589	2				-						-					
590	2				-						-					
591	2				-						-					
592	2				-						-					
593	4				-						1					
TOTAL	27				4						2					
CULVERT LAYOUT - MAINLANES																
+619																
+620																
TOTAL																
GRAND TOTAL	55		1		45		62		4		87		1		16	

SHEET No.	ITEM 465 - JUNC.BOX 8'x8' (EA)		6'x6' (EA)		5'x5' (EA)		ITEM 465 INLET EXT.		MANHOLE (COMPL) (ITEM 465) TY M (EA)		TY A (EA)		TY AI (EA)		ITEM 479 ADJUST INLET (JUNC.BOX) (EA)		ITEM 496 REMOV OLD STR. (SMALL) (EA)		ITEM 496 REMOV OLD STR. (PIPE) (LF)	
	EST	FIN	EST	FIN	EST	FIN	EST	FIN	EST	FIN	EST	FIN	EST	FIN	EST	FIN	EST	FIN	EST	FIN
INTERSECTION CROSSING																				
584							2													
585							1													
586							4													
587							-													
588							1													
589							3													
590							4													
591							2													
592							1													
593							2													
TOTAL							20													
CULVERT LAYOUT - MAINLANES																				
+619																				
+620	1																			
TOTAL	1																			
GRAND TOTAL	1		2		24		104		11		18		4		17		103		8,196	

* FOR CONTRACTORS INFORMATION ONLY (NON-PAY)

+ 72" RCP FOR CULVERT LAYOUT SHALL BE CL IV

SUMMARY OF DRAINAGE DITCHES

SHEET NO.	ITEM 110 CHANNEL EXCAVATION (CY)	* ITEM 400 STR.EXC. (CULV)(LARGE) (CY)		ITEM 400 CEMENT STABL. BACKFILL (CY)		ITEM 402 TRENCH EXC. PROTECTION (FT)		ITEM 462 CONC.BOX CULVERT (7'x5') (FT)		ITEM 462 CONC.BOX CULVERT (7'x7') (FT)		ITEM 464 RC PIPE (CL III) (60 IN) (LF)		CUT & REST. PAVEMENT (ITEM 400) (SF)		REMOVE OLD STR.(PIPE) (ITEM 496) (FT)		* REMOVE CHAIN LINK FENCE N. DRAIN (LF)	
		EST	FIN	EST	FIN	EST	FIN	EST	FIN	EST	FIN	EST	FIN	EST	FIN	EST	FIN	EST	FIN
624	104,960	-		-		-		-		-		-		-		65			
640	-	264		103		138		138		-		-		-		-			
641	-	287		111		160		160		-		-		-		-			
642	-	504		195		244		244		-		-		-		-			
643	-	772		299		350		350		-		-		26		-			
644	-	820		318		402		402		-		-		-		-			
645	-	319		280		166		-		-		166		-		-			
631	93,187	6,954		2,256		1,022		-		1,022		-		-		-			
646	-	664		257		294		294		-		-		31		-			
647	-	262		51		138		-		-		138		-		-			
																		1045	
TOTAL:	198,147	10,846		3,870		2,914		1,588		1,022		304		57		65		1045	

* FOR CONTRACTORS INFORMATION ONLY (NON-PAY)

SUMMARY OF STRUCTURE EXCAVATION SPECIAL (ITEM 400-0516)

SHEET NO.	4" GRAVEL BEDDING TY "B" (CY)	
	EST	FIN
THRU-OUT PROJECT	1403	
TOTAL	1403	

REVISED 9-26-03

Parsons Brinckerhoff Quade & Douglas Inc.

R. Gutierrez Engineering Corporation

Texas Department of Transportation

© 2001 by TxDOT

ESTIMATE & QUANTITY SHEETS

SHEET 2 OF 3

DESIGNED:	FED. RD DIV. No.	STATE	FEDERAL AID PROJECT No.		HIGHWAY No.	
CHECKED:	6	TEXAS	XXXXXXXX		US 281	
DRAWN:	STATE DISTRICT	COUNTY	CONTROL No.	SECTION No.	JOB No.	SHEET No.
CHECKED:	21	HIDALGO	0255	08	091	31

IRRIGATION LINES QUANTITIES

SHEET No.	ITEM 464 12 IN. RCP		ITEM 4003 REINFORCED CONC. LOW-HEAD PIPE 12 IN.		ITEM 4971 STEEL PIPE 12 IN.		ITEM 4003 REINFORCED CONC.LOW-HEAD PIPE 15 IN.		ITEM 4971 STEEL PIPE 15 IN.		ITEM 4003 REINFORCED CONC.LOW-HEAD PIPE 18 IN.		ITEM 4971 STEEL PIPE 18 IN.		ITEM 4003 REINFORCED CONC.LOW-HEAD PIPE 21 IN.		ITEM 4003 REINFORCED CONC.LOW-HEAD PIPE 24 IN.		ITEM 4003 REINFORCED CONC.LOW-HEAD PIPE 30 IN.		ITEM 4003 REINFORCED CONC.LOW-HEAD PIPE 36 IN.		ITEM 4003 REINFORCED CONC.LOW-HEAD PIPE 42 IN.		ITEM 4003 REINFORCED CONC.LOW-HEAD PIPE 48 IN.		ITEM 4008 IRRIG WELL 60 IN.		ITEM 496 REMOVE OLD STRUCTURE (PIPE)		ITEM 402 TRENCH EXCAVATION PROTECTION		ITEM 409 PRESTR.CONC PILE 14" SQ.(LF)		ITEM 420 CLASS 'C' CONCRETE (CY)		ITEM 400 CUT & RESTORE PAVT (SY)		ITEM 4001 IRRIGATION VALVE 4" (EA)		ITEM 4001 36" IRRIGATION GATEWELL (EA)		ITEM 4001 42" IRRIGATION WELL (EA)		ITEM 4002 RELOCATE WITH APPERTENANCES (LS)	
	EST	FIN	EST	FIN	EST	FIN	EST	FIN	EST	FIN	EST	FIN	EST	FIN	EST	FIN	EST	FIN	EST	FIN	EST	FIN	EST	FIN	EST	FIN	EST	FIN	EST	FIN	EST	FIN	EST	FIN	EST	FIN	EST	FIN	EST	FIN	EST	FIN	EST	FIN
633	-		-		-		-		-		1344		-		1314		-		-		-		-		-		-		-		-		-		-		-		-		-		-		-	
648	-		80		132		-		-		-		-		-		-		-		-		-		-		-		-		338		-		40		7.4		-		-		-		-	
649	-		-		-		100		60		-		-		-		-		-		-		-		-		-		-		160		-		40		7.4		-		-		-		-	
650	-		-		-		100		60		-		-		-		-		-		-		-		-		-		-		160		-		40		7.4		-		-		-		-	
651	-		-		-		-		-		119		94		-		-		-		-		-		-		-		-		-		206		40		7.4		-		1		-		-	
652	-		-		-		102		60		-		-		-		-		-		-		-		-		-		-		-		-		40		7.4		-		1		-		-	
653	-		-		-		105		60		-		-		-		-		-		-		-		-		-		-		162		-		40		7.4		-		2		1		-	
654	69		-		-		-		-		115		60		-		-		-		-		-		-		-		-		176		-		40		7.4		-		2		-		1	
655	-		-		-		-		-		394		-		-		-		-		-		-		-		-		-		176		-		40		7.4		-		1		-		1	
656	-		-		-		-		-		-		-		-		-		492		-		-		-		-		-		394		394		-		-		66		-		-		-	
657	-		-		-		-		-		-		-		-		-		-		-		-		-		-		-		492		492		-		-		101		-		-		-	
658	-		-		-		-		-		-		-		-		286		-		-		-		-		720		1		748		720		-		-		161		-		-		-	
659	-		-		-		-		-		-		-		-		-		-		-		-		-		-		1		314		286		-		-		73		-		-		-	
660	-		-		-		364		-		-		-		-		-		-		-		-		-		-		-		35		35		-		-		-		-		-		-	
661	-		-		-		-		-		-		-		-		-		-		-		390		-		-		-		364		364		-		-		98		-		-		-	
662	-		-		-		-		-		-		-		-		-		766		-		-		60		-		-		390		392		-		-		144.5		-		-		-	
663	-		-		-		-		-		-		-		-		-		88		-		-		-		-		-		766		548		-		-		-		-		-		3	
664	-		-		-		-		-		-		-		-		-		350		-		-		-		-		-		80		370		-		-		-		-		-		-	
																															350		350		-		-		136		-		-		-	
TOTAL:	69		80		132		771		240		1999		154		1314		286		1696		390		60		720		2		5105		4.157		280		51.8		779.5		7		2		4		2	

SUMMARY OF PROP. CONCRETE RIPRAP (CLASS B) (ITEM 432)

SHEET. No.	QUANTITY (C.Y.) 4"	
	EST	FIN
561	65.0	
624	128.0	
625	65.0	
626	252.0	
628	129.0	
632	162.0	
633	177.0	
637	634.0	
640	84.0	
641	84.0	
642	84.0	
643	127.0	
644	125.0	
645	156.0	
646	113.0	
647	136.0	
648	1.5	
654	2.5	
TOTAL:	2525	

Parsons Brinckerhoff Quade & Douglas Inc.

R. Gutierrez Engineering Corporation

Texas Department of Transportation

© 2001 by TxDOT

ESTIMATE & QUANTITY SHEETS

SHEET 3 OF 3

DESIGNED:	FED. RD DIV. No.	STATE	FEDERAL AID PROJECT No.			HIGHWAY No.
CHECKED:	6	TEXAS				US 281
DRAWN:	STATE DISTRICT	COUNTY	CONTROL No.	SECTION No.	JOB No.	SHEET No.
CHECKED:	21	HIDALGO	0255	08	091	32

IRRIGATION LINES QUANTITIES

SHEET No.	ITEM 464 12 IN. RCP		ITEM 4003 REINFORCED CONC. LOW-HEAD PIPE 12 IN.		ITEM 4971 STEEL PIPE 30 IN.		ITEM 4003 REINFORCED CONC. LOW-HEAD PIPE 15 IN.		ITEM 4971 STEEL PIPE 15 IN.		ITEM 4003 REINFORCED CONC. LOW-HEAD PIPE 18 IN.		ITEM 4971 STEEL PIPE 18 IN.		ITEM 4003 REINFORCED CONC. LOW-HEAD PIPE 21 IN.	
	EST	FIN	EST	FIN	EST	FIN	EST	FIN	EST	FIN	EST	FIN	EST	FIN	EST	FIN
633	–		–		–		–		–		1344		–		1314	
648	–				132		–		–		–		–		–	
649	–		–		–		100		60		–		–		–	
650	–		–		–		100		60		–		–		–	
651	–		–		–		–		–		119		94		–	
652	–		–		–		102		60		–		–		–	
653	–		–		–		105		60		–		–		–	
654	69		–		–		–		–		115		60		–	
655	–		–		–		–		–		394		–		–	
656	–		–		–		–		–		–		–		–	
657	–		–		–		–		–		–		–		–	
658	–		–		–		–		–		–		–		–	
659	–		–		–		–		–		–		–		–	
660	–		–		–		364		–		–		–		–	
661	–		–		–		–		–		–		–		–	
662	–		–		–		–		–		–		–		–	
663	–		–		–		–		–		–		–		–	
664	–		–		–		–		–		–		–		–	
TOTAL:	69				132		771		240		1999		154		1314	

SHEET No.	ITEM 4003 REINFORCED CONC. LOW-HEAD PIPE 24 IN.		ITEM 4003 REINFORCED CONC. LOW-HEAD PIPE 30 IN.		ITEM 4003 REINFORCED CONC. LOW-HEAD PIPE 36 IN.		ITEM 4003 REINFORCED CONC. LOW-HEAD PIPE 42 IN.		ITEM 4003 REINFORCED CONC. LOW-HEAD PIPE 48 IN.		ITEM 4315 IRRIG WELL 60 IN.		ITEM 496 REMOVE OLD STRUCTURE (PIPE)		ITEM 402 TRENCH EXCAVATION PROTECTION	
	EST	FIN	EST	FIN	EST	FIN	EST	FIN	EST	FIN	EST	FIN	EST	FIN	EST	FIN
633	–		–		–		–		–		–		–		–	
648	–		80		–		–		–		–		338		–	
649	–		–		–		–		–		–		160		–	
650	–		–		–		–		–		–		160		–	
651	–		–				–		–		–		–		206	
652	–		–				–		–		–		162		–	
653	–		–		–		–		–		–		176		–	
654	–		–		–		–		–		–		176		–	
655	–		–		–		–		–		–		394		394	
656	–		492		–		–		–		–		492		492	
657	–		–		–		–		720		1		748		720	
658	286		–		–		–		–		1		314		286	
659	–		–		–		–		–		–		35		35	
660	–		–		–		–		–		–		364		364	
661	–		–		390		–		–		–		390		392	
662	–		766		–		60		–		–		766		548	
663	–		88		–		–		–		–		80		370	
664	–		350		–		–		–		–		350		350	
TOTAL:	286		1776		390		60		720		2		5105		4.157	

SHEET No.	ITEM 409 PRESTR.CONC. PILE 14" SQ.(LF)		ITEM 420 CLASS "C" CONCRETE (CY)		ITEM 400 CUT & RESTORE PAV'T (SY)		ITEM 4315 IRRIGATION VALVE 14" (EA)		ITEM 4315 36" IRRIGATION GATEWELL (EA)		ITEM 4315 42" IRRIGATION WELL (EA)		ITEM 4002 RELOCATE WITH APPERTENANCES (LS)	
	EST	FIN	EST	FIN	EST	FIN	EST	FIN	EST	FIN	EST	FIN	EST	FIN
633	–		–		–		–		–		–		–	
648	40		7.4		–		–		–		–		–	
649	40		7.4		–		–		–		–		–	
650	40		7.4		–		1		–		–		–	
651	40		7.4		–		1		1		–		–	
652	40		7.4		–		2		1		–		–	
653	40		7.4		–		2		–		–		1	
654	40		7.4		–		1		–		1		1	
655	–		–		66		–		–		–		–	
656	–		–		101		–		–		–		–	
657	–		–		161		–		–		–		–	
658	–		–		73		–		–		–		–	
659	–		–		–		–		–		–		–	
660	–		–		98		–		–		–		–	
661	–		–		144.5		–		–		–		–	
662	–		–		–		–		–		3		–	
663	–		–		–		–		–		–		–	
664	–		–		136		–		–		–		–	
TOTAL:	280		51.8		779.5		7		2		4		2	

SUMMARY OF PROP. CONCRETE RIPRAP (CLASS B) (ITEM 432)

SHEET. No.	QUANTITY (C.Y.) 4"	
	EST	FIN
561	65.0	
624	128.0	
625	65.0	
626	252.0	
628	129.0	
632	162.0	
633	177.0	
637	634.0	
640	84.0	
641	84.0	
642	84.0	
643	127.0	
644	125.0	
645	156.0	
646	113.0	
647	136.0	
648	1.5	
654	2.5	
TOTAL:	2525	

⚠1 REVISED 9-26-03

Parsons Brinckerhoff Quade & Douglas Inc.

R. Gutierrez Engineering Corporation

Texas Department of Transportation

© 2001 by TxDOT

ESTIMATE & QUANTITY SHEETS

SHEET 3 OF 3

DESIGNED:	FED. RD DIV. No.	STATE	FEDERAL AID PROJECT No.	HIGHWAY No.
CHECKED:	6	TEXAS		US 281

DRAWN:	STATE DISTRICT	COUNTY	CONTROL No.	SECTION No.	JOB No.	SHEET No.
CHECKED:	21	HIDALGO	0255	08	091	32

ITEM 644
SUMMARY OF SMALL SIGNS (TO BE INSTALLED)

STATION LIMITS	TYPE OF MOUNT																					
	TWT(1) UA(P) (EA)		TWT(1) WA(P) (EA)		10BWG(1) SA(P) (EA)		10BWG(1) SA(P-BM) (EA)		10BWG(1) SA(T) (EA)		10BWG(1) SA(U) (EA)		S80(1) SA(P) (EA)		S80(1) SA(P-BM) (EA)		S80(1) SA(T) (EA)		S80(1) SA(U) (EA)		S80(1) SA(U-1EXT) (EA)		S80(1) SA(T-2EXT) (EA)	
	EST.	FIN.	EST.	FIN.	EST.	FIN.	EST.	FIN.	EST.	FIN.	EST.	FIN.	EST.	FIN.	EST.	FIN.	EST.	FIN.	EST.	FIN.	EST.	FIN.	EST.	FIN.
THROUGHOUT PROJECT	11		13		165		66		41		1		18		9		1		11		6		1	
TOTAL:	11		13		165		66		41		1		18		9		1		11		6		1	

ITEM 649
SMALL SIGNS (TO BE REMOVED OR RELOCATED)

STATION LIMITS	REMOVE LARGE SIGN ASSM (EA)		REMOVE SMALL SIGN ASSM (EA)		RELOC LARGE SIGN ASSM (EA)		RELOC SMALL SIGN ASSM (EA)	
	EST.	FIN.	EST.	FIN.	EST.	FIN.	EST.	FIN.
THROUGHOUT PROJECT	29		274		-		2	
TOTAL:	29		274		-		2	

ITEM 668
SUMMARY OF PREFABRICATED PAVEMENT MARKINGS

STATION LIMITS	TY B (WHITE)													
	WORD (ONLY) (EA)		ARROW (LEFT) (EA)		ARROW (RIGHT) (EA)		ARROW (STRAIGHT) (EA)		ARROW (U-TURN) (EA)		ARROW (STRAIGHT & LEFT) (EA)		ARROW (STRAIGHT & RIGHT) (EA)	
	EST.	FIN.	EST.	FIN.	EST.	FIN.	EST.	FIN.	EST.	FIN.	EST.	FIN.	EST.	FIN.
THROUGHOUT PROJECT	75		53		28		42		20		2		16	
TOTAL:	75		55		28		42		20		2		16	

ITEM 666
REFLECTORIZED PAVEMENT MARKINGS

STATION LIMITS	TY I - THERMOPLASTIC (90 MIL)																			
	4 IN BROKEN WHITE (LF)		4 IN SOLID WHITE (LF)		12 IN LNDP WHITE (LF)		8 IN SOLID WHITE (LF)		24 IN SOLID WHITE (LF)		4 IN BROKEN YELLOW (LF)		4 IN SOLID YELLOW (LF)		8 IN SOLID YELLOW (LF)		24 IN SOLID YELLOW (LF)		12 IN SOLID WHITE (LF)		MEDIAN NOSE YELLOW (EA)	
	EST.	FIN.	EST.	FIN.	EST.	FIN.	EST.	FIN.	EST.	FIN.	EST.	FIN.	EST.	FIN.	EST.	FIN.	EST.	FIN.	EST.	FIN.	EST.	FIN.
THROUGHOUT PROJECT	46833		62021		2625		44315		13914		187		80821		4473		3797		5613		2	
TOTAL:	46833		62021		2625		44315		13914		187		80821		4473		3797		5613		2	

ITEM 672
RAISED PAVEMENT MARKERS

STATION LIMITS	CL B (REFL)									
	TY I - A (SGL REFL) (EA)		TY I - C (SGL REFL) (EA)		TY I - R (SGL REFL) (EA)		TY II - AA (DBL REFL) (EA)		TY II - CR (DBL REFL) (EA)	
	EST.	FIN.	EST.	FIN.	EST.	FIN.	EST.	FIN.	EST.	FIN.
THROUGHOUT PROJECT	520		8252		266		614		5878	
TOTAL:	520		8252		266		614		5878	

ITEM 677
EXISTING PAVEMENT MARKING AND MARKER ELIMINATION

STATION LIMITS	CL B (REFL)									
	ELMI EXT PAV MRK (4") (LF)		ELMI EXT PAV MRK (8") (LF)		ELIMI EXT RAIS PAV MRK (EA)		ELIMI EXT PAV MRK (WORD) (EA)		ELMI EST PAV MRK (ARROW) (EA)	
	EST.	FIN.	EST.	FIN.	EST.	FIN.	EST.	FIN.	EST.	FIN.
THROUGHOUT PROJECT	752		80		27		1		5	
TOTAL:	752		80		27		1		5	

Parsons Brinckerhoff Quade & Douglas Inc.

Texas Department of Transportation

© 2002 by TxDOT

US 281
ESTIMATE & QUANTITY

SHEET 1 of 1						
DESIGNED: XXX	FED. RD DIV. NO.	STATE	FEDERAL AID PROJECT No.		HIGHWAY NO.	
CHECKED: XXX	6	TEXAS			US 281	
DRAWN: XXX	STATE DISTRICT	COUNTY	CONTROL No.	SECTION No.	JOB No.	SHEET No.
CHECKED: XXX	PHARR	HIDALGO	0255	08	091	33

6/27/03 10:39 AM

I:\Projects\22322a\CADD\Sheets\Summary Sheets\281eq14.xls

SUMMARY OF LARGE SIGN ITEMS

	ITEM 432 CONCRETE RIPRAP (CY)	ITEM 636 ROUTE SHIELDS, EXIT ONLY PANELS, & OTHER ATTACHEMENTS ALUMINUM (TYPE A)	BACKGROUND SUBSTRATE (SQ FT)			ITEM 647 GALVANIZED STUCTURAL STEEL TOTAL WEIGHT (LBS)	ITEM 416 DRILLED SHAFT (LF)			
			GROUND MOUNT		OVERHEAD		NON - REINF.	REINFORCED		
			ITEM 637 PLYWOOD (TYPE A)	ITEM 637 ALUMINUM (TYPE G)	ITEM 642 ALUMINUM (TYPE O)		12" DIA.	24" DIA.	30" DIA.	36" DIA.
TOTAL:	17.3	666.51		1384.00	4095.75	5375.93	32.0	76		

CANTILEVER OVERHEAD SIGN SUPPORTS AND OVERHEAD SIGN BRIDGES

ITEM	DESCRIPTION	UNIT	TOTALS
416 0504	DRILL SHAFT (SIGN MTS) (30")	FT	55
416 0506	DRILL SHAFT (SIGN MTS) (36")	FT	371
416 0508	DRILL SHAFT (SIGN MTS) (48")	FT	161
416 0509	DRILL SHAFT (SIGN MTS) (54")	FT	72
650 0558	OVERHEAD SIGN SUPT (70 FT BRDG) (21 FT 0 IN HT)	EA	1
650 0560	OVERHEAD SIGN SUPT (80 FT BRDG) (21 FT 0 IN HT)	EA	2
650 0562	OVERHEAD SIGN SUPT (90 FT BRDG) (21 FT 0 IN HT)	EA	3
650 0593	OVERHEAD SIGN SUPT (30 FT CANT) (17 FT 6 IN HT)	EA	4
650 0602	OVERHEAD SIGN SUPT (30 FT CANT) (21 FT 0 IN HT)	EA	4
650 0603	OVERHEAD SIGN SUPT (35 FT CANT) (21 FT 0 IN HT)	EA	2
651 0501	REMOVE OVERHEAD SIGN SUPT	EA	3
654 0502	SIGN WALKWAY W / HANDRAIL (36")	FT	475

7/21/03 1:15 PM

I:\Projects\22322a\CADD\Sheets\Summary\281eq15.xls

Parsons Brinckerhoff Quade & Douglas Inc.

Texas Department of Transportation

© 2002 by TxDOT

US 281
ESTIMATE & QUANTITY

SHEET 15 of 17

DESIGNED:	FED. DIV.	RD. No.	STATE	FEDERAL AID PROJECT No.		HIGHWAY No.	
CHECKED:	6		TEXAS			US 281	
DRAWN:	STATE DISTRICT		COUNTY	CONTROL No.	SECTION No.	JOB No.	SHEET No.
CHECKED:	PHARR		HIDALGO	0255	08	091	34

	ITEM	SUMMARY OF TRAFFIC SIGNAL ITEMS CSJ: 0255-08-091		① US 281 AT TRENTON ROAD		② US 281 AT NOLANA LOOP		③ US 281 AT SIOUX ROAD		④ US 281 AT TEXAS 495		⑤ US 281 AT OWASSA ROAD		TOTALS
		ITEM DESCRIPTION	UNIT	EST.	FIN.	EST.	FIN.	EST.	FIN.	EST.	FIN.	EST.	FIN.	
*	610	LUMINAIRE, 250 WATT HIGH PRESSURE SODIUM	EA.	4		4		4		4				16
	618	1" P.V.C. CONDUIT	LF	150		165		145		160		520		1140
	618	2" P.V.C. CONDUIT	LF	2190		2155		2105		2170				8620
	618	4" P.V.C. CONDUIT	LF	710		765		795		730				3000
	620	#6 AWG BARE	LF	230		230		230		230		520		1440
	620	#6 AWG XHHW INSULATED	LF	460		460		460		460		1040		2880
	620	#8 AWG BARE	LF	1200		1240		1220		1220				4880
	620	#8 AWG XHHW INSULATED	LF	2230		2330		2310		2270				9140
	624	GROUND BOX (RPM) (TY A) (122311) APRON	EA.	28		26		26		26		3		109
	625	3/16" GALVANIZED ZINC SWAY CABLE	LF									300		300
	625	5/16" GALVANIZED ZINC SPAN WIRE CABLE	LF									800		800
	628	ELEC SERV TYD(120/240)070(NS)GS(T)TP(0)	EA.	1		1		1		1		1		5
*	636	ALUM SIGN TY A (PROTECTED LEFT ON GRN ARROW)	EA.	2		2		2		2				8
	656	FOUNDATION F/ PEDESTAL POLE (24 IN.)	LF	63		46		46		46				201
	656	FOUNDATION F/ TRAFFIC SIGNAL (TY A) (36 IN DR SH)	LF									48		48
	656	FOUNDATION F/ TRAFFIC SIGNAL (TY A) (42 IN DR SH)	LF			35		35						70
	656	FOUNDATION F/ TRAFFIC SIGNAL (TY A) (48 IN DR SH)	LF	44						88				132
	656	FOUNDATION F/ TRAFFIC SIGNAL (TY B) (36 IN DR SH)	LF	31		31		31						93
	656	SIGNAL CONTROLLER CONC. FOUNDATION	EA.	1		1		1		1		2		6
	680	INSTALL OF HWY TRAF SIGNAL (ISOLATED)	EA.	1		1		1		1		1		5
	682	VEHICLE SIGNAL SECTION (12 IN.)	EA.	52		52		52		58		12		226
	682	PEDESTRIAN SIGNAL SECTION (12 IN.)	EA.	12		12		12		12				48
	682	BACK PLATE (3 SEC.) (12 IN.)	EA.	14		14		14		16				58
	682	BACK PLATE (5 SEC.) (12 IN.)	EA.	2		2		2		2				8
*	684	1/C #14 AWG LOOP WIRE (XHHW)	LF	3940		4300		3970		4860				17070
	684	2/C #14 AWG SHIELDED LOOP LEAD-IN	LF	3660		3890		3840		3840				15230
	684	5/C #12 AWG SIGNAL CABLE	LF	4989		3722		3732		3618		360		16421
	684	7/C #12 AWG SIGNAL CABLE	LF	650		680		660		680				2670
	686	TRAF SIG POLE ASM (STL)1 ARM(44 FT)LUM	EA.	2		2		2						6
	686	TRAF SIG POLE ASM (STL)1 ARM(50 FT)LUM	EA.							2				2
	686	TRAF SIG POLE ASM (STL)2 ARM 40-36'LUM	EA.			2		2						4
	686	TRAF SIG POLE ASM (STL)2 ARM 40-40'LUM	EA.											0
	686	TRAF SIG POLE ASM (STL)2 ARM 44-36'LUM	EA.							1				1
	686	TRAF SIG POLE ASM (STL)2 ARM 44-40'LUM	EA.	1						1				2
	686	TRAF SIG POLE ASM (STL)2 ARM 44-44'LUM	EA.	1										1
	686	30' STEEL STRAIN POLE WITH LUMINAIRES	EA.									4		4
	688	PEDESTRIAN DETECTOR	EA.	12		12		12		12				48
	688	VEHICLE DETECTOR (SAW CUT)	LF	1820		1985		1840		2270				7915
**	6000	DIAMOND CONTROLLER, FULL TRAFFIC ACTUATED	EA.	1		1		1		1				4
*	6001	LOOP AMPLIFIER (1-CHANNEL)	EA.	12		12		12		12				48
*	6002	FLASHER CONTROLLER W/CABINET	EA.									2		2
	6008	PEDESTAL POLE ASSEMBLIES	EA.	11		8		8		8				35
	6010	SALVAGE TRAFFIC SIGNALS	EA.			1		1		1				3
*	6032	HORIZONTAL SIGN LIGHT	EA.	2		2		2		2				8

*QUANTITIES SHOWN ARE FOR THE CONTRACTOR'S INFORMATION ONLY. THESE ITEMS ARE SUBSIDIARY TO VARIOUS OTHER ITEMS.

**ACTUATED DIAMOND CONTROLLERS TO BE PROVIDED BY THE STATE.

STATE OF TEXAS
KAREN ASPELIN
84162
LICENSED PROFESSIONAL ENGINEER
Karen Aspelin
8-6-03

PB Parsons Brinckerhoff Quade & Douglas Inc.

Texas Department of Transportation

© 2002 by TxDOT

QUANTITY SUMMARY SHEET

SHEET 1 OF 1				281TSD12.DGN		
DESIGNED: KEA	FED. RD DIV. NO.	STATE	FEDERAL AID PROJECT No.		HIGHWAY No.	
CHECKED: KEA	6	TEXAS			US 281	
DRAWN: MVJ	STATE DISTRICT	COUNTY	CONTROL No.	SECTION No.	JOB No.	SHEET No.
CHECKED: KEA	PHARR	HIDALGO	0255	08	091	35

$NAME$

$TIME$

7/2/2003

$FILE$

EARTHWORK TABLE

Station	End Areas (cut) sf	Unadjusted Volumes cy	Cumulative Volumes cy	End Areas (fill) sf	Unadjusted Volumes cy	Cumulative Volumes cy	Mass Ordinate
609+96.30/1	32.88	0	0	77.96	0	0	0
610+50.00/1	33.52	66	66	66.08	143	143	-77
611+00.00/1	46.52	74	140	38.8	97	240	-100
611+26.28/1	88.78	66	206	39.96	38	278	-72
611+50.00/1	100.12	83	289	39.13	35	313	-24
612+00.00/1	118.45	202	491	26.37	61	374	117
612+17.33/1	213.58	107	598	40.71	22	396	202
612+50.00/1	235.09	271	869	53	57	453	416
613+00.00/1	260.79	459	1328	73.57	117	570	758
613+50.00/1	276.45	497	1825	82.56	145	715	1110
613+90.52/1	288.49	424	2249	80.97	123	838	1411
614+50.00/1	383.49	740	2989	108.54	209	1047	1942
614+92.48/1	384.7	604	3593	101.08	165	1212	2381
615+00.00/1	384.36	107	3700	98	28	1240	2460
615+50.00/1	383.51	711	4411	81.98	167	1407	3004
616+50.00/1	415.35	1479	5890	63.44	269	1676	4214
616+86.26/1	446.25	579	6469	51.99	78	1754	4715
617+01.00/1	434.81	240	6709	47.52	27	1781	4928
617+50.00/1	450.75	804	7513	34.1	74	1855	5658
618+03.00/1	517.64	950	8463	21.04	54	1909	6554
618+21.52/1	538.32	362	8825	17.85	13	1922	6903
618+50.00/1	575.18	587	9412	12.81	16	1938	7474
618+76.32/1	626	585	9997	5.64	9	1947	8050
618+95.80/1	644.31	458	10455	0.39	2	1949	8506
619+50.00/1	676.83	1326	11781	0.06	0	1949	9832
619+72.93/1	685.08	578	12359	1.2	1	1950	10409
620+01.00/1	942.79	846	13205	10.1	6	1956	11249
620+33.23/1	966.21	1139	14344	8.47	11	1967	12377
620+48.26/1	959.16	536	14880	7.83	5	1972	12908
621+01.00/1	977.52	1891	16771	16.5	24	1996	14775
621+50.00/1	942.66	1742	18513	20.68	34	2030	16483
622+00.00/1	912.61	1718	20231	27.06	44	2074	18157
622+50.00/1	883.58	1663	21894	30.11	53	2127	19767
623+01.00/1	787.27	1578	23472	37.64	64	2191	21281
623+50.00/1	726.55	1374	24846	45.16	75	2266	22580
624+00.00/1	660.62	1284	26130	39.92	79	2345	23785
624+50.00/1	613.23	1179	27309	50.85	84	2429	24880
625+00.00/1	561.37	1088	28397	61.32	104	2533	25864
625+50.00/1	535	1015	29412	55.87	109	2642	26770
626+01.00/1	525.76	1002	30414	64.25	113	2755	27659
626+50.00/1	519.83	949	31363	66.58	119	2874	28489
627+00.00/1	517.78	961	32324	63.62	121	2995	29329
627+50.00/1	532.93	973	33297	67.02	121	3116	30181
628+01.00/1	563.5	1036	34333	53.67	114	3230	31103
628+50.00/1	590.63	1047	35380	46.41	91	3321	32059
629+01.00/1	602.1	1126	36506	34.83	77	3398	33108
629+50.00/1	603.42	1094	37600	25.22	54	3452	34148
630+05.00/1	728.29	1356	38956	20.37	46	3498	35458
630+50.00/1	736.61	1221	40177	20.4	34	3532	36645
631+01.00/1	758.37	1412	41589	19.49	38	3570	38019
631+50.00/1	786.46	1402	42991	17	33	3603	39388
632+01.00/1	779.15	1479	44470	15.01	30	3633	40837
632+50.00/1	780.08	1415	45885	13.26	26	3659	42226
633+01.00/1	750.57	1446	47331	39.84	50	3709	43622
633+50.00/1	795	1402	48733	16.26	51	3760	44973
634+01.00/1	800.78	1507	50240	10.63	25	3785	46455
634+50.00/1	807.41	1459	51699	10.05	19	3804	47895
635+01.00/1	828.72	1545	53244	12.84	22	3826	49418
635+50.00/1	846.09	1520	54764	14.78	25	3851	50913
636+00.00/1	864.11	1584	56348	18.47	31	3882	52466
636+32.11/1	884.25	1040	57388	17.06	21	3903	53485
636+50.00/1	890.36	588	57976	16.81	11	3914	54062
637+00.00/1	886.3	1645	59621	19.11	33	3947	55674
637+41.23/1	888.05	1355	60976	25.21	34	3981	56995
637+50.00/1	890.77	289	61265	21.92	8	3989	57276
638+01.00/1	878.17	1671	62936	24.32	44	4033	58903
638+50.00/1	835.75	1555	64491	32.89	52	4085	60406
639+00.00/1	782.57	1498	65989	32.23	60	4145	61844
639+41.88/1	718.08	1164	67153	30.38	49	4194	62959
639+50.00/1	748.08	220	67373	27.96	9	4203	63170
640+05.00/1	621.65	1395	68768	38.97	68	4271	64497
640+41.88/1	527.52	785	69553	61.93	69	4340	65213
640+50.00/1	506.4	155	69708	67.97	20	4360	65348
641+00.00/1	360.41	803	70511	140.19	193	4553	65958
641+50.00/1	259.44	574	71085	254.58	366	4919	66166
642+00.00/1	233.37	456	71541	518.19	716	5635	65906
642+50.00/1	241.94	440	71981	709.7	1137	6772	65209

EARTHWORK TABLE (CONT.)

Station	End Areas (cut) sf	Unadjusted Volumes cy	Cumulative Volumes cy	End Areas (fill) sf	Unadjusted Volumes cy	Cumulative Volumes cy	Mass Ordinate
643+00.00/1	251.93	457	72438	858.07	1452	8224	64214
643+50.00/1	249.05	464	72902	1006.8	1727	9951	62951
643+57.55/1	250.09	70	72972	1032.51	285	10236	62736
644+01.00/1	252.82	405	73377	1140.06	1748	11984	61393
644+50.00/1	268.5	473	73850	1291.23	2206	14190	59660
645+00.00/1	277.69	506	74356	1425.72	2516	16706	57650
645+50.00/1	294.44	530	74886	1537.09	2743	19449	55437
646+01.00/1	308.12	569	75455	1649.26	3009	22458	52997
646+50.00/1	311.48	562	76017	1743.32	3078	25536	50481
647+01.00/1	321.73	598	76615	1822.11	3367	28903	47712
647+50.00/1	331.04	592	77207	1911.56	3388	32291	44916
648+00.00/1	332.13	614	77821	2071.09	3688	35979	41842
648+50.00/1	338.53	621	78442	2123.48	3884	39863	38579
649+01.00/1	333.62	635	79077	2191.62	4075	43938	35139
649+50.00/1	304.36	579	79656	2250.31	4031	47969	31687
649+64.36/1	340.6	172	79828	2267.8	1201	49170	30658
650+01.00/1	358.36	474	80302	2313.22	3108	52278	28024
650+50.00/1	385.26	675	80977	2370.71	4250	56528	24449
651+01.00/1	385.88	728	81705	2419.77	4524	61052	20653
651+15.59/1	385.73	208	81913	2423.33	1309	62361	19552
651+45.61/1	394.48	434	82347	2432.25	2699	65060	17287
651+50.00/1	396.33	64	82411	2433.69	396	65456	16955
652+01.00/1	384.62	738	83149	2461.28	4623	70079	13070
652+50.00/1	390.94	704	83853	2487.75	4491	74570	9283
652+78.54/1	389.58	413	84266	2496.08	2634	77204	7062
653+00.00/1	385.58	308	84574	2506.76	1988	79192	5382
653+50.00/1	415.15	741	85315	2525.04	4659	83851	1464
653+58.00/1	418.84	124	85439	2457.41	738	84589	850
653+98.00/1	325.75	541	85980	2442	3518	88107	-2127
654+38.00/1	342.25	0	85980	7.6	0	88107	-2127
656+22.00/1	320.12	0	85980	0	0	88107	-2127
656+50.00/1	294.88	0	85980	14.26	0	88107	-2127
656+62.00/1	296.12	0	85980	14.69	0	88107	-2127
657+00.10/1	477.7	528	86508	2309.86	3161	91268	-4760
657+50.00/1	408.02	818	87326	2424.22	4375	95643	-8317
658+01.00/1	395.63	759	88085	2381.69	4539	100182	-12097
658+50.00/1	362.38	688	88773	2333.76	4279	104461	-15688
659+01.00/1	354.43	677	89450	2294.02	4371	108832	-19382
659+50.00/1	368.27	656	90106	2238.99	4113	112945	-22839
660+01.00/1	384.23	711	90817	2155.84	4151	117096	-26279
660+50.00/1	360.2	676	91493	2086.06	3849	120945	-29452
661+01.00/1	325.33	647	92140	2011.94	3870	124815	-32675
661+50.00/1	329.21	594	92734	1924.31	3572	128387	-35653
662+00.00/1	299.24	582	93316	1868.4	3512	131899	-38583
662+50.00/1	293.5	549	93865	1807.92	3404	135303	-41438
663+01.00/1	304.26	565	94430	1705.29	3318	138621	-44191
663+50.00/1	308.6	556	94986	1593.94	2994	141615	-46629
664+01.00/1	314.19	588	95574	1471.57	2895	144510	-48936
664+50.00/1	310.89	567	96141	1332.16	2544	147054	-50913
665+01.00/1	299.22	576	96717	1224.53	2415	149469	-52752
665+51.00/1	294.08	549	97266	1104.51	2157	151626	-54360
666+01.00/1	275.84	528	97794	1016.74	1964	153590	-55796
666+50.00/1	269.65	495	98289	877.56	1719	155309	-57020
667+01.00/1	269.51	509	98798	720.8	1510	156819	-58021
667+50.00/1	273.1	492	99290	560.92	1163	157982	-58692
668+01.00/1	274.58	517	99807	410.46	917	158899	-59092
668+50.00/1	315.08	535	100342	180.97	537	159436	-59094
669+00.00/1	439.54	699	101041	107.15	267	159703	-58662
669+01.00/1	442.05	16	101057	103.24	4	159707	-58650
669+50.00/1	563.96	913	101970	59.75	148	159855	-57885
670+01.00/1	690.83	1185	103155	45.45	99	159954	-56799
670+50.00/1	807.63	1360	104515	33.06	71	160025	-55510
670+86.76/1	835.51	1119	105634	32.56	45	160070	-54436
671+01.00/1	854.99	446	106080	32.73	17	160087	-54007
671+50.00/1	922.86	1613	107693	33.17	60	160147	-52454
671+67.42/1	910.67	591	108284	35.78	22	160169	-51885
672+00.00/1	892.44	1088	109372	39.91	46	160215	-50843
672+50.00/1	904.46	1664	111036	39.48	74	160289	-49253
672+89.93/1	888.81	1326	112362	33.37	54	160343	-47981
673+02.00/1	889.3	397	112759	30.23	14	160357	-47598
673+50.00/1	881.72	1574	114333	31.28	55	160412	-46079
673+73.81/1	869.63	772	115105	31.11	28	160440	-45335
673+99.20/1	850.55	809	115914	33.68	30	160470	-44556
674+50.00/1	823.61	1575	117489	25.75	56	160526	-43037
674+83.25/1	795.52	997	118486	32.55	36	160562	-42076
675+00.00/1	780.29	489	118975	35.24	21	160583	-41608
675+50.00/1	735.75	1404	120379	53.04	82	160665	-40286

THE SEAL APPEARING ON THIS DOCUMENT WAS AUTHORIZED BY DEEPAK MANGLORKAR, P.E. 89613 ON 7/2/2003

STATE OF TEXAS
DEEPAK MANGLORKAR
89613
REGISTERED PROFESSIONAL ENGINEER
D. Manglorkar 7/2/03

PB Parsons Brinckerhoff Quade & Douglas Inc.

Texas Department of Transportation

©2003 by TxDOT

US 281

EARTHWORK SUMMARY

SHEET 1 OF 4			281ERTSUM01.DGN				
DESIGNED: JA	FED. RD DIV. No.	STATE	FEDERAL AID PROJECT No.			HIGHWAY No.	
CHECKED: JP	6	TEXAS				US 281	
DRAWN:	STATE DISTRICT	COUNTY	CONTROL No.	SECTION No.	JOB No.	SHEET No.	
CHECKED: JDH	PHARR	HIDALGO	0255	08	091	36	

$NAME$

$TIME$

7/2/2003

$FILES

EARTHWORK TABLE (CONT.)

Station	End Areas (cut) sf	Unadjusted Volumes cy	Cumulative Volumes cy	End Areas (fill) sf	Unadjusted Volumes cy	Cumulative Volumes cy	Mass Ordinate
676+01.00/1	745.99	1399	121778	54.84	102	160767	-38989
676+50.00/1	759.35	1366	123144	48.44	94	160861	-37717
677+00.00/1	783.87	1429	124573	33.15	76	160937	-36364
677+50.00/1	789.09	1456	126029	32.46	61	160998	-34969
678+00.10/1	792	1467	127496	29.7	58	161056	-33560
678+50.00/1	784.69	1457	128953	28.43	54	161110	-32157
679+00.00/1	763.87	1434	130387	29.97	54	161164	-30777
679+50.00/1	730.61	1384	131771	23.29	49	161213	-29442
680+01.00/1	726.69	1376	133147	29.18	50	161263	-28116
680+50.00/1	727.31	1319	134466	24.64	49	161312	-26846
681+01.00/1	745.72	1391	135857	20.17	42	161354	-25497
681+50.00/1	748.21	1356	137213	23.63	40	161394	-24181
682+05.00/1	737.85	1514	138727	22.92	47	161441	-22714
682+50.00/1	747.12	1237	139964	22.89	38	161479	-21515
683+00.00/1	758.54	1394	141358	23.56	43	161522	-20164
683+50.00/1	768.29	1414	142772	24.74	45	161567	-18795
684+00.00/1	780.08	1434	144206	24.28	45	161612	-17406
684+50.00/1	803.97	1467	145673	16.03	37	161649	-15976
685+01.00/1	779.54	1496	147169	9.37	24	161673	-14504
685+50.00/1	785.24	1420	148589	7.54	15	161688	-13099
686+00.00/1	793.19	1462	150051	11.07	17	161705	-11654
686+50.00/1	796.58	1472	151523	10.66	20	161725	-10202
687+01.00/1	786.97	1496	153019	8.96	19	161744	-8725
687+50.00/1	792.32	1433	154452	5.25	13	161757	-7305
688+01.00/1	811.22	1514	155966	13.19	17	161774	-5808
688+50.00/1	822.9	1483	157449	4.5	16	161790	-4341
689+01.00/1	831.6	1563	159012	2.96	7	161797	-2785
689+50.00/1	844	1520	160532	3.98	6	161803	-1271
690+01.00/1	870.47	1619	162151	1.41	5	161808	343
690+50.00/1	869	1578	163729	1.9	3	161811	1918
691+01.00/1	869.12	1642	165371	3.27	5	161816	3555
691+50.00/1	872.09	1580	166951	6.61	9	161825	5126
692+01.00/1	853.22	1629	168580	5.9	12	161837	6743
692+05.61/1	851.92	146	168726	5.82	1	161838	6888
692+31.12/1	839.38	799	169525	5.2	5	161843	7682
692+50.00/1	844.04	589	170114	5.82	4	161847	8267
692+67.64/1	843.23	551	170665	6.92	4	161851	8814
693+01.00/1	840.44	1040	171705	13.33	13	161864	9841
693+44.83/1	821.01	1349	173054	24.39	31	161895	11159
693+50.00/1	820.19	157	173211	24.65	5	161900	11311
694+01.00/1	813.01	1542	174753	23.7	46	161946	12807
694+50.00/1	799.15	1463	176216	38.99	57	162003	14213
694+81.40/1	806.98	934	177150	33.69	42	162045	15105
695+00.00/1	823.06	561	177711	34.02	23	162068	15643
695+37.79/1	776.45	1119	178830	46.79	57	162125	16705
695+67.61/1	823.48	884	179714	41.17	49	162174	17540
696+01.00/1	796.71	1002	180716	46.71	54	162228	18488
696+50.00/1	795.65	1445	182161	40.83	79	162307	19854
697+01.00/1	839.78	1545	183706	41.7	78	162385	21321
697+50.00/1	903.44	1582	185288	22.1	58	162443	22845
698+00.00/1	1039.49	1799	187087	16.54	36	162479	24608
698+50.00/1	1182.83	2058	189145	15.76	30	162509	26636
699+01.00/1	1377.06	2418	191563	9.99	24	162533	29030
699+50.00/1	1557.45	2663	194226	11.36	19	162552	31674
700+00.00/1	1795.3	3104	197330	9.21	19	162571	34759
700+50.00/1	2020.97	3534	200864	30.53	37	162608	38256
701+01.00/1	2208.85	3995	204859	3.95	33	162641	42218
701+50.00/1	2429.88	4209	209068	9.24	12	162653	46415
702+01.00/1	2707.96	4852	213920	9.69	18	162671	51249
702+50.00/1	2847.52	5041	218961	16.05	23	162694	56267
703+01.00/1	3106.58	5623	224584	599.81	582	163276	61308
703+50.00/1	3293.94	5808	230392	0.16	544	163820	66572
704+01.00/1	3311.36	6238	236630	0.3	0	163820	72810
704+50.00/1	3445.24	6131	242761	3.32	3	163823	78938
705+00.00/1	3450.46	6385	249146	15.27	17	163840	85306
705+50.00/1	3133.52	6096	255242	63.16	73	163913	91329
706+00.00/1	2654.1	5359	260601	478.46	502	164415	96186
706+50.00/1	2004.27	4313	264914	1185.58	1541	165956	98958
706+60.00/1	1855.01	715	265629	1319.29	464	166420	99209
707+00.01/1	1383.17	2399	268028	1843	2343	168763	99265
707+50.00/1	504.07	1747	269775	2612.64	4125	172888	96887
707+55.00/1	418.02	85	269860	2726.19	494	173382	96478
708+58.00/1	368.95	1501	271361	4195.76	13203	186585	84776
709+18.00/1	490.83	955	272316	2602.45	7554	194139	78177
710+05.00/1	756.87	2010	274326	1678.19	6897	201036	73290
710+28.41/1	830	688	275014	1548.43	1399	202435	72579
711+00.00/1	988.01	2410	277424	910.25	3260	205695	71729

EARTHWORK TABLE (CONT.)

Station	End Areas (cut) sf	Unadjusted Volumes cy	Cumulative Volumes cy	End Areas (fill) sf	Unadjusted Volumes cy	Cumulative Volumes cy	Mass Ordinate
711+49.99/1	918.7	1765	279189	713.59	1503	207198	71991
712+00.00/1	882.93	1669	280858	769.83	1374	208572	72286
712+50.00/1	899.31	1650	282508	941.55	1585	210157	72351
713+05.00/1	814.27	1745	284253	1224.89	2207	212364	71889
713+50.00/1	658.51	1227	285480	1516.95	2285	214649	70831
714+00.00/1	545.15	1115	286595	1927.28	3189	217838	68757
714+50.00/1	477.44	838	287433	2274.52	3442	221280	66153
715+10.00/1	248.73	0	287433	23	0	221280	66153
715+50.00/1	316.91	0	287433	57.31	0	221280	66153
716+05.00/1	376.44	0	287433	2.08	0	221280	66153
716+51.00/1	396.82	0	287433	28.42	26	221306	66127
717+01.00/1	814.35	0	287433	2569.16	2588	223894	63539
717+50.00/1	536.73	0	287433	2795	4867	228761	58672
718+05.00/1	546.67	401	287834	3005	5907	234668	53166
718+50.00/1	559.84	922	288756	3135	5117	239785	48971
718+60.97/1	548.17	225	288981	3142	1275	241060	47921
719+00.00/1	545.95	791	289772	3223	4600	245660	44112
719+50.00/1	523.24	990	290762	3235	5980	251640	39122
720+05.00/1	466.91	1008	291770	3215	6569	258209	33561
720+50.00/1	431.33	749	292519	3143	5298	263507	29012
721+00.00/1	418.47	787	293306	3023	5709	269216	24090
721+50.00/1	420.64	777	294083	2872	5458	274674	19409
722+00.10/1	388.84	751	294834	2808.22	5270	279944	14890
722+50.00/1	423.03	750	295584	2629.6	5025	284969	10615
723+00.00/1	437.24	797	296381	2436.9	4691	289660	6721
723+50.00/1	472.97	843	297224	2096.25	4197	293857	3367
724+00.00/1	449.4	854	298078	2039.21	3829	297686	392
724+50.00/1	483.49	864	298942	1793.14	3548	301234	-2292
725+01.00/1	468.02	899	299841	1563.08	3170	304404	-4563
725+50.00/1	477.72	858	300699	1308.81	2606	307010	-6311
726+00.00/1	445.21	855	301554	1070.46	2203	309213	-7659
726+50.00/1	448.68	828	302382	796.76	1729	310942	-8560
727+00.00/1	416.02	801	303183	531.3	1230	312172	-8989
727+50.00/1	391.36	748	303931	285.28	756	312928	-8997
727+95.98/1	424.91	695	304626	185.69	401	313329	-8703
728+00.00/1	431.41	64	304690	176.25	27	313356	-8666
728+50.00/1	544.71	904	305594	72.99	231	313587	-7993
729+01.00/1	683.02	1160	306754	33.18	100	313687	-6933
729+50.00/1	795.33	1341	308095	22.84	51	313738	-5643
729+90.99/1	890.5	1280	309375	15.1	29	313767	-4392
730+05.00/1	921.66	470	309845	10.6	7	313774	-3929
730+50.00/1	985.28	1589	311434	10.43	18	313792	-2358
730+86.43/1	930.81	1293	312727	30.05	27	313819	-1092
731+01.00/1	947.89	507	313234	29.75	16	313835	-601
731+50.00/1	971.7	1742	314976	27.09	52	313887	1089
732+05.00/1	1008.06	2018	316994	15.36	41	313928	3066
732+50.00/1	1027.72	1696	318690	9.23	20	313948	4742
733+01.00/1	1060.31	1972	320662	5.78	14	313962	6700
733+50.00/1	1107	1967	322629	5.47	10	313972	8657
733+75.31/1	1106.04	1037	323666	5.71	5	313977	9689
734+00.00/1	1127.68	1021	324687	5.06	5	313982	10705
734+50.00/1	1114.18	2076	326763	4.03	8	313990	12773
735+00.00/1	1104.89	2055	328818	3.27	7	313997	14821
735+50.00/1	1083.21	2026	330844	4.04	7	314004	16840
736+05.00/1	1073.12	2196	333040	8.03	12	314016	19024
736+50.00/1	1051.41	1770	334810	12.66	17	314033	20777
737+01.00/1	1032.5	1968	336778	12.74	24	314057	22721
737+50.00/1	1042.64	1883	338661	6.41	17	314074	24587
738+00.00/1	1053.55	1941	340602	4.17	10	314084	26518
738+50.00/1	1027.37	1927	342529	5.6	9	314093	28436
739+00.00/1	1007.13	1884	344413	4.07	9	314102	30311
739+50.00/1	976.37	1837	346250	5.45	9	314111	32139
740+00.00/1	971.65	1804	348054	8.41	13	314124	33930
740+50.00/1	930.71	1761	349815	16.77	23	314147	35668
741+01.00/1	898.86	1728	351543	13.03	28	314175	37368
741+50.00/1	745.48	1492	353035	15.41	26	314201	38834
742+00.00/1	740.76	1376	354411	8.1	22	314223	40188
742+50.00/1	789.03	1416	355827	15.88	22	314245	41582
743+01.00/1	757.61	1461	357288	27.04	41	314286	43002
743+50.00/1	754.07	1372	358660	19.88	43	314329	44331
744+00.00/1	773.33	1414	360074	11.64	29	314358	45716
744+50.00/1	782.93	1441	361515	17.34	27	314385	47130
745+01.00/1	799.42	1494	363009	16.87	32	314417	48592
745+50.00/1	836.19	1484	364493	7	22	314439	50054
746+00.00/1	876.63	1586	366079	2.34	9	314448	51631
746+50.00/1	932.62	1675	367754	1.45	4	314452	53302
747+01.00/1	964.44	1792	369546	4.84	6	314458	55088

THE SEAL APPEARING ON THIS DOCUMENT WAS AUTHORIZED BY DEEPAK MANGLORKAR, P.E. 89613 ON 7/2/2003

STATE OF TEXAS
DEEPAK MANGLORKAR
89613
LICENSED PROFESSIONAL ENGINEER

PB Parsons Brinckerhoff Quade & Douglas Inc.

Texas Department of Transportation

©2003 by TxDOT

US 281

EARTHWORK SUMMARY

SHEET 2 OF 4			281ERTSUM02.DGN				
DESIGNED: JA	FED. RD DIV. No.	STATE	FEDERAL AID PROJECT No.		HIGHWAY No.		
CHECKED: JP	6	TEXAS			US 281		
DRAWN:	STATE DISTRICT	COUNTY	CONTROL No.	SEC. No.	JOB No.	SHEET No.	
CHECKED: JDH	PHARR	HIDALGO	0255	08	091	36A	

$NAME$

$TIME$

7/2/2003

$FILES

EARTHWORK TABLE (CONT.)

Station	End Areas (cut) sf	Unadjusted Volumes cy	Cumulative Volumes cy	End Areas (fill) sf	Unadjusted Volumes cy	Cumulative Volumes cy	Mass Ordinate
747+50.00/1	986.59	1770	371316	5.67	10	314468	56848
748+00.00/1	1028.21	1866	373182	3.62	9	314477	58705
748+50.00/1	1051.33	1926	375108	3.41	7	314484	60624
749+00.00/1	1044.09	1940	377048	2.29	5	314489	62559
749+50.00/1	1032.45	1923	378971	1.44	3	314492	64479
749+70.96/1	1034.88	802	379773	0.12	1	314493	65280
750+00.00/1	1035.85	1114	380887	0	0	314493	66394
750+50.00/1	1019.69	1903	382790	0	0	314493	68297
750+68.61/1	1004.02	697	383487	0	0	314493	68994
751+00.00/1	992.11	1160	384647	0.05	0	314493	70154
751+50.00/1	1025.03	1868	386515	0.08	0	314493	72022
752+01.00/1	1013.19	1925	388440	0.02	0	314493	73947
752+50.00/1	994.44	1822	390262	0.49	0	314493	75769
752+73.13/1	989.1	850	391112	0.72	1	314494	76618
753+55.21/1	853.06	2800	393912	6.06	10	314504	79408
754+05.00/1	750.2	1478	395390	13.88	18	314522	80868
754+25.96/1	738.48	578	395968	12.95	10	314532	81436
754+50.00/1	722.38	650	396618	16.53	13	314545	82073
755+00.00/1	697.13	1314	397932	23.57	37	314582	83350
755+50.00/1	678.82	1274	399206	18.91	39	314621	84585
756+00.00/1	659.3	1239	400445	25.67	41	314662	85783
756+19.80/1	666.74	486	400931	24.72	18	314680	86251
756+50.00/1	671.75	749	401680	16.68	23	314703	86977
757+01.00/1	655.72	1254	402934	21.98	37	314740	88194
757+50.00/1	672.92	1206	404140	33.77	51	314791	89349
758+01.00/1	661.89	1261	405401	47.41	77	314868	90533
758+50.00/1	644.62	1186	406587	52.72	91	314959	91628
759+01.00/1	622.52	1197	407784	73.4	119	315078	92706
759+50.00/1	621.64	1129	408913	58.44	120	315198	93715
760+01.00/1	596.72	1151	410064	72.42	124	315322	94742
760+50.00/1	583.8	1071	411135	109.24	165	315487	95648
761+00.00/1	580.93	1078	412213	108.33	201	315688	96525
761+50.00/1	584.46	1079	413292	134.34	225	315913	97379
762+05.00/1	574.91	1181	414473	178.24	318	316231	98242
762+50.00/1	599.88	979	415452	156.24	279	316510	98942
763+00.00/1	619.42	1129	416581	160.93	294	316804	99777
763+50.00/1	640.87	1167	417748	127.7	267	317071	100677
764+00.00/1	669.43	1213	418961	106.75	217	317288	101673
764+55.37/1	833.11	1541	420502	75.96	187	317475	103027
765+00.00/1	872.43	1410	421912	58	111	317586	104326
765+50.00/1	913.83	1654	423566	41.35	92	317678	105888
766+05.00/1	919.62	1867	425433	39.75	83	317761	107672
766+50.00/1	912.36	1527	426960	40.25	67	317828	109132
766+89.34/1	966.4	1369	428329	29.4	51	317879	110450
767+06.21/1	315.06	400	428729	4.11	10	317889	110840
769+91.25/1	276.06	0	428729	11.31	0	317889	110840
770+29.33/1	942.71	856	429585	199.21	148	318037	111548
770+50.00/1	843.36	684	430269	184.38	147	318184	112085
771+05.00/1	874.32	1749	432018	145.17	336	318520	113498
771+50.00/1	893.02	1473	433491	128.19	228	318748	114743
772+00.00/1	870.04	1632	435123	108.65	219	318967	116156
772+50.00/1	838.8	1582	436705	96.31	190	319157	117548
772+54.34/1	838.79	135	436840	94.58	15	319172	117668
773+05.00/1	710.55	1454	438294	86.03	169	319341	118953
773+50.00/1	687.89	1165	439459	87.01	144	319485	119974
774+01.00/1	666.73	1279	440738	89.39	167	319652	121086
774+50.00/1	629.66	1176	441914	93.27	166	319818	122096
775+00.00/1	608.62	1147	443061	93.55	173	319991	123070
775+50.00/1	603.28	1122	444183	88.43	168	320159	124024
776+00.00/1	579.71	1095	445278	105.9	180	320339	124939
776+50.00/1	554.41	1050	446328	114.67	204	320543	125785
777+01.00/1	573.63	1065	447393	84.13	188	320731	126662
777+50.00/1	583.81	1050	448443	65.08	135	320866	127577
778+01.00/1	588.81	1107	449550	29.25	89	320955	128595
778+50.00/1	613.36	1091	450641	15.34	40	320995	129646
779+00.00/1	624.63	1146	451787	11.38	25	321020	130767
779+50.00/1	603.17	1137	452924	12.61	22	321042	131882
779+79.88/1	582.73	656	453580	12.68	14	321056	132524
779+93.83/1	568.9	298	453878	14.82	7	321063	132815
780+01.00/1	562.96	150	454028	15.13	4	321067	132961
780+50.00/1	545.52	1006	455034	17.74	30	321097	133937
780+81.30/1	529.74	623	455657	20.81	22	321119	134538
781+00.00/1	546.95	373	456030	27.35	17	321136	134894
781+21.82/1	546.38	442	456472	26.33	22	321158	135314
781+50.00/1	532.64	563	457035	26.95	28	321186	135849
782+01.00/1	518.57	993	458028	45.32	68	321254	136774
782+30.70/1	520.31	571	458599	27.55	40	321294	137305

EARTHWORK TABLE (CONT.)

Station	End Areas (cut) sf	Unadjusted Volumes cy	Cumulative Volumes cy	End Areas (fill) sf	Unadjusted Volumes cy	Cumulative Volumes cy	Mass Ordinate
782+51.64/1	530.25	407	459006	49.24	30	321324	137682
783+05.00/1	535.41	1053	460059	48.33	96	321420	138639
783+50.00/1	536.03	893	460952	46.55	79	321499	139453
783+64.17/1	580.97	293	461245	27.6	19	321518	139727
784+01.00/1	561.94	780	462025	25.11	36	321554	140471
784+50.00/1	574.17	1031	463056	23.89	44	321598	141458
785+00.00/1	563.74	1054	464110	21.09	42	321640	142470
785+22.14/1	558.01	460	464570	22.76	18	321658	142912
785+50.00/1	544.93	569	465139	23.13	24	321682	143457
786+01.00/1	522.56	1008	466147	6.51	28	321710	144437
786+50.00/1	512.87	940	467087	12.57	17	321727	145360
787+00.00/1	517.33	954	468041	16.33	27	321754	146287
787+50.00/1	509.04	950	468991	15.66	30	321784	147207
787+67.97/1	506.07	338	469329	17.4	11	321795	147534
788+01.00/1	511.28	622	469951	23.61	25	321820	148131
788+50.00/1	525.64	941	470892	22.91	42	321862	149030
789+00.00/1	532.56	980	471872	19.09	39	321901	149971
789+50.00/1	537.08	990	472862	22.81	39	321940	150922
789+60.81/1	540.29	216	473078	24.13	9	321949	151129
789+81.59/1	543.66	417	473495	29.24	21	321970	151525
790+01.00/1	541.33	390	473885	33.54	23	321993	151892
790+50.00/1	557.57	997	474882	37.25	64	322057	152825
791+00.00/1	570.07	1044	475926	41.94	73	322130	153796
791+50.00/1	587.77	1072	476998	40.79	77	322207	154791
792+01.00/1	595.86	1118	478116	53.56	89	322296	155820
792+50.00/1	607.96	1092	479208	55.62	99	322395	156813
792+61.09/1	600.86	248	479456	59.46	24	322419	157037
793+00.00/1	605.23	869	480325	75.17	97	322516	157809
793+50.00/1	597.76	1114	481439	56.89	122	322638	158801
794+00.00/1	583.23	1094	482533	63.98	112	322750	159783
794+50.00/1	553.61	1053	483586	67.48	122	322872	160714
795+00.00/1	544.08	1016	484602	72.02	129	323001	161601
795+50.00/1	517.83	983	485585	79.75	141	323142	162443
795+81.59/1	507.06	600	486185	76.47	91	323233	162952
796+01.00/1	500.33	362	486547	77.03	55	323288	163259
796+11.45/1	499.3	193	486740	76.33	30	323318	163422
796+50.00/1	487.97	705	487445	69.56	104	323422	164023
797+00.00/1	482.02	898	488343	74.4	133	323555	164788
797+50.00/1	472.98	884	489227	74.81	138	323693	165534
797+83.06/1	459.11	571	489798	68.84	88	323781	166017
798+00.00/1	461.45	289	490087	74.72	45	323826	166261
798+50.00/1	449.88	844	490931	72.39	136	323962	166969
799+01.00/1	423.88	825	491756	81.13	145	324107	167649
799+50.00/1	457.86	800	492556	60.05	128	324235	168321
800+01.00/1	490.39	896	493452	49.63	104	324339	169113
800+50.00/1	505.13	903	494355	49.36	90	324429	169926
800+61.29/1	502.83	211	494566	50.28	21	324450	170116
800+82.93/1	521.75	411	494977	42.52	37	324487	170490
801+00.00/1	539.27	335	495312	43.68	27	324514	170798
801+50.00/1	562.33	1020	496332	43.49	81	324595	171737
802+00.00/1	576.38	1054	497386	48.05	85	324680	172706
802+50.00/1	600.43	1090	498476	43.48	85	324765	173711
802+75.78/1	617.87	582	499058	32.89	36	324801	174257
803+01.00/1	631.44	583	499641	31.64	30	324831	174810
803+50.00/1	659.39	1171	500812	25.77	52	324883	175929
804+01.00/1	702.47	1286	502098	24.5	47	324930	177168
804+50.00/1	735.09	1304	503402	12.26	33	324963	178439
805+00.00/1	796.68	1418	504820	11.85	22	324985	179835
805+50.00/1	858.06	1532	506352	1.17	12	324997	181355
805+77.58/1	858.11	877	507229	2.98	2	324999	182230
806+00.00/1	847.52	708	507937	1.66	2	325001	182936
806+50.00/1	885.2	1604	509541	1.22	3	325004	184537
806+78.16/1	898.5	930	510471	0.11	1	325005	185466
806+99.00/1	903.57	695	511166	0.18	0	325005	186161
807+50.00/1	918.9	1721	512887	2.05	2	325007	187880
807+88.56/1	855.8	1267	514154	11.48	10	325017	189137
808+05.00/1	823.63	511	514665	5.84	5	325022	189643
808+32.74/1	700.33	779	515444	3.38	5	325027	190417
808+50.00/1	750.02	0	515444	0.47	0	325027	190417
808+92.74/1	693.41	4	515448	1.06	0	325027	190421
809+50.00/1	701.61	1479	516927	23.12	26	325053	191874
810+00.00/1	696.97	1295	518222	24.08	44	325097	193125
810+47.35/1	707.55	1232	519454	22.2	41	325138	194316
810+50.00/1	705.82	69	519523	22.84	2	325140	194383
811+01.00/1	698.34	1326	520849	47.04	66	325206	195643
811+50.00/1	694.53	1264	522113	67.98	104	325310	196803
811+61.78/1	695.06	303	522416	67.69	30	325340	197076

THE SEAL APPEARING ON THIS DOCUMENT WAS AUTHORIZED BY DEEPAK MANGLORKAR, P.E. 89613 ON 7/2/2003

STATE OF TEXAS
DEEPAK MANGLORKAR
89613
PROFESSIONAL ENGINEER
D. Manglorkar

PB Parsons Brinckerhoff Quade & Douglas Inc.

Texas Department of Transportation

© 2003 by TxDOT

US 281

EARTHWORK SUMMARY

SHEET 3 OF 4				281ERTSUM03.DGN			
DESIGNED: JA	FED. RD DIV. No.	STATE	FEDERAL AID PROJECT No.		HIGHWAY No.		
CHECKED: JP	6	TEXAS			US 281		
DRAWN:	STATE DISTRICT	COUNTY	CONTROL No.	SECTION No.	JOB No.	SHEET No.	
CHECKED: JDH	PHARR	HIDALGO	0255	08	091	36 B	

$NAME$

$TIME$

7/2/2003

$FILE$

EARTHWORK TABLE (CONT.)

Station	End Areas (cut) sf	Unadjusted Volumes cy	Cumulative Volumes cy	End Areas (fill) sf	Unadjusted Volumes cy	Cumulative Volumes cy	Mass Ordinate
812+00.00/1	665.33	963	523379	58.48	89	325429	197950
812+50.00/1	656.89	1224	524603	73.27	122	325551	199052
813+01.00/1	630.96	1216	525819	118.1	181	325732	200087
813+50.00/1	613.54	1129	526948	138	232	325964	200984
814+01.00/1	593.27	1140	528088	162.51	284	326248	201840
814+50.00/1	576.58	1062	529150	189.77	320	326568	202582
815+01.00/1	565.76	1079	530229	220.82	388	326956	203273
815+50.00/1	566.59	1028	531257	264.86	441	327397	203860
816+00.00/1	571.79	1054	532311	241.58	469	327866	204445
816+50.00/1	580.38	1067	533378	247.02	452	328318	205060
817+00.00/1	596.53	1090	534468	226.7	439	328757	205711
817+23.03/1	710.38	557	535025	236.4	198	328955	206070
817+50.00/1	731.83	720	535745	228.17	232	329187	206558
818+00.00/1	772.63	1393	537138	231.75	426	329613	207525
818+50.00/1	882.09	1532	538670	224.51	422	330035	208635
819+05.00/1	882.63	1797	540467	243.63	477	330512	209955
819+50.00/1	892.75	1479	541946	244.78	407	330919	211027
819+68.06/1	923.7	608	542554	242.07	163	331082	211472
819+85.00/1	368	573	543127	0	166	331248	211879
822+72.00/1	402	4092	547219	328.92	53	331301	215918
822+88.03/1	935.73	548	547767	220.96	163	331464	216303
823+05.00/1	923.37	584	548351	194.07	130	331594	216757
823+50.00/1	916.91	1534	549885	150.98	288	331882	218003
824+00.00/1	899.62	1682	551567	144.28	273	332155	219412
824+50.00/1	773.36	1549	553116	155.29	277	332432	220684
824+90.00/1	765.16	1140	554256	191.18	257	332689	221567
825+05.00/1	754.83	422	554678	209.62	111	332800	221878
825+48.06/1	714.88	1172	555850	286.21	395	333195	222655
825+80.00/1	599.51	777	556627	304.46	349	333544	223083
826+00.00/1	592.25	441	557068	329.18	235	333779	223289
826+50.00/1	588.24	1093	558161	380.89	657	334436	223725
827+01.00/1	598.12	1120	559281	381.4	720	335156	224125
827+50.00/1	603.91	1091	560372	392.43	702	335858	224514
828+00.00/1	603.42	1118	561490	355.89	693	336551	224939
828+03.53/1	593.79	78	561568	354.27	46	336597	224971
828+50.00/1	555.19	989	562557	328.35	587	337184	225373
828+78.62/1	545.17	583	563140	311.81	339	337523	225617
829+01.00/1	535.54	448	563588	297.05	252	337775	225813
829+50.00/1	512.8	951	564539	259.61	505	338280	226259
830+00.00/1	488.02	927	565466	225.42	449	338729	226737
830+50.00/1	451.42	870	566336	192.33	387	339116	227220
831+01.00/1	418.54	822	567158	166.99	339	339455	227703
831+50.00/1	391.44	735	567893	146.82	285	339740	228153
832+00.00/1	373.74	709	568602	135.02	261	340001	228601
832+50.00/1	382.06	700	569302	116.64	233	340234	229068
832+62.52/1	385.93	178	569480	117.33	54	340288	229192
833+01.00/1	412.63	569	570049	114.17	165	340453	229596
833+50.00/1	412.05	748	570797	105.96	200	340653	230144
833+71.47/1	366.46	310	571107	137.57	97	340750	230357
834+00.00/1	327.98	367	571474	129.27	141	340891	230583
834+50.00/1	332.2	611	572085	116.48	228	341119	230966
835+00.00/1	344.85	627	572712	107.99	208	341327	231385
835+44.39/1	343.21	566	573278	110.4	180	341507	231771
835+50.00/1	344.32	71	573349	109.71	23	341530	231819
835+60.04/1	347.96	129	573478	109.35	41	341571	231907
836+00.00/1	292.65	474	573952	108.5	161	341732	232220
836+50.00/1	394.68	636	574588	111.16	203	341935	232653
837+00.00/1	408.31	744	575332	102.96	198	342133	233199
837+50.00/1	459.44	803	576135	83.18	172	342305	233830
838+01.00/1	503.81	910	577045	74.57	149	342454	234591
838+50.00/1	459.77	874	577919	87.04	147	342601	235318
839+01.00/1	466.15	874	578793	64.21	143	342744	236049
839+06.55/1	467.6	96	578889	62.67	13	342757	236132
839+50.00/1	465.34	751	579640	62.24	101	342858	236782
839+88.03/1	471.47	660	580300	68.17	92	342950	237350
839+99.99/1	458.4	206	580506	82.2	33	342983	237523
840+50.00/1	498.44	886	581392	70.74	142	343125	238267
841+00.00/1	503.14	927	582319	87.93	147	343272	239047
841+50.00/1	483.19	913	583232	104.7	178	343450	239782
842+01.00/1	489.19	918	584150	94.87	188	343638	240512
842+50.00/1	491.37	890	585040	93.05	171	343809	241231
843+00.00	371.33	799	585839	108.21	186	343995	241844
843+50.00	351.24	669	586508	80.92	175	344170	242338
843+62.26	549.43	204	586712	83.54	37	344207	242505
843+87.27	601.63	533	587245	82.7	77	344284	242961
844+02.58	566.43	331	587576	59.47	40	344324	243252
844+50.00	684.13	1098	588674	94.13	135	344459	244215

EARTHWORK TABLE (CONT.)

Station	End Areas (cut) sf	Unadjusted Volumes cy	Cumulative Volumes cy	End Areas (fill) sf	Unadjusted Volumes cy	Cumulative Volumes cy	Mass Ordinate
845+00.00	691.06	1273	589947	105.34	185	344644	245303
845+50.00	677.44	1267	591214	95.16	186	344830	246384
845+65.83	665.04	394	591608	91.98	55	344885	246723
845+95.00	656.44	714	592322	58.31	81	344966	247356
846+00.00	671.79	123	592445	47.16	10	344976	247469
846+24.00	480.27	512	592957	368.14	185	345161	247796

US 281 SUMMARY TOTALS			
ITEM NO.	DESCRIPTION	UNIT	TOTALS
110	EXCAVATION (RDWY)	CY	592597
132	EMBANK (ORD COMP) (TY B)(CL3)	CY	270569

THE SEAL APPEARING ON THIS DOCUMENT WAS AUTHORIZED BY DEEPAK MANGLORKAR, P.E. 89613 ON 7/2/2003

STATE OF TEXAS
DEEPAK MANGLORKAR
89613
REGISTERED PROFESSIONAL ENGINEER

D. Manglorkar

PB Parsons Brinckerhoff
Quade & Douglas Inc.

Texas Department of Transportation

© 2003 by TxDOT

US 281

EARTHWORK SUMMARY

SHEET 4 OF 4			281ERTSUM04.DGN				
DESIGNED: JA	FED. RD DIV. No.	STATE	FEDERAL AID PROJECT No.			HIGHWAY No.	
CHECKED: JP	6	TEXAS				US 281	
DRAWN:	STATE DISTRICT	COUNTY	CONTROL No.	SECTION No.	JOB No.	SHEET No.	
CHECKED: JDH	PHARR	HIDALGO	0255	08	091	37	

$NAME$ $TIME$ 7/3/2003 $FILE$

EARTHWORK TABLE

TRENTON ROAD

Station	End Areas (cut) sf	Unadjusted Volumes cy	Cumulative Volumes cy	End Areas (fill) sf	Unadjusted Volumes cy	Cumulative Volumes cy	Mass Ordinate
10+34.79/1	238.7	0	0	3.1	0	0	0
10+50.00/1	264.78	142	142	6.37	3	3	139
11+00.00/1	176.12	408	550	71.79	72	75	475
11+50.00/1	181.64	331	881	111.58	170	245	636
11+84.00/1	212.38	248	1129	124.72	149	394	735
12+00.00/1	226.33	130	1259	113.96	71	465	794
12+56.65/1	233.57	482	1741	145.33	272	737	1004
13+00.05/1	286.3	418	2159	83.39	184	921	1238
13+50.00/1	389.09	625	2784	57.28	130	1051	1733
14+00.00/1	534.84	855	3639	43.97	94	1145	2494
14+50.00/1	820.72	1255	4894	14.97	55	1200	3694
14+91.54/1	1101.67	1479	6373	16.87	24	1224	5149
15+00.10/1	1173.52	361	6734	19.12	6	1230	5504
15+50.00/1	1580.35	2545	9279	16.82	33	1263	8016
16+00.05/1	2126.13	3435	12714	21.93	36	1299	11415
16+35.82/1	2527.75	3083	15797	14.13	24	1323	14474
16+52.70/1	2490.26	1569	17366	0	4	1327	16039
16+82.15/1	2712.5	2837	20203	0	0	1327	18876
17+00.10/1	2890.31	1862	22065	0	0	1327	20738
17+26.28/1	3106.61	2907	24972	0	0	1327	23645
17+50.00/1	3526.92	2914	27886	0	0	1327	26559
17+69.33/1	3259.91	2429	30315	0	0	1327	28988
17+89.12/1	2815.99	2227	32542	1.87	1	1328	31214
18+03.47/1	2212.22	1336	33878	2.76	1	1329	32549
18+34.80/1	1131.62	1940	35818	2.14	3	1332	34486
18+44.65/1	931.38	376	36194	0.09	0	1332	34862
18+53.02/1	758.1	262	36456	0.75	0	1332	35124
18+76.28/1	571.14	573	37029	6.64	3	1335	35694
18+96.84/1	487.49	403	37432	24.66	12	1347	36085
19+00.05/1	506.41	59	37491	28.05	3	1350	36141
19+14.00/1	521.34	266	37757	41.19	18	1368	36389
19+20.97/1	597.86	144	37901	0	5	1373	36528
19+57.16/1	831.36	958	38859	2.95	2	1375	37484
19+65.60/1	839.03	261	39120	3.62	1	1376	37744
19+70.52/1	846.68	154	39274	4.43	1	1377	37897
19+96.20/1	912.83	837	40111	9.5	7	1384	38727
20+00.00/1	930.76	130	40241	9.14	1	1385	38856
20+24.98/1	1129.38	953	41194	13.75	11	1396	39798
20+27.55/1	704.64	87	41281	23.94	2	1398	39883
20+43.50/1	720.84	421	41702	0	7	1405	40297
20+78.50/1	745.59	950	42652	0	0	1405	41247
21+00.00/1	896.58	654	43306	18.87	8	1413	41893
21+25.71/1	800.28	808	44114	43.17	30	1443	42671
21+50.00/1	772.71	708	44822	24.42	30	1473	43349
21+56.61/1	757.78	187	45009	18.07	5	1478	43531
22+00.05/1	482.93	998	46007	6.79	20	1498	44509
22+08.00/1	430.49	134	46141	46.13	8	1506	44635
22+25.43/1	326.58	244	46385	92.14	45	1551	44834
22+38.34/1	333.02	158	46543	85.98	43	1594	44949
22+47.68/1	322.43	113	46656	0	15	1609	45047
22+69.28/1	1087.79	564	47220	50.95	20	1629	45591
23+00.10/1	2552.68	2078	49298	0	29	1658	47640
23+15.96/1	3005.33	1632	50930	56.76	17	1675	49255
23+34.20/1	2887.85	1991	52921	53.53	37	1712	51209
23+57.96/1	2911.36	2552	55473	28.54	36	1748	53725
24+00.00/1	2715.37	4381	59854	0	22	1770	58084
24+14.54/1	2685.05	1454	61308	0.44	0	1770	59538
24+50.00/1	2416.27	3350	64658	0	0	1770	62888
25+00.05/1	1985.88	4080	68738	3.38	3	1773	66965
25+36.41/1	1630.63	2435	71173	8.22	8	1781	69392
25+72.07/1	1368.43	1980	73153	7.38	10	1791	71362
26+00.00/1	1136.67	1296	74449	0	4	1795	72654
26+50.00/1	835.16	1826	76275	0	0	1795	74480
27+00.00/1	566.3	1298	77573	0	0	1795	75778
27+50.00/1	355.86	854	78427	4.17	4	1799	76628
28+00.00/1	230.01	542	78969	59.51	59	1858	77111
28+50.64/1	158.02	364	79333	19.28	74	1932	77401
29+00.00/1	110.3	245	79578	90.09	100	2032	77546
29+50.00/1	99.63	194	79772	6.41	89	2121	77651
29+99.82/1	93.42	178	79950	12.02	17	2138	77812

OWASSA ROAD

12+50.00	96.68	0	0	0	0	0	0
13+00.00	94.49	177	177	0	0	0	177
13+50.00	85.52	167	344	0	0	0	344
14+00.00	75.56	149	493	0	0	0	493
14+50.00	84.59	148	641	21.17	20	20	621
15+50.00	1814.87	3518	4159	0	39	59	4100
15+63.12	2566.49	1065	5224	0	0	59	5165
15+85.30	3459.31	2475	7699	0	0	59	7640
16+00.00	3831.65	1985	9684	0	0	59	9625
16+50.00	3642.85	6921	16605	0	0	59	16546
17+00.00	3712.29	6810	23415	0	0	59	23356
17+50.00	933.56	4302	27717	0	0	59	27658
18+00.00	1193.5	1970	29687	0	0	59	29628
18+43.80	342.51	1246	30933	45.43	37	96	30837
18+50.00	272.21	71	31004	43.65	10	106	30898
19+00.00	413.5	635	31639	30.46	69	175	31464
20+00.00	478.48	1652	33291	0	56	231	33060
20+50.00	462.46	871	34162	0	0	231	33931
21+00.00	187.3	602	34764	0	0	231	34533
21+50.00	97.21	263	35027	0	0	231	34796
22+00.00	90.23	174	35201	0	0	231	34970
22+50.00	89.3	166	35367	0	0	231	35136
23+00.00	90.07	166	35533	0	0	231	35302
23+50.00	90.19	167	35700	0	0	231	35469
23+56.45	90.47	22	35722	0	0	231	35491

EARTHWORK TABLE (CONT.)

NB BUS 281

Station	End Areas (cut) sf	Unadjusted Volumes cy	Cumulative Volumes cy	End Areas (fill) sf	Unadjusted Volumes cy	Cumulative Volumes cy	Mass Ordinate
10+00.00/1	265.37	0	0	0	0	0	0
10+50.00/1	310.72	533	533	0	0	0	533
11+00.00/1	288.33	555	1088	0.22	0	0	1088
11+50.00/1	225.1	475	1563	1.07	1	1	1562
12+00.00/1	188.43	383	1946	1.44	2	3	1943
12+50.00/1	168.71	331	2277	25.01	24	27	2250
13+00.00/1	178.71	322	2599	73.03	91	118	2481
13+50.00/1	177.16	330	2929	130.86	189	307	2622
14+00.00/1	198.88	348	3277	197.83	304	611	2666
14+50.00/1	211.84	380	3657	286.33	448	1059	2598
15+00.00/1	2118.84	408	4065	347.91	587	1646	2419
15+50.00/1	223.23	418	4483	496.74	782	2428	2055
16+00.00/1	235.26	425	4908	480.48	905	3333	1575
16+11.37/1	251.31	102	5010	496.65	206	3539	1471
16+16.62/1	259.48	50	5060	504.1	97	3636	1424
31+14.35/1	4.52	0	0	635.93	54	0	0
31+50.00/1	4.52	8	8	598.39	815	815	-807
32+00.00/1	4.52	8	16	517.32	1033	1848	-1832
32+50.00/1	4.54	8	24	451.04	897	2745	-2721
33+00.00/1	4.56	8	32	384.38	774	3519	-3487
33+50.00/1	4.53	8	40	310.98	644	4163	-4123
34+00.00/1	4.53	8	48	238.95	509	4672	-4624
34+50.00/1	4.53	8	56	199.07	406	5078	-5022
35+00.00/1	4.53	8	64	156.37	329	5407	-5343
35+50.00/1	4.53	8	72	105.83	243	5650	-5578
36+00.00/1	4.54	8	80	80.4	172	5822	-5742
36+50.00/1	147.66	70	150	35.96	54	5876	-5726

NOLANA LOOP

12+42.63/1	283.66	0	0	0	0	0	0
12+48.14/1	270.41	57	57	0	0	0	57
12+84.76/1	249.12	352	409	2.51	2	2	407
13+00.10/1	253.39	143	552	0.48	1	3	549
13+20.72/1	251.98	193	745	6.51	3	6	739
13+46.06/1	252.4	237	982	5.45	6	12	970
13+63.52/1	257.48	165	1147	1.99	2	14	1133
14+00.10/1	260.79	351	1498	2.9	3	17	1481
14+06.57/1	260.85	62	1560	2.56	1	18	1542
14+36.97/1	246.93	286	1846	4.16	4	22	1824
14+50.00/1	252.55	121	1967	2.84	2	24	1943
15+00.10/1	251.87	468	2435	0.97	4	28	2407
15+42.95/1	307.19	444	2879	32.6	27	55	2824
15+50.00/1	302.92	80	2959	31.24	8	63	2896
15+56.97/1	301.17	78	3037	0	4	67	2970
16+08.96/1	390.22	666	3703	0	0	67	3636
16+27.50/1	523.7	314	4017	12.51	4	71	3946
16+39.54/1	478.17	223	4240	5.05	4	75	4165
16+50.00/1	458.65	181	4421	3.27	2	77	4344
16+58.96/1	451.56	151	4572	4.38	1	78	4494
16+68.97/1	447.47	167	4739	4.03	2	80	4659
16+81.36/1	442.33	204	4943	5.51	2	82	4861
17+00.10/1	442.56	307	5250	11.5	6	88	5162
17+50.00/1	441.34	817	6067	1.25	12	100	5967
17+58.91/1	437.57	145	6212	4.31	1	101	6111
18+00.10/1	422.02	656	6868	4.12	6	107	6761
18+36.47/1	413.45	563	7431	10.43	10	117	7314
18+48.45/1	414.65	184	7615	13.1	5	122	7493
18+58.46/1	416.47	154	7769	10.09	4	126	7643
18+77.51/1	464.81	311	8080	4.17	5	131	7949
18+90.08/1	489.79	222	8302	6.39	2	133	8169
19+00.10/1	432.08	171	8473	1.29	1	134	8339
19+08.46/1	360.84	123	8596	0.97	0	134	8462
19+60.47/1	359.12	693	9289	0	1	135	9154
19+72.95/1	342.79	162	9451	72.67	17	152	9299
20+00.10/1	258.03	302	9753	41.96	58	210	9543
20+20.35/1	256.43	193	9946	1.53	16	226	9720
20+50.00/1	258.85	283	10229	0	1	227	10002
20+75.33/1	256	242	10471	0.34	0	227	10244
20+80.48/1	251.73	48	10519	1.31	0	227	10292
21+00.10/1	257.6	185	10704	0.01	0	227	10477
21+10.43/1	251.4	97	10801	0.32	0	227	10574
21+50.00/1	221.13	346	11147	6.58	5	232	10915
21+76.58/1	219.53	217	11364	8.54	7	239	11125
21+99.90/1	206.47	184	11548	11.91	9	248	11300
22+10.37/1	201.15	79	11627	15.75	5	253	11374

SIOUX ROAD

11+41.13/1	155.15	0	0	0.05	0	0	0
11+91.19/1	191.11	321	321	0.64	1	1	320
12+00.00/1	198.9	64	385	0.48	0	1	384
12+50.00/1	240.59	407	792	0	0	1	791
13+00.00/1	299.41	500	1292	0	0	1	1291
13+29.05/1	336.03	342	1634	0	0	1	1633
13+31.43/1	339.1	30	1664	0	0	1	1663
13+50.00/1	348.93	237	1901	0	0	1	1900
14+00.00/1	367.43	663	2564	0	0	1	2563
14+42.94/1	382.12	596	3160	0	0	1	3159
14+71.43/1	382.56	403	3563	0	0	1	3562
15+00.10/1	391.66	411	3974	0	0	1	3973
15+31.54/1	394.9	458	4432	0	0	1	4431
15+50.00/1	422.71	280	4712	0	0	1	4711
15+75.00/1	492.85	424	5136	0	0	1	5135
15+91.33/1	659.81	349	5485	0	0	1	5484
16+31.44/1	293.96	708	6193	0	0	1	6192
16+58.48/1	580.78	438	6631	7.57	4	5	6626
16+81.43/1	516.96	467	7098	5.69	6	11	7087

THE SEAL APPEARING ON THIS DOCUMENT WAS AUTHORIZED BY DEEPAK MANGLORKAR, P.E. 89613 ON 7/3/2003

STATE OF TEXAS
DEEPAK MANGLORKAR
89613
PROFESSIONAL ENGINEER
D. Manglorkar

PB Parsons Brinckerhoff Quade & Douglas Inc.

Texas Department of Transportation

© 2003 by TxDOT

US 281

EARTHWORK SUMMARY

SHEET 1 OF 2			281ERTSUM01.DGN				
DESIGNED: JA	FED. RD DIV. No.	STATE	FEDERAL AID PROJECT No.			HIGHWAY No.	
CHECKED: JP	6	TEXAS				US 281	
DRAWN: -	STATE DISTRICT	COUNTY	CONTROL No.	SECTION No.	JOB No.	SHEET No.	
CHECKED: JDH	PHARR	HIDALGO	0255	08	091	38	

EARTHWORK TABLE (CONT.)

SIOUX ROAD (CONT.)

Station	End Areas (cut) sf	Unadjusted Volumes cy	Cumulative Volumes cy	End Areas (fill) sf	Unadjusted Volumes cy	Cumulative Volumes cy	Mass Ordinate
17+00.10/1	498.31	351	7449	11.45	6	17	7432
17+23.04/1	492.37	421	7870	18.52	13	30	7840
17+37.26/1	487.18	258	8128	18.76	10	40	8088
17+50.00/1	483.16	229	8357	20.46	9	49	8308
18+00.00/1	475.13	887	9244	23.78	41	90	9154
18+50.00/1	509.41	912	10156	16.6	37	127	10029
18+64.04/1	526.02	269	10425	6.7	6	133	10292
18+86.20/1	573.83	451	10876	3.58	4	137	10739
19+04.43/1	517.26	368	11244	0.81	1	138	11106
19+29.23/1	492.28	464	11708	29.79	14	152	11556
19+54.33/1	249.58	345	12053	0	14	166	11887
19+94.43/1	429.59	504	12557	0	0	166	12391
20+00.10/1	525.8	100	12657	0	0	166	12491
20+08.69/1	556.93	172	12829	0	0	166	12663
20+25.00/1	443.07	302	13131	0	0	166	12965
20+39.68/1	385.3	225	13356	0	0	166	13190
20+54.32/1	371.59	205	13561	0	0	166	13395
20+73.00/1	374.35	258	13819	0	0	166	13653
20+78.30/1	371.84	73	13892	0	0	166	13726
21+00.10/1	362.39	296	14188	0	0	166	14022
21+14.44/1	360.54	192	14380	0	0	166	14214
21+28.00/1	368.45	183	14563	0	0	166	14397
21+44.37/1	380.11	227	14790	0	0	166	14624
22+00.00/1	396.9	800	15590	0	0	166	15424
22+09.07/1	395.88	133	15723	0	0	166	15557
22+54.42/1	393.84	663	16386	0	0	166	16220
22+98.12/1	334.35	589	16975	0	0	166	16809
23+00.00/1	329.31	23	16998	0	0	166	16832
23+29.76/1	279.89	336	17334	0	0	166	17168
23+50.00/1	253.43	200	17534	0	0	166	17368
24+00.10/1	200.06	421	17955	0	0	166	17789
24+32.51/1	151.49	211	18166	0.87	1	167	17999
24+74.31/1	151.01	234	18400	0	1	168	18232

TEXAS 495

12+81.98/1	248.48	0	0	0.43	0	0	0
13+00.10/1	258.27	170	170	0.15	0	0	170
13+47.62/1	285.82	479	649	0	0	0	649
13+54.84/1	288.54	77	726	0	0	0	726
14+00.10/1	310.44	502	1228	0	0	0	1228
14+13.71/1	315.21	158	1386	12.08	3	3	1383
14+35.00/1	355.38	264	1650	6.95	8	11	1639
14+50.00/1	416.97	215	1865	5.86	4	15	1850
14+60.00/1	419.06	155	2020	34.87	8	23	1997
14+73.23/1	911.33	326	2346	0	9	32	2314
15+24.63/1	279.14	1133	3479	0	0	32	3447
15+50.00/1	640.15	432	3911	0.42	0	32	3879
15+74.53/1	549.05	540	4451	0	0	32	4419
15+89.13/1	532.02	292	4743	1.02	0	32	4711
15+92.08/1	530.45	58	4801	0.98	0	32	4769
16+00.10/1	525.86	157	4958	0.88	0	32	4926
16+50.00/1	498.8	947	5905	0.31	1	33	5872
17+00.10/1	520.73	946	6851	0.76	1	34	6817
17+37.42/1	559.67	747	7598	0.46	1	35	7563
17+40.04/1	563.22	54	7652	0.44	0	35	7617
17+50.00/1	576.87	210	7862	0.45	0	35	7827
17+55.08/1	584.09	109	7971	0.5	0	35	7936
17+99.90/1	249.22	692	8663	0.38	1	36	8627
18+04.98/1	294.22	51	8714	0	0	36	8678
18+56.15/1	785.89	1024	9738	0	0	36	9702
18+69.90/1	460.99	317	10055	5.19	1	37	10018
18+84.90/1	382.11	234	10289	7.03	3	40	10249
18+99.90/1	335.92	199	10488	1.04	2	42	10446
19+12.53/1	314.74	152	10640	1.67	1	43	10597
19+23.52/1	315.95	128	10768	0.96	1	44	10724
19+40.70/1	304.7	197	10965	0.14	0	44	10921

US 281 SUMMARY TOTALS			
ITEM NO.	DESCRIPTION	UNIT	TOTALS
110	EXCAVATION (RDWY)	CY	163190
132	EMBANK (ORD COMP) (TY B)(CL 3)	CY	12401

EARTHWORK TABLE (CONT.)

Station	End Areas (cut) sf	Unadjusted Volumes cy	Cumulative Volumes cy	End Areas (fill) sf	Unadjusted Volumes cy	Cumulative Volumes cy	Mass Ordinate

THE SEAL APPEARING ON THIS DOCUMENT WAS AUTHORIZED BY DEEPAK MANGLORKAR, P.E. 89613 ON 7/3/2003 .

STATE OF TEXAS
DEEPAK MANGLORKAR
89613
REGISTERED
PROFESSIONAL ENGINEER

Parsons Brinckerhoff Quade & Douglas Inc.

Texas Department of Transportation

© 2003 by TxDOT

US 281

EARTHWORK SUMMARY

SHEET 2 OF 2			281ERTSUM02.DGN				
DESIGNED: JA	FED. RD DIV. No.	STATE	FEDERAL AID PROJECT No.		HIGHWAY No.		
CHECKED: JP	6	TEXAS			US 281		
DRAWN:	STATE DISTRICT	COUNTY	CONTROL No.	SECTION No.	JOB No.	SHEET No.	
CHECKED: JDH	PHARR	HIDALGO	0255	08	091	39	

$NAME$ $TIME$ 7/3/2003 $FILES

ESTIMATE SUMMARY

PROJECT MG 2003(689)

CONTROL 0255-08-091

EST.	FINAL	EST.	FINAL	EST.	FINAL	EST.	FINAL	ROADWAY URBAN + BRIDGES EST.	ROADWAY URBAN + BRIDGES FINAL	ALT.	ITEM-CODE ITEM NO	ITEM-CODE DESC CODE	ITEM-CODE SP NO	DESCRIPTION	UNIT	TOTAL EST.	TOTAL FINAL
								226.200			100	0502		PREP ROW	STA	226.200	
								128.780			100	0510		PREP ROW (CHANNEL)	STA	128.780	
								6652.000			104	0503		REMOV CONC (RIPRAP)	SY	6652.000	
								1211.000			104	0505		REMOV CONC (MED)	SY	1211.000	
								575.000			104	0509		REMOV CONC (SDWLK)	SY	575.000	
								7389.000			104	0513		REMOV CONC (CURB & GUTTER)	LF	7389.000	
								23841.000			104	0514		REMOV CONC (CURB)	LF	23841.000	
								6049.000			104	0553		REMOV CONC (DRAIN)	SY	6049.000	
								755787.000			110	0501		EXCAVATION (RDWY)	CY	755787.000	
								196813.000			110	0502		EXCAVATION (CHAN)	CY	196813.000	
								282970.000			132	0509		EMBANK (DENS CONT) (TY C) (CL 3)	CY	282970.000	
								81.600			164	0524	002	CELL FIB SEED (TEMP) (WARM)	AC	81.600	
								81.600			164	0526	002	CELL FIB SEED (TEMP) (COOL)	AC	81.600	
								81.600			164	0550	002	CELL FIB SEED (PERM) (URBAN) (CLAY)	AC	81.600	
								12590.000			168	0501		VEGETATIVE WATERING	MG	12590.000	
								866.000			204	0503		SPRINKLING (DUST CONTROL)	MG	866.000	
								188972.000		1	247	0599	018	FL BS (COMPL IN PLAC) (TY D GR6 CL 4)	CY	188972.000	
								169232.000			251	0682		REWKING BS MTL (DC) TYB CL5 (VAR DEPTH)	CY	169232.000	
								655264.000			260	0515	001	LIME TREAT SUBGR (DC) (12")	SY	655264.000	
								9783.000			260	0517	001	LIME (TY A (SLRY), TY B OR TY C (SLRY)	TON	9783.000	
								12090.000		1	262	0518		LIME (TY A (SLRY), TY B OR TY C (SLRY)	TON	12090.000	
								33387.000		1	262	0529		LIME TRT FOR BS CRS (NEW/EXT BS) (DC) 8"	SY	33387.000	
								261399.000		1	262	0548		LIME TRT FOR BS CRS (NEW/EXT BS) (DC) 18"	SY	261399.000	
								344859.000		1	262	0597		LIME TRT FOR BS CRS (NEW/EXT BS) (DC) 23"	SY	344859.000	
								120903.000			305	0514		SALV, HAUL & STKPL RECLM ASPH PAV (6.5")	SY	120903.000	
								6872.000			305	0542		SALV, HL & STKPL RCL ASPH PAV (2 3/4")	SY	6872.000	
								18848.000			305	0556		SALV, HAUL & STKPL RCLM ASPH PAV (5.5")	SY	18848.000	
								48762.000			305	0579		SALV, HAUL & STKPL RCL ASPH PAV (6.75")	SY	48762.000	
								97376.000			305	0580		SALV, HAUL & STKPL RCL ASPH PAV (8.75")	SY	97376.000	
								127930.000			310	0501		ASPH MATRL (MC-30)	GAL	127930.000	
								5330.000			316	0513	004	AGGR (TY PB GR4 OR TY L GR3)	CY	5330.000	
								191894.000			316	0622	004	ASPH (AC-10 OR HFRS-2)	GAL	191894.000	
								54025.000			354	0525		PLAN & TEXT ASPH CONC PAV (1 1/2 ")	SY	54025.000	
								12475.000			400	0507	020	CEM STABIL BKFL	CY	12475.000	
								8825.000			400	0508	020	CUT & RESTORING PAV	SY	8825.000	
								470.000			400	0520	020	STRUC EXCAV (SPL)	CY	470.000	
								50755.000			402	0501		TRENCH EXCAV PROTECTION	LF	50755.000	
								2340.000			403	0501		TEMPORARY SPL SHORING	SF	2340.000	
								280.000			409	0501	002	PRESTR CONC PIL (14" SQ)	LF	280.000	
								1064.000			409	0502	002	PRESTR CONC PIL (16" SQ)	LF	1064.000	
								1701.000			416	0504	008	DRILL SHAFT (30 IN)	LF	1701.000	
								3276.000			416	0506	008	DRILL SHAFT (36 IN)	LF	3276.000	
								1000.000			416	0507	008	DRILL SHAFT (42 IN)	LF	1000.000	
								161.000			416	0508	008	DRILL SHAFT (48 IN)	LF	161.000	
								1232.000			416	0509	008	DRILL SHAFT (54 IN)	LF	1232.000	
								1280.000			416	0510	008	DRILL SHAFT (60 IN)	LF	1280.000	
								76.000			416	0521	008	DRILL SHAFT (24 IN)	LF	76.000	
								32.000			416	0547	008	DRILL SHAFT (12 IN)	LF	32.000	
								53.000			420	0509	015	CL C CONC (MISC)	CY	53.000	
								346.700			420	0513	015	CL C CONC (ABUT)	CY	346.700	

ESTIMATE & QUANTITY SHEET

STATE DIST. NO.	COUNTY	PROJECT NO.	SHEET NO.
21	HIDALGO	MG 2003(689)	39A

ESTIMATE SUMMARY

PROJECT MG 2003(689)
CONTROL 0255-08-091
ROADWAY URBAN + BRIDGES

EST.	FINAL	EST.	FINAL	EST.	FINAL	EST.	FINAL	EST.	FINAL	ALT.	ITEM-CODE ITEM NO	ITEM-CODE DESC CODE	ITEM-CODE SP NO	DESCRIPTION	UNIT	TOTAL EST.	TOTAL FINAL
								226.200			100	0502		PREP ROW	STA	226.200	
								128.780			100	0510		PREP ROW (CHANNEL)	STA	128.780	
								6652.000			104	0503		REMOV CONC (RIPRAP)	SY	6652.000	
								1211.000			104	0505		REMOV CONC (MED)	SY	1211.000	
								575.000			104	0509		REMOV CONC (SDWLK)	SY	575.000	
								7389.000			104	0513		REMOV CONC (CURB & GUTTER)	LF	7389.000	
								23841.000			104	0514		REMOV CONC (CURB)	LF	23841.000	
								6049.000			104	0553		REMOV CONC (DRAIN)	SY	6049.000	
								755787.000			110	0501		EXCAVATION (RDWY)	CY	755787.000	
								196813.000			110	0502		EXCAVATION (CHAN)	CY	196813.000	
								282970.000			132	0509		EMBANK (DENS CONT) (TY C) (CL 3)	CY	282970.000	
								81.600			164	0524	002	CELL FIB SEED (TEMP) (WARM)	AC	81.600	
								81.600			164	0526	002	CELL FIB SEED (TEMP) (COOL)	AC	81.600	
								81.600			164	0550	002	CELL FIB SEED (PERM) (URBAN) (CLAY)	AC	81.600	
								12590.000			168	0501		VEGETATIVE WATERING	MG	12590.000	
								866.000			204	0503		SPRINKLING (DUST CONTROL)	MG	866.000	
								188972.000		1	247	0599	018	FL BS (COMPL IN PLAC) (TY D GR6 CL 4)	CY	188972.000	
								169232.000			251	0682		REWKING BS MTL (DC) TYB CL5 (VAR DEPTH)	CY	169232.000	
								655506.000			260	0515	001	LIME TREAT SUBGR (DC) (12")	SY	655506.000	
								9894.000			260	0517	001	LIME (TY A (SLRY), TY B OR TY C (SLRY)	TON	9894.000	
								12095.000		1	262	0518		LIME (TY A (SLRY), TY B OR TY C (SLRY)	TON	12095.000	
								33387.000		1	262	0529		LIME TRT FOR BS CRS (NEW/EXT BS) (DC) 8"	SY	33387.000	
								261399.000		1	262	0548		LIME TRT FOR BS CRS (NEW/EXT BS) (DC) 18"	SY	261399.000	
								345101.000		1	262	0597		LIME TRT FOR BS CRS (NEW/EXT BS) (DC) 23"	SY	345101.000	
								127978.000			310	0501		ASPH MATRL (MC-30)	GAL	127978.000	
								5332.000			316	0513	004	AGGR (TY PB GR4 OR TY L GR3)	CY	5332.000	
								191967.000			316	0622	004	^SPH (AC-10 OR HFRS-2)	GAL	191967.000	
								54025.000			354	0525		PLAN & TEXT ASPH CONC PAV (1 1/2 ")	SY	54025.000	
								12475.000			400	0507	022	CEM STABIL BKFL	CY	12475.000	
								8825.000			400	0508	022	CUT & RESTORING PAV	SY	8825.000	
								1403.000			400	0516	022	STRUCT EXCAV (SPECIAL)	CY	1403.000	
								470.000			400	0520	022	STRUC EXCAV (SPL)	CY	470.000	
								50755.000			402	0501		TRENCH EXCAV PROTECTION	LF	50755.000	
								9245.000			403	0501		TEMPORARY SPL SHORING	SF	9245.000	
								280.000			409	0501	002	PRESTR CONC PIL (14" SQ)	LF	280.000	
								1064.000			409	0502	002	PRESTR CONC PIL (16" SQ)	LF	1064.000	
								1701.000			416	0504	008	DRILL SHAFT (30 IN)	LF	1701.000	
								3276.000			416	0506	008	DRILL SHAFT (36 IN)	LF	3276.000	
								1000.000			416	0507	008	DRILL SHAFT (42 IN)	LF	1000.000	
								161.000			416	0508	008	DRILL SHAFT (48 IN)	LF	161.000	
								1232.000			416	0509	008	DRILL SHAFT (54 IN)	LF	1232.000	
								1280.000			416	0510	008	DRILL SHAFT (60 IN)	LF	1280.000	
								76.000			416	0521	008	DRILL SHAFT (24 IN)	LF	76.000	
								140.000			416	0524	008	DRILL SHAFT (60 IN) (HIGH MAST POLE)	LF	140.000	
								32.000			416	0547	008	DRILL SHAFT (12 IN)	LF	32.000	
								53.000			420	0509	015	CL C CONC (MISC)	CY	53.000	
								346.700			420	0513	015	CL C CONC (ABUT)	CY	346.700	
								2081.400			420	0514	015	CL C CONC (BENT)	CY	2081.400	
								203.100			420	0518	015	CL S CONC (SLAB)	CY	203.100	
								8.000			420	0584	015	CL S CONC (MISC)	CY	8.000	

ESTIMATE & QUANTITY SHEET

REVISED 9-26-03

STATE DIST. NO.	COUNTY	PROJECT NO.	SHEET NO.
21	HIDALGO	MG 2003(689)	39A

ESTIMATE SUMMARY

PROJECT MG 2003(689)

CONTROL 0255-08-091

EST.	FINAL	EST.	FINAL	EST.	FINAL	EST.	FINAL	ROADWAY URBAN + BRIDGES EST.	FINAL	ALT.	ITEM-CODE ITEM NO	DESC CODE	SD NO	DESCRIPTION	UNIT	TOTAL EST.	FINAL
								2081.400			420	0514	015	CL C CONC (BENT)	CY	2081.400	
								203.100			420	0518	015	CL S CONC (SLAB)	CY	203.100	
								8.000			420	0584	015	CL S CONC (MISC)	CY	8.000	
								112791.000			422	0501		REINF CONC SLAB	SF	112791.000	
								41786.000			422	0502		REINF CONC SLAB (EXT STR)	SF	41786.000	
								117932.000			423	0501		RETAINING WALL (MSE)	SF	117932.000	
								19548.570			425	0507	001	PRESTR CONC BEAM (TY IV)	LF	19548.570	
								16929.000			428	0501	002	CONC SURF TREAT	SY	16929.000	
								175.600			430	0506		CL C CONC FOR EXT STR (ABUT)	CY	175.600	
								159.900			430	0507		CL C CONC FOR EXT STR (BENT)	CY	159.900	
								2974.000			432	0501		RIPRAP (CONC) (CL B)	CY	2974.000	
								8.000			434	0505	001	SLIDING ELASTOMERIC BEAR (SE 5)	EA	8.000	
								485840.000			442	0502	018	STRUCT STL-HS	LB	485840.000	
								12020.000			442	0646	018	STR STL (ARMOR JOINT) (SPL)	LB	12020.000	
								20.000			444	0501		BRIDGE PROTECT ASSEM	EA	20.000	
								2.000			444	0505		SIGN & BRACKET	EA	2.000	
								13146.270			450	0526		RAIL (TY SSTR)	LF	13146.270	
								144.000			450	0781		RAIL (TY SSTR) (RETROFIT)	LF	144.000	
								658.340			454	0503		SEALED EXPANSION JOINTS (4 IN)	LF	658.340	
								1588.000			462	0519	003	CONC BOX CULV (7 FT X 5 FT)	LF	1588.000	
								1022.000			462	0521	003	CONC BOX CULV (7 FT X 7 FT)	LF	1022.000	
								69.000			464	0501	003	RC PIPE (CL III) (12 ")	LF	69.000	
								9451.000			464	0559	003	RC PIPE (SEWER) (CL III) (18 IN)	LF	9451.000	
								5980.000			464	0561	003	RC PIPE (SEWER) (CL III) (24 IN)	LF	5980.000	
								7558.000			464	0563	003	RC PIPE (SEWER) (CL III) (30 IN)	LF	7558.000	
								7717.000			464	0565	003	RC PIPE (SEWER) (CL III) (36 IN)	LF	7717.000	
								7033.000			464	0566	003	RC PIPE (SEWER) (CL III) (42 IN)	LF	7033.000	
								7679.000			464	0567	003	RC PIPE (SEWER) (CL III) (48 IN)	LF	7679.000	
								559.000			464	0568	003	RC PIPE (SEWER) (CL III) (54 IN)	LF	559.000	
								1149.000			464	0569	003	RC PIPE (SEWER) (CL III) (60 IN)	LF	1149.000	
								341.000			464	0570	003	RC PIPE (SEWER) (CL III) (66 IN)	LF	341.000	
								584.000			464	0571	003	RC PIPE (SEWER) (CL III) (72 IN)	LF	584.000	
								58.000			465	0501		INLET (COMPL) (TY A)	EA	58.000	
								46.000			465	0503		INLET (COMPL) (TY C)	EA	46.000	
								86.000			465	0506		INLET (COMPL) (TY F)	EA	86.000	
								22.000			465	0510		MANH (COMPL) (TY A)	EA	22.000	
								13.000			465	0526		MANH (COMPL) (TY M)	EA	13.000	
								104.000			465	0540		INLET EXT	EA	104.000	
								62.000			465	0578		INLET (COMPL) (TY CC)	EA	62.000	
								13.000			465	0596		INLET (COMPL) (TY L-1)	EA	13.000	
								1.000			465	0669		INLET (COMPL) (TY A1)	EA	1.000	
								4.000			465	0670		INLET (COMPL) (TY A2)	EA	4.000	
								1.000			465	0674		INLET (COMPL) (TY F) (SPL)	EA	1.000	
								17.000			465	0825		MANH (COMPL) (JCT BOX) (5 FT X 5 FT)	EA	17.000	
								2.000			465	0826		MANH (COMPL) (JCT BOX) (6 FT X 6 FT)	EA	2.000	
								1.000			465	0827		MANH (COMPL) (JCT BOX) (8 FT X 8 FT)	EA	1.000	
								4.000			465	3565		MANH (COMPL) (TY A1)	EA	4.000	
								13.000			467	0580	009	SAFE END TRT (TY II) (18 IN) (RCP) (6: 1)	EA	13.000	
								11.000			471	0518		GRATE & FRAME (DECK DRAIN)	EA	11.000	
								13.000			479	0502		ADJ INLETS	EA	13.000	

ESTIMATE & QUANTITY SHEET

STATE DIST. NO.	COUNTY	PROJECT NO.	SHEET NO.
21	HIDALGO	MG 2003(689)	39B

ESTIMATE SUMMARY

PROJECT MG 2003(689)
CONTROL 0255-08-091
ROADWAY URBAN + BRIDGES

EST.	FINAL	EST.	FINAL	EST.	FINAL	EST.	FINAL	EST.	FINAL	ALT	ITEM NO	DESC CODE	SP NO	DESCRIPTION	UNIT	TOTAL EST.	TOTAL FINAL
								112791.000			422	0501		REINF CONC SLAB	SF	112791.000	
								41786.000			422	0502		REINF CONC SLAB (EXT STR)	SF	41786.000	
								126551.000			423	0501		RETAINING WALL (MSE)	SF	126551.000	
								19548.570			425	0507	001	PRESTR CONC BEAM (TY IV)	LF	19548.570	
								16929.000			428	0501	002	CONC SURF TREAT	SY	16929.000	
								175.600			430	0506		CL C CONC FOR EXT STR (ABUT)	CY	175.600	
								159.900			430	0507		CL C CONC FOR EXT STR (BENT)	CY	159.900	
								2974.000			432	0501		RIPRAP (CONC) (CL B)	CY	2974.000	
								8.000			434	0505	001	SLIDING ELASTOMERIC BEAR (SE 5)	EA	8.000	
								485840.000			442	0502	018	STRUCT STL-HS	LB	485840.000	
								12020.000			442	0646	018	STR STL (ARMOR JOINT) (SPL)	LB	12020.000	
								20.000			444	0501		BRIDGE PROTECT ASSEM	EA	20.000	
								2.000			444	0505		SIGN & BRACKET	EA	2.000	
								13146.270			450	0526		RAIL (TY SSTR)	LF	13146.270	
								144.000			450	0781		RAIL (TY SSTR) (RETROFIT)	LF	144.000	
								658.340			454	0503		SEALED EXPANSION JOINTS (4 IN)	LF	658.340	
								1588.000			462	0519	003	CONC BOX CULV (7 FT X 5 FT)	LF	1588.000	
								1022.000			462	0521	003	CONC BOX CULV (7 FT X 7 FT)	LF	1022.000	
								69.000			464	0501	003	RC PIPE (CL III) (12 ")	LF	69.000	
								9451.000			464	0559	003	RC PIPE (SEWER) (CL III) (18 IN)	LF	9451.000	
								5980.000			464	0561	003	RC PIPE (SEWER) (CL III) (24 IN)	LF	5980.000	
								7558.000			464	0563	003	RC PIPE (SEWER) (CL III) (30 IN)	LF	7558.000	
								7717.000			464	0565	003	RC PIPE (SEWER) (CL III) (36 IN)	LF	7717.000	
								7033.000			464	0566	003	RC PIPE (SEWER) (CL III) (42 IN)	LF	7033.000	
								7679.000			464	0567	003	RC PIPE (SEWER) (CL III) (48 IN)	LF	7679.000	
								559.000			464	0568	003	RC PIPE (SEWER) (CL III) (54 IN)	LF	559.000	
								1149.000			464	0569	003	RC PIPE (SEWER) (CL III) (60 IN)	LF	1149.000	
								341.000		2	464	0570	003	RC PIPE (SEWER) (CL III) (66 IN)	LF	341.000	
								346.000			464	0571	003	RC PIPE (SEWER) (CL III) (72 IN)	LF	346.000	
								580.000			464	0584	003	RC PIPE (SEWER) (CL IV) (72 IN)	LF	580.000	
								58.000			465	0501		INLET (COMPL) (TY A)	EA	58.000	
								46.000			465	0503		INLET (COMPL) (TY C)	EA	46.000	
								86.000			465	0506		INLET (COMPL) (TY F)	EA	86.000	
								22.000			465	0510		MANH (COMPL) (TY A)	EA	22.000	
								13.000			465	0526		MANH (COMPL) (TY M)	EA	13.000	
								104.000			465	0540		INLET EXT	EA	104.000	
								62.000			465	0578		INLET (COMPL) (TY CC)	EA	62.000	
								13.000			465	0596		INLET (COMPL) (TY L-1)	EA	13.000	
								1.000			465	0669		INLET (COMPL) (TY A1)	EA	1.000	
								4.000			465	0670		INLET (COMPL) (TY A2)	EA	4.000	
								1.000			465	0674		INLET (COMPL) (TY F) (SPL)	EA	1.000	
								17.000			465	0825		MANH (COMPL) (JCT BOX) (5 FT X 5 FT)	EA	17.000	
								2.000			465	0826		MANH (COMPL) (JCT BOX) (6 FT X 6 FT)	EA	2.000	
								1.000			465	0827		MANH (COMPL) (JCT BOX) (8 FT X 8 FT)	EA	1.000	
								4.000			465	3565		MANH (COMPL) (TY A1)	EA	4.000	
								13.000			467	0580	009	SAFE END TRT (TY II) (18 IN) (RCP) (6: 1)	EA	13.000	
								11.000			471	0518		GRATE & FRAME (DECK DRAIN)	EA	11.000	
								13.000			479	0502		ADJ INLETS	EA	13.000	
								1337.000			481	0502		PVC PIPE (SDR-35) (6 IN)	LF	1337.000	
								540.000			481	0514		PVC PIPE (SCH 40) (6 IN)	LF	540.000	

ESTIMATE & QUANTITY SHEET REVISED 9-26-03

STATE DIST. NO.	COUNTY	PROJECT NO.	SHEET NO.
21	HIDALGO	MG 2003(689)	39B

ESTIMATE SUMMARY

PROJECT MG 2003(689)

CONTROL 0255-08-091

ROADWAY URBAN + BRIDGES

EST.	FINAL	EST.	FINAL	EST.	FINAL	EST.	FINAL	EST.	FINAL	ALT.	ITEM NO	DESC CODE	SC NO	DESCRIPTION	UNIT	TOTAL EST.	TOTAL FINAL
								1337.000			481	0502		PVC PIPE (SDR-35) (6 IN)	LF	1337.000	
								1.000			496	0501		REMOV OLD STR (LARGE)	EA	1.000	
								104.000			496	0502		REMOV OLD STR (SMALL)	EA	104.000	
								21151.000			496	0504		REMOV OLD STR (PIPE)	LF	21151.000	
								2.000			496	0542		REMOV OLD STR (LARGE) (BRIDGE)	EA	2.000	
								1.000			500	0501		MOBILIZATION	LS	1.000	
								38.000			502	0501	027	BARRICADES, SIGNS AND TRAF HANDLE	MO	38.000	
								40865.000			508	0503		CONSTRUCT DETOURS (CL 3)	SY	40865.000	
								25100.000			512	0501	001	PORT CONC TRAF BAR (FURN & INSTL)	LF	25100.000	
								91633.000			512	0503	001	PORT CONC TRAF BAR (MOVE & RESET)	LF	91633.000	
								25100.000			512	0504	001	PORT CONC TRAF BAR (REMOVE)	LF	25100.000	
								200.000			512	0536	001	PORT CTB (LOW PRF TY 2) (MOVE & RESET)	LF	200.000	
								40768.000			512	0545	001	PORT CONC TRF BAR (LOW PRF TY 1) (REMOV)	LF	40768.000	
								40768.000			512	0546	001	PORT CTB (LOW PRF TY 1) (FURN & INSTL)	LF	40768.000	
								420.000			512	0547	001	PORT CTB (LOW PRF TY 2) (FURN & INSTL)	LF	420.000	
								34023.000			512	0548	001	PORT CTB (LOW PRF TY 1) (MOVE & RESET)	LF	34023.000	
								420.000			512	0549	001	PORT CTB (LOW PRF TY 2) (REMOVE)	LF	420.000	
								18606.000			514	0503		PERM CONC TRAF BARRIER (TY 2)	LF	18606.000	
								1078.900			514	0535		PERM CONC TRF BAR SGL SLP (TY 1) (H=42")	LF	1078.900	
								590.000			514	0539		PERM CONC TRF BAR SGL SLP (TY 3) (H=42")	LF	590.000	
								820.000			514	0540		PERM CONC TRF BAR SGL SLP (TY 4) (H=42")	LF	820.000	
								5937.000			529	0512		CONC CURB (TY A) (MOUNTABLE)	LF	5937.000	
								5779.000			529	0514		CONC CURB AND GUTTER (TY A) (MOUNTABLE)	LF	5779.000	
								15768.000			529	0516		CONC CURB AND GUTTER (TY A) (BARRIER)	LF	15768.000	
								10567.000			529	0534		CONC CURB (TY A) (BARRIER)	LF	10567.000	
								2465.000			529	0546		CONC GUTTER (VALLEY)	LF	2465.000	
								24163.000			529	0552		CONC CURB AND GUTTER (TY B) (MOUNTABLE)	LF	24163.000	
								46044.000			529	0565		CONC CURB (TY B) (MOUNTABLE)	LF	46044.000	
								1173.000			529	0566		CONC GUTTER (VALLEY) (4')	LF	1173.000	
								2491.600			530	0501	012	DRVWYS (CONC) (6 ")	SY	2491.600	
								2853.900			530	0542	012	DRVWYS (ASPH-CONC PAV) (TY PB-1)	SY	2853.900	
								1170.800			530	0544	012	DRVWYS (ASPH-CONC PAV) (TY P-1)	SY	1170.800	
								2774.200			530	0545	012	TURNOUTS (ASPH-CONC PAV) (TY PRB1)	SY	2774.200	
								2180.400			531	0537	018	CONCRETE SIDEWALK (5 FT)	SY	2180.400	
								19.000			540	0505	024	TERM ANCHOR SECT (12 GA)	EA	19.000	
								12463.000			540	0506	024	MTL BEAM GD FEN (12 GA) (TIM POST)	LF	12463.000	
								901.000			540	0507	024	MTL BM GD FEN (BLK OUT) (12GA) TIM POST	LF	901.000	
								29.000			540	0538	024	MTL BM GD FEN TRANS (THRIE BEAM)	EA	29.000	
								11350.000			542	0501		REMOV METAL BEAM GUARD FENCE	LF	11350.000	
								20.000			542	0503		REMOV TERMINAL-ANCHOR SECTION	EA	20.000	
								15.000			560	0501		MAILBOX INSTAL (SINGLE)	EA	15.000	
								1.000			560	0502		MAILBOX INSTAL (DOUBLE)	EA	1.000	
								15.000			560	0503		MAILBOX INSTAL (MULTIPLE)	EA	15.000	
								25.000			610	0544	002	RDWY ILL ASSEM (TY SA 40-10) (.25 KW) S	EA	25.000	
								56.000			610	0596	002	UNDERPASS LIGHTING ASSEMBLY (SPECIAL 1)	EA	56.000	
								4.000			610	0674	002	RDWY ILL ASSEM (TY SP 40S-10) (.25 KW) S	EA	4.000	
								83.000			610	0675	002	RDWY ILL ASM (TY SP 40S-10-10) (.25KW) S	EA	83.000	
								4.000			613	0510	002	HIGH MAST ILL POLE (150 FT) (100 MPH)	EA	4.000	
								4.000			614	0505	001	HI MST ILL ASM (12-400 WATT) (ASYM) (TYB)	EA	4.000	
								1375.000			618	0502		CONDUIT (RM) (1 ")	LF	1375.000	

ESTIMATE & QUANTITY SHEET

STATE DIST. NO.	COUNTY	PROJECT NO.	SHEET NO.
21	HIDALGO	MG 2003(689)	39c

ESTIMATE SUMMARY

PROJECT MG 2003(689)

CONTROL 0255-08-091

ROADWAY URBAN + BRIDGES

EST.	FINAL	EST.	FINAL	EST.	FINAL	EST.	FINAL	EST.	FINAL	ALT.	ITEM-CODE ITEM NO	ITEM-CODE DESC CODE	ITEM-CODE SP NO	DESCRIPTION	UNIT	TOTAL EST.	TOTAL FINAL
								1.000			496	0501		REMOV OLD STR (LARGE)	EA	1.000	
								104.000			496	0502		REMOV OLD STR (SMALL)	EA	104.000	
								21151.000			496	0504		REMOV OLD STR (PIPE)	LF	21151.000	
								2.000			496	0542		REMOV OLD STR (LARGE) (BRIDGE)	EA	2.000	
								1.000			500	0501		MOBILIZATION	LS	1.000	
								38.000			502	0501	027	BARRICADES, SIGNS AND TRAF HANDLE	MO	38.000	
								40865.000			508	0503		CONSTRUCT DETOURS (CL 3)	SY	40865.000	
								25100.000			512	0501	001	PORT CONC TRAF BAR (FURN & INSTL)	LF	25100.000	
								91633.000			512	0503	001	PORT CONC TRAF BAR (MOVE & RESET)	LF	91633.000	
								25100.000			512	0504	001	PORT CONC TRAF BAR (REMOVE)	LF	25100.000	
								200.000			512	0536	001	PORT CTB (LOW PRF TY 2) (MOVE & RESET)	LF	200.000	
								40768.000			512	0545	001	PORT CONC TRF BAR (LOW PRF TY 1) (REMOV)	LF	40768.000	
								40768.000			512	0546	001	PORT CTB (LOW PRF TY 1) (FURN & INSTL)	LF	40768.000	
								420.000			512	0547	001	PORT CTB (LOW PRF TY 2) (FURN & INSTL)	LF	420.000	
								34023.000			512	0548	001	PORT CTB (LOW PRF TY 1) (MOVE & RESET)	LF	34023.000	
								420.000			512	0549	001	PORT CTB (LOW PRF TY 2) (REMOVE)	LF	420.000	
								18606.000			514	0503		PERM CONC TRAF BARRIER (TY 2)	LF	18606.000	
								1078.900			514	0535		PERM CONC TRF BAR SGL SLP (TY 1) (H=42")	LF	1078.900	
								590.000			514	0539		PERM CONC TRF BAR SGL SLP (TY 3) (H=42")	LF	590.000	
								820.000			514	0540		PERM CONC TRF BAR SGL SLP (TY 4) (H=42")	LF	820.000	
								5937.000			529	0512		CONC CURB (TY A) (MOUNTABLE)	LF	5937.000	
								5779.000			529	0514		CONC CURB AND GUTTER (TY A) (MOUNTABLE)	LF	5779.000	
								15768.000			529	0516		CONC CURB AND GUTTER (TY A) (BARRIER)	LF	15768.000	
								10567.000			529	0534		CONC CURB (TY A) (BARRIER)	LF	10567.000	
								24163.000			529	0552		CONC CURB AND GUTTER (TY B) (MOUNTABLE)	LF	24163.000	
								3638.000			529	0553		CONC GUTTER (TY A) (4 FT)	LF	3638.000	
								46044.000			529	0565		CONC CURB (TY B) (MOUNTABLE)	LF	46044.000	
								9813.000			529	0566		CONC GUTTER (VALLEY) (4')	LF	9813.000	
								5429.000			529	0592		CONC GUTTER (TY B)	LF	5429.000	
								2491.600			530	0501	012	DRVWYS (CONC) (6 ")	SY	2491.600	
								2853.900			530	0542	012	DRVWYS (ASPH-CONC PAV) (TY PB-1)	SY	2853.900	
								1170.800			530	0544	012	DRVWYS (ASPH-CONC PAV) (TY P-1)	SY	1170.800	
								2774.200			530	0545	012	TURNOUTS (ASPH-CONC PAV) (TY PRB1)	SY	2774.200	
								2180.400			531	0537	018	CONCRETE SIDEWALK (5 FT)	SY	2180.400	
								19.000			540	0505	024	TERM ANCHOR SECT (12 GA)	EA	19.000	
								12463.000			540	0506	024	MTL BEAM GD FEN (12 GA) (TIM POST)	LF	12463.000	
								901.000			540	0507	024	MTL BM GD FEN (BLK OUT) (12GA) TIM POST	LF	901.000	
								29.000			540	0538	024	MTL BM GD FEN TRANS (THRIE BEAM)	EA	29.000	
								11350.000			542	0501		REMOV METAL BEAM GUARD FENCE	LF	11350.000	
								20.000			542	0503		REMOV TERMINAL-ANCHOR SECTION	EA	20.000	
								15.000			560	0501		MAILBOX INSTAL (SINGLE)	EA	15.000	
								1.000			560	0502		MAILBOX INSTAL (DOUBLE)	EA	1.000	
								15.000			560	0503		MAILBOX INSTAL (MULTIPLE)	EA	15.000	
								13.000			580	0502		PROJECT MAINT (MOWING)	CYC	13.000	
								13.000			580	0504		PROJECT MAINT (LITTER PICKUP)	CYC	13.000	
								13.000			580	0506		PROJECT MAINT (SWEEPING)	CYC	13.000	
								56.000			610	0596	002	UNDERPASS LIGHTING ASSEMBLY (SPECIAL 1)	EA	56.000	
								25.000			610	0652	002	RDWY ILL ASSEM (TY SA 40T-10) (.25 KW) S	EA	25.000	
								4.000			610	0674	002	RDWY ILL ASSEM (TY SP 40S-10) (.25 KW) S	EA	4.000	
								83.000			610	0675	002	RDWY ILL ASM (TY SP 40S-10-10) (.25KW) S	EA	83.000	

ESTIMATE & QUANTITY SHEET

STATE DIST. NO.	COUNTY	PROJECT NO.	SHEET NO.
21	HIDALGO	MG 2003(689)	39C

ESTIMATE SUMMARY

PROJECT MG 2003(689)
CONTROL 0255-08-091
ROADWAY URBAN + BRIDGES

EST.	FINAL	EST.	FINAL	EST.	FINAL	EST.	FINAL	EST.	FINAL	ALT	ITEM NO	DESC CODE	SP NO	DESCRIPTION	UNIT	TOTAL EST.	TOTAL FINAL
								42747.000			618	0511		CONDUIT (PVC) (SCHD 40) (2 ")	LF	42747.000	
								3000.000			618	0514		CONDUIT (PVC) (SCHD 40) (4 ")	LF	3000.000	
								540.000			618	0515		CONDUIT (PVC) (SCHD 40) (6 ")	LF	540.000	
								1432.000			618	0526		CONDUIT (RM) (2 ") (PUSH-BORE)	LF	1432.000	
								3528.000			618	0539		CONDUIT (PVC) (SCHD 80) (2 ") (BORE)	LF	3528.000	
								1140.000			618	0545		CONDUIT (PVC) (SCHD 40) (1 ")	LF	1140.000	
								31111.000			620	0503		ELEC CONDUCTOR (NO. 8) BARE	LF	31111.000	
								5340.000			620	0504		ELEC CONDUCTOR (NO. 6) BARE	LF	5340.000	
								2750.000			620	0508		ELEC CONDUCTOR (NO. 10) INSULATED	LF	2750.000	
								72232.000			620	0509		ELEC CONDUCTOR (NO. 8) INSULATED	LF	72232.000	
								11400.000			620	0510		ELEC CONDUCTOR (NO. 6) INSULATED	LF	11400.000	
								392.000			620	0511		ELEC CONDUCTOR (NO. 4) INSULATED	LF	392.000	
								165.000			624	0501		GROUND BOX TY A (122311) W/APRON	EA	165.000	
								14.000			624	0503		GROUND BOX TY C (162911) W/APRON	EA	14.000	
								300.000			625	0502	004	ZINC-COAT STL WIRE STRAND (3/8 IN)	LF	300.000	
								800.000			625	0504	004	ZINC-COAT STL WIRE STRAND (5/16 IN)	LF	800.000	
								2.000			628	0511		EL SRV TYA (240/480) 060 (NS) GS (T) TP (O)	EA	2.000	
								2.000			628	0512		ELEC SERV TYA (240/480) 100 (NS) GS (T) TP (O)	EA	2.000	
								5.000			628	0545		EL SV TYD (120/240) 070 (NS) GS (T) TP (O)	EA	5.000	
								1.000			628	0651		ELEC SERV TYA (240/480) 200 (NS) GS (T) TP (O)	EA	1.000	
								576.000			634	0501		PLYWOOD SIGNS (TY A)	SF	576.000	
								667.000			636	0501		ALUM SIGNS (TY A)	SF	667.000	
								1384.000			637	0501		ALUM SIGNS (TY G)	SF	1384.000	
								4096.000			642	0501	001	ALUM SIGNS (TY O)	SF	4096.000	
								11.000			644	0608		SM RD SGN ASSM TY TWT (1) UA (P)	EA	11.000	
								13.000			644	0611		SM RD SGN ASSM TY TWT (1) WA (P)	EA	13.000	
								165.000			644	0614		SM RD SGN ASSM TY 10BWG (1) SA (P)	EA	165.000	
								66.000			644	0615		SM RD SGN ASSM TY 10BWG (1) SA (P-BM)	EA	66.000	
								41.000			644	0618		SM RD SGN ASSM TY 10BWG (1) SA (T)	EA	41.000	
								1.000			644	0619		SM RD SGN ASSM TY 10BWG (1) SA (U)	EA	1.000	
								18.000			644	0630		SM RD SGN ASSM TY S80 (1) SA (P)	EA	18.000	
								9.000			644	0631		SM RD SGN ASSM TY S80 (1) SA (P-BM)	EA	9.000	
								1.000			644	0634		SM RD SGN ASSM TY S80 (1) SA (T)	EA	1.000	
								11.000			644	0635		SM RD SGN ASSM TY S80 (1) SA (U)	EA	11.000	
								6.000			644	0636		SM RD SGN ASSM TY S80 (1) SA (U-1EXT)	EA	6.000	
								1.000			644	0652		SM RD SGN ASSM TY S80 (2) SA (T-2EXT)	EA	1.000	
								5375.930			647	0501		LG RDSD SGN SUPT (STRUCT STL)	LB	5375.930	
								29.000			649	0501		REMOV LARGE RDSD SGN ASSMS	EA	29.000	
								274.000			649	0502		REMOV SMALL RDSD SGN ASSMS	EA	274.000	
								2.000			649	0504		RELOC SMALL RDSD SGN ASSMS	EA	2.000	
								1.000			650	0558	002	OVHD SGN SUPT (70 FT BRDG) (21.0 HT)	EA	1.000	
								2.000			650	0560	002	OVHD SGN SUPT (80 FT BRDG) (21.0 HT)	EA	2.000	
								3.000			650	0562	002	OVHD SGN SUPT (90 FT BRDG) (21.0 HT)	EA	3.000	
								4.000			650	0593	002	OVHD SGN SUPT (30 FT CANT) (17.5 HT)	EA	4.000	
								4.000			650	0602	002	OVHD SGN SUPT (30 FT CANT) (21.0 HT)	EA	4.000	
								2.000			650	0603	002	OVHD SGN SUPT (35 FT CANT) (21.0 HT)	EA	2.000	
								3.000			651	0501		REMOV OVHD SIGN SUPPORTS	EA	3.000	
								475.000			654	0502		SGN WLKWY W/HNDRL (36 IN)	LF	475.000	
								48.000			656	0502		FND LG RDSD SGN SUPT (24 IN DRIL SHFT)	LF	48.000	
								201.000			656	0510		FND FOR TRAF SIG (24 IN DRIL SHFT)	LF	201.000	

ESTIMATE & QUANTITY SHEET

STATE DIST. NO.	COUNTY	PROJECT NO.	SHEET NO.
21	HIDALGO	MG 2003(689)	39D

ESTIMATE SUMMARY

PROJECT MG 2003 (689)

CONTROL 0255-08-091

ROADWAY URBAN + BRIDGES

EST.	FINAL	EST.	FINAL	EST.	FINAL	EST.	FINAL	EST.	FINAL	ALT.	ITEM-CODE ITEM NO	ITEM-CODE DESC CODE	ITEM-CODE SP NO	DESCRIPTION	UNIT	TOTAL EST.	TOTAL FINAL
								4.000			613	0510	002	HIGH MAST ILL POLE (150 FT) (100 MPH)	EA	4.000	
								4.000			614	0505	001	HI MST ILL ASM (12-400 WATT) (ASYM) (TYB)	EA	4.000	
								1375.000			618	0502		CONDUIT (RM) (1 ")	LF	1375.000	
								42747.000			618	0511		CONDUIT (PVC) (SCHD 40) (2 ")	LF	42747.000	
								3000.000			618	0514		CONDUIT (PVC) (SCHD 40) (4 ")	LF	3000.000	
								1432.000			618	0526		CONDUIT (RM) (2 ") (PUSH-BORE)	LF	1432.000	
								3528.000			618	0539		CONDUIT (PVC) (SCHD 80) (2 ") (BORE)	LF	3528.000	
								1140.000			618	0545		CONDUIT (PVC) (SCHD 40) (1 ")	LF	1140.000	
								31111.000			620	0503		ELEC CONDUCTOR (NO. 8) BARE	LF	31111.000	
								5340.000			620	0504		ELEC CONDUCTOR (NO. 6) BARE	LF	5340.000	
								2750.000			620	0508		ELEC CONDUCTOR (NO. 10) INSULATED	LF	2750.000	
								72232.000			620	0509		ELEC CONDUCTOR (NO. 8) INSULATED	LF	72232.000	
								11400.000			620	0510		ELEC CONDUCTOR (NO. 6) INSULATED	LF	11400.000	
								392.000			620	0511		ELEC CONDUCTOR (NO. 4) INSULATED	LF	392.000	
								165.000			624	0501		GROUND BOX TY A (122311) W/APRON	EA	165.000	
								14.000			624	0503		GROUND BOX TY C (162911) W/APRON	EA	14.000	
								300.000			625	0502	004	ZINC-COAT STL WIRE STRAND (3/8 IN)	LF	300.000	
								800.000			625	0504	004	ZINC-COAT STL WIRE STRAND (5/16 IN)	LF	800.000	
								2.000			628	0511		EL SRV TYA (240/480) 060 (NS) GS (T) TP (O)	EA	2.000	
								2.000			628	0512		ELEC SERV TYA (240/480) 100 (NS) GS (T) TP (O)	EA	2.000	
								5.000			628	0545		EL SV TYD (120/240) 070 (NS) GS (T) TP (O)	EA	5.000	
								1.000			628	0651		ELEC SERV TYA (240/480) 200 (NS) GS (T) TP (O)	EA	1.000	
								576.000			634	0501		PLYWOOD SIGNS (TY A)	SF	576.000	
								667.000			636	0501		ALUM SIGNS (TY A)	SF	667.000	
								1384.000			637	0501		ALUM SIGNS (TY G)	SF	1384.000	
								4096.000			642	0501	001	ALUM SIGNS (TY O)	SF	4096.000	
								11.000			644	0608		SM RD SGN ASSM TY TWT (1) UA (P)	EA	11.000	
								13.000			644	0611		SM RD SGN ASSM TY TWT (1) WA (P)	EA	13.000	
								165.000			644	0614		SM RD SGN ASSM TY 10BWG (1) SA (P)	EA	165.000	
								66.000			644	0615		SM RD SGN ASSM TY 10BWG (1) SA (P-BM)	EA	66.000	
								41.000			644	0618		SM RD SGN ASSM TY 10BWG (1) SA (T)	EA	41.000	
								1.000			644	0619		SM RD SGN ASSM TY 10BWG (1) SA (U)	EA	1.000	
								18.000			644	0630		SM RD SGN ASSM TY S80 (1) SA (P)	EA	18.000	
								9.000			644	0631		SM RD SGN ASSM TY S80 (1) SA (P-BM)	EA	9.000	
								1.000			644	0634		SM RD SGN ASSM TY S80 (1) SA (T)	EA	1.000	
								11.000			644	0635		SM RD SGN ASSM TY S80 (1) SA (U)	EA	11.000	
								6.000			644	0636		SM RD SGN ASSM TY S80 (1) SA (U-1EXT)	EA	6.000	
								1.000			644	0652		SM RD SGN ASSM TY S80 (2) SA (T-2EXT)	EA	1.000	
								5375.930			647	0501		LG RDSD SGN SUPT (STRUCT STL)	LB	5375.930	
								29.000			649	0501		REMOV LARGE RDSD SGN ASSMS	EA	29.000	
								274.000			649	0502		REMOV SMALL RDSD SGN ASSMS	EA	274.000	
								10.000			649	0503		RELOC LARGE RDSD SGN ASSMS	EA	10.000	
								2.000			649	0504		RELOC SMALL RDSD SGN ASSMS	EA	2.000	
								1.000			650	0558	002	OVHD SGN SUPT (70 FT BRDG) (21.0 HT)	EA	1.000	
								2.000			650	0560	002	OVHD SGN SUPT (80 FT BRDG) (21.0 HT)	EA	2.000	
								3.000			650	0562	002	OVHD SGN SUPT (90 FT BRDG) (21.0 HT)	EA	3.000	
								4.000			650	0593	002	OVHD SGN SUPT (30 FT CANT) (17.5 HT)	EA	4.000	
								4.000			650	0602	002	OVHD SGN SUPT (30 FT CANT) (21.0 HT)	EA	4.000	
								2.000			650	0603	002	OVHD SGN SUPT (35 FT CANT) (21.0 HT)	EA	2.000	
								3.000			651	0501		REMOV OVHD SIGN SUPPORTS	EA	3.000	

ESTIMATE & QUANTITY SHEET REVISED 9-26-03

STATE DIST. NO.	COUNTY	PROJECT NO.	SHEET NO.
21	HIDALGO	MG 2003 (689)	39D

ESTIMATE SUMMARY

PROJECT MG 2003(689)

CONTROL 0255-08-091

ROADWAY URBAN + BRIDGES

EST.	FINAL	EST.	FINAL	EST.	FINAL	EST.	FINAL	EST.	FINAL	ALT	ITEM-CODE ITEM NO	ITEM-CODE DESC CODE	ITEM-CODE SP NO	DESCRIPTION	UNIT	TOTAL EST.	TOTAL FINAL
								70.000			656	0513		FND FOR TRAF SIG (42 IN DRIL SHFT)	LF	70.000	
								132.000			656	0514		FND FOR TRAF SIG (48 IN DRIL SHFT)	LF	132.000	
								6.000			656	0518		TRAF SIG CNTRL FND	CY	6.000	
								522.000			656	0535		FND FOR RDWY ILL ASM (TY A) (30IN DR SH)	LF	522.000	
								48.000			656	0542		FND FOR TRAF SIG (TY A) (36IN DR SH)	LF	48.000	
								93.000			656	0543		FND FOR TRAF SIG (TY B) (36IN DR SH)	LF	93.000	
								1.000			656	0563		FND FOR TRAF SIG (CNTRL) (TS-CF)	EA	1.000	
								94.000			658	0545		DEL ASM TY B (D-SW)	EA	94.000	
								16.000			658	0579		OBJ MRK ASM TY 3 (OM-3R)	EA	16.000	
								129176.000			662	0501	008	WRK ZN PAV MRK REMOV (W) (4") (SLD)	LF	129176.000	
								36067.000			662	0502	008	WRK ZN PAV MRK REMOV (W) (4") (BRK)	LF	36067.000	
								38.000			662	0512	008	WRK ZN PAV MRK REMOV (W) (ARROW)	EA	38.000	
								49.000			662	0513	008	WRK ZN PAV MRK REMOV (W) (DBL ARROW)	EA	49.000	
								5.000			662	0514	008	WRK ZN PAV MRK REMOV (W) (TRL ARROW)	EA	5.000	
								17.000			662	0515	008	WRK ZN PAV MRK REMOV (W) (TND ARROW)	EA	17.000	
								491.000			662	0516	008	WRK ZN PAV MRK REMOV (W) (WORD)	EA	491.000	
								256325.000			662	0523	008	WRK ZN PAV MRK REMOV (Y) (4") (SLD)	LF	256325.000	
								59529.000			662	0549	008	WRK ZN PAV MRK NON-REMOV (W) (4") (SLD)	LF	59529.000	
								5770.000			662	0550	008	WRK ZN PAV MRK NON-REMOV (W) (4") (BRK)	LF	5770.000	
								1714.000			662	0553	008	WRK ZN PAV MRK NON-REMOV (W) (8") (SLD)	LF	1714.000	
								2308.000			662	0557	008	WRK ZN PAV MRK NON-REMOV (W) (24") (SLD)	LF	2308.000	
								53434.000			662	0569	008	WRK ZN PAV MRK NON-REMOV (Y) (4") (SLD)	LF	53434.000	
								62021.000			666	0501	043	REFL PAV MRK TY I (W) (4") (SLD)	LF	62021.000	
								46833.000			666	0502	043	REFL PAV MRK TY I (W) (4") (BRK)	LF	46833.000	
								44315.000			666	0506	043	REFL PAV MRK TY I (W) (8") (SLD)	LF	44315.000	
								5613.000			666	0509	043	REFL PAV MRK TY I (W) (12") (SLD)	LF	5613.000	
								13914.000			666	0512	043	REFL PAV MRK TY I (W) (24") (SLD)	LF	13914.000	
								80821.000			666	0524	043	REFL PAV MRK TY I (Y) (4") (SLD)	LF	80821.000	
								187.000			666	0525	043	REFL PAV MRK TY I (Y) (4") (BRK)	LF	187.000	
								4473.000			666	0529	043	REFL PAV MRK TY I (Y) (8") (SLD)	LF	4473.000	
								3797.000			666	0532	043	REFL PAV MRK TY I (Y) (24") (SLD)	LF	3797.000	
								2.000			666	0534	043	REFL PAV MRK TY I (Y) (MED NOSE)	EA	2.000	
								2625.000			666	0542	043	REFL PAV MRK TY II (W) (12") (LNDP)	LF	2625.000	
								145.000			668	0541		PREFAB PAV MRK TY B (W) (ARROW)	EA	145.000	
								18.000			668	0542		PREFAB PAV MRK TY B (W) (DBL ARROW)	EA	18.000	
								75.000			668	0545		PREFAB PAV MRK TY B (W) (WORD)	EA	75.000	
								520.000			672	0506	012	RAIS PAV MRKR CL B (REFL) TY I-A	EA	520.000	
								8252.000			672	0507	012	RAIS PAV MRKR CL B (REFL) TY I-C	EA	8252.000	
								266.000			672	0508	012	RAIS PAV MRKR CL B (REFL) TY I-R	EA	266.000	
								614.000			672	0509	012	RAIS PAV MRKR CL B (REFL) TY II-A-A	EA	614.000	
								5878.000			672	0510	012	RAIS PAV MRKR CL B (REFL) TY II-C-R	EA	5878.000	
								14573.000			677	0501		ELIM EXT PAV MRK & MRKR (4")	LF	14573.000	
								80.000			677	0503		ELIM EXT PAV MRK & MRKR (8")	LF	80.000	
								5.000			677	0507		ELIM EXT PAV MRK & MRKR (ARROW)	EA	5.000	
								1.000			677	0508		ELIM EXT PAV MRK & MRKR (WORD)	EA	1.000	
								27.000			677	0518		ELIM EXT PAV MRK & MRKR (RAIS PAV MRKR)	EA	27.000	
								5.000			680	0501	007	INSTAL OF HWY TRAF SIG (ISOLATED)	EA	5.000	
								226.000			682	0502		VEH SIG SEC (12 IN)	EA	226.000	
								48.000			682	0504		PED SIG SEC (12 IN) (1 INDICATION)	EA	48.000	
								58.000			682	0509		BACK PLATE (3 SEC) (12 IN)	EA	58.000	

ESTIMATE & QUANTITY SHEET

STATE DIST. NO.	COUNTY	PROJECT NO.	SHEET NO.
21	HIDALGO	MG 2003(689)	39E

ESTIMATE SUMMARY

PROJECT MG 2003(689)
CONTROL 0255-08-091
ROADWAY URBAN + BRIDGES

EST.	FINAL	EST.	FINAL	EST.	FINAL	EST.	FINAL	EST.	FINAL	ALT.	ITEM-CODE ITEM NO	ITEM-CODE DESC CODE	ITEM-CODE SP NO	DESCRIPTION	UNIT	TOTAL EST.	TOTAL FINAL
								475.000			654	0502		SGN WLKWY W/HNDRL (36 IN)	LF	475.000	
								201.000			656	0510		FND FOR TRAF SIG (24 IN DRIL SHFT)	LF	201.000	
								70.000			656	0513		FND FOR TRAF SIG (42 IN DRIL SHFT)	LF	70.000	
								132.000			656	0514		FND FOR TRAF SIG (48 IN DRIL SHFT)	LF	132.000	
								6.000			656	0518		TRAF SIG CNTRL FND	CY	6.000	
								150.000			656	0535		FND FOR RDWY ILL ASM (TY A) (30IN DR SH)	LF	150.000	
								48.000			656	0542		FND FOR TRAF SIG (TY A) (36IN DR SH)	LF	48.000	
								93.000			656	0543		FND FOR TRAF SIG (TY B) (36IN DR SH)	LF	93.000	
								1.000			656	0563		FND FOR TRAF SIG (CNTRL) (TS-CF)	EA	1.000	
								94.000			658	0545		DEL ASM TY B (D-SW)	EA	94.000	
								16.000			658	0579		OBJ MRK ASM TY 3 (OM-3R)	EA	16.000	
								129176.000			662	0501	008	WRK ZN PAV MRK REMOV (W) (4") (SLD)	LF	129176.000	
								36067.000			662	0502	008	WRK ZN PAV MRK REMOV (W) (4") (BRK)	LF	36067.000	
								38.000			662	0512	008	WRK ZN PAV MRK REMOV (W) (ARROW)	EA	38.000	
								49.000			662	0513	008	WRK ZN PAV MRK REMOV (W) (DBL ARROW)	EA	49.000	
								5.000			662	0514	008	WRK ZN PAV MRK REMOV (W) (TRL ARROW)	EA	5.000	
								17.000			662	0515	008	WRK ZN PAV MRK REMOV (W) (TND ARROW)	EA	17.000	
								491.000			662	0516	008	WRK ZN PAV MRK REMOV (W) (WORD)	EA	491.000	
								256325.000			662	0523	008	WRK ZN PAV MRK REMOV (Y) (4") (SLD)	LF	256325.000	
								59529.000			662	0549	008	WRK ZN PAV MRK NON-REMOV (W) (4") (SLD)	LF	59529.000	
								5770.000			662	0550	008	WRK ZN PAV MRK NON-REMOV (W) (4") (BRK)	LF	5770.000	
								1714.000			662	0553	008	WRK ZN PAV MRK NON-REMOV (W) (8") (SLD)	LF	1714.000	
								2308.000			662	0557	008	WRK ZN PAV MRK NON-REMOV (W) (24") (SLD)	LF	2308.000	
								53434.000			662	0569	008	WRK ZN PAV MRK NON-REMOV (Y) (4") (SLD)	LF	53434.000	
								62021.000			666	0501	043	REFL PAV MRK TY I (W) (4") (SLD)	LF	62021.000	
								46833.000			666	0502	043	REFL PAV MRK TY I (W) (4") (BRK)	LF	46833.000	
								44315.000			666	0506	043	REFL PAV MRK TY I (W) (8") (SLD)	LF	44315.000	
								5613.000			666	0509	043	REFL PAV MRK TY I (W) (12") (SLD)	LF	5613.000	
								13914.000			666	0512	043	REFL PAV MRK TY I (W) (24") (SLD)	LF	13914.000	
								80821.000			666	0524	043	REFL PAV MRK TY I (Y) (4") (SLD)	LF	80821.000	
								187.000			666	0525	043	REFL PAV MRK TY I (Y) (4") (BRK)	LF	187.000	
								4473.000			666	0529	043	REFL PAV MRK TY I (Y) (8") (SLD)	LF	4473.000	
								3797.000			666	0532	043	REFL PAV MRK TY I (Y) (24") (SLD)	LF	3797.000	
								2.000			666	0534	043	REFL PAV MRK TY I (Y) (MED NOSE)	EA	2.000	
								2625.000			666	0542	043	REFL PAV MRK TY II (W) (12") (LNDP)	LF	2625.000	
								145.000			668	0541		PREFAB PAV MRK TY B (W) (ARROW)	EA	145.000	
								18.000			668	0542		PREFAB PAV MRK TY B (W) (DBL ARROW)	EA	18.000	
								75.000			668	0545		PREFAB PAV MRK TY B (W) (WORD)	EA	75.000	
								520.000			672	0506	012	RAIS PAV MRKR CL B (REFL) TY I-A	EA	520.000	
								8252.000			672	0507	012	RAIS PAV MRKR CL B (REFL) TY I-C	EA	8252.000	
								266.000			672	0508	012	RAIS PAV MRKR CL B (REFL) TY I-R	EA	266.000	
								614.000			672	0509	012	RAIS PAV MRKR CL B (REFL) TY II-A-A	EA	614.000	
								5878.000			672	0510	012	RAIS PAV MRKR CL B (REFL) TY II-C-R	EA	5878.000	
								14573.000			677	0501		ELIM EXT PAV MRK & MRKR (4")	LF	14573.000	
								80.000			677	0503		ELIM EXT PAV MRK & MRKR (8")	LF	80.000	
								5.000			677	0507		ELIM EXT PAV MRK & MRKR (ARROW)	EA	5.000	
								1.000			677	0508		ELIM EXT PAV MRK & MRKR (WORD)	EA	1.000	
								27.000			677	0518		ELIM EXT PAV MRK & MRKR (RAIS PAV MRKR)	EA	27.000	
								5.000			680	0501	007	INSTAL OF HWY TRAF SIG (ISOLATED)	EA	5.000	
								226.000			682	0502		VEH SIG SEC (12 IN)	EA	226.000	

ESTIMATE & QUANTITY SHEET REVISED 9-26-03

STATE DIST. NO.	COUNTY	PROJECT NO.	SHEET NO.
21	HIDALGO	MG 2003(689)	39E

ESTIMATE SUMMARY

PROJECT MG 2003(689)
CONTROL 0255-08-091
ROADWAY URBAN + BRIDGES

EST.	FINAL	EST.	FINAL	EST.	FINAL	EST.	FINAL	EST.	FINAL	ALT.	ITEM-CODE ITEM NO	ITEM-CODE DESC CODE	ITEM-CODE SP NO	DESCRIPTION	UNIT	TOTAL EST.	TOTAL FINAL
								8.000			682	0511		BACK PLATE (5 SEC) (12 IN)	EA	8.000	
								19891.000			684	0505		TRAF SIG CBL (TY A) (5 CONDR) (12 AWG)	LF	19891.000	
								2670.000			684	0507		TRAF SIG CBL (TY A) (7 CONDR) (12 AWG)	LF	2670.000	
								18368.000			684	0544		TRAF SIG CBL (TY C) (2 CONDR) (14 AWG)	LF	18368.000	
								4.000			686	0505	003	TRAF SIG POLE ASM (STL) STR (TY B) 30'LUM	EA	4.000	
								4.000			686	0560	003	TRAF SIG POLE ASM (STL) 2 ARM 40-36'LUM	EA	4.000	
								1.000			686	0565	003	TRAF SIG POLE ASM (STL) 2 ARM 44-36'LUM	EA	1.000	
								6.000			686	0572	003	TRAF SIG POLE ASM (STL) 1 ARM (44 FT) LUM	EA	6.000	
								2.000			686	0611	003	TRAF SIG POLE ASM (STL) 1 ARM (50 FT) LUM	EA	2.000	
								2.000			686	0663	003	TRAF SIG POLE ASM (STL) 2 ARM 44-40'LUM	EA	2.000	
								1.000			686	0664	003	TRAF SIG POLE ASM (STL) 2 ARM 44-44'LUM	EA	1.000	
								48.000			688	0501		PED DETECT (PUSH BTN)	EA	48.000	
								7915.000			688	0511		VEH DETECT (SAWCUT)	LF	7915.000	
								10.000			688	0512		VEH DETECT (LOOP AMP)	EA	10.000	
								279.000			1057	0501		TRNSPLTG TREES & PALMS BY TREE SPD	EA	279.000	
								1.000			1507	0501		LED DMS FIELD EQUIPMENT (18 IN)	EA	1.000	
								4.000			1508	0501		PORT CHANGE MESS SIGN (LED)	EA	4.000	
								1.000			1509	0501		REMOVE EXIST VMS SYSTEM	EA	1.000	
								34987.000			3146	0530	015	HOT MIX (TY D) (SURF) (PG 76-22)	TON	34987.000	
								112919.000			3241	0508		SPHMACP (PG 64-22) (1/2")	TON	112919.000	
								53001.000			3248	0501		HDSMACP (1/2 IN MIX TYPE) (PG 76-22)	TON	53001.000	
								1886.000			3358	0501		ASPHALT (TY I OR II, CRM)	TON	1886.000	
								21688.000			3358	0502		AGGR (CL A)	TON	21688.000	
								2.000			4001	0504		IRRIG WELL (36 IN)	EA	2.000	
								4.000			4001	0505		IRRIG WELL (42 IN)	EA	4.000	
								7.000			4001	0520		IRRIG VALVE (14 IN)	EA	7.000	
								2.000			4001	0530		IRRIG WELL (60 IN)	EA	2.000	
								2.000			4002	0505		RELOC IRRIG JUNCTION BOX W/VENT	EA	2.000	
								80.000			4003	0501		RC LOW-HEAD PRSSR PIPE (CL III) (12 IN)	LF	80.000	
								771.000			4003	0502		RC LOW-HEAD PRSSR PIPE (CL III) (15 IN)	LF	771.000	
								1999.000			4003	0504		RC LOW-HEAD PRSSR PIPE (CL III) (18 IN)	LF	1999.000	
								286.000			4003	0505		RC LOW-HEAD PRSSR PIPE (CL III) (24 IN)	LF	286.000	
								1696.000			4003	0506		RC LOW-HEAD PRSSR PIPE (CL III) (30 IN)	LF	1696.000	
								390.000			4003	0507		RC LOW-HEAD PRSSR PIPE (CL III) (36 IN)	LF	390.000	
								60.000			4003	0508		RC LOW-HEAD PRSSR PIPE (CL III) (42 IN)	LF	60.000	
								720.000			4003	0509		RC LOW-HEAD PRSSR PIPE (CL III) (48 IN)	LF	720.000	
								1314.000			4003	0529		RC LOW-HEAD PRSSR PIPE (CL III) (21 IN)	LF	1314.000	
								837.000			4438	0501		FLOWABLE BACKFILL	CY	837.000	
								132.000			4971	0501		STEEL PIPE (12 IN)	LF	132.000	
								240.000			4971	0502		STEEL PIPE (15 IN)	LF	240.000	
								154.000			4971	0503		STEEL PIPE (18 IN)	LF	154.000	
								1478.000			5010	0504		CONSTRUCT EXIT (TY 2)	SY	1478.000	
								1478.000			5010	0505		CONSTRUCT EXIT (REMOV & REPLAC) (TY 2)	SY	1478.000	
								1478.000			5010	0506		CONSTRUCT EXIT (REMOV) (TY 2)	SY	1478.000	
								1365.000			5012	0502		FRNT END LDR WORK (EROSN CONT) (CL 1)	HR	1365.000	
								4520.000			5190	0501		REMOV & REL LNDSCP PAV UNITS (2 3/8IN)	SY	4520.000	
								7728.000			5249	0501		TEMP SEDMT CONT FENCE	LF	7728.000	
								3798.000			5249	0502		TEMP SEDMT CONT FENCE (REMOVE & REPLAC)	LF	3798.000	
								7728.000			5249	0503		TEMP SEDMT CONT FENCE (REMOV)	LF	7728.000	
								32.000			5267	0501		REMOV SINGLE GDRAIL TERMINALS	EA	32.000	

ESTIMATE & QUANTITY SHEET

STATE DIST. NO.	COUNTY	PROJECT NO.	SHEET NO.
21	HIDALGO	MG 2003(689)	39F

ESTIMATE SUMMARY

PROJECT MG 2003(689)
CONTROL 0255-08-091
ROADWAY URBAN + BRIDGES

EST.	FINAL	EST.	FINAL	EST.	FINAL	EST.	FINAL	EST.	FINAL	ALT	ITEM NO	DESC CODE	SPC NO	DESCRIPTION	UNIT	TOTAL EST.	TOTAL FINAL
								48.000			682	0504		PED SIG SEC (12 IN) (1 INDICATION)	EA	48.000	
								58.000			682	0509		BACK PLATE (3 SEC) (12 IN)	EA	58.000	
								8.000			682	0511		BACK PLATE (5 SEC) (12 IN)	EA	8.000	
								19891.000			684	0505		TRAF SIG CBL (TY A) (5 CONDR) (12 AWG)	LF	19891.000	
								2670.000			684	0507		TRAF SIG CBL (TY A) (7 CONDR) (12 AWG)	LF	2670.000	
								18368.000			684	0544		TRAF SIG CBL (TY C) (2 CONDR) (14 AWG)	LF	18368.000	
								4.000			686	0505	003	TRAF SIG POLE ASM (STL) STR (TY B) 30'LUM	EA	4.000	
								4.000			686	0560	003	TRAF SIG POLE ASM (STL) 2 ARM 40-36'LUM	EA	4.000	
								1.000			686	0565	003	TRAF SIG POLE ASM (STL) 2 ARM 44-36'LUM	EA	1.000	
								6.000			686	0572	003	TRAF SIG POLE ASM (STL) 1 ARM (44 FT) LUM	EA	6.000	
								2.000			686	0611	003	TRAF SIG POLE ASM (STL) 1 ARM (50 FT) LUM	EA	2.000	
								2.000			686	0663	003	TRAF SIG POLE ASM (STL) 2 ARM 44-40'LUM	EA	2.000	
								1.000			686	0664	003	TRAF SIG POLE ASM (STL) 2 ARM 44-44'LUM	EA	1.000	
								48.000			688	0501		PED DETECT (PUSH BTN)	EA	48.000	
								7915.000			688	0511		VEH DETECT (SAWCUT)	LF	7915.000	
								10.000			688	0512		VEH DETECT (LOOP AMP)	EA	10.000	
								279.000			1057	0501		TRNSPLTG TREES & PALMS BY TREE SPD	EA	279.000	
								1.000			1507	0501		LED DMS FIELD EQUIPMENT (18 IN)	EA	1.000	
								4.000			1508	0501		PORT CHANGE MESS SIGN (LED)	EA	4.000	
								1.000			1509	0501		REMOVE EXIST VMS SYSTEM	EA	1.000	
								34987.000			3146	0530	015	HOT MIX (TY D) (SURF) (PG 76-22)	TON	34987.000	
								112999.000			3241	0508		SPHMACP (PG 64-22) (1/2")	TON	112999.000	
								53027.000			3248	0501		HDSMACP (1/2 IN MIX TYPE) (PG 76-22)	TON	53027.000	
								1887.000			3358	0501		ASPHALT (TY I OR II, CRM)	TON	1887.000	
								21704.000			3358	0502		AGGR (CL A)	TON	21704.000	
								2.000			4002	0505		RELOC IRRIG JUNCTION BOX W/VENT	EA	2.000	
								771.000			4003	0502		RC LOW-HEAD PRSSR PIPE (CL III) (15 IN)	LF	771.000	
								1999.000			4003	0504		RC LOW-HEAD PRSSR PIPE (CL III) (18 IN)	LF	1999.000	
								286.000			4003	0505		RC LOW-HEAD PRSSR PIPE (CL III) (24 IN)	LF	286.000	
								1776.000			4003	0506		RC LOW-HEAD PRSSR PIPE (CL III) (30 IN)	LF	1776.000	
								390.000			4003	0507		RC LOW-HEAD PRSSR PIPE (CL III) (36 IN)	LF	390.000	
								60.000			4003	0508		RC LOW-HEAD PRSSR PIPE (CL III) (42 IN)	LF	60.000	
								720.000			4003	0509		RC LOW-HEAD PRSSR PIPE (CL III) (48 IN)	LF	720.000	
								1314.000			4003	0529		RC LOW-HEAD PRSSR PIPE (CL III) (21 IN)	LF	1314.000	
								2.000			4315	0503		IRRIG WELL (36 IN)	EA	2.000	
								4.000			4315	0504		IRRIG WELL (42 IN)	EA	4.000	
								7.000			4315	0513		IRRIG VALVE (14 IN)	EA	7.000	
								2.000			4315	0521		IRRIG WELL (60 IN)	EA	2.000	
								837.000			4438	0501		FLOWABLE BACKFILL	CY	837.000	
								240.000			4971	0502		STEEL PIPE (15 IN)	LF	240.000	
								154.000			4971	0503		STEEL PIPE (18 IN)	LF	154.000	
								132.000			4971	0504		STEEL PIPE (30 IN)	LF	132.000	
								1478.000			5010	0504		CONSTRUCT EXIT (TY 2)	SY	1478.000	
								1478.000			5010	0505		CONSTRUCT EXIT (REMOV & REPLAC) (TY 2)	SY	1478.000	
								1478.000			5010	0506		CONSTRUCT EXIT (REMOV) (TY 2)	SY	1478.000	
								1365.000			5012	0502		FRNT END LDR WORK (EROSN CONT) (CL 1)	HR	1365.000	
								4520.000			5190	0501		REMOV & REL LNDSCP PAV UNITS (2 3/8IN)	SY	4520.000	
								7728.000			5249	0501		TEMP SEDMT CONT FENCE	LF	7728.000	
								3798.000			5249	0502		TEMP SEDMT CONT FENCE (REMOVE & REPLAC)	LF	3798.000	
								7728.000			5249	0503		TEMP SEDMT CONT FENCE (REMOV)	LF	7728.000	

ESTIMATE & QUANTITY SHEET REVISED 9-26-03

STATE DIST. NO.	COUNTY	PROJECT NO.	SHEET NO.
21	HIDALGO	MG 2003(689)	39F

ESTIMATE SUMMARY

PROJECT MG 2003(689)

CONTROL 0255-08-091

ROADWAY URBAN + BRIDGES

EST.	FINAL	EST.	FINAL	EST.	FINAL	EST.	FINAL	EST.	FINAL	ALT.	ITEM-CODE ITEM NO	ITEM-CODE DESC CODE	ITEM-CODE SUB NO	DESCRIPTION	UNIT	TOTAL EST.	TOTAL FINAL
								2.000			5453	0519		QUADGUARD SYSTEM (2') (TY A) 2 BAY	EA	2.000	
								2340.000			5559	0501		COLORED-TEXTURIZED CONCRETE (4")	SY	2340.000	
								147329.000			5788	0501		LANDSCAPE PAVERS	SF	147329.000	
								26.000			5819	0502		SINGLE GUARDRAIL TERM (TY II)	EA	26.000	
								36.000			5866	0506		CURB RAMP AND LANDING (TY 7)	EA	36.000	
								19.000			5866	0507		CURB RAMP AND LANDING (TY 8)	EA	19.000	
								6.000			5866	0510		CURB RAMP AND LANDING (TY 21)	EA	6.000	
								2.000			5866	0511		CURB RAMP AND LANDING (TY 22)	EA	2.000	
								8.000			5985	0501		REACT 350 (NARROW REACT 350 HS-B)	EA	8.000	
								8.000			5985	0503		REACT 350 (REMOVE)	EA	8.000	
								12.000			5985	0504		REACT 350 (REMOVE & RESET)	EA	12.000	
								3.000			6010	0501		SALV TRAF SIGNALS	EA	3.000	
								2258.000			6031	0502		COMMUN CABLE (6 PAIR) (22 AWG)	LF	2258.000	
								1530.000			6031	0506		COMMUN CABLE (25 PAIR) (22 AWG)	LF	1530.000	
								35.000			8524	0501		PEDESTAL POLE ASSEM	EA	35.000	
														ALTERNATE NO. 1A			
								188972.000			247	0817	018	FL BS (COMPL IN PLAC) (TY A GR1 CL 4)	CY	188972.000	
								5712.000			262	0518		LIME (TY A (SLRY), TY B OR TY C (SLRY)	TON	5712.000	
								639645.000			262	0537		LIME TRT FOR BS CASE (EXT BS) (DC) (VAR)	SY	639645.000	
														CONTRACTOR FORCE ACCOUNT WORK			
														FURN CELLULAR PHONES	LS	1.000	

ESTIMATE & QUANTITY SHEET

STATE DIST. NO.	COUNTY	PROJECT NO.	SHEET NO.
21	HIDALGO	MG 2003(689)	39G

ESTIMATE SUMMARY

PROJECT MG 2003(689)
CONTROL 0255-08-091
ROADWAY URBAN + BRIDGES

EST.	FINAL	EST.	FINAL	EST.	FINAL	EST.	FINAL	EST.	FINAL	ALT	ITEM-CODE ITEM NO	ITEM-CODE DESC CODE	ITEM-CODE SP NO	DESCRIPTION	UNIT	TOTAL EST.	TOTAL FINAL
								32.000			5267	0501		REMOV SINGLE GDRAIL TERMINALS	EA	32.000	
								2.000			5453	0519		QUADGUARD SYSTEM (2') (TY A) 2 BAY	EA	2.000	
								2340.000			5559	0501		COLORED-TEXTURIZED CONCRETE (4")	SY	2340.000	
								147329.000			5788	0501		LANDSCAPE PAVERS	SF	147329.000	
								26.000			5819	0502		SINGLE GUARDRAIL TERM (TY II)	EA	26.000	
								36.000			5866	0506		CURB RAMP AND LANDING (TY 7)	EA	36.000	
								19.000			5866	0507		CURB RAMP AND LANDING (TY 8)	EA	19.000	
								6.000			5866	0510		CURB RAMP AND LANDING (TY 21)	EA	6.000	
								2.000			5866	0511		CURB RAMP AND LANDING (TY 22)	EA	2.000	
								8.000			5985	0501		REACT 350 (NARROW REACT 350 HS-B)	EA	8.000	
								8.000			5985	0503		REACT 350 (REMOVE)	EA	8.000	
								12.000			5985	0504		REACT 350 (REMOVE & RESET)	EA	12.000	
								3.000			6010	0501		SALV TRAF SIGNALS	EA	3.000	
								2258.000			6031	0502		COMMUN CABLE (6 PAIR) (22 AWG)	LF	2258.000	
								1530.000			6031	0506		COMMUN CABLE (25 PAIR) (22 AWG)	LF	1530.000	
								35.000			8524	0501		PEDESTAL POLE ASSEM	EA	35.000	
														ALTERNATE NO. 1A			
								188972.000			247	0817	018	FL BS (COMPL IN PLAC) (TY A GR1 CL 4)	CY	188972.000	
								5712.000			262	0518		LIME (TY A (SLRY), TY B OR TY C (SLRY)	TON	5712.000	
								639645.000			262	0537		LIME TRT FOR BS CRSE (EXT BS) (DC) (VAR)	SY	639645.000	
														ALTERNATE NO. 2A			
								341.000			462	0546	003	CONC BOX SEWER (5 FT X 5 FT)	LF	341.000	
														CONTRACTOR FORCE ACCOUNT WORK			
														FURN CELLULAR PHONES	LS	1.000	

ESTIMATE & QUANTITY SHEET REVISED 9-26-03

STATE DIST. NO.	COUNTY	PROJECT NO.	SHEET NO.
21	HIDALGO	MG 2003(689)	399

NAME
02:41:57 PM
07/02/2003
i:\22322a\cadd\sheets\summary\281tcpsum01.dgn

TEMPORARY DETOUR PAVEMENT AND RAMPS SUMMARY - US 281 CSJ 0255-08-091

	ITEM	508	110 #	132 #	247 #	310 #	3146 #	403 #
PLAN PROFILE SHEET	SHEET NO.	CONSTRUCT DETOURS (CL 3) (SY)	EXCAVATION (CY)	EMBANK (DENS CONT) (TY C) (CL 3) (CY)	FL BS (COMPL IN PLAC) (TY D GR 6) (CL 4) (CY)	ASPH MATRL (MC-30) (GAL)	HOT MIX (TY D) (SURF) (PG 64-22) (TON)	TEMP SPL SHORING (SF)
NORTHBOUND	1 of 11	879	440		440	176	150	
FRONTAGE	2 of 11	2134	1067		1067	427	365	
ROAD	3 of 11	2059	1030		1030	412	352	
	4 of 11	1863	932		932	373	319	
PHASE IA	5 of 11	1973	987		987	395	337	
	6 of 11	2336	1168		1168	467	399	
	7 of 11	1343	672		672	269	230	
SUB TOTAL		12587	6296	0	6296	2519	2152	0
SOUTHBOUND	1 of 11	863	432		432	173	148	
FRONTAGE	2 of 11	2110	1055		1055	422	361	
ROAD	3 of 11	2099	1050		1050	420	359	
	4 of 11	1902	951		951	380	325	
PHASE IA	5 of 11	2382	1191		1191	476	407	
	6 of 11	1951	976		976	390	334	
	7 of 11	668	334		334	134	114	
SUB TOTAL		11975	5989	0	5989	2395	2048	0
EXIST	6 of 11	185	93		93	37	32	
NORTHBOUND	7 of 11	757	379		379	151	129	
MAINLANES/RAMP	8 of 11	1220	610		610	244	209	
	9 of 11	2051	1026		1026	410	351	
PHASE IA	10 of 11	2230	1115		1115	446	381	
	11 of 11	407	204		204	81	70	
SUB TOTAL		6850	3427	0	3427	1369	1172	
EXIST	6 of 11	1035	518		518	207	177	
SOUTHBOUND	7 of 11							
MAINLANES/RAMP	8 of 11	1161	581		581	232	199	
	9 of 11	1909	955		955	382	326	
PHASE IA	10 of 11	1523	762		762	305	260	
	11 of 11	169	85		85	34	29	
SUB TOTAL		5797	2901	0	2901	1160	991	
EXIST	6 of 11	1873	937		937	375	320	
MAINLANES								
PHASE II								
SUB TOTAL		1873	937	0	937	375	320	
TEMP CONN OF	5 of 11	841	421		421	168	144	
RAMP RN11								
PHASE III								
SUB TOTAL		841	421	0	421	168	144	
TEMP CONN OF	5 of 11	942	471		471	188	161	
RAMP RS12								
PHASE III								
SUB TOTAL		942	471	0	471	188	161	
CSJ 0255-08-091 TOTALS		40865	20442	0	# 20442	# 8174	# 6988	0

FOR CONTRACTORS INFORMATION ONLY

Parsons Brinckerhoff Quade & Douglas Inc.

Texas Department of Transportation

© 2003 by TxDOT

US 281 TRAFFIC CONTROL QUANTITY SUMMARY

SHEET 1 OF 16				281TCPSUM01.DGN			
DESIGNED: DM	FED. RD DIV. NO.	STATE	FEDERAL AID PROJECT NO.			HIGHWAY NO.	
CHECKED: JP	6	TEXAS				US 281	
DRAWN: KTD	STATE DISTRICT	COUNTY	CONTROL NO.	SECTION NO.	JOB NO.	SHEET NO.	
CHECKED: DM	PHARR	HIDALGO	0255	08	091	40	

DESCRIPTION	ITEM 512 PORT CONC TRAF BAR FURN & INSTALL (LF)	PORT CONC TRAF BAR MOVE / RESET (LF)	PORT CONC TRAF BAR REMOVE (LF)	ITEM 512 PORT CTB (LOW PRF TY 1) FURN & INSTALL (LF)	PORT CTB (LOW PRF TY 1) MOVE / RESET (LF)	PORT CTB (LOW PRF TY 1) REMOVE (LF)	ITEM 512 PORT CTB (LOW PRF TY 2) FURN & INSTALL (LF)	PORT CTB (LOW PRF TY 2) MOVE / RESET (LF)	PORT CTB (LOW PRF TY 2) REMOVE (LF)	ITEM 5985 NARROW REACT 350 HS-B INSTALL (EA)	NARROW REACT 350 HS-B MOVE / RESET (EA)	NARROW REACT 350 HS-B REMOVE (EA)
PHASE IA												
SHEET 5												
OWASSA ROAD	494											
SUB TOTAL	494	0	0	0	0	0	0	0	0	0	0	0
SHEET 6												
SB ENTRANCE RAMP	1172									1		
NB ENTRANCE RAMP	302											
SUB TOTAL	1474	0	0	0	0	0	0	0	0	1	0	0
SHEET 7												
NB ENTRANCE RAMP	707									1		
SUB TOTAL	707	0	0	0	0	0	0	0	0	1	0	0
SHEET 8												
SB ENTRANCE RAMP	1614									2		
NB EXIT RAMP	1972									1		
SUB TOTAL	3586	0	0	0	0	0	0	0	0	3	0	0
SHEET 9												
SB ENTRANCE RAMP	1109											
NB EXIT RAMP	1934											
SB EXIT RAMP	1322									1		
NB ENTRANCE RAMP	684											
SUB TOTAL	5049	0	0	0	0	0	0	0	0	1	0	0
SHEET 10												
SB EXIT RAMP	2192									1		
NB ENTRANCE RAMP	1915									1		
SUB TOTAL	4107	0	0	0	0	0	0	0	0	2	0	0
SHEET 11												
SB EXIT RAMP	400											
NB ENTRANCE RAMP	624											
SUB TOTAL	1024	0	0	0	0	0	0	0	0	0	0	0
TOTAL PHASE IA	16441	0	0	0	0	0	0	0	0	8	0	0
PHASE IB												
SHEET 1												
SB FRONTAGE ROAD				1285			20					
NB FRONTAGE ROAD				1512								
SUB TOTAL	0	0	0	2797	0	0	20	0	0	0	0	0
SHEET 2												
SB FRONTAGE ROAD				2400								
NB FRONTAGE ROAD				2400								
SUB TOTAL	0	0	0	4800	0	0	0	0	0	0	0	0
SHEET 3												
SB FRONTAGE ROAD				1730			20					
NB FRONTAGE ROAD				2258			20					
SUB TOTAL	0	0	0	3988	0	0	40	0	0	0	0	0
SHEET 4												
SB FRONTAGE ROAD				2400								
NB FRONTAGE ROAD				2400								
SUB TOTAL	0	0	0	4800	0	0	0	0	0	0	0	0
SHEET 5												
SB FRONTAGE ROAD				3690			20					
NB FRONTAGE ROAD				1760			20					
SUB TOTAL	0	0	0	5450	0	0	40	0	0	0	0	0
SHEET 6												
SB FRONTAGE ROAD				2400								
NB FRONTAGE ROAD				1994								
SUB TOTAL	0	0	0	4394	0	0	0	0	0	0	0	0
SHEET 7												
SB FRONTAGE ROAD				1202								
NB FRONTAGE ROAD				1491			20					
SUB TOTAL	0	0	0	2693	0	0	20	0	0	0	0	0
TOTAL PHASE IB	0	0	0	28922	0	0	120	0	0	0	0	0

NAME

02:42:02 PM

07/02/2003

i:\22322g\cadd\sheets\summary\281tcpsum02.dgn

Parsons Brinckerhoff Quade & Douglas Inc.

Texas Department of Transportation

© 2003 by TxDOT

US 281
TRAFFIC CONTROL
QUANTITY SUMMARY

SHEET 2 OF 16 | 281TCPSUM02.DGN

DESIGNED: DM	FED. RD DIV. NO.	STATE	FEDERAL AID PROJECT No.	HIGHWAY No.
CHECKED: JP	6	TEXAS		US 281

DRAWN: KTD	STATE DISTRICT	COUNTY	CONTROL No.	SECTION No.	JOB No.	SHEET No.
CHECKED: DM	PHARR	HIDALGO	0255	08	091	41

DESCRIPTION	ITEM 512 PORT CONC TRAF BAR FURN & INSTALL (LF)	PORT CONC TRAF BAR MOVE / RESET (LF)	PORT CONC TRAF BAR REMOVE (LF)	ITEM 512 PORT CTB (LOW PRF TY 1) FURN & INSTALL (LF)	PORT CTB (LOW PRF TY 1) MOVE / RESET (LF)	PORT CTB (LOW PRF TY 1) REMOVE (LF)	ITEM 512 PORT CTB (LOW PRF TY 2) FURN & INSTALL (LF)	PORT CTB (LOW PRF TY 2) MOVE / RESET (LF)	PORT CTB (LOW PRF TY 2) REMOVE (LF)	ITEM 5985 NARROW REACT 350 HS-B INSTALL (EA)	NARROW REACT 350 HS-B MOVE / RESET (EA)	NARROW REACT 350 HS-B REMOVE (EA)
PHASE II												
SHEET 1												
SB FRONTAGE ROAD					690			20				
NB FRONTAGE ROAD					947							
SUB TOTAL	0	0	0	0	1637	0	0	20	0	0	0	0
SHEET 2												
SB MAINLANE		614										
NB MAINLANE		770										
SB FRONTAGE ROAD					2400							
NB FRONTAGE ROAD					2400							
SUB TOTAL	0	1384	0	0	4800	0	0	0	0	0	0	0
SHEET 3												
SB MAINLANE		240										
NB MAINLANE		121										
SB FRONTAGE ROAD					1971			40				
NB FRONTAGE ROAD					1687			20				
SUB TOTAL	0	361	0	0	3658	0	0	60	0	0	0	0
SHEET 4												
SB MAINLANE		343										
NB MAINLANE		477										
SB FRONTAGE ROAD					2400							
NB FRONTAGE ROAD					2400							
SUB TOTAL	0	820	0	0	4800	0	0	0	0	0	0	0
SHEET 5												
SB FRONTAGE ROAD					3640		20	40				
NB FRONTAGE ROAD					1170							
SUB TOTAL	0	0	0	0	4810	0	20	40	0	0	0	0
SHEET 6												
SB MAINLANE		562									1	
NB MAINLANE		782									1	
SB FRONTAGE ROAD					2240		20					
NB FRONTAGE ROAD					1625							
SUB TOTAL	0	1344	0	0	3865	0	20	0	0	0	2	0
SHEET 7												
SB MAINLANE		2400										
NB MAINLANE		2400										
SB FRONTAGE ROAD					1711		20					
NB FRONTAGE ROAD					2090		40					
SUB TOTAL	0	4800	0	0	3801	0	60	0	0	0	0	0
SHEET 8												
SB MAINLANE		2400										
NB MAINLANE		2400										
SB FRONTAGE ROAD				411	1551		40					
NB FRONTAGE ROAD				1713			20					
SUB TOTAL	0	4800	0	2124	1551	0	60	0	0	0	0	0
SHEET 9												
SB MAINLANE		2400										
NB MAINLANE	1668	532									1	
SB FRONTAGE ROAD				3004			20					
NB FRONTAGE ROAD				2291			20					
SUB TOTAL	1668	2932	0	5295	0	0	40	0	0	0	1	0
SHEET 10												
SB MAINLANE	2400											
NB MAINLANE	2400											
SB FRONTAGE ROAD				1853			20					
NB FRONTAGE ROAD				1837			20					
SUB TOTAL	4800	0	0	3690	0	0	40	0	0	0	0	0
SHEET 11												
SB MAINLANE	1372											
NB MAINLANE	624											
SB FRONTAGE ROAD				375			20					
NB FRONTAGE ROAD				362			40					
SUB TOTAL	1996	0	0	737	0	0	60	0	0	0	0	0
TOTAL PHASE II	8464	16441	0	11846	28922	0	300	120	0	0	3	0

NAME

02:42:06 PM

07/02/2003

i:\22322a\cadd\sheets\summary\281tcpsum02a.dgn

Parsons Brinckerhoff Quade & Douglas Inc.

Texas Department of Transportation

© 2003 by TxDOT

US 281
TRAFFIC CONTROL
QUANTITY SUMMARY

SHEET 3 OF 16				281TCPSUM02A.DGN	
DESIGNED: DM	FED. RD DIV. No.	STATE	FEDERAL AID PROJECT No.	HIGHWAY No.	
CHECKED: JP	6	TEXAS		US 281	
DRAWN: KTD	STATE DISTRICT	COUNTY	CONTROL No.	SECTION No.	JOB No.	SHEET No.
CHECKED: DM	PHARR	HIDALGO	0255	08	091	41A

DESCRIPTION	ITEM 512									ITEM 5985		
	PORT CONC TRAF BAR			PORT CTB (LOW PRF TY 1)			PORT CTB (LOW PRF TY 2)			NARROW REACT 350 HS-B		
	FURN & INSTALL (LF)	MOVE / RESET (LF)	REMOVE (LF)	FURN & INSTALL (LF)	MOVE / RESET (LF)	REMOVE (LF)	FURN & INSTALL (LF)	MOVE / RESET (LF)	REMOVE (LF)	INSTALL (EA)	MOVE / RESET (EA)	REMOVE (EA)
PHASE III												
SHEET 1												
SB MAINLANE		596										
NB MAINLANE		600									1	
SUB TOTAL	0	1196	0	0	0	0	0	0	0	0	1	0
SHEET 4												
SB MAINLANE		374									1	
NB MAINLANE		364										
SUB TOTAL	0	738	0	0	0	0	0	0	0	0	1	0
SHEET 5												
SB MAINLANE		303										
NB MAINLANE		396									1	
SUB TOTAL	0	699	0	0	0	0	0	0	0	0	1	0
SHEET 6												
SB MAINLANE		622										
NB MAINLANE		549										
SUB TOTAL	0	1171	0	0	0	0	0	0	0	0	0	0
SHEET 7												
SB MAINLANE		2436									1	
NB MAINLANE		2680										
SUB TOTAL	0	5116	0	0	0	0	0	0	0	0	1	0
SHEET 8												
SB MAINLANE		2738										
NB MAINLANE		3193										
SUB TOTAL	0	5931	0	0	0	0	0	0	0	0	0	0
SHEET 9												
SB MAINLANE		2475									1	
NB MAINLANE		2715									1	
SUB TOTAL	0	5190	0	0	0	0	0	0	0	0	2	0
SHEET 10												
SB MAINLANE		2000									1	
NB MAINLANE		1795									1	
SUB TOTAL	0	3795	0	0	0	0	0	0	0	0	2	0
SHEET 11												
SB MAINLANE		614										
NB MAINLANE	195	455										
SUB TOTAL	195	1069	0	0	0	0	0	0	0	0	0	0
TOTAL PHASE III	195	24905	0	0	0	0	0	0	0	0	8	0
PHASE IV												
SHEET 1												
SB MAINLANE		1033									1	
NB MAINLANE		384										
SB FRONTAGE ROAD		667										
NB FRONTAGE ROAD		558										
SUB TOTAL	0	2622	0	0	0	0	0	0	0	0	1	0
SHEET 2												
SB FRONTAGE ROAD		3213										
NB FRONTAGE ROAD		3471										
SUB TOTAL	0	6684	0	0	0	0	0	0	0	0	0	0
SHEET 3												
SB FRONTAGE ROAD		2400										
NB FRONTAGE ROAD		2400										
SUB TOTAL	0	4800	0	0	0	0	0	0	0	0	0	0
SHEET 4												
SB FRONTAGE ROAD		3558										
NB FRONTAGE ROAD		3417										
SUB TOTAL	0	6975	0	0	0	0	0	0	0	0	0	0
SHEET 5												
SB FRONTAGE ROAD		1468										
SUB TOTAL	0	1468	0	0	0	0	0	0	0	0	0	0
TOTAL PHASE IV	0	22549	0	0	0	0	0	0	0	0	1	0

Parsons Brinckerhoff Quade & Douglas Inc.

Texas Department of Transportation

© 2003 by TxDOT

US 281
TRAFFIC CONTROL
QUANTITY SUMMARY

SHEET 4 OF 16					281TCPSUM03.DGN		
DESIGNED: DM	FED. RD DIV. No.	STATE	FEDERAL AID PROJECT No.		HIGHWAY No.		
CHECKED: JP	6	TEXAS			US 281		
DRAWN: KTD	STATE DISTRICT	COUNTY	CONTROL No.	SECTION No.	JOB No.	SHEET No.	
CHECKED: DM	PHARR	HIDALGO	0255	08	091	42	

NAME
02:42:11 PM
07/02/2003
i:\22322a\cadd\sheets\summary\281tcpsum03.dgn

NAME
02:42:15 PM
07/02/2003
i:\22322a\cadd\sheets\summary\281tcpsum04.dgn

DESCRIPTION	ITEM 512									ITEM 5985		
	PORT CONC TRAF BAR			PORT CTB (LOW PRF TY 1)			PORT CTB (LOW PRF TY 2)			NARROW REACT 350 HS-B		
	FURN & INSTALL (LF)	MOVE / RESET (LF)	REMOVE (LF)	FURN & INSTALL (LF)	MOVE / RESET (LF)	REMOVE (LF)	FURN & INSTALL (LF)	MOVE / RESET (LF)	REMOVE (LF)	INSTALL (EA)	MOVE / RESET (EA)	REMOVE (EA)
PHASE IV STEP 1A												
SHEET 1												
SB FRONTAGE ROAD		1711										
NB FRONTAGE ROAD		1477										
SUB TOTAL	0	3188	0	0	0	0	0	0	0	0	0	0
TOTAL PHASE IV STEP 1A	0	3188	0	0	0	0	0	0	0	0	0	0
PHASE IV STEP 1B												
SHEET 1												
SB FRONTAGE ROAD					1536			20				
NB FRONTAGE ROAD					1190			20				
SUB TOTAL	0	0	0	0	2726	0	0	40	0	0	0	0
TOTAL PHASE IV STEP 1B	0	0	0	0	2726	0	0	40	0	0	0	0
PHASE IV STEP 1C												
SHEET 1												
SB FRONTAGE ROAD					1075			20				
NB FRONTAGE ROAD					1300			20				
SUB TOTAL	0	0	0	0	2375	0	0	40	0	0	0	0
TOTAL PHASE IV STEP 1C	0	0	0	0	2375	0	0	40	0	0	0	0
PHASE IV STEP 2												
SHEET 2												
NB MAINLANE		593										
SUB TOTAL	0	593	0	0	0	0	0	0	0	0	0	0
TOTAL PHASE IV STEP 2	0	593	0	0	0	0	0	0	0	0	0	0
PHASE V												
SHEET 1												
SB FRONTAGE ROAD		406										
NB FRONTAGE ROAD		558										
SUB TOTAL	0	964	0	0	0	0	0	0	0	0	0	0
SHEET 2												
SB FRONTAGE ROAD		3317										
NB FRONTAGE ROAD		3380										
SUB TOTAL	0	6697	0	0	0	0	0	0	0	0	0	0
SHEET 3												
SB FRONTAGE ROAD		2809										
NB FRONTAGE ROAD		4473										
SUB TOTAL	0	7282	0	0	0	0	0	0	0	0	0	0
SHEET 4												
SB FRONTAGE ROAD		2400										
NB FRONTAGE ROAD		4381										
SUB TOTAL	0	6781	0	0	0	0	0	0	0	0	0	0
SHEET 5												
SB FRONTAGE ROAD		918										
NB FRONTAGE ROAD	0	1315										
SUB TOTAL	0	2233	0	0	0	0	0	0	0	0	0	0
TOTAL PHASE V	0	23957	0								0	
CSJ 0255-08-091 TOTALS	25,100	91,633	25,100	40,768	34,023	40,768	420	200	420	8	12	8

Parsons Brinckerhoff Quade & Douglas Inc.

Texas Department of Transportation

© 2003 by TxDOT

US 281
TRAFFIC CONTROL
QUANTITY SUMMARY

SHEET 5 OF 16 | 281TCPSUM04.DGN

DESIGNED: DM	FED. RD DIV. NO.	STATE	FEDERAL AID PROJECT No.			HIGHWAY No.	
CHECKED: JP	6	TEXAS				US 281	
DRAWN: KTD	STATE DISTRICT	COUNTY	CONTROL No.	SECTION No.	JOB No.	SHEET No.	
CHECKED: DM	PHARR	HIDALGO	0255	08	091	43	

NAME

02:42:19 PM

07/02/2003

ITEM 662 & 677
SUMMARY OF WORK ZONE PAVEMENT MARKINGS

PHASE/SHEET NO.	STANDARD MARKINGS (NON - REMOV.)					STANDARD MARKINGS (REMOV.)								ITEM 677	RAISED PAVEMENT MARKERS			
	4 IN WHITE (SOLID) (LF)	4 IN YELLOW (SOLID) (LF)	4 IN WHITE (BRK) (LF)	8 IN WHITE (SOLID) (LF)	24 IN WHITE (SOLID) (LF)	4 IN WHITE (SOLID) (LF)	4 IN YELLOW (SOLID) (LF)	4 IN WHITE (BRK) (LF)	ARROW (EA)	ARROW (TRL) (EA)	ARROW (DBL) (EA)	ARROW (TND) (EA)	WORD (W) (ONLY) (EA)	ELIMIN 4" PVMT MARK & MARKERS (LF)	WHITE (SOLID) (EA)	WHITE (BRK) (EA)	YELLOW (SOLID) (EA)	YELLOW (DOUBLE SOLID) (EA)
PHASE IA																		
SHHET 5																		
NB FRONTAGE ROAD		495	29	435										1,045				
SUB TOTAL		495	29	435										1,045				
TOTAL PHASE IA		495	29	435										1,045				

ITEM 662 & 677
SUMMARY OF WORK ZONE PAVEMENT MARKINGS

PHASE/SHEET NO.	STANDARD MARKINGS (NON - REMOV.)					STANDARD MARKINGS (REMOV.)								ITEM 677	RAISED PAVEMENT MARKERS			
	4 IN WHITE (SOLID) (LF)	4 IN YELLOW (SOLID) (LF)	4 IN WHITE (BRK) (LF)	8 IN WHITE (BRK) (LF)	24 IN WHITE (SOLID) (LF)	4 IN WHITE (SOLID) (LF)	4 IN YELLOW (SOLID) (LF)	4 IN WHITE (BRK) (LF)	ARROW (EA)	ARROW (TRL) (EA)	ARROW (DBL) (EA)	ARROW (TND) (EA)	WORD (W) (ONLY) (EA)	ELIMIN 4" PVMT MARK & MARKERS (LF)	WHITE (SOLID) (EA)	WHITE (BRK) (EA)	YELLOW (SOLID) (EA)	YELLOW (DOUBLE SOLID) (EA)
PHASE IB																		
SHEET 1																		
NB FRONTAGE ROAD	1,598	1,607												1,323				
SB FRONTAGE ROAD	1,430	1,395												1,535				
SUB TOTAL	3,028	3,002							0				0	2,858				
SHEET 2																		
NB FRONTAGE ROAD	2,400	2,400																
SB FRONTAGE ROAD	2,400	2,400																
SUB TOTAL	4,800	4,800							0				0	0				
SHEET 3																		
NB FRONTAGE ROAD	2,645	2,732												2,179				
SB FRONTAGE ROAD	2,075	2,396							1				1	1,785				
SUB TOTAL	4,720	5,128							1				1	3,964				
SHEET 4																		
NB FRONTAGE ROAD	2,499	2,259												860				
SB FRONTAGE ROAD	2,472	2,155												930				
SUB TOTAL	4,971	4,414							0				0	1,790				
SHEET 5																		
NB FRONTAGE ROAD	1,757	1,366												523				
SB FRONTAGE ROAD	2,424	3,113				625								1,373				
SUB TOTAL	4,181	4,479				625			0				0	1,896				
SHEET 6																		
NB FRONTAGE ROAD	1,963	2,093												807				
SB FRONTAGE ROAD	2,512	2,500												776				
SUB TOTAL	4,475	4,593							0				0	1,583				
SHEET 7																		
NB FRONTAGE ROAD	1,492	1,072												475				
SB FRONTAGE ROAD	1,212	855												210				
SUB TOTAL	2,704	1,927							0				0	685				
TOTAL PHASE IB	28,879	28,343	0			625			1				1	12,776				

© 2003 by TxDOT

Parsons Brinckerhoff Quade & Douglas Inc.

Texas Department of Transportation

US 281
TRAFFIC CONTROL
QUANTITY SUMMARY

SHEET 6 OF 16				281TCPSUM05.DGN				
DESIGNED: DM	FED. RD DIV. No.	STATE	FEDERAL AID PROJECT No.		HIGHWAY No.			
CHECKED: JP	6	TEXAS			US 281			
DRAWN: KTD	STATE DISTRICT	COUNTY	CONTROL No.	SECTION No.	JOB No.	SHEET No.		
CHECKED: DM	PHARR	HIDALGO	0255	08	091	44		

i:\223220\cadd\sheets\summary\281tcpsum05.dgn

NAME

02:42:24 PM

07/02/2003

i:\22322o\cadd\sheets\summary\281tcpsum06.dgn

ITEM 662 & 677
SUMMARY OF WORK ZONE PAVEMENT MARKINGS

PHASE/SHEET NO.	STANDARD MARKINGS (NON - REMOV.)					STANDARD MARKINGS (REMOV.)								ITEM 677	RAISED PAVEMENT MARKERS			
	4 IN WHITE (SOLID) (LF)	4 IN YELLOW (SOLID) (LF)	4 IN WHITE (BRK) (LF)	8 IN WHITE (SOLID) (LF)	24 IN WHITE (SOLID) (LF)	4 IN WHITE (SOLID) (LF)	4 IN YELLOW (SOLID) (LF)	4 IN WHITE (BRK) (LF)	ARROW (EA)	ARROW (TRL) (EA)	ARROW (DBL) (EA)	ARROW (TND) (EA)	WORD (W) (ONLY) (EA)	ELIMIN 4" PVMT MARK & MARKERS (LF)	WHITE (SOLID) (EA)	WHITE (BRK) (EA)	YELLOW (SOLID) (EA)	YELLOW (DOUBLE SOLID) (EA)
PHASE II																		
SHEET 1																		
NB FRONTAGE ROAD				22			944											
SB FRONTAGE ROAD							1,388											
SUB TOTAL				22			2,332											
SHEET 2																		
NB FRONTAGE ROAD							2,400											
SB FRONTAGE ROAD				24			2,400											
SUB TOTAL				24			4,800											
SHEET 3																		
NB FRONTAGE ROAD			109	30			2,403							436				
SB FRONTAGE ROAD				29		405	3,369											
SUB TOTAL			109	59		405	5,772							436				
SHEET 4																		
NB FRONTAGE ROAD				25		230	2,400											
SB FRONTAGE ROAD				35		100	2,400											
SUB TOTAL				60		330	4,800											
SHEET 5																		
NB FRONTAGE ROAD							1,300											
SB FRONTAGE ROAD						1,094	4,745	274										
SUB TOTAL						1,094	6,045	274										
SHEET 6																		
NB FRONTAGE ROAD				16			1,675	164										
SB FRONTAGE ROAD				17			2,283	247										
NB MAINLANE	877	1,398	218															
SB MAINLANE	1,385	1,497	275															
SUB TOTAL	2,262	2,895	493	33			3,958	411										
SHEET 7																		
NB FRONTAGE ROAD							2,710	575										
SB FRONTAGE ROAD							2,929	550										
NB MAINLANE	2,833	2,400	600															
SB MAINLANE	2,545	2,400	600															
SUB TOTAL	5,378	4,800	1,200				5,639	1,125										
SHEET 8																		
NB FRONTAGE ROAD							2,194	462										
SB FRONTAGE ROAD							2,131	550										
NB MAINLANE	2,558	2,400	600															
SB MAINLANE	2,754	2,400	600															
SUB TOTAL	5,312	4,800	1,200				4,325	1,012										
SHEET 9																		
NB FRONTAGE ROAD				15			2,681	610										
SB FRONTAGE ROAD				26			2,998	600										
NB MAINLANE	3,249	2,400	600															
SB MAINLANE	3,000	2,400	600															
SUB TOTAL	6,249	4,800	1,200	41			5,679	1,210										
SHEET 10																		
NB FRONTAGE ROAD							2,151	470										
SB FRONTAGE ROAD							2,374	470										
NB MAINLANE	3,001	2,400	600															
SB MAINLANE	2,697	2,400	550															
SUB TOTAL	5,698	4,800	1,150				4,525	940										
SHEET 11																		
NB FRONTAGE ROAD							573	147										
SB FRONTAGE ROAD							580	147										
NB MAINLANE	630	1,222																
SB MAINLANE	623	623																
SUB TOTAL	1,253	1,845					1,153	294										
TOTAL PHASE II	26,152	23,940	5,352	239		1,829	49,028	5,266						436				

Parsons Brinckerhoff Quade & Douglas Inc.

Texas Department of Transportation

© 2003 by TxDOT

US 281
TRAFFIC CONTROL
QUANTITY SUMMARY

SHEET 7 OF 16 | 281TCPSUM06.DGN

DESIGNED: DM	FED. RD DIV. NO.	STATE	FEDERAL AID PROJECT NO.				HIGHWAY No.
CHECKED: JP	6	TEXAS					US 281
DRAWN: KTD	STATE DISTRICT	COUNTY	CONTROL No.	SECTION No.	JOB No.	SHEET No.	
CHECKED: DM	PHARR	HIDALGO	0255	08	091	45	

NAME

02:42:29 PM

07/02/2003

i:\22322a\cadd\sheets\summary\281tcpsum07.dgn

ITEM 662 & 677
SUMMARY OF WORK ZONE PAVEMENT MARKINGS

PHASE/SHEET NO.	STANDARD MARKINGS (NON - REMOV.)					STANDARD MARKINGS (REMOV.)								ITEM 677	RAISED PAVEMENT MARKERS			
	4 IN WHITE (SOLID) (LF)	4 IN YELLOW (SOLID) (LF)	4 IN WHITE (BRK) (LF)	8 IN WHITE (SOLID) (LF)	24 IN WHITE (SOLID) (LF)	4 IN WHITE (SOLID) (LF)	4 IN YELLOW (SOLID) (LF)	4 IN WHITE (BRK) (LF)	ARROW (EA)	ARROW (TRL) (EA)	ARROW (DBL) (EA)	ARROW (TND) (EA)	WORD (W) (ONLY) (EA)	ELIMIN 4" PVMT MARK & MARKERS (LF)	WHITE (SOLID) (EA)	WHITE (BRK) (EA)	YELLOW (SOLID) (EA)	YELLOW (DOUBLE SOLID) (EA)
PHASE III																		
SHEET 1																		
NB FRONTAGE ROAD							969	297										
SB FRONTAGE ROAD							877	250										
SUB TOTAL							1,846	547										
SHEET 2																		
NB FRONTAGE ROAD							2,400	600										
SB FRONTAGE ROAD							2,400	600										
SUB TOTAL							4,800	1,200										
SHEET 3																		
NB FRONTAGE ROAD						619	3,001	600										
SB FRONTAGE ROAD						533	2,928	600										
SUB TOTAL						1,152	5,929	1,200										
SHEET 4																		
NB FRONTAGE ROAD						422	2,795	600										
SB FRONTAGE ROAD						530	2,786	600										
SUB TOTAL						952	5,581	1,200										
SHEET 5																		
NB FRONTAGE ROAD							1,275	640										
SB FRONTAGE ROAD							3,024	625										
SUB TOTAL							4,299	1,265										
SHEET 6																		
NB FRONTAGE ROAD							1,546	307										
SB FRONTAGE ROAD						194	2,597	600										
NB MAINLANE						1,068	1,252	405										
SB MAINLANE						1,441	1,249	394										
SUB TOTAL						2,701	6,644	1,706										
SHEET 7																		
NB FRONTAGE ROAD						1,120	3,347	600										
SB FRONTAGE ROAD						308	2,575	600										
NB MAINLANE						2,400	2,400	600										
SB MAINLANE						2,873	2,805	600										
SUB TOTAL						6,701	11,127	2,400										
SHEET 8																		
NB FRONTAGE ROAD						936	2,915	569										
SB FRONTAGE ROAD						828	3,041	550										
NB MAINLANE						2,400	2,400	600										
SB MAINLANE						2,400	2,400	600										
SUB TOTAL						6,564	10,756	2,319										
SHEET 9																		
NB FRONTAGE ROAD						1,089	3,467	607										
SB FRONTAGE ROAD						1,270	3,484	600										
NB MAINLANE						2,400	2,400	600										
SB MAINLANE						2,400	2,400	600										
SUB TOTAL						7,159	11,751	2,407										
SHEET 10																		
NB FRONTAGE ROAD						1,203	3,220	557										
SB FRONTAGE ROAD						1,195	3,283	567										
NB MAINLANE						2,400	2,400	600										
SB MAINLANE						2,400	2,400	530										
SUB TOTAL						7,198	11,283	2,254										
SHEET 11																		
NB FRONTAGE ROAD						220	2,050											
SB FRONTAGE ROAD							371											
NB MAINLANE						1,268	605											
SB MAINLANE						620	620											
SUB TOTAL						2,108	3,646											
TOTAL PHASE III						34,535	77,662	16,498										

Parsons Brinckerhoff Quade & Douglas Inc.

Texas Department of Transportation

© 2003 by TxDOT

US 281
TRAFFIC CONTROL
QUANTITY SUMMARY

SHEET 8 OF 16				281TCPSUM07.DGN			
DESIGNED: DM	FED. RD DIV. NO.	STATE	FEDERAL AID PROJECT NO.			HIGHWAY NO.	
CHECKED: JP	6	TEXAS				US 281	
DRAWN: KTD	STATE DISTRICT	COUNTY	CONTROL NO.	SECTION NO.	JOB NO.	SHEET NO.	
CHECKED: DM	PHARR	HIDALGO	0255	08	091	46	

NAME

02:42:35 PM

07/02/2003

i:\22322a\cadd\sheets\summary\281tcpsum08.dgn

ITEM 662 & 677
SUMMARY OF WORK ZONE PAVEMENT MARKINGS

PHASE/SHEET NO.	STANDARD MARKINGS (NON - REMOV.)					STANDARD MARKINGS (REMOV.)								ITEM 677	RAISED PAVEMENT MARKERS			
	4 IN WHITE (SOLID) (LF)	4 IN YELLOW (SOLID) (LF)	4 IN WHITE (BRK) (LF)	8 IN WHITE (SOLID) (LF)	24 IN WHITE (SOLID) (LF)	4 IN WHITE (SOLID) (LF)	4 IN YELLOW (SOLID) (LF)	4 IN WHITE (BRK) (LF)	ARROW (EA)	ARROW (TRL) (EA)	ARROW (DBL) (EA)	ARROW (TND) (EA)	WORD (W) (ONLY) (EA)	ELIMIN 4" PVMT MARK & MARKERS (LF)	WHITE (SOLID) (EA)	WHITE (BRK) (EA)	YELLOW (SOLID) (EA)	YELLOW (DOUBLE SOLID) (EA)
PHASE III STEP 1A																		
SHEET 1																		
SH 495	497				167	1,149	3,438		4		1		4					
NB FRONTAGE ROAD				71	56		928	232			2							
SB FRONTAGE ROAD	732			168	95		320	534	2		1		2					
SUB TOTAL	1,229			239	318	1,149	4,686	766	6		4		6					
PHASE III STEP 1B																		
SHEET 1																		
SH 495	1,040				150	1,386	4,172		4		1		4					
NB FRONTAGE ROAD				92	67	538	855	192			2							
SB FRONTAGE ROAD					34	372	787	198			2							
SUB TOTAL	1,040			92	251	2,296	5,814	390	4		5		4					
PHASE III STEP 1C																		
SHEET 1																		
SH 495					98	2,396	5,784		2		2		2					
NB FRONTAGE ROAD				150	24	782	474	198			2	1	1					
SB FRONTAGE ROAD						776	96	169			2	1	1					
SUB TOTAL				150	122	3,964	6,354	367	2		6	2	4					
SHEET 1																		
SH 495																		
NB FRONTAGE ROAD																		
SB FRONTAGE ROAD						596		116										
SUB TOTAL						596		116										
PHASE III STEP 1D																		
SHEET 1																		
SH 495					127	1,960	4,706		2		1		2					
NB FRONTAGE ROAD				63	25	934	331	224			2	1	1					
SB FRONTAGE ROAD				214	70	766	77	178	2			1	3					
SUB TOTAL				277	222	3,660	5,114	402	4		3	2	6					
TOTAL PHASE III STEP 1	2,269			758	913	11,665	21,968	2,041	16		18	4	20					

ITEM 662 & 677
SUMMARY OF WORK ZONE PAVEMENT MARKINGS

PHASE/SHEET NO.	STANDARD MARKINGS (NON - REMOV.)					STANDARD MARKINGS (REMOV.)								ITEM 677	RAISED PAVEMENT MARKERS			
	4 IN WHITE (SOLID) (LF)	4 IN YELLOW (SOLID) (LF)	4 IN WHITE (BRK) (LF)	8 IN WHITE (SOLID) (LF)	24 IN WHITE (SOLID) (LF)	4 IN WHITE (SOLID) (LF)	4 IN YELLOW (SOLID) (LF)	4 IN WHITE (BRK) (LF)	ARROW (EA)	ARROW (TRL) (EA)	ARROW (DBL) (EA)	ARROW (TND) (EA)	WORD (W) (ONLY) (EA)	ELIMIN 4" PVMT MARK & MARKERS (LF)	WHITE (SOLID) (EA)	WHITE (BRK) (EA)	YELLOW (SOLID) (EA)	YELLOW (DOUBLE SOLID) (EA)
PHASE III STEP 2A																		
SHEET 1																		
SIOUX ROAD					128	1,849	5,328				4							
NB FRONTAGE ROAD					23	2,587				1								
SB FRONTAGE ROAD					24	328				1								
SUB TOTAL					175	4,764	5,328			2	4							
SHEET 2																		
SIOUX ROAD																		
NB FRONTAGE ROAD																		
SB FRONTAGE ROAD						2,238												
SUB TOTAL						2,238												
PHASE III STEP 2B																		
SHEET 1																		
SIOUX ROAD	365	656		88	100	652	1,712		2		2		2					
NB FRONTAGE ROAD					27		1,231			1								
SB FRONTAGE ROAD				194	40		508	95	1		1		1					
SUB TOTAL	365	656		282	167	652	3,451	95	3	1	3		3					
SHEET 2																		
SIOUX ROAD																		
NB FRONTAGE ROAD																		
SB FRONTAGE ROAD							252	225										
SUB TOTAL							252	225										
PHASE III STEP 2C																		
SHEET 1																		
SIOUX ROAD					167	2,126	3,498	53	3		1		3					
NB FRONTAGE ROAD							236	143			2							
SB FRONTAGE ROAD					30		1,124	84		1								
SUB TOTAL					197	2,126	4,858	280	3	1	3		3					
SHEET 2																		
SIOUX ROAD																		
NB FRONTAGE ROAD							144	53										
SB FRONTAGE ROAD								50										
SUB TOTAL							144	103										
PHASE III STEP 2D																		
SHEET 1																		
SIOUX ROAD					84	2,864	4,034	100			4							
NB FRONTAGE ROAD					70	603			1			1	2					
SB FRONTAGE ROAD					42	1,777		90	1		1	1	2					
SUB TOTAL					196	5,244	4,034	190	2		5	2	4					
SHEET 2																		
SIOUX ROAD																		
NB FRONTAGE ROAD						1,296		100										
SB FRONTAGE ROAD																		
SUB TOTAL						1,296		100										
TOTAL PHASE III STEP 2	365	656		282	735	16,320	18,067	993	8	4	15	2	10					

Parsons Brinckerhoff Quade & Douglas Inc.

Texas Department of Transportation

© 2003 by TxDOT

US 281
TRAFFIC CONTROL
QUANTITY SUMMARY

SHEET 9 OF 16				281TCPSUM08.DGN	
DESIGNED: DM	FED. RD DIV. No.	STATE	FEDERAL AID PROJECT No.		HIGHWAY No.
CHECKED: JP	6	TEXAS			US 281
DRAWN: KTD	STATE DISTRICT	COUNTY	CONTROL No.	SECTION No.	JOB No.	SHEET No.
CHECKED: DM	PHARR	HIDALGO	0255	08	091	47

NAME

02:42:39 PM

07/02/2003

i:\22322a\cadd\sheets\summary\281tcpsum09.dgn

ITEM 662 & 677
SUMMARY OF WORK ZONE PAVEMENT MARKINGS

PHASE/SHEET NO.	STANDARD MARKINGS (NON - REMOV.)					STANDARD MARKINGS (REMOV.)								ITEM 677	RAISED PAVEMENT MARKERS			
	4 IN WHITE (SOLID) (LF)	4 IN YELLOW (SOLID) (LF)	4 IN WHITE (BRK) (LF)	8 IN WHITE (SOLID) (LF)	24 IN WHITE (SOLID) (LF)	4 IN WHITE (SOLID) (LF)	4 IN YELLOW (SOLID) (LF)	4 IN WHITE (BRK) (LF)	ARROW (EA)	ARROW (TRL) (EA)	ARROW (DBL) (EA)	ARROW (TND) (EA)	WORD (W) (ONLY) (EA)	ELIMIN 4" PVMT MARK & MARKERS (LF)	WHITE (SOLID) (EA)	WHITE (BRK) (EA)	YELLOW (SOLID) (EA)	YELLOW (DOUBLE SOLID) (EA)
PHASE III STEP 3A																		
SHEET 1																		
NOLANA LOOP					153	2,190	4,442		1		3		1					
NB FRONTAGE ROAD					30	154	1,200	300			2							
SB FRONTAGE ROAD						311	186	130	1			1	2					
SUB TOTAL					183	2,655	5,828	430	2		5	1	3					
PHASE III STEP 3B																		
SHEET 1																		
NOLANA LOOP	93				141	1,937	4,486	89	4				4					
NB FRONTAGE ROAD	261				48		657	342	1		1	1	2					
SB FRONTAGE ROAD	114				38		1,103	398			2							
SUB TOTAL	468				227	1,937	6,246	829	5		3	1	6					
PHASE III STEP 3C																		
SHEET 1																		
NOLANA LOOP					87	1,727	3,196		2		2		2					
NB FRONTAGE ROAD					42	858	58		1		1		1					
SB FRONTAGE ROAD					12	1,342		299		1		2	2					
SUB TOTAL					141	3,927	3,254	299	3	1	3	2	5					
SHEET 2																		
NOLANA LOOP						530	1,660											
NB FRONTAGE ROAD						462		231				1	1					
SB FRONTAGE ROAD																		
SUB TOTAL						992	1,660	231				1	1					
PHASE III STEP 3D																		
SHEET 1																		
NOLANA					45	1,213	3,184		2		2		2					
NB FRONTAGE ROAD					23	1,028	106	148			2							
SB FRONTAGE ROAD					41	974	50	266	1		1	2	3					
SUB TOTAL					109	3,215	3,340	414	3		5	2	5					
SHEET 2																		
NOLANA LOOP						1,060	2,124											
NB FRONTAGE ROAD						540		60				2	2					
SB FRONTAGE ROAD						126												
SUB TOTAL						1,726	2,124	60				2	2					
TOTAL PHASE III STEP 3	468				660	14,452	22,452	2,263	13	1	16	9	22					

Parsons Brinckerhoff Quade & Douglas Inc.

Texas Department of Transportation

© 2003 by TxDOT

US 281
TRAFFIC CONTROL
QUANTITY SUMMARY

SHEET 10 OF 16				281TCPSUM09.DGN			
DESIGNED: DM	FED. RD DIV. No.	STATE	FEDERAL AID PROJECT No.		HIGHWAY No.		
CHECKED: JP	6	TEXAS			US 281		
DRAWN: KTD	STATE DISTRICT	COUNTY	CONTROL No.	SECTION No.	JOB No.	SHEET No.	
CHECKED: DM	PHARR	HIDALGO	0255	08	091	48	

NAME

02:42:44 PM

07/02/2003

i:\22322a\cadd\sheets\summary\281tcpsum10.dgn

ITEM 662 & 677
SUMMARY OF WORK ZONE PAVEMENT MARKINGS

PHASE/SHEET NO.	STANDARD MARKINGS (NON - REMOV.)					STANDARD MARKINGS (REMOV.)								ITEM 677	RAISED PAVEMENT MARKERS			
	4 IN WHITE (SOLID) (LF)	4 IN YELLOW (SOLID) (LF)	4 IN WHITE (BRK) (LF)	8 IN WHITE (SOLID) (LF)	24 IN WHITE (SOLID) (LF)	4 IN WHITE (SOLID) (LF)	4 IN YELLOW (SOLID) (LF)	4 IN WHITE (BRK) (LF)	ARROW (EA)	ARROW (TRL) (EA)	ARROW (DBL) (EA)	ARROW (TND) (EA)	WORD (W) (ONLY) (EA)	ELIMIN 4" PVMT MARK & MARKERS (LF)	WHITE (SOLID) (EA)	WHITE (BRK) (EA)	YELLOW (SOLID) (EA)	YELLOW (DOUBLE SOLID) (EA)
PHASE IV																		
SHEET 1																		
NB FRONTAGE ROAD							487											
SB FRONTAGE ROAD							1,002											
NB MAINLANE						2,406	1,203											
SB MAINLANE						3,360	1,680											
SUB TOTAL						5,766	4,372											
SHEET 2																		
NB FRONTAGE ROAD						2,400	2,910	600										
SB FRONTAGE ROAD						2,400	2,992	600										
SUB TOTAL						4,800	5,902	1,200										
SHEET 3																		
NB FRONTAGE ROAD						2,400	2,400	600										
SB FRONTAGE ROAD						2,400	2,400	600										
SUB TOTAL						4,800	4,800	1,200										
SHEET 4																		
NB FRONTAGE ROAD						1,614	2,975	404										
SB FRONTAGE ROAD						1,603	2,983	401										
NB MAINLANE						1,576	788											
SB MAINLANE						1,612	806											
SUB TOTAL						6,405	7,552	805										
SHEET 5																		
NB FRONTAGE ROAD							1,112											
SB FRONTAGE ROAD							625	250										
NB MAINLANE						1,482	741											
SB MAINLANE						828	414											
SUB TOTAL						2,310	2,892	250										
TOTAL PHASE IV						24,081	25,518	3,455										
PHASE IV STEP 1B																		
SHEET 1																		
NB FRONTAGE ROAD							1,695	318										
SB FRONTAGE ROAD							1,548	337										
SUB TOTAL							3,243	655										
PHASE IV STEP 1C																		
SHEET 1																		
NB FRONTAGE ROAD	798		200			1,297						1	1					
SB FRONTAGE ROAD	698		189			1,075						1	1					
SUB TOTAL	1,396		389			2,372						2	2					
TOTAL PHASE IV STEP 1	1,396		389			2,372	3,243	655				2	2					
PHASE IV STEP 2																		
SHEET 1																		
NB FRONTAGE ROAD							1,261											
SB FRONTAGE ROAD							630											
SUB TOTAL							1,891											
SHEET 2																		
NB FRONTAGE ROAD							1,488											
SB FRONTAGE ROAD																		
SUB TOTAL							1,488											
TOTAL PHASE IV STEP 2							3,379											
PHASE IV STEP 3																		
SHEET 1																		
NB FRONTAGE ROAD						1,247	1,267											
SB FRONTAGE ROAD																		
SUB TOTAL						1,247	1,267											
SHEET 2																		
NB FRONTAGE ROAD						2,146	2,152											
SB FRONTAGE ROAD																		
SUB TOTAL						2,146	2,152											
TOTAL PHASE IV STEP 3						3,393	3,419											

Parsons Brinckerhoff Quade & Douglas Inc.

Texas Department of Transportation

© 2003 by TxDOT

US 281
TRAFFIC CONTROL
QUANTITY SUMMARY

SHEET 11 OF 16				281TCPSUM10.DGN			
DESIGNED: DM	FED. RD DIV. No.	STATE	FEDERAL AID PROJECT No.		HIGHWAY No.		
CHECKED: JP	6	TEXAS			US 281		
DRAWN: KTD	STATE DISTRICT	COUNTY	CONTROL No.	SECTION No.	JOB No.	SHEET No.	
CHECKED: DM	PHARR	HIDALGO	0255	08	091	49	

NAME

02:42:48 PM

07/02/2003

i:\22322a\cadd\sheets\summary\281tcpsum11.dgn

ITEM 662 & 677
SUMMARY OF WORK ZONE PAVEMENT MARKINGS

PHASE/SHEET NO.	STANDARD MARKINGS (NON - REMOV.)					STANDARD MARKINGS (REMOV.)								ITEM 677	RAISED PAVEMENT MARKERS			
	4 IN WHITE (SOLID) (LF)	4 IN YELLOW (SOLID) (LF)	4 IN WHITE (BRK) (LF)	8 IN WHITE (SOLID) (LF)	24 IN WHITE (SOLID) (LF)	4 IN WHITE (SOLID) (LF)	4 IN YELLOW (SOLID) (LF)	4 IN WHITE (BRK) (LF)	ARROW (EA)	ARROW (TRL) (EA)	ARROW (DBL) (EA)	ARROW (TND) (EA)	WORD (W) (ONLY) (EA)	ELIMIN 4" PVMT MARK & MARKERS (LF)	WHITE (SOLID) (EA)	WHITE (BRK) (EA)	YELLOW (SOLID) (EA)	YELLOW (DOUBLE SOLID) (EA)
PHASE V																		
SHEET 1																		
NB FRONTAGE ROAD							113											
SB FRONTAGE ROAD							1,105											
NB MAINLANE						684	684	171										
SB MAINLANE						795	795	200										
SUB TOTAL						1,479	2,697	371										
SHEET 2																		
NB FRONTAGE ROAD						1,632	3,023	408										
SB FRONTAGE ROAD						1,814	2,783	454										
NB MAINLANE						655	655	164										
SB MAINLANE						764	764	191										
SUB TOTAL						4,865	7,225	1,217										
SHEET 3																		
NB FRONTAGE ROAD						2,562	3,080	557										
SB FRONTAGE ROAD						2,400	3,725	600										
SUB TOTAL						4,962	6,805	1,157										
SHEET 4																		
NB FRONTAGE ROAD						2,400	4,330	600										
SB FRONTAGE ROAD						2,400	3,917	600										
SUB TOTAL						4,800	8,247	1,200										
SHEET 5																		
NB FRONTAGE ROAD						453	2,405	114										
SB FRONTAGE ROAD						175	1,040	44										
NB MAINLANE						2,000	2,000	500										
SB MAINLANE						1,170	1,170	293										
SUB TOTAL						3,798	6,615	951										
TOTAL PHASE V						19,904	31,589	4,896										
CSJ: 0255-08-091 TOTALS	59,529	53,434	5,770	1,714	2,308	129,176	256,325	36,067	38	5	49	17	491	13,821				

Parsons Brinckerhoff Quade & Douglas Inc.

Texas Department of Transportation

© 2003 by TxDOT

US 281
TRAFFIC CONTROL
QUANTITY SUMMARY

SHEET 12 OF 16						281TCPSUM11.DGN	
DESIGNED: DM	FED. RD DIV. No.	STATE	FEDERAL AID PROJECT No.			HIGHWAY No.	
CHECKED: JP	6	TEXAS				US 281	
DRAWN: KTD	STATE DISTRICT	COUNTY	CONTROL No.	SECTION No.	JOB No.	SHEET No.	
CHECKED: DM	PHARR	HIDALGO	0255	08	091	50	

NAME

02:42:54 PM

07/02/2003

i:\22322g\cadd\sheets\summary\281tcpsum12.dgn

	CUT AND RESTORE ITEM 400							
	STATION (FT)	DIAMETER (IN)	HEIGHT OF CUT (FT)	WIDTH OF EXCAVATION (FT)	LENGTH OF PIPE (FT)	CUT AND RESTORE (SY)	CEM STABIL BKFL (CY)	STRUC EXCAV (SPL) (CY)
PHASE IA								
SHEET 1								
NB FRONTAGE ROAD	506920+00	24	3.50	6.50	22.0	15.9	15	
NB FRONTAGE ROAD	506920+00	18	2.92	5.92	25.0	16.4	13	
SB FRONTAGE ROAD	61613+20	18	2.92	5.92	22.0	14.5	12	
SB FRONTAGE ROAD	61617+54	36	4.67	7.67	146.0	124.4	136	
SB FRONTAGE ROAD	61620+98	24	3.50	6.50	24.0	17.3	16	
SUB TOTAL						188.5	192	0
SHEET 2								
NB FRONTAGE ROAD	50624+48	18	2.92	5.92	74.0	48.6	39	
NB FRONTAGE ROAD	50624+09	18	2.92	5.92	16.0	10.5	9	
NB FRONTAGE ROAD	50628+86	18	2.92	5.92	24.0	15.8	13	
NB FRONTAGE ROAD	50632+63	24	3.50	6.50	24.0	17.3	16	
NB FRONTAGE ROAD	50636+44	18	2.92	5.92	25.0	16.4	13	
NB FRONTAGE ROAD	50643+42	18	2.92	5.92	72.0	47.3	38	
NB FRONTAGE ROAD	50647+88	18	2.92	5.92	24.0	15.8	13	
SB FRONTAGE ROAD	61626+44	18	2.92	5.92	20.0	13.1	11	
SB FRONTAGE ROAD	61626+62	18	2.92	5.92	25.0	16.4	13	
SB FRONTAGE ROAD	61630+50	18	2.92	5.92	23.0	15.1	12	
SB FRONTAGE ROAD	61633+53	18	2.92	5.92	22.0	14.5	12	
SB FRONTAGE ROAD	61636+53	18	2.92	5.92	24.0	15.8	13	
SB FRONTAGE ROAD	61644+83	18	2.92	5.92	22.0	14.5	12	
SUB TOTAL						261.1	214	0
SHEET 3								
NB FRONTAGE ROAD	50650+14	18	2.92	5.92	23.0	15.1	12	
NB FRONTAGE ROAD	50650+41	30	4.08	7.08	150.0	118.1	119	
NB FRONTAGE ROAD	50651+38	18	2.92	5.92	29.0	19.1	15	
NB FRONTAGE ROAD	50651+38	18	2.92	5.92	23.0	15.1	12	
TRENTON RD	24+20	18	2.92	5.92	45.0	29.6	24	
NB FRONTAGE ROAD	50656+20	24	3.50	6.50	35.0	25.3	23	
NB FRONTAGE ROAD	50659+25	18	2.92	5.92	27.0	17.8	14	
NB FRONTAGE ROAD	50662+67	42	5.33	8.33	350.0	324.1	385	
NB FRONTAGE ROAD	50666+50	18	2.92	5.92	22.0	14.5	12	
NB FRONTAGE ROAD	50668+50	18	2.92	5.92	25.0	16.4	13	
NB FRONTAGE ROAD	50670+00	48	5.92	8.92	23.0	22.8	29	
TRUNKLINE G	670+89	84	9.25	12.25	146.0	198.7	324	33
SB FRONTAGE ROAD	61648+60	18	2.92	5.92	20.0	13.1	11	
SB FRONTAGE ROAD	61649+30	18	2.92	5.92	24.0	15.8	13	
SB FRONTAGE ROAD	61649+32	30	4.08	7.08	255.0	200.7	203	
SB FRONTAGE ROAD	61652+10	18	2.92	5.92	53.0	34.8	28	
SB FRONTAGE ROAD	61656+71	24	3.50	6.50	46.0	33.2	30	
TRENTON RD	16+83	24	3.50	6.50	49.0	35.4	32	
TRENTON RD	13+00	24	3.50	6.50	61.0	44.1	40	
SB FRONTAGE ROAD	61660+63	18	2.92	5.92	23.0	15.1	12	
SB FRONTAGE ROAD	61663+33	36	4.67	7.67	174.0	148.2	163	
SB FRONTAGE ROAD	61664+12	18	2.92	5.92	40.0	26.3	21	
SB FRONTAGE ROAD	61665+50	18	2.92	5.92	36.0	23.7	19	
SB FRONTAGE ROAD	61667+62	18	2.92	5.92	22.0	14.5	12	
SUB TOTAL						1421.5	1566.0	33.0
SHEET 4								
NB FRONTAGE ROAD	50673+81	48	5.83	8.83	35.0	34.4	43	
NB FRONTAGE ROAD	50677+00	18	2.92	5.92	24.0	15.8	13	
NB FRONTAGE ROAD	50680+50	18	2.92	5.92	24.0	15.8	13	
NB FRONTAGE ROAD	50684+00	18	2.92	5.92	24.0	15.8	13	
NB FRONTAGE ROAD	50685+48	18	2.92	5.92	29.0	19.1	15	
NB FRONTAGE ROAD	50685+51	18	2.92	5.92	22.0	14.5	12	
NB FRONTAGE ROAD	50687+50	18	2.92	5.92	24.0	15.8	13	
NB FRONTAGE ROAD	50689+64	18	2.92	5.92	46.0	30.2	24	
NB FRONTAGE ROAD	50689+61	42	5.33	8.33	411.0	380.6	452	
SB FRONTAGE ROAD	61675+34	18	2.92	5.92	23.0	15.1	12	
SB FRONTAGE ROAD	61678+12	18	2.92	5.92	23.0	15.1	12	
SB FRONTAGE ROAD	61681+62	18	2.92	5.92	23.0	15.1	12	
SB FRONTAGE ROAD	61685+13	18	2.92	5.92	21.0	13.8	11	
SB FRONTAGE ROAD	61687+86	18	2.92	5.92	28.0	18.4	15	
SB FRONTAGE ROAD	61687+46	18	2.92	5.92	22.0	14.5	12	
SB FRONTAGE ROAD	61687+49	36	4.67	7.67	200.0	170.4	187	
SB FRONTAGE ROAD	61690+86	30	4.08	7.08	330.0	259.7	262	
SB FRONTAGE ROAD	61691+58	18	2.92	5.92	28.0	18.4	15	
SUB TOTAL						1082.5	1136.0	0.0

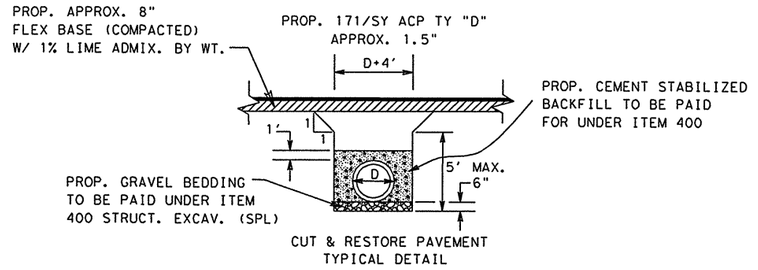

TO BE USED WHEN CUT IS GREATER THAN 10 FEET

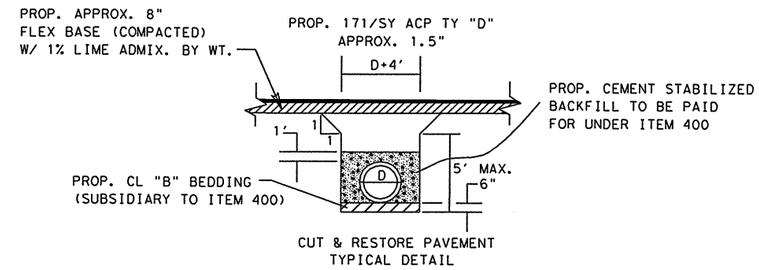

TO BE USED WHEN CUT IS LESS THAN 10 FEET

Parsons Brinckerhoff Quade & Douglas Inc.

Texas Department of Transportation

© 2003 by TxDOT

US 281 TRAFFIC CONTROL QUANTITY SUMMARY

SHEET 13 OF 16					281TCPSUM12.DGN		
DESIGNED: DM	FED. RD DIV. NO.	STATE	FEDERAL AID PROJECT NO.		HIGHWAY NO.		
CHECKED: JP	6	TEXAS			US 281		
DRAWN: KTD	STATE DISTRICT	COUNTY	CONTROL NO.	SECTION NO.	JOB NO.	SHEET NO.	
CHECKED: DM	PHARR	HIDALGO	0255	08	091	51	

	CUT AND RESTORE ITEM 400							
	STATION (FT)	DIAMETER (IN)	HEIGHT OF CUT (FT)	WIDTH OF EXCAVATION (FT)	LENGTH OF PIPE (FT)	CUT AND RESTORE (SY)	CEM STABIL BKFL (CY)	STRUC EXCAV (SPL) (CY)
PHASE IA (CONT.)								
SHEET 5								
NB FRONTAGE ROAD	50699+37	18	2.92	5.92	25	16.4	13	
NB MAINLANE	700+00	18	2.92	5.92	38.0	25.0	20	
NB FRONTAGE ROAD	50703+92	18	2.92	5.92	24.0	15.8	13	
NB MAINLANE	704+65	18	2.92	5.92	46.0	30.2	24	
NB FRONTAGE ROAD	50707+63	18	2.92	5.92	24.0	15.8	13	
NB FRONTAGE ROAD	50710+29	30	4.08	7.08	75.0	59.0	60	
NB FRONTAGE ROAD	50715+48	30	4.08	7.08	54.0	42.5	43	
OWASSA ROAD	21+28	18	2.92	5.92	35.0	23.0	19	
OWASSA ROAD	23+56	18	2.92	5.92	26.0	17.1	14	
SB FRONTAGE ROAD	61699+62	18	2.92	5.92	23.0	15.1	12	
SB FRONTAGE ROAD	62700+60	24	3.50	6.50	40.0	28.9	26	
SB FRONTAGE ROAD	62700+65	24	3.50	6.50	100.0	72.2	66	
SB FRONTAGE ROAD	62702+44	6	1.75	4.75	49.0	25.9	14	
SB FRONTAGE ROAD	62702+33	18	2.92	5.92	39.0	25.6	21	
SB FRONTAGE ROAD	62704+11	6	1.75	4.75	77.0	40.6	22	
SB FRONTAGE ROAD	62704+89	18	2.92	5.92	91.0	59.8	48	
SB FRONTAGE ROAD	61709+25	18	2.92	5.92	38.0	25.0	20	
SB FRONTAGE ROAD	62715+25	24	3.50	6.50	56.0	40.4	37	
SB FRONTAGE ROAD	62715+72	18	2.92	5.92	24.0	15.8	13	
SB FRONTAGE ROAD	62719+53	18	2.92	5.92	36.0	23.7	19	
SUB TOTAL						617.8	517	0
SHEET 6								
NB FRONTAGE ROAD	50723+96	18	2.92	5.92	14.0	9.2	7	
NB FRONTAGE ROAD	50725+77	42	5.33	8.33	87.0	80.6	96	
NB FRONTAGE ROAD	50729+86	18	2.92	5.92	24.0	15.8	13	
NB FRONTAGE ROAD	50733+79	24	3.50	6.50	25.0	18.1	17	
NB FRONTAGE ROAD	50737+80	18	2.92	5.92	24.0	15.8	13	
NB FRONTAGE ROAD	50741+66	18	2.92	5.92	25.0	16.4	13	
NB FRONTAGE ROAD	50741+94	18	2.92	5.92	39.0	25.6	21	
SB MAINLANE	720+54	18	2.92	5.92	37.0	24.3	20	
SB FRONTAGE ROAD	62723+04	36	3.67	3.67	69.0	28.1	7	
SB FRONTAGE ROAD	62723+51	42	4.25	4.25	93.0	43.9	13	
SB FRONTAGE ROAD	62723+68	18	2.92	5.92	45.0	29.6	24	
SB MAINLANE	723+84	18	2.92	5.92	41.0	30.9	22	
SB FRONTAGE ROAD	62729+84	18	2.92	5.92	23.0	15.1	12	
SB FRONTAGE ROAD	62734+73	24	3.50	6.50	23.0	16.6	15	
SB FRONTAGE ROAD	62738+45	18	2.92	5.92	26.0	17.1	14	
SB FRONTAGE ROAD	62741+99	18	2.92	5.92	23.0	15.1	12	
SB FRONTAGE ROAD	62742+23	18	2.92	5.92	100.0	65.7	53	
SUB TOTAL						467.9	372	0
SHEET 7								
NB FRONTAGE ROAD	50745+10	24	3.50	6.50	24.0	17.3	16	
NB FRONTAGE ROAD	50748+40	48	5.83	8.83	24.0	23.6	29	
NB FRONTAGE ROAD	50748+83	48	5.83	8.83	26.0	25.5	32	
TRUNKLINE I	750+09	72	8.17	11.17	180.0	223.3	339	37
NB FRONTAGE ROAD	50751+90	52	6.17	9.17	81.0	82.5	107	14
NB FRONTAGE ROAD	50752+75	36	4.67	7.67	153.0	130.3	143	
NB FRONTAGE ROAD	50758+31	18	2.92	5.92	35.0	23.0	19	
NB FRONTAGE ROAD	50764+94	18	2.92	5.92	35.0	23.0	19	
SB FRONTAGE ROAD	62745+23	24	3.50	6.50	23.0	16.6	15	
SB FRONTAGE ROAD	62748+26	18	2.92	5.92	28.0	18.4	15	
SB FRONTAGE ROAD	62748+32	48	5.83	8.83	162.0	159.0	199	
SB FRONTAGE ROAD	62751+51	48	5.83	8.83	336.0	329.8	413	
SB FRONTAGE ROAD	62757+98	24	3.50	6.50	36.0	26.0	24	
SB FRONTAGE ROAD	62762+04	18	2.92	5.92	36.0	23.7	19	
SB FRONTAGE ROAD	62765+57	18	2.92	5.92	38.0	25.0	20	
SUB TOTAL						1147.0	1409.0	51.0
SHEET 8								
NB FRONTAGE ROAD	50767+29	24	3.50	6.50	28.0	20.2	19	
NB FRONTAGE ROAD	50767+92	18	2.92	5.92	67.0	44.0	36	
NB FRONTAGE ROAD	50767+86	24	3.50	6.50	295.0	213.1	195	
NOLANA LOOP	22+08	18	2.92	5.92	66.0	43.4	35	
NB FRONTAGE ROAD	50772+27	24	3.50	6.50	35.0	25.3	23	
NB FRONTAGE ROAD	50776+45	18	2.92	5.92	35.0	23.0	19	
NB FRONTAGE ROAD	50780+04	18	2.92	5.92	35.0	23.0	19	
NB FRONTAGE ROAD	50782+04	18	2.92	5.92	45.0	29.6	24	
NB FRONTAGE ROAD	50783+03	36	4.67	7.67	221.0	188.3	206	
SB FRONTAGE ROAD	62767+11	30	4.08	7.08	140.0	110.2	111	
SB FRONTAGE ROAD	62768+92	30	4.08	7.08	360.0	283.3	286	
NOLANA LOOP	12+60	24	3.50	6.50	77.0	55.6	51	
SB FRONTAGE ROAD	62781+44	18	2.92	5.92	42.0	27.6	22	
SB FRONTAGE ROAD	62784+86	18	2.92	5.92	45.0	29.6	24	
SB FRONTAGE ROAD	62790+78	18	2.92	5.92	36.0	23.7	19	
SUB TOTAL						1139.9	1089.0	0.0

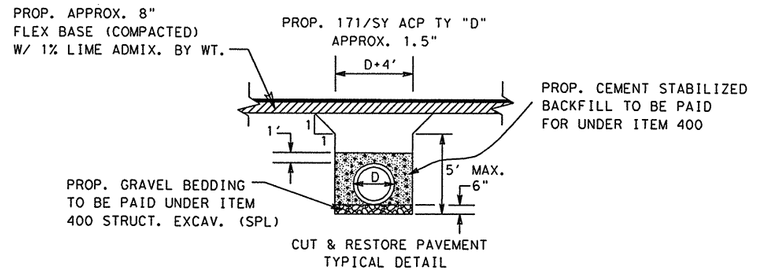

TO BE USED WHEN CUT IS GREATER THAN 10 FEET

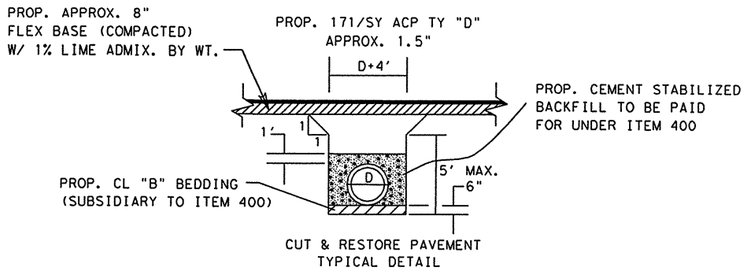

TO BE USED WHEN CUT IS LESS THAN 10 FEET

Parsons Brinckerhoff Quade & Douglas Inc.

Texas Department of Transportation

© 2003 by TxDOT

US 281 TRAFFIC CONTROL QUANTITY SUMMARY

SHEET 14 OF 16				281TCPSUM13.DGN				
DESIGNED: DM	FED. RD DIV. NO.	STATE	FEDERAL AID PROJECT No.				HIGHWAY No.	
CHECKED: JP	6	TEXAS					US 281	
DRAWN: KTD	STATE DISTRICT	COUNTY	CONTROL No.	SECTION No.	JOB No.	SHEET No.		
CHECKED: DM	PHARR	HIDALGO	0255	08	091	52		

NAME
02:43:01 PM
07/02/2003
i:\22322a\cadd\sheets\summary\281tcpsum13.dgn

NAME
02:43:06 PM
07/02/2003

	CUT AND RESTORE ITEM 400							
	STATION (FT)	DIAMETER (IN)	HEIGHT OF CUT (FT)	WIDTH OF EXCAVATION (FT)	LENGTH OF PIPE (FT)	CUT AND RESTORE (SY)	CEM STABIL BKFL (CY)	STRUC EXCAV (SPL) (CY)
PHASE IA (CONT.)								
SHEET 9								
NB FRONTAGE ROAD	50795+97	18	2.92	5.92	35.0	23.0	19	
NB FRONTAGE ROAD	50802+03	18	2.92	5.92	35.0	23.0	19	
NB FRONTAGE ROAD	50805+03	18	2.92	5.92	35.0	23.0	19	
NB FRONTAGE ROAD	50811+36	66	7.58	10.58	55.0	64.7	94	66
NB FRONTAGE ROAD	50812+00	18	3.00	6.00	69.0	46.0	38	
SB FRONTAGE ROAD	62802+33	18	2.92	5.92	35.0	23.0	19	
SB FRONTAGE ROAD	62805+11	18	2.92	5.92	35.0	23.0	19	
SUB TOTAL						225.7	227	66
SHEET 10								
NB FRONTAGE ROAD	50819+50	18	2.92	5.92	36.0	23.7	19	
NB FRONTAGE ROAD	50820+76	54	6.42	9.42	60.0	62.8	83	70.0
NB FRONTAGE ROAD	50820+63	30	4.08	7.08	54.0	42.5	43	
SIOUX ROAD	22+70	24	3.50	6.50	48.0	34.7	32	
NB FRONTAGE ROAD	50823+00	18	2.92	5.92	35.0	23.0	19	
NB FRONTAGE ROAD	50837+48	48	5.83	8.83	152.0	149.2	187	
SB FRONTAGE ROAD	62818+77	18	2.92	5.92	45.0	29.6	24	
SB FRONTAGE ROAD	62820+85	24	3.50	6.50	40.0	28.9	26	
SIOUX ROAD	16+55	18	2.92	5.92	55.0	36.2	29	
SIOUX ROAD	14+43	18	2.92	5.92	55.0	30.9	29	
SB FRONTAGE ROAD	62822+69	24	3.50	6.50	50.0	38.1	33	
SB FRONTAGE ROAD	62836+45	18	2.92	5.92	38.0	25.0	20	
SUB TOTAL						522.6	544	70
SHEET 11								
NB FRONTAGE ROAD	50840+00	18	2.92	5.92	52.0	34.2	28	
NB MAINLANE	841+50	18	2.92	5.92	63.0	41.4	34	
NB FRONTAGE ROAD	50845+26	30	4.08	7.08	48.0	37.8	38	
NB FRONTAGE ROAD	50845+29	30	4.08	7.08	161.0	126.7	128	
NB FRONTAGE ROAD	50846+88	24	3.50	6.50	260.0	187.8	172	
NB FRONTAGE ROAD	50846+88	18	2.92	5.92	58.0	38.1	31	
NB FRONTAGE ROAD	50846+88	24	3.50	6.50	71.0	51.3	47	
SH 495	19+26	18	2.92	5.92	84.0	55.2	45	
SB FRONTAGE ROAD	62843+07	18	2.92	5.92	53.0	34.8	28	
SB FRONTAGE ROAD	62845+50	18	2.92	5.92	59.0	38.8	31	
SB FRONTAGE ROAD	62848+19	18	2.92	5.92	130.0	85.5	69	
SH 495	15+44	18	2.92	5.92	88.0	57.9	47	
SH 495	14+00	18	2.92	5.92	85.0	55.9	45	
SB FRONTAGE ROAD	62849+05	18	2.92	5.92	52.0	34.2	28	
SUB TOTAL						879.6	771	0
TOTAL PHASE IA						7954.1	8037.0	220.0

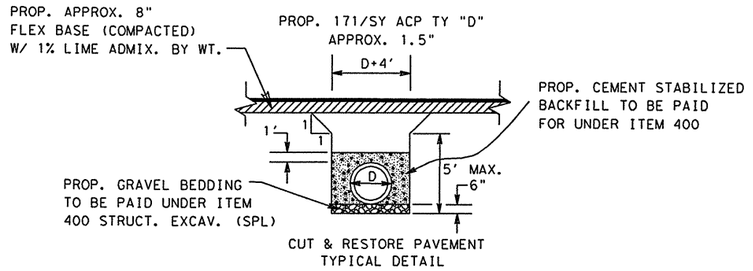

TO BE USED WHEN CUT IS GREATER THAN 10 FEET

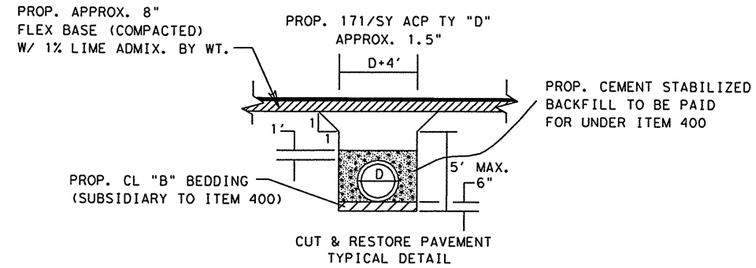

TO BE USED WHEN CUT IS LESS THAN 10 FEET

Parsons Brinckerhoff Quade & Douglas Inc.

Texas Department of Transportation

© 2003 by TxDOT

US 281
TRAFFIC CONTROL
QUANTITY SUMMARY

SHEET 15 OF 16						281TCPSUM14.DGN	
DESIGNED: DM	FED. RD DIV. No.	STATE	FEDERAL AID PROJECT No.			HIGHWAY No.	
CHECKED: JP	6	TEXAS				US 281	
DRAWN: KTD	STATE DISTRICT	COUNTY	CONTROL No.	SECTION No.	JOB No.	SHEET No.	
CHECKED: DM	PHARR	HIDALGO	0255	08	091	53	

i:\22322a\cadd\sheets\summary\281tcpsum14.dgn

NAME
08/06/2003 03:48:10 PM
H:\223220\CADD\quantities\281TCPSUM15.dgn

ITEM 5249 TEMP SEDMT CONT FENCE (INLET)

	STATION	TEMP SEDMT CONT FENCE (LF)	TEMP SEDMT CONT FENCE (REMOVE & REPLACE) (LF)	TEMP SEDMT CONT FENCE (REMOVE) (LF)
SOUTHBOUND				
G40	61615+31	48	48	48
G34	61620+13	48		48
G33	61620+94	48	48	48
G2	61630+50	48		48
G4	61633+53	48	48	48
G6	61636+56	48		48
G7	61644+83	48	48	48
G9	61648+60	48		48
G19	61660+62	48	48	48
G21	665+47	48		48
G24	61667+62	48	48	48
H2	61675+35	48		48
H4	61681+62	48	48	48
H6	61685+12	48		48
H9	61688+02	48	48	48
H11	61699+62	48		48
H12	61699+62	48	48	48
H14	61702+24	48		48
H20	61703+91	48	48	48
H29	61703+91	48		48
H13	61703+63	48	48	48
H15	62702+19	48		48
H17	62701+01	48	48	48
H21	62700+51	48		48
H22	62704+24	48	48	48
H27	62705+36	48		48
I32	62707+42	48	48	48
I35	62707+42	48		48
I31	62709+23	48	48	48
I25	62712+18	48		48
I26	62712+18	48	48	48
I19	62714+65	48		48
I36	62715+04	48	48	48
I21	62716+04	48		48
I29	14+50	48	48	48
I30	14+50	48		48
IJ6	62718+37	48	48	48
I6	62719+53	48		48
I5	62719+53	48	48	48
I8	62723+68	48		48
I10	62729+84	48	48	48
I9	62729+84	48		48
I12	62734+72	48	48	48
I11	62734+73	48		48
I13	62738+44	48	48	48
I14	62738+44	48		48
I16	62745+22	48	48	48
I15	62745+22	48		48
I18	62747+98	48	48	48
I17	62748+40	48		48
I20	62750+24	48	48	48
K6	62757+98	48		48
K4	62762+02	48	48	48
N21	14+00	48		48
N22	14+00	48	48	48
L26	62772+04	48		48
L8	62776+71	48	48	48
JL6	62780+19	48		48
L29	62787+02	48	48	48
L12	62793+01	48		48
L17	62798+99	48	48	48
L18	62802+32	48		48
L21	62807+91	48	48	48
N13	62811+52	48		48
N11	62815+53	48	48	48
JN5	16+41	48		48
JN6	16+41	48	48	48
N19	14+43	48		48
N20	14+43	48	48	48
N8	62826+58	48		48
N23	62833+05	48	48	48
SUBTOTAL		3408	1728	3408

ITEM 5249 TEMP SEDMT CONT FENCE (INLET)

	STATION	TEMP SEDMT CONT FENCE (LF)	TEMP SEDMT CONT FENCE (REMOVE & REPLACE) (LF)	TEMP SEDMT CONT FENCE (REMOVE) (LF)
NORTHBOUND				
O12	50620+00	48	48	48
O11	50624+25	48		48
O5	50628+86	48	48	48
O6	50632+63	48		48
O7	50636+44	48	48	48
O8	50641+57	48		48
O1	50644+38	48	48	48
F10	50659+25	48		48
F14	50666+50	48	48	48
F16	50670+00	48		48
E26	50674+13	48	48	48
E24	50677+00	48		48
E22	50680+50	48	48	48
E20	50684+00	48		48
E18	50687+50	48	48	48
E16	50689+10	48		48
E13	50699+37	48	48	48
E12	50703+91	48		48
E9	704+02	48	48	48
E8	50707+63	48		48
E5	710+78	48	48	48
JD1	50717+96	48		48
D2	50721+52	48	48	48
D4	50724+00	48		48
D6	50729+85	48	48	48
D14	50733+29	48		48
D15	50733+85	48	48	48
D7	50733+85	48		48
D9	50737+80	48	48	48
D8	50737+79	48		48
D18	50741+62	48	48	48
D19	50741+93	48		48
D10	50745+10	48	48	48
D11	50745+10	48		48
D12	50748+40	48	48	48
D13	50748+39	48		48
C9	50752+27	48	48	48
C8	50758+29	48		48
C3	50761+78	48	48	48
C2	50764+93	48		48
C16	50768+60	48	48	48
B2	50771+77	48		48
B3	50776+46	48	48	48
B5	50780+05	48		48
B8	50788+99	48	48	48
B10	50795+97	48		48
B12	50798+76	48	48	48
B13	50802+02	48		48
B15	50805+01	48	48	48
A10	50815+31	48		48
A24	19+43	48	48	48
A25	19+43	48		48
A8	50826+32	48	48	48
A6	50831+78	48		48
A19	50837+45	48	48	48
SUBTOTAL		2640	1344	2640
TOTAL		6048	2928	6048

ITEM 5249 TEMP SEDMT CONT FENCE (DITCH)

STATION	TEMP SEDMT CONT FENCE (LF)	TEMP SEDMT CONT FENCE (REMOVE & REPLACE) (LF)	TEMP SEDMT CONT FENCE (REMOVE) (LF)
SOUTHBOUND			
61611+00	30	30	30
61619+00	30		30
61622+00	30	30	30
61634+00	30		30
61637+50	30	30	30
61653+00	30		30
61657+50	30	30	30
61670+00	30		30
61675+00	30	30	30
61690+00	30		30
61692+00	30	30	30
61708+50	30		30
62714+00	30	30	30
62717+00	30		30
62729+00	30	30	30
62731+00	30		30
62749+00	30	30	30
62751+00	30		30
62767+00	30	30	30
62770+00	30		30
62777+00	30	30	30
62784+00	30		30
62804+00	30	30	30
62809+00	30		30
62819+50	30	30	30
62822+50	30		30
62832+00	30	30	30
62839+00	30		30
62846+00	30	30	30
NORTHBOUND			
50610+00	30	30	30
50619+00	30		30
50616+00	30	30	30
50644+50	30		30
50643+00	30	30	30
50654+00	30		30
50657+00	30	30	30
50674+00	30		30
50695+50	30	30	30
50694+00	30		30
50710+00	30	30	30
50717+00	30		30
50732+00	30	30	30
50731+50	30		30
50755+75	30	30	30
50754+00	30		30
50766+50	30	30	30
50770+00	30		30
50782+00	30	30	30
50785+50	30		30
50807+50	30	30	30
50813+00	30		30
50819+50	30	30	30
50822+50	30		30
50837+00	30	30	30
50840+50	30		30
50845+50	30	30	30
TOTAL	1680	870	1680

ITEM

SHEET / STATION LIMITS	PORT CHANGE MES SGN (EA)
THROUGHOUT PROJECT	4
TOTAL	4

GIVE US A BRAKE SIGNS

	ITEM 634 PLYWOOD SIGNS (TY A) SF	ITEM 647 LG RDSD SGN SUPT (STRUCT STL) LB	ITEM 656 FND LG RDSD SGN SUPT (24 IN DRIL SHFT) LF
NBML			
EG20-7	256	1188	24
CW21-1T	32		
SBML			
EG20-7	256	1188	24
CW21-1T	32		
TOTAL	576	2376	48

ITEM 5010

SHEET / STATION LIMITS	CONST EXIT TYPE II (SY)	CONST EXIT REM & REP TYPE II (SY)	CONST EXIT REM TYPE II (SY)
THROUGHOUT PROJECT	1478	1478	1478
TOTAL	1478	1478	1478

MILLING AND OVERLAY ITEMS 354 & 3146

	ITEM 354 PLANE ASPH CONC PAV (SY)	ITEM 3146 HOT MIX (TY D) (SURF) (PG 64-22) (TON)
PHASE III		
SHEET 7 OF 11		
NB MAINLANE	540.2	46
SB MAINLANE	475.7	41
SHEET 8 OF 11		
NB MAINLANE	399.8	34
SB MAINLANE	693.5	59
SHEET 10 OF 11		
NB MAINLANE	1226.8	105
SB MAINLANE	1288.3	110
TOTAL	4624	395

1.5" AVERAGE DEPTH OF MILL AND OVERLAY

ITEM 5012 FRNT END LDR WORK (EROSN CONT)

LOCATION	LOCATONS (EA)	QUANTITY * (HR)
SED CONTROL FENCE	182	1365
TOTAL		1365

* 1/2 HR/LOCATION/MONTH (APPROX 15 MONTHS)

THE SEAL APPEARING ON THIS DOCUMENT WAS AUTHORIZED BY JOHN M PEREZ, P.E. 66425 ON 08/06/2003.

STATE OF TEXAS
JOHN M. PEREZ
66425
REGISTERED PROFESSIONAL ENGINEER
8/6/03

Parsons Brinckerhoff Quade & Douglas Inc.

Texas Department of Transportation

© 2003 by TxDOT

US 281 TRAFFIC CONTROL QUANTITY SUMMARY

SHEET 16 OF 16				281TCPSUM15.DGN			
DESIGNED: PAF	FED. RD DIV. No.	STATE	FEDERAL AID PROJECT No.				HIGHWAY No.
CHECKED: JP	6	TEXAS					US 281
DRAWN: KTD	STATE DISTRICT	COUNTY	CONTROL No.	SECTION No.	JOB No.	SHEET No.	
CHECKED: JDH	PHARR	HIDALGO	0255	08	091	54	

NAME

10:57:28 AM

06/20/2003

THIS TRAFFIC CONTROL PLAN IS SUBMITTED FOR THE CONTRACTOR'S CONSIDERATION. THE CONTRACTOR MAY SUBMIT AN ALTERNATE CONSTRUCTION SEQUENCE AND TRAFFIC CONTROL PLAN TO THE ENGINEER FOR APPROVAL.

THE CONTRACTOR'S ATTENTION IS DIRECTED TO THE REQUIREMENTS OF ITEM 7, "LEGAL RELATIONS AND RESPONSIBILITIES TO THE PUBLIC" OF THE STANDARD SPECIFICATIONS.

ALL SIGNS, BARRICADES, WORK ZONE MARKINGS AND DEVICES AS SHOWN HEREON SHALL BE IN ACCORDANCE WITH THE "TEXAS MANUAL ON UNIFORM TRAFFIC CONTROL DEVICES" (T.M.U.T.C.D.), WITH LATEST REVISIONS.

THE TRAFFIC CONTROL PLAN HAS BEEN DIVIDED INTO FIVE (5) PHASES OF CONSTRUCTION. THE VARIOUS PHASES AND STEPS WILL REQUIRE DETOURS, LANE TRANSITIONS, AND LANE OR SHOULDER CLOSURE TRANSITIONS. THE CONTRACTOR SHALL BE RESPONSIBLE FOR REMOVING ALL CONFLICTING PAVEMENT MARKINGS AND FOR INSTALLING THE REQUIRED TEMPORARY CONC. TRAFFIC BARRIERS, CHANNELIZING DEVICES WITH APPROPRIATE CONSTRUCTION PAVEMENT MARKINGS AND CONSTRUCTION WARNING SIGNS IN ACCORDANCE WITH THE TRAFFIC CONTROL PLANS, BARRICADE AND CONSTRUCTION STANDARD SHEETS, THE T.M.U.T.C.D. AND/OR AS DIRECTED BY THE ENGINEER. SINCE THE TRAFFIC CONTROL PLAN IS COMPLEX DUE TO THE VARIOUS PHASES AND STEPS OF WORK INVOLVED, MOVING FROM ONE PHASE OR SEQUENCE TO ANOTHER WILL REQUIRE ADVANCE COMPREHENSIVE PLANNING, SO AS TO MAXIMIZE SAFETY AND MINIMIZE INCONVENIENCE FOR THE TRAVELING PUBLIC. THEREFORE, THE CONTRACTOR WILL BE REQUIRED TO ASSIGN A KNOWLEDGEABLE AND RESPONSIBLE TRAFFIC CONTROL PERSON TO PROVIDE COORDINATION IN THIS REGARD, WITH HIS WORK FORCES, SUBCONTRACTORS AND THE ENGINEER.

THE TRAFFIC CONTROL PLAN AND VARIOUS PHASES AND SEQUENCES OF CONSTRUCTION SERVE AS A GUIDE FOR THE SAFE HANDLING OF TRAFFIC DURING CONSTRUCTION OF THE PROJECT ROADWAYS, UTILITIES, AND OTHER RELATED ITEMS. THE TRAFFIC CONTROL PLANS PROVIDED IN THE PLAN SET DOES NOT ATTEMPT TO ADDRESS EVERY ASPECT OF CONSTRUCTION THAT IS REQUIRED DURING EACH PHASE OF CONSTRUCTION, AND THEREFORE, THE CONTRACTOR IS NOT RELIEVED OF THE RESPONSIBILITY OF CONSTRUCTING THE COMPLETE ROADWAYS, UTILITIES AND OTHER RELATED ITEMS, AS NOTED ON THE PLANS AND SPECIFICATIONS.

BY BIDDING AND ACCEPTING TO PERFORM THE CONSTRUCTION WORK, THE CONTRACTOR ACKNOWLEDGES AND ACCEPTS THAT THE "TRAFFIC CONTROL PLANS" PROVIDED WITH THE PLAN SET ONLY SERVES AS A "GUIDE" FOR THE SAFE HANDLING OF TRAFFIC DURING CONSTRUCTION OF THE PROJECT ROADWAYS, UTILTIES AND OTHER RELATED ITEMS. THE CONTRACTOR ALSO ACCEPTS AND ACKNOWLEDGES THAT THE CONTRACTOR SHALL BE RESPONSIBLE FOR ENSURING ALL LAWS, REGULATIONS, ACCEPTED SAFE PRACTICES, AND STANDARD REQUIREMENTS FOR THE SAFE HANDLING OF TRAFFIC DURING CONSTRUCTION ARE STRICTLY FOLLOWED. THE CONTRACTOR SHALL FOLLOW ALL GUIDELINES ESTABLISHED IN THE T.M.U.T.C.D. FOR THE PURPOSE OF SAFE TRAFFIC HANDLING, INCLUDING BUT NOT LIMITED TO THE GUIDELINES PROVIDED IN THE LATEST VERSION OF "PART VI OF THE TEXAS MANUAL ON UNIFORM TRAFFIC CONTROL DEVICES".

THE CONTRACTOR SHALL BE RESPONSIBLE FOR COORDINATING THE WORK BETWEEN THE VARIOUS TRADES AND SUB-CONTRACTORS, TO ASSURE THAT ALL WORK IS ACCOMPLISHED FOR EACH PHASE OF CONSTRUCTION AND WILL NOT CONFLICT OR REQUIRE CHANGES OR ADDITIONAL WORK DURING OTHER PHASES OF CONSTRUCTION.

THE PROJECT AREA IS TO BE SIGNED FOR A WORK-ZONE SPEED OF 50 MPH ALONG MAINLANES AND 40 MPH ALONG THE FRONTAGE ROADS. THIS WILL BE AN ENFORCEABLE REGULATORY SPEED FOR THE US 281 MAINLANES ONLY, AS NOTED ON THE PLANS. ADVISORY SPEED SIGNS IN SUFFICIENT NUMBER, AS NOTED ON THE PLANS AND/OR AS DETERMINED BY THE ENGINEER, SHALL BE FURNISHED IN ALL OTHER AREAS OF THE PROJECT.

THE CONTRACTOR SHALL PROVIDE OFF-DUTY UNIFORMED LAW ENFORCEMENT OFFICER(S) (NUMBER AS DETERMINED BY THE ENGINEER), WITH JURISDICTION IN THE PROJECT AREA FOR TRAFFIC CONTROL OPERATIONS. THIS DOES NOT RELIEVE THE CONTRACTOR OF THE RESPONSIBILITY OF TAKING OTHER STEPS AND PROVIDING OTHER PERSONNEL WHICH THE ENGINEER MAY DEEM NECESSARY FOR THE PROTECTION OF THE WORKERS AND SAFETY OF THE PUBLIC.

THE CONTRACTOR SHALL COORDINATE THE TRAFFIC CONTROL PLAN AND THE VARIOUS SEQUENCES OF CONSTRUCTION WITH ANY ADJACENT CONSTRUCTION PROJECTS TO ENSURE THE UNINTERRUPTED FLOW OF TRAFFIC THROUGH THE PROJECT AREAS.

THE CONTRACTOR SHALL NOTIFY THE PROPER CITY, COUNTY, E.M.S., FIRE DEPARTMENT, POLICE DEPARTMENT, TEXAS DEPT. OF PUBLIC SAFETY AND TEXAS DEPT. OF TRANSPORTATION OFFICIALS WHEN MAJOR TRAFFIC CHANGES ARE TO BE MADE. CONTRACTOR TO COORDINATE WITH TEXAS DEPARTMENT OF TRANSPORTATION ON THE MAJOR TRAFFIC CHANGES SO THAT TXDOT CAN CONTACT THE PUBLIC MEDIA TO NOTIFY AND ADVISE THE TRAVELING PUBLIC OF THE PROPOSED TRAFFIC CHANGES. THE NOTIFICATION MUST BE MADE AT LEAST THREE (3) DAYS PRIOR TO THE CHANGE.

FOR THIS PROJECT, THE CONTRACTOR SHALL FURNISH AND INSTALL FOUR (4) PORTABLE CHANGEABLE MESSAGE SIGNS (PCMS), TO INFORM THE PUBLIC OF CHANGES IN TRAFFIC PATTERNS. THESE SIGNS SHALL REMAIN IN PLACE FOR THE DURATION OF THE PROJECT, AND SHALL BE ACTIVATED AT LEAST SEVENTY-TWO (72) HOURS PRIOR TO ALL TRAFFIC PHASE CHANGES. THE PCMS SHOULD BE PLACED FAR ENOUGH IN ADVANCE OF THE WORK SITE TO ALLOW TRAFFIC AMPLE TIME AND OPPORTUNITY TO EXIT THE FREEWAY. UPON COMPLETION OF THE PROJECT, THE PCMS SHALL REMAIN THE PROPERTY OF THE CONTRACTOR. THE PCMS AND ALL RELATED COSTS FOR SETUP, RELOCATION, MAINTENANCE, REMOVAL AND INCIDENTALS SHALL BE SUBSIDIARY TO ITEM 502. THE CONTRACTOR SHALL BE RESPONSIBLE FOR UPDATING DAILY MESSAGES.

A TYPE "C" FLASHING ARROW PANEL SHALL BE USED IN CONNECTION WITH ALL LANE CLOSURE SIGNING. THE CONTRACTOR SHALL BE RESPONSIBLE FOR FURNISHING, MAINTAINING AND OPERATING THESE DEVICES IN A MANNER ACCEPTABLE TO THE ENGINEER AT THE CONTRACTOR'S EXPENSE.

CROSSROAD SIGNING SHALL BE AS SHOWN ON BC (2)-03 AND AS DIRECTED BY THE ENGINEER. THE TRAFFIC CONTROL PLANS GRAPHICALLY INDICATE THE LOCATION AND TYPE OF TRAFFIC SIGNS TO BE USED FOR TRAFFIC CONTROL DURING THE VARIOUS PHASES AND SEQUENCES OF CONSTRUCTION. THE CONTRACTOR SHALL BE RESPONSIBLE FOR PROVIDING THE APPROPRIATE SIGN SUPPORTS, ACCORDING TO ITS LOCATION AND USE, AS SHOWN ON THE PLANS AND IN ACCORDANCE WITH THE "BARRICADE AND CONSTRUCTION STANDARDS".

ADVANCE PROJECT LIMIT AND CROSSROAD SIGNING WITH WARNING LIGHTS, SHALL BE PLACED IN ACCORDANCE WITH THE "BARRICADE AND CONSTRUCTION STANDARDS" SHEETS BC(1)-03 THRU BC(12)-03. THESE SIGNS SHALL REMAIN IN PLACE UNTIL FINAL PROJECT ACCEPTANCE BY TXDOT.

FOR THIS PROJECT, THE CONTRACTOR SHALL INSTALL "GIVE US A BRAKE": WORK ZONE (G20-7) SIGNS AT EACH APPROACH, HALF-WAY THROUGH THE CONSTRUCTION AREA AND AT LOCATIONS TO BE DETERMINED IN THE FIELD BY THE ENGINEER. SEE STANDARD SHEETS WZ (BRK)-03 FOR DETAILS. THESE SIGNS SHALL BE PAID FOR UNDER ITEM 634 "PLYWOOD SIGN TYPE A", "FOUNDATIONS FOR SIGNS, TRAFFIC SIGNALS AND ROADSIDE ILLUMINATION ASSEMBLIES".

THE BARRICADES, SIGNS, CHANNELIZING DEVICES AND OTHER TRAFFIC HANDLING DEVICES, MAY BE ADJUSTED OR SHIFTED TO FIT FIELD CONDITIONS OR AS REQUIRED FOR CONSTRUCTION AND SET UP, FOR THE VARIOUS PHASES, AS SHOWN ON THE PLANS AND AS DIRECTED BY THE ENGINEER.

ADEQUATE SIGNS AND BARRICADES SHALL BE INSTALLED BY THE CONTRACTOR AND APPROVED BY THE ENGINEER PRIOR TO OPENING ANY SECTION TO TRAFFIC. THE ENGINEER MAY DIRECT THE CONTRACTOR TO FURNISH ADDITIONAL SIGNS, BARRICADES, AND CHANNELIZING DEVICES AS REQUIRED TO MAINTAIN TRAFFIC AND MOTORIST SAFETY DURING CONSTRUCTION. ANY SUCH ADDITIONAL SIGNS AND BARRICADES, ETC. SHALL BE CONSIDERED SUBSIDIARY TO PAY ITEM 502 "BARRICADES, SIGNS AND TRAFFIC HANDLING".

THE CONTRACTOR SHALL MAINTAIN BARRICADES, SIGNS, CHANNELIZING DEVICES, WARNING LIGHTS AND TRAFFIC HANDLING DEVICES IN A CLEAN AND FUNCTIONAL CONDITION AT ALL TIMES, INCLUDING MAINTENANCE DUE TO ACTS OF VANDALISM OR ACCIDENT. THE CONTRACTOR SHALL HAVE ENOUGH SIGNS AND BARRICADES AVAILABLE, AT ALL TIMES, TO REPLACE THOSE DAMAGED.

CONTRACTOR SHALL UTILIZE TRAFFIC CONTROL DEVICES AS SHOWN ON THE PLANS ON A "PER PHASE" BASIS. THEREFORE, ANY DEVICES UTILIZED IN A PREVIOUS PHASE THAT CONFLICT WITH THE TRAFFIC CONTROL FOR THE CURRENT PHASE SHALL BE REMOVED. ANY DEVICES THAT ARE UTILIZED IN CONSECUTIVE PHASES ARE NOTED AS SUCH ON THE PLANS.

THE CONTRACTOR SHALL RESTORE TRAFFIC AND SITE TO ORIGINAL CONDITION UPON COMPLETION OF THE PROJECT. ALL TEMPORARY PAVEMENT AND TRAFFIC CONTROL DEVICES SHALL BE REMOVED FROM THE PROJECT. MATERIALS FURNISHED, INSTALLED AND REMOVED BY THE CONTRACTOR SHALL BECOME THE PROPERTY OF THE CONTRACTOR, UNLESS OTHERWISE SHOWN ON THE PLANS.

FOR PEDESTRIAN SAFETY, PLASTIC CONSTRUCTION FENCING (MINIMUM 4' HIGH) SHALL BE USED AROUND ALL OPEN EXCAVATIONS AS REQUIRED OR DIRECTED BY THE ENGINEER. FOR DAYTIME BRIDGE CONSTRUCTION, CONTRACTOR SHALL PROVIDE A SAFE ROUTE AWAY FROM THE IMMEDIATE CONSTRUCTION AREA FOR PEDESTRIAN TRAFFIC TO ENSURE THEIR SAFETY THROUGH THE BRIDGE ZONE. THIS INCLUDES A TRAVERSABLE PATH IF DEEMED NECESSARY BY THE ENGINEER.

DETOUR STRIPING AND SIGNING SHALL BE AS SHOWN ON THE PLANS AND IN ACCORDANCE WITH THE T.M.U.T.C.D.

ALL WORK ZONE PAVEMENT MARKINGS SHALL BE THE RESPONSIBILITY OF THE CONTRACTOR AND SHALL BE IN ACCORDANCE WITH THE "STANDARD SHEETS" WZ (STPM)-03 AND BC(10) AND (11)-03 AND THE T.M.U.T.C.D.

WORK ZONE PAVEMENT MARKINGS ON BRIDGES AND THOSE INSTALLED AFTER THE COMPLETION OF WORK ON A CERTAIN PHASE SEQUENCE, AND WHICH ARE TO BE REMOVED ON A SUBSEQUENT SEQUENCE OF WORK, SHALL BE OF THE REMOVABLE TYPE. ALL NON REMOVABLE WORK ZONE PAVEMENT MARKINGS SHALL BE THERMOPLASTIC.

ALL WORK ZONE GUIDEMARKS, SHORT TERM MARKINGS AND STANDARD MARKINGS USED ON THIS PROJECT AS REQUIRED BY THE T.M.U.T.C.D., WILL BE PAID FOR UNDER ITEM 662 "WORK ZONE PAVEMENT MARKINGS".

ALL DRUMS USED ON THIS PROJECT FOR TRAFFIC CONTROL SHALL BE PLASTIC. PLASTIC DRUMS, SHALL BE USED IN ACCORDANCE WITH THE PLANS AND MANUFACTURER'S RECOMMENDATIONS OR AS DIRECTED BY THE ENGINEER.

DURING CONSTRUCTION, THE CONTRACTOR SHALL BE REQUIRED TO FURNISH, PLACE AND MAINTAIN IN ACCORDANCE WITH THE "TEXAS MANUAL ON UNIFORM TRAFFIC CONTROL DEVICES FOR STREETS AND HIGHWAYS", VERTICAL PANELS ALONG THE EDGE OF PAVEMENT AND FILLS. THE VERTICAL PANELS SHALL BE SUPPLEMENTED WITH LIGHTS AS DIRECTED BY THE ENGINEER.

THE PORTION OF THIS PROJECT WHICH COINCIDES WITH EXISTING ROAD AND/OR PRIVATE DRIVES SHALL BE KEPT OPEN TO TRAFFIC AT ALL TIMES, UNLESS OTHERWISE PROVIDED FOR OR APPROVED BY THE ENGINEER. THE CONTRACTOR WILL BE REQUIRED TO MAINTAIN AT ALL TIMES TWO LANES OF NORTHBOUND AND SOUTHBOUND SURFACED MAINLANE ROADWAYS DURING MAINLANE RECONSTRUCTION, (EXCEPT AS NOTED BELOW), ONE LANE OF ONE-WAY SURFACED FRONTAGE ROADS (MIN 11' LANE) DURING FRONTAGE ROAD RECONSTRUCTION, AND TWO-WAY SURFACED ROADWAYS (MIN 11' LANE) ON ALL OTHER ROAD RECONSTRUCTION, UNLESS OTHERWISE NOTED ON THE PLANS OR AS DIRECTED BY THE ENGINEER.

CONSTRUCTION REQUIRING TEMPORARY LANE CLOSURES OF MAINLANES, RESULTING IN LESS THAN THE MINIMUM NUMBER OF LANES AS NOTED ABOVE, SHALL BE DONE DURING OFF-PEAK HOURS, BETWEEN 9:00 A.M. TO 4:00 P.M. AND AT NIGHTTIME, OR AS DIRECTED BY THE ENGINEER. DURING THE PEAK HOURS OF 6:00 A.M. TO 8:30 A.M. AND 4:00 P.M. TO 7:00 P.M., THE CONTRACTOR SHALL MAINTAIN THE MINIMUM REQUIRED NUMBER OF LANES OPEN TO TRAFFIC.

THE SEAL APPEARING ON THIS DOCUMENT WAS AUTHORIZED BY JOHN M PEREZ, P.E. 66425 ON 06/20/2003.

STATE OF TEXAS
JOHN M. PEREZ
66425
REGISTERED PROFESSIONAL ENGINEER

6/20/03

Parsons Brinckerhoff Quade & Douglas Inc.

Texas Department of Transportation

© 2003 by TxDOT

US 281
TRAFFIC CONTROL
GENERAL NOTES

SHEET 1 OF 3				281TCPNOTES1.DGN	
DESIGNED: PAF	FED. RD DIV. No.	STATE	FEDERAL AID PROJECT No.		HIGHWAY No.
CHECKED: JP	6	TEXAS			US 281
DRAWN: KTD	STATE DISTRICT	COUNTY	CONTROL No.	SECTION No.	JOB No.	SHEET No.
CHECKED: JDH	PHARR	HIDALGO	0255	08	091	55

h:\22322a\cadd\sheets\traffic\tcp\281tcpnotes1.dgn

NAME

10:57:28 AM

06/20/2003

THIS TRAFFIC CONTROL PLAN IS SUBMITTED FOR THE CONTRACTOR'S CONSIDERATION. THE CONTRACTOR MAY SUBMIT AN ALTERNATE CONSTRUCTION SEQUENCE AND TRAFFIC CONTROL PLAN TO THE ENGINEER FOR APPROVAL.

THE CONTRACTOR'S ATTENTION IS DIRECTED TO THE REQUIREMENTS OF ITEM 7, "LEGAL RELATIONS AND RESPONSIBILITIES TO THE PUBLIC" OF THE STANDARD SPECIFICATIONS.

ALL SIGNS, BARRICADES, WORK ZONE MARKINGS AND DEVICES AS SHOWN HEREON SHALL BE IN ACCORDANCE WITH THE "TEXAS MANUAL ON UNIFORM TRAFFIC CONTROL DEVICES" (T.M.U.T.C.D.), WITH LATEST REVISIONS.

THE TRAFFIC CONTROL PLAN HAS BEEN DIVIDED INTO FIVE (5) PHASES OF CONSTRUCTION. THE VARIOUS PHASES AND STEPS WILL REQUIRE DETOURS, LANE TRANSITIONS, AND LANE OR SHOULDER CLOSURE TRANSITIONS. THE CONTRACTOR SHALL BE RESPONSIBLE FOR REMOVING ALL CONFLICTING PAVEMENT MARKINGS AND FOR INSTALLING THE REQUIRED TEMPORARY CONC. TRAFFIC BARRIERS, CHANNELIZING DEVICES WITH APPROPRIATE CONSTRUCTION PAVEMENT MARKINGS AND CONSTRUCTION WARNING SIGNS IN ACCORDANCE WITH THE TRAFFIC CONTROL PLANS, BARRICADE AND CONSTRUCTION STANDARD SHEETS, THE T.M.U.T.C.D. AND/OR AS DIRECTED BY THE ENGINEER. SINCE THE TRAFFIC CONTROL PLAN IS COMPLEX DUE TO THE VARIOUS PHASES AND STEPS OF WORK INVOLVED, MOVING FROM ONE PHASE OR SEQUENCE TO ANOTHER WILL REQUIRE ADVANCE COMPREHENSIVE PLANNING, SO AS TO MAXIMIZE SAFETY AND MINIMIZE INCONVENIENCE FOR THE TRAVELING PUBLIC. THEREFORE, THE CONTRACTOR WILL BE REQUIRED TO ASSIGN A KNOWLEDGEABLE AND RESPONSIBLE TRAFFIC CONTROL PERSON TO PROVIDE COORDINATION IN THIS REGARD, WITH HIS WORK FORCES, SUBCONTRACTORS AND THE ENGINEER.

THE TRAFFIC CONTROL PLAN AND VARIOUS PHASES AND SEQUENCES OF CONSTRUCTION SERVE AS A GUIDE FOR THE SAFE HANDLING OF TRAFFIC DURING CONSTRUCTION OF THE PROJECT ROADWAYS, UTILITIES, AND OTHER RELATED ITEMS. THE TRAFFIC CONTROL PLANS PROVIDED IN THE PLAN SET DOES NOT ATTEMPT TO ADDRESS EVERY ASPECT OF CONSTRUCTION THAT IS REQUIRED DURING EACH PHASE OF CONSTRUCTION, AND THEREFORE, THE CONTRACTOR IS NOT RELIEVED OF THE RESPONSIBILITY OF CONSTRUCTING THE COMPLETE ROADWAYS, UTILITIES AND OTHER RELATED ITEMS, AS NOTED ON THE PLANS AND SPECIFICATIONS.

BY BIDDING AND ACCEPTING TO PERFORM THE CONSTRUCTION WORK, THE CONTRACTOR ACKNOWLEDGES AND ACCEPTS THAT THE "TRAFFIC CONTROL PLANS" PROVIDED WITH THE PLAN SET ONLY SERVES AS A "GUIDE" FOR THE SAFE HANDLING OF TRAFFIC DURING CONSTRUCTION OF THE PROJECT ROADWAYS, UTILTIES AND OTHER RELATED ITEMS. THE CONTRACTOR ALSO ACCEPTS AND ACKNOWLEDGES THAT THE CONTRACTOR SHALL BE RESPONSIBLE FOR ENSURING ALL LAWS, REGULATIONS, ACCEPTED SAFE PRACTICES, AND STANDARD REQUIREMENTS FOR THE SAFE HANDLING OF TRAFFIC DURING CONSTRUCTION ARE STRICTLY FOLLOWED. THE CONTRACTOR SHALL FOLLOW ALL GUIDELINES ESTABLISHED IN THE T.M.U.T.C.D. FOR THE PURPOSE OF SAFE TRAFFIC HANDLING, INCLUDING BUT NOT LIMITED TO THE GUIDELINES PROVIDED IN THE LATEST VERSION OF "PART VI OF THE TEXAS MANUAL ON UNIFORM TRAFFIC CONTROL DEVICES".

THE CONTRACTOR SHALL BE RESPONSIBLE FOR COORDINATING THE WORK BETWEEN THE VARIOUS TRADES AND SUB-CONTRACTORS, TO ASSURE THAT ALL WORK IS ACCOMPLISHED FOR EACH PHASE OF CONSTRUCTION AND WILL NOT CONFLICT OR REQUIRE CHANGES OR ADDITIONAL WORK DURING OTHER PHASES OF CONSTRUCTION.

THE PROJECT AREA IS TO BE SIGNED FOR A WORK-ZONE SPEED OF 50 MPH ALONG MAINLANES AND 40 MPH ALONG THE FRONTAGE ROADS. THIS WILL BE AN ENFORCEABLE REGULATORY SPEED FOR THE US 281 MAINLANES ONLY, AS NOTED ON THE PLANS. ADVISORY SPEED SIGNS IN SUFFICIENT NUMBER, AS NOTED ON THE PLANS AND/OR AS DETERMINED BY THE ENGINEER, SHALL BE FURNISHED IN ALL OTHER AREAS OF THE PROJECT.

THE CONTRACTOR SHALL PROVIDE OFF-DUTY UNIFORMED LAW ENFORCEMENT OFFICER(S) (NUMBER AS DETERMINED BY THE ENGINEER), WITH JURISDICTION IN THE PROJECT AREA FOR TRAFFIC CONTROL OPERATIONS. THIS DOES NOT RELIEVE THE CONTRACTOR OF THE RESPONSIBILITY OF TAKING OTHER STEPS AND PROVIDING OTHER PERSONNEL WHICH THE ENGINEER MAY DEEM NECESSARY FOR THE PROTECTION OF THE WORKERS AND SAFETY OF THE PUBLIC.

THE CONTRACTOR SHALL COORDINATE THE TRAFFIC CONTROL PLAN AND THE VARIOUS SEQUENCES OF CONSTRUCTION WITH ANY ADJACENT CONSTRUCTION PROJECTS TO ENSURE THE UNINTERRUPTED FLOW OF TRAFFIC THROUGH THE PROJECT AREAS.

THE CONTRACTOR SHALL NOTIFY THE PROPER CITY, COUNTY, E.M.S., FIRE DEPARTMENT, POLICE DEPARTMENT, TEXAS DEPT. OF PUBLIC SAFETY AND TEXAS DEPT. OF TRANSPORTATION OFFICIALS WHEN MAJOR TRAFFIC CHANGES ARE TO BE MADE. CONTRACTOR TO COORDINATE WITH TEXAS DEPARTMENT OF TRANSPORTATION ON THE MAJOR TRAFFIC CHANGES SO THAT TXDOT CAN CONTACT THE PUBLIC MEDIA TO NOTIFY AND ADVISE THE TRAVELING PUBLIC OF THE PROPOSED TRAFFIC CHANGES. THE NOTIFICATION MUST BE MADE AT LEAST THREE (3) DAYS PRIOR TO THE CHANGE.

FOR THIS PROJECT, THE CONTRACTOR SHALL FURNISH AND INSTALL FOUR (4) PORTABLE CHANGEABLE MESSAGE SIGNS (PCMS), TO INFORM THE PUBLIC OF CHANGES IN TRAFFIC PATTERNS. THESE SIGNS SHALL REMAIN IN PLACE FOR THE DURATION OF THE PROJECT, AND SHALL BE ACTIVATED AT LEAST SEVENTY-TWO (72) HOURS PRIOR TO ALL TRAFFIC PHASE CHANGES. THE PCMS SHOULD BE PLACED FAR ENOUGH IN ADVANCE OF THE WORK SITE TO ALLOW TRAFFIC AMPLE TIME AND OPPORTUNITY TO EXIT THE FREEWAY. UPON COMPLETION OF THE PROJECT, THE PCMS SHALL REMAIN THE PROPERTY OF THE CONTRACTOR. THE ~~PCMS AND ALL~~ RELATED COSTS FOR SETUP, RELOCATION, MAINTENANCE, REMOVAL AND INCIDENTALS SHALL BE SUBSIDIARY TO ITEM ~~502~~ 1508. THE CONTRACTOR SHALL BE RESPONSIBLE FOR UPDATING DAILY MESSAGES.

A TYPE "C" FLASHING ARROW PANEL SHALL BE USED IN CONNECTION WITH ALL LANE CLOSURE SIGNING. THE CONTRACTOR SHALL BE RESPONSIBLE FOR FURNISHING, MAINTAINING AND OPERATING THESE DEVICES IN A MANNER ACCEPTABLE TO THE ENGINEER AT THE CONTRACTOR'S EXPENSE.

CROSSROAD SIGNING SHALL BE AS SHOWN ON BC (2)-03 AND AS DIRECTED BY THE ENGINEER. THE TRAFFIC CONTROL PLANS GRAPHICALLY INDICATE THE LOCATION AND TYPE OF TRAFFIC SIGNS TO BE USED FOR TRAFFIC CONTROL DURING THE VARIOUS PHASES AND SEQUENCES OF CONSTRUCTION. THE CONTRACTOR SHALL BE RESPONSIBLE FOR PROVIDING THE APPROPRIATE SIGN SUPPORTS, ACCORDING TO ITS LOCATION AND USE, AS SHOWN ON THE PLANS AND IN ACCORDANCE WITH THE "BARRICADE AND CONSTRUCTION STANDARDS".

ADVANCE PROJECT LIMIT AND CROSSROAD SIGNING WITH WARNING LIGHTS, SHALL BE PLACED IN ACCORDANCE WITH THE "BARRICADE AND CONSTRUCTION STANDARDS" SHEETS BC(1)-03 THRU BC(12)-03. THESE SIGNS SHALL REMAIN IN PLACE UNTIL FINAL PROJECT ACCEPTANCE BY TXDOT.

FOR THIS PROJECT, THE CONTRACTOR SHALL INSTALL "GIVE US A BRAKE": WORK ZONE (G20-7) SIGNS AT EACH APPROACH, HALF-WAY THROUGH THE CONSTRUCTION AREA AND AT LOCATIONS TO BE DETERMINED IN THE FIELD BY THE ENGINEER. SEE STANDARD SHEETS WZ (BRK)-03 FOR DETAILS. THESE SIGNS SHALL BE PAID FOR UNDER ITEM 634 "PLYWOOD SIGN TYPE A", "FOUNDATIONS FOR SIGNS, TRAFFIC SIGNALS AND ROADSIDE ILLUMINATION ASSEMBLIES".

THE BARRICADES, SIGNS, CHANNELIZING DEVICES AND OTHER TRAFFIC HANDLING DEVICES, MAY BE ADJUSTED OR SHIFTED TO FIT FIELD CONDITIONS OR AS REQUIRED FOR CONSTRUCTION AND SET UP, FOR THE VARIOUS PHASES, AS SHOWN ON THE PLANS AND AS DIRECTED BY THE ENGINEER.

ADEQUATE SIGNS AND BARRICADES SHALL BE INSTALLED BY THE CONTRACTOR AND APPROVED BY THE ENGINEER PRIOR TO OPENING ANY SECTION TO TRAFFIC. THE ENGINEER MAY DIRECT THE CONTRACTOR TO FURNISH ADDITIONAL SIGNS, BARRICADES, AND CHANNELIZING DEVICES AS REQUIRED TO MAINTAIN TRAFFIC AND MOTORIST SAFETY DURING CONSTRUCTION. ANY SUCH ADDITIONAL SIGNS AND BARRICADES, ETC. SHALL BE CONSIDERED SUBSIDIARY TO PAY ITEM 502 "BARRICADES, SIGNS AND TRAFFIC HANDLING".

THE CONTRACTOR SHALL MAINTAIN BARRICADES, SIGNS, CHANNELIZING DEVICES, WARNING LIGHTS AND TRAFFIC HANDLING DEVICES IN A CLEAN AND FUNCTIONAL CONDITION AT ALL TIMES, INCLUDING MAINTENANCE DUE TO ACTS OF VANDALISM OR ACCIDENT. THE CONTRACTOR SHALL HAVE ENOUGH SIGNS AND BARRICADES AVAILABLE, AT ALL TIMES, TO REPLACE THOSE DAMAGED.

CONTRACTOR SHALL UTILIZE TRAFFIC CONTROL DEVICES AS SHOWN ON THE PLANS ON A "PER PHASE" BASIS. THEREFORE, ANY DEVICES UTILIZED IN A PREVIOUS PHASE THAT CONFLICT WITH THE TRAFFIC CONTROL FOR THE CURRENT PHASE SHALL BE REMOVED. ANY DEVICES THAT ARE UTILIZED IN CONSECUTIVE PHASES ARE NOTED AS SUCH ON THE PLANS.

THE CONTRACTOR SHALL RESTORE TRAFFIC AND SITE TO ORIGINAL CONDITION UPON COMPLETION OF THE PROJECT. ALL TEMPORARY PAVEMENT AND TRAFFIC CONTROL DEVICES SHALL BE REMOVED FROM THE PROJECT. MATERIALS FURNISHED, INSTALLED AND REMOVED BY THE CONTRACTOR SHALL BECOME THE PROPERTY OF THE CONTRACTOR, UNLESS OTHERWISE SHOWN ON THE PLANS.

FOR PEDESTRIAN SAFETY, PLASTIC CONSTRUCTION FENCING (MINIMUM 4' HIGH) SHALL BE USED AROUND ALL OPEN EXCAVATIONS AS REQUIRED OR DIRECTED BY THE ENGINEER. FOR DAYTIME BRIDGE CONSTRUCTION, CONTRACTOR SHALL PROVIDE A SAFE ROUTE AWAY FROM THE IMMEDIATE CONSTRUCTION AREA FOR PEDESTRIAN TRAFFIC TO ENSURE THEIR SAFETY THROUGH THE BRIDGE ZONE. THIS INCLUDES A TRAVERSABLE PATH IF DEEMED NECESSARY BY THE ENGINEER.

DETOUR STRIPING AND SIGNING SHALL BE AS SHOWN ON THE PLANS AND IN ACCORDANCE WITH THE T.M.U.T.C.D.

ALL WORK ZONE PAVEMENT MARKINGS SHALL BE THE RESPONSIBILITY OF THE CONTRACTOR AND SHALL BE IN ACCORDANCE WITH THE "STANDARD SHEETS" WZ (STPM)-03 AND BC(10) AND (11)-03 AND THE T.M.U.T.C.D.

WORK ZONE PAVEMENT MARKINGS ON BRIDGES AND THOSE INSTALLED AFTER THE COMPLETION OF WORK ON A CERTAIN PHASE SEQUENCE, AND WHICH ARE TO BE REMOVED ON A SUBSEQUENT SEQUENCE OF WORK, SHALL BE OF THE REMOVABLE TYPE. ALL NON REMOVABLE WORK ZONE PAVEMENT MARKINGS SHALL BE THERMOPLASTIC.

ALL WORK ZONE GUIDEMARKS, SHORT TERM MARKINGS AND STANDARD MARKINGS USED ON THIS PROJECT AS REQUIRED BY THE T.M.U.T.C.D., WILL BE PAID FOR UNDER ITEM 662 "WORK ZONE PAVEMENT MARKINGS".

ALL DRUMS USED ON THIS PROJECT FOR TRAFFIC CONTROL SHALL BE PLASTIC. PLASTIC DRUMS, SHALL BE USED IN ACCORDANCE WITH THE PLANS AND MANUFACTURER'S RECOMMENDATIONS OR AS DIRECTED BY THE ENGINEER.

DURING CONSTRUCTION, THE CONTRACTOR SHALL BE REQUIRED TO FURNISH, PLACE AND MAINTAIN IN ACCORDANCE WITH THE "TEXAS MANUAL ON UNIFORM TRAFFIC CONTROL DEVICES FOR STREETS AND HIGHWAYS", VERTICAL PANELS ALONG THE EDGE OF PAVEMENT AND FILLS. THE VERTICAL PANELS SHALL BE SUPPLEMENTED WITH LIGHTS AS DIRECTED BY THE ENGINEER.

THE PORTION OF THIS PROJECT WHICH COINCIDES WITH EXISTING ROAD AND/OR PRIVATE DRIVES SHALL BE KEPT OPEN TO TRAFFIC AT ALL TIMES, UNLESS OTHERWISE PROVIDED FOR OR APPROVED BY THE ENGINEER. THE CONTRACTOR WILL BE REQUIRED TO MAINTAIN AT ALL TIMES TWO LANES OF NORTHBOUND AND SOUTHBOUND SURFACED MAINLANE ROADWAYS DURING MAINLANE RECONSTRUCTION, (EXCEPT AS NOTED BELOW), ONE LANE OF ONE-WAY SURFACED FRONTAGE ROADS (MIN 11' LANE) DURING FRONTAGE ROAD RECONSTRUCTION, AND TWO-WAY SURFACED ROADWAYS (MIN 11' LANE) ON ALL OTHER ROAD RECONSTRUCTION, UNLESS OTHERWISE NOTED ON THE PLANS OR AS DIRECTED BY THE ENGINEER.

CONSTRUCTION REQUIRING TEMPORARY LANE CLOSURES OF MAINLANES, RESULTING IN LESS THAN THE MINIMUM NUMBER OF LANES AS NOTED ABOVE, SHALL BE DONE DURING OFF-PEAK HOURS, BETWEEN 9:00 A.M. TO 4:00 P.M. AND AT NIGHTTIME, OR AS DIRECTED BY THE ENGINEER. DURING THE PEAK HOURS OF 6:00 A.M. TO 8:30 A.M. AND 4:00 P.M. TO 7:00 P.M., THE CONTRACTOR SHALL MAINTAIN THE MINIMUM REQUIRED NUMBER OF LANES OPEN TO TRAFFIC.

1 REVISED 9-26-03

THE SEAL APPEARING ON THIS DOCUMENT WAS AUTHORIZED BY JOHN M PEREZ, P.E. 66425 ON 06/20/2003.

STATE OF TEXAS · JOHN M. PEREZ · 66425 · REGISTERED PROFESSIONAL ENGINEER

6/20/03

Parsons Brinckerhoff Quade & Douglas Inc.

Texas Department of Transportation

© 2003 by TxDOT

US 281 TRAFFIC CONTROL GENERAL NOTES

SHEET 1 OF 3				281TCPNOTES1.DGN			
DESIGNED: PAF	FED. RD DIV. No.	STATE	FEDERAL AID PROJECT No.			HIGHWAY No.	
CHECKED: JP	6	TEXAS				US 281	
DRAWN: KTD	STATE DISTRICT	COUNTY	CONTROL No.	SECTION No.	JOB No.	SHEET No.	
CHECKED: JDH	PHARR	HIDALGO	0255	08	091	55	

h:\22322o\cadd\sheets\traffic\tcp\281tcpnotes1.dgn

NAME

10:57:32 AM

06/20/2003

WHEN CONNECTING PROPOSED ROADWAY AND/OR DETOURS TO SECTIONS OF EXISTING PAVEMENT BEING USED BY TRAFFIC AND SUCH OPERATIONS RESULT IN A DROP-OFF OF MORE THAN 2 INCHES, A 4.0 FT. BUFFER ZONE AND 3:1 SLOPE WILL BE REQUIRED. THE SLOPE MUST BE CONSTRUCTED WITH A COMPACTED MATERIAL CAPABLE OF SUPPORTING VEHICLES, AS APPROVED BY THE ENGINEER. THIS WORK SHALL BE DONE EXPEDITIOUSLY DURING DAYLIGHT HOURS. FLAGGERS AND APPROPRIATE SIGNING TO SAFELY GUIDE TRAFFIC THROUGH THE WORK AREA WILL BE REQUIRED, AS DIRECTED BY THE ENGINEER.

CONSTRUCTION DETOURS SHALL BE PAID FOR UNDER ITEM 508 "CONSTRUCTION DETOURS" AND AS SHOWN ON THE PLANS.

CHANNELIZING DEVICES SHALL BE REQUIRED ALONG THE PORTIONS OF THE ROADWAY OPEN TO TRAFFIC DURING CONSTRUCTION. DEVICES ALONG THE MAINLANES SHALL BE OF THE PORTABLE BASE TYPE IN ACCORDANCE WITH "COMPLIANT WORK ZONE TRAFFIC CONTROL DEVICES LIST". ALL OTHER ROADS SHALL UTILIZE DRUMS AND SUPPLEMENTAL CONTROL DEVICES AS REQUIRED, UNLESS OTHERWISE SHOWN ON THE PLANS, OR AS DIRECTED BY THE ENGINEER.

CONTRACTOR SHALL BE RESPONSIBLE FOR FLAGGING CONDUIT RUNS & FLAGGING BOXES. IN THE EVENT THAT THESE ARE DESTROYED THE CONTRACTOR WILL BE RESPONSIBLE FOR REPLACING THEM AT HIS COST.

STEPS IN PHASES OF CONSTRUCTION MAY BE COMBINED AND/OR OVERLAPPED AS APPROVED BY THE ENGINEER.

TO ACCOMMODATE THE VARIOUS PHASES OF CONSTRUCTION, THE CONTRACTOR WILL BE RESPONSIBLE FOR THE TEMPORARY ADJUSTMENT AND RELOCATION TO THE EXISTING SIGNAL HEADS AND ANY OTHER INCIDENTAL WORK NECESSARY TO PROVIDE FOR PROPER TRAFFIC SIGNAL OPERATION. THE ADJUSTMENTS AND RELOCATIONS WILL NOT BE PAID FOR DIRECTLY BUT SHALL BE CONSIDERED SUBSIDIARY TO ITEM 502 "BARRICADES, SIGNS AND TRAFFIC HANDLING".

STOP SIGNS ON INTERSECTING STREETS SHALL BE ADJUSTED DURING THE VARIOUS CONSTRUCTION PHASES. ALL EXISTING REGULATORY SIGNS SHALL NOT BE REMOVED UNTIL TEMPORARY SIGN SUPPORTS HAVE BEEN INSTALLED TO ALLOW FOR IMMEDIATE REPLACEMENT OF PROPOSED RELOCATED SIGNS.

THE CONTRACTOR SHALL MAINTAIN THE EXISTING PAVEMENT MARKINGS IN A GOOD VISIBLE CONDITION THROUGHOUT THE LENGTH OF THE PROJECT. REMOVAL OF EXISTING PAVEMENT MARKINGS SHALL BE ACCOMPLISHED BY "METHODS AS APPROVED BY THE ENGINEER" AND WILL BE PAID FOR UNDER ITEM 677 "ELIMINATING EXISTING PAVEMENT MARKINGS & MARKERS".

THE CONTRACTOR SHALL COVER THE EXISTING ADVANCE AND SUPPLEMENTAL GUIDE SIGNS, INCLUDING EXIT GORE SIGNS, CORRESPONDING TO TEMPORARY EXIT OR ENTRANCE RAMP CLOSURES FOR THAT PARTICULAR SEQUENCE OF PHASE CONSTRUCTION. THE COVERING OF THESE SIGNS SHALL BE WITH A MATERIAL AS APPROVED BY THE ENGINEER AND ATTACHED TO THE SIGN IN A MANNER WHICH WILL PRESENT A NEAT APPEARANCE AND NOT DAMAGE THE SIGN. THE CONTRACTOR SHALL MAINTAIN THESE COVERED SIGNS FOR THE DURATION OF THE SEQUENCE OF CONSTRUCTION. WHEN THE EXIT OR ENTRANCE RAMP IS RE-OPENED TO TRAFFIC, ALL EXISTING PERMANENT SIGNS WHICH ARE TO REMAIN IN PLACE AND/OR RELOCATED SHALL BE UNCOVERED. ALL OTHER PERMANENT, TEMPORARY AND DETOUR GUIDE SIGNS SHALL BE REMOVED.

TEMPORARY EXIT SIGNS SHALL BE INSTALLED ON TIMBER BREAKAWAY ROADSIDE SIGN SUPPORTS AS SHOWN ON "BARRICADE STANDARD" BC (5)-03. ALL WORK AND MATERIALS REQUIRED FOR THE INSTALLATION, REMOVAL AND COVERING OF EXISTING AND TEMPORARY EXIT SIGNS, AS REQUIRED FOR THE VARIOUS SEQUENCES OF CONSTRUCTION, WILL BE SUBSIDIARY TO ITEM 502. ALL TEMPORARY GUIDE SIGNS FURNISHED AND INSTALLED BY THE CONTRACTOR SHALL REMAIN THE PROPERTY OF THE CONTRACTOR. FOR TYPICAL APPLICATION DETAILS SEE "TEMPORARY GUIDE SIGNS FOR EXIT RAMP CLOSURES" ON SHEET 59.

THE CONTRACTOR SHALL PROVIDE PORTABLE CONCRETE TRAFFIC BARRIERS AS REQUIRED FOR THE VARIOUS PHASES OF CONSTRUCTION. THE CONTRACTOR SHALL PROVIDE PORTABLE CONCRETE TRAFFIC BARRIERS (PCTB) WHICH SHALL BE SLOTTED AND UNSLOTTED. THE SLOTTED BARRIER SHALL BE USED WHERE TEMPORARY ROADWAY DRAINAGE IS REQUIRED. EACH BARRIER SECTION SHALL BE INDIVIDUALLY INSPECTED AND APPROVED BY THE ENGINEER. THIS ITEM SHALL BE PAID FOR UNDER ITEM 512 "PORTABLE CONCRETE TRAFFIC BARRIERS".

TEMPORARY BARRIER END TREATMENT AND ALL WORK AND MATERIAL REQUIRED FOR ITS INSTALLATION AND ATTACHMENT TO THE CONCRETE MEDIAN BARRIERS WILL BE MEASURED AND PAID FOR UNDER ITEMS AS SHOWN IN THE PLANS AND SPECIFICATIONS.

THE CONTRACTOR SHALL USE THE SLING TYPE LIFTING DEVICES WHEN MOVING THE TEMPORARY CONCRETE TRAFFIC BARRIERS FURNISHED BY TXDOT. IF HOLES ARE NEEDED FOR SLING LIFT, THE CONTRACTOR SHALL DRILL OR CORE APPROXIMATELY 2 INCH HOLES (NON-IMPACTED) 6.0 FT. (+/-) 2 INCH FROM EACH END AND 1.0 FT. FROM THE TOP FOR SLING LIFTING OF THE BARRIERS. THE EXISTING THREADED SLEEVES SHALL NOT BE USED.

TCP MOUNTED DELINEATORS SHALL BE PLACED ON CONCRETE TRAFFIC BARRIERS (CTB) AT 30 FT CENTERS, WHEN USED TO TRANSITION OR CHANNEL TRAFFIC WHEN A TRAFFIC LANE IS ADJACENT TO OR LESS THAN 3 FT. FROM THE BARRIER ON THE RIGHT OR LEFT SIDE OF THE TRAVEL LANE. THE DELINEATORS SHALL BE CLASS A REFLECTORS, COLOR CONFORMING TO THE "TEXAS MANUAL ON UNIFORM TRAFFIC CONTROL DEVICES". THE CONTRACTOR SHALL MAINTAIN THESE DELINEATORS IN A CLEAN CONDITION AND REPLACE AS NECESSARY.

TRAFFIC BARRIERS NOT RE-USED AS PERMANENT MEDIAN TRAFFIC BARRIER, INCLUDING TEMPORARY T503 AND T504 BRIDGE RAILINGS, FURNISHED, INSTALLED AND REMOVED BY THE CONTRACTOR SHALL REMAIN THE PROPERTY OF THE CONTRACTOR. ALL OTHER BARRIERS AND RAILINGS FURNISHED BY TXDOT SHALL BE REMOVED AND DELIVERED TO THE TXDOT PHARR DISTRICT OFFICE YARD.

ALL WORK, INCLUDING LABOR TOOLS AND EQUIPMENT, REQUIRED FOR LOADING, HAULING, UNLOADING, PLACING AND STORING OF CONCRETE BARRIER USED IN THIS PROJECT FOR PREPARATION, INCLUDING BARRIER DELINEATION, MODIFYING THE BARRIER END, FOR REASONABLE REPAIR OF DAMAGED SECTIONS, ERECTION, MAINTAINING, REMOVING, HAULING AND DELIVERING THE CONCRETE BARRIERS, AS REQUIRED BY THE VARIOUS PHASES OF CONSTRUCTION, SHALL BE PAID FOR UNDER ITEM 512 "PORTABLE CONCRETE TRAFFIC BARRIER".

THE CONTRACTOR SHALL PERFORM THE FULL-DEPTH PHASE WORK ONLY THRU THE AREA NOT TO EXCEED THE LENGTH OF THE ERECTED TEMPORARY CONCRETE BARRIER. THE CONTRACTOR MAY WORK IN THE REMAINING LENGTH OF THE PROPOSED SECTION BEYOND THE CONCRETE BARRIER BY SCARIFYING AND REMOVING THE EXISTING ACP WITH SALVAGED FLEX BASE, SO AS NOT TO EXCEED A DROP OFF OF MORE THAN 4". THE CONSTRUCTION AREA BEYOND THE CONCRETE BARRIER WILL REQUIRE DRUMS AS TEMPORARY BARRIER, UNLESS OTHERWISE DIRECTED BY THE ENGINEER.

DURING BRIDGE DEMOLITION, ANY EXISTING BRIDGE DECKS REQUIRING CONSTRUCTION BREAK-BACK FOR NEW BRIDGE CONSTRUCTION SHALL BE SAW CUT SO AS TO PROVIDE A CLEAN CUT LINE WHEN DECK IS REMOVED. THIS WORK WILL NOT BE PAID FOR DIRECTLY, BUT SHALL BE CONSIDERED SUBSIDIARY TO THE VARIOUS BID ITEMS.

DURING THE FRONTAGE ROAD WIDENING CONSTRUCTION PHASE, WHERE SHOWN IN THE PLANS AND AS INDICATED IN THE TYPICAL SECTIONS, THE EXISTING PAVEMENT SHALL GENERALLY BE SAW-CUT ONE-FOOT FROM THE EXISTING PAVEMENT EDGE AS TO PROVIDE A CLEAN, STRAIGHT CUT LINE, FOR THE NEW PAVEMENT TO BE LAID ALONG THE EXISTING PAVEMENT EDGE. THIS WORK WILL NOT BE PAID FOR DIRECTLY, BUT SHALL BE CONSIDERED SUBSIDIARY TO THE VARIOUS BID ITEMS.

DURING CONSTRUCTION, THE CONTRACTOR WILL BE REQUIRED TO ERECT ACCURATE TEMPORARY CLEARANCE SIGNS (W12-3), IN ACCORDANCE WITH THE "T.M.U.T.C.D.", ON THE OVERPASS STRUCTURES. FINAL CLEARANCE SIGNS SHALL BE IN ACCORDANCE WITH ITEM 444, "BRIDGE PROTECTIVE ASSEMBLY". TEMPORARY CLEARANCE SIGNS WILL NOT BE PAID FOR DIRECTLY, BUT SHALL BE CONSIDERED SUBSIDIARY TO THE VARIOUS BID ITEMS.

THE VARIOUS PHASES OF CONSTRUCTION, WILL REQUIRE THE USE OF "REUSEABLE ENERGY ABSORBING CRASH TERMINALS" (REACT 350) SYSTEMS AND "SINGLE GUARDRAIL TERMINALS" (SGT) OR DEPARTMENT APPROVED PCTB END-TREATMENTS. EIGHT (8) REACT 350 SYSTEMS SHALL BE INSTALLED AND PAID FOR IN ACCORDANCE WITH SPECIAL SPECIFICATION ITEM 5985. THE CONTRACTOR SHALL BE RESPONSIBLE FOR INSTALLING THESE SYSTEMS AT THE DESIGNATED LOCATIONS, AS SHOWN ON THE PLANS. THESE SYSTEMS SHALL THEN BE RELOCATED AND RE-USED, AS REQUIRED, DURING THE VARIOUS PHASES OF CONSTRUCTION AS SHOWN ON THE PLANS.

THE CONTRACTOR SHALL BE RESPONSIBLE FOR MAINTAINING THESE SYSTEMS. ANY DAMAGE TO THE SYSTEMS SHALL BE REPAIRED AND/OR REPLACED IMMEDIATELY, AS PER SPECIFICATIONS. UPON COMPLETION OF THE PROJECT, THE SYSTEMS SHALL BE REMOVED AND DELIVERED TO THE TXDOT MAINTENANCE YARD IN PHARR, TX. ALL WORK, TOOLS, MATERIALS, AND EQUIPMENT NECESSARY TO REMOVE AND RELOCATE THESE SYSTEMS, INCLUDING DELIVERY TO TXDOT, WILL BE PAID FOR AS PER SPECIAL SPECIFICATION ITEM 5985.

CONTRACTOR SHALL BE RESPONSIBLE FOR MAINTAINING TEMPORARY DRAINAGE THROUGHOUT THE PROJECT LIMITS, DURING ALL PHASES OF CONSTRUCTION, IN ORDER TO AVOID CREATING HAZARDOUS ROAD CONDITIONS AND FLOODING OF PROPERTIES ADJACENT TO THE PROJECT AREA. IF SUCH CONDITIONS REQUIRE PLACEMENT OF LATERALS ACROSS ENTIRE FRONTAGE ROAD WIDTH, THEN CONTRACTOR SHALL BE REQUIRED TO CUT AND RESTORE PAVEMENT. THIS WORK SHALL BE PAID FOR UNDER PERTINENT BID ITEMS.

THE CONTRACTOR SHALL KEEP TRAVELED SURFACES USED IN HIS HAULING OPERATION FREE OF DIRT OR OTHER MATERIAL.

THE USE OF RUBBER-TIRED EQUIPMENT WILL BE REQUIRED FOR MOVING DIRT OR OTHER MATERIALS ALONG OR ACROSS PAVED SURFACES.

WHERE THE CONTRACTOR DESIRES TO MOVE ANY EQUIPMENT NOT LICENSED FOR OPERATION ON PUBLIC HIGHWAYS ON OR ACROSS ANY PAVEMENT, HE SHALL PROTECT THE PAVEMENT FROM ALL DAMAGE AS DIRECTED BY THE ENGINEER.

A POWER BROOM SHALL BE USED TO CLEAN THE ROADWAY OF DIRT AND DEBRIS DURING ALL PHASES OF CONSTRUCTION. ALL TRAVEL LANES TO BE KEPT CLEAN AT ALL TIMES AND TO BE SWEPT AT THE END OF THE WORKDAY WHERE CONSTRUCTION VEHICLES HAVE TRAVELED OR CROSSED THE ROADWAY.

THE SEAL APPEARING ON THIS DOCUMENT WAS AUTHORIZED BY JOHN M PEREZ, P.E. 66425 ON 06/20/2003.

STATE OF TEXAS
JOHN M. PEREZ
66425
REGISTERED PROFESSIONAL ENGINEER

6/20/03

Parsons Brinckerhoff Quade & Douglas Inc.

Texas Department of Transportation

© 2003 by TxDOT

US 281
TRAFFIC CONTROL
GENERAL NOTES

SHEET 2 OF 3				281TCPNOTES2.DGN			
DESIGNED: PAF	FED. RD DIV. No.	STATE	FEDERAL AID PROJECT No.		HIGHWAY No.		
CHECKED: JP	6	TEXAS			US 281		
DRAWN: KTD	STATE DISTRICT	COUNTY	CONTROL No.	SECTION No.	JOB No.	SHEET No.	
CHECKED: JDH	PHARR	HIDALGO	0255	08	091	56	

h:\22322a\cadd\sheets\traffic\tcp\281tcpnotes2.dgn

NAME

10:57:32 AM

06/20/2003

WHEN CONNECTING PROPOSED ROADWAY AND/OR DETOURS TO SECTIONS OF EXISTING PAVEMENT BEING USED BY TRAFFIC AND SUCH OPERATIONS RESULT IN A DROP-OFF OF MORE THAN 2 INCHES, A 4.0 FT. BUFFER ZONE AND 3:1 SLOPE WILL BE REQUIRED. THE SLOPE MUST BE CONSTRUCTED WITH A COMPACTED MATERIAL CAPABLE OF SUPPORTING VEHICLES, AS APPROVED BY THE ENGINEER. THIS WORK SHALL BE DONE EXPEDITIOUSLY DURING DAYLIGHT HOURS. FLAGGERS AND APPROPRIATE SIGNING TO SAFELY GUIDE TRAFFIC THROUGH THE WORK AREA WILL BE REQUIRED, AS DIRECTED BY THE ENGINEER.

CONSTRUCTION DETOURS SHALL BE PAID FOR UNDER ITEM 508 "CONSTRUCTION DETOURS" AND AS SHOWN ON THE PLANS.

CHANNELIZING DEVICES SHALL BE REQUIRED ALONG THE PORTIONS OF THE ROADWAY OPEN TO TRAFFIC DURING CONSTRUCTION. DEVICES ALONG THE MAINLANES SHALL BE OF THE PORTABLE BASE TYPE IN ACCORDANCE WITH "COMPLIANT WORK ZONE TRAFFIC CONTROL DEVICES LIST". ALL OTHER ROADS SHALL UTILIZE DRUMS AND SUPPLEMENTAL CONTROL DEVICES AS REQUIRED, UNLESS OTHERWISE SHOWN ON THE PLANS, OR AS DIRECTED BY THE ENGINEER.

CONTRACTOR SHALL BE RESPONSIBLE FOR FLAGGING CONDUIT RUNS & FLAGGING BOXES. IN THE EVENT THAT THESE ARE DESTROYED THE CONTRACTOR WILL BE RESPONSIBLE FOR REPLACING THEM AT HIS COST.

STEPS IN PHASES OF CONSTRUCTION MAY BE COMBINED AND/OR OVERLAPPED AS APPROVED BY THE ENGINEER.

TO ACCOMMODATE THE VARIOUS PHASES OF CONSTRUCTION, THE CONTRACTOR WILL BE RESPONSIBLE FOR THE TEMPORARY ADJUSTMENT AND RELOCATION TO THE EXISTING SIGNAL HEADS AND ANY OTHER INCIDENTAL WORK NECESSARY TO PROVIDE FOR PROPER TRAFFIC SIGNAL OPERATION.* THE ADJUSTMENTS AND RELOCATIONS WILL NOT BE PAID FOR DIRECTLY BUT SHALL BE CONSIDERED SUBSIDIARY TO ITEM 502 "BARRICADES, SIGNS AND TRAFFIC HANDLING".

STOP SIGNS ON INTERSECTING STREETS SHALL BE ADJUSTED DURING THE VARIOUS CONSTRUCTION PHASES. ALL EXISTING REGULATORY SIGNS SHALL NOT BE REMOVED UNTIL TEMPORARY SIGN SUPPORTS HAVE BEEN INSTALLED TO ALLOW FOR IMMEDIATE REPLACEMENT OF PROPOSED RELOCATED SIGNS.

THE CONTRACTOR SHALL MAINTAIN THE EXISTING PAVEMENT MARKINGS IN A GOOD VISIBLE CONDITION THROUGHOUT THE LENGTH OF THE PROJECT. REMOVAL OF EXISTING PAVEMENT MARKINGS SHALL BE ACCOMPLISHED BY "METHODS AS APPROVED BY THE ENGINEER" AND WILL BE PAID FOR UNDER ITEM 677 "ELIMINATING EXISTING PAVEMENT MARKINGS & MARKERS".

THE CONTRACTOR SHALL COVER THE EXISTING ADVANCE AND SUPPLEMENTAL GUIDE SIGNS, INCLUDING EXIT GORE SIGNS, CORRESPONDING TO TEMPORARY EXIT OR ENTRANCE RAMP CLOSURES FOR THAT PARTICULAR SEQUENCE OF PHASE CONSTRUCTION. THE COVERING OF THESE SIGNS SHALL BE WITH A MATERIAL AS APPROVED BY THE ENGINEER AND ATTACHED TO THE SIGN IN A MANNER WHICH WILL PRESENT A NEAT APPEARANCE AND NOT DAMAGE THE SIGN. THE CONTRACTOR SHALL MAINTAIN THESE COVERED SIGNS FOR THE DURATION OF THE SEQUENCE OF CONSTRUCTION. WHEN THE EXIT OR ENTRANCE RAMP IS RE-OPENED TO TRAFFIC, ALL EXISTING PERMANENT SIGNS WHICH ARE TO REMAIN IN PLACE AND/OR RELOCATED SHALL BE UNCOVERED. ALL OTHER PERMANENT, TEMPORARY AND DETOUR GUIDE SIGNS SHALL BE REMOVED.

*THIS WILL INCLUDE TEMPORARY WOOD POLES, SPAN WIRE, AND SIGNAL HEADS.

TEMPORARY EXIT SIGNS SHALL BE INSTALLED ON TIMBER BREAKAWAY ROADSIDE SIGN SUPPORTS AS SHOWN ON "BARRICADE STANDARD" BC (5)-03. ALL WORK AND MATERIALS REQUIRED FOR THE INSTALLATION, REMOVAL AND COVERING OF EXISTING AND TEMPORARY EXIT SIGNS, AS REQUIRED FOR THE VARIOUS SEQUENCES OF CONSTRUCTION, WILL BE SUBSIDIARY TO ITEM 502. ALL TEMPORARY GUIDE SIGNS FURNISHED AND INSTALLED BY THE CONTRACTOR SHALL REMAIN THE PROPERTY OF THE CONTRACTOR. FOR TYPICAL APPLICATION DETAILS SEE "TEMPORARY GUIDE SIGNS FOR EXIT RAMP CLOSURES" ON SHEET 59.

THE CONTRACTOR SHALL PROVIDE PORTABLE CONCRETE TRAFFIC BARRIERS AS REQUIRED FOR THE VARIOUS PHASES OF CONSTRUCTION. THE CONTRACTOR SHALL PROVIDE PORTABLE CONCRETE TRAFFIC BARRIERS (PCTB) WHICH SHALL BE SLOTTED AND UNSLOTTED. THE SLOTTED BARRIER SHALL BE USED WHERE TEMPORARY ROADWAY DRAINAGE IS REQUIRED. EACH BARRIER SECTION SHALL BE INDIVIDUALLY INSPECTED AND APPROVED BY THE ENGINEER. THIS ITEM SHALL BE PAID FOR UNDER ITEM 512 "PORTABLE CONCRETE TRAFFIC BARRIERS".

TEMPORARY BARRIER END TREATMENT AND ALL WORK AND MATERIAL REQUIRED FOR ITS INSTALLATION AND ATTACHMENT TO THE CONCRETE MEDIAN BARRIERS WILL BE MEASURED AND PAID FOR UNDER ITEMS AS SHOWN IN THE PLANS AND SPECIFICATIONS.

THE CONTRACTOR SHALL USE THE SLING TYPE LIFTING DEVICES WHEN MOVING THE TEMPORARY CONCRETE TRAFFIC BARRIERS FURNISHED BY TXDOT. IF HOLES ARE NEEDED FOR SLING LIFT, THE CONTRACTOR SHALL DRILL OR CORE APPROXIMATELY 2 INCH HOLES (NON-IMPACTED) 6.0 FT. (+/-) 2 INCH FROM EACH END AND 1.0 FT. FROM THE TOP FOR SLING LIFTING OF THE BARRIERS. THE EXISTING THREADED SLEEVES SHALL NOT BE USED.

TCP MOUNTED DELINEATORS SHALL BE PLACED ON CONCRETE TRAFFIC BARRIERS (CTB) AT 30 FT CENTERS, WHEN USED TO TRANSITION OR CHANNEL TRAFFIC WHEN A TRAFFIC LANE IS ADJACENT TO OR LESS THAN 3 FT. FROM THE BARRIER ON THE RIGHT OR LEFT SIDE OF THE TRAVEL LANE. THE DELINEATORS SHALL BE CLASS A REFLECTORS, COLOR CONFORMING TO THE "TEXAS MANUAL ON UNIFORM TRAFFIC CONTROL DEVICES". THE CONTRACTOR SHALL MAINTAIN THESE DELINEATORS IN A CLEAN CONDITION AND REPLACE AS NECESSARY.

TRAFFIC BARRIERS NOT RE-USED AS PERMANENT MEDIAN TRAFFIC BARRIER, INCLUDING TEMPORARY T503 AND T504 BRIDGE RAILINGS, FURNISHED, INSTALLED AND REMOVED BY THE CONTRACTOR SHALL REMAIN THE PROPERTY OF THE CONTRACTOR. ALL OTHER BARRIERS AND RAILINGS FURNISHED BY TXDOT SHALL BE REMOVED AND DELIVERED TO THE TXDOT PHARR DISTRICT OFFICE YARD.

ALL WORK, INCLUDING LABOR TOOLS AND EQUIPMENT, REQUIRED FOR LOADING, HAULING, UNLOADING, PLACING AND STORING OF CONCRETE BARRIER USED IN THIS PROJECT FOR PREPARATION, INCLUDING BARRIER DELINEATION, MODIFYING THE BARRIER END, FOR REASONABLE REPAIR OF DAMAGED SECTIONS, ERECTION, MAINTAINING, REMOVING, HAULING AND DELIVERING THE CONCRETE BARRIERS, AS REQUIRED BY THE VARIOUS PHASES OF CONSTRUCTION, SHALL BE PAID FOR UNDER ITEM 512 "PORTABLE CONCRETE TRAFFIC BARRIER".

THE CONTRACTOR SHALL PERFORM THE FULL-DEPTH PHASE WORK ONLY THRU THE AREA NOT TO EXCEED THE LENGTH OF THE ERECTED TEMPORARY CONCRETE BARRIER. THE CONTRACTOR MAY WORK IN THE REMAINING LENGTH OF THE PROPOSED SECTION BEYOND THE CONCRETE BARRIER BY SCARIFYING AND REMOVING THE EXISTING ACP WITH SALVAGED FLEX BASE, SO AS NOT TO EXCEED A DROP OFF OF MORE THAN 4". THE CONSTRUCTION AREA BEYOND THE CONCRETE BARRIER WILL REQUIRE DRUMS AS TEMPORARY BARRIER, UNLESS OTHERWISE DIRECTED BY THE ENGINEER.

DURING BRIDGE DEMOLITION, ANY EXISTING BRIDGE DECKS REQUIRING CONSTRUCTION BREAK-BACK FOR NEW BRIDGE CONSTRUCTION SHALL BE SAW CUT SO AS TO PROVIDE A CLEAN CUT LINE WHEN DECK IS REMOVED. THIS WORK WILL NOT BE PAID FOR DIRECTLY, BUT SHALL BE CONSIDERED SUBSIDIARY TO THE VARIOUS BID ITEMS.

DURING THE FRONTAGE ROAD WIDENING CONSTRUCTION PHASE, WHERE SHOWN IN THE PLANS AND AS INDICATED IN THE TYPICAL SECTIONS, THE EXISTING PAVEMENT SHALL GENERALLY BE SAW-CUT ONE-FOOT FROM THE EXISTING PAVEMENT EDGE AS TO PROVIDE A CLEAN, STRAIGHT CUT LINE, FOR THE NEW PAVEMENT TO BE LAID ALONG THE EXISTING PAVEMENT EDGE. THIS WORK WILL NOT BE PAID FOR DIRECTLY, BUT SHALL BE CONSIDERED SUBSIDIARY TO THE VARIOUS BID ITEMS.

DURING CONSTRUCTION, THE CONTRACTOR WILL BE REQUIRED TO ERECT ACCURATE TEMPORARY CLEARANCE SIGNS (W12-3), IN ACCORDANCE WITH THE "T.M.U.T.C.D.", ON THE OVERPASS STRUCTURES. FINAL CLEARANCE SIGNS SHALL BE IN ACCORDANCE WITH ITEM 444, "BRIDGE PROTECTIVE ASSEMBLY". TEMPORARY CLEARANCE SIGNS WILL NOT BE PAID FOR DIRECTLY, BUT SHALL BE CONSIDERED SUBSIDIARY TO THE VARIOUS BID ITEMS.

THE VARIOUS PHASES OF CONSTRUCTION, WILL REQUIRE THE USE OF "REUSEABLE ENERGY ABSORBING CRASH TERMINALS" (REACT 350) SYSTEMS AND "SINGLE GUARDRAIL TERMINALS" (SGT) OR DEPARTMENT APPROVED PCTB END-TREATMENTS. EIGHT (8) REACT 350 SYSTEMS SHALL BE INSTALLED AND PAID FOR IN ACCORDANCE WITH SPECIAL SPECIFICATION ITEM 5985. THE CONTRACTOR SHALL BE RESPONSIBLE FOR INSTALLING THESE SYSTEMS AT THE DESIGNATED LOCATIONS, AS SHOWN ON THE PLANS. THESE SYSTEMS SHALL THEN BE RELOCATED AND RE-USED, AS REQUIRED, DURING THE VARIOUS PHASES OF CONSTRUCTION AS SHOWN ON THE PLANS.

THE CONTRACTOR SHALL BE RESPONSIBLE FOR MAINTAINING THESE SYSTEMS. ANY DAMAGE TO THE SYSTEMS SHALL BE REPAIRED AND/OR REPLACED IMMEDIATELY, AS PER SPECIFICATIONS. UPON COMPLETION OF THE PROJECT, THE SYSTEMS SHALL BE REMOVED AND DELIVERED TO THE TXDOT MAINTENANCE YARD IN PHARR, TX. ALL WORK, TOOLS, MATERIALS, AND EQUIPMENT NECESSARY TO REMOVE AND RELOCATE THESE SYSTEMS, INCLUDING DELIVERY TO TXDOT, WILL BE PAID FOR AS PER SPECIAL SPECIFICATION ITEM 5985.

CONTRACTOR SHALL BE RESPONSIBLE FOR MAINTAINING TEMPORARY DRAINAGE THROUGHOUT THE PROJECT LIMITS, DURING ALL PHASES OF CONSTRUCTION, IN ORDER TO AVOID CREATING HAZARDOUS ROAD CONDITIONS AND FLOODING OF PROPERTIES ADJACENT TO THE PROJECT AREA. IF SUCH CONDITIONS REQUIRE PLACEMENT OF LATERALS ACROSS ENTIRE FRONTAGE ROAD WIDTH, THEN CONTRACTOR SHALL BE REQUIRED TO CUT AND RESTORE PAVEMENT. THIS WORK SHALL BE PAID FOR UNDER PERTINENT BID ITEMS.

THE CONTRACTOR SHALL KEEP TRAVELED SURFACES USED IN HIS HAULING OPERATION FREE OF DIRT OR OTHER MATERIAL.

THE USE OF RUBBER-TIRED EQUIPMENT WILL BE REQUIRED FOR MOVING DIRT OR OTHER MATERIALS ALONG OR ACROSS PAVED SURFACES.

WHERE THE CONTRACTOR DESIRES TO MOVE ANY EQUIPMENT NOT LICENSED FOR OPERATION ON PUBLIC HIGHWAYS ON OR ACROSS ANY PAVEMENT, HE SHALL PROTECT THE PAVEMENT FROM ALL DAMAGE AS DIRECTED BY THE ENGINEER.

A POWER BROOM SHALL BE USED TO CLEAN THE ROADWAY OF DIRT AND DEBRIS DURING ALL PHASES OF CONSTRUCTION. ALL TRAVEL LANES TO BE KEPT CLEAN AT ALL TIMES AND TO BE SWEPT AT THE END OF THE WORKDAY WHERE CONSTRUCTION VEHICLES HAVE TRAVELED OR CROSSED THE ROADWAY.

⚠ REVISED 9-26-03

THE SEAL APPEARING ON THIS DOCUMENT WAS AUTHORIZED BY JOHN M PEREZ, P.E. 66425 ON 06/20/2003.

STATE OF TEXAS
JOHN M. PEREZ
66425
REGISTERED PROFESSIONAL ENGINEER

6/20/03

Parsons Brinckerhoff Quade & Douglas Inc.

Texas Department of Transportation

© 2003 by TxDOT

US 281
TRAFFIC CONTROL
GENERAL NOTES

SHEET 2 OF 3				281TCPNOTES2.DGN			
DESIGNED: PAF	FED. RD DIV. No.	STATE	FEDERAL AID PROJECT No.			HIGHWAY No.	
CHECKED: JP	6	TEXAS				US 281	
DRAWN: KTD	STATE DISTRICT	COUNTY	CONTROL No.	SECTION No.	JOB No.	SHEET No.	
CHECKED: JDH	PHARR	HIDALGO	0255	08	091	56	

h:\22322a\cadd\sheets\traffic\tcp\281tcpnotes2.dgn

NAME
10:57:34 AM
06/20/2003

CONSTRUCTION OF STORM SEWER LINES CROSSING THE FRONTAGE ROADS SHALL BE DONE BY THE OPEN CUT METHOD IN ALL PHASES OF CONSTRUCTION. DURING THIS WORK, ONE LANE OF FRONTAGE ROAD TRAFFIC SHALL BE OPEN AT ALL TIMES. THIS HALF-WIDTH METHOD OF CONSTRUCTION SHALL BE DONE DURING OFF-PEAK HOURS, BETWEEN 9:00 A.M. AND 4 P.M. AND AT NIGHTTIME. DURING THE PEAK HOURS OF 6 A.M. TO 8:30 A.M. AND 4 P.M. TO 7 P.M. ALL LANES OF THE FRONTAGE ROAD SHALL REMAIN OPEN TO TRAFFIC.

THE CONTRACTOR SHALL BE REQUIRED TO CUT AND RESTORE PAVEMENT FOR OPEN CUT METHOD PIPE INSTALLATION. THIS WORK SHALL BE PAID UNDER ITEM 400, "CUTTING AND RESTORING PAVEMENT" AS INDICATED IN THE PLANS.

CONSTRUCTION OF STORM SEWER LINES CROSSING THE EXISTING MAIN LANES SHALL BE DONE BY JACKING, BORING OR TUNNELING METHODS, UNLESS OTHERWISE NOTED ON THE "SEQUENCE OF TRAFFIC CONTROL DURING CONSTRUCTION". THIS CONSTRUCTION SHALL BE DONE DURING THE APPROPRIATE PHASE(S) OF CONSTRUCTION, SO THAT LATERALS CAN BE CONNECTED TO PROPOSED MEDIAN TRUNKLINES AND STORM SEWERS TRUNKLINES IN THE OUTER SEPARATIONS OF THE MAIN LANES. TWO LANES OF TRAFFIC, IN BOTH DIRECTIONS, SHALL BE PROVIDED FOR THE MAIN LANES AT ALL TIMES, DURING THIS PHASE OF CONSTRUCTION. PROPOSED CROSSINGS OF EXISTING FRONTAGE ROADS SHALL BE BY THE OPEN CUT METHOD.

CONSTRUCTION OF ILLUMINATION AND SIGN LIGHTING ELECTRICAL CONDUITS, CROSSING THE EXISTING MAINLANES AND FRONTAGE ROADS SHALL BE BY JACKING, BORING OR TUNNELING METHODS. THIS CONSTRUCTION SHALL BE DONE DURING THE APPROPRIATE PHASES AND SEQUENCES OF CONSTRUCTION, WITH STUB-OUTS AND/OR GROUND BOXES PROVIDED FOR FINAL CONSTRUCTION AND CONNECTION OF ILLUMINATION AND SIGN LIGHTING. SEE "ILLUMINATION LAYOUTS" FOR DETAILS.

ONE HIGH-INTENSITY, YELLOW ROTATING DOME LIGHT SHALL BE REQUIRED ON ALL EQUIPMENT SUCH AS DISTRIBUTORS, SPREADER BOXES, LAY-DOWN MACHINES, ROLLERS, BACK HOES, ROAD GRADERS, LOADERS, ETC. THIS LIGHT SHALL BE MOUNTED HIGH ENOUGH TO BE VISIBLE FROM ALL DIRECTIONS AND SHALL BE USED WHEN THE EQUIPMENT IS WITHIN 30' OF THE TRAVEL WAY. ALL OTHER EQUIPMENT SUCH AS TRUCKS, TRAILERS, AUTOS, ETC., SHALL BE EQUIPPED WITH EMERGENCY FLASHERS, WHICH SHALL BE USED WHILE WITHIN THE SECTION OF WORK.

THE CONTRACTOR SHALL PROVIDE TRUCK MOUNTED ATTENUATORS ON ALL SHADOW VEHICLES, AS SHOWN ON THE "TCP STANDARD SHEETS". THE TRUCK MOUNTED ATTENUATORS SHALL BE ONE OF THE FOLLOWING MODELS OR APPROVED EQUAL:

ALPHA 1000 MODEL (259J) BY ENERGY ABSORPTION SYSTEM, INC.
MODEL TMCC BY HEXCEL, INC.
SYRO-45 BY TMA
CK-1128 BY RENGARD

ALL EXISTING SIGNALS REQUIRING TEMPORARY ADJUSTMENT SHALL BE DONE IN ACCORDANCE WITH SPECIFIED CONSTRUCTION PHASING. ALL WORK ASSOCIATED WITH SIGNAL ADJUSTMENT SHALL BE SUBSIDIARY TO ITEM 502. THE CONTRACTOR SHALL BE REQUIRED TO PROVIDE A QUALIFIED TECHNICIAN TO INSTALL PROPER SIGNAL PHASING. IF NEEDED, CONTRACTOR WILL BE ASKED TO MODIFY PHASING TO ACCOMMODATE CERTAIN TRAFFIC DEMANDS, AND THIS WORK SHALL BE SUBSIDIARY TO ITEM 502.

DURING BRIDGE DEMOLITION, BENT CONSTRUCTION AND BEAM AND BRIDGE DECK PLACEMENT, THE CONTRACTOR SHALL PROVIDE ADEQUATE PROTECTION TO MAINLANE AND UNDERPASS TRAFFIC. THE CONTRACTOR SHALL CLOSE THE ROAD AND DETOUR TRAFFIC DURING THIS CONSTRUCTION AS SHOWN ON PLANS. THIS WORK SHALL BE PERFORMED DURING OFF-PEAK HOURS AND NIGHTTIME IN SUCH A MANNER AS TO MINIMIZE DELAY AND PROVIDE SAFETY TO THE TRAVELING PUBLIC. THIS WORK WILL BE DONE WITHIN THE APPROPRIATE PHASES OF CONSTRUCTION AS SHOWN ON THE PLANS. SEE "TYPICAL DETOUR FOR CLOSED STREET" STANDARD DETAIL SHEET.

TEMPORARY EXTENSIONS OF EXISTING ENTRANCE AND EXIT RAMPS TO NEWLY CONSTRUCTED MAINLANES SHALL BE TRANSITIONED AT ONE PERCENT GRADE FROM MAINLANES TO EXISTING RAMP ROADWAY. TYPE "B" ACP SHALL BE USED FOR LEVEL UP AND ROADWAY TRANSITIONS. SEE "TYPICAL TRAFFIC CONTROL DURING CONSTRUCTION DETAILS" STANDARD SHEET.

THE SEAL APPEARING ON THIS DOCUMENT WAS AUTHORIZED BY JOHN M PEREZ, P.E. 66425 ON 06/20/2003.

STATE OF TEXAS
JOHN M. PEREZ
66425
REGISTERED PROFESSIONAL ENGINEER

John M. Perez 6/20/03

Parsons Brinckerhoff Quade & Douglas Inc.

Texas Department of Transportation

© 2003 by TxDOT

US 281
TRAFFIC CONTROL
GENERAL NOTES

SHEET 3 OF 3				281TCPNOTES3.DGN			
DESIGNED: PAF	FED. RD DIV. NO.	STATE	FEDERAL AID PROJECT NO.			HIGHWAY NO.	
CHECKED: JP	6	TEXAS				US 281	
DRAWN: KTD	STATE DISTRICT	COUNTY	CONTROL No.	SECTION No.	JOB No.	SHEET No.	
CHECKED: JDH	PHARR	HIDALGO	0255	08	091	57	

h:\22322o\cadd\sheets\traffic\tcp\281tcpnotes3.dgn

NAME
03:52:46 PM
08/06/2003

US 281 SEQUENCE OF CONSTRUCTION

PHASE I CONSTRUCTION

SET UP PROPOSED BARRICADES & SIGNS AS SHOWN FOR PROJECT LIMIT TRAFFIC CONTROL.

INSTALL TRAFFIC CONTROL MEASURES INCLUDING PAVEMENT MARKINGS, SIGNING, BARRICADES, ETC. PRIOR TO COMMENCING EACH PHASE OF CONSTRUCTION.

INSTALL EROSION CONTROL MEASURES SHOWN FOR EACH PHASE PRIOR TO COMMENCING EACH PHASE OF CONSTRUCTION.

PHASE I: STORM SEWER CONSTRUCTION

CONSTRUCT ALL TRUNK LINE SYSTEMS, INCLUDING LATERALS, INLETS AND OUTFALLS NECESSARY TO MAINTAIN POSITIVE DRAINAGE THROUGHOUT ALL PHASES OF CONSTRUCTION.

REGRADE DITCHES TO MAINTAIN EXISTING DRAINAGE PATTERNS AND REMOVE, RELAY, OR EXTEND EXISTING DRAINAGE STRUCTURES AS NEEDED THROUGHOUT ALL PHASES OF CONSTRUCTION. (INCIDENTAL TO OTHER ITEMS).

THE MAINTENANCE OF POSITIVE DRAINAGE WILL BE CONSIDERED PART OF THE BARRICADE REPORT, FOR SAFETY CONCERNS. IF DRAINAGE IS NOT MAINTAINED, PAYMENT ON ITEM 502 MAY BE WITHELD. CUT AND RESTORE PAVEMENT ITEM 400 SHALL BE USED FOR PROPOSED STORM DRAIN LINES CROSSING EXISTING ROADWAYS. THIS WORK SHALL BE DONE USING NIGHT TIME CLOSURES.

PHASE I: UTILITY ADJUSTMENTS/RELOCATIONS

CONSTRUCT IRRIGATION LINES SHOWN TO BE REPLACED OR ADJUSTED.

IRRIGATION CROSSINGS SHALL BE COORDINATED WITH THE IRRIGATION DISTRICT AND THE ENGINEER.

1A. CONSTRUCT DETOUR PAVEMENT ALONG THE INSIDE EDGE OF THE EXISTING NB & SB FRONTAGE ROAD FROM BEGIN PROJECT TO APPROXIMATELY STA. 757+00. USE DAILY LANE CLOSURE OF INSIDE LANE AS NECESSARY. TEMPORARILY GRADE DROP OFF EDGE CONDITIONS TO 3:1 OR LESS OVERNIGHT.

CONSTRUCT DETOUR PAVEMENT ALONG OUTSIDE EDGE OF MAINLANES FROM STA 724+00 TO END OF PROJECT. TEMPORARILY GRADE DROP OFF EDGE CONDITIONS TO 3:1 OR LESS OVERNIGHT.

WIDEN PHARR/MCALLEN DRAIN DITCH BRIDGE AND NBFR TOWARDS THE INSIDE. PLACE SSTR (RETROFIT) ON OUTSIDE RAIL OF PHARR/MCALLEN DRAIN DITCH AND NBFR.

CONSTRUCT NBFR APPROXIMATELY STA. 50712+00 TO STA. 50724+00.

CONSTRUCT SBFR APPROXIMATELY STA. 61701+00 TO STA. 61705+00 INCLUDING A PORTION OF THE FREE RIGHT AND THE THRU CONNECTOR TO BUS 281. CONSTRUCT A TEMPORARY DETOUR PAVEMENT CONNECTION FOR THE SBFR THRU CONNECTOR TO BUS 281 TO MAINTAIN RIGHT AND LEFT TURNS.

CONSTRUCT OWASSA ROAD APPROXIMATELY STA. 18+50 TO STA. 20+50.

BEGIN CONSTRUCTION OF NB BUS 281 APPROXIMATELY STA. 28+30 TO STA. 37+85.

1B. INSTALL SIGNING AND PAVEMENT MARKINGS AND MOVE NB & SB FRONTAGE ROAD TRAFFIC TO DETOUR PAVEMENT. CONSTRUCT FRONTAGE ROAD OUTSIDE CURB AND GUTTER, INLETS, AND 16.5 FT OF PAVEMENT FROM BEG. PROJECT TO APPROX. STA. 754+00.

CONTINUE CONSTRUCTION OF NB BUS 281 STA. 28+30 TO STA. 37+85 AND BUILD FROM APPROXIMATELY STA. 26+19 TO STA. 28+30.

PHASE II CONSTRUCTION

REMOVE EXISTING SIGNING, STRIPING, AND RAISED PAVEMENT MARKINGS ON MAINLANES THAT ARE IN CONFLICT WITH PHASE II TCP.

INSTALL PAVEMENT MARKINGS, SIGNING, AND OTHER TRAFFIC CONTROL MEASURES AS REQUIRED TO SHIFT NB & SB MAINLANE TRAFFIC TO OUTSIDE. PROVIDE TWO TRAVEL LANES NB & SB AT ALL TIMES.

INSTALL PCTB AS SHOWN IN PHASE II. CONSTRUCT NEW PAVEMENT 36 FT. EITHER SIDE OF THE US 281 CENTERLINE FROM STA 739+00 TO END OF PROJECT.

SHIFT NB & SB FRONTAGE ROAD TRAFFIC TO THE NEW OUTSIDE LANE CONSTRUCTED IN PHASE IB FROM STA 612+00 TO STA 754+00.

CONSTRUCT THE INSIDE OF THE NB & SB FRONTAGE ROADS FROM BEG. PROJECT TO APPROX. STA 755+00. ONE COURSE SURFACE TREATMENT BETWEEN ACP & FLEX BASE NB & SB FRONTAGE ROAD FROM STA 735+00 TO END OF PROJECT.

WIDEN AND OVERLAY THE EXISTING NB & SB FRONTAGE ROADS TO THE INSIDE FROM APPROX. STA 755+00 TO END OF PROJECT.

MAINTAIN EXISTING RAMPS OPEN TO TRAFFIC DURING PHASE II.

WIDEN EXISTING OVERPASS STRUCTURES AT NOLANA LOOP AND SIOUX ROAD TO THE INSIDE.

WIDEN EXISTING NB & SB MAINLANE BRIDGES AT PHARR/MCALLEN DITCH TO THE INSIDE.

USE NIGHTTIME DETOUR PLAN FOR OVERHEAD CONSTRUCTION OF BRIDGES AT NOLANA LOOP AND SIOUX ROAD.

PHASE III CONSTRUCTION

INSTALL PAVEMENT MARKINGS, SIGNING, AND OTHER TRAFFIC CONTROL MEASURES ON NEWLY CONSTRUCTED NB & SB OUTSIDE FRONTAGE ROADS. SHIFT FRONTAGE ROAD TRAFFIC TO THE OUTSIDE.

INSTALL PAVEMENT MARKINGS, SIGNING, AND OTHER TRAFFIC CONTROL MEASURES ON NEWLY CONSTRUCTED INSIDE MAINLANES. SHIFT NB & SB MAINLANE TRAFFIC TO INSIDE. PROVIDE TWO TRAVEL LANES NB & SB.

INSTALL PCTB ON NB & SB MAINLANES AS SHOWN.

CONSTRUCT THE OUTSIDE OF THE MAINLANES FROM STA. 739+00 TO END OF PROJECT.

CONSTRUCT OWASSA ROAD APPROXIMATELY STA. 15+00 TO STA. 16+00.

MAINTAIN THE EXISTING ENTRANCE & EXIT RAMPS OPEN TO MAINLANE TRAFFIC, EXCEPT WHEN A RAMP MUST BE CLOSED FOR CONSTRUCTION. NO TWO ADJACENT ENTRANCE OR EXIT RAMPS MAY BE CLOSED AT ANY TIME. IMPLEMENT TCP "RAMP CLOSURE LAYOUT" STEPS A-C FOR RAMP CLOSURES AND CONSTRUCTION.

STEP A. CLOSE RAMPS RN17, RN07, RN02, AND RS02 FOR CONSTRUCTION.

REOPEN RAMPS RN17, RN07, RN02, AND RS02.

PARTIALLY CONSTRUCT RAMPS RN13, RS14, RN15, RS16 AND RS10.

STEP B. CLOSE RAMPS RN05, RN03, RS18, RS08 AND RS04 FOR CONSTRUCTION.

REOPEN RAMPS RN05, RN03, RS18, RS08 AND RS04.

PARTIALLY CONSTRUCT RAMPS RS12 & RN09. CONSTRUCT A TEMPORARY CONNECTION FROM THE NEW PORTION OF RS12 TO EXISTING US281 MAINLANE.

STEP C. CLOSE RAMP RS06 FOR CONSTRUCTION.

REOPEN RAMP RS06.

PARTIALLY CONSTRUCT RAMP RN11. CONSTRUCT A TEMPORARY CONNECTION FROM THE NEW PORTION OF RN11 TO EXISTING US281 MAINLANE.

PHASE III CONSTRUCTION (CONTINUED)

WIDEN EXISTING NB FRONTAGE ROAD STRUCTURE AT PHARR/MCALLEN DITCH TO THE INSIDE.

WIDEN EXISTING MAINLANE STRUCTURES AT PHARR/MCALLEN DITCH ON THE NORTHBOUND SIDE.

WIDEN EXISTING MAINLANE NB & SB OVERPASS STRUCTURES AT NOLANA LOOP AND SIOUX ROAD TO THE OUTSIDE.

USE NIGHTTIME DETOUR PLAN FOR OVERHEAD CONSTRUCTION OF BRIDGES AT ALL INTERSECTIONS.

STEP 1A. THRU 1D. CONSTRUCT TEXAS 495 INTERSECTION. (CONC PAV'T)

STEP 2A. THRU 2D. CONSTRUCT SIOUX ROAD INTERSECTION. (CONC PAV'T)

STEP 3A. THRU 3D. CONSTRUCT NOLANA LOOP INTERSECTION. (CONC PAV'T)

PHASE IV CONSTRUCTION

INSTALL PAVEMENT MARKINGS, SIGNING, BARRICADES, ETC. AS REQUIRED TO DIVERT ALL NB & SB MAINLANE TRAFFIC TO THE FRONTAGE ROADS AT TRENTON ROAD.

RECONSTRUCT MAINLANES FROM STA. 621+50 TO STA 691+00. COMPLETE CONSTRUCTION OF RAMPS RS16, RN15, RS14 AND RN13. PARTIALLY CONSTRUCT NEW US 281 TRENTON ROAD OVERPASS INCLUDING MSE RETAINING WALLS, DRILLED SHAFT FOUNDATION, COLUMNS AND BENTS, AND PLACE THE BEAMS OVER THE TWO OUTSIDE SPANS.

INSTALL TRAFFIC CONTROL MEASURES AND DETOUR PLAN TO CLOSE TRENTON ROAD AT US 281.

STEP 1A. REMOVE EXISTING TRENTON ROAD UNDERPASS BRIDGE SPANS OVER US 281 MAINLANES ONLY. KEEP BRIDGE SPANS OVER THE NB & SB FRONTAGE ROADS INTACT.
COMPLETE US 281 OVERPASS.

COMPLETE RAMPS RN13, RS14, RN15 AND RS16

STEP 1B. INSTALL PAVEMENT MARKINGS, SIGNING, BARRICADES, ETC. AS REQUIRED TO DIVERT ALL NB & SB MAINLANE TRAFFIC BACK ONTO THE MAINLANES. COMPLETE TRENTON ROAD INTERSECTION AND NB & SB TURNAROUND LANES.

STEP 1C. OPEN TRENTON ROAD INTERSECTION AND TURNAROUND LANES. CONSTRUCT REMAINING SECTIONS OF TRENTON ROAD. USE TCP "TRENTON ROAD DETOUR LAYOUT" DURING CONSTRUCTION. REMOVE TRENTON ROAD JUG HANDLES.

OPEN THE COMPLETED US 281 MAINLANES AND TRENTON ROAD TO TRAFFIC. DETOUR NB BUS 281 TO TRENTON ROAD. CLOSE RAMP RN09 TO TRAFFIC.

STEP 2. COMPLETE CONSTRUCTION OF THE SBFR APPROX. STA 61705+00 TO STA 61712+00.

COMPLETE CONSTRUCTION OF THE WEST SIDE OF THE NBFR FROM APPROX. STA 50709+50 TO STA 50712+50 AND FROM APPROX. STA 50723+25 TO STA 50727+75.

STEP 3. MOVE NBFR TRAFFIC TO WEST SIDE OF PAVEMENT BUILT IN STEP 2.

COMPLETE CONSTRUCTION OF THE EAST SIDE OF THE NBFR FROM APPROX. STA 50709+50 TO STA 50712+50 AND FROM APPROX. STA 50723+25 TO STA 50727+75.

COMPLETE DRIVEWAYS ADJACENT TO THE NORTHBOUND FRONTAGE ROAD NEAR BUS 281.

IMPORTANT NOTE TO CONTRACTOR:
KEY PROJECT MILESTONE!!
LIQUIDATED DAMAGES OR INCENTIVES APPLY TO THIS PHASE!

PHASE V CONSTRUCTION

INSTALL PAVEMENT MARKINGS, SIGNING, BARRICADES, ETC. AS REQUIRED TO DIVERT ALL NB & SB MAINLANE TRAFFIC TO THE FRONTAGE ROADS AT OWASSA ROAD.

INSTALL TRAFFIC CONTROL MEASURES AND DETOUR PLAN TO CLOSE OWASSA ROAD AT US 281.

DETOUR OWASSA ROAD TRAFFIC PER DETOUR PLAN. DETOUR NB & SB BUS 281 TRAFFIC TO TRENTON ROAD.

DIVERT NB & SB MAINLINE TO FRONTAGE ROADS AT OWASSA ROAD.

RECONSTRUCT MAINLINE FROM STA. 691+00 TO STA. 739+00 AND COMPLETE RAMPS RS12, RN11, RS10, AND RN09.

COMPLETE THE NB BUS281 FROM APPROX. STA 15+00 TO STA 26+19.

CONSTRUCT REMAINING SEGMENTS OF OWASSA ROAD STA. 24+00 TO STA. 20+50, STA. 19+50 TO STA. 16+00 AND STA. 15+00 TO STA. 14+00.

COMPLETE THE FINAL COURSE OF ACP, PERMANENT PAVEMENT MARKINGS, SIGNING, STRIPING, AND PLACEMENT OF PERMANENT TRAFFIC SIGNALS INTO OPERATION. PRIOR TO FINAL ACCEPTANCE REMOVE ALL TEMPORARY SIGNALIZATION, BARRICADES, SIGNS, AND TRAFFIC HANDLING DEVICES. OPEN ALL LANES TO TRAFFIC.

ONCE VEGETATION IS ESTABLISED AND ALL DISTURBED AREAS STABILIZED, REMOVE ALL TEMPORARY EROSION CONTROL MEASURES.

IMPORTANT NOTE TO CONTRACTOR:
KEY PROJECT MILESTONE!!
LIQUIDATED DAMAGES OR INCENTIVES APPLY TO THIS PHASE!

THE SEAL APPEARING ON THIS DOCUMENT WAS AUTHORIZED BY JOHN M PEREZ, P.E. 66425 ON 08/06/2003.

STATE OF TEXAS
JOHN M. PEREZ
66425
REGISTERED PROFESSIONAL ENGINEER
8/6/03

PB Parsons Brinckerhoff Quade & Douglas Inc.

Texas Department of Transportation

© 2003 by TxDOT

US 281
TRAFFIC CONTROL PLAN
SEQUENCE OF CONSTRUCTION

SHEET 1 OF 1				281TCPNOTES4.DGN				
DESIGNED: PAF	FED. RD DIV. No.	STATE	FEDERAL AID PROJECT No.				HIGHWAY No.	
CHECKED: JP	6	TEXAS					US 281	
DRAWN: KTD	STATE DISTRICT	COUNTY		CONTROL No.	SECTION No.	JOB No.	SHEET No.	
CHECKED: JDH	PHARR	HIDALGO		0255	08	091	58	

h:\22322o\cadd\sheets\traffic\tcp\281tcpnotes4.dgn

NAME
10:57:12 AM
06/20/2003

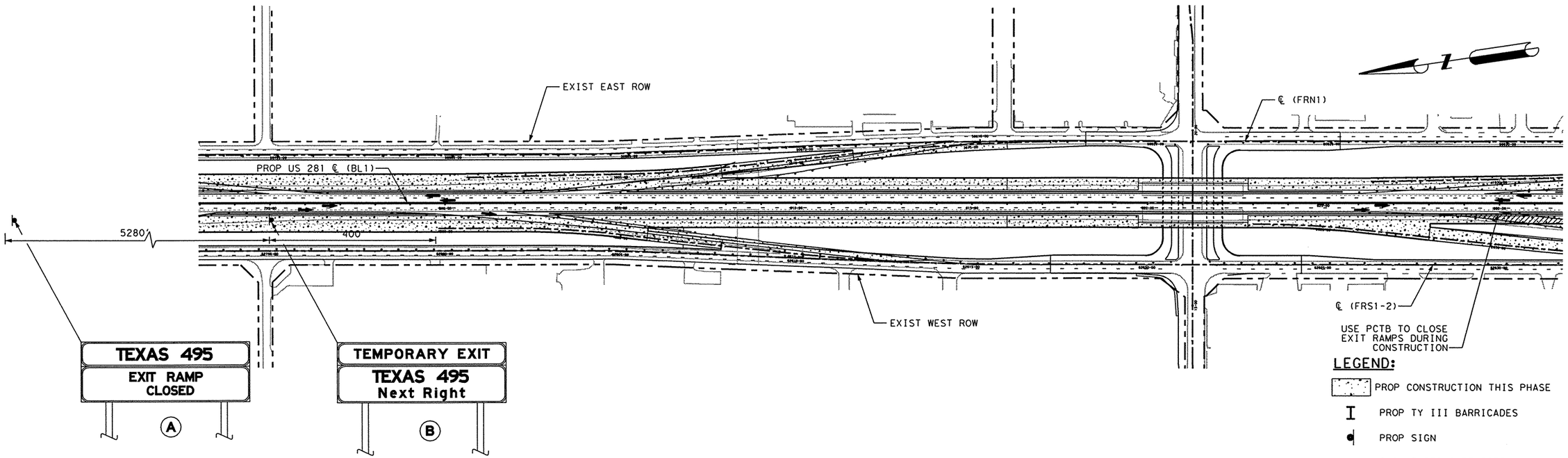

LEGEND:

- PROP CONSTRUCTION THIS PHASE
- I PROP TY III BARRICADES
- PROP SIGN
- ○○○ CHANNELIZING DEVICES

NOTES:

CONTRACTOR SHALL ERECT TEMPORARY GUIDE SIGNS PRIOR TO OPENING PROPOSED TEMPORARY RAMPS.

TEMPORARY EXIT SIGNS SHALL BE BUILT AND INSTALLED IN ACCORDANCE WITH BARRICADE STANDARD BC (4)-99. SEE GENERAL NOTES FOR PLACEMENT AND PAYMENT.

SEE TCP (6-3) FOR TYPICAL EXIT RAMP CLOSURE DETAIL

MINIMUM TEXT SIZE IS 8".

MAXIMUM SIZE OF SIGNS SHALL BE 36 SQ.FT.

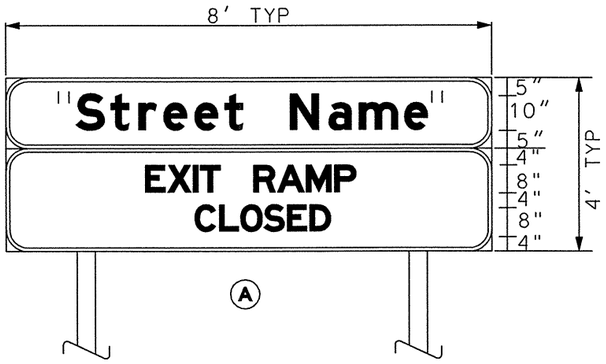

TEMPORARY EXIT SIGNS *

DESCRIPTION				
PHASE	EXIST./PROP. EXIT RAMP (DIRECTION)	PROP. SIGN LOCATION (STA.)	PROP. SIGN TEXT	SIGN SIZE
PHASE III	I ROAD NORTH BOUND	A 757+80 B 705+00	"I ROAD"	8' X 4'
PHASE III	TRENTON ROAD NORTH BOUND	A 817+80 B 765+00	"TRENTON ROAD"	8' X 4'
PHASE IV	BUSINESS 281 NORTH BOUND	A 817+80 B 765+00	"BUSINESS 281"	8' X 4'
PHASE III	NOLANA ROAD NORTH BOUND	A 917+80 B 865+00	"NOLANA ROAD"	8' X 4'
PHASE III	TRENTON ROAD SOUTH BOUND		"TRENTON ROAD"	8' X 4'
PHASE III	BUSINESS 281 SOUTH BOUND	A 582+20 B 635+00	"BUSINESS 281"	8' X 4'
PHASE III	NOLANA ROAD SOUTH BOUND	A 622+20 B 675+00	"NOLANA ROAD"	8' X 4'
PHASE III	SIOUX ROAD SOUTH BOUND	A 687+20 B 740+00	"SIOUX ROAD"	8' X 4'
PHASE III	TEXAS 495 SOUTH BOUND	A 748+20 B 801+00	"TEXAS 495"	8' X 4'

* NOTE: SUBSIDIARY TO ITEM 502.

THE SEAL APPEARING ON THIS DOCUMENT WAS AUTHORIZED BY JOHN M PEREZ, P.E. 66425 ON 06/20/2003.

STATE OF TEXAS · JOHN M. PEREZ · 66425 · REGISTERED PROFESSIONAL ENGINEER

Parsons Brinckerhoff Quade & Douglas Inc.

Texas Department of Transportation

© 2003 by TxDOT

US 281
TRAFFIC CONTROL PLAN
TEMPORARY EXIT SIGNS FOR EXIT RAMP CLOSURES

SCALE: 1"= 300'

SHEET 1 OF 1 | 281TCPTGS.DGN

DESIGNED: PAF	FED. RD DIV. NO.	STATE	FEDERAL AID PROJECT No.			HIGHWAY No.	
	6	TEXAS				US 281	
CHECKED: JP	STATE DISTRICT	COUNTY	CONTROL No.	SECTION No.	JOB No.	SHEET No.	
DRAWN: RLJ	PHARR	HIDALGO	0255	08	091	59	
CHECKED: JDH							

h:\22322a\cadd\sheets\traffic\tcp\281tcptgs.dgn

NAME
10:58:04 AM
06/20/2003
h:\22322a\cadd\sheets\traffic\tcp\281tcpdetour.dgn

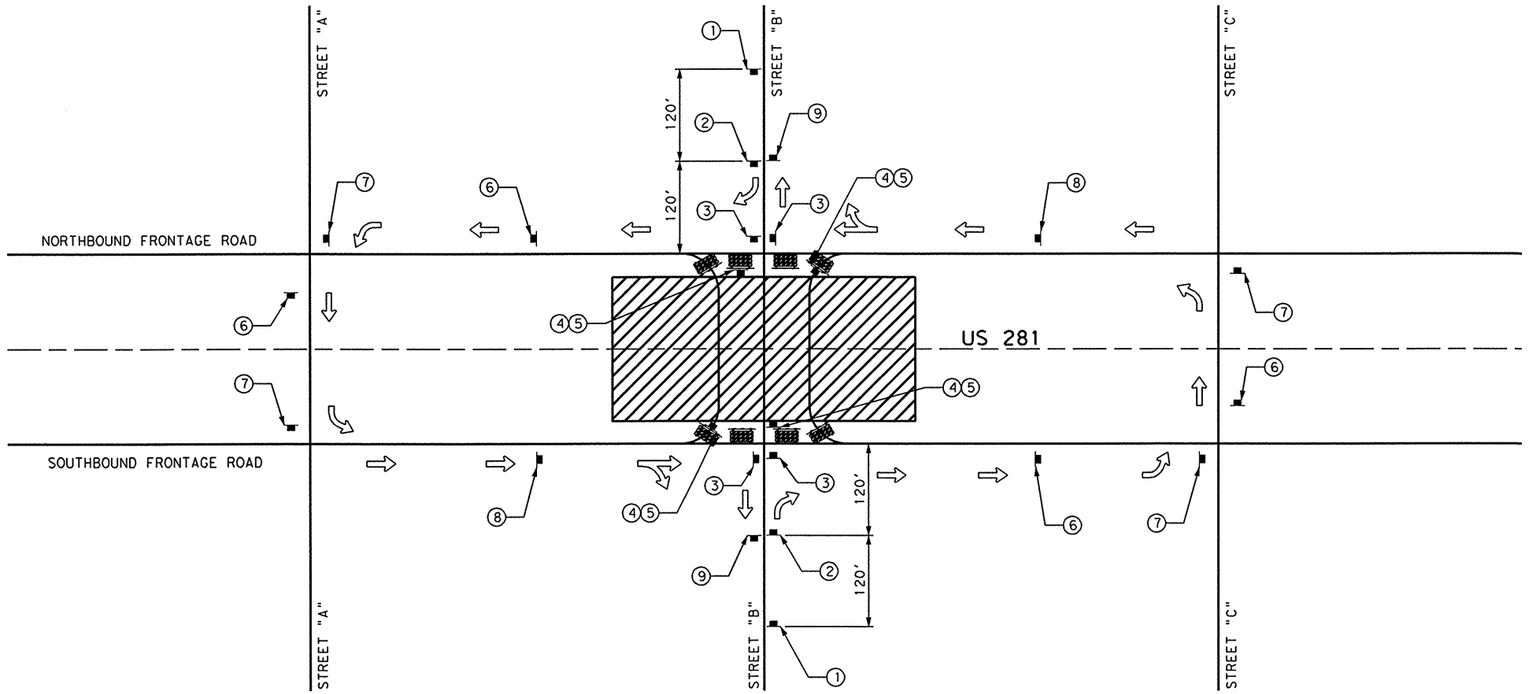

LEGEND:

- CONSTRUCTION AREA
- DIRECTION OF TRAFFIC FLOW
- TYPE A WARNING LIGHT
- CONSTRUCTION WARNING SIGN
- TYPE III BARRICADE

NOTES:

1. UNLESS AN ALTERNATE CONSTRUCTION SEQUENCE AND TRAFFIC CONTROL PLAN IS APPROVED BY THE ENGINEER, ALL OVERHEAD OVERPASS CONSTRUCTION OPERATIONS, WHICH REQUIRE ROADWAY CLOSURES, SHALL BE PERFORMED DURING OFF-PEAK HOURS, NIGHTTIME AND WEEKEND HOURS BETWEEN 7:00 P.M. FRIDAY AND 6:00 A.M. WEEK DAYS, OR AS APPROVED BY THE ENGINEER. WHEN A COMPLETE ROADWAY CLOSURE IS REQUIRED, TRAFFIC IS TO BE DETOURED AS SHOWN AND/OR DIRECTED BY THE ENGINEER.
2. ALL PERMANENT SIGNING IN CONFLICT WITH THE DETOUR OR DIRECTION OF TRAFFIC SHALL BE TEMPORARILY COVERED FOR THE DURATION OF THE DETOUR.
3. ALL DETOUR SIGNING SHALL BE EITHER REMOVED OR COVERED WHEN NOT IN USE.
4. BARRICADES SHALL NOT BE USED AS SIGN SUPPORTS.

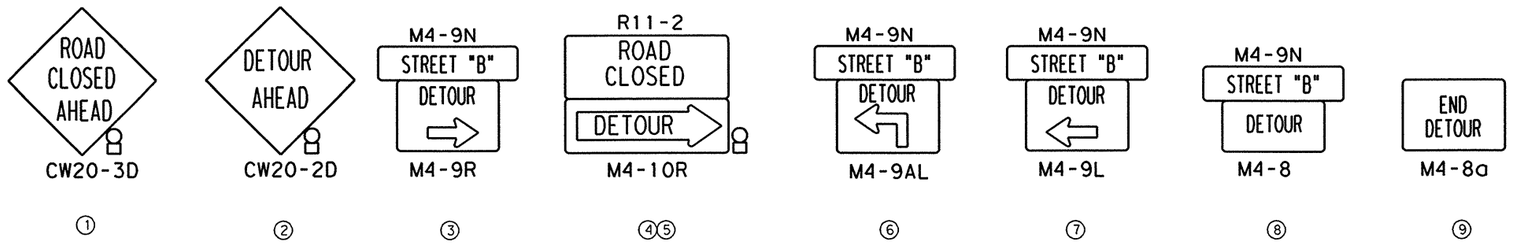

THE SEAL APPEARING ON THIS DOCUMENT WAS AUTHORIZED BY JOHN M PEREZ, P.E. 66425 ON 06/20/2003.

STATE OF TEXAS
JOHN M. PEREZ
66425
REGISTERED PROFESSIONAL ENGINEER

6/20/03

Texas Department of Transportation

© 2003 by TxDOT

US 281
TRAFFIC CONTROL PLAN
TYPICAL DETOUR FOR CLOSED STREET

SHEET 1 OF 1				281TCPDETOUR.DGN	
DESIGNED: PAF	FED. RD DIV. NO.	STATE	FEDERAL AID PROJECT No.		HIGHWAY No.
CHECKED: JP	6	TEXAS			US 281
DRAWN: KTD	STATE DISTRICT	COUNTY	CONTROL No.	SECTION No.	JOB No.	SHEET No.
CHECKED: JDH	PHARR	HIDALGO	0255	08	091	60

NAME
10:58:31 AM
06/20/2003
h:\22322e\cadd\sheets\traffic\tcp\281tcpdetour1.dgn

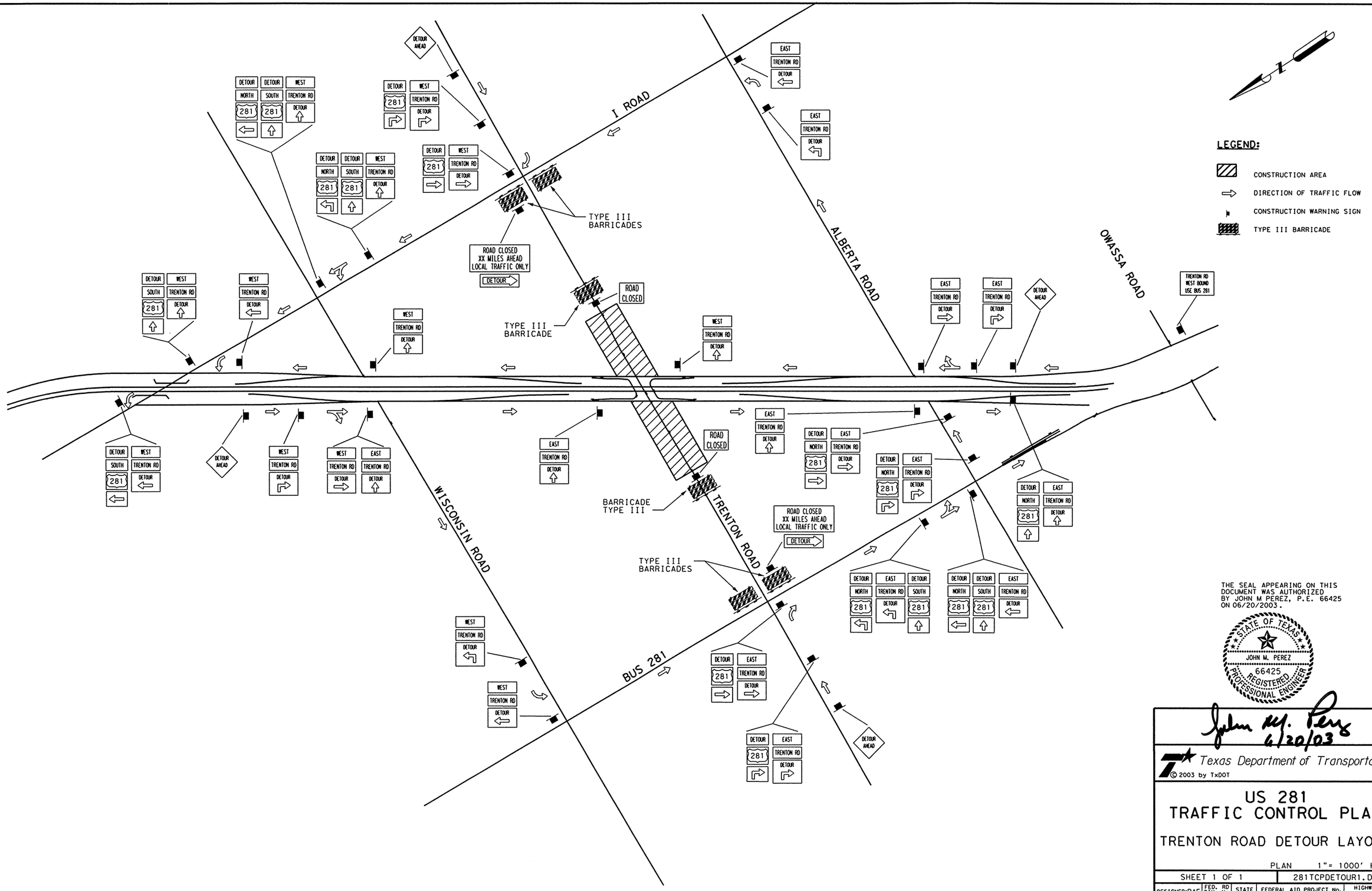

THE SEAL APPEARING ON THIS DOCUMENT WAS AUTHORIZED BY JOHN M PEREZ, P.E. 66425 ON 06/20/2003.

STATE OF TEXAS
JOHN M. PEREZ
66425
REGISTERED PROFESSIONAL ENGINEER

John M. Perez 6/20/03

Texas Department of Transportation

© 2003 by TxDOT

US 281
TRAFFIC CONTROL PLAN

TRENTON ROAD DETOUR LAYOUT

PLAN 1"= 1000' HORIZ

SHEET 1 OF 1 | 281TCPDETOUR1.DGN

DESIGNED: PAF	FED. RD DIV. No.	STATE	FEDERAL AID PROJECT No.			HIGHWAY No.
CHECKED: JP	6	TEXAS				US 281
DRAWN: PGT	STATE DISTRICT	COUNTY	CONTROL No.	SECTION No.	JOB No.	SHEET No.
CHECKED: JDH	PHARR	HIDALGO	0255	08	091	61

NAME
03:54:49 PM
08/06/2003

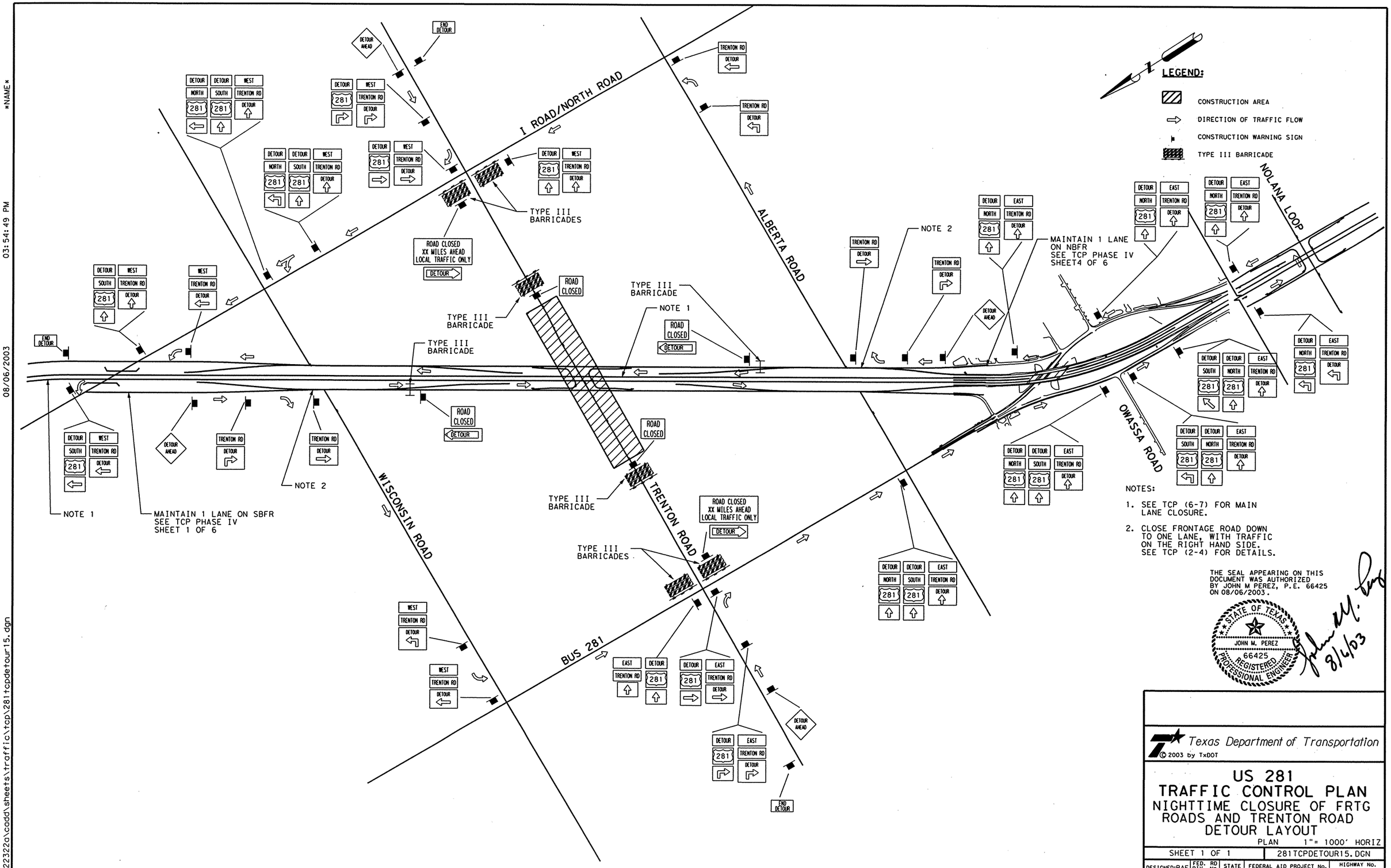

NOTES:

1. SEE TCP (6-7) FOR MAIN LANE CLOSURE.
2. CLOSE FRONTAGE ROAD DOWN TO ONE LANE, WITH TRAFFIC ON THE RIGHT HAND SIDE. SEE TCP (2-4) FOR DETAILS.

THE SEAL APPEARING ON THIS DOCUMENT WAS AUTHORIZED BY JOHN M PEREZ, P.E. 66425 ON 08/06/2003.

STATE OF TEXAS
JOHN M. PEREZ
66425
REGISTERED PROFESSIONAL ENGINEER

8/6/03

Texas Department of Transportation

© 2003 by TxDOT

US 281
TRAFFIC CONTROL PLAN
NIGHTTIME CLOSURE OF FRTG ROADS AND TRENTON ROAD
DETOUR LAYOUT

PLAN 1" = 1000' HORIZ

SHEET 1 OF 1 | 281TCPDETOUR15.DGN

DESIGNED: PAF	FED. RD DIV. NO.	STATE	FEDERAL AID PROJECT No.			HIGHWAY No.
CHECKED: JP	6	TEXAS				US 281
DRAWN: PGT	STATE DISTRICT	COUNTY	CONTROL No.	SECTION No.	JOB No.	SHEET No.
CHECKED: JDH	PHARR	HIDALGO	0255	08	091	62

h:\22322o\cadd\sheets\traffic\tcp\281tcpdetour15.dgn

NAME
08/06/2003 03:55:07 PM
h:\22322a\cadd\sheets\traffic\tcp\281tcpdetour2.dgn

LEGEND:

- CONSTRUCTION AREA
- DIRECTION OF TRAFFIC FLOW
- CONSTRUCTION WARNING SIGN
- TYPE III BARRICADE

I ROAD
TRENTON ROAD
ALBERTA ROAD
OWASSA ROAD
MINNESOTA ROAD
NOLANA LOOP
BUS 281
SUGAR ROAD

TYPE III BARRICADES
ROAD CLOSED XX MILES AHEAD LOCAL TRAFFIC ONLY
TYPE III BARRICADE
ROAD CLOSED

*NOTE: SEE SHEET 63A FOR "CLOSURE OF SOUTHBOUND FRONTAGE ROAD DETOUR LAYOUT PHASE V" TO BE USED IN CONJUNCTION WITH THIS DETOUR.

THE SEAL APPEARING ON THIS DOCUMENT WAS AUTHORIZED BY JOHN M PEREZ, P.E. 66425 ON 08/06/2003.

STATE OF TEXAS · JOHN M. PEREZ · 66425 · REGISTERED PROFESSIONAL ENGINEER

8/6/03

Texas Department of Transportation

© 2003 by TxDOT

US 281
TRAFFIC CONTROL PLAN
CLOSURE OF MAIN LANES AND OWASSA ROAD DETOUR LAYOUT

PLAN 1"= 1000' HORIZ

SHEET 1 OF 1						281TCPDETOUR2.DGN	
DESIGNED: PAF	FED. RD DIV. No.	STATE	FEDERAL AID PROJECT No.				HIGHWAY No.
CHECKED: JP	6	TEXAS					US 281
DRAWN: SBH	STATE DISTRICT	COUNTY	CONTROL No.	SECTION No.	JOB No.	SHEET No.	
CHECKED: JDH	PHARR	HIDALGO	0255	08	091	63	

NAME
04:09:41 PM
08/06/2003
h:\22322a\cadd\sheets\traffic\top\281tcpdetour2a.dgn

LEGEND:

- CONSTRUCTION AREA
- DIRECTION OF TRAFFIC FLOW
- CONSTRUCTION WARNING SIGN
- TYPE III BARRICADE

I ROAD
TRENTON ROAD
ALBERTA ROAD
OWASSA ROAD
MINNESOTA ROAD
NOLANA LOOP
BUS 281
SUGAR ROAD

NORTH BUSINESS 281
NORTH BUSINESS 281
DETOUR NORTH BUSINESS 281
DETOUR AHEAD
DETOUR AHEAD
END DETOUR
TYPE III BARRICADE
ROAD CLOSED
WEST OWASSA RD DETOUR
WEST OWASSA RD DETOUR
DETOUR SOUTH 281
DETOUR SOUTH 281
DETOUR BUSINESS 281
END DETOUR
DETOUR 281 WEST OWASSA RD DETOUR

THE SEAL APPEARING ON THIS DOCUMENT WAS AUTHORIZED BY JOHN M PEREZ, P.E. 66425 ON 08/06/2003.

STATE OF TEXAS
JOHN M. PEREZ
66425
REGISTERED PROFESSIONAL ENGINEER
8/6/03

Texas Department of Transportation

© 2003 by TxDOT

US 281
TRAFFIC CONTROL PLAN
CLOSURE OF SOUTH BOUND FRONTAGE ROAD DETOUR LAYOUT PHASE V

PLAN 1"= 1000' HORIZ

SHEET 1 OF 1						281TCPDETOUR2.DGN
DESIGNED: PAF	FED. RD DIV. No.	STATE	FEDERAL AID PROJECT No.			HIGHWAY No.
CHECKED: JP	6	TEXAS				US 281
DRAWN: SBH	STATE DISTRICT	COUNTY	CONTROL No.	SECTION No.	JOB No.	SHEET No.
CHECKED: JDH	PHARR	HIDALGO	0255	08	091	63A

NAME
10:58:18 AM
06/20/2003
h:\22322o\cadd\sheets\traffic\tcp\281tcpdet01.dgn

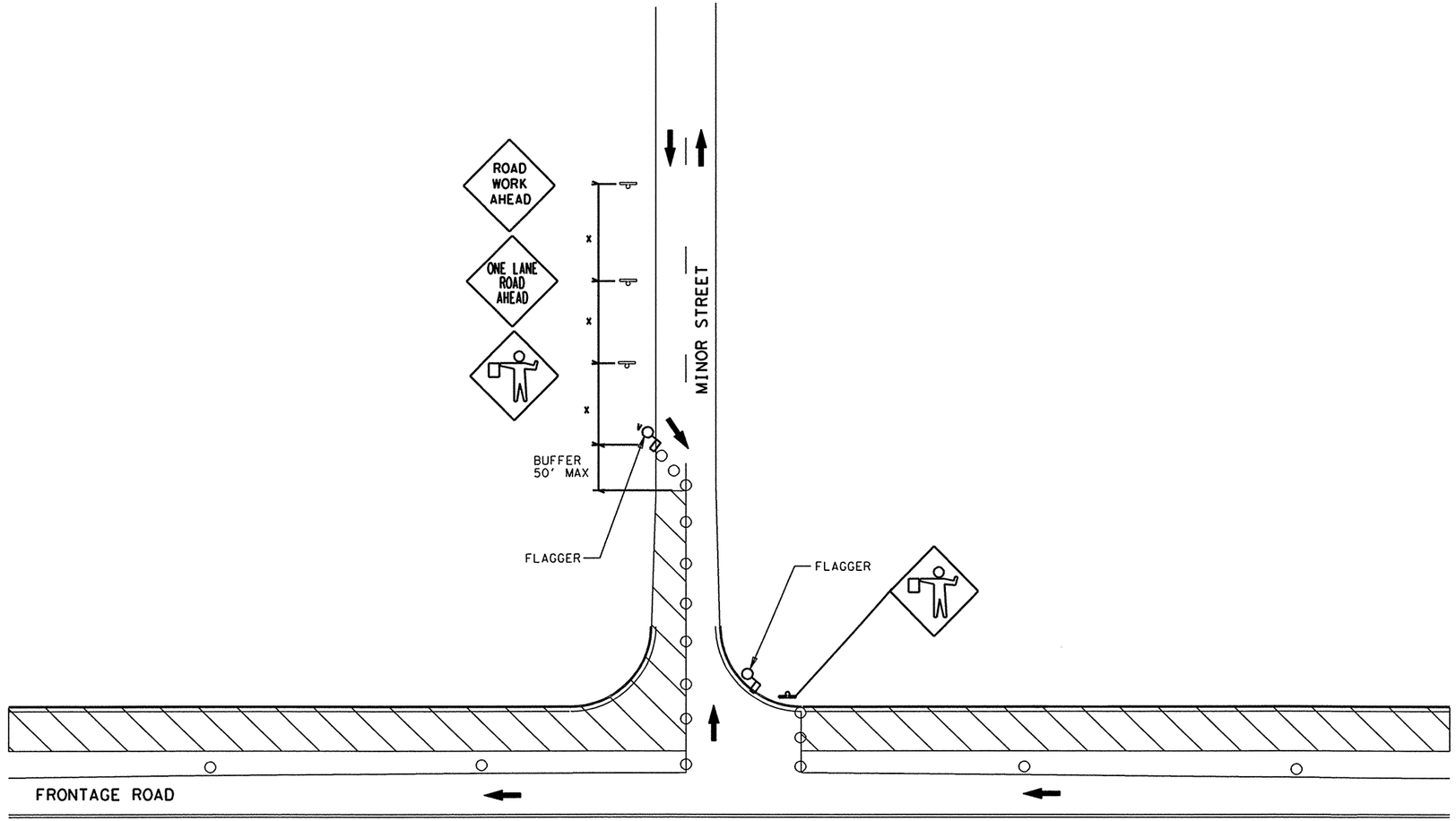

LANE CLOSURE ON MINOR STREET

NOTES:

WARNING SIGN SEQUENCE IN OPPOSITE DIRECTION SAME AS BELOW.

SIGNING SHOWN FOR ONE DIRECTION ONLY.

Posted Speed (MPH)	"X" Sign Spacings (feet)
30 or less	120
35	160
40	240
45	320
50	400
55	500
60	600
65	700
70	800

THE SEAL APPEARING ON THIS DOCUMENT WAS AUTHORIZED BY JOHN M PEREZ, P.E. 66425 ON 06/20/2003.

STATE OF TEXAS
JOHN M. PEREZ
66425
REGISTERED PROFESSIONAL ENGINEER

John M. Perez 6/20/03

Texas Department of Transportation

© 2003 by TxDOT

US 281
TRAFFIC CONTROL PLAN
MINOR STREET CLOSURE DETAIL

N. T. S.

SHEET 1 OF 1					281TCPDET01.dgn	
DESIGNED: PAF	FED. RD DIV. No.	STATE	FEDERAL AID PROJECT No.			HIGHWAY No.
CHECKED: JP	6	TEXAS				US 281
DRAWN: RLJ	STATE DISTRICT	COUNTY	CONTROL No.	SECTION No.	JOB No.	SHEET No.
CHECKED: JDH	PHARR	HIDALGO	0255	08	091	64

NAME
10:47:28 AM
06/20/2003

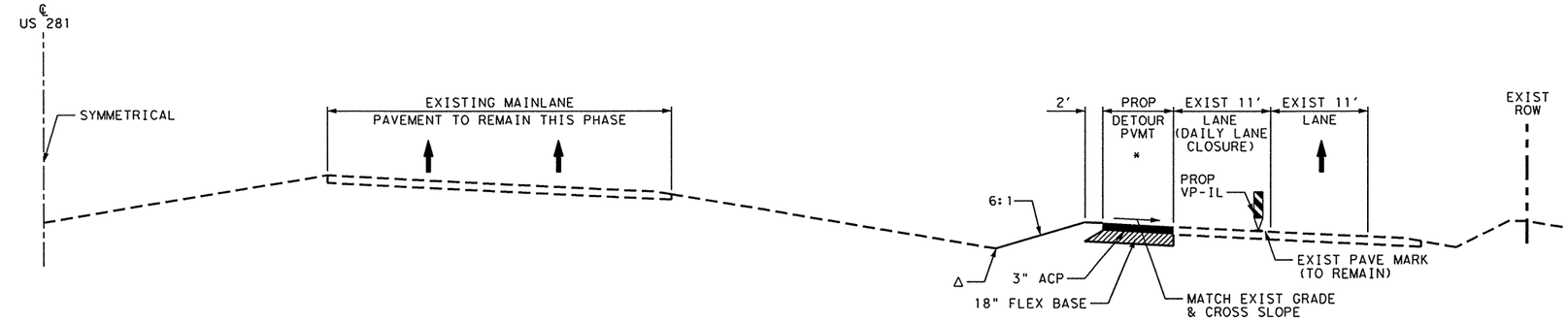

*

SBFR

STA 61611+00 TO STA 61615+75 WIDTH VARIES 0' - 8'
STA 61618+00 TO STA 61652+00 WIDTH VARIES 0' - 8'
STA 61654+00 TO STA 61662+00 WIDTH VARIES 0' - 8'
STA 61664+00 TO STA 61691+00 WIDTH VARIES 0' - 8'
STA 61693+00 TO STA 61701+25 WIDTH VARIES 0' - 8'
STA 62704+80 TO STA 62722+40 WIDTH VARIES 0' - 8'
STA 62724+00 TO STA 62751+50 WIDTH VARIES 0' - 8'

*

NBFR

STA 50610+00 TO STA 50614+50 WIDTH VARIES 0' - 8'
STA 50617+00 TO STA 50651+50 WIDTH VARIES 0' - 8'
STA 50653+25 TO STA 50659+60 WIDTH VARIES 0' - 8'
STA 50662+90 TO STA 50693+50 WIDTH VARIES 0' - 8'
STA 50696+10 TO STA 50710+90 WIDTH VARIES 0' - 8'

PHASE IA TYPICAL SECTION
STA 630+00.00 TO STA 724+00.00

LEGEND:

WORKZONE PAVEMENT MARKINGS:

SY	SOLID YELLOW NON-REMOVABLE
SW	SOLID WHITE NON-REMOVABLE
BW	BROKEN WHITE NON-REMOVEABLE
SYR	SOLID YELLOW REMOVEABLE
SWR	SOLID WHITE REMOVEABLE
BWR	BROKEN WHITE REMOVEABLE

** **NBML ACCELERATION LANE**

STA 741+00.00 TO STA 751+00.00 TRANS 0' MIN ~ 12' MAX

SBML ACCELERATION LANE

STA 724+00.00 TO STA 736+80.00 TRANS 0' MIN ~ 12' MAX

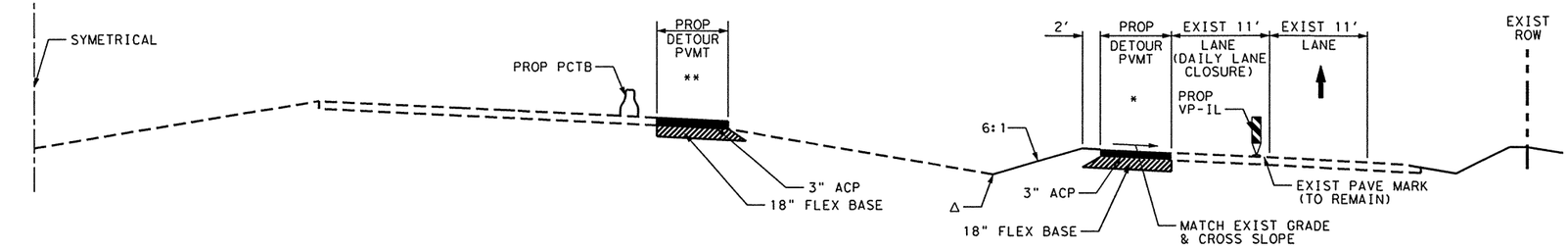

* **SBFR**

STA 62724+00 TO STA 62751+50 WIDTH VARIES 0' - 8'

* **NBFR**

STA 50724+00 TO STA 50757+00 WIDTH VARIES 0' - 8'

PHASE IA TYPICAL SECTION
STA 724+00.00 TO STA 757+00.00

Δ THE CONTRACTOR SHALL REGRADE DITCHES TO MAINTAIN THE EXISTING DRAINAGE PATTERNS AND REMOVE/RELAY OR EXTEND EXISTING DRAINAGE STRUCTURES AS NEEDED. THIS WORK SHALL BE CONSIDERED SUBSIDIARY TO THE VARIOUS BID ITEMS OF THIS CONTRACT.

NOTE:
SEE PROPOSED TYPICAL SECTIONS FOR CROSS SLOPE INFORMATION.

THE SEAL APPEARING ON THIS DOCUMENT WAS AUTHORIZED BY JOHN M PEREZ, P.E. 66425 ON 06/20/2003.

STATE OF TEXAS
JOHN M. PEREZ
66425
REGISTERED PROFESSIONAL ENGINEER

John M. Perez 6/20/03

Parsons Brinckerhoff Quade & Douglas Inc.

Texas Department of Transportation

© 2003 by TxDOT

TRAFFIC CONTROL PHASING TYPICAL SECTION
PHASE IA
STA 630+00 TO STA 757+00

SCALE: NTS

SHEET 1 OF 3				281TYP15.DGN			
DESIGNED: PAF	FED. RD DIV. No.	STATE	FEDERAL AID PROJECT No.			HIGHWAY No.	
CHECKED: JP	6	TEXAS				US 281	
DRAWN: RLJ	STATE DISTRICT	COUNTY	CONTROL No.	SECTION No.	JOB No.	SHEET No.	
CHECKED: JDH	PHARR	HIDALGO	0255	08	091	65	

h:\22322o\cadd\sheets\traffic\tcp\typ\281typ15.dgn

NAME
10:47:37 AM
06/20/2003
h:\22322a\cadd\sheets\traffic\tcp\typ\281typ19.dgn

*

NBML

STA 778+50.00 TO STA 787+30.00 WIDTH VARIES 0' - 8'
STA 790+60.00 TO STA 798+30.00 WIDTH VARIES 0' - 8'
STA 809+10.00 TO STA 819+85.39 WIDTH VARIES 0' - 8'
STA 835+10.00 TO STA 843+17.00 WIDTH VARIES 0' - 8'
STA 843+17.00 TO STA 846+00.00 ~ TRANS 8' TO 0'

**

NBML ACCELERATION LANE

STA 798+29.80 TO STA 808+29.80 ~ TRANS 0' MIN TO 12' MAX
STA 822+70.75 TO STA 837+61.40 ~ TRANS 0' MIN TO 12' MAX

*

SBML

STA 777+00.00 TO STA 786+60.00 WIDTH VARIES 0' - 8'
STA 795+00.00 TO STA 803+32.79 WIDTH VARIES 0' - 8'
STA 805+70.00 TO STA 808+32.60 WIDTH VARIES 0' - 8'
STA 808+92.60 TO STA 819+85.39 WIDTH VARIES 0' - 8'
STA 822+71.02 TO STA 832+03.82 WIDTH VARIES 0' - 8'
STA 833+80.00 TO STA 840+00.00 WIDTH VARIES 0' - 8'
STA 840+00.00 TO STA 844+00.00 ~ TRANS 8' TO 0'

**

SBML ACCELERATION LANE

STA 785+38.06 TO STA 795+00.00 ~ TRANS 0' MIN TO 12' MAX

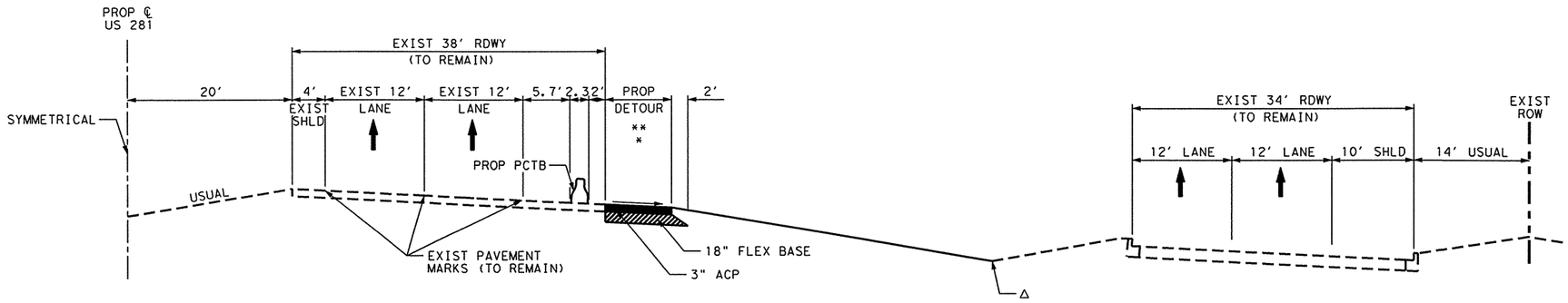

NBFR

STA 50757+10.00 TO END OF PROJECT

SBFR

STA 62757+00.00 TO END OF PROJECT

PHASE IA TYPICAL SECTION

STA 757+00.00 TO STA 846+00.00

△ THE CONTRACTOR SHALL REGRADE DITCHES TO MAINTAIN THE EXISTING DRAINAGE PATTERNS AND REMOVE/RELAY OR EXTEND EXISTING DRAINAGE STRUCTURES AS NEEDED. THIS WORK SHALL BE CONSIDERED SUBSIDIARY TO THE VARIOUS BID ITEMS OF THIS CONTRACT

NOTE:
SEE PROPOSED TYPICAL SECTIONS FOR CROSS SLOPE INFORMATION.

THE SEAL APPEARING ON THIS DOCUMENT WAS AUTHORIZED BY JOHN M PEREZ, P.E. 66425 ON 06/20/2003.

STATE OF TEXAS
JOHN M. PEREZ
66425
REGISTERED PROFESSIONAL ENGINEER

6/20/03

Parsons Brinckerhoff Quade & Douglas Inc.

Texas Department of Transportation

© 2003 by TxDOT

TRAFFIC CONTROL PHASING TYPICAL SECTION

PHASE IA
STA 757+00 TO STA 846+00

SCALE: NTS

SHEET 2 OF 3							281TYP19.DGN	
DESIGNED: PAF	FED. RD DIV. NO.	STATE	FEDERAL AID PROJECT No.				HIGHWAY No.	
CHECKED: JP	6	TEXAS					US 281	
DRAWN: RLJ	STATE DISTRICT	COUNTY	CONTROL No.	SECTION No.	JOB No.	SHEET No.		
CHECKED: JDH	PHARR	HIDALGO	0255	08	091	66		

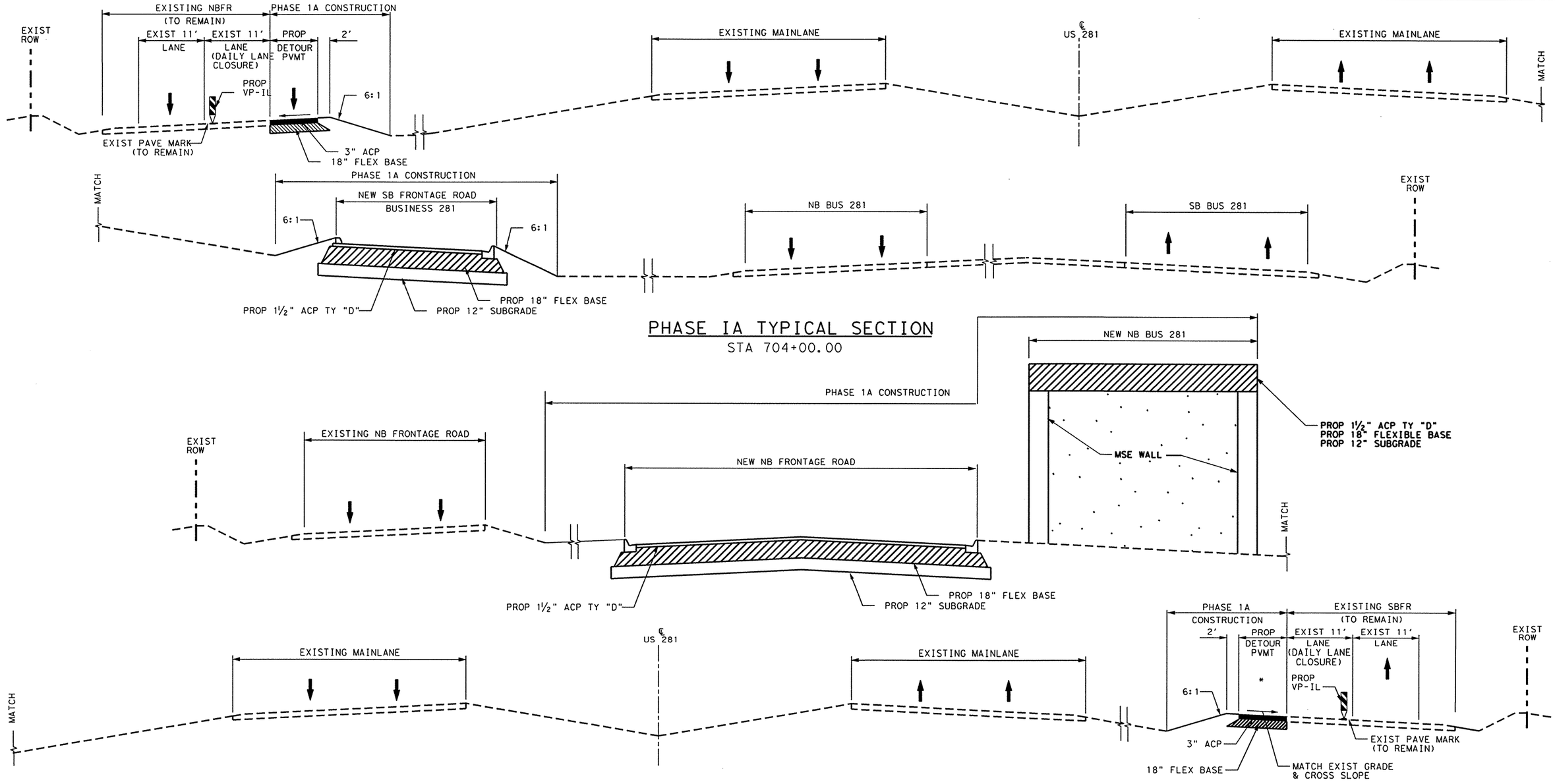

PHASE IA TYPICAL SECTION
STA 704+00.00

PHASE IA TYPICAL SECTION
STA 719+00.00

△ THE CONTRACTOR SHALL REGRADE DITCHES TO MAINTAIN THE EXISTING DRAINAGE PATTERNS AND REMOVE/RELAY OR EXTEND EXISTING DRAINAGE STRUCTURES AS NEEDED. THIS WORK SHALL BE CONSIDERED SUBSIDIARY TO THE VARIOUS BID ITEMS OF THIS CONTRACT

NOTE:
SEE PROPOSED TYPICAL SECTIONS FOR CROSS SLOPE INFORMATION.

LEGEND:

WORKZONE PAVEMENT MARKINGS:

SY	SOLID YELLOW NON-REMOVABLE
SW	SOLID WHITE NON-REMOVABLE
BW	BROKEN WHITE NON-REMOVEABLE
SYR	SOLID YELLOW REMOVEABLE
SWR	SOLID WHITE REMOVEABLE
BWR	BROKEN WHITE REMOVEABLE

THE SEAL APPEARING ON THIS DOCUMENT WAS AUTHORIZED BY JOHN M PEREZ, P.E. 66425 ON 06/20/2003.

STATE OF TEXAS · JOHN M. PEREZ · 66425 · REGISTERED PROFESSIONAL ENGINEER

6/20/03

Parsons Brinckerhoff Quade & Douglas Inc.

Texas Department of Transportation

© 2003 by TxDOT

TRAFFIC CONTROL PHASING TYPICAL SECTION
PHASE IA
BUS 281 CONSTRUCTION

SCALE: NTS

SHEET 3 OF 3 — 281TYP31.DGN

DESIGNED: PAF	FED. RD. DIV. No.	STATE	FEDERAL AID PROJECT No.				HIGHWAY No.
CHECKED: JP	6	TEXAS					US 281
DRAWN: SBH	STATE DISTRICT	COUNTY	CONTROL No.	SECTION No.	JOB No.	SHEET No.	
CHECKED: JDH	PHARR	HIDALGO	0255	08	091	67	

NAME
10:49:37 AM
06/20/2003
h:\22322a\cadd\sheets\traffic\tcp\typ\281typ31.dgn

NAME
10:36:13 AM
06/20/2003

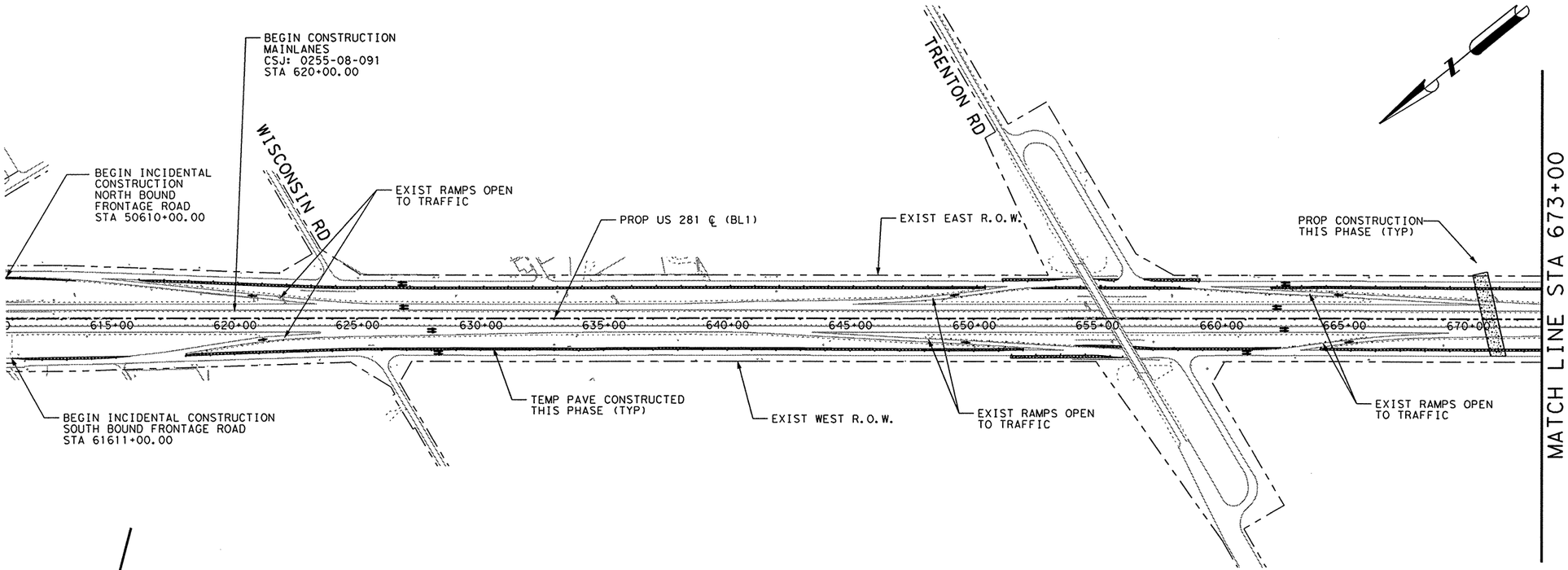

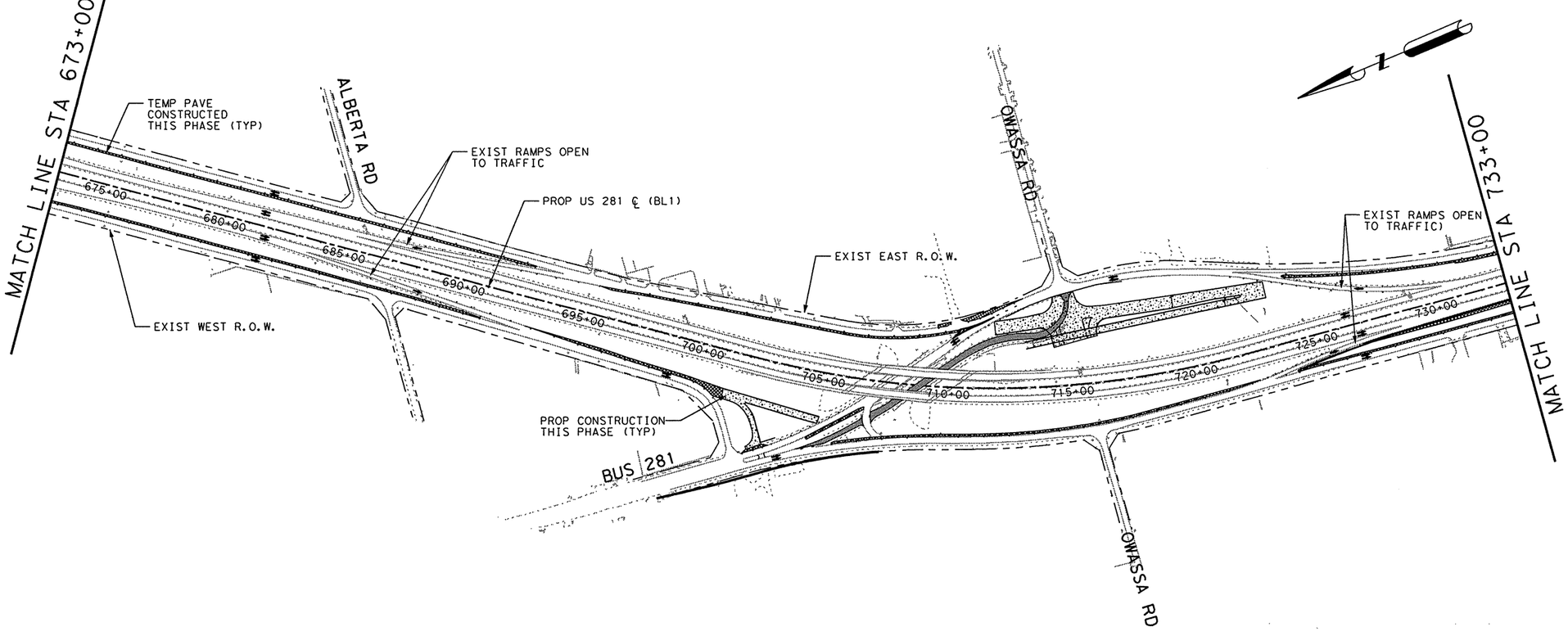

LEGEND:

- TEMP PAV CONSTRUCTED PREVIOUS PHASE
- TEMP PAV CONSTRUCTED THIS PHASE
- PROP CONSTRUCTION THIS PHASE
- PROP CONSTRUCTION PREVIOUS PHASE
- EXISTING TO BE REMOVED
- DIRECTIONAL ARROW

THE SEAL APPEARING ON THIS DOCUMENT WAS AUTHORIZED BY JOHN M PEREZ, P.E. 66425 ON 06/20/2003.

STATE OF TEXAS
JOHN M. PEREZ
66425
REGISTERED PROFESSIONAL ENGINEER

John M. Perez
6/20/03

Parsons Brinckerhoff Quade & Douglas Inc.

Texas Department of Transportation

© 2003 by TxDOT

US 281
TRAFFIC CONTROL LAYOUT
PHASE IA
BEGIN PROJECT TO END PROJECT

PLAN 1"= 500' HORIZ

SHEET 1 OF 2 | 281SEQ1ALAYOUT01.DGN

DESIGNED: PAF	FED. RD DIV. No.	STATE	FEDERAL AID PROJECT No.			HIGHWAY No.
CHECKED: JP	6	TEXAS				US 281
DRAWN: KTD	STATE DISTRICT	COUNTY	CONTROL No.	SECTION No.	JOB No.	SHEET No.
CHECKED: JDH	PHARR	HIDALGO	0255	08	091	68

h:\22322o\cadd\sheets\traffic\tcp\281seq1layout01.dgn

NAME
10:36:23 AM
06/20/2003

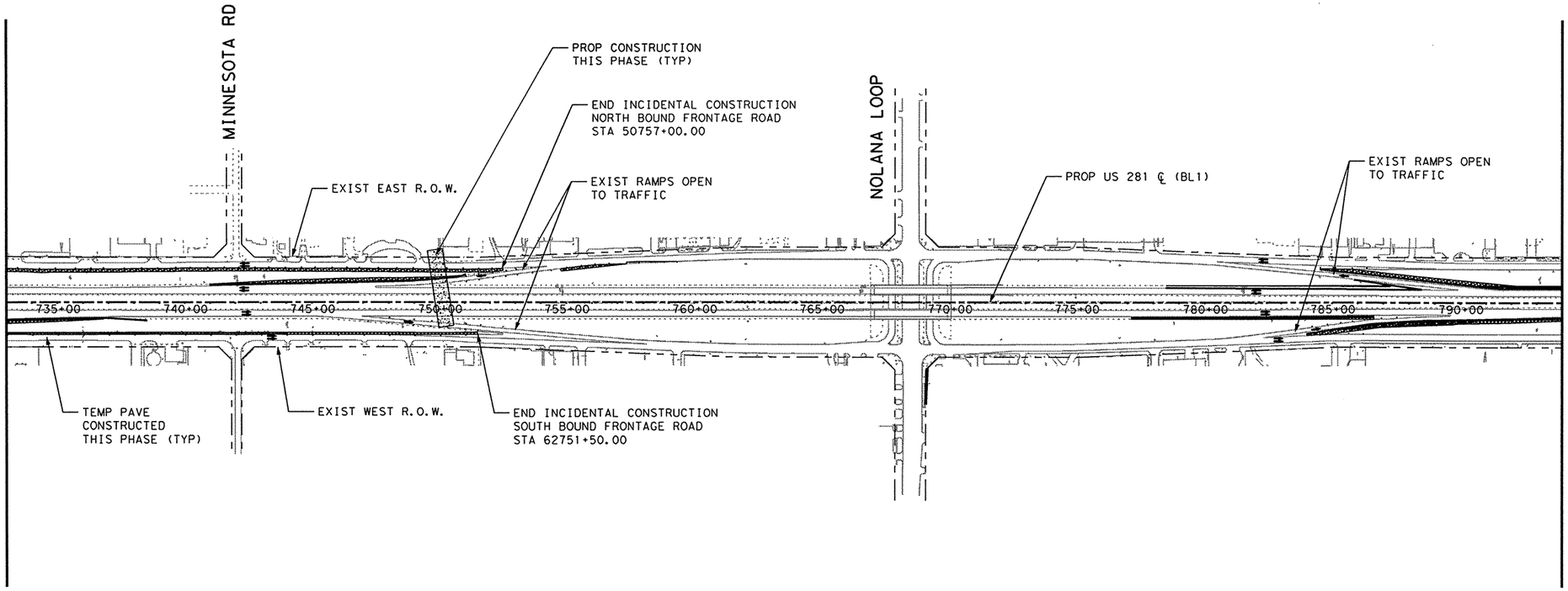

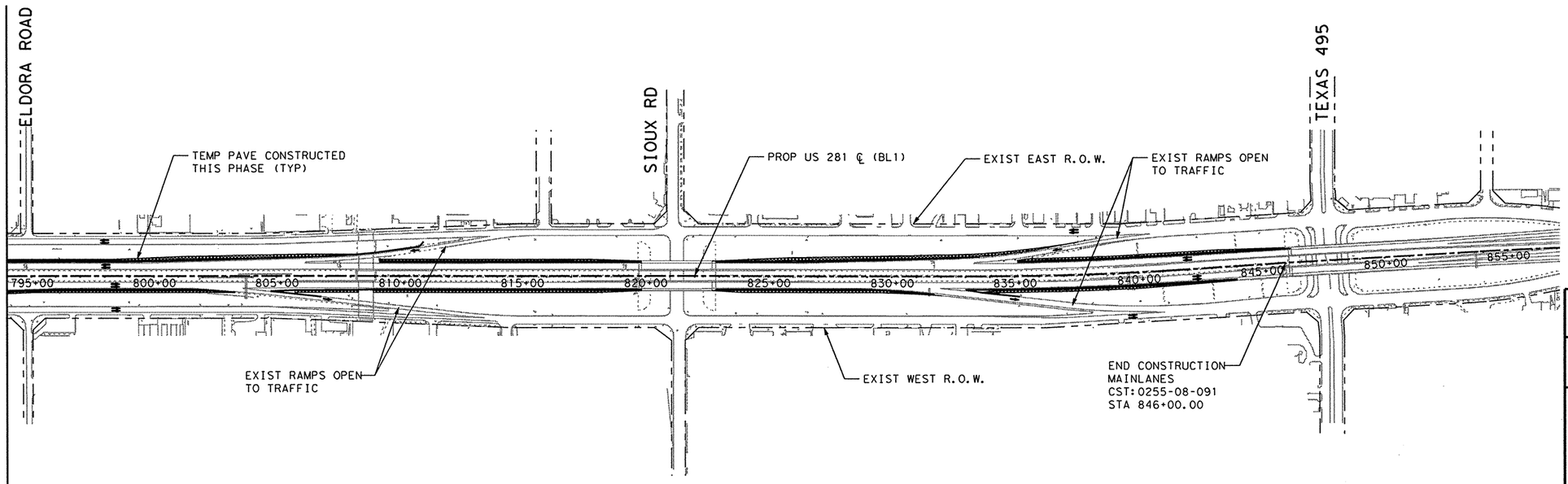

LEGEND:

- TEMP PAV CONSTRUCTED PREVIOUS PHASE
- TEMP PAV CONSTRUCTED THIS PHASE
- PROP CONSTRUCTION THIS PHASE
- PROP CONSTRUCTION PREVIOUS PHASE
- EXISTING TO BE REMOVED
- DIRECTIONAL ARROW

THE SEAL APPEARING ON THIS DOCUMENT WAS AUTHORIZED BY JOHN M PEREZ, P.E. 66425 ON 06/20/2003.

STATE OF TEXAS
JOHN M. PEREZ
66425
REGISTERED PROFESSIONAL ENGINEER
4/20/03

Parsons Brinckerhoff Quade & Douglas Inc.

Texas Department of Transportation

© 2003 by TxDOT

US 281
TRAFFIC CONTROL LAYOUT

PHASE IA
BEGIN PROJECT TO
END PROJECT

PLAN 1"= 500' HORIZ

SHEET 2 OF 2 | 281SEQIALAYOUT02.DGN

DESIGNED: PAF	FED. RD DIV. NO.	STATE	FEDERAL AID PROJECT NO.			HIGHWAY NO.
CHECKED: JP	6	TEXAS				US 281
DRAWN: KTD	STATE DISTRICT	COUNTY	CONTROL No.	SECTION No.	JOB No.	SHEET No.
CHECKED: JDH	PHARR	HIDALGO	0255	08	091	69

h:\22322a\cadd\sheets\traffic\tcp\281seqialayout02.dgn

NAME
04:04:52 PM
08/06/2003
h:\22322a\cadd\sheets\traffic\tcp\281seqia01.dgn

WORK ZONE / TRAFFIC FINES DOUBLE / WHEN WORKERS ARE PRESENT — EG20-9 / ER20-5 / ER20-5 PLAQUE — Ⓢ 1
ROAD WORK AHEAD — CW20-1D — FL Ⓢ 2
REDUCED SPEED AHEAD — ER2-5A — Ⓢ 3
SPEED LIMIT 50 — ER2-1 — Ⓢ 4
SPEED LIMIT 40 — ER2-1 — Ⓢ 4A
SG20-5T: BEGIN ROAD WORK NEXT X MILES / NAME ADDRESS CITY STATE / CONTRACTOR — SG20-6 — Ⓢ 5
HIGHWAY IMPROVEMENT PROJECT FUNDED BY YOUR TRANSPORTATION TAX DOLLARS / SCHEDULED COMPLETION XXXXXX XXXX — SG20-8
ECW1-4R — 6
ECW1-4L — 7
ECW4-1L — 8
END ROAD WORK — G20-2A — Ⓢ 9
ECW4-1R — 10
FCW4-3R — 11
ECW1-6A — 12
ROAD WORK ⇦ NEXT X MILES — G20-1bL — Ⓢ 2A
ROAD WORK NEXT X MILES ⇨ — G20-1bR — Ⓢ 2B
CW20-5L: LEFT LANE CLOSED / 500 FT PLAQUE — 13
CW20-5R: RIGHT LANE CLOSED / 500 FT PLAQUE — 14

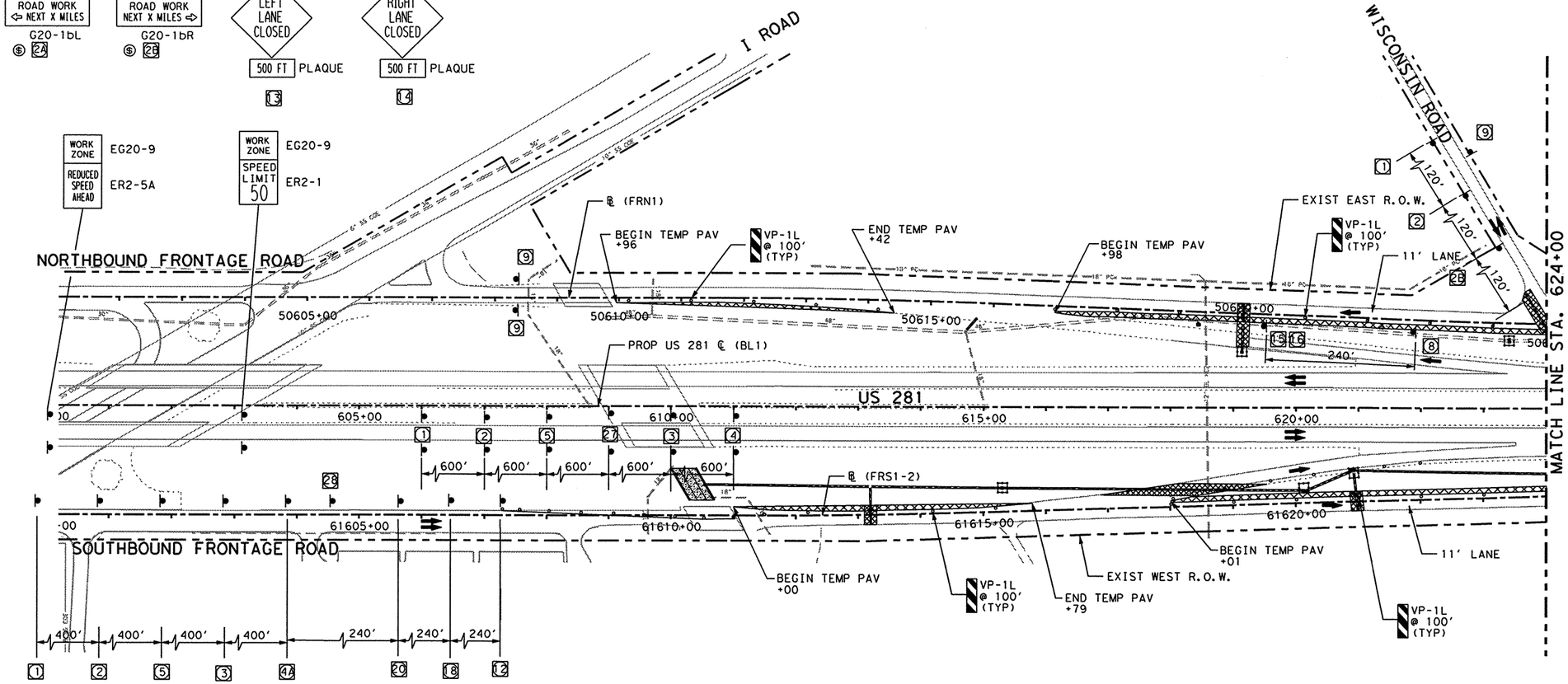

NOTES:

1. SEE "MINOR STREET CLOSURE DETAIL" FOR TRAFFIC CONTROL FOR MINOR STREETS.
2. SEE TRAFFIC CONTROL PHASING TYPICAL SECTION FOR TCP ROADWAY SECTIONS.
3. Ⓢ SIGNS ARE TO REMAIN THRU OUT THE DURATION OF THE PROJECT.
4. RAMP CLOSURE DURING "CUT AND RESTORE PAVEMENT" OPERATIONS SHALL BE IN ACCORDANCE TO STANDARD TCP (6-3).
5. TEMP SED CONTROL FENCE ON GRATED INLETS SHALL BE LEFT IN PLACE THROUGHOUT DURATION OF PROJECT OR AS DIRECTED BY THE ENGINEER.

LEGEND:

- TEMP PAV CONSTRUCTED PREVIOUS PHASE
- TEMP PAV CONSTRUCTED THIS PHASE
- PROP CONSTRUCTION THIS PHASE
- PROP CONSTRUCTION PREVIOUS PHASE
- EXISTING TO BE REMOVED
- SW SOLID WHITE (NON-REMOVABLE)
- SY SOLID YELLOW (NON-REMOVABLE)
- BW BROKEN WHITE (NON-REMOVABLE)
- DSY DOUBLE SOLID YELLOW (NON-REMOVABLE)
- SWR SOLID WHITE (REMOVABLE)
- SYR SOLID YELLOW (REMOVABLE)
- BWR BROKEN WHITE (REMOVABLE)
- DSYR DOUBLE SOLID YELLOW (REMOVABLE)
- Ⓨ YELLOW GUIDE MARKS AND SHORT TERM MARKINGS
- Ⓦ WHITE GUIDE MARKS AND SHORT TERM MARKINGS
- ○○○ CHANNELIZING DEVICES
- TEMP SED CONTROL FENCE (12' EACH SEGMENT)
- TEMP SED CONTROL FENCE (48' EACH SEGMENT)
- CONSTRUCTION EXIT (TY 2)
- PROP SIGN
- I PROP TY III BARRICADE
- 8' WIDE CUT AND RESTORE PAVEMENT FOR STORM SEWER CONSTRUCTION

THE SEAL APPEARING ON THIS DOCUMENT WAS AUTHORIZED BY JOHN M PEREZ, P.E. 66425 ON 08/06/2003.

STATE OF TEXAS — JOHN M. PEREZ — 66425 — REGISTERED PROFESSIONAL ENGINEER — 9/6/03

ER1-2 YIELD — 15
R1-2A TO RAMP — 16
NARROW LANES AHEAD — CW20-8 — 17
FCW4-2L — 18
FCW4-2R — 19
CW20-5L: LEFT LANE CLOSED / 1000 FT PLAQUE — 20
CW20-5R: RIGHT LANE CLOSED / 1000 FT PLAQUE — 21
W3-2A — 22
E5-1 EXIT — 23
CW1-8(F) — 24 25
SCW13-2 EXIT 45 M.P.H. — 26
G20-7 Working for You Give Us A BRAKE — Ⓢ 27
CW21-1T Give Us A BRAKE — Ⓢ 28
R11-2 ROAD CLOSED — 29
R3-20 LEFT LANE MUST TURN LEFT — 30
TEMPORARY EXIT "STREET NAME" NEXT RIGHT — 31

SEE "TEMP EXIT SIGNS FOR EXIT RAMP CLOSURES" FOR ADDITIONAL INFORMATION

Parsons Brinckerhoff Quade & Douglas Inc.

Texas Department of Transportation

© 2003 by TxDOT

US 281
TRAFFIC CONTROL PLAN
PHASE IA

PLAN 1"= 200' HORIZ

SHEET 1 OF 11 — 281SEQIA01.DGN

DESIGNED: PAF	FED. RD DIV. No.	STATE	FEDERAL AID PROJECT No.			HIGHWAY No.
CHECKED: JP	6	TEXAS				US 281
DRAWN: KTD	STATE DISTRICT	COUNTY	CONTROL No.	SECTION No.	JOB No.	SHEET No.
CHECKED: JDH	PHARR	HIDALGO	0255	08	091	70

NAME
10:33:03 AM
06/20/2003
h:\22322o\cadd\sheets\traffic\tcp\281seqia02.dgn

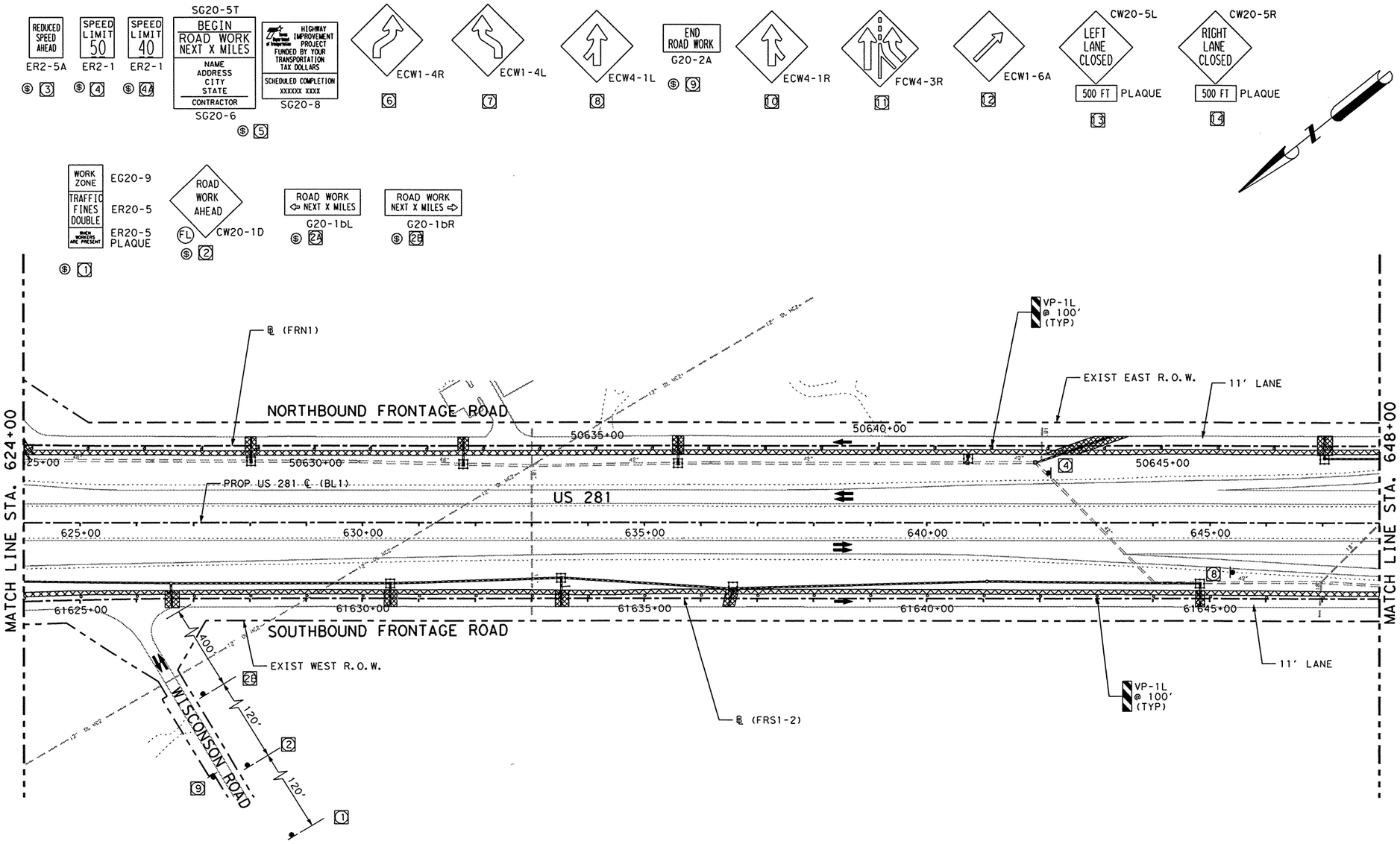

NOTES:

1. SEE "MINOR STREET CLOSURE DETAIL" FOR TRAFFIC CONTROL FOR MINOR STREETS.
2. SEE TRAFFIC CONTROL PHASING TYPICAL SECTION FOR TCP ROADWAY SECTIONS.
3. Ⓢ SIGNS ARE TO REMAIN THRU OUT THE DURATION OF THE PROJECT.
4. RAMP CLOSURE DURING "CUT AND RESTORE PAVEMENT" OPERATIONS SHALL BE IN ACCORDANCE TO STANDARD TCP (6-3).
5. TEMP SED CONTROL FENCE ON GRATED INLETS SHALL BE LEFT IN PLACE THROUGHOUT DURATION OF PROJECT OR AS DIRECTED BY THE ENGINEER.

LEGEND:

- TEMP PAV CONSTRUCTED PREVIOUS PHASE
- TEMP PAV CONSTRUCTED THIS PHASE
- PROP CONSTRUCTION THIS PHASE
- PROP CONSTRUCTION PREVIOUS PHASE
- EXISTING TO BE REMOVED
- SW SOLID WHITE (NON-REMOVABLE)
- SY SOLID YELLOW (NON-REMOVABLE)
- BW BROKEN WHITE (NON-REMOVABLE)
- DSY DOUBLE SOLID YELLOW (NON-REMOVABLE)
- SWR SOLID WHITE (REMOVABLE)
- SYR SOLID YELLOW (REMOVABLE)
- BWR BROKEN WHITE (REMOVABLE)
- DSYR DOUBLE SOLID YELLOW (REMOVABLE)
- Ⓨ YELLOW GUIDE MARKS AND SHORT TERM MARKINGS
- Ⓦ WHITE GUIDE MARKS AND SHORT TERM MARKINGS
- ○○○ CHANNELIZING DEVICES
- TEMP SED CONTROL FENCE (12' EACH SEGMENT)
- TEMP SED CONTROL FENCE (48' EACH SEGMENT)
- CONSTRUCTION EXIT (TY 2)
- PROP SIGN
- I PROP TY III BARRICADE
- 8' WIDE CUT AND RESTORE PAVEMENT FOR STORM SEWER CONSTRUCTION

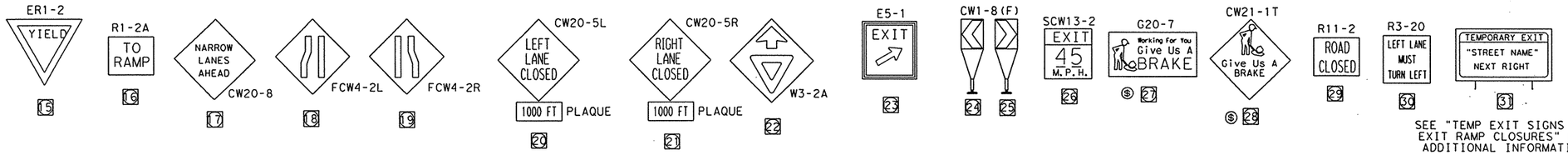

SEE "TEMP EXIT SIGNS FOR EXIT RAMP CLOSURES" FOR ADDITIONAL INFORMATION

THE SEAL APPEARING ON THIS DOCUMENT WAS AUTHORIZED BY JOHN M PEREZ, P.E. 66425 ON 06/20/2003.

STATE OF TEXAS · JOHN M. PEREZ · 66425 · REGISTERED PROFESSIONAL ENGINEER

6/20/03

Parsons Brinckerhoff Quade & Douglas Inc.

Texas Department of Transportation

© 2003 by TxDOT

US 281
TRAFFIC CONTROL PLAN
PHASE IA

PLAN 1" = 200' HORIZ

SHEET 2 OF 11				281SEQIA02.DGN			
DESIGNED: PAF	FED. RD DIV. No.	STATE	FEDERAL AID PROJECT No.			HIGHWAY No.	
CHECKED: JP	6	TEXAS				US 281	
DRAWN: KTD	STATE DISTRICT	COUNTY	CONTROL No.	SECTION No.	JOB No.	SHEET No.	
CHECKED: JDH	PHARR	HIDALGO	0255	08	091	71	

NAME
10:33:15 AM
06/20/2003
h:\22322g\cadd\sheets\traffic\tcp\281seqia03.dgn

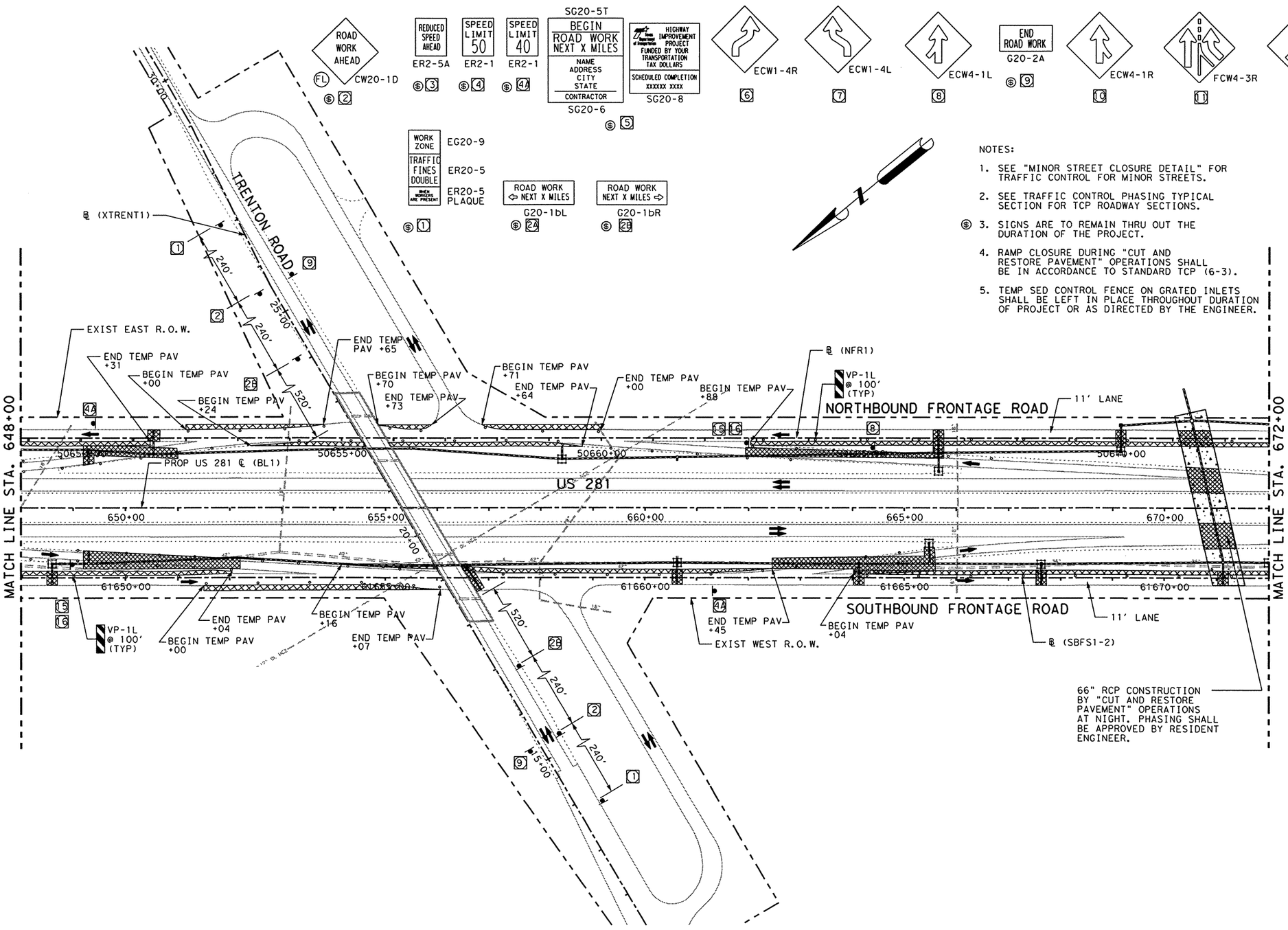

ROAD WORK AHEAD CW20-1D [2]
REDUCED SPEED AHEAD ER2-5A [3]
SPEED LIMIT 50 ER2-1 [4]
SPEED LIMIT 40 ER2-1 [4A]
SG20-5T: BEGIN ROAD WORK NEXT X MILES / NAME ADDRESS CITY STATE / CONTRACTOR — SG20-6 [5]
HIGHWAY IMPROVEMENT PROJECT FUNDED BY YOUR TRANSPORTATION TAX DOLLARS / SCHEDULED COMPLETION XXXXX XXXX — SG20-8
ECW1-4R [6]
ECW1-4L [7]
ECW4-1L [8]
END ROAD WORK G20-2A [9]
ECW4-1R [10]
FCW4-3R [11]
ECW1-6A [12]
CW20-5L LEFT LANE CLOSED 500 FT PLAQUE [13]
CW20-5R RIGHT LANE CLOSED 500 FT PLAQUE [14]
WORK ZONE EG20-9
TRAFFIC FINES DOUBLE ER20-5
WHEN WORKERS ARE PRESENT ER20-5 PLAQUE [1]
ROAD WORK ⇦ NEXT X MILES G20-1bL [2A]
ROAD WORK NEXT X MILES ⇨ G20-1bR [2B]

NOTES:

1. SEE "MINOR STREET CLOSURE DETAIL" FOR TRAFFIC CONTROL FOR MINOR STREETS.
2. SEE TRAFFIC CONTROL PHASING TYPICAL SECTION FOR TCP ROADWAY SECTIONS.
3. SIGNS ARE TO REMAIN THRU OUT THE DURATION OF THE PROJECT.
4. RAMP CLOSURE DURING "CUT AND RESTORE PAVEMENT" OPERATIONS SHALL BE IN ACCORDANCE TO STANDARD TCP (6-3).
5. TEMP SED CONTROL FENCE ON GRATED INLETS SHALL BE LEFT IN PLACE THROUGHOUT DURATION OF PROJECT OR AS DIRECTED BY THE ENGINEER.

LEGEND:

- TEMP PAV CONSTRUCTED PREVIOUS PHASE
- TEMP PAV CONSTRUCTED THIS PHASE
- PROP CONSTRUCTION THIS PHASE
- PROP CONSTRUCTION PREVIOUS PHASE
- EXISTING TO BE REMOVED
- SW SOLID WHITE (NON-REMOVABLE)
- SY SOLID YELLOW (NON-REMOVABLE)
- BW BROKEN WHITE (NON-REMOVABLE)
- DSY DOUBLE SOLID YELLOW (NON-REMOVABLE)
- SWR SOLID WHITE (REMOVABLE)
- SYR SOLID YELLOW (REMOVABLE)
- BWR BROKEN WHITE (REMOVABLE)
- DSYR DOUBLE SOLID YELLOW (REMOVABLE)
- (Y) YELLOW GUIDE MARKS AND SHORT TERM MARKINGS
- (W) WHITE GUIDE MARKS AND SHORT TERM MARKINGS
- CHANNELIZING DEVICES
- TEMP SED CONTROL FENCE (12' EACH SEGMENT)
- TEMP SED CONTROL FENCE (48' EACH SEGMENT)
- CONSTRUCTION EXIT (TY 2)
- PROP SIGN
- PROP TY III BARRICADE
- 8' WIDE CUT AND RESTORE PAVEMENT FOR STORM SEWER CONSTRUCTION

ER1-2 YIELD [15]
R1-2A TO RAMP [16]
NARROW LANES AHEAD CW20-8 [17]
FCW4-2L [18]
FCW4-2R [19]
CW20-5L LEFT LANE CLOSED 1000 FT PLAQUE [20]
CW20-5R RIGHT LANE CLOSED 1000 FT PLAQUE [21]
W3-2A [22]
E5-1 EXIT [23]
CW1-8(F) [24] [25]
SCW13-2 EXIT 45 M.P.H. [26]
G20-7 Working For You Give Us A BRAKE [27]
CW21-1T Give Us A BRAKE [28]
R11-2 ROAD CLOSED [29]
R3-20 LEFT LANE MUST TURN LEFT [30]
TEMPORARY EXIT "STREET NAME" NEXT RIGHT [31]

SEE "TEMP EXIT SIGNS FOR EXIT RAMP CLOSURES" FOR ADDITIONAL INFORMATION

THE SEAL APPEARING ON THIS DOCUMENT WAS AUTHORIZED BY JOHN M PEREZ, P.E. 66425 ON 06/20/2003.

STATE OF TEXAS · JOHN M. PEREZ · 66425 · REGISTERED PROFESSIONAL ENGINEER

Parsons Brinckerhoff Quade & Douglas Inc.

Texas Department of Transportation

© 2003 by TxDOT

US 281
TRAFFIC CONTROL PLAN
PHASE IA

PLAN 1"= 200' HORIZ

SHEET 3 OF 11 — 281SEQIA03.DGN

DESIGNED: PAF	FED. RD DIV. No.	STATE	FEDERAL AID PROJECT No.			HIGHWAY No.
CHECKED: JP	6	TEXAS				US 281
DRAWN: KTD	STATE DISTRICT	COUNTY	CONTROL No.	SECTION No.	JOB No.	SHEET No.
CHECKED: JDH	PHARR	HIDALGO	0255	08	091	72

NAME
10:33:28 AM
06/20/2003
h:\22322o\cadd\sheets\traffic\tcp\281seqia04.dgn

(FL) ROAD WORK AHEAD — CW20-1D — (S) 2
REDUCED SPEED AHEAD — ER2-5A — (S) 3
SPEED LIMIT 50 — ER2-1 — (S) 4
SPEED LIMIT 40 — ER2-1 — (S) 4A
SG20-5T: BEGIN ROAD WORK NEXT X MILES / NAME ADDRESS CITY STATE / CONTRACTOR — SG20-6 — (S) 5
HIGHWAY IMPROVEMENT PROJECT FUNDED BY YOUR TRANSPORTATION TAX DOLLARS / SCHEDULED COMPLETION XXXXXX XXXX — SG20-8
ECW1-4R — 6
ECW1-4L — 7
ECW4-1L — 8
END ROAD WORK — G20-2A — (S) 9
ECW4-1R — 10
FCW4-3R — 11
ECW1-6A — 12
CW20-5L: LEFT LANE CLOSED / 500 FT PLAQUE — 13
CW20-5R: RIGHT LANE CLOSED / 500 FT PLAQUE — 14

WORK ZONE / TRAFFIC FINES DOUBLE / WHEN WORKERS ARE PRESENT — EG20-9 / ER20-5 / ER20-5 PLAQUE — (S) 1
ROAD WORK ⇦ NEXT X MILES — G20-1bL — (S) 2A
ROAD WORK NEXT X MILES ⇨ — G20-1bR — (S) 2B

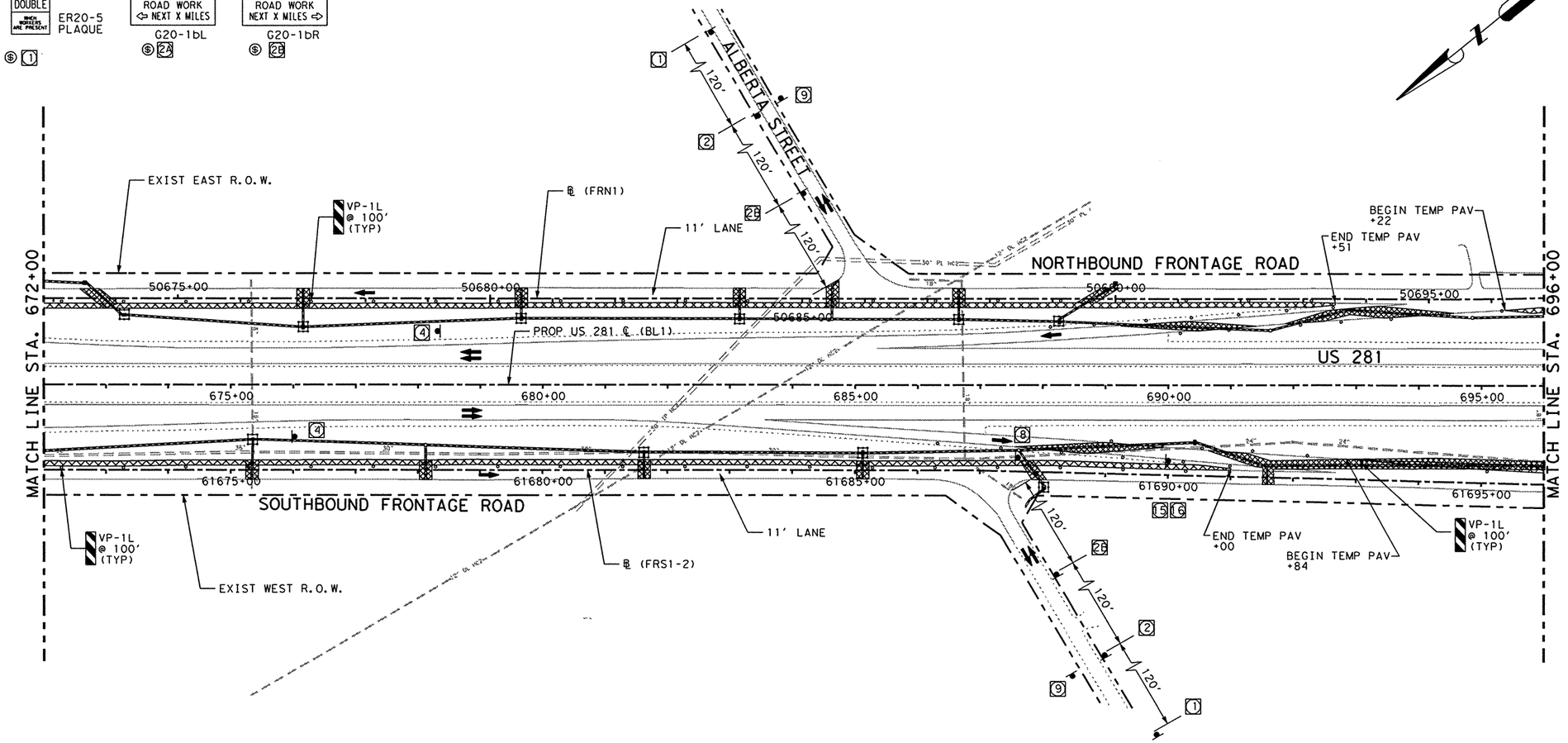

ER1-2 YIELD — 15
R1-2A TO RAMP — 16
NARROW LANES AHEAD — CW20-8 — 17
FCW4-2L — 18
FCW4-2R — 19
CW20-5L: LEFT LANE CLOSED / 1000 FT PLAQUE — 20
CW20-5R: RIGHT LANE CLOSED / 1000 FT PLAQUE — 21
W3-2A — 22
E5-1 EXIT — 23
CW1-8(F) — 24 25
SCW13-2 EXIT 45 M.P.H. — 26
G20-7 Working For You Give Us A BRAKE — (S) 27
CW21-1T Give Us A BRAKE — (S) 28
R11-2 ROAD CLOSED — 29
R3-20 LEFT LANE MUST TURN LEFT — 30
TEMPORARY EXIT "STREET NAME" NEXT RIGHT — 31

SEE "TEMP EXIT SIGNS FOR EXIT RAMP CLOSURES" FOR ADDITIONAL INFORMATION

NOTES:

1. SEE "MINOR STREET CLOSURE DETAIL" FOR TRAFFIC CONTROL FOR MINOR STREETS.
2. SEE TRAFFIC CONTROL PHASING TYPICAL SECTION FOR TCP ROADWAY SECTIONS.
3. SIGNS ARE TO REMAIN THRU OUT THE DURATION OF THE PROJECT.
4. RAMP CLOSURE DURING "CUT AND RESTORE PAVEMENT" OPERATIONS SHALL BE IN ACCORDANCE TO STANDARD TCP (6-3).
5. TEMP SED CONTROL FENCE ON GRATED INLETS SHALL BE LEFT IN PLACE THROUGHOUT DURATION OF PROJECT OR AS DIRECTED BY THE ENGINEER.

LEGEND:

- TEMP PAV CONSTRUCTED PREVIOUS PHASE
- TEMP PAV CONSTRUCTED THIS PHASE
- PROP CONSTRUCTION THIS PHASE
- PROP CONSTRUCTION PREVIOUS PHASE
- EXISTING TO BE REMOVED
- SW SOLID WHITE (NON-REMOVABLE)
- SY SOLID YELLOW (NON-REMOVABLE)
- BW BROKEN WHITE (NON-REMOVABLE)
- DSY DOUBLE SOLID YELLOW (NON-REMOVABLE)
- SWR SOLID WHITE (REMOVABLE)
- SYR SOLID YELLOW (REMOVABLE)
- BWR BROKEN WHITE (REMOVABLE)
- DSYR DOUBLE SOLID YELLOW (REMOVABLE)
- (Y) YELLOW GUIDE MARKS AND SHORT TERM MARKINGS
- (W) WHITE GUIDE MARKS AND SHORT TERM MARKINGS
- CHANNELIZING DEVICES
- TEMP SED CONTROL FENCE (12' EACH SEGMENT)
- TEMP SED CONTROL FENCE (48' EACH SEGMENT)
- CONSTRUCTION EXIT (TY 2)
- PROP SIGN
- PROP TY III BARRICADE
- 8' WIDE CUT AND RESTORE PAVEMENT FOR STORM SEWER CONSTRUCTION

THE SEAL APPEARING ON THIS DOCUMENT WAS AUTHORIZED BY JOHN M PEREZ, P.E. 66425 ON 06/20/2003.

STATE OF TEXAS — JOHN M. PEREZ — 66425 — REGISTERED PROFESSIONAL ENGINEER — 6/20/03

Parsons Brinckerhoff Quade & Douglas Inc.

Texas Department of Transportation

© 2003 by TxDOT

US 281
TRAFFIC CONTROL PLAN
PHASE IA

PLAN 1"= 200' HORIZ

SHEET 4 OF 11 — 281SEQIA04.DGN

DESIGNED: PAF	FED. RD DIV. NO.	STATE	FEDERAL AID PROJECT NO.				HIGHWAY NO.
CHECKED: JP	6	TEXAS					US 281
DRAWN: KTD	STATE DISTRICT	COUNTY	CONTROL NO.	SECTION NO.	JOB NO.		SHEET NO.
CHECKED: JDH	PHARR	HIDALGO	0255	08	091		73

NAME
10:33:39 AM
06/20/2003
h:\22322o\cadd\sheets\traffic\tcp\281seqia05.dgn

WORK ZONE EG20-9
TRAFFIC FINES DOUBLE ER20-5
WHEN WORKERS ARE PRESENT ER20-5 PLAQUE
ROAD WORK AHEAD CW20-1D
REDUCED SPEED AHEAD ER2-5A
SPEED LIMIT 50 ER2-1
SPEED LIMIT 40 ER2-1
SG20-5T
BEGIN ROAD WORK NEXT X MILES
NAME ADDRESS CITY STATE
CONTRACTOR
SG20-6
HIGHWAY IMPROVEMENT PROJECT FUNDED BY YOUR TRANSPORTATION TAX DOLLARS
SCHEDULED COMPLETION XXXXXX XXXX
SG20-8
ECW1-4R
ECW1-4L
ECW4-1L
END ROAD WORK G20-2A
ECW4-1R
FCW4-3R
ECW1-6A
CW20-5L
LEFT LANE CLOSED
500 FT PLAQUE
CW20-5R
RIGHT LANE CLOSED
500 FT PLAQUE

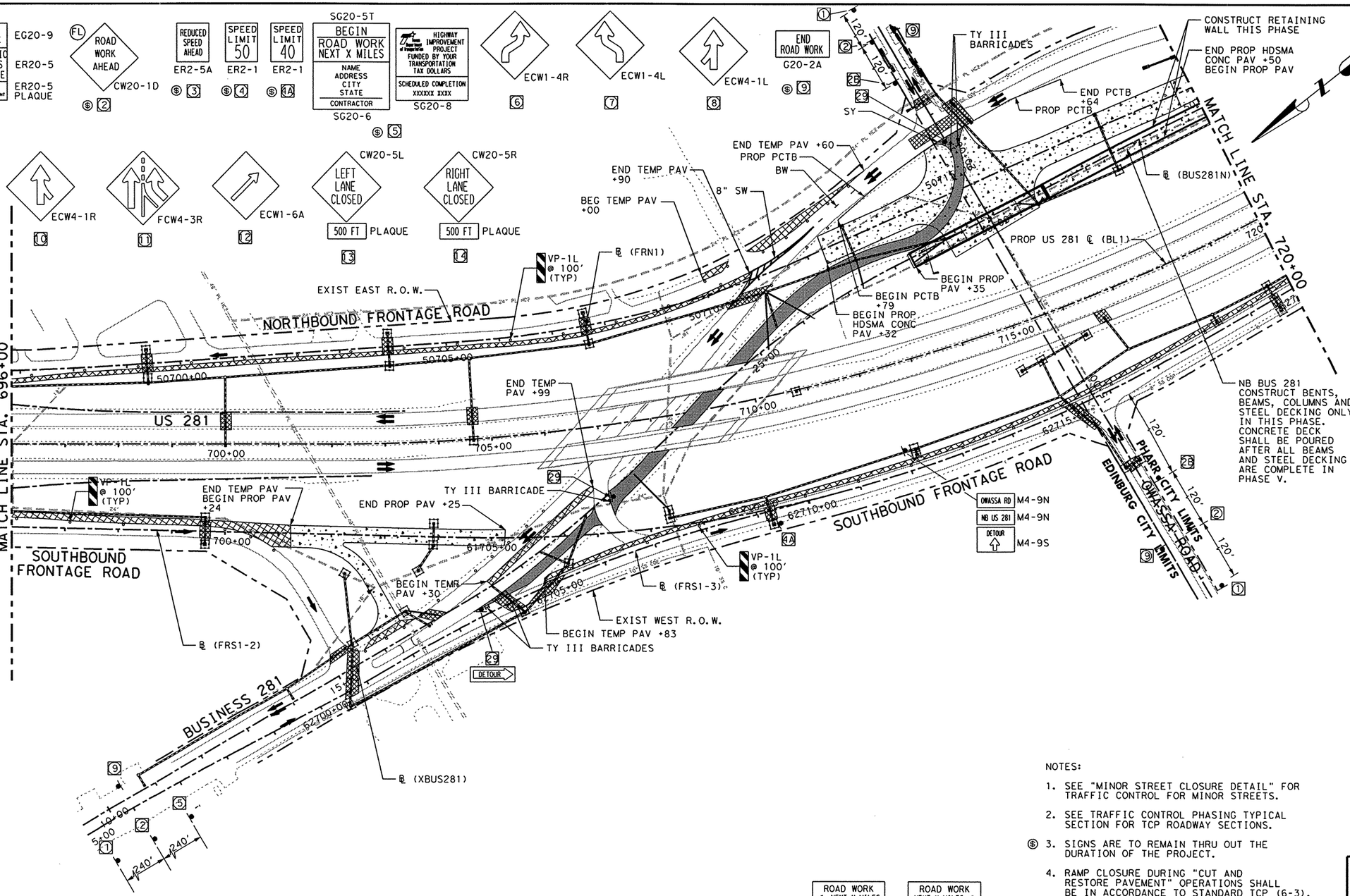

LEGEND:

- TEMP PAV CONSTRUCTED PREVIOUS PHASE
- TEMP PAV CONSTRUCTED THIS PHASE
- PROP CONSTRUCTION THIS PHASE
- PROP CONSTRUCTION PREVIOUS PHASE
- EXISTING TO BE REMOVED
- SW SOLID WHITE (NON-REMOVABLE)
- SY SOLID YELLOW (NON-REMOVABLE)
- BW BROKEN WHITE (NON-REMOVABLE)
- DSY DOUBLE SOLID YELLOW (NON-REMOVABLE)
- SWR SOLID WHITE (REMOVABLE)
- SYR SOLID YELLOW (REMOVABLE)
- BWR BROKEN WHITE (REMOVABLE)
- DSYR DOUBLE SOLID YELLOW (REMOVABLE)
- (Y) YELLOW GUIDE MARKS AND SHORT TERM MARKINGS
- (W) WHITE GUIDE MARKS AND SHORT TERM MARKINGS
- CHANNELIZING DEVICES
- TEMP SED CONTROL FENCE (12' EACH SEGMENT)
- TEMP SED CONTROL FENCE (48' EACH SEGMENT)
- CONSTRUCTION EXIT (TY 2)
- PROP SIGN
- PROP TY III BARRICADE
- 8' WIDE CUT AND RESTORE PAVEMENT FOR STORM SEWER CONSTRUCTION

ROAD WORK ⇦ NEXT X MILES G20-1bL
ROAD WORK NEXT X MILES ⇨ G20-1bR

ER1-2 YIELD
R1-2A TO RAMP
NARROW LANES AHEAD CW20-8
FCW4-2L
FCW4-2R
CW20-5L LEFT LANE CLOSED 1000 FT PLAQUE
CW20-5R RIGHT LANE CLOSED 1000 FT PLAQUE
W3-2A
E5-1 EXIT
CW1-8(F)
SCW13-2 EXIT 45 M.P.H.
G20-7 Working For You Give Us A BRAKE
CW21-1T Give Us A BRAKE
R11-2 ROAD CLOSED
R3-20 LEFT LANE MUST TURN LEFT
TEMPORARY EXIT "STREET NAME" NEXT RIGHT

SEE "TEMP EXIT SIGNS FOR EXIT RAMP CLOSURES" FOR ADDITIONAL INFORMATION

NOTES:

1. SEE "MINOR STREET CLOSURE DETAIL" FOR TRAFFIC CONTROL FOR MINOR STREETS.
2. SEE TRAFFIC CONTROL PHASING TYPICAL SECTION FOR TCP ROADWAY SECTIONS.
3. (S) SIGNS ARE TO REMAIN THRU OUT THE DURATION OF THE PROJECT.
4. RAMP CLOSURE DURING "CUT AND RESTORE PAVEMENT" OPERATIONS SHALL BE IN ACCORDANCE TO STANDARD TCP (6-3).
5. TEMP SED CONTROL FENCE ON GRATED INLETS SHALL BE LEFT IN PLACE THROUGHOUT DURATION OF PROJECT OR AS DIRECTED BY THE ENGINEER.

THE SEAL APPEARING ON THIS DOCUMENT WAS AUTHORIZED BY JOHN M PEREZ, P.E. 66425 ON 06/20/2003.

STATE OF TEXAS · JOHN M. PEREZ · 66425 · REGISTERED PROFESSIONAL ENGINEER

6/20/03

Parsons Brinckerhoff Quade & Douglas Inc.

Texas Department of Transportation

© 2003 by TxDOT

US 281
TRAFFIC CONTROL PLAN
PHASE IA

PLAN 1"= 200' HORIZ

SHEET 5 OF 11 | 281SEQIA05.DGN

DESIGNED: PAF	FED. RD DIV. No.	STATE	FEDERAL AID PROJECT No.			HIGHWAY No.
CHECKED: JP	6	TEXAS				US 281
DRAWN: KTD	STATE DISTRICT	COUNTY	CONTROL No.	SECTION No.	JOB No.	SHEET No.
CHECKED: JDH	PHARR	HIDALGO	0255	08	091	74

NAME

10:33:51 AM

06/20/2003

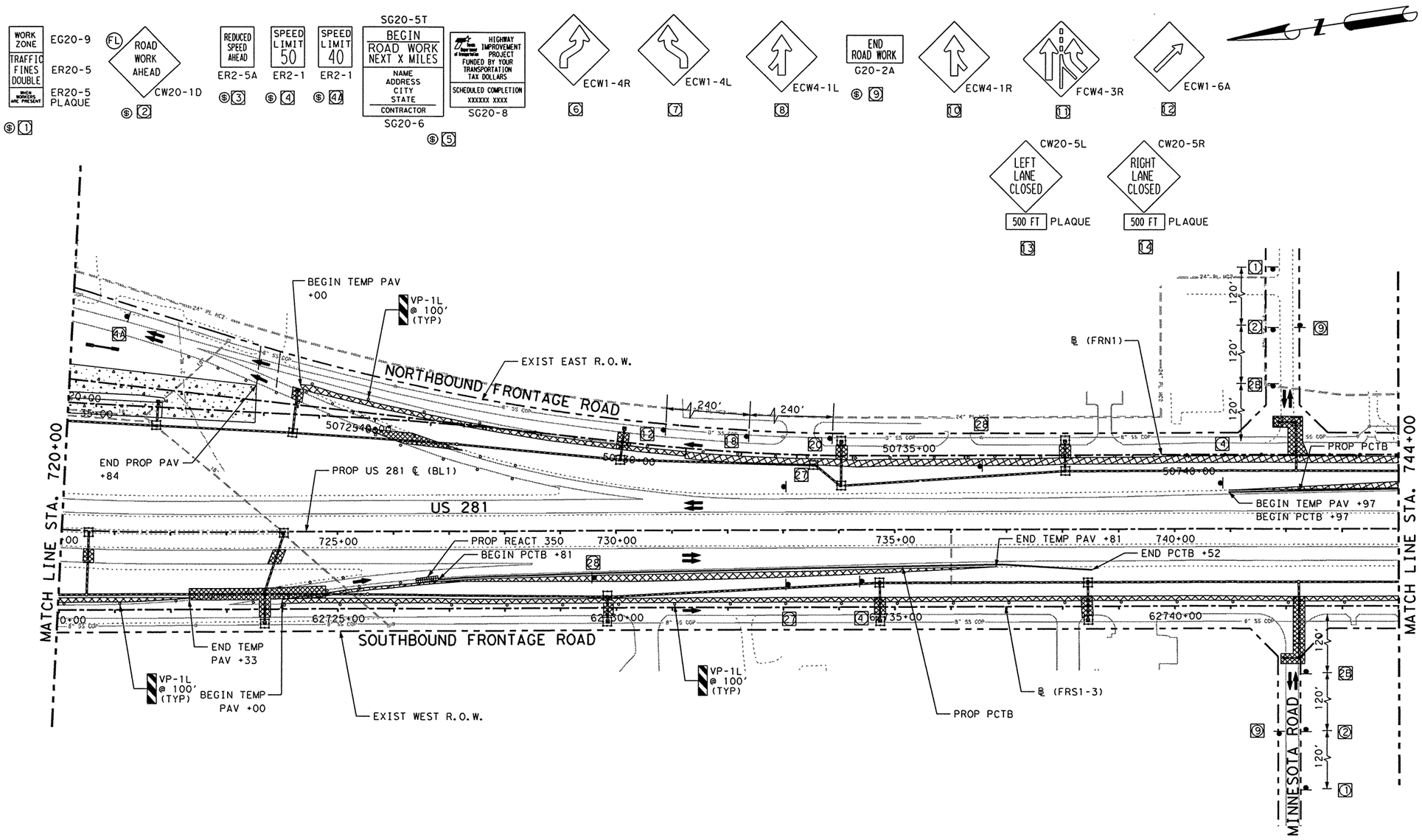

SEE "TEMP EXIT SIGNS FOR EXIT RAMP CLOSURES" FOR ADDITIONAL INFORMATION

NOTES:

1. SEE "MINOR STREET CLOSURE DETAIL" FOR TRAFFIC CONTROL FOR MINOR STREETS.
2. SEE TRAFFIC CONTROL PHASING TYPICAL SECTION FOR TCP ROADWAY SECTIONS.
3. Ⓢ SIGNS ARE TO REMAIN THRU OUT THE DURATION OF THE PROJECT.
4. RAMP CLOSURE DURING "CUT AND RESTORE PAVEMENT" OPERATIONS SHALL BE IN ACCORDANCE TO STANDARD TCP (6-3).
5. SEE PREVIOUS SHEET FOR BUS 281 DETOUR ALIGNMENT DATA.
6. TEMP SED CONTROL FENCE ON GRATED INLETS SHALL BE LEFT IN PLACE THROUGHOUT DURATION OF PROJECT OR AS DIRECTED BY THE ENGINEER.

LEGEND:

- TEMP PAV CONSTRUCTED PREVIOUS PHASE
- TEMP PAV CONSTRUCTED THIS PHASE
- PROP CONSTRUCTION THIS PHASE
- PROP CONSTRUCTION PREVIOUS PHASE
- EXISTING TO BE REMOVED
- SW SOLID WHITE (NON-REMOVABLE)
- SY SOLID YELLOW (NON-REMOVABLE)
- BW BROKEN WHITE (NON-REMOVABLE)
- DSY DOUBLE SOLID YELLOW (NON-REMOVABLE)
- SWR SOLID WHITE (REMOVABLE)
- SYR SOLID YELLOW (REMOVABLE)
- BWR BROKEN WHITE (REMOVABLE)
- DSYR DOUBLE SOLID YELLOW (REMOVABLE)
- Ⓨ YELLOW GUIDE MARKS AND SHORT TERM MARKINGS
- Ⓦ WHITE GUIDE MARKS AND SHORT TERM MARKINGS
- CHANNELIZING DEVICES
- TEMP SED CONTROL FENCE (12' EACH SEGMENT)
- TEMP SED CONTROL FENCE (48' EACH SEGMENT)
- CONSTRUCTION EXIT (TY 2)
- PROP SIGN
- PROP TY III BARRICADE
- 8' WIDE CUT AND RESTORE PAVEMENT FOR STORM SEWER CONSTRUCTION

THE SEAL APPEARING ON THIS DOCUMENT WAS AUTHORIZED BY JOHN M PEREZ, P.E. 66425 ON 06/20/2003.

STATE OF TEXAS · JOHN M. PEREZ · 66425 · REGISTERED PROFESSIONAL ENGINEER

6/20/03

Parsons Brinckerhoff Quade & Douglas Inc.

Texas Department of Transportation

© 2003 by TxDOT

US 281
TRAFFIC CONTROL PLAN
PHASE IA

PLAN 1"= 200' HORIZ

SHEET 6 OF 11 — 281SEQIA06.DGN

DESIGNED: PAF	FED. RD DIV. NO.	STATE	FEDERAL AID PROJECT NO.			HIGHWAY NO.
CHECKED: JP	6	TEXAS				US 281
DRAWN: KTD	STATE DISTRICT	COUNTY	CONTROL NO.	SECTION NO.	JOB NO.	SHEET NO.
CHECKED: JDH	PHARR	HIDALGO	0255	08	091	75

h:\22322e\cadd\sheets\traffic\tcp\281seqia06.dgn

NAME
10:34:02 AM
06/20/2003
h:\22322o\cadd\sheets\traffic\tcp\281seqia07.dgn

WORK ZONE / TRAFFIC FINES DOUBLE / WHEN WORKERS ARE PRESENT — EG20-9 / ER20-5 / ER20-5 PLAQUE — (FL) ROAD WORK AHEAD CW20-1D — REDUCED SPEED AHEAD ER2-5A — SPEED LIMIT 50 ER2-1 — SPEED LIMIT 40 ER2-1 — SG20-5T BEGIN ROAD WORK NEXT X MILES / NAME ADDRESS CITY STATE / CONTRACTOR SG20-6 — HIGHWAY IMPROVEMENT PROJECT FUNDED BY YOUR TRANSPORTATION TAX DOLLARS / SCHEDULED COMPLETION XXXXX XXXX SG20-8 — ECW1-4R — ECW1-4L — ECW4-1L — END ROAD WORK G20-2A — ECW4-1R

FCW4-3R — ECW1-6A — CW20-5L LEFT LANE CLOSED 500 FT PLAQUE — CW20-5R RIGHT LANE CLOSED 500 FT PLAQUE

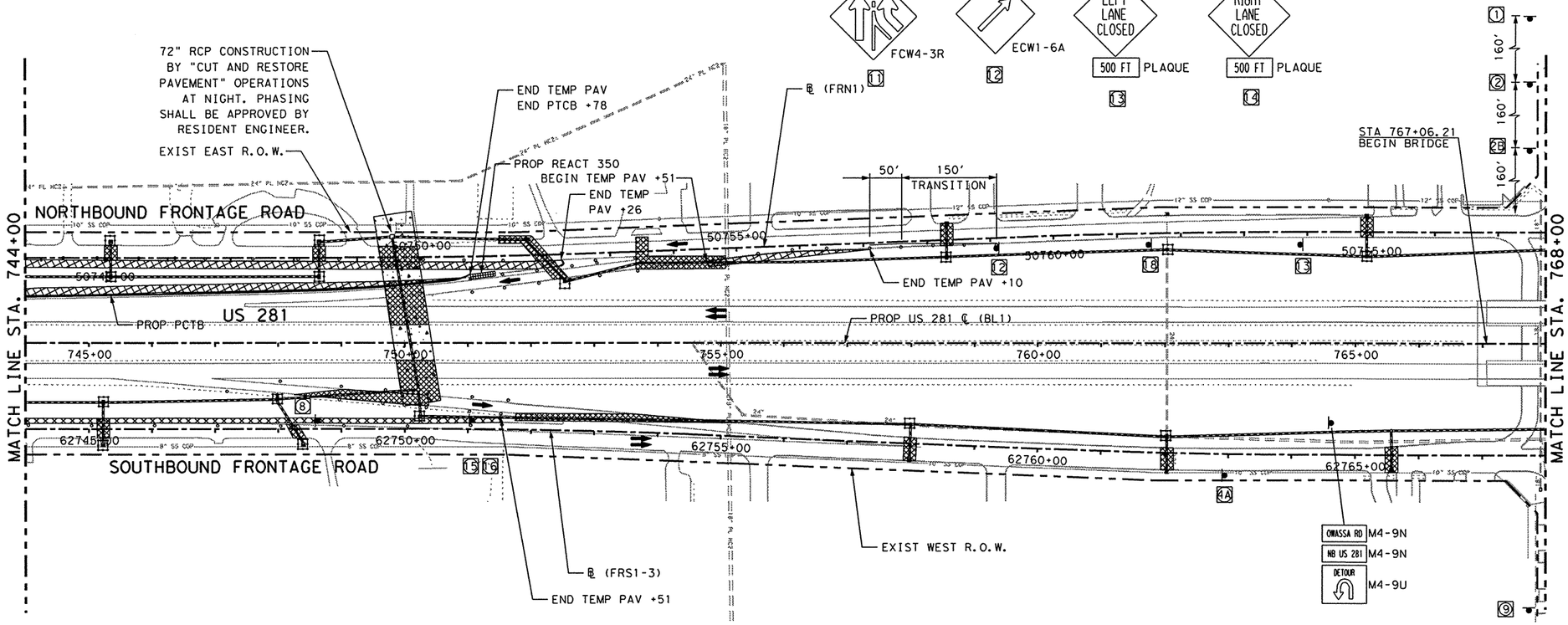

NOTES:

1. SEE "MINOR STREET CLOSURE DETAIL" FOR TRAFFIC CONTROL FOR MINOR STREETS.
2. SEE TRAFFIC CONTROL PHASING TYPICAL SECTION FOR TCP ROADWAY SECTIONS.
3. SIGNS ARE TO REMAIN THRU OUT THE DURATION OF THE PROJECT.
4. RAMP CLOSURE DURING "CUT AND RESTORE PAVEMENT" OPERATIONS SHALL BE IN ACCORDANCE TO STANDARD TCP (6-3).
5. TEMP SED CONTROL FENCE ON GRATED INLETS SHALL BE LEFT IN PLACE THROUGHOUT DURATION OF PROJECT OR AS DIRECTED BY THE ENGINEER.

LEGEND:

- TEMP PAV CONSTRUCTED PREVIOUS PHASE
- TEMP PAV CONSTRUCTED THIS PHASE
- PROP CONSTRUCTION THIS PHASE
- PROP CONSTRUCTION PREVIOUS PHASE
- EXISTING TO BE REMOVED
- SW SOLID WHITE (NON-REMOVABLE)
- SY SOLID YELLOW (NON-REMOVABLE)
- BW BROKEN WHITE (NON-REMOVABLE)
- DSY DOUBLE SOLID YELLOW (NON-REMOVABLE)
- SWR SOLID WHITE (REMOVABLE)
- SYR SOLID YELLOW (REMOVABLE)
- BWR BROKEN WHITE (REMOVABLE)
- DSYR DOUBLE SOLID YELLOW (REMOVABLE)
- (Y) YELLOW GUIDE MARKS AND SHORT TERM MARKINGS
- (W) WHITE GUIDE MARKS AND SHORT TERM MARKINGS
- CHANNELIZING DEVICES
- TEMP SED CONTROL FENCE (12' EACH SEGMENT)
- TEMP SED CONTROL FENCE (48' EACH SEGMENT)
- CONSTRUCTION EXIT (TY 2)
- PROP SIGN
- PROP TY III BARRICADE
- 8' WIDE CUT AND RESTORE PAVEMENT FOR STORM SEWER CONSTRUCTION

THE SEAL APPEARING ON THIS DOCUMENT WAS AUTHORIZED BY JOHN M PEREZ, P.E. 66425 ON 06/20/2003.

STATE OF TEXAS · JOHN M. PEREZ · 66425 · REGISTERED PROFESSIONAL ENGINEER

6/20/03

ER1-2 YIELD — R1-2A TO RAMP — NARROW LANES AHEAD CW20-8 — FCW4-2L — FCW4-2R — CW20-5L LEFT LANE CLOSED 1000 FT PLAQUE — CW20-5R RIGHT LANE CLOSED 1000 FT PLAQUE — W3-2A — E5-1 EXIT — CW1-8(F) — SCW13-2 EXIT 45 M.P.H. — G20-7 Working For You Give Us A BRAKE — CW21-1T Give Us A BRAKE — R11-2 ROAD CLOSED — R3-20 LEFT LANE MUST TURN LEFT — TEMPORARY EXIT "STREET NAME" NEXT RIGHT

ROAD WORK ⇦ NEXT X MILES G20-1bL — ROAD WORK NEXT X MILES ⇨ G20-1bR

SEE "TEMP EXIT SIGNS FOR EXIT RAMP CLOSURES" FOR ADDITIONAL INFORMATION

Parsons Brinckerhoff Quade & Douglas Inc.

Texas Department of Transportation

© 2003 by TxDOT

US 281
TRAFFIC CONTROL PLAN
PHASE IA

PLAN 1"= 200' HORIZ

SHEET 7 OF 11 — 281SEQIA07.DGN

DESIGNED: PAF	FED. RD DIV. No.	STATE	FEDERAL AID PROJECT No.	HIGHWAY No.
CHECKED: JP	6	TEXAS		US 281

DRAWN: KTD	STATE DISTRICT	COUNTY	CONTROL No.	SECTION No.	JOB No.	SHEET No.
CHECKED: JDH	PHARR	HIDALGO	0255	08	091	76

NAME
10:34:11 AM
06/20/2003
h:\22322o\cadd\sheets\traffic\top\281seqia08.dgn

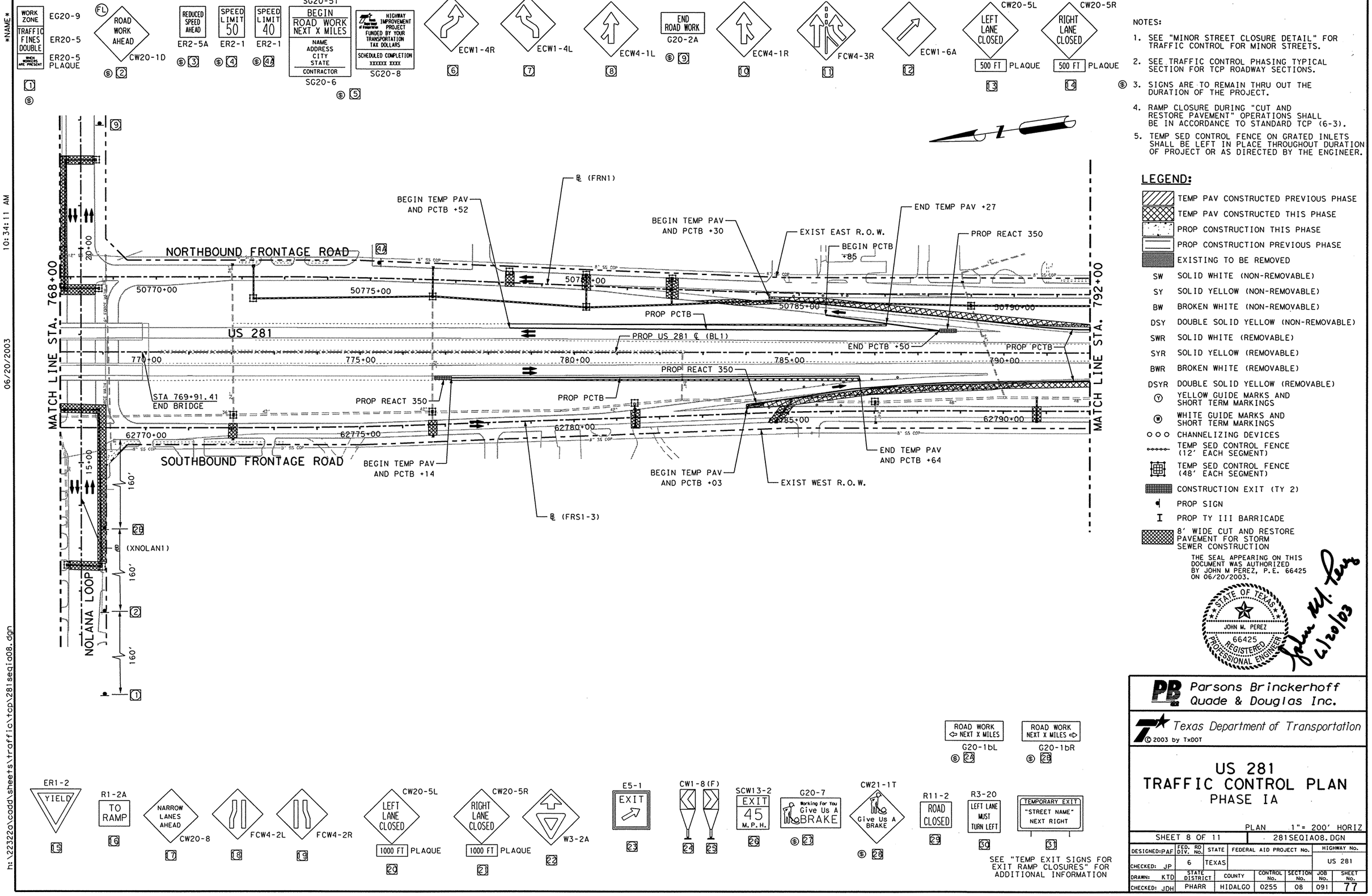

NOTES:

1. SEE "MINOR STREET CLOSURE DETAIL" FOR TRAFFIC CONTROL FOR MINOR STREETS.
2. SEE TRAFFIC CONTROL PHASING TYPICAL SECTION FOR TCP ROADWAY SECTIONS.
3. SIGNS ARE TO REMAIN THRU OUT THE DURATION OF THE PROJECT.
4. RAMP CLOSURE DURING "CUT AND RESTORE PAVEMENT" OPERATIONS SHALL BE IN ACCORDANCE TO STANDARD TCP (6-3).
5. TEMP SED CONTROL FENCE ON GRATED INLETS SHALL BE LEFT IN PLACE THROUGHOUT DURATION OF PROJECT OR AS DIRECTED BY THE ENGINEER.

LEGEND:

- TEMP PAV CONSTRUCTED PREVIOUS PHASE
- TEMP PAV CONSTRUCTED THIS PHASE
- PROP CONSTRUCTION THIS PHASE
- PROP CONSTRUCTION PREVIOUS PHASE
- EXISTING TO BE REMOVED
- SW SOLID WHITE (NON-REMOVABLE)
- SY SOLID YELLOW (NON-REMOVABLE)
- BW BROKEN WHITE (NON-REMOVABLE)
- DSY DOUBLE SOLID YELLOW (NON-REMOVABLE)
- SWR SOLID WHITE (REMOVABLE)
- SYR SOLID YELLOW (REMOVABLE)
- BWR BROKEN WHITE (REMOVABLE)
- DSYR DOUBLE SOLID YELLOW (REMOVABLE)
- (Y) YELLOW GUIDE MARKS AND SHORT TERM MARKINGS
- (W) WHITE GUIDE MARKS AND SHORT TERM MARKINGS
- CHANNELIZING DEVICES
- TEMP SED CONTROL FENCE (12' EACH SEGMENT)
- TEMP SED CONTROL FENCE (48' EACH SEGMENT)
- CONSTRUCTION EXIT (TY 2)
- PROP SIGN
- PROP TY III BARRICADE
- 8' WIDE CUT AND RESTORE PAVEMENT FOR STORM SEWER CONSTRUCTION

THE SEAL APPEARING ON THIS DOCUMENT WAS AUTHORIZED BY JOHN M PEREZ, P.E. 66425 ON 06/20/2003.

STATE OF TEXAS · JOHN M. PEREZ · 66425 · REGISTERED PROFESSIONAL ENGINEER

6/20/03

ER1-2 YIELD
R1-2A TO RAMP
NARROW LANES AHEAD CW20-8
FCW4-2L
FCW4-2R
CW20-5L LEFT LANE CLOSED 1000 FT PLAQUE
CW20-5R RIGHT LANE CLOSED 1000 FT PLAQUE
W3-2A
E5-1 EXIT
CW1-8(F)
SCW13-2 EXIT 45 M.P.H.
G20-7 Working for You Give Us A BRAKE
CW21-1T Give Us A BRAKE
ROAD WORK ⇦ NEXT X MILES G20-1bL
ROAD WORK NEXT X MILES ⇨ G20-1bR
R11-2 ROAD CLOSED
R3-20 LEFT LANE MUST TURN LEFT
TEMPORARY EXIT "STREET NAME" NEXT RIGHT

SEE "TEMP EXIT SIGNS FOR EXIT RAMP CLOSURES" FOR ADDITIONAL INFORMATION

Parsons Brinckerhoff Quade & Douglas Inc.

Texas Department of Transportation

© 2003 by TxDOT

US 281
TRAFFIC CONTROL PLAN
PHASE IA

PLAN 1"= 200' HORIZ

SHEET 8 OF 11 · 281SEQIA08.DGN

DESIGNED: PAF	FED. RD DIV. No.	STATE	FEDERAL AID PROJECT No.			HIGHWAY No.
CHECKED: JP	6	TEXAS				US 281
DRAWN: KTD	STATE DISTRICT	COUNTY	CONTROL No.	SECTION No.	JOB No.	SHEET No.
CHECKED: JDH	PHARR	HIDALGO	0255	08	091	77

NAME
10:34:22 AM
06/20/2003
h:\22322a\cadd\sheets\traffic\tcp\281seqia09.dgn

WORK ZONE / TRAFFIC FINES DOUBLE / WHEN WORKERS ARE PRESENT — EG20-9 / ER20-5 / ER20-5 PLAQUE — (1) (S)

ROAD WORK AHEAD — CW20-1D — (FL) (S) (2)

REDUCED SPEED AHEAD — ER2-5A — (S) (3)

SPEED LIMIT 50 — ER2-1 — (S) (4)

SPEED LIMIT 40 — ER2-1 — (S) (4A)

SG20-5T
BEGIN ROAD WORK NEXT X MILES
NAME ADDRESS CITY STATE
CONTRACTOR
SG20-6 — (5) (S)

HIGHWAY IMPROVEMENT PROJECT FUNDED BY YOUR TRANSPORTATION TAX DOLLARS
SCHEDULED COMPLETION XXXXXX XXXX
SG20-8

ECW1-4R — (6)

ECW1-4L — (7)

ECW4-1L — (8)

END ROAD WORK — G20-2A — (S) (9)

ECW4-1R — (10)

FCW4-3R — (11)

ECW1-6A — (12)

CW20-5L
LEFT LANE CLOSED
500 FT PLAQUE — (13)

CW20-5R
RIGHT LANE CLOSED
500 FT PLAQUE — (14) (S)

NOTES:

1. SEE "MINOR STREET CLOSURE DETAIL" FOR TRAFFIC CONTROL FOR MINOR STREETS.
2. SEE TRAFFIC CONTROL PHASING TYPICAL SECTION FOR TCP ROADWAY SECTIONS.
3. SIGNS ARE TO REMAIN THRU OUT THE DURATION OF THE PROJECT.
4. RAMP CLOSURE DURING "CUT AND RESTORE PAVEMENT" OPERATIONS SHALL BE IN ACCORDANCE TO STANDARD TCP (6-3).
5. TEMP SED CONTROL FENCE ON GRATED INLETS SHALL BE LEFT IN PLACE THROUGHOUT DURATION OF PROJECT OR AS DIRECTED BY THE ENGINEER.

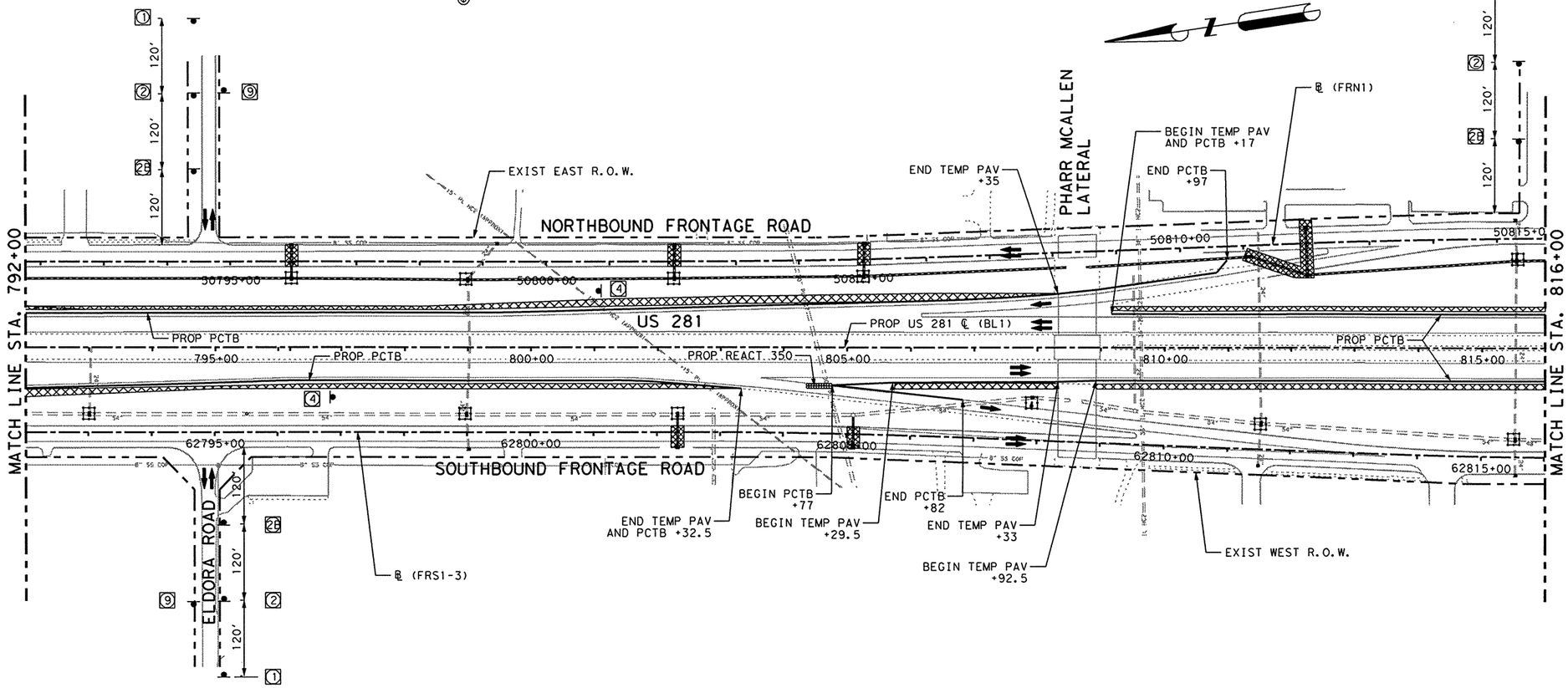

LEGEND:

- TEMP PAV CONSTRUCTED PREVIOUS PHASE
- TEMP PAV CONSTRUCTED THIS PHASE
- PROP CONSTRUCTION THIS PHASE
- PROP CONSTRUCTION PREVIOUS PHASE
- EXISTING TO BE REMOVED
- SW — SOLID WHITE (NON-REMOVABLE)
- SY — SOLID YELLOW (NON-REMOVABLE)
- BW — BROKEN WHITE (NON-REMOVABLE)
- DSY — DOUBLE SOLID YELLOW (NON-REMOVABLE)
- SWR — SOLID WHITE (REMOVABLE)
- SYR — SOLID YELLOW (REMOVABLE)
- BWR — BROKEN WHITE (REMOVABLE)
- DSYR — DOUBLE SOLID YELLOW (REMOVABLE)
- (Y) YELLOW GUIDE MARKS AND SHORT TERM MARKINGS
- (W) WHITE GUIDE MARKS AND SHORT TERM MARKINGS
- CHANNELIZING DEVICES
- TEMP SED CONTROL FENCE (12' EACH SEGMENT)
- TEMP SED CONTROL FENCE (48' EACH SEGMENT)
- CONSTRUCTION EXIT (TY 2)
- PROP SIGN
- PROP TY III BARRICADE
- 8' WIDE CUT AND RESTORE PAVEMENT FOR STORM SEWER CONSTRUCTION

THE SEAL APPEARING ON THIS DOCUMENT WAS AUTHORIZED BY JOHN M PEREZ, P.E. 66425 ON 06/20/2003.

STATE OF TEXAS — JOHN M. PEREZ — 66425 — REGISTERED PROFESSIONAL ENGINEER

6/20/03

ER1-2 YIELD — (15)

R1-2A TO RAMP — (16)

NARROW LANES AHEAD — CW20-8 — (17)

FCW4-2L — (18)

FCW4-2R — (19)

CW20-5L LEFT LANE CLOSED 1000 FT PLAQUE — (20)

CW20-5R RIGHT LANE CLOSED 1000 FT PLAQUE — (21)

W3-2A — (22)

E5-1 EXIT — (23)

CW1-8(F) — (24) (25)

SCW13-2 EXIT 45 M.P.H. — (26)

G20-7 Working for You Give Us A BRAKE — (S) (27)

CW21-1T Give Us A BRAKE — (S) (28)

R11-2 ROAD CLOSED — (29)

R3-20 LEFT LANE MUST TURN LEFT — (30)

TEMPORARY EXIT "STREET NAME" NEXT RIGHT — (31)

ROAD WORK ⇦ NEXT X MILES — G20-1bL — (S) (2A)

ROAD WORK NEXT X MILES ⇨ — G20-1bR — (S) (2B)

SEE "TEMP EXIT SIGNS FOR EXIT RAMP CLOSURES" FOR ADDITIONAL INFORMATION

Parsons Brinckerhoff Quade & Douglas Inc.

Texas Department of Transportation

© 2003 by TxDOT

US 281
TRAFFIC CONTROL PLAN
PHASE IA

PLAN 1"= 200' HORIZ

SHEET 9 OF 11 — 281SEQIA09.DGN

DESIGNED: PAF	FED. RD DIV. No.	STATE	FEDERAL AID PROJECT No.	HIGHWAY No.
CHECKED: JP	6	TEXAS		US 281

DRAWN: KTD	STATE DISTRICT	COUNTY	CONTROL No.	SECTION No.	JOB No.	SHEET No.
CHECKED: JDH	PHARR	HIDALGO	0255	08	091	78

NAME
04:05:02 PM
08/06/2003
h:\22320\cadd\sheets\traffic\tcp\281seqia10.dgn

WORK ZONE / TRAFFIC FINES DOUBLE / WHEN WORKERS ARE PRESENT — EG20-9 / ER20-5 / ER20-5 PLAQUE
ROAD WORK AHEAD — CW20-1D
REDUCED SPEED AHEAD — ER2-5A
SPEED LIMIT 50 — ER2-1
SPEED LIMIT 40 — ER2-1
BEGIN ROAD WORK NEXT X MILES / NAME ADDRESS CITY STATE / CONTRACTOR — SG20-6
HIGHWAY IMPROVEMENT PROJECT FUNDED BY YOUR TRANSPORTATION TAX DOLLARS / SCHEDULED COMPLETION XXXXXX XXXX — SG20-8
SG20-5T
ECW1-4R
ECW1-4L
ECW4-1L
END ROAD WORK — G20-2A
ECW4-1R
FCW4-3R
ECW1-6A
CW20-5L — LEFT LANE CLOSED — 500 FT PLAQUE
CW20-5R — RIGHT LANE CLOSED — 500 FT PLAQUE

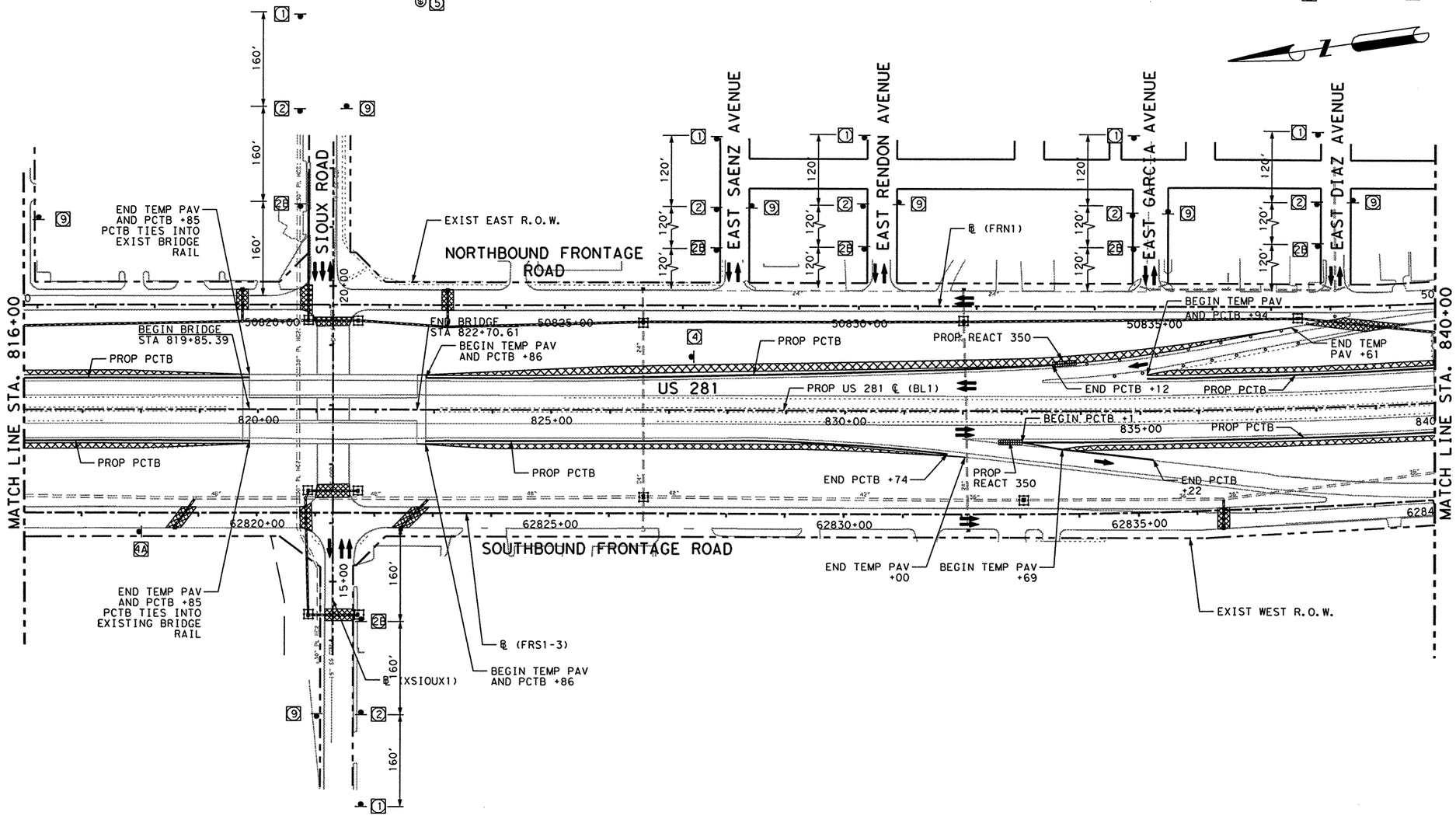

NOTES:

1. SEE "MINOR STREET CLOSURE DETAIL" FOR TRAFFIC CONTROL FOR MINOR STREETS.
2. SEE TRAFFIC CONTROL PHASING TYPICAL SECTION FOR TCP ROADWAY SECTIONS.
3. Ⓢ SIGNS ARE TO REMAIN THRU OUT THE DURATION OF THE PROJECT.
4. RAMP CLOSURE DURING "CUT AND RESTORE PAVEMENT" OPERATIONS SHALL BE IN ACCORDANCE TO STANDARD TCP (6-3).
5. TEMP SED CONTROL FENCE ON GRATED INLETS SHALL BE LEFT IN PLACE THROUGHOUT DURATION OF PROJECT OR AS DIRECTED BY THE ENGINEER.

LEGEND:

- TEMP PAV CONSTRUCTED PREVIOUS PHASE
- TEMP PAV CONSTRUCTED THIS PHASE
- PROP CONSTRUCTION THIS PHASE
- PROP CONSTRUCTION PREVIOUS PHASE
- EXISTING TO BE REMOVED
- SW — SOLID WHITE (NON-REMOVABLE)
- SY — SOLID YELLOW (NON-REMOVABLE)
- BW — BROKEN WHITE (NON-REMOVABLE)
- DSY — DOUBLE SOLID YELLOW (NON-REMOVABLE)
- SWR — SOLID WHITE (REMOVABLE)
- SYR — SOLID YELLOW (REMOVABLE)
- BWR — BROKEN WHITE (REMOVABLE)
- DSYR — DOUBLE SOLID YELLOW (REMOVABLE)
- Ⓨ — YELLOW GUIDE MARKS AND SHORT TERM MARKINGS
- Ⓦ — WHITE GUIDE MARKS AND SHORT TERM MARKINGS
- ○○○ — CHANNELIZING DEVICES
- TEMP SED CONTROL FENCE (12' EACH SEGMENT)
- TEMP SED CONTROL FENCE (48' EACH SEGMENT)
- CONSTRUCTION EXIT (TY 2)
- PROP SIGN
- PROP TY III BARRICADE
- 8' WIDE CUT AND RESTORE PAVEMENT FOR STORM SEWER CONSTRUCTION

THE SEAL APPEARING ON THIS DOCUMENT WAS AUTHORIZED BY JOHN M PEREZ, P.E. 66425 ON 08/06/2003.

STATE OF TEXAS — JOHN M. PEREZ — 66425 — REGISTERED PROFESSIONAL ENGINEER

9/6/03

ER1-2 YIELD — 15
R1-2A TO RAMP — 16
NARROW LANES AHEAD — CW20-8 — 17
FCW4-2L — 18
FCW4-2R — 19
CW20-5L — LEFT LANE CLOSED — 1000 FT PLAQUE — 20
CW20-5R — RIGHT LANE CLOSED — 1000 FT PLAQUE — 21
W3-2A — 22
E5-1 EXIT — 23
CW1-8(F) — 24 25
SCW13-2 EXIT 45 M.P.H. — 26
G20-7 Working For You Give Us A BRAKE — Ⓢ 27
CW21-1T Give Us A BRAKE — Ⓢ 28
R11-2 ROAD CLOSED — 29
R3-20 LEFT LANE MUST TURN LEFT — 30
TEMPORARY EXIT "STREET NAME" NEXT RIGHT — 31
ROAD WORK ⇦ NEXT X MILES — G20-1bL — Ⓢ 2A
ROAD WORK NEXT X MILES ⇨ — G20-1bR — Ⓢ 2B

SEE "TEMP EXIT SIGNS FOR EXIT RAMP CLOSURES" FOR ADDITIONAL INFORMATION

Parsons Brinckerhoff Quade & Douglas Inc.

Texas Department of Transportation
© 2003 by TxDOT

US 281
TRAFFIC CONTROL PLAN
PHASE IA

PLAN 1"= 200' HORIZ

SHEET 10 OF 11 — 281SEQIA10.DGN

DESIGNED: PAF	FED. RD DIV. No.	STATE	FEDERAL AID PROJECT No.			HIGHWAY No.
CHECKED: JP	6	TEXAS				US 281
DRAWN: KTD	STATE DISTRICT	COUNTY	CONTROL No.	SECTION No.	JOB No.	SHEET No.
CHECKED: JDH	PHARR	HIDALGO	0255	08	091	79

NAME
04:05:12 PM
08/06/2003
h:\22322o\cadd\sheets\traffic\tcp\281seqia11.dgn

WORK ZONE TRAFFIC FINES DOUBLE WHEN WORKERS ARE PRESENT — EG20-9, ER20-5, ER20-5 PLAQUE — (S)1

ROAD WORK AHEAD — CW20-1D — (S)2

REDUCED SPEED AHEAD — ER2-5A — (S)3

SPEED LIMIT 50 — ER2-1 — (S)4

SPEED LIMIT 40 — ER2-1 — (S)4A

SG20-5T
BEGIN ROAD WORK NEXT X MILES
NAME
ADDRESS
CITY
STATE
CONTRACTOR
SG20-6 — (S)5

HIGHWAY IMPROVEMENT PROJECT FUNDED BY YOUR TRANSPORTATION TAX DOLLARS
SCHEDULED COMPLETION XXXXXX XXXX
SG20-8

ECW1-4R — 6

ECW1-4L — 7

ECW4-1L — 8

END ROAD WORK — G20-2A — (S)9

ECW4-1R — 10

FCW4-3R — 11

ECW1-6A — 12

CW20-5L LEFT LANE CLOSED — 500 FT PLAQUE — 13

CW20-5R RIGHT LANE CLOSED — 500 FT PLAQUE — 14

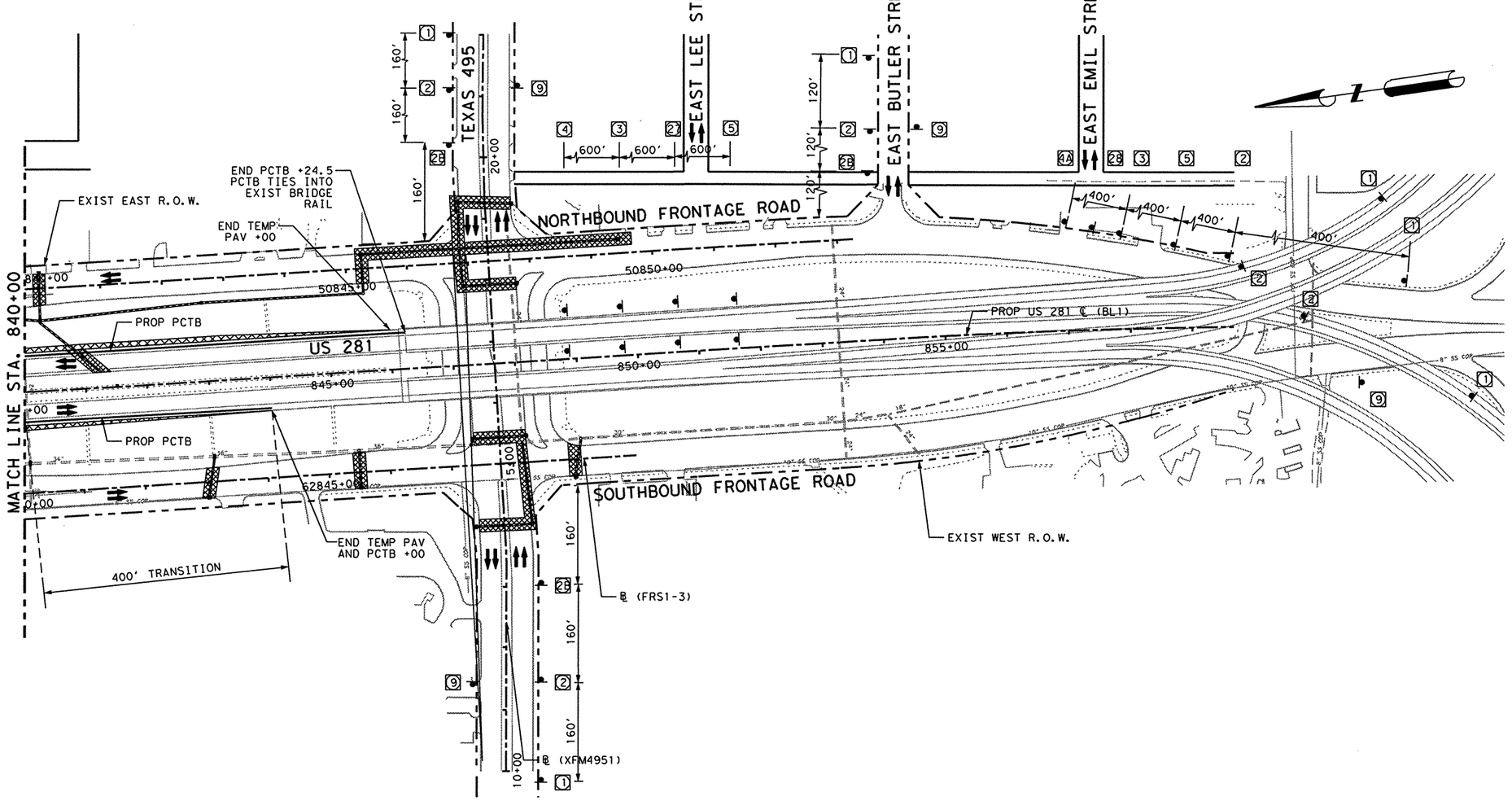

NOTES:

1. SEE "MINOR STREET CLOSURE DETAIL" FOR TRAFFIC CONTROL FOR MINOR STREETS.
2. SEE TRAFFIC CONTROL PHASING TYPICAL SECTION FOR TCP ROADWAY SECTIONS.
3. (S) SIGNS ARE TO REMAIN THRU OUT THE DURATION OF THE PROJECT.
4. RAMP CLOSURE DURING "CUT AND RESTORE PAVEMENT" OPERATIONS SHALL BE IN ACCORDANCE TO STANDARD TCP (6-3).
5. TEMP SED CONTROL FENCE ON GRATED INLETS SHALL BE LEFT IN PLACE THROUGHOUT DURATION OF PROJECT OR AS DIRECTED BY THE ENGINEER.

LEGEND:

- TEMP PAV CONSTRUCTED PREVIOUS PHASE
- TEMP PAV CONSTRUCTED THIS PHASE
- PROP CONSTRUCTION THIS PHASE
- PROP CONSTRUCTION PREVIOUS PHASE
- EXISTING TO BE REMOVED
- SW — SOLID WHITE (NON-REMOVABLE)
- SY — SOLID YELLOW (NON-REMOVABLE)
- BW — BROKEN WHITE (NON-REMOVABLE)
- DSY — DOUBLE SOLID YELLOW (NON-REMOVABLE)
- SWR — SOLID WHITE (REMOVABLE)
- SYR — SOLID YELLOW (REMOVABLE)
- BWR — BROKEN WHITE (REMOVABLE)
- DSYR — DOUBLE SOLID YELLOW (REMOVABLE)
- (Y) YELLOW GUIDE MARKS AND SHORT TERM MARKINGS
- (W) WHITE GUIDE MARKS AND SHORT TERM MARKINGS
- CHANNELIZING DEVICES
- TEMP SED CONTROL FENCE (12' EACH SEGMENT)
- TEMP SED CONTROL FENCE (48' EACH SEGMENT)
- CONSTRUCTION EXIT (TY 2)
- PROP SIGN
- PROP TY III BARRICADE
- 8' WIDE CUT AND RESTORE PAVEMENT FOR STORM SEWER CONSTRUCTION

THE SEAL APPEARING ON THIS DOCUMENT WAS AUTHORIZED BY JOHN M PEREZ, P.E. 66425 ON 08/06/2003.

STATE OF TEXAS — JOHN M. PEREZ — 66425 — REGISTERED PROFESSIONAL ENGINEER — 8/6/03

ER1-2 YIELD — 15

R1-2A TO RAMP — 16

NARROW LANES AHEAD — CW20-8 — 17

FCW4-2L — 18

FCW4-2R — 19

CW20-5L LEFT LANE CLOSED — 1000 FT PLAQUE — 20

CW20-5R RIGHT LANE CLOSED — 1000 FT PLAQUE — 21

W3-2A — 22

E5-1 EXIT — 23

CW1-8(F) — 24, 25

SCW13-2 EXIT 45 M.P.H. — 26

G20-7 Working For You Give Us A BRAKE — (S)27

CW21-1T Give Us A BRAKE — (S)28

ROAD WORK ⇦ NEXT X MILES — G20-1bL — (S)2A

ROAD WORK NEXT X MILES ⇨ — G20-1bR — (S)2B

R11-2 ROAD CLOSED — 29

R3-20 LEFT LANE MUST TURN LEFT — 30

TEMPORARY EXIT "STREET NAME" NEXT RIGHT — 31

SEE "TEMP EXIT SIGNS FOR EXIT RAMP CLOSURES" FOR ADDITIONAL INFORMATION

Parsons Brinckerhoff Quade & Douglas Inc.

Texas Department of Transportation

© 2003 by TxDOT

US 281
TRAFFIC CONTROL PLAN
PHASE IA

PLAN 1"= 200' HORIZ

SHEET 11 OF 11 — 281SEQIA11.DGN

DESIGNED: PAF	FED. RD DIV. No.	STATE	FEDERAL AID PROJECT No.			HIGHWAY No.
CHECKED: JP	6	TEXAS				US 281
DRAWN: KTD	STATE DISTRICT	COUNTY	CONTROL No.	SECTION No.	JOB No.	SHEET No.
CHECKED: JDH	PHARR	HIDALGO	0255	08	091	80

NAME
10:47:39 AM
06/20/2003
h:\22322a\coddl\sheets\traffic\tcp\typ\281typ19a.dgn

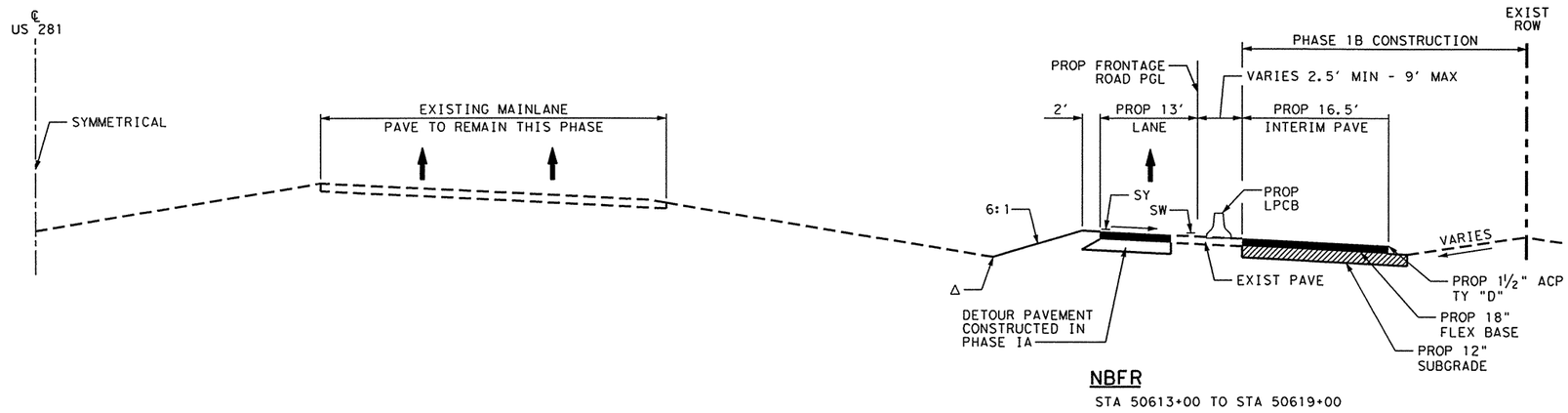

NBFR
STA 50613+00 TO STA 50619+00

SBFR
STA 61614+00 TO STA 61619+00

PHASE IB TYPICAL SECTION INTERIM PAVEMENT
STA 613+00.00 TO STA 619+00.00

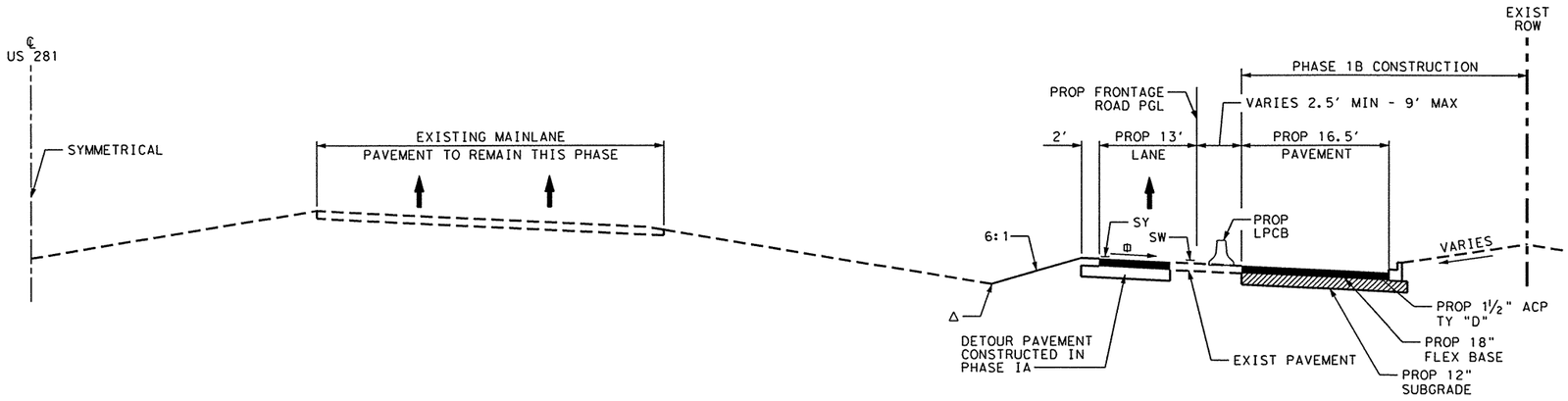

PHASE IB TYPICAL SECTION
STA 619+00.00 TO STA 754+00.00

Δ THE CONTRACTOR SHALL REGRADE DITCHES TO MAINTAIN THE EXISTING DRAINAGE PATTERNS AND REMOVE/RELAY OR EXTEND EXISTING DRAINAGE STRUCTURES AS NEEDED. THIS WORK SHALL BE CONSIDERED SUBSIDIARY TO THE VARIOUS BID ITEMS OF THIS CONTRACT

NOTE:
SEE PROPOSED TYPICAL SECTIONS FOR CROSS SLOPE INFORMATION.

THE SEAL APPEARING ON THIS DOCUMENT WAS AUTHORIZED BY JOHN M PEREZ, P.E. 66425 ON 06/20/2003.

STATE OF TEXAS
JOHN M. PEREZ
66425
REGISTERED PROFESSIONAL ENGINEER

6/20/03

Parsons Brinckerhoff Quade & Douglas Inc.

Texas Department of Transportation

© 2003 by TxDOT

TRAFFIC CONTROL PHASING TYPICAL SECTION

PHASE 1B
STA 613+00 TO STA 754+00

SCALE: NTS

SHEET 1 OF 1 | 281TYP19A.DGN

DESIGNED:PAF	FED. RD DIV. No.	STATE	FEDERAL AID PROJECT No.			HIGHWAY No.	
CHECKED: JP	6	TEXAS				US 281	
DRAWN: RLJ	STATE DISTRICT	COUNTY	CONTROL No.	SECTION No.	JOB No.	SHEET No.	
CHECKED: JDH	PHARR	HIDALGO	0255	08	091	81	

NAME
10:46:47 AM
06/20/2003

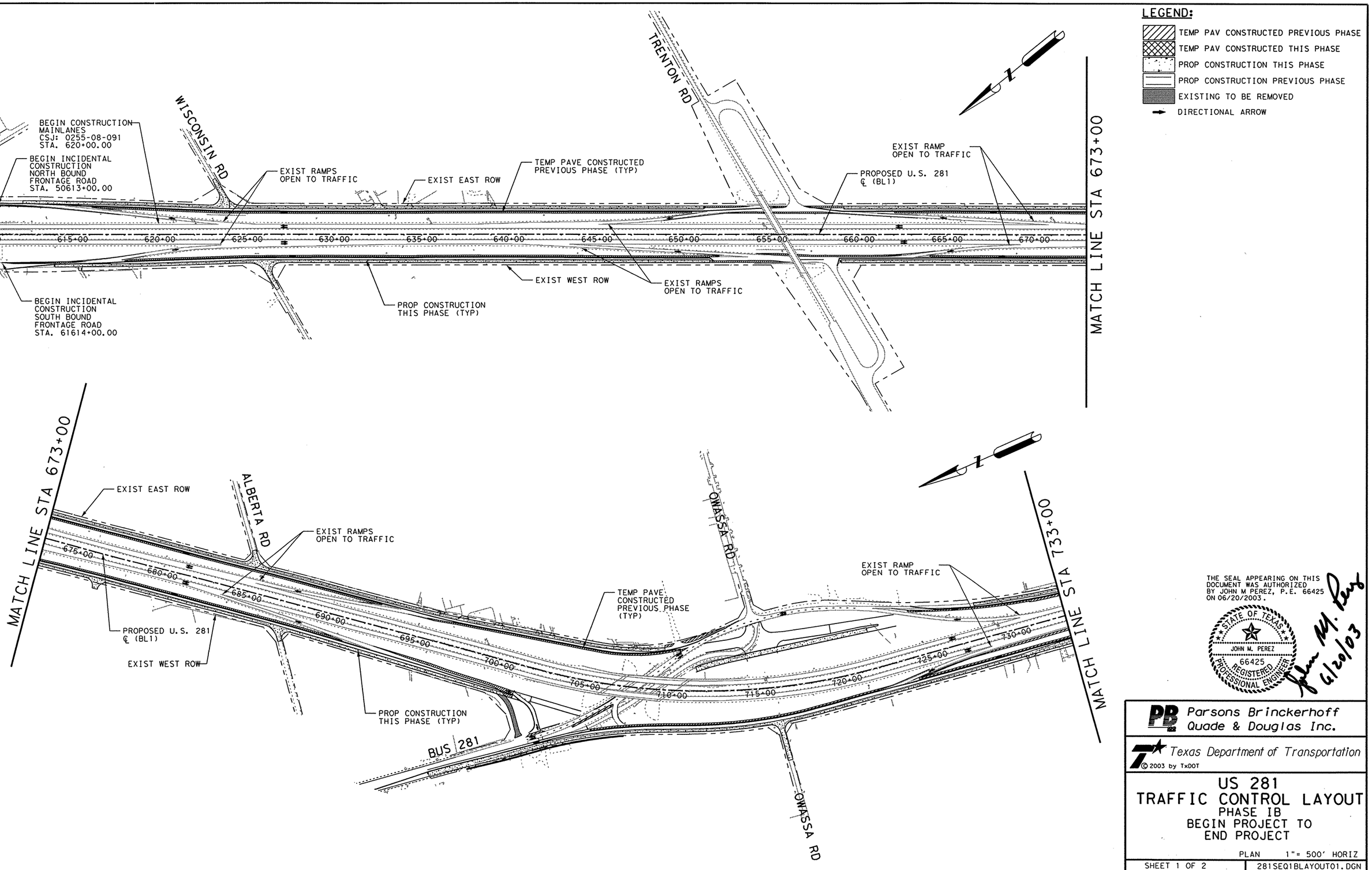

THE SEAL APPEARING ON THIS DOCUMENT WAS AUTHORIZED BY JOHN M PEREZ, P.E. 66425 ON 06/20/2003.

STATE OF TEXAS
JOHN M. PEREZ
66425
REGISTERED PROFESSIONAL ENGINEER

6/20/03

Parsons Brinckerhoff Quade & Douglas Inc.

Texas Department of Transportation

© 2003 by TxDOT

US 281
TRAFFIC CONTROL LAYOUT
PHASE IB
BEGIN PROJECT TO END PROJECT

PLAN 1"= 500' HORIZ

SHEET 1 OF 2 | 281SEQ1BLAYOUT01.DGN

DESIGNED: PAF	FED. RD DIV. No.	STATE	FEDERAL AID PROJECT No.			HIGHWAY No.	
CHECKED: JP	6	TEXAS				US 281	
DRAWN: KTD	STATE DISTRICT	COUNTY	CONTROL No.	SECTION No.	JOB No.	SHEET No.	
CHECKED: JDH	PHARR	HIDALGO	0255	08	091	82	

h:\22322o\cadd\sheets\traffic\tcp\281seq1blayout01.dgn

NAME
10:46:58 AM
06/20/2003
h:\22322a\cadd\sheets\traffic\tcp\281seqiblayout02.dgn

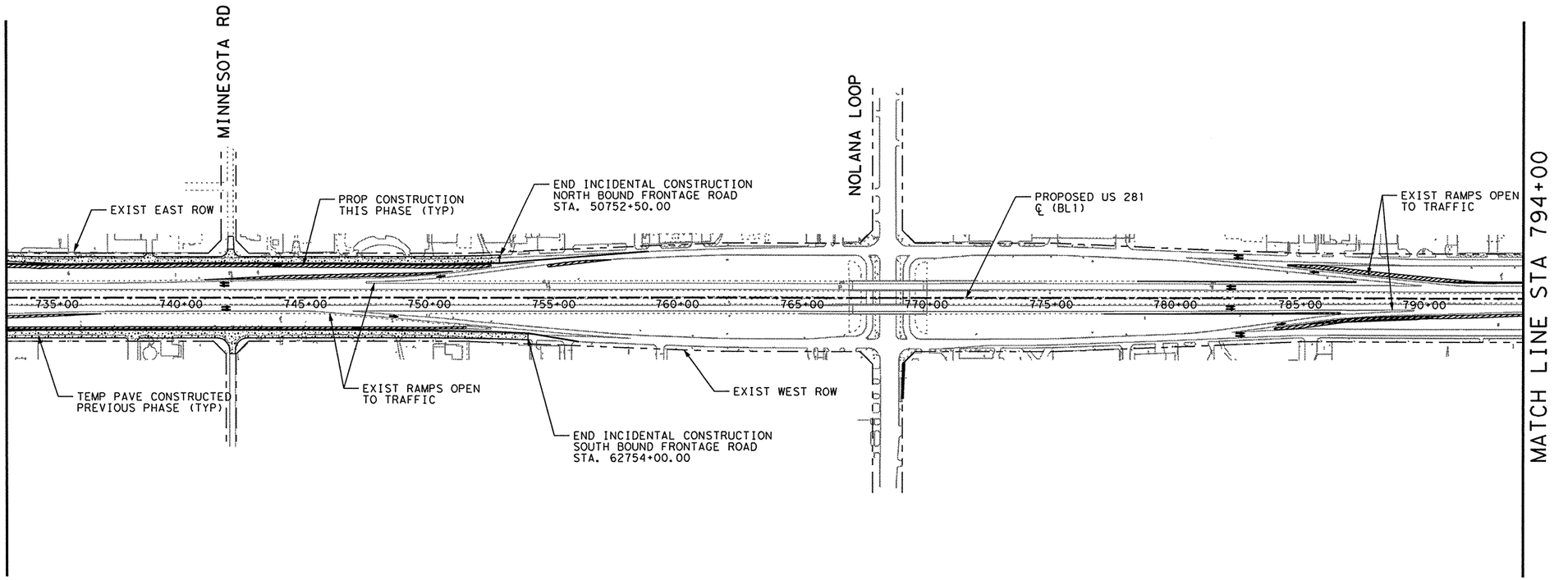

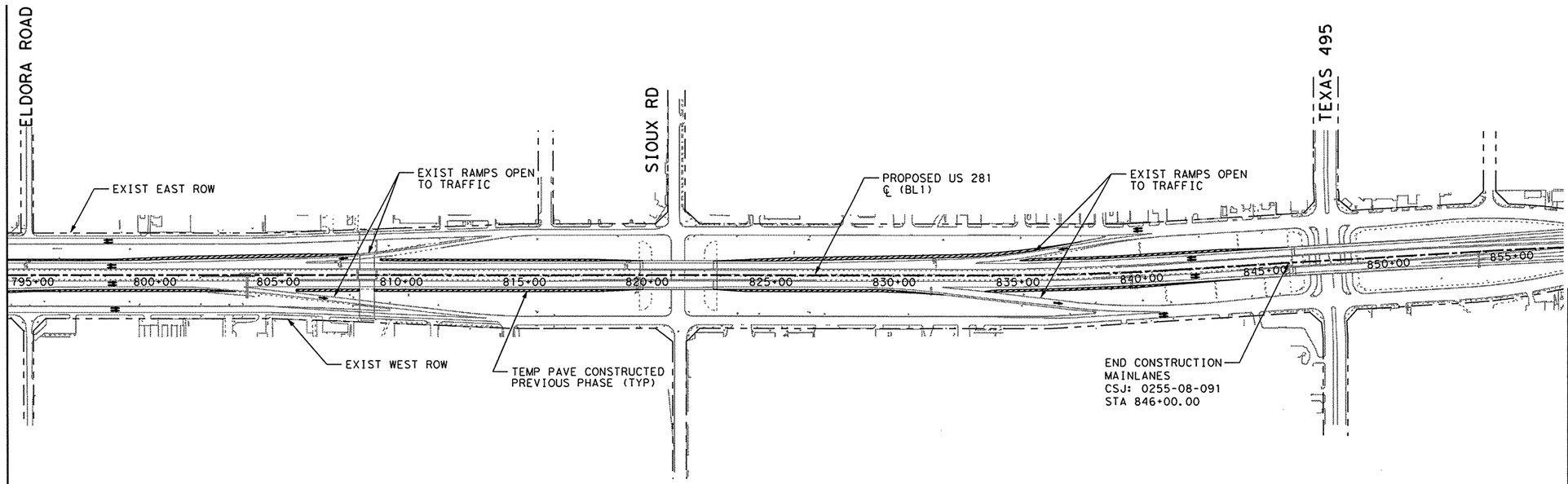

LEGEND:

- TEMP PAV CONSTRUCTED PREVIOUS PHASE
- TEMP PAV CONSTRUCTED THIS PHASE
- PROP CONSTRUCTION THIS PHASE
- PROP CONSTRUCTION PREVIOUS PHASE
- EXISTING TO BE REMOVED
- DIRECTIONAL ARROW

THE SEAL APPEARING ON THIS DOCUMENT WAS AUTHORIZED BY JOHN M PEREZ, P.E. 66425 ON 06/20/2003.

STATE OF TEXAS · JOHN M. PEREZ · 66425 · REGISTERED PROFESSIONAL ENGINEER

6/20/03

Parsons Brinckerhoff Quade & Douglas Inc.

Texas Department of Transportation

© 2003 by TxDOT

US 281
TRAFFIC CONTROL LAYOUT
PHASE IB
BEGIN PROJECT TO END PROJECT

PLAN 1"= 500' HORIZ

SHEET 2 OF 2 | 281SEQIBLAYOUT02.DGN

DESIGNED: PAF	FED. RD DIV. No.	STATE	FEDERAL AID PROJECT No.				HIGHWAY No.
CHECKED: JP	6	TEXAS					US 281
DRAWN: KTD	STATE DISTRICT	COUNTY	CONTROL No.	SECTION No.	JOB No.	SHEET No.	
CHECKED: JDH	PHARR	HIDALGO	0255	08	091	83	

NAME
10:45:06 AM
06/20/2003
h:\22322a\cadd\sheets\traffic\tcp\281seqib01.dgn

WORK ZONE / TRAFFIC FINES DOUBLE / WHEN WORKERS ARE PRESENT — EG20-9, ER20-5, ER20-5 PLAQUE [1]

ROAD WORK AHEAD — CW20-1D [2]

REDUCED SPEED AHEAD — ER2-5A [3]

SPEED LIMIT 50 — ER2-1 [4]

SPEED LIMIT 40 — ER2-1 [4A]

SG20-5T
BEGIN ROAD WORK NEXT X MILES
NAME ADDRESS CITY STATE
CONTRACTOR
SG20-6 [5]

HIGHWAY IMPROVEMENT PROJECT FUNDED BY YOUR TRANSPORTATION TAX DOLLARS
SCHEDULED COMPLETION XXXXXX XXXX
SG20-8

ECW1-4R [6]

ECW1-4L [7]

ECW4-1L [8]

END ROAD WORK — G20-2A [9]

ECW4-1R [10]

FCW4-3R [11]

ECW1-6A [12]

CW20-5L
LEFT LANE CLOSED
500 FT PLAQUE [13]

CW20-5R
RIGHT LANE CLOSED
500 FT PLAQUE [14]

ROAD WORK ⇦ NEXT X MILES — G20-1bL [28]

ROAD WORK NEXT X MILES ⇨ — G20-1bR [29]

NOTES:

1. SEE "MINOR STREET CLOSURE DETAIL" FOR TRAFFIC CONTROL FOR MINOR STREETS.
2. SEE TRAFFIC CONTROL PHASING TYPICAL SECTION FOR TCP ROADWAY SECTIONS.
3. TEMP SED CONTROL FENCE ON GRATED INLETS SHALL BE LEFT IN PLACE THROUGHOUT DURATION OF PROJECT OR AS DIRECTED BY THE ENGINEER.

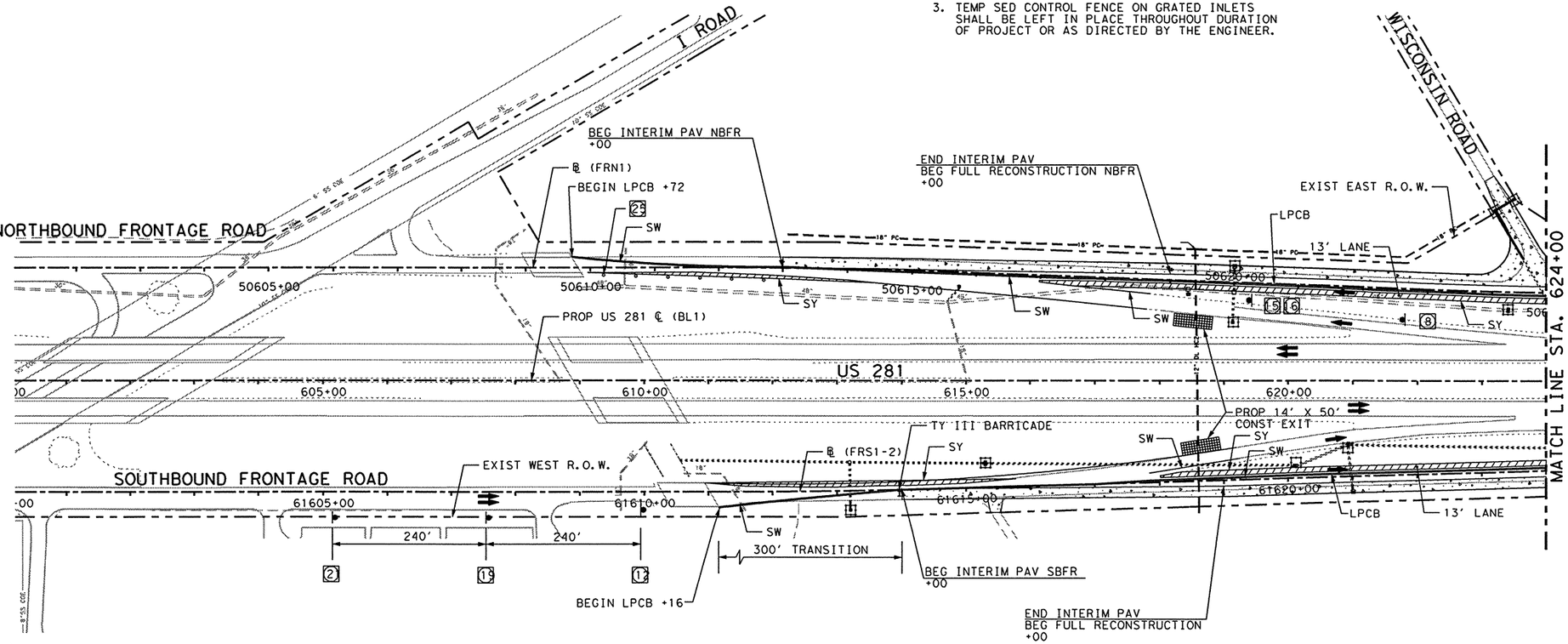

LEGEND:

- TEMP PAV CONSTRUCTED PREVIOUS PHASE
- TEMP PAV CONSTRUCTED THIS PHASE
- PROP CONSTRUCTION THIS PHASE
- PROP CONSTRUCTION PREVIOUS PHASE
- EXISTING TO BE REMOVED
- SW — SOLID WHITE (NON-REMOVABLE)
- SY — SOLID YELLOW (NON-REMOVABLE)
- BW — BROKEN WHITE (NON-REMOVABLE)
- DSY — DOUBLE SOLID YELLOW (NON-REMOVABLE)
- SWR — SOLID WHITE (REMOVABLE)
- SYR — SOLID YELLOW (REMOVABLE)
- BWR — BROKEN WHITE (REMOVABLE)
- DSYR — DOUBLE SOLID YELLOW (REMOVABLE)
- (Y) — YELLOW GUIDE MARKS AND SHORT TERM MARKINGS
- (W) — WHITE GUIDE MARKS AND SHORT TERM MARKINGS
- CHANNELIZING DEVICES
- TEMP SED CONTROL FENCE (12' EACH SEGMENT)
- TEMP SED CONTROL FENCE (48' EACH SEGMENT)
- CONSTRUCTION EXIT (TY 2)
- PROP SIGN
- PROP TY III BARRICADE
- STRUCTURES TO BE CONSTRUCTED DURING THIS PHASE

ER1-2 YIELD [15]

R1-2A TO RAMP [16]

NARROW LANES AHEAD — CW20-8 [17]

FCW4-2L [18]

FCW4-2R [19]

CW20-5L LEFT LANE CLOSED
1000 FT PLAQUE [20]

CW20-5R RIGHT LANE CLOSED
1000 FT PLAQUE [21]

W3-2A [22]

E5-1 EXIT [23]

CW1-8(F) [24] [25]

SCW13-2 EXIT 45 M.P.H. [26]

G20-7 Working For You Give Us A BRAKE [27]

CW21-1T Give Us A BRAKE [28]

R11-2 ROAD CLOSED [29]

R3-20 LEFT LANE MUST TURN LEFT [30]

TEMPORARY EXIT "STREET NAME" NEXT RIGHT [31]

SEE "TEMP EXIT SIGNS FOR EXIT RAMP CLOSURES" FOR ADDITIONAL INFORMATION

THE SEAL APPEARING ON THIS DOCUMENT WAS AUTHORIZED BY JOHN M PEREZ, P.E. 66425 ON 06/20/2003.

STATE OF TEXAS — JOHN M. PEREZ — 66425 — REGISTERED PROFESSIONAL ENGINEER

6/20/03

Parsons Brinckerhoff Quade & Douglas Inc.

Texas Department of Transportation

© 2003 by TxDOT

US 281
TRAFFIC CONTROL PLAN
PHASE IB

PLAN 1"= 200' HORIZ

SHEET 1 OF 7 | 281SEQIB01.DGN

DESIGNED: PAF	FED. RD DIV. No.	STATE	FEDERAL AID PROJECT No.			HIGHWAY No.
CHECKED: JP	6	TEXAS				US 281
DRAWN: KTD	STATE DISTRICT	COUNTY	CONTROL No.	SECTION No.	JOB No.	SHEET No.
CHECKED: JDH	PHARR	HIDALGO	0255	08	091	84

NAME
10:45:19 AM
06/20/2003
h:\22322o\cadd\sheets\traffic\tcp\281seqib02.dgn

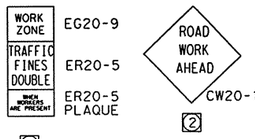

EG20-9
ER20-5
ER20-5 PLAQUE
1

CW20-1D
2

ER2-5A
3

ER2-1
4

ER2-1
4A

SG20-6
5

SG20-8

ECW1-4R
6

ECW1-4L
7

ECW4-1L
8

G20-2A
9

ECW4-1R
10

FCW4-3R
11

ECW1-6A
12

CW20-5L
500 FT PLAQUE
13

CW20-5R
500 FT PLAQUE
14

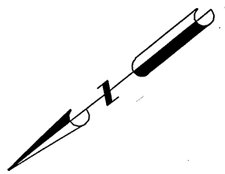

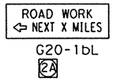

G20-1bL
2A

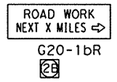

G20-1bR
2B

NOTES:

1. SEE "MINOR STREET CLOSURE DETAIL" FOR TRAFFIC CONTROL FOR MINOR STREETS.
2. SEE TRAFFIC CONTROL PHASING TYPICAL SECTION FOR TCP ROADWAY SECTIONS.
3. TEMP SED CONTROL FENCE ON GRATED INLETS SHALL BE LEFT IN PLACE THROUGHOUT DURATION OF PROJECT OR AS DIRECTED BY THE ENGINEER.

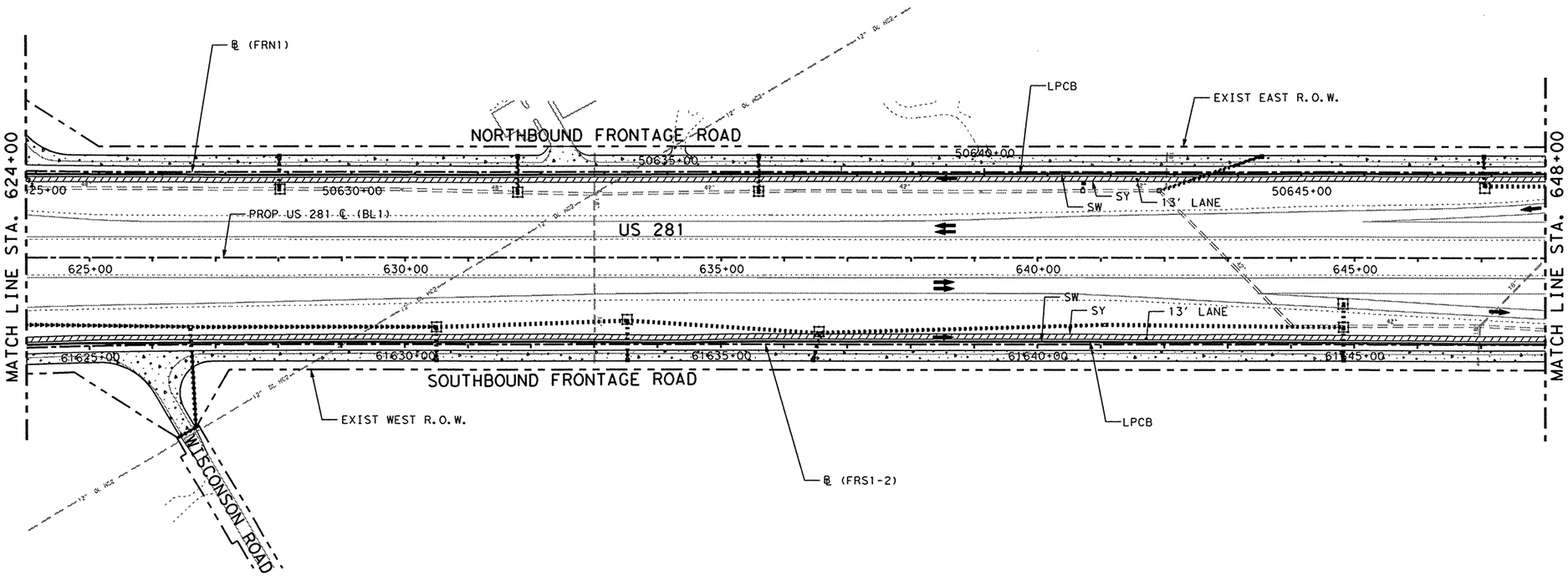

LEGEND:

	TEMP PAV CONSTRUCTED PREVIOUS PHASE
	TEMP PAV CONSTRUCTED THIS PHASE
	PROP CONSTRUCTION THIS PHASE
	PROP CONSTRUCTION PREVIOUS PHASE
	EXISTING TO BE REMOVED
SW	SOLID WHITE (NON-REMOVABLE)
SY	SOLID YELLOW (NON-REMOVABLE)
BW	BROKEN WHITE (NON-REMOVABLE)
DSY	DOUBLE SOLID YELLOW (NON-REMOVABLE)
SWR	SOLID WHITE (REMOVABLE)
SYR	SOLID YELLOW (REMOVABLE)
BWR	BROKEN WHITE (REMOVABLE)
DSYR	DOUBLE SOLID YELLOW (REMOVABLE)
(Y)	YELLOW GUIDE MARKS AND SHORT TERM MARKINGS
(W)	WHITE GUIDE MARKS AND SHORT TERM MARKINGS
	CHANNELIZING DEVICES
	TEMP SED CONTROL FENCE (12' EACH SEGMENT)
	TEMP SED CONTROL FENCE (48' EACH SEGMENT)
	CONSTRUCTION EXIT (TY 2)
	PROP SIGN
	PROP TY III BARRICADE
	STRUCTURE TO BE CONSTRUCTED DURING THIS PHASE

ER1-2
15

R1-2A
16

CW20-8
17

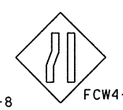
FCW4-2L
18

FCW4-2R
19

CW20-5L
20

CW20-5R
21

22

E5-1
23

CW1-8(F)
24

25

SCW13-2
26

G20-7
27

CW21-1T
28

R11-2
29

R3-20
30

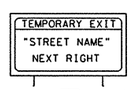

31

SEE "TEMP EXIT SIGNS FOR EXIT RAMP CLOSURES" FOR ADDITIONAL INFORMATION

THE SEAL APPEARING ON THIS DOCUMENT WAS AUTHORIZED BY JOHN M PEREZ, P.E. 66425 ON 06/20/2003.

6/20/03

Parsons Brinckerhoff Quade & Douglas Inc.

Texas Department of Transportation

© 2003 by TxDOT

US 281
TRAFFIC CONTROL PLAN
PHASE IB

PLAN 1"= 200' HORIZ

SHEET 2 OF 7			281SEQIB02.DGN			
DESIGNED: PAF	FED. RD DIV. No.	STATE	FEDERAL AID PROJECT No.			HIGHWAY No.
CHECKED: JP	6	TEXAS				US 281
DRAWN: KTD	STATE DISTRICT	COUNTY	CONTROL No.	SECTION No.	JOB No.	SHEET No.
CHECKED: JDH	PHARR	HIDALGO	0255	08	091	85

NAME
10:45:31 AM
06/20/2003

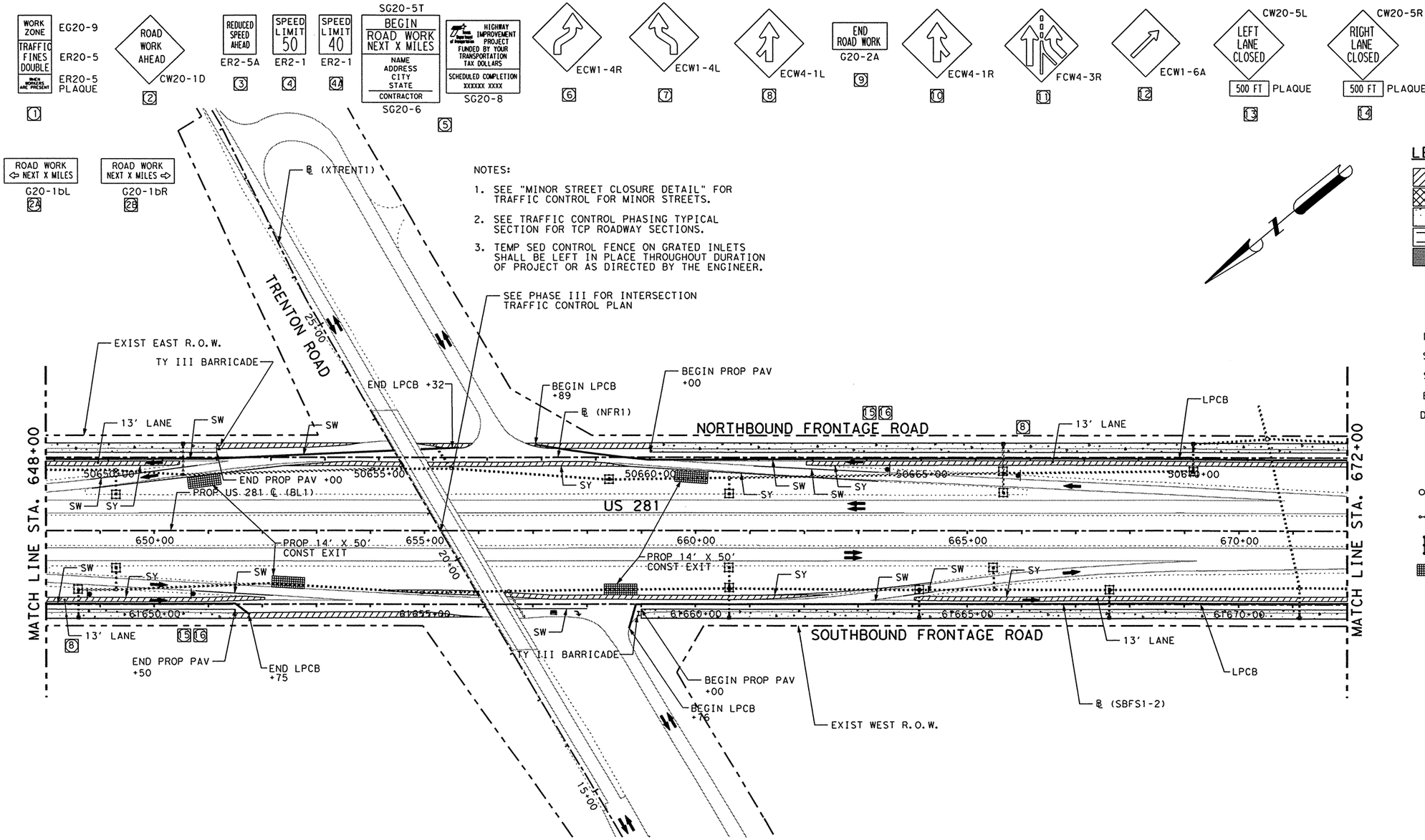

NOTES:

1. SEE "MINOR STREET CLOSURE DETAIL" FOR TRAFFIC CONTROL FOR MINOR STREETS.
2. SEE TRAFFIC CONTROL PHASING TYPICAL SECTION FOR TCP ROADWAY SECTIONS.
3. TEMP SED CONTROL FENCE ON GRATED INLETS SHALL BE LEFT IN PLACE THROUGHOUT DURATION OF PROJECT OR AS DIRECTED BY THE ENGINEER.

SEE PHASE III FOR INTERSECTION TRAFFIC CONTROL PLAN

LEGEND:

- TEMP PAV CONSTRUCTED PREVIOUS PHASE
- TEMP PAV CONSTRUCTED THIS PHASE
- PROP CONSTRUCTION THIS PHASE
- PROP CONSTRUCTION PREVIOUS PHASE
- EXISTING TO BE REMOVED
- SW SOLID WHITE (NON-REMOVABLE)
- SY SOLID YELLOW (NON-REMOVABLE)
- BW BROKEN WHITE (NON-REMOVABLE)
- DSY DOUBLE SOLID YELLOW (NON-REMOVABLE)
- SWR SOLID WHITE (REMOVABLE)
- SYR SOLID YELLOW (REMOVABLE)
- BWR BROKEN WHITE (REMOVABLE)
- DSYR DOUBLE SOLID YELLOW (REMOVABLE)
- Ⓨ YELLOW GUIDE MARKS AND SHORT TERM MARKINGS
- Ⓦ WHITE GUIDE MARKS AND SHORT TERM MARKINGS
- CHANNELIZING DEVICES
- TEMP SED CONTROL FENCE (12' EACH SEGMENT)
- TEMP SED CONTROL FENCE (48' EACH SEGMENT)
- CONSTRUCTION EXIT (TY 2)
- PROP SIGN
- PROP TY III BARRICADE
- STRUCTURE TO BE CONSTRUCTED DURING THIS PHASE

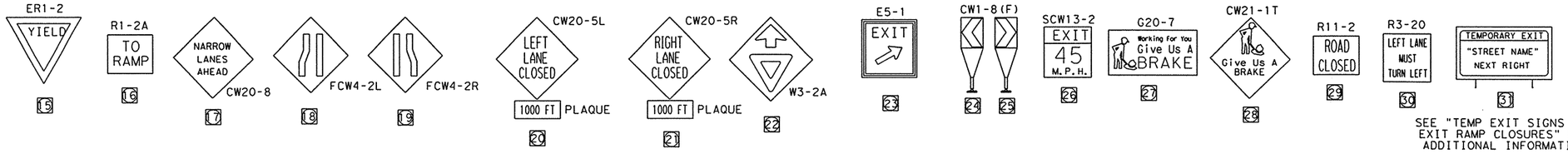

SEE "TEMP EXIT SIGNS FOR EXIT RAMP CLOSURES" FOR ADDITIONAL INFORMATION

THE SEAL APPEARING ON THIS DOCUMENT WAS AUTHORIZED BY JOHN M PEREZ, P.E. 66425 ON 06/20/2003.

STATE OF TEXAS · JOHN M. PEREZ · 66425 · REGISTERED PROFESSIONAL ENGINEER

6/20/03

Parsons Brinckerhoff Quade & Douglas Inc.

Texas Department of Transportation

© 2003 by TxDOT

US 281
TRAFFIC CONTROL PLAN
PHASE IB

PLAN 1"= 200' HORIZ

SHEET 3 OF 7 | 281SEQIB03.DGN

DESIGNED: PAF	FED. RD DIV. No.	STATE	FEDERAL AID PROJECT No.	HIGHWAY No.
CHECKED: JP	6	TEXAS		US 281

DRAWN: KTD	STATE DISTRICT	COUNTY	CONTROL No.	SECTION No.	JOB No.	SHEET No.
CHECKED: JDH	PHARR	HIDALGO	0255	08	091	86

h:\22322o\cadd\sheets\traffic\tcp\281seqib03.dgn

NAME
10:45:42 AM
06/20/2003

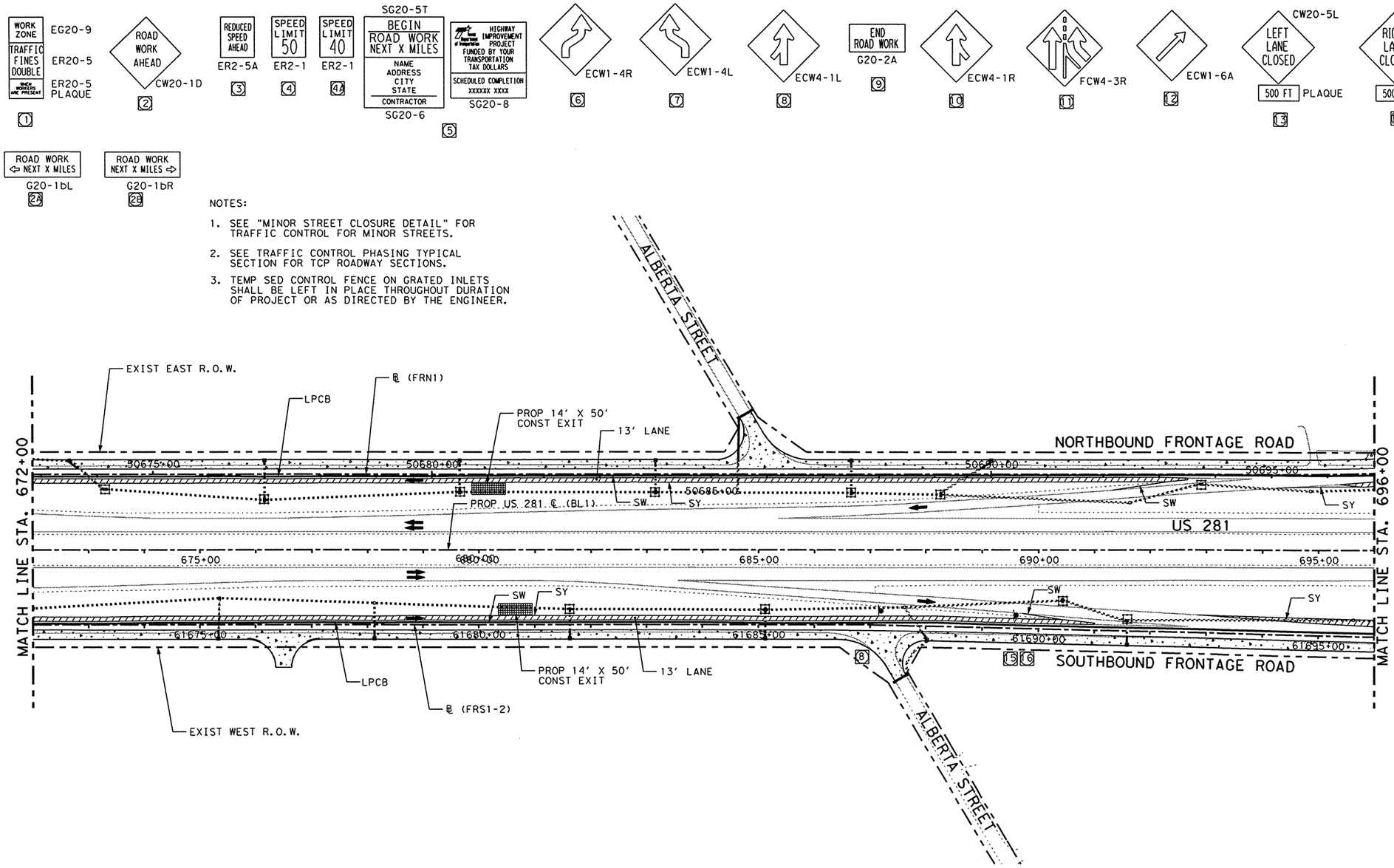

1 WORK ZONE EG20-9 / TRAFFIC FINES DOUBLE ER20-5 / WHEN WORKERS ARE PRESENT ER20-5 PLAQUE

2 ROAD WORK AHEAD CW20-1D

3 REDUCED SPEED AHEAD ER2-5A

4 SPEED LIMIT 50 ER2-1

4A SPEED LIMIT 40 ER2-1

5 SG20-5T BEGIN ROAD WORK NEXT X MILES / NAME ADDRESS CITY STATE / CONTRACTOR SG20-6

HIGHWAY IMPROVEMENT PROJECT FUNDED BY YOUR TRANSPORTATION TAX DOLLARS / SCHEDULED COMPLETION XXXXXX XXXX SG20-8

6 ECW1-4R

7 ECW1-4L

8 ECW4-1L

9 END ROAD WORK G20-2A

10 ECW4-1R

11 FCW4-3R

12 ECW1-6A

13 CW20-5L LEFT LANE CLOSED 500 FT PLAQUE

14 CW20-5R RIGHT LANE CLOSED 500 FT PLAQUE

2A ROAD WORK ⇦ NEXT X MILES G20-1bL

2B ROAD WORK NEXT X MILES ⇨ G20-1bR

NOTES:

1. SEE "MINOR STREET CLOSURE DETAIL" FOR TRAFFIC CONTROL FOR MINOR STREETS.
2. SEE TRAFFIC CONTROL PHASING TYPICAL SECTION FOR TCP ROADWAY SECTIONS.
3. TEMP SED CONTROL FENCE ON GRATED INLETS SHALL BE LEFT IN PLACE THROUGHOUT DURATION OF PROJECT OR AS DIRECTED BY THE ENGINEER.

LEGEND:

- TEMP PAV CONSTRUCTED PREVIOUS PHASE
- TEMP PAV CONSTRUCTED THIS PHASE
- PROP CONSTRUCTION THIS PHASE
- PROP CONSTRUCTION PREVIOUS PHASE
- EXISTING TO BE REMOVED
- SW SOLID WHITE (NON-REMOVABLE)
- SY SOLID YELLOW (NON-REMOVABLE)
- BW BROKEN WHITE (NON-REMOVABLE)
- DSY DOUBLE SOLID YELLOW (NON-REMOVABLE)
- SWR SOLID WHITE (REMOVABLE)
- SYR SOLID YELLOW (REMOVABLE)
- BWR BROKEN WHITE (REMOVABLE)
- DSYR DOUBLE SOLID YELLOW (REMOVABLE)
- (Y) YELLOW GUIDE MARKS AND SHORT TERM MARKINGS
- (W) WHITE GUIDE MARKS AND SHORT TERM MARKINGS
- CHANNELIZING DEVICES
- TEMP SED CONTROL FENCE (12' EACH SEGMENT)
- TEMP SED CONTROL FENCE (48' EACH SEGMENT)
- CONSTRUCTION EXIT (TY 2)
- PROP SIGN
- PROP TY III BARRICADE
- STRUCTURE TO BE CONSTRUCTED DURING THIS PHASE

15 ER1-2 YIELD

16 R1-2A TO RAMP

17 NARROW LANES AHEAD CW20-8

18 FCW4-2L

19 FCW4-2R

20 CW20-5L LEFT LANE CLOSED 1000 FT PLAQUE

21 CW20-5R RIGHT LANE CLOSED 1000 FT PLAQUE

22 W3-2A

23 E5-1 EXIT

24 CW1-8(F)

25 CW1-8(F)

26 SCW13-2 EXIT 45 M.P.H.

27 G20-7 Working for You Give Us A BRAKE

28 CW21-1T Give Us A BRAKE

29 R11-2 ROAD CLOSED

30 R3-20 LEFT LANE MUST TURN LEFT

31 TEMPORARY EXIT "STREET NAME" NEXT RIGHT

SEE "TEMP EXIT SIGNS FOR EXIT RAMP CLOSURES" FOR ADDITIONAL INFORMATION

THE SEAL APPEARING ON THIS DOCUMENT WAS AUTHORIZED BY JOHN M PEREZ, P.E. 66425 ON 06/20/2003.

STATE OF TEXAS · JOHN M. PEREZ · 66425 · REGISTERED PROFESSIONAL ENGINEER

6/20/03

Parsons Brinckerhoff Quade & Douglas Inc.

Texas Department of Transportation

© 2003 by TxDOT

US 281
TRAFFIC CONTROL PLAN
PHASE IB

PLAN 1"= 200' HORIZ

SHEET 4 OF 7 — 281SEQIB04.DGN

DESIGNED: PAF	FED. RD DIV. No.	STATE	FEDERAL AID PROJECT No.	HIGHWAY No.
CHECKED: JP	6	TEXAS		US 281

DRAWN: KTD	STATE DISTRICT	COUNTY	CONTROL No.	SECTION No.	JOB No.	SHEET No.
CHECKED: JDH	PHARR	HIDALGO	0255	08	091	87

h:\22322a\cadd\sheets\traffic\tcp\281seqib04.dgn

NAME
10:45:55 AM
06/20/2003
h:\22322o\cadd\sheets\traffic\tcp\281seqib05.dgn

WORK ZONE / TRAFFIC FINES DOUBLE / WHEN WORKERS ARE PRESENT — EG20-9 / ER20-5 / ER20-5 PLAQUE — 1
ROAD WORK AHEAD — CW20-1D — 2
REDUCED SPEED AHEAD — ER2-5A — 3
SPEED LIMIT 50 — ER2-1 — 4
SPEED LIMIT 40 — ER2-1 — 4A
SG20-5T: BEGIN ROAD WORK NEXT X MILES / NAME ADDRESS CITY STATE / CONTRACTOR — SG20-6 — 5
HIGHWAY IMPROVEMENT PROJECT FUNDED BY YOUR TRANSPORTATION TAX DOLLARS / SCHEDULED COMPLETION XXXXXX XXXX — SG20-8
ECW1-4R — 6
ECW1-4L — 7
ECW4-1L — 8
END ROAD WORK — G20-2A — 9
ECW4-1R — 10
FCW4-3R — 11
ECW1-6A — 12
LEFT LANE CLOSED / 500 FT PLAQUE — CW20-5L — 13
RIGHT LANE CLOSED / 500 FT PLAQUE — CW20-5R — 14

NB BUS 281 CONTINUE CONSTRUCTING BENTS, BEAMS, COLUMNS, AND STEEL DECKING ONLY IN THIS PHASE. CONCRETE DECK SHALL BE POURED AFTER ALL BEAMS AND STEEL DECKING ARE COMPLETE IN PHASE V.

END LPCB +40
FLASHING ARROW PANEL
TY III BARRICADES
MATCH LINE STA. 720+00
TY III BARRICADE
END CONSTRUCTION +00
℄ (FRN1)
℄ (BUS281N)
PROP US 281 ℄ (BL1)
EXIST EAST R.O.W.
NORTHBOUND FRONTAGE ROAD
LPCB
REMOVED IN PHASE IA
BEGIN PROP PAV +19
MATCH LINE STA. 696+00
US 281
13' LANE
PROP 14"x50' CONST EXIT
OWASSA RD M4-9N
NB US 281 M4-9N
DETOUR M4-9S
END PROP HDSMA CONC PAV +50 BEGIN PROP PAV
REMOVED IN PHASE IA
PROP 14"x50' CONST EXIT
TY III BARRICADE
SOUTHBOUND FRONTAGE ROAD
PHARR CITY LIMITS
EDINBURG CITY LIMITS
OWASSA ROAD
END PROP HDSMA CONC PAV +50
END LPCB +84
DETOUR
LPCB
END PROP PAV +50 BEGIN PROP HDSMA CONC PAV
℄ (FRS1-2)
℄ (XBUS281)
℄ (FRS1-3)
EXIST WEST R.O.W.
BUSINESS 281
FLASHING ARROW PANEL
SWR
TY III BARRICADE
BEGIN PROP PAV +27
600'
600'

ROAD WORK ⇦ NEXT X MILES — G20-1bL — 24
ROAD WORK NEXT X MILES ⇨ — G20-1bR — 25

ER1-2 YIELD — 15
R1-2A TO RAMP — 16
NARROW LANES AHEAD — CW20-8 — 17
FCW4-2L — 18
FCW4-2R — 19
CW20-5L LEFT LANE CLOSED / 1000 FT PLAQUE — 20
CW20-5R RIGHT LANE CLOSED / 1000 FT PLAQUE — 21
W3-2A — 22
E5-1 EXIT — 23
CW1-8(F) — 24 25
SCW13-2 EXIT 45 M.P.H. — 26
G20-7 Working For You Give Us A BRAKE — 27
CW21-1T Give Us A BRAKE — 28
R11-2 ROAD CLOSED — 29
R3-20 LEFT LANE MUST TURN LEFT — 30
TEMPORARY EXIT "STREET NAME" NEXT RIGHT — 31

SEE "TEMP EXIT SIGNS FOR EXIT RAMP CLOSURES" FOR ADDITIONAL INFORMATION

LEGEND:

- TEMP PAV CONSTRUCTED PREVIOUS PHASE
- TEMP PAV CONSTRUCTED THIS PHASE
- PROP CONSTRUCTION THIS PHASE
- PROP CONSTRUCTION PREVIOUS PHASE
- EXISTING TO BE REMOVED
- SW SOLID WHITE (NON-REMOVABLE)
- SY SOLID YELLOW (NON-REMOVABLE)
- BW BROKEN WHITE (NON-REMOVABLE)
- DSY DOUBLE SOLID YELLOW (NON-REMOVABLE)
- SWR SOLID WHITE (REMOVABLE)
- SYR SOLID YELLOW (REMOVABLE)
- BWR BROKEN WHITE (REMOVABLE)
- DSYR DOUBLE SOLID YELLOW (REMOVABLE)
- (Y) YELLOW GUIDE MARKS AND SHORT TERM MARKINGS
- (W) WHITE GUIDE MARKS AND SHORT TERM MARKINGS
- CHANNELIZING DEVICES
- TEMP SED CONTROL FENCE (12' EACH SEGMENT)
- TEMP SED CONTROL FENCE (48' EACH SEGMENT)
- CONSTRUCTION EXIT (TY 2)
- PROP SIGN
- PROP TY III BARRICADE

NOTES:

1. SEE "MINOR STREET CLOSURE DETAIL" FOR TRAFFIC CONTROL FOR MINOR STREETS.
2. SEE TRAFFIC CONTROL PHASING TYPICAL SECTION FOR TCP ROADWAY SECTIONS.
3. TEMP SED CONTROL FENCE ON GRATED INLETS SHALL BE LEFT IN PLACE THROUGHOUT DURATION OF PROJECT OR AS DIRECTED BY THE ENGINEER.

THE SEAL APPEARING ON THIS DOCUMENT WAS AUTHORIZED BY JOHN M PEREZ, P.E. 66425 ON 06/20/2003.

STATE OF TEXAS · JOHN M. PEREZ · 66425 · REGISTERED PROFESSIONAL ENGINEER

Parsons Brinckerhoff Quade & Douglas Inc.

Texas Department of Transportation

© 2003 by TxDOT

US 281
TRAFFIC CONTROL PLAN
PHASE IB

PLAN 1"= 200' HORIZ

SHEET 5 OF 7 — 281SEQIB05.DGN

DESIGNED: PAF	FED. RD DIV. No.	STATE	FEDERAL AID PROJECT No.			HIGHWAY No.	
CHECKED: JP	6	TEXAS				US 281	
DRAWN: KTD	STATE DISTRICT	COUNTY	CONTROL No.	SECTION No.	JOB No.	SHEET No.	
CHECKED: JDH	PHARR	HIDALGO	0255	08	091	88	

NAME
10:46:06 AM
06/20/2003
h:\22322o\cadd\sheets\traffic\tcp\281seqib06.dgn

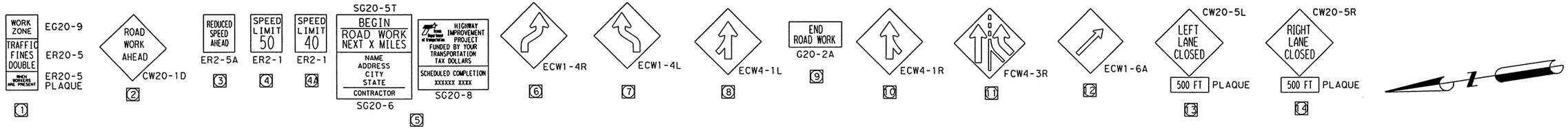

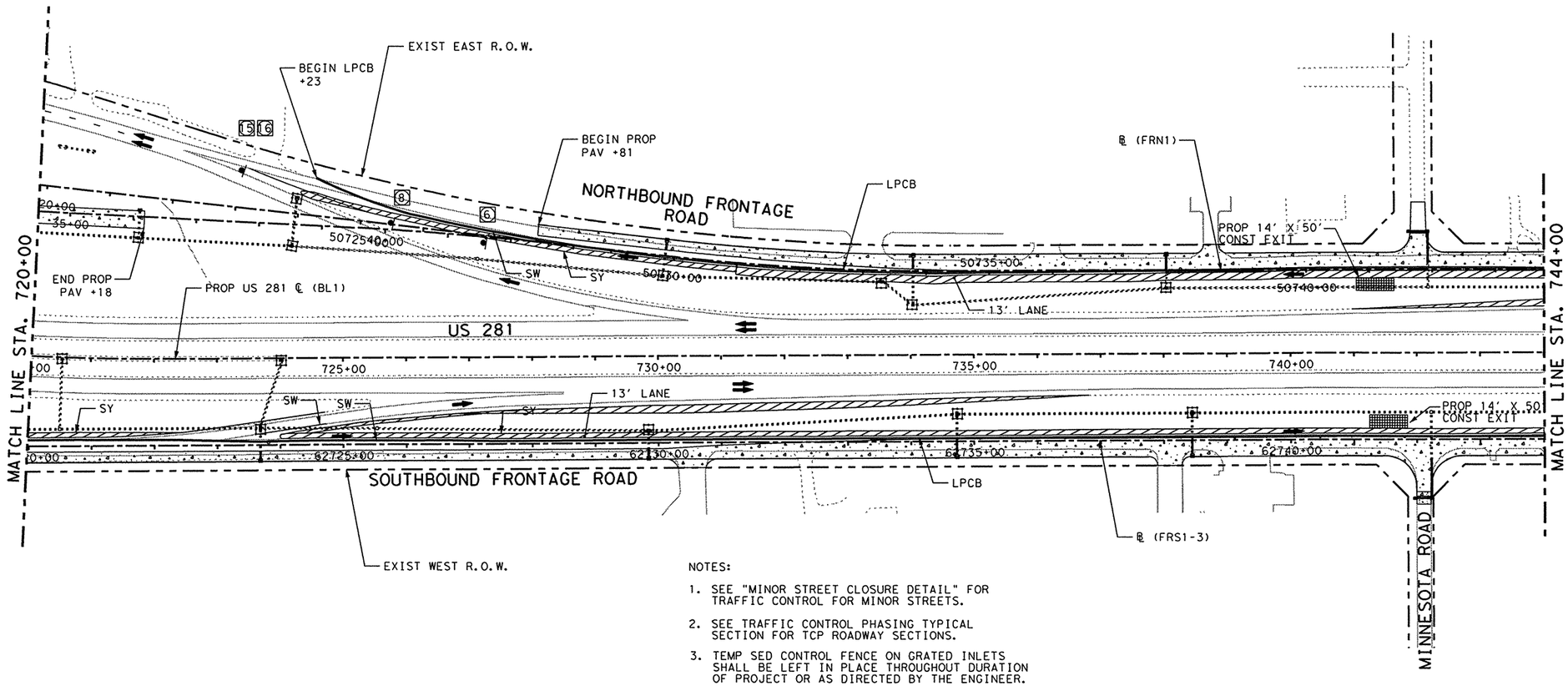

NOTES:

1. SEE "MINOR STREET CLOSURE DETAIL" FOR TRAFFIC CONTROL FOR MINOR STREETS.
2. SEE TRAFFIC CONTROL PHASING TYPICAL SECTION FOR TCP ROADWAY SECTIONS.
3. TEMP SED CONTROL FENCE ON GRATED INLETS SHALL BE LEFT IN PLACE THROUGHOUT DURATION OF PROJECT OR AS DIRECTED BY THE ENGINEER.

LEGEND:

- TEMP PAV CONSTRUCTED PREVIOUS PHASE
- TEMP PAV CONSTRUCTED THIS PHASE
- PROP CONSTRUCTION THIS PHASE
- PROP CONSTRUCTION PREVIOUS PHASE
- EXISTING TO BE REMOVED
- SW SOLID WHITE (NON-REMOVABLE)
- SY SOLID YELLOW (NON-REMOVABLE)
- BW BROKEN WHITE (NON-REMOVABLE)
- DSY DOUBLE SOLID YELLOW (NON-REMOVABLE)
- SWR SOLID WHITE (REMOVABLE)
- SYR SOLID YELLOW (REMOVABLE)
- BWR BROKEN WHITE (REMOVABLE)
- DSYR DOUBLE SOLID YELLOW (REMOVABLE)
- (Y) YELLOW GUIDE MARKS AND SHORT TERM MARKINGS
- (W) WHITE GUIDE MARKS AND SHORT TERM MARKINGS
- CHANNELIZING DEVICES
- TEMP SED CONTROL FENCE (12' EACH SEGMENT)
- TEMP SED CONTROL FENCE (48' EACH SEGMENT)
- CONSTRUCTION EXIT (TY 2)
- PROP SIGN
- PROP TY III BARRICADE
- STRUCTURES TO BE CONSTRUCTED DURING THIS PHASE

THE SEAL APPEARING ON THIS DOCUMENT WAS AUTHORIZED BY JOHN M PEREZ, P.E. 66425 ON 06/20/2003.

STATE OF TEXAS · JOHN M. PEREZ · 66425 · REGISTERED PROFESSIONAL ENGINEER

6/20/03

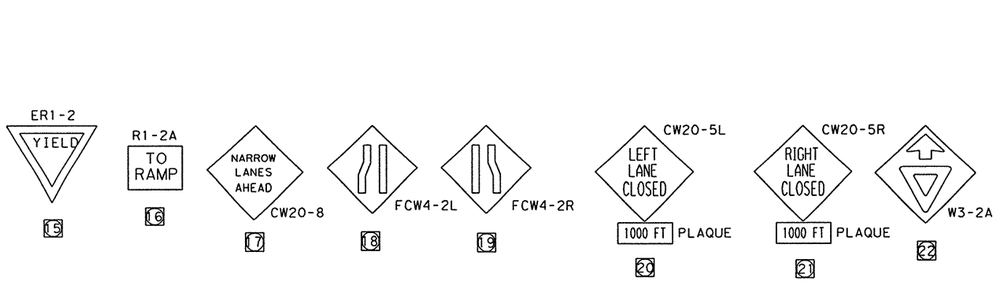

SEE "TEMP EXIT SIGNS FOR EXIT RAMP CLOSURES" FOR ADDITIONAL INFORMATION

Parsons Brinckerhoff Quade & Douglas Inc.

Texas Department of Transportation

© 2003 by TxDOT

US 281
TRAFFIC CONTROL PLAN
PHASE IB

PLAN 1"= 200' HORIZ

SHEET 6 OF 7 — 281SEQIB06.DGN

DESIGNED: PAF	FED. RD DIV. No.	STATE	FEDERAL AID PROJECT No.	HIGHWAY No.
CHECKED: JP	6	TEXAS		US 281

DRAWN: KTD	STATE DISTRICT	COUNTY	CONTROL No.	SECTION No.	JOB No.	SHEET No.
CHECKED: JDH	PHARR	HIDALGO	0255	08	091	89

NAME
10:46:17 AM
06/20/2003
h:\22322o\cadd\sheets\traffic\tcp\281seqib07.dgn

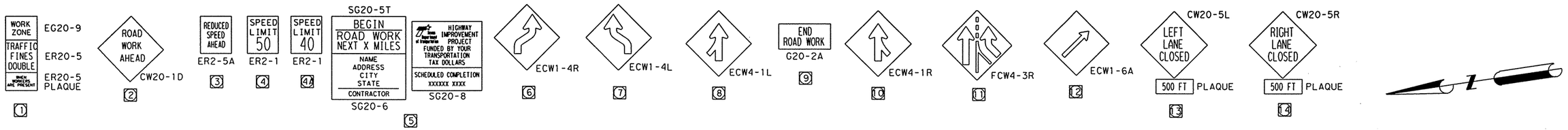

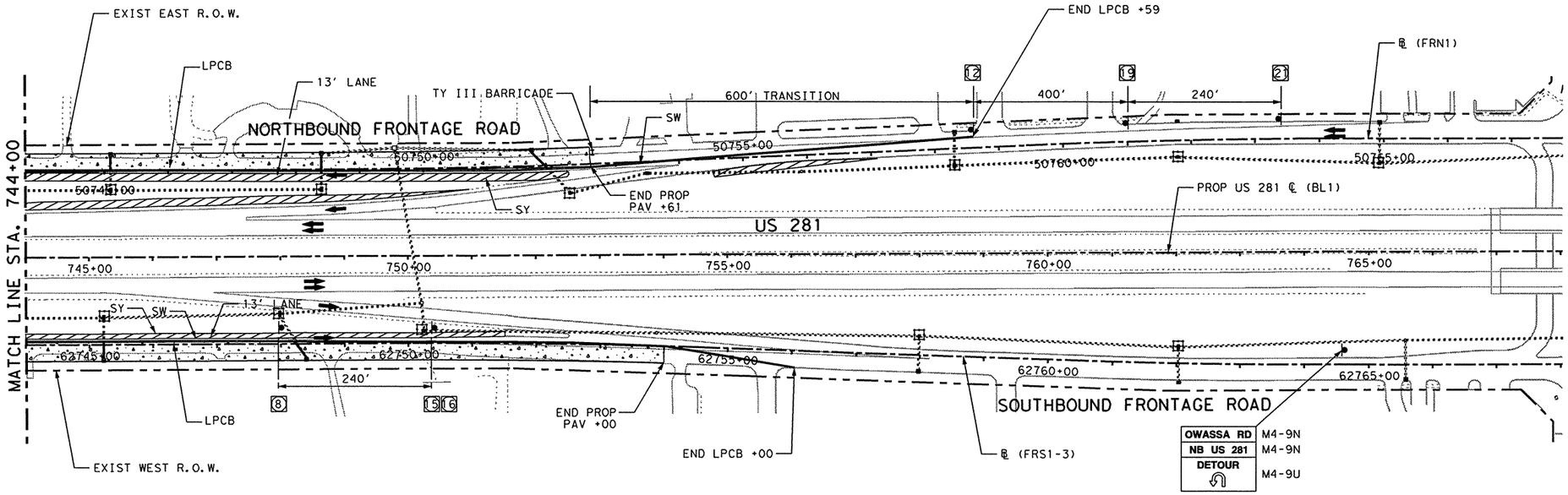

LEGEND:

- TEMP PAV CONSTRUCTED PREVIOUS PHASE
- TEMP PAV CONSTRUCTED THIS PHASE
- PROP CONSTRUCTION THIS PHASE
- PROP CONSTRUCTION PREVIOUS PHASE
- EXISTING TO BE REMOVED
- SW SOLID WHITE (NON-REMOVABLE)
- SY SOLID YELLOW (NON-REMOVABLE)
- BW BROKEN WHITE (NON-REMOVABLE)
- DSY DOUBLE SOLID YELLOW (NON-REMOVABLE)
- SWR SOLID WHITE (REMOVABLE)
- SYR SOLID YELLOW (REMOVABLE)
- BWR BROKEN WHITE (REMOVABLE)
- DSYR DOUBLE SOLID YELLOW (REMOVABLE)
- (Y) YELLOW GUIDE MARKS AND SHORT TERM MARKINGS
- (W) WHITE GUIDE MARKS AND SHORT TERM MARKINGS
- CHANNELIZING DEVICES
- TEMP SED CONTROL FENCE (12' EACH SEGMENT)
- TEMP SED CONTROL FENCE (48' EACH SEGMENT)
- CONSTRUCTION EXIT (TY 2)
- PROP SIGN
- PROP TY III BARRICADE
- STRUCTURES TO BE CONSTRUCTED DURING THIS PHASE

NOTES:

1. SEE "MINOR STREET CLOSURE DETAIL" FOR TRAFFIC CONTROL FOR MINOR STREETS.
2. SEE TRAFFIC CONTROL PHASING TYPICAL SECTION FOR TCP ROADWAY SECTIONS.
3. TEMP SED CONTROL FENCE ON GRATED INLETS SHALL BE LEFT IN PLACE THROUGHOUT DURATION OF PROJECT OR AS DIRECTED BY THE ENGINEER.

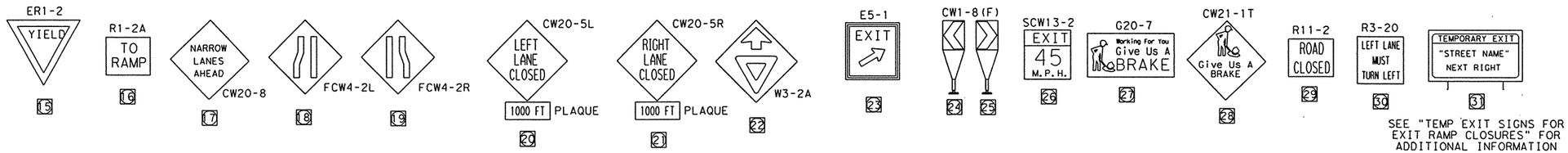

SEE "TEMP EXIT SIGNS FOR EXIT RAMP CLOSURES" FOR ADDITIONAL INFORMATION

THE SEAL APPEARING ON THIS DOCUMENT WAS AUTHORIZED BY JOHN M PEREZ, P.E. 66425 ON 06/20/2003.

STATE OF TEXAS · JOHN M. PEREZ · 66425 · REGISTERED PROFESSIONAL ENGINEER

6/20/03

Parsons Brinckerhoff Quade & Douglas Inc.

Texas Department of Transportation

© 2003 by TxDOT

US 281
TRAFFIC CONTROL PLAN
PHASE IB

PLAN 1"= 200' HORIZ

SHEET 7 OF 7 | 281SEQIB07.DGN

DESIGNED: PAF	FED. RD DIV. NO.	STATE	FEDERAL AID PROJECT NO.			HIGHWAY NO.
CHECKED: JP	6	TEXAS				US 281
DRAWN: KTD	STATE DISTRICT	COUNTY	CONTROL No.	SECTION No.	JOB No.	SHEET No.
CHECKED: JDH	PHARR	HIDALGO	0255	08	091	90

NAME
10:47:31 AM
06/20/2003
h:\22322e\cadd\sheets\traffic\tcp\typ\281typ17.dgn

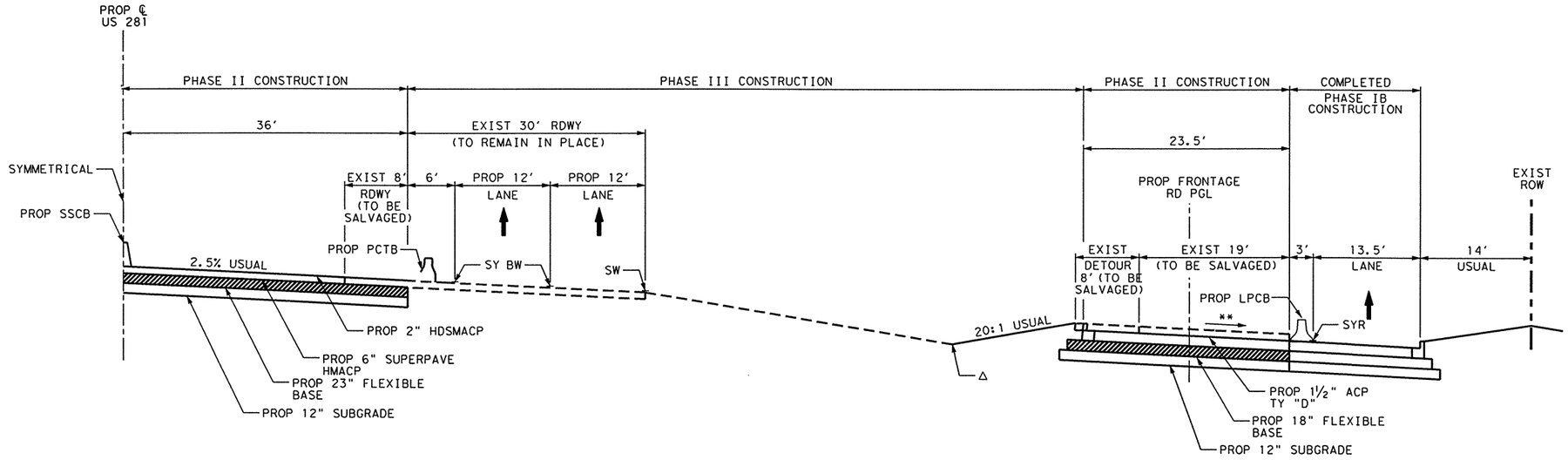

PHASE II TYPICAL SECTION

STA 739+00.00 TO STA 752+00.00

NBFR STA 50613+00.00 TO STA 50751+75.00

SBFR STA 61614+00.00 TO STA 62752+00.00

NBFR STA 50613+00 TO STA 50619+00

SBFR STA 61614+00 TO STA 61619+00

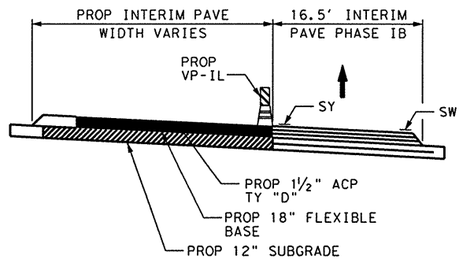

PHASE II INTERIM PAVEMENT CONSTRUCTION

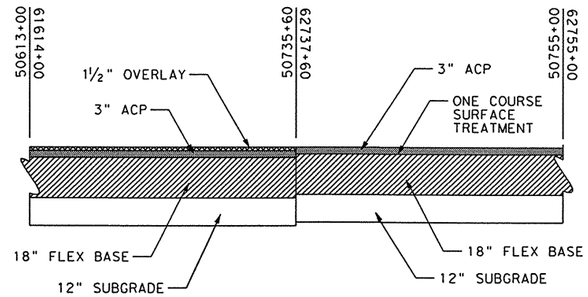

FRONTAGE ROAD PAVEMENT PROFILE

NBFR STA 50613+00 TO 50755+00

SBFR STA 61614+00 TO 62755+00

NOTES

△ THE CONTRACTOR SHALL REGRADE DITCHES TO MAINTAIN THE EXISTING DRAINAGE PATTERNS AND REMOVE/RELAY OR EXTEND EXISTING DRAINAGE STRUCTURES AS NEEDED. THIS WORK SHALL BE CONSIDERED SUBSIDIARY TO THE VARIOUS BID ITEMS OF THIS CONTRACT

SEE PROPOSED TYPICAL SECTIONS FOR CROSS SLOPE INFORMATION.

** MATCH EXISTING FRONTAGE RD CROSS SLOPE AND PROFILE.

THE SEAL APPEARING ON THIS DOCUMENT WAS AUTHORIZED BY JOHN M PEREZ, P.E. 66425 ON 06/20/2003.

STATE OF TEXAS
JOHN M. PEREZ
66425
REGISTERED PROFESSIONAL ENGINEER

6/20/03

Parsons Brinckerhoff Quade & Douglas Inc.

Texas Department of Transportation

© 2003 by TxDOT

TRAFFIC CONTROL PHASING TYPICAL SECTION

PHASE II
STA 739+00 TO STA 752+00

SCALE: NTS

SHEET 1 OF 2 | 281TYP17.DGN

DESIGNED: PAF	FED. RD DIV. NO.	STATE	FEDERAL AID PROJECT NO.	HIGHWAY NO.
CHECKED: JP	6	TEXAS		US 281

DRAWN:	STATE DISTRICT	COUNTY	CONTROL NO.	SECTION NO.	JOB NO.	SHEET NO.
CHECKED: JDH	PHARR	HIDALGO	0255	08	091	91

NAME
10:47:33 AM
06/20/2003

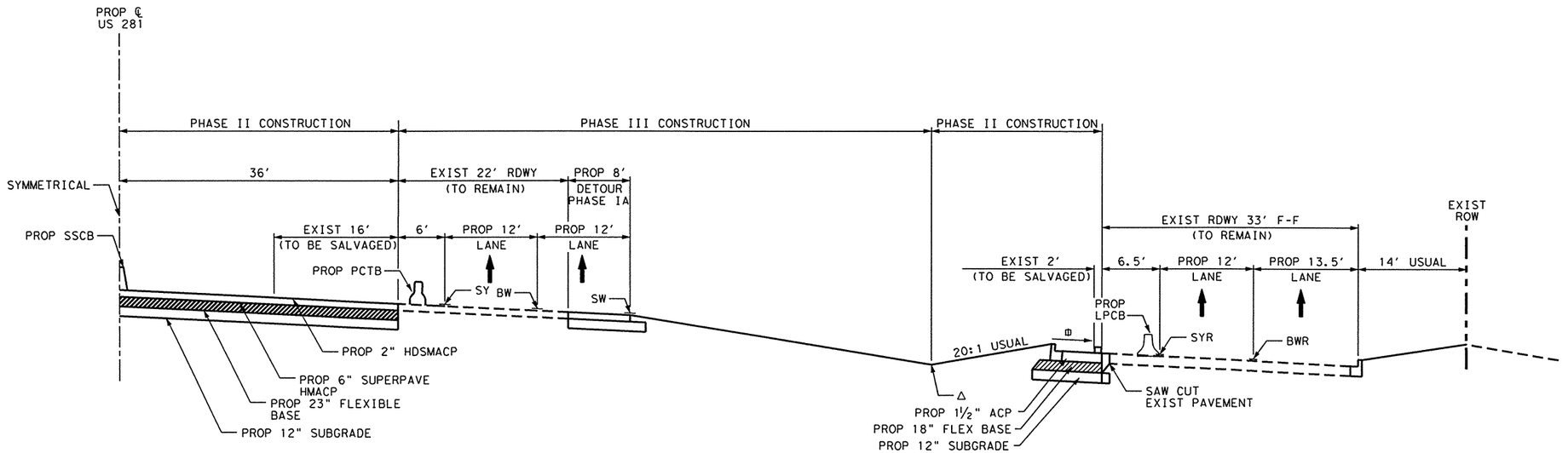

NBFR STA 50751+75.00 TO END OF PROJECT
SBFR STA 62752+00.00 TO END OF PROJECT

PHASE II TYPICAL SECTION

STA 752+00.00 to STA 846+00.00

Δ THE CONTRACTOR SHALL REGRADE DITCHES TO MAINTAIN THE EXISTING DRAINAGE PATTERNS AND REMOVE/RELAY OR EXTEND EXISTING DRAINAGE STRUCTURES AS NEEDED. THIS WORK SHALL BE CONSIDERED SUBSIDIARY TO THE VARIOUS BID ITEMS OF THIS CONTRACT

NOTE:
SEE PROPOSED TYPICAL SECTIONS FOR CROSS SLOPE INFORMATION.

THE SEAL APPEARING ON THIS DOCUMENT WAS AUTHORIZED BY JOHN M PEREZ, P.E. 66425 ON 06/20/2003.

STATE OF TEXAS
JOHN M. PEREZ
66425
REGISTERED PROFESSIONAL ENGINEER

4/20/03

Parsons Brinckerhoff Quade & Douglas Inc.

Texas Department of Transportation

© 2003 by TxDOT

TRAFFIC CONTROL PHASING TYPICAL SECTION

PHASE II

STA 752+00 TO STA 846+00

SCALE: NTS

SHEET 2 OF 2 | 281TYP18.DGN

DESIGNED: PAF	FED. RD DIV. No.	STATE	FEDERAL AID PROJECT No.			HIGHWAY No.	
CHECKED: JP	6	TEXAS				US 281	
DRAWN:	STATE DISTRICT	COUNTY	CONTROL No.	SECTION No.	JOB No.	SHEET No.	
CHECKED: JDH	PHARR	HIDALGO	0255	08	091	92	

h:\22322o\cadd\sheets\traffic\tcp\typ\281typ18.dgn

NAME
10:53:47 AM
06/20/2003

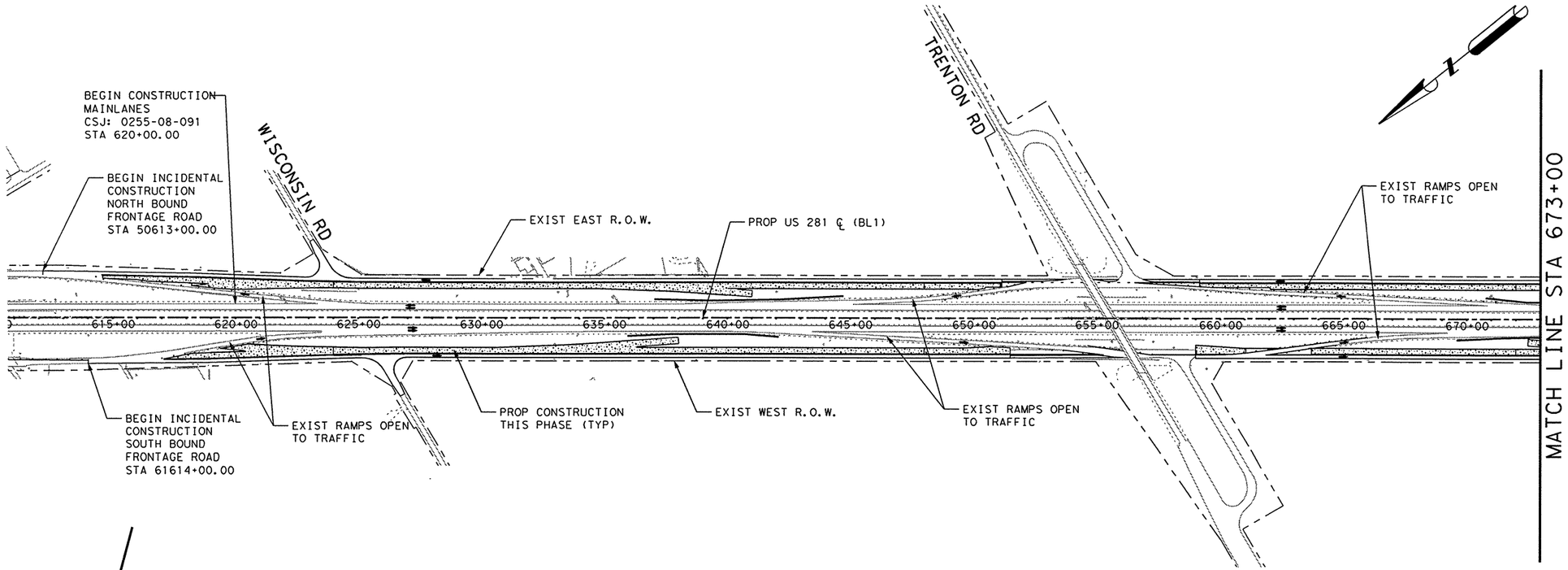

LEGEND:

- TEMP PAV CONSTRUCTED PREVIOUS PHASE
- TEMP PAV CONSTRUCTED THIS PHASE
- PROP CONSTRUCTION THIS PHASE
- PROP CONSTRUCTION PREVIOUS PHASE
- EXISTING TO BE REMOVED
- DIRECTIONAL ARROW

THE SEAL APPEARING ON THIS DOCUMENT WAS AUTHORIZED BY JOHN M PEREZ, P.E. 66425 ON 06/20/2003.

STATE OF TEXAS
JOHN M. PEREZ
66425
REGISTERED PROFESSIONAL ENGINEER

6/20/03

Parsons Brinckerhoff Quade & Douglas Inc.

Texas Department of Transportation

© 2003 by TxDOT

US 281
TRAFFIC CONTROL LAYOUT
PHASE II
BEGIN PROJECT TO END PROJECT

PLAN 1"= 500' HORIZ

SHEET 1 OF 2 | 281SEQIILAYOUT01.DGN

DESIGNED: PAF	FED. RD DIV. No.	STATE	FEDERAL AID PROJECT No.			HIGHWAY No.	
CHECKED: JP	6	TEXAS				US 281	
DRAWN: KTD	STATE DISTRICT	COUNTY	CONTROL No.	SECTION No.	JOB No.	SHEET No.	
CHECKED: JDH	PHARR	HIDALGO	0255	08	091	93	

h:\22322a\cadd\sheets\traffic\tcp\281seqiilayout01.dgn

NAME
10:53:57 AM
06/20/2003
h:\22322a\cadd\sheets\traffic\tcp\281seqiilayout02.dgn

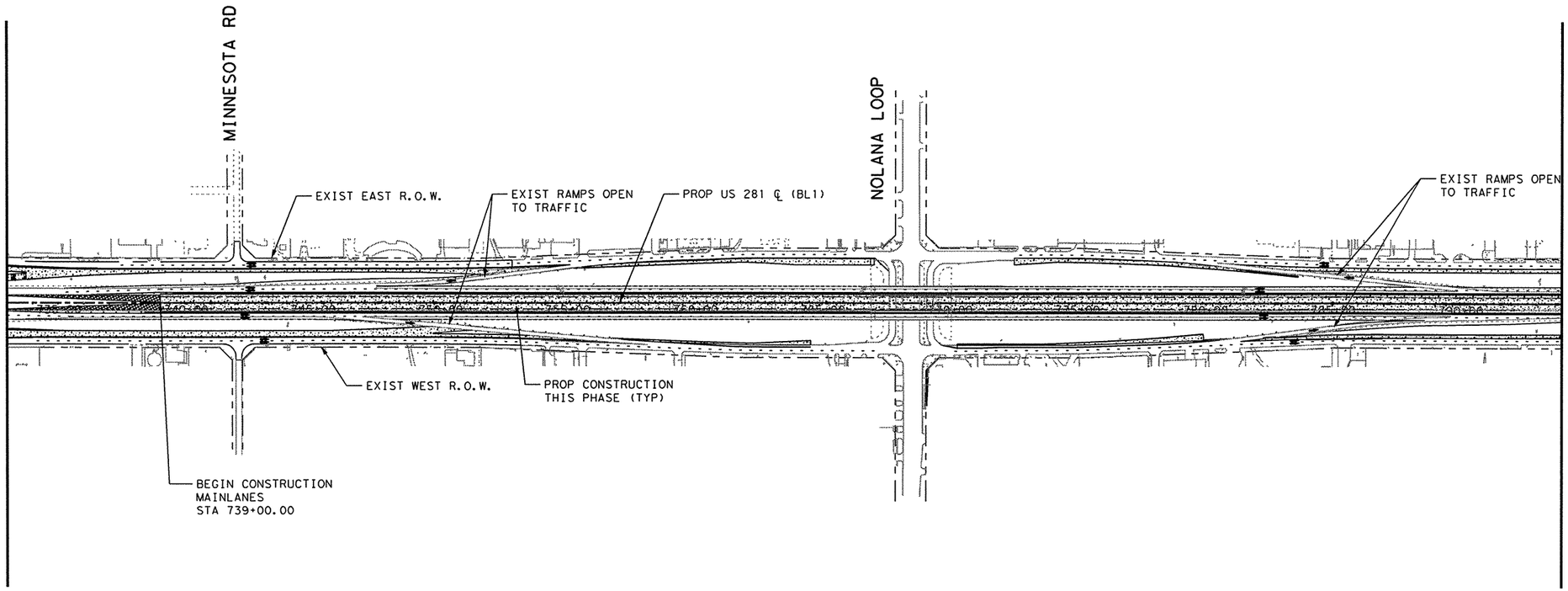

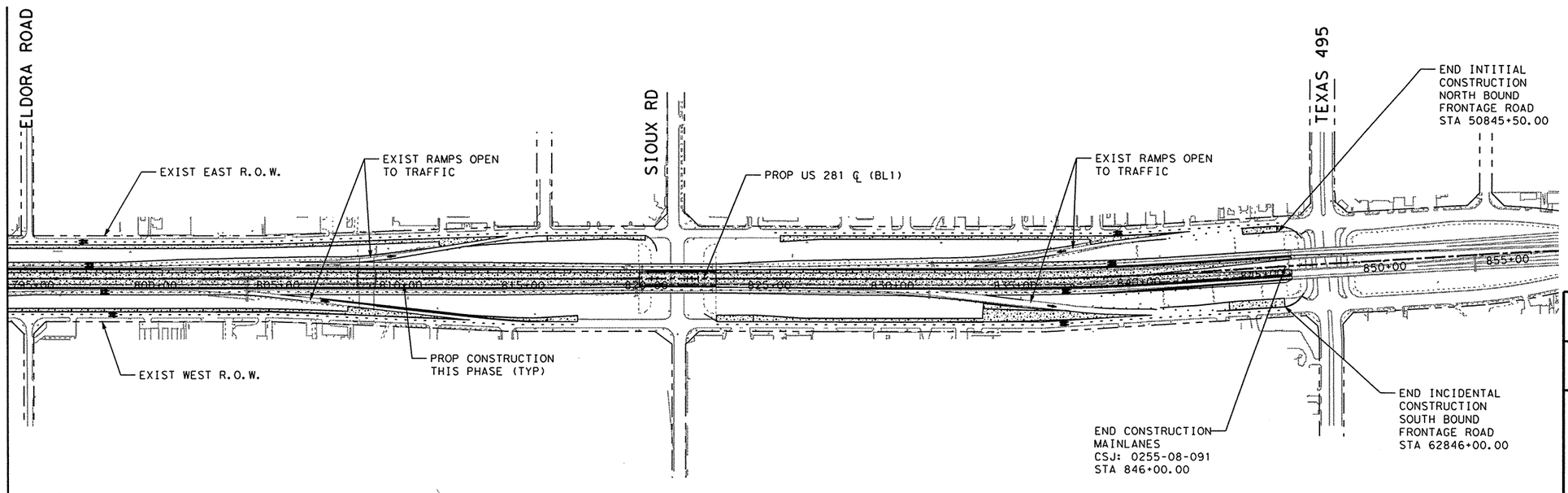

LEGEND:

- TEMP PAV CONSTRUCTED PREVIOUS PHASE
- TEMP PAV CONSTRUCTED THIS PHASE
- PROP CONSTRUCTION THIS PHASE
- PROP CONSTRUCTION PREVIOUS PHASE
- EXISTING TO BE REMOVED
- DIRECTIONAL ARROW

THE SEAL APPEARING ON THIS DOCUMENT WAS AUTHORIZED BY JOHN M PEREZ, P.E. 66425 ON 06/20/2003.

STATE OF TEXAS · JOHN M. PEREZ · 66425 · REGISTERED PROFESSIONAL ENGINEER

6/20/03

Parsons Brinckerhoff Quade & Douglas Inc.

Texas Department of Transportation

© 2003 by TxDOT

US 281
TRAFFIC CONTROL LAYOUT
PHASE II
BEGIN PROJECT TO END PROJECT

PLAN 1"= 500' HORIZ

SHEET 2 OF 2							281SEQIILAYOUT02.DGN	
DESIGNED: PAF	FED. RD DIV. No.	STATE	FEDERAL AID PROJECT No.				HIGHWAY No.	
CHECKED: JP	6	TEXAS					US 281	
DRAWN: KTD	STATE DISTRICT	COUNTY	CONTROL No.	SECTION No.	JOB No.	SHEET No.		
CHECKED: JDH	PHARR	HIDALGO	0255	08	091	94		

NAME
11:02:38 AM
06/20/2003
h:\22322a\cadd\sheets\traffic\tcp\281seqii01.dgn

WORK ZONE / TRAFFIC FINES DOUBLE / WHEN WORKERS ARE PRESENT — EG20-9, ER20-5, ER20-5 PLAQUE — (1)
ROAD WORK AHEAD — CW20-1D — (2)
REDUCED SPEED AHEAD — ER2-5A — (3)
SPEED LIMIT 50 — ER2-1 — (4)
SPEED LIMIT 40 — ER2-1 — (4)
SG20-5T: BEGIN ROAD WORK NEXT X MILES / NAME ADDRESS CITY STATE / CONTRACTOR — SG20-6 — (5)
HIGHWAY IMPROVEMENT PROJECT FUNDED BY YOUR TRANSPORTATION TAX DOLLARS / SCHEDULED COMPLETION XXXXXX XXXX — SG20-8
ECW1-4R — (6)
ECW1-4L — (7)
ECW4-1L — (8)
END ROAD WORK — G20-2A — (9)
ECW4-1R — (10)
FCW4-3R — (11)
ECW1-6A — (12)
CW20-5L: LEFT LANE CLOSED / 500 FT PLAQUE — (13)
CW20-5R: RIGHT LANE CLOSED / 500 FT PLAQUE — (14)

ROAD WORK ⇦ NEXT X MILES — G20-1bL — (2A)
ROAD WORK NEXT X MILES ⇨ — G20-1bR — (2B)

NOTES:

1. SEE "MINOR STREET CLOSURE DETAIL" FOR TRAFFIC CONTROL FOR MINOR STREETS.
2. SEE TRAFFIC CONTROL PHASING TYPICAL SECTION FOR TCP ROADWAY SECTIONS.
3. FOR RAMP PHASING CONSTRUCTION SEE "RAMP CLOSURE LAYOUT" SHEETS.
4. TEMP SED CONTROL FENCE ON GRATED INLETS SHALL BE LEFT IN PLACE THROUGHOUT DURATION OF PROJECT OR AS DIRECTED BY THE ENGINEER.

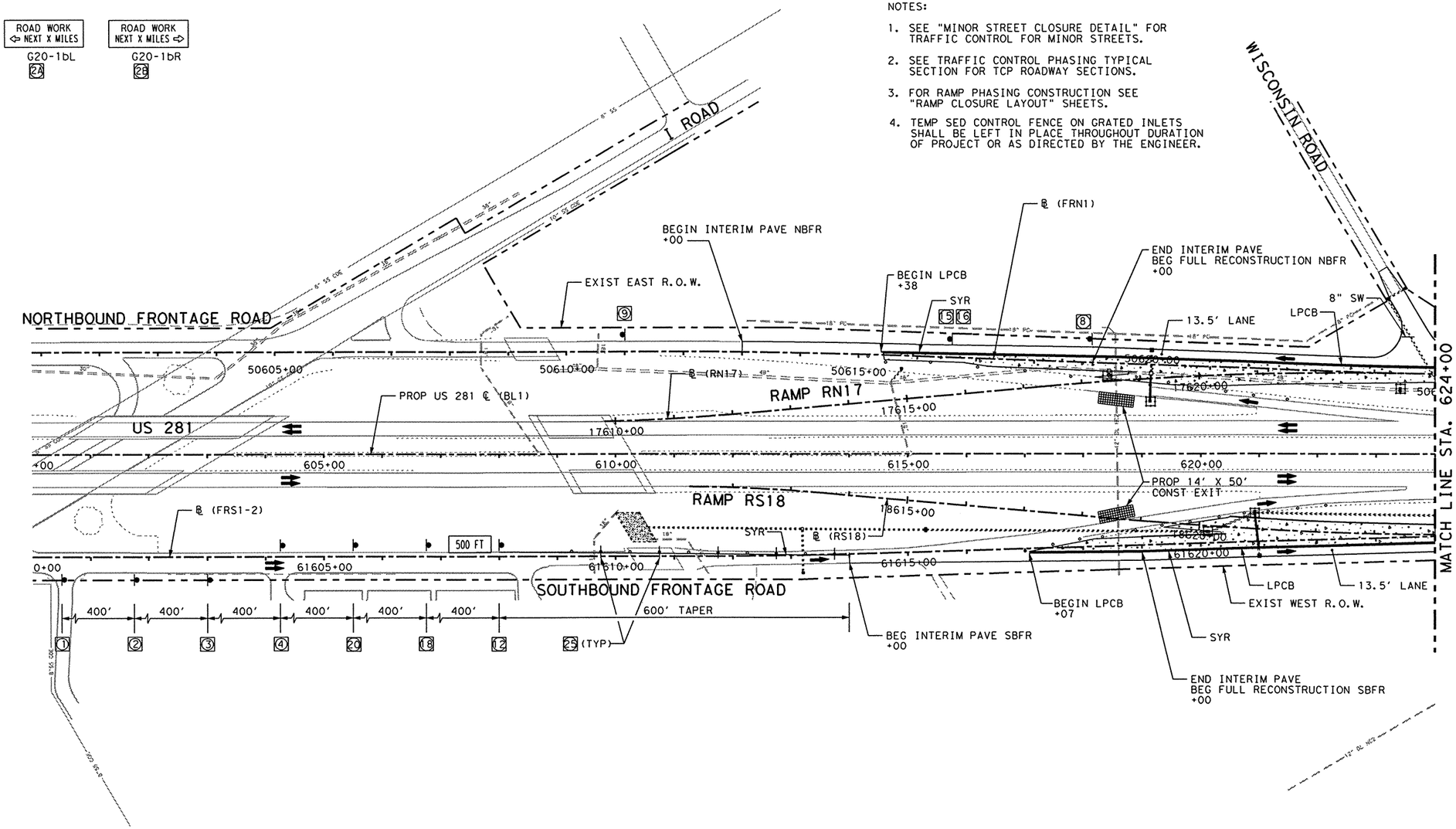

LEGEND:

- TEMP PAV CONSTRUCTED PREVIOUS PHASE
- TEMP PAV CONSTRUCTED THIS PHASE
- PROP CONSTRUCTION THIS PHASE
- PROP CONSTRUCTION PREVIOUS PHASE
- EXISTING TO BE REMOVED
- SW SOLID WHITE (NON-REMOVABLE)
- SY SOLID YELLOW (NON-REMOVABLE)
- BW BROKEN WHITE (NON-REMOVABLE)
- DSY DOUBLE SOLID YELLOW (NON-REMOVABLE)
- SWR SOLID WHITE (REMOVABLE)
- SYR SOLID YELLOW (REMOVABLE)
- BWR BROKEN WHITE (REMOVABLE)
- DSYR DOUBLE SOLID YELLOW (REMOVABLE)
- (Y) YELLOW GUIDE MARKS AND SHORT TERM MARKINGS
- (W) WHITE GUIDE MARKS AND SHORT TERM MARKINGS
- CHANNELIZING DEVICES
- TEMP SED CONTROL FENCE (12' EACH SEGMENT)
- TEMP SED CONTROL FENCE (48' EACH SEGMENT)
- CONSTRUCTION EXIT (TY 2)
- PROP SIGN
- PROP TY III BARRICADE
- STRUCTURES TO BE CONSTRUCTED DURING THIS PHASE

THE SEAL APPEARING ON THIS DOCUMENT WAS AUTHORIZED BY JOHN M PEREZ, P.E. 66425 ON 06/20/2003.

STATE OF TEXAS — JOHN M. PEREZ — 66425 — REGISTERED PROFESSIONAL ENGINEER — 6/20/03

ER1-2 YIELD — (15)
R1-2A TO RAMP — (16)
NARROW LANES AHEAD — CW20-8 — (17)
FCW4-2L — (18)
FCW4-2R — (19)
CW20-5L: LEFT LANE CLOSED / 1000 FT PLAQUE — (20)
CW20-5R: RIGHT LANE CLOSED / 1000 FT PLAQUE — (21)
W3-2A — (22)
E5-1 EXIT — (23)
CW1-8(F) — (24) (25)
SCW13-2 EXIT 45 M.P.H. — (26)
G20-7 Working For You Give Us A BRAKE — (27)
CW21-1T Give Us A BRAKE — (28)
R11-2 ROAD CLOSED — (29)
R3-20 LEFT LANE MUST TURN LEFT — (30)
TEMPORARY EXIT "STREET NAME" NEXT RIGHT — (31)

SEE "TEMP EXIT SIGNS FOR EXIT RAMP CLOSURES" FOR ADDITIONAL INFORMATION

Parsons Brinckerhoff Quade & Douglas Inc.

Texas Department of Transportation

© 2003 by TxDOT

US 281
TRAFFIC CONTROL PLAN
PHASE II

PLAN 1"= 200' HORIZ

SHEET 1 OF 11 — 281SEQII01.DGN

DESIGNED: PAF	FED. RD DIV. No.	STATE	FEDERAL AID PROJECT No.	HIGHWAY No.
CHECKED: JP	6	TEXAS		US 281

DRAWN: KTD	STATE DISTRICT	COUNTY	CONTROL No.	SECTION No.	JOB No.	SHEET No.
CHECKED: JDH	PHARR	HIDALGO	0255	08	091	95

NAME
11:02:52 AM
06/20/2003

WORK ZONE / TRAFFIC FINES DOUBLE / WHEN WORKERS ARE PRESENT — EG20-9 / ER20-5 / ER20-5 PLAQUE [1]

ROAD WORK AHEAD — CW20-1D [2]

REDUCED SPEED AHEAD — ER2-5A [3]

SPEED LIMIT 50 — ER2-1 [4]

SPEED LIMIT 40 — ER2-1 [4a]

SG20-5T

BEGIN ROAD WORK NEXT X MILES
NAME
ADDRESS
CITY
STATE
CONTRACTOR
SG20-6 [5]

HIGHWAY IMPROVEMENT PROJECT FUNDED BY YOUR TRANSPORTATION TAX DOLLARS
SCHEDULED COMPLETION XXXXXX XXXX
SG20-8

ECW1-4R [6]

ECW1-4L [7]

ECW4-1L [8]

END ROAD WORK — G20-2A [9]

ECW4-1R [10]

FCW4-3R [11]

ECW1-6A [12]

CW20-5L — LEFT LANE CLOSED — 500 FT PLAQUE [13]

CW20-5R — RIGHT LANE CLOSED — 500 FT PLAQUE [14]

ROAD WORK ⇦ NEXT X MILES — G20-1bL [24]

ROAD WORK NEXT X MILES ⇨ — G20-1bR [25]

NOTES:

1. SEE "MINOR STREET CLOSURE DETAIL" FOR TRAFFIC CONTROL FOR MINOR STREETS.
2. SEE TRAFFIC CONTROL PHASING TYPICAL SECTION FOR TCP ROADWAY SECTIONS.
3. FOR RAMP PHASING CONSTRUCTION SEE "RAMP CLOSURE LAYOUT" SHEETS.
4. TEMP SED CONTROL FENCE ON GRATED INLETS SHALL BE LEFT IN PLACE THROUGHOUT DURATION OF PROJECT OR AS DIRECTED BY THE ENGINEER.

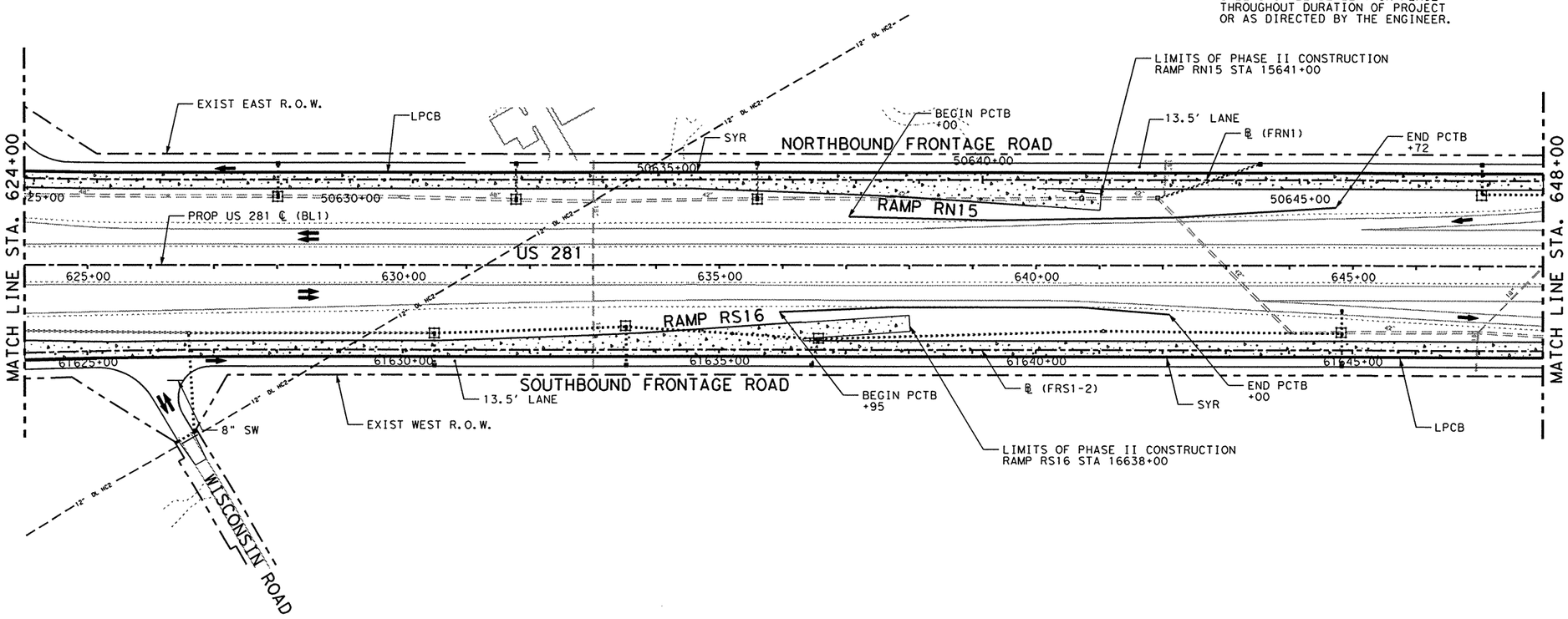

LEGEND:

- TEMP PAV CONSTRUCTED PREVIOUS PHASE
- TEMP PAV CONSTRUCTED THIS PHASE
- PROP CONSTRUCTION THIS PHASE
- PROP CONSTRUCTION PREVIOUS PHASE
- EXISTING TO BE REMOVED
- SW SOLID WHITE (NON-REMOVABLE)
- SY SOLID YELLOW (NON-REMOVABLE)
- BW BROKEN WHITE (NON-REMOVABLE)
- DSY DOUBLE SOLID YELLOW (NON-REMOVABLE)
- SWR SOLID WHITE (REMOVABLE)
- SYR SOLID YELLOW (REMOVABLE)
- BWR BROKEN WHITE (REMOVABLE)
- DSYR DOUBLE SOLID YELLOW (REMOVABLE)
- Ⓨ YELLOW GUIDE MARKS AND SHORT TERM MARKINGS
- Ⓦ WHITE GUIDE MARKS AND SHORT TERM MARKINGS
- ○○○ CHANNELIZING DEVICES
- TEMP SED CONTROL FENCE (12' EACH SEGMENT)
- TEMP SED CONTROL FENCE (48' EACH SEGMENT)
- CONSTRUCTION EXIT (TY 2)
- PROP SIGN
- I PROP TY III BARRICADE

ER1-2 YIELD [15]

R1-2A TO RAMP [16]

NARROW LANES AHEAD — CW20-8 [17]

FCW4-2L [18]

FCW4-2R [19]

CW20-5L — LEFT LANE CLOSED — 1000 FT PLAQUE [20]

CW20-5R — RIGHT LANE CLOSED — 1000 FT PLAQUE [21]

W3-2A [22]

E5-1 EXIT [23]

CW1-8(F) [24] [25]

SCW13-2 EXIT 45 M.P.H. [26]

G20-7 Working For You Give Us A BRAKE [27]

CW21-1T Give Us A BRAKE [28]

R11-2 ROAD CLOSED [29]

R3-20 LEFT LANE MUST TURN LEFT [30]

TEMPORARY EXIT "STREET NAME" NEXT RIGHT [31]

SEE "TEMP EXIT SIGNS FOR EXIT RAMP CLOSURES" FOR ADDITIONAL INFORMATION

THE SEAL APPEARING ON THIS DOCUMENT WAS AUTHORIZED BY JOHN M PEREZ, P.E. 66425 ON 06/20/2003.

STATE OF TEXAS — JOHN M. PEREZ — 66425 — REGISTERED PROFESSIONAL ENGINEER

4/20/03

Parsons Brinckerhoff Quade & Douglas Inc.

Texas Department of Transportation

© 2003 by TxDOT

US 281
TRAFFIC CONTROL PLAN
PHASE II

PLAN 1"= 200' HORIZ

SHEET 2 OF 11 | 281SEQII02.DGN

DESIGNED: PAF	FED. RD DIV. NO.	STATE	FEDERAL AID PROJECT No.			HIGHWAY No.
CHECKED: JP	6	TEXAS				US 281
DRAWN: KTD	STATE DISTRICT	COUNTY	CONTROL No.	SECTION No.	JOB No.	SHEET No.
CHECKED: JDH	PHARR	HIDALGO	0255	08	091	96

h:\22322a\cadd\sheets\traffic\tcp\281seqii02.dgn

NAME
04:05:24 PM
08/06/2003
h:\22322a\cadd\sheets\traffic\tcp\281seqii03.dgn

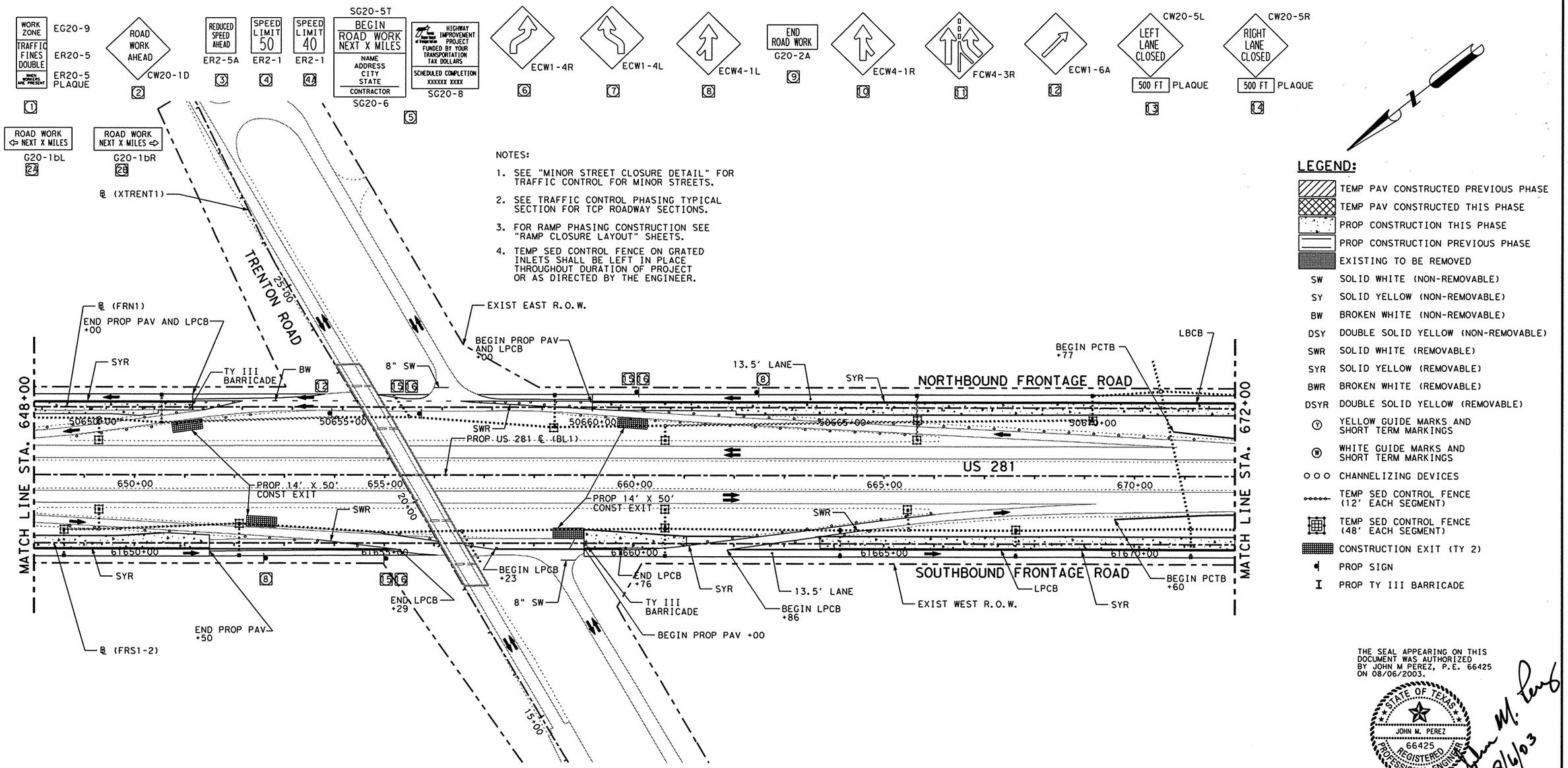

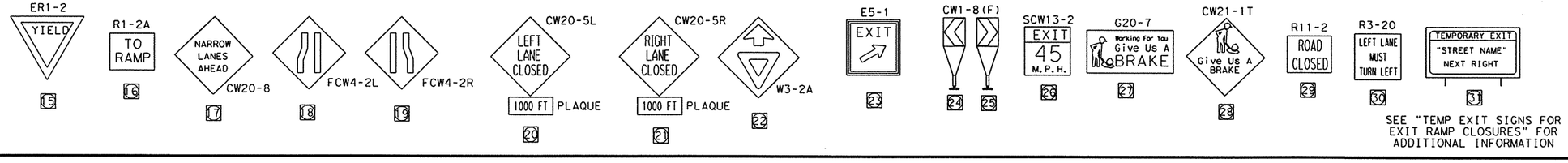

SEE "TEMP EXIT SIGNS FOR EXIT RAMP CLOSURES" FOR ADDITIONAL INFORMATION

THE SEAL APPEARING ON THIS DOCUMENT WAS AUTHORIZED BY JOHN M PEREZ, P.E. 66425 ON 08/06/2003.

STATE OF TEXAS
JOHN M. PEREZ
66425
REGISTERED PROFESSIONAL ENGINEER

9/6/03

Parsons Brinckerhoff Quade & Douglas Inc.

Texas Department of Transportation

© 2003 by TxDOT

US 281
TRAFFIC CONTROL PLAN
PHASE II

PLAN 1"= 200' HORIZ

SHEET 3 OF 11 | 281SEQII03.DGN

DESIGNED: PAF	FED. RD DIV. NO.	STATE	FEDERAL AID PROJECT NO.			HIGHWAY NO.
CHECKED: JP	6	TEXAS				US 281
DRAWN: KTD	STATE DISTRICT	COUNTY	CONTROL No.	SECTION No.	JOB No.	SHEET No.
CHECKED: JDH	PHARR	HIDALGO	0255	08	091	97

NAME
11:03:17 AM
06/20/2003

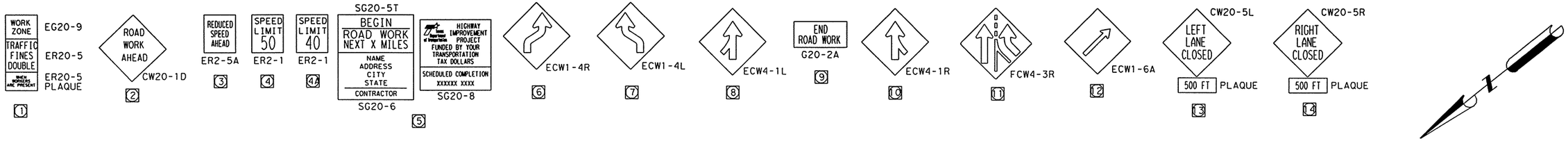

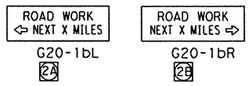

NOTES:

1. SEE "MINOR STREET CLOSURE DETAIL" FOR TRAFFIC CONTROL FOR MINOR STREETS.
2. SEE TRAFFIC CONTROL PHASING TYPICAL SECTION FOR TCP ROADWAY SECTIONS.
3. FOR RAMP PHASING CONSTRUCTION SEE "RAMP CLOSURE LAYOUT" SHEETS.
4. TEMP SED CONTROL FENCE ON GRATED INLETS SHALL BE LEFT IN PLACE THROUGHOUT DURATION OF PROJECT OR AS DIRECTED BY THE ENGINEER.

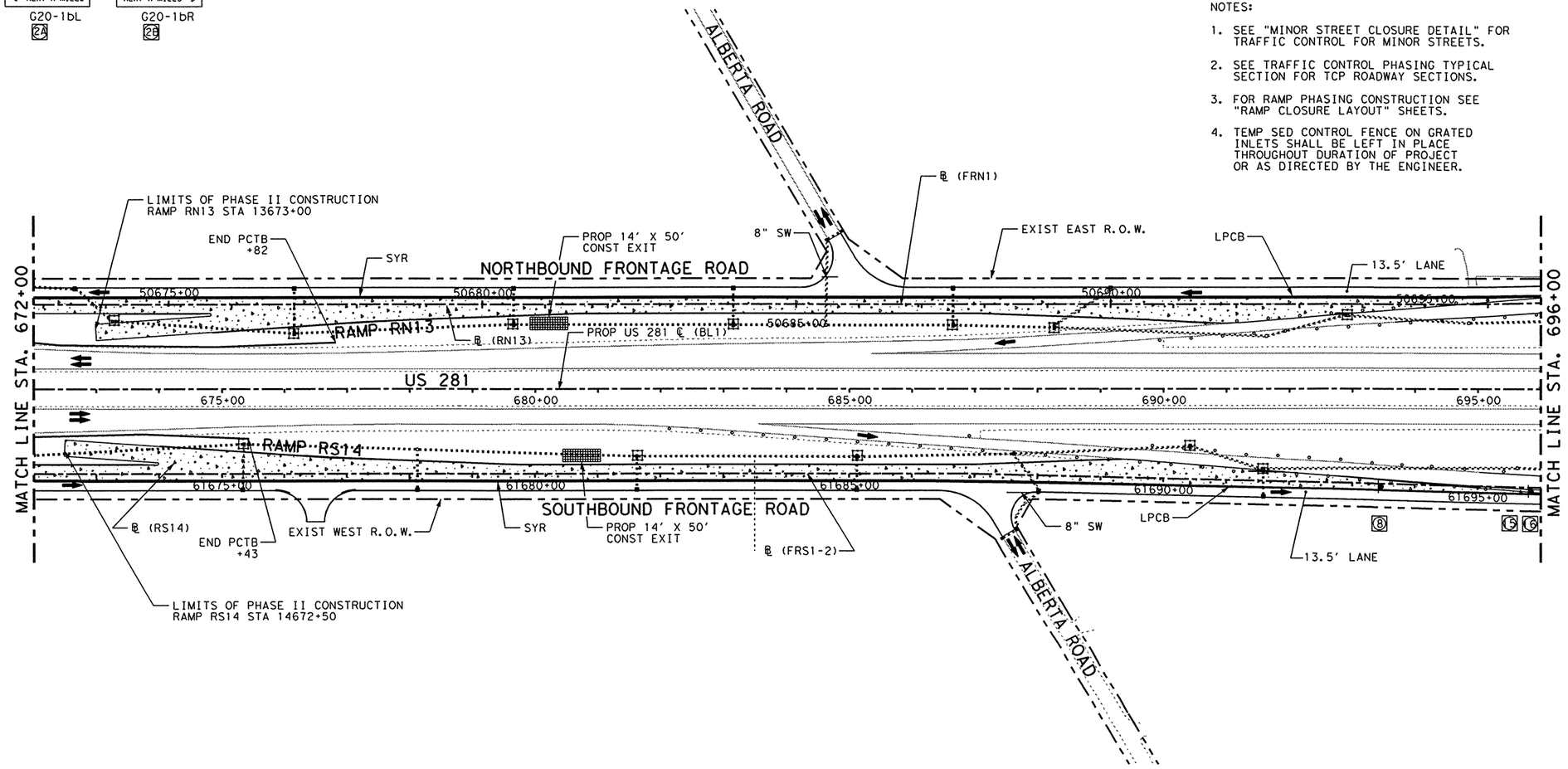

LEGEND:

- TEMP PAV CONSTRUCTED PREVIOUS PHASE
- TEMP PAV CONSTRUCTED THIS PHASE
- PROP CONSTRUCTION THIS PHASE
- PROP CONSTRUCTION PREVIOUS PHASE
- EXISTING TO BE REMOVED
- SW SOLID WHITE (NON-REMOVABLE)
- SY SOLID YELLOW (NON-REMOVABLE)
- BW BROKEN WHITE (NON-REMOVABLE)
- DSY DOUBLE SOLID YELLOW (NON-REMOVABLE)
- SWR SOLID WHITE (REMOVABLE)
- SYR SOLID YELLOW (REMOVABLE)
- BWR BROKEN WHITE (REMOVABLE)
- DSYR DOUBLE SOLID YELLOW (REMOVABLE)
- (Y) YELLOW GUIDE MARKS AND SHORT TERM MARKINGS
- (W) WHITE GUIDE MARKS AND SHORT TERM MARKINGS
- CHANNELIZING DEVICES
- TEMP SED CONTROL FENCE (12' EACH SEGMENT)
- TEMP SED CONTROL FENCE (48' EACH SEGMENT)
- CONSTRUCTION EXIT (TY 2)
- PROP SIGN
- PROP TY III BARRICADE

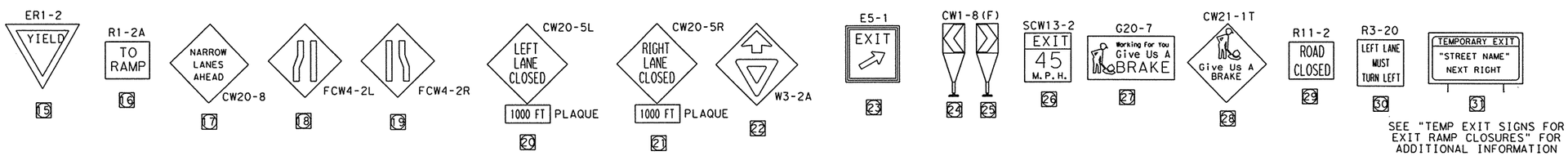

SEE "TEMP EXIT SIGNS FOR EXIT RAMP CLOSURES" FOR ADDITIONAL INFORMATION

THE SEAL APPEARING ON THIS DOCUMENT WAS AUTHORIZED BY JOHN M PEREZ, P.E. 66425 ON 06/20/2003.

STATE OF TEXAS
JOHN M. PEREZ
66425
REGISTERED PROFESSIONAL ENGINEER

6/20/03

Parsons Brinckerhoff Quade & Douglas Inc.

Texas Department of Transportation

© 2003 by TxDOT

US 281
TRAFFIC CONTROL PLAN
PHASE II

PLAN 1"= 200' HORIZ

SHEET 4 OF 11 | 281SEQII04.DGN

DESIGNED: PAF	FED. RD DIV. No.	STATE	FEDERAL AID PROJECT No.	HIGHWAY No.
CHECKED: JP	6	TEXAS		US 281

DRAWN: KTD	STATE DISTRICT	COUNTY	CONTROL No.	SECTION No.	JOB No.	SHEET No.
CHECKED: JDH	PHARR	HIDALGO	0255	08	091	98

h:\22322a\cadd\sheets\traffic\tcp\281seqii04.dgn

NAME
11:03:30 AM
06/20/2003

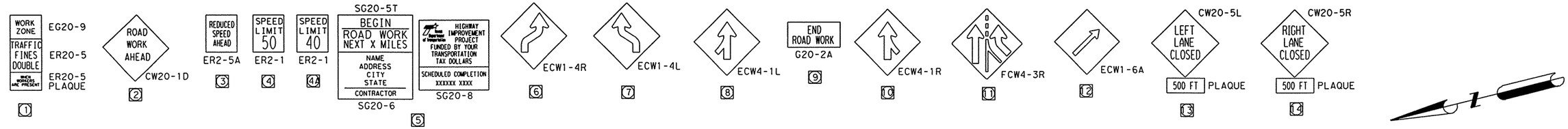

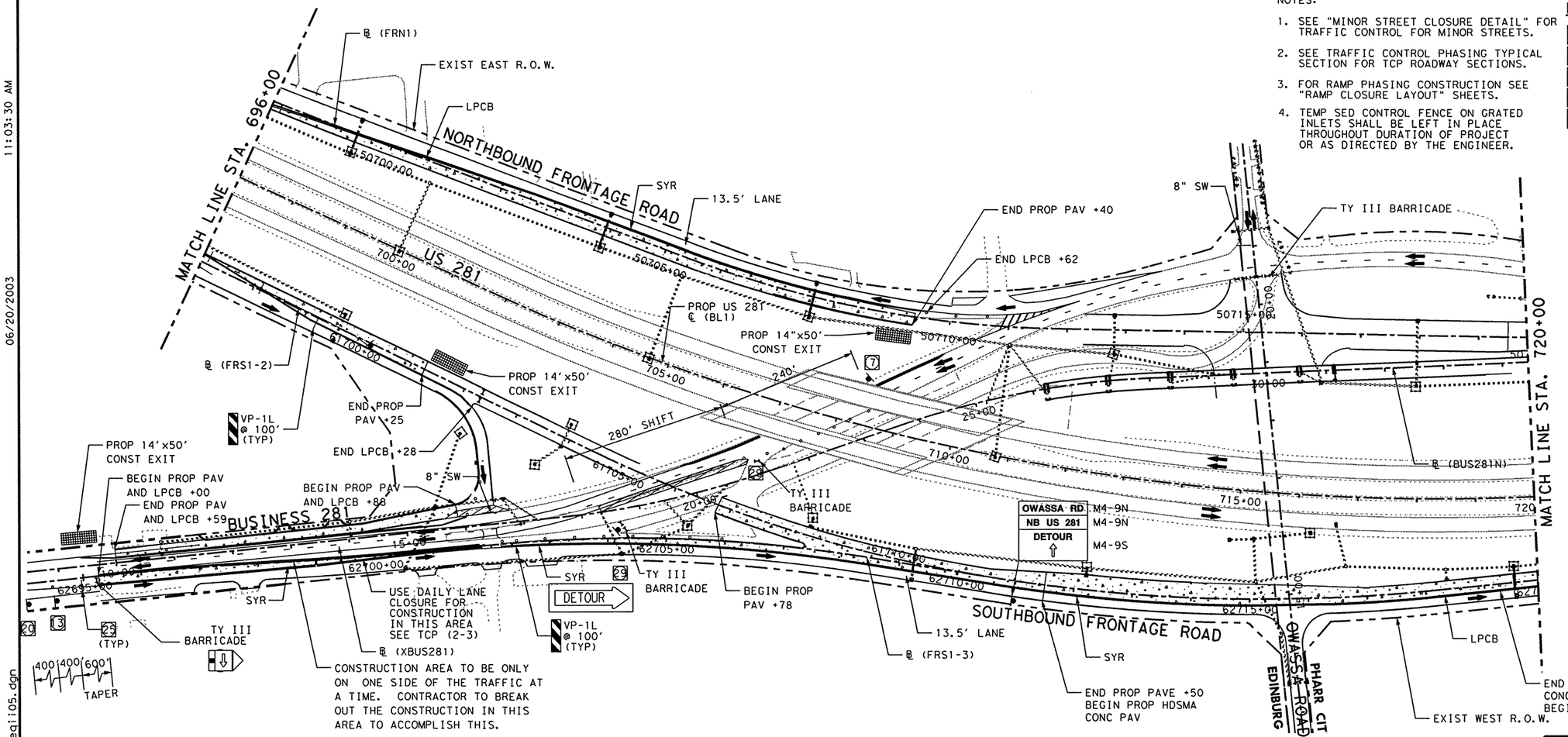

NOTES:

1. SEE "MINOR STREET CLOSURE DETAIL" FOR TRAFFIC CONTROL FOR MINOR STREETS.
2. SEE TRAFFIC CONTROL PHASING TYPICAL SECTION FOR TCP ROADWAY SECTIONS.
3. FOR RAMP PHASING CONSTRUCTION SEE "RAMP CLOSURE LAYOUT" SHEETS.
4. TEMP SED CONTROL FENCE ON GRATED INLETS SHALL BE LEFT IN PLACE THROUGHOUT DURATION OF PROJECT OR AS DIRECTED BY THE ENGINEER.

LEGEND:

- TEMP PAV CONSTRUCTED PREVIOUS PHASE
- TEMP PAV CONSTRUCTED THIS PHASE
- PROP CONSTRUCTION THIS PHASE
- PROP CONSTRUCTION PREVIOUS PHASE
- EXISTING TO BE REMOVED

SW	SOLID WHITE (NON-REMOVABLE)
SY	SOLID YELLOW (NON-REMOVABLE)
BW	BROKEN WHITE (NON-REMOVABLE)
DSY	DOUBLE SOLID YELLOW (NON-REMOVABLE)
SWR	SOLID WHITE (REMOVABLE)
SYR	SOLID YELLOW (REMOVABLE)
BWR	BROKEN WHITE (REMOVABLE)
DSYR	DOUBLE SOLID YELLOW (REMOVABLE)
Ⓨ	YELLOW GUIDE MARKS AND SHORT TERM MARKINGS
Ⓦ	WHITE GUIDE MARKS AND SHORT TERM MARKINGS
○○○	CHANNELIZING DEVICES
	TEMP SED CONTROL FENCE (12' EACH SEGMENT)
	TEMP SED CONTROL FENCE (48' EACH SEGMENT)
	CONSTRUCTION EXIT (TY 2)
	PROP SIGN
I	PROP TY III BARRICADE
	STRUCTURES TO BE CONSTRUCTED DURING THIS PHASE

THE SEAL APPEARING ON THIS DOCUMENT WAS AUTHORIZED BY JOHN M PEREZ, P.E. 66425 ON 06/20/2003.

STATE OF TEXAS · JOHN M. PEREZ · 66425 · REGISTERED PROFESSIONAL ENGINEER

6/20/03

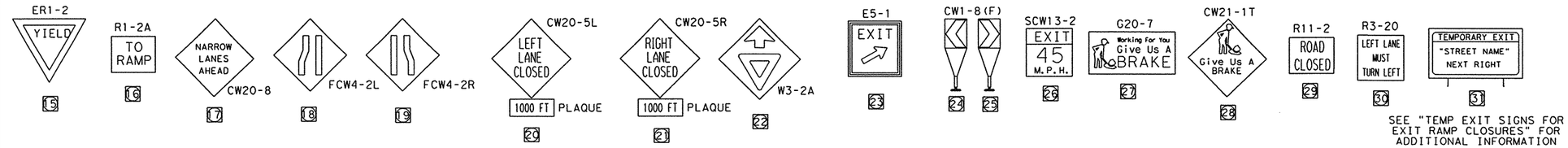

SEE "TEMP EXIT SIGNS FOR EXIT RAMP CLOSURES" FOR ADDITIONAL INFORMATION

Parsons Brinckerhoff Quade & Douglas Inc.

Texas Department of Transportation

© 2003 by TxDOT

US 281
TRAFFIC CONTROL PLAN
PHASE II

PLAN 1"= 200' HORIZ

SHEET 5 OF 11			281SEQII05.DGN				
DESIGNED: PAF	FED. RD DIV. No.	STATE	FEDERAL AID PROJECT No.			HIGHWAY No.	
CHECKED: JP	6	TEXAS				US 281	
DRAWN: KTD	STATE DISTRICT	COUNTY	CONTROL No.	SECTION No.	JOB No.	SHEET No.	
CHECKED: JDH	PHARR	HIDALGO	0255	08	091	99	

h:\22322a\cadd\sheets\traffic\tcp\281seqii05.dgn

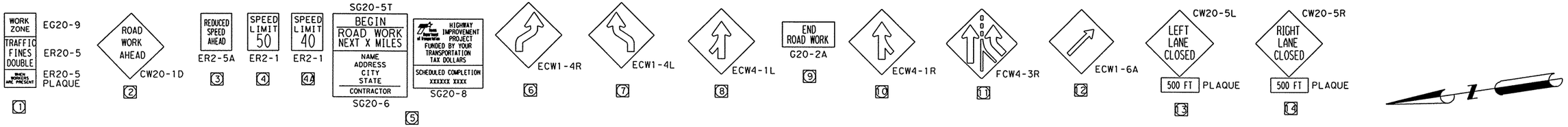

NOTES:

1. SEE "MINOR STREET CLOSURE DETAIL" FOR TRAFFIC CONTROL FOR MINOR STREETS.
2. SEE TRAFFIC CONTROL PHASING TYPICAL SECTION FOR TCP ROADWAY SECTIONS.
3. FOR RAMP PHASING CONSTRUCTION SEE "RAMP CLOSURE LAYOUT" SHEETS.
4. TEMP SED CONTROL FENCE ON GRATED INLETS SHALL BE LEFT IN PLACE THROUGHOUT DURATION OF PROJECT OR AS DIRECTED BY THE ENGINEER.

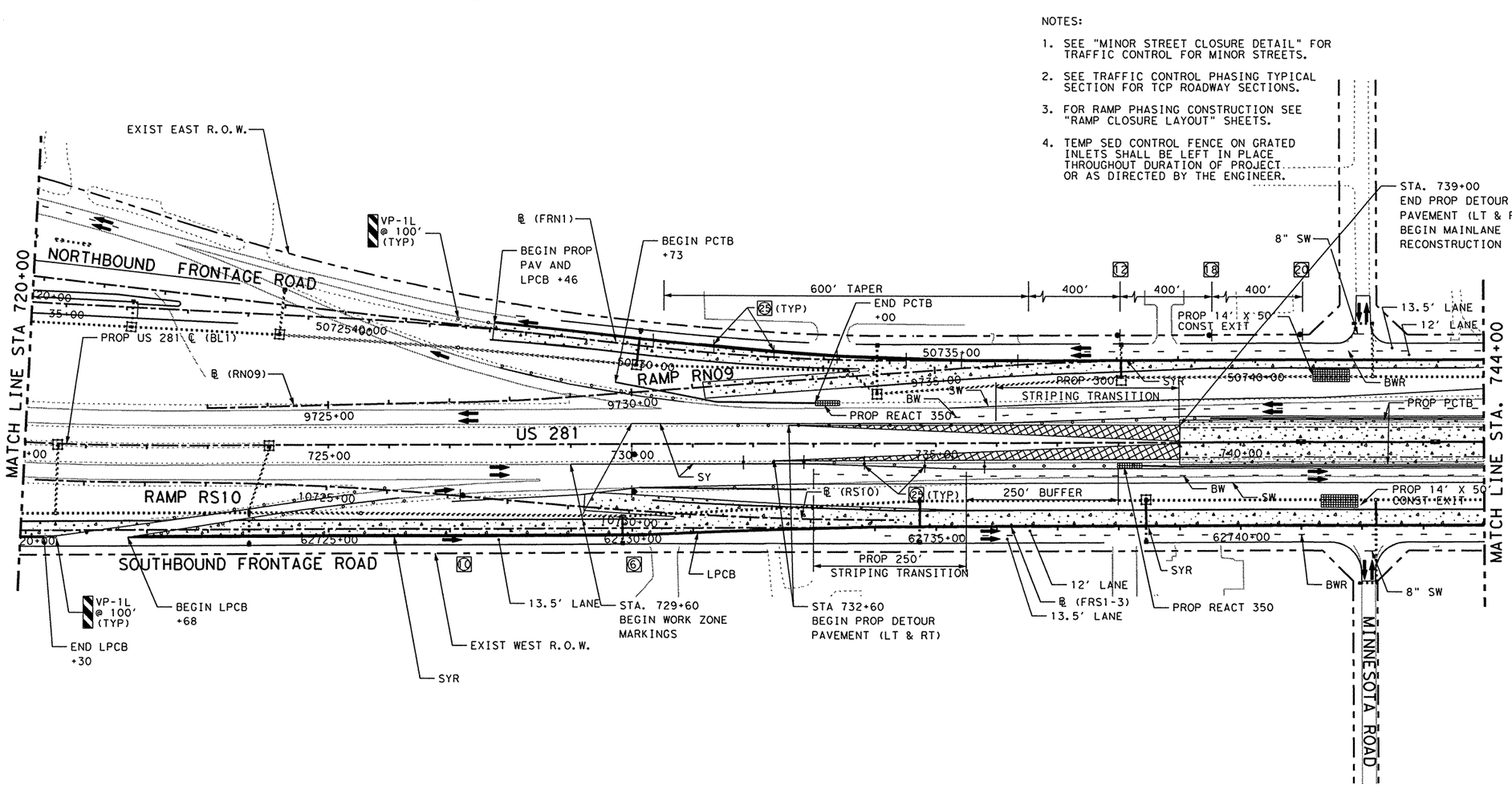

LEGEND:

- TEMP PAV CONSTRUCTED PREVIOUS PHASE
- TEMP PAV CONSTRUCTED THIS PHASE
- PROP CONSTRUCTION THIS PHASE
- PROP CONSTRUCTION PREVIOUS PHASE
- EXISTING TO BE REMOVED
- SW SOLID WHITE (NON-REMOVABLE)
- SY SOLID YELLOW (NON-REMOVABLE)
- BW BROKEN WHITE (NON-REMOVABLE)
- DSY DOUBLE SOLID YELLOW (NON-REMOVABLE)
- SWR SOLID WHITE (REMOVABLE)
- SYR SOLID YELLOW (REMOVABLE)
- BWR BROKEN WHITE (REMOVABLE)
- DSYR DOUBLE SOLID YELLOW (REMOVABLE)
- (Y) YELLOW GUIDE MARKS AND SHORT TERM MARKINGS
- (W) WHITE GUIDE MARKS AND SHORT TERM MARKINGS
- CHANNELIZING DEVICES
- TEMP SED CONTROL FENCE (12' EACH SEGMENT)
- TEMP SED CONTROL FENCE (48' EACH SEGMENT)
- CONSTRUCTION EXIT (TY 2)
- PROP SIGN
- PROP TY III BARRICADE
- STRUCTURES TO BE CONSTRUCTED DURING THIS PHASE

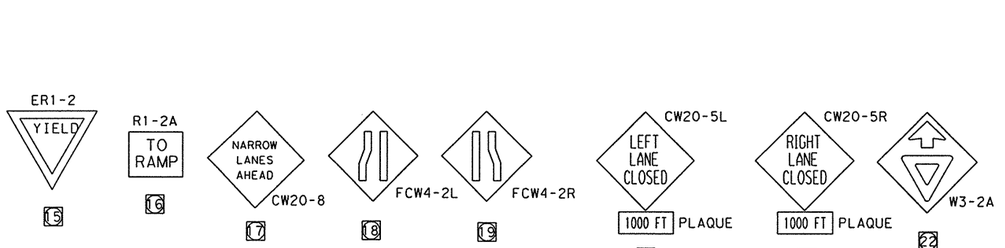

SEE "TEMP EXIT SIGNS FOR EXIT RAMP CLOSURES" FOR ADDITIONAL INFORMATION

THE SEAL APPEARING ON THIS DOCUMENT WAS AUTHORIZED BY JOHN M PEREZ, P.E. 66425 ON 06/20/2003.

STATE OF TEXAS
JOHN M. PEREZ
66425
REGISTERED PROFESSIONAL ENGINEER

6/20/03

Parsons Brinckerhoff Quade & Douglas Inc.

Texas Department of Transportation

© 2003 by TxDOT

US 281
TRAFFIC CONTROL PLAN
PHASE II

PLAN 1"= 200' HORIZ

SHEET 6 OF 11 | 281SEQII06.DGN

DESIGNED: PAF	FED. RD DIV. No.	STATE	FEDERAL AID PROJECT No.			HIGHWAY No.	
CHECKED: JP	6	TEXAS				US 281	
DRAWN: KTD	STATE DISTRICT	COUNTY	CONTROL No.	SECTION No.	JOB No.	SHEET No.	
CHECKED: JDH	PHARR	HIDALGO	0255	08	091	100	

NAME
11:03:53 AM
06/20/2003
h:\22322a\cadd\sheets\traffic\tcp\281seqii07.dgn

WORK ZONE / TRAFFIC FINES DOUBLE / WHEN WORKERS ARE PRESENT — EG20-9, ER20-5, ER20-5 PLAQUE [1]

ROAD WORK AHEAD — CW20-1D [2]

REDUCED SPEED AHEAD — ER2-5A [3]

SPEED LIMIT 50 — ER2-1 [4]

SPEED LIMIT 40 — ER2-1 [4A]

SG20-5T
BEGIN ROAD WORK NEXT X MILES
NAME
ADDRESS
CITY
STATE
CONTRACTOR
SG20-6 [5]

HIGHWAY IMPROVEMENT PROJECT FUNDED BY YOUR TRANSPORTATION TAX DOLLARS
SCHEDULED COMPLETION XXXXX XXXX
SG20-8

ECW1-4R [6]

ECW1-4L [7]

ECW4-1L [8]

END ROAD WORK — G20-2A [9]

ECW4-1R [10]

FCW4-3R [11]

ECW1-6A [12]

CW20-5L
LEFT LANE CLOSED
500 FT PLAQUE [13]

CW20-5R
RIGHT LANE CLOSED
500 FT PLAQUE [14]

NOTES:

1. SEE "MINOR STREET CLOSURE DETAIL" FOR TRAFFIC CONTROL FOR MINOR STREETS.
2. SEE TRAFFIC CONTROL PHASING TYPICAL SECTION FOR TCP ROADWAY SECTIONS.
3. FOR RAMP PHASING CONSTRUCTION SEE "RAMP CLOSURE LAYOUT" SHEETS.
4. TEMP SED CONTROL FENCE ON GRATED INLETS SHALL BE LEFT IN PLACE THROUGHOUT DURATION OF PROJECT OR AS DIRECTED BY THE ENGINEER.

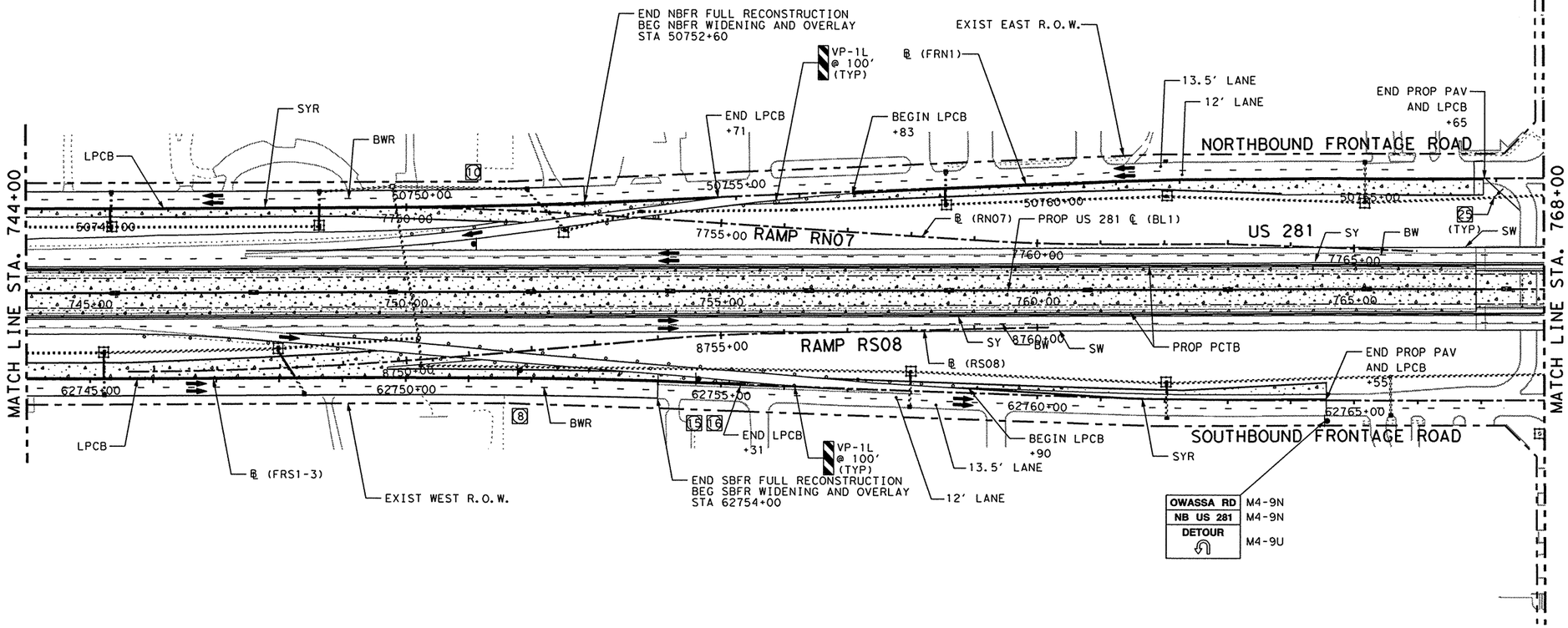

ROAD WORK ⇦ NEXT X MILES — G20-1bL [24]

ROAD WORK NEXT X MILES ⇨ — G20-1bR [25]

ER1-2 YIELD [15]

R1-2A TO RAMP [16]

NARROW LANES AHEAD — CW20-8 [17]

FCW4-2L [18]

FCW4-2R [19]

CW20-5L LEFT LANE CLOSED 1000 FT PLAQUE [20]

CW20-5R RIGHT LANE CLOSED 1000 FT PLAQUE [21]

W3-2A [22]

E5-1 EXIT [23]

CW1-8(F) [24] [25]

SCW13-2 EXIT 45 M.P.H. [26]

G20-7 Working For You Give Us A BRAKE [27]

CW21-1T Give Us A BRAKE [28]

R11-2 ROAD CLOSED [29]

R3-20 LEFT LANE MUST TURN LEFT [30]

TEMPORARY EXIT "STREET NAME" NEXT RIGHT [31]

SEE "TEMP EXIT SIGNS FOR EXIT RAMP CLOSURES" FOR ADDITIONAL INFORMATION

LEGEND:

- TEMP PAV CONSTRUCTED PREVIOUS PHASE
- TEMP PAV CONSTRUCTED THIS PHASE
- PROP CONSTRUCTION THIS PHASE
- PROP CONSTRUCTION PREVIOUS PHASE
- EXISTING TO BE REMOVED
- SW SOLID WHITE (NON-REMOVABLE)
- SY SOLID YELLOW (NON-REMOVABLE)
- BW BROKEN WHITE (NON-REMOVABLE)
- DSY DOUBLE SOLID YELLOW (NON-REMOVABLE)
- SWR SOLID WHITE (REMOVABLE)
- SYR SOLID YELLOW (REMOVABLE)
- BWR BROKEN WHITE (REMOVABLE)
- DSYR DOUBLE SOLID YELLOW (REMOVABLE)
- (Y) YELLOW GUIDE MARKS AND SHORT TERM MARKINGS
- (W) WHITE GUIDE MARKS AND SHORT TERM MARKINGS
- CHANNELIZING DEVICES
- TEMP SED CONTROL FENCE (12' EACH SEGMENT)
- TEMP SED CONTROL FENCE (48' EACH SEGMENT)
- CONSTRUCTION EXIT (TY 2)
- PROP SIGN
- PROP TY III BARRICADE
- STRUCTURES TO BE CONSTRUCTED DURING THIS PHASE

THE SEAL APPEARING ON THIS DOCUMENT WAS AUTHORIZED BY JOHN M PEREZ, P.E. 66425 ON 06/20/2003.

STATE OF TEXAS · JOHN M. PEREZ · 66425 · REGISTERED PROFESSIONAL ENGINEER

6/20/03

Parsons Brinckerhoff Quade & Douglas Inc.

Texas Department of Transportation

© 2003 by TxDOT

US 281
TRAFFIC CONTROL PLAN
PHASE II

PLAN 1"= 200' HORIZ

SHEET 7 OF 11				281SEQII07.DGN			
DESIGNED: PAF	FED. RD DIV. No.	STATE	FEDERAL AID PROJECT No.				HIGHWAY No.
CHECKED: JP	6	TEXAS					US 281
DRAWN: KTD	STATE DISTRICT	COUNTY	CONTROL No.	SECTION No.	JOB No.	SHEET No.	
CHECKED: JDH	PHARR	HIDALGO	0255	08	091	101	

NAME
11:04:05 AM
06/20/2003
h:\22322a\oadd\sheets\traffic\tcp\281seqii08.dgn

WORK ZONE / TRAFFIC FINES DOUBLE / WHEN WORKERS ARE PRESENT — EG20-9 / ER20-5 / ER20-5 PLAQUE [1]

ROAD WORK AHEAD — CW20-1D [2]

REDUCED SPEED AHEAD — ER2-5A [3]

SPEED LIMIT 50 — ER2-1 [4]

SPEED LIMIT 40 — ER2-1 [4A]

SG20-5T
BEGIN ROAD WORK NEXT X MILES
NAME
ADDRESS
CITY
STATE
CONTRACTOR
SG20-6 [5]

HIGHWAY IMPROVEMENT PROJECT FUNDED BY YOUR TRANSPORTATION TAX DOLLARS
SCHEDULED COMPLETION XXXXX XXXX
SG20-8

ECW1-4R [6]

ECW1-4L [7]

ECW4-1L [8]

END ROAD WORK — G20-2A [9]

ECW4-1R [10]

FCW4-3R [11]

ECW1-6A [12]

CW20-5L
LEFT LANE CLOSED
500 FT PLAQUE [13]

CW20-5R
RIGHT LANE CLOSED
500 FT PLAQUE [14]

NOTES:

1. SEE "MINOR STREET CLOSURE DETAIL" FOR TRAFFIC CONTROL FOR MINOR STREETS.
2. SEE TRAFFIC CONTROL PHASING TYPICAL SECTION FOR TCP ROADWAY SECTIONS.
3. FOR RAMP PHASING CONSTRUCTION SEE "RAMP CLOSURE LAYOUT" SHEETS.
4. TEMP SED CONTROL FENCE ON GRATED INLETS SHALL BE LEFT IN PLACE THROUGHOUT DURATION OF PROJECT OR AS DIRECTED BY THE ENGINEER.

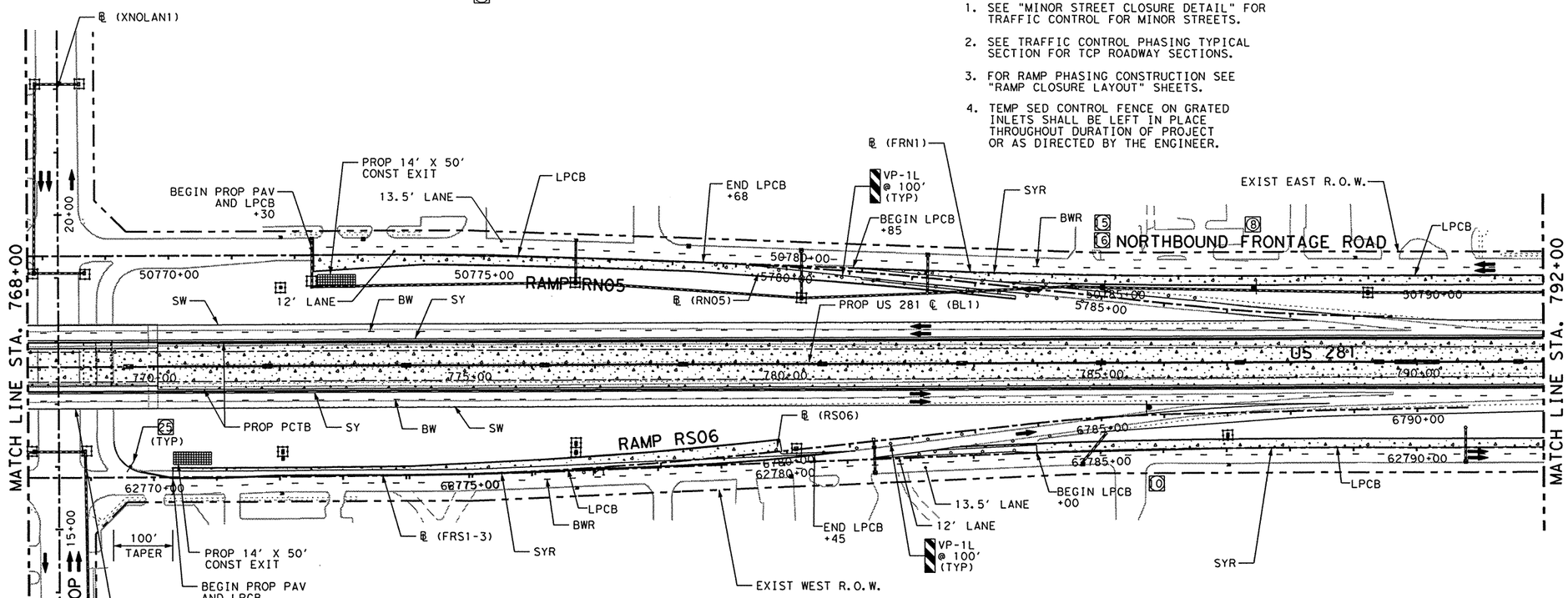

LEGEND:

- TEMP PAV CONSTRUCTED PREVIOUS PHASE
- TEMP PAV CONSTRUCTED THIS PHASE
- PROP CONSTRUCTION THIS PHASE
- PROP CONSTRUCTION PREVIOUS PHASE
- EXISTING TO BE REMOVED
- SW SOLID WHITE (NON-REMOVABLE)
- SY SOLID YELLOW (NON-REMOVABLE)
- BW BROKEN WHITE (NON-REMOVABLE)
- DSY DOUBLE SOLID YELLOW (NON-REMOVABLE)
- SWR SOLID WHITE (REMOVABLE)
- SYR SOLID YELLOW (REMOVABLE)
- BWR BROKEN WHITE (REMOVABLE)
- DSYR DOUBLE SOLID YELLOW (REMOVABLE)
- (Y) YELLOW GUIDE MARKS AND SHORT TERM MARKINGS
- (W) WHITE GUIDE MARKS AND SHORT TERM MARKINGS
- CHANNELIZING DEVICES
- TEMP SED CONTROL FENCE (12' EACH SEGMENT)
- TEMP SED CONTROL FENCE (48' EACH SEGMENT)
- CONSTRUCTION EXIT (TY 2)
- PROP SIGN
- I PROP TY III BARRICADE

ER1-2 YIELD [15]

R1-2A TO RAMP [16]

NARROW LANES AHEAD — CW20-8 [17]

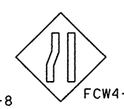
FCW4-2L [18]

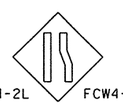
FCW4-2R [19]

CW20-5L
LEFT LANE CLOSED
1000 FT PLAQUE [20]

CW20-5R
RIGHT LANE CLOSED
1000 FT PLAQUE [21]

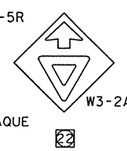
W3-2A [22]

E5-1 EXIT [23]

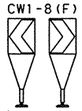
CW1-8(F) [24] [25]

SCW13-2 EXIT 45 M.P.H. [26]

G20-7 Working For You Give Us A BRAKE [27]

CW21-1T Give Us A BRAKE [28]

R11-2 ROAD CLOSED [29]

R3-20 LEFT LANE MUST TURN LEFT [30]

TEMPORARY EXIT "STREET NAME" NEXT RIGHT [31]

SEE "TEMP EXIT SIGNS FOR EXIT RAMP CLOSURES" FOR ADDITIONAL INFORMATION

ROAD WORK ⇦ NEXT X MILES — G20-1bL [28A]

ROAD WORK NEXT X MILES ⇨ — G20-1bR [28B]

THE SEAL APPEARING ON THIS DOCUMENT WAS AUTHORIZED BY JOHN M PEREZ, P.E. 66425 ON 06/20/2003.

STATE OF TEXAS — JOHN M. PEREZ — 66425 — REGISTERED PROFESSIONAL ENGINEER

Parsons Brinckerhoff Quade & Douglas Inc.

Texas Department of Transportation

© 2003 by TxDOT

US 281
TRAFFIC CONTROL PLAN
PHASE II

PLAN 1"= 200' HORIZ

SHEET 8 OF 11 — 281SEQII08.DGN

DESIGNED: PAF	FED. RD DIV. No.	STATE	FEDERAL AID PROJECT No.	HIGHWAY No.
CHECKED: JP	6	TEXAS		US 281

DRAWN: KTD	STATE DISTRICT	COUNTY	CONTROL No.	SECTION No.	JOB No.	SHEET No.
CHECKED: JDH	PHARR	HIDALGO	0255	08	091	102

NAME
11:04:16 AM
06/20/2003
h:\22322a\cadd\sheets\traffic\tcp\281seqii09.dgn

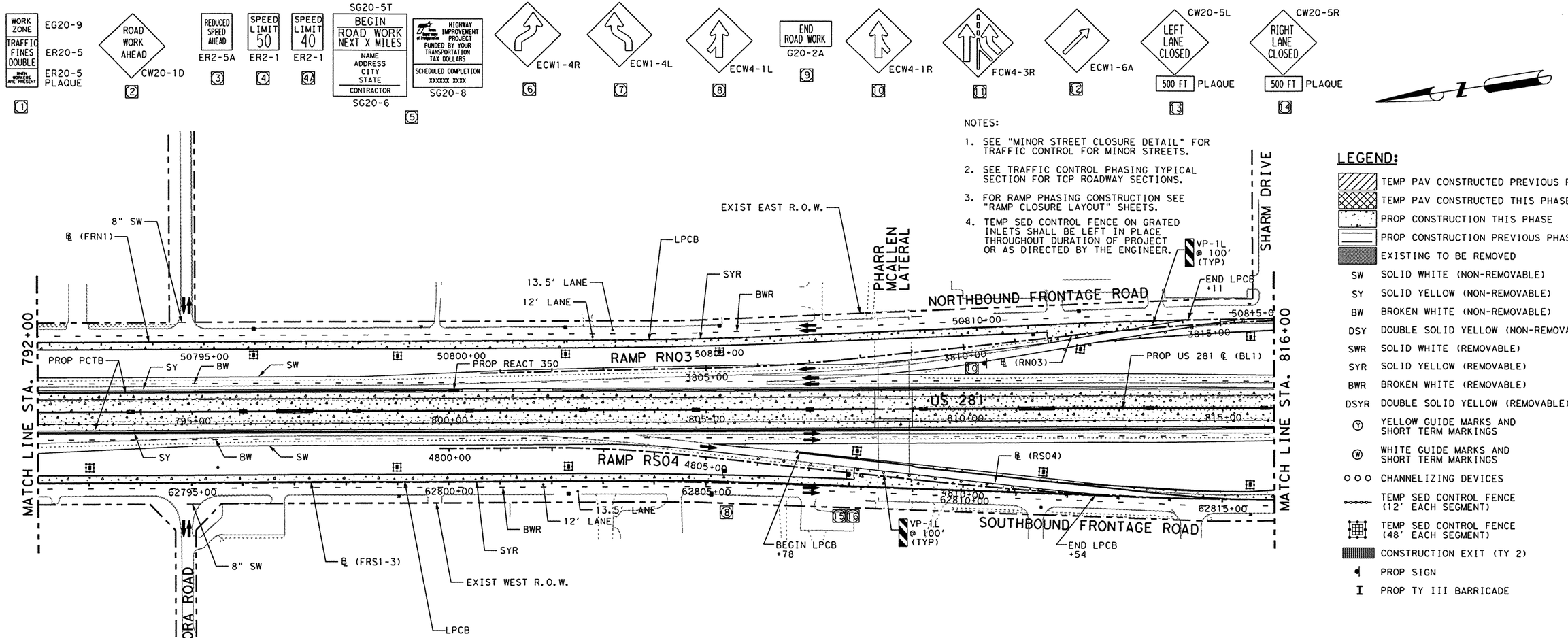

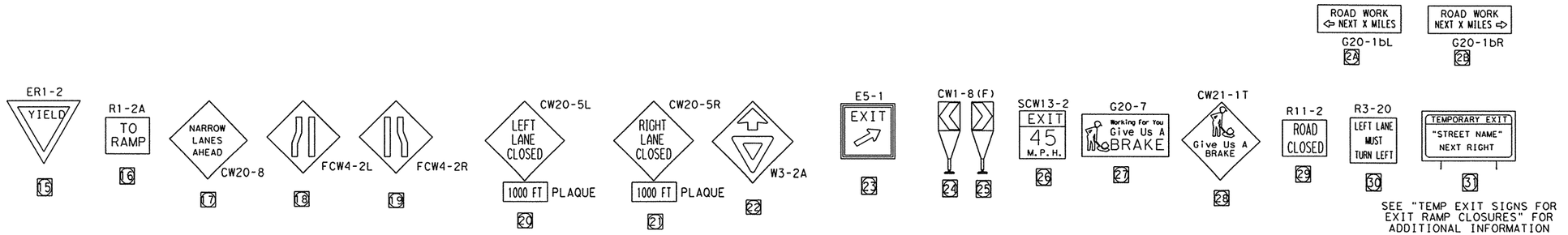

THE SEAL APPEARING ON THIS DOCUMENT WAS AUTHORIZED BY JOHN M PEREZ, P.E. 66425 ON 06/20/2003.

STATE OF TEXAS
JOHN M. PEREZ
66425
REGISTERED PROFESSIONAL ENGINEER

John M. Perez 6/20/03

Parsons Brinckerhoff Quade & Douglas Inc.

Texas Department of Transportation

© 2003 by TxDOT

US 281
TRAFFIC CONTROL PLAN
PHASE II

PLAN 1"= 200' HORIZ

SHEET 9 OF 11 | 281SEQII09.DGN

DESIGNED: PAF	FED. RD DIV. No.	STATE	FEDERAL AID PROJECT No.	HIGHWAY No.
CHECKED: JP	6	TEXAS		US 281

DRAWN: KTD	STATE DISTRICT	COUNTY	CONTROL No.	SECTION No.	JOB No.	SHEET No.
CHECKED: JDH	PHARR	HIDALGO	0255	08	091	103

NAME
11:04:28 AM
06/20/2003
h:\22322a\cadd\sheets\traffic\tcp\281seqii10.dgn

WORK ZONE / TRAFFIC FINES DOUBLE / WHEN WORKERS ARE PRESENT — EG20-9 / ER20-5 / ER20-5 PLAQUE — [1]

ROAD WORK AHEAD — CW20-1D — [2]

REDUCED SPEED AHEAD — ER2-5A — [3]

SPEED LIMIT 50 — ER2-1 — [4]

SPEED LIMIT 40 — ER2-1 — [4a]

SG20-5T
BEGIN ROAD WORK NEXT X MILES
NAME ADDRESS CITY STATE
CONTRACTOR
SG20-6 — [5]

HIGHWAY IMPROVEMENT PROJECT FUNDED BY YOUR TRANSPORTATION TAX DOLLARS
SCHEDULED COMPLETION xxxxx xxxx
SG20-8

ECW1-4R — [6]

ECW1-4L — [7]

ECW4-1L — [8]

END ROAD WORK — G20-2A — [9]

ECW4-1R — [10]

FCW4-3R — [11]

ECW1-6A — [12]

CW20-5L
LEFT LANE CLOSED
500 FT PLAQUE — [13]

CW20-5R
RIGHT LANE CLOSED
500 FT PLAQUE — [14]

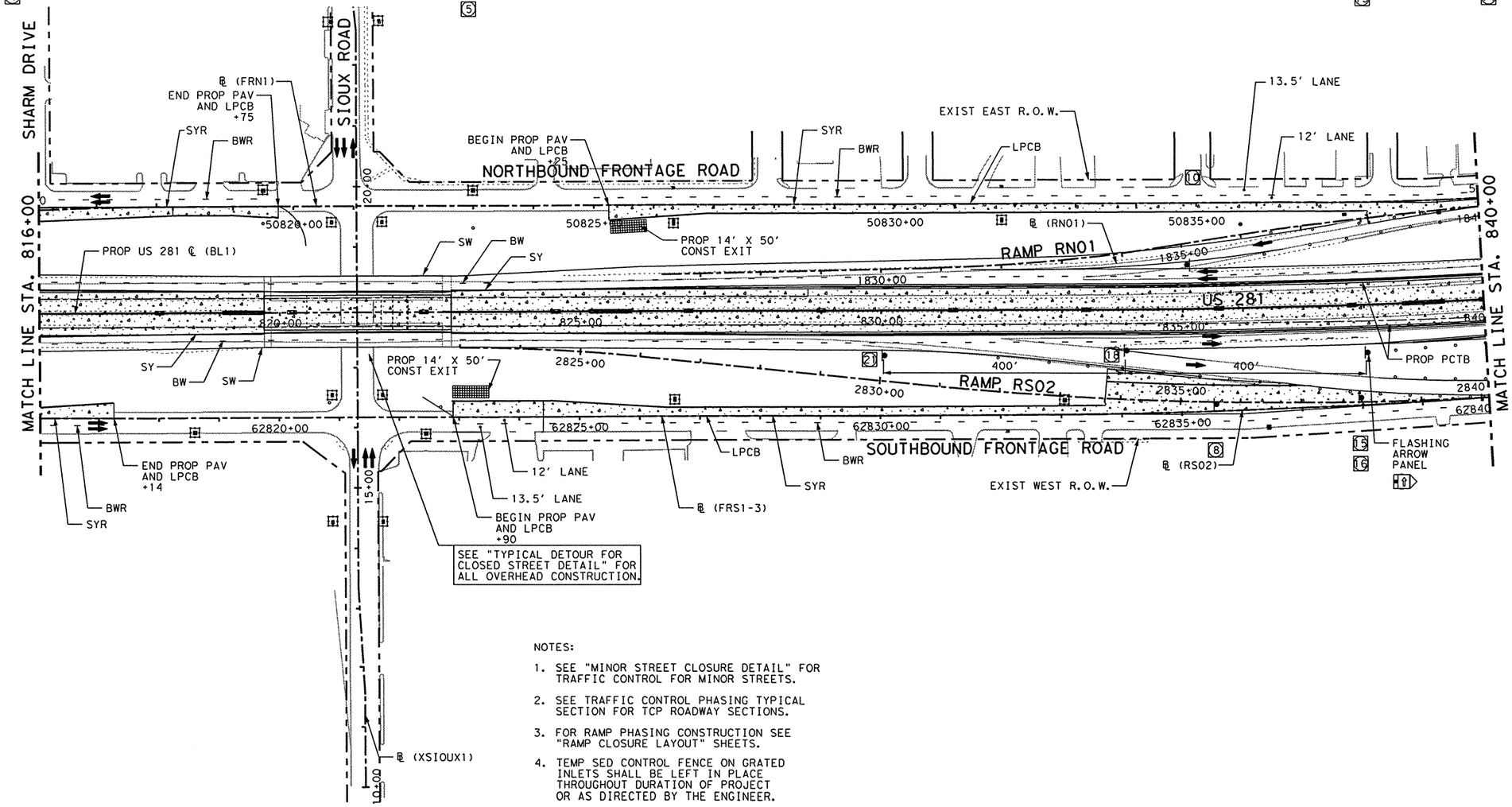

SEE "TYPICAL DETOUR FOR CLOSED STREET DETAIL" FOR ALL OVERHEAD CONSTRUCTION.

NOTES:

1. SEE "MINOR STREET CLOSURE DETAIL" FOR TRAFFIC CONTROL FOR MINOR STREETS.
2. SEE TRAFFIC CONTROL PHASING TYPICAL SECTION FOR TCP ROADWAY SECTIONS.
3. FOR RAMP PHASING CONSTRUCTION SEE "RAMP CLOSURE LAYOUT" SHEETS.
4. TEMP SED CONTROL FENCE ON GRATED INLETS SHALL BE LEFT IN PLACE THROUGHOUT DURATION OF PROJECT OR AS DIRECTED BY THE ENGINEER.

LEGEND:

- TEMP PAV CONSTRUCTED PREVIOUS PHASE
- TEMP PAV CONSTRUCTED THIS PHASE
- PROP CONSTRUCTION THIS PHASE
- PROP CONSTRUCTION PREVIOUS PHASE
- EXISTING TO BE REMOVED
- SW SOLID WHITE (NON-REMOVABLE)
- SY SOLID YELLOW (NON-REMOVABLE)
- BW BROKEN WHITE (NON-REMOVABLE)
- DSY DOUBLE SOLID YELLOW (NON-REMOVABLE)
- SWR SOLID WHITE (REMOVABLE)
- SYR SOLID YELLOW (REMOVABLE)
- BWR BROKEN WHITE (REMOVABLE)
- DSYR DOUBLE SOLID YELLOW (REMOVABLE)
- Ⓨ YELLOW GUIDE MARKS AND SHORT TERM MARKINGS
- Ⓦ WHITE GUIDE MARKS AND SHORT TERM MARKINGS
- ○○○ CHANNELIZING DEVICES
- TEMP SED CONTROL FENCE (12' EACH SEGMENT)
- TEMP SED CONTROL FENCE (48' EACH SEGMENT)
- CONSTRUCTION EXIT (TY 2)
- PROP SIGN
- I PROP TY III BARRICADE

THE SEAL APPEARING ON THIS DOCUMENT WAS AUTHORIZED BY JOHN M PEREZ, P.E. 66425 ON 06/20/2003.

STATE OF TEXAS — JOHN M. PEREZ — 66425 — REGISTERED PROFESSIONAL ENGINEER

6/20/03

ER1-2 YIELD — [15]

R1-2A TO RAMP — [16]

NARROW LANES AHEAD — CW20-8 — [17]

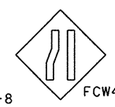
FCW4-2L — [18]

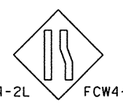
FCW4-2R — [19]

CW20-5L
LEFT LANE CLOSED
1000 FT PLAQUE — [20]

CW20-5R
RIGHT LANE CLOSED
1000 FT PLAQUE — [21]

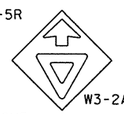
W3-2A — [22]

E5-1 EXIT — [23]

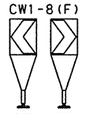
CW1-8(F) — [24] [25]

SCW13-2 EXIT 45 M.P.H. — [26]

[27]

[28]

R11-2 ROAD CLOSED — [29]

R3-20 LEFT LANE MUST TURN LEFT — [30]

TEMPORARY EXIT "STREET NAME" NEXT RIGHT — [31]

ROAD WORK ⇦ NEXT X MILES — G20-1bL — [2A]

ROAD WORK NEXT X MILES ⇨ — G20-1bR — [2B]

SEE "TEMP EXIT SIGNS FOR EXIT RAMP CLOSURES" FOR ADDITIONAL INFORMATION

Parsons Brinckerhoff Quade & Douglas Inc.

Texas Department of Transportation

© 2003 by TxDOT

US 281
TRAFFIC CONTROL PLAN
PHASE II

PLAN 1"= 200' HORIZ

SHEET 10 OF 11 | 281SEQII10.DGN

DESIGNED: PAF	FED. RD DIV. No.	STATE	FEDERAL AID PROJECT No.	HIGHWAY No.
CHECKED: JP	6	TEXAS		US 281

DRAWN: KTD	STATE DISTRICT	COUNTY	CONTROL No.	SECTION No.	JOB No.	SHEET No.
CHECKED: JDH	PHARR	HIDALGO	0255	08	091	104

NAME
11:04:39 AM
06/20/2003

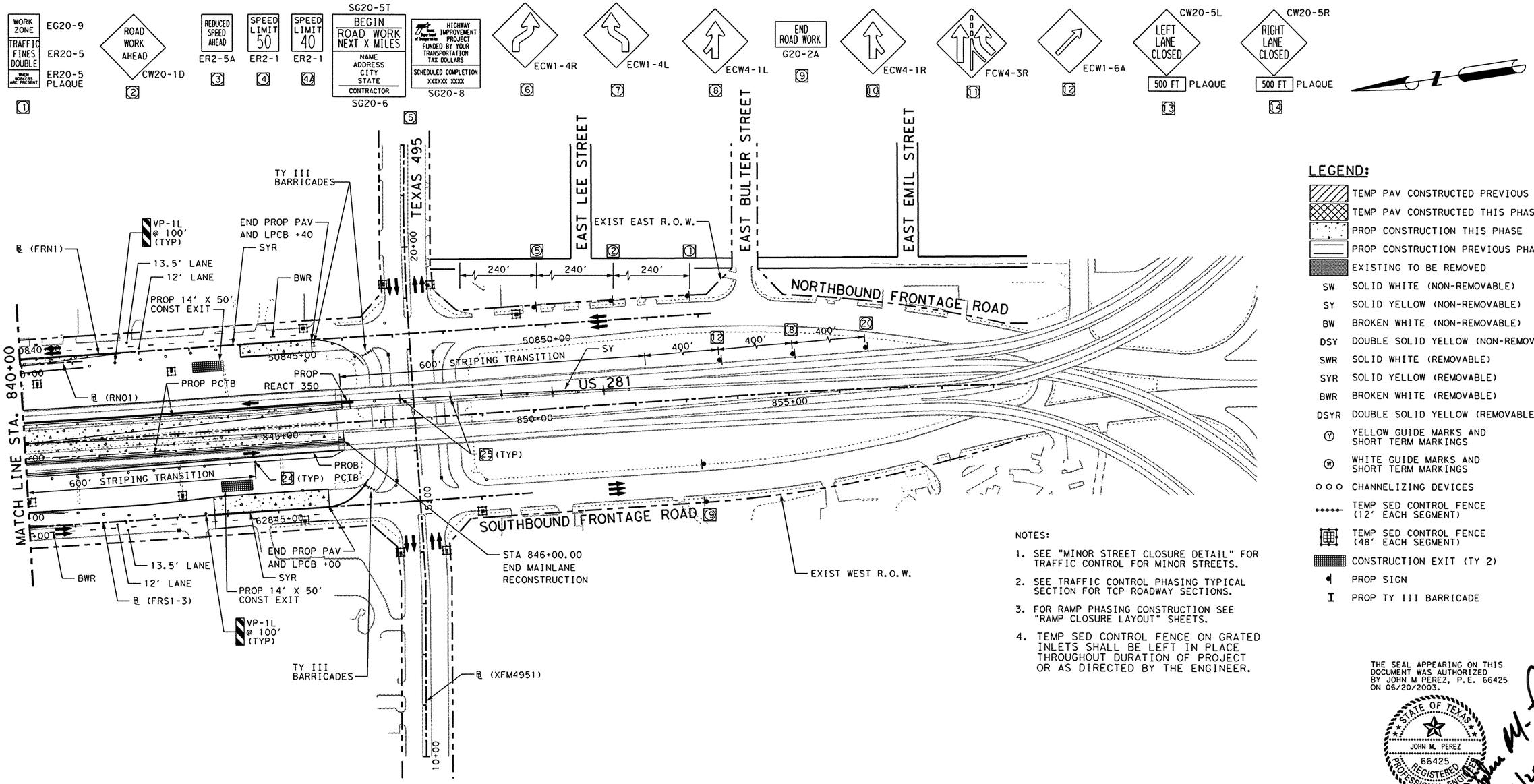

LEGEND:

- TEMP PAV CONSTRUCTED PREVIOUS PHASE
- TEMP PAV CONSTRUCTED THIS PHASE
- PROP CONSTRUCTION THIS PHASE
- PROP CONSTRUCTION PREVIOUS PHASE
- EXISTING TO BE REMOVED
- SW — SOLID WHITE (NON-REMOVABLE)
- SY — SOLID YELLOW (NON-REMOVABLE)
- BW — BROKEN WHITE (NON-REMOVABLE)
- DSY — DOUBLE SOLID YELLOW (NON-REMOVABLE)
- SWR — SOLID WHITE (REMOVABLE)
- SYR — SOLID YELLOW (REMOVABLE)
- BWR — BROKEN WHITE (REMOVABLE)
- DSYR — DOUBLE SOLID YELLOW (REMOVABLE)
- Ⓨ — YELLOW GUIDE MARKS AND SHORT TERM MARKINGS
- Ⓦ — WHITE GUIDE MARKS AND SHORT TERM MARKINGS
- ○○○ — CHANNELIZING DEVICES
- TEMP SED CONTROL FENCE (12' EACH SEGMENT)
- TEMP SED CONTROL FENCE (48' EACH SEGMENT)
- CONSTRUCTION EXIT (TY 2)
- PROP SIGN
- I — PROP TY III BARRICADE

NOTES:

1. SEE "MINOR STREET CLOSURE DETAIL" FOR TRAFFIC CONTROL FOR MINOR STREETS.
2. SEE TRAFFIC CONTROL PHASING TYPICAL SECTION FOR TCP ROADWAY SECTIONS.
3. FOR RAMP PHASING CONSTRUCTION SEE "RAMP CLOSURE LAYOUT" SHEETS.
4. TEMP SED CONTROL FENCE ON GRATED INLETS SHALL BE LEFT IN PLACE THROUGHOUT DURATION OF PROJECT OR AS DIRECTED BY THE ENGINEER.

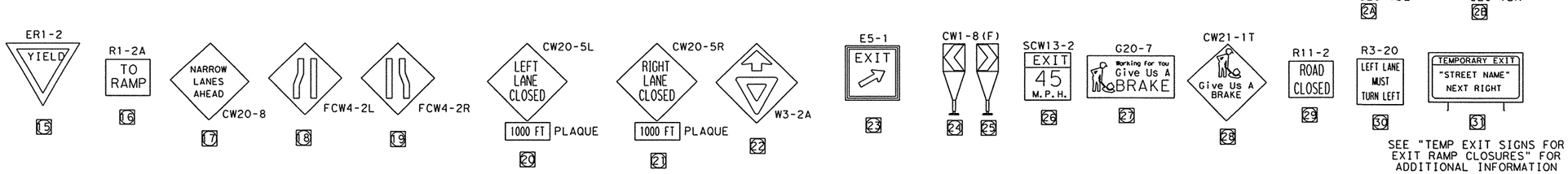

SEE "TEMP EXIT SIGNS FOR EXIT RAMP CLOSURES" FOR ADDITIONAL INFORMATION

THE SEAL APPEARING ON THIS DOCUMENT WAS AUTHORIZED BY JOHN M PEREZ, P.E. 66425 ON 06/20/2003.

STATE OF TEXAS · JOHN M. PEREZ · 66425 · REGISTERED PROFESSIONAL ENGINEER

6/20/03

Parsons Brinckerhoff Quade & Douglas Inc.

Texas Department of Transportation

© 2003 by TxDOT

US 281
TRAFFIC CONTROL PLAN
PHASE II

PLAN 1"= 200' HORIZ

SHEET 11 OF 11				281SEQII11.DGN			
DESIGNED: PAF	FED. RD DIV. No.	STATE	FEDERAL AID PROJECT No.			HIGHWAY No.	
CHECKED: JP	6	TEXAS				US 281	
DRAWN: KTD	STATE DISTRICT	COUNTY	CONTROL No.	SECTION No.	JOB No.	SHEET No.	
CHECKED: JDH	PHARR	HIDALGO	0255	08	091	105	

h:\22322ov\cadd\sheets\traffic\tcp\281seqii11.dgn

NAME
10:47:30 AM
06/20/2003

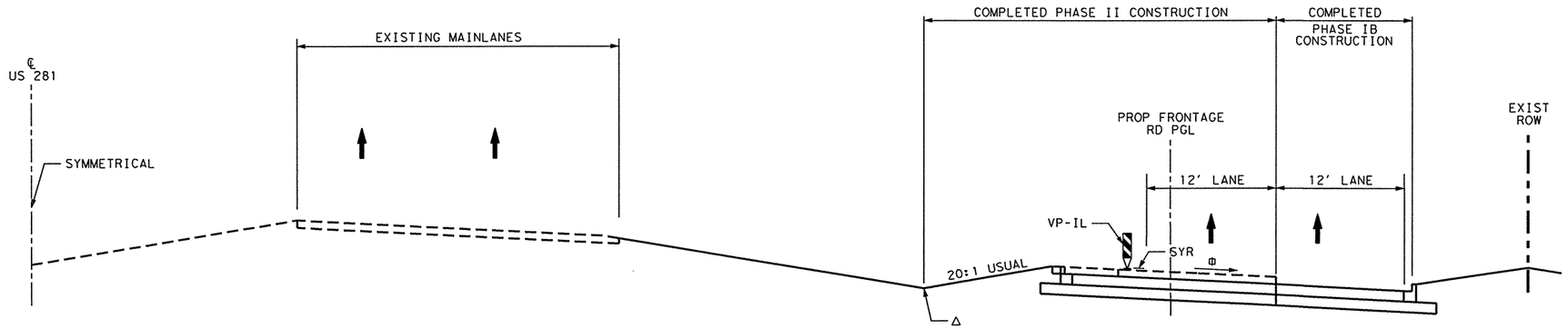

PHASE III TYPICAL SECTION

STA 630+00.00 TO STA 739+00.00

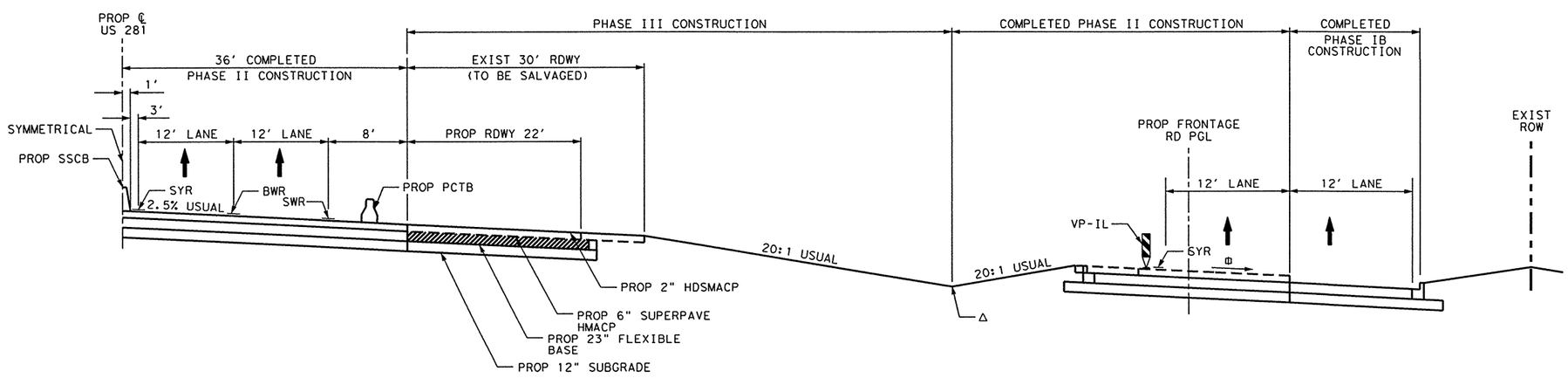

PHASE III TYPICAL SECTION

STA 739+00.00 TO STA 752+00.00

Δ THE CONTRACTOR SHALL REGRADE DITCHES TO MAINTAIN THE EXISTING DRAINAGE PATTERNS AND REMOVE/RELAY OR EXTEND EXISTING DRAINAGE STRUCTURES AS NEEDED. THIS WORK SHALL BE CONSIDERED SUBSIDIARY TO THE VARIOUS BID ITEMS OF THIS CONTRACT

NOTE:
SEE PROPOSED TYPICAL SECTIONS FOR CROSS SLOPE INFORMATION.

THE SEAL APPEARING ON THIS DOCUMENT WAS AUTHORIZED BY JOHN M PEREZ, P.E. 66425 ON 06/20/2003.

STATE OF TEXAS
JOHN M. PEREZ
66425
REGISTERED PROFESSIONAL ENGINEER

6/20/03

Parsons Brinckerhoff Quade & Douglas Inc.

Texas Department of Transportation

© 2003 by TxDOT

TRAFFIC CONTROL PHASING TYPICAL SECTION

PHASE III

STA 630+00 TO STA 752+00

SCALE: NTS

SHEET 1 OF 12 | 281TYP16.DGN

DESIGNED: PAF	FED. RD DIV. No.	STATE	FEDERAL AID PROJECT No.				HIGHWAY No.	
CHECKED: JP	6	TEXAS					US 281	
DRAWN:	STATE DISTRICT	COUNTY	CONTROL No.	SECTION No.	JOB No.	SHEET No.		
CHECKED: JDH	PHARR	HIDALGO	0255	08	091	106		

h:\22322o\cadd\sheets\traffic\tcp\typ\281typ16.dgn

NAME
10:47:34 AM
06/20/2003

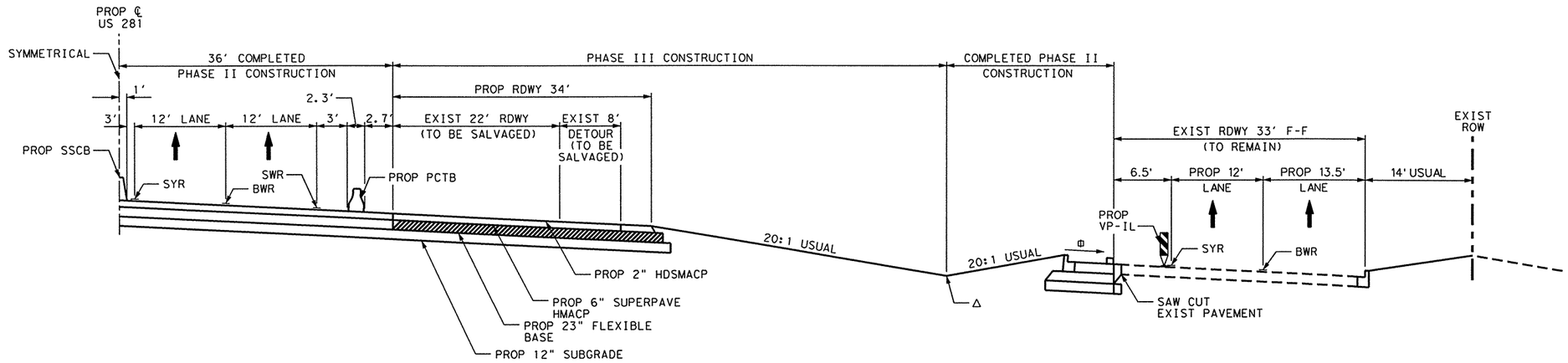

NBFR STA 50752+60.00 TO END OF PROJECT
SBFR STA 62754+00.00 TO END OF PROJECT

PHASE III TYPICAL SECTION

STA 752+00.00 TO STA 846+00.00

Δ THE CONTRACTOR SHALL REGRADE DITCHES TO MAINTAIN THE EXISTING DRAINAGE PATTERNS AND REMOVE/RELAY OR EXTEND EXISTING DRAINAGE STRUCTURES AS NEEDED. THIS WORK SHALL BE CONSIDERED SUBSIDIARY TO THE VARIOUS BID ITEMS OF THIS CONTRACT

NOTE:
SEE PROPOSED TYPICAL SECTIONS FOR CROSS SLOPE INFORMATION.

h:\22322o\cadd\sheets\traffic\tcp\typ\281typ18a.dgn

THE SEAL APPEARING ON THIS DOCUMENT WAS AUTHORIZED BY JOHN M PEREZ, P.E. 66425 ON 06/20/2003.

STATE OF TEXAS
JOHN M. PEREZ
66425
REGISTERED
PROFESSIONAL ENGINEER

John M. Perez 6/20/03

Parsons Brinckerhoff Quade & Douglas Inc.

Texas Department of Transportation

© 2003 by TxDOT

TRAFFIC CONTROL PHASING TYPICAL SECTION

PHASE III
STA 752+00 TO STA 846+00

SCALE: NTS

SHEET 2 OF 12					281TYP18A.DGN	
DESIGNED: PAF	FED. RD DIV. No.	STATE	FEDERAL AID PROJECT No.			HIGHWAY No.
CHECKED: JP	6	TEXAS				US 281
DRAWN:	STATE DISTRICT	COUNTY	CONTROL No.	SECTION No.	JOB No.	SHEET No.
CHECKED: JDH	PHARR	HIDALGO	0255	08	091	107

NAME
10:47:42 AM
06/20/2003
h:\22322a\cadd\sheets\traffic\tcp\typ\281typ21.dgn

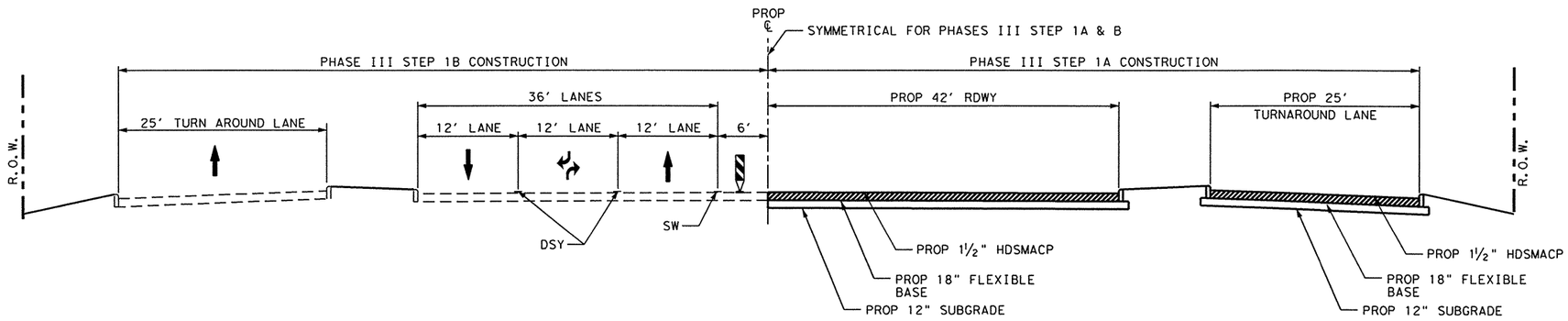

PHASE III STEP 1A & 1B TYPICAL SECTION

TEXAS 495 STA 15+00.00 TO STA 18+31.10

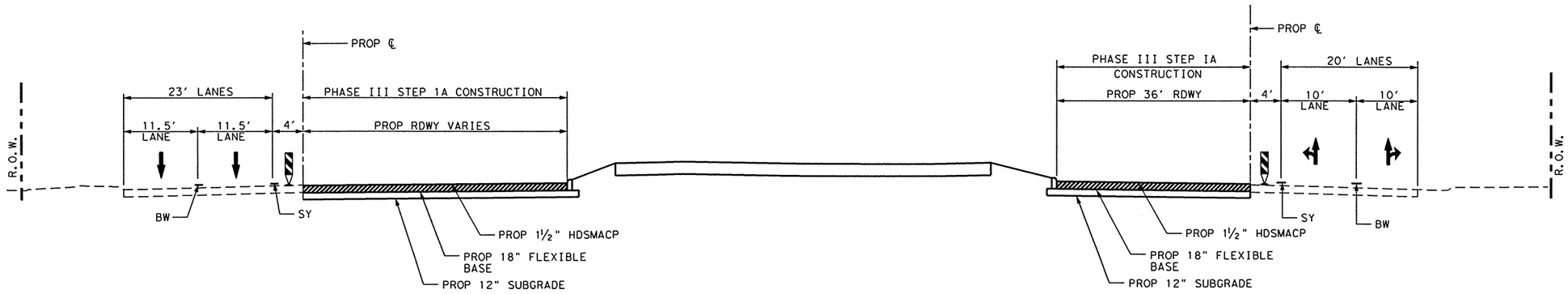

PHASE III STEP 1A TYPICAL SECTION

FRONTAGE ROAD STA 849+00.00

△ THE CONTRACTOR SHALL REGRADE DITCHES TO MAINTAIN THE EXISTING DRAINAGE PATTERNS AND REMOVE/RELAY OR EXTEND EXISTING DRAINAGE STRUCTURES AS NEEDED. THIS WORK SHALL BE CONSIDERED SUBSIDIARY TO THE VARIOUS BID ITEMS OF THIS CONTRACT

NOTE:
SEE PROPOSED TYPICAL SECTIONS FOR CROSS SLOPE INFORMATION.

THE SEAL APPEARING ON THIS DOCUMENT WAS AUTHORIZED BY JOHN M PEREZ, P.E. 66425 ON 06/20/2003.

STATE OF TEXAS
JOHN M. PEREZ
66425
REGISTERED PROFESSIONAL ENGINEER

6/20/03

Parsons Brinckerhoff Quade & Douglas Inc.

Texas Department of Transportation

© 2003 by TxDOT

TRAFFIC CONTROL PHASING TYPICAL SECTION

PHASE III - STEP 1A &1B CONSTRUCTION

SCALE: NTS

SHEET 3 OF 12				281TYP21.DGN			
DESIGNED: PAF	FED. RD DIV. No.	STATE	FEDERAL AID PROJECT No.				HIGHWAY No.
CHECKED: JP	6	TEXAS					US 281
DRAWN: RLJ	STATE DISTRICT	COUNTY	CONTROL No.	SECTION No.	JOB No.	SHEET No.	
CHECKED: JDH	PHARR	HIDALGO	0255	08	091	108	

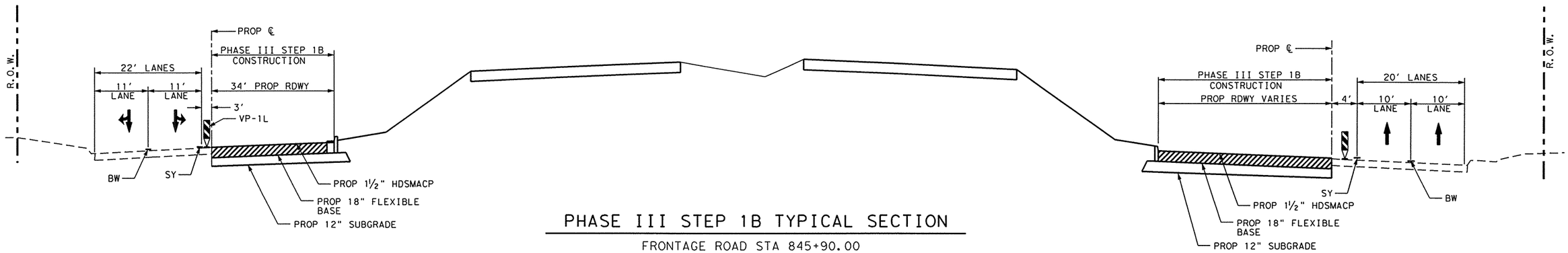

PHASE III STEP 1B TYPICAL SECTION

FRONTAGE ROAD STA 845+90.00

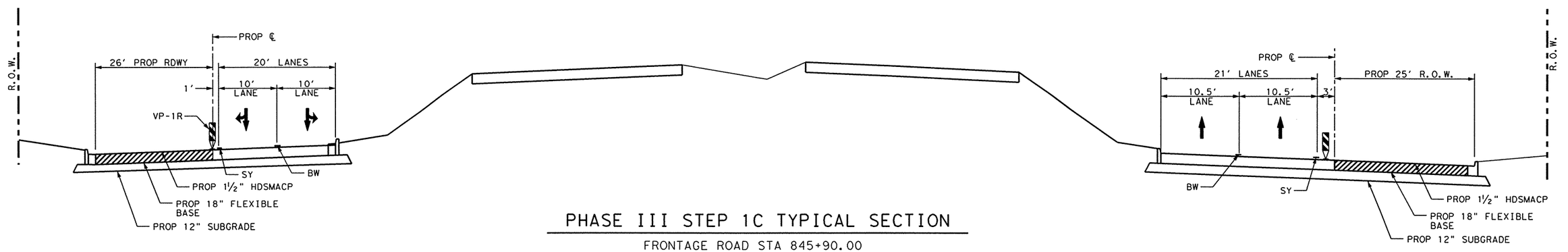

PHASE III STEP 1C TYPICAL SECTION

FRONTAGE ROAD STA 845+90.00

△ THE CONTRACTOR SHALL REGRADE DITCHES TO MAINTAIN THE EXISTING DRAINAGE PATTERNS AND REMOVE/RELAY OR EXTEND EXISTING DRAINAGE STRUCTURES AS NEEDED. THIS WORK SHALL BE CONSIDERED SUBSIDIARY TO THE VARIOUS BID ITEMS OF THIS CONTRACT

NOTE:
SEE PROPOSED TYPICAL SECTIONS FOR CROSS SLOPE INFORMATION.

THE SEAL APPEARING ON THIS DOCUMENT WAS AUTHORIZED BY JOHN M PEREZ, P.E. 66425 ON 06/20/2003.

STATE OF TEXAS
JOHN M. PEREZ
66425
REGISTERED PROFESSIONAL ENGINEER

6/20/03

Parsons Brinckerhoff Quade & Douglas Inc.

Texas Department of Transportation

© 2003 by TxDOT

TRAFFIC CONTROL PHASING TYPICAL SECTION

PHASE III - STEP 1B & 1C CONSTRUCTION

SCALE: NTS

SHEET 4 OF 12				281TYP22.DGN	
DESIGNED: PAF	FED. RD DIV. No.	STATE	FEDERAL AID PROJECT No.		HIGHWAY No.
CHECKED: JP	6	TEXAS			US 281
DRAWN: RLJ	STATE DISTRICT	COUNTY	CONTROL No.	SECTION No.	JOB No.	SHEET No.
CHECKED: JDH	PHARR	HIDALGO	0255	08	091	109

NAME 10:49:23 AM 06/20/2003
h:\22322a\cadd\sheets\traffic\tcp\typ\281typ22.dgn

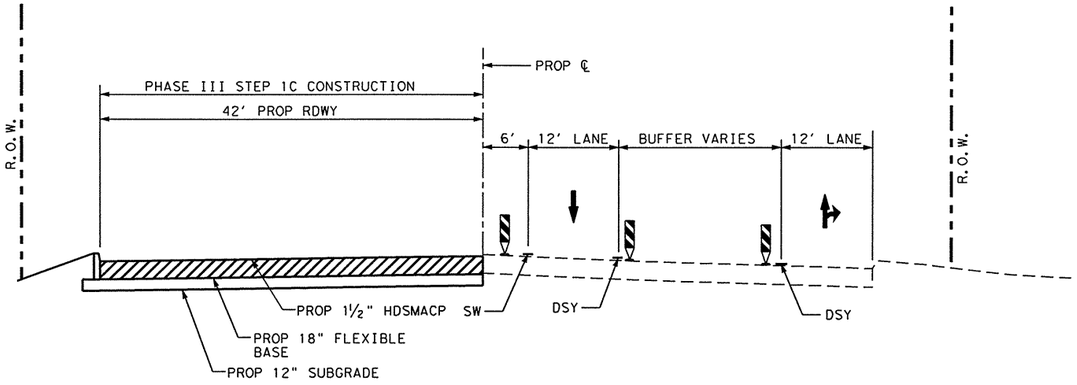

PHASE III STEP 1C TYPICAL SECTION

TEXAS 495 STA 14+00.00

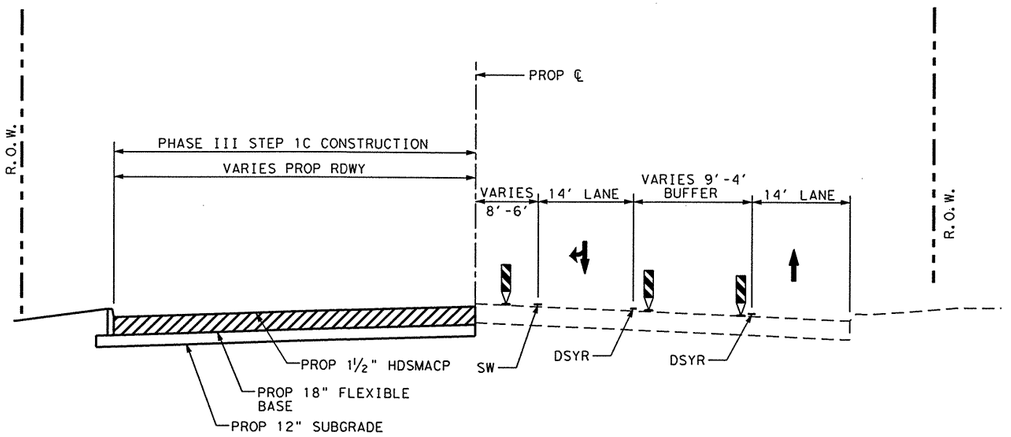

PHASE III STEP 1C TYPICAL SECTION

TEXAS 495 STA 20+00.00

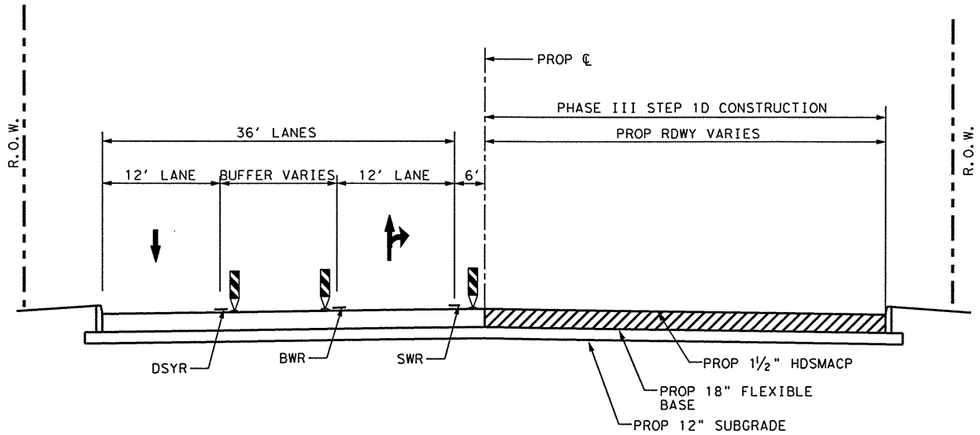

PHASE III STEP 1D TYPICAL SECTION

TEXAS 495 STA 14+00.00

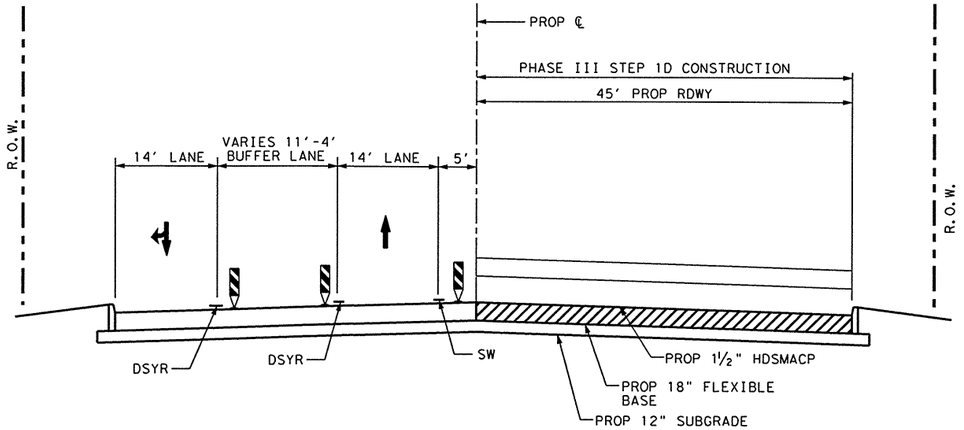

PHASE III STEP 1D TYPICAL SECTION

TEXAS 495 STA 20+00.00

△ THE CONTRACTOR SHALL REGRADE DITCHES TO MAINTAIN THE EXISTING DRAINAGE PATTERNS AND REMOVE/RELAY OR EXTEND EXISTING DRAINAGE STRUCTURES AS NEEDED. THIS WORK SHALL BE CONSIDERED SUBSIDIARY TO THE VARIOUS BID ITEMS OF THIS CONTRACT

NOTE:
SEE PROPOSED TYPICAL SECTIONS FOR CROSS SLOPE INFORMATION.

THE SEAL APPEARING ON THIS DOCUMENT WAS AUTHORIZED BY JOHN M PEREZ, P.E. 66425 ON 06/20/2003.

STATE OF TEXAS
JOHN M. PEREZ
66425
REGISTERED PROFESSIONAL ENGINEER

6/20/03

Parsons Brinckerhoff Quade & Douglas Inc.

Texas Department of Transportation

© 2003 by TxDOT

TRAFFIC CONTROL PHASING TYPICAL SECTION

PHASE III - SH 495
STEP 1C & 1D CONSTRUCTION

SCALE: NTS

SHEET 5 OF 12				281TYP23.DGN	
DESIGNED: PAF	FED. RD DIV. No.	STATE	FEDERAL AID PROJECT No.		HIGHWAY No.
CHECKED: JP	6	TEXAS			US 281
DRAWN: RLJ	STATE DISTRICT	COUNTY	CONTROL No.	SECTION No.	JOB No. / SHEET No.
CHECKED: JDH	PHARR	HIDALGO	0255	08	091 / 110

NAME
10:49:24 AM
06/20/2003
h:\22322g\cadd\sheets\traffic\tcp\typ\281typ23.dgn

NAME
10:49:26 AM
06/20/2003

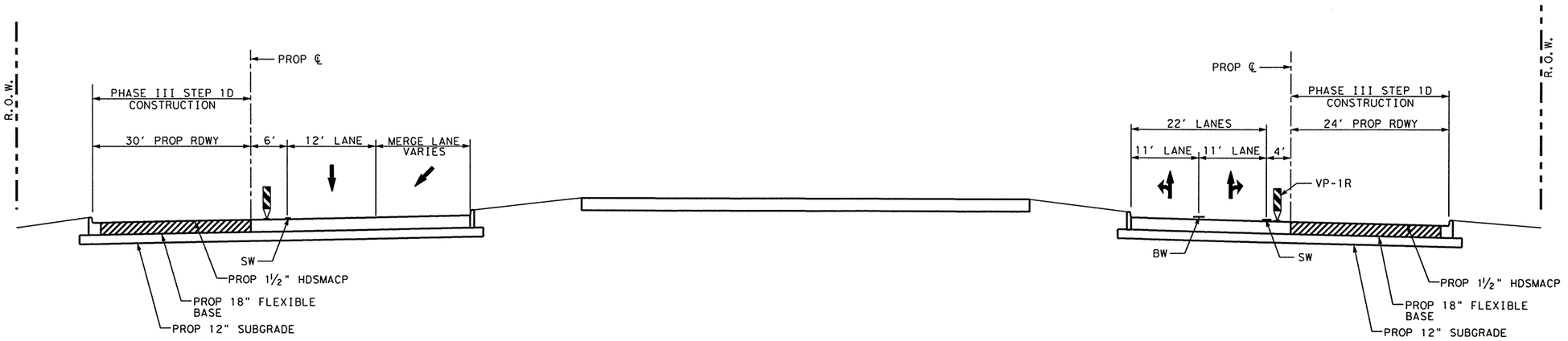

PHASE III STEP 1D TYPICAL SECTION

FRONTAGE ROAD STA 849+00.00

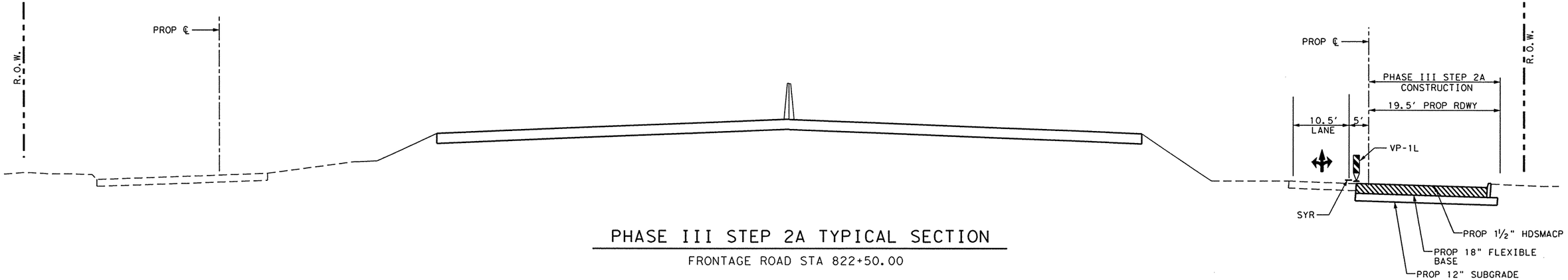

PHASE III STEP 2A TYPICAL SECTION

FRONTAGE ROAD STA 822+50.00

△ THE CONTRACTOR SHALL REGRADE DITCHES TO MAINTAIN THE EXISTING DRAINAGE PATTERNS AND REMOVE/RELAY OR EXTEND EXISTING DRAINAGE STRUCTURES AS NEEDED. THIS WORK SHALL BE CONSIDERED SUBSIDIARY TO THE VARIOUS BID ITEMS OF THIS CONTRACT

NOTE:
SEE PROPOSED TYPICAL SECTIONS FOR CROSS SLOPE INFORMATION.

THE SEAL APPEARING ON THIS DOCUMENT WAS AUTHORIZED BY JOHN M PEREZ, P.E. 66425 ON 06/20/2003.

STATE OF TEXAS
JOHN M. PEREZ
66425
REGISTERED PROFESSIONAL ENGINEER

John M. Perez
6/20/03

Parsons Brinckerhoff Quade & Douglas Inc.

Texas Department of Transportation

© 2003 by TxDOT

TRAFFIC CONTROL PHASING TYPICAL SECTION

PHASE III - STEP 1D & 2A CONSTRUCTION

SCALE: NTS

SHEET 6 OF 12				281TYP24.DGN			
DESIGNED: PAF	FED. RD DIV. No.	STATE	FEDERAL AID PROJECT No.			HIGHWAY No.	
CHECKED: JP	6	TEXAS				US 281	
DRAWN: RLJ	STATE DISTRICT	COUNTY	CONTROL No.	SECTION No.	JOB No.	SHEET No.	
CHECKED: JDH	PHARR	HIDALGO	0255	08	091	111	

h:\22322a\cadd\sheets\traffic\tcp\typ\281typ24.dgn

NAME
10:49:27 AM
06/20/2003
h:\22322e\cadd\sheets\traffic\tcp\typ\281typ25.dgn

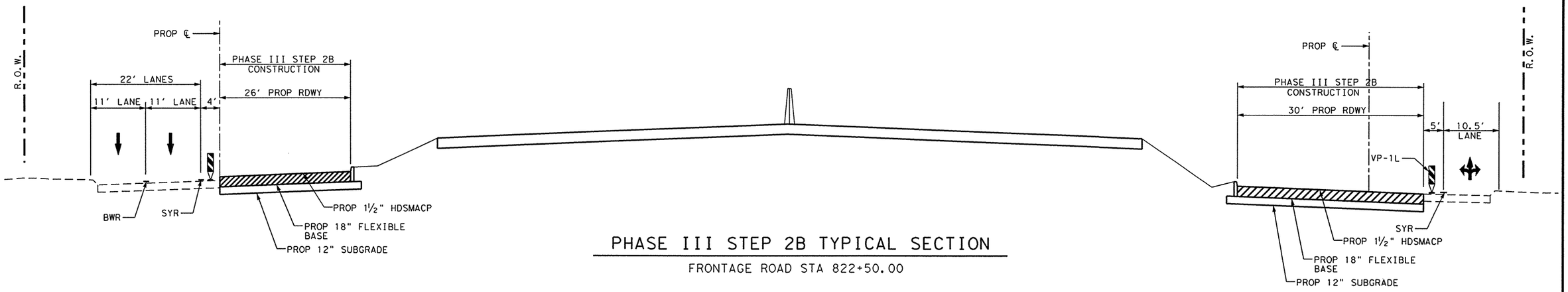

PHASE III STEP 2B TYPICAL SECTION

FRONTAGE ROAD STA 822+50.00

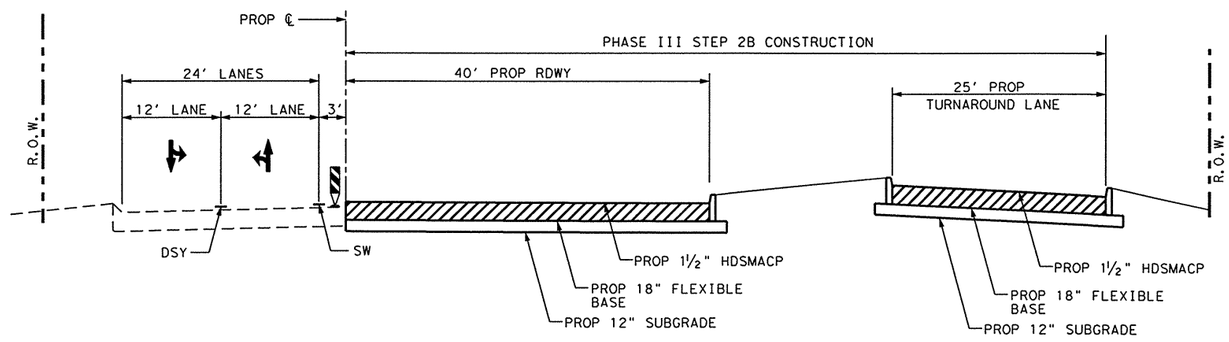

PHASE III STEP 2B TYPICAL SECTION

SIOUX RD STA 16+17.00 TO STA 19+68.00

△ THE CONTRACTOR SHALL REGRADE DITCHES TO MAINTAIN THE EXISTING DRAINAGE PATTERNS AND REMOVE/RELAY OR EXTEND EXISTING DRAINAGE STRUCTURES AS NEEDED. THIS WORK SHALL BE CONSIDERED SUBSIDIARY TO THE VARIOUS BID ITEMS OF THIS CONTRACT

NOTE:
SEE PROPOSED TYPICAL SECTIONS FOR CROSS SLOPE INFORMATION.

THE SEAL APPEARING ON THIS DOCUMENT WAS AUTHORIZED BY JOHN M PEREZ, P.E. 66425 ON 06/20/2003.

STATE OF TEXAS
JOHN M. PEREZ
66425
REGISTERED PROFESSIONAL ENGINEER

6/20/03

Parsons Brinckerhoff Quade & Douglas Inc.

Texas Department of Transportation

© 2003 by TxDOT

TRAFFIC CONTROL PHASING TYPICAL SECTION

PHASE III - SIOUX
STEP 2B CONSTRUCTION

SCALE: NTS

SHEET 7 OF 12				281TYP25.DGN			
DESIGNED: PAF	FED. RD DIV. No.	STATE	FEDERAL AID PROJECT No.				HIGHWAY No.
CHECKED: JP	6	TEXAS					US 281
DRAWN: RLJ	STATE DISTRICT	COUNTY	CONTROL No.	SECTION No.	JOB No.	SHEET No.	
CHECKED: JDH	PHARR	HIDALGO	0255	08	091	112	

NAME
10:49:29 AM
06/20/2003

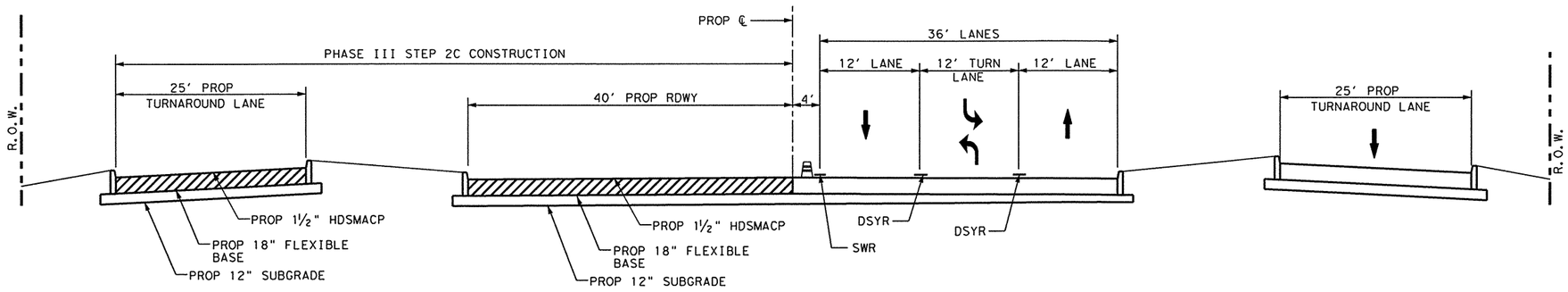

PHASE III STEP 2C & 3B TYPICAL SECTION

SIOUX RD STA 16+17.00 TO STA 19+68.00
NOLANA LOOP STA 15+83.00 TO STA 19+34.00

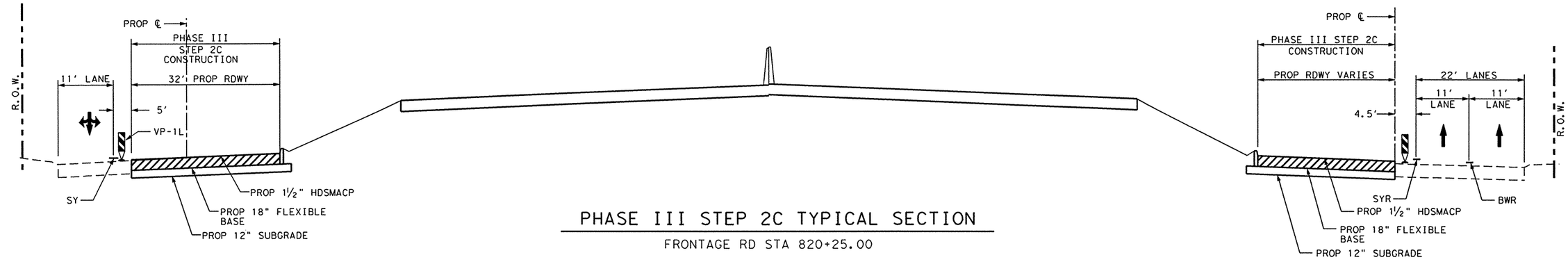

PHASE III STEP 2C TYPICAL SECTION

FRONTAGE RD STA 820+25.00

△ THE CONTRACTOR SHALL REGRADE DITCHES TO MAINTAIN THE EXISTING DRAINAGE PATTERNS AND REMOVE/RELAY OR EXTEND EXISTING DRAINAGE STRUCTURES AS NEEDED. THIS WORK SHALL BE CONSIDERED SUBSIDIARY TO THE VARIOUS BID ITEMS OF THIS CONTRACT

NOTE:
SEE PROPOSED TYPICAL SECTIONS FOR CROSS SLOPE INFORMATION.

THE SEAL APPEARING ON THIS DOCUMENT WAS AUTHORIZED BY JOHN M PEREZ, P.E. 66425 ON 06/20/2003.

STATE OF TEXAS
JOHN M. PEREZ
66425
REGISTERED PROFESSIONAL ENGINEER

6/20/03

Parsons Brinckerhoff Quade & Douglas Inc.

Texas Department of Transportation

© 2003 by TxDOT

TRAFFIC CONTROL PHASING TYPICAL SECTION

PHASE III - SIOUX
STEP 2C CONSTRUCTION

SCALE: NTS

SHEET 8 OF 12				281TYP26.DGN			
DESIGNED: PAF	FED. RD DIV. No.	STATE	FEDERAL AID PROJECT No.				HIGHWAY No.
CHECKED: JP	6	TEXAS					US 281
DRAWN: RLJ	STATE DISTRICT	COUNTY	CONTROL No.	SECTION No.	JOB No.	SHEET No.	
CHECKED: JDH	PHARR	HIDALGO	0255	08	091	113	

h:\22322a\cadd\sheets\traffic\top\typ\281typ26.dgn

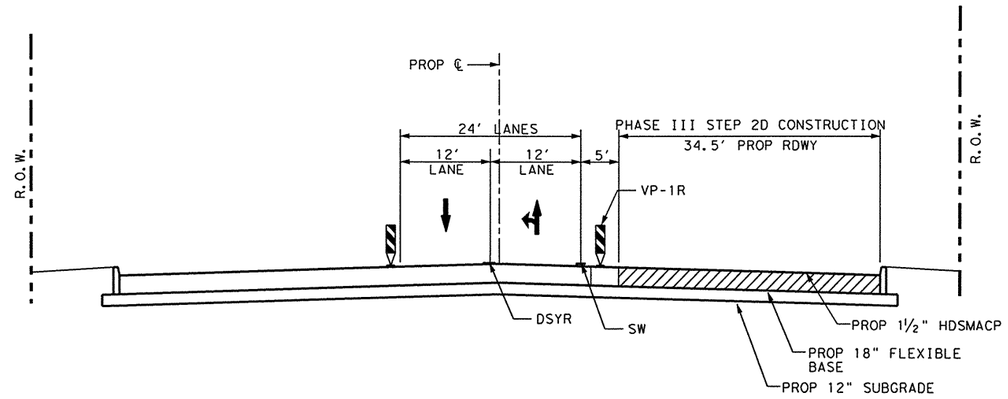

PHASE III STEP 2D TYPICAL SECTION

SIOUX RD STA 15+00.00

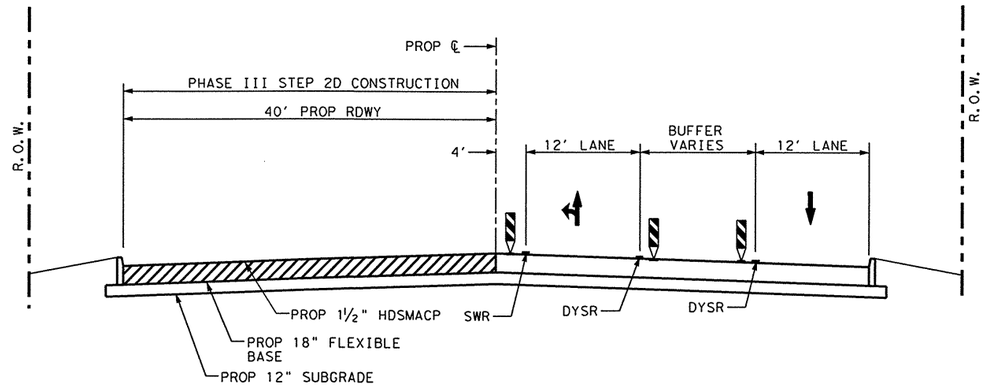

PHASE III STEP 2D TYPICAL SECTION

SIOUX RD STA 21+00.00

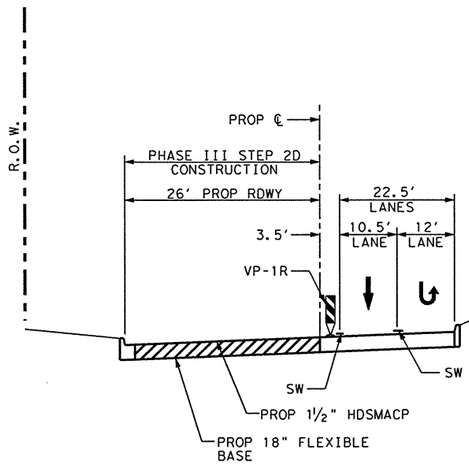

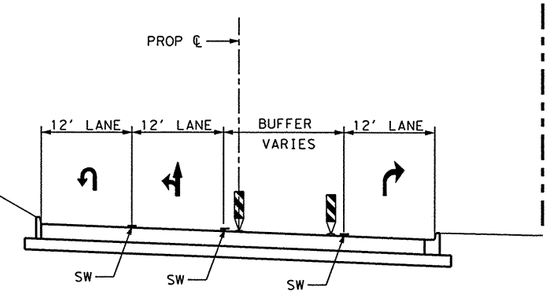

PHASE III STEP 2D TYPICAL SECTION

FRONTAGE RD STA 820+25.00

△ THE CONTRACTOR SHALL REGRADE DITCHES TO MAINTAIN THE EXISTING DRAINAGE PATTERNS AND REMOVE/RELAY OR EXTEND EXISTING DRAINAGE STRUCTURES AS NEEDED. THIS WORK SHALL BE CONSIDERED SUBSIDIARY TO THE VARIOUS BID ITEMS OF THIS CONTRACT

NOTE:
SEE PROPOSED TYPICAL SECTIONS FOR CROSS SLOPE INFORMATION.

THE SEAL APPEARING ON THIS DOCUMENT WAS AUTHORIZED BY JOHN M PEREZ, P.E. 66425 ON 06/20/2003.

STATE OF TEXAS
JOHN M. PEREZ
66425
REGISTERED PROFESSIONAL ENGINEER

6/20/03

Parsons Brinckerhoff Quade & Douglas Inc.

Texas Department of Transportation

© 2003 by TxDOT

TRAFFIC CONTROL PHASING TYPICAL SECTION

PHASE III - SIOUX
STEP 2D CONSTRUCTION

SCALE: NTS

SHEET 9 OF 12 | 281TYP27.DGN

DESIGNED: PAF	FED. RD DIV. No.	STATE	FEDERAL AID PROJECT No.				HIGHWAY No.
CHECKED: JP	6	TEXAS					US 281
DRAWN: RLJ	STATE DISTRICT	COUNTY	CONTROL No.	SECTION No.	JOB No.	SHEET No.	
CHECKED: JDH	PHARR	HIDALGO	0255	08	091	114	

NAME
10:49:30 AM
06/20/2003
h:\22322a\cadd\sheets\traffic\tcp\typ\281typ27.dgn

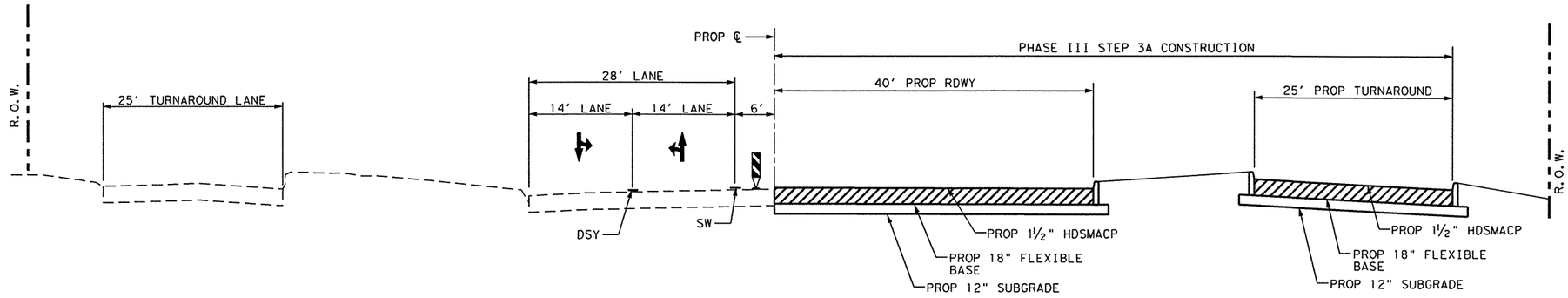

PHASE III STEP 3A TYPICAL SECTION

NOLANA LOOP STA 15+83.00 TO STA 19+34.00

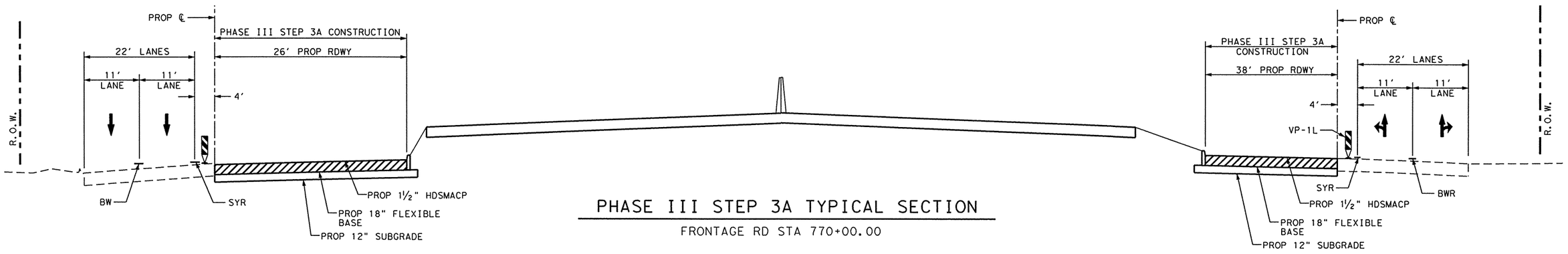

PHASE III STEP 3A TYPICAL SECTION

FRONTAGE RD STA 770+00.00

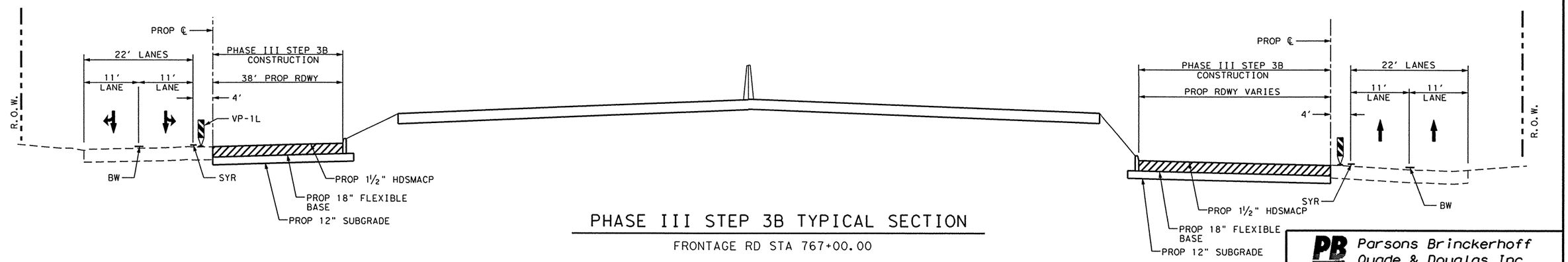

PHASE III STEP 3B TYPICAL SECTION

FRONTAGE RD STA 767+00.00

△ THE CONTRACTOR SHALL REGRADE DITCHES TO MAINTAIN THE EXISTING DRAINAGE PATTERNS AND REMOVE/RELAY OR EXTEND EXISTING DRAINAGE STRUCTURES AS NEEDED. THIS WORK SHALL BE CONSIDERED SUBSIDIARY TO THE VARIOUS BID ITEMS OF THIS CONTRACT

NOTE:
SEE PROPOSED TYPICAL SECTIONS FOR CROSS SLOPE INFORMATION.

THE SEAL APPEARING ON THIS DOCUMENT WAS AUTHORIZED BY JOHN M PEREZ, P.E. 66425 ON 06/20/2003.

STATE OF TEXAS
JOHN M. PEREZ
66425
REGISTERED PROFESSIONAL ENGINEER

6/20/03

Parsons Brinckerhoff Quade & Douglas Inc.

Texas Department of Transportation

© 2003 by TxDOT

TRAFFIC CONTROL PHASING TYPICAL SECTION

PHASE III - NOLANA LOOP
STEP 3A & 3B CONSTRUCTION

SCALE: NTS

SHEET 10 OF 12				281TYP28.DGN	
DESIGNED: PAF	FED. RD DIV. No.	STATE	FEDERAL AID PROJECT No.		HIGHWAY No.
CHECKED: JP	6	TEXAS			US 281
DRAWN: RLJ	STATE DISTRICT	COUNTY	CONTROL No.	SECTION No.	JOB No.	SHEET No.
CHECKED: JDH	PHARR	HIDALGO	0255	08	091	115

NAME
10:49:32 AM
06/20/2003
h:\22322e\cadd\sheets\traffic\tcp\typ\281typ28.dgn

NAME
10:49:33 AM
06/20/2003
h:\22322a\cadd\sheets\traffic\tcp\typ\281typ29.dgn

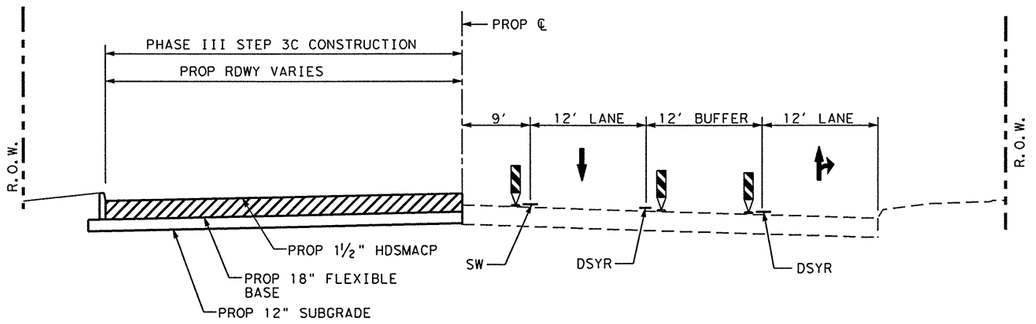

PHASE III STEP 3C TYPICAL SECTION

NOLANA LOOP STA 14+00.00

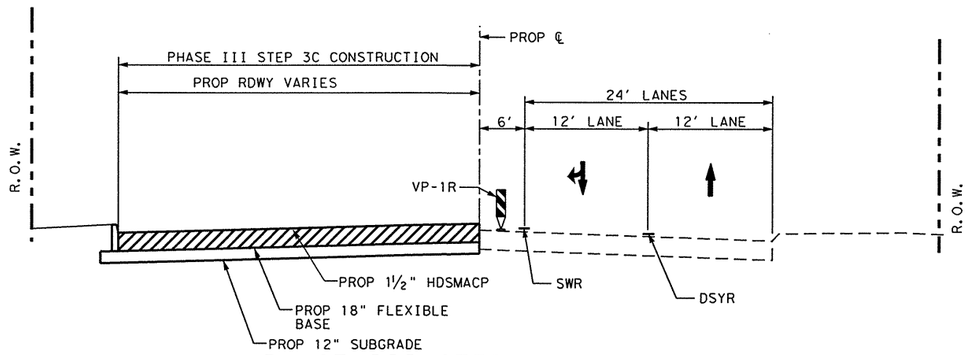

PHASE III STEP 3C TYPICAL SECTION

NOLANA LOOP STA 21+00.00

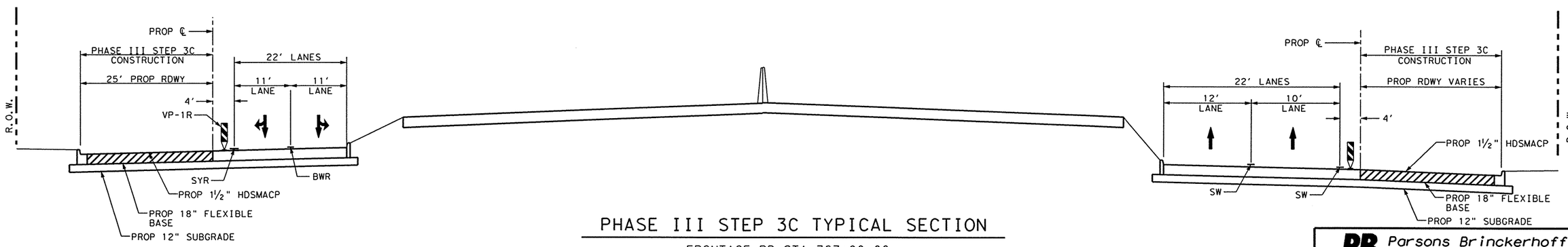

PHASE III STEP 3C TYPICAL SECTION

FRONTAGE RD STA 767+00.00

△ THE CONTRACTOR SHALL REGRADE DITCHES TO MAINTAIN THE EXISTING DRAINAGE PATTERNS AND REMOVE/RELAY OR EXTEND EXISTING DRAINAGE STRUCTURES AS NEEDED. THIS WORK SHALL BE CONSIDERED SUBSIDIARY TO THE VARIOUS BID ITEMS OF THIS CONTRACT

NOTE:
SEE PROPOSED TYPICAL SECTIONS FOR CROSS SLOPE INFORMATION.

THE SEAL APPEARING ON THIS DOCUMENT WAS AUTHORIZED BY JOHN M PEREZ, P.E. 66425 ON 06/20/2003.

STATE OF TEXAS
JOHN M. PEREZ
66425
REGISTERED PROFESSIONAL ENGINEER

John M. Perez
6/20/03

Parsons Brinckerhoff Quade & Douglas Inc.

Texas Department of Transportation

© 2003 by TxDOT

TRAFFIC CONTROL PHASING TYPICAL SECTION

PHASE III - NOLANA LOOP
STEP 3C CONSTRUCTION

SCALE: NTS

SHEET 11 OF 12 | 281TYP29.DGN

DESIGNED: PAF	FED. RD DIV. NO.	STATE	FEDERAL AID PROJECT No.				HIGHWAY No.
CHECKED: JP	6	TEXAS					US 281
DRAWN: RLJ	STATE DISTRICT	COUNTY	CONTROL No.	SECTION No.	JOB No.	SHEET No.	
CHECKED: JDH	PHARR	HIDALGO	0255	08	091	116	

NAME
10:49:35 AM
06/20/2003
h:\22322a\cadd\sheets\traffic\tcp\typ\281typ30.dgn

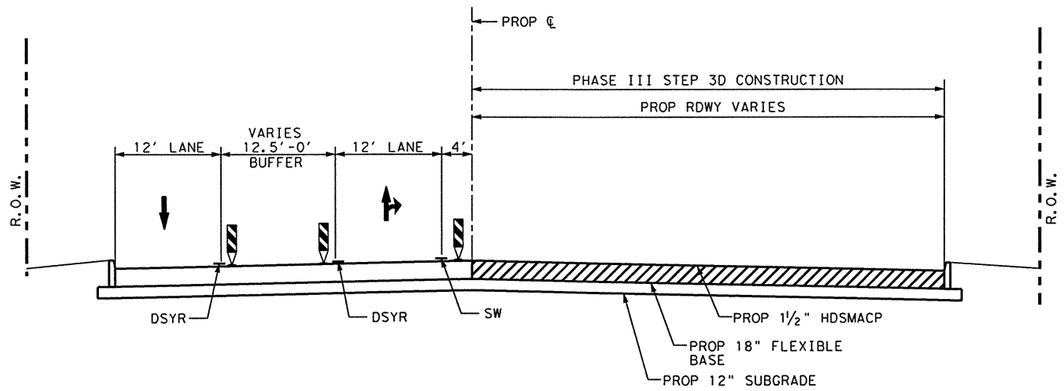

PHASE III STEP 3D TYPICAL SECTION

NOLANA LOOP STA 14+00.00

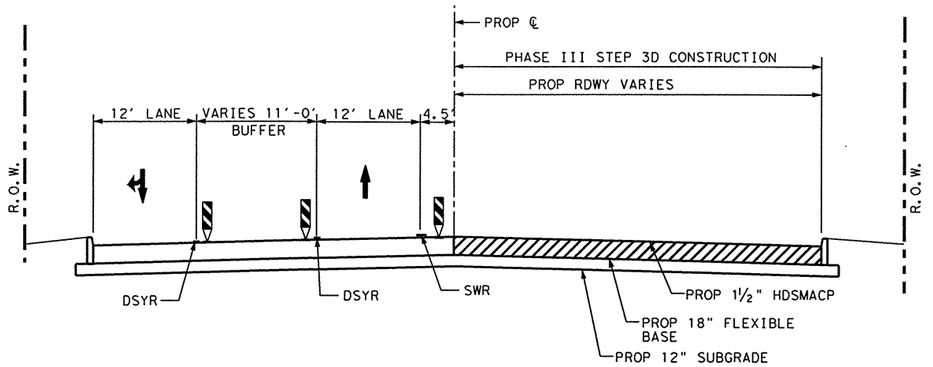

PHASE III STEP 3D TYPICAL SECTION

NOLANA LOOP STA 21+00.00

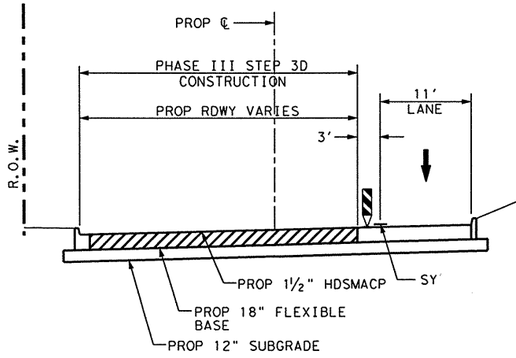

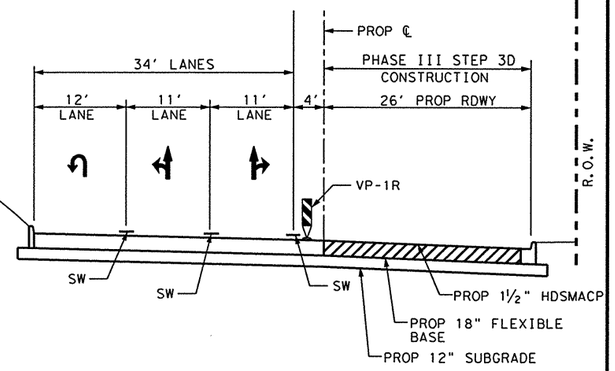

PHASE III STEP 3D TYPICAL SECTION

FRONTAGE RD STA 770+00.00

△ THE CONTRACTOR SHALL REGRADE DITCHES TO MAINTAIN THE EXISTING DRAINAGE PATTERNS AND REMOVE/RELAY OR EXTEND EXISTING DRAINAGE STRUCTURES AS NEEDED. THIS WORK SHALL BE CONSIDERED SUBSIDIARY TO THE VARIOUS BID ITEMS OF THIS CONTRACT

NOTE:
SEE PROPOSED TYPICAL SECTIONS FOR CROSS SLOPE INFORMATION.

THE SEAL APPEARING ON THIS DOCUMENT WAS AUTHORIZED BY JOHN M PEREZ, P.E. 66425 ON 06/20/2003.

STATE OF TEXAS
JOHN M. PEREZ
66425
REGISTERED PROFESSIONAL ENGINEER

John M. Perez
6/20/03

Parsons Brinckerhoff Quade & Douglas Inc.

Texas Department of Transportation

© 2003 by TxDOT

TRAFFIC CONTROL PHASING TYPICAL SECTION

PHASE III - NOLANA LOOP
STEP 3D CONSTRUCTION

SCALE: NTS

SHEET 12 OF 12 | 281TYP30.DGN

DESIGNED: PAF	FED. RD DIV. No.	STATE	FEDERAL AID PROJECT No.				HIGHWAY No.
CHECKED: JP	6	TEXAS					US 281
DRAWN: RLJ	STATE DISTRICT	COUNTY	CONTROL No.	SECTION No.	JOB No.	SHEET No.	
CHECKED: JDH	PHARR	HIDALGO	0255	08	091	117	

NAME

10:54:10 AM

06/20/2003

h:\223220\cadd\sheets\traffic\tcp\281seqiiilayout01.dgn

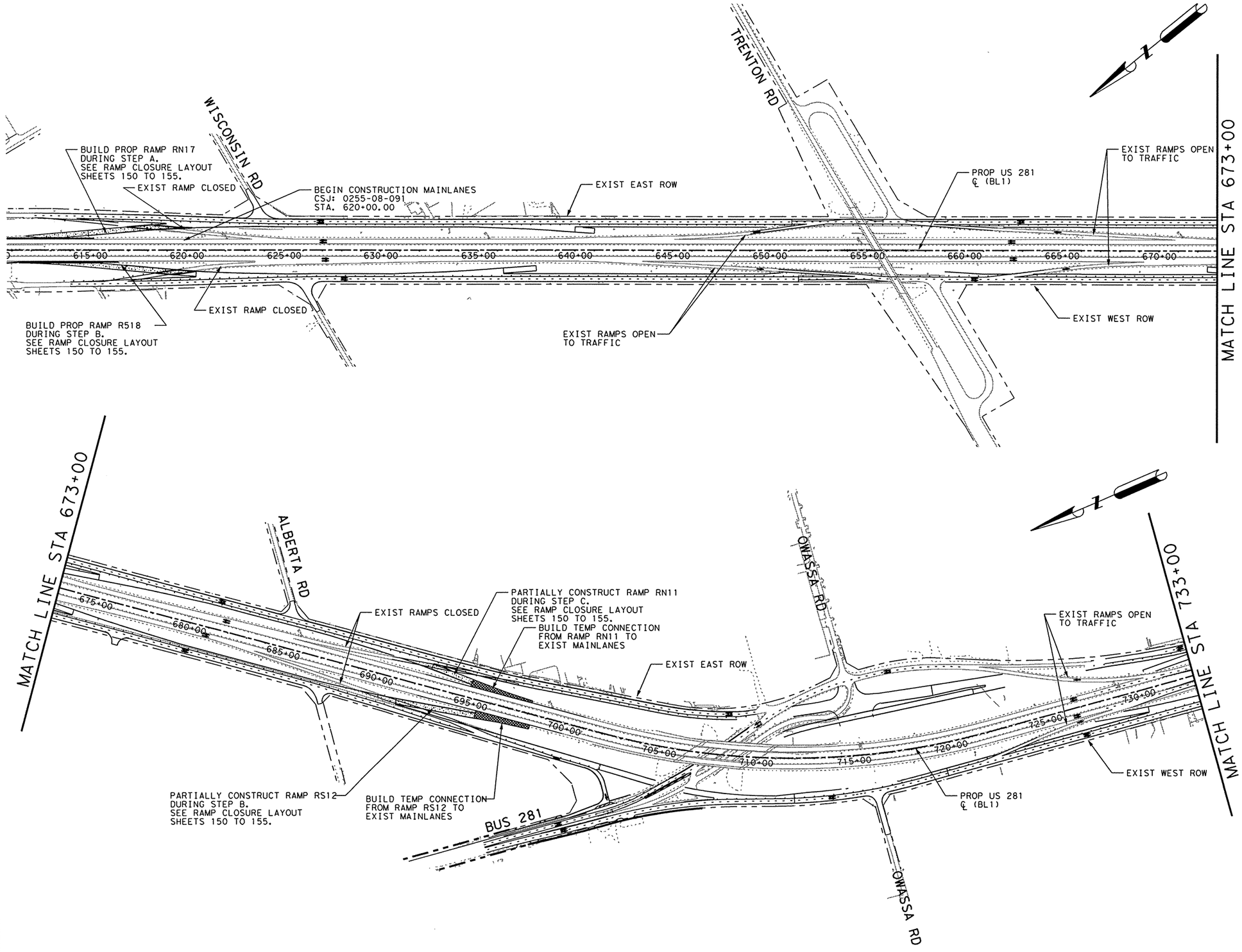

LEGEND:

- TEMP PAV CONSTRUCTED PREVIOUS PHASE
- TEMP PAV CONSTRUCTED THIS PHASE
- PROP CONSTRUCTION THIS PHASE
- PROP CONSTRUCTION PREVIOUS PHASE
- EXISTING TO BE REMOVED
- DIRECTIONAL ARROW

THE SEAL APPEARING ON THIS DOCUMENT WAS AUTHORIZED BY JOHN M PEREZ, P.E. 66425 ON 06/20/2003.

STATE OF TEXAS
JOHN M. PEREZ
66425
REGISTERED PROFESSIONAL ENGINEER

6/20/03

Parsons Brinckerhoff Quade & Douglas Inc.

Texas Department of Transportation

© 2003 by TxDOT

US 281
TRAFFIC CONTROL LAYOUT
PHASE III
BEGIN PROJECT TO END PROJECT

PLAN 1"= 500' HORIZ

SHEET 1 OF 2 | 281SEQIIILAYOUT01.DGN

DESIGNED: PAF	FED. RD DIV. NO.	STATE	FEDERAL AID PROJECT No.			HIGHWAY No.
CHECKED: JP	6	TEXAS				US 281
DRAWN: KTD	STATE DISTRICT	COUNTY	CONTROL No.	SECTION No.	JOB No.	SHEET No.
CHECKED: JDH	PHARR	HIDALGO	0255	08	091	118

NAME
10:54:21 AM
06/20/2003

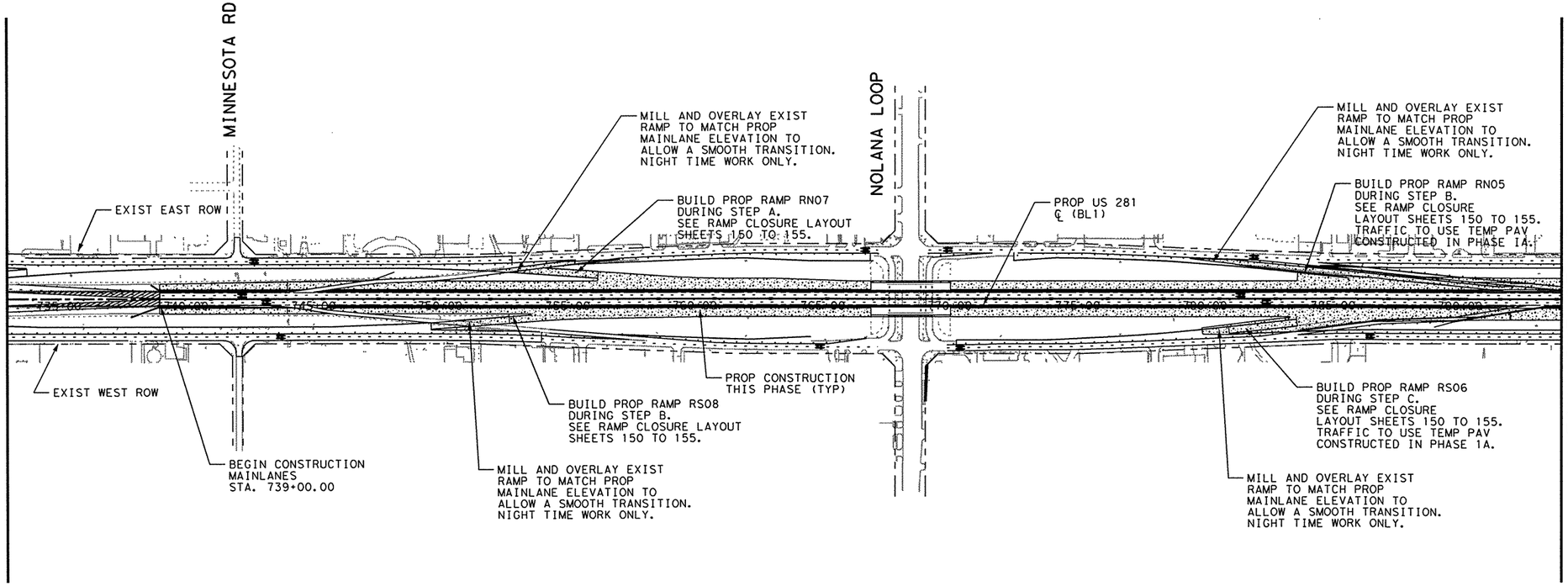

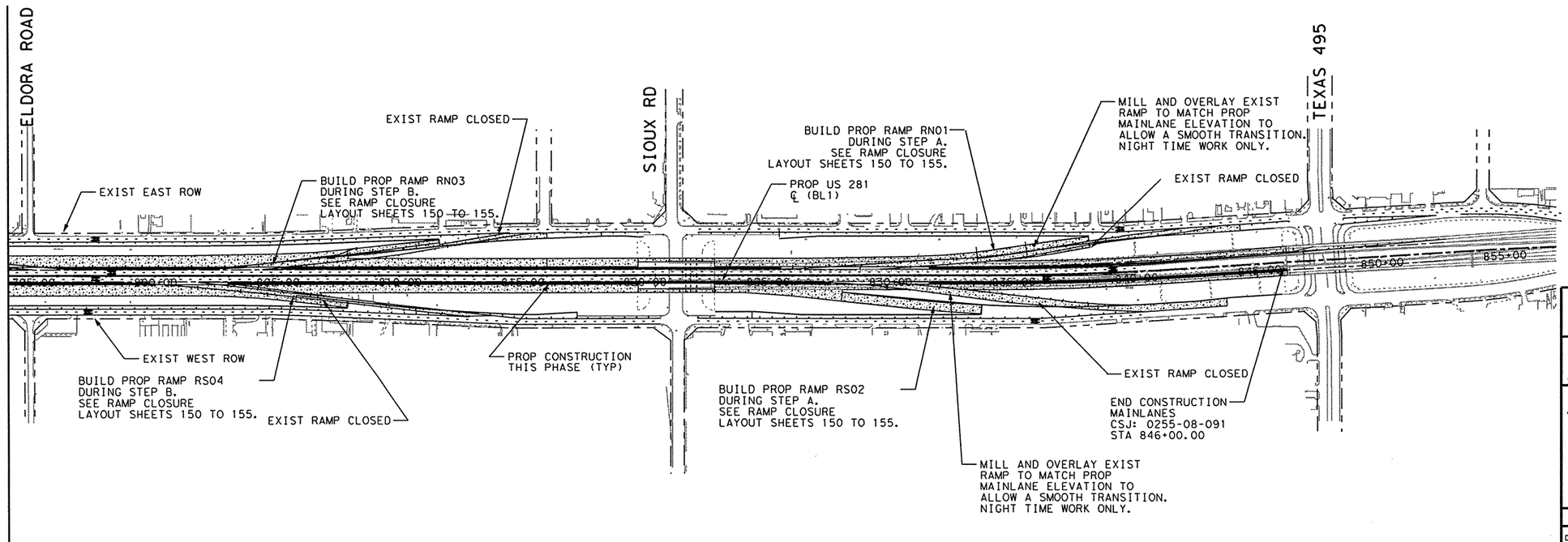

LEGEND:

- TEMP PAV CONSTRUCTED PREVIOUS PHASE
- TEMP PAV CONSTRUCTED THIS PHASE
- PROP CONSTRUCTION THIS PHASE
- PROP CONSTRUCTION PREVIOUS PHASE
- EXISTING TO BE REMOVED
- DIRECTIONAL ARROW

NOTES:

SEE PHASE III STEPS 1A THRU 1D FOR CONSTRUCTION OF SH495.

SEE PHASE III STEPS 2A THRU 2E FOR CONSTRUCTION OF SIOUX RD.

SEE PHASE III STEPS 3A THRU 3D FOR CONSTRUCTION OF NOLANA LOOP.

THE SEAL APPEARING ON THIS DOCUMENT WAS AUTHORIZED BY JOHN M PEREZ, P.E. 66425 ON 06/20/2003.

STATE OF TEXAS · JOHN M. PEREZ · 66425 · REGISTERED PROFESSIONAL ENGINEER

6/20/03

Parsons Brinckerhoff Quade & Douglas Inc.

Texas Department of Transportation

© 2003 by TxDOT

US 281
TRAFFIC CONTROL LAYOUT
PHASE III
BEGIN PROJECT TO END PROJECT

PLAN 1"= 500' HORIZ

SHEET 2 OF 2 | 281SEQIIILAYOUT02.DGN

DESIGNED: PAF	FED. RD DIV. No.	STATE	FEDERAL AID PROJECT No.			HIGHWAY No.
CHECKED: JP	6	TEXAS				US 281
DRAWN: KTD	STATE DISTRICT	COUNTY	CONTROL No.	SECTION No.	JOB No.	SHEET No.
CHECKED: JDH	PHARR	HIDALGO	0255	08	091	119

h:\22322a\cadd\sheets\traffic\tcp\281seqiiilayout02.dgn

NAME
11:10:35 AM
06/20/2003
h:\22322o\cadd\sheets\traffic\tcp\281seqiii01.dgn

WORK ZONE / TRAFFIC FINES DOUBLE / WHEN WORKERS ARE PRESENT — EG20-9 / ER20-5 / ER20-5 PLAQUE — 1

ROAD WORK AHEAD — CW20-1D — 2

REDUCED SPEED AHEAD — ER2-5A — 3

SPEED LIMIT 50 — ER2-1 — 4

SPEED LIMIT 40 — ER2-1 — 4A

SG20-5T
BEGIN ROAD WORK NEXT X MILES
NAME
ADDRESS
CITY
STATE
CONTRACTOR
SG20-6 — 5

HIGHWAY IMPROVEMENT PROJECT FUNDED BY YOUR TRANSPORTATION TAX DOLLARS
SCHEDULED COMPLETION XXXXXX XXXX
SG20-8

ECW1-4R — 6

ECW1-4L — 7

ECW4-1L — 8

END ROAD WORK — G20-2A — 9

ECW4-1R — 10

FCW4-3R — 11

ECW1-6A — 12

CW20-5L
LEFT LANE CLOSED
500 FT PLAQUE — 13

CW20-5R
RIGHT LANE CLOSED
500 FT PLAQUE — 14

ROAD WORK ⇦ NEXT X MILES — G20-1bL — 2A

ROAD WORK NEXT X MILES ⇨ — G20-1bR — 2B

NOTES:

1. SEE "MINOR STREET CLOSURE DETAIL" FOR TRAFFIC CONTROL FOR MINOR STREETS.
2. SEE TRAFFIC CONTROL PHASING TYPICAL SECTION FOR TCP ROADWAY SECTIONS.
3. FOR RAMP PHASING CONSTRUCTION SEE "RAMP CLOSURE LAYOUT" SHEETS.
4. TEMP SED CONTROL FENCE ON GRATED INLETS SHALL BE LEFT IN PLACE THROUGHOUT DURATION OF PROJECT OR AS DIRECTED BY THE ENGINEER.

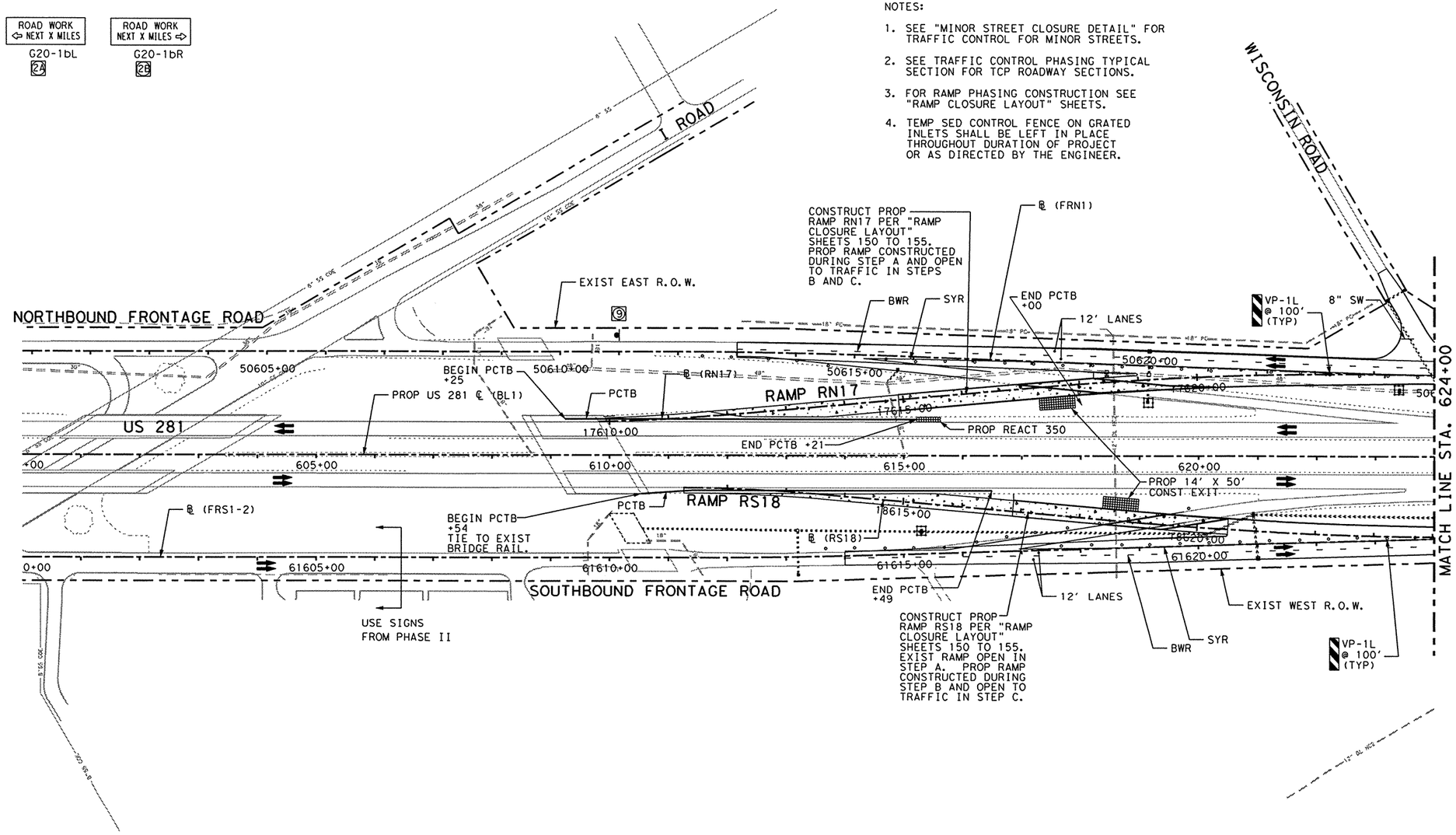

LEGEND:

- TEMP PAV CONSTRUCTED PREVIOUS PHASE
- TEMP PAV CONSTRUCTED THIS PHASE
- PROP CONSTRUCTION THIS PHASE
- PROP CONSTRUCTION PREVIOUS PHASE
- EXISTING TO BE REMOVED
- SW — SOLID WHITE (NON-REMOVABLE)
- SY — SOLID YELLOW (NON-REMOVABLE)
- BW — BROKEN WHITE (NON-REMOVABLE)
- DSY — DOUBLE SOLID YELLOW (NON-REMOVABLE)
- SWR — SOLID WHITE (REMOVABLE)
- SYR — SOLID YELLOW (REMOVABLE)
- BWR — BROKEN WHITE (REMOVABLE)
- DSYR — DOUBLE SOLID YELLOW (REMOVABLE)
- (Y) — YELLOW GUIDE MARKS AND SHORT TERM MARKINGS
- (W) — WHITE GUIDE MARKS AND SHORT TERM MARKINGS
- CHANNELIZING DEVICES
- TEMP SED CONTROL FENCE (12' EACH SEGMENT)
- TEMP SED CONTROL FENCE (48' EACH SEGMENT)
- CONSTRUCTION EXIT (TY 2)
- PROP SIGN
- PROP TY III BARRICADE
- STRUCTURES TO BE CONSTRUCTED DURING THIS PHASE

THE SEAL APPEARING ON THIS DOCUMENT WAS AUTHORIZED BY JOHN M PEREZ, P.E. 66425 ON 06/20/2003.

STATE OF TEXAS — JOHN M. PEREZ — 66425 — REGISTERED PROFESSIONAL ENGINEER

6/20/03

ER1-2 YIELD — 15

R1-2A TO RAMP — 16

NARROW LANES AHEAD — CW20-8 — 17

FCW4-2L — 18

FCW4-2R — 19

CW20-5L LEFT LANE CLOSED 1000 FT PLAQUE — 20

CW20-5R RIGHT LANE CLOSED 1000 FT PLAQUE — 21

W3-2A — 22

E5-1 EXIT — 23

CW1-8(F) — 24, 25

SCW13-2 EXIT 45 M.P.H. — 26

G20-7 Working For You Give Us A BRAKE — 27

CW21-1T Give Us A BRAKE — 28

R11-2 ROAD CLOSED — 29

R3-20 LEFT LANE MUST TURN LEFT — 30

TEMPORARY EXIT "STREET NAME" NEXT RIGHT — 31

SEE "TEMP EXIT SIGNS FOR EXIT RAMP CLOSURES" FOR ADDITIONAL INFORMATION

Parsons Brinckerhoff Quade & Douglas Inc.

Texas Department of Transportation

© 2003 by TxDOT

US 281
TRAFFIC CONTROL PLAN
PHASE III

PLAN 1"= 200' HORIZ

SHEET 1 OF 11				281SEQIII01.DGN			
DESIGNED: PAF	FED. RD DIV. No.	STATE	FEDERAL AID PROJECT No.			HIGHWAY No.	
CHECKED: JP	6	TEXAS				US 281	
DRAWN: KTD	STATE DISTRICT	COUNTY	CONTROL No.	SECTION No.	JOB No.	SHEET No.	
CHECKED: JDH	PHARR	HIDALGO	0255	08	091	120	

NAME
11:10:49 AM
06/20/2003
h:\22322a\cadd\sheets\traffic\top\281seqiii02.dgn

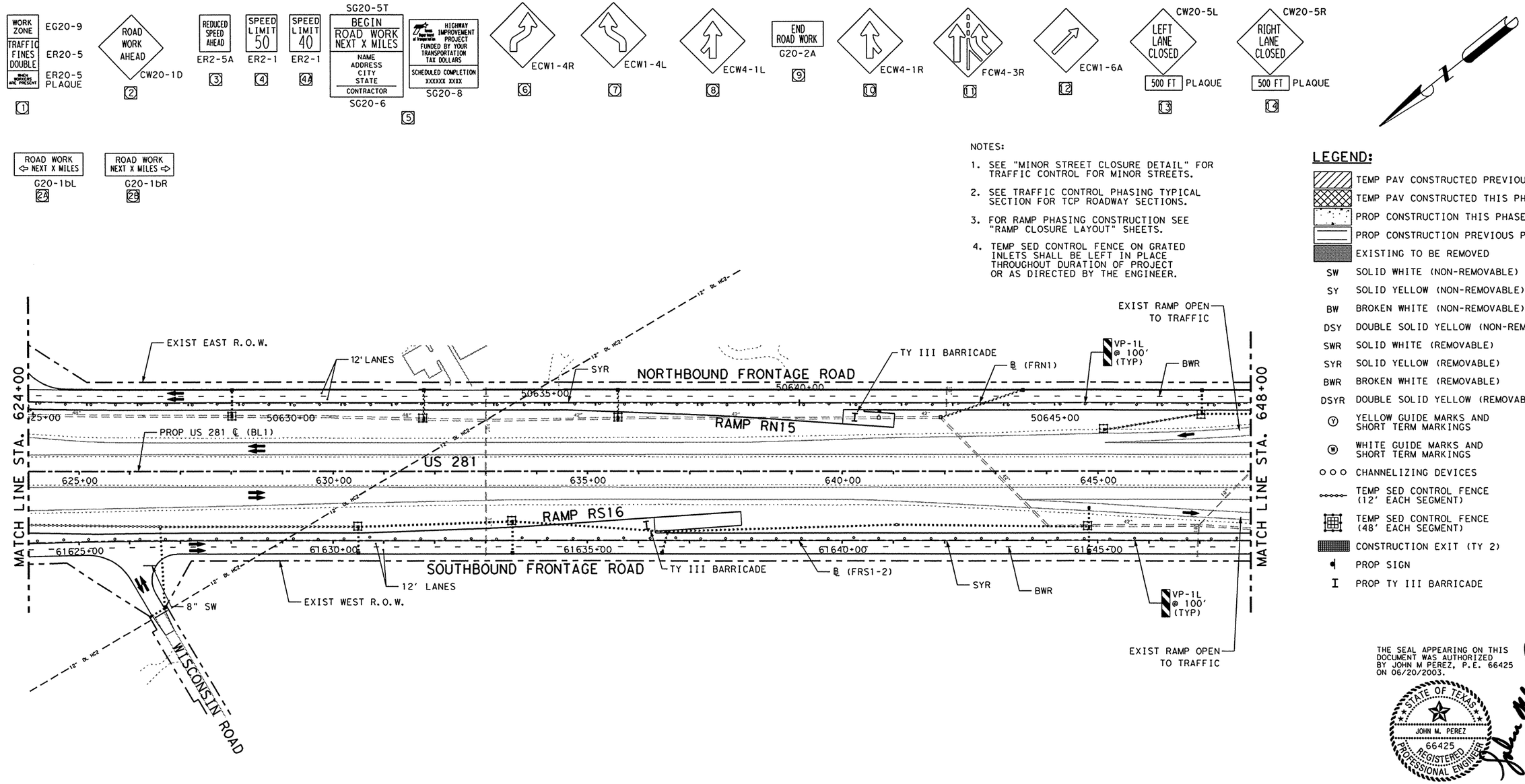

SEE "TEMP EXIT SIGNS FOR EXIT RAMP CLOSURES" FOR ADDITIONAL INFORMATION

THE SEAL APPEARING ON THIS DOCUMENT WAS AUTHORIZED BY JOHN M PEREZ, P.E. 66425 ON 06/20/2003.

STATE OF TEXAS
JOHN M. PEREZ
66425
REGISTERED PROFESSIONAL ENGINEER

6/20/03

Parsons Brinckerhoff Quade & Douglas Inc.

Texas Department of Transportation

© 2003 by TxDOT

US 281
TRAFFIC CONTROL PLAN
PHASE III

PLAN 1"= 200' HORIZ

SHEET 2 OF 11				281SEQIII02.DGN			
DESIGNED: PAF	FED. RD DIV. No.	STATE	FEDERAL AID PROJECT No.			HIGHWAY No.	
CHECKED: JP	6	TEXAS				US 281	
DRAWN: KTD	STATE DISTRICT	COUNTY	CONTROL No.	SECTION No.	JOB No.	SHEET No.	
CHECKED: JDH	PHARR	HIDALGO	0255	08	091	121	

NAME
11:11:02 AM
06/20/2003

WORK ZONE / TRAFFIC FINES DOUBLE / WHEN WORKERS ARE PRESENT — EG20-9 / ER20-5 / ER20-5 PLAQUE [1]

ROAD WORK AHEAD — CW20-1D [2]

REDUCED SPEED AHEAD — ER2-5A [3]

SPEED LIMIT 50 — ER2-1 [4]

SPEED LIMIT 40 — ER2-1 [4A]

SG20-5T
BEGIN ROAD WORK NEXT X MILES
NAME
ADDRESS
CITY
STATE
CONTRACTOR
SG20-6 [5]

HIGHWAY IMPROVEMENT PROJECT FUNDED BY YOUR TRANSPORTATION TAX DOLLARS
SCHEDULED COMPLETION XXXXX XXXX
SG20-8

ECW1-4R [6]

ECW1-4L [7]

ECW4-1L [8]

END ROAD WORK — G20-2A [9]

ECW4-1R [10]

FCW4-3R [11]

ECW1-6A [12]

CW20-5L
LEFT LANE CLOSED
500 FT PLAQUE [13]

CW20-5R
RIGHT LANE CLOSED
500 FT PLAQUE [14]

ROAD WORK ⇦ NEXT X MILES — G20-1bL [2A]

ROAD WORK NEXT X MILES ⇨ — G20-1bR [2B]

NOTES:

1. SEE "MINOR STREET CLOSURE DETAIL" FOR TRAFFIC CONTROL FOR MINOR STREETS.
2. SEE TRAFFIC CONTROL PHASING TYPICAL SECTION FOR TCP ROADWAY SECTIONS.
3. FOR RAMP PHASING CONSTRUCTION SEE "RAMP CLOSURE LAYOUT" SHEETS.
4. TEMP SED CONTROL FENCE ON GRATED INLETS SHALL BE LEFT IN PLACE THROUGHOUT DURATION OF PROJECT OR AS DIRECTED BY THE ENGINEER.

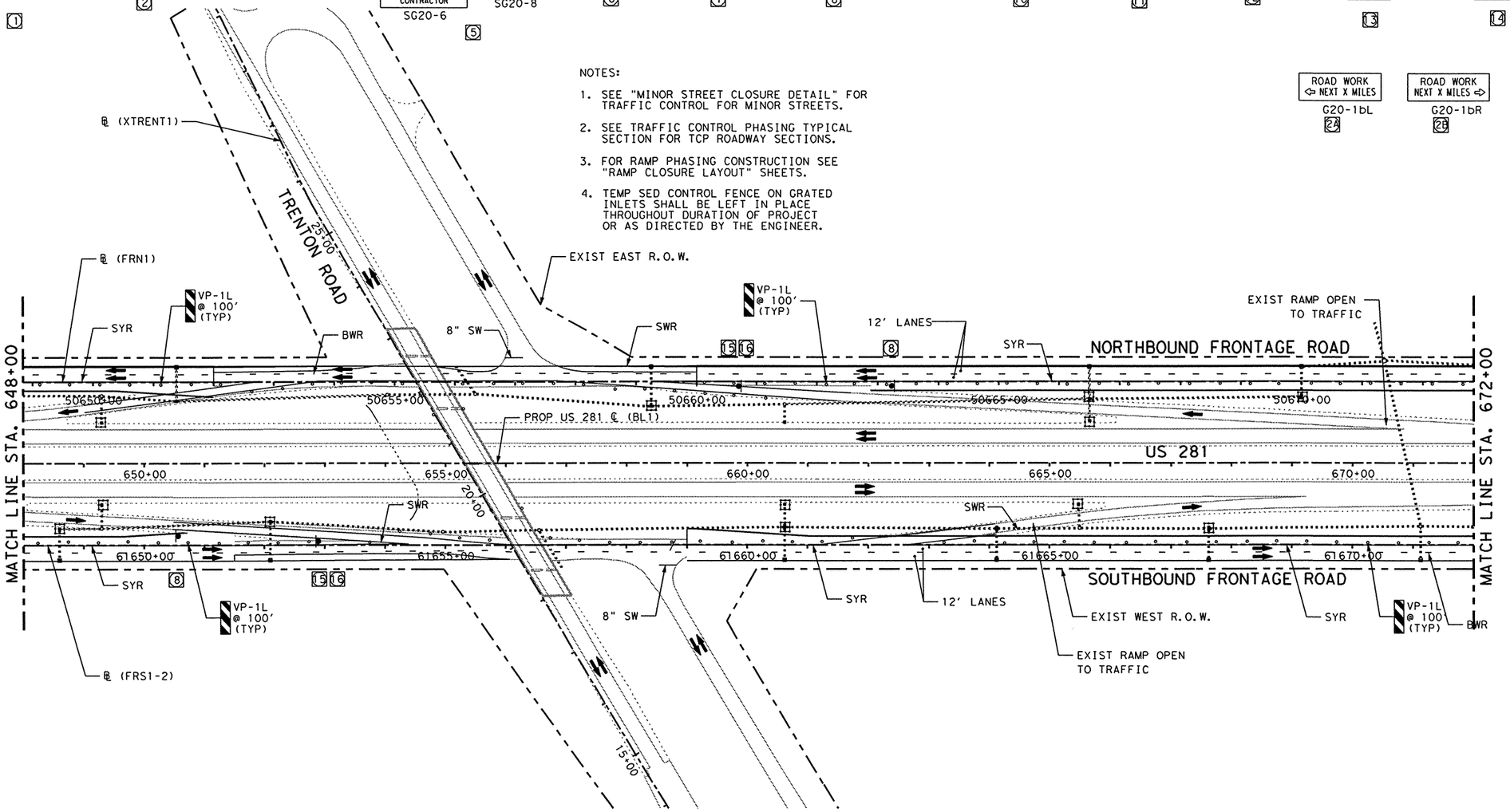

LEGEND:

- TEMP PAV CONSTRUCTED PREVIOUS PHASE
- TEMP PAV CONSTRUCTED THIS PHASE
- PROP CONSTRUCTION THIS PHASE
- PROP CONSTRUCTION PREVIOUS PHASE
- EXISTING TO BE REMOVED
- SW SOLID WHITE (NON-REMOVABLE)
- SY SOLID YELLOW (NON-REMOVABLE)
- BW BROKEN WHITE (NON-REMOVABLE)
- DSY DOUBLE SOLID YELLOW (NON-REMOVABLE)
- SWR SOLID WHITE (REMOVABLE)
- SYR SOLID YELLOW (REMOVABLE)
- BWR BROKEN WHITE (REMOVABLE)
- DSYR DOUBLE SOLID YELLOW (REMOVABLE)
- (Y) YELLOW GUIDE MARKS AND SHORT TERM MARKINGS
- (W) WHITE GUIDE MARKS AND SHORT TERM MARKINGS
- CHANNELIZING DEVICES
- TEMP SED CONTROL FENCE (12' EACH SEGMENT)
- TEMP SED CONTROL FENCE (48' EACH SEGMENT)
- CONSTRUCTION EXIT (TY 2)
- PROP SIGN
- PROP TY III BARRICADE

ER1-2 YIELD [15]

R1-2A TO RAMP [16]

NARROW LANES AHEAD — CW20-8 [17]

FCW4-2L [18]

FCW4-2R [19]

CW20-5L
LEFT LANE CLOSED
1000 FT PLAQUE [20]

CW20-5R
RIGHT LANE CLOSED
1000 FT PLAQUE [21]

W3-2A [22]

E5-1 EXIT [23]

CW1-8(F) [24] [25]

SCW13-2 EXIT 45 M.P.H. [26]

G20-7 Working For You Give Us A BRAKE [27]

CW21-1T Give Us A BRAKE [28]

R11-2 ROAD CLOSED [29]

R3-20 LEFT LANE MUST TURN LEFT [30]

TEMPORARY EXIT "STREET NAME" NEXT RIGHT [31]

SEE "TEMP EXIT SIGNS FOR EXIT RAMP CLOSURES" FOR ADDITIONAL INFORMATION

THE SEAL APPEARING ON THIS DOCUMENT WAS AUTHORIZED BY JOHN M PEREZ, P.E. 66425 ON 06/20/2003.

STATE OF TEXAS · JOHN M. PEREZ · 66425 · REGISTERED PROFESSIONAL ENGINEER

6/20/03

Parsons Brinckerhoff Quade & Douglas Inc.

Texas Department of Transportation

© 2003 by TxDOT

US 281
TRAFFIC CONTROL PLAN
PHASE III

PLAN 1"= 200' HORIZ

SHEET 3 OF 11 | 281SEQIII03.DGN

DESIGNED: PAF	FED. RD DIV. No.	STATE	FEDERAL AID PROJECT No.			HIGHWAY No.	
CHECKED: JP	6	TEXAS				US 281	
DRAWN: KTD	STATE DISTRICT	COUNTY	CONTROL No.	SECTION No.	JOB No.	SHEET No.	
CHECKED: JDH	PHARR	HIDALGO	0255	08	091	122	

h:\22322a\cadd\sheets\traffic\tcp\281seqiii03.dgn

NAME
11:11:14 AM
06/20/2003
h:\22322a\cadd\sheets\traffic\tcp\281seqiii04.dgn

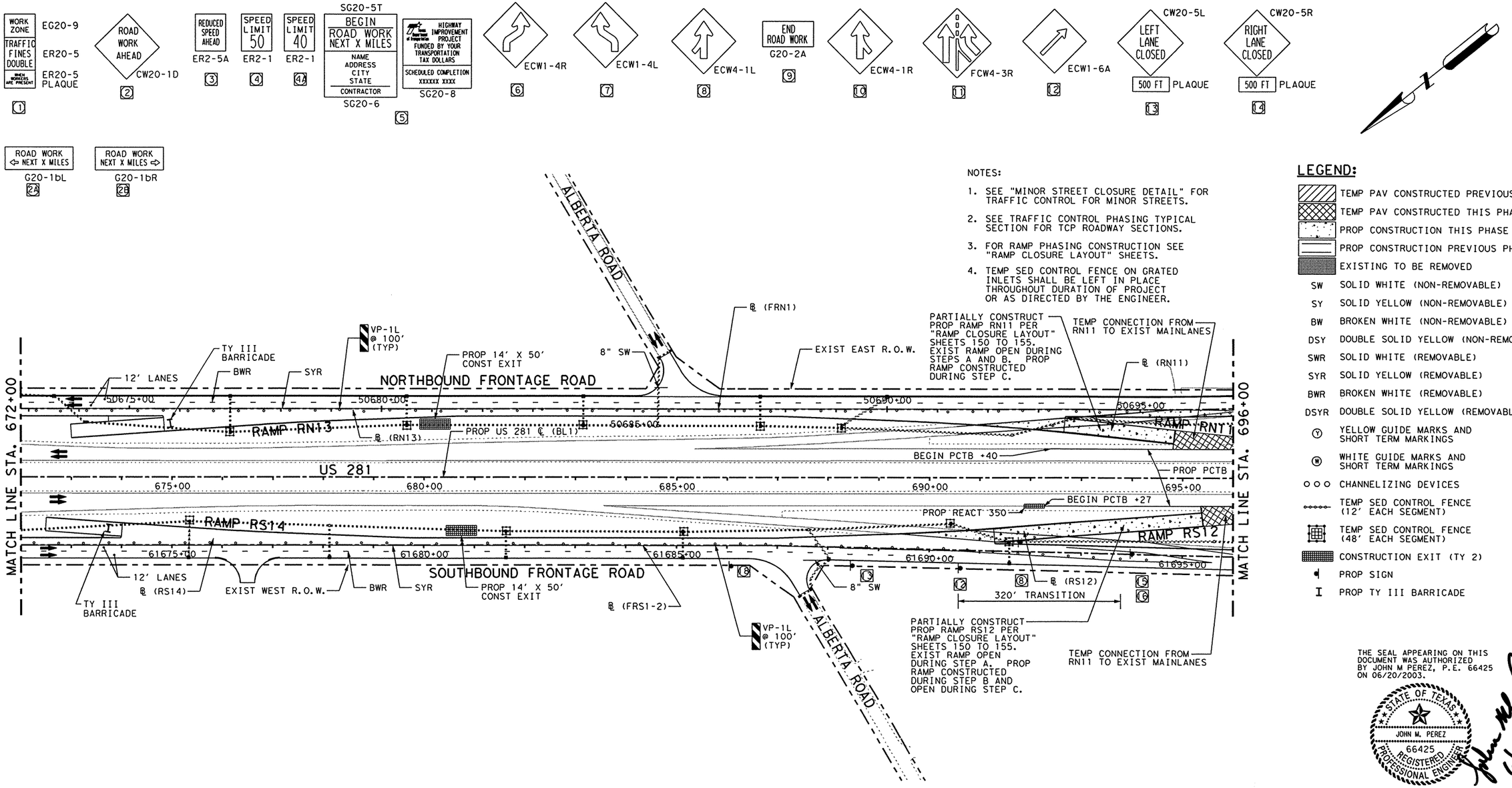

NOTES:

1. SEE "MINOR STREET CLOSURE DETAIL" FOR TRAFFIC CONTROL FOR MINOR STREETS.
2. SEE TRAFFIC CONTROL PHASING TYPICAL SECTION FOR TCP ROADWAY SECTIONS.
3. FOR RAMP PHASING CONSTRUCTION SEE "RAMP CLOSURE LAYOUT" SHEETS.
4. TEMP SED CONTROL FENCE ON GRATED INLETS SHALL BE LEFT IN PLACE THROUGHOUT DURATION OF PROJECT OR AS DIRECTED BY THE ENGINEER.

LEGEND:

- TEMP PAV CONSTRUCTED PREVIOUS PHASE
- TEMP PAV CONSTRUCTED THIS PHASE
- PROP CONSTRUCTION THIS PHASE
- PROP CONSTRUCTION PREVIOUS PHASE
- EXISTING TO BE REMOVED
- SW SOLID WHITE (NON-REMOVABLE)
- SY SOLID YELLOW (NON-REMOVABLE)
- BW BROKEN WHITE (NON-REMOVABLE)
- DSY DOUBLE SOLID YELLOW (NON-REMOVABLE)
- SWR SOLID WHITE (REMOVABLE)
- SYR SOLID YELLOW (REMOVABLE)
- BWR BROKEN WHITE (REMOVABLE)
- DSYR DOUBLE SOLID YELLOW (REMOVABLE)
- (Y) YELLOW GUIDE MARKS AND SHORT TERM MARKINGS
- (W) WHITE GUIDE MARKS AND SHORT TERM MARKINGS
- CHANNELIZING DEVICES
- TEMP SED CONTROL FENCE (12' EACH SEGMENT)
- TEMP SED CONTROL FENCE (48' EACH SEGMENT)
- CONSTRUCTION EXIT (TY 2)
- PROP SIGN
- PROP TY III BARRICADE

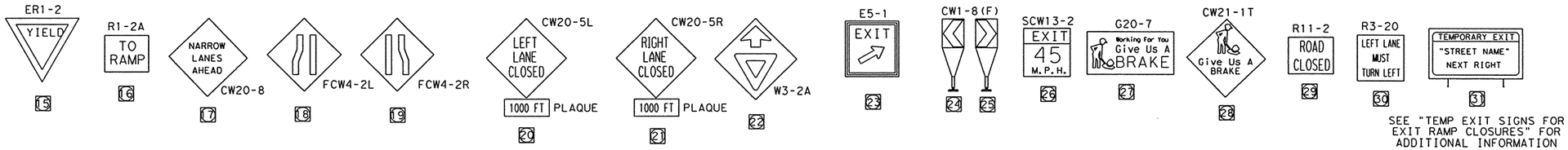

SEE "TEMP EXIT SIGNS FOR EXIT RAMP CLOSURES" FOR ADDITIONAL INFORMATION

THE SEAL APPEARING ON THIS DOCUMENT WAS AUTHORIZED BY JOHN M PEREZ, P.E. 66425 ON 06/20/2003.

STATE OF TEXAS · JOHN M. PEREZ · 66425 · REGISTERED PROFESSIONAL ENGINEER

6/20/03

Parsons Brinckerhoff Quade & Douglas Inc.

Texas Department of Transportation

© 2003 by TxDOT

US 281
TRAFFIC CONTROL PLAN
PHASE III

PLAN 1"= 200' HORIZ

SHEET 4 OF 11 | 281SEQIII04.DGN

DESIGNED: PAF	FED. RD DIV. No.	STATE	FEDERAL AID PROJECT No.			HIGHWAY No.
CHECKED: JP	6	TEXAS				US 281
DRAWN: KTD	STATE DISTRICT	COUNTY	CONTROL No.	SECTION No.	JOB No.	SHEET No.
CHECKED: JDH	PHARR	HIDALGO	0255	08	091	123

NAME

11:11:27 AM

06/20/2003

h:\22322e\cadd\sheets\traffic\tcp\281seqiii05.dgn

WORK ZONE / TRAFFIC FINES DOUBLE / WHEN WORKERS ARE PRESENT — EG20-9, ER20-5, ER20-5 PLAQUE (1)

ROAD WORK AHEAD — CW20-1D (2)

REDUCED SPEED AHEAD — ER2-5A (3)

SPEED LIMIT 50 — ER2-1 (4)

SPEED LIMIT 40 — ER2-1 (4A)

SG20-5T: BEGIN ROAD WORK NEXT X MILES / NAME ADDRESS CITY STATE / CONTRACTOR — SG20-6 (5)

HIGHWAY IMPROVEMENT PROJECT FUNDED BY YOUR TRANSPORTATION TAX DOLLARS / SCHEDULED COMPLETION XXXXXX XXXX — SG20-8

ECW1-4R (6)

ECW1-4L (7)

ECW4-1L (8)

END ROAD WORK — G20-2A (9)

ECW4-1R (10)

FCW4-3R (11)

ECW1-6A (12)

CW20-5L: LEFT LANE CLOSED / 500 FT PLAQUE (13)

CW20-5R: RIGHT LANE CLOSED / 500 FT PLAQUE (14)

ROAD WORK ⇦ NEXT X MILES — G20-1bL (2A)

ROAD WORK NEXT X MILES ⇨ — G20-1bR (2B)

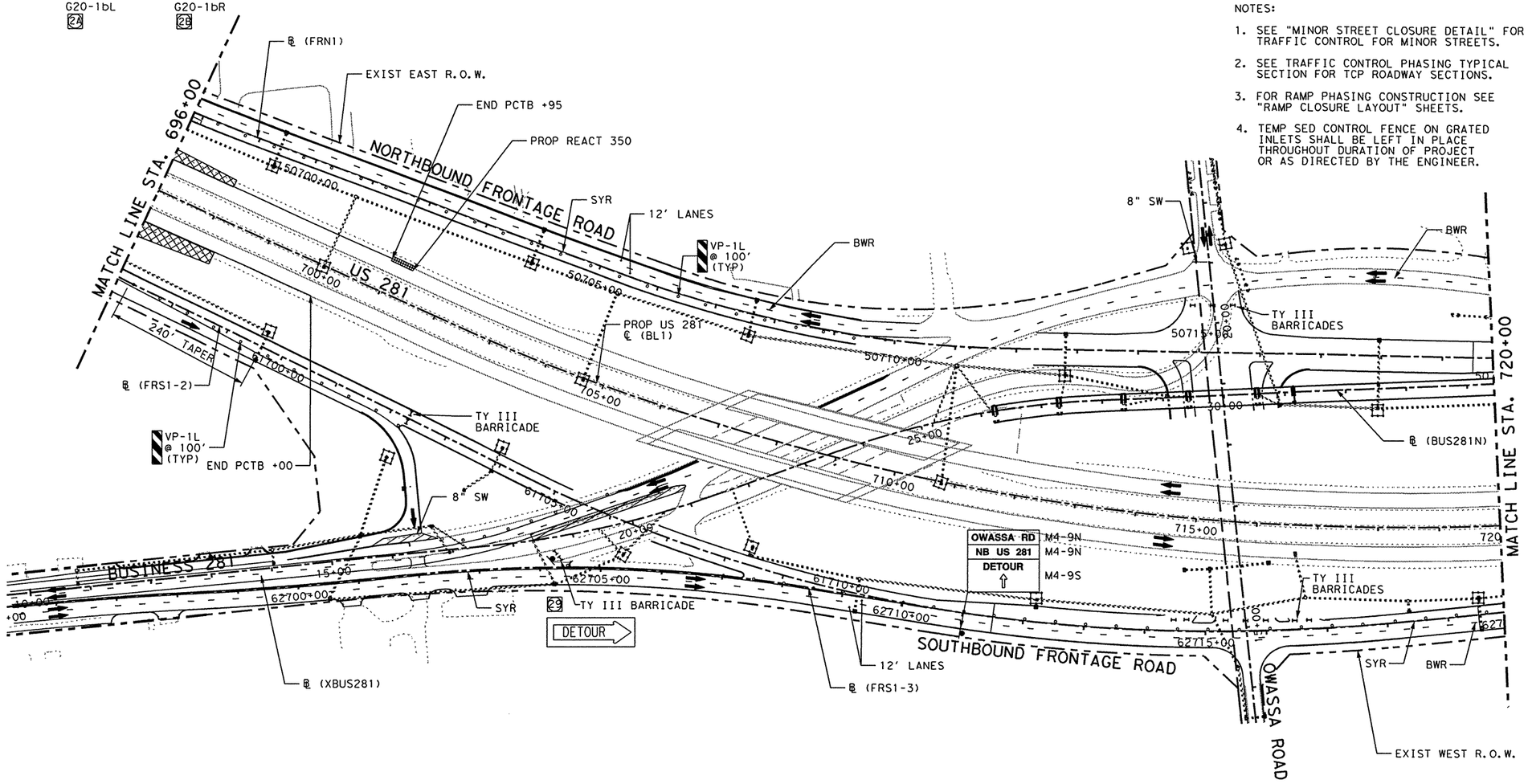

NOTES:

1. SEE "MINOR STREET CLOSURE DETAIL" FOR TRAFFIC CONTROL FOR MINOR STREETS.
2. SEE TRAFFIC CONTROL PHASING TYPICAL SECTION FOR TCP ROADWAY SECTIONS.
3. FOR RAMP PHASING CONSTRUCTION SEE "RAMP CLOSURE LAYOUT" SHEETS.
4. TEMP SED CONTROL FENCE ON GRATED INLETS SHALL BE LEFT IN PLACE THROUGHOUT DURATION OF PROJECT OR AS DIRECTED BY THE ENGINEER.

LEGEND:

- TEMP PAV CONSTRUCTED PREVIOUS PHASE
- TEMP PAV CONSTRUCTED THIS PHASE
- PROP CONSTRUCTION THIS PHASE
- PROP CONSTRUCTION PREVIOUS PHASE
- EXISTING TO BE REMOVED
- SW SOLID WHITE (NON-REMOVABLE)
- SY SOLID YELLOW (NON-REMOVABLE)
- BW BROKEN WHITE (NON-REMOVABLE)
- DSY DOUBLE SOLID YELLOW (NON-REMOVABLE)
- SWR SOLID WHITE (REMOVABLE)
- SYR SOLID YELLOW (REMOVABLE)
- BWR BROKEN WHITE (REMOVABLE)
- DSYR DOUBLE SOLID YELLOW (REMOVABLE)
- (Y) YELLOW GUIDE MARKS AND SHORT TERM MARKINGS
- (W) WHITE GUIDE MARKS AND SHORT TERM MARKINGS
- CHANNELIZING DEVICES
- TEMP SED CONTROL FENCE (12' EACH SEGMENT)
- TEMP SED CONTROL FENCE (48' EACH SEGMENT)
- CONSTRUCTION EXIT (TY 2)
- PROP SIGN
- PROP TY III BARRICADE
- STRUCTURES TO BE CONSTRUCTED DURING THIS PHASE

THE SEAL APPEARING ON THIS DOCUMENT WAS AUTHORIZED BY JOHN M PEREZ, P.E. 66425 ON 06/20/2003.

STATE OF TEXAS — JOHN M. PEREZ — 66425 — REGISTERED PROFESSIONAL ENGINEER

6/20/03

ER1-2 YIELD (15)

R1-2A TO RAMP (16)

NARROW LANES AHEAD — CW20-8 (17)

FCW4-2L (18)

FCW4-2R (19)

CW20-5L: LEFT LANE CLOSED / 1000 FT PLAQUE (20)

CW20-5R: RIGHT LANE CLOSED / 1000 FT PLAQUE (21)

W3-2A (22)

E5-1 EXIT (23)

CW1-8(F) (24) (25)

SCW13-2 EXIT 45 M.P.H. (26)

G20-7 Working For You Give Us A BRAKE (27)

CW21-1T Give Us A BRAKE (28)

R11-2 ROAD CLOSED (29)

R3-20 LEFT LANE MUST TURN LEFT (30)

TEMPORARY EXIT "STREET NAME" NEXT RIGHT (31)

SEE "TEMP EXIT SIGNS FOR EXIT RAMP CLOSURES" FOR ADDITIONAL INFORMATION

Parsons Brinckerhoff Quade & Douglas Inc.

Texas Department of Transportation

© 2003 by TxDOT

US 281
TRAFFIC CONTROL PLAN
PHASE III

PLAN 1"= 200' HORIZ

SHEET 5 OF 11				281SEQIII05.DGN			
DESIGNED: PAF	FED. RD DIV. No.	STATE	FEDERAL AID PROJECT No.			HIGHWAY No.	
CHECKED: JP	6	TEXAS				US 281	
DRAWN: KTD	STATE DISTRICT	COUNTY	CONTROL No.	SECTION No.	JOB No.	SHEET No.	
CHECKED: JDH	PHARR	HIDALGO	0255	08	091	124	

NAME
11:11:39 AM
06/20/2003

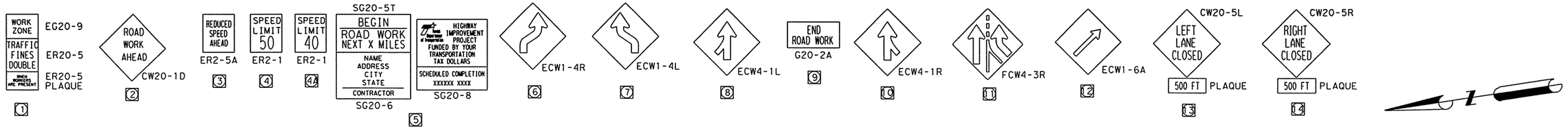

NOTES:

1. SEE "MINOR STREET CLOSURE DETAIL" FOR TRAFFIC CONTROL FOR MINOR STREETS.
2. SEE TRAFFIC CONTROL PHASING TYPICAL SECTION FOR TCP ROADWAY SECTIONS.
3. FOR RAMP PHASING CONSTRUCTION SEE "RAMP CLOSURE LAYOUT" SHEETS.
4. TEMP SED CONTROL FENCE ON GRATED INLETS SHALL BE LEFT IN PLACE THROUGHOUT DURATION OF PROJECT OR AS DIRECTED BY THE ENGINEER.

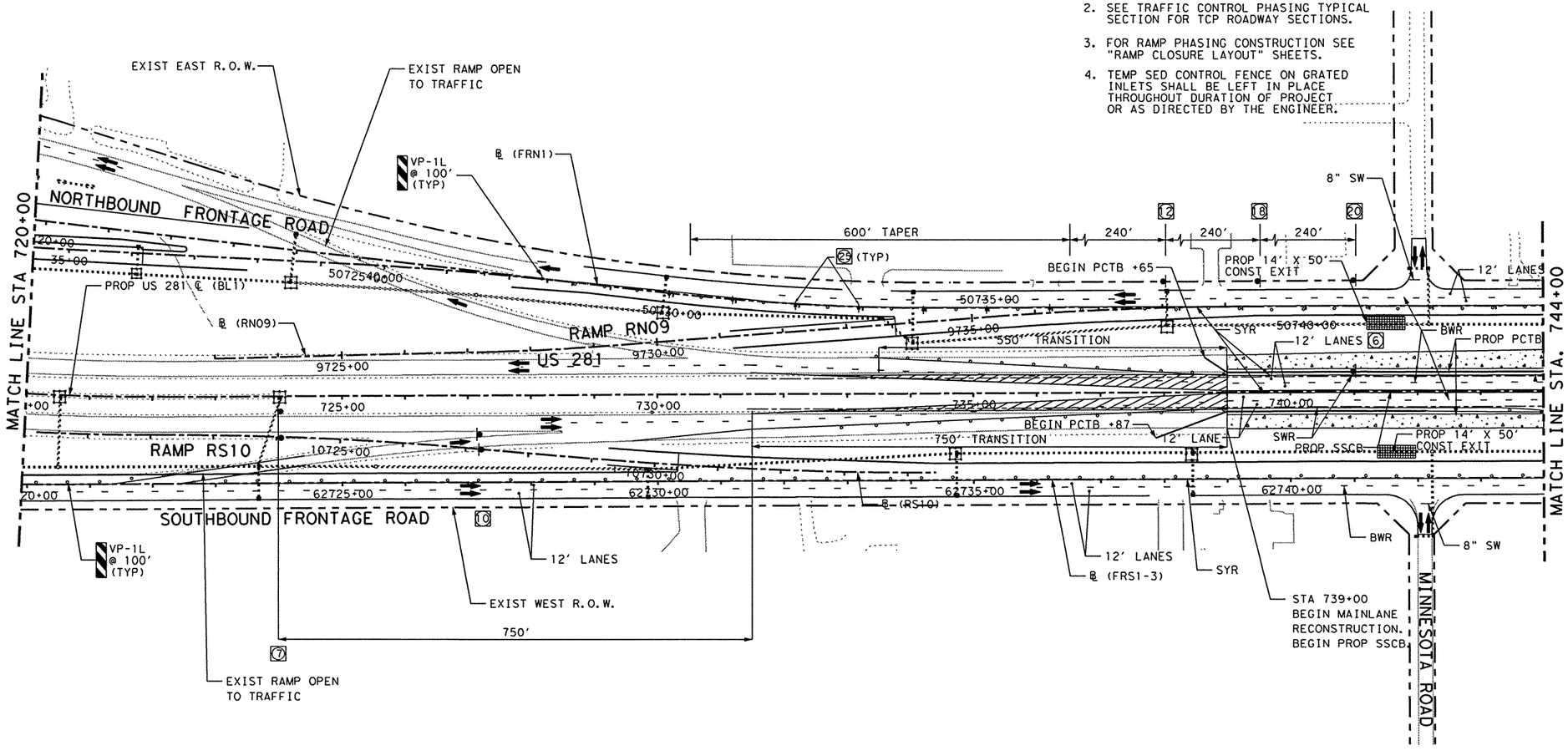

LEGEND:

	TEMP PAV CONSTRUCTED PREVIOUS PHASE
	TEMP PAV CONSTRUCTED THIS PHASE
	PROP CONSTRUCTION THIS PHASE
	PROP CONSTRUCTION PREVIOUS PHASE
	EXISTING TO BE REMOVED
SW	SOLID WHITE (NON-REMOVABLE)
SY	SOLID YELLOW (NON-REMOVABLE)
BW	BROKEN WHITE (NON-REMOVABLE)
DSY	DOUBLE SOLID YELLOW (NON-REMOVABLE)
SWR	SOLID WHITE (REMOVABLE)
SYR	SOLID YELLOW (REMOVABLE)
BWR	BROKEN WHITE (REMOVABLE)
DSYR	DOUBLE SOLID YELLOW (REMOVABLE)
Ⓨ	YELLOW GUIDE MARKS AND SHORT TERM MARKINGS
Ⓦ	WHITE GUIDE MARKS AND SHORT TERM MARKINGS
	CHANNELIZING DEVICES
	TEMP SED CONTROL FENCE (12' EACH SEGMENT)
	TEMP SED CONTROL FENCE (48' EACH SEGMENT)
	CONSTRUCTION EXIT (TY 2)
	PROP SIGN
	PROP TY III BARRICADE
	STRUCTURES TO BE CONSTRUCTED DURING THIS PHASE

THE SEAL APPEARING ON THIS DOCUMENT WAS AUTHORIZED BY JOHN M PEREZ, P.E. 66425 ON 06/20/2003.

STATE OF TEXAS
JOHN M. PEREZ
66425
REGISTERED PROFESSIONAL ENGINEER
6/20/03

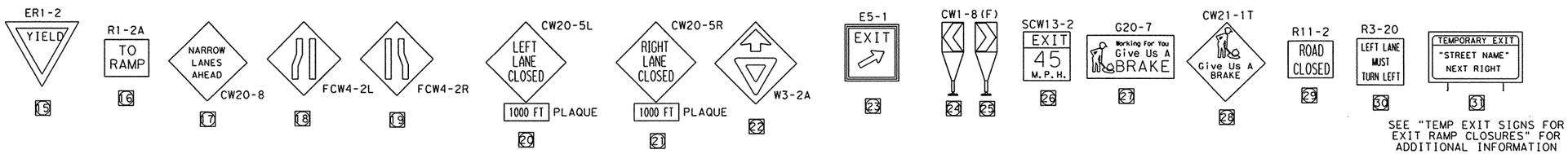

SEE "TEMP EXIT SIGNS FOR EXIT RAMP CLOSURES" FOR ADDITIONAL INFORMATION

Parsons Brinckerhoff Quade & Douglas Inc.

Texas Department of Transportation

© 2003 by TxDOT

US 281
TRAFFIC CONTROL PLAN
PHASE III

PLAN 1"= 200' HORIZ

SHEET 6 OF 11				281SEQIII06.DGN			
DESIGNED: PAF	FED. RD DIV. NO.	STATE	FEDERAL AID PROJECT No.			HIGHWAY No.	
CHECKED: JP	6	TEXAS				US 281	
DRAWN: KTD	STATE DISTRICT	COUNTY	CONTROL No.	SECTION No.	JOB No.	SHEET No.	
CHECKED: JDH	PHARR	HIDALGO	0255	08	091	125	

h:\22322a\cadd\sheets\traffic\tcp\281seqiii06.dgn

NAME
11:11:51 AM
06/20/2003

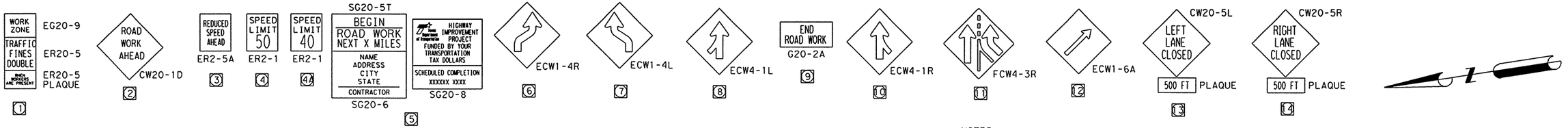

NOTES:

1. SEE "MINOR STREET CLOSURE DETAIL" FOR TRAFFIC CONTROL FOR MINOR STREETS.
2. SEE TRAFFIC CONTROL PHASING TYPICAL SECTION FOR TCP ROADWAY SECTIONS.
3. FOR RAMP PHASING CONSTRUCTION SEE "RAMP CLOSURE LAYOUT" SHEETS.
4. TEMP SED CONTROL FENCE ON GRATED INLETS SHALL BE LEFT IN PLACE THROUGHOUT DURATION OF PROJECT OR AS DIRECTED BY THE ENGINEER.

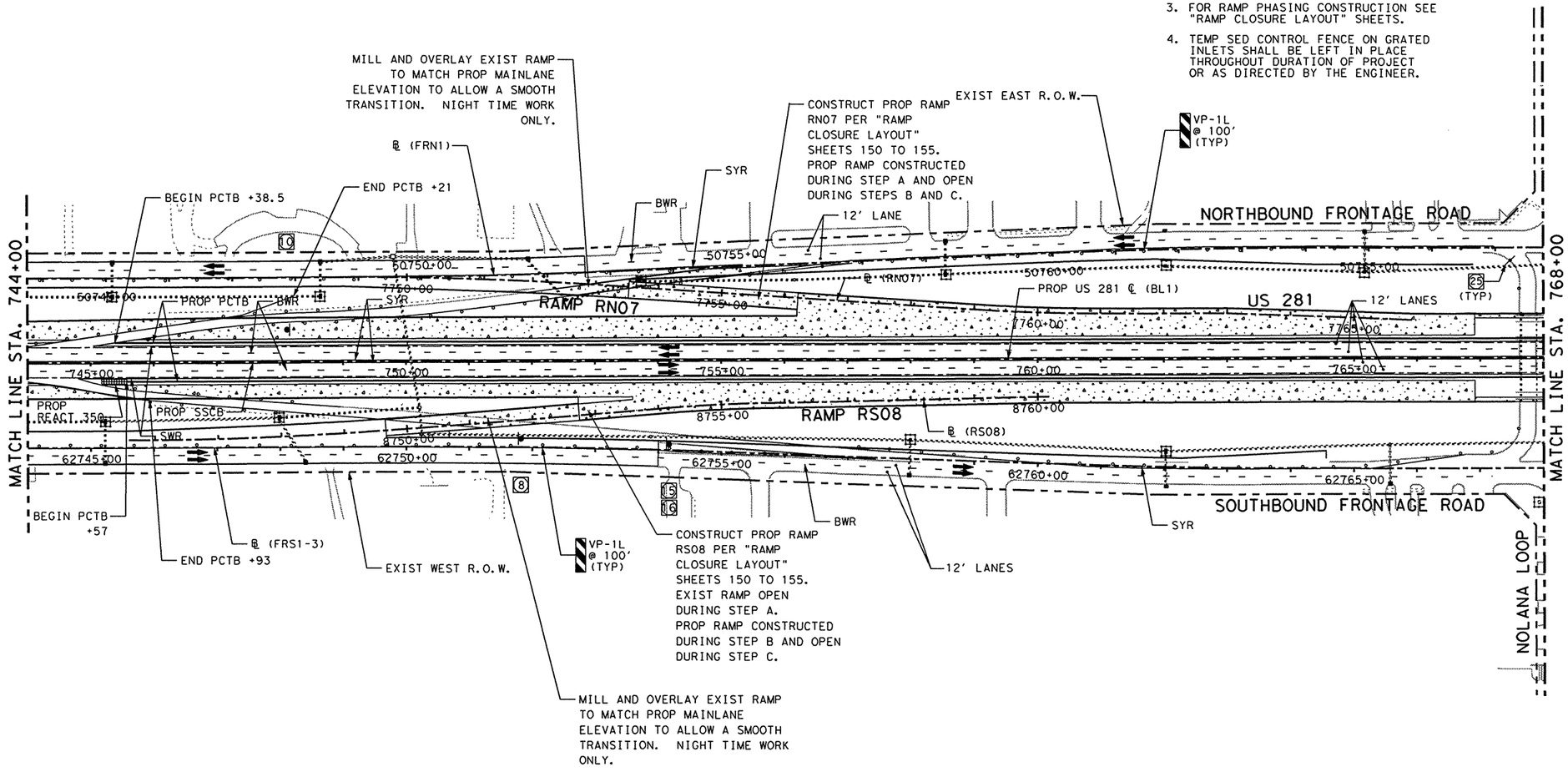

LEGEND:

- TEMP PAV CONSTRUCTED PREVIOUS PHASE
- TEMP PAV CONSTRUCTED THIS PHASE
- PROP CONSTRUCTION THIS PHASE
- PROP CONSTRUCTION PREVIOUS PHASE
- EXISTING TO BE REMOVED
- SW SOLID WHITE (NON-REMOVABLE)
- SY SOLID YELLOW (NON-REMOVABLE)
- BW BROKEN WHITE (NON-REMOVABLE)
- DSY DOUBLE SOLID YELLOW (NON-REMOVABLE)
- SWR SOLID WHITE (REMOVABLE)
- SYR SOLID YELLOW (REMOVABLE)
- BWR BROKEN WHITE (REMOVABLE)
- DSYR DOUBLE SOLID YELLOW (REMOVABLE)
- Ⓨ YELLOW GUIDE MARKS AND SHORT TERM MARKINGS
- Ⓦ WHITE GUIDE MARKS AND SHORT TERM MARKINGS
- CHANNELIZING DEVICES
- TEMP SED CONTROL FENCE (12' EACH SEGMENT)
- TEMP SED CONTROL FENCE (48' EACH SEGMENT)
- CONSTRUCTION EXIT (TY 2)
- PROP SIGN
- PROP TY III BARRICADE
- STRUCTURES TO BE CONSTRUCTED DURING THIS PHASE

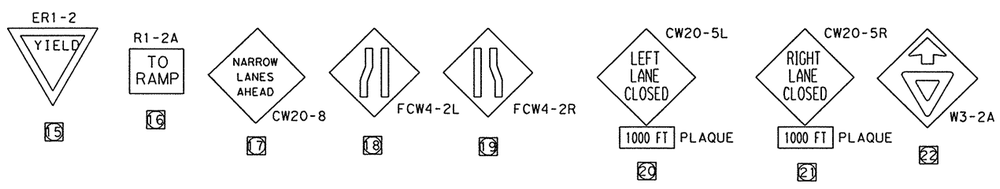

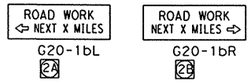

SEE "TEMP EXIT SIGNS FOR EXIT RAMP CLOSURES" FOR ADDITIONAL INFORMATION

THE SEAL APPEARING ON THIS DOCUMENT WAS AUTHORIZED BY JOHN M PEREZ, P.E. 66425 ON 06/20/2003.

STATE OF TEXAS
JOHN M. PEREZ
66425
REGISTERED PROFESSIONAL ENGINEER

6/20/03

PB Parsons Brinckerhoff Quade & Douglas Inc.

Texas Department of Transportation

© 2003 by TxDOT

US 281
TRAFFIC CONTROL PLAN
PHASE III

PLAN 1"= 200' HORIZ

SHEET 7 OF 11				281SEQIII07.DGN			
DESIGNED: PAF	FED. RD DIV. No.	STATE	FEDERAL AID PROJECT No.			HIGHWAY No.	
CHECKED: JP	6	TEXAS				US 281	
DRAWN: KTD	STATE DISTRICT	COUNTY	CONTROL No.	SECTION No.	JOB No.	SHEET No.	
CHECKED: JDH	PHARR	HIDALGO	0255	08	091	126	

h:\22322a\cadd\sheets\traffic\tcp\281seqiii07.dgn

NAME
11:12:04 AM
06/20/2003

WORK ZONE / TRAFFIC FINES DOUBLE / WHEN WORKERS ARE PRESENT — EG20-9 / ER20-5 / ER20-5 PLAQUE [1]

ROAD WORK AHEAD — CW20-1D [2]

REDUCED SPEED AHEAD — ER2-5A [3]

SPEED LIMIT 50 — ER2-1 [4]

SPEED LIMIT 40 — ER2-1 [4A]

SG20-5T
BEGIN ROAD WORK NEXT X MILES
NAME
ADDRESS
CITY
STATE
CONTRACTOR
SG20-6 [5]

HIGHWAY IMPROVEMENT PROJECT FUNDED BY YOUR TRANSPORTATION TAX DOLLARS
SCHEDULED COMPLETION XXXXXX XXXX
SG20-8

ECW1-4R [6]

ECW1-4L [7]

ECW4-1L [8]

END ROAD WORK — G20-2A [9]

ECW4-1R [10]

FCW4-3R [11]

ECW1-6A [12]

CW20-5L
LEFT LANE CLOSED
500 FT PLAQUE [13]

CW20-5R
RIGHT LANE CLOSED
500 FT PLAQUE [14]

NOTES:

1. SEE "MINOR STREET CLOSURE DETAIL" FOR TRAFFIC CONTROL FOR MINOR STREETS.
2. SEE TRAFFIC CONTROL PHASING TYPICAL SECTION FOR TCP ROADWAY SECTIONS.
3. FOR RAMP PHASING CONSTRUCTION SEE "RAMP CLOSURE LAYOUT" SHEETS.
4. TEMP SED CONTROL FENCE ON GRATED INLETS SHALL BE LEFT IN PLACE THROUGHOUT DURATION OF PROJECT OR AS DIRECTED BY THE ENGINEER.

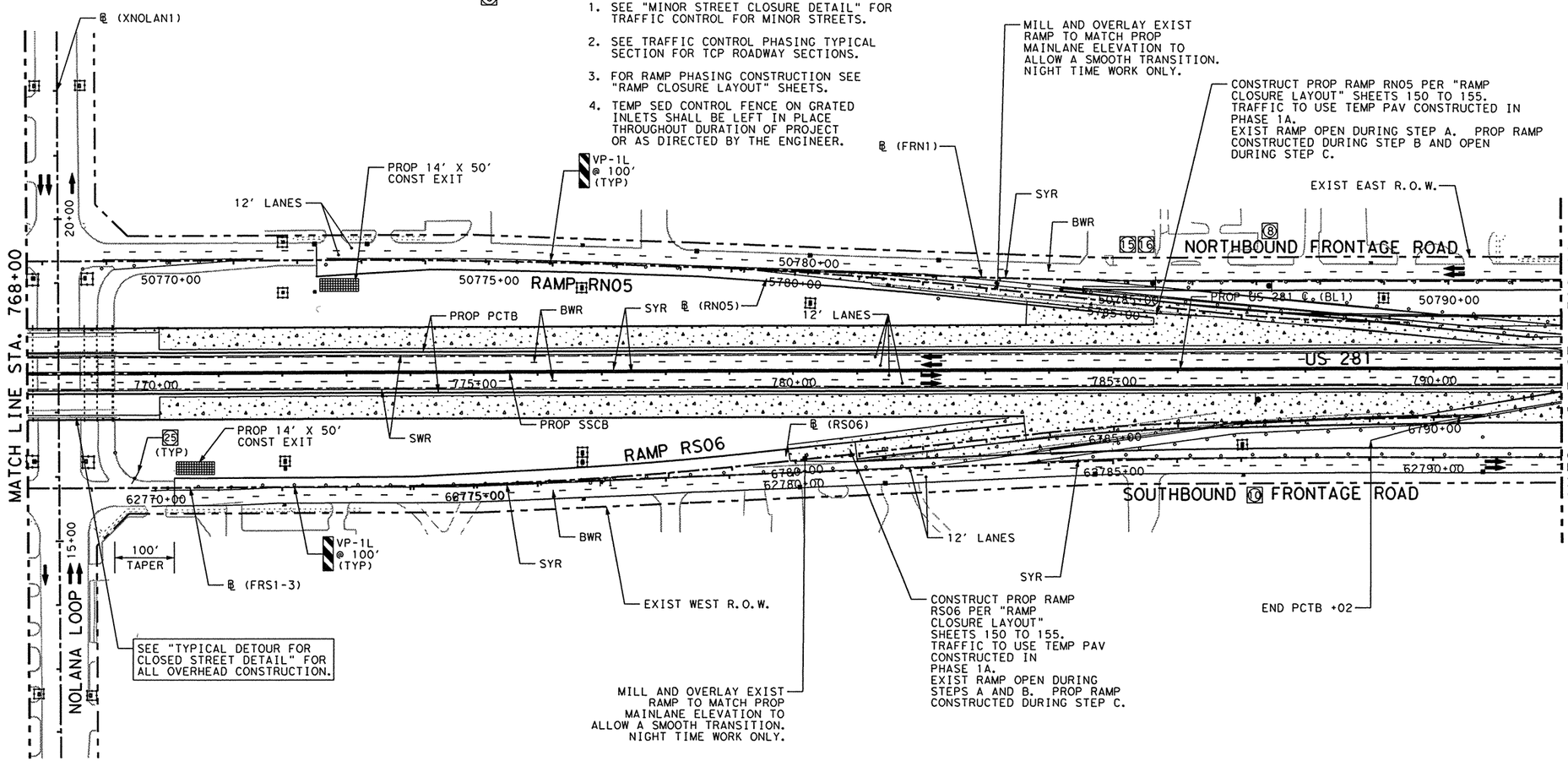

LEGEND:

- TEMP PAV CONSTRUCTED PREVIOUS PHASE
- TEMP PAV CONSTRUCTED THIS PHASE
- PROP CONSTRUCTION THIS PHASE
- PROP CONSTRUCTION PREVIOUS PHASE
- EXISTING TO BE REMOVED
- SW — SOLID WHITE (NON-REMOVABLE)
- SY — SOLID YELLOW (NON-REMOVABLE)
- BW — BROKEN WHITE (NON-REMOVABLE)
- DSY — DOUBLE SOLID YELLOW (NON-REMOVABLE)
- SWR — SOLID WHITE (REMOVABLE)
- SYR — SOLID YELLOW (REMOVABLE)
- BWR — BROKEN WHITE (REMOVABLE)
- DSYR — DOUBLE SOLID YELLOW (REMOVABLE)
- (Y) — YELLOW GUIDE MARKS AND SHORT TERM MARKINGS
- (W) — WHITE GUIDE MARKS AND SHORT TERM MARKINGS
- CHANNELIZING DEVICES
- TEMP SED CONTROL FENCE (12' EACH SEGMENT)
- TEMP SED CONTROL FENCE (48' EACH SEGMENT)
- CONSTRUCTION EXIT (TY 2)
- PROP SIGN
- PROP TY III BARRICADE

THE SEAL APPEARING ON THIS DOCUMENT WAS AUTHORIZED BY JOHN M PEREZ, P.E. 66425 ON 06/20/2003.

STATE OF TEXAS — JOHN M. PEREZ — 66425 — REGISTERED PROFESSIONAL ENGINEER

6/20/03

ER1-2 YIELD [15]

R1-2A TO RAMP [16]

NARROW LANES AHEAD — CW20-8 [17]

FCW4-2L [18]

FCW4-2R [19]

CW20-5L LEFT LANE CLOSED 1000 FT PLAQUE [20]

CW20-5R RIGHT LANE CLOSED 1000 FT PLAQUE [21]

W3-2A [22]

E5-1 EXIT [23]

CW1-8(F) [24] [25]

SCW13-2 EXIT 45 M.P.H. [26]

G20-7 Working For You Give Us A BRAKE [27]

CW21-1T Give Us A BRAKE [28]

R11-2 ROAD CLOSED [29]

R3-20 LEFT LANE MUST TURN LEFT [30]

TEMPORARY EXIT "STREET NAME" NEXT RIGHT [31]

ROAD WORK ⇦ NEXT X MILES — G20-1bL [2A]

ROAD WORK NEXT X MILES ⇨ — G20-1bR [2B]

SEE "TEMP EXIT SIGNS FOR EXIT RAMP CLOSURES" FOR ADDITIONAL INFORMATION

Parsons Brinckerhoff Quade & Douglas Inc.

Texas Department of Transportation

© 2003 by TxDOT

US 281
TRAFFIC CONTROL PLAN
PHASE III

PLAN 1"= 200' HORIZ

SHEET 8 OF 11				281SEQIII08.DGN			
DESIGNED: PAF	FED. RD DIV. NO.	STATE	FEDERAL AID PROJECT NO.			HIGHWAY NO.	
CHECKED: JP	6	TEXAS				US 281	
DRAWN: KTD	STATE DISTRICT	COUNTY	CONTROL No.	SECTION No.	JOB No.	SHEET No.	
CHECKED: JDH	PHARR	HIDALGO	0255	08	091	127	

h:\22322a\cadd\sheets\traffic\tcp\281seqiii08.dgn

NAME
04:05:35 PM
08/06/2003
h:\22322a\cadd\sheets\traffic\tcp\281seqiii09.dgn

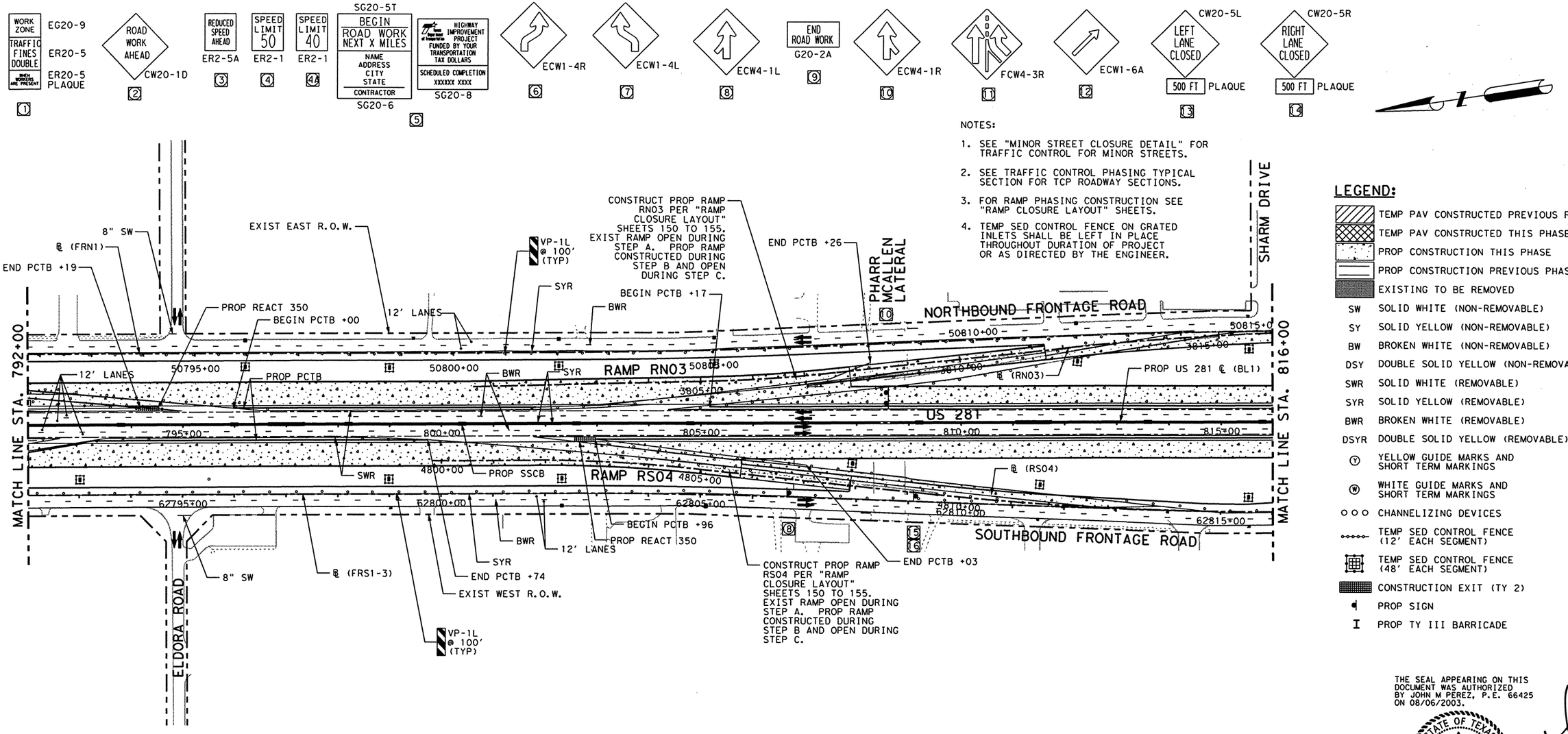

LEGEND:

- TEMP PAV CONSTRUCTED PREVIOUS PHASE
- TEMP PAV CONSTRUCTED THIS PHASE
- PROP CONSTRUCTION THIS PHASE
- PROP CONSTRUCTION PREVIOUS PHASE
- EXISTING TO BE REMOVED
- SW SOLID WHITE (NON-REMOVABLE)
- SY SOLID YELLOW (NON-REMOVABLE)
- BW BROKEN WHITE (NON-REMOVABLE)
- DSY DOUBLE SOLID YELLOW (NON-REMOVABLE)
- SWR SOLID WHITE (REMOVABLE)
- SYR SOLID YELLOW (REMOVABLE)
- BWR BROKEN WHITE (REMOVABLE)
- DSYR DOUBLE SOLID YELLOW (REMOVABLE)
- (Y) YELLOW GUIDE MARKS AND SHORT TERM MARKINGS
- (W) WHITE GUIDE MARKS AND SHORT TERM MARKINGS
- CHANNELIZING DEVICES
- TEMP SED CONTROL FENCE (12' EACH SEGMENT)
- TEMP SED CONTROL FENCE (48' EACH SEGMENT)
- CONSTRUCTION EXIT (TY 2)
- PROP SIGN
- PROP TY III BARRICADE

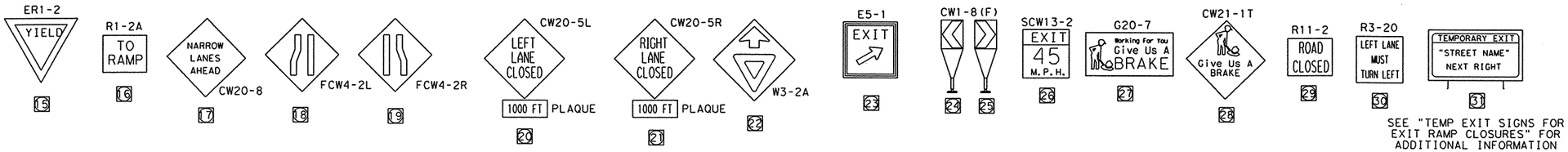

SEE "TEMP EXIT SIGNS FOR EXIT RAMP CLOSURES" FOR ADDITIONAL INFORMATION

THE SEAL APPEARING ON THIS DOCUMENT WAS AUTHORIZED BY JOHN M PEREZ, P.E. 66425 ON 08/06/2003.

STATE OF TEXAS · JOHN M. PEREZ · 66425 · REGISTERED PROFESSIONAL ENGINEER

8/6/03

Parsons Brinckerhoff Quade & Douglas Inc.

Texas Department of Transportation

© 2003 by TxDOT

US 281
TRAFFIC CONTROL PLAN
PHASE III

PLAN 1"= 200' HORIZ

SHEET 9 OF 11 | 281SEQIII09.DGN

DESIGNED: PAF	FED. RD DIV. NO.	STATE	FEDERAL AID PROJECT No.	HIGHWAY No.
CHECKED: JP	6	TEXAS		US 281

DRAWN: KTD	STATE DISTRICT	COUNTY	CONTROL No.	SECTION No.	JOB No.	SHEET No.
CHECKED: JDH	PHARR	HIDALGO	0255	08	091	128

NAME
11:12:28 AM
06/20/2003
h:\22322a\cadd\sheets\traffic\tcp\281seqiii10.dgn

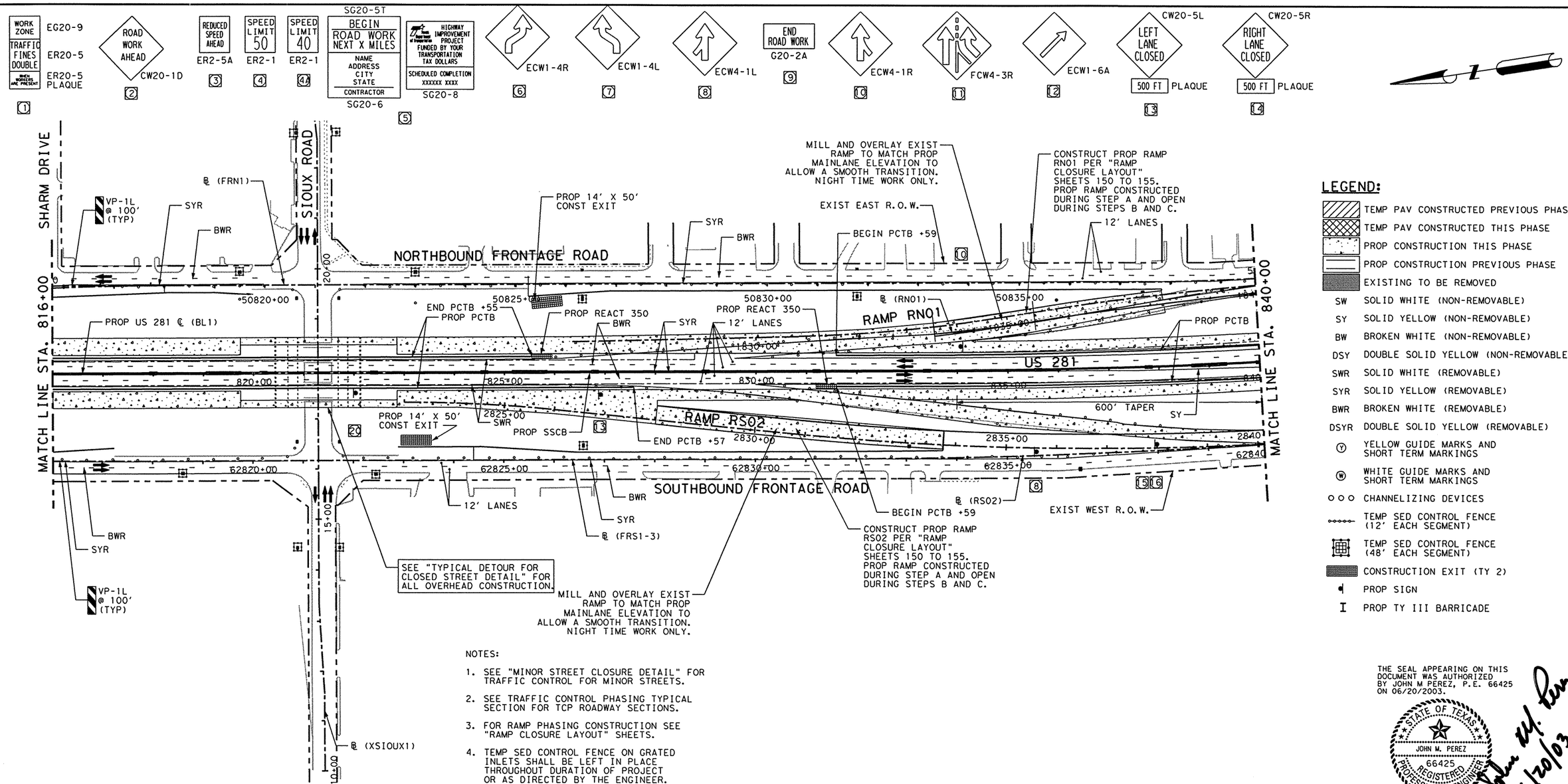

NOTES:

1. SEE "MINOR STREET CLOSURE DETAIL" FOR TRAFFIC CONTROL FOR MINOR STREETS.
2. SEE TRAFFIC CONTROL PHASING TYPICAL SECTION FOR TCP ROADWAY SECTIONS.
3. FOR RAMP PHASING CONSTRUCTION SEE "RAMP CLOSURE LAYOUT" SHEETS.
4. TEMP SED CONTROL FENCE ON GRATED INLETS SHALL BE LEFT IN PLACE THROUGHOUT DURATION OF PROJECT OR AS DIRECTED BY THE ENGINEER.

LEGEND:

- TEMP PAV CONSTRUCTED PREVIOUS PHASE
- TEMP PAV CONSTRUCTED THIS PHASE
- PROP CONSTRUCTION THIS PHASE
- PROP CONSTRUCTION PREVIOUS PHASE
- EXISTING TO BE REMOVED
- SW SOLID WHITE (NON-REMOVABLE)
- SY SOLID YELLOW (NON-REMOVABLE)
- BW BROKEN WHITE (NON-REMOVABLE)
- DSY DOUBLE SOLID YELLOW (NON-REMOVABLE)
- SWR SOLID WHITE (REMOVABLE)
- SYR SOLID YELLOW (REMOVABLE)
- BWR BROKEN WHITE (REMOVABLE)
- DSYR DOUBLE SOLID YELLOW (REMOVABLE)
- Ⓨ YELLOW GUIDE MARKS AND SHORT TERM MARKINGS
- Ⓦ WHITE GUIDE MARKS AND SHORT TERM MARKINGS
- CHANNELIZING DEVICES
- TEMP SED CONTROL FENCE (12' EACH SEGMENT)
- TEMP SED CONTROL FENCE (48' EACH SEGMENT)
- CONSTRUCTION EXIT (TY 2)
- PROP SIGN
- PROP TY III BARRICADE

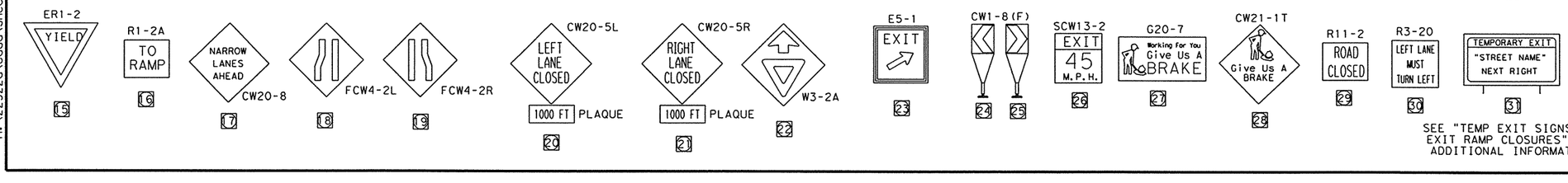

SEE "TEMP EXIT SIGNS FOR EXIT RAMP CLOSURES" FOR ADDITIONAL INFORMATION

THE SEAL APPEARING ON THIS DOCUMENT WAS AUTHORIZED BY JOHN M PEREZ, P.E. 66425 ON 06/20/2003.

STATE OF TEXAS · JOHN M. PEREZ · 66425 · REGISTERED PROFESSIONAL ENGINEER

6/20/03

Parsons Brinckerhoff Quade & Douglas Inc.

Texas Department of Transportation

© 2003 by TxDOT

US 281
TRAFFIC CONTROL PLAN
PHASE III

PLAN 1"= 200' HORIZ

SHEET 10 OF 11 | 281SEQIII10.DGN

DESIGNED: PAF	FED. RD DIV. NO.	STATE	FEDERAL AID PROJECT NO.				HIGHWAY NO.	
CHECKED: JP	6	TEXAS					US 281	
DRAWN: KTD	STATE DISTRICT	COUNTY		CONTROL No.	SECTION No.	JOB No.	SHEET No.	
CHECKED: JDH	PHARR	HIDALGO		0255	08	091	129	

NAME
11:12:40 AM
06/20/2003
h:\22322a\cadd\sheets\traffic\tcp\281seqiiii1.dgn

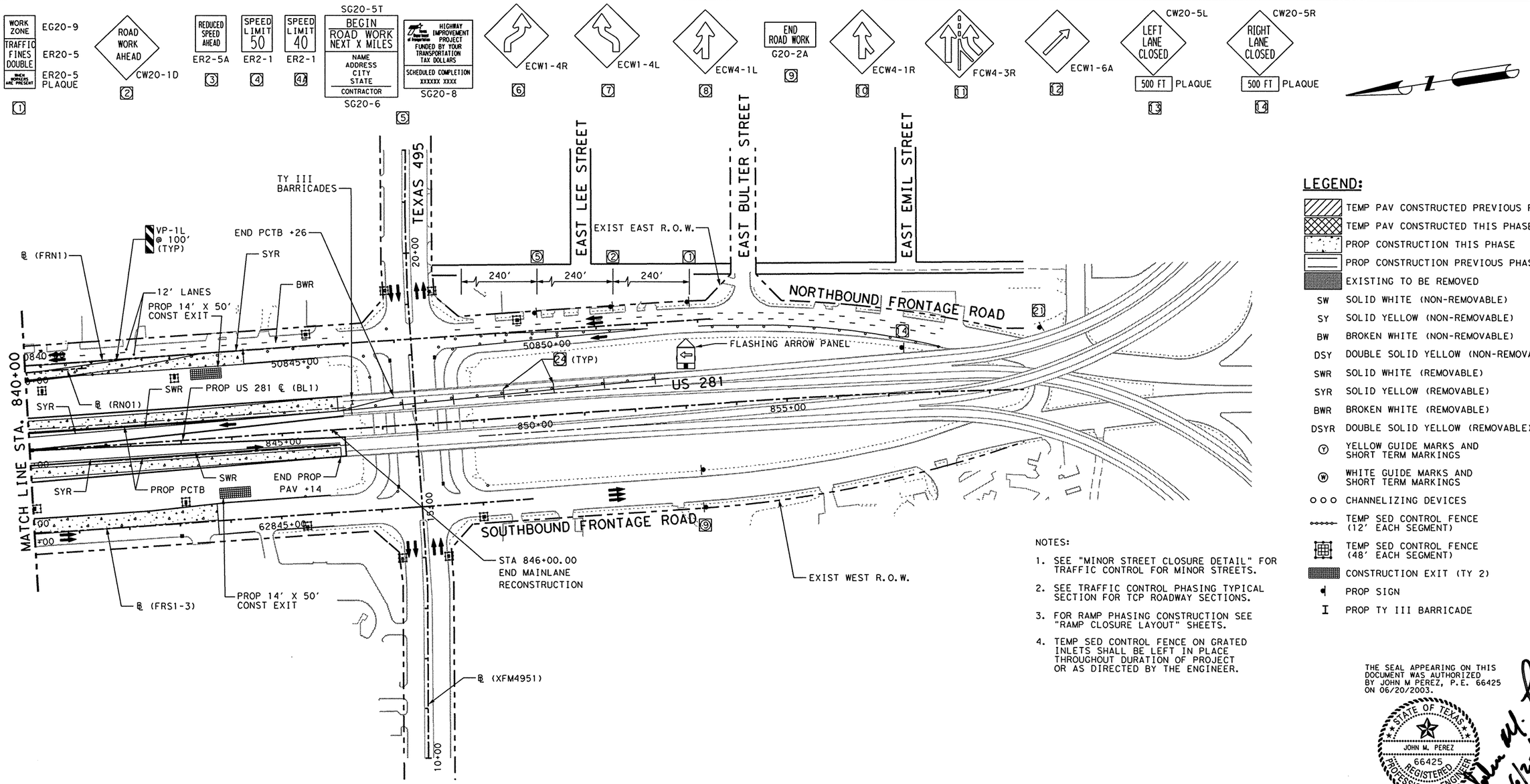

LEGEND:

- TEMP PAV CONSTRUCTED PREVIOUS PHASE
- TEMP PAV CONSTRUCTED THIS PHASE
- PROP CONSTRUCTION THIS PHASE
- PROP CONSTRUCTION PREVIOUS PHASE
- EXISTING TO BE REMOVED
- SW SOLID WHITE (NON-REMOVABLE)
- SY SOLID YELLOW (NON-REMOVABLE)
- BW BROKEN WHITE (NON-REMOVABLE)
- DSY DOUBLE SOLID YELLOW (NON-REMOVABLE)
- SWR SOLID WHITE (REMOVABLE)
- SYR SOLID YELLOW (REMOVABLE)
- BWR BROKEN WHITE (REMOVABLE)
- DSYR DOUBLE SOLID YELLOW (REMOVABLE)
- (Y) YELLOW GUIDE MARKS AND SHORT TERM MARKINGS
- (W) WHITE GUIDE MARKS AND SHORT TERM MARKINGS
- CHANNELIZING DEVICES
- TEMP SED CONTROL FENCE (12' EACH SEGMENT)
- TEMP SED CONTROL FENCE (48' EACH SEGMENT)
- CONSTRUCTION EXIT (TY 2)
- PROP SIGN
- PROP TY III BARRICADE

NOTES:

1. SEE "MINOR STREET CLOSURE DETAIL" FOR TRAFFIC CONTROL FOR MINOR STREETS.
2. SEE TRAFFIC CONTROL PHASING TYPICAL SECTION FOR TCP ROADWAY SECTIONS.
3. FOR RAMP PHASING CONSTRUCTION SEE "RAMP CLOSURE LAYOUT" SHEETS.
4. TEMP SED CONTROL FENCE ON GRATED INLETS SHALL BE LEFT IN PLACE THROUGHOUT DURATION OF PROJECT OR AS DIRECTED BY THE ENGINEER.

THE SEAL APPEARING ON THIS DOCUMENT WAS AUTHORIZED BY JOHN M PEREZ, P.E. 66425 ON 06/20/2003.

STATE OF TEXAS · JOHN M. PEREZ · 66425 · REGISTERED PROFESSIONAL ENGINEER

6/20/03

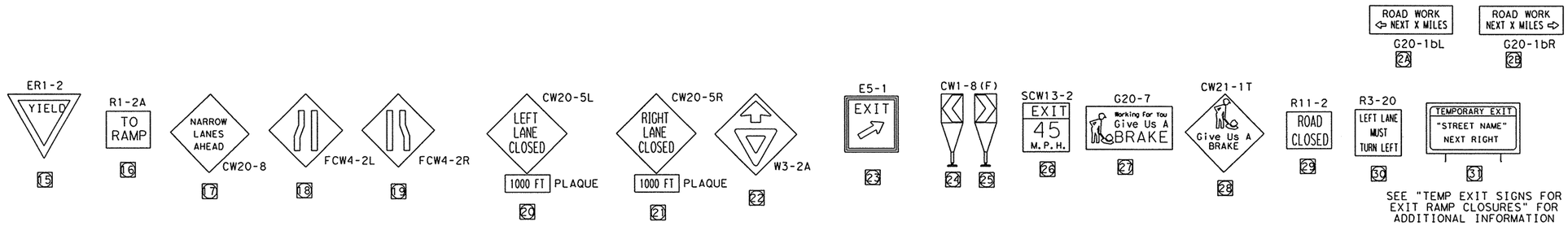

SEE "TEMP EXIT SIGNS FOR EXIT RAMP CLOSURES" FOR ADDITIONAL INFORMATION

Parsons Brinckerhoff Quade & Douglas Inc.

Texas Department of Transportation

© 2003 by TxDOT

US 281
TRAFFIC CONTROL PLAN
PHASE III

PLAN 1"= 200' HORIZ

SHEET 11 OF 11 | 281SEQIIII1.DGN

DESIGNED: PAF	FED. RD DIV. No.	STATE	FEDERAL AID PROJECT No.	HIGHWAY No.
CHECKED: JP	6	TEXAS		US 281

DRAWN: KTD	STATE DISTRICT	COUNTY	CONTROL No.	SECTION No.	JOB No.	SHEET No.
CHECKED: JDH	PHARR	HIDALGO	0255	08	091	130

NAME

11:12:52 AM

06/20/2003

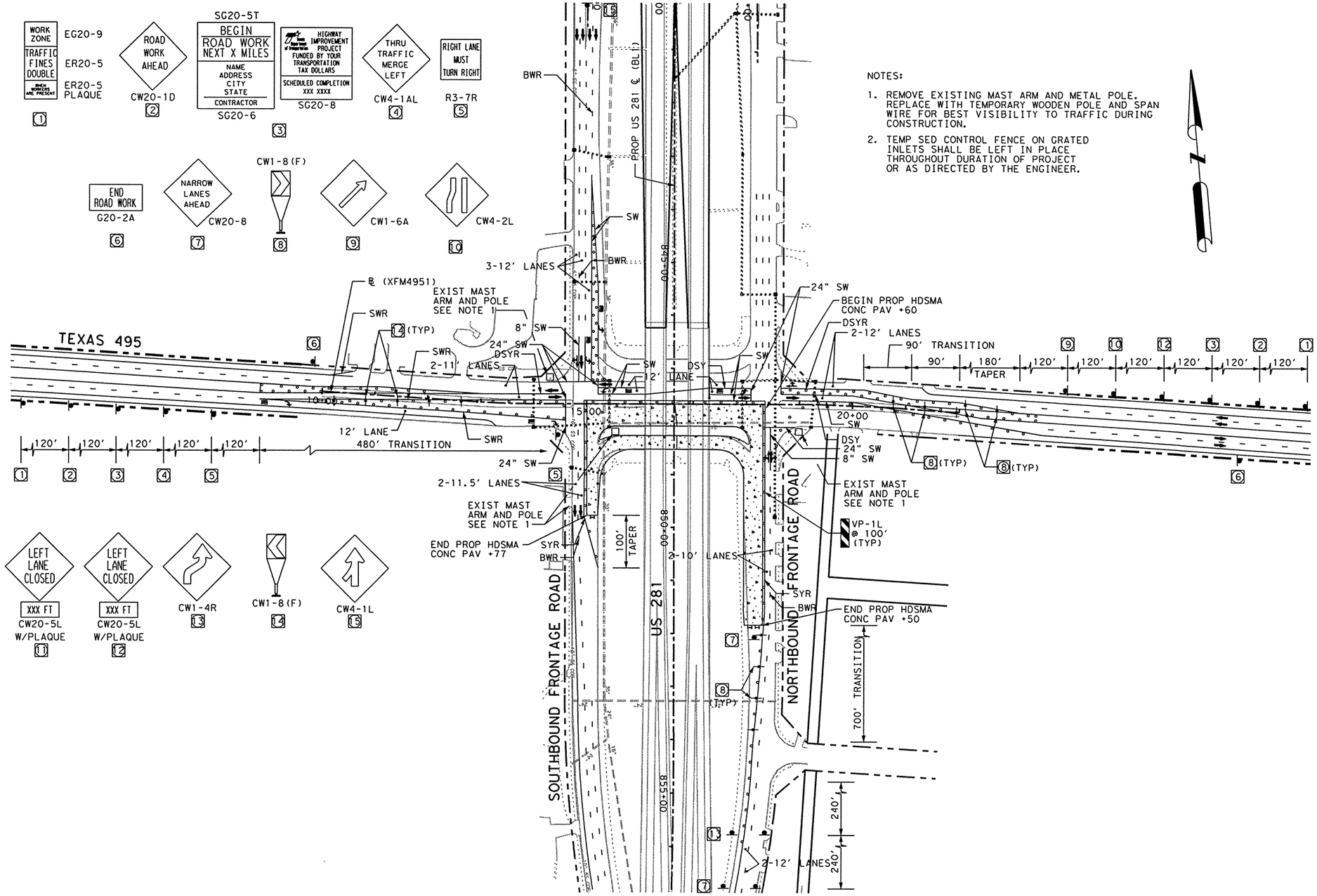

LEGEND:

- TEMP PAV CONSTRUCTED PREVIOUS PHASE
- TEMP PAV CONSTRUCTED THIS PHASE
- PROP CONSTRUCTION THIS PHASE
- PROP CONSTRUCTION PREVIOUS PHASE
- EXISTING TO BE REMOVED
- I PROP TY III BARRICADES
- PROP SIGN
- ooo CHANNELIZING DEVICES
- BY BROKEN YELLOW (NON-REMOVABLE)
- BW BROKEN WHITE (NON-REMOVABLE)
- SY SOLID YELLOW (NON-REMOVABLE)
- SW SOLID WHITE (NON-REMOVABLE)
- DSY DOUBLE SOLID YELLOW (NON-REMOVABLE)
- DSYR DOUBLE SOLID YELLOW (REMOVABLE)
- SWR SOLID WHITE (REMOVABLE)
- SYR SOLID YELLOW (REMOVABLE)
- BWR BROKEN WHITE (REMOVABLE)
- (Y) YELLOW GUIDEMARKS AND SHORT TERM MARKINGS
- (W) WHITE GUIDEMARKS AND SHORT TERM MARKINGS
- TEMP SED CONTROL FENCE (12' EACH SEGMENT)

THE SEAL APPEARING ON THIS DOCUMENT WAS AUTHORIZED BY JOHN M PEREZ, P.E. 66425 ON 06/20/2003.

STATE OF TEXAS
JOHN M. PEREZ
66425
REGISTERED PROFESSIONAL ENGINEER
4/20/03

Parsons Brinckerhoff Quade & Douglas Inc.

Texas Department of Transportation

© 2003 by TxDOT

US 281
TRAFFIC CONTROL PLAN
TEXAS 495
PHASE III STEP 1A

PLAN 1"= 200' HORIZ

SHEET 1 OF 1						281SEQIII1A01.DGN
DESIGNED: PAF	FED. RD DIV. No.	STATE	FEDERAL AID PROJECT No.			HIGHWAY No.
CHECKED: JP	6	TEXAS				US 281
DRAWN: KTD	STATE DISTRICT	COUNTY	CONTROL No.	SECTION No.	JOB No.	SHEET No.
CHECKED: JDH	PHARR	HIDALGO	0255	08	091	131

h:\22322a\cadd\sheets\traffic\tcp\281seqiii1a01.dgn

NAME
11:13:02 AM
06/20/2003

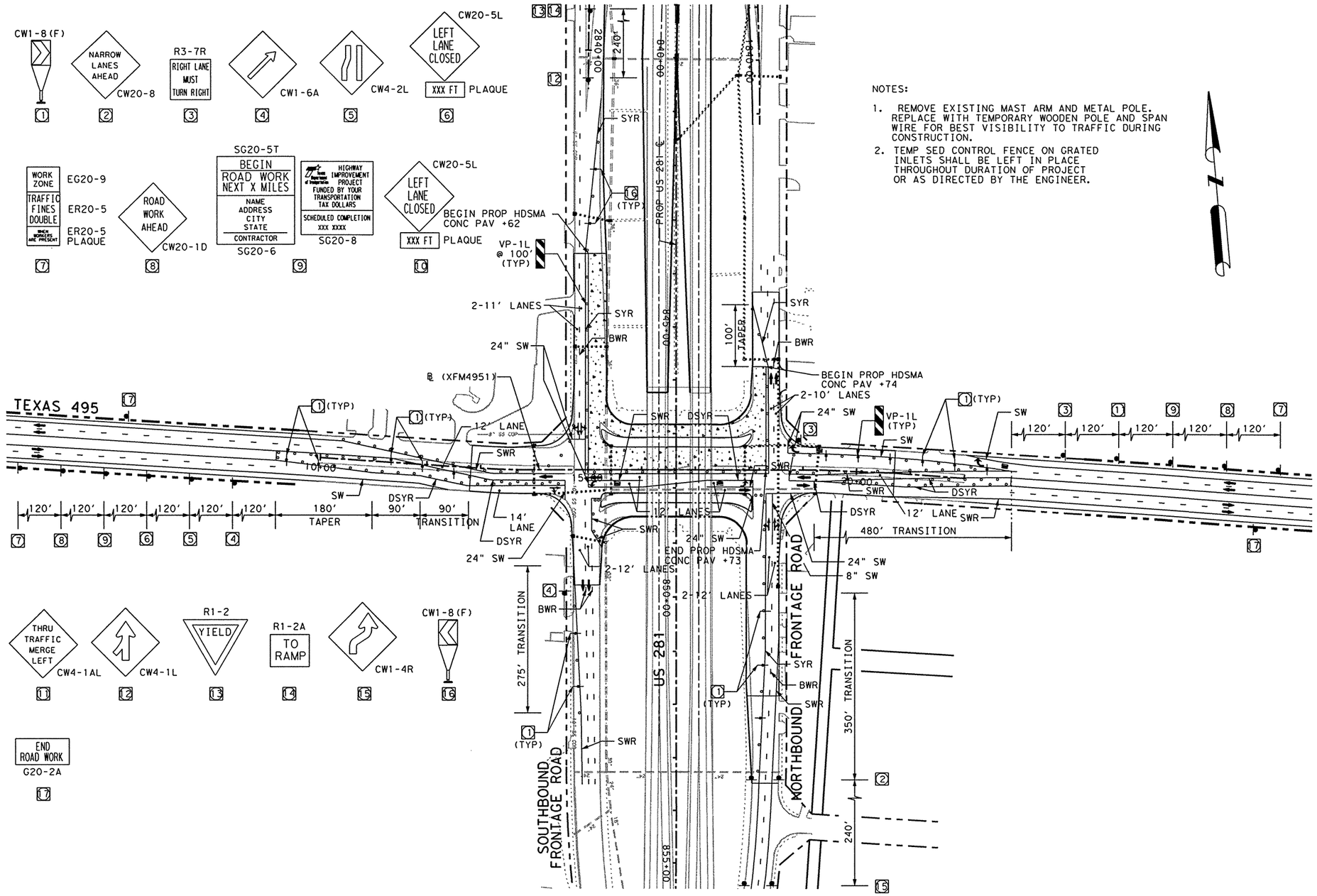

NOTES:

1. REMOVE EXISTING MAST ARM AND METAL POLE. REPLACE WITH TEMPORARY WOODEN POLE AND SPAN WIRE FOR BEST VISIBILITY TO TRAFFIC DURING CONSTRUCTION.
2. TEMP SED CONTROL FENCE ON GRATED INLETS SHALL BE LEFT IN PLACE THROUGHOUT DURATION OF PROJECT OR AS DIRECTED BY THE ENGINEER.

LEGEND:

- TEMP PAV CONSTRUCTED PREVIOUS PHASE
- TEMP PAV CONSTRUCTED THIS PHASE
- PROP CONSTRUCTION THIS PHASE
- PROP CONSTRUCTION PREVIOUS PHASE
- EXISTING TO BE REMOVED
- PROP TY III BARRICADES
- PROP SIGN

o o o	CHANNELIZING DEVICES
BY	BROKEN YELLOW (NON-REMOVABLE)
BW	BROKEN WHITE (NON-REMOVABLE)
SY	SOLID YELLOW (NON-REMOVABLE)
SW	SOLID WHITE (NON-REMOVABLE)
DSY	DOUBLE SOLID YELLOW (NON-REMOVABLE)
DSYR	DOUBLE SOLID YELLOW (REMOVABLE)
SWR	SOLID WHITE (REMOVABLE)
SYR	SOLID YELLOW (REMOVABLE)
BWR	BROKEN WHITE (REMOVABLE)
(Y)	YELLOW GUIDEMARKS AND SHORT TERM MARKINGS
(W)	WHITE GUIDEMARKS AND SHORT TERM MARKINGS
o-o-o-o	TEMP SED CONTROL FENCE (12' EACH SEGMENT)

THE SEAL APPEARING ON THIS DOCUMENT WAS AUTHORIZED BY JOHN M PEREZ, P.E. 66425 ON 06/20/2003.

STATE OF TEXAS
JOHN M. PEREZ
66425
REGISTERED PROFESSIONAL ENGINEER

6/20/03

Parsons Brinckerhoff Quade & Douglas Inc.

Texas Department of Transportation

© 2003 by TxDOT

US 281
TRAFFIC CONTROL PLAN
TEXAS 495
PHASE III STEP 1B

PLAN 1"= 200' HORIZ

SHEET 1 OF 1 | 281SEQIII1B01.DGN

DESIGNED: PAF	FED. RD DIV. No.	STATE	FEDERAL AID PROJECT No.	HIGHWAY No.
CHECKED: JP	6	TEXAS		US 281

DRAWN: KTD	STATE DISTRICT	COUNTY	CONTROL No.	SECTION No.	JOB No.	SHEET No.
CHECKED: JDH	PHARR	HIDALGO	0255	08	091	132

h:\22322a\coadd\sheets\traffic\tcp\281seqiii1b01.dgn

NAME
04:05:45 PM
08/06/2003

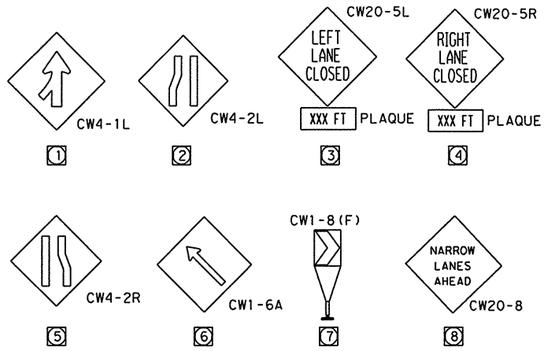

NOTE:

1. TEMP SED CONTROL FENCE ON GRATED INLETS SHALL BE LEFT IN PLACE THROUGHOUT DURATION OF PROJECT OR AS DIRECTED BY THE ENGINEER.

LEGEND:

- TEMP PAV CONSTRUCTED PREVIOUS PHASE
- TEMP PAV CONSTRUCTED THIS PHASE
- PROP CONSTRUCTION THIS PHASE
- PROP CONSTRUCTION PREVIOUS PHASE
- EXISTING TO BE REMOVED
- PROP TY III BARRICADES
- PROP SIGN
- ○○○ CHANNELIZING DEVICES

BY	BROKEN YELLOW (NON-REMOVABLE)
BW	BROKEN WHITE (NON-REMOVABLE)
SY	SOLID YELLOW (NON-REMOVABLE)
SW	SOLID WHITE (NON-REMOVABLE)
DSY	DOUBLE SOLID YELLOW (NON-REMOVABLE)
DSYR	DOUBLE SOLID YELLOW (REMOVABLE)
SWR	SOLID WHITE (REMOVABLE)
SYR	SOLID YELLOW (REMOVABLE)
BWR	BROKEN WHITE (REMOVABLE)
(Y)	YELLOW GUIDEMARKS AND SHORT TERM MARKINGS
(W)	WHITE GUIDEMARKS AND SHORT TERM MARKINGS

TEMP SED CONTROL FENCE (12' EACH SEGMENT)

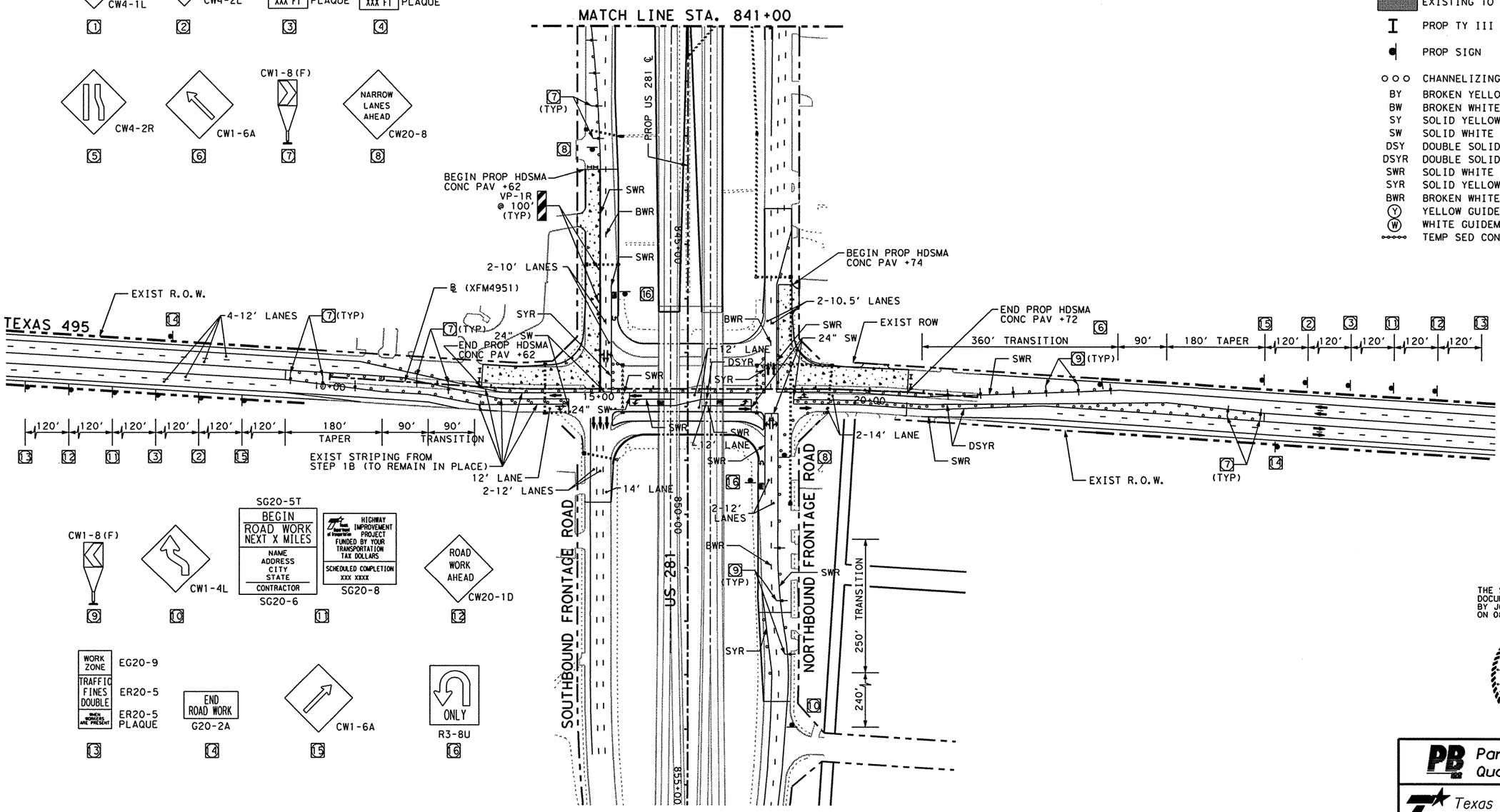

THE SEAL APPEARING ON THIS DOCUMENT WAS AUTHORIZED BY JOHN M PEREZ, P.E. 66425 ON 08/06/2003.

STATE OF TEXAS
JOHN M. PEREZ
66425
REGISTERED PROFESSIONAL ENGINEER

8/6/03

Parsons Brinckerhoff Quade & Douglas Inc.

Texas Department of Transportation

© 2003 by TxDOT

US 281
TRAFFIC CONTROL PLAN
TEXAS 495
PHASE III STEP 1C

PLAN 1"= 200' HORIZ

SHEET 1 OF 2 | 281SEQIII1C01.DGN

DESIGNED: PAF	FED. RD DIV. No.	STATE	FEDERAL AID PROJECT No.	HIGHWAY No.
CHECKED: JP	6	TEXAS		US 281

DRAWN: KTD	STATE DISTRICT	COUNTY	CONTROL No.	SECTION No.	JOB No.	SHEET No.
CHECKED: JDH	PHARR	HIDALGO	0255	08	091	133

h:\22322o\cadd\sheets\traffic\tcp\281seqiiic01.dgn

NAME
11:13:19 AM
06/20/2003

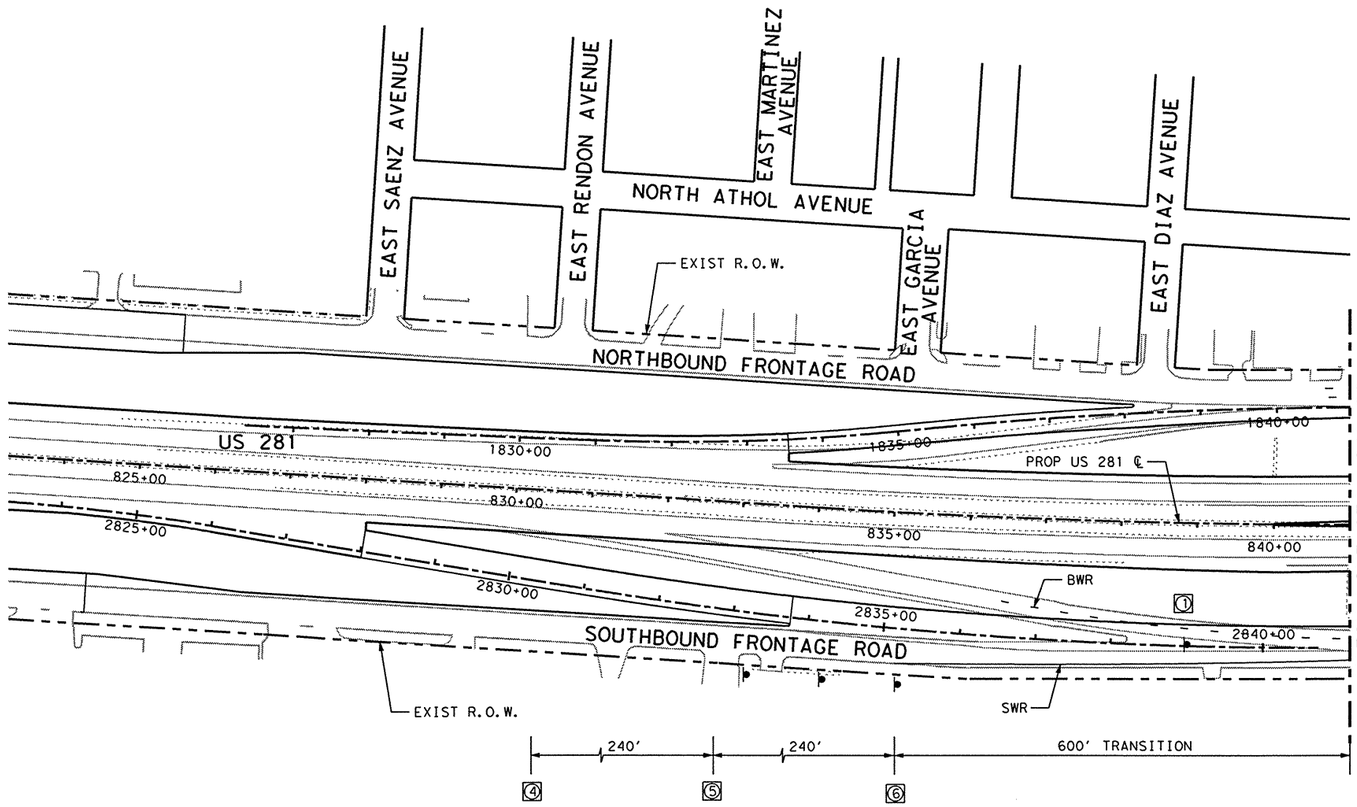

NOTE:

1. TEMP SED CONTROL FENCE ON GRATED INLETS SHALL BE LEFT IN PLACE THROUGHOUT DURATION OF PROJECT OR AS DIRECTED BY THE ENGINEER.

LEGEND:

- TEMP PAV CONSTRUCTED PREVIOUS PHASE
- TEMP PAV CONSTRUCTED THIS PHASE
- PROP CONSTRUCTION THIS PHASE
- PROP CONSTRUCTION PREVIOUS PHASE
- EXISTING TO BE REMOVED
- PROP TY III BARRICADES
- PROP SIGN
- ○○○ CHANNELIZING DEVICES
- BY BROKEN YELLOW (NON-REMOVABLE)
- BW BROKEN WHITE (NON-REMOVABLE)
- SY SOLID YELLOW (NON-REMOVABLE)
- SW SOLID WHITE (NON-REMOVABLE)
- DSY DOUBLE SOLID YELLOW (NON-REMOVABLE)
- DSYR DOUBLE SOLID YELLOW (REMOVABLE)
- SWR SOLID WHITE (REMOVABLE)
- SYR SOLID YELLOW (REMOVABLE)
- BWR BROKEN WHITE (REMOVABLE)
- (Y) YELLOW GUIDEMARKS AND SHORT TERM MARKINGS
- (W) WHITE GUIDEMARKS AND SHORT TERM MARKINGS
- TEMP SED CONTROL FENCE (12' EACH SEGMENT)

THE SEAL APPEARING ON THIS DOCUMENT WAS AUTHORIZED BY JOHN M PEREZ, P.E. 66425 ON 06/20/2003.

STATE OF TEXAS · JOHN M. PEREZ · 66425 · REGISTERED PROFESSIONAL ENGINEER

6/20/03

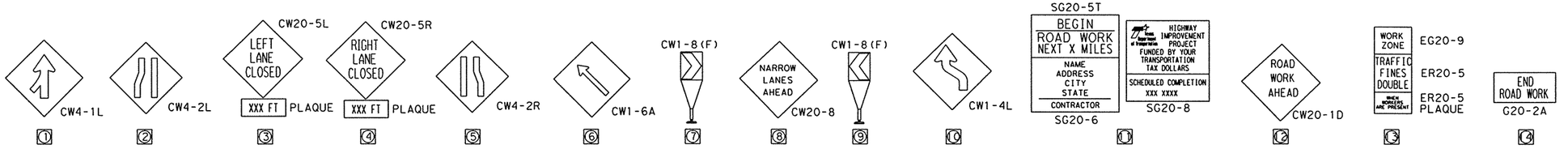

Parsons Brinckerhoff Quade & Douglas Inc.

Texas Department of Transportation

© 2003 by TxDOT

US 281
TRAFFIC CONTROL PLAN
TEXAS 495
PHASE III STEP 1C

PLAN 1"= 200' HORIZ

SHEET 2 OF 2 | 281SEQIII1C02.DGN

DESIGNED: PAF	FED. RD DIV. NO.	STATE	FEDERAL AID PROJECT No.	HIGHWAY No.
CHECKED: JP	6	TEXAS		US 281

DRAWN: KTD	STATE DISTRICT	COUNTY	CONTROL No.	SECTION No.	JOB No.	SHEET No.
CHECKED: JDH	PHARR	HIDALGO	0255	08	091	134

h:\22320\cadd\sheets\traffic\tcp\281seqiii1c02.dgn

NAME
11:13:26 AM
06/20/2003

WORK ZONE / TRAFFIC FINES DOUBLE / WHEN WORKERS ARE PRESENT — EG20-9, ER20-5, ER20-5 PLAQUE — 1

ROAD WORK AHEAD — CW20-1D — 2

SG20-5T
BEGIN ROAD WORK NEXT X MILES
NAME ADDRESS CITY STATE
CONTRACTOR
SG20-6 — 3

HIGHWAY IMPROVEMENT PROJECT FUNDED BY YOUR TRANSPORTATION TAX DOLLARS
SCHEDULED COMPLETION XXX XXXX
SG20-8

CW1-6A — 4

CW1-8(F) — 5

NARROW LANES AHEAD — CW20-8 — 6

CW1-4L — 7

CW1-8(F) — 8

CW20-5L
LEFT LANE CLOSED
XXX FT PLAQUE — 9

CW1-4R — 10

CW20-5R
RIGHT LANE CLOSED
XXX FT PLAQUE — 13

R3-7R
RIGHT LANE MUST TURN RIGHT — 11

END ROAD WORK — G20-2A — 12

FCW4-2R — 14

FCW4-2L — 15

ECW1-6A — 16

ONLY — R3-8U — 17

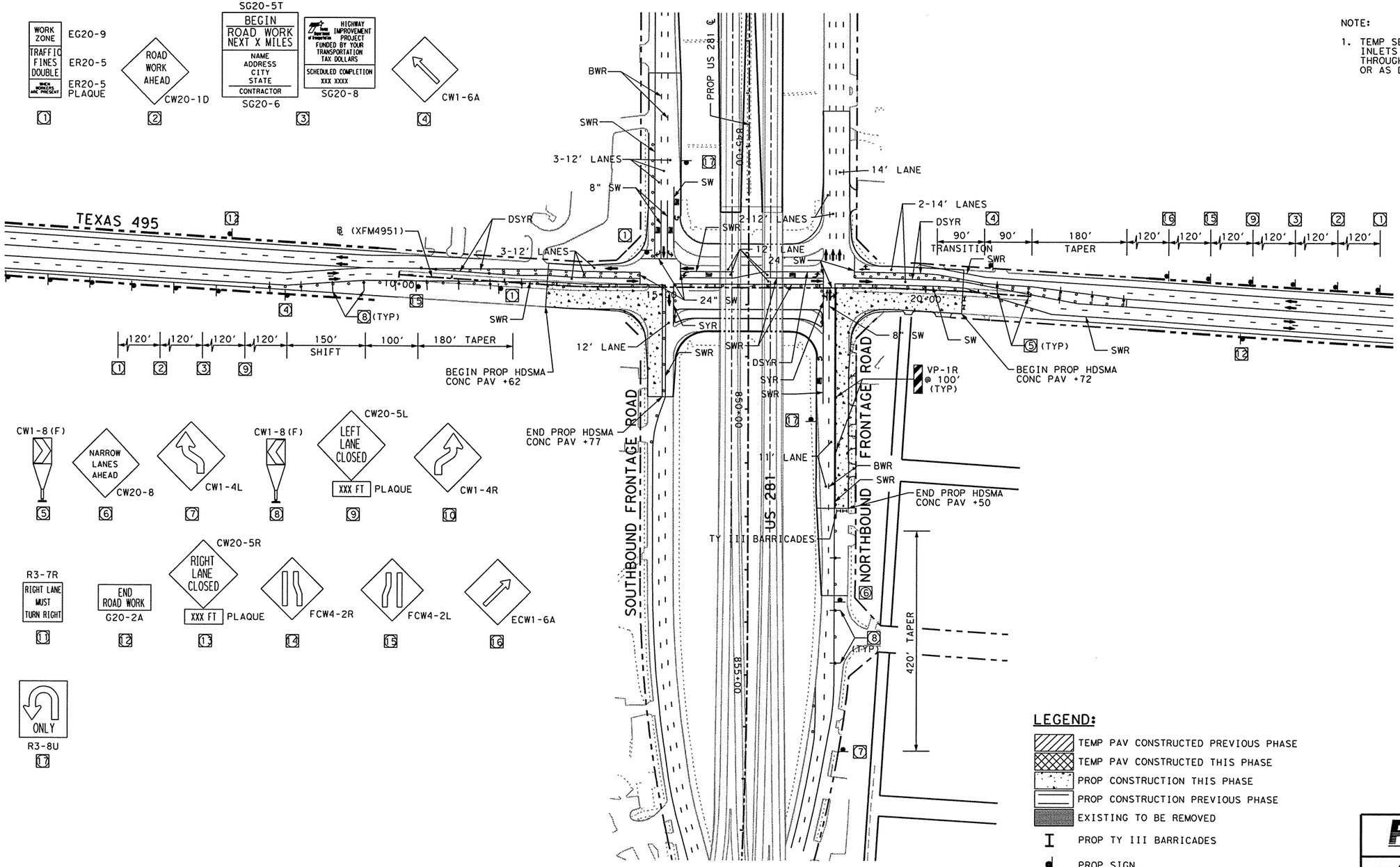

NOTE:

1. TEMP SED CONTROL FENCE ON GRATED INLETS SHALL BE LEFT IN PLACE THROUGHOUT DURATION OF PROJECT OR AS DIRECTED BY THE ENGINEER.

LEGEND:

	TEMP PAV CONSTRUCTED PREVIOUS PHASE
	TEMP PAV CONSTRUCTED THIS PHASE
	PROP CONSTRUCTION THIS PHASE
	PROP CONSTRUCTION PREVIOUS PHASE
	EXISTING TO BE REMOVED
I	PROP TY III BARRICADES
	PROP SIGN
o o o	CHANNELIZING DEVICES
BY	BROKEN YELLOW (NON-REMOVABLE)
BW	BROKEN WHITE (NON-REMOVABLE)
SY	SOLID YELLOW (NON-REMOVABLE)
SW	SOLID WHITE (NON-REMOVABLE)
DSY	DOUBLE SOLID YELLOW (NON-REMOVABLE)
DSYR	DOUBLE SOLID YELLOW (REMOVABLE)
SWR	SOLID WHITE (REMOVABLE)
SYR	SOLID YELLOW (REMOVABLE)
BWR	BROKEN WHITE (REMOVABLE)
(Y)	YELLOW GUIDEMARKS AND SHORT TERM MARKINGS
(W)	WHITE GUIDEMARKS AND SHORT TERM MARKINGS
	TEMP SED CONTROL FENCE (12' EACH SEGMENT)

THE SEAL APPEARING ON THIS DOCUMENT WAS AUTHORIZED BY JOHN M PEREZ, P.E. 66425 ON 06/20/2003.

STATE OF TEXAS — JOHN M. PEREZ — 66425 — REGISTERED PROFESSIONAL ENGINEER

6/20/03

Parsons Brinckerhoff Quade & Douglas Inc.

Texas Department of Transportation

© 2003 by TxDOT

US 281
TRAFFIC CONTROL PLAN
TEXAS 495
PHASE III STEP 1D

PLAN 1"= 200' HORIZ

SHEET 1 OF 1 — 281SEQIII1D01.DGN

DESIGNED: PAF	FED. RD DIV. NO.	STATE	FEDERAL AID PROJECT No.			HIGHWAY No.	
CHECKED: JP	6	TEXAS				US 281	
DRAWN: KTD	STATE DISTRICT	COUNTY	CONTROL No.	SECTION No.	JOB No.	SHEET No.	
CHECKED: JDH	PHARR	HIDALGO	0255	08	091	135	

h:\22322a\cadd\sheets\traffic\tcp\281seqiii1d01.dgn

NAME
11:13:34 AM
06/20/2003

MATCH LINE STA. 818+00

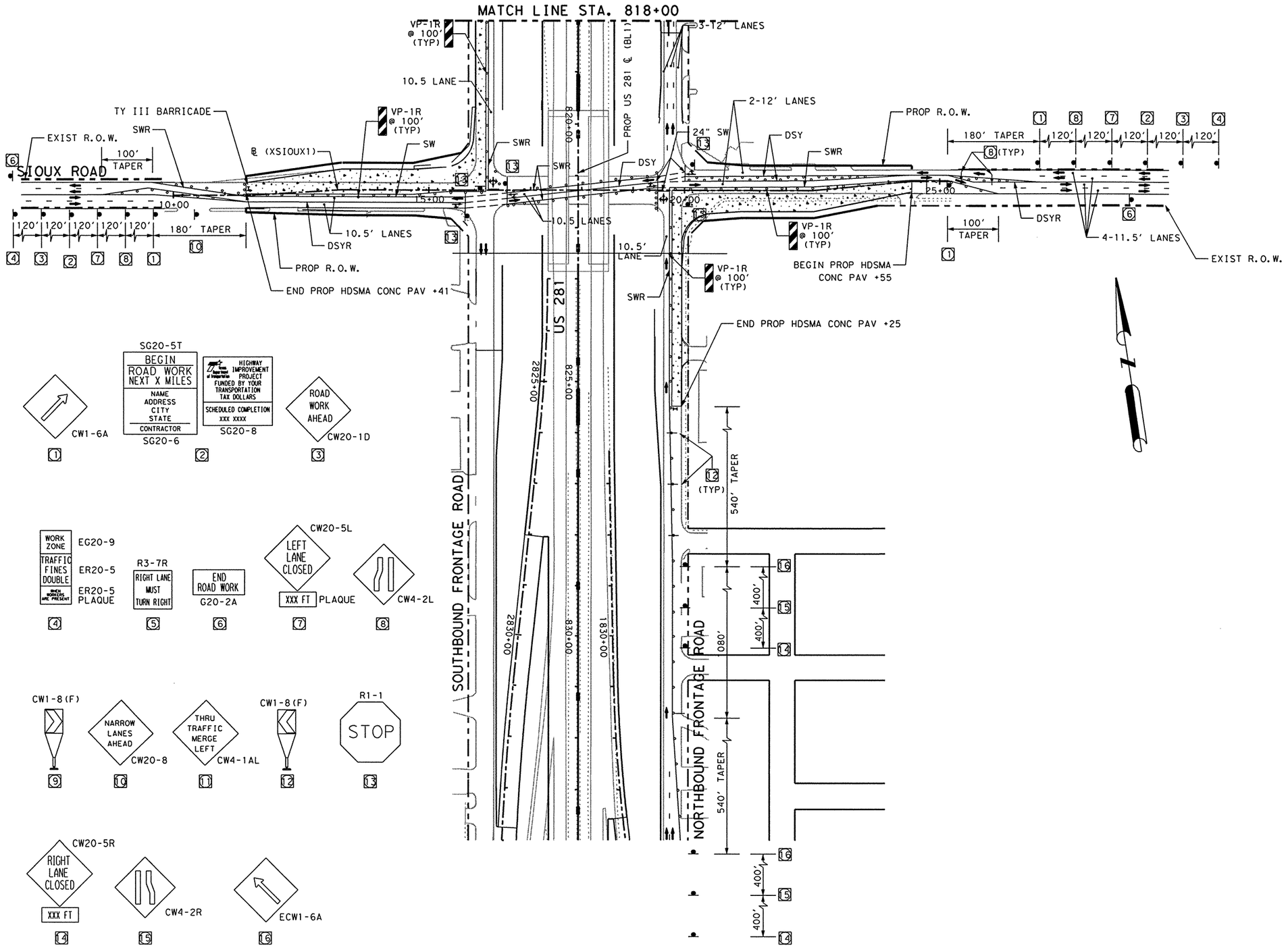

NOTE:

1. REMOVE ALL EXISTING FLASHING BEACONS AND WOODEN POLES.
2. TEMP SED CONTROL FENCE ON GRATED INLETS SHALL BE LEFT IN PLACE THROUGHOUT DURATION OF PROJECT OR AS DIRECTED BY THE ENGINEER.

LEGEND:

- TEMP PAV CONSTRUCTED PREVIOUS PHASE
- TEMP PAV CONSTRUCTED THIS PHASE
- PROP CONSTRUCTION THIS PHASE
- PROP CONSTRUCTION PREVIOUS PHASE
- EXISTING TO BE REMOVED
- I PROP TY III BARRICADES
- PROP SIGN
- o o o CHANNELIZING DEVICES
- BY BROKEN YELLOW (NON-REMOVABLE)
- BW BROKEN WHITE (NON-REMOVABLE)
- SY SOLID YELLOW (NON-REMOVABLE)
- SW SOLID WHITE (NON-REMOVABLE)
- DSY DOUBLE SOLID YELLOW (NON-REMOVABLE)
- DSYR DOUBLE SOLID YELLOW (REMOVABLE)
- SWR SOLID WHITE (REMOVABLE)
- SYR SOLID YELLOW (REMOVABLE)
- BWR BROKEN WHITE (REMOVABLE)
- (Y) YELLOW GUIDEMARKS AND SHORT TERM MARKINGS
- (W) WHITE GUIDEMARKS AND SHORT TERM MARKINGS
- TEMP SED CONTROL FENCE (12' EACH SEGMENT)

THE SEAL APPEARING ON THIS DOCUMENT WAS AUTHORIZED BY JOHN M PEREZ, P.E. 66425 ON 06/20/2003.

STATE OF TEXAS
JOHN M. PEREZ
66425
REGISTERED PROFESSIONAL ENGINEER
6/20/03

Parsons Brinckerhoff Quade & Douglas Inc.

Texas Department of Transportation

© 2003 by TxDOT

US 281
TRAFFIC CONTROL PLAN
SIOUX RD
PHASE III STEP 2A

PLAN 1"= 200' HORIZ

SHEET 1 OF 2 | 281SEQIII2A01.DGN

DESIGNED: PAF	FED. RD DIV. No.	STATE	FEDERAL AID PROJECT No.			HIGHWAY No.
CHECKED: JP	6	TEXAS				US 281
DRAWN: KTD	STATE DISTRICT	COUNTY	CONTROL No.	SECTION No.	JOB No.	SHEET No.
CHECKED: JDH	PHARR	HIDALGO	0255	08	091	136

h:\22322a\cadd\sheets\traffic\tcp\281seqiii2a01.dgn

NAME

11:13:41 AM

06/20/2003

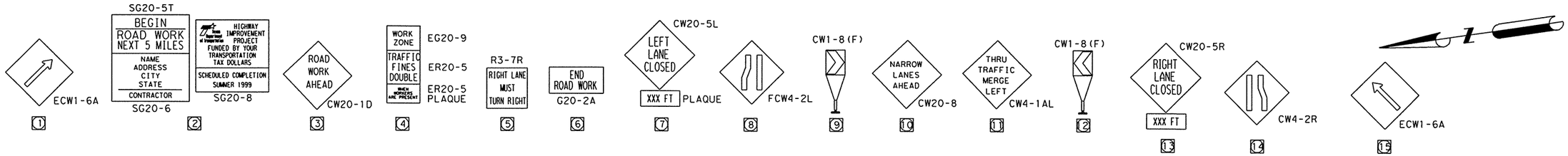

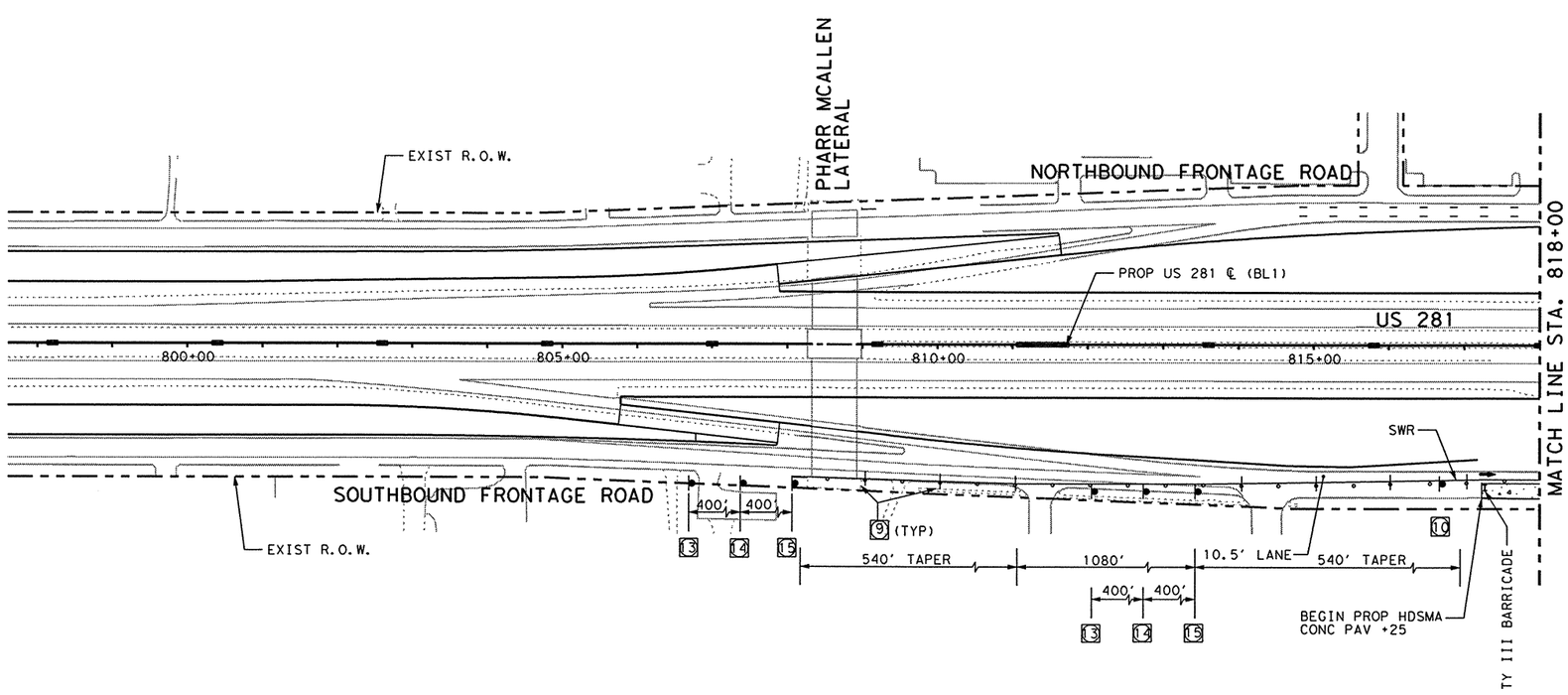

NOTE:

1. TEMP SED CONTROL FENCE ON GRATED INLETS SHALL BE LEFT IN PLACE THROUGHOUT DURATION OF PROJECT OR AS DIRECTED BY THE ENGINEER.

LEGEND:

- TEMP PAV CONSTRUCTED PREVIOUS PHASE
- TEMP PAV CONSTRUCTED THIS PHASE
- PROP CONSTRUCTION THIS PHASE
- PROP CONSTRUCTION PREVIOUS PHASE
- EXISTING TO BE REMOVED
- I — PROP TY III BARRICADES
- PROP SIGN
- ○○○ CHANNELIZING DEVICES
- BY BROKEN YELLOW (NON-REMOVABLE)
- BW BROKEN WHITE (NON-REMOVABLE)
- SY SOLID YELLOW (NON-REMOVABLE)
- SW SOLID WHITE (NON-REMOVABLE)
- DSY DOUBLE SOLID YELLOW (NON-REMOVABLE)
- DSYR DOUBLE SOLID YELLOW (REMOVABLE)
- SWR SOLID WHITE (REMOVABLE)
- SYR SOLID YELLOW (REMOVABLE)
- BWR BROKEN WHITE (REMOVABLE)
- (Y) YELLOW GUIDEMARKS AND SHORT TERM MARKINGS
- (W) WHITE GUIDEMARKS AND SHORT TERM MARKINGS
- TEMP SED CONTROL FENCE (12' EACH SEGMENT)

THE SEAL APPEARING ON THIS DOCUMENT WAS AUTHORIZED BY JOHN M PEREZ, P.E. 66425 ON 06/20/2003.

STATE OF TEXAS — JOHN M. PEREZ — 66425 — REGISTERED PROFESSIONAL ENGINEER

6/20/03

Parsons Brinckerhoff Quade & Douglas Inc.

Texas Department of Transportation

© 2003 by TxDOT

US 281
TRAFFIC CONTROL PLAN
SIOUX RD
PHASE III STEP 2A

PLAN 1"= 200' HORIZ

SHEET 2 OF 2 | 281SEQIII2A02.DGN

DESIGNED: PAF	FED. RD DIV. NO.	STATE	FEDERAL AID PROJECT No.			HIGHWAY No.	
CHECKED: JP	6	TEXAS				US 281	
DRAWN: KTD	STATE DISTRICT	COUNTY	CONTROL No.	SECTION No.	JOB No.	SHEET No.	
CHECKED: JDH	PHARR	HIDALGO	0255	08	091	137	

h:\22322a\cadd\sheets\traffic\tcp\281seqiii2a02.dgn

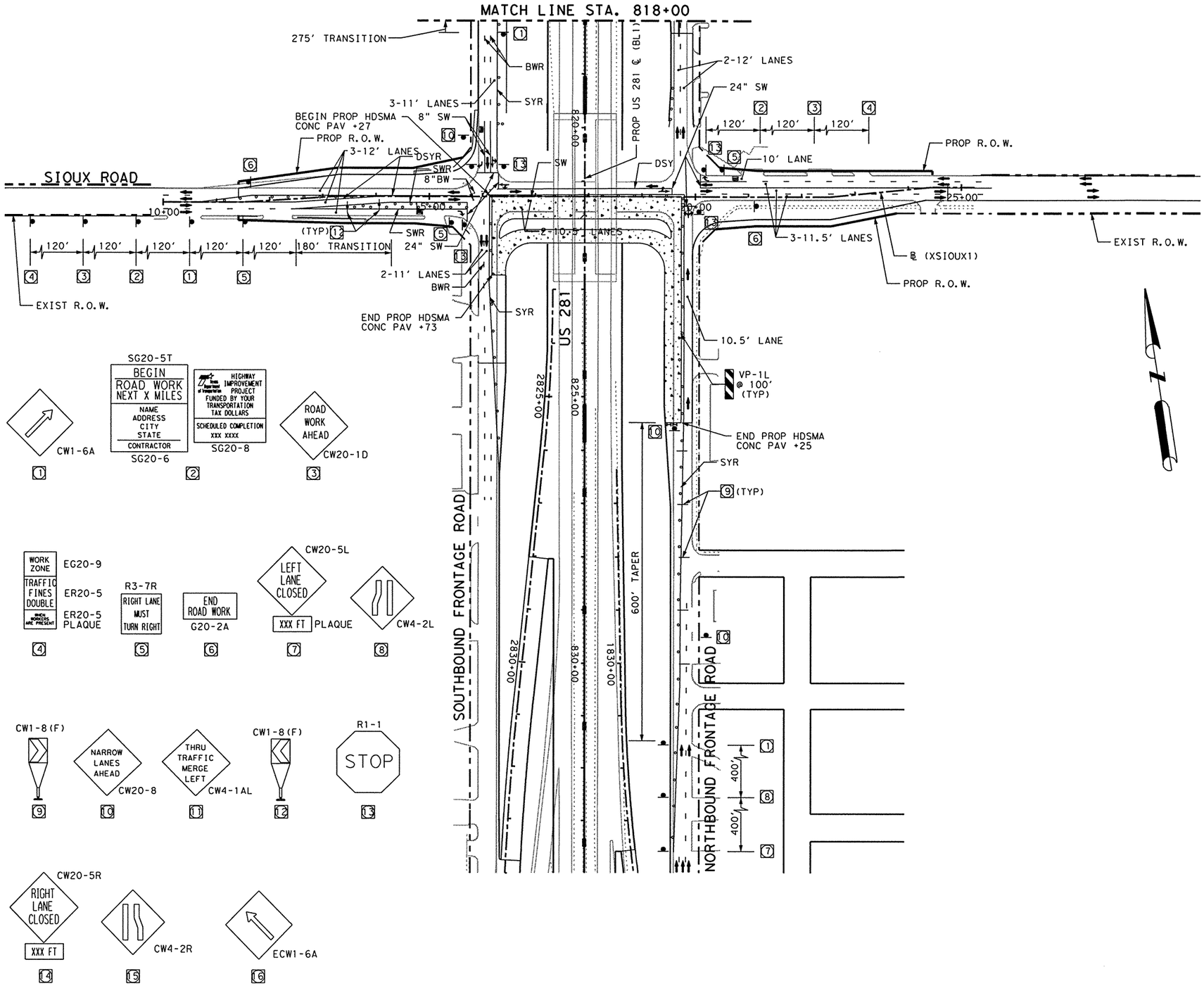

NOTE:

1. REMOVE ALL EXISTING FLASHING BEACONS AND WOODEN POLES.
2. TEMP SED CONTROL FENCE ON GRATED INLETS SHALL BE LEFT IN PLACE THROUGHOUT DURATION OF PROJECT OR AS DIRECTED BY THE ENGINEER.

LEGEND:

- TEMP PAV CONSTRUCTED PREVIOUS PHASE
- TEMP PAV CONSTRUCTED THIS PHASE
- PROP CONSTRUCTION THIS PHASE
- PROP CONSTRUCTION PREVIOUS PHASE
- EXISTING TO BE REMOVED
- PROP TY III BARRICADES
- PROP SIGN
- CHANNELIZING DEVICES
- BY BROKEN YELLOW (NON-REMOVABLE)
- BW BROKEN WHITE (NON-REMOVABLE)
- SY SOLID YELLOW (NON-REMOVABLE)
- SW SOLID WHITE (NON-REMOVABLE)
- DSY DOUBLE SOLID YELLOW (NON-REMOVABLE)
- DSYR DOUBLE SOLID YELLOW (REMOVABLE)
- SWR SOLID WHITE (REMOVABLE)
- SYR SOLID YELLOW (REMOVABLE)
- BWR BROKEN WHITE (REMOVABLE)
- (Y) YELLOW GUIDEMARKS AND SHORT TERM MARKINGS
- (W) WHITE GUIDEMARKS AND SHORT TERM MARKINGS
- TEMP SED CONTROL FENCE (12' EACH SEGMENT)

THE SEAL APPEARING ON THIS DOCUMENT WAS AUTHORIZED BY JOHN M PEREZ, P.E. 66425 ON 06/20/2003.

STATE OF TEXAS
JOHN M. PEREZ
66425
REGISTERED PROFESSIONAL ENGINEER

John M. Perez 6/20/03

Parsons Brinckerhoff Quade & Douglas Inc.

Texas Department of Transportation

© 2003 by TxDOT

US 281
TRAFFIC CONTROL PLAN
SIOUX RD
PHASE III STEP 2B

PLAN 1"= 200' HORIZ

SHEET 1 OF 2 | 281SEQIII2B01.DGN

DESIGNED: PAF	FED. RD DIV. No.	STATE	FEDERAL AID PROJECT No.	HIGHWAY No.
CHECKED: JP	6	TEXAS		US 281

DRAWN: KTD	STATE DISTRICT	COUNTY	CONTROL No.	SECTION No.	JOB No.	SHEET No.
CHECKED: JDH	PHARR	HIDALGO	0255	08	091	138

NAME
11:13:48 AM
06/20/2003
h:\22322a\cadd\sheets\traffic\tcp\281seqiii2b01.dgn

NAME
11:13:56 AM
06/20/2003
h:\22322a\cadd\sheets\traffic\tcp\281seqiii2b02.dgn

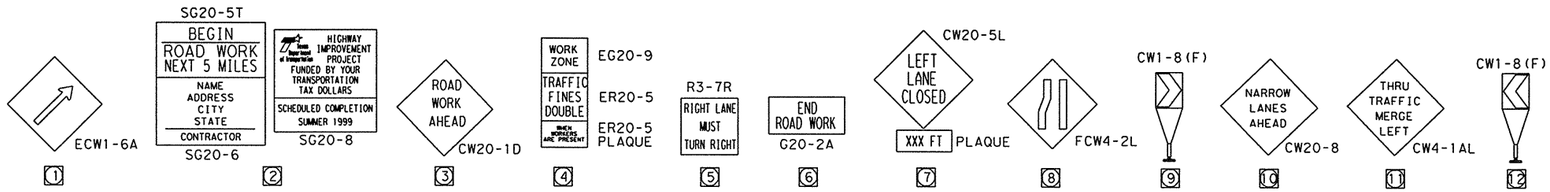

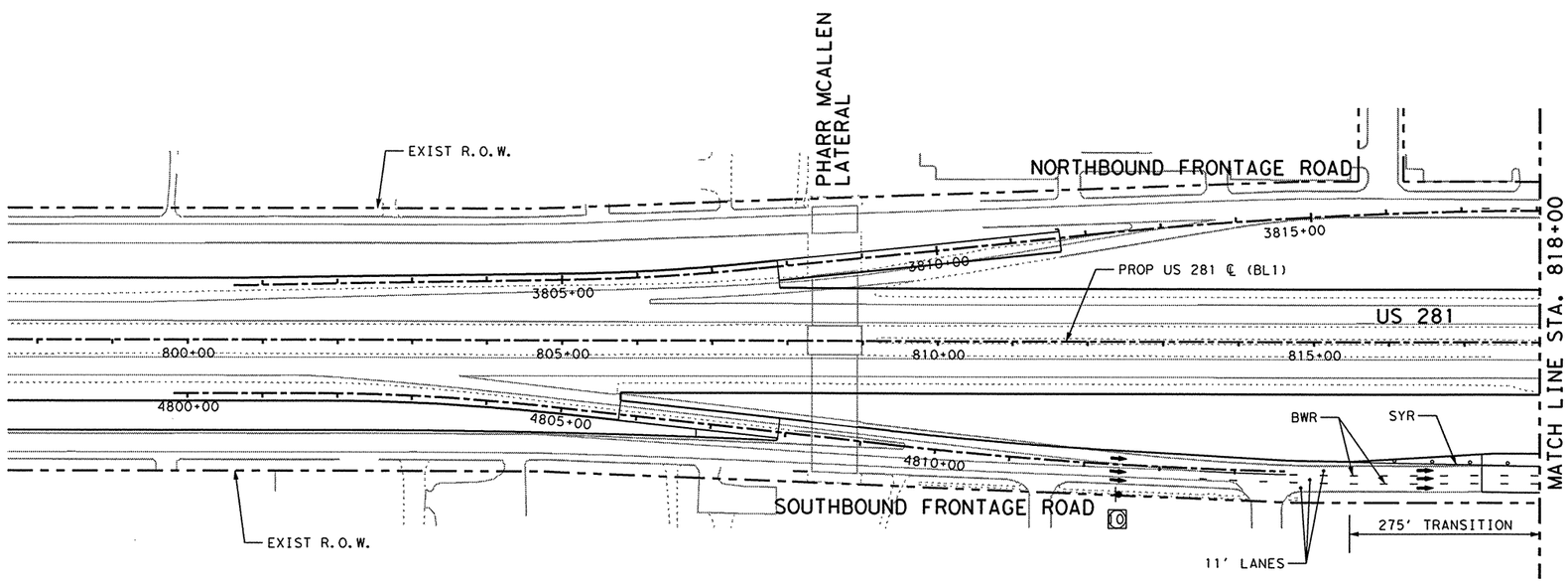

NOTE:

1. TEMP SED CONTROL FENCE ON GRATED INLETS SHALL BE LEFT IN PLACE THROUGHOUT DURATION OF PROJECT OR AS DIRECTED BY THE ENGINEER.

LEGEND:

- TEMP PAV CONSTRUCTED PREVIOUS PHASE
- TEMP PAV CONSTRUCTED THIS PHASE
- PROP CONSTRUCTION THIS PHASE
- PROP CONSTRUCTION PREVIOUS PHASE
- EXISTING TO BE REMOVED
- I — PROP TY III BARRICADES
- ● — PROP SIGN
- ○○○ CHANNELIZING DEVICES
- BY BROKEN YELLOW (NON-REMOVABLE)
- BW BROKEN WHITE (NON-REMOVABLE)
- SY SOLID YELLOW (NON-REMOVABLE)
- SW SOLID WHITE (NON-REMOVABLE)
- DSY DOUBLE SOLID YELLOW (NON-REMOVABLE)
- DSYR DOUBLE SOLID YELLOW (REMOVABLE)
- SWR SOLID WHITE (REMOVABLE)
- SYR SOLID YELLOW (REMOVABLE)
- BWR BROKEN WHITE (REMOVABLE)
- (Y) YELLOW GUIDEMARKS AND SHORT TERM MARKINGS
- (W) WHITE GUIDEMARKS AND SHORT TERM MARKINGS
- TEMP SED CONTROL FENCE (12' EACH SEGMENT)

THE SEAL APPEARING ON THIS DOCUMENT WAS AUTHORIZED BY JOHN M PEREZ, P.E. 66425 ON 06/20/2003.

STATE OF TEXAS — JOHN M. PEREZ — 66425 — REGISTERED PROFESSIONAL ENGINEER

6/20/03

Parsons Brinckerhoff Quade & Douglas Inc.

Texas Department of Transportation

© 2003 by TxDOT

US 281
TRAFFIC CONTROL PLAN
SIOUX RD
PHASE III STEP 2B

PLAN 1"= 200' HORIZ

SHEET 2 OF 2 | 281SEQIII2B02.DGN

DESIGNED: PAF	FED. RD DIV. NO.	STATE	FEDERAL AID PROJECT NO.				HIGHWAY NO.
CHECKED: JP	6	TEXAS					US 281
DRAWN: KTD	STATE DISTRICT	COUNTY	CONTROL NO.	SECTION NO.	JOB NO.	SHEET NO.	
CHECKED: JDH	PHARR	HIDALGO	0255	08	091	139	

NAME
11:14:03 AM
06/20/2003
h:\22322a\cadd\sheets\traffic\tcp\281seqiii2c01.dgn

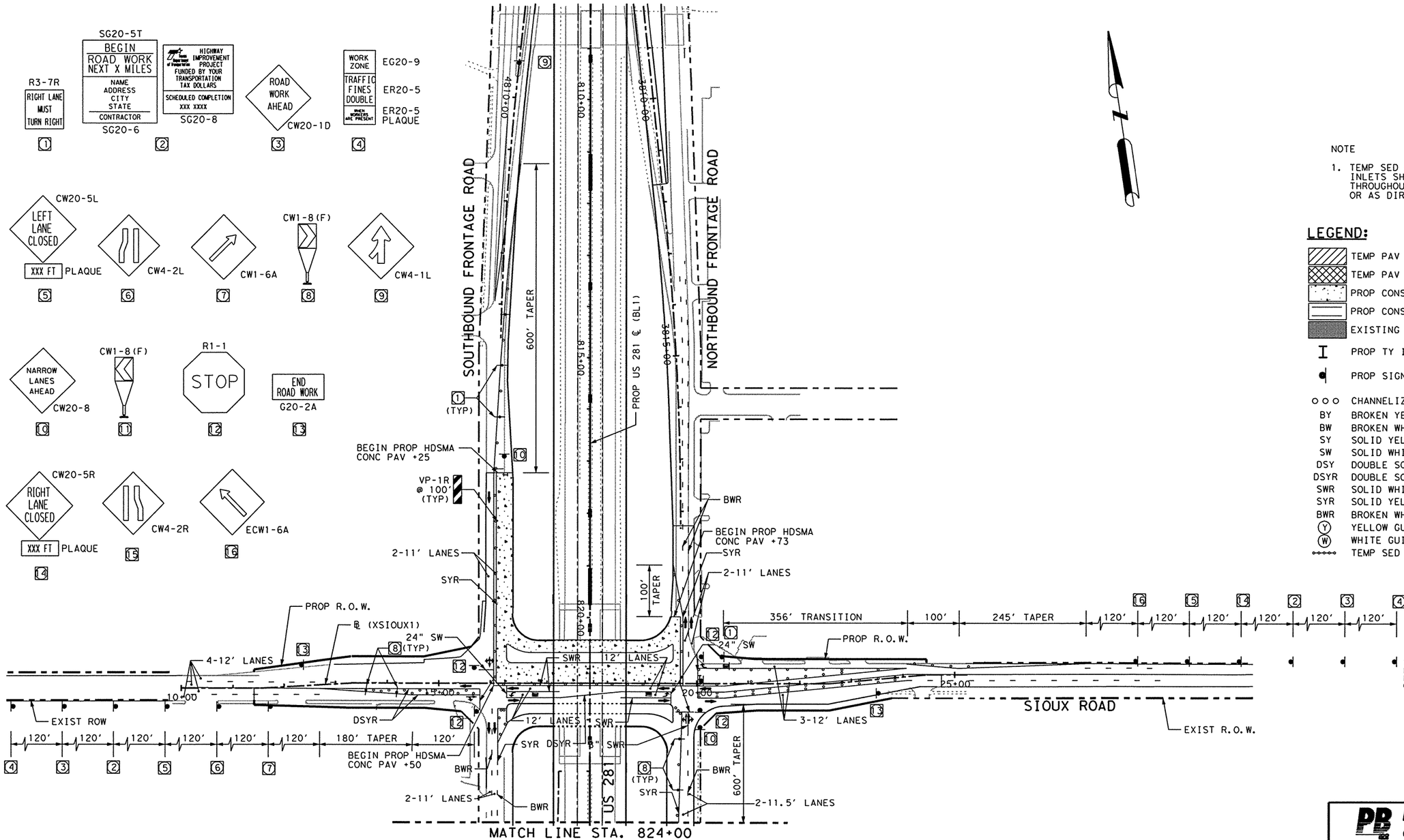

NOTE

1. TEMP SED CONTROL FENCE ON GRATED INLETS SHALL BE LEFT IN PLACE THROUGHOUT DURATION OF PROJECT OR AS DIRECTED BY THE ENGINEER.

LEGEND:

- TEMP PAV CONSTRUCTED PREVIOUS PHASE
- TEMP PAV CONSTRUCTED THIS PHASE
- PROP CONSTRUCTION THIS PHASE
- PROP CONSTRUCTION PREVIOUS PHASE
- EXISTING TO BE REMOVED
- PROP TY III BARRICADES
- PROP SIGN
- o o o CHANNELIZING DEVICES
- BY BROKEN YELLOW (NON-REMOVABLE)
- BW BROKEN WHITE (NON-REMOVABLE)
- SY SOLID YELLOW (NON-REMOVABLE)
- SW SOLID WHITE (NON-REMOVABLE)
- DSY DOUBLE SOLID YELLOW (NON-REMOVABLE)
- DSYR DOUBLE SOLID YELLOW (REMOVABLE)
- SWR SOLID WHITE (REMOVABLE)
- SYR SOLID YELLOW (REMOVABLE)
- BWR BROKEN WHITE (REMOVABLE)
- (Y) YELLOW GUIDEMARKS AND SHORT TERM MARKINGS
- (W) WHITE GUIDEMARKS AND SHORT TERM MARKINGS
- TEMP SED CONTROL FENCE (12' EACH SEGMENT)

THE SEAL APPEARING ON THIS DOCUMENT WAS AUTHORIZED BY JOHN M PEREZ, P.E. 66425 ON 06/20/2003.

STATE OF TEXAS · JOHN M. PEREZ · 66425 · REGISTERED PROFESSIONAL ENGINEER · 6/20/03

Parsons Brinckerhoff Quade & Douglas Inc.

Texas Department of Transportation

© 2003 by TxDOT

US 281
TRAFFIC CONTROL PLAN
SIOUX RD
PHASE III STEP 2C

PLAN 1"= 200' HORIZ

SHEET 1 OF 2 | 281SEQIII2C01.DGN

DESIGNED: PAF	FED. RD DIV. No.	STATE	FEDERAL AID PROJECT No.			HIGHWAY No.	
CHECKED: JP	6	TEXAS				US 281	
DRAWN: KTD	STATE DISTRICT	COUNTY	CONTROL No.	SECTION No.	JOB No.	SHEET No.	
CHECKED: JDH	PHARR	HIDALGO	0255	08	091	140	

NAME
11:14:10 AM
06/20/2003

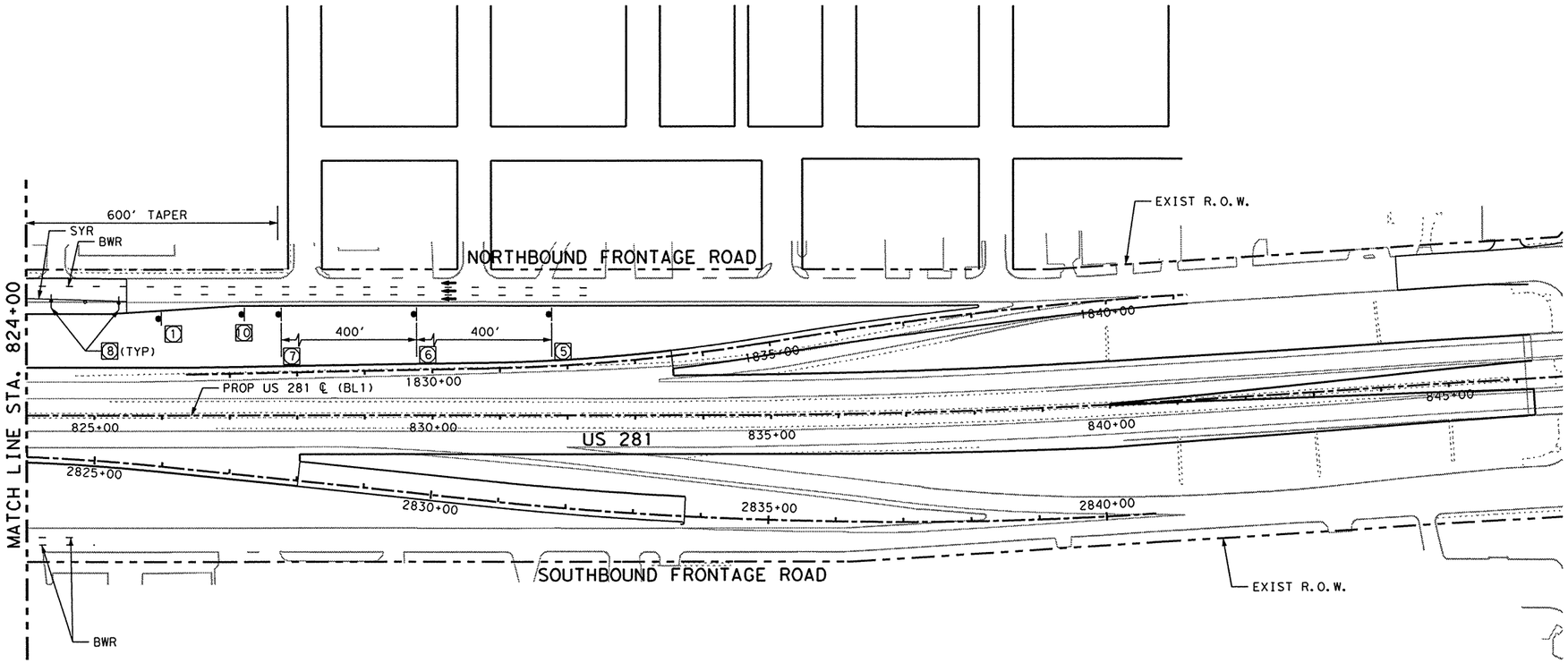

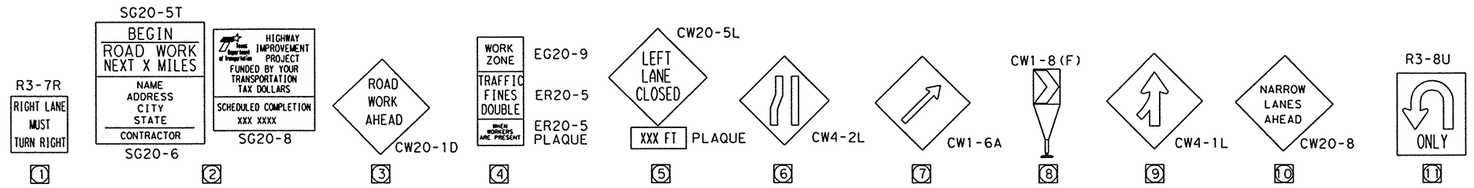

NOTE:

1. TEMP SED CONTROL FENCE ON GRATED INLETS SHALL BE LEFT IN PLACE THROUGHOUT DURATION OF PROJECT OR AS DIRECTED BY THE ENGINEER.

LEGEND:

- TEMP PAV CONSTRUCTED PREVIOUS PHASE
- TEMP PAV CONSTRUCTED THIS PHASE
- PROP CONSTRUCTION THIS PHASE
- PROP CONSTRUCTION PREVIOUS PHASE
- EXISTING TO BE REMOVED
- I — PROP TY III BARRICADES
- PROP SIGN
- o o o — CHANNELIZING DEVICES
- BY — BROKEN YELLOW (NON-REMOVABLE)
- BW — BROKEN WHITE (NON-REMOVABLE)
- SY — SOLID YELLOW (NON-REMOVABLE)
- SW — SOLID WHITE (NON-REMOVABLE)
- DSY — DOUBLE SOLID YELLOW (NON-REMOVABLE)
- DSYR — DOUBLE SOLID YELLOW (REMOVABLE)
- SWR — SOLID WHITE (REMOVABLE)
- SYR — SOLID YELLOW (REMOVABLE)
- BWR — BROKEN WHITE (REMOVABLE)
- (Y) — YELLOW GUIDEMARKS AND SHORT TERM MARKINGS
- (W) — WHITE GUIDEMARKS AND SHORT TERM MARKINGS
- TEMP SED CONTROL FENCE (12' EACH SEGMENT)

THE SEAL APPEARING ON THIS DOCUMENT WAS AUTHORIZED BY JOHN M PEREZ, P.E. 66425 ON 06/20/2003.

STATE OF TEXAS
JOHN M. PEREZ
66425
REGISTERED PROFESSIONAL ENGINEER
4/20/03

Parsons Brinckerhoff Quade & Douglas Inc.

Texas Department of Transportation

© 2003 by TxDOT

US 281
TRAFFIC CONTROL PLAN
SIOUX RD
PHASE III STEP 2C

PLAN 1"= 200' HORIZ

SHEET 2 OF 2				281SEQIII2C02.DGN			
DESIGNED: PAF	FED. RD DIV. No.	STATE	FEDERAL AID PROJECT No.			HIGHWAY No.	
CHECKED: JP	6	TEXAS				US 281	
DRAWN: KTD	STATE DISTRICT	COUNTY	CONTROL No.	SECTION No.	JOB No.	SHEET No.	
CHECKED: JDH	PHARR	HIDALGO	0255	08	091	141	

h:\22322a\cadd\sheets\traffic\tcp\281seqiii2c02.dgn

NAME
04:05:53 PM
08/06/2003

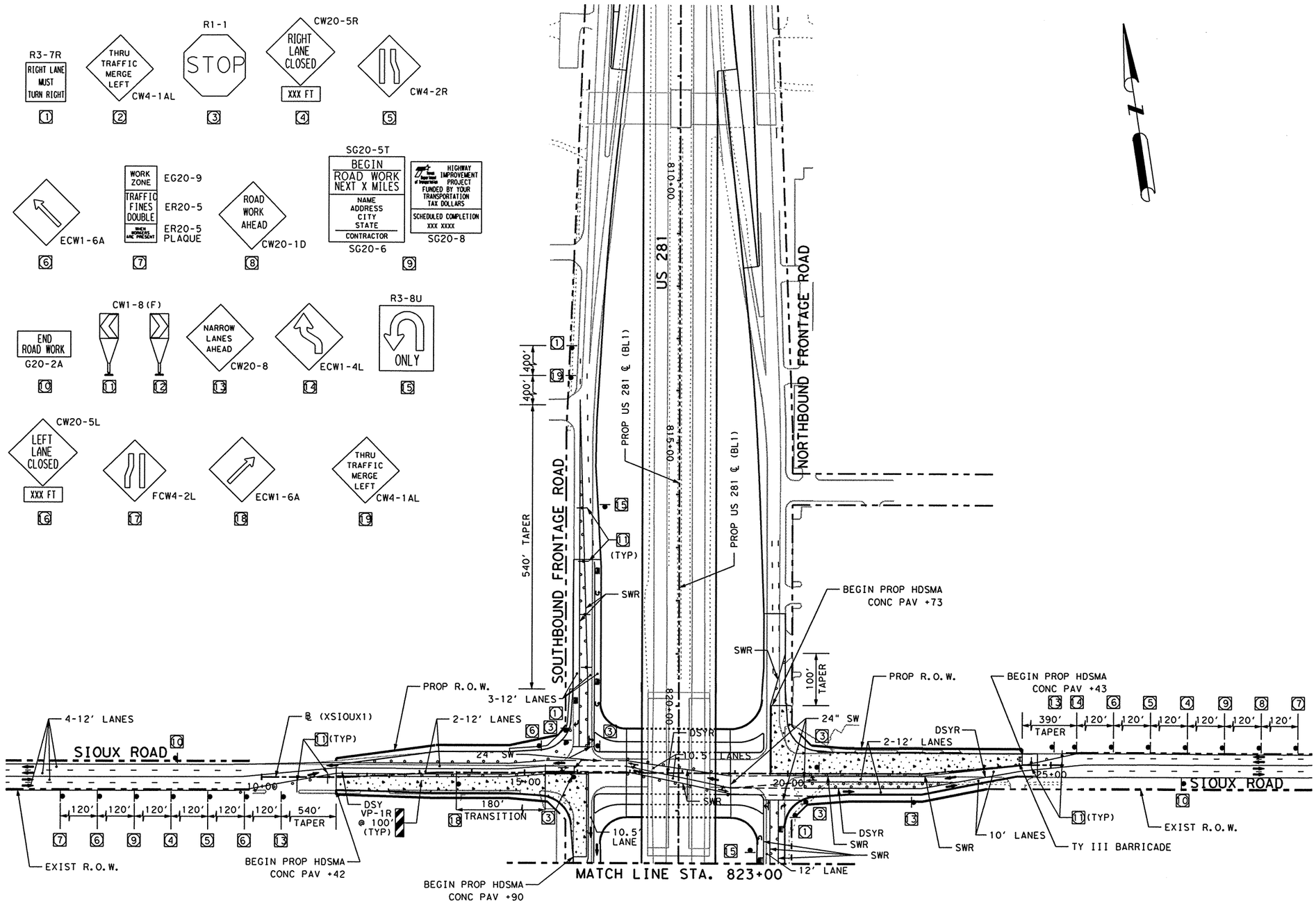

NOTE:

1. TEMP SED CONTROL FENCE ON GRATED INLETS SHALL BE LEFT IN PLACE THROUGHOUT DURATION OF PROJECT OR AS DIRECTED BY THE ENGINEER.

LEGEND:

- TEMP PAV CONSTRUCTED PREVIOUS PHASE
- TEMP PAV CONSTRUCTED THIS PHASE
- PROP CONSTRUCTION THIS PHASE
- PROP CONSTRUCTION PREVIOUS PHASE
- EXISTING TO BE REMOVED
- I — PROP TY III BARRICADES
- PROP SIGN
- ○○○ CHANNELIZING DEVICES

BY	BROKEN YELLOW (NON-REMOVABLE)
BW	BROKEN WHITE (NON-REMOVABLE)
SY	SOLID YELLOW (NON-REMOVABLE)
SW	SOLID WHITE (NON-REMOVABLE)
DSY	DOUBLE SOLID YELLOW (NON-REMOVABLE)
DSYR	DOUBLE SOLID YELLOW (REMOVABLE)
SWR	SOLID WHITE (REMOVABLE)
SYR	SOLID YELLOW (REMOVABLE)
BWR	BROKEN WHITE (REMOVABLE)
(Y)	YELLOW GUIDEMARKS AND SHORT TERM MARKINGS
(W)	WHITE GUIDEMARKS AND SHORT TERM MARKINGS
∞∞∞	TEMP SED CONTROL FENCE (12' EACH SEGMENT)

THE SEAL APPEARING ON THIS DOCUMENT WAS AUTHORIZED BY JOHN M PEREZ, P.E. 66425 ON 08/06/2003.

STATE OF TEXAS · JOHN M. PEREZ · 66425 · REGISTERED PROFESSIONAL ENGINEER

8/6/03

Parsons Brinckerhoff Quade & Douglas Inc.

Texas Department of Transportation

© 2003 by TxDOT

US 281
TRAFFIC CONTROL PLAN
SIOUX RD
PHASE III STEP 2D

PLAN 1"= 200' HORIZ

SHEET 1 OF 2 | 281SEQIII2D01.DGN

DESIGNED: PAF	FED. RD DIV. No.	STATE	FEDERAL AID PROJECT No.			HIGHWAY No.	
CHECKED: JP	6	TEXAS				US 281	
DRAWN: KTD	STATE DISTRICT	COUNTY	CONTROL No.	SECTION No.	JOB No.	SHEET No.	
CHECKED: JDH	PHARR	HIDALGO	0255	08	091	142	

h:\22322e\cadd\sheets\traffic\tcp\281seqiii2d01.dgn

NAME
11:14:25 AM
06/20/2003
h:\22322a\cadd\sheets\traffic\tcp\281seqiii2d02.dgn

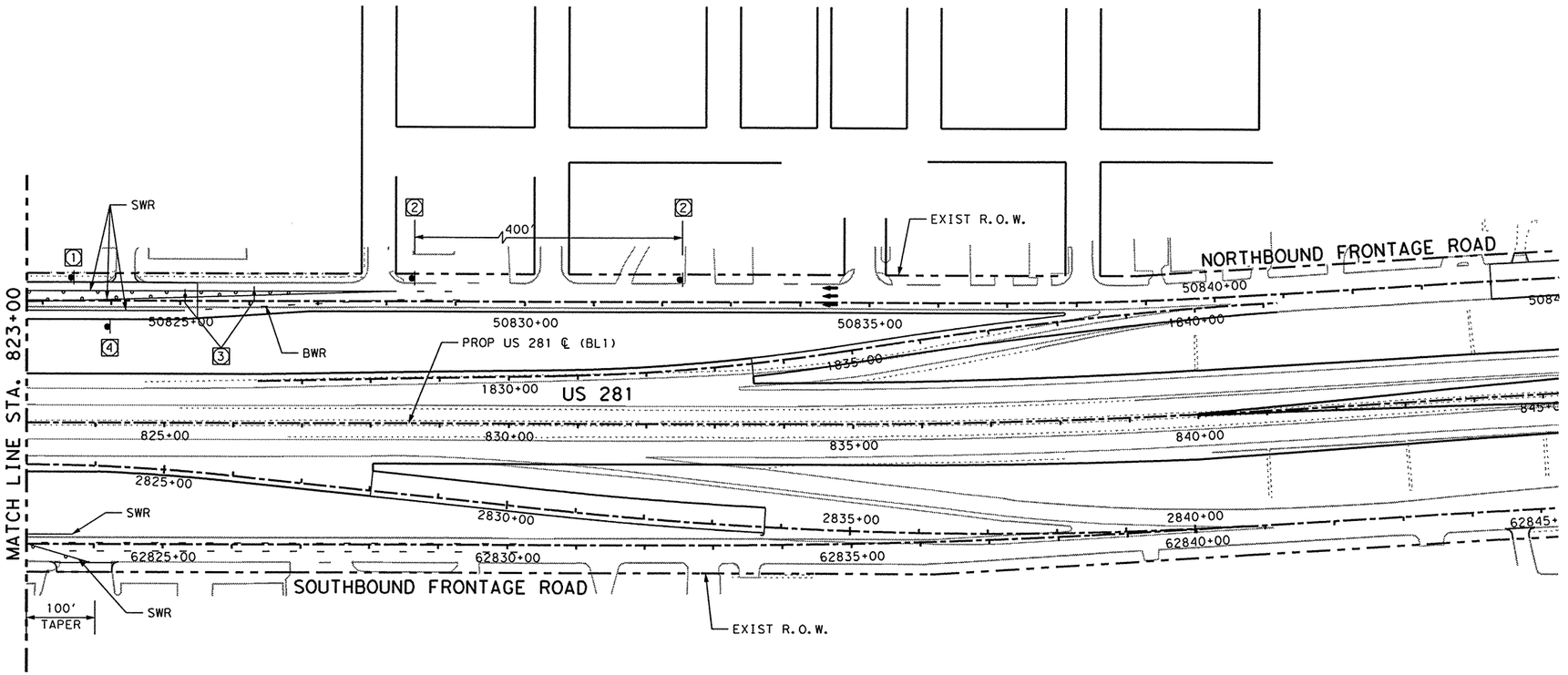

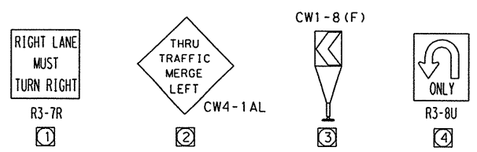

NOTE:

1. TEMP SED CONTROL FENCE ON GRATED INLETS SHALL BE LEFT IN PLACE THROUGHOUT DURATION OF PROJECT OR AS DIRECTED BY THE ENGINEER.

LEGEND:

- TEMP PAV CONSTRUCTED PREVIOUS PHASE
- TEMP PAV CONSTRUCTED THIS PHASE
- PROP CONSTRUCTION THIS PHASE
- PROP CONSTRUCTION PREVIOUS PHASE
- EXISTING TO BE REMOVED
- I — PROP TY III BARRICADES
- PROP SIGN
- ○○○ CHANNELIZING DEVICES
- BY — BROKEN YELLOW (NON-REMOVABLE)
- BW — BROKEN WHITE (NON-REMOVABLE)
- SY — SOLID YELLOW (NON-REMOVABLE)
- SW — SOLID WHITE (NON-REMOVABLE)
- DSY — DOUBLE SOLID YELLOW (NON-REMOVABLE)
- DSYR — DOUBLE SOLID YELLOW (REMOVABLE)
- SWR — SOLID WHITE (REMOVABLE)
- SYR — SOLID YELLOW (REMOVABLE)
- BWR — BROKEN WHITE (REMOVABLE)
- (Y) — YELLOW GUIDEMARKS AND SHORT TERM MARKINGS
- (W) — WHITE GUIDEMARKS AND SHORT TERM MARKINGS
- TEMP SED CONTROL FENCE (12' EACH SEGMENT)

THE SEAL APPEARING ON THIS DOCUMENT WAS AUTHORIZED BY JOHN M PEREZ, P.E. 66425 ON 06/20/2003.

STATE OF TEXAS
JOHN M. PEREZ
66425
REGISTERED PROFESSIONAL ENGINEER

4/20/03

Parsons Brinckerhoff Quade & Douglas Inc.

Texas Department of Transportation

© 2003 by TxDOT

US 281
TRAFFIC CONTROL PLAN
SIOUX RD
PHASE III STEP 2D

PLAN 1"= 200' HORIZ

SHEET 2 OF 2 | 281SEQIII2D02.DGN

DESIGNED: PAF	FED. RD DIV. No.	STATE	FEDERAL AID PROJECT No.	HIGHWAY No.
CHECKED: JP	6	TEXAS		US 281

DRAWN: KTD	STATE DISTRICT	COUNTY	CONTROL No.	SECTION No.	JOB No.	SHEET No.
CHECKED: JDH	PHARR	HIDALGO	0255	08	091	143

NAME
11:14:33 AM
06/20/2003

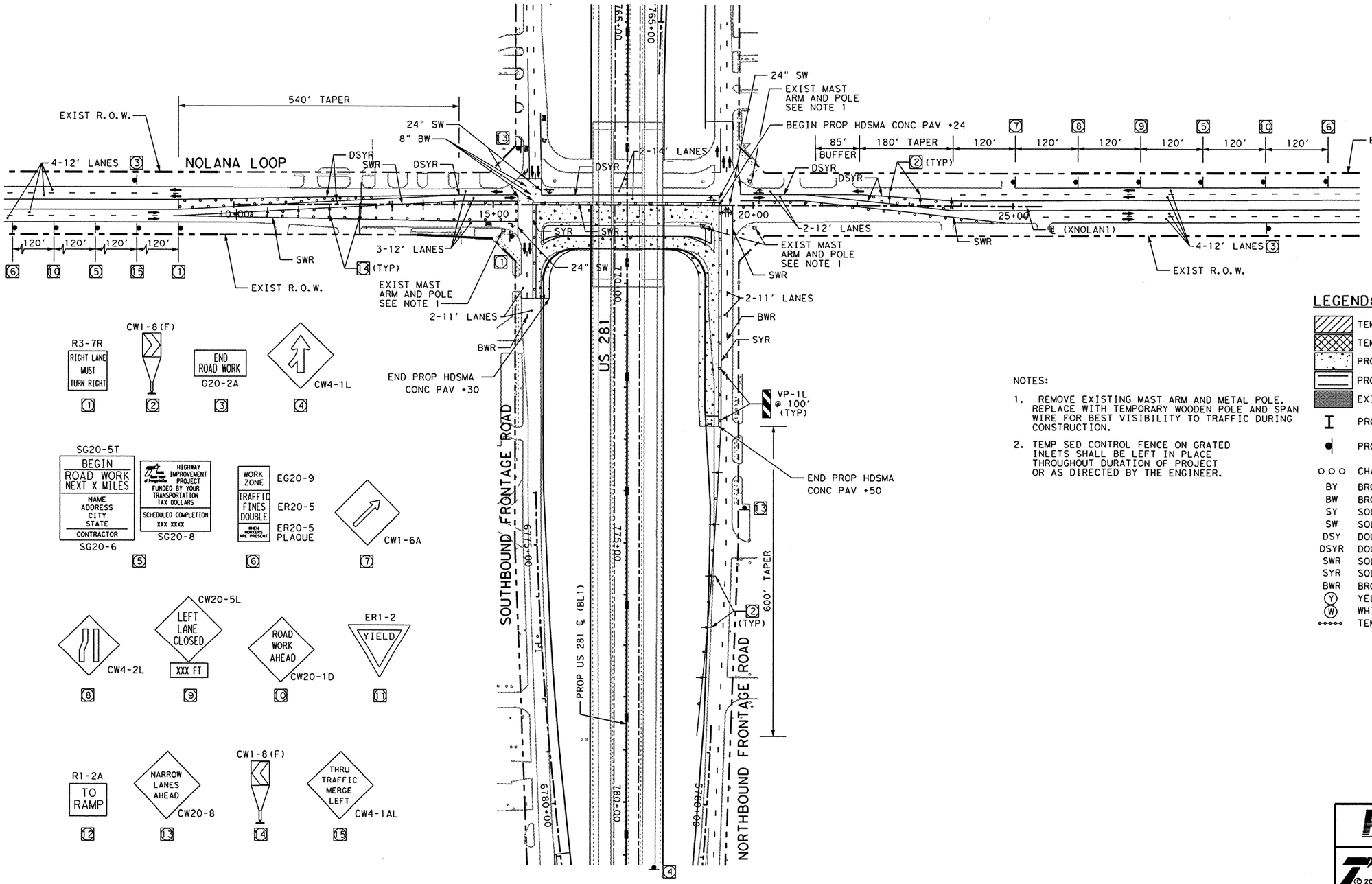

NOTES:

1. REMOVE EXISTING MAST ARM AND METAL POLE. REPLACE WITH TEMPORARY WOODEN POLE AND SPAN WIRE FOR BEST VISIBILITY TO TRAFFIC DURING CONSTRUCTION.
2. TEMP SED CONTROL FENCE ON GRATED INLETS SHALL BE LEFT IN PLACE THROUGHOUT DURATION OF PROJECT OR AS DIRECTED BY THE ENGINEER.

LEGEND:

	TEMP PAV CONSTRUCTED PREVIOUS PHASE
	TEMP PAV CONSTRUCTED THIS PHASE
	PROP CONSTRUCTION THIS PHASE
	PROP CONSTRUCTION PREVIOUS PHASE
	EXISTING TO BE REMOVED
I	PROP TY III BARRICADES
	PROP SIGN
○○○	CHANNELIZING DEVICES
BY	BROKEN YELLOW (NON-REMOVABLE)
BW	BROKEN WHITE (NON-REMOVABLE)
SY	SOLID YELLOW (NON-REMOVABLE)
SW	SOLID WHITE (NON-REMOVABLE)
DSY	DOUBLE SOLID YELLOW (NON-REMOVABLE)
DSYR	DOUBLE SOLID YELLOW (REMOVABLE)
SWR	SOLID WHITE (REMOVABLE)
SYR	SOLID YELLOW (REMOVABLE)
BWR	BROKEN WHITE (REMOVABLE)
(Y)	YELLOW GUIDEMARKS AND SHORT TERM MARKINGS
(W)	WHITE GUIDEMARKS AND SHORT TERM MARKINGS
	TEMP SED CONTROL FENCE (12' EACH SEGMENT)

THE SEAL APPEARING ON THIS DOCUMENT WAS AUTHORIZED BY JOHN M PEREZ, P.E. 66425 ON 06/20/2003.

STATE OF TEXAS
JOHN M. PEREZ
66425
REGISTERED PROFESSIONAL ENGINEER

6/20/03

Parsons Brinckerhoff Quade & Douglas Inc.

Texas Department of Transportation

© 2003 by TxDOT

US 281
TRAFFIC CONTROL PLAN
NOLANA LOOP
PHASE III STEP 3A

PLAN 1"= 200' HORIZ

SHEET 1 OF 1				281SEQIII3A01.DGN			
DESIGNED: PAF	FED. RD DIV. No.	STATE	FEDERAL AID PROJECT No.			HIGHWAY No.	
CHECKED: JP	6	TEXAS				US 281	
DRAWN: KTD	STATE DISTRICT	COUNTY		CONTROL No.	SECTION No.	JOB No.	SHEET No.
CHECKED: JDH	PHARR	HIDALGO		0255	08	091	144

h:\223220\cadd\sheets\traffic\tcp\281seqiii3a01.dgn

NAME
11:14:40 AM
06/20/2003
h:\22322a\cadd\sheets\traffic\tcp\281seqiii3b01.dgn

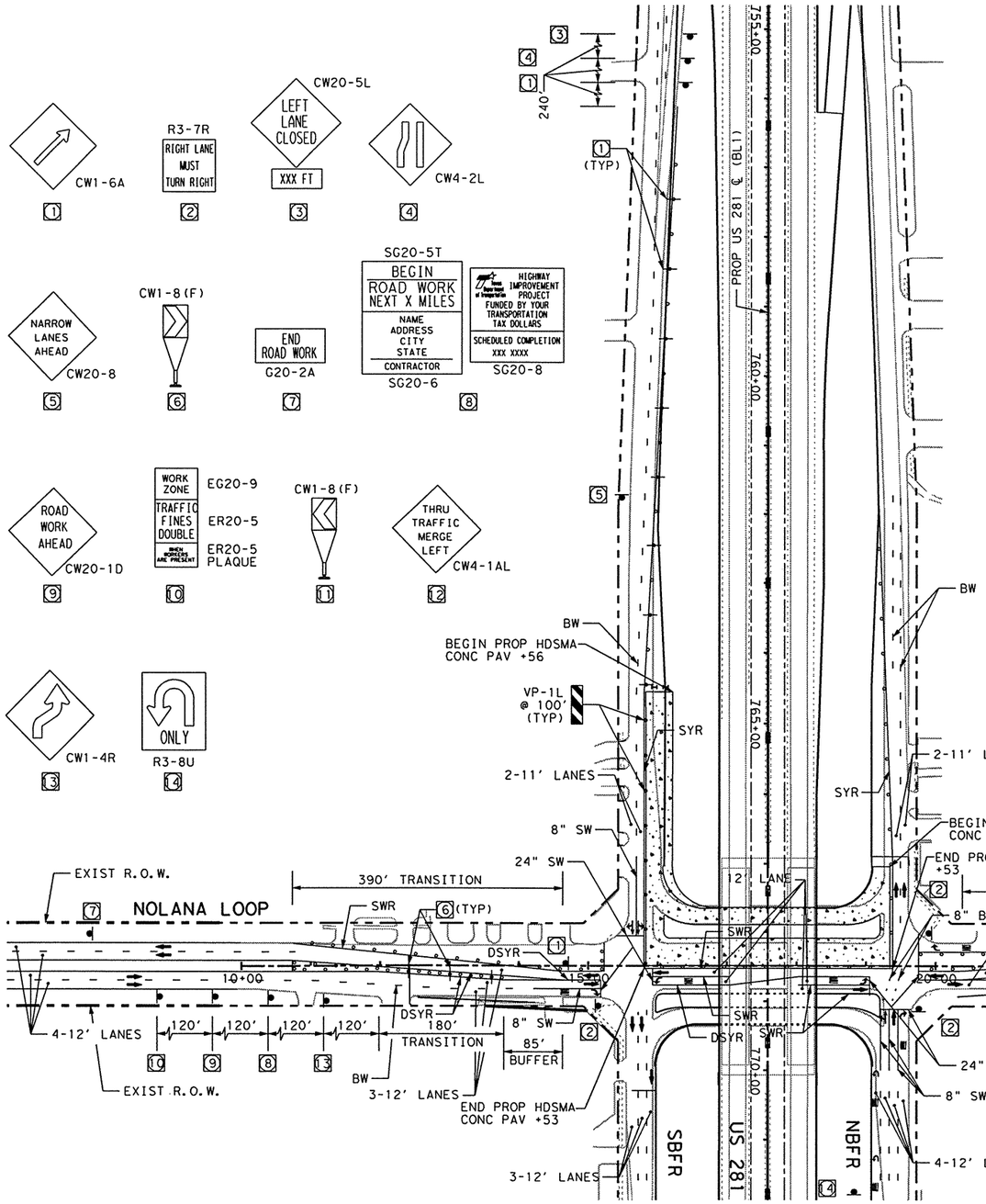

NOTE:

1. TEMP SED CONTROL FENCE ON GRATED INLETS SHALL BE LEFT IN PLACE THROUGHOUT DURATION OF PROJECT OR AS DIRECTED BY THE ENGINEER.

LEGEND:

	TEMP PAV CONSTRUCTED PREVIOUS PHASE
	TEMP PAV CONSTRUCTED THIS PHASE
	PROP CONSTRUCTION THIS PHASE
	PROP CONSTRUCTION PREVIOUS PHASE
	EXISTING TO BE REMOVED
I	PROP TY III BARRICADES
	PROP SIGN
o o o	CHANNELIZING DEVICES
BY	BROKEN YELLOW (NON-REMOVABLE)
BW	BROKEN WHITE (NON-REMOVABLE)
SY	SOLID YELLOW (NON-REMOVABLE)
SW	SOLID WHITE (NON-REMOVABLE)
DSY	DOUBLE SOLID YELLOW (NON-REMOVABLE)
DSYR	DOUBLE SOLID YELLOW (REMOVABLE)
SWR	SOLID WHITE (REMOVABLE)
SYR	SOLID YELLOW (REMOVABLE)
BWR	BROKEN WHITE (REMOVABLE)
(Y)	YELLOW GUIDEMARKS AND SHORT TERM MARKINGS
(W)	WHITE GUIDEMARKS AND SHORT TERM MARKINGS
	TEMP SED CONTROL FENCE (12' EACH SEGMENT)

THE SEAL APPEARING ON THIS DOCUMENT WAS AUTHORIZED BY JOHN M PEREZ, P.E. 66425 ON 06/20/2003.

STATE OF TEXAS
JOHN M. PEREZ
66425
REGISTERED PROFESSIONAL ENGINEER
6/20/03

Parsons Brinckerhoff Quade & Douglas Inc.

Texas Department of Transportation

© 2003 by TxDOT

US 281
TRAFFIC CONTROL PLAN
NOLANA LOOP
PHASE III STEP 3B

PLAN 1"= 200' HORIZ

SHEET 1 OF 1						281SEQIII3B01.DGN	
DESIGNED: PAF	FED. RD DIV. No.	STATE	FEDERAL AID PROJECT No.			HIGHWAY No.	
CHECKED: JP	6	TEXAS				US 281	
DRAWN: KTD	STATE DISTRICT	COUNTY	CONTROL No.	SECTION No.	JOB No.	SHEET No.	
CHECKED: JDH	PHARR	HIDALGO	0255	08	091	145	

NAME
11:14:47 AM
06/20/2003

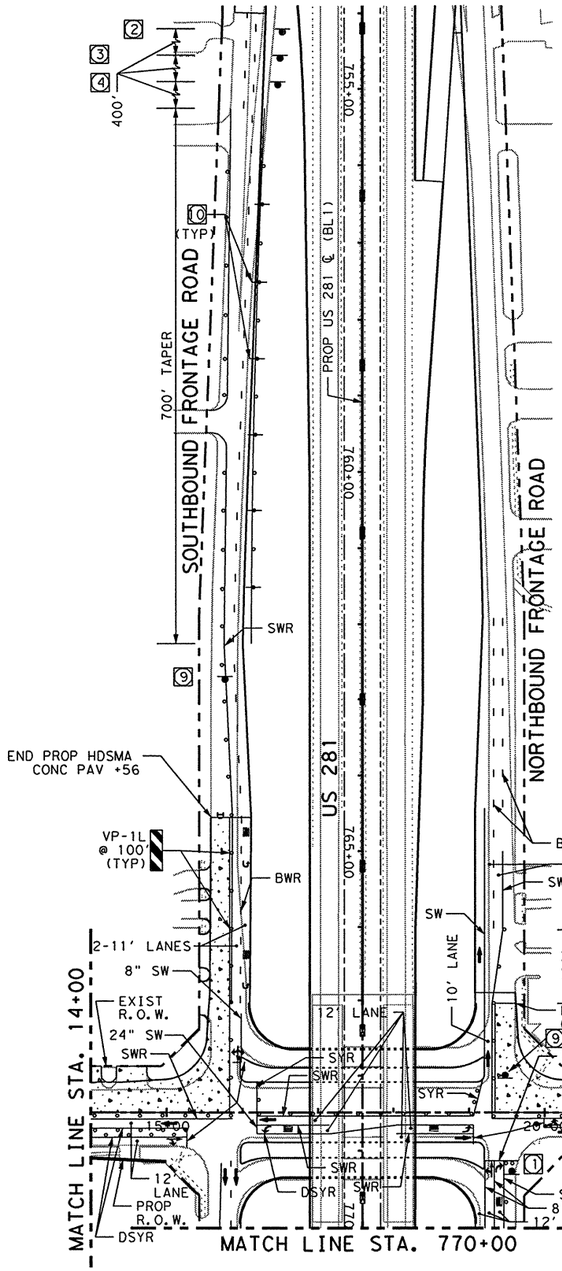

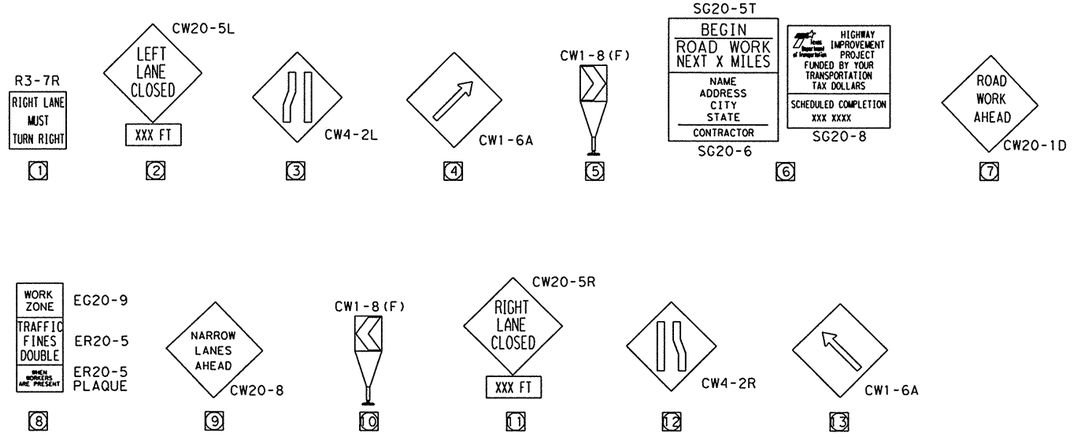

NOTE:

1. TEMP SED CONTROL FENCE ON GRATED INLETS SHALL BE LEFT IN PLACE THROUGHOUT DURATION OF PROJECT OR AS DIRECTED BY THE ENGINEER.

LEGEND:

- TEMP PAV CONSTRUCTED PREVIOUS PHASE
- TEMP PAV CONSTRUCTED THIS PHASE
- PROP CONSTRUCTION THIS PHASE
- PROP CONSTRUCTION PREVIOUS PHASE
- EXISTING TO BE REMOVED
- I — PROP TY III BARRICADES
- PROP SIGN
- ○○○ CHANNELIZING DEVICES
- BY — BROKEN YELLOW (NON-REMOVABLE)
- BW — BROKEN WHITE (NON-REMOVABLE)
- SY — SOLID YELLOW (NON-REMOVABLE)
- SW — SOLID WHITE (NON-REMOVABLE)
- DSY — DOUBLE SOLID YELLOW (NON-REMOVABLE)
- DSYR — DOUBLE SOLID YELLOW (REMOVABLE)
- SWR — SOLID WHITE (REMOVABLE)
- SYR — SOLID YELLOW (REMOVABLE)
- BWR — BROKEN WHITE (REMOVABLE)
- (Y) — YELLOW GUIDEMARKS AND SHORT TERM MARKINGS
- (W) — WHITE GUIDEMARKS AND SHORT TERM MARKINGS
- TEMP SED CONTROL FENCE (12' EACH SEGMENT)

THE SEAL APPEARING ON THIS DOCUMENT WAS AUTHORIZED BY JOHN M PEREZ, P.E. 66425 ON 06/20/2003.

STATE OF TEXAS — JOHN M. PEREZ — 66425 — REGISTERED PROFESSIONAL ENGINEER

6/20/03

Parsons Brinckerhoff Quade & Douglas Inc.

Texas Department of Transportation

© 2003 by TxDOT

US 281
TRAFFIC CONTROL PLAN
NOLANA LOOP
PHASE III STEP 3C

PLAN 1"= 200' HORIZ

SHEET 1 OF 2 — 281SEQIII3C01.DGN

DESIGNED: PAF	FED. RD DIV. No.	STATE	FEDERAL AID PROJECT No.			HIGHWAY No.
CHECKED: JP	6	TEXAS				US 281
DRAWN: KTD	STATE DISTRICT	COUNTY	CONTROL No.	SECTION No.	JOB No.	SHEET No.
CHECKED: JDH	PHARR	HIDALGO	0255	08	091	146

h:\22322a\cadd\sheets\traffic\tcp\281seqiii3c01.dgn

NOTE:

1. TEMP SED CONTROL FENCE ON GRATED INLETS SHALL BE LEFT IN PLACE THROUGHOUT DURATION OF PROJECT OR AS DIRECTED BY THE ENGINEER.
2. TEMP SED CONTROL FENCE ON GRATED INLETS SHALL BE LEFT IN PLACE THROUGHOUT DURATION OF PROJECT OR AS DIRECTED BY THE ENGINEER.

LEGEND:

Symbol	Description
(hatched)	TEMP PAV CONSTRUCTED PREVIOUS PHASE
(cross-hatched)	TEMP PAV CONSTRUCTED THIS PHASE
(stippled)	PROP CONSTRUCTION THIS PHASE
(lined)	PROP CONSTRUCTION PREVIOUS PHASE
(shaded)	EXISTING TO BE REMOVED
I	PROP TY III BARRICADES
(sign symbol)	PROP SIGN
o o o	CHANNELIZING DEVICES
BY	BROKEN YELLOW (NON-REMOVABLE)
BW	BROKEN WHITE (NON-REMOVABLE)
SY	SOLID YELLOW (NON-REMOVABLE)
SW	SOLID WHITE (NON-REMOVABLE)
DSY	DOUBLE SOLID YELLOW (NON-REMOVABLE)
DSYR	DOUBLE SOLID YELLOW (REMOVABLE)
SWR	SOLID WHITE (REMOVABLE)
SYR	SOLID YELLOW (REMOVABLE)
BWR	BROKEN WHITE (REMOVABLE)
(Y)	YELLOW GUIDEMARKS AND SHORT TERM MARKINGS
(W)	WHITE GUIDEMARKS AND SHORT TERM MARKINGS
o-o-o-o	TEMP SED CONTROL FENCE (12' EACH SEGMENT)

THE SEAL APPEARING ON THIS DOCUMENT WAS AUTHORIZED BY JOHN M PEREZ, P.E. 66425 ON 06/20/2003.

STATE OF TEXAS ★ JOHN M. PEREZ 66425 REGISTERED PROFESSIONAL ENGINEER

John M. Perez 6/20/03

Parsons Brinckerhoff Quade & Douglas Inc.

Texas Department of Transportation

© 2003 by TxDOT

US 281
TRAFFIC CONTROL PLAN
NOLANA LOOP
PHASE III STEP 3C

PLAN 1"= 200' HORIZ

SHEET 2 OF 2	281SEQIII3C02.DGN						
DESIGNED: PAF	FED. RD DIV. No.	STATE	FEDERAL AID PROJECT No.			HIGHWAY No.	
CHECKED: JP	6	TEXAS				US 281	
DRAWN: KTD	STATE DISTRICT	COUNTY	CONTROL No.	SECTION No.	JOB No.	SHEET No.	
CHECKED: JDH	PHARR	HIDALGO	0255	08	091	147	

h:\22322a\cadd\sheets\traffic\tcp\281seqiii3c02.dgn 06/20/2003 11:14:55 AM *NAME*

NAME
04:06:00 PM
08/06/2003

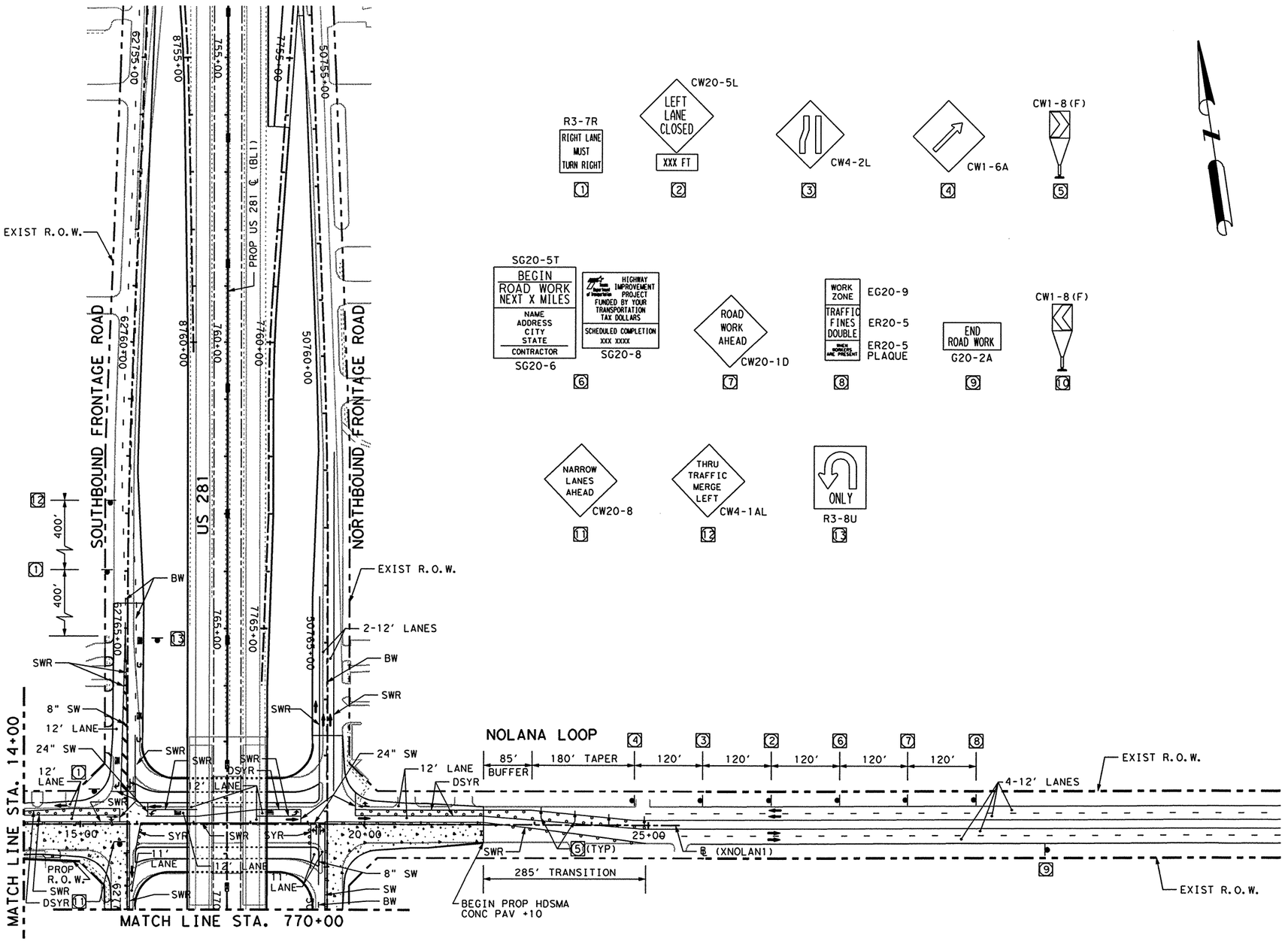

NOTE:

1. TEMP SED CONTROL FENCE ON GRATED INLETS SHALL BE LEFT IN PLACE THROUGHOUT DURATION OF PROJECT OR AS DIRECTED BY THE ENGINEER.

LEGEND:

- TEMP PAV CONSTRUCTED PREVIOUS PHASE
- TEMP PAV CONSTRUCTED THIS PHASE
- PROP CONSTRUCTION THIS PHASE
- PROP CONSTRUCTION PREVIOUS PHASE
- EXISTING TO BE REMOVED
- I — PROP TY III BARRICADES
- PROP SIGN
- ooo — CHANNELIZING DEVICES
- BY — BROKEN YELLOW (NON-REMOVABLE)
- BW — BROKEN WHITE (NON-REMOVABLE)
- SY — SOLID YELLOW (NON-REMOVABLE)
- SW — SOLID WHITE (NON-REMOVABLE)
- DSY — DOUBLE SOLID YELLOW (NON-REMOVABLE)
- DSYR — DOUBLE SOLID YELLOW (REMOVABLE)
- SWR — SOLID WHITE (REMOVABLE)
- SYR — SOLID YELLOW (REMOVABLE)
- BWR — BROKEN WHITE (REMOVABLE)
- (Y) — YELLOW GUIDEMARKS AND SHORT TERM MARKINGS
- (W) — WHITE GUIDEMARKS AND SHORT TERM MARKINGS
- TEMP SED CONTROL FENCE (12' EACH SEGMENT)

THE SEAL APPEARING ON THIS DOCUMENT WAS AUTHORIZED BY JOHN M PEREZ, P.E. 66425 ON 08/06/2003.

STATE OF TEXAS · JOHN M. PEREZ · 66425 · REGISTERED PROFESSIONAL ENGINEER

8/6/03

PB Parsons Brinckerhoff Quade & Douglas Inc.

Texas Department of Transportation

© 2003 by TxDOT

US 281
TRAFFIC CONTROL PLAN
NOLANA LOOP
PHASE III STEP 3D

PLAN 1"= 200' HORIZ

SHEET 1 OF 2 | 281SEQIII3D01.DGN

DESIGNED: PAF	FED. RD DIV. No.	STATE	FEDERAL AID PROJECT No.				HIGHWAY No.
CHECKED: JP	6	TEXAS					US 281
DRAWN: KTD	STATE DISTRICT	COUNTY	CONTROL No.	SECTION No.	JOB No.	SHEET No.	
CHECKED: JDH	PHARR	HIDALGO	0255	08	091	148	

h:\22322a\cadd\sheets\traffic\tcp\281seqiii3d01.dgn

NAME
11:15:11 AM
06/20/2003

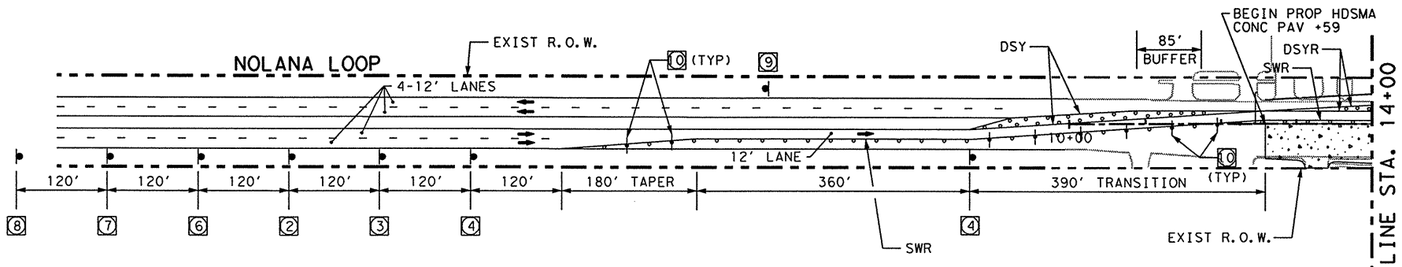

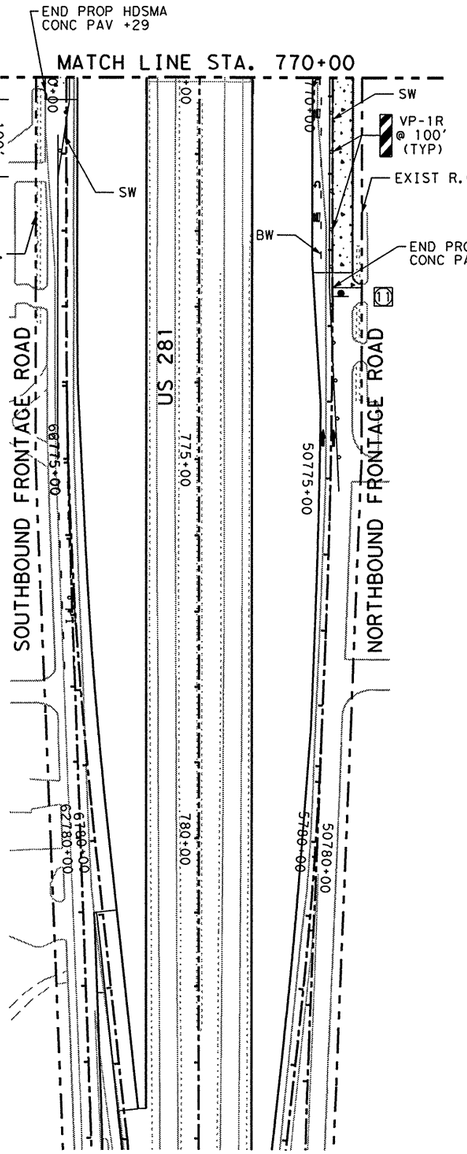

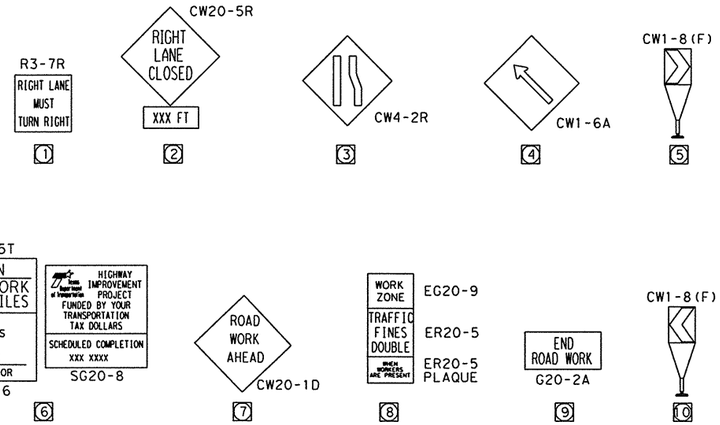

NOTE:

1. TEMP SED CONTROL FENCE ON GRATED INLETS SHALL BE LEFT IN PLACE THROUGHOUT DURATION OF PROJECT OR AS DIRECTED BY THE ENGINEER.

LEGEND:

- TEMP PAV CONSTRUCTED PREVIOUS PHASE
- TEMP PAV CONSTRUCTED THIS PHASE
- PROP CONSTRUCTION THIS PHASE
- PROP CONSTRUCTION PREVIOUS PHASE
- EXISTING TO BE REMOVED
- I — PROP TY III BARRICADES
- PROP SIGN
- ○○○ CHANNELIZING DEVICES
- BY — BROKEN YELLOW (NON-REMOVABLE)
- BW — BROKEN WHITE (NON-REMOVABLE)
- SY — SOLID YELLOW (NON-REMOVABLE)
- SW — SOLID WHITE (NON-REMOVABLE)
- DSY — DOUBLE SOLID YELLOW (NON-REMOVABLE)
- DSYR — DOUBLE SOLID YELLOW (REMOVABLE)
- SWR — SOLID WHITE (REMOVABLE)
- SYR — SOLID YELLOW (REMOVABLE)
- BWR — BROKEN WHITE (REMOVABLE)
- (Y) — YELLOW GUIDEMARKS AND SHORT TERM MARKINGS
- (W) — WHITE GUIDEMARKS AND SHORT TERM MARKINGS
- TEMP SED CONTROL FENCE (12' EACH SEGMENT)

THE SEAL APPEARING ON THIS DOCUMENT WAS AUTHORIZED BY JOHN M PEREZ, P.E. 66425 ON 06/20/2003.

STATE OF TEXAS — JOHN M. PEREZ — 66425 — REGISTERED PROFESSIONAL ENGINEER

6/20/03

Parsons Brinckerhoff Quade & Douglas Inc.

Texas Department of Transportation

© 2003 by TxDOT

US 281
TRAFFIC CONTROL PLAN
NOLANA LOOP
PHASE III STEP 3D

PLAN 1"= 200' HORIZ

SHEET 2 OF 2 | 281SEQIII3D02.DGN

DESIGNED: PAF	FED. RD DIV. No.	STATE	FEDERAL AID PROJECT No.	HIGHWAY No.
CHECKED: JP	6	TEXAS		US 281

DRAWN: KTD	STATE DISTRICT	COUNTY	CONTROL No.	SECTION No.	JOB No.	SHEET No.
CHECKED: JDH	PHARR	HIDALGO	0255	08	091	149

h:\22322a\cadd\sheets\traffic\tcp\281seqiii3d02.dgn

NAME
10:55:13 AM
06/20/2003

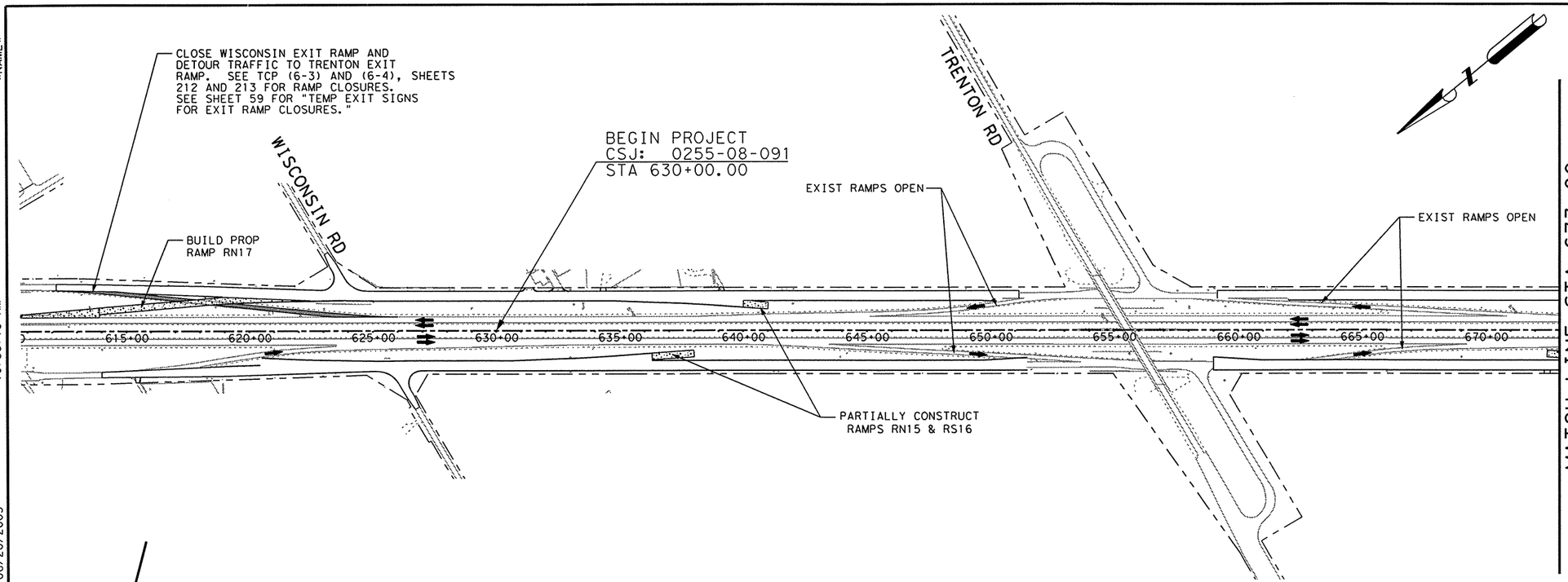

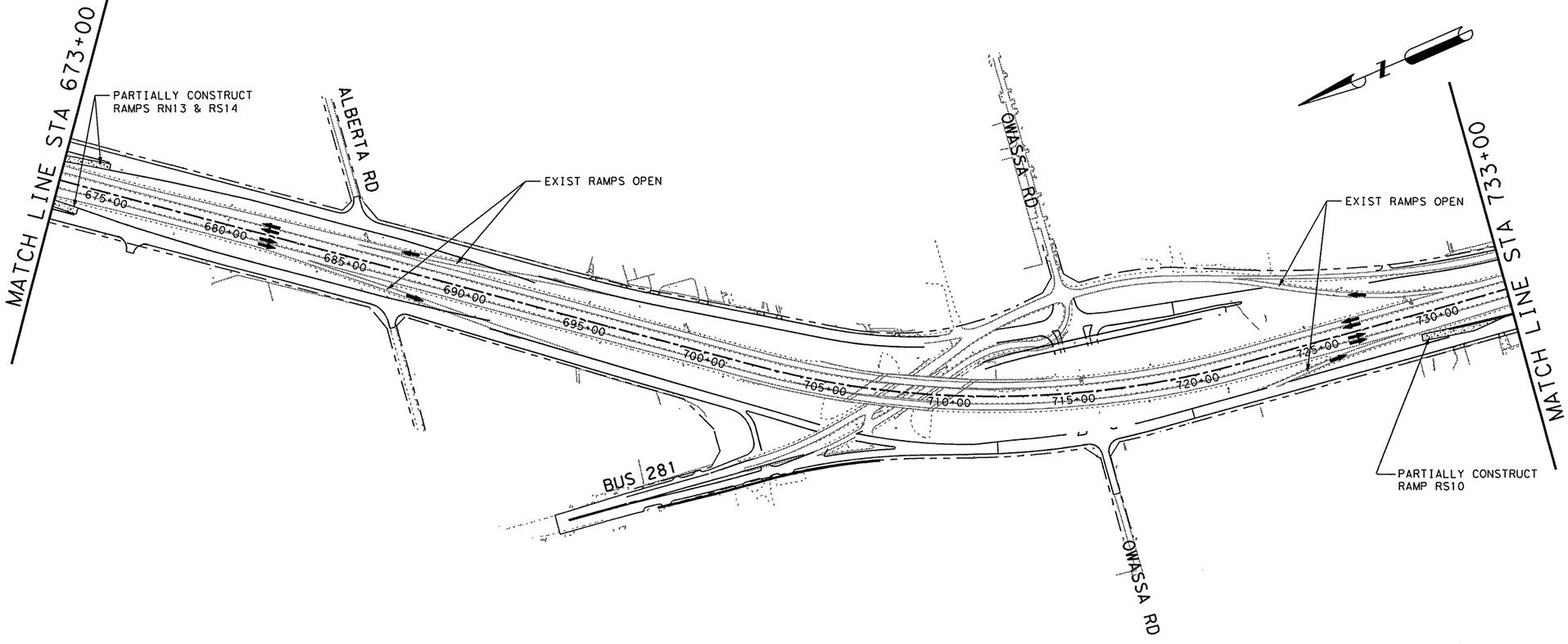

LEGEND:

- TEMP PAV CONSTRUCTED PREVIOUS PHASE
- TEMP PAV CONSTRUCTED THIS PHASE
- PROP CONSTRUCTION THIS PHASE
- PROP CONSTRUCTION PREVIOUS PHASE
- EXISTING TO BE REMOVED
- DIRECTIONAL ARROW

NOTES:

SEE TCP (6-2), (6-3) AND (6-4), SHEETS 211 TO 213, FOR RAMP CLOSURE DETAILS.

SEE "TEMP EXIT SIGNS FOR EXIT RAMP CLOSURES" SHEET 59 FOR ADDITIONAL INFORMATION.

RAMPS RN13, RS14, RN15, AND RS16 WILL PARTIALLY BE CONSTRUCTED IN PHASE III AND PARTIALLY IN PHASE IV.

THE SEAL APPEARING ON THIS DOCUMENT WAS AUTHORIZED BY JOHN M PEREZ, P.E. 66425 ON 06/20/2003.

STATE OF TEXAS
JOHN M. PEREZ
66425
REGISTERED PROFESSIONAL ENGINEER

6/20/03

Parsons Brinckerhoff Quade & Douglas Inc.

Texas Department of Transportation

© 2003 by TxDOT

US 281
RAMP CLOSURE LAYOUT
US 281
PHASE III STEP A

PLAN 1"= 500' HORIZ

SHEET 1 OF 2 | 281SEQIIIRAMP1A.DGN

DESIGNED: PAF	FED. RD DIV. NO.	STATE	FEDERAL AID PROJECT No.				HIGHWAY No.
CHECKED: JP	6	TEXAS					US 281
DRAWN: KTD	STATE DISTRICT	COUNTY	CONTROL No.	SECTION No.	JOB No.	SHEET No.	
CHECKED: JDH	PHARR	HIDALGO	0255	08	091	150	

h:\22320\cadd\sheets\traffic\tcp\281seqiiirampla.dgn

NAME
10:55:20 AM
06/20/2003

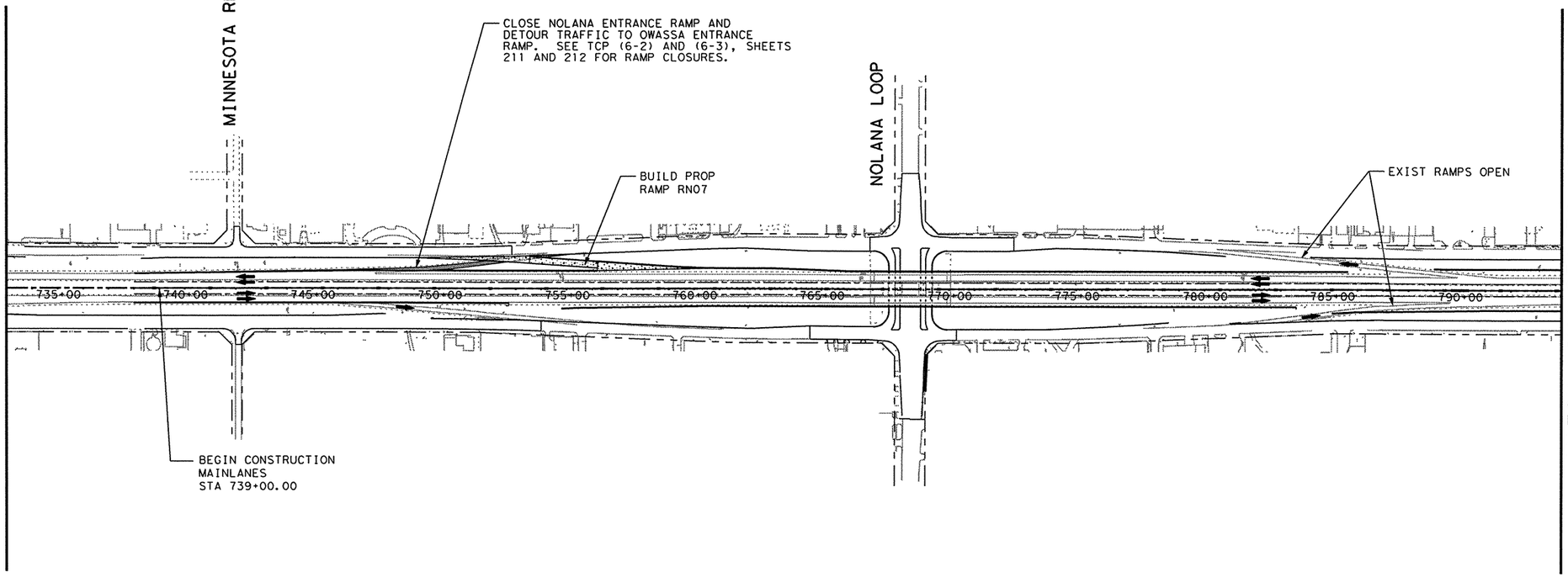

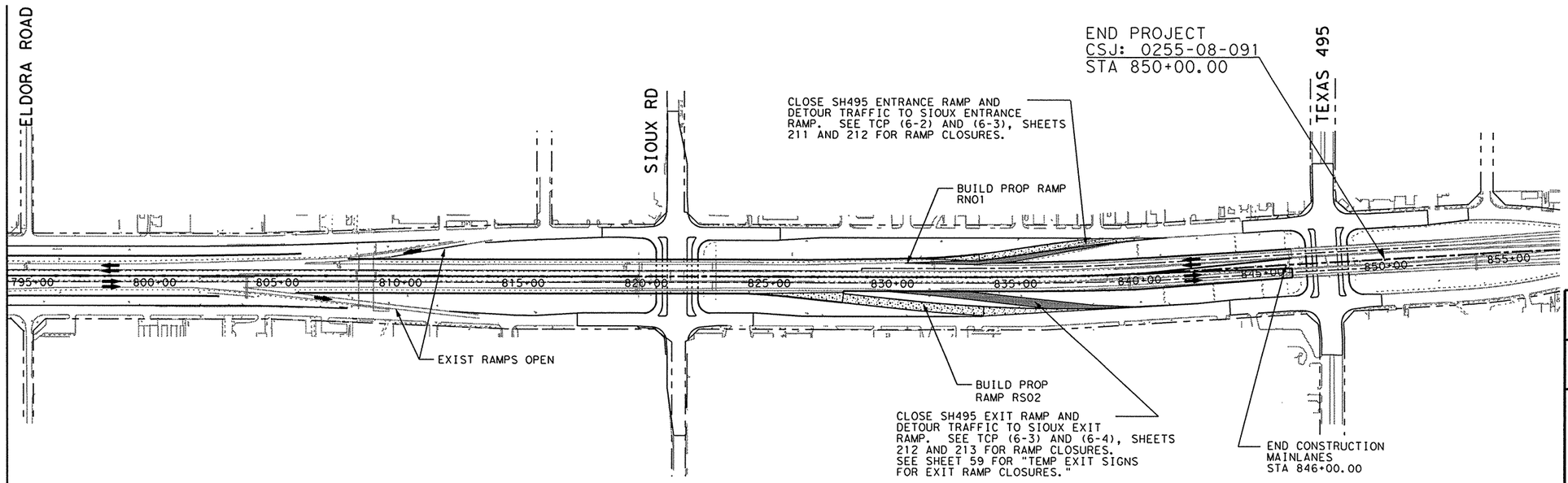

LEGEND:

- TEMP PAV CONSTRUCTED PREVIOUS PHASE
- TEMP PAV CONSTRUCTED THIS PHASE
- PROP CONSTRUCTION THIS PHASE
- PROP CONSTRUCTION PREVIOUS PHASE
- EXISTING TO BE REMOVED
- DIRECTIONAL ARROW

NOTES:

SEE TCP (6-2), (6-3) AND (6-4), SHEETS 211 TO 213 FOR RAMP CLOSURE DETAILS.

SEE "TEMP EXIT SIGNS FOR EXIT RAMP CLOSURES", SHEET 59, FOR ADDITIONAL INFORMATION.

THE SEAL APPEARING ON THIS DOCUMENT WAS AUTHORIZED BY JOHN M PEREZ, P.E. 66425 ON 06/20/2003.

STATE OF TEXAS · JOHN M. PEREZ · 66425 · REGISTERED PROFESSIONAL ENGINEER

6/20/03

Parsons Brinckerhoff Quade & Douglas Inc.

Texas Department of Transportation

© 2003 by TxDOT

US 281
RAMP CLOSURE LAYOUT
US 281
PHASE III STEP A

PLAN 1"= 500' HORIZ

SHEET 2 OF 2				281SEQIIIRAMP1B.DGN			
DESIGNED:PAF	FED. RD DIV. No.	STATE	FEDERAL AID PROJECT No.				HIGHWAY No.
CHECKED: JP	6	TEXAS					US 281
DRAWN: KTD	STATE DISTRICT	COUNTY	CONTROL No.	SECTION No.	JOB No.	SHEET No.	
CHECKED: JDH	PHARR	HIDALGO	0255	08	091	151	

h:\22322g\cadd\sheets\traffic\tcp\281seqiiirampib.dgn

NAME
10:55:26 AM
06/20/2003
h:\22322e\cadd\sheets\traffic\tcp\281seqiiiramp2a.dgn

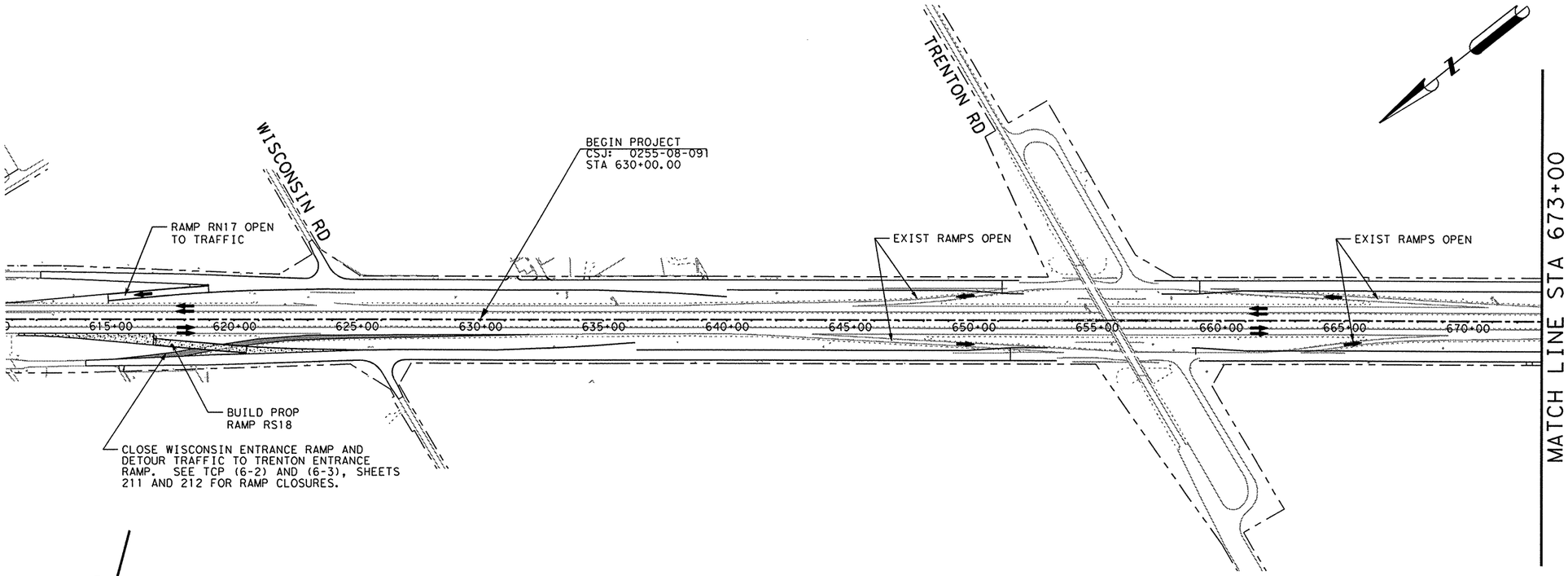

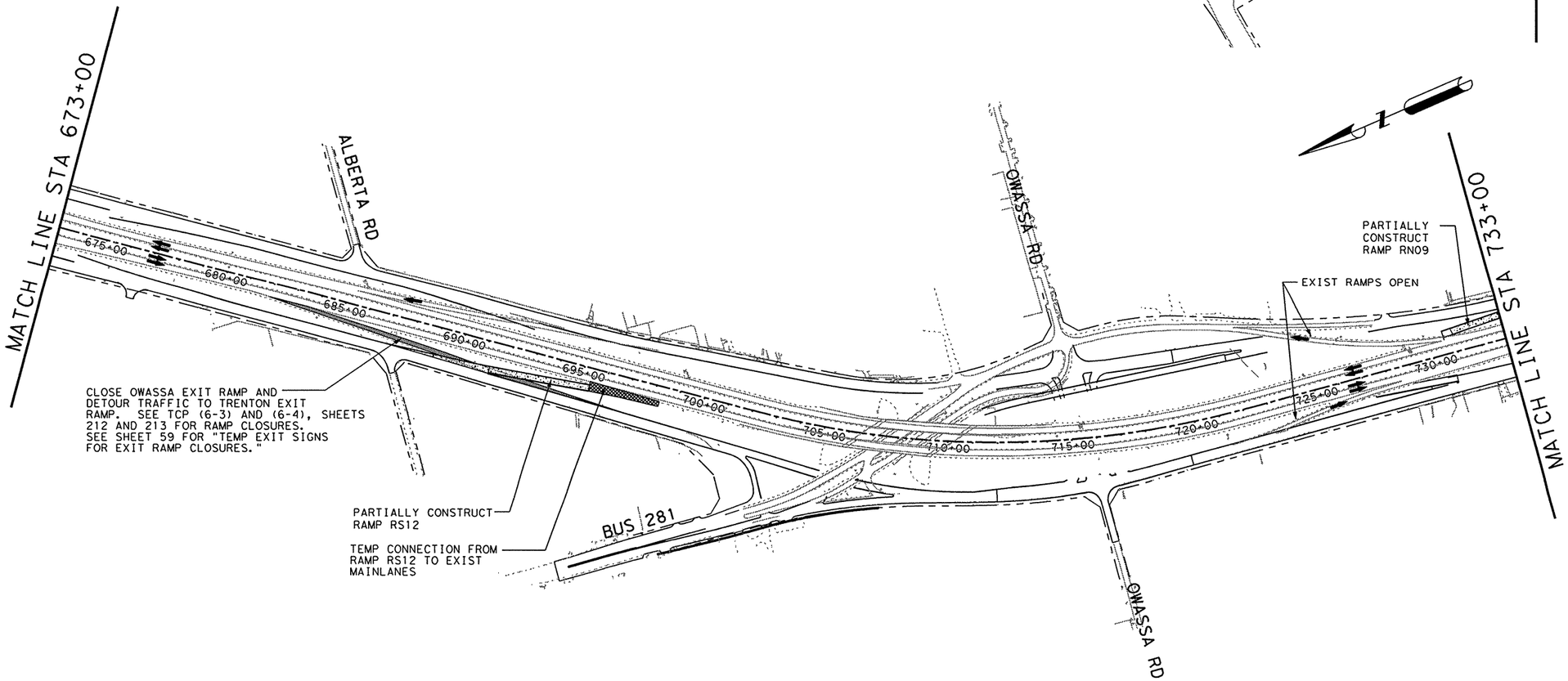

LEGEND:

- TEMP PAV CONSTRUCTED PREVIOUS PHASE
- TEMP PAV CONSTRUCTED THIS PHASE
- PROP CONSTRUCTION THIS PHASE
- PROP CONSTRUCTION PREVIOUS PHASE
- EXISTING TO BE REMOVED
- DIRECTIONAL ARROW

NOTES:

SEE TCP (6-2), (6-3) AND (6-4), SHEETS 211 TO 213 FOR RAMP CLOSURE DETAILS.

SEE "TEMP EXIT SIGNS FOR EXIT RAMP CLOSURES" SHEET 59 FOR ADDITIONAL INFORMATION.

THE SEAL APPEARING ON THIS DOCUMENT WAS AUTHORIZED BY JOHN M PEREZ, P.E. 66425 ON 06/20/2003.

STATE OF TEXAS
JOHN M. PEREZ
66425
REGISTERED PROFESSIONAL ENGINEER
6/20/03

Parsons Brinckerhoff Quade & Douglas Inc.

Texas Department of Transportation

© 2003 by TxDOT

US 281
RAMP CLOSURE LAYOUT
US 281
PHASE III STEP B

PLAN 1"= 500' HORIZ

SHEET 1 OF 2 | 281SEQIIIRAMP2A.DGN

DESIGNED: PAF	FED. RD DIV. No.	STATE	FEDERAL AID PROJECT No.			HIGHWAY No.
CHECKED: JP	6	TEXAS				US 281
DRAWN: KTD	STATE DISTRICT	COUNTY	CONTROL No.	SECTION No.	JOB No.	SHEET No.
CHECKED: JDH	PHARR	HIDALGO	0255	08	091	152

NAME
10:55:33 AM
06/20/2003

MATCH LINE STA 733+00

MINNESOTA RD

NOLANA LOOP

RAMP RN07 OPEN TO TRAFFIC

BUILD PROP RAMP RN05

RAMP TRAFFIC TO USE TEMP PAV BUILT IN PHASE 1A

735+00 740+00 745+00 750+00 755+00 760+00 765+00 770+00 775+00 780+00 785+00 790+00

BEGIN CONSTRUCTION MAINLANES STA 739+00.00

PARTIALLY CONSTRUCT RAMP RS08. COMPLETE RAMP PRIOR TO RAMP RS06, BUT NOT BEFORE RAMP RS04.

EXIST RAMP OPEN TO TRAFFIC

MATCH LINE STA 794+00

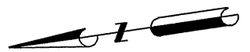

LEGEND:

- TEMP PAV CONSTRUCTED PREVIOUS PHASE
- TEMP PAV CONSTRUCTED THIS PHASE
- PROP CONSTRUCTION THIS PHASE
- PROP CONSTRUCTION PREVIOUS PHASE
- EXISTING TO BE REMOVED
- DIRECTIONAL ARROW

NOTES:

SEE TCP (6-2), (6-3) AND (6-4), SHEETS 211 TO 213 FOR RAMP CLOSURE DETAILS.

SEE "TEMP EXIT SIGNS FOR EXIT RAMP CLOSURES", SHEET 59, FOR ADDITIONAL INFORMATION.

MATCH LINE STA 794+00

ELDORA ROAD

CLOSE SIOUX ENTRANCE RAMP AND DETOUR TRAFFIC TO SH495 ENTRANCE RAMP. SEE TCP (6-2) AND (6-3), SHEETS 211 AND 212 FOR RAMP CLOSURES.

BUILD PROP RAMP RN03

SIOUX RD

RAMP RN01 OPEN TO TRTAFFIC

END PROJECT
CSJ: 0255-08-091
STA 850+00.00

TEXAS 495

795+00 800+00 805+00 810+00 815+00 820+00 825+00 830+00 835+00 840+00 845+00 850+00 855+00

BUILD PROP RAMP RS04

CLOSE SIOUX EXIT RAMP AND DETOUR TRAFFIC TO NOLANA EXIT RAMP. SEE TCP (6-3) AND (6-4), SHEETS 212 AND 213 FOR RAMP CLOSURES. SEE SHEET 59 FOR "TEMP EXIT SIGNS FOR EXIT RAMP CLOSURES".

RAMP RS02 OPEN TO TRAFFIC

END CONSTRUCTION MAINLANES STA 846+00.00

THE SEAL APPEARING ON THIS DOCUMENT WAS AUTHORIZED BY JOHN M PEREZ, P.E. 66425 ON 06/20/2003.

STATE OF TEXAS
JOHN M. PEREZ
66425
REGISTERED PROFESSIONAL ENGINEER

6/20/03

Parsons Brinckerhoff Quade & Douglas Inc.

Texas Department of Transportation

© 2003 by TxDOT

US 281
RAMP CLOSURE LAYOUT
US 281
PHASE III STEP B

PLAN 1"= 500' HORIZ

SHEET 2 OF 2 | 281SEQIIIRAMP2B.DGN

DESIGNED: PAF	FED. RD DIV. No.	STATE	FEDERAL AID PROJECT No.			HIGHWAY No.	
CHECKED: JP	6	TEXAS				US 281	
DRAWN: KTD	STATE DISTRICT	COUNTY	CONTROL No.	SECTION No.	JOB No.	SHEET No.	
CHECKED: JDH	PHARR	HIDALGO	0255	08	091	153	

h:\22322a\cadd\sheets\traffic\tcp\281seqiiiramp2b.dgn

NAME
10:55:39 AM
06/20/2003

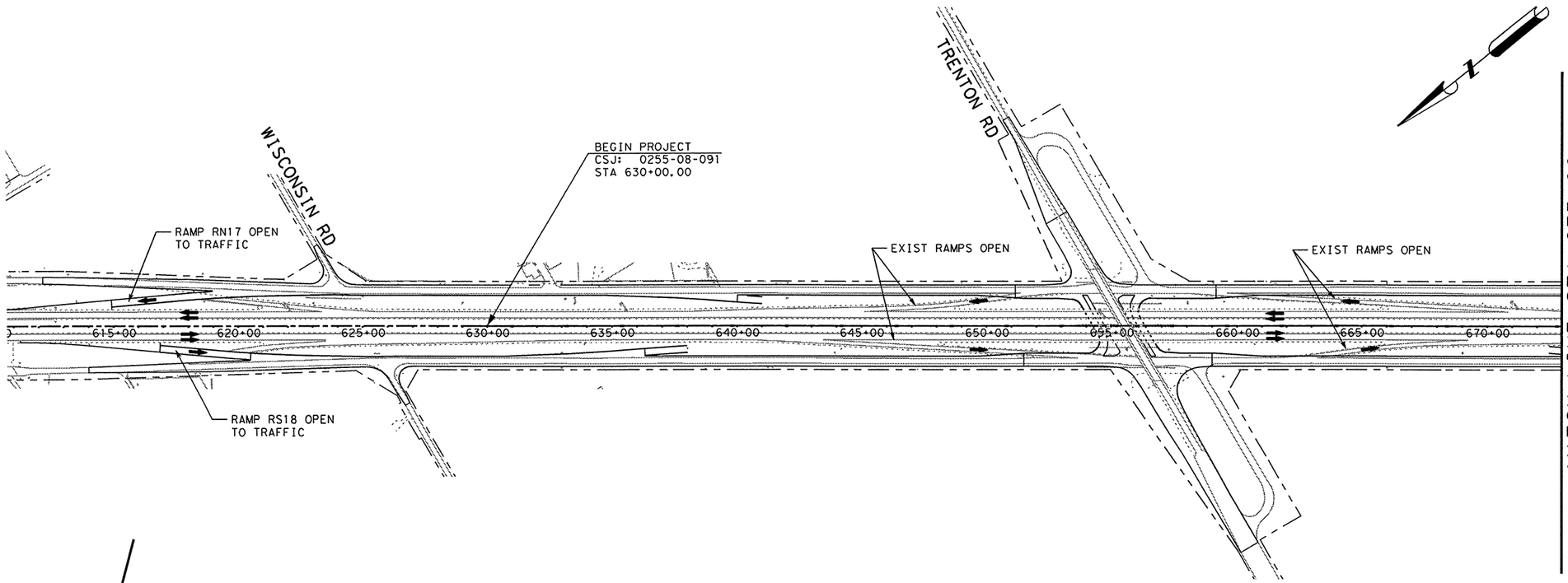

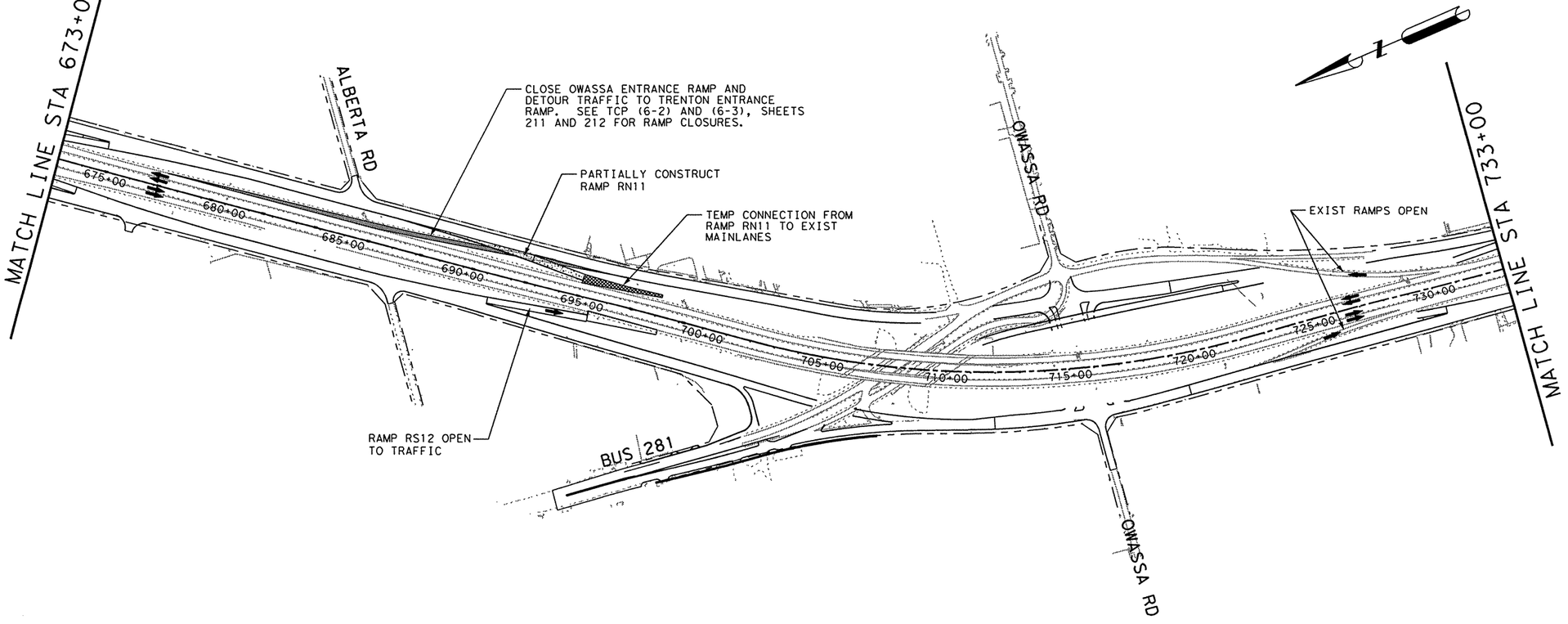

LEGEND:

- TEMP PAV CONSTRUCTED PREVIOUS PHASE
- TEMP PAV CONSTRUCTED THIS PHASE
- PROP CONSTRUCTION THIS PHASE
- PROP CONSTRUCTION PREVIOUS PHASE
- EXISTING TO BE REMOVED
- DIRECTIONAL ARROW

NOTES:

SEE TCP (6-2), (6-3) AND (6-4), SHEETS 211 TO 213 FOR RAMP CLOSURE DETAILS.

SEE "TEMP EXIT SIGNS FOR EXIT RAMP CLOSURES", SHEET 59, FOR ADDITIONAL INFORMATION.

THE SEAL APPEARING ON THIS DOCUMENT WAS AUTHORIZED BY JOHN M PEREZ, P.E. 66425 ON 06/20/2003.

STATE OF TEXAS
JOHN M. PEREZ
66425
REGISTERED PROFESSIONAL ENGINEER

6/20/03

Parsons Brinckerhoff Quade & Douglas Inc.

Texas Department of Transportation

© 2003 by TxDOT

US 281
RAMP CLOSURE LAYOUT
US 281
PHASE III STEP C

PLAN 1"= 500' HORIZ

SHEET 1 OF 2 | 281SEQIIIRAMP3A.DGN

DESIGNED: PAF	FED. RD DIV. NO.	STATE	FEDERAL AID PROJECT No.			HIGHWAY No.
CHECKED: JP	6	TEXAS				US 281
DRAWN: KTD	STATE DISTRICT	COUNTY	CONTROL No.	SECTION No.	JOB No.	SHEET No.
CHECKED: JDH	PHARR	HIDALGO	0255	08	091	154

h:\22322a\cadd\sheets\traffic\tcp\281seqiiiramp3a.dgn

NAME
10:55:45 AM
06/20/2003

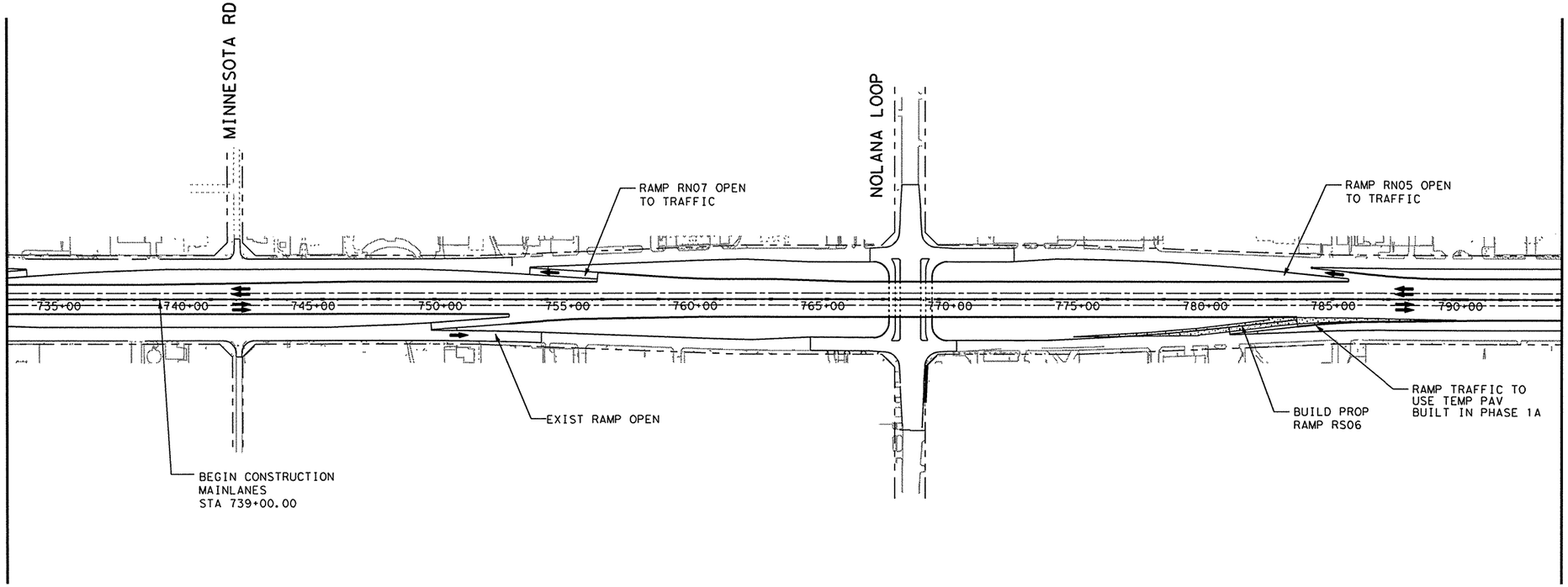

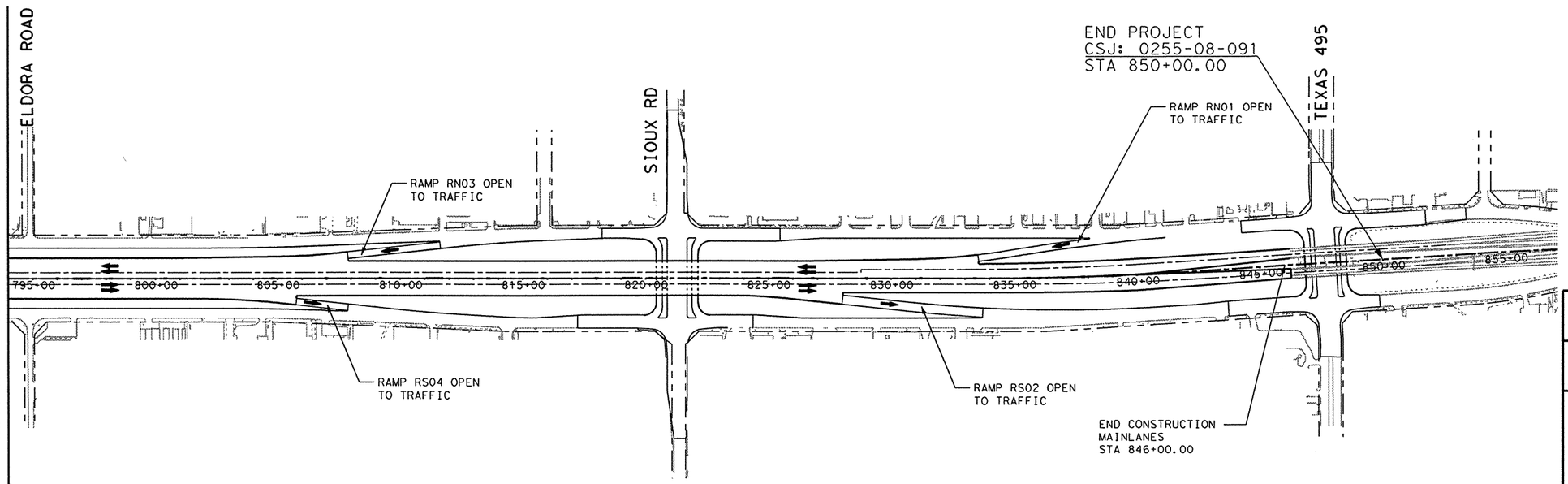

LEGEND:

- TEMP PAV CONSTRUCTED PREVIOUS PHASE
- TEMP PAV CONSTRUCTED THIS PHASE
- PROP CONSTRUCTION THIS PHASE
- PROP CONSTRUCTION PREVIOUS PHASE
- EXISTING TO BE REMOVED
- DIRECTIONAL ARROW

NOTES:

SEE TCP (6-2), (6-3) AND (6-4), SHEETS 211 TO 213 FOR RAMP CLOSURE DETAILS.

SEE "TEMP EXIT SIGNS FOR EXIT RAMP CLOSURES", SHEET 59, FOR ADDITIONAL INFORMATION.

THE SEAL APPEARING ON THIS DOCUMENT WAS AUTHORIZED BY JOHN M PEREZ, P.E. 66425 ON 06/20/2003.

STATE OF TEXAS · JOHN M. PEREZ · 66425 · REGISTERED PROFESSIONAL ENGINEER

6/20/03

Parsons Brinckerhoff Quade & Douglas Inc.

Texas Department of Transportation

© 2003 by TxDOT

US 281
RAMP CLOSURE LAYOUT
US 281
PHASE III STEP C

PLAN 1"= 500' HORIZ

SHEET 2 OF 2 | 281SEQIIIRAMP3B.DGN

DESIGNED: PAF	FED. RD DIV. No.	STATE	FEDERAL AID PROJECT No.				HIGHWAY No.
CHECKED: JP	6	TEXAS					US 281
DRAWN: KTD	STATE DISTRICT	COUNTY	CONTROL No.	SECTION No.	JOB No.	SHEET No.	
CHECKED: JDH	PHARR	HIDALGO	0255	08	091	155	

h:\22322a\cadd\sheets\traffic\tcp\281seqiiiramp3b.dgn

NAME
10:47:36 AM
06/20/2003
h:\22322ov\cadd\sheets\traffic\tcp\typ\281typ18b.dgn

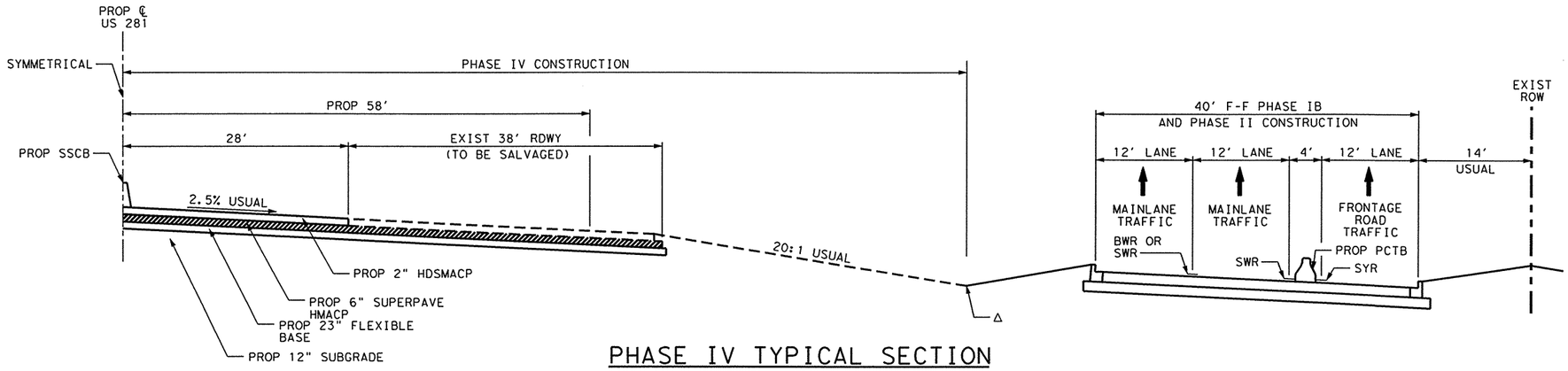

PHASE IV TYPICAL SECTION

STA 630+00.00 TO STA 691+00.00

Δ THE CONTRACTOR SHALL REGRADE DITCHES TO MAINTAIN THE EXISTING DRAINAGE PATTERNS AND REMOVE/RELAY OR EXTEND EXISTING DRAINAGE STRUCTURES AS NEEDED. THIS WORK SHALL BE CONSIDERED SUBSIDIARY TO THE VARIOUS BID ITEMS OF THIS CONTRACT

NOTE:
SEE PROPOSED TYPICAL SECTIONS FOR CROSS SLOPE INFORMATION.

THE SEAL APPEARING ON THIS DOCUMENT WAS AUTHORIZED BY JOHN M PEREZ, P.E. 66425 ON 06/20/2003.

STATE OF TEXAS
JOHN M. PEREZ
66425
REGISTERED PROFESSIONAL ENGINEER

John M. Perez 6/20/03

Parsons Brinckerhoff Quade & Douglas Inc.

Texas Department of Transportation

© 2003 by TxDOT

TRAFFIC CONTROL PHASING TYPICAL SECTION

PHASE IV
STA 630+00 TO STA 691+00

SCALE: NTS

SHEET 1 OF 1						281TYP18B.DGN	
DESIGNED: PAF	FED. RD DIV. No.	STATE	FEDERAL AID PROJECT No.			HIGHWAY No.	
CHECKED: JP	6	TEXAS				US 281	
DRAWN:	STATE DISTRICT	COUNTY	CONTROL No.	SECTION No.	JOB No.	SHEET No.	
CHECKED: JDH	PHARR	HIDALGO	0255	08	091	156	

NAME
10:54:32 AM
06/20/2003

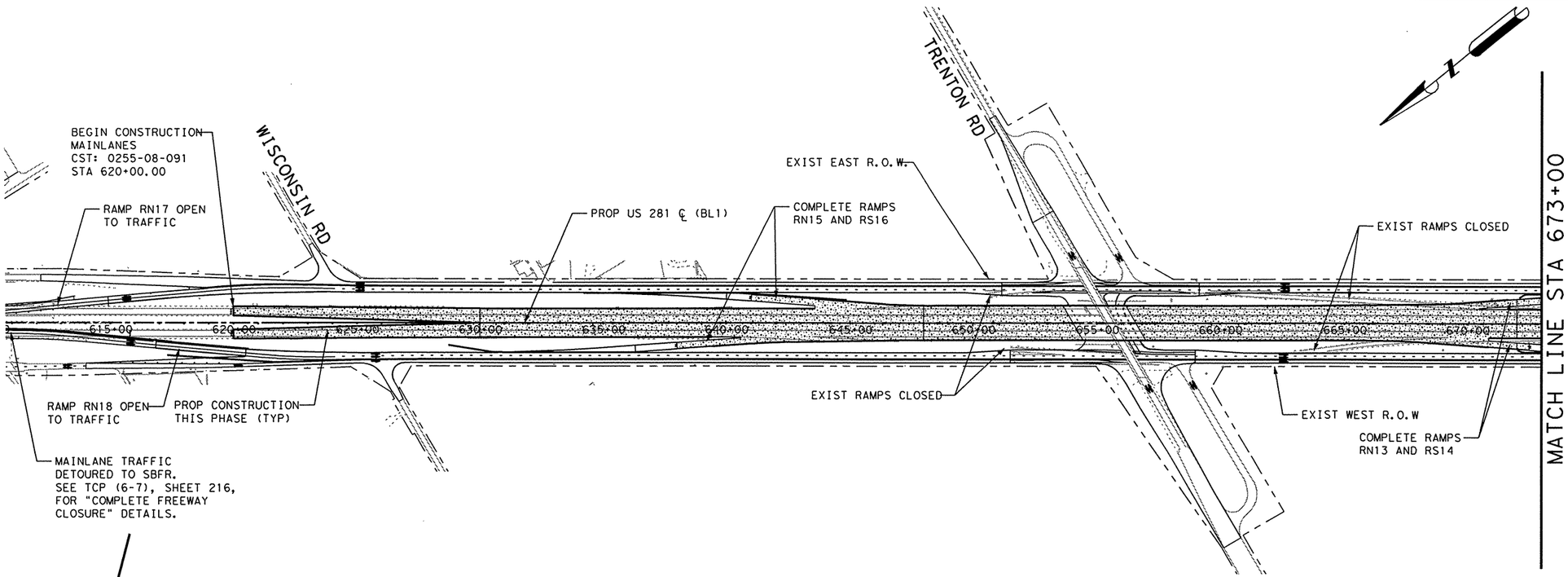

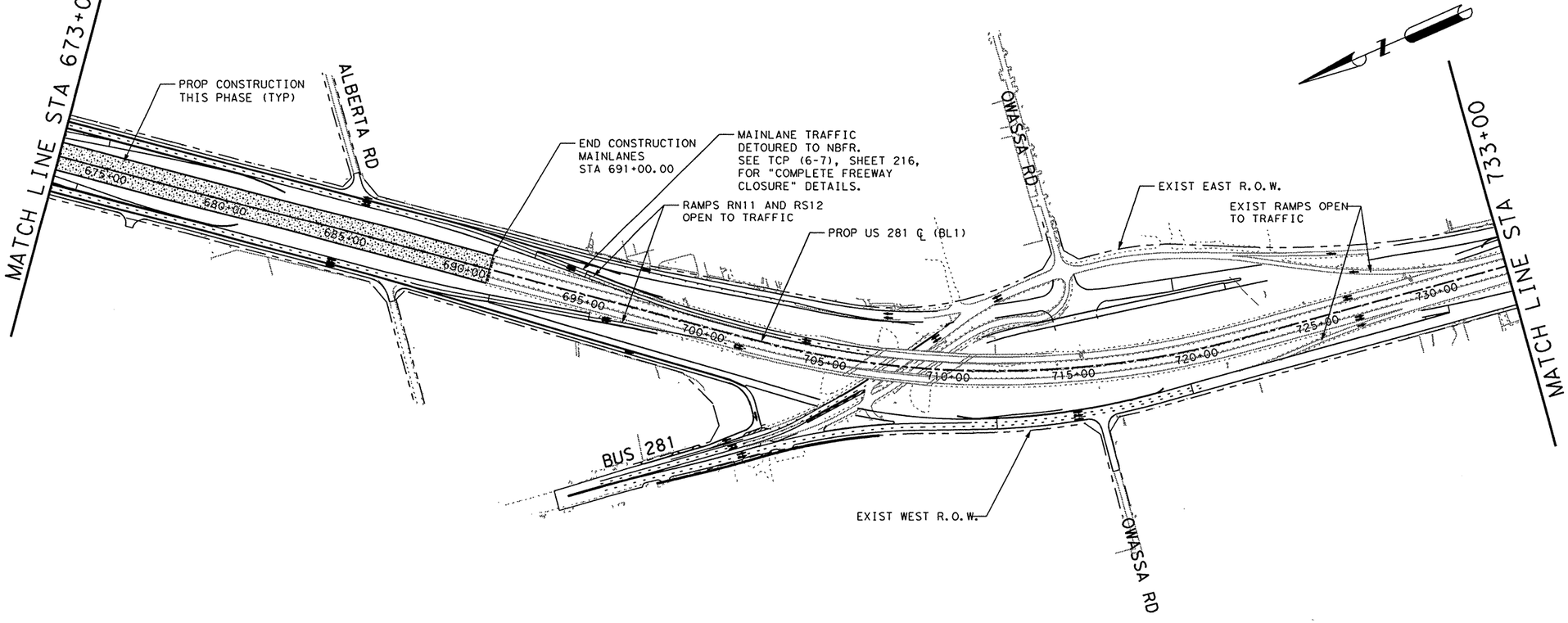

LEGEND:

- TEMP PAV CONSTRUCTED PREVIOUS PHASE
- TEMP PAV CONSTRUCTED THIS PHASE
- PROP CONSTRUCTION THIS PHASE
- PROP CONSTRUCTION PREVIOUS PHASE
- EXISTING TO BE REMOVED
- DIRECTIONAL ARROW

NOTES:

SEE PHASE IV, STEPS IA THROUGH IC FOR CONSTRUCTION OF TRENTON ROAD.

SEE PHASE IV, STEPS 2 AND 3 FOR COMPLETION OF NBFR AT OWASSA ROAD.

THE SEAL APPEARING ON THIS DOCUMENT WAS AUTHORIZED BY JOHN M PEREZ, P.E. 66425 ON 06/20/2003.

STATE OF TEXAS
JOHN M. PEREZ
66425
REGISTERED PROFESSIONAL ENGINEER

6/20/03

Parsons Brinckerhoff Quade & Douglas Inc.

Texas Department of Transportation

© 2003 by TxDOT

US 281
TRAFFIC CONTROL LAYOUT
PHASE IV
BEGIN PROJECT TO END PROJECT

PLAN 1"= 500' HORIZ

SHEET 1 OF 2 | 281SEQIVLAYOUT01.DGN

DESIGNED: PAF	FED. RD DIV. NO.	STATE	FEDERAL AID PROJECT No.				HIGHWAY No.
CHECKED: JP	6	TEXAS					US 281
DRAWN: KTD	STATE DISTRICT	COUNTY	CONTROL No.	SECTION No.	JOB No.	SHEET No.	
CHECKED: JDH	PHARR	HIDALGO	0255	08	091	157	

h:\22322a\cadd\sheets\traffic\tcp\281seqivlayout01.dgn

NAME
10:54:47 AM
06/20/2003
h:\22322g\coadd\sheets\traffic\tcp\281seqivlayout02.dgn

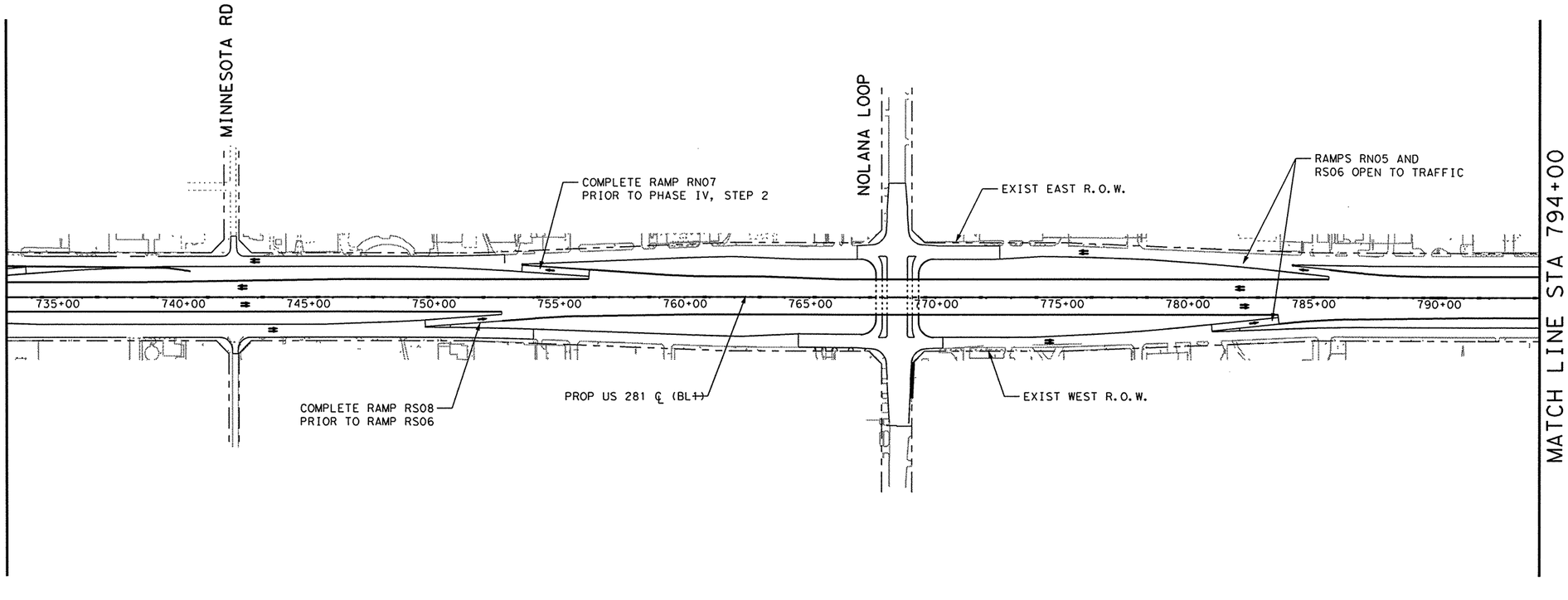

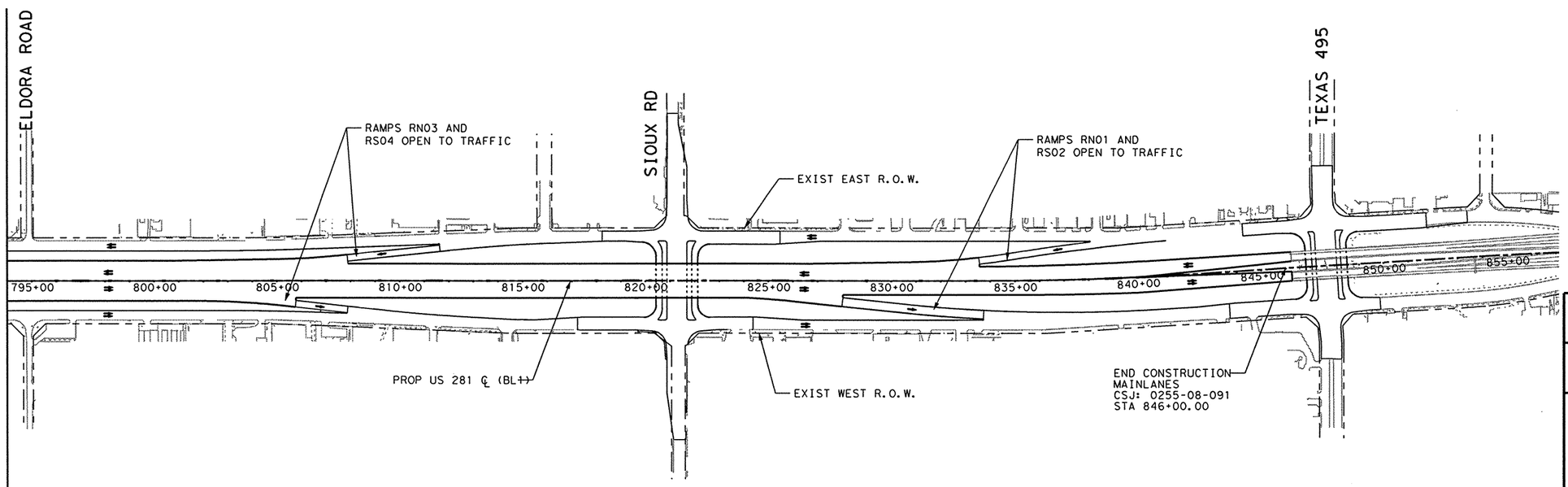

LEGEND:

- TEMP PAV CONSTRUCTED PREVIOUS PHASE
- TEMP PAV CONSTRUCTED THIS PHASE
- PROP CONSTRUCTION THIS PHASE
- PROP CONSTRUCTION PREVIOUS PHASE
- EXISTING TO BE REMOVED
- DIRECTIONAL ARROW

THE SEAL APPEARING ON THIS DOCUMENT WAS AUTHORIZED BY JOHN M PEREZ, P.E. 66425 ON 06/20/2003.

STATE OF TEXAS · JOHN M. PEREZ · 66425 · REGISTERED PROFESSIONAL ENGINEER

6/20/03

Parsons Brinckerhoff Quade & Douglas Inc.

Texas Department of Transportation

© 2003 by TxDOT

US 281
TRAFFIC CONTROL LAYOUT

PHASE IV
BEGIN PROJECT TO
END PROJECT

PLAN 1"= 500' HORIZ

SHEET 2 OF 2						281SEQIVLAYOUT02.DGN	
DESIGNED:PAF	FED. RD DIV. No.	STATE	FEDERAL AID PROJECT No.				HIGHWAY No.
CHECKED: JP	6	TEXAS					US 281
DRAWN: KTD	STATE DISTRICT	COUNTY		CONTROL No.	SECTION No.	JOB No.	SHEET No.
CHECKED: JDH	PHARR	HIDALGO		0255	08	091	158

NAME
11:28:36 AM
06/20/2003

WORK ZONE / TRAFFIC FINES DOUBLE / WHEN WORKERS ARE PRESENT — EG20-9 / ER20-5 / ER20-5 PLAQUE [1]

ROAD WORK AHEAD — CW20-1D [2]

REDUCED SPEED AHEAD — ER2-5A [3]

SPEED LIMIT 50 — ER2-1 [4]

SPEED LIMIT 40 — ER2-1 [4A]

SG20-5T
BEGIN ROAD WORK NEXT X MILES
NAME ADDRESS CITY STATE
CONTRACTOR
SG20-6 [5]

HIGHWAY IMPROVEMENT PROJECT FUNDED BY YOUR TRANSPORTATION TAX DOLLARS
SCHEDULED COMPLETION XXXXXX XXXX
SG20-8

ECW1-4R [6]

ECW1-4L [7]

ECW4-1L [8]

END ROAD WORK — G20-2A [9]

ECW4-1R [10]

FCW4-3R [11]

ECW1-6A [12]

CW20-5L LEFT LANE CLOSED 500 FT PLAQUE [13]

CW20-5R RIGHT LANE CLOSED 500 FT PLAQUE [14]

NOTES:

1. SEE "MINOR STREET CLOSURE DETAIL" FOR TRAFFIC CONTROL FOR MINOR STREETS.
2. SEE TRAFFIC CONTROL PHASING TYPICAL SECTION FOR TCP ROADWAY SECTIONS.
3. TEMP SED CONTROL FENCE ON GRATED INLETS SHALL BE LEFT IN PLACE THROUGHOUT DURATION OF PROJECT OR AS DIRECTED BY THE ENGINEER.

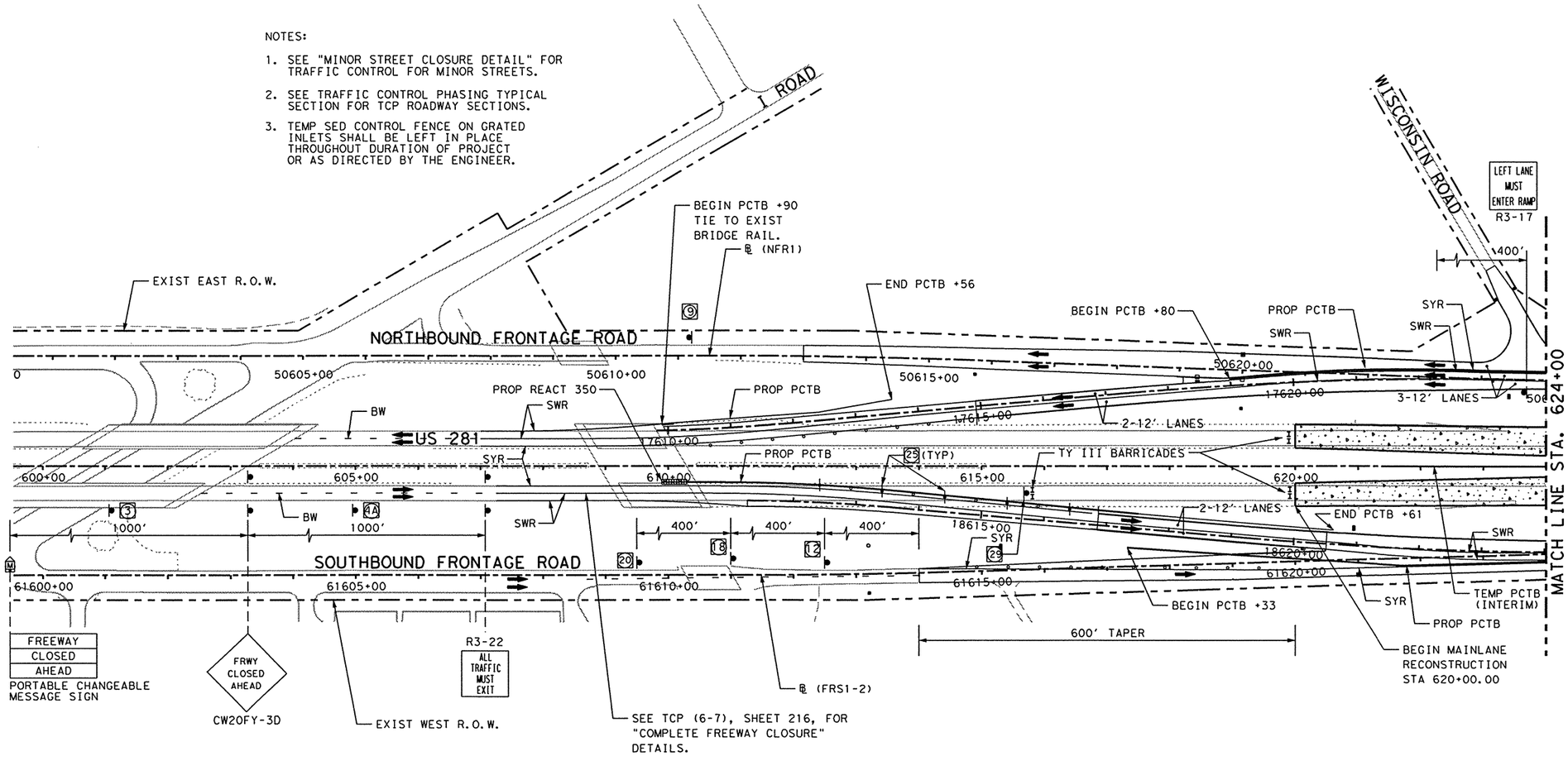

LEGEND:

- TEMP PAV CONSTRUCTED PREVIOUS PHASE
- TEMP PAV CONSTRUCTED THIS PHASE
- PROP CONSTRUCTION THIS PHASE
- PROP CONSTRUCTION PREVIOUS PHASE
- EXISTING TO BE REMOVED
- SW SOLID WHITE (NON-REMOVABLE)
- SY SOLID YELLOW (NON-REMOVABLE)
- BW BROKEN WHITE (NON-REMOVABLE)
- DSY DOUBLE SOLID YELLOW (NON-REMOVABLE)
- SWR SOLID WHITE (REMOVABLE)
- SYR SOLID YELLOW (REMOVABLE)
- BWR BROKEN WHITE (REMOVABLE)
- DSYR DOUBLE SOLID YELLOW (REMOVABLE)
- Ⓨ YELLOW GUIDE MARKS AND SHORT TERM MARKINGS
- Ⓦ WHITE GUIDE MARKS AND SHORT TERM MARKINGS
- CHANNELIZING DEVICES
- TEMP SED CONTROL FENCE (12' EACH SEGMENT)
- TEMP SED CONTROL FENCE (48' EACH SEGMENT)
- CONSTRUCTION EXIT (TY 2)
- PROP SIGN
- PROP TY III BARRICADE

THE SEAL APPEARING ON THIS DOCUMENT WAS AUTHORIZED BY JOHN M PEREZ, P.E. 66425 ON 06/20/2003.

STATE OF TEXAS — JOHN M. PEREZ — 66425 — REGISTERED PROFESSIONAL ENGINEER

6/20/03

ER1-2 YIELD [15]

R1-2A TO RAMP [16]

NARROW LANES AHEAD — CW20-8 [17]

FCW4-2L [18]

FCW4-2R [19]

CW20-5L LEFT LANE CLOSED 1000 FT PLAQUE [20]

CW20-5R RIGHT LANE CLOSED 1000 FT PLAQUE [21]

W3-2A [22]

E5-1 EXIT [23]

CW1-8(F) [24] [25]

SCW13-2 EXIT 45 M.P.H. [26]

G20-7 Working For You Give Us A BRAKE [27]

CW21-1T Give Us A BRAKE [28]

R11-2 ROAD CLOSED [29]

R3-20 LEFT LANE MUST TURN LEFT [30]

TEMPORARY EXIT "STREET NAME" NEXT RIGHT [31]

ROAD WORK ⇦ NEXT X MILES — G20-1bL [24]

ROAD WORK NEXT X MILES ⇨ — G20-1bR [25]

SEE "TEMP EXIT SIGNS FOR EXIT RAMP CLOSURES" FOR ADDITIONAL INFORMATION

Parsons Brinckerhoff Quade & Douglas Inc.

Texas Department of Transportation

© 2003 by TxDOT

US 281
TRAFFIC CONTROL PLAN
PHASE IV

PLAN 1"= 200' HORIZ

SHEET 1 OF 5				281SEQIV01.DGN			
DESIGNED: PAF	FED. RD DIV. No.	STATE	FEDERAL AID PROJECT No.			HIGHWAY No.	
CHECKED: JP	6	TEXAS				US 281	
DRAWN: KTD	STATE DISTRICT	COUNTY	CONTROL No.	SECTION No.	JOB No.	SHEET No.	
CHECKED: JDH	PHARR	HIDALGO	0255	08	091	159	

h:\22322a\cadd\sheets\traffic\tcp\281seqiv01.dgn

NAME
11:28:50 AM
06/20/2003
h:\22322a\cadd\sheets\traffictcp\281seqiv02.dgn

WORK ZONE / TRAFFIC FINES DOUBLE / WHEN WORKERS ARE PRESENT — EG20-9 / ER20-5 / ER20-5 PLAQUE [1]

ROAD WORK AHEAD — CW20-1D [2]

REDUCED SPEED AHEAD — ER2-5A [3]

SPEED LIMIT 50 — ER2-1 [4]

SPEED LIMIT 40 — ER2-1 [4A]

SG20-5T
BEGIN ROAD WORK NEXT X MILES
NAME ADDRESS CITY STATE
CONTRACTOR
SG20-6 [5]

HIGHWAY IMPROVEMENT PROJECT FUNDED BY YOUR TRANSPORTATION TAX DOLLARS
SCHEDULED COMPLETION XXXXXX XXXX
SG20-8

ECW1-4R [6]

ECW1-4L [7]

ECW4-1L [8]

END ROAD WORK — G20-2A [9]

ECW4-1R [10]

FCW4-3R [11]

ECW1-6A [12]

CW20-5L
LEFT LANE CLOSED
500 FT PLAQUE [13]

CW20-5R
RIGHT LANE CLOSED
500 FT PLAQUE [14]

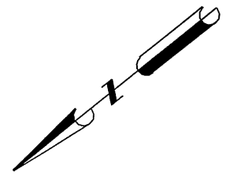

NOTES:

1. SEE "MINOR STREET CLOSURE DETAIL" FOR TRAFFIC CONTROL FOR MINOR STREETS.
2. SEE TRAFFIC CONTROL PHASING TYPICAL SECTION FOR TCP ROADWAY SECTIONS.
3. TEMP SED CONTROL FENCE ON GRATED INLETS SHALL BE LEFT IN PLACE THROUGHOUT DURATION OF PROJECT OR AS DIRECTED BY THE ENGINEER.

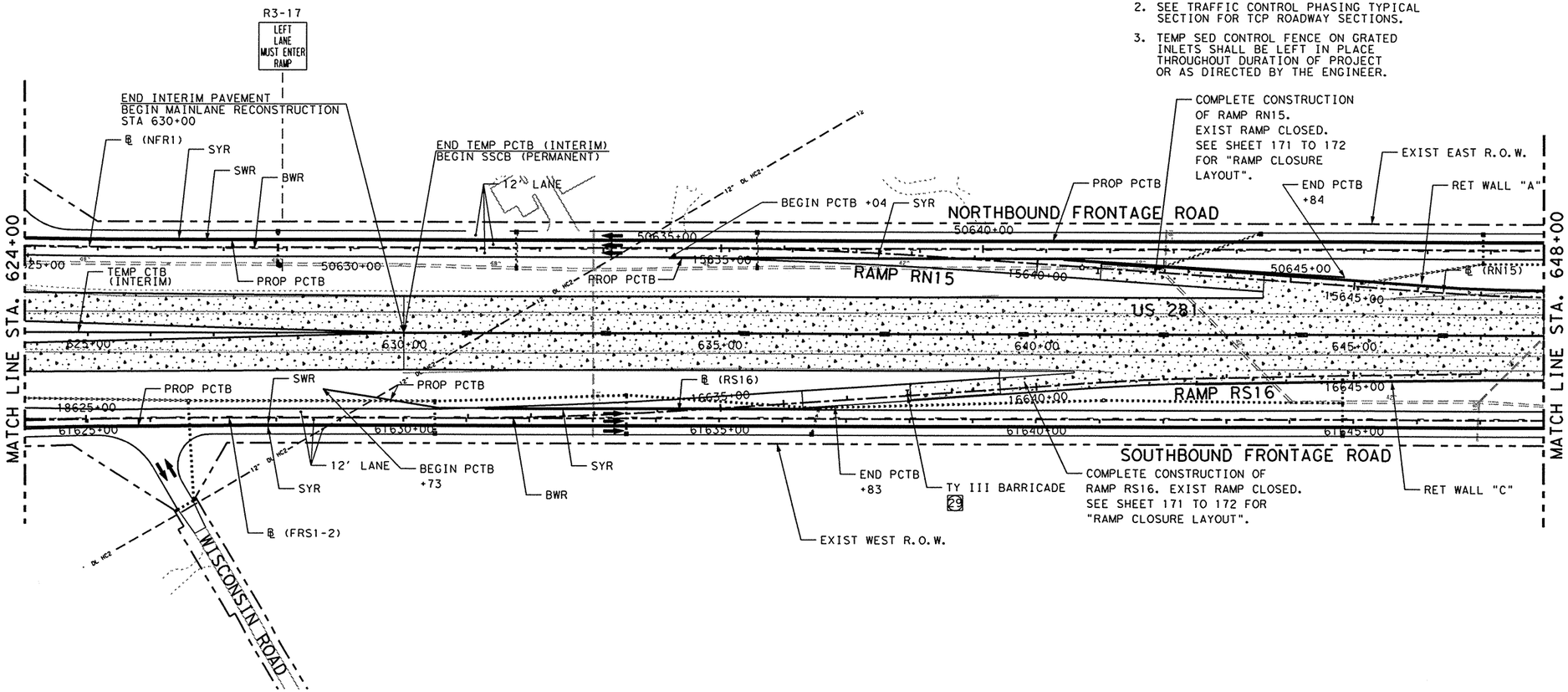

LEGEND:

- TEMP PAV CONSTRUCTED PREVIOUS PHASE
- TEMP PAV CONSTRUCTED THIS PHASE
- PROP CONSTRUCTION THIS PHASE
- PROP CONSTRUCTION PREVIOUS PHASE
- EXISTING TO BE REMOVED
- SW SOLID WHITE (NON-REMOVABLE)
- SY SOLID YELLOW (NON-REMOVABLE)
- BW BROKEN WHITE (NON-REMOVABLE)
- DSY DOUBLE SOLID YELLOW (NON-REMOVABLE)
- SWR SOLID WHITE (REMOVABLE)
- SYR SOLID YELLOW (REMOVABLE)
- BWR BROKEN WHITE (REMOVABLE)
- DSYR DOUBLE SOLID YELLOW (REMOVABLE)
- Ⓨ YELLOW GUIDE MARKS AND SHORT TERM MARKINGS
- Ⓦ WHITE GUIDE MARKS AND SHORT TERM MARKINGS
- CHANNELIZING DEVICES
- TEMP SED CONTROL FENCE (12' EACH SEGMENT)
- TEMP SED CONTROL FENCE (48' EACH SEGMENT)
- CONSTRUCTION EXIT (TY 2)
- PROP SIGN
- PROP TY III BARRICADE
- STRUCTURES TO BE CONSTRUCTED DURING THIS PHASE

THE SEAL APPEARING ON THIS DOCUMENT WAS AUTHORIZED BY JOHN M PEREZ, P.E. 66425 ON 06/20/2003.

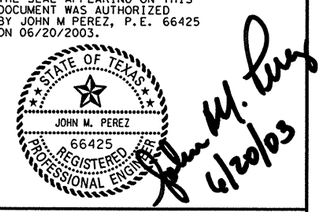

ER1-2 YIELD [15]

R1-2A TO RAMP [16]

NARROW LANES AHEAD — CW20-8 [17]

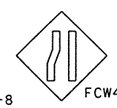
FCW4-2L [18]

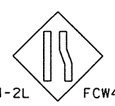
FCW4-2R [19]

CW20-5L
LEFT LANE CLOSED
1000 FT PLAQUE [20]

CW20-5R
RIGHT LANE CLOSED
1000 FT PLAQUE [21]

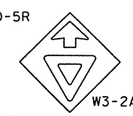
W3-2A [22]

E5-1 EXIT [23]

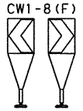
CW1-8(F) [24] [25]

SCW13-2 EXIT 45 M.P.H. [26]

G20-7 Working For You Give Us A BRAKE [27]

CW21-1T Give Us A BRAKE [28]

R11-2 ROAD CLOSED [29]

R3-20 LEFT LANE MUST TURN LEFT [30]

TEMPORARY EXIT "STREET NAME" NEXT RIGHT [31]

ROAD WORK ⇦ NEXT X MILES — G20-1bL [24]

ROAD WORK NEXT X MILES ⇨ — G20-1bR [25]

SEE "TEMP EXIT SIGNS FOR EXIT RAMP CLOSURES" FOR ADDITIONAL INFORMATION

Parsons Brinckerhoff Quade & Douglas Inc.

Texas Department of Transportation

© 2003 by TxDOT

US 281
TRAFFIC CONTROL PLAN
PHASE IV

PLAN 1"= 200' HORIZ

SHEET 2 OF 5 — 281SEQIV02.DGN

DESIGNED: PAF	FED. RD DIV. No.	STATE	FEDERAL AID PROJECT No.			HIGHWAY No.
CHECKED: JP	6	TEXAS				US 281
DRAWN: KTD	STATE DISTRICT	COUNTY	CONTROL No.	SECTION No.	JOB No.	SHEET No.
CHECKED: JDH	PHARR	HIDALGO	0255	08	091	160

NAME
11:29:03 AM
06/20/2003
h:\22322a\cadd\sheets\traffic\tcp\281seqiv03.dgn

WORK ZONE EG20-9
TRAFFIC FINES DOUBLE ER20-5
WHEN WORKERS ARE PRESENT ER20-5 PLAQUE
[1]

ROAD WORK AHEAD CW20-1D [2]

REDUCED SPEED AHEAD ER2-5A [3]

SPEED LIMIT 50 ER2-1 [4]

SPEED LIMIT 40 ER2-1 [4A]

SG20-5T
BEGIN ROAD WORK NEXT X MILES
NAME
ADDRESS
CITY
STATE
CONTRACTOR
SG20-6 [5]

HIGHWAY IMPROVEMENT PROJECT FUNDED BY YOUR TRANSPORTATION TAX DOLLARS
SCHEDULED COMPLETION XXXXXX XXXX
SG20-8

ECW1-4R [6]

ECW1-4L [7]

ECW4-1L [8]

END ROAD WORK G20-2A [9]

ECW4-1R [10]

FCW4-3R [11]

ECW1-6A [12]

CW20-5L LEFT LANE CLOSED 500 FT PLAQUE [13]

CW20-5R RIGHT LANE CLOSED 500 FT PLAQUE [14]

NOTES:

1. SEE "MINOR STREET CLOSURE DETAIL" FOR TRAFFIC CONTROL FOR MINOR STREETS.
2. SEE TRAFFIC CONTROL PHASING TYPICAL SECTION FOR TCP ROADWAY SECTIONS.
3. TEMP SED CONTROL FENCE ON GRATED INLETS SHALL BE LEFT IN PLACE THROUGHOUT DURATION OF PROJECT OR AS DIRECTED BY THE ENGINEER.

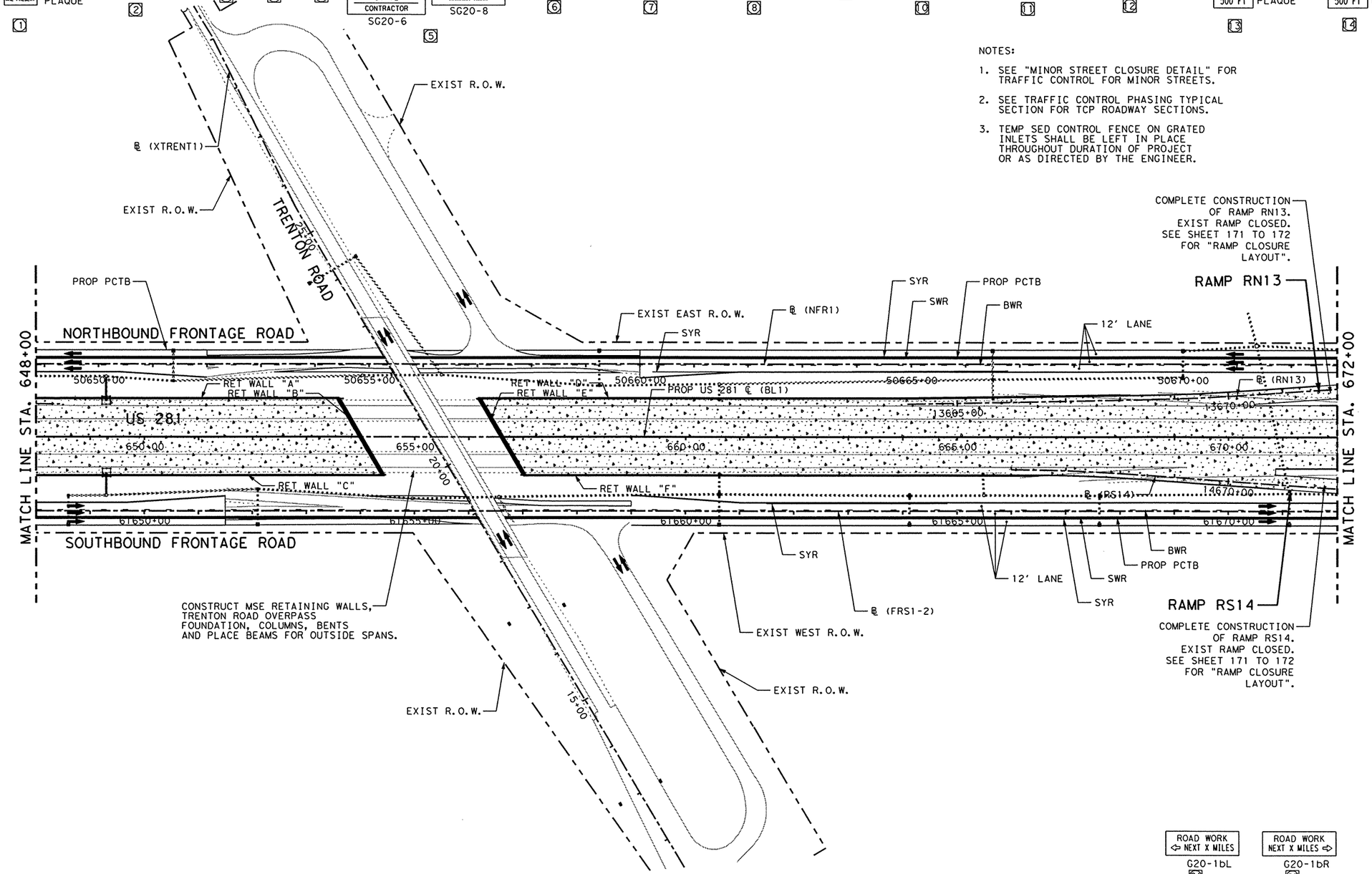

LEGEND:

- TEMP PAV CONSTRUCTED PREVIOUS PHASE
- TEMP PAV CONSTRUCTED THIS PHASE
- PROP CONSTRUCTION THIS PHASE
- PROP CONSTRUCTION PREVIOUS PHASE
- EXISTING TO BE REMOVED
- SW SOLID WHITE (NON-REMOVABLE)
- SY SOLID YELLOW (NON-REMOVABLE)
- BW BROKEN WHITE (NON-REMOVABLE)
- DSY DOUBLE SOLID YELLOW (NON-REMOVABLE)
- SWR SOLID WHITE (REMOVABLE)
- SYR SOLID YELLOW (REMOVABLE)
- BWR BROKEN WHITE (REMOVABLE)
- DSYR DOUBLE SOLID YELLOW (REMOVABLE)
- (Y) YELLOW GUIDE MARKS AND SHORT TERM MARKINGS
- (W) WHITE GUIDE MARKS AND SHORT TERM MARKINGS
- CHANNELIZING DEVICES
- TEMP SED CONTROL FENCE (12' EACH SEGMENT)
- TEMP SED CONTROL FENCE (48' EACH SEGMENT)
- CONSTRUCTION EXIT (TY 2)
- PROP SIGN
- PROP TY III BARRICADE
- STRUCTURES TO BE CONSTRUCTED DURING THIS PHASE

THE SEAL APPEARING ON THIS DOCUMENT WAS AUTHORIZED BY JOHN M PEREZ, P.E. 66425 ON 06/20/2003.

STATE OF TEXAS · JOHN M. PEREZ · 66425 · REGISTERED PROFESSIONAL ENGINEER

6/20/03

ER1-2 YIELD [15]

R1-2A TO RAMP [16]

NARROW LANES AHEAD CW20-8 [17]

FCW4-2L [18]

FCW4-2R [19]

CW20-5L LEFT LANE CLOSED 1000 FT PLAQUE [20]

CW20-5R RIGHT LANE CLOSED 1000 FT PLAQUE [21]

W3-2A [22]

E5-1 EXIT [23]

CW1-8(F) [24] [25]

SCW13-2 EXIT 45 M.P.H. [26]

G20-7 Working For You Give Us A BRAKE [27]

CW21-1T Give Us A BRAKE [28]

R11-2 ROAD CLOSED [29]

R3-20 LEFT LANE MUST TURN LEFT [30]

TEMPORARY EXIT "STREET NAME" NEXT RIGHT [31]

ROAD WORK ⇦ NEXT X MILES G20-1bL [28A]

ROAD WORK NEXT X MILES ⇨ G20-1bR [28B]

SEE "TEMP EXIT SIGNS FOR EXIT RAMP CLOSURES" FOR ADDITIONAL INFORMATION

Parsons Brinckerhoff Quade & Douglas Inc.

Texas Department of Transportation

© 2003 by TxDOT

US 281
TRAFFIC CONTROL PLAN
PHASE IV

PLAN 1"= 200' HORIZ

SHEET 3 OF 5 | 281SEQIV03.DGN

DESIGNED: PAF	FED. RD DIV. No.	STATE	FEDERAL AID PROJECT No.			HIGHWAY No.	
CHECKED: JP	6	TEXAS				US 281	
DRAWN: KTD	STATE DISTRICT	COUNTY	CONTROL No.	SECTION No.	JOB No.	SHEET No.	
CHECKED: JDH	PHARR	HIDALGO	0255	08	091	161	

NAME
11:29:15 AM
06/20/2003

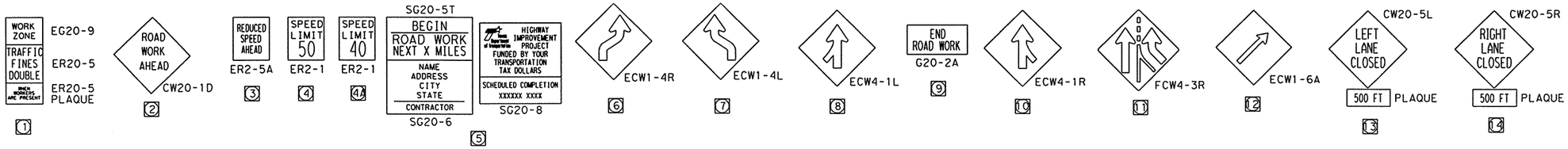

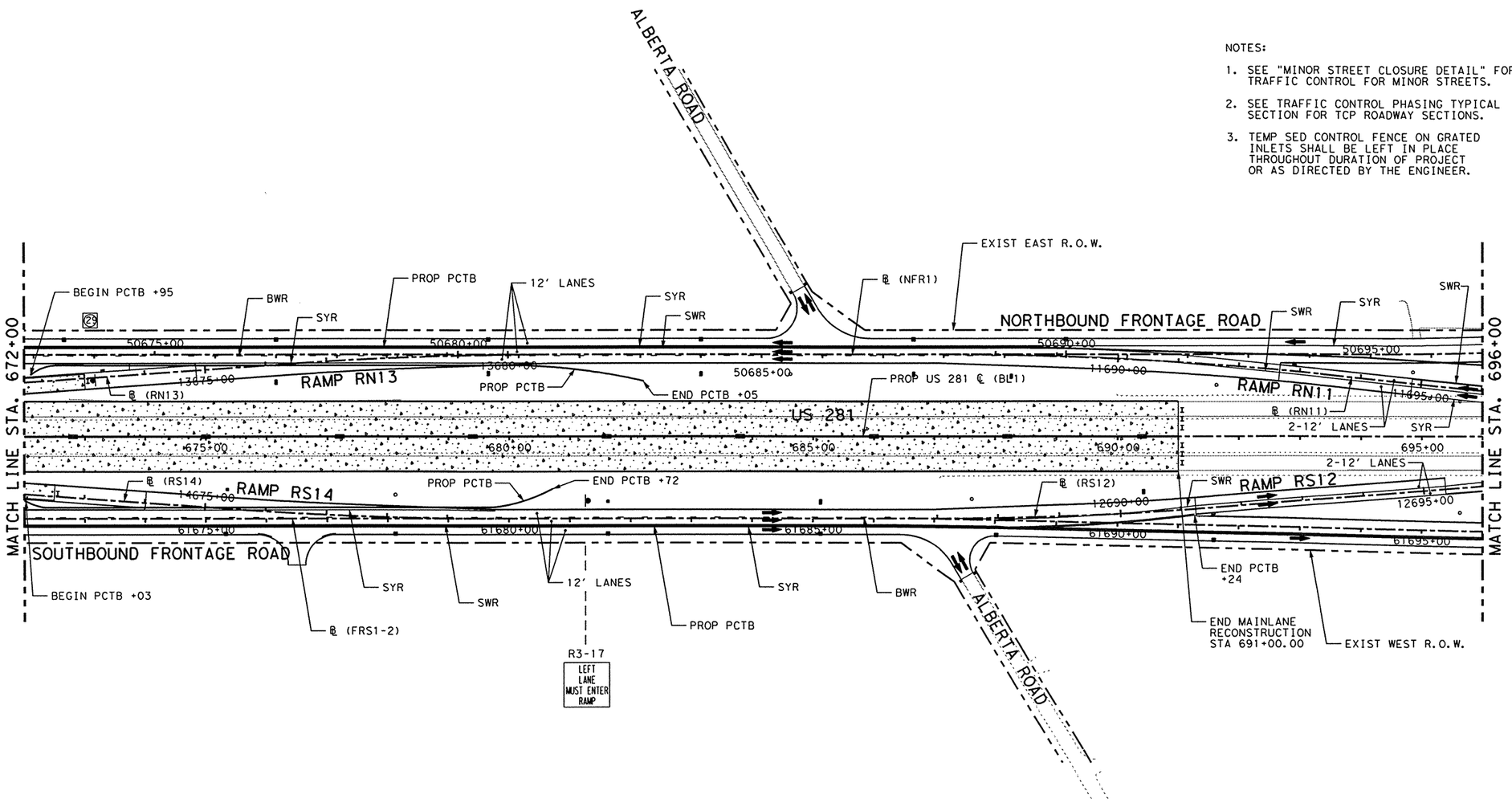

NOTES:

1. SEE "MINOR STREET CLOSURE DETAIL" FOR TRAFFIC CONTROL FOR MINOR STREETS.
2. SEE TRAFFIC CONTROL PHASING TYPICAL SECTION FOR TCP ROADWAY SECTIONS.
3. TEMP SED CONTROL FENCE ON GRATED INLETS SHALL BE LEFT IN PLACE THROUGHOUT DURATION OF PROJECT OR AS DIRECTED BY THE ENGINEER.

LEGEND:

- TEMP PAV CONSTRUCTED PREVIOUS PHASE
- TEMP PAV CONSTRUCTED THIS PHASE
- PROP CONSTRUCTION THIS PHASE
- PROP CONSTRUCTION PREVIOUS PHASE
- EXISTING TO BE REMOVED
- SW — SOLID WHITE (NON-REMOVABLE)
- SY — SOLID YELLOW (NON-REMOVABLE)
- BW — BROKEN WHITE (NON-REMOVABLE)
- DSY — DOUBLE SOLID YELLOW (NON-REMOVABLE)
- SWR — SOLID WHITE (REMOVABLE)
- SYR — SOLID YELLOW (REMOVABLE)
- BWR — BROKEN WHITE (REMOVABLE)
- DSYR — DOUBLE SOLID YELLOW (REMOVABLE)
- (Y) YELLOW GUIDE MARKS AND SHORT TERM MARKINGS
- (W) WHITE GUIDE MARKS AND SHORT TERM MARKINGS
- CHANNELIZING DEVICES
- TEMP SED CONTROL FENCE (12' EACH SEGMENT)
- TEMP SED CONTROL FENCE (48' EACH SEGMENT)
- CONSTRUCTION EXIT (TY 2)
- PROP SIGN
- PROP TY III BARRICADE

THE SEAL APPEARING ON THIS DOCUMENT WAS AUTHORIZED BY JOHN M PEREZ, P.E. 66425 ON 06/20/2003.

STATE OF TEXAS — JOHN M. PEREZ — 66425 — REGISTERED PROFESSIONAL ENGINEER

6/20/03

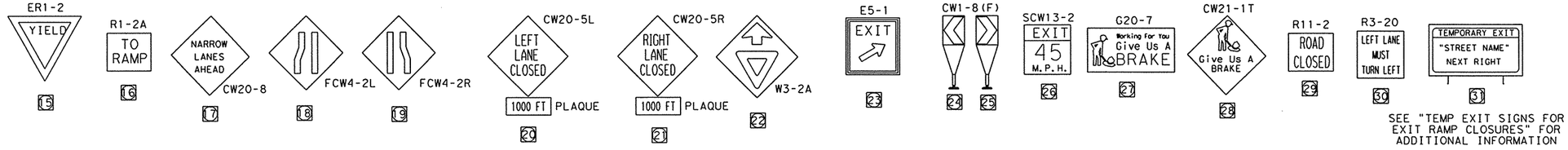

SEE "TEMP EXIT SIGNS FOR EXIT RAMP CLOSURES" FOR ADDITIONAL INFORMATION

Parsons Brinckerhoff Quade & Douglas Inc.

Texas Department of Transportation

© 2003 by TxDOT

US 281
TRAFFIC CONTROL PLAN
PHASE IV

PLAN 1"= 200' HORIZ

SHEET 4 OF 5 | 281SEQIV04.DGN

DESIGNED: PAF	FED. RD DIV. No.	STATE	FEDERAL AID PROJECT No.			HIGHWAY No.	
CHECKED: JP	6	TEXAS				US 281	
DRAWN: KTD	STATE DISTRICT	COUNTY	CONTROL No.	SECTION No.	JOB No.	SHEET No.	
CHECKED: JDH	PHARR	HIDALGO	0255	08	091	162	

h:\22322a\cadd\sheets\traffic\tcp\281seqiv04.dgn

NAME
11:29:28 AM
06/20/2003

WORK ZONE / TRAFFIC FINES DOUBLE / WHEN WORKERS ARE PRESENT — EG20-9, ER20-5, ER20-5 PLAQUE [1]

ROAD WORK AHEAD — CW20-1D [2]

REDUCED SPEED AHEAD — ER2-5A [3]

SPEED LIMIT 50 — ER2-1 [4]

SPEED LIMIT 40 — ER2-1 [4A]

SG20-5T
BEGIN ROAD WORK NEXT X MILES
NAME ADDRESS CITY STATE
CONTRACTOR
SG20-6 [5]

HIGHWAY IMPROVEMENT PROJECT FUNDED BY YOUR TRANSPORTATION TAX DOLLARS
SCHEDULED COMPLETION XXXXXX XXXX
SG20-8

ECW1-4R [6]

ECW1-4L [7]

ECW4-1L [8]

END ROAD WORK — G20-2A [9]

ECW4-1R [10]

FCW4-3R [11]

ECW1-6A [12]

CW20-5L LEFT LANE CLOSED — 500 FT PLAQUE [13]

CW20-5R RIGHT LANE CLOSED — 500 FT PLAQUE [14]

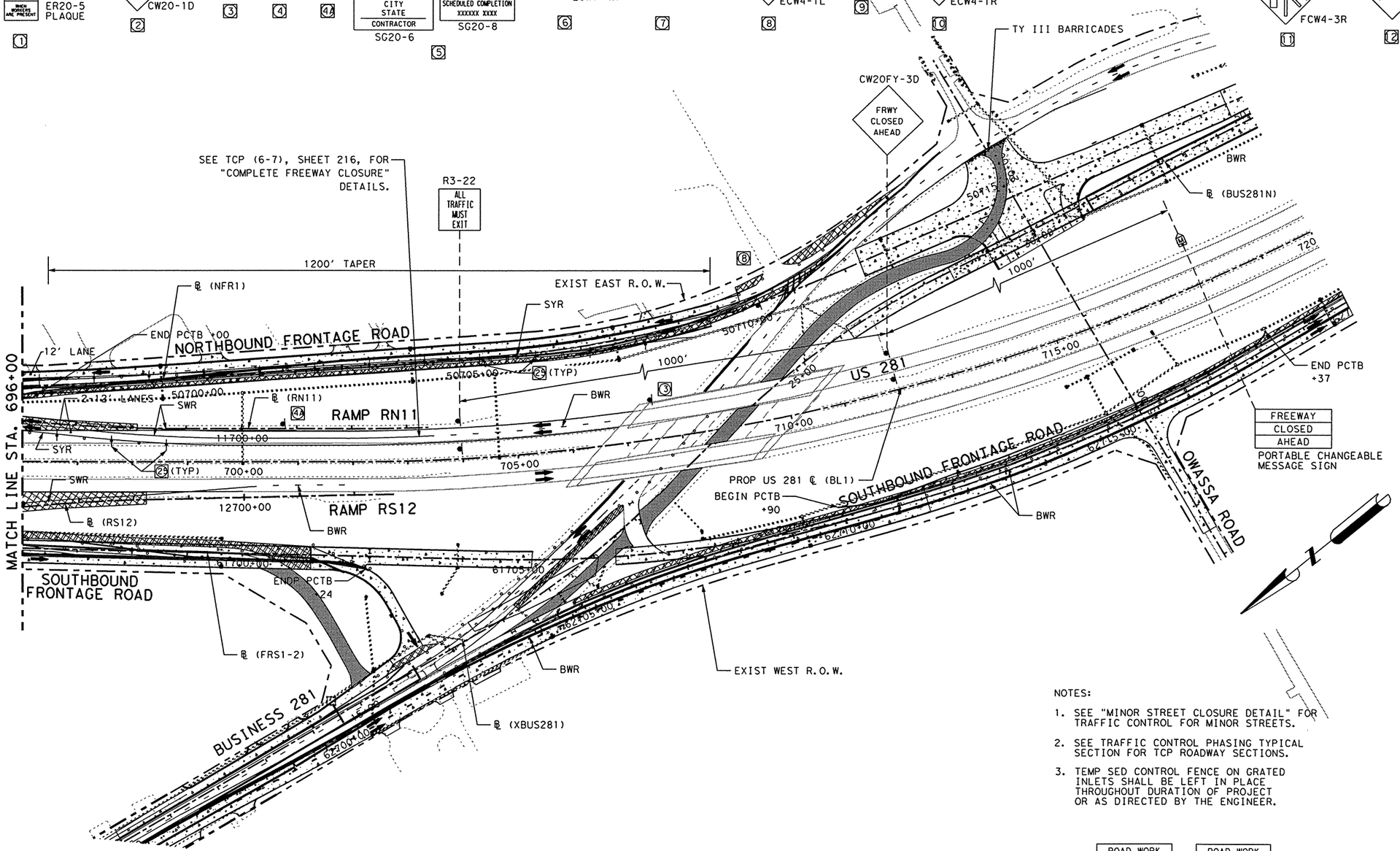

LEGEND:

- TEMP PAV CONSTRUCTED PREVIOUS PHASE
- TEMP PAV CONSTRUCTED THIS PHASE
- PROP CONSTRUCTION THIS PHASE
- PROP CONSTRUCTION PREVIOUS PHASE
- EXISTING TO BE REMOVED
- SW — SOLID WHITE (NON-REMOVABLE)
- SY — SOLID YELLOW (NON-REMOVABLE)
- BW — BROKEN WHITE (NON-REMOVABLE)
- DSY — DOUBLE SOLID YELLOW (NON-REMOVABLE)
- SWR — SOLID WHITE (REMOVABLE)
- SYR — SOLID YELLOW (REMOVABLE)
- BWR — BROKEN WHITE (REMOVABLE)
- DSYR — DOUBLE SOLID YELLOW (REMOVABLE)
- (Y) — YELLOW GUIDE MARKS AND SHORT TERM MARKINGS
- (W) — WHITE GUIDE MARKS AND SHORT TERM MARKINGS
- CHANNELIZING DEVICES
- TEMP SED CONTROL FENCE (12' EACH SEGMENT)
- TEMP SED CONTROL FENCE (48' EACH SEGMENT)
- CONSTRUCTION EXIT (TY 2)
- PROP SIGN
- PROP TY III BARRICADE
- STRUCTURES TO BE CONSTRUCTED DURING THIS PHASE

NOTES:

1. SEE "MINOR STREET CLOSURE DETAIL" FOR TRAFFIC CONTROL FOR MINOR STREETS.
2. SEE TRAFFIC CONTROL PHASING TYPICAL SECTION FOR TCP ROADWAY SECTIONS.
3. TEMP SED CONTROL FENCE ON GRATED INLETS SHALL BE LEFT IN PLACE THROUGHOUT DURATION OF PROJECT OR AS DIRECTED BY THE ENGINEER.

THE SEAL APPEARING ON THIS DOCUMENT WAS AUTHORIZED BY JOHN M PEREZ, P.E. 66425 ON 06/20/2003.

STATE OF TEXAS — JOHN M. PEREZ — 66425 — REGISTERED PROFESSIONAL ENGINEER — 6/20/03

ROAD WORK ⇦ NEXT X MILES — G20-1bL [28]

ROAD WORK NEXT X MILES ⇨ — G20-1bR [28]

ER1-2 YIELD [15]

R1-2A TO RAMP [16]

NARROW LANES AHEAD — CW20-8 [17]

FCW4-2L [18]

FCW4-2R [19]

CW20-5L LEFT LANE CLOSED — 1000 FT PLAQUE [20]

CW20-5R RIGHT LANE CLOSED — 1000 FT PLAQUE [21]

W3-2A [22]

E5-1 EXIT [23]

CW1-8(F) [24] [25]

SCW13-2 EXIT 45 M.P.H. [26]

G20-7 Working for You Give Us A BRAKE [27]

CW21-1T Give Us A BRAKE [28]

R11-2 ROAD CLOSED [29]

R3-20 LEFT LANE MUST TURN LEFT [30]

TEMPORARY EXIT "STREET NAME" NEXT RIGHT [31]

SEE "TEMP EXIT SIGNS FOR EXIT RAMP CLOSURES" FOR ADDITIONAL INFORMATION

Parsons Brinckerhoff Quade & Douglas Inc.

Texas Department of Transportation

© 2003 by TxDOT

US 281
TRAFFIC CONTROL PLAN
PHASE IV

PLAN 1"= 200' HORIZ

SHEET 5 OF 5				281SEQIV05.DGN			
DESIGNED: PAF	FED. RD DIV. NO.	STATE	FEDERAL AID PROJECT NO.			HIGHWAY NO.	
CHECKED: JP	6	TEXAS				US 281	
DRAWN: KTD	STATE DISTRICT	COUNTY	CONTROL No.	SECTION No.	JOB No.	SHEET No.	
CHECKED: JDH	PHARR	HIDALGO	0255	08	091	163	

h:\22322a\cadd\sheets\traffic\tcp\281seqiv05.dgn

NAME
04:06:53 PM
08/06/2003

IMPORTANT NOTE TO CONTRACTOR:
KEY PROJECT MILESTONE!!
LIQUIDATED DAMAGES OR INCENTIVES APPLY TO THIS PHASE!

NOTES:
1. PAVEMENT MARKINGS ARE TO REMAIN FROM PHASE IV STA 648+00 TO 672+00 FOR PHASE IV STEP 1A.
2. TEMP SED CONTROL FENCE ON GRATED INLETS SHALL BE LEFT IN PLACE THROUGHOUT DURATION OF PROJECT OR AS DIRECTED BY THE ENGINEER.

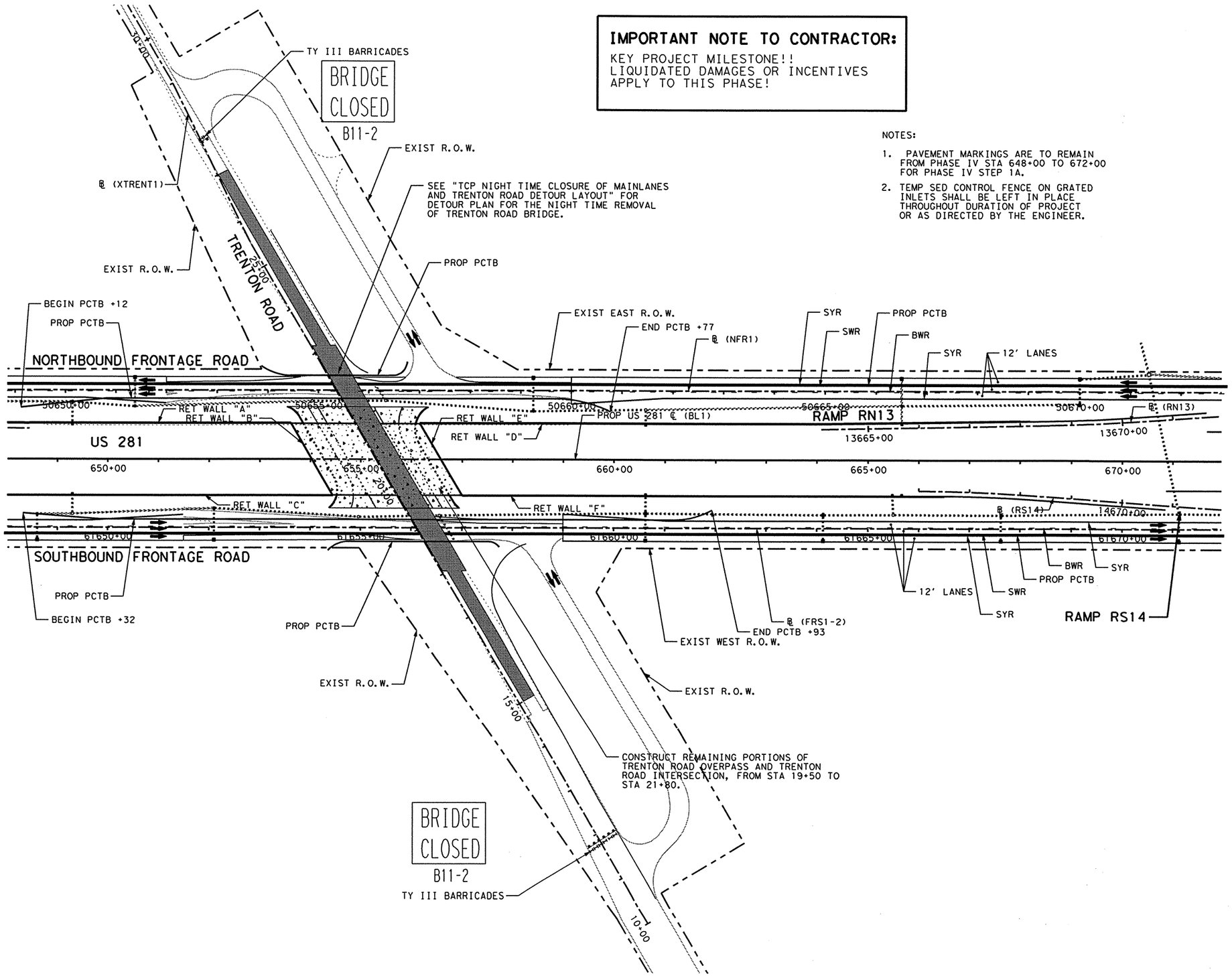

LEGEND:

- TEMP PAV CONSTRUCTED PREVIOUS PHASE
- TEMP PAV CONSTRUCTED THIS PHASE
- PROP CONSTRUCTION THIS PHASE
- PROP CONSTRUCTION PREVIOUS PHASE
- EXISTING TO BE REMOVED
- SW SOLID WHITE (NON-REMOVABLE)
- SY SOLID YELLOW (NON-REMOVABLE)
- BW BROKEN WHITE (NON-REMOVABLE)
- DSY DOUBLE SOLID YELLOW (NON-REMOVABLE)
- SWR SOLID WHITE (REMOVABLE)
- SYR SOLID YELLOW (REMOVABLE)
- BWR BROKEN WHITE (REMOVABLE)
- DSYR DOUBLE SOLID YELLOW (REMOVABLE)
- (Y) YELLOW GUIDE MARKS AND SHORT TERM MARKINGS
- (W) WHITE GUIDE MARKS AND SHORT TERM MARKINGS
- CHANNELIZING DEVICES
- TEMP SED CONTROL FENCE (12' EACH SEGMENT)
- TEMP SED CONTROL FENCE (48' EACH SEGMENT)
- CONSTRUCTION EXIT (TY 2)
- PROP SIGN
- PROP TY III BARRICADE

THE SEAL APPEARING ON THIS DOCUMENT WAS AUTHORIZED BY JOHN M PEREZ, P.E. 66425 ON 08/06/2003.

STATE OF TEXAS · JOHN M. PEREZ · 66425 · REGISTERED PROFESSIONAL ENGINEER

8/6/03

Parsons Brinckerhoff Quade & Douglas Inc.

Texas Department of Transportation

© 2003 by TxDOT

US 281
TRAFFIC CONTROL PLAN

TRENTON ROAD
PHASE IV STEP 1A

PLAN 1"= 200' HORIZ

SHEET 1 OF 3				281SEQIV4A01.DGN			
DESIGNED: PAF	FED. RD DIV. No.	STATE	FEDERAL AID PROJECT No.			HIGHWAY No.	
CHECKED: JP	6	TEXAS				US 281	
DRAWN: PGT	STATE DISTRICT	COUNTY	CONTROL No.	SECTION No.	JOB No.	SHEET No.	
CHECKED: JDH	PHARR	HIDALGO	0255	08	091	164	

h:\223220\cadd\sheets\traffic\tcp\281seqiv4a01.dgn

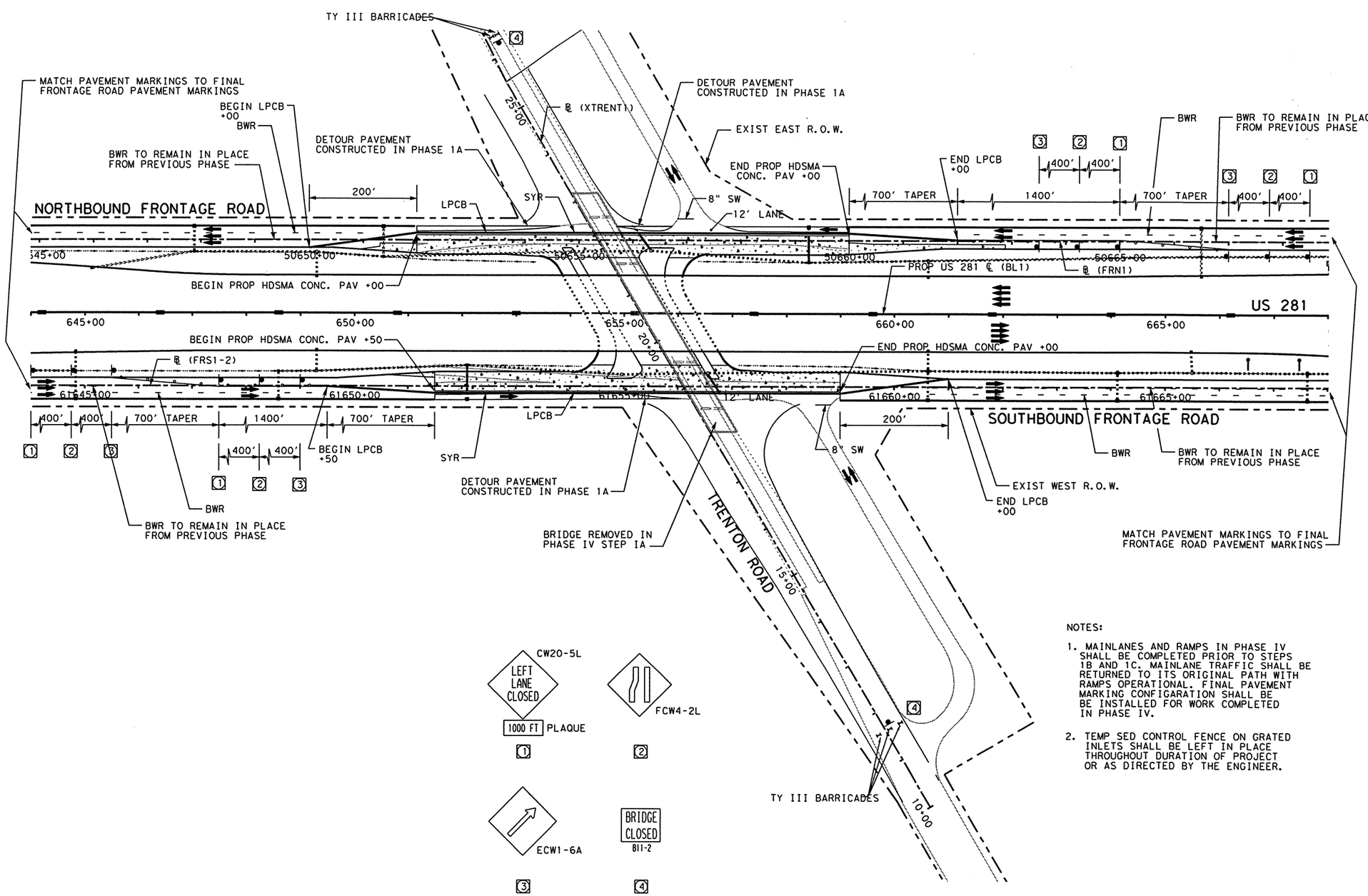

NOTES:

1. MAINLANES AND RAMPS IN PHASE IV SHALL BE COMPLETED PRIOR TO STEPS 1B AND 1C. MAINLANE TRAFFIC SHALL BE RETURNED TO ITS ORIGINAL PATH WITH RAMPS OPERATIONAL. FINAL PAVEMENT MARKING CONFIGARATION SHALL BE BE INSTALLED FOR WORK COMPLETED IN PHASE IV.
2. TEMP SED CONTROL FENCE ON GRATED INLETS SHALL BE LEFT IN PLACE THROUGHOUT DURATION OF PROJECT OR AS DIRECTED BY THE ENGINEER.

IMPORTANT NOTE TO CONTRACTOR:

KEY PROJECT MILESTONE!!
LIQUIDATED DAMAGES OR INCENTIVES APPLY TO THIS PHASE!

LEGEND:

- TEMP PAV CONSTRUCTED PREVIOUS PHASE
- TEMP PAV CONSTRUCTED THIS PHASE
- PROP CONSTRUCTION THIS PHASE
- PROP CONSTRUCTION PREVIOUS PHASE
- EXISTING TO BE REMOVED
- SW SOLID WHITE (NON-REMOVABLE)
- SY SOLID YELLOW (NON-REMOVABLE)
- BW BROKEN WHITE (NON-REMOVABLE)
- DSY DOUBLE SOLID YELLOW (NON-REMOVABLE)
- SWR SOLID WHITE (REMOVABLE)
- SYR SOLID YELLOW (REMOVABLE)
- BWR BROKEN WHITE (REMOVABLE)
- DSYR DOUBLE SOLID YELLOW (REMOVABLE)
- (Y) YELLOW GUIDE MARKS AND SHORT TERM MARKINGS
- (W) WHITE GUIDE MARKS AND SHORT TERM MARKINGS
- CHANNELIZING DEVICES
- TEMP SED CONTROL FENCE (12' EACH SEGMENT)
- TEMP SED CONTROL FENCE (48' EACH SEGMENT)
- CONSTRUCTION EXIT (TY 2)
- PROP SIGN
- PROP TY III BARRICADE

THE SEAL APPEARING ON THIS DOCUMENT WAS AUTHORIZED BY JOHN M PEREZ, P.E. 66425 ON 08/06/2003.

STATE OF TEXAS · JOHN M. PEREZ · 66425 · REGISTERED PROFESSIONAL ENGINEER

8/6/03

Parsons Brinckerhoff Quade & Douglas Inc. KTD

Texas Department of Transportation

© 2003 by TxDOT

US 281
TRAFFIC CONTROL PLAN
TRENTON ROAD
PHASE IV STEP 1B

PLAN 1"= 200' HORIZ

SHEET 2 OF 3 | 281SEQIV4B01.DGN

DESIGNED: PAF	FED. RD DIV. NO.	STATE	FEDERAL AID PROJECT No.	HIGHWAY No.
CHECKED: JP	6	TEXAS		US 281

DRAWN: PGT	STATE DISTRICT	COUNTY	CONTROL No.	SECTION No.	JOB No.	SHEET No.
CHECKED: JDH	PHARR	HIDALGO	0255	08	091	165

NAME
04:07:13 PM
08/06/2003

IMPORTANT NOTE TO CONTRACTOR:
KEY PROJECT MILESTONE!!
LIQUIDATED DAMAGES OR INCENTIVES APPLY TO THIS PHASE!

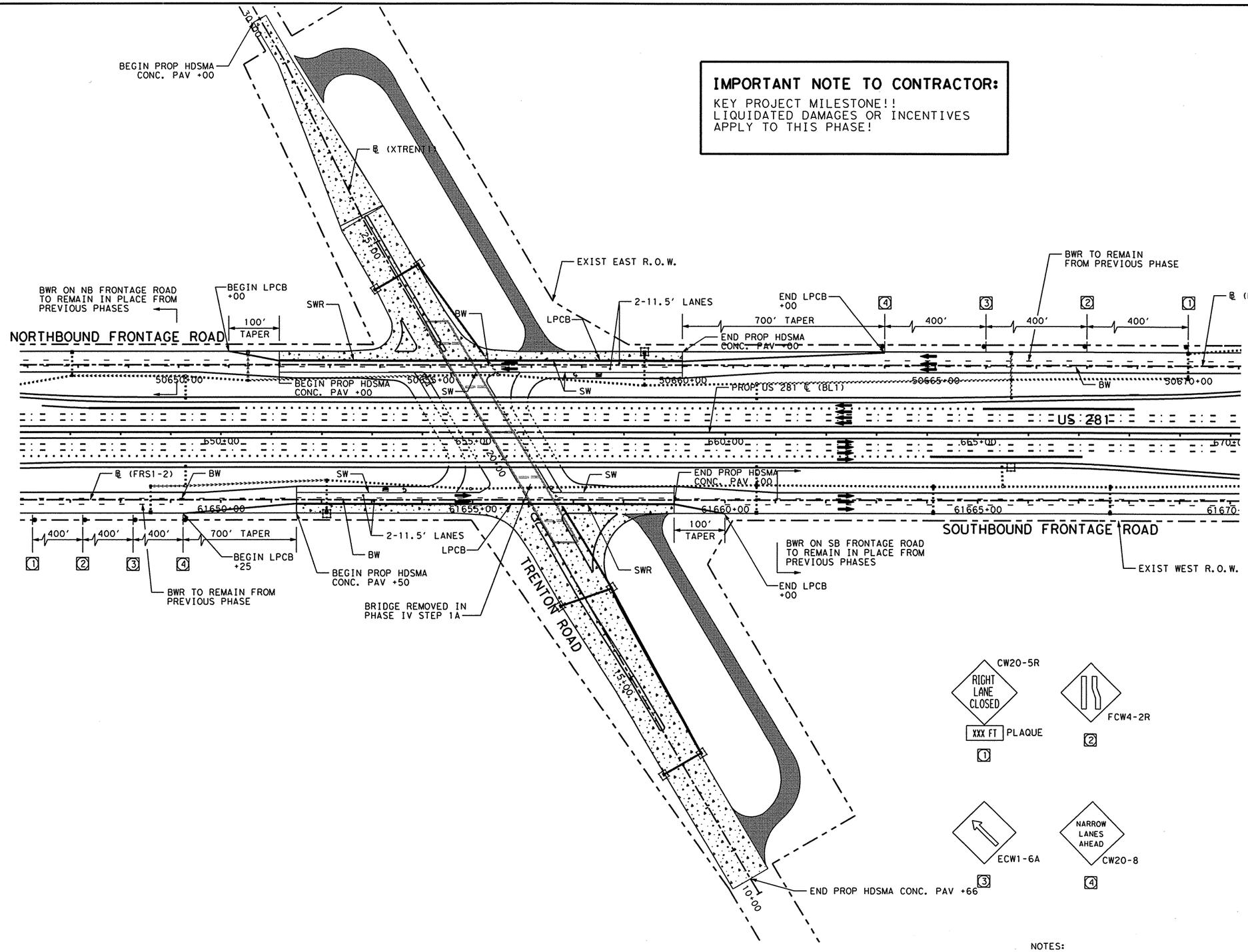

NOTES:

1. SEE SHEET "TRENTON ROAD DETOUR LAYOUT" FOR DETOUR PLAN FOR TRENTON ROAD CLOSURE.
2. TEMP SED CONTROL FENCE ON GRATED INLETS SHALL BE LEFT IN PLACE THROUGHOUT DURATION OF PROJECT OR AS DIRECTED BY THE ENGINEER.

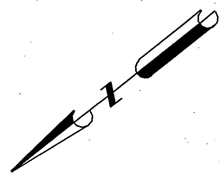

LEGEND:

- TEMP PAV CONSTRUCTED PREVIOUS PHASE
- TEMP PAV CONSTRUCTED THIS PHASE
- PROP CONSTRUCTION THIS PHASE
- PROP CONSTRUCTION PREVIOUS PHASE
- EXISTING TO BE REMOVED
- SW — SOLID WHITE (NON-REMOVABLE)
- SY — SOLID YELLOW (NON-REMOVABLE)
- BW — BROKEN WHITE (NON-REMOVABLE)
- DSY — DOUBLE SOLID YELLOW (NON-REMOVABLE)
- SWR — SOLID WHITE (REMOVABLE)
- SYR — SOLID YELLOW (REMOVABLE)
- BWR — BROKEN WHITE (REMOVABLE)
- DSYR — DOUBLE SOLID YELLOW (REMOVABLE)
- (Y) — YELLOW GUIDE MARKS AND SHORT TERM MARKINGS
- (W) — WHITE GUIDE MARKS AND SHORT TERM MARKINGS
- CHANNELIZING DEVICES
- TEMP SED CONTROL FENCE (12' EACH SEGMENT)
- TEMP SED CONTROL FENCE (48' EACH SEGMENT)
- CONSTRUCTION EXIT (TY 2)
- PROP SIGN
- PROP TY III BARRICADE
- STRUCTURES TO BE CONSTRUCTED DURING THIS PHASE

THE SEAL APPEARING ON THIS DOCUMENT WAS AUTHORIZED BY JOHN M PEREZ, P.E. 66425 ON 08/06/2003.

STATE OF TEXAS — JOHN M. PEREZ — 66425 — REGISTERED PROFESSIONAL ENGINEER

8/6/03

PB Parsons Brinckerhoff Quade & Douglas Inc.

Texas Department of Transportation

© 2003 by TxDOT

US 281
TRAFFIC CONTROL PLAN

TRENTON ROAD
PHASE IV STEP 1C

PLAN 1"= 200' HORIZ

SHEET 3 OF 3 | 281SEQIV4C01.DGN

DESIGNED: PAF	FED. RD DIV. NO.	STATE	FEDERAL AID PROJECT No.			HIGHWAY No.
CHECKED: JP	6	TEXAS				US 281
DRAWN: PGT	STATE DISTRICT	COUNTY	CONTROL No.	SECTION No.	JOB No.	SHEET No.
CHECKED: JDH	PHARR	HIDALGO	0255	08	091	166

h:\22322a\cadd\sheets\traffic\top\281seqiv4c01.dgn

NAME
04:06:10 PM
08/06/2003
h:\22322a\cadd\sheets\traffic\tcp\281seqiv201.dgn

1 WORK ZONE / TRAFFIC FINES DOUBLE / WHEN WORKERS ARE PRESENT — EG20-9, ER20-5, ER20-5 PLAQUE
2 ROAD WORK AHEAD — CW20-1D
3 REDUCED SPEED AHEAD — ER2-5A
4 SPEED LIMIT 50 — ER2-1
42 SPEED LIMIT 40 — ER2-1
5 SG20-5T: BEGIN ROAD WORK NEXT X MILES / NAME ADDRESS CITY STATE / CONTRACTOR — SG20-6
HIGHWAY IMPROVEMENT PROJECT FUNDED BY YOUR TRANSPORTATION TAX DOLLARS / SCHEDULED COMPLETION XXXXXX XXXX — SG20-8
6 ECW1-4R
7 ECW1-4L
8 ECW4-1L
9 END ROAD WORK — G20-2A
10 ECW4-1R
11 FCW4-3R
12 ECW1-6A
13 CW20-5L: LEFT LANE CLOSED / 500 FT PLAQUE
14 CW20-5R: RIGHT LANE CLOSED / 500 FT PLAQUE

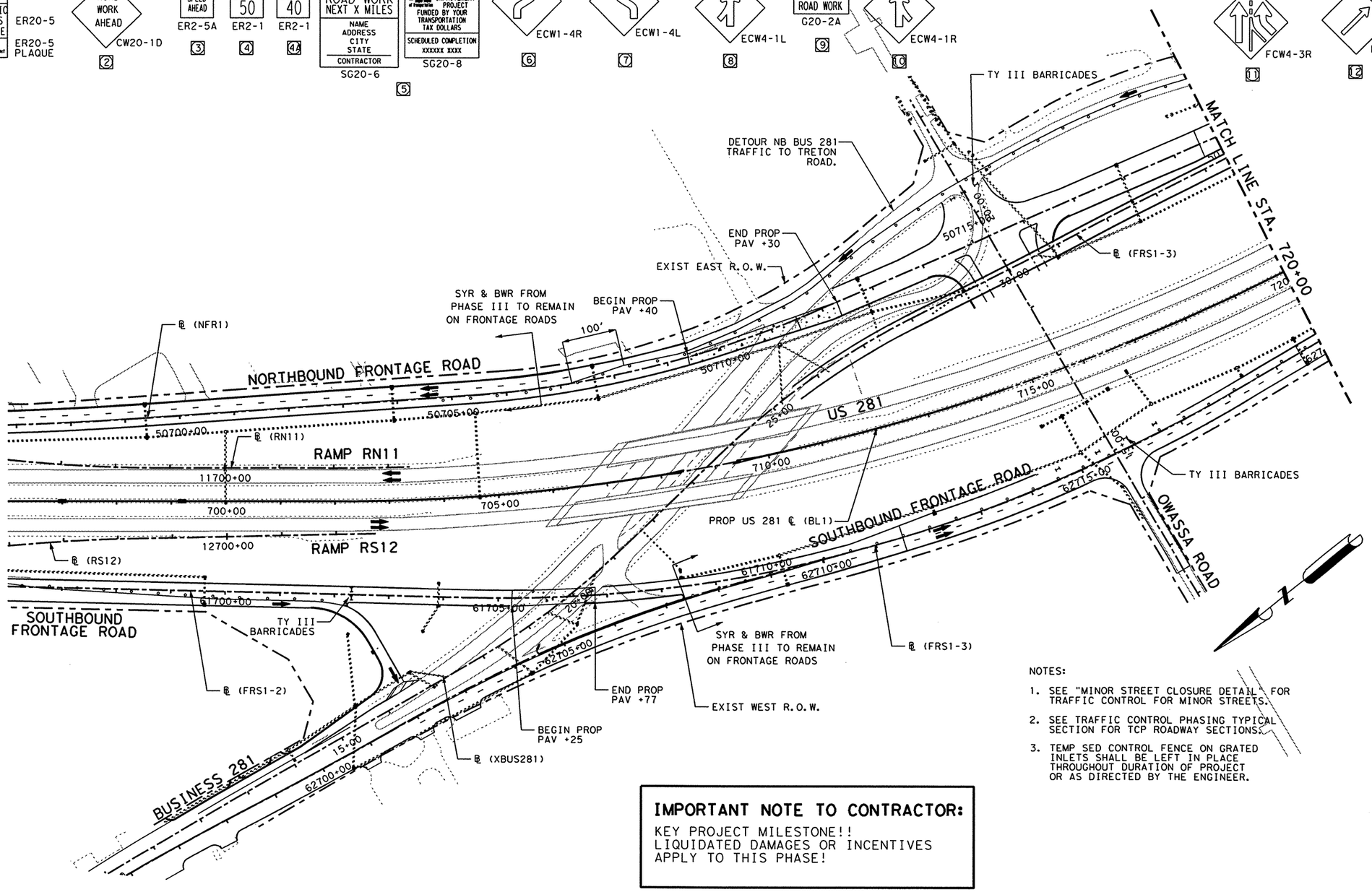

LEGEND:

- TEMP PAV CONSTRUCTED PREVIOUS PHASE
- TEMP PAV CONSTRUCTED THIS PHASE
- PROP CONSTRUCTION THIS PHASE
- PROP CONSTRUCTION PREVIOUS PHASE
- EXISTING TO BE REMOVED
- SW SOLID WHITE (NON-REMOVABLE)
- SY SOLID YELLOW (NON-REMOVABLE)
- BW BROKEN WHITE (NON-REMOVABLE)
- DSY DOUBLE SOLID YELLOW (NON-REMOVABLE)
- SWR SOLID WHITE (REMOVABLE)
- SYR SOLID YELLOW (REMOVABLE)
- BWR BROKEN WHITE (REMOVABLE)
- DSYR DOUBLE SOLID YELLOW (REMOVABLE)
- (Y) YELLOW GUIDE MARKS AND SHORT TERM MARKINGS
- (W) WHITE GUIDE MARKS AND SHORT TERM MARKINGS
- CHANNELIZING DEVICES
- TEMP SED CONTROL FENCE (12' EACH SEGMENT)
- TEMP SED CONTROL FENCE (48' EACH SEGMENT)
- CONSTRUCTION EXIT (TY 2)
- PROP SIGN
- PROP TY III BARRICADE
- STRUCTURES TO BE CONSTRUCTED DURING THIS PHASE

NOTES:

1. SEE "MINOR STREET CLOSURE DETAIL" FOR TRAFFIC CONTROL FOR MINOR STREETS.
2. SEE TRAFFIC CONTROL PHASING TYPICAL SECTION FOR TCP ROADWAY SECTIONS.
3. TEMP SED CONTROL FENCE ON GRATED INLETS SHALL BE LEFT IN PLACE THROUGHOUT DURATION OF PROJECT OR AS DIRECTED BY THE ENGINEER.

IMPORTANT NOTE TO CONTRACTOR:
KEY PROJECT MILESTONE!!
LIQUIDATED DAMAGES OR INCENTIVES APPLY TO THIS PHASE!

15 ER1-2 YIELD
16 R1-2A TO RAMP
17 NARROW LANES AHEAD — CW20-8
18 FCW4-2L
19 FCW4-2R
20 CW20-5L: LEFT LANE CLOSED / 1000 FT PLAQUE
21 CW20-5R: RIGHT LANE CLOSED / 1000 FT PLAQUE
22 W3-2A
23 E5-1 EXIT
24 CW1-8(F)
25 CW1-8(F)
26 SCW13-2 EXIT 45 M.P.H.
27 G20-7 Working for You Give Us A BRAKE
28 CW21-1T Give Us A BRAKE
29 R11-2 ROAD CLOSED
30 R3-20 LEFT LANE MUST TURN LEFT
31 TEMPORARY EXIT "STREET NAME" NEXT RIGHT
24a ROAD WORK ⇦ NEXT X MILES — G20-1bL
25a ROAD WORK NEXT X MILES ⇨ — G20-1bR

SEE "TEMP EXIT SIGNS FOR EXIT RAMP CLOSURES" FOR ADDITIONAL INFORMATION

THE SEAL APPEARING ON THIS DOCUMENT WAS AUTHORIZED BY JOHN M PEREZ, P.E. 66425 ON 08/06/2003.

STATE OF TEXAS — JOHN M. PEREZ — 66425 — REGISTERED PROFESSIONAL ENGINEER — 8/6/03

Parsons Brinckerhoff Quade & Douglas Inc.

Texas Department of Transportation

© 2003 by TxDOT

US 281
TRAFFIC CONTROL PLAN
PHASE IV
STEP 2

PLAN 1"= 200' HORIZ

SHEET 1 OF 2				281SEQIV201.DGN			
DESIGNED: PAF	FED. RD DIV. No.	STATE	FEDERAL AID PROJECT No.			HIGHWAY No.	
CHECKED: JP	6	TEXAS				US 281	
DRAWN: KTD	STATE DISTRICT	COUNTY	CONTROL No.	SECTION No.	JOB No.	SHEET No.	
CHECKED: JDH	PHARR	HIDALGO	0255	08	091	167	

NAME
04:06:22 PM
08/06/2003

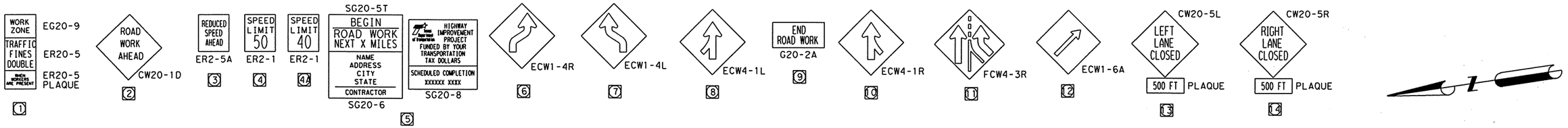

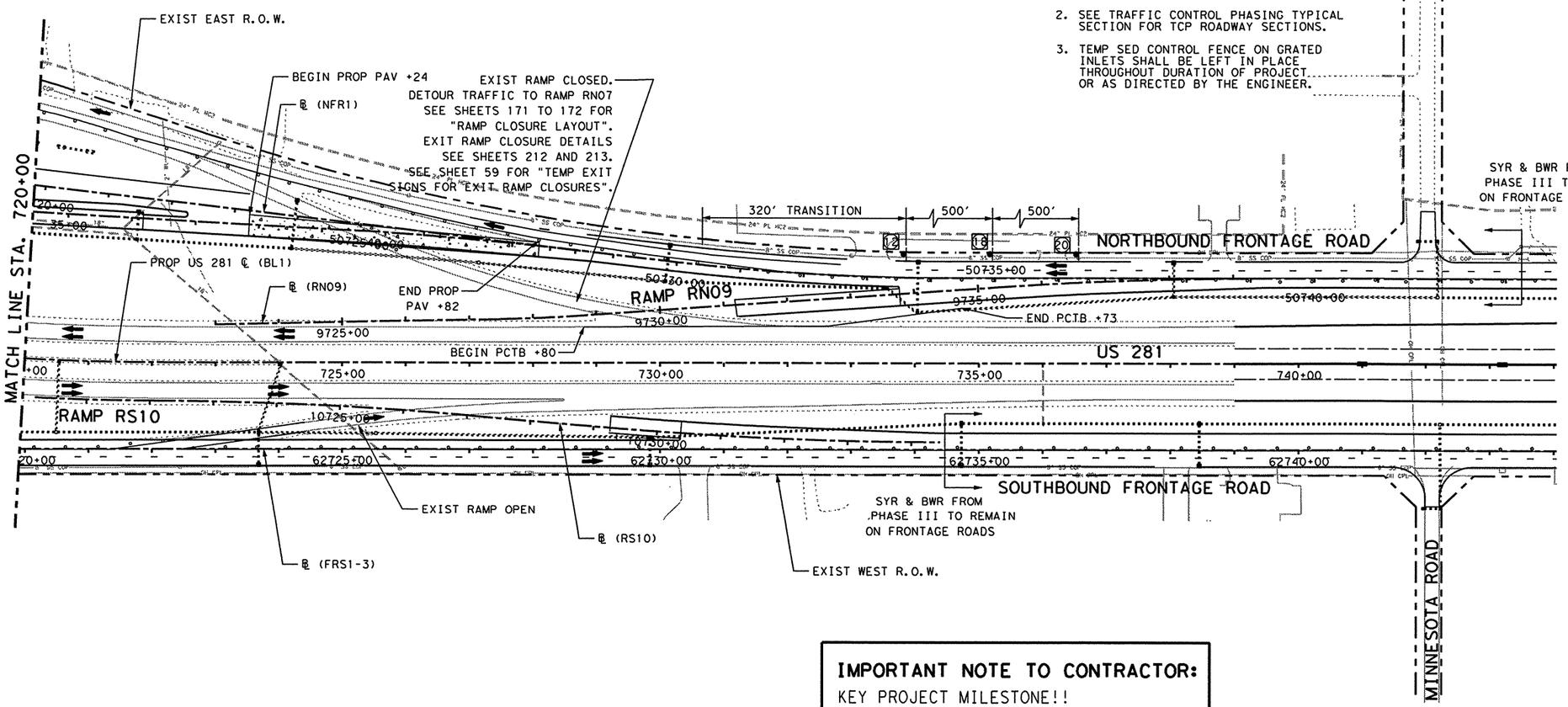

NOTES:

1. SEE "MINOR STREET CLOSURE DETAIL" FOR TRAFFIC CONTROL FOR MINOR STREETS.
2. SEE TRAFFIC CONTROL PHASING TYPICAL SECTION FOR TCP ROADWAY SECTIONS.
3. TEMP SED CONTROL FENCE ON GRATED INLETS SHALL BE LEFT IN PLACE THROUGHOUT DURATION OF PROJECT. OR AS DIRECTED BY THE ENGINEER.

LEGEND:

- TEMP PAV CONSTRUCTED PREVIOUS PHASE
- TEMP PAV CONSTRUCTED THIS PHASE
- PROP CONSTRUCTION THIS PHASE
- PROP CONSTRUCTION PREVIOUS PHASE
- EXISTING TO BE REMOVED
- SW SOLID WHITE (NON-REMOVABLE)
- SY SOLID YELLOW (NON-REMOVABLE)
- BW BROKEN WHITE (NON-REMOVABLE)
- DSY DOUBLE SOLID YELLOW (NON-REMOVABLE)
- SWR SOLID WHITE (REMOVABLE)
- SYR SOLID YELLOW (REMOVABLE)
- BWR BROKEN WHITE (REMOVABLE)
- DSYR DOUBLE SOLID YELLOW (REMOVABLE)
- Ⓨ YELLOW GUIDE MARKS AND SHORT TERM MARKINGS
- Ⓦ WHITE GUIDE MARKS AND SHORT TERM MARKINGS
- CHANNELIZING DEVICES
- TEMP SED CONTROL FENCE (12' EACH SEGMENT)
- TEMP SED CONTROL FENCE (48' EACH SEGMENT)
- CONSTRUCTION EXIT (TY 2)
- PROP SIGN
- PROP TY III BARRICADE

IMPORTANT NOTE TO CONTRACTOR:

KEY PROJECT MILESTONE!!
LIQUIDATED DAMAGES OR INCENTIVES APPLY TO THIS PHASE!

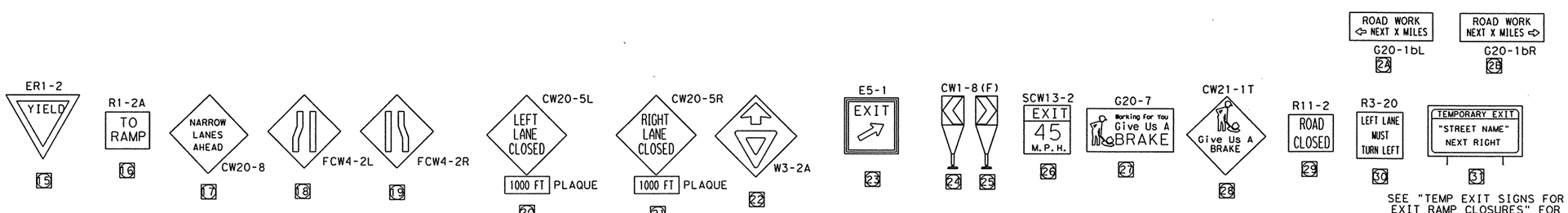

SEE "TEMP EXIT SIGNS FOR EXIT RAMP CLOSURES" FOR ADDITIONAL INFORMATION

THE SEAL APPEARING ON THIS DOCUMENT WAS AUTHORIZED BY JOHN M PEREZ, P.E. 66425 ON 08/06/2003.

STATE OF TEXAS · JOHN M. PEREZ · 66425 · REGISTERED PROFESSIONAL ENGINEER

8/6/03

Parsons Brinckerhoff Quade & Douglas Inc.

Texas Department of Transportation

© 2003 by TxDOT

US 281
TRAFFIC CONTROL PLAN
PHASE IV
STEP 2

PLAN 1"= 200' HORIZ

SHEET 2 OF 2 | 281SEQIV202.DGN

DESIGNED: PAF	FED. RD DIV. NO.	STATE	FEDERAL AID PROJECT No.				HIGHWAY No.
CHECKED: JP	6	TEXAS					US 281
DRAWN: KTD	STATE DISTRICT	COUNTY	CONTROL No.	SECTION No.	JOB No.	SHEET No.	
CHECKED: JDH	PHARR	HIDALGO	0255	08	091	168	

h:\22322a\cadd\sheets\traffic\top\281seqiv202.dgn

NAME

04:06:31 PM

08/06/2003

h:\22322a\cadd\sheets\traffic\tcp\281seqiv301.dgn

WORK ZONE / TRAFFIC FINES DOUBLE / WHEN WORKERS ARE PRESENT — EG20-9, ER20-5, ER20-5 PLAQUE [1]

ROAD WORK AHEAD — CW20-1D [2]

REDUCED SPEED AHEAD — ER2-5A [3]

SPEED LIMIT 50 — ER2-1 [4]

SPEED LIMIT 40 — ER2-1 [4A]

SG20-5T: BEGIN ROAD WORK NEXT X MILES / NAME ADDRESS CITY STATE / CONTRACTOR — SG20-6 [5]

HIGHWAY IMPROVEMENT PROJECT FUNDED BY YOUR TRANSPORTATION TAX DOLLARS / SCHEDULED COMPLETION XXXXXX XXXX — SG20-8

ECW1-4R [6]

ECW1-4L [7]

ECW4-1L [8]

END ROAD WORK — G20-2A [9]

ECW4-1R [10]

FCW4-3R [11]

ECW1-6A [12]

CW20-5L: LEFT LANE CLOSED / 500 FT PLAQUE [13]

CW20-5R: RIGHT LANE CLOSED / 500 FT PLAQUE [14]

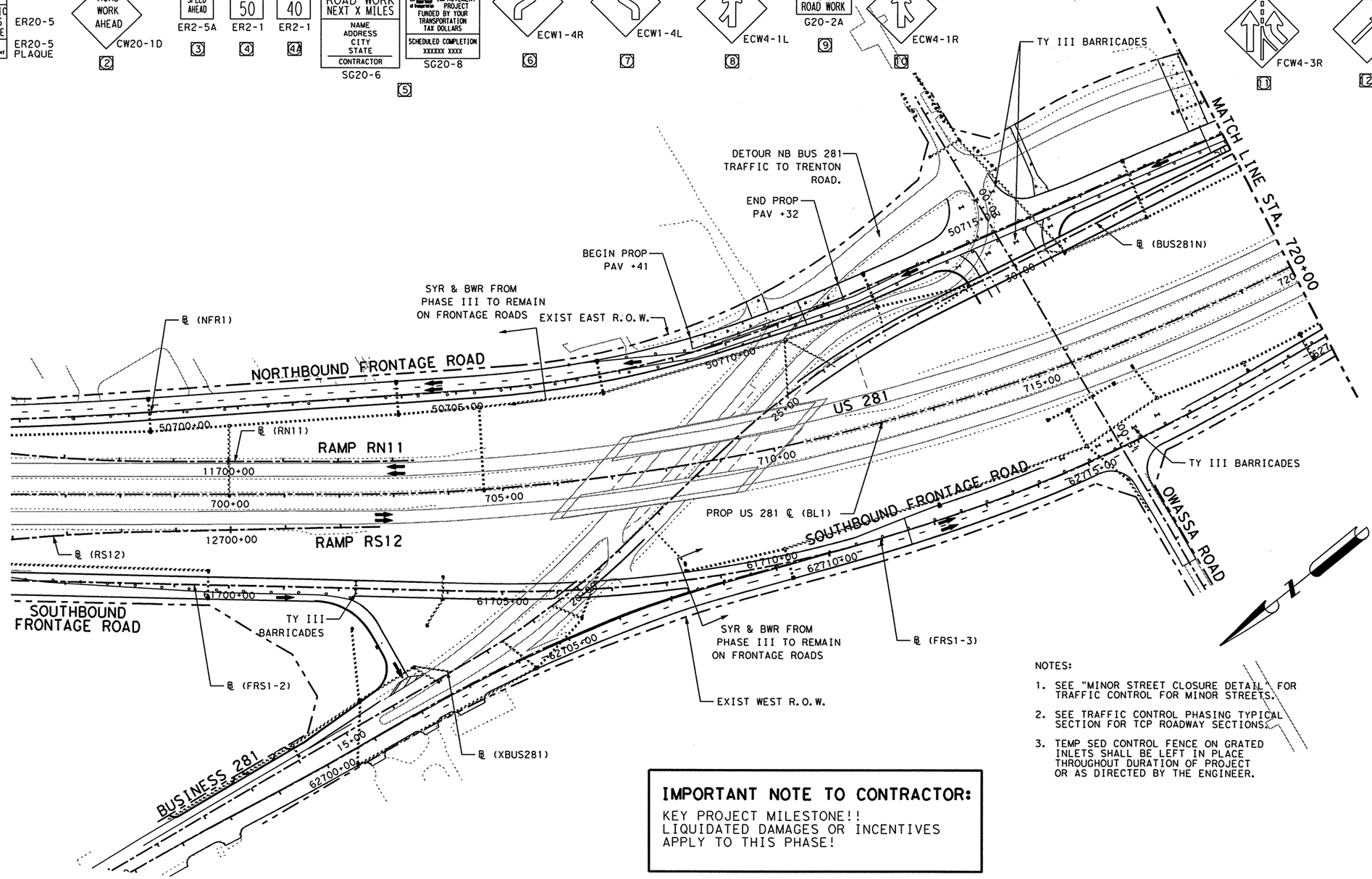

LEGEND:

- TEMP PAV CONSTRUCTED PREVIOUS PHASE
- TEMP PAV CONSTRUCTED THIS PHASE
- PROP CONSTRUCTION THIS PHASE
- PROP CONSTRUCTION PREVIOUS PHASE
- EXISTING TO BE REMOVED
- SW — SOLID WHITE (NON-REMOVABLE)
- SY — SOLID YELLOW (NON-REMOVABLE)
- BW — BROKEN WHITE (NON-REMOVABLE)
- DSY — DOUBLE SOLID YELLOW (NON-REMOVABLE)
- SWR — SOLID WHITE (REMOVABLE)
- SYR — SOLID YELLOW (REMOVABLE)
- BWR — BROKEN WHITE (REMOVABLE)
- DSYR — DOUBLE SOLID YELLOW (REMOVABLE)
- (Y) — YELLOW GUIDE MARKS AND SHORT TERM MARKINGS
- (W) — WHITE GUIDE MARKS AND SHORT TERM MARKINGS
- CHANNELIZING DEVICES
- TEMP SED CONTROL FENCE (12' EACH SEGMENT)
- TEMP SED CONTROL FENCE (48' EACH SEGMENT)
- CONSTRUCTION EXIT (TY 2)
- PROP SIGN
- PROP TY III BARRICADE
- STRUCTURES TO BE CONSTRUCTED DURING THIS PHASE

NOTES:

1. SEE "MINOR STREET CLOSURE DETAIL" FOR TRAFFIC CONTROL FOR MINOR STREETS.
2. SEE TRAFFIC CONTROL PHASING TYPICAL SECTION FOR TCP ROADWAY SECTIONS.
3. TEMP SED CONTROL FENCE ON GRATED INLETS SHALL BE LEFT IN PLACE THROUGHOUT DURATION OF PROJECT OR AS DIRECTED BY THE ENGINEER.

IMPORTANT NOTE TO CONTRACTOR:

KEY PROJECT MILESTONE!!
LIQUIDATED DAMAGES OR INCENTIVES APPLY TO THIS PHASE!

ER1-2 YIELD [15]

R1-2A TO RAMP [16]

NARROW LANES AHEAD — CW20-8 [17]

FCW4-2L [18]

FCW4-2R [19]

CW20-5L: LEFT LANE CLOSED / 1000 FT PLAQUE [20]

CW20-5R: RIGHT LANE CLOSED / 1000 FT PLAQUE [21]

W3-2A [22]

E5-1 EXIT [23]

CW1-8(F) [24] [25]

SCW13-2 EXIT 45 M.P.H. [26]

G20-7 Working For You Give Us A BRAKE [27]

CW21-1T Give Us A BRAKE [28]

R11-2 ROAD CLOSED [29]

R3-20 LEFT LANE MUST TURN LEFT [30]

TEMPORARY EXIT "STREET NAME" NEXT RIGHT [31]

ROAD WORK ⇦ NEXT X MILES — G20-1bL [28A]

ROAD WORK NEXT X MILES ⇨ — G20-1bR [28B]

SEE "TEMP EXIT SIGNS FOR EXIT RAMP CLOSURES" FOR ADDITIONAL INFORMATION

THE SEAL APPEARING ON THIS DOCUMENT WAS AUTHORIZED BY JOHN M PEREZ, P.E. 66425 ON 08/06/2003.

STATE OF TEXAS — JOHN M. PEREZ — 66425 — REGISTERED PROFESSIONAL ENGINEER

8/6/03

Parsons Brinckerhoff Quade & Douglas Inc.

Texas Department of Transportation

© 2003 by TxDOT

US 281
TRAFFIC CONTROL PLAN
PHASE IV
STEP 3

PLAN 1"= 200' HORIZ

SHEET 1 OF 2 | 281SEQIV301.DGN

DESIGNED: PAF	FED. RD DIV. NO.	STATE	FEDERAL AID PROJECT NO.			HIGHWAY NO.
CHECKED: JP	6	TEXAS				US 281
DRAWN: KTD	STATE DISTRICT	COUNTY	CONTROL No.	SECTION No.	JOB No.	SHEET No.
CHECKED: JDH	PHARR	HIDALGO	0255	08	091	169

NAME
04:06:43 PM
08/06/2003
h:\22322a\cadd\sheets\traffic\tcp\281seqiv302.dgn

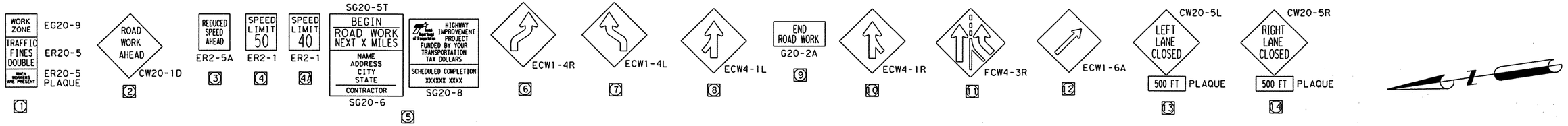

NOTES:

1. SEE "MINOR STREET CLOSURE DETAIL" FOR TRAFFIC CONTROL FOR MINOR STREETS.
2. SEE TRAFFIC CONTROL PHASING TYPICAL SECTION FOR TCP ROADWAY SECTIONS.
3. TEMP SED CONTROL FENCE ON GRATED INLETS SHALL BE LEFT IN PLACE THROUGHOUT DURATION OF PROJECT OR AS DIRECTED BY THE ENGINEER.

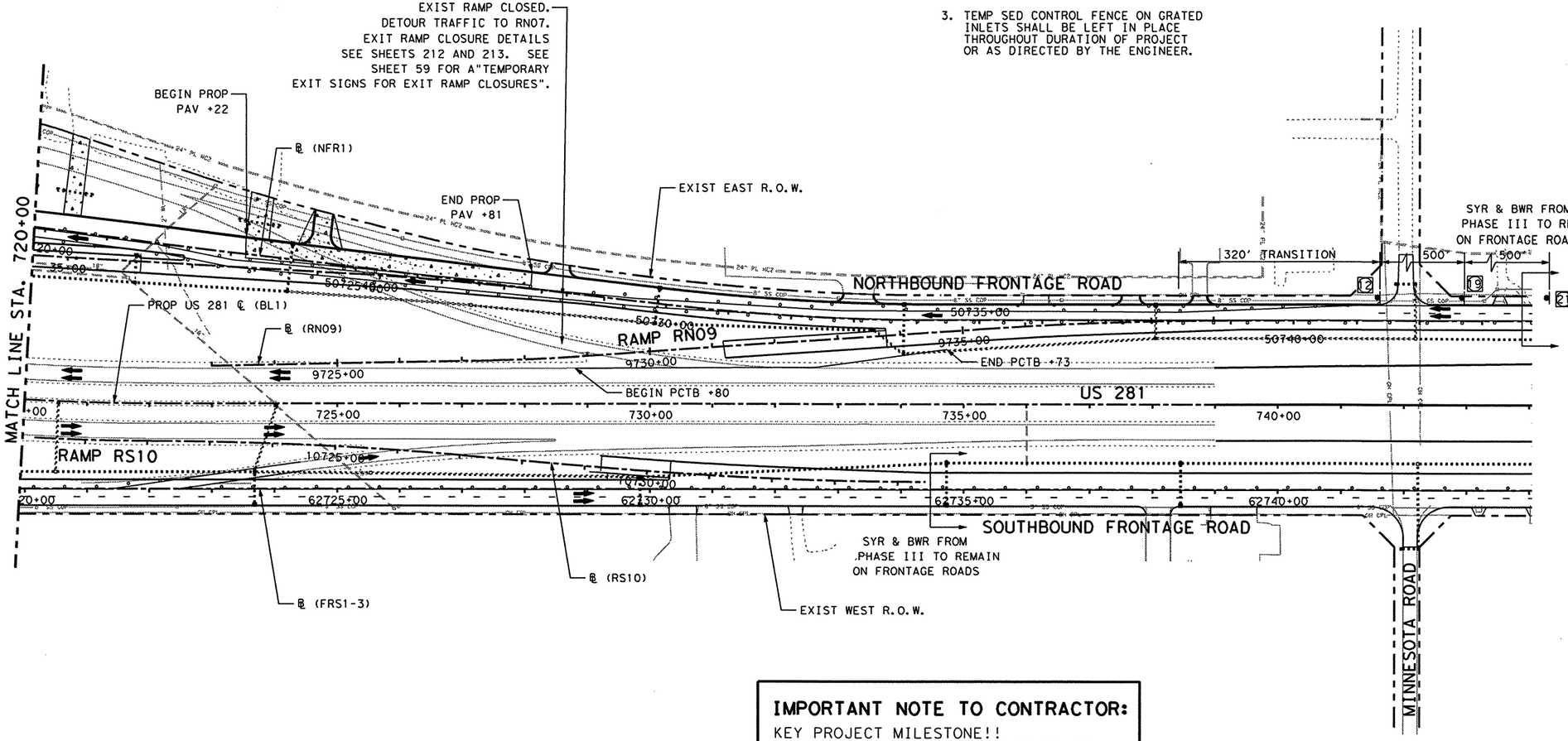

IMPORTANT NOTE TO CONTRACTOR:

KEY PROJECT MILESTONE!!
LIQUIDATED DAMAGES OR INCENTIVES APPLY TO THIS PHASE!

LEGEND:

- TEMP PAV CONSTRUCTED PREVIOUS PHASE
- TEMP PAV CONSTRUCTED THIS PHASE
- PROP CONSTRUCTION THIS PHASE
- PROP CONSTRUCTION PREVIOUS PHASE
- EXISTING TO BE REMOVED
- SW SOLID WHITE (NON-REMOVABLE)
- SY SOLID YELLOW (NON-REMOVABLE)
- BW BROKEN WHITE (NON-REMOVABLE)
- DSY DOUBLE SOLID YELLOW (NON-REMOVABLE)
- SWR SOLID WHITE (REMOVABLE)
- SYR SOLID YELLOW (REMOVABLE)
- BWR BROKEN WHITE (REMOVABLE)
- DSYR DOUBLE SOLID YELLOW (REMOVABLE)
- (Y) YELLOW GUIDE MARKS AND SHORT TERM MARKINGS
- (W) WHITE GUIDE MARKS AND SHORT TERM MARKINGS
- CHANNELIZING DEVICES
- TEMP SED CONTROL FENCE (12' EACH SEGMENT)
- TEMP SED CONTROL FENCE (48' EACH SEGMENT)
- CONSTRUCTION EXIT (TY 2)
- PROP SIGN
- PROP TY III BARRICADE

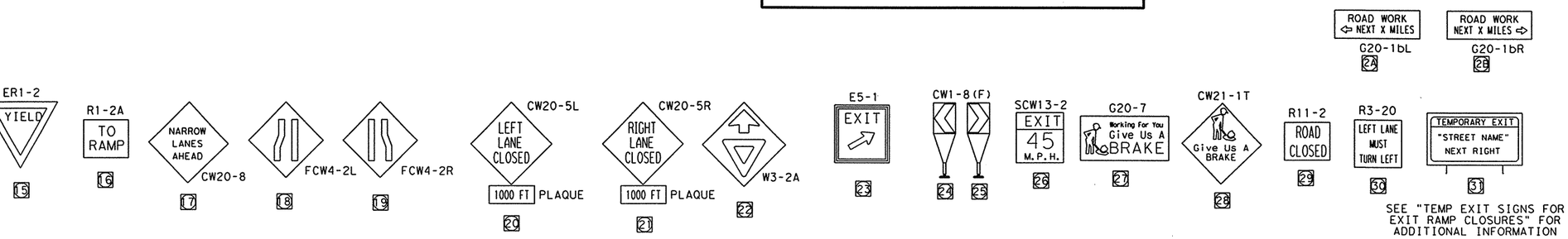

SEE "TEMP EXIT SIGNS FOR EXIT RAMP CLOSURES" FOR ADDITIONAL INFORMATION

THE SEAL APPEARING ON THIS DOCUMENT WAS AUTHORIZED BY JOHN M PEREZ, P.E. 66425 ON 08/06/2003.

STATE OF TEXAS · JOHN M. PEREZ · 66425 · REGISTERED PROFESSIONAL ENGINEER

8/4/03

Parsons Brinckerhoff Quade & Douglas Inc.

Texas Department of Transportation

© 2003 by TxDOT

US 281
TRAFFIC CONTROL PLAN
PHASE IV
STEP 3

PLAN 1"= 200' HORIZ

SHEET 2 OF 2				281SEQIV302.DGN			
DESIGNED: PAF	FED. RD DIV. No.	STATE	FEDERAL AID PROJECT No.			HIGHWAY No.	
CHECKED: JP	6	TEXAS				US 281	
DRAWN: KTD	STATE DISTRICT	COUNTY	CONTROL No.	SECTION No.	JOB No.	SHEET No.	
CHECKED: JDH	PHARR	HIDALGO	0255	08	091	170	

NAME
10:55:53 AM
06/20/2003

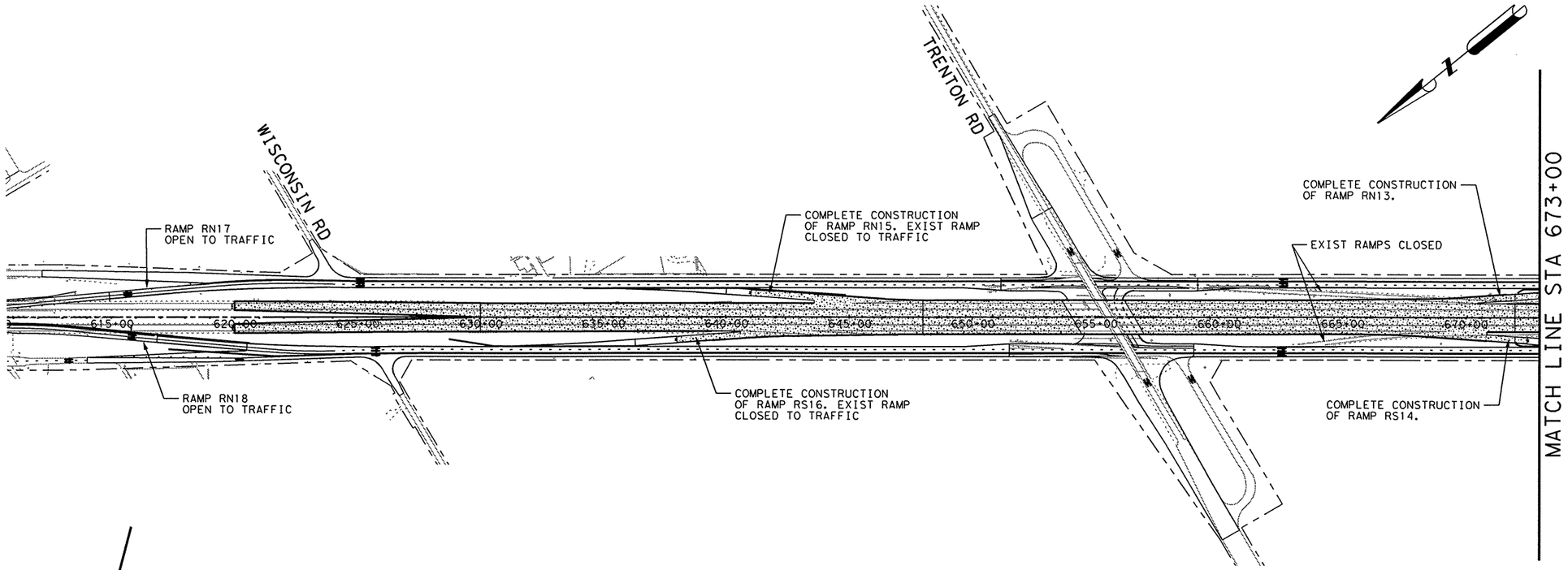

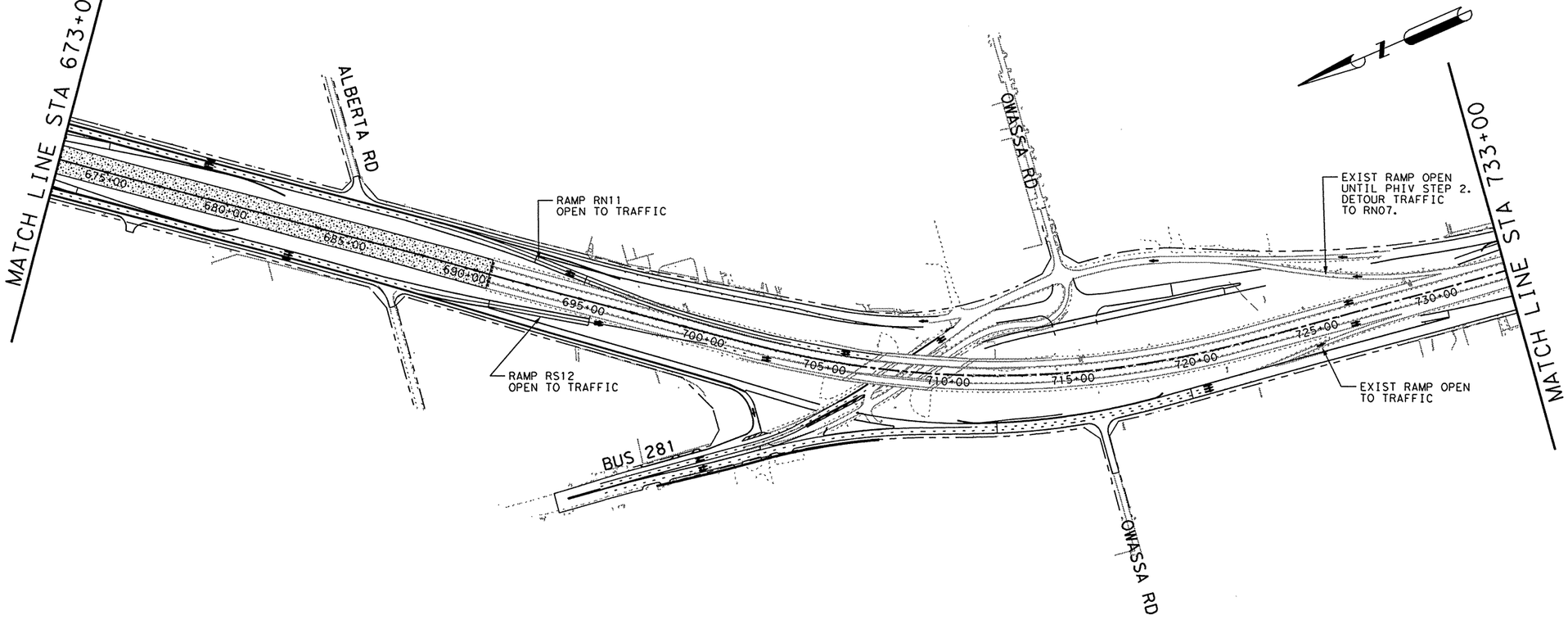

LEGEND:

- TEMP PAV CONSTRUCTED PREVIOUS PHASE
- TEMP PAV CONSTRUCTED THIS PHASE
- PROP CONSTRUCTION THIS PHASE
- PROP CONSTRUCTION PREVIOUS PHASE
- EXISTING TO BE REMOVED
- DIRECTIONAL ARROW

NOTES:

SEE TCP (6-2), (6-3) AND (6-4), SHEETS 211 TO 213, FOR RAMP CLOSURES.

SEE "TEMP EXIT SIGNS FOR EXIT RAMP CLOSURES" SHEET 59 FOR ADDITIONAL INFORMATION.

THE SEAL APPEARING ON THIS DOCUMENT WAS AUTHORIZED BY JOHN M PEREZ, P.E. 66425 ON 06/20/2003.

STATE OF TEXAS
JOHN M. PEREZ
66425
REGISTERED
PROFESSIONAL ENGINEER
6/20/03

Parsons Brinckerhoff Quade & Douglas Inc.

Texas Department of Transportation

© 2003 by TxDOT

US 281
RAMP CLOSURE LAYOUT

PHASE IV

PLAN 1"= 500' HORIZ

SHEET 1 OF 2 | 281SEQIVRAMP1A.DGN

DESIGNED: PAF	FED. RD DIV. No.	STATE	FEDERAL AID PROJECT No.			HIGHWAY No.
CHECKED: JP	6	TEXAS				US 281
DRAWN: KTD	STATE DISTRICT	COUNTY	CONTROL No.	SECTION No.	JOB No.	SHEET No.
CHECKED: JDH	PHARR	HIDALGO	0255	08	091	171

h:\22322a\cadd\sheets\traffic\tcp\281seqivrampla.dgn

NAME
10:56:06 AM
06/20/2003
h:\22322a\cadd\sheets\traffic\tcp\281seqivramp1b.dgn

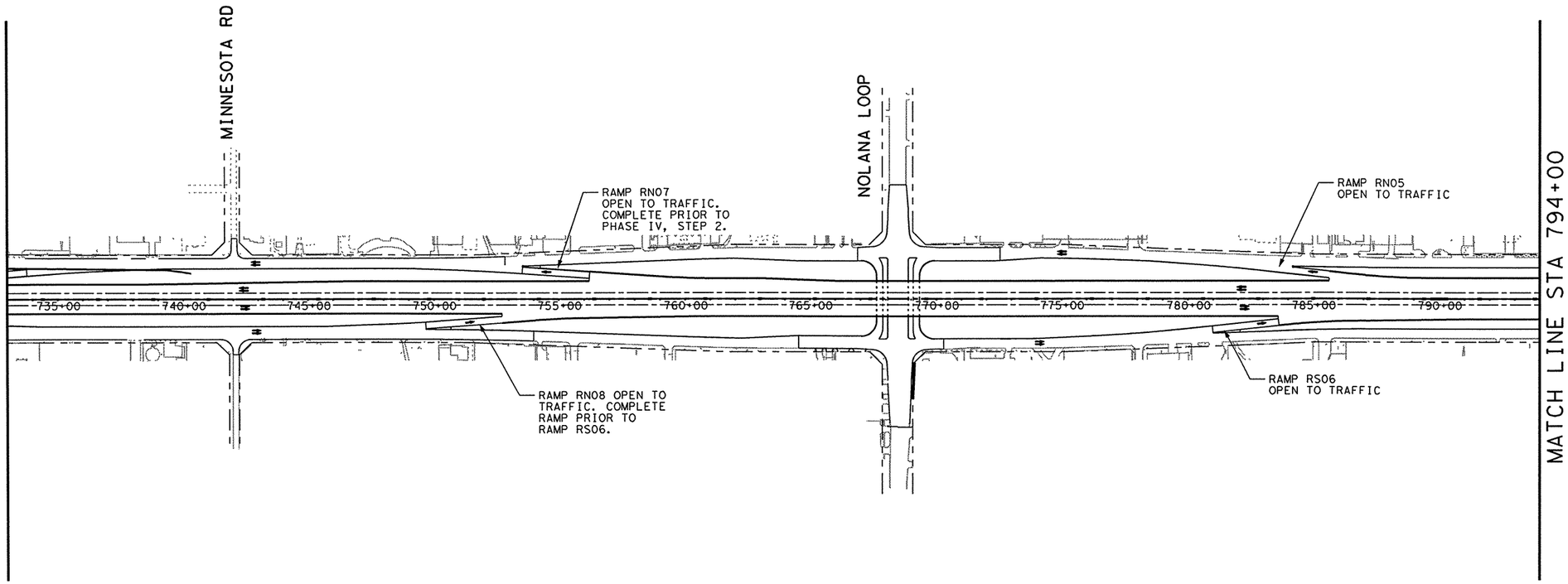

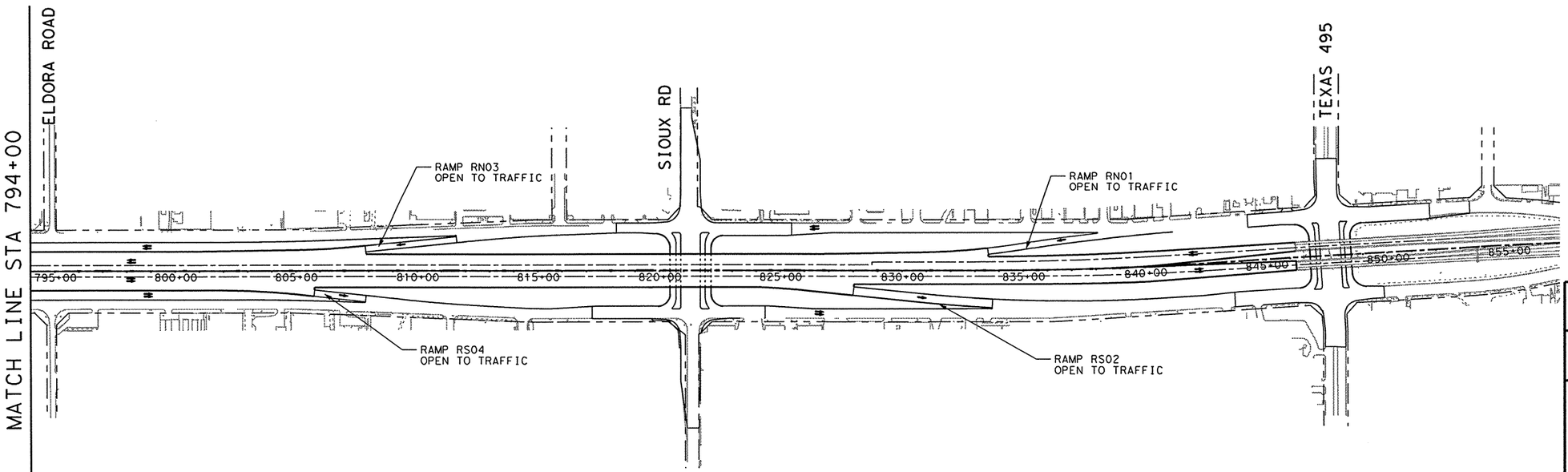

LEGEND:

- TEMP PAV CONSTRUCTED PREVIOUS PHASE
- TEMP PAV CONSTRUCTED THIS PHASE
- PROP CONSTRUCTION THIS PHASE
- PROP CONSTRUCTION PREVIOUS PHASE
- EXISTING TO BE REMOVED
- DIRECTIONAL ARROW

NOTES:

SEE TCP (6-2), (6-3) AND (6-4), SHEETS 211 TO 213, FOR RAMP CLOSURES.

SEE "TEMP EXIT SIGNS FOR EXIT RAMP CLOSURES" SHEET 59 FOR ADDITIONAL INFORMATION.

THE SEAL APPEARING ON THIS DOCUMENT WAS AUTHORIZED BY JOHN M PEREZ, P.E. 66425 ON 06/20/2003.

STATE OF TEXAS · JOHN M. PEREZ · 66425 · REGISTERED PROFESSIONAL ENGINEER

6/20/03

Parsons Brinckerhoff Quade & Douglas Inc.

Texas Department of Transportation

© 2003 by TxDOT

US 281
RAMP CLOSURE LAYOUT
PHASE IV

PLAN 1" = 500' HORIZ

SHEET 2 OF 2 | 281SEQIVRAMP1B.DGN

DESIGNED: PAF	FED. RD DIV. No.	STATE	FEDERAL AID PROJECT No.				HIGHWAY No.
CHECKED: JP	6	TEXAS					US 281
DRAWN: KTD	STATE DISTRICT	COUNTY	CONTROL No.	SECTION No.	JOB No.	SHEET No.	
CHECKED: JDH	PHARR	HIDALGO	0255	08	091	172	

NAME
10:47:40 AM
06/20/2003
h:\22322a\cadd\sheets\traffic\tcp\typ\281typ20.dgn

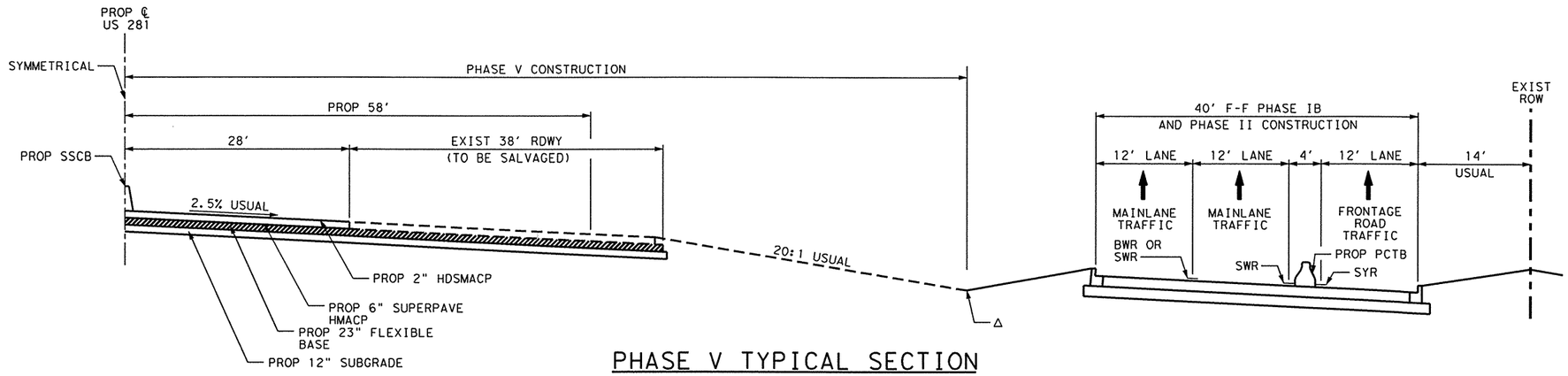

PHASE V TYPICAL SECTION

STA 691+00.00 TO STA 739+00.00

Δ THE CONTRACTOR SHALL REGRADE DITCHES TO MAINTAIN THE EXISTING DRAINAGE PATTERNS AND REMOVE/RELAY OR EXTEND EXISTING DRAINAGE STRUCTURES AS NEEDED. THIS WORK SHALL BE CONSIDERED SUBSIDIARY TO THE VARIOUS BID ITEMS OF THIS CONTRACT

NOTE:
SEE PROPOSED TYPICAL SECTIONS FOR CROSS SLOPE INFORMATION.

THE SEAL APPEARING ON THIS DOCUMENT WAS AUTHORIZED BY JOHN M PEREZ, P.E. 66425 ON 06/20/2003.

STATE OF TEXAS
JOHN M. PEREZ
66425
REGISTERED PROFESSIONAL ENGINEER

6/20/03

Parsons Brinckerhoff Quade & Douglas Inc.

Texas Department of Transportation

© 2003 by TxDOT

TRAFFIC CONTROL PHASING TYPICAL SECTION

PHASE V
STA 691+00 TO 739+00

SCALE: NTS

SHEET 1 OF 1 | 281TYP20.DGN

DESIGNED: PAF	FED. RD DIV. No.	STATE	FEDERAL AID PROJECT No.			HIGHWAY No.
CHECKED: JP	6	TEXAS				US 281
DRAWN:	STATE DISTRICT	COUNTY	CONTROL No.	SECTION No.	JOB No.	SHEET No.
CHECKED: JDH	PHARR	HIDALGO	0255	08	091	173

NAME
10:54:54 AM
06/20/2003

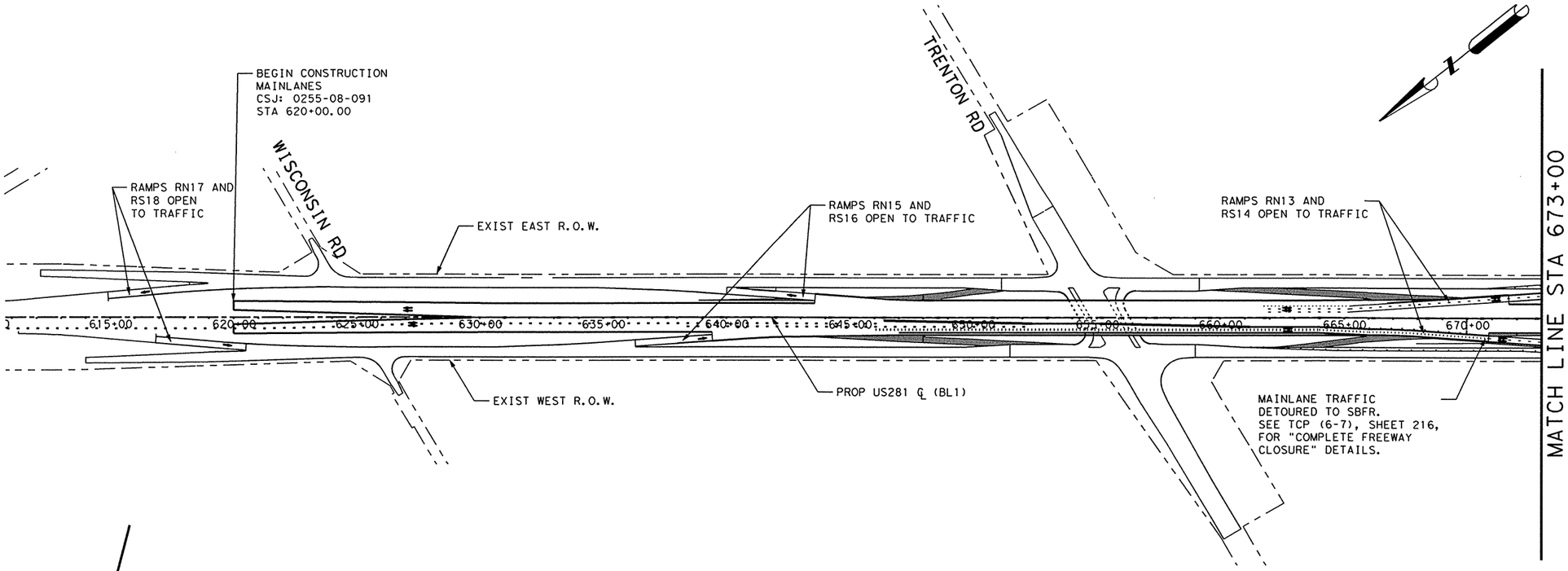

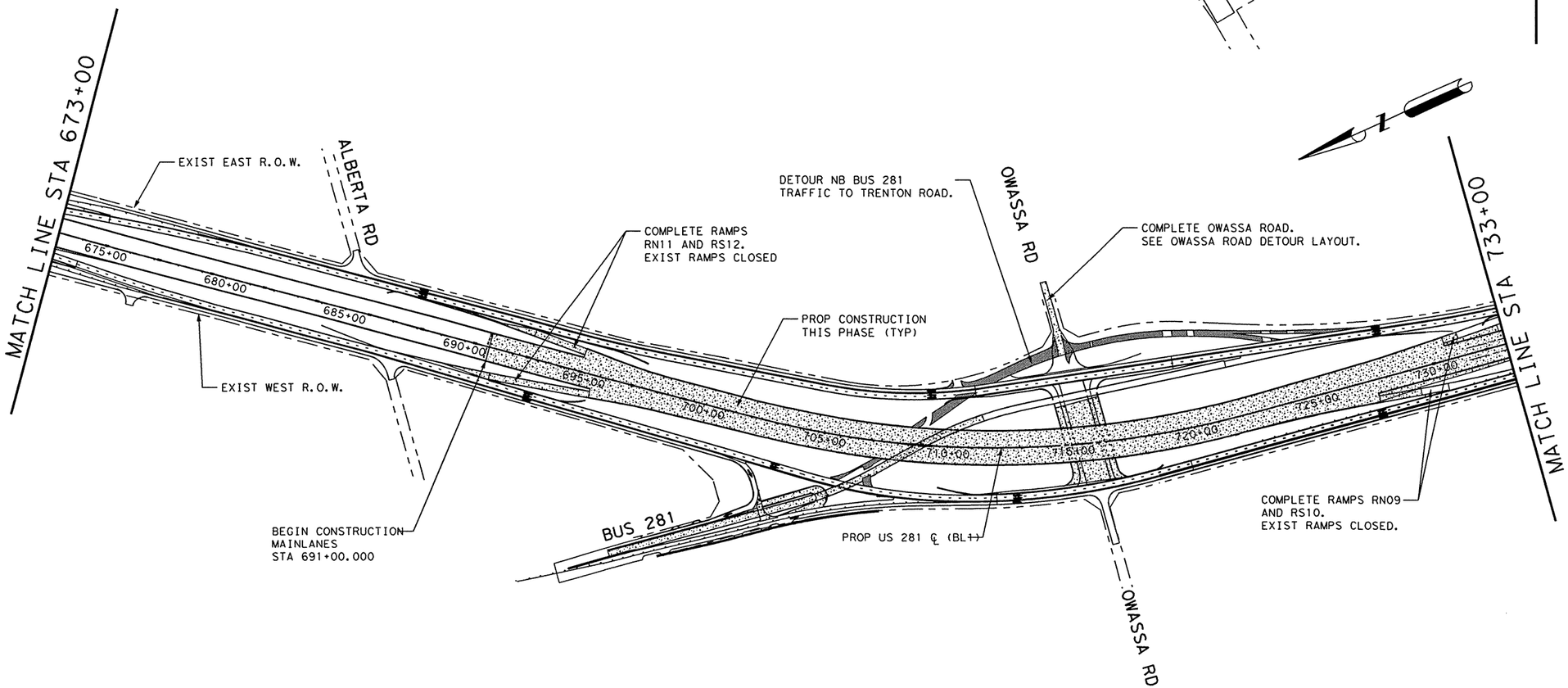

LEGEND:

- TEMP PAV CONSTRUCTED PREVIOUS PHASE
- TEMP PAV CONSTRUCTED THIS PHASE
- PROP CONSTRUCTION THIS PHASE
- PROP CONSTRUCTION PREVIOUS PHASE
- EXISTING TO BE REMOVED
- DIRECTIONAL ARROW

THE SEAL APPEARING ON THIS DOCUMENT WAS AUTHORIZED BY JOHN M PEREZ, P.E. 66425 ON 06/20/2003.

STATE OF TEXAS
JOHN M. PEREZ
66425
REGISTERED
PROFESSIONAL ENGINEER

6/20/03

Parsons Brinckerhoff Quade & Douglas Inc.

Texas Department of Transportation

© 2003 by TxDOT

US 281
TRAFFIC CONTROL LAYOUT
PHASE V
BEGIN PROJECT TO END PROJECT

PLAN 1"= 500' HORIZ

SHEET 1 OF 2 | 281SEQVLAYOUT01.DGN

DESIGNED: PAF	FED. RD DIV. NO.	STATE	FEDERAL AID PROJECT NO.			HIGHWAY NO.	
CHECKED: JP	6	TEXAS				US 281	
DRAWN: KTD	STATE DISTRICT	COUNTY	CONTROL No.	SECTION No.	JOB No.	SHEET No.	
CHECKED: JDH	PHARR	HIDALGO	0255	08	091	174	

h:\22322a\cadd\sheets\traffic\tcp\281seqvlayout01.dgn

NAME
10:55:05 AM
06/20/2003
h:\22322a\cadd\sheets\traffic\tcp\281seqvlayout02.dgn

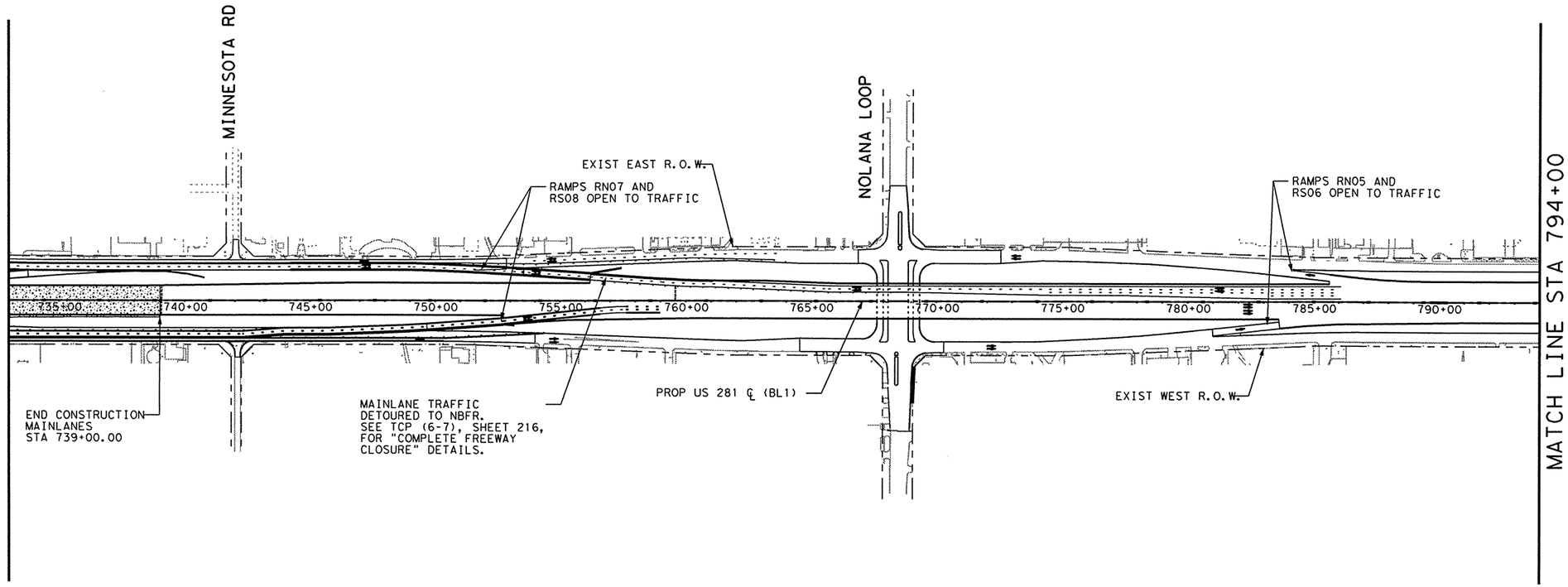

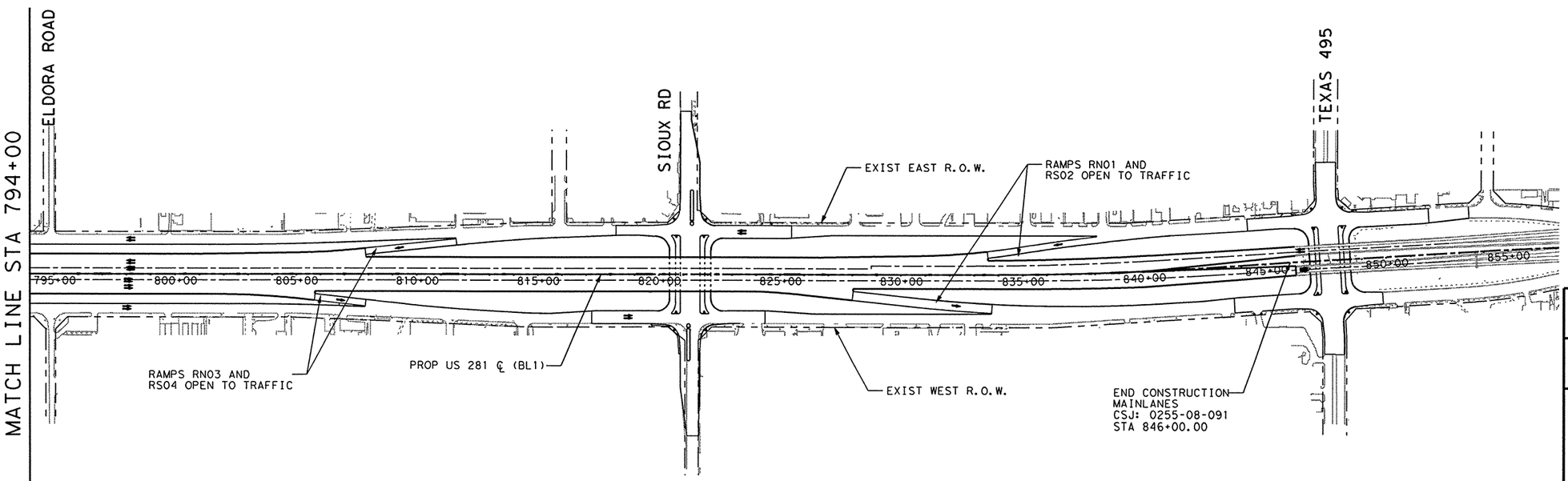

LEGEND:

- TEMP PAV CONSTRUCTED PREVIOUS PHASE
- TEMP PAV CONSTRUCTED THIS PHASE
- PROP CONSTRUCTION THIS PHASE
- PROP CONSTRUCTION PREVIOUS PHASE
- EXISTING TO BE REMOVED
- DIRECTIONAL ARROW

THE SEAL APPEARING ON THIS DOCUMENT WAS AUTHORIZED BY JOHN M PEREZ, P.E. 66425 ON 06/20/2003.

STATE OF TEXAS
JOHN M. PEREZ
66425
REGISTERED PROFESSIONAL ENGINEER

Parsons Brinckerhoff Quade & Douglas Inc.

Texas Department of Transportation

© 2003 by TxDOT

US 281
TRAFFIC CONTROL LAYOUT

PHASE V
BEGIN PROJECT TO END PROJECT

PLAN 1"= 500' HORIZ

SHEET 2 OF 2					281SEQVLAYOUT02.DGN	
DESIGNED:PAF	FED. RD DIV. No.	STATE	FEDERAL AID PROJECT No.			HIGHWAY No.
CHECKED: JP	6	TEXAS				US 281
DRAWN: KTD	STATE DISTRICT	COUNTY	CONTROL No.	SECTION No.	JOB No.	SHEET No.
CHECKED: JDH	PHARR	HIDALGO	0255	08	091	175

NAME
11:31:02 AM
06/20/2003

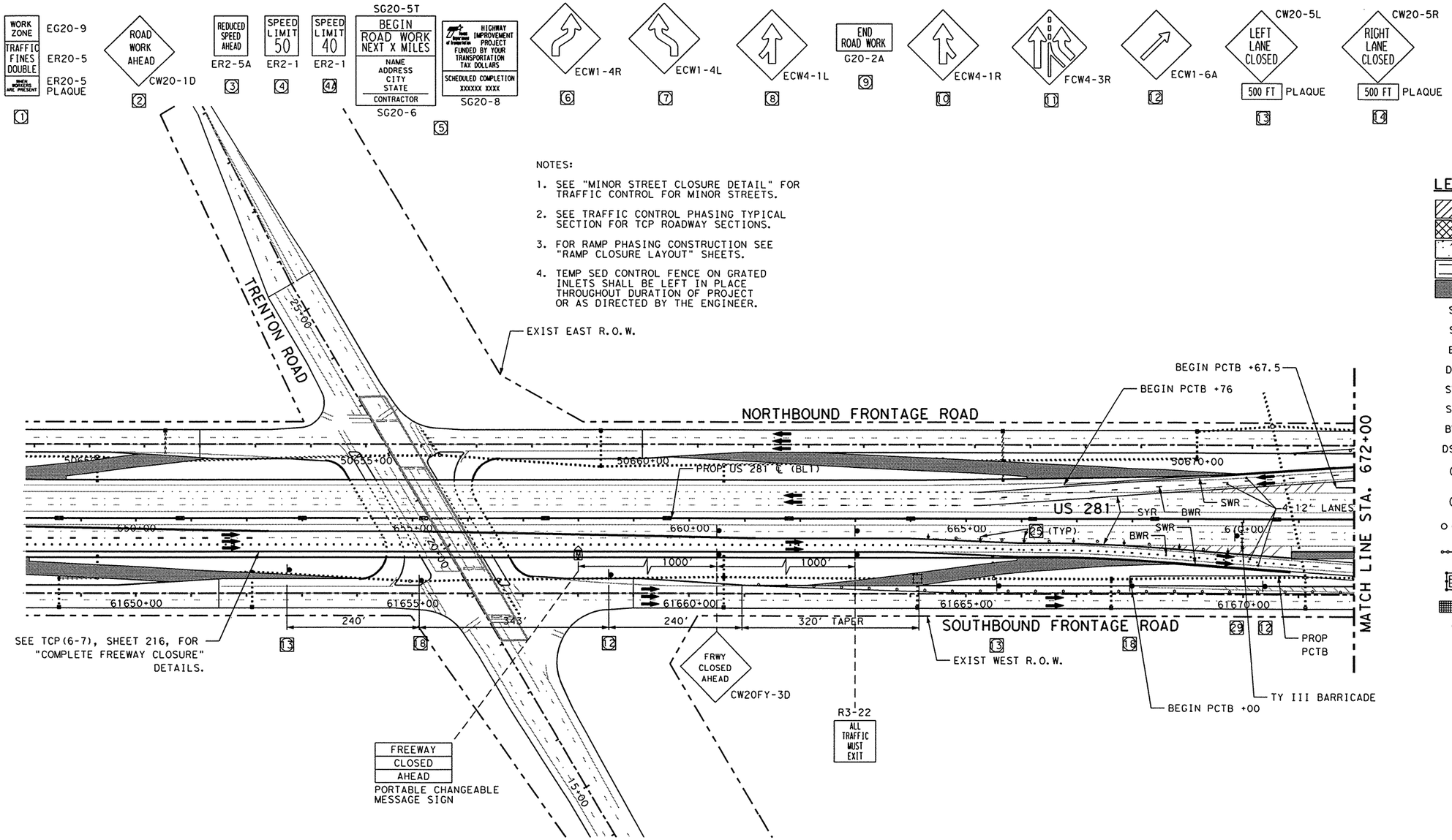

LEGEND:

- TEMP PAV CONSTRUCTED PREVIOUS PHASE
- TEMP PAV CONSTRUCTED THIS PHASE
- PROP CONSTRUCTION THIS PHASE
- PROP CONSTRUCTION PREVIOUS PHASE
- EXISTING TO BE REMOVED
- SW SOLID WHITE (NON-REMOVABLE)
- SY SOLID YELLOW (NON-REMOVABLE)
- BW BROKEN WHITE (NON-REMOVABLE)
- DSY DOUBLE SOLID YELLOW (NON-REMOVABLE)
- SWR SOLID WHITE (REMOVABLE)
- SYR SOLID YELLOW (REMOVABLE)
- BWR BROKEN WHITE (REMOVABLE)
- DSYR DOUBLE SOLID YELLOW (REMOVABLE)
- (Y) YELLOW GUIDE MARKS AND SHORT TERM MARKINGS
- (W) WHITE GUIDE MARKS AND SHORT TERM MARKINGS
- CHANNELIZING DEVICES
- TEMP SED CONTROL FENCE (12' EACH SEGMENT)
- TEMP SED CONTROL FENCE (48' EACH SEGMENT)
- CONSTRUCTION EXIT (TY 2)
- PROP SIGN
- PROP TY III BARRICADE

THE SEAL APPEARING ON THIS DOCUMENT WAS AUTHORIZED BY JOHN M PEREZ, P.E. 66425 ON 06/20/2003.

STATE OF TEXAS · JOHN M. PEREZ · 66425 · REGISTERED PROFESSIONAL ENGINEER

6/20/03

Parsons Brinckerhoff Quade & Douglas Inc.

Texas Department of Transportation

© 2003 by TxDOT

US 281
TRAFFIC CONTROL PLAN
PHASE V

PLAN 1"= 200' HORIZ

SHEET 1 OF 5			281SEQV01.DGN				
DESIGNED: PAF	FED. RD DIV. NO.	STATE	FEDERAL AID PROJECT No.				HIGHWAY No.
CHECKED: JP	6	TEXAS					US 281
DRAWN: KTD	STATE DISTRICT	COUNTY	CONTROL No.	SECTION No.	JOB No.	SHEET No.	
CHECKED: JDH	PHARR	HIDALGO	0255	08	091	176	

h:\22322o\cadd\sheets\traffic\tcp\281seqv01.dgn

NAME
04:07:22 PM
08/06/2003
h:\22322e\coddl\sheets\traffic\tcp\281seqv02.dgn

WORK ZONE EG20-9
TRAFFIC FINES DOUBLE ER20-5
WHEN WORKERS ARE PRESENT ER20-5 PLAQUE
[1]

ROAD WORK AHEAD CW20-1D
[2]

REDUCED SPEED AHEAD ER2-5A
[3]

SPEED LIMIT 50 ER2-1
[4]

SPEED LIMIT 40 ER2-1
[4A]

SG20-5T
BEGIN ROAD WORK NEXT X MILES
NAME
ADDRESS
CITY
STATE
CONTRACTOR
SG20-6
[5]

HIGHWAY IMPROVEMENT PROJECT FUNDED BY YOUR TRANSPORTATION TAX DOLLARS
SCHEDULED COMPLETION XXXXXX XXXX
SG20-8

ECW1-4R
[6]

ECW1-4L
[7]

ECW4-1L
[8]

END ROAD WORK G20-2A
[9]

ECW4-1R
[10]

FCW4-3R
[11]

ECW1-6A
[12]

CW20-5L
LEFT LANE CLOSED
500 FT PLAQUE
[13]

CW20-5R
RIGHT LANE CLOSED
500 FT PLAQUE
[14]

NOTES:

1. SEE "MINOR STREET CLOSURE DETAIL" FOR TRAFFIC CONTROL FOR MINOR STREETS.
2. SEE TRAFFIC CONTROL PHASING TYPICAL SECTION FOR TCP ROADWAY SECTIONS.
3. FOR RAMP PHASING CONSTRUCTION SEE "RAMP CLOSURE LAYOUT" SHEETS.
4. TEMP SED CONTROL FENCE ON GRATED INLETS SHALL BE LEFT IN PLACE THROUGHOUT DURATION OF PROJECT OR AS DIRECTED BY THE ENGINEER.

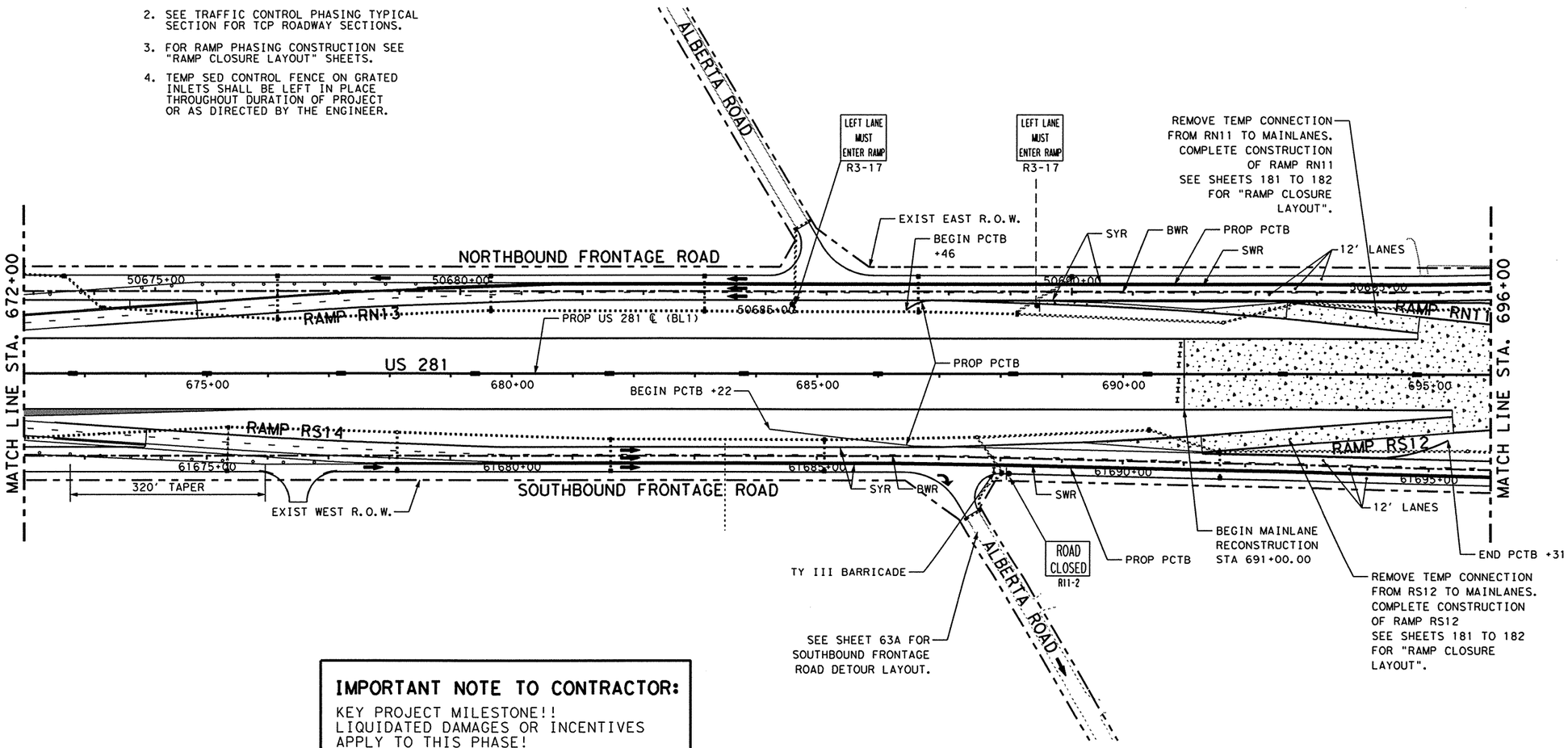

IMPORTANT NOTE TO CONTRACTOR:
KEY PROJECT MILESTONE!!
LIQUIDATED DAMAGES OR INCENTIVES APPLY TO THIS PHASE!

LEGEND:

- TEMP PAV CONSTRUCTED PREVIOUS PHASE
- TEMP PAV CONSTRUCTED THIS PHASE
- PROP CONSTRUCTION THIS PHASE
- PROP CONSTRUCTION PREVIOUS PHASE
- EXISTING TO BE REMOVED
- SW SOLID WHITE (NON-REMOVABLE)
- SY SOLID YELLOW (NON-REMOVABLE)
- BW BROKEN WHITE (NON-REMOVABLE)
- DSY DOUBLE SOLID YELLOW (NON-REMOVABLE)
- SWR SOLID WHITE (REMOVABLE)
- SYR SOLID YELLOW (REMOVABLE)
- BWR BROKEN WHITE (REMOVABLE)
- DSYR DOUBLE SOLID YELLOW (REMOVABLE)
- (Y) YELLOW GUIDE MARKS AND SHORT TERM MARKINGS
- (W) WHITE GUIDE MARKS AND SHORT TERM MARKINGS
- CHANNELIZING DEVICES
- TEMP SED CONTROL FENCE (12' EACH SEGMENT)
- TEMP SED CONTROL FENCE (48' EACH SEGMENT)
- CONSTRUCTION EXIT (TY 2)
- PROP SIGN
- PROP TY III BARRICADE

THE SEAL APPEARING ON THIS DOCUMENT WAS AUTHORIZED BY JOHN M PEREZ, P.E. 66425 ON 08/06/2003.

STATE OF TEXAS · JOHN M. PEREZ · 66425 · REGISTERED PROFESSIONAL ENGINEER
8/6/03

ER1-2 YIELD
[15]

R1-2A TO RAMP
[16]

NARROW LANES AHEAD CW20-8
[17]

FCW4-2L
[18]

FCW4-2R
[19]

CW20-5L LEFT LANE CLOSED 1000 FT PLAQUE
[20]

CW20-5R RIGHT LANE CLOSED 1000 FT PLAQUE
[21]

W3-2A
[22]

E5-1 EXIT
[23]

CW1-8(F)
[24] [25]

SCW13-2 EXIT 45 M.P.H.
[26]

G20-7 Working For You Give Us A BRAKE
[27]

CW21-1T Give Us A BRAKE
[28]

R11-2 ROAD CLOSED
[29]

R3-20 LEFT LANE MUST TURN LEFT
[30]

TEMPORARY EXIT "STREET NAME" NEXT RIGHT
[31]

ROAD WORK ⇦ NEXT X MILES G20-1bL
[28]

ROAD WORK NEXT X MILES ⇨ G20-1bR
[28]

SEE "TEMP EXIT SIGNS FOR EXIT RAMP CLOSURES" FOR ADDITIONAL INFORMATION

Parsons Brinckerhoff Quade & Douglas Inc.

Texas Department of Transportation

© 2003 by TxDOT

US 281
TRAFFIC CONTROL PLAN
PHASE V

PLAN 1"= 200' HORIZ

SHEET 2 OF 5 | 281SEQV02.DGN

DESIGNED: PAF	FED. DIV.	FED. RD No.	STATE	FEDERAL AID PROJECT No.	HIGHWAY No.
CHECKED: JP	6		TEXAS		US 281

DRAWN: KTD	STATE DISTRICT	COUNTY	CONTROL No.	SECTION No.	JOB No.	SHEET No.
CHECKED: JDH	PHARR	HIDALGO	0255	08	091	177

NAME
04:07:33 PM
08/06/2003
h:\22322a\cadd\sheets\traffic\tcp\281seqv03.dgn

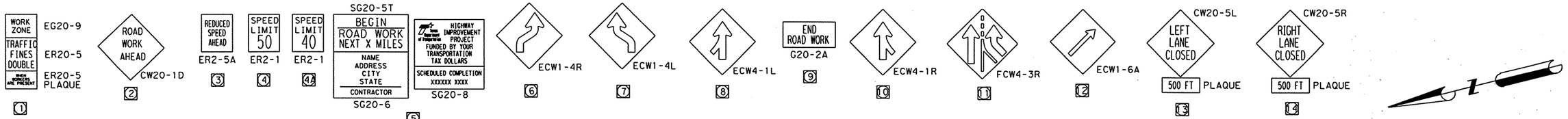

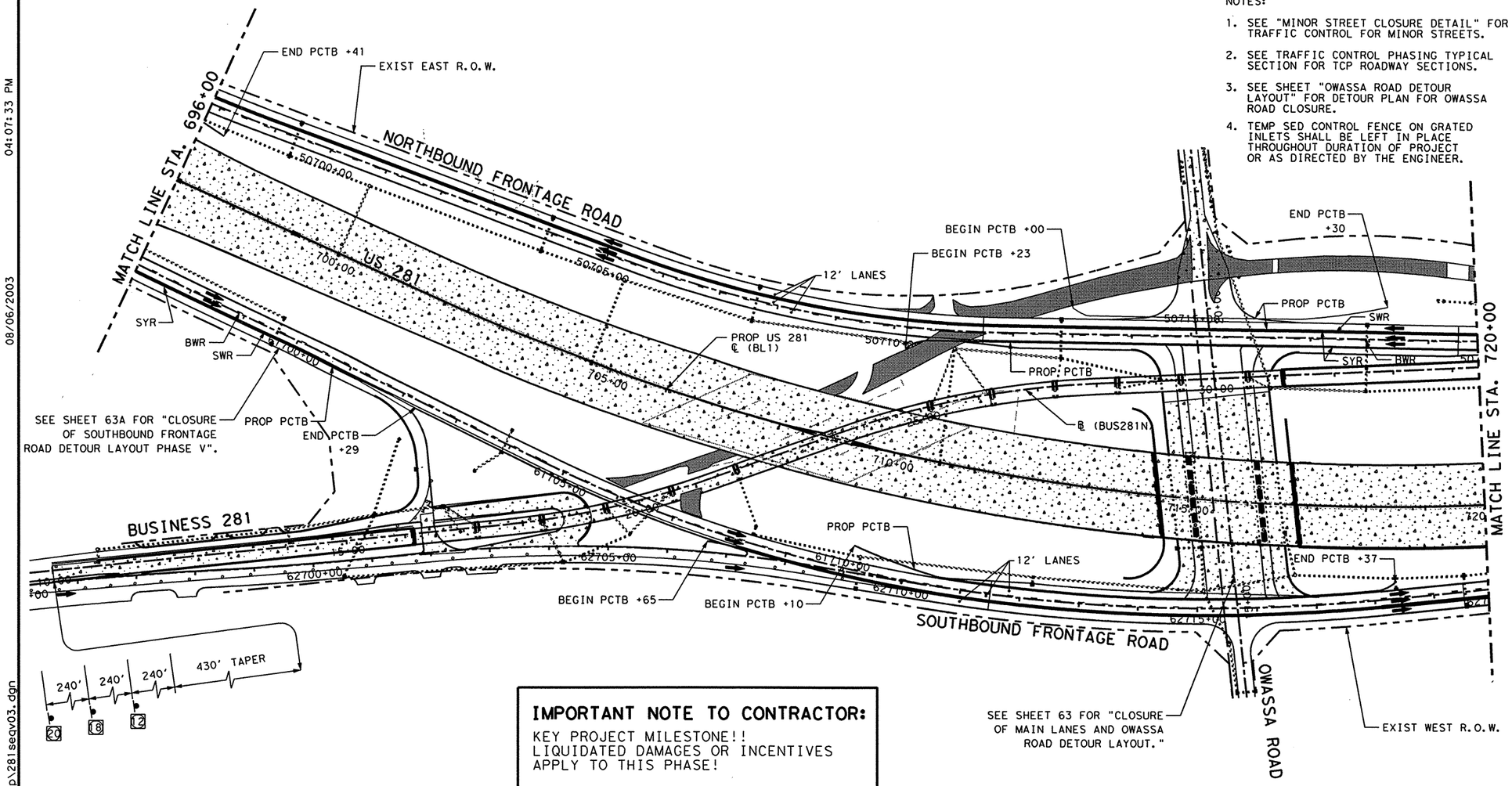

NOTES:

1. SEE "MINOR STREET CLOSURE DETAIL" FOR TRAFFIC CONTROL FOR MINOR STREETS.
2. SEE TRAFFIC CONTROL PHASING TYPICAL SECTION FOR TCP ROADWAY SECTIONS.
3. SEE SHEET "OWASSA ROAD DETOUR LAYOUT" FOR DETOUR PLAN FOR OWASSA ROAD CLOSURE.
4. TEMP SED CONTROL FENCE ON GRATED INLETS SHALL BE LEFT IN PLACE THROUGHOUT DURATION OF PROJECT OR AS DIRECTED BY THE ENGINEER.

IMPORTANT NOTE TO CONTRACTOR:
KEY PROJECT MILESTONE!!
LIQUIDATED DAMAGES OR INCENTIVES APPLY TO THIS PHASE!

LEGEND:

- TEMP PAV CONSTRUCTED PREVIOUS PHASE
- TEMP PAV CONSTRUCTED THIS PHASE
- PROP CONSTRUCTION THIS PHASE
- PROP CONSTRUCTION PREVIOUS PHASE
- EXISTING TO BE REMOVED
- SW SOLID WHITE (NON-REMOVABLE)
- SY SOLID YELLOW (NON-REMOVABLE)
- BW BROKEN WHITE (NON-REMOVABLE)
- DSY DOUBLE SOLID YELLOW (NON-REMOVABLE)
- SWR SOLID WHITE (REMOVABLE)
- SYR SOLID YELLOW (REMOVABLE)
- BWR BROKEN WHITE (REMOVABLE)
- DSYR DOUBLE SOLID YELLOW (REMOVABLE)
- (Y) YELLOW GUIDE MARKS AND SHORT TERM MARKINGS
- (W) WHITE GUIDE MARKS AND SHORT TERM MARKINGS
- CHANNELIZING DEVICES
- TEMP SED CONTROL FENCE (12' EACH SEGMENT)
- TEMP SED CONTROL FENCE (48' EACH SEGMENT)
- CONSTRUCTION EXIT (TY 2)
- PROP SIGN
- PROP TY III BARRICADE
- STRUCTURES TO BE CONSTRUCTED DURING THIS PHASE

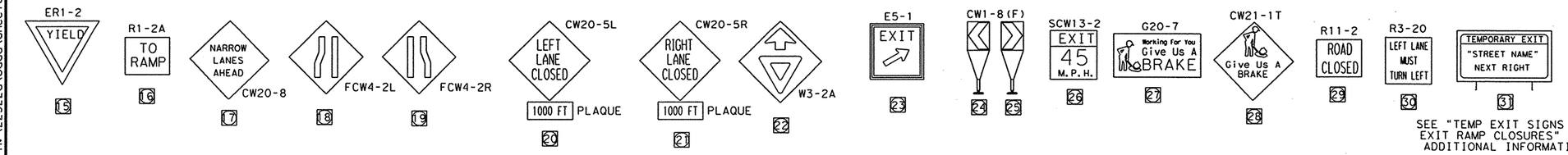

SEE "TEMP EXIT SIGNS FOR EXIT RAMP CLOSURES" FOR ADDITIONAL INFORMATION

THE SEAL APPEARING ON THIS DOCUMENT WAS AUTHORIZED BY JOHN M PEREZ, P.E. 66425 ON 08/06/2003.

STATE OF TEXAS · JOHN M. PEREZ · 66425 · REGISTERED PROFESSIONAL ENGINEER

8/6/03

Parsons Brinckerhoff Quade & Douglas Inc.

Texas Department of Transportation

© 2003 by TxDOT

US 281
TRAFFIC CONTROL PLAN
PHASE V

PLAN 1"= 200' HORIZ

SHEET 3 OF 5 | 281SEQV03.DGN

DESIGNED: PAF	FED. RD DIV. NO.	STATE	FEDERAL AID PROJECT NO.				HIGHWAY No.
CHECKED: JP	6	TEXAS					US 281
DRAWN: KTD	STATE DISTRICT	COUNTY	CONTROL No.	SECTION No.	JOB No.	SHEET No.	
CHECKED: JDH	PHARR	HIDALGO	0255	08	091	178	

NAME
04:07:43 PM
08/06/2003

WORK ZONE / TRAFFIC FINES DOUBLE / WHEN WORKERS ARE PRESENT — EG20-9 / ER20-5 / ER20-5 PLAQUE [1]

ROAD WORK AHEAD — CW20-1D [2]

REDUCED SPEED AHEAD — ER2-5A [3]

SPEED LIMIT 50 — ER2-1 [4]

SPEED LIMIT 40 — ER2-1 [4A]

SG20-5T
BEGIN ROAD WORK NEXT X MILES
NAME
ADDRESS
CITY
STATE
CONTRACTOR
SG20-6 [5]

HIGHWAY IMPROVEMENT PROJECT FUNDED BY YOUR TRANSPORTATION TAX DOLLARS
SCHEDULED COMPLETION XXXXXX XXXX
SG20-8

ECW1-4R [6]

ECW1-4L [7]

ECW4-1L [8]

END ROAD WORK — G20-2A [9]

ECW4-1R [10]

FCW4-3R [11]

ECW1-6A [12]

CW20-5L LEFT LANE CLOSED 500 FT PLAQUE [13]

CW20-5R RIGHT LANE CLOSED 500 FT PLAQUE [14]

NOTES:

1. SEE "MINOR STREET CLOSURE DETAIL" FOR TRAFFIC CONTROL FOR MINOR STREETS.
2. SEE TRAFFIC CONTROL PHASING TYPICAL SECTION FOR TCP ROADWAY SECTIONS.
3. FOR RAMP PHASING CONSTRUCTION SEE "RAMP CLOSURE LAYOUT" SHEETS.
4. TEMP SED CONTROL FENCE ON GRATED INLETS SHALL BE LEFT IN PLACE THROUGHOUT DURATION OF PROJECT OR AS DIRECTED BY THE ENGINEER.

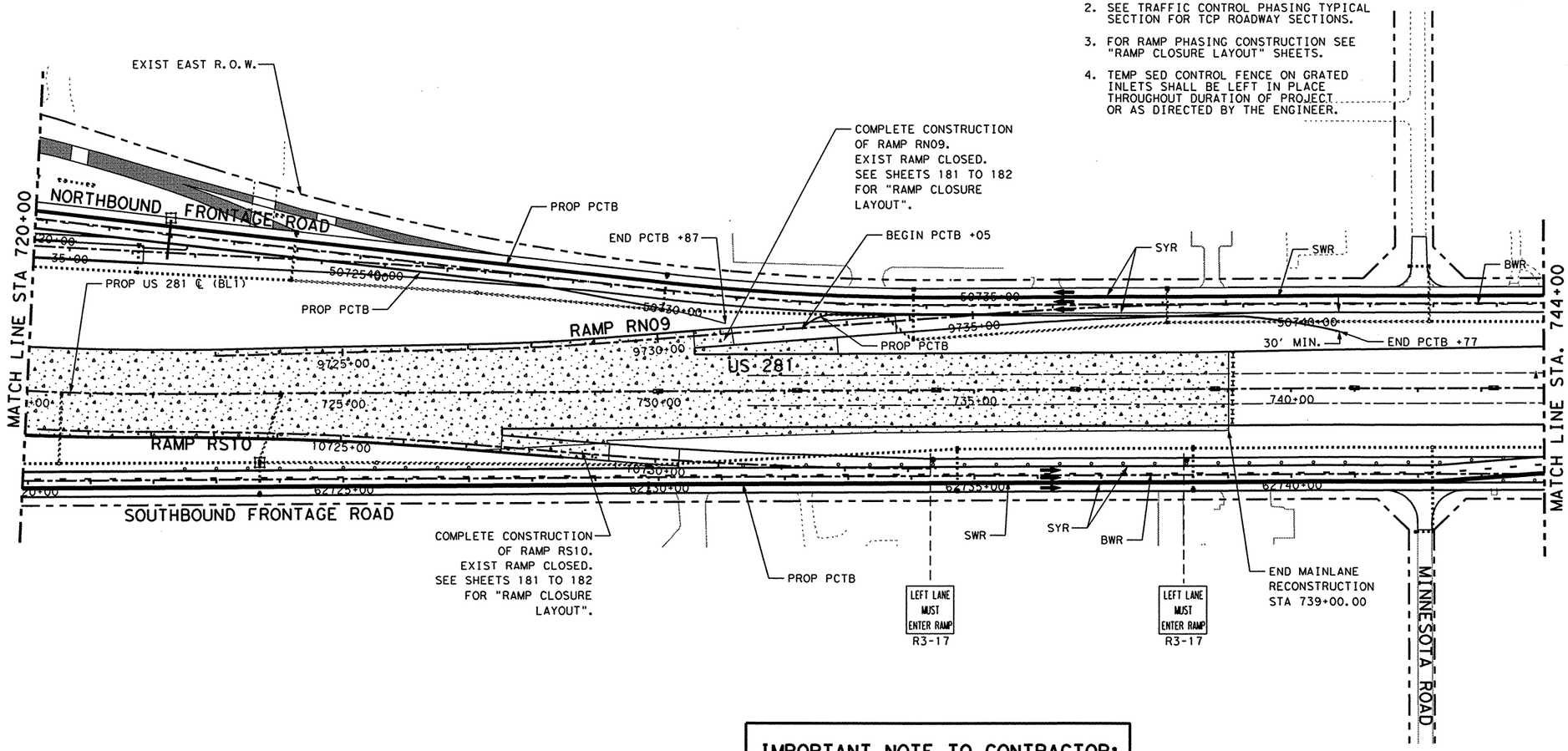

LEGEND:

- TEMP PAV CONSTRUCTED PREVIOUS PHASE
- TEMP PAV CONSTRUCTED THIS PHASE
- PROP CONSTRUCTION THIS PHASE
- PROP CONSTRUCTION PREVIOUS PHASE
- EXISTING TO BE REMOVED
- SW SOLID WHITE (NON-REMOVABLE)
- SY SOLID YELLOW (NON-REMOVABLE)
- BW BROKEN WHITE (NON-REMOVABLE)
- DSY DOUBLE SOLID YELLOW (NON-REMOVABLE)
- SWR SOLID WHITE (REMOVABLE)
- SYR SOLID YELLOW (REMOVABLE)
- BWR BROKEN WHITE (REMOVABLE)
- DSYR DOUBLE SOLID YELLOW (REMOVABLE)
- (Y) YELLOW GUIDE MARKS AND SHORT TERM MARKINGS
- (W) WHITE GUIDE MARKS AND SHORT TERM MARKINGS
- CHANNELIZING DEVICES
- TEMP SED CONTROL FENCE (12' EACH SEGMENT)
- TEMP SED CONTROL FENCE (48' EACH SEGMENT)
- CONSTRUCTION EXIT (TY 2)
- PROP SIGN
- PROP TY III BARRICADE
- STRUCTURES TO BE CONSTRUCTED DURING THIS PHASE

IMPORTANT NOTE TO CONTRACTOR:
KEY PROJECT MILESTONE!!
LIQUIDATED DAMAGES OR INCENTIVES APPLY TO THIS PHASE!

ER1-2 YIELD [15]

R1-2A TO RAMP [16]

NARROW LANES AHEAD CW20-8 [17]

FCW4-2L [18]

FCW4-2R [19]

CW20-5L LEFT LANE CLOSED 1000 FT PLAQUE [20]

CW20-5R RIGHT LANE CLOSED 1000 FT PLAQUE [21]

W3-2A [22]

E5-1 EXIT [23]

CW1-8(F) [24] [25]

SCW13-2 EXIT 45 M.P.H. [26]

G20-7 Working for You Give Us A BRAKE [27]

CW21-1T Give Us A BRAKE [28]

R11-2 ROAD CLOSED [29]

R3-20 LEFT LANE MUST TURN LEFT [30]

TEMPORARY EXIT "STREET NAME" NEXT RIGHT [31]

ROAD WORK ⇦ NEXT X MILES G20-1bL [2A]

ROAD WORK NEXT X MILES ⇨ G20-1bR [2B]

SEE "TEMP EXIT SIGNS FOR EXIT RAMP CLOSURES" FOR ADDITIONAL INFORMATION

THE SEAL APPEARING ON THIS DOCUMENT WAS AUTHORIZED BY JOHN M PEREZ, P.E. 66425 ON 08/06/2003.

STATE OF TEXAS · JOHN M. PEREZ · 66425 · REGISTERED PROFESSIONAL ENGINEER

8/6/03

Parsons Brinckerhoff Quade & Douglas Inc.

Texas Department of Transportation

© 2003 by TxDOT

US 281
TRAFFIC CONTROL PLAN
PHASE V

PLAN 1"= 200' HORIZ

SHEET 4 OF 5 — 281SEQV04.DGN

DESIGNED: PAF	FED. RD DIV. NO.	STATE	FEDERAL AID PROJECT NO.			HIGHWAY NO.
CHECKED: JP	6	TEXAS				US 281
DRAWN: KTD	STATE DISTRICT	COUNTY	CONTROL NO.	SECTION NO.	JOB NO.	SHEET NO.
CHECKED: JDH	PHARR	HIDALGO	0255	08	091	179

h:\22322o\cadd\sheets\traffic\tcp\281seqv04.dgn

NAME
11:31:49 AM
06/20/2003
h:\22322a\cadd\sheets\traffic\tcp\281seqv05.dgn

WORK ZONE / TRAFFIC FINES DOUBLE / WHEN WORKERS ARE PRESENT — EG20-9 / ER20-5 / ER20-5 PLAQUE — (1)

ROAD WORK AHEAD — CW20-1D — (2)

REDUCED SPEED AHEAD — ER2-5A — (3)

SPEED LIMIT 50 — ER2-1 — (4)

SPEED LIMIT 40 — ER2-1 — (4A)

SG20-5T
BEGIN ROAD WORK NEXT X MILES
NAME
ADDRESS
CITY
STATE
CONTRACTOR
SG20-6 — (5)

HIGHWAY IMPROVEMENT PROJECT FUNDED BY YOUR TRANSPORTATION TAX DOLLARS
SCHEDULED COMPLETION XXXXXX XXXX
SG20-8

(6)

(7)

(8)

END ROAD WORK — G20-2A — (9)

(10)

(11)

(12)

CW20-5L
LEFT LANE CLOSED
500 FT PLAQUE — (13)

CW20-5R
RIGHT LANE CLOSED
500 FT PLAQUE — (14)

NOTES:

1. SEE "MINOR STREET CLOSURE DETAIL" FOR TRAFFIC CONTROL FOR MINOR STREETS.
2. SEE TRAFFIC CONTROL PHASING TYPICAL SECTION FOR TCP ROADWAY SECTIONS.
3. FOR RAMP PHASING CONSTRUCTION SEE "RAMP CLOSURE LAYOUT" SHEETS.
4. TEMP SED CONTROL FENCE ON GRATED INLETS SHALL BE LEFT IN PLACE THROUGHOUT DURATION OF PROJECT OR AS DIRECTED BY THE ENGINEER.

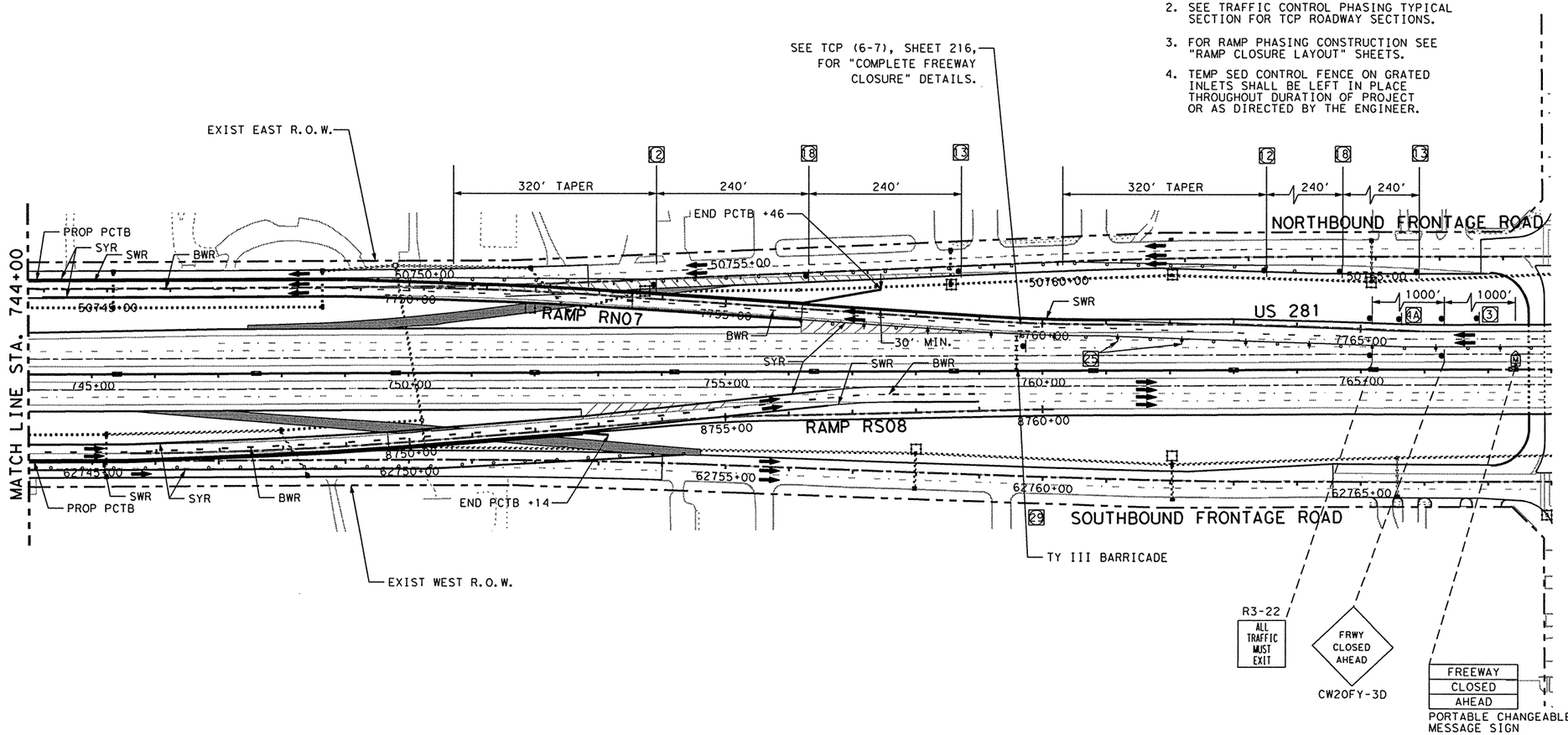

LEGEND:

- TEMP PAV CONSTRUCTED PREVIOUS PHASE
- TEMP PAV CONSTRUCTED THIS PHASE
- PROP CONSTRUCTION THIS PHASE
- PROP CONSTRUCTION PREVIOUS PHASE
- EXISTING TO BE REMOVED
- SW — SOLID WHITE (NON-REMOVABLE)
- SY — SOLID YELLOW (NON-REMOVABLE)
- BW — BROKEN WHITE (NON-REMOVABLE)
- DSY — DOUBLE SOLID YELLOW (NON-REMOVABLE)
- SWR — SOLID WHITE (REMOVABLE)
- SYR — SOLID YELLOW (REMOVABLE)
- BWR — BROKEN WHITE (REMOVABLE)
- DSYR — DOUBLE SOLID YELLOW (REMOVABLE)
- (Y) — YELLOW GUIDE MARKS AND SHORT TERM MARKINGS
- (W) — WHITE GUIDE MARKS AND SHORT TERM MARKINGS
- CHANNELIZING DEVICES
- TEMP SED CONTROL FENCE (12' EACH SEGMENT)
- TEMP SED CONTROL FENCE (48' EACH SEGMENT)
- CONSTRUCTION EXIT (TY 2)
- PROP SIGN
- PROP TY III BARRICADE
- STRUCTURES TO BE CONSTRUCTED DURING THIS PHASE

THE SEAL APPEARING ON THIS DOCUMENT WAS AUTHORIZED BY JOHN M PEREZ, P.E. 66425 ON 06/20/2003.

STATE OF TEXAS — JOHN M. PEREZ — 66425 — REGISTERED PROFESSIONAL ENGINEER

6/20/03

ER1-2 YIELD — (15)

R1-2A TO RAMP — (16)

NARROW LANES AHEAD — CW20-8 — (17)

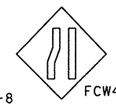

(18)

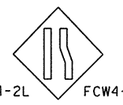

(19)

CW20-5L LEFT LANE CLOSED 1000 FT PLAQUE — (20)

CW20-5R RIGHT LANE CLOSED 1000 FT PLAQUE — (21)

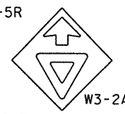

(22)

(23)

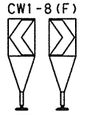

(24) (25)

SCW13-2 EXIT 45 M.P.H. — (26)

G20-7 Working For You Give Us A BRAKE — (27)

CW21-1T Give Us A BRAKE — (28)

R11-2 ROAD CLOSED — (29)

R3-20 LEFT LANE MUST TURN LEFT — (30)

TEMPORARY EXIT "STREET NAME" NEXT RIGHT — (31)

ROAD WORK ⇦ NEXT X MILES — G20-1bL — (28A)

ROAD WORK NEXT X MILES ⇨ — G20-1bR — (28B)

SEE "TEMP EXIT SIGNS FOR EXIT RAMP CLOSURES" FOR ADDITIONAL INFORMATION

Parsons Brinckerhoff Quade & Douglas Inc.

Texas Department of Transportation

© 2003 by TxDOT

US 281
TRAFFIC CONTROL PLAN
PHASE V

PLAN 1"= 200' HORIZ

SHEET 5 OF 5			281SEQV05.DGN				
DESIGNED: PAF	FED. RD DIV. No.	STATE	FEDERAL AID PROJECT No.			HIGHWAY No.	
CHECKED: JP	6	TEXAS				US 281	
DRAWN: KTD	STATE DISTRICT	COUNTY	CONTROL No.	SECTION No.	JOB No.	SHEET No.	
CHECKED: JDH	PHARR	HIDALGO	0255	08	091	180	

NAME
10:56:13 AM
06/20/2003

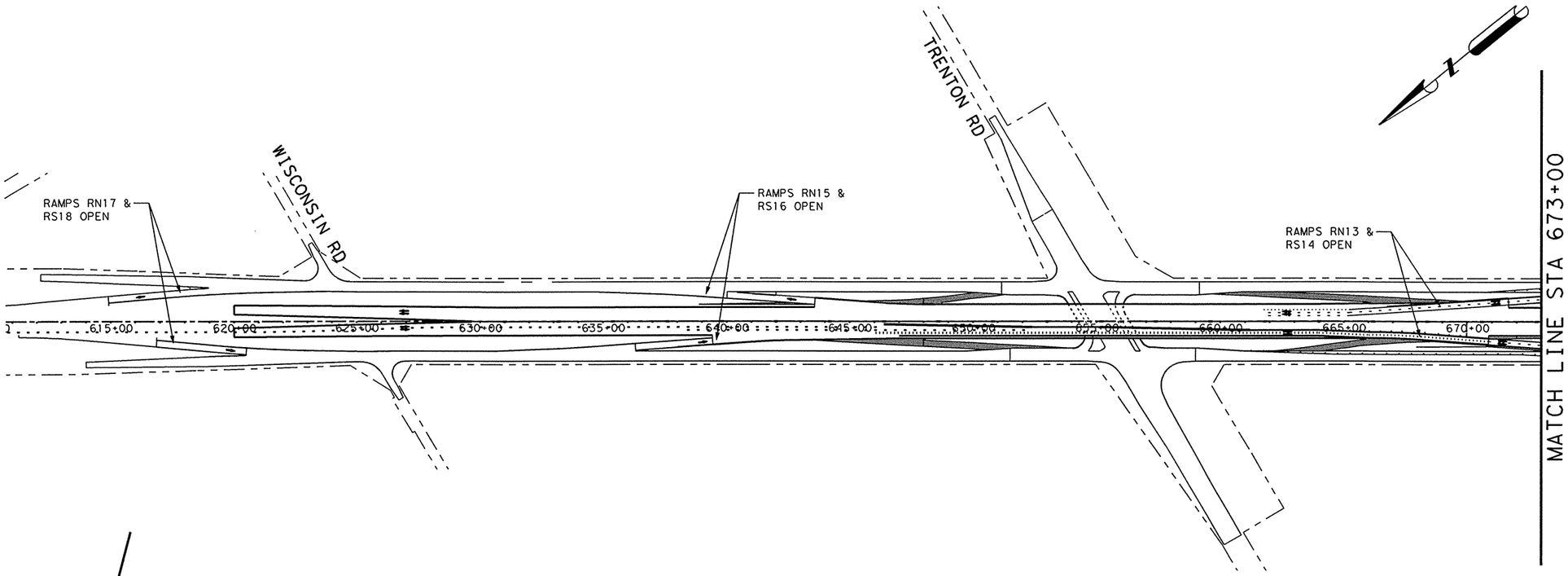

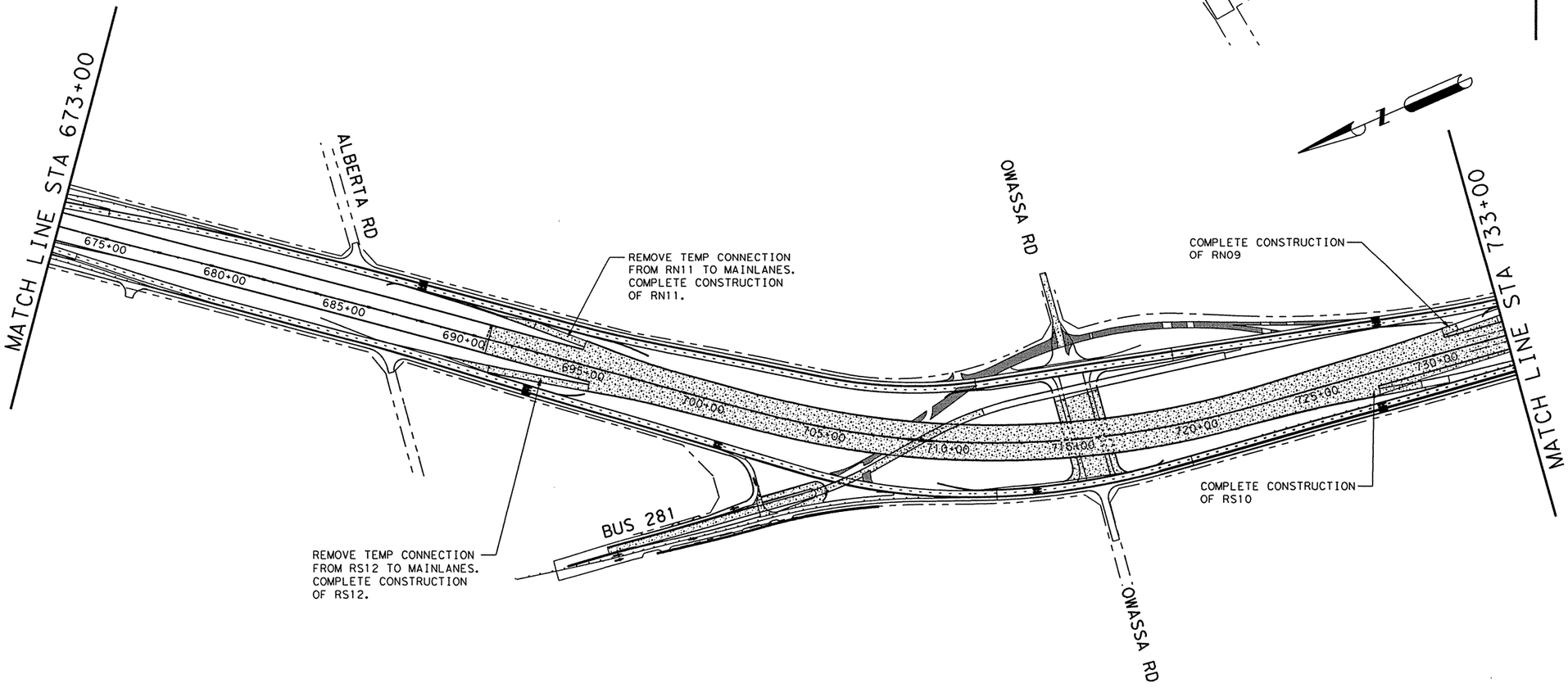

LEGEND:

- TEMP PAV CONSTRUCTED PREVIOUS PHASE
- TEMP PAV CONSTRUCTED THIS PHASE
- PROP CONSTRUCTION THIS PHASE
- PROP CONSTRUCTION PREVIOUS PHASE
- EXISTING TO BE REMOVED
- DIRECTIONAL ARROW

NOTES:

SEE TCP (6-2), (6-3) AND (6-4), SHEETS 211 TO 213, FOR RAMP CLOSURES.

SEE "TEMP EXIT SIGNS FOR EXIT RAMP CLOSURES" SHEET 59 FOR ADDITIONAL INFORMATION.

THE SEAL APPEARING ON THIS DOCUMENT WAS AUTHORIZED BY JOHN M PEREZ, P.E. 66425 ON 06/20/2003.

STATE OF TEXAS
JOHN M. PEREZ
66425
REGISTERED PROFESSIONAL ENGINEER

4/20/03

Parsons Brinckerhoff Quade & Douglas Inc.

Texas Department of Transportation

© 2003 by TxDOT

US 281
RAMP CLOSURE LAYOUT
PHASE V

PLAN 1"= 500' HORIZ

SHEET 1 OF 2 | 281SEQVRAMP1A.DGN

DESIGNED: PAF	FED. RD DIV. NO.	STATE	FEDERAL AID PROJECT No.			HIGHWAY No.	
CHECKED: JP	6	TEXAS				US 281	
DRAWN: KTD	STATE DISTRICT	COUNTY	CONTROL No.	SECTION No.	JOB No.	SHEET No.	
CHECKED: JDH	PHARR	HIDALGO	0255	08	091	181	

h:\22322a\cadd\sheets\traffic\tcp\281seqvramp1a.dgn

NAME
10:56:23 AM
06/20/2003

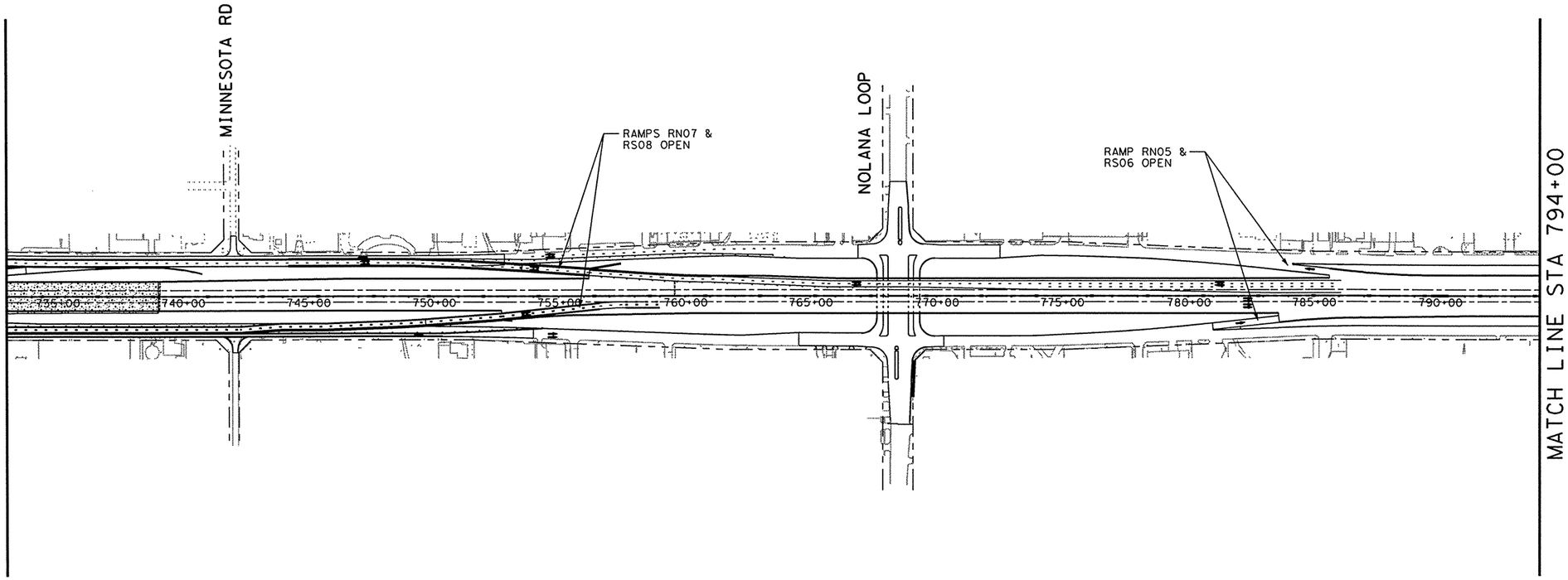

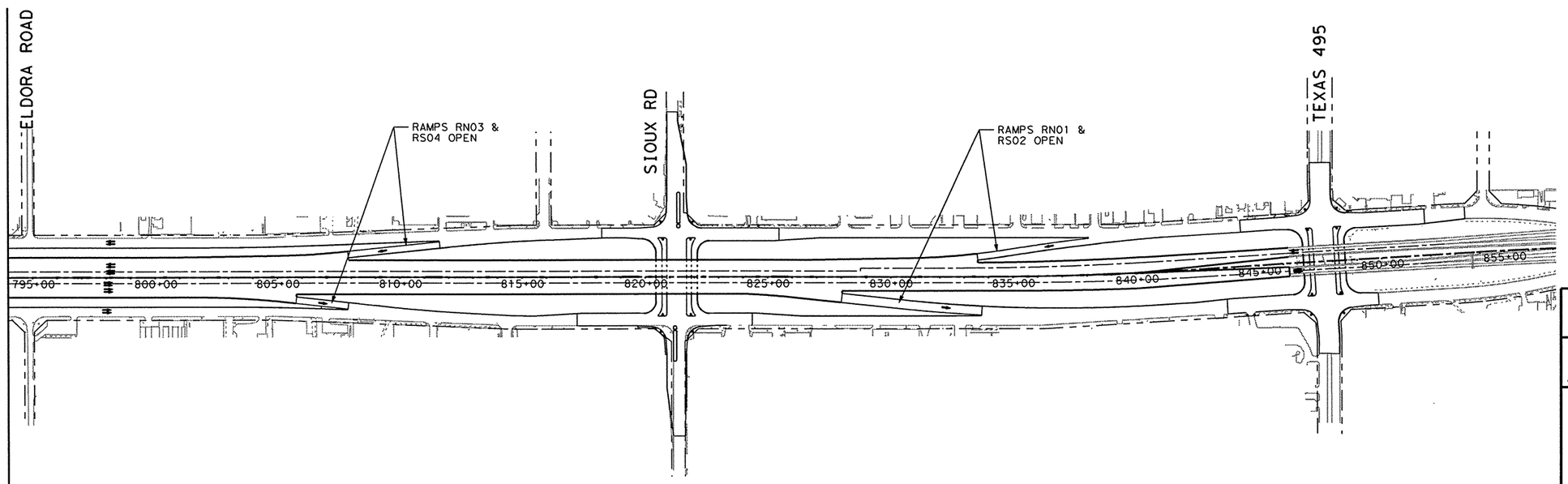

LEGEND:

- TEMP PAV CONSTRUCTED PREVIOUS PHASE
- TEMP PAV CONSTRUCTED THIS PHASE
- PROP CONSTRUCTION THIS PHASE
- PROP CONSTRUCTION PREVIOUS PHASE
- EXISTING TO BE REMOVED
- DIRECTIONAL ARROW

NOTES:

SEE TCP (6-2), (6-3) AND (6-4), SHEETS 211 TO 213, FOR RAMP CLOSURES.

SEE "TEMP EXIT SIGNS FOR EXIT RAMP CLOSURES" SHEET 59 FOR ADDITIONAL INFORMATION.

THE SEAL APPEARING ON THIS DOCUMENT WAS AUTHORIZED BY JOHN M PEREZ, P.E. 66425 ON 06/20/2003.

STATE OF TEXAS
JOHN M. PEREZ
66425
REGISTERED PROFESSIONAL ENGINEER

6/20/03

Parsons Brinckerhoff Quade & Douglas Inc.

Texas Department of Transportation

© 2003 by TxDOT

US 281
RAMP CLOSURE LAYOUT
PHASE V

PLAN 1"= 500' HORIZ

SHEET 2 OF 2 | 281SEQVRAMP1B.DGN

DESIGNED: PAF	FED. RD DIV. No.	STATE	FEDERAL AID PROJECT No.			HIGHWAY No.
CHECKED: JP	6	TEXAS				US 281
DRAWN: KTD	STATE DISTRICT	COUNTY	CONTROL No.	SECTION No.	JOB No.	SHEET No.
CHECKED: JDH	PHARR	HIDALGO	0255	08	091	182

h: \22322a\cadd\sheets\traffic\tcp\281seqvramp1b.dgn

DISCLAIMER
The use of this standard is governed by the "Texas Engineering Practice Act". No warranty of any kind is made by TxDOT for any purpose whatsoever. TxDOT assumes no responsibility for the conversion of this standard to other formats or for incorrect results or damages resulting from its use.

LEVELS DISPLAYED
ACC:
1 2 3 4 5 6 7 8 9 10 11 12 13 14 15 16
17 18 19 20 21 22 23 24 25 26 27 28 29 30 31 32
33 34 35 36 37 38 39 40 41 42 43 44 45 46 47 48
49 50 51 52 53 54 55 56 57 58 59 60 61 62 63

Barricade and Construction (BC) Standard Sheets General Notes: ⚠

1. The Barricade and Construction Standard Sheets (BC sheets) are intended to show typical examples for placement of traffic control devices, construction pavement markings, and typical construction signs. The information contained in these sheets meet or exceed the requirements shown in the "Texas Manual on Uniform Traffic Control Devices" (TMUTCD).
2. The development and design of the Traffic Control Plan (TCP) is the responsibility of the Engineer.
3. The Contractor may propose changes to the TCP that are signed and sealed by a licensed professional engineer for approval. The Engineer may develop, sign and seal Contractor proposed changes.
4. The Contractor is responsible for installing and maintaining the traffic control devices as shown in the plans. The Contractor may not move or change the approximate location of any device without the approval of the Engineer.
5. Geometric design of lane shifts and detours should, when possible, meet the applicable design criteria contained in manuals such as the American Association of State Highway and Transportation Officials (AASHTO) "Policy on the Geometric Design of Highways and Streets" or the TxDOT "Roadway Design Manual".
6. When projects abut, the Engineer(s) may omit the END ROAD WORK, TRAFFIC FINES DOUBLE, and other advance warning signs if the signing would be redundant and the work areas appear continuous to the motorists. If the adjacent project is completed first, the Contractor will erect the necessary warning signs as shown on these sheets, the TCP sheets or as directed by the Engineer. The BEGIN ROAD WORK NEXT X MILES sign will be revised to show appropriate work zone distance.
7. The Engineer may require duplicate construction warning signs on the median side of divided highways where median width will permit and traffic volumes justify the signing.
8. All signs shall be constructed in accordance with the details found in the "Standard Highway Sign Designs for Texas," latest edition. Sign details not shown in this manual shall be shown in the plans or the Engineer shall provide a detail to the Contractor before the sign is manufactured.
9. The traffic control devices shown in the illustrations of the BC sheets are examples. As necessary, the Engineer will determine the most appropriate traffic control devices to be used.
10. As shown on BC(2), the OBSERVE WARNING SIGNS STATE LAW, BEGIN ROAD WORK NEXT X MILES, CONTRACTOR and END ROAD WORK signs shall be erected at or near the CSJ limits and the WORK ZONE TRAFFIC FINES DOUBLE sign with plaque shall be erected in advance of the CSJ limits.
11. Except for devices required by Note 10, traffic control devices should be in place only while work is actually in progress or a definite need exists.
12. The Engineer has the final decision on the location of all traffic control devices.

Only pre-qualified products shall be used. A copy of the "Compliant Work Zone Traffic Control Devices List" (CWZTCD) describes pre-qualified products and their sources and may be obtained by contacting:

Standards Engineer
Traffic Operations Division - TE
Texas Department of Transportation
125 East 11th Street
Austin, Texas 78701-2483
Phone (512) 416-3120
Fax (512) 416-3299

Instructions to locate the "CWZTCD" on TxDOT website are:

Start at website - www.dot.state.tx.us
Click on "About TxDOT",
Click on "Functional Organizational Chart",
Click on Traffic Operations Box,
Click on "Compliant Work Zone Traffic Control Devices",
again click on "Compliant Work Zone Traffic Control Devices".
This site is printable.

4/03 Revision
⚠ Revised General Notes

STANDARD PLANS
TEXAS DEPARTMENT OF TRANSPORTATION
Traffic Operations Division

BARRICADE AND CONSTRUCTION GENERAL NOTES AND REQUIREMENTS

1 of 12 BC(1)-03

© TxDOT 11-4-02			DN: BAS	CK: GRB	DW: FDN	CK: CAL
REVISIONS 4-03	STATE DISTRICT	FEDERAL REGION	PROJECT NUMBER			SHEET
	PHR	6				183
	COUNTY		CONTROL	SECTION	JOB	HIGHWAY
	HIDALGO		0255	08	091	US 281

DISCLAIMER
The use of this standard is governed by the "Texas Engineering Practice Act". No warranty of any kind is made by TxDOT for any purpose whatsoever. TxDOT assumes no responsibility for the conversion of this standard to other formats or for incorrect results or damages resulting from its use.

ACC:

LEVELS DISPLAYED																
1	2	3	4	5	6	7	8	9	10	11	12	13	14	15	16	
17	18	19	20	21	22	23	24	25	26	27	28	29	30	31	32	
33	34	35	36	37	38	39	40	41	42	43	44	45	46	47	48	
49	50	51	52	53	54	55	56	57	58	59	60	61	62	63		

CLOSED ROADWAY

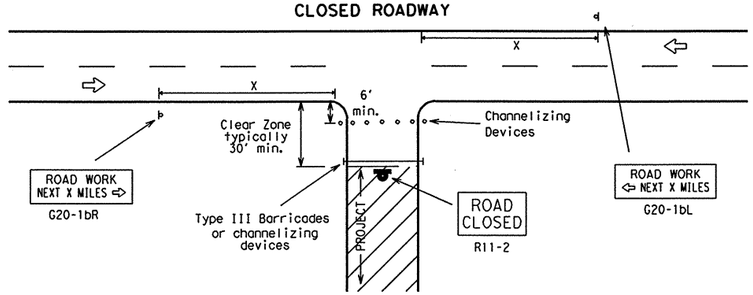

Barricades or channelizing devices shall be erected completely across roadway. Drums, vertical panels or cones shall be used in place of Type III Barricades when shown in plans or as specified by the Engineer.

T-INTERSECTION

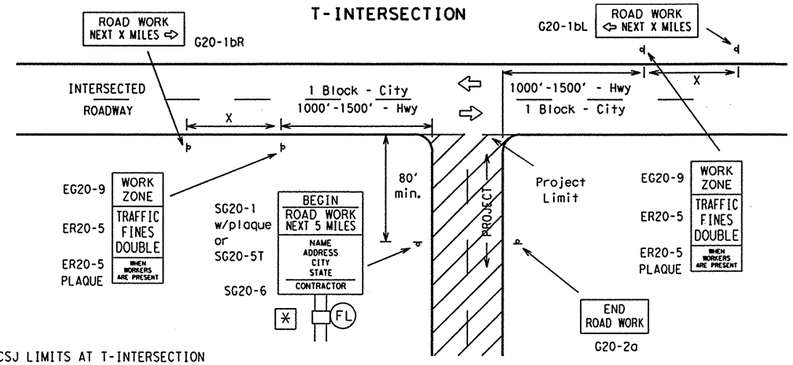

CSJ LIMITS AT T-INTERSECTION

1. A ROAD WORK NEXT X MILES (G20-1bR(L)) sign should be erected on the intersected highway as shown above.
2. The Engineer will determine the types and location of any additional traffic control devices, such as a flagger and accompanying signs, or other signs, that should be used when work is being performed at or near an intersection.
3. The Engineer/Inspector shall ensure that construction work zone signs are installed with adequate spacing between the signs so the legibility of existing permanent and other work zone signs is not obstructed.

TYPICAL LOCATION OF CROSSROAD SIGNS

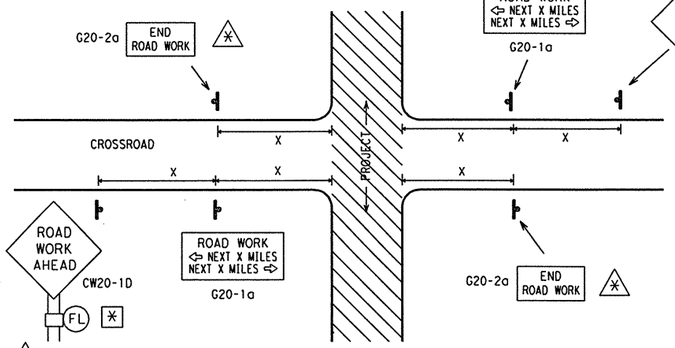

* May be mounted on back of CW20-1D sign with approval of engineer. (See note 2 at right)

1. The typical minimum signing on a crossroad approach should be a CW20-1D ROAD WORK AHEAD sign and a G20-2a END ROAD WORK sign, unless noted otherwise in plans.
2. The Engineer may use the reduced size 36" x 36" ROAD WORK AHEAD (MCW20-1D) sign mounted back to back with the reduced size 36" x 18" END ROAD WORK (SG20-2a) sign on low volume crossroads. See the "Standard Highway Sign Designs for Texas" manual for sign details. The Engineer may omit the advance warning signs on low volume crossroads. The Engineer will determine whether a road is low volume. This information shall be shown in the plans.
3. Based on existing field conditions, the Engineer/Inspector may require additional signs such as FLAGGER AHEAD, LOOSE GRAVEL, or other appropriate signs. When additional signs are required, these signs will be considered part of the minimum requirements. The Engineer/Inspector will determine the proper location and spacing of any sign not shown on the BC sheets, Traffic Control Plan sheets or the Work Zone Standard Sheets.
4. The G20-1a sign shall be required on major crossroads to advise motorists of the length of construction in either direction from the intersection. The Engineer will determine whether a roadway is considered high volume.
5. Additional traffic control devices may be shown elsewhere in the plans for higher volume crossroads.
6. When work occurs in the intersection area, appropriate traffic control devices, as shown elsewhere in the plans or as determined by the Engineer/Inspector, shall be in place.

TYPICAL CONSTRUCTION WARNING SIGN SIZE AND SPACING [1,5,6]

Posted Speed	Sign Spacing "X" △	Long-term Or Intermediate-term Stationary Approach Warning Signs CW20 and CW21 Series		Short-term Stationary Or Short Duration Approach Warning Signs CW21 Series		Other Warning Signs
MPH	Feet (Apprx.)	Standard inches	Minimum [4] inches	Standard inches [7]	Minimum [4] inches [7]	Standard inches [7]
30	120	48 x 48	36 x 36	30 x 30 or 36 x 36	24 x 24 or 30 x 30	30 x 30 or 36 x 36
35	160					
40	240					
45	320		Use Standard Size		Use Standard Size	
50	400					
55	500 [2]					
60	600 [2]			48 x 48		48 x 48
65	700 [2]					
70	800 [2]					
75	900 [2]					
*	* [3]					

* For typical sign spacings on expressways and freeways, see Part VI of the "Texas Manual on Uniform Traffic Control Devices" (TMUTCD) typical application diagrams or TCP Standard Sheets.
△ Minimum distance from work area to first Advance Warning sign and/or distance between each additional sign.

General Notes:
1. Special or larger size signs may be used as necessary.
2. Distance between signs should be increased as required to have 1500 feet advance warning.
3. Distance between signs should be increased as required to have ½ mile or more advance warning.
4. For use only on secondary roads or city streets where speeds are low.
5. Only diamond shaped warning sign sizes are indicated.
6. See sign size listing in "TMUTCD", Appendix A or the "Standard Highway Sign Design" manual for complete list of available sign design sizes.
7. Where two sizes are listed, see sign size listing in "TMUTCD", Appendix A or the "Standard Highway Sign Design" manual for proper size.

Only pre-qualified products shall be used. A copy of the "Compliant Work Zone Traffic Control Devices List" (CWZTCD) describes pre-qualified products and their sources and may be obtained by contacting:

Standards Engineer
Traffic Operations Division - TE
Texas Department of Transportation
125 East 11th Street
Austin, Texas 78701-2483
Phone (512) 416-3120
Fax (512) 416-3299

Instructions to locate the "CWZTCD" on TxDOT website are:

Start at website - www.dot.state.tx.us
Click on "About TxDOT",
Click on "Functional Organizational Chart",
Click on Traffic Operations Box,
Click on "Compliant Work Zone Traffic Control Devices",
again click on "Compliant Work Zone Traffic Control Devices".
This site is printable.

TYPICAL SIGNING AND TRAFFIC CONTROL DEVICE DETAILS FOR WORK BEGINNING AT THE CSJ LIMITS

(Less than 2000 feet between project limits and work area) (Typical signing shall be installed at all CSJ Limits)

TYPICAL DETAILS FOR WORK AREAS IN VARIOUS LOCATION WITHIN CSJ LIMITS

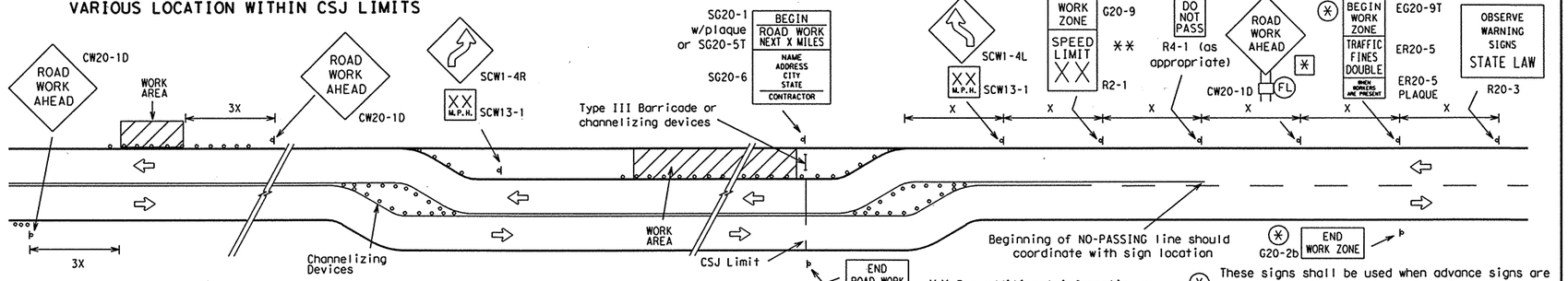

When extended distances occur between minimal work areas, the Engineer/Inspector should ensure additional Road Work Ahead (CW20-1D) signs are placed in advance of these work areas to remind drivers they are still within the project limits. See the applicable TCP sheets for exact location and spacing of signs and channelizing devices.

** For additional information on the placement of work zone speed limit signs, refer to BC(3)

* These signs shall be used when advance signs are required outside the CSJ Limits. They inform the motorist of entering or leaving a work zone where traffic fines may double if workers are present.

TYPICAL DETAIL FOR PROJECT LIMIT AWAY FROM WORK AREA

(Greater than 2000 feet between project limits and work area) (Typical signing shall be installed at all CSJ Limits)

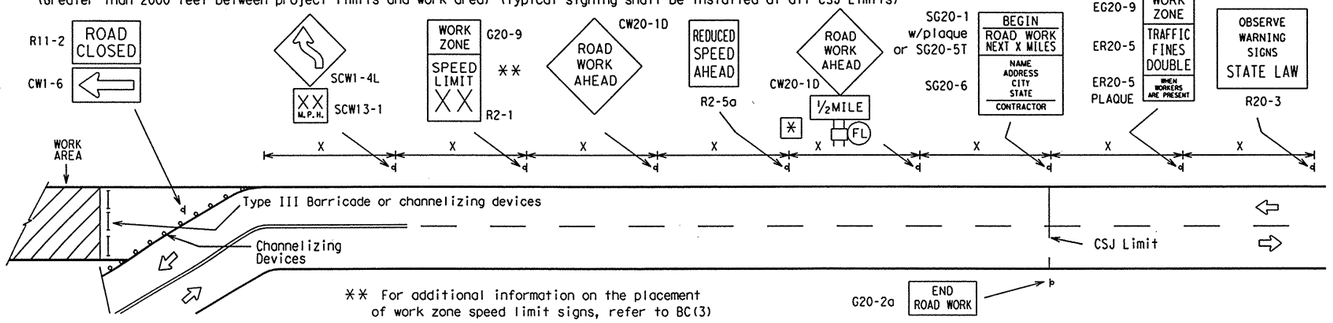

LEGEND

- Sign
- (FL) Flashing Type A-Low Intensity Warning Light
- O O Channelizing Devices
- I Type III Barricade
- * The Type A Warning Lights shall not be used with signs manufactured with Type E Sheeting (Fluorescent Prismatic) meeting the requirements of Departmental Material Specification DMS-8300.
- X See Typical Construction Warning Sign Size and Spacing chart or the TMUTCD for sign spacing requirements.

STANDARD PLANS
TEXAS DEPARTMENT OF TRANSPORTATION
Traffic Operations Division

BARRICADE AND CONSTRUCTION PROJECT LIMIT STANDARD

2 of 12 BC(2)-03

©TxDOT 11-4-02	DN: BAS	CK: GRB	DW: FDN	CK: CAL

REVISIONS	STATE DISTRICT	FEDERAL REGION	FEDERAL AID PROJECT	SHEET
	PHR	6		184

COUNTY	CONTROL	SECTION	JOB	HIGHWAY
HIDALGO	0255	08	091	US 281

DISCLAIMER
The use of this standard is governed by the "Texas Engineering Practice Act". No warranty of any kind is made by TxDOT for any purpose whatsoever. TxDOT assumes no responsibility for the conversion of this standard to other formats or for incorrect results or damages resulting from its use.

LEVELS DISPLAYED
1 2 3 4 5 6 7 8 9 10 11 12 13 14 15 16
17 18 19 20 21 22 23 24 25 26 27 28 29 30 31 32
33 34 35 36 37 38 39 40 41 42 43 44 45 46 47 48
49 50 51 52 53 54 55 56 57 58 59 60 61 62 63
ACC:

TYPICAL APPLICATION OF WORK ZONE SPEED LIMIT SIGNS

Work zone speed limits shall be regulatory, established in accordance with the "Procedures for Establishing Speed Zones," and approved by the Texas Transportation Commission.

Reduced speeds should only be posted in the vicinity of work activity and not throughout the entire project.

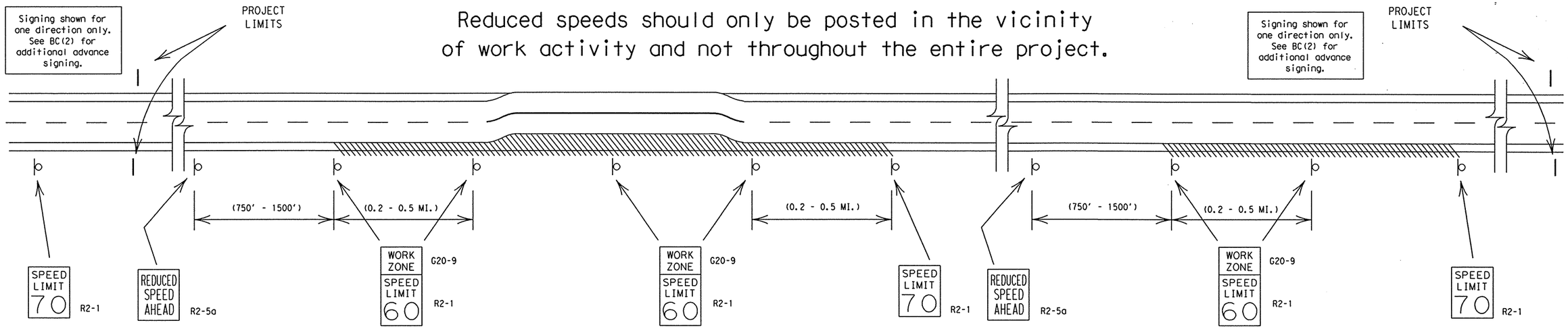

GUIDANCE FOR USE:

LONG/INTERMEDIATE TERM WORK ZONE SPEED LIMITS

This type of work zone speed limit should be included on the design of the traffic control plans when restricted geometrics with a lower design speed are present in the work zone and modification of the geometrics to a higher design speed is not feasible.

LONG/INTERMEDIATE TERM WORK ZONE SPEED LIMIT signs should be posted and visible to the motorists at all times. Work activity in the area of reduced speed zone should be greater than 12 consecutive hours per day. Work activity may also be defined as a change in the roadway that requires a reduced speed for motorists to safely negotiate the work area, including:

a) rough road or damaged pavement surface
b) substantial alteration of roadway geometrics (diversions)
c) construction detours
d) grade
e) width
f) other conditions readily apparent to the driver

As long as any of these conditions exist, the work zone speed limit signs should remain in place.

SHORT TERM WORK ZONE SPEED LIMITS

This type of work zone speed limit should be included on the design of the traffic control plans when workers or equipment are not behind concrete barrier, work activity is within 15 feet of pavement edge or actually on the pavement.

SHORT TERM WORK ZONE SPEED LIMIT signs should be posted and visible to the motorists only when work activity is present. Work activity in the area of reduced speed should be less than 12 consecutive hours. When work activity is not present, signs should be covered with an approved sign cover or removed from work area.

GENERAL NOTES:

1. Regulatory work zone speed limits should be used only for sections of construction projects where speed control is of major importance.
   Regulatory work zone speed signs (R2-1) should be removed during periods when they are not needed to minimize interference with traffic.
2. Regulatory work zone speed limit signs shall be placed on supports at a 7 foot mounting height.
3. Speed zone signs are illustrated for one direction of travel and are normally posted for each direction of travel.
4. Frequency of speed limit signs should be:
   40 mph and greater 0.2 to 2 miles
   35 mph and less 0.2 to 1 mile
5. Regulatory speed limit signs shall have black legend and border on a white reflective background.
6. Fabrication, erection and maintenance of REDUCED SPEED AHEAD sign, WORK ZONE plaque and SPEED LIMIT signs shall not be paid for directly, but shall be considered subsidiary to Item 502.
7. Turning signs from view, laying signs over or down will not be allowed, unless otherwise noted.
8. Techniques that may help reduce traffic speeds.
   (In order of effectiveness.)
   A. Flagger stationed next to sign.
   B. Law enforcement.
   C. Portable changeable message sign (PCMS).
   D. Low-power radar transmitter.
9. Refer to "Work Zone Speed Limit Work Sheets 1 and 2" to determine when a construction speed zone should be required.

STANDARD PLANS
Texas Department of Transportation
Traffic Operations Division

BARRICADE AND CONSTRUCTION WORK ZONE SPEED LIMIT STANDARD

3 of 12 BC(3)-03

© TxDOT 11-4-02

DN: JWT	CK: GRB	DW: FDN	CK: CAL

REVISIONS	STATE DISTRICT	FEDERAL REGION	FEDERAL AID PROJECT	SHEET
	PHR	6		185

COUNTY	CONTROL	SECTION	JOB	HIGHWAY
HIDALGO	0255	08	091	US 281

DISCLAIMER
The use of this standard is governed by the "Texas Engineering Practice Act". No warranty of any kind is made by TxDOT for any purpose whatsoever. TxDOT assumes no responsibility for the conversion of this standard to other formats or for incorrect results or damages resulting from its use.

TYPICAL MINIMUM CLEARANCES FOR LONG TERM AND INTERMEDIATE TERM SIGNS

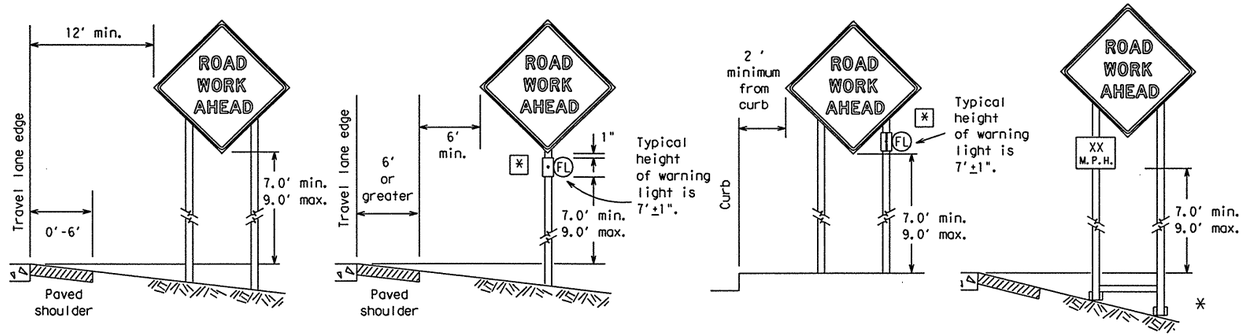

It is the intent of these plans to provide positive guidance to motorists throughout the project limits by the use of signs, pavement markings, delineation and/or channelizing devices. All traffic control devices shall conform with the "Texas Manual on Uniform Traffic Control Devices for Streets and Highways" (TMUTCD) and the "Compliant Work Zone Traffic Control Devices List" list (CWZTCD).

* When placing skid supports on unlevel ground, the leg post lengths must be adjusted so the sign appears straight and plumb. Objects shall NOT be placed under skids as a means of leveling.

ATTACHMENT FOR WOODEN SIGN SUPPORTS

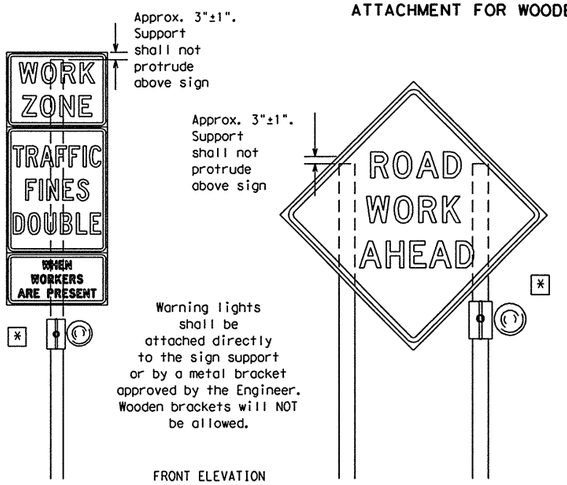

Attachment to wooden supports will be by bolts and nuts or screws. Use TxDOT's or manufacturer's recommended procedures for attaching sign substrates to other types of sign supports

Nails will NOT be allowed.

Each sign shall be attached directly to the sign support. Multiple signs shall not be joined or spliced by any means. Supports shall not be extended or repaired by splicing or other means.

Only pre-qualified products shall be used. A copy of the "Compliant Work Zone Traffic Control Devices List" (CWZTCD) describes pre-qualified products and their sources and may be obtained by contacting:

Standards Engineer
Traffic Operations Division - TE
Texas Department of Transportation
125 East 11th Street
Austin, Texas 78701-2483
Phone (512) 416-3120
Fax (512) 416-3299

Instructions to locate the "CWZTCD" on TxDOT website are:

Start at website - www.dot.state.tx.us
Click on "About TxDOT",
Click on "Functional Organizational Chart",
Click on Traffic Operations Box,
Click on "Compliant Work Zone Traffic Control Devices",
again click on "Compliant Work Zone Traffic Control Devices".
This site is printable.

(FL) Flashing Type A - Low Intensity Warning Light

* The Type A Warning lights shall not be used with Type E Sheeting (Fluorescent Prismatic) meeting the requirements of DMS-8300.

CONTRACTOR REQUIREMENTS FOR MAINTAINING PERMANENT SIGNS WITHIN THE PROJECT LIMITS

1. Permanent signs are used to give notice of traffic laws or regulations, call attention to conditions that are potentially hazardous to traffic operations, show route designations, destinations, directions, distances, services, points of interest, and other geographical, recreational, or cultural information. Drivers proceeding through a work zone need the same, if not better route guidance as normally installed on a roadway without construction.
2. When permanent regulatory or warning signs conflict with work zone conditions, remove or cover the permanent signs until the permanent sign message matches the roadway condition.
3. When existing permanent signs are moved and relocated due to construction purposes, they shall be visible to motorists at all times.
4. If existing signs are to be relocated on their original supports, they shall be installed on crashworthy bases as shown on the SMD Standard sheets. The signs shall meet the required mounting heights shown on the BC Sheets or the SMD Standards. This work should be paid for under the appropriate pay item for relocating existing signs.
5. If permanent signs are to be removed and relocated using temporary supports, the Contractor shall use crashworthy supports as shown on the BC sheets or the CWZTCD. The signs shall meet the required mounting heights shown on the BC Sheets or the SMD Standards during construction. This work should be paid for under the appropriate pay item for relocating existing signs.
6. Any sign or traffic control device that is struck or damaged by the Contractor or his/her construction equipment shall be replaced as soon as possible by the Contractor to ensure proper guidance for the motorists. This will be subsidiary to Item 502.

GENERAL NOTES FOR WORK ZONE SIGNS

1. Contractor shall install and maintain signs in a straight and plumb condition and/or as directed by the Engineer.
2. Wooden sign posts shall be painted white.
3. Barricades shall NOT be used as sign supports.
4. Nails shall NOT be used to attach signs to any support.
5. All signs shall be installed in accordance with the plans or as directed by the Engineer. Signs shall be used to regulate, warn, and guide the traveling public safely through the work zone.
6. The Contractor may furnish either the sign design shown in the plans or in the "Standard Highway Sign Designs for Texas" (SHSD). The Engineer/Inspector may require the Contractor to furnish other work zone signs that are shown in the TMUTCD but may have been omitted from the plans. Any variation in the plans shall be documented by written agreement between the Engineer and the Contractor's Responsible Person. All changes must be documented in writing before being implemented. This can include documenting the changes in the Inspector's TxDOT diary and having both the Inspector and Contractor initial and date the agreed upon changes. The additional signs requested by the Engineer/Inspector shall not be subsidiary.
7. The Contractor shall furnish sign supports listed in the "Compliant Work Zone Traffic Control Device List" (CWZTCD). The Contractor shall install the sign support in accordance with the manufacturer's recommendations. If there is a question regarding installation procedures, the Contractor shall furnish the Engineer a copy of the manufacturer's installation recommendations so that the Engineer can verify the correct procedures are being followed.
8. The contractor is responsible for sign installations and replacing signs with damaged or cracked substrates and/or damaged or marred reflective sheeting as directed by the Engineer/Inspector.
9. Identification markings may be shown only on the back of the sign substrate. The maximum height of letters and/or company logos used for identification shall be 1".
10. The Contractor shall replace damaged wood posts. New or damaged wood sign posts shall not be spliced.

Duration of Work (as defined by the "Texas Manual on Uniform Traffic Control Devices" Part VI)

1. The types of sign supports, the size of signs, and the type of sign substrates can vary based on the type of work being performed. The Engineer is responsible for selecting the appropriate size sign for the type of work being performed. The Contractor is responsible for ensuring that the sign support and substrate meets crashworthiness and length of work requirements.
   a. Long-term stationary - work that occupies a location more than 3 days.
   b. Intermediate-term stationary - work that occupies a location from overnight to 3 days.
   c. Short-term stationary - daytime work that occupies a location from 1 to 12 hours.
   d. Short, duration - work that occupies a location up to 1 hour.
   e. Mobile - work that moves intermittently or continuously. Does not stop for more than 15 minutes at a time.

SIGN MOUNTING HEIGHT

1. The bottom of Long-term/Intermediate-term signs shall be at least 7 feet, but not more than 9 feet, above the paved surface.
2. The bottom of Short-term/Short Duration signs shall be a minimum of 1 foot above the pavement surface but no more than 2 feet above the ground.
3. Long-term/Intermediate-term Signs may be used in lieu of Short-term/Short Duration signing.
4. Short-term/Short Duration signs shall be used only during daylight and shall be removed at the end of the workday.
5. Regulatory signs shall be mounted at least 7 feet, but not more than 9.0 feet, above the paved surface regardless of work duration.

SIZE OF SIGNS

1. The Engineer may allow the use of smaller size construction warning signs on secondary roads or city streets where speeds are low if the sign size is listed as an option on the "Typical Construction Warning Sign Size and Spacing" chart shown on BC(2).
2. The Contractor shall furnish the sign sizes shown in plans, the BC Sheets, the TCP sheets or as directed by the Engineer.

SIGN SUBSTRATES

1. The Contractor shall ensure that the sign substrate is allowed for the type of sign support that is being used. The CWZTCD lists each substrate that can be used on the different types and models of sign supports.
2. "Mesh" type materials are NOT an approved sign substrate.
3. All wooden individual sign panels fabricated from 2 or more pieces shall have one or more plywood cleat, 1/2" thick by 6" wide, fastened to the back of the sign and extending fully across the sign. The cleat shall be attached to the back of the sign using wood screws that do not penetrate the face of the sign panel. The screws shall be placed on both sides of the splice and spaced at 6" centers. The Engineer may approve other methods of splicing the sign faces.

REFLECTIVE SHEETING

1. Reflectorized signs shall be constructed of sheeting meeting the color and retro-reflectivity requirements of DMS-8300 or DMS-8310. The DMS specifications can be accessed from the following web address:
   http://manuals.dot.state.tx.us:80/dynaweb/colmates/dms/@Generic BookView
2. White sheeting, meeting the requirements of DMS-8300 Type C (High Specific Intensity), shall be used for signs with white background and channelizing devices.
3. Orange sheeting, meeting the requirements of DMS-8300 Type E (Fluorescent Prismatic), shall be used for signs with orange backgrounds.

SIGN LETTERS

1. All sign letters and numbers shall be clear, and open rounded type uppercase alphabet letters as approved by the Federal Highway Administration (FHWA) and as published in the "Standard Highway Sign Design for Texas" manual. Signs, letters and numbers shall be of first class workmanship in accordance with Department Standards and Specifications.

REMOVING OR COVERING

1. When sign messages may be confusing or do not apply, the signs shall be removed or completely covered.
2. Long-term stationary or intermediate stationary signs installed on square metal tubing may be turned away from traffic 90 degrees when the sign message is not applicable. This type of sign support meets the crashworthiness standards regardless of the direction of impact. This technique may not be used for signs installed in the median of divided highways or near any intersections where the sign may be seen from approaching traffic.
3. Signs installed on skids shall not be turned at 90 degree angles to the roadway. These signs should be removed or completely covered when not required.
4. When signs are covered, the material used shall be opaque, such as heavy mil black plastic.
5. Burlap shall NOT be used to cover signs.
6. Duct tape or other adhesive material shall NOT be affixed to a sign face. These materials can damage the retroreflectivity of sign sheeting.
7. Signs shall be removed upon completion of the work.

SIGN SUPPORT WEIGHTS

1. Where sign supports require the use of weights to keep from turning over, the use of sandbags with dry, cohesionless sand is recommended.
2. The sandbags will be tied shut to keep the sand from spilling and to maintain a constant weight.
3. Rock, concrete, iron, steel or other solid objects will not be permitted for use as sign support weights.
4. Sandbags should weigh a minimum of 35 lbs and a maximum of 50 lbs.
5. Sandbags shall be made of a durable material that tears upon vehicular impact.
6. Rubber (such as tire inner tubes) shall NOT be used for sandbags.
7. Rubber ballasts (such as those used with cones or edgeline channelizers) shall NOT be used as sign support weights.
8. Sandbags shall only be placed along or laid over the base supports of the traffic control device and shall not be suspended above ground level or hung with rope, wire, chains or other fasteners. Sandbags shall be placed along the length of the skids to weigh down the sign support.
9. Sandbags shall NOT be placed under the skid and shall not be used to level sign supports placed on slopes.

STANDARD PLANS
Texas Department of Transportation
Traffic Operations Division

BARRICADE AND CONSTRUCTION TEMPORARY SIGN NOTES STANDARD

4 of 12 BC(4)-03

©TxDOT 11-4-02	DN: BAS	CK: GRB	DW: FDN	CK: CAL
REVISIONS	STATE DISTRICT	FEDERAL REGION	FEDERAL AID PROJECT	SHEET
	PHR	6		186
	COUNTY		CONTROL	SECTION	JOB	HIGHWAY
	HIDALGO		0255	08	091	US281

LEVELS DISPLAYED ACC:

1	2	3	4	5	6	7	8	9	10	11	21	31	41	51	61	
17	18	19	20	21	22	23	24	25	26	27	28	29	33	131	132	
33	34	35	51	63	75	81	94	104	142	143	144	154	164	174	184	
496	506	515	525	535	545	556	576	585	596	606	616	626	63			

DISCLAIMER
The use of this standard is governed by the "Texas Engineering Practice Act". No warranty of any kind is made by TxDOT for any purpose whatsoever. TxDOT assumes no responsibility for the conversion of this standard to other formats or for incorrect results or damages resulting from its use.

EXAMPLES OF SKID MOUNTED SIGN SUPPORTS

LONG/INTERMEDIATE TERM STATIONARY - PORTABLE SKID MOUNTED SIGN SUPPORTS □

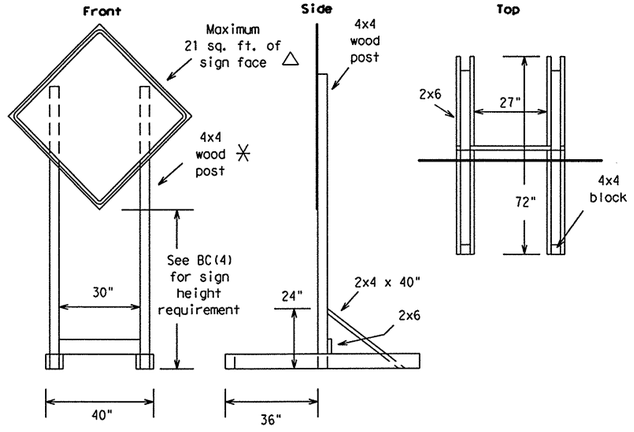

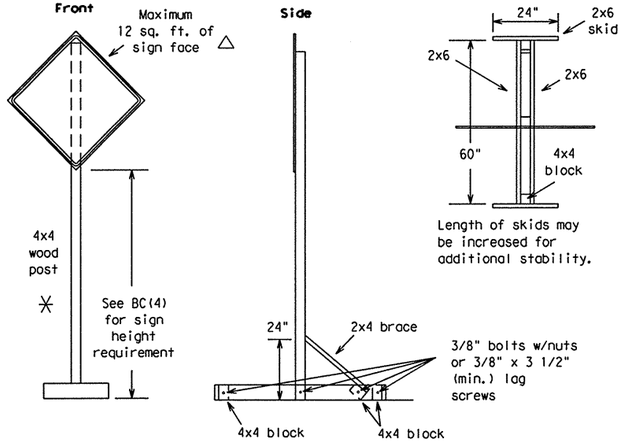

SHORT TERM STATIONARY/SHORT DURATION - PORTABLE SIGN SUPPORTS □

For Daytime use only.
1 Foot Mounting Height

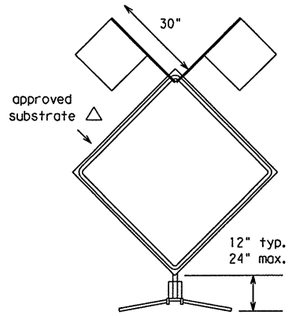

Flags as required by Engineer or as shown on plans

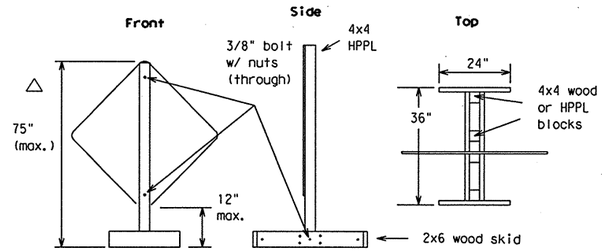

The upright SHALL be made of hollow-profile plastic lumber (HPPL). Wood or metal shall NOT be used.

EXAMPLES OF GROUND MOUNTED SIGN SUPPORTS

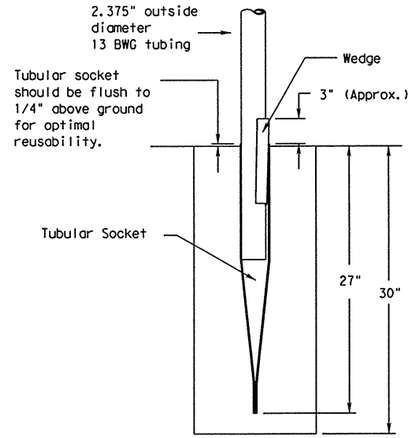

WEDGE ANCHOR SYSTEM WITH THIN-WALL TUBE

The wedge anchor system with thin wall tubing may be used to support up to 10 sq. ft. of sign area.

Where solid rock is encountered at ground level, the foundation shall be a minimum depth of 18 inches. When solid rock is encountered below ground level, the foundation shall extend in the solid rock a minimum depth of 18 inches or provide a minimum foundation depth of 30 inches. If solid rock is encountered, the socket/stub may be reduced in length as required to a min. length of 18 inches. Any material removed from the socket/stub shall be from the bottom and the clearance requirements shown above must still be adhered to. The inner surfaces of the socket/stub must remain free of debris.
Install Wedge Anchor System per manufacturer recommendations.
Attach the sign to the sign post.
Insert the sign post into the socket and align the sign face with the roadway.
Drive the wedge into the socket to secure post. This will leave approximately 3 inches of the wedge exposed.

Supports shall be straight within 1/4 inch per 5 feet of length and shall have a smooth, uniform finish free from defects affecting strength or appearance. Any bolt holes and sheared ends shall be free from burrs.

WING CHANNEL

Lap-splice/base bolted anchor

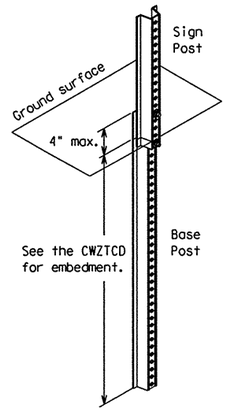

PERFORATED SQUARE METAL TUBING

With Anchor

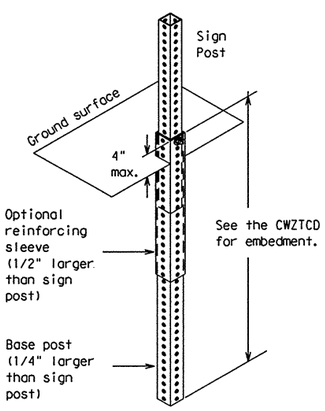

Refer to the CWZTCD and the manufacturer's installation procedure for each type sign support.
The maximum sign square footage shall adhere to the manufacturer's recommendation. Two post installations can be used for larger signs.

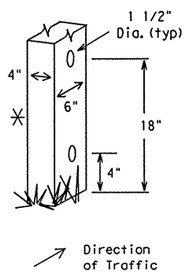

WOOD POST SYSTEM FOR GROUND MOUNTED SIGN SUPPORTS

Nominal Post Size	No. of Posts	Maximum Sq. feet of Sign Face	Minimum Soil Embedment	Drilled Hole(s) Required
4 x 4	1	12	36"	NO
4 x 4	2	21	36"	NO
4 x 6	1	21	36"	YES
4 x 6	2	36	36"	YES

No more than 2 sign posts shall be mounted within a 7 ft. circle.

When project is completed, all sign supports and foundations shall be removed from the project site. This will be considered subsidiary to Item 502.

□ See BC(4) for definition of "Work Duration."

✳ Sign posts MUST be one piece. Splicing will NOT be allowed. Posts shall be painted white.

△ See the CWZTCD for the type of sign substrate that can be used for each approved sign support.

Only pre-qualified products shall be used. A copy of the "Compliant Work Zone Traffic Control Devices List" (CWZTCD) describes pre-qualified products and their sources and may be obtained by contacting:

Standards Engineer
Traffic Operations Division - TE
Texas Department of Transportation
125 East 11th Street
Austin, Texas 78701-2483
Phone (512) 416-3120
Fax (512) 416-3299

Instructions to locate the "CWZTCD" on TxDOT website are:

Start at website - www.dot.state.tx.us
Click on "About TxDOT",
Click on "Functional Organizational Chart",
Click on Traffic Operations Box,
Click on "Compliant Work Zone Traffic Control Devices",
again click on "Compliant Work Zone Traffic Control Devices".
This site is printable.

STANDARD PLANS
Texas Department of Transportation
Traffic Operations Division

BARRICADE AND CONSTRUCTION TYPICAL SIGN SUPPORT STANDARD

5 of 12 BC(5)-03

©TxDOT 11-4-02	DN: JWT	CK: GRB	DN: FDN	CK: CAL
REVISIONS	STATE DISTRICT	FEDERAL REGION	FEDERAL AID PROJECT	SHEET
	PHR	6		187
	COUNTY	CONTROL	SECTION	JOB	HIGHWAY
	HIDALGO	0255	08	091	US 281

105

LEVELS DISPLAYED
1 2 3 4 5 6 7 8 9 10 11 12 13 14 15 16
17 18 19 20 21 22 23 24 25 26 27 28 29 30 31 32
33 34 35 36 37 38 39 40 41 42 43 44 45 46 47 48
49 50 51 52 53 54 55 56 57 58 59 60 61 62 63

ACC:

DISCLAIMER
The use of this standard is governed by the "Texas Engineering Practice Act". No warranty of any kind is made by TxDOT for any purpose whatsoever. TxDOT assumes no responsibility for the conversion of this standard to other formats or for incorrect results or damages resulting from its use.

ACC:

LEVELS DISPLAYED

1	2	3	4	5	6	7	8	9	10	11	12	13	14	15	16
17	18	19	20	21	22	23	24	25	26	27	28	29	30	31	32
33	34	35	36	37	38	39	40	41	42	43	44	45	46	47	48
49	50	51	52	53	54	55	56	57	58	59	60	61	62	63	

PORTABLE CHANGEABLE MESSAGE SIGNS

1. The Engineer/Inspector shall approve all messages used on portable changeable message signs (PCMS).
2. PCMS placed on the shoulder or within the R-O-W, but are not behind a concrete traffic barrier shall have a minimum of four plastic drums placed perpendicular to traffic, on the upstream side of the PCMS.
3. Messages on PCMS should contain no more than 8 words (four to eight characters per word), not including simple words such as "TO," "FOR," "AT," etc.
4. Messages should consist of a single phase, or two phases that alternate. Three-phase messages are not allowed.
5. Each phase of the message should convey a single thought.
6. Use the word "EXIT" to refer to an exit ramp on a freeway; i.e., "EXIT CLOSED." Do not use the term "RAMP."
7. Always use the route or interstate designation (IH, US, SH, FM) along with the number when referring to a roadway.
8. Specify the actual days of the week; e.g., TUES THROUGH FRI or TUES-FRI in the coming week that work activity will occur.
9. The message term "WEEKEND" should be used only if the work is to start on Saturday morning and end by Sunday evening at midnight. Actual days and hours of work should be displayed on the PCMS if work is to begin on Friday evening and/or continue into Monday morning.
10. The Engineer/Inspector may select one of two options which are available for displaying a two-phase message on a PCMS. Each phase may be displayed for either four seconds each or for two seconds each.
11. Do not "flash" messages or words included in a message. The message should be steady burn or continuous while displayed.
12. Do not present redundant information on a two-phase message; i.e., keeping two lines of the message the same and changing the third line.
13. Do not use the words "Danger" or "Caution" in message.
14. Do not display the message "LANES SHIFT LEFT" or "LANES SHIFT RIGHT" on a PCMS. Drivers do not understand the message.
15. Do not display messages that scroll horizontally or vertically across the face of the sign.
16. The following table lists abbreviated words and two-word phrases that are acceptable for use on a PCMS. Both words in a phrase must be displayed together. Words or phrases not on this list should not be abbreviated.

Word or Phrase	Abbreviation	Word or Phrase	Abbreviation
Access Road	ACCES RD	Miles	MI
Air Quality	AIR QLTY	Miles Per Hour	MPH
Avenue	AVE	Time Minutes	Time MIN
Best Route	BEST RTE	Monday	MON
Boulevard	BLVD	Normal	NORM
Bridge	BRDG	North	N
Cannot	CANT	Parking	PKING
Center	CNTR	Parking Lot	PRK LOT
Construction Ahead	CONST AHEAD	Road	RD
Detour Route	DETOUR RTE	Right Lane	RGT LN
East	E	Saturday	SAT
Emergency	EMER	Service Road	SERV RD
Emergency Vehicle	EMER VEH	Shoulder	SHLDR
Entrance, Enter	ENT	Slippery	SLIP
Express Lanes	EXP LANE	South	S
Expressway	EXPWY	Speed	SPD
Distance Feet	Distance FT	Street	ST
Fog Ahead	FOG AHD	Sunday	SUN
Freeway	FRWY, FWY	Telephone	PHONE
Freeway Blocked	FWY BLKD	Thursday	THURS
Friday	FRI	To Downtown	TO DWNTN
Hazardous Driving	HAZ DRIVING	Traffic	TRAF
Highway	HWY	Travelers	TRVLRS
Hours	HR	Tuesday	TUES
Information	INFO	Turnpike	Name TRNPK
Left	LFT	Upper Level	UPPR LVL
Left Lane	LFT LN	Warning	WARN
Lane Closed	LN CLSD	Wednesday	WED
Lower Level	LOWR LVL	Weight Limit	WT LIMIT
Maintenance	MAINT	Wet Pavement	WET PVMT
Roadway designation #	IH-number, US-number, SH-number, FM-number	West	W

WHEN NOT IN USE, REMOVE THE PCMS FROM THE RIGHT-OF-WAY OR PLACE THE PCMS BEHIND CONCRETE TRAFFIC BARRIER.

TYPICAL FLASHING ARROW PANEL

1. The Flashing Arrow Panel should be used for all lane closures on multi-lane roadways, or slow moving maintenance or construction activities on the travel lanes.
2. Flashing Arrow Panels should not be used on two-lane, two-way roadways, detours, diversions or work on shoulders unless the "CAUTION" display (see detail below) is used.
3. The Engineer/Inspector shall choose all appropriate signs, barricades and/or other traffic control devices that should be used in conjunction with the Flashing Arrow Panel.
4. The Flashing Arrow Panel should be able to display the following symbols:

Flashing RIGHT (LEFT) ARROW

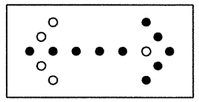

Flashing DOUBLE ARROW

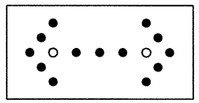

Flashing CAUTION

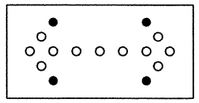

5. The "CAUTION" display consists of four corner lamps flashing simultaneously.
6. The straight line caution display is NOT ALLOWED.
7. The Flashing Arrow Panel shall be capable of minimum 50 percent dimming from rated lamp voltage. The flashing rate of the lamps shall not be less than 25 nor more than 40 flashes per minute.
8. Minimum lamp "on time" shall be approximately 50 percent for the flashing arrow and equal intervals of 25 percent for each sequential phase of the flashing chevron.
9. The sequential arrow display is NOT ALLOWED.
10. The flashing arrow display is the TxDOT standard; however, the sequential Chevron display may be used during daylight operations.

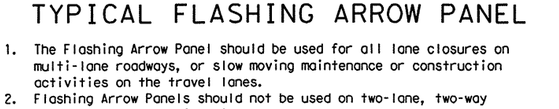

11. The Flashing Arrow Panel shall be mounted on a vehicle, trailer or other suitable support.
12. A Flashing Arrow Panel SHOULD NOT BE USED to laterally shift all lanes of traffic on a multi-lane roadway at once.

REQUIREMENTS

TYPE	MINIMUM SIZE	MINIMUM NUMBER OF PANEL LAMPS	MINIMUM VISIBILITY DISTANCE
B	30 x 60	13	3/4 mile
C	48 x 96	15	1 mile

ATTENTION: Flashing Arrow Panels shall be equipped with automatic dimming devices.

WHEN NOT IN USE, REMOVE THE ARROW PANEL FROM THE RIGHT-OF-WAY OR PLACE THE ARROW PANEL BEHIND CONCRETE TRAFFIC BARRIER.

TYPE C DELINEATORS FOR CONCRETE TRAFFIC BARRIER AND ATTENUATORS

1. Type C Delineators shall be prequalified, and conform to the color and reflectivity requirements of DMS-8600. A list of prequalified Type C Delineators can be found at the following Web site: ftp://ftp.dot.state.tx.us/pub/txdot-info/gsd/pdf/dms8600preq.pdf.
2. Color of delineators shall be as specified in the "Texas Manual on Uniform Traffic Control Devices" (TMUTCD). The cost of the Type C Delineators shall be considered subsidiary to Item 502.

CONCRETE TRAFFIC BARRIER (CTB)

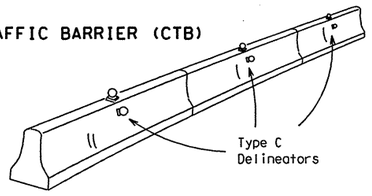

3. Two (2) Type C Delineators should be mounted on each section of CTB in approximately the midsection of the CTB. The Type C Delineator on the side of the CTB shall be installed directly below the Type C Delineator mounted on top of the CTB.
4. Maximum spacing of Type C Delineators is 40 feet.
5. Pavement markers or temporary flexible-reflective roadway marker tabs shall NOT be used as CTB delineation.
6. Attach Type C Delineators on CTB as per manufacturer's recommendations.
7. Missing or damaged Type C Delineators shall be replaced as directed by the Engineer.

LOW PROFILE CONCRETE BARRIER (LPCB)

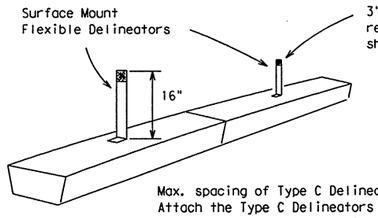

Max. spacing of Type C Delineators is 20 feet. Attach the Type C Delineators as per manufacturer's recommendations.

DELINEATION OF END TREATMENTS

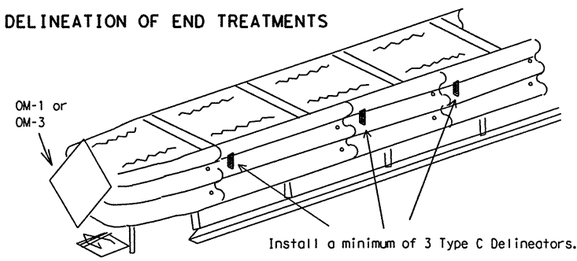

	APPROACHING TRAFFIC	
	BOTH SIDES	ONE SIDE
DELINEATION	OM-1	OM-3 or Vertical Panel

Attach the Type C Delineators as per manufacturer's recommendations.

TRUCK-MOUNTED ATTENUATORS

1. Truck-mounted attenuators (TMA) used on TxDOT facilities must meet the requirements outlined in the National Cooperative Highway Research Report No. 350 (NCHRP 350).
2. Refer to the CWZTCD for the requirements of Level 2 or Level 3 TMAs.
3. Refer to the dates shown in the CWZTCD to ensure that the TMA meets the age requirements and the crashworthiness criteria established by the Federal Highway Administration (FHWA) for TMAs.
4. Refer to the CWZTCD for a list of approved TMAs.
5. TMAs are required on freeways unless otherwise noted in the plans.
6. A TMA should be used anytime that it can be positioned approximately 100 feet or less in advance of the area of crew exposure without adversely affecting the work performance.
7. The only reason a TMA should not be required is when a work area is spread down the roadway and the work crew is an extended distance from the TMA.

WARNING LIGHTS

1. Warning lights shall meet the requirements of the TMUTCD.
2. Warning lights shall NOT be installed on barricades.
3. Type A-Low Intensity Flashing Warning Lights are commonly used with signs. They are intended to warn of an approaching potentially hazardous area. Their use shall be as indicated on this sheet and/or other sheets of the plans by the designation " FL". The Type A Warning Lights shall not be used with signs manufactured with Type E Sheeting (Fluorescent Prismatic) meeting the requirements of Departmental Material Specification DMS-8300.
4. Type-C Steady Burn Lights are intended to be used in a series for delineation to supplement other traffic control devices. Their use shall be as indicated on this sheet and/or other sheets of the plans by the designation " SB ".
5. The Engineer/Inspector or the plans shall specify the location and type of warning lights to be installed on the traffic control devices.
6. When required by the Engineer, the Contractor shall furnish a copy of the warning lights certification. The warning light manufacturer will certify the warning lights meet the requirements of the latest ITE Purchase Specifications for Flashing and Steady-Burn Warning Lights.

END TREATMENTS FOR CTB'S USED IN WORK ZONES

End treatments used on CTB's in work zones shall meet crashworthy standards as defined in the National Cooperative Highway Research Report 350. Refer to the CWZTCD List for approved end treatments and manufacturers.

Only pre-qualified products shall be used. A copy of the "Compliant Work Zone Traffic Control Devices List" (CWZTCD) describes pre-qualified products and their sources and may be obtained by contacting:

Standards Engineer
Traffic Operations Division - TE
Texas Department of Transportation
125 East 11th Street
Austin, Texas 78701-2483
Phone (512) 416-3120
Fax (512) 416-3299

Instructions to locate the "CWZTCD" on TxDOT website are:

Start at website - www.dot.state.tx.us
Click on "About TxDOT",
Click on "Functional Organizational Chart",
Click on Traffic Operations Box,
Click on "Compliant Work Zone Traffic Control Devices",
again click on "Compliant Work Zone Traffic Control Devices".
This site is printable.

STANDARD PLANS
Texas Department of Transportation
Traffic Operations Division

BARRICADE AND CONSTRUCTION ARROW & MESSAGE SIGNS, REFLECTORS & WARNING LIGHT STANDARD

6 of 12 BC(6)-03

©TxDOT 11-4-02	DN: BAS	CK: GRB	DW: FDN	CK: CAL
REVISIONS	STATE DISTRICT / FEDERAL REGION	FEDERAL AID PROJECT		SHEET
	PHR 6			188
	COUNTY	CONTROL	SECTION	JOB	HIGHWAY
	HIDALGO	0255	08	091	US 281

DISCLAIMER
The use of this standard is governed by the "Texas Engineering Practice Act". No warranty of any kind is made by TxDOT for any purpose whatsoever. TxDOT assumes no responsibility for the conversion of this standard to other formats or for incorrect results or damages resulting from its use.

LEVELS DISPLAYED / ACC:

1	2	3	4	5	6	7	8	9	10	11	12	13	14	15	16
17	18	19	20	21	22	23	24	25	26	27	28	29	30	31	32
33	34	35	36	37	38	39	40	41	42	43	44	45	46	47	48
49	50	51	52	53	54	55	56	57	58	59	60	61	62	63	

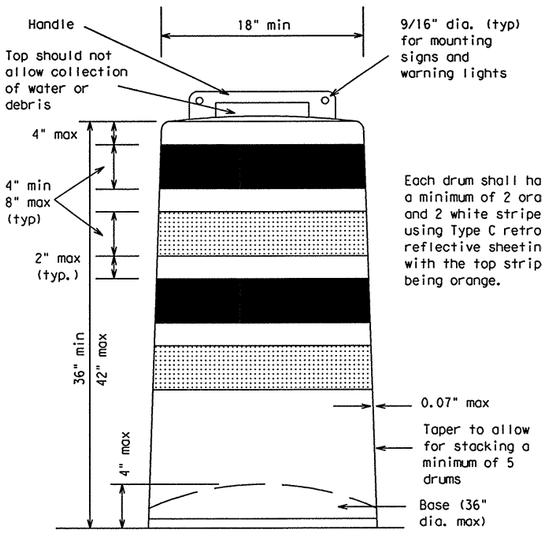

GENERAL NOTES

1. Drums and all related items shall comply with the requirements of the current version of the "Texas Manual on Uniform Traffic Control Devices" (TMUTCD) and the "Compliant Work Zone Traffic Control Devices List" (CWZTCD).
2. Drums, bases, and related materials shall exhibit good workmanship and shall be free from objectionable marks or defects that would adversely affect their appearance or serviceability.
3. ⚠1 The Contractor shall have a maximum of 24 hours to replace any plastic drums or other traffic control devices identified for replacement by the Engineer/Inspector. The replacement device must be an approved device.

Prequalified plastic drums shall meet the following requirements:

GENERAL DESIGN REQUIREMENTS

1. Plastic drums shall be a two-piece design; the "body" of the drum shall be the top portion and the "base" shall be the bottom.
2. The body and base shall lock together in such a manner that the body separates from the base when impacted by a vehicle traveling at a speed of 20 MPH or greater but prevents accidental separation due to normal handling and/or air turbulence created by passing vehicles.
3. Plastic drums shall be constructed of lightweight flexible, and deformable materials. The Contractor shall NOT use metal drums or single piece plastic drums as channelization devices or sign supports.
4. Drums shall present a profile that is a minimum of 18 inches in width at the 36 inch height when viewed from any direction. The height of drum unit (body installed on base) shall be a minimum of 36 inches and a maximum of 42 inches.
5. The top of the drum shall have a built-in handle for easy pickup and shall be designed to drain water and not collect debris. The handle shall have a minimum of two widely spaced 9/16 inch diameter holes to allow attachment of a warning light, delineator reflector unit or non-plywood sign.
6. The exterior of the drum body shall have a minimum of four alternating orange and white retroreflective circumferential stripes not less than 4 inches nor greater than 8 inches in width. Any non-reflectorized space between any two adjacent stripes shall not exceed 2 inches in width.
7. Bases shall have a maximum width of 36 inches, a maximum height of 4 inches, and a minimum of two footholds of sufficient size to allow base to be held down while separating the drum body from the base.
8. Plastic drums shall be constructed of ultra-violet stabilized, orange, high-density polyethylene (HDPE) or other approved material.
9. Drum body shall have a minimum unballasted weight of 7.7 lbs. and maximum unballasted weight of 11 lbs. The wall of the drum body shall be a minimum of 0.07 inch in thickness. Weight of any drum supplied shall not vary more than 0.5 lb. from that of the prequalified sample.
10. Drum and base shall be marked with manufacturer's name and model number.

RETROREFLECTIVE SHEETING

1. The stripes used on drums shall be constructed of sheeting meeting the color and retroreflectivity requirements of Departmental Materials Specification DMS-8300, "Flat Surface Reflective Sheeting." High Specific Intensity (Type C) retro-reflective sheeting shall be supplied unless otherwise specified in the plans.
2. The sheeting shall be suitable for use on and shall adhere to the drum surface such that, upon vehicular impact, the sheeting shall remain adhered in-place and exhibit no delaminating, checking, cracking, or loss of retroreflectivity other than that loss due to abrasion of the sheeting surface.

BALLAST

1. Unballasted bases shall be large enough to hold up to 50 lbs. of sand. This base, when filled with the ballast material, should weigh between 35 lbs (minimum) and 50 lbs (maximum). The ballast may be sand in one to three sandbags separate from the base, sand in a sand-filled plastic base, or other ballasting devices as approved by the Engineer. Stacking of sandbags will be allowed, however height of sandbags above pavement surface may not exceed 12 inches.
2. Bases with built-in ballast shall weigh between 40 lbs. and 50 lbs. Built-in ballast can be constructed of an integral crumb rubber base or a solid rubber base.
3. The ballast shall not be heavy objects, water, or any material that would become hazardous to motorists, pedestrians, or workers when the drum is struck by a vehicle.
4. When used in regions susceptible to freezing, drums shall have drainage holes in the bottoms so that water will not collect and freeze becoming a hazard when struck by a vehicle.
5. Ballast shall not be placed on top of drums.
6. Adhesives may be used to secure base of drums to pavement.

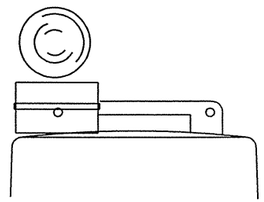

Type C Warning Light or approved substitute mounted adjacent to the travel way.

WARNING LIGHTS AND DELINEATORS MOUNTED ON PLASTIC DRUMS

1. Type A flashing warning lights are intended to warn drivers that they are approaching or are in a potentially hazardous area.
2. Type A flashing warning lights are not intended for delineation and shall not be used in a series.
3. Type C steady-burn warning lights are intended to be used in a series to delineate the edge of the travel lane on detours, on lane changes, on lane closures, and on other similar conditions.
4. Type A and Type C warning lights shall be installed at locations as detailed on other sheets in the plans.
5. Warning lights shall not be installed on a drum that has a sign, chevron or vertical panel.
6. Type A Class 1, Type A Class 2, or Type B Reflector Units (D & OM Standard) may be attached to drums to delineate the intended vehicular path. The color of the reflector unit shall correspond to the pavement marking it is supplementing or for which it is substituting (left edgeline-yellow or right edgeline-white). The reflective unit shall be attached to the handle of the drum using the mounting hole nearest the travel lane and shall be aligned perpendicular to approaching traffic.
7. Delineators may be used as directed by the Engineer. Delineators may not be used as a substitute for warning lights.

WARNING REFLECTORS MOUNTED ON PLASTIC DRUMS AS A SUBSTITUTE FOR TYPE C WARNING LIGHTS

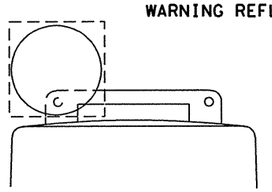

Warning reflector may be round or square.
Must have a reflective surface
area of at least 30 square inches

1. A warning reflector or approved substitute may be mounted on a plastic drum as a substitute for a Type C, steady burn warning light at the discretion of the Contractor unless otherwise noted in the plans.
2. The warning reflector shall be manufactured using a sign substrate approved for use with plastic drums listed on the CWZTCD.
3. The warning reflector shall have a minimum retroreflective surface area (one-side) of 30 square inches.
4. Round reflectors shall be fully reflectorized, including the area where attached to the drum.
5. Square substrates must have a minimum of 30 square inches of reflectorized sheeting. They do not have to be reflectorized where it attaches to the drum.
6. The side of the warning reflector facing approaching traffic shall have sheeting meeting the color and retroreflectivity requirements for DMS 8300-Type D (Non-fluorescent Prismatic).
7. When used near two-way traffic, both sides of the warning reflector shall be reflectorized.
8. The warning reflector should be mounted on the side of the handle nearest approaching traffic.

TYPICAL DETAIL OF LANE CLOSURE USING PLASTIC DRUMS AS CHANNELIZING DEVICES

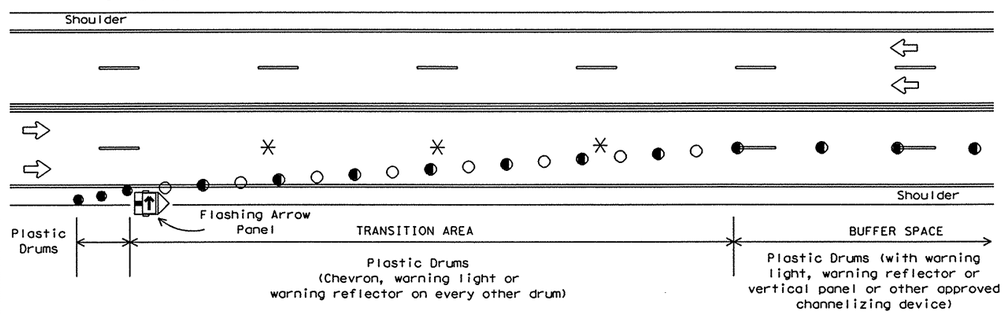

Provide adequate sight distance when placing lane closures. Do not place lane closures in vertical or horizontal curves.
See BC(8) for table showing the spacing of channelizing devices in the taper and tangent section.

✳ NOTE: Lane lines shall be removed when the lane closure occupies a location for longer than 2 weeks.

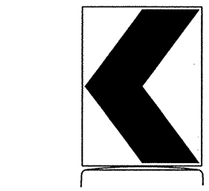

18" x 24" Sign
(Maximum Sign Dimension)
Chevron CW1-8, Driveway sign D70a, Keep Right R4 series or other signs as approved by Engineer

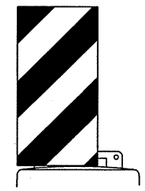

12" x 24" Vertical Panel mount with diagonals sloping down towards travel way

Plywood, Aluminum or Metal sign substrates shall NOT be used on plastic drums

SIGNS, CHEVRONS, AND VERTICAL PANELS MOUNTED ON PLASTIC DRUMS

1. Signs used on plastic drums shall be manufactured using substrates listed on the CWZTCD.
2. Chevrons and other work zone signs with an orange background shall be manufactured with Type E (Fluorescent Prismatic) sheeting meeting the color and retroreflectivity requirements of DMS-8300, "Flat Surface Reflective Sheeting," unless otherwise specified in the plans.
3. Vertical Panels shall be manufactured with orange and white sheeting meeting the requirements of DMS-8300 Type C (High Specific Intensity). Diagonal stripes on Vertical Panels shall slope down toward the intended traveled lane.
4. Other sign messages (text or symbolic) may be used as approved by the Engineer. Sign dimensions shall not exceed 18 inches in width or 24 inches in height.
5. Signs shall be installed using a 1/2 inch bolt (nominal) and nut, two washers, and one locking washer for each connection.
6. Mounting bolts and nuts shall be fully engaged and adequately torqued. Bolts should not extend more than 1/2 inch beyond nuts.

Only pre-qualified products shall be used. A copy of the "Compliant Work Zone Traffic Control Devices List" (CWZTCD) describes pre-qualified products and their sources and may be obtained by contacting:

Standards Engineer
Traffic Operations Division - TE
Texas Department of Transportation
125 East 11th Street
Austin, Texas 78701-2483
Phone (512) 416-3120
Fax (512) 416-3299

Instructions to locate the "CWZTCD" on TxDOT website are:

Start at website - www.dot.state.tx.us
Click on "About TxDOT",
Click on "Functional Organizational Chart",
Click on Traffic Operations Box,
Click on "Compliant Work Zone Traffic Control Devices",
again click on "Compliant Work Zone Traffic Control Devices".
This site is printable.

4/03 Revision

⚠1 Revised note

STANDARD PLANS
Texas Department of Transportation
Traffic Operations Division

BARRICADE AND CONSTRUCTION PLASTIC DRUM STANDARD

7 of 12 BC(7)-03

© TxDOT 11-4-02	DN: BAS	CK: GRB	DW: FDN	CK: CAL

REVISIONS	STATE DISTRICT	FEDERAL REGION	FEDERAL AID PROJECT	SHEET
4-03	PHR	6		189

COUNTY	CONTROL	SECTION	JOB	HIGHWAY
HIDALGO	0255	08	091	US 281

DISCLAIMER
The use of this standard is governed by the "Texas Engineering Practice Act". No warranty of any kind is made by TxDOT for any purpose whatsoever. TxDOT assumes no responsibility for the conversion of this standard to other formats or for incorrect results or damages resulting from its use.

CHANNELIZING DEVICES

VERTICAL PANELS

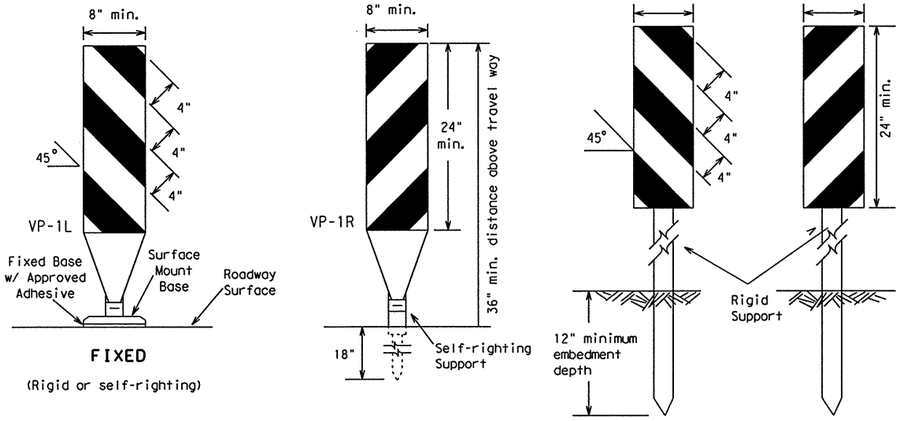

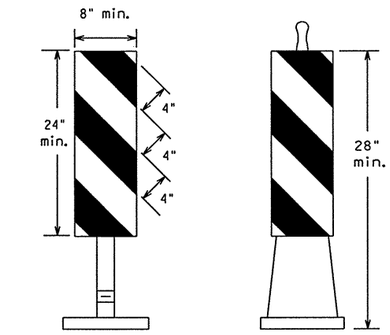

1. Vertical Panels (VP's) are normally used to channelize traffic or divide opposing lanes of traffic.
2. VP's may be used in daytime or nighttime situations. They may be used at the edge of shoulder drop-offs and other areas such as lane transitions where positive daytime and nighttime delineation is required. The Engineer/Inspector shall refer to the Roadway Design Manual Appendix B "Treatment of Pavement Drop-offs in Work Zones" for additional guidelines on the use of VP's for drop-offs.
3. VP's should be mounted back to back if used at the edge of cuts adjacent to two-way two lane roadways. Stripes are to be reflective orange and reflective white and should always slope downward toward the travel lane.
4. VP's used on expressways, freeways, and on high speed roadways shall have a minimum of 2 square feet of retroreflective area facing traffic.
5. Self-righting supports are available with portable base. See "Compliant Work Zone Traffic Control Devices List" (CWZTCD).
6. Sheeting for the VP's shall be retroreflective Type C (High Specific Intensity) conforming to Departmental Material Specification DMS-8300, unless noted otherwise.

CHEVRONS

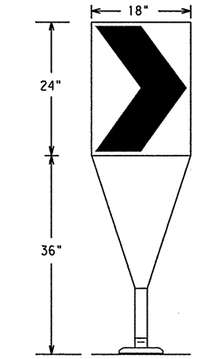

Fixed Base w/ Approved Adhesive (Driveable Base, or Flexible Support can be used)

1. The chevron shall be a vertical rectangle with a minimum size of 12 by 18 inches.
2. Chevrons are intended to give notice of a sharp change of alignment with the direction of travel and provide additional emphasis and guidance for vehicle operators with regard to changes in horizontal alignment of the roadway.
3. Chevrons, when used, shall be erected on the outside of a sharp curve or turn, or on the far side of an intersection. They shall be in line with and at right angles to approaching traffic. Spacing should be such that the motorist always has three in view, until the change in alignment eliminates its need.
4. To be effective, the chevron should be visible for at least 500 feet.
5. Chevrons shall be orange with a black non-reflective legend. Sheeting for the chevron shall be retroreflective Type E (Fluorescent Prismatic) conforming to Departmental Material Specification DMS-8300, unless noted otherwise. The legend shall be black vinyl non-reflective decal sheeting meeting the requirements of DMS-8320.

GENERAL NOTES:

1. Work Zone channelizing devices illustrated on this sheet may be installed in close proximity to traffic and are suitable for use on high or low speed roadways. The Engineer/Inspector shall ensure that spacing and placement is uniform and in accordance with the "Texas Manual on Uniform Traffic Control Devices" (TMUTCD).
2. Channelizing devices shown on this sheet may have a driveable, fixed or portable base. The requirement for self-righting channelizing devices must be specified in the General Notes or other plan sheets.
3. Channelizing devices on self-righting supports should be used in work zone areas where channelizing devices are frequently impacted by errant vehicles or vehicle related wind gusts making alignment of the channelizing devices difficult to maintain. Locations of these devices shall be detailed elsewhere in the plans. These devices shall conform to the TMUTCD and the "Compliant Work Zone Traffic Control Devices List" (CWZTCD).
4. The contractor shall maintain devices in a clean condition and replace damaged, non-reflective, faded, or broken devices and bases as required by the Engineer/Inspector. The Contractor shall be required to maintain proper device spacing and alignment.
5. Portable bases shall be fabricated from virgin and/or recycled rubber. The portable bases shall weigh approximately 35 lbs.
6. Pavement surfaces shall be prepared in a manner that ensures proper bonding between the adhesives, the fixed mount bases and the pavement surface. Adhesives shall be prepared and applied according to the manufacturer's recommendations.
7. The installation and removal of channelizing devices shall not cause detrimental effects to the final pavement surfaces, including pavement surface discoloration or surface integrity. Driveable bases shall not be permitted on final pavement surfaces. The Engineer/Inspector shall approve all application and removal procedures of fixed bases.
8. Examples on this sheet are the most commonly used channelizing devices in work zones. For other devices, refer to the CWZTCD.

Posted Speed	Formula	Minimum Desirable Taper Lengths ** 10' Offset	11' Offset	12' Offset	Suggested Maximum Spacing of Channelizing Devices On a Taper	On a Tangent
30	$L=\frac{WS^2}{60}$	150'	165'	180'	30'	60'-75'
35		205'	225'	245'	35'	70'-90'
40		265'	295'	320'	40'	80'-100'
45	L=WS	450'	495'	540'	45'	90'-110'
50		500'	550'	600'	50'	100'-125'
55		550'	605'	660'	55'	110'-140'
60		600'	660'	720'	60'	120'-150'
65		650'	715'	780'	65'	130'-165'
70		700'	770'	840'	70'	140'-175'
75		750'	825'	900'	75'	150'-185'

**Taper lengths have been rounded off.
L=Length of Taper (FT.) W=Width of Offset (FT.) S=Posted Speed (MPH)

Only pre-qualified products shall be used. A copy of the "Compliant Work Zone Traffic Control Devices List" (CWZTCD) describes pre-qualified products and their sources and may be obtained by contacting:

Standards Engineer
Traffic Operations Division - TE
Texas Department of Transportation
125 East 11th Street
Austin, Texas 78701-2483
Phone (512) 416-3120
Fax (512) 416-3299

Instructions to locate the "CWZTCD" on TxDOT website are:

Start at website - www.dot.state.tx.us
Click on "About TxDOT",
Click on "Functional Organizational Chart",
Click on Traffic Operations Box,
Click on "Compliant Work Zone Traffic Control Devices",
again click on "Compliant Work Zone Traffic Control Devices".
This site is printable.

OPPOSING TRAFFIC LANE DIVIDERS (OTLD)

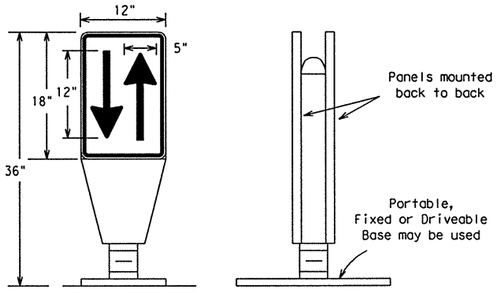

1. Opposing Traffic Lane Dividers (OTLD) are delineation devices designed to convert a normal one-way roadway section to two-way operation. OTLD's are used on temporary centerlines. The upward and downward arrows on the sign's face indicate the direction of traffic on either side of the divider. The base is secured to the pavement with an adhesive or rubber weight to minimize movement caused by a vehicle impact or wind gust. The OTLD is placed on a flexible self-righting support that returns to an upright position when impacted by a vehicle.
2. The OTLD may be used in combination with simple tubular markers or vertical panels (vp's).
3. Spacing between the OTLD shall not exceed 500 feet. Tubular markers or vp's placed between the OTLD's should not exceed 100 foot spacing.
4. The OTLD shall be orange with a black non-reflective legend. Sheeting for the OTLD shall be retroreflective Type E (Fluorescent Prismatic) conforming to Departmental Material Specification DMS-8300, unless noted otherwise. The legend shall be black vinyl non-reflective decal sheeting meeting the requirements of DMS-8320.

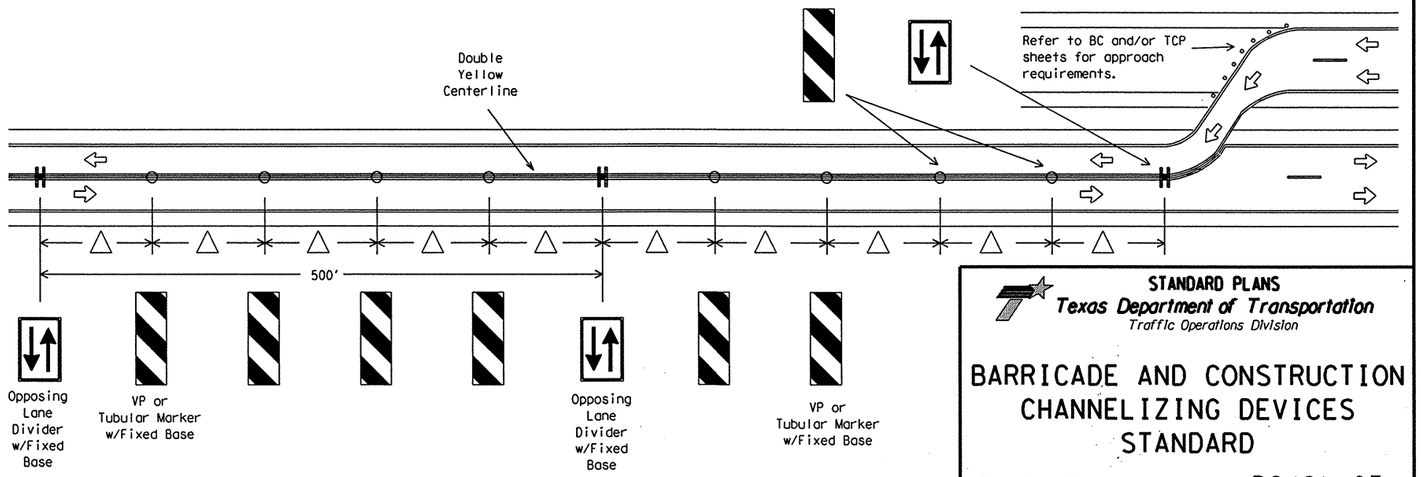

△ Spacing between the VP's or tubular markers shall not exceed 100 feet. On roadways with speeds less than 45 MPH, spacing between the tubular markers or VP's shall be as shown on the channelizing spacing table shown on this page. If the table shows spacing greater than 100 feet based on the roadway speed, then use a maximum of 100 feet spacing between the tubular markers or VP's. Every fifth channelizing device shall be an OTLD. Spacing between the OTLD shall not exceed 500 feet. When using this type of traffic control set-up, the OTLD, VP's or tubular markers shall have the fixed base with approved adhesive per the manufacturer's recommendations.

STANDARD PLANS
Texas Department of Transportation
Traffic Operations Division

BARRICADE AND CONSTRUCTION CHANNELIZING DEVICES STANDARD

8 of 12 BC(8)-03

©TxDOT 11-4-02	DW: BAS	CK: GRB	DW: FDN	CK: CAL
REVISIONS	STATE DISTRICT: PHR	FEDERAL REGION: 6	FEDERAL AID PROJECT	SHEET: 190
	COUNTY: HIDALGO	CONTROL: 0255	SECTION: 08	JOB: 091	HIGHWAY: US 281

108

LEVELS DISPLAYED
1 2 3 4 5 6 7 8 9 10 11 12 13 14 15 16
17 18 19 20 21 22 23 24 25 26 27 28 29 30 31 32
33 34 35 36 37 38 39 40 41 42 43 44 45 46 47 48
49 50 51 52 53 54 55 56 57 58 59 60 61 62 63

ACC:

DISCLAIMER
The use of this standard is governed by the "Texas Engineering Practice Act". No warranty of any kind is made by TxDOT for any purpose whatsoever. TxDOT assumes no responsibility for the conversion of this standard to other formats or for incorrect results or damages resulting from its use.

TYPE III BARRICADES

1. Refer to the Compliant Work Zone Traffic Control Devices List (CWZTCD) for details of the Type III Barricades and a list of all materials used in the construction of Type III Baricades.
2. Type III Barricades shall be used at each end of construction projects closed to all traffic.
3. Barricades extending across a roadway should have stripes that slope downward in the direction toward which traffic must turn in detouring. When both right and left turns are provided, the chevron striping may slope downward in both directions from the center of the barricade.
4. Striping of rails, for the right side of the roadway, should slope downward to the left. For the left side of the roadway, striping should slope downward to the right.
5. Identification markings may be shown only on the back of the barricade rails. The maximum height of letters and/or company logos used for identification shall be 1".
6. Barricades shall not be placed parallel to traffic unless an adequate clear zone is provided.
7. Warning lights shall NOT be installed on barricades.
8. Where barricades require the use of weights to keep from turning over, the use of sandbags with dry, cohesionless sand is recommended. The sandbags will be tied shut to keep the sand from spilling and to maintain a constant weight. Rock, concrete, iron, steel or other solid objects will NOT be permitted. Sandbags should weigh a minimum of 35 lbs and a maximum of 50 lbs. Sandbags shall be made of a durable material that tears upon vehicular impact. Rubber (such as tire inner tubes) shall not be used for sandbags. Sandbags shall only be placed along or upon the base supports of the device and shall not be suspended above ground level or hung with rope, wire, chains or other fasteners.

Barricades shall NOT be used as a sign support.

TYPICAL STRIPING DETAIL FOR BARRICADE RAIL

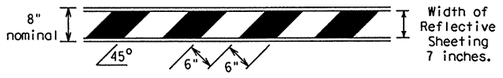

TYPICAL PANEL DETAIL FOR SKID OR POST TYPE BARRICADES

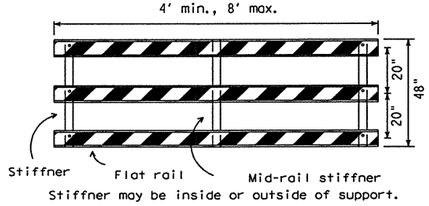

Stiffner may be inside or outside of support.

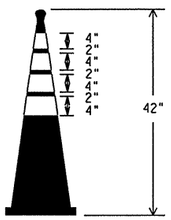

EDGELINE CHANNELIZER

1. This device is intended only for use in place of a vertical panel to channelize traffic by indicating the edge of the travel lane.
2. This device shall not be used to separate lanes of traffic (opposing or otherwise) or warn of objects.
3. This device is based on a 42 inch, two-piece cone with an alternate striping pattern: four 4 inch retroreflective bands, with an approximate 2 inch gap between bands. The color of the band should correspond to the color of the edgeline (yellow for left edgeline, white for right edgeline) for which the device is substituted or for which it supplements. The reflectorized bands shall be retroreflective Type C (High Specific Intensity) conforming to Departmental Material Specification DMS-8300, unless otherwise noted.
4. The base must weigh a minimum of 30 lbs.

LEVELS DISPLAYED

1	2	3	4	5	6	7	8	9	10	11	12	13	14	15	16
17	18	19	20	21	22	23	24	25	26	27	28	29	30	31	32
33	34	35	36	37	38	39	40	41	42	43	44	45	46	47	48
49	50	51	52	53	54	55	56	57	58	59	60	61	62	63	

ACC:

TYPE III BARRICADE (POST AND SKID) TYPICAL APPLICATION

Each roadway of a divided highway shall be barricaded in the same manner.

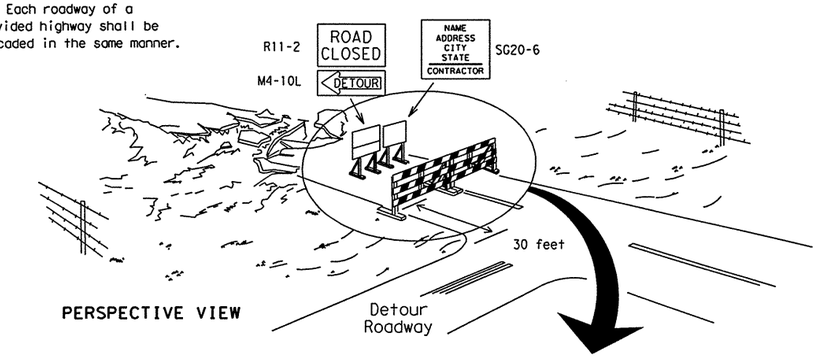

PERSPECTIVE VIEW

The three rails on Type III barricades shall be reflectorized orange and reflective white stripes on one side facing one-way traffic and both sides for two-way traffic.
Barricade striping should slant downward in the direction of detour.

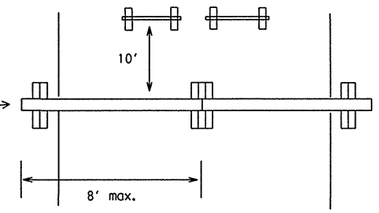

PLAN VIEW

1. Signs should be mounted on independent supports at a 7 foot mounting height in center of roadway. The signs should be a minimum of 10 feet behind Type III Barricades.
2. Advance signing shall be as specified elsewhere in the plans.

CULVERT WIDENING OR OTHER ISOLATED WORK WITHIN THE PROJECT LIMITS

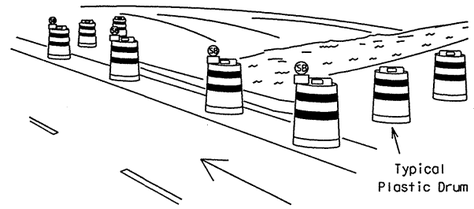

PERSPECTIVE VIEW

1. Where positive redirectional capability is provided, drums may be omitted.
2. Plastic construction fencing may be used with drums for safety as required in the plans.
3. Vertical Panels on flexible support may be substituted for drums when the shoulder width is less than 4 feet.
4. When the shoulder width is greater than 12 feet, steady-burn lights may be omitted if drums are used.
5. Drums must extend the length of the culvert widening.

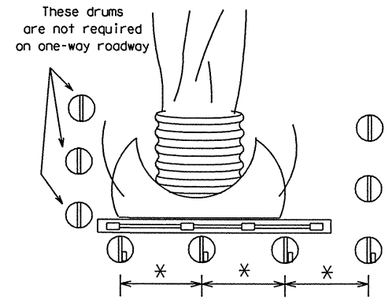

PLAN VIEW

Legend
- Plastic drum
- Plastic drum with steady burn light

Only pre-qualified products shall be used. A copy of the "Compliant Work Zone Traffic Control Devices List" (CWZTCD) describes pre-qualified products and their sources and may be obtained by contacting:

Standards Engineer
Traffic Operations Division - TE
Texas Department of Transportation
125 East 11th Street
Austin, Texas 78701-2483
Phone (512) 416-3120
Fax (512) 416-3299

Instructions to locate the "CWZTCD" on TxDOT website are:

Start at website - www.dot.state.tx.us
Click on "About TxDOT",
Click on "Functional Organizational Chart",
Click on Traffic Operations Box,
Click on "Compliant Work Zone Traffic Control Devices",
again click on "Compliant Work Zone Traffic Control Devices".
This site is printable.

CONES

28" Cones shall have a minimum weight of 9 1/2 lbs.

42" 2-piece cones shall have a minimum weight of 30 lbs.

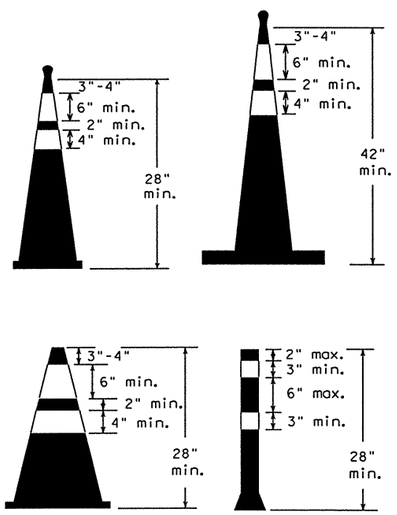

1. Traffic cones and tubular markers shall be a minimum of 28 inches in height when used either on freeways or at nighttime.
2. Cones or tubular markers shall be predominantly orange, fluorescent red-orange, or fluorescent yellow-orange. They should be kept clean and bright for maximum visibility.
3. Cones used only for daytime operations do not require the reflectorized bands.
4. Cones used for nighttime operations shall be reflectorized. Reflectorized material shall have a smooth, sealed outer surface that displays the same approximate color during the day and night. The reflectorized bands shall be retroreflective Type C (High Specific Intensity) conforming to Departmental Material Specification DMS-8300, unless otherwise noted.
5. When used at night, appropriate personnel shall ensure that cones and tubular markers remain in their proper location and in an upright position.
6. Reflectorization of cones shall consist of a minimum 6 inch band placed at least 3 inches but not more than 4 inches from the top, supplemented by a minimum 4 inch band spaced a minimum of 2 inches below the 6 inch band.
7. Reflectorization of tubular markers shall be a minimum of two 3 inch bands placed a maximum of 2 inches from the top with a maximum of 6 inches between bands. The reflectorized bands shall be retroreflective Type C (High Specific Intensity) conforming to Departmental Material Specification DMS-8300, unless otherwise noted.
8. One-piece cones or tubular markers are generally suitable for temporary usage (up to 8 hours) with other channelization devices such as vertical panels, drums or two-piece cones for long term usage. Care should be taken to ensure they remain in their proper location and in an upright position.
9. Cones or tubular markers used on each project shall be of the same size and shape.
10. The handle may be designed as a hook or other shape, fabricated from non-rigid materials similar to the cone material, and may extend up to a maximum of 8 inches above the top of cone. Length of the handle shall not be considered with regard to the overall height of the cone.

STANDARD PLANS
Texas Department of Transportation
Traffic Operations Division

BARRICADE AND CONSTRUCTION TYPE III BARRICADE & CONES STANDARD

9 of 12 BC(9)-03

©TxDOT 11-4-02	DN: BAS	CK: GRB	DW: FDN	CK: CAL
REVISIONS	STATE DISTRICT	FEDERAL REGION	FEDERAL AID PROJECT	SHEET
	PHR	6		191
	COUNTY		CONTROL	SECTION	JOB	HIGHWAY
	HIDALGO		0255	08	091	US281

DISCLAIMER
The use of this standard is governed by the "Texas Engineering Practice Act". No warranty of any kind is made by TxDOT for any purpose whatsoever. TxDOT assumes no responsibility for the conversion of this standard to other formats or for incorrect results or damages resulting from its use.

WORK ZONE PAVEMENT MARKINGS

GENERAL

1. The Contractor shall be responsible for maintaining work zone and existing pavement markings, in accordance with the standard specifications and special provisions, on all roadways open to traffic within the CSJ limits unless otherwise stated in the plans.
2. Color, patterns and dimensions shall be in conformance with the "Texas Manual on Uniform Traffic Control Devices" (TMUTCD).
3. Additional supplemental pavement marking details may be found in the plans or specifications.
4. Pavement markings shall be installed in accordance with the TMUTCD and as shown on the plans.
5. When short term markings are required on the plans, short term markings shall conform with the TMUTCD, the plans and details as shown on the Standard Plan Sheet WZ(STPM).
6. When standard pavement markings are not in place and the roadway is opened to traffic, DO NOT PASS signs shall be erected to mark the beginning of the sections where passing is prohibited and the sections where passing is permitted.
7. All work zone pavement markings shall be installed in accordance with Item 662, "Work Zone Pavement Markings."

RAISED PAVEMENT MARKERS

1. Raised pavement markers are to be placed according to the patterns on BC(11).
2. All raised pavement markers used for work zone markings shall meet the requirements of Item 672, "RAISED PAVEMENT MARKERS" and Departmental Material Specification DMS-4200 or DMS-4300.
3. A list of prequalified reflective raised pavement markers can be found at the following web site:
ftp://ftp.dot.state.tx.us/pub/txdot-info/gsd/pdf/dms4200preq.pdf
4. A list of prequalified non-reflective traffic buttons can be found at the following web site:
ftp://ftp.dot.state.tx.us/pub/txdot-info/gsd/pdf/4300preq.pdf

PREFABRICATED PAVEMENT MARKINGS

1. Removable prefabricated pavement markings shall meet the requirements of DMS-8241. A list of prequalified products can be found at the following web site:
ftp://ftp.dot.state.tx.us/pub/txdot-info/gsd/pdf/pavemark.pdf
2. Non-removable prefabricated pavement markings (foil back) shall meet the requirements of DMS-8240 or the TXDOT Purchase Specification No. 550-74-89. A list of prequalified products and a copy of the TXDOT Purchase Specifications can be found at web sites:
ftp://ftp.dot.state.tx.us/pub/txdot-info/gsd/pdf/pavement.pdf
ftp://ftp.dot.state.tx.us/pub/txdot-info/gsd/pdf/tss/tss377.pdf

MAINTAINING WORK ZONE PAVEMENT MARKINGS

1. The Contractor will be responsible for maintaining work zone pavement markings within the work limits.
2. Work zone pavement markings shall be inspected in accordance with the frequency and reporting requirements of work zone traffic control device inspections as required by Form 599.
3. The markings should provide a visible reference for a minimum distance of 300 feet during normal daylight hours and 150 feet when illuminated by automobile low-beam headlights at night, unless sight distance is restricted by roadway geometrics.
4. Markings failing to meet this criteria shall be replaced as required by the Engineer at the expense of the Contractor.

REMOVAL OF PAVEMENT MARKINGS

1. Pavement markings that are no longer applicable, could create confusion or direct a motorist toward or into the closed portion of the roadway, shall be removed or obliterated before the roadway is opened to traffic.
2. The above shall not apply to detours in place for less than two weeks, where flaggers and/or sufficient channelizing devices are used in lieu of markings to outline the detour route.
3. Pavement markings shall be removed to the fullest extent possible, so as not to leave a disernible marking, by any method that does not materially damage the surface or texture of the pavement.
4. The removal of pavement markings may require resurfacing or seal coating portions of the roadway.
5. Subject to the approval of the Engineer, any method that proves to be successful on a particular type pavement may be used.
6. Blast cleaning may be used but will not be required unless specifically shown in the plans.
7. Over-painting of the markings SHALL NOT BE permitted.
8. Removal of raised pavement markers shall be as directed by the Engineer.
9. Removal of existing pavement markings and markers will be paid for directly in accordance with Item 677, "ELIMINATING EXISTING PAVEMENT MARKINGS AND MARKERS," unless otherwise stated in the plans.

Temporary Flexible-Reflective Roadway Marker Tabs

STAPLES OR NAILS SHALL NOT BE USED TO SECURE TEMPORARY FLEXIBLE-REFLECTIVE ROADWAY MARKER TABS TO THE PAVEMENT SURFACE

1. Temporary flexible-reflective roadway marker tabs used as guidemarks shall meet the requirements of DMS-8242.
2. Tabs detailed on this sheet are to be inspected and accepted by the Engineer or designated representative. Sampling and testing is not normally required, however at the option of the Engineer, either "A" or "B" below may be imposed to assure quality before placement on the roadway.
   A. Select five (5) or more tabs at random from each lot or shipment and submit to the Construction Division, Materials and Pavement Section to determine specification compliance.
   B. Select five (5) tabs and perform the following test. Affix five (5) tabs at 24 inch intervals on an asphaltic pavement in a straight line. Using a medium size passenger vehicle or pickup, run over the markers with the front and rear tires at a speed of 35 to 40 miles per hour, four (4) times in each direction. No more than one (1) out of the five (5) reflective surfaces shall be lost or displaced as a result of this test.
3. Small design variances may be noted between tab manufacturers.

Raised Pavement Markers used as Guidemarks

1. Raised pavement markers used as guidemarks shall be from the approved product list, and meet the requirements of DMS-4200.
2. All temporary construction raised pavement markers provided on a project shall be of the same manufacturer.
3. Adhesive for guidemarks shall be bituminous material hot applied or butyl rubber pad for all surfaces, or thermoplastic for concrete surfaces.

Guidemarks shall be designated as:
YELLOW - (two amber reflective surfaces with yellow body).
WHITE - (one silver reflective surface with white body).

DEPARTMENTAL MATERIAL SPECIFICATIONS

PAVEMENT MARKERS (REFLECTORIZED)	DMS-4200
TRAFFIC BUTTONS	DMS-4300
EPOXY AND ADHESIVES	DMS-6100
BITUMINOUS ADHESIVE FOR PAVEMENT MARKERS	DMS-6130
PREFABRICATED PAVEMENT MARKINGS-PERMANENT	DMS-8240
PREFABRICATED PAVEMENT MARKINGS-REMOVABLE	DMS-8241
TEMPORARY FLEXIBLE-REFLECTIVE ROADWAY MARKER TABS	DMS-8242

Only pre-qualified products shall be used. A copy of the "Compliant Work Zone Traffic Control Devices List" (CWZTCD) describes pre-qualified products and their sources and may be obtained by contacting:

Standards Engineer
Traffic Operations Division - TE
Texas Department of Transportation
125 East 11th Street
Austin, Texas 78701-2483
Phone (512) 416-3120
Fax (512) 416-3299

Instructions to locate the "CWZTCD" on TxDOT website are:

Start at website - www.dot.state.tx.us
Click on "About TxDOT",
Click on "Functional Organizational Chart",
Click on Traffic Operations Box,
Click on "Compliant Work Zone Traffic Control Devices",
again click on "Compliant Work Zone Traffic Control Devices".
This site is printable.

LEVELS DISPLAYED ACC:
1 2 3 4 5 6 7 8 9 10 11 12 13 14 15 16
17 18 19 20 21 22 23 24 25 26 27 28 29 30 31 32
33 34 35 36 37 38 39 40 41 42 43 44 45 46 47 48
49 50 51 52 53 54 55 56 57 58 59 60 61 62 63

STANDARD PLANS
Texas Department of Transportation
Traffic Operations Division

BARRICADE AND CONSTRUCTION PAVEMENT MARKINGS STANDARD

10 of 12 BC(10)-03

©TxDOT February 1998	DN: LR	CK: DTN	DW: FDN	CK: CAL

REVISIONS	STATE DISTRICT	FEDERAL REGION	FEDERAL AID PROJECT			SHEET
1-97 2-98	PHR	6				192
1-02 11-02	COUNTY		CONTROL	SECTION	JOB	HIGHWAY
	HIDALGO		0255	08	091	US 281

109A

DISCLAIMER
The use of this standard is governed by the "Texas Engineering Practice Act". No warranty of any kind is made by TxDOT for any purpose whatsoever. TxDOT assumes no responsibility for the conversion of this standard to other formats or for incorrect results or damages resulting from its use.

PAVEMENT MARKING PATTERNS

CENTER LINE & NO-PASSING ZONE BARRIER LINES FOR TWO-LANE, TWO-WAY HIGHWAYS

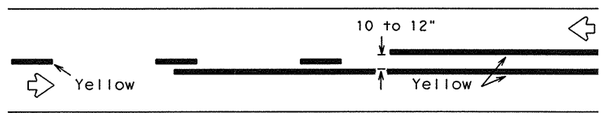

REFLECTORIZED PAVEMENT MARKINGS - PATTERN A

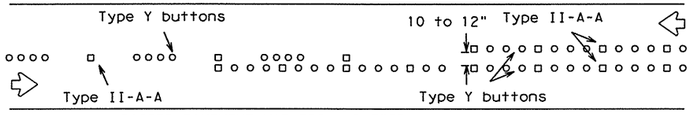

RAISED PAVEMENT MARKERS - PATTERN A

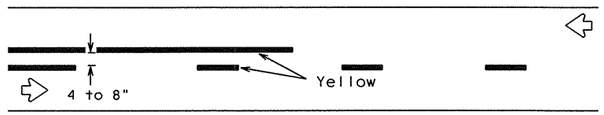

REFLECTORIZED PAVEMENT MARKINGS - PATTERN B

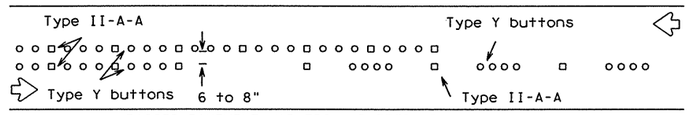

RAISED PAVEMENT MARKERS - PATTERN B

Pattern A is the TXDOT Standard, however Pattern B may be used if approved by the Engineer.
Prefabricated markings may be substituted for reflectorized pavement markings.

EDGE & LANE LINES FOR DIVIDED HIGHWAY

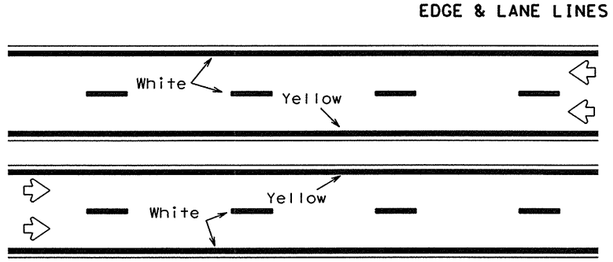

REFLECTORIZED PAVEMENT MARKINGS

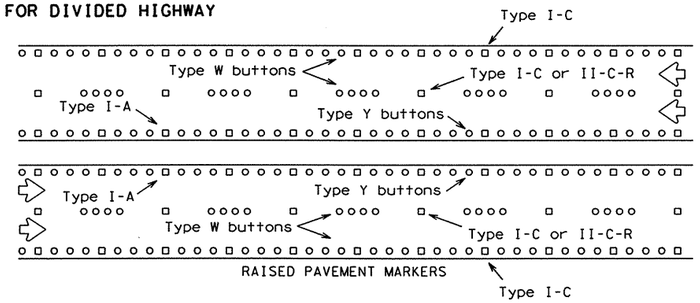

RAISED PAVEMENT MARKERS

Prefabricated markings may be substituted for reflectorized pavement markings.

LANE & CENTER LINES FOR MULTILANE UNDIVIDED HIGHWAYS

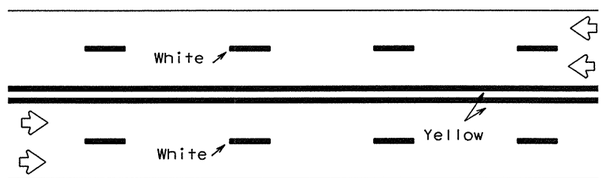

REFLECTORIZED PAVEMENT MARKINGS

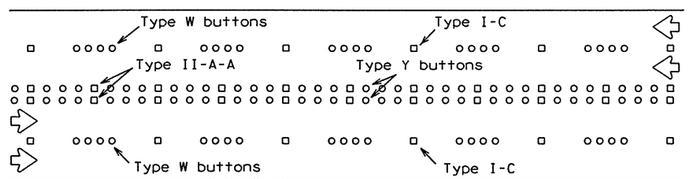

RAISED PAVEMENT MARKERS

Prefabricated markings may be substituted for reflectorized pavement markings.

TWO-WAY LEFT TURN LANE

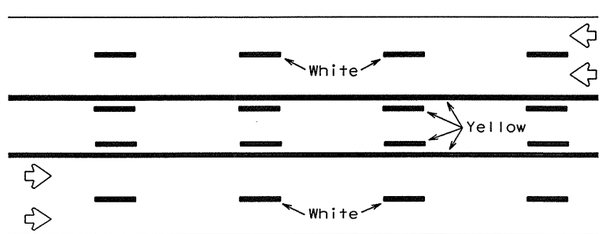

REFLECTORIZED PAVEMENT MARKINGS

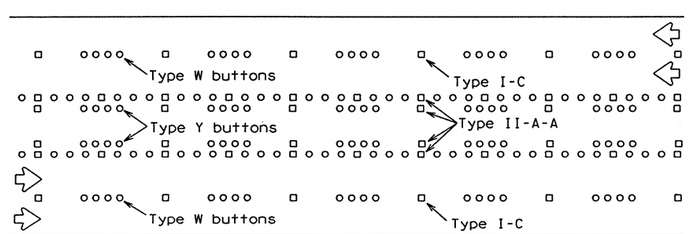

RAISED PAVEMENT MARKERS

Prefabricated markings may be substituted for reflectorized pavement markings.

STANDARD WORK ZONE PAVEMENT MARKINGS DETAILS

SOLID LINES

DOUBLE NO-PASSING LINE

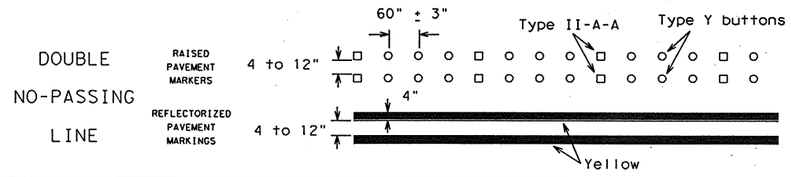

EDGE LINE OR SINGLE NO-PASSING LINE

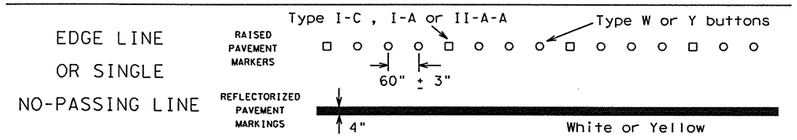

WIDE LINE

(FOR LEFT TURN CHANNELIZING LINE OR CHANNELIZING LINE USED TO DISCOURAGE LANE CHANGING.)

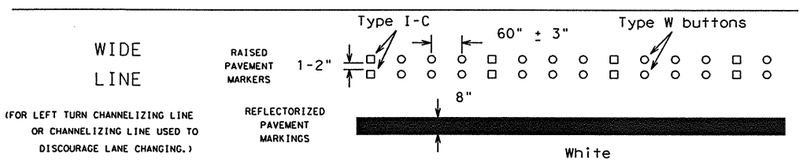

BROKEN LINE

(FOR CENTER LINE OR LANE LINE.)

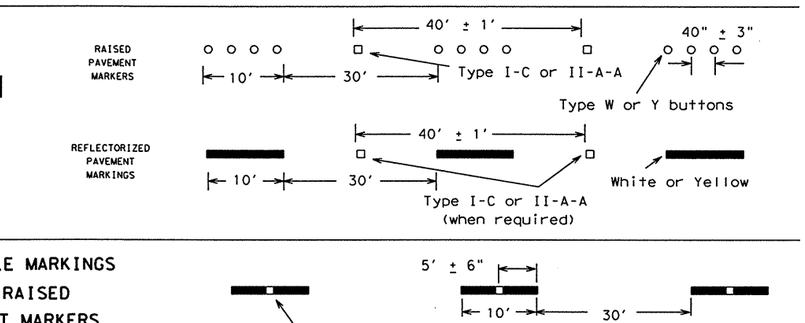

REMOVABLE MARKINGS WITH RAISED PAVEMENT MARKERS

If raised pavement markers are used to supplement REMOVABLE markings, the markers shall be applied to the top of the tape at the approximate mid length of tape used for broken lines or at 20 foot spacing for solid lines. This allows an easier removal of raised pavement markers and tape.

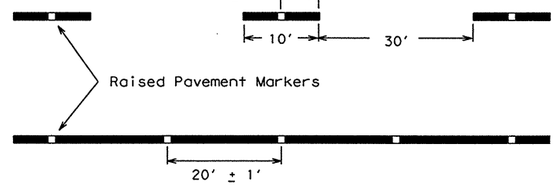

Centerline only - not to be used on edge lines

Only pre-qualified products shall be used. A copy of the "Compliant Work Zone Traffic Control Devices List" (CWZTCD) describes pre-qualified products and their sources and may be obtained by contacting:

Standards Engineer
Traffic Operations Division - TE
Texas Department of Transportation
125 East 11th Street
Austin, Texas 78701-2483
Phone (512) 416-3120
Fax (512) 416-3299

Instructions to locate the "CWZTCD" on TxDOT website are:

Start at website - www.dot.state.tx.us
Click on "About TxDOT",
Click on "Functional Organizational Chart",
Click on Traffic Operations Box,
Click on "Compliant Work Zone Traffic Control Devices",
again click on "Compliant Work Zone Traffic Control Devices".
This site is printable.

Raised pavement markers used as standard pavement markings shall be from the approved products list and meet the requirements of Item "RAISED PAVEMENT MARKERS."

STANDARD PLANS
Texas Department of Transportation
Traffic Operations Division

BARRICADE AND CONSTRUCTION PAVEMENT MARKING PATTERNS STANDARD

11 of 12 BC(11)-03

© TxDOT February 1998

DN: - LR	CK: - DTN	DW: - FDN	CK: - CAL

REVISIONS	STATE DISTRICT	FEDERAL REGION	FEDERAL AID PROJECT	SHEET
2-94	PHR	6		193
1-97	COUNTY		CONTROL / SECTION / JOB	HIGHWAY
2-98 11-02	HIDALGO		0255 / 08 / 091	US 281

109B

LEVELS DISPLAYED
1 2 3 4 5 6 7 8 9 10 11 12 13 14 15 16 17 18 19 20 21 22 23 24 25 26 27 28 29 30 31 32 33 34 35 36 37 38 39 40 41 42 43 44 45 46 47 48 49 50 51 52 53 54 55 56 57 58 59 60 61 62 63

ACC:

DISCLAIMER
The use of this standard is governed by the "Texas Engineering Practice Act". No warranty of any kind is made by TxDOT for any purpose whatsoever. TxDOT assumes no responsibility for the conversion of this standard to other formats or for incorrect results or damages resulting from its use.

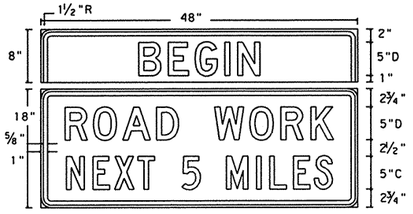

SG20-1 w/plaque
48" X 26"

Letters - Black
Numbers - Black
Border - Black
Background - Orange Refl.

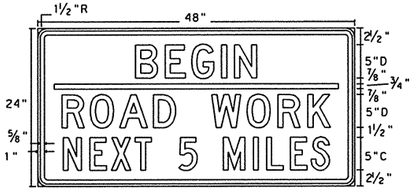

SG20-5T
48" X 24"

Letters - Black
Numbers - Black
Border - Black
Background - Orange Refl.

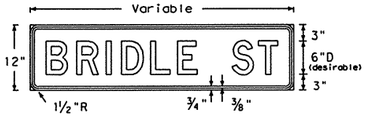

M4-9N
Variable X 12"

Letters - Black
Border - Black
Background - Orange Refl.

The M4-9R,L or S sign is to be used to detour local streets or roads that are not a State or Federal numbered highway; however, it should not be used in lieu of the M4-10 sign at the beginning of the detour or to detour State or Federal numbered routes.

Also, when the M4-9R,L or S sign is used, a sign (M4-9N) with the name of the street being detoured may be mounted above it.

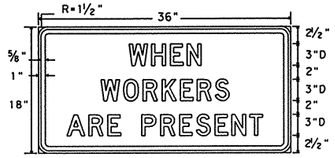

ER20-5
Plaque
36" X 18"

Letters - Black
Border - Black
Background - White Refl.

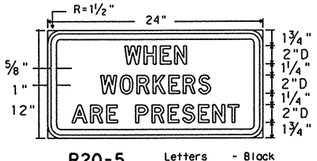

R20-5
Plaque
24" X 12"

Letters - Black
Border - Black
Background - White Refl.

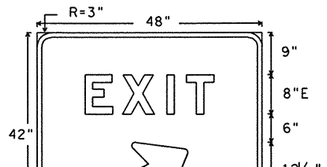

E5-1a
48" X 42"

Letters - White Refl.
Arrow - White Refl.
Border - White Refl.
Background - Green Refl.

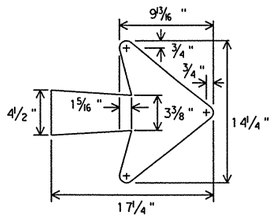

B-1 Arrow Detail

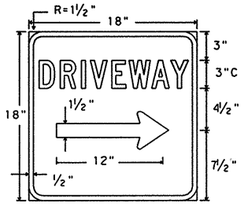

D-70a
18" X 18"

Letters - White Refl.
Symbol - White Refl.
Border - White Refl.
Background - Blue Refl.

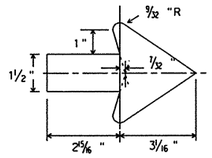

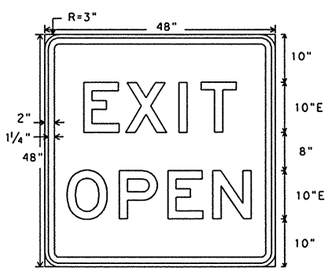

E5-2
48" X 48"

Letters - Black
Border - Black
Background - Orange Refl.

D-70S
42" X 14"

Letters - White Refl.
Symbol - White Refl.
Border - White Refl.
Background - Blue Refl.

* Alternate first line legend for D-70S

RESTAURANT	D70R 4"C
BUSINESS	D70B 4"C
MOTEL	D70M 4"C
GAS	D70G 4"C

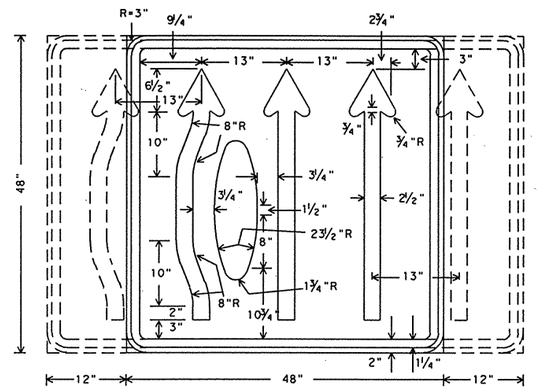

CW24-2
Var. X 48"

A mirror image may be used to show proper lane alignment.

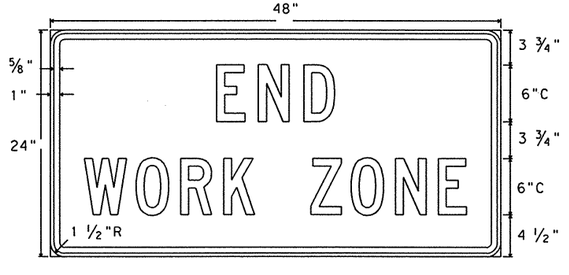

G20-2b
48" X 24"

Letters - Black
Border - Black
Background - Orange Refl.

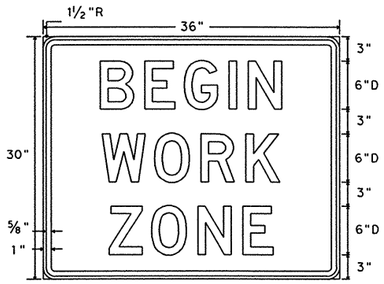

EG20-9T
36" X 30"

Letters - Black
Border - Black
Background - Orange Refl.

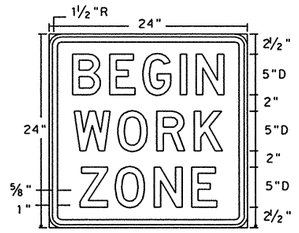

G20-9T
24" X 24"

Letters - Black
Border - Black
Background - Orange Refl.

Only pre-qualified products shall be used. A copy of the "Compliant Work Zone Traffic Control Devices List" (CWZTCD) describes pre-qualified products and their sources and may be obtained by contacting:

Standards Engineer
Traffic Operations Division - TE
Texas Department of Transportation
125 East 11th Street
Austin, Texas 78701-2483
Phone (512) 416-3120
Fax (512) 416-3299

Instructions to locate the "CWZTCD" on TxDOT website are:

Start at website - www.dot.state.tx.us
Click on "About TxDOT",
Click on "Functional Organizational Chart",
Click on Traffic Operations Box,
Click on "Compliant Work Zone Traffic Control Devices",
again click on "Compliant Work Zone Traffic Control Devices".
This site is printable.

DEPARTMENT MATERIAL SPECIFICATIONS

PLYWOOD SIGN BLANKS	DMS-7100
ALUMINUM SIGN BLANKS	DMS-7110
FLAT SURFACE REFLECTIVE SHEETING	DMS-8300
VINYL NON-REFLECTIVE DECAL SHEETING	DMS-8320

COLOR	USAGE	REFLECTIVE SHEETING OR OTHER MATERIAL
BLUE	BACKGROUND	TYPE C (HIGH SPECIFIC INTENSITY)
RED	BACKGROUND	TYPE C (HIGH SPECIFIC INTENSITY)
GREEN	BACKGROUND	TYPE C (HIGH SPECIFIC INTENSITY)
ORANGE	BACKGROUND	TYPE E (FLUORESCENT PRISMATIC)
WHITE	BACKGROUND	TYPE C (HIGH SPECIFIC INTENSITY)
YELLOW	BACKGROUND	TYPE C (HIGH SPECIFIC INTENSITY)
BLACK	LEGEND & BORDERS	VINYL NON-REFLECTIVE DECAL SHEETING
WHITE	LEGEND & BORDERS	TYPE C (HIGH SPECIFIC INTENSITY)

STANDARD PLANS
Texas Department of Transportation
Traffic Operations Division

BARRICADE AND CONSTRUCTION REGULATORY & GUIDE SIGNS STANDARDS

12 of 12 BC(12)-03

©TxDOT February 1998	DN: GRB	CK: BAS	DW: FDN	CK: CAL

REVISIONS	STATE DISTRICT	FEDERAL REGION	FEDERAL AID PROJECT	SHEET
10-99	PHR	6		194
11-02	COUNTY		CONTROL / SECTION / JOB	HIGHWAY
	HIDALGO		0255 / 08 / 091	US 281

109C

LEVELS DISPLAYED
1 2 3 4 5 6 7 8 9 10 11 12 13 14 15 16
17 18 19 20 21 22 23 24 25 26 27 28 29 30 31 32
33 34 35 36 37 38 39 40 41 42 43 44 45 46 47 48
49 50 51 52 53 54 55 56 57 58 59 60 61 62 63

ACC:

DISCLAIMER
The use of this standard is governed by the "Texas Engineering Practice Act". No warranty of any kind is made by TxDOT for any purpose whatsoever. TxDOT assumes no responsibility for the conversion of this standard to other formats or for incorrect results or damages resulting from its use.

CHANNELIZING DEVICES FOR URBAN ROADWAY TYPE PROJECT

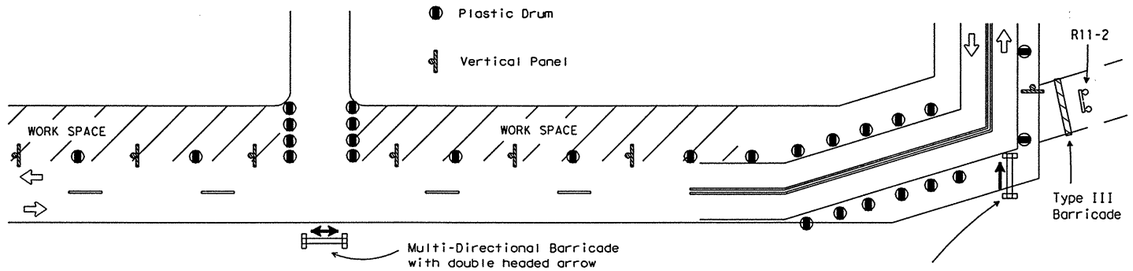

For spacing between devices, see BC(8). Use self-righting supports in areas where there is a high potential for channelizing devices to be struck.

MULTI-DIRECTIONAL BARRICADE

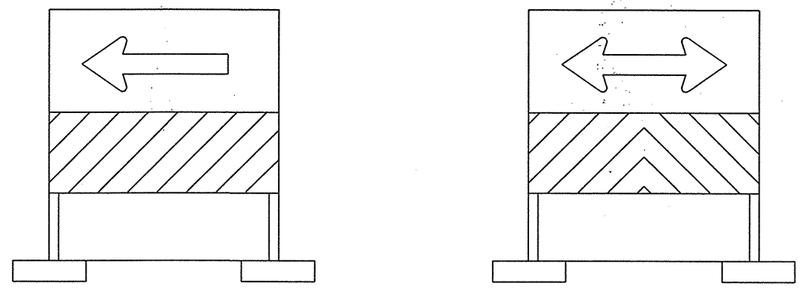

Single Headed Arrow

Double Headed Arrow

1. Multi-directional barricade shall not be used for lane closures.
2. May be used for sharp changes in alignment, or across roadway from stem of "T" intersection.
3. Typically used for Intermediate Term Stationary, Short Term Stationary or Short Duration work zone operations.
4. See the CWZTCD List for approved designs.

BARRIER DELINEATION WITH SAFETY GLARE FENCE

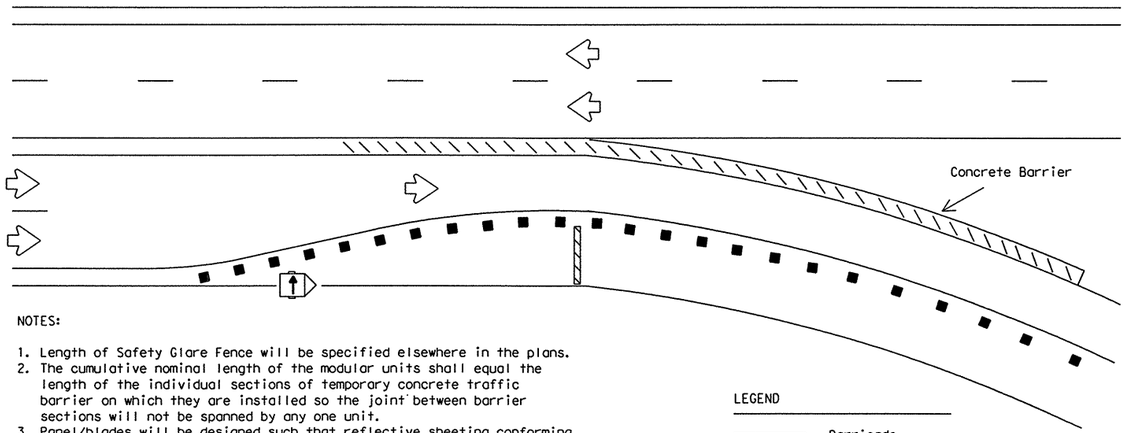

NOTES:

1. Length of Safety Glare Fence will be specified elsewhere in the plans.
2. The cumulative nominal length of the modular units shall equal the length of the individual sections of temporary concrete traffic barrier on which they are installed so the joint between barrier sections will not be spanned by any one unit.
3. Panel/blades will be designed such that reflective sheeting conforming with Departmental Material Specification DMS-8300, Flat Surface Reflective Sheeting, Type C (High Specific Intensity), minimum size of 2 inches by 12 inches can be attached to the edge of the panel/blade. The sheeting shall be attached to one panel/blade per section of concrete barrier not to exceed a spacing of 30 feet. Barrier reflectors are not necessary when panel/blades are installed.
4. Moduler Glare Screens for head light barrier shall meet the requirements of DMS-8610.

LEGEND

- Barricade
- Channelizing devices
- Trailer mounted flashing arrow panel
- Safety glare fence

USAGE OF CW1-6, ECW1-6a AND CW1-8 SIGNS

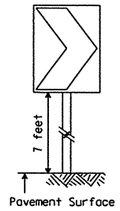

CW1-8

The CHEVRON sign (CW1-8) may be used to replace roadside delineation on curves or used in transitions or tapers.

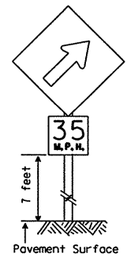

ECW1-6a

An UPWARD SLOPING ARROW sign (ECW1-6a) is intended to be used to indicate the beginning of a curve or transition. It should be preceded with an appropriate curve sign when needed, and should not be used throughout the curve or transition. Advisory speed plaque is optional.

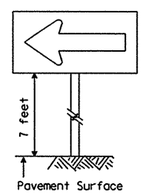

CW1-6

A LARGE ARROW sign (CW1-6) is intended to be used to give notice of a sharp change in alignment (turn) in the direction of travel. It should be preceded with an appropriate advance construction warning turn sign.

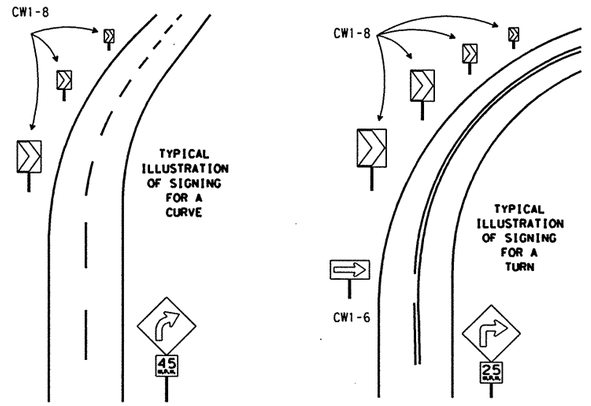

NOTES:

1. CW1-6, ECW1-6a & CW1-8 signs shall be mounted on fixed supports.
2. Chevrons, when used, shall be erected on the outside of a sharp curve or turn, or on the far side of an intersection. They shall be in line with and at right angles to approaching traffic. Spacing should be such that the motorist always has three in view, until the change in alignment eliminates its need.
3. For two-way traffic, use same arrangement of signs on outside of curve for each direction of travel.
4. Appropriate advance warning CURVE or TURN sign with Advisory Speed plaque should be used when needed.

Only pre-qualified products shall be used. A copy of the "Compliant Work Zone Traffic Control Devices List" (CWZTCD) describes pre-qualified products and their sources and may be obtained by contacting:

Standards Engineer
Traffic Operations Division - TE
Texas Department of Transportation
125 East 11th Street
Austin, Texas 78701-2483
Phone (512) 416-3120
Fax (512) 416-3299

Instructions to locate the "CWZTCD" on TxDOT website are:

Start at website - www.dot.state.tx.us
Click on "About TxDOT",
Click on "Organizational Chart",
Click on Traffic Operations Box,
Click on "Compliant Work Zone Traffic Control Devices",
Click on "View PDF".
This site is printable.

PREQUALIFICATION PROCEDURES ARE OBTAINED FROM:

CONSTRUCTION DIVISION-MATERIALS AND TESTS SECTION
TEXAS DEPARTMENT OF TRANSPORTATION (TxDOT)
125 EAST 11th STREET
AUSTIN, TX 78701-2483

DEPARTMENTAL MATERIAL SPECIFICATIONS

FLAT SURFACE REFLECTIVE SHEETING	DMS-8300
DELINEATORS AND OBJECT MARKERS	DMS-8600
MODULER GLARE SCREENS	DMS-8610

COLOR	USAGE	SIGN SHEETING
ORANGE	BACKGROUND	TYPE E (FLUORESCENT PRISMATIC)
WHITE	BACKGROUND	TYPE C (HIGH SPECIFIC INTENSITY)
BLACK	LEGEND & BORDERS	VINYL NON-REFLECTIVE SHEETING

REFER TO THE BC SHEETS FOR SHEETING REQUIREMENT ON CHANNELIZING DEVICES.

The five categories of work duration and their time at a location shall be:

A. Long-term stationary is work that occupies a location more than 3 days.

B. Intermediate-term stationary is work that occupies a location more than one daylight period up to 3 days, or nighttime work lasting more than 1 hour.

C. Short-term stationary is daytime work that occupies a location for more than 1 hour, but less than 12 hours.

D. Short duration is work that occupies a location up to 1 hour.

E. Mobile is work that moves intermittently or continuously.

LEVELS DISPLAYED
1 2 3 4 5 6 7 8 9 10 11 12 13 14 15 16
17 18 19 20 21 22 23 24 25 26 27 28 29 30 31 32
33 34 35 36 37 38 39 40 41 42 43 44 45 46 47 48
49 50 51 52 53 54 55 56 57 58 59 60 61 62 63

ACC:

STANDARD PLANS
TEXAS DEPARTMENT OF TRANSPORTATION
Traffic Operations Division

TRAFFIC CONTROL PLAN TYPICAL DETAILS

WZ(TD)-03

© TxDOT February 1998	DN: LR	CK: DTN	DW: DN	CK: GB	MSG NO.:

REVISIONS	STATE DISTRICT	FEDERAL REGION	FEDERAL AID PROJECT	SHEET
4-98	PHR	6		195
3-03	COUNTY		CONTROL / SECTION / JOB	HIGHWAY
	HIDALGO		0255 / 08 / 091	US 281

DISCLAIMER
The use of this standard is governed by the "Texas Engineering Practice Act". No warranty of any kind is made by TxDOT for any purpose whatsoever. TxDOT assumes no responsibility for the conversion of this standard to other formats or for incorrect results or damages resulting from its use.

WORK ZONE SHORT TERM PAVEMENT MARKINGS DETAILS

SOLID LINES

DOUBLE NO-PASSING LINE

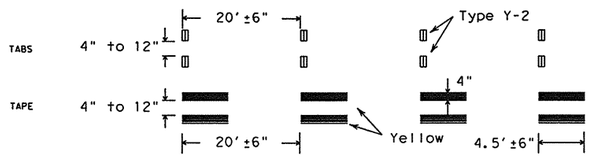

SINGLE NO-PASSING LINE or CHANNELIZATION LINE

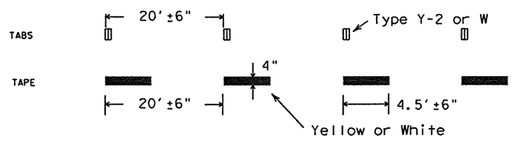

BROKEN LINE

(FOR CENTER LINE OR LANE LINE.)

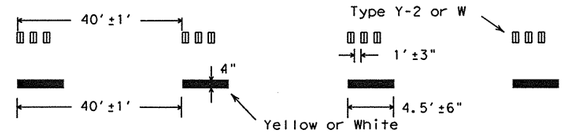

NOTES:

1. Short term pavement markings may be prefabricated markings (stick down tape) or temporary flexible-reflective roadway marker tabs unless otherwise specified elsewhere in plans.
2. Short term pavement markings shall NOT be used to simulate edge lines.
3. Dimensions indicated on this sheet are typical and approximate. Variations in size and height may occur between markers or devices made by manufacturers, by as much as 1/4 inch, unless otherwise noted.
4. Temporary flexible-reflective roadway marker tabs will require normal maintenance replacement when used on roadways with an ADT per lane of up to 7500 vehicles with no more than 10% truck mix. When roadways exceed these values, additional maintenance replacement of devices should be planned.
5. No segment of roadway open to traffic shall remain without permanent pavement markings for a period greater than 14 calendar days. The Contractor will be responsible for maintaining short term pavement markings until permanent pavement markings are in place. When the Contractor is responsible for placement of permanent pavement markings, no segment of roadway shall remain without permanent pavement markings for a period greater than 14 calendar days unless weather conditions prohibit placement. Permanent pavement markings shall be placed as soon as weather permits.
6. For two lane, two-way roadways, DO NOT PASS signs shall be erected to mark the beginning of sections where passing is prohibited and PASS WITH CARE signs shall be erected to mark the beginning of sections where passing is permitted. Signs shall be in accordance with the "Texas Manual on Uniform Traffic Control Devices" (TMUTCD) and may be used to indicate the limits of no-passing zones for up to 14 calendar days. Permanent pavement markings should then be placed.
7. For low volume two lane, two-way roadways of 4000 ADT or less, no-passing lines may be omitted when approved by the Engineer. DO NOT PASS and PASS WITH CARE signs shall be erected (see note 6).

TEMPORARY FLEXIBLE-REFLECTIVE ROADWAY MARKER TABS (TABS)

1. Temporary flexible-reflective roadway marker tabs detailed on this sheet will be designated Type Y-2 (two amber reflective surfaces with yellow body); Type Y (one amber reflective surface with yellow body); and Type W (one white or silver reflective surface with white body). Additional details may be found on BC(10).
2. Tabs shall meet requirements of Departmental Material Specification DMS-8242.
3. When dry, tabs shall be visible for a minimum distance of 200 feet during normal daylight hours and when illuminated by automobile low-beam head light at night, unless sight distance is restricted by roadway geometrics.
4. No two consecutive tabs nor four tabs per 1000 feet of line shall be missing or fail to meet the visual performance requirements of Note 3.

REMOVABLE - PREFABRICATED PAVEMENT MARKINGS

1. Removable prefabricated pavement markings shall meet the requirements of DMS-8241. A list of prequalified products can be found at the following web site:
   ftp://ftp.dot.state.tx.us/pub/txdot-info/gsd/pdf/pavemark.pdf

NON REMOVABLE - PREFABRICATED PAVEMENT MARKINGS

1. Non-removable prefabricated pavement markings (foil back) shall meet the requirements of DMS-8240 or the TXDOT Purchase Specification No. 550-74-89. A list of prequalified products and a copy of the TXDOT Purchase Specifications can be found at web sites:
   ftp://ftp.dot.state.tx.us/pub/txdot-info/gsd/pdf/pavement.pdf
   ftp://ftp.dot.state.tx.us/pub/txdot-info/gsd/pdf/tss/tss377.pdf

RAISED PAVEMENT MARKERS

1. All raised pavement markers used for work zone markings shall meet the requirements of Item 672, "RAISED PAVEMENT MARKERS" and Departmental Material Specification DMS-4200.
2. A list of prequalified reflective raised pavement markers can be found at the following web site:
   ftp://ftp.dot.state.tx.us/pub/txdot-info/gsd/pdf/dms4200preq.pdf

LEVELS DISPLAYED — ACC:

1	2	3	4	5	6	7	8	9	10	11	12	13	14	15	16
17	18	19	20	21	22	23	24	25	26	27	28	29	30	31	32
33	34	35	36	37	38	39	40	41	42	43	44	45	46	47	48
49	50	51	52	53	54	55	56	57	58	59	60	61	62	63	

WORK ZONE SHORT TERM PAVEMENT MARKINGS PATTERNS

CENTER LINE & NO-PASSING ZONE BARRIER LINES FOR TWO LANE TWO-WAY HIGHWAYS

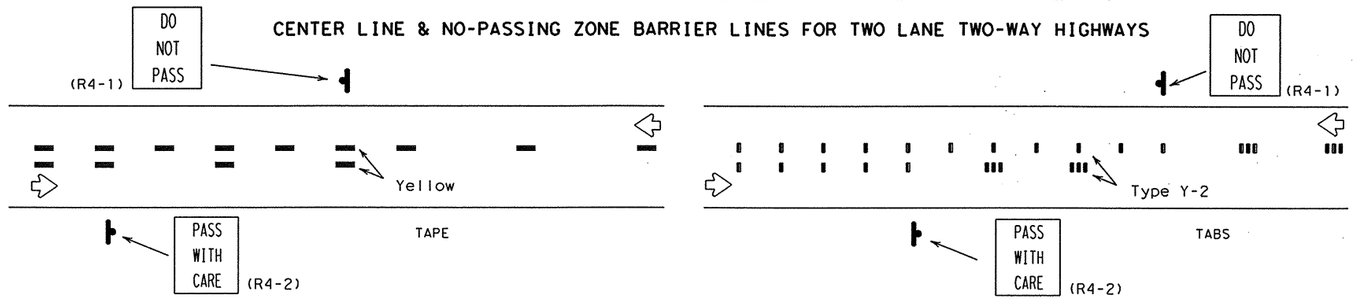

LANE LINES FOR DIVIDED HIGHWAY

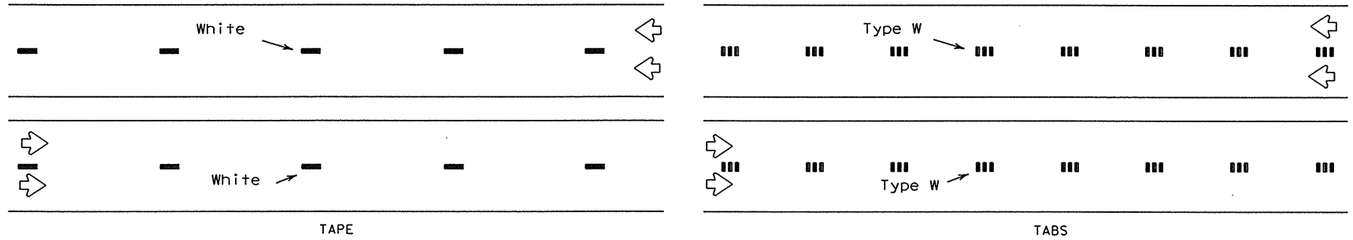

LANE & CENTER LINES FOR MULTILANE UNDIVIDED HIGHWAYS

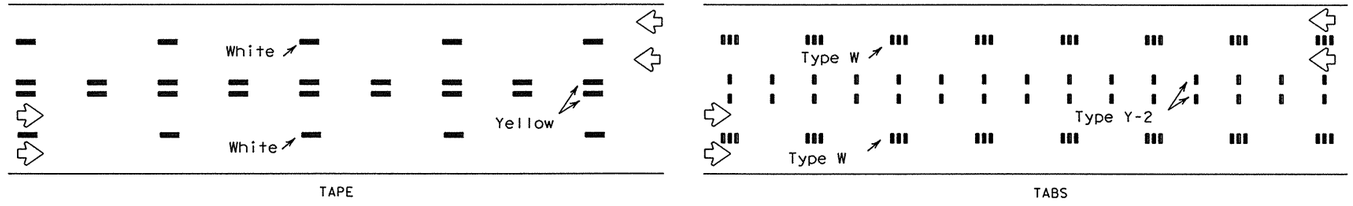

TWO-WAY LEFT TURN LANE

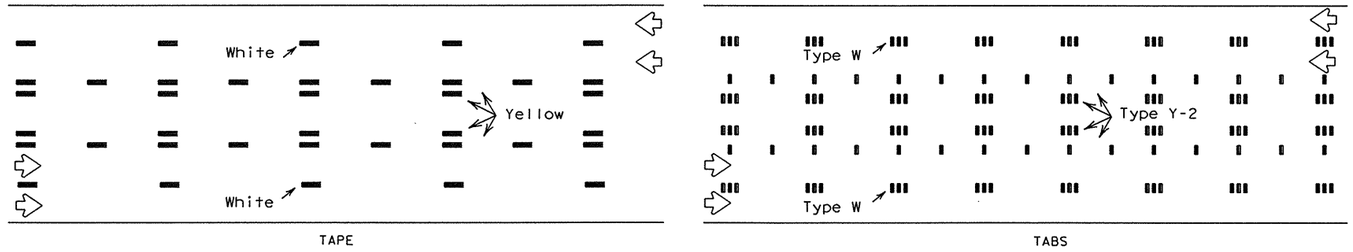

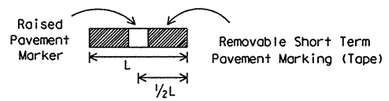

If raised pavement markers are used to supplement REMOVABLE short term markings, the markers shall be applied to the top of the tape at the approximate mid length of the tape. This allows an easier removal of raised markers and tape.

DEPARTMENT MATERIAL SPECIFICATIONS

PREFABRICATED PAVEMENT MARKINGS-PERMANENT	DMS-8240
PREFABRICATED PAVEMENT MARKINGS-REMOVABLE	DMS-8241
TEMPORARY FLEXIBLE-REFLECTIVE ROADWAY MARKER TABS	DMS-8242
PAVEMENT MARKERS (REFLECTORIZED)	DMS-4200

STANDARD PLANS
TEXAS DEPARTMENT OF TRANSPORTATION
Traffic Operations Division

WORK ZONE SHORT TERM PAVEMENT MARKINGS

WZ(STPM)-03

© TxDOT April 1992	DN: LR	CK:	DW: DN	CK: MT	MCG NO.:
REVISIONS 1-97 3-03	STATE DISTRICT: PHR	FEDERAL REGION: 6	FEDERAL AID PROJECT		SHEET: 196
COUNTY: HIDALGO	CONTROL: 0255	SECTION: 08	JOB: 091	HIGHWAY: US 281	

DISCLAIMER
The use of this standard is governed by the "Texas Engineering Practice Act". No warranty of any kind is made by TxDOT for any purpose whatsoever. TxDOT assumes no responsibility for the conversion of this standard to other formats or for incorrect results or damages resulting from its use.

TYPICAL DEAD END BARRICADE INSTALLATION

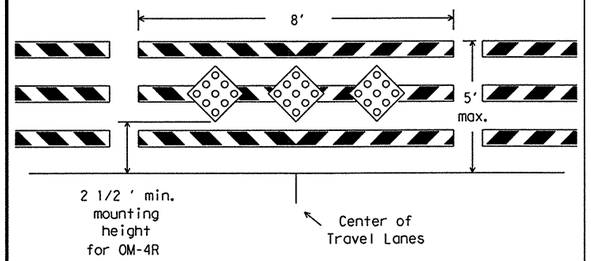

Barricade striping is red and white
sloping toward the center of the roadway.
(See Note 1)

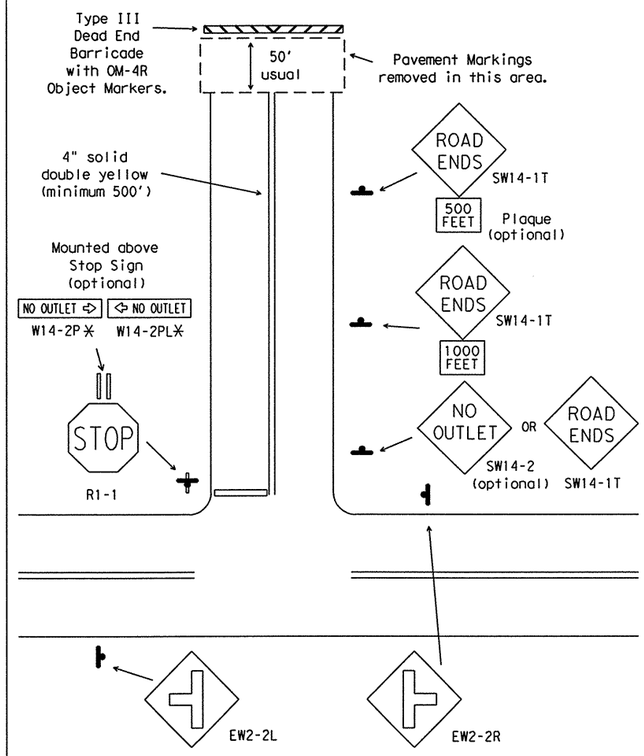

* W14-1P DEAD END plaque may be used as an alternate.

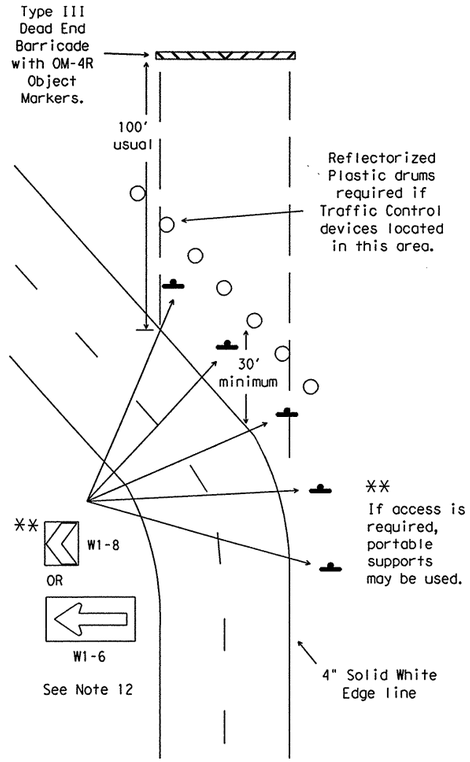

Devices shown for one direction of travel

DEPARTMENTAL MATERIAL SPECIFICATIONS	
PLYWOOD SIGN BLANKS	DMS-7100
ALUMINUM SIGN BLANKS	DMS-7110
SIGN HARDWARE	DMS-7120
WINGED CHANNEL POSTS	DMS-7130
FLAT SURFACE REFLECTIVE SHEETING	DMS-8300
VINYL NON-REFLECTIVE DECAL SHEETING	DMS-8320
DELINEATORS AND OBJECT MARKERS	DMS-8600

COLOR	USAGE	SHEETING MATERIAL
RED	BACKGROUND	TYPE C (HIGH SPECIFIC INTENSITY)
WHITE	BACKGROUND	TYPE C (HIGH SPECIFIC INTENSITY)
YELLOW	BACKGROUND	TYPE C (HIGH SPECIFIC INTENSITY)
BLACK	LEGEND & BORDERS	VINYL NON-REFLECTIVE SHEETING

GENERAL NOTES:

1. Barricade striping shall be red and white reflective sheeting for all permanent road closures. Orange and white reflective sheeting may be substituted for locations where duration of road closure is expected to be 18 months or less, or when approved by the Engineer. Red and orange reflective sheeting shall not be combined on barricades or locations.
2. Barricades shall be designed and constructed to Compliant Work Zone Traffic Control Device List (CWZTCD) standards in a first-class workmanship manner of clean sound material. Components made of lumber shall be painted with a minimum of two coats of white paint to ensure thorough coverage and a uniform white color. Barricade striping material shall meet the color and retroreflective requirements of Departmental Material Specification DMS-8300, Type C.
3. Post type breakaway supports shall be used as barricade supports. Barricades may be fabricated with "skid" supports if approved by the Engineer. Skid supports should be anchored using sand bags to prevent movement. For construction details of post (fixed Type III barricades) see CWZTCD list Part D.2.f. The dead end road barricades may also be anchored to the pavement using the bolt down median anchor manufactered by Universal Anchor System shown on SMD(FRP). The barricades shall be built using FRP posts and approved rails as shown on the CWZTCD List.
4. Barricades shall not be placed parallel to traffic unless a minimum adequate clear zone of 30 feet from edge of travel lane is provided.
5. A minimum of one 8-foot wide barricade and three OM-4R object markers shall be required for all locations. Barricades shall extend across all travel lanes and shoulders if shoulders are present. Barricades may be extended to the ROW as directed by Engineer.
6. Stockpiled materials shall not be placed on traffic side of barricades.
7. OM-4 object markers shall be mounted to the middle rail using two 1/2" through bolts with flat washers and lock washers.
8. OM-4 object markers shall be constructed of 0.063 aluminum and shall meet the color and reflective requirements of DMS-8300 Type C and DMS-8600.
9. Plastic drums shall meet the requirements as listed on the CWZTCD list or the BC Standards. Plastic drums may be anchored with adhesive to prevent movement.
10. All signs and chevrons shall be installed with hardware and support at the minimum mounting height in accordance with the SMD and BC Standards. Signs shall be mounted at a 7 foot minimum height. Signs shall not be attached to barricades.
11. Motorists should be able to see at least three chevron signs as they approach the curve and as they drive through the curve from either direction.
12. Delineation devices such as the chevron or large arrow signs shall only be placed on the outside portion of a curve.

GENERAL NOTE FOR SIGNS:

1. The alphabets and lateral spacing between letters and numerals shall conform with the "Texas Manual on Uniform Traffic Control Devices for Streets and Highways" (TMUTCD), latest edition, and any approved changes thereto.
2. Lateral spacing of text shall provide a balanced appearance.
3. All materials shall conform to Departmental Material Specifications.
4. Legend shall be black and applied by screening process, cut-out vinyl non-reflective sheeting or combination thereof.
5. Sign blanks shall be any material that meets the DMS requirements for permenant sign substrates.

Only pre-qualified products shall be used. A copy of the "Compliant Work Zone Traffic Control Devices List" (CWZTCD) describes pre-qualified products and their sources and may be obtained by contacting:

Standards Engineer
Traffic Operations Division - TE
Texas Department of Transportation
125 East 11th Street
Austin, Texas 78701-2483
Phone (512) 416-3120
Fax (512) 416-3299

Instructions to locate the "CWZTCD" on TxDOT website are:

Start at website - www.dot.state.tx.us
Click on "About TxDOT",
Click on "Organizational Chart",
Click on Traffic Operations Box,
Click on "Compliant Work Zone Traffic Control Devices",
Click on "View PDF".
This site is printable.

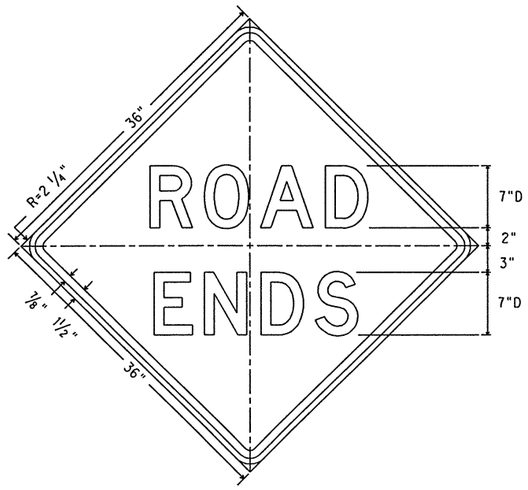

SW14-1T
36" X 36"

Letters - Black
Border - Black
Background - Yellow Refl.

LEVELS DISPLAYED

1	2	3	4	5	6	7	8	9	10	11	12	13	14	15	16
17	18	19	20	21	22	23	24	25	26	27	28	29	30	31	32
33	34	35	36	37	38	39	40	41	42	43	44	45	46	47	48
49	50	51	52	53	54	55	56	57	58	59	60	61	62	63	

ACC:

STANDARD PLANS
Texas Department of Transportation
Traffic Operations Division

WORK ZONE DEAD END ROADWAY DETAILS

WZ(DERD)-03

© TxDOT August 1995

DN: LR/MT	CK: GRB	DW: FDN	CK: CAL

REVISIONS	STATE DISTRICT	FEDERAL REGION	FEDERAL AID PROJECT	SHEET
1-97	PHR	6		197
2-98	COUNTY		CONTROL / SECTION / JOB	HIGHWAY
4-98	HIDALGO		0255 / 08 / 091	US 281
3-03				

DISCLAIMER
The use of this standard is governed by the "Texas Engineering Practice Act". No warranty of any kind is made by TxDOT for any purpose whatsoever. TxDOT assumes no responsibility for the conversion of this standard to other formats or for incorrect results or damages resulting from its use.

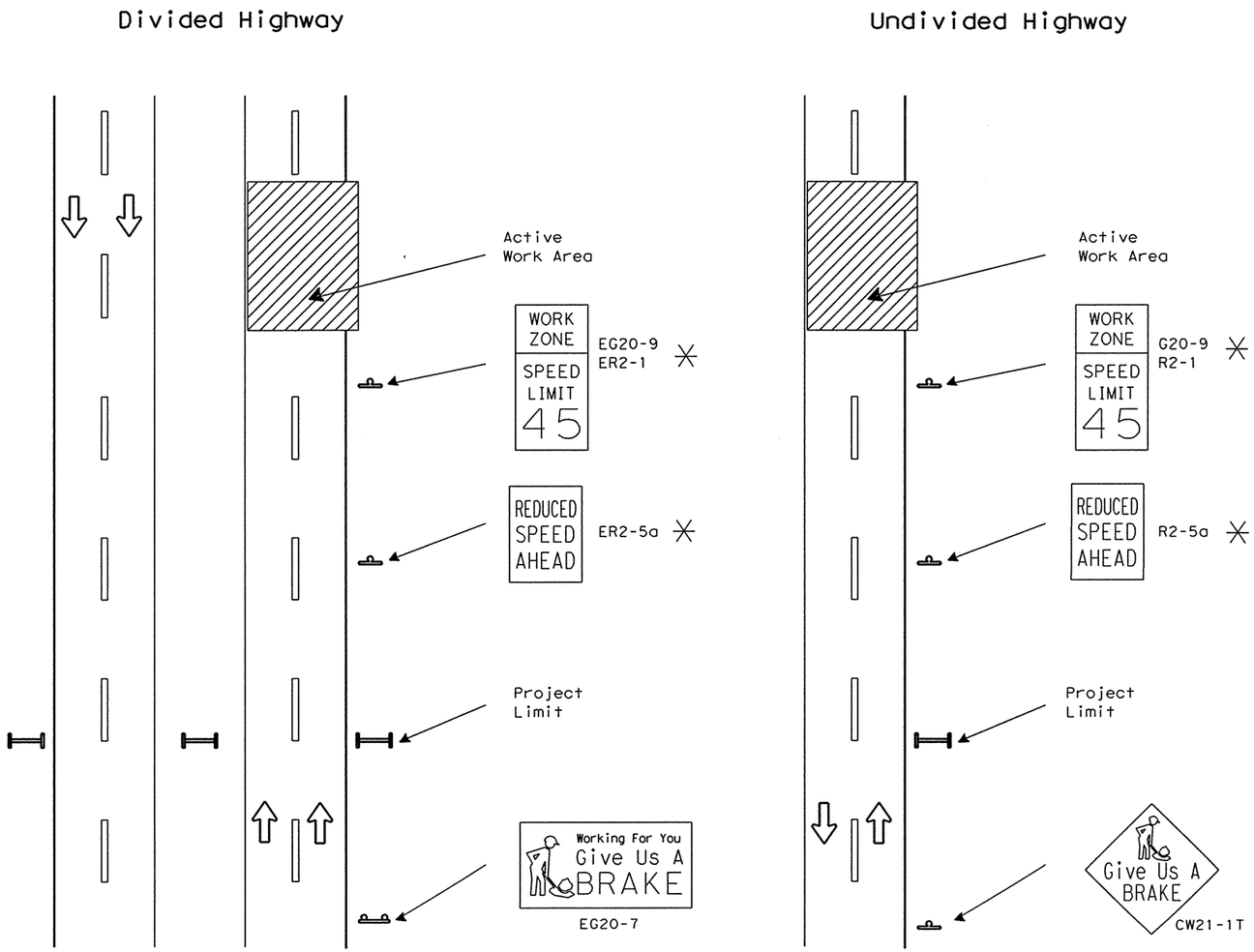

SIGNS ARE SHOWN FOR ONE DIRECTION OF TRAVEL

✳ Posted only when reduced speed is directed by the Engineer

SUMMARY OF LARGE SIGNS

BACKGROUND COLOR	SIGN DESIGNATION	SIGN TEXT	SIGN DIMENSIONS	REFLECTIVE SHEETING	PLY TY A (SQ FT)	GALVANIZED STRUCT STEEL Size	(LF) ①	(LF) ②	DRILLED SHAFT 24" DIA. (LF)
Orange	EG20-7	Give Us A BRAKE	16' x 8'	Type E	128	W8x18	16	17	12
Orange	G20-7	Give Us A BRAKE	8' x 4'	Type E	32	S4x7.7	12	13	7✳

✳ 12" Non-reinforced Concrete Footing (LF)

SUMMARY OF SMALL SIGNS

BACKGROUND COLOR	SIGN DESIGNATION	SIGN TEXT	SIGN DIMENSIONS	REFLECTIVE SHEETING	PLY TY A (SQ FT)
Orange	EG20-9	WORK ZONE	36" x 24"	Type E	6
Orange	G20-9	WORK ZONE	24" x 18"	Type E	3
White	ER2-1	SPEED LIMIT	36" x 48"	Type C	12
White	ER2-5a	REDUCED SPEED AHEAD	36" x 48"	Type C	12
Orange	CW21-1T	GIVE US A BRAKE	48" x 48"	Type E	16

DEPARTMENTAL MATERIAL SPECIFICATIONS

PLYWOOD SIGN BLANKS	DMS-7100
ALUMINUM SIGN BLANKS	DMS-7110
FLAT SURFACE REFLECTIVE SHEETING	DMS-8300
VINYL NON-REFLECTIVE SHEETING	DMS-8320

COLOR	USAGE	SHEETING MATERIAL
WHITE	BACKBROUND	TYPE C (HIGH SPECIFIC INTENSITY)
ORANGE	BACKGROUND	TYPE E (FLUORESCENT PRISMATIC)
BLACK	LEGEND & BORDERS	VINYL NON-REFLECTIVE SHEETING

GENERAL NOTES:

1. See BC and SMD sheets for additional sign support details.
2. Sign locations shall be approved by the Engineer.
3. For projects more than two miles in length, Give Us a BRAKE and WORK ZONE SPEED LIMIT signs should be repeated halfway through the project.
4. The WORK ZONE (G20-9) sign is to be installed in combination with a SPEED LIMIT (R2-1) sign.
5. Speed limits shall be regulatory and approved by the Transportation Commission.
6. EG20-9, G20-9, ER2-1, R2-1, ER2-5a, R2-5a and CW21-1T signs and supports shall be considered subsidiary to Item 502, "Barricades, Signs and Traffic Handling."
7. G20-7 and EG20-7 signs shall be paid for under the following bid items:
   - Item 634 Plywood Signs Type A
   - Item 647 Large Roadside Sign Supports
   - Item 656 Foundations for Signs, Traffic Signals and Roadway Ill. Assem.
8. All signs shall be constructed in accordance with the details found in the "Standard Highway Sign Designs for Texas," latest edition. Sign details not shown in this manual shall be shown in the plans or the Engineer shall provide a detail to the Contractor before the sign is manufactured.

STANDARD PLANS
TEXAS DEPARTMENT OF TRANSPORTATION
Traffic Operations Division

WORK ZONE "GIVE US A BRAKE" SIGNS

WZ(BRK)-03

©TxDOT August 1995

DN: LR	CK:	DW: DN	CK:	NEG NO.:

REVISIONS	STATE DISTRICT	FEDERAL REGION	FEDERAL AID PROJECT	SHEET
6-96 8-96 5-98 3-03	PHR	6		198

COUNTY	CONTROL	SECTION	JOB	HIGHWAY
HIDALGO	0255	08	091	US 281

LEVELS DISPLAYED
ACC:

DISCLAIMER
The use of this standard is governed by the "Texas Engineering Practice Act". No warranty of any kind is made by TxDOT for any purpose whatsoever. TxDOT assumes no responsibility for the conversion of this standard to other formats or for incorrect results or damages resulting from its use.

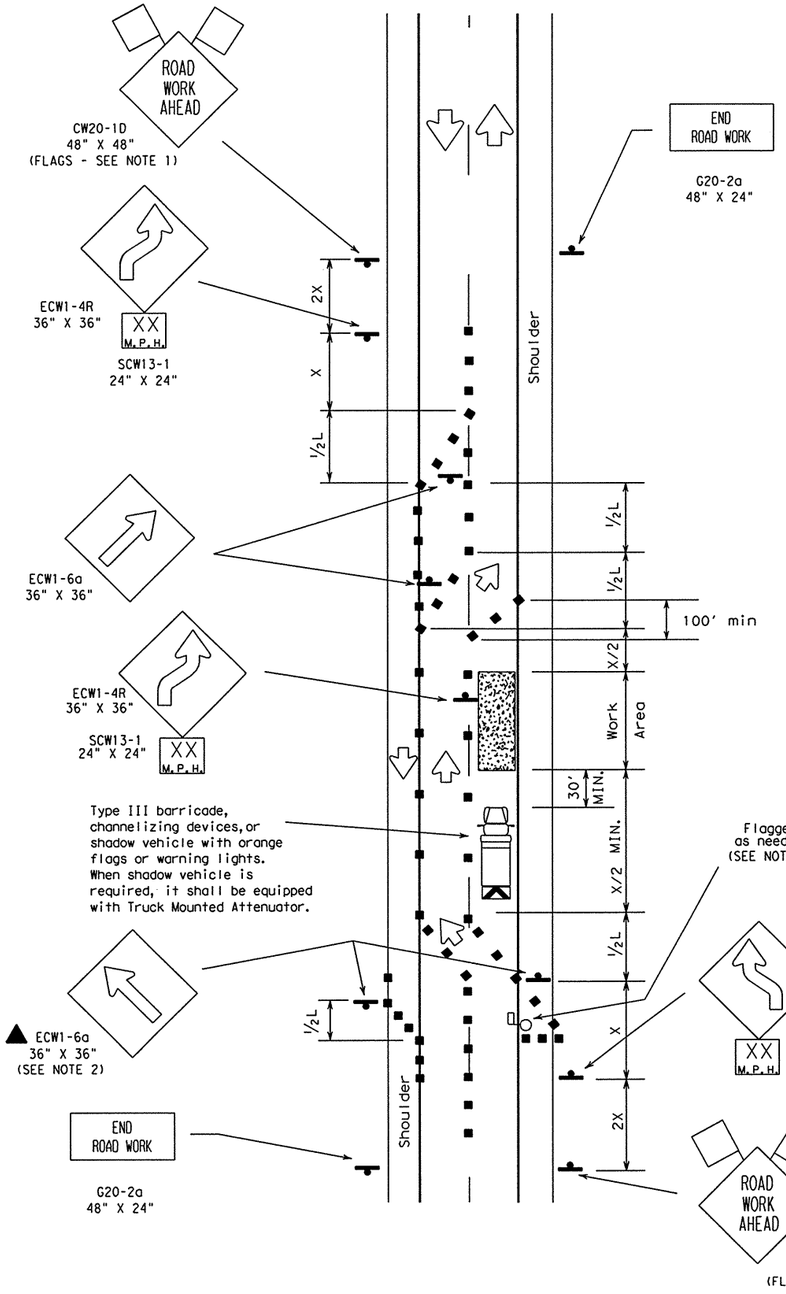

TCP (1-3a)
2-Lane Roadway With Paved Shoulders
One Lane Closed
Adequate Field of View

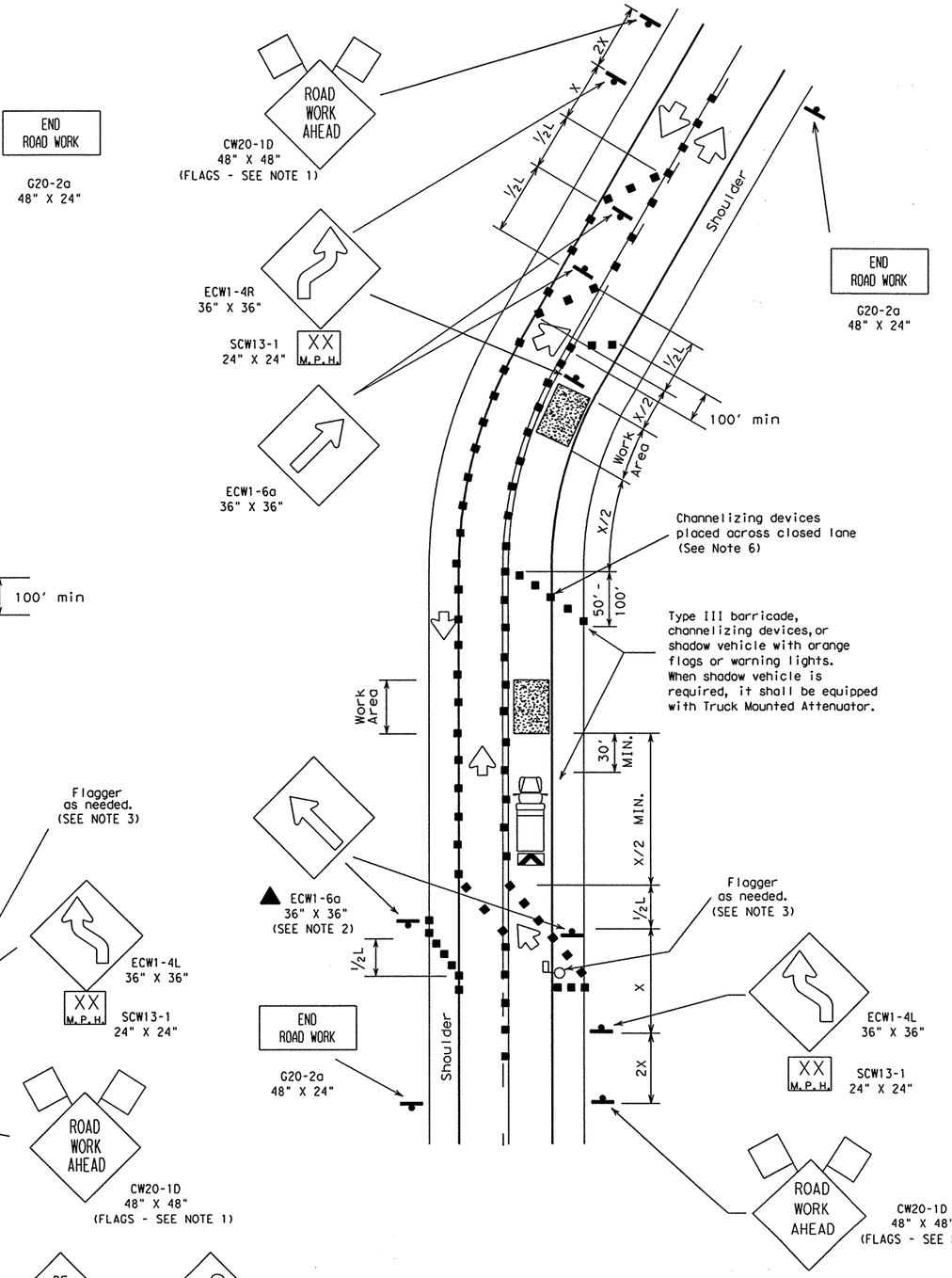

TCP (1-3b)
2-Lane Roadway With Paved Shoulders
One Lane Closed
Inadequate Field of View

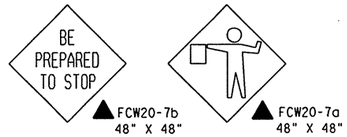

Use Only When Flaggers Control Traffic
(SEE NOTE 2)

LEGEND

Type III Barricade ■ ■ Channelizing Devices Flag
Heavy Work Vehicle Truck Mounted Attenuator
Trailer Mounted Flashing Arrow Panel
Portable Changeable Message Sign (M)
Flagger Sign Post

Posted Speed ✳	Formula	Minimum Desirable Taper Lengths ✳✳ 10' Offset	11' Offset	12' Offset	Suggested Maximum Spacing of Device On a Taper	On a Tangent	Minimum Sign Spacing X Distance
30	$L = \frac{WS^2}{60}$	150'	165'	180'	30'	60'-75'	120'
35		205'	225'	245'	35'	70'-90'	160'
40		265'	295'	320'	40'	80'-100'	240'
45	L=WS	450'	495'	540'	45'	90'-110'	320'
50		500'	550'	600'	50'	100'-125'	400'
55		550'	605'	660'	55'	110'-140'	500'
60		600'	660'	720'	60'	120'-150'	✳600'
65		650'	715'	780'	65'	130'-165'	✳700'
70		700'	770'	840'	70'	140'-175'	✳800'

✳ Conventional Roads Only

✳✳ Taper lengths have been rounded off.
L=Length of Taper (FT.) W=Width of Offset (FT.) S=Posted Speed (MPH)

TYPICAL USAGE:				
MOBILE	SHORT DURATION	SHORT TERM STATIONARY	INTERMEDIATE TERM STATIONARY	LONG TERM STATIONARY
	✓	✓		

GENERAL NOTES:

1. Unless otherwise stated in the plans, flags attached to signs are REQUIRED.
2. All traffic control devices illustrated are REQUIRED, except those denoted with the triangle symbol may be omitted when stated elsewhere in the plans.
3. Flagger control should NOT be used unless roadway conditions or heavy traffic volume require additional emphasis to safely control traffic. Additional flaggers should be positioned at end of traffic queues unless 24" x 24" STOP/SLOW paddle is used.
4. DO NOT PASS, PASS WITH CARE, and construction regulatory speed zone signs may be installed downstream of the ROAD WORK AHEAD signs.
5. ROAD WORK AHEAD sign may be repeated if the visibility of the work zone is less than 1500'.
6. When the work zone is made up of several work areas, channelizing devices should be placed laterally across the closed lane to re-emphasize closure. Laterally placed channelizing devices should be repeated every 500' to 1000' in urban areas and every 1/4 to 1/2 mile in rural areas.

Only pre-qualified products shall be used. A list of compliant products and their sources may be obtained by writing or faxing:

Standards Engineer
Traffic Operations Division - TE
Texas Department of Transportation
125 East 11th Street
Austin, Texas 78701-2483
Phone (512) 416-3335
Fax (512) 416-3161
E-mail TRF-STANDARD@mailgw.dot.state.tx.us

The requirement for shadow vehicles will be listed in the project GENERAL NOTES, Item 502, Barricades, Signs and Traffic Handling.

STANDARD PLANS
TEXAS DEPARTMENT OF TRANSPORTATION
Traffic Operations Division

TRAFFIC CONTROL PLAN

TCP(1-3)-98

© TxDOT December 1985	DN: LR	CK:	DW: DN	CK: MT	MEG NO.:
REVISIONS 2-94 8-95 1-97 4-98	STATE DISTRICT: PHR	FEDERAL REGION: 6	FEDERAL AID PROJECT		SHEET: 199
	COUNTY: HIDALGO	CONTROL: 0255	SECTION: 08	JOB: 091	HIGHWAY: US 281

DN: CK: DW: CK:
DATE: ACC: FILE:

LEVELS DISPLAYED
1 2 3 4 5 6 7 8 9 10 11 12 13 31 41 51 61
17 18 19 20 21 22 23 24 25 26 27 28 29 30 33 133
33 34 35 36 37 38 39 40 41 42 43 44 45 46 47 48
49 50 51 52 53 54 55 56 57 58 59 60 61 62 63

DISCLAIMER
The use of this standard is governed by the "Texas Engineering Practice Act". No warranty of any kind is made by TxDOT for any purpose whatsoever. TxDOT assumes no responsibility for the conversion of this standard to other formats or for incorrect results or damages resulting from its use.

TCP (1-4a)

One Lane Closed

TCP (1-4b)

Two Lanes Closed

LEGEND

Type III Barricade — Channelizing Devices — Flag
Heavy Work Vehicle — Truck Mounted Attenuator
Trailer Mounted Flashing Arrow Panel — Portable Changeable Message Sign
Flagger — Sign Post

Posted Speed ⁎	Formula	Minimum Desirable Taper Lengths ⁎⁎ 10' Offset	11' Offset	12' Offset	Suggested Maximum Spacing of Device On a Taper	On a Tangent	Minimum Sign Spacing X Distance
30	$L = \frac{WS^2}{60}$	150'	165'	180'	30'	60'-75'	120'
35		205'	225'	245'	35'	70'-90'	160'
40		265'	295'	320'	40'	80'-100'	240'
45	L=WS	450'	495'	540'	45'	90'-110'	320'
50		500'	550'	600'	50'	100'-125'	400'
55		550'	605'	660'	55'	110'-140'	500'
60		600'	660'	720'	60'	120'-150'	⁎600'
65		650'	715'	780'	65'	130'-165'	⁎700'
70		700'	770'	840'	70'	140'-175'	⁎800'

⁎ Conventional Roads Only

⁎⁎ Taper lengths have been rounded off.
L=Length of Taper (FT.) W=Width of Offset (FT.) S=Posted Speed (MPH)

TYPICAL USAGE:				
MOBILE	SHORT DURATION	SHORT TERM STATIONARY	INTERMEDIATE TERM STATIONARY	LONG TERM STATIONARY
	✓	✓		

GENERAL NOTES:

1. Unless otherwise stated in the plans, flags attached to the signs are REQUIRED.
2. All traffic control devices illustrated are REQUIRED, except those denoted with the triangle symbol may be omitted when stated elsewhere in the plans.
3. The FORM ONE LANE LEFT sign may be used following the RIGHT LANE CLOSED sign. Spacing distance between signs should be the minimum distance indicated.
4. ROAD WORK AHEAD sign may be repeated if the visibility of the work zone is less than 1500'.
5. If pavement markings are not removed and traffic is directed over a double yellow centerline, the maximum spaciing of channelizing devices in a tangent section should be no greater than 10 feet.

Only pre-qualified products shall be used. A list of compliant products and their sources may be obtained by writing or faxing:

**Standards Engineer
Traffic Operations Division - TE
Texas Department of Transportation
125 East 11th Street
Austin, Texas 78701-2483
Phone (512) 416-3335
Fax (512) 416-3161
E-mail TRF-STANDARD@mailgw.dot.state.tx.us**

The requirement for shadow vehicles will be listed in the project GENERAL NOTES, Item 502, Barricades, Signs and Traffic Handling.

STANDARD PLANS
TEXAS DEPARTMENT OF TRANSPORTATION
Traffic Operations Division

TRAFFIC CONTROL PLAN

TCP(1-4)-98

©TxDOT December 1985 | DN: LR | CK: MT | DW: DN | CK: MT | NEG NO.:
REVISIONS: 2-94, 8-95, 1-97, 4-98
STATE DISTRICT: PHR | FEDERAL REGION: 6 | FEDERAL AID PROJECT | SHEET: 200
COUNTY: HIDALGO | CONTROL: 0255 | SECTION: 08 | JOB: 091 | HIGHWAY: US 281

DISCLAIMER
The use of this standard is governed by the "Texas Engineering Practice Act". No warranty of any kind is made by TxDOT for any purpose whatsoever. TxDOT assumes no responsibility for the conversion of this standard to other formats or for incorrect results or damages resulting from its use.

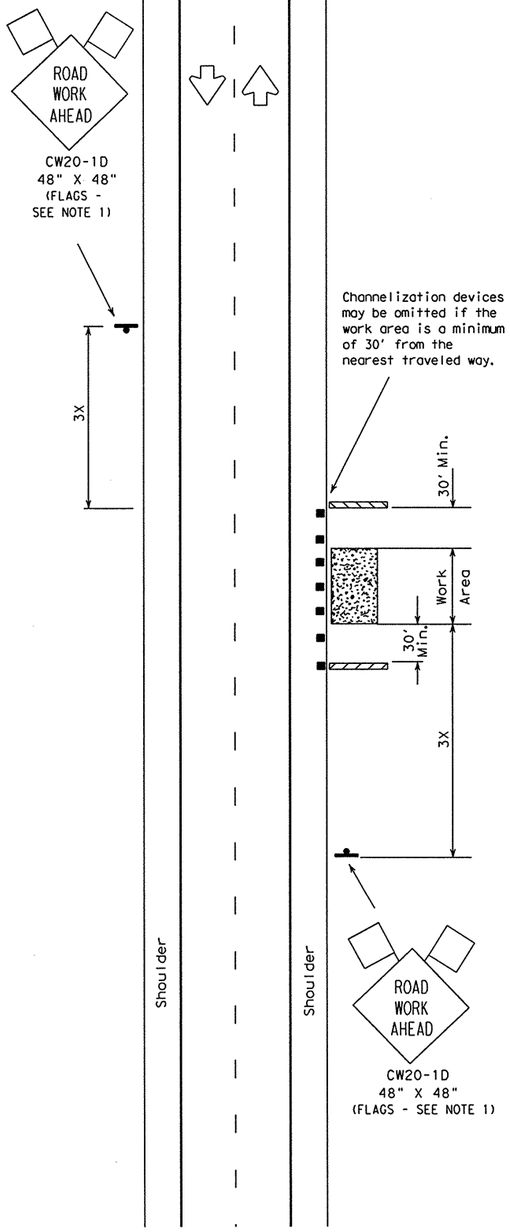

TCP (2-1a)

Work Area Near Shoulder

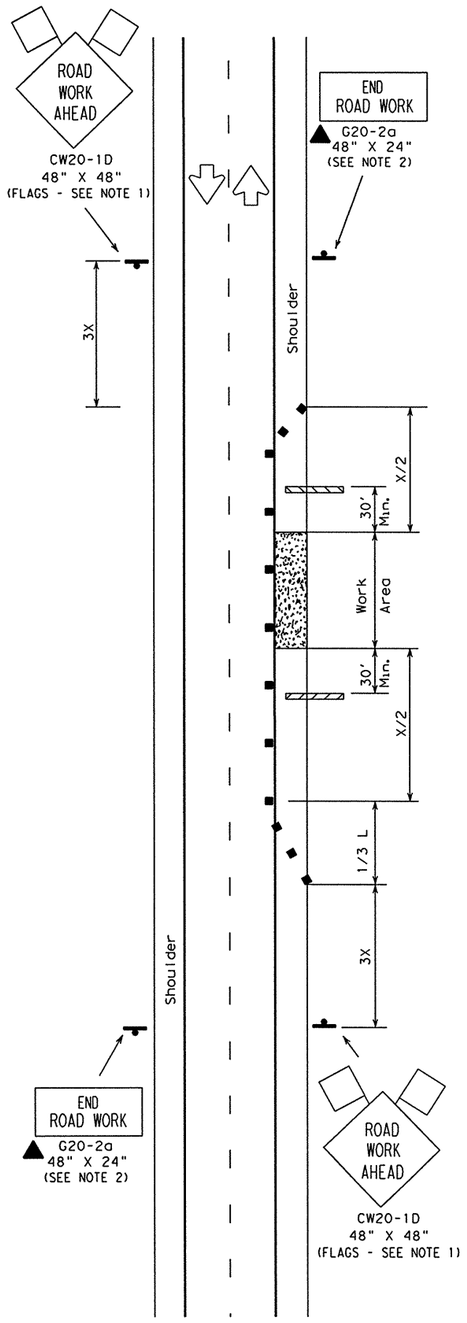

TCP (2-1b)

Work Area on Shoulder

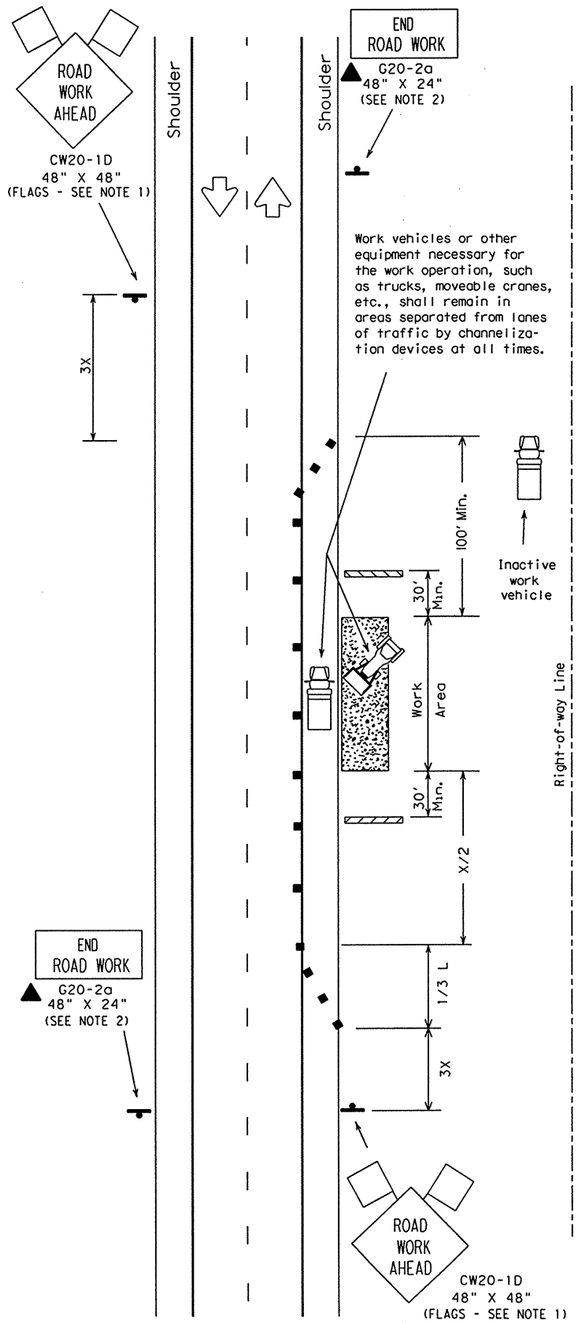

TCP (2-1c)

Work Vehicles on Shoulder

LEGEND

Type III Barricade ■ ■ Channelizing Devices Flag
Heavy Work Vehicle Truck Mounted Attenuator
Trailer Mounted Flashing Arrow Panel (M) Portable Changeable Message Sign
Flagger Sign Post

Posted Speed ✳	Formula	Minimum Desirable Taper Lengths ✳✳ 10' Offset	11' Offset	12' Offset	Suggested Maximum Spacing of Device On a Taper	On a Tangent	Minimum Sign Spacing X Distance
30	$L=\frac{WS^2}{60}$	150'	165'	180'	30'	60'-75'	120'
35		205'	225'	245'	35'	70'-90'	160'
40		265'	295'	320'	40'	80'-100'	240'
45	L=WS	450'	495'	540'	45'	90'-110'	320'
50		500'	550'	600'	50'	100'-125'	400'
55		550'	605'	660'	55'	110'-140'	500'
60		600'	660'	720'	60'	120'-150'	✳600'
65		650'	715'	780'	65'	130'-165'	✳700'
70		700'	770'	840'	70'	140'-175'	✳800'

✳ Conventional Roads Only

✳✳ Taper lengths have been rounded off.
L=Length of Taper (FT.) W=Width of Offset (FT.) S=Posted Speed (MPH)

TYPICAL USAGE:				
MOBILE	SHORT DURATION	SHORT TERM STATIONARY	INTERMEDIATE TERM STATIONARY	LONG TERM STATIONARY
	✓	✓	✓	✓

GENERAL NOTES:

1. Unless otherwise stated in the plans, flags attached to signs are REQUIRED.
2. All traffic control devices illustrated are REQUIRED, except those denoted with the triangle symbol may be omitted when stated elsewhere in the plans.
3. Type III barricades are required on both sides of work area at all times. (See BC Standards for barricade details.)
4. Stockpiled material should be placed a minimum 30' from nearest traveled way.
5. On high speed facilities advance warning signs should be installed approximately 3X from the work area or from the beginning of a lane or shoulder taper. On low speed facilities the advance warning sign should be placed on the "X" minimum distance.

Only pre-qualified products shall be used. A list of compliant products and their sources may be obtained by writing or faxing:

Standards Engineer
Traffic Operations Division - TE
Texas Department of Transportation
125 East 11th Street
Austin, Texas 78701-2483
Phone (512) 416-3335
Fax (512) 416-3161
E-mail TRF-STANDARD@mailgw.dot.state.tx.us

STANDARD PLANS
TEXAS DEPARTMENT OF TRANSPORTATION
Traffic Operations Division

TRAFFIC CONTROL PLAN

TCP(2-1)-98

©TxDOT December 1985	DN: LR	CK: MT	DW: DN	CK: MT	REQ NO.:
REVISIONS 2-94 8-95 1-97 4-98	STATE DISTRICT: PHR	FEDERAL REGION: 6	FEDERAL AID PROJECT		SHEET: 201
	COUNTY: HIDALGO	CONTROL: 0255	SECTION: 08	JOB: 091	HIGHWAY: US281

161

LEVELS DISPLAYED
1 2 3 4 5 6 7 8 9 10 11 12 13 14 15 16
17 18 19 20 21 22 23 24 25 26 27 28 29 30 31 32
33 34 35 36 37 38 39 40 41 42 43 44 45 46 47 48
49 50 51 52 53 54 55 56 57 58 59 60 61 62 63

DATE:
ACC:
FILE:
DN:
CK:
DW:
CK:

DISCLAIMER
The use of this standard is governed by the "Texas Engineering Practice Act". No warranty of any kind is made by TxDOT for any purpose whatsoever. TxDOT assumes no responsibility for the conversion of this standard to other formats or for incorrect results or damages resulting from its use.

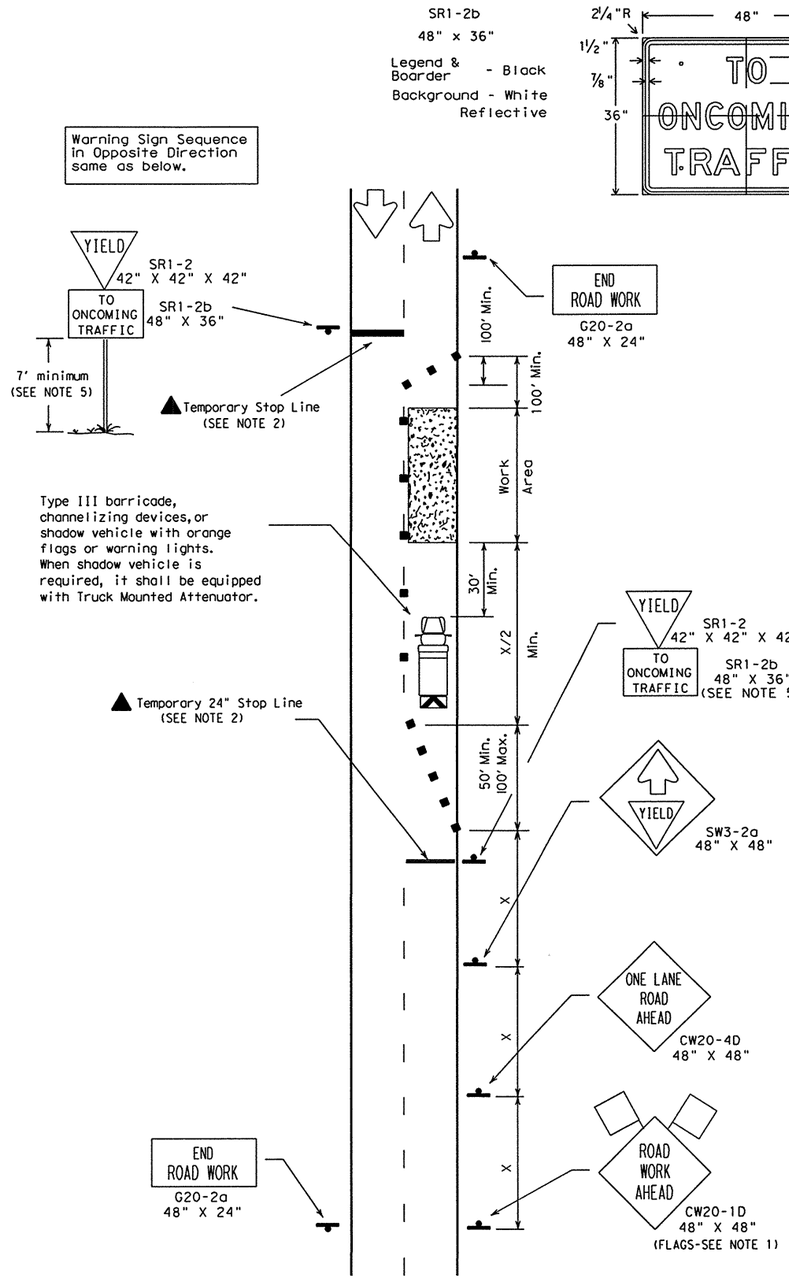

TCP (2-2a)

2-Lane Roadway Without Paved Shoulders
One Lane Closed
Adequate Field of View

The requirement for shadow vehicles will be listed in the project GENERAL NOTES, Item 502, Barricades, Signs and Traffic Handling.

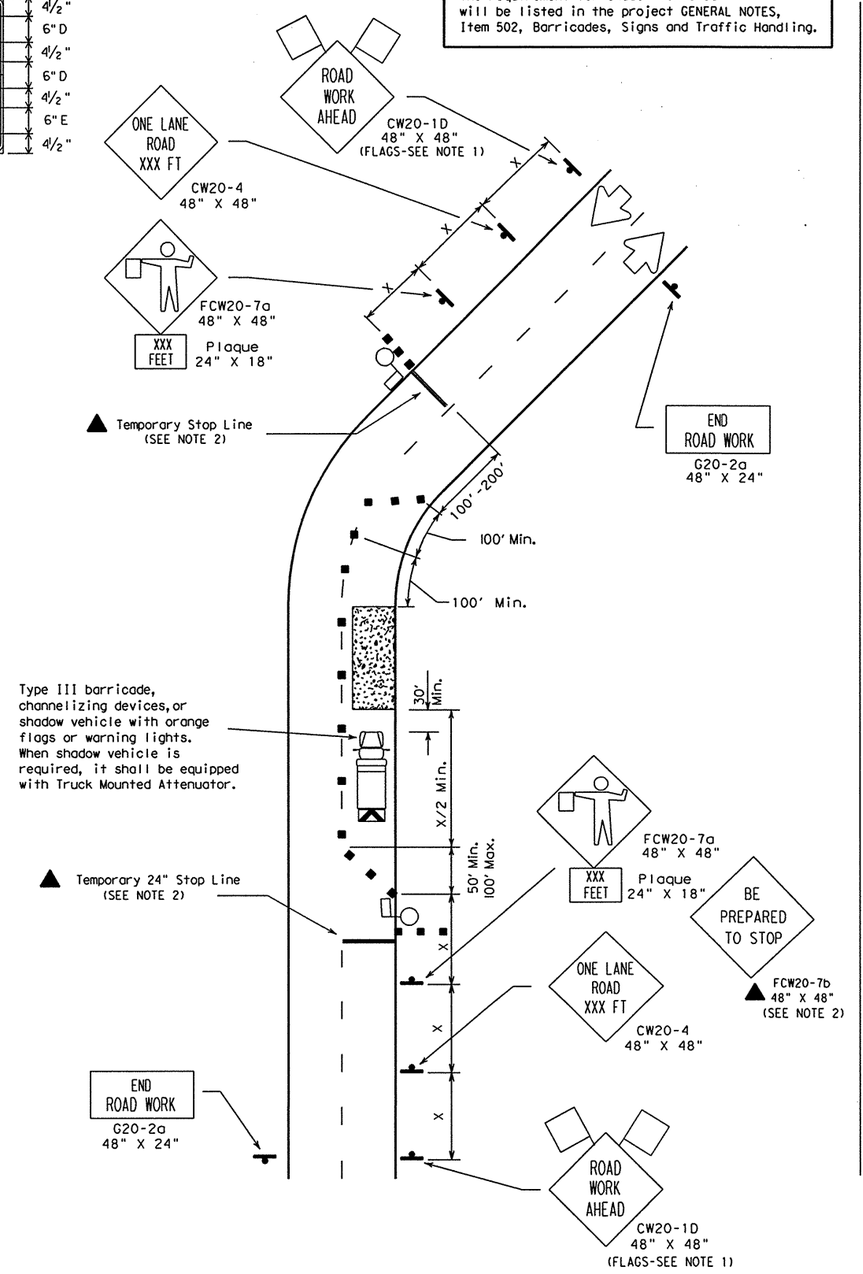

TCP (2-2b)

2-Lane Roadway Without Paved Shoulders
One Lane Closed
Inadequate Field of View

LEGEND

Type III Barricade ■ ■ Channelizing Devices Flag
Heavy Work Vehicle Truck Mounted Attenuator
Trailer Mounted Flashing Arrow Panel (M) Portable Changeable Message Sign
Flagger Sign Post

Posted Speed ✳	Formula	Minimum Desirable Taper Lengths ✳✳ 10' Offset	11' Offset	12' Offset	Suggested Maximum Spacing of Device On a Taper	On a Tangent	Minimum Sign Spacing x Distance
30	$L=\frac{WS^2}{60}$	150'	165'	180'	30'	60'-75'	120'
35		205'	225'	245'	35'	70'-90'	160'
40		265'	295'	320'	40'	80'-100'	240'
45	L=WS	450'	495'	540'	45'	90'-110'	320'
50		500'	550'	600'	50'	100'-125'	400'
55		550'	605'	660'	55'	110'-140'	500'
60		600'	660'	720'	60'	120'-150'	✳600'
65		650'	715'	780'	65'	130'-165'	✳700'
70		700'	770'	840'	70'	140'-175'	✳800'

✳ Conventional Roads Only

✳✳ Taper lengths have been rounded off.
L=Length of Taper (FT.) W=Width of Offset (FT.) S=Posted Speed (MPH)

TYPICAL USAGE: MOBILE	SHORT DURATION	SHORT TERM STATIONARY	INTERMEDIATE TERM STATIONARY	LONG TERM STATIONARY
	✓	✓	✓	

GENERAL NOTES:

1. Flags attached to signs are REQUIRED.
2. All traffic control devices illustrated are REQUIRED, except those denoted with the triangle symbol may be omitted when stated elsewhere in the plans.
3. The BE PREPARED TO STOP sign may be installed after the ONE LANE ROAD XXX FT sign, but proper sign spacing shall be maintained.
4. YIELD sign traffic control may be used on projects with approaches that have adequate sight distance. For projects in urban areas, work zones should be no longer than one half city block. In rural areas on roadways with less than 4000 ADT and work areas should be no longer than 400'.
5. YIELD TO ONCOMING TRAFFIC sign shall be placed on a support at a 7' minimum mounting height.
6. Flaggers should use two-way radios or other methods of communication to control traffic.
7. Length of work area should be based on the ability of flaggers to communicate.
8. For intermediate term situations, when it is not feasible to remove and restore pavement markings, the channelization must be made dominant by using a very close spacing. This is especially important in locations of conflicting information, such as where traffic is directed over a double yellow centerline. In such locations a maximum channelizing device spacing of 10 feet is recommended. The 10 foot channelizing device spacing recommendation is intended for the area of conflicting information and not the entire work zone.

STANDARD PLANS
TEXAS DEPARTMENT OF TRANSPORTATION
Traffic Operations Division

TRAFFIC CONTROL PLAN

TCP(2-2)-03

© TxDOT December 1985

DN: LR	CK: MT	DW: DN	CK: MT	MCG NO.1

REVISIONS	STATE DISTRICT	FEDERAL REGION	FEDERAL AID PROJECT	SHEET
8-95	PHR	6		202
1-97				
4-98				
3-03				

COUNTY	CONTROL	SECTION	JOB	HIGHWAY
HIDALGO	0255	08	071	US 281

DN: CK: DW: CK:
DATE: ACC: FILE:

LEVELS DISPLAYED
1 2 3 4 5 6 7 8 9 10 11 12 13 14 15 16
17 18 19 20 21 22 23 24 25 26 27 28 29 30 31 32
33 34 35 36 37 38 39 40 41 42 43 44 45 46 47 48
49 50 51 52 53 54 55 56 57 58 59 60 61 62 63

DISCLAIMER
The use of this standard is governed by the "Texas Engineering Practice Act". No warranty of any kind is made by TxDOT for any purpose whatsoever. TxDOT assumes no responsibility for the conversion of this standard to other formats or for incorrect results or damages resulting from its use.

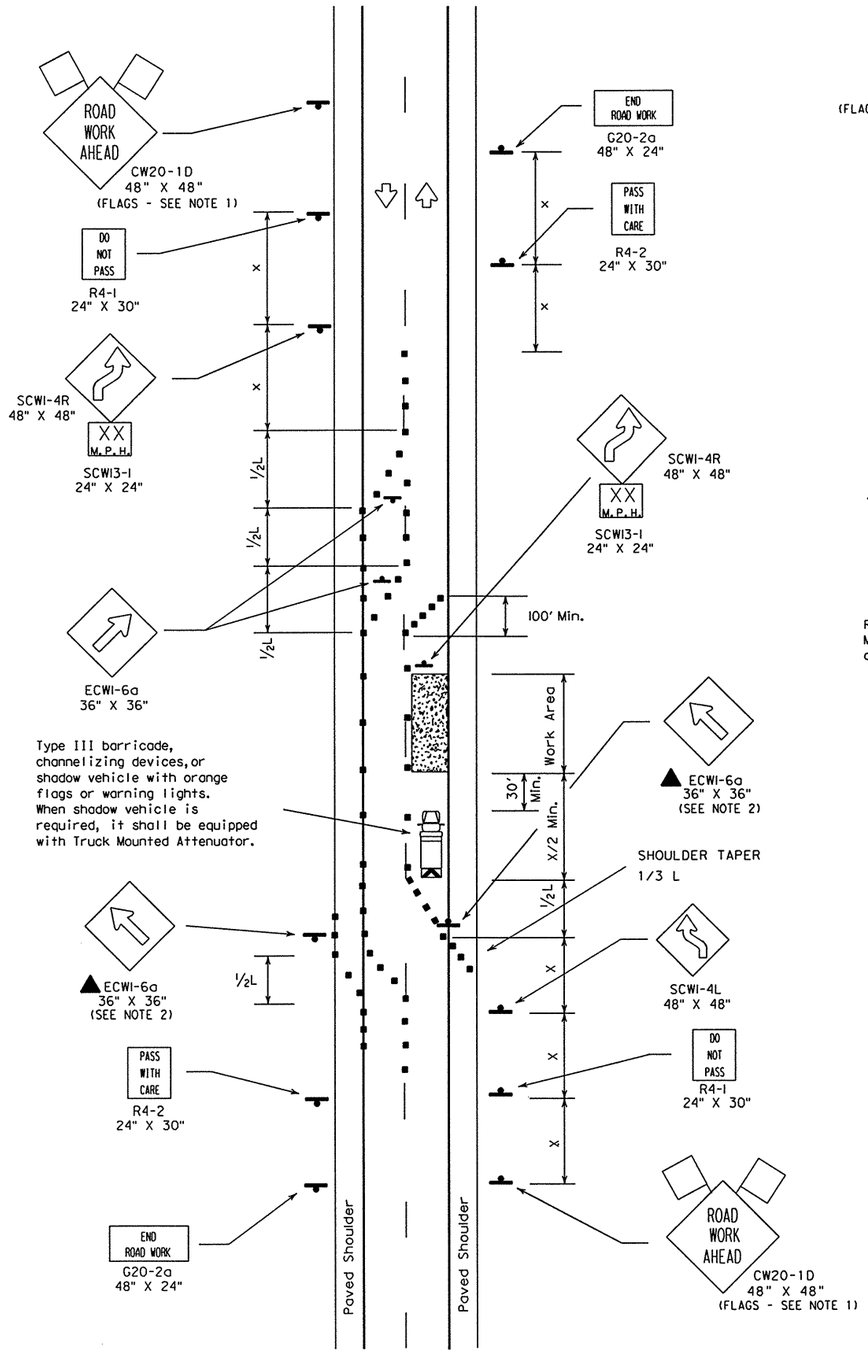

TCP (2-3a)

2-Lane Roadway With Paved Shoulders
One Lane Closed
Adequate Field of View

The requirement for shadow vehicles will be listed in the project GENERAL NOTES, Item 502, Barricades, Signs and Traffic Handling.

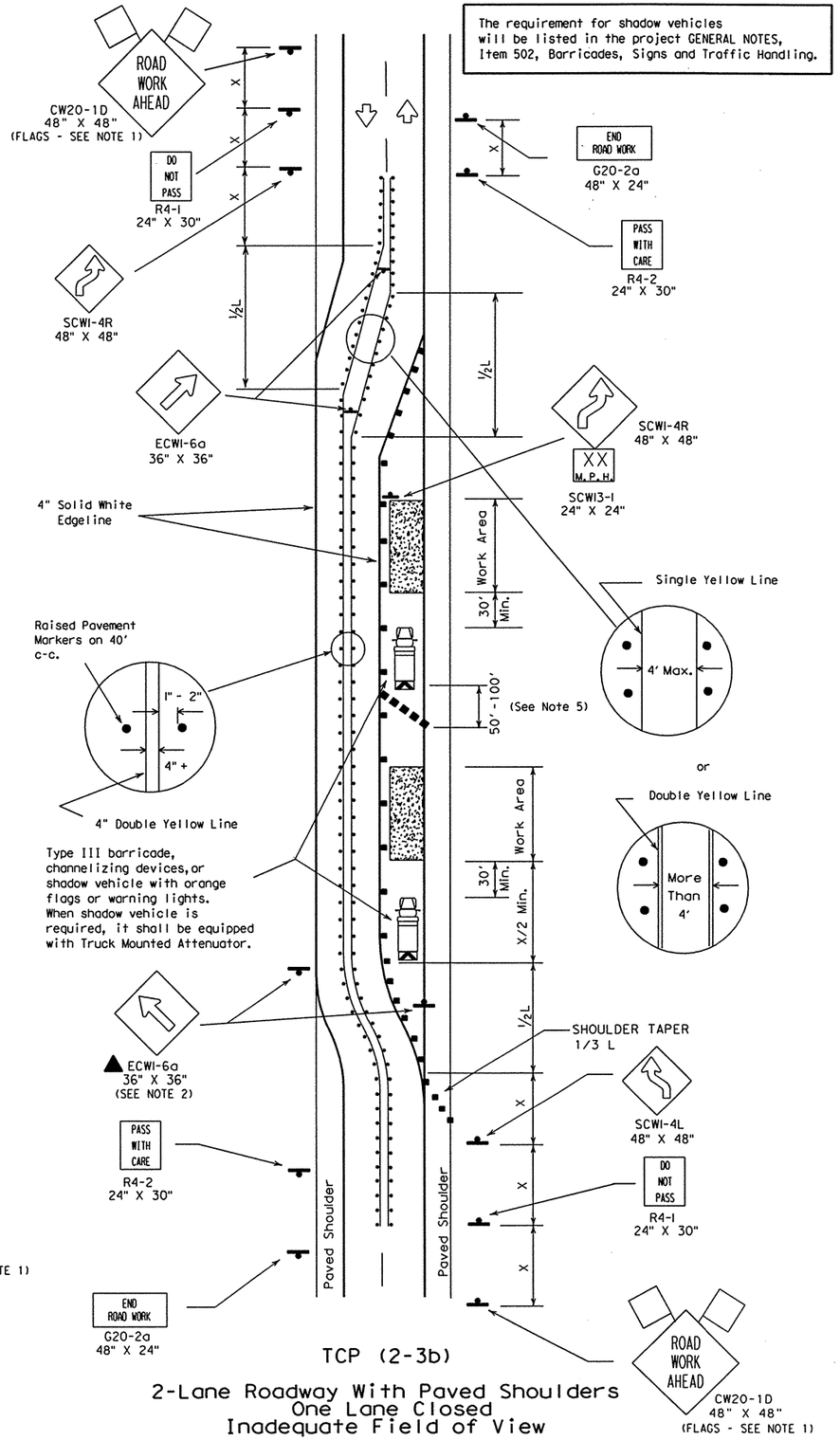

TCP (2-3b)

2-Lane Roadway With Paved Shoulders
One Lane Closed
Inadequate Field of View

LEGEND

Type III Barricade ■ ■ Channelizing Devices Flag
Heavy Work Vehicle Truck Mounted Attenuator
Trailer Mounted Flashing Arrow Panel (M) Portable Changeable Message Sign
Flagger Sign Post
• • • Raised Pavement Markers Type II-A-A (40' spacing)

Posted Speed ✳	Formula	Minimum Desirable Taper Lengths ✳✳ 10' Offset	11' Offset	12' Offset	Suggested Maximum Spacing of Device On a Taper	On a Tangent	Minimum Sign Spacing X Distance
30	$L=\frac{WS^2}{60}$	150'	165'	180'	30'	60'-75'	120'
35		205'	225'	245'	35'	70'-90'	160'
40		265'	295'	320'	40'	80'-100'	240'
45	L=WS	450'	495'	540'	45'	90'-110'	320'
50		500'	550'	600'	50'	100'-125'	400'
55		550'	605'	660'	55'	110'-140'	500'
60		600'	660'	720'	60'	120'-150'	✳600'
65		650'	715'	780'	65'	130'-165'	✳700'
70		700'	770'	840'	70'	140'-175'	✳800'

✳ Conventional Roads Only

✳✳ Taper lengths have been rounded off.
L=Length of Taper (FT.) W=Width of Offset (FT.) S=Posted Speed (MPH)

TYPICAL USAGE: MOBILE	SHORT DURATION	SHORT TERM STATIONARY	INTERMEDIATE TERM STATIONARY	LONG TERM STATIONARY
		✓	✓	✓ (2-3b only)

GENERAL NOTES:

1. Unless otherwise stated in the plans, flags attached to signs are REQUIRED.
2. All traffic control devices illustrated are REQUIRED, except those denoted with the triangle symbol may be omitted when stated elsewhere in the plans.
3. When work area will be in place more than one day but less than 2 weeks existing pavement markings may remain in place. Channelizing devices shall be used to separate traffic.
4. Flagger control should NOT be used unless roadway conditions or heavy traffic volume require additional emphasis to safely control traffic. Flagger should be positioned at end of traffic queue.
5. DO NOT PASS, PASS WITH CARE, and construction regulatory speed zone signs may be installed within ROAD WORK AHEAD signs. Proper spacing of signs shall be maintained.
6. When the work zone will be in place more than two weeks, conflicting pavement markings shall be removed, unless approved by the Engineer. New markings shall be placed and maintained to the satisfaction of the Engineer.
7. For intermediate term situations, when it is not feasible to remove and restore pavement markings, the channelization must be made dominant by using a very close spacing. This is especially important in locations of conflicting information, such as where traffic is directed over a double yellow centerline. In such locations a maximum channelizing device spacing of 10 feet is recommended. The 10 foot channelizing device spacing recommendation is intended for the area of conflicting information and not the entire work zone.

LEVELS DISPLAYED
1 2 3 4 5 6 7 8 9 10 11 12 13 14 15 16
17 18 19 20 21 22 23 24 25 26 27 28 29 30 31 32
33 34 35 36 37 38 39 40 41 42 43 44 45 46 47 48
49 50 51 52 53 54 55 56 57 58 59 60 61 62 63

DN: CK: DW: CK:
DATE: ACC: FILE:

STANDARD PLANS
TEXAS DEPARTMENT OF TRANSPORTATION
Traffic Operations Division

TRAFFIC CONTROL PLAN

TCP(2-3)-03

©TxDOT December 1985

DN: LR	CK: MT	DW: DN	CK: DW	MEG NO.:

REVISIONS	STATE DISTRICT	FEDERAL REGION	FEDERAL AID PROJECT	SHEET
8-95	PHR	6		203
1-97				
4-98				
3-03				

COUNTY	CONTROL	SECTION	JOB	HIGHWAY
HIDALGO	0255	08	091	115281

DISCLAIMER
The use of this standard is governed by the "Texas Engineering Practice Act". No warranty of any kind is made by TxDOT for any purpose whatsoever. TxDOT assumes no responsibility for the conversion of this standard to other formats or for incorrect results or damages resulting from its use.

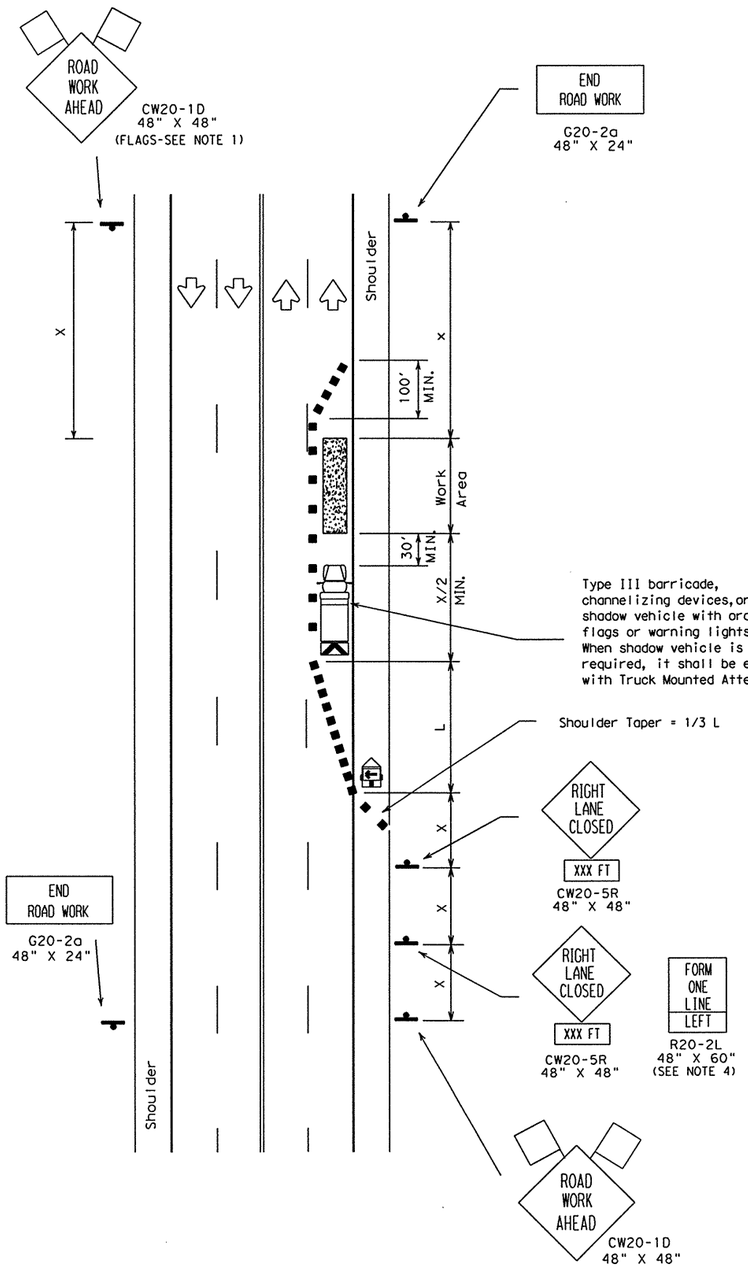

TCP (2-4a)

One Lane Closed
Less Than Two Weeks

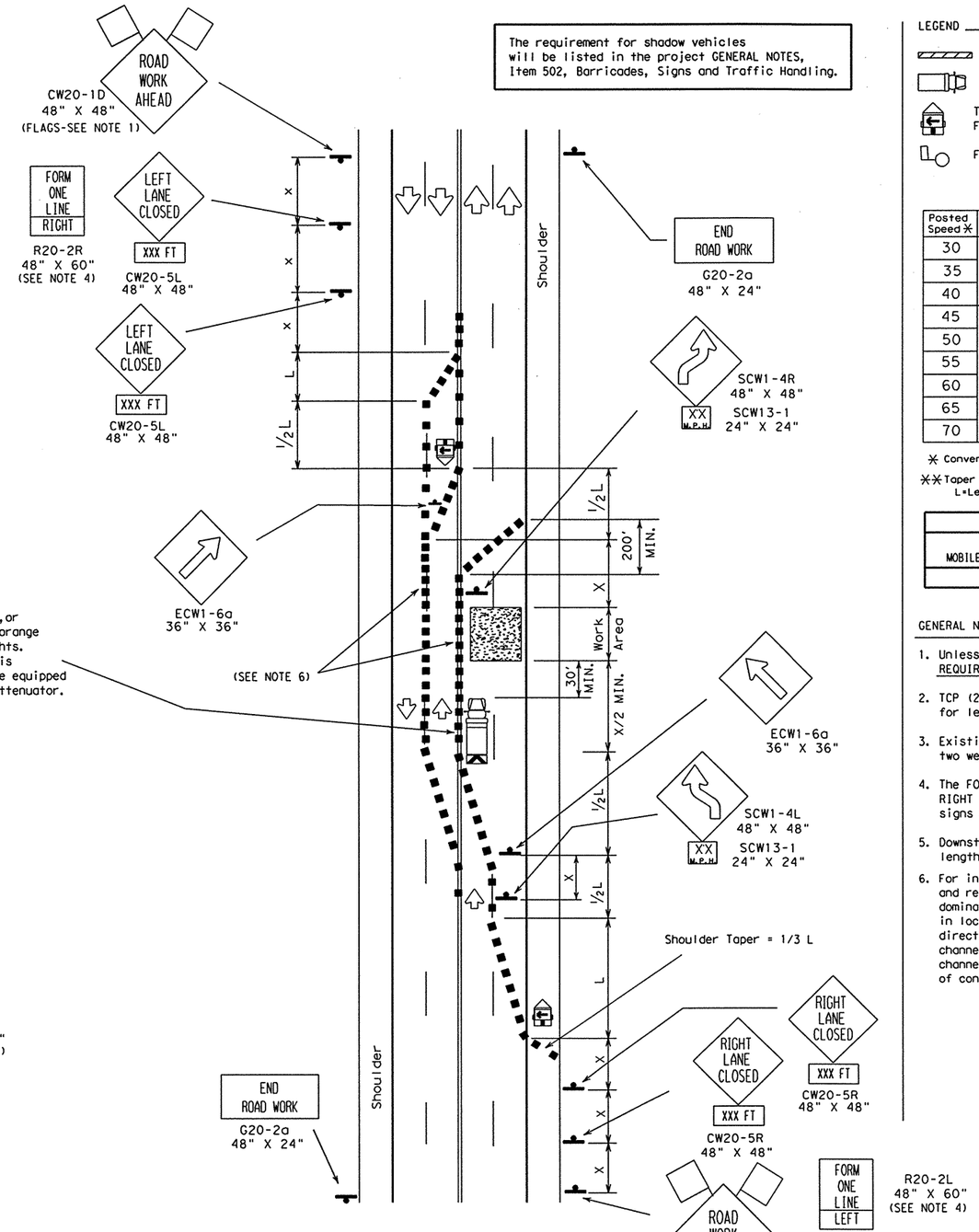

TCP (2-4b)

Two Lanes Closed
Less Than Two Weeks

LEGEND

Type III Barricade ■ ■ Channelizing Devices Flag
Heavy Work Vehicle Truck Mounted Attenuator
Trailer Mounted Flashing Arrow Panel (M) Portable Changeable Message Sign
Flagger Sign Post

Posted Speed *	Formula	Minimum Desirable Taper Lengths ** 10' Offset	11' Offset	12' Offset	Suggested Maximum Spacing of Device On a Taper	On a Tangent	Minimum Sign Spacing x Distance
30	$L=\frac{WS^2}{60}$	150'	165'	180'	30'	60'-75'	120'
35		205'	225'	245'	35'	70'-90'	160'
40		265'	295'	320'	40'	80'-100'	240'
45	L=WS	450'	495'	540'	45'	90'-110'	320'
50		500'	550'	600'	50'	100'-125'	400'
55		550'	605'	660'	55'	110'-140'	500'
60		600'	660'	720'	60'	120'-150'	*600'
65		650'	715'	780'	65'	130'-165'	*700'
70		700'	770'	840'	70'	140'-175'	*800'

* Conventional Roads Only

** Taper lengths have been rounded off.
L=Length of Taper (FT.) W=Width of Offset (FT.) S=Posted Speed (MPH)

TYPICAL USAGE: MOBILE	SHORT DURATION	SHORT TERM STATIONARY	INTERMEDIATE TERM STATIONARY	LONG TERM STATIONARY
		✓	✓	

GENERAL NOTES:

1. Unless otherwise stated in the plans, flags attached to signs are REQUIRED.
2. TCP (2-4b) shall be used only on projects that will be at a location for less than two weeks.
3. Existing pavement markings may remain in place for projects less than two weeks in duration.
4. The FORM ONE LINE LEFT (or RIGHT) sign may be used following the RIGHT (or LEFT) LANE CLOSED XXX FT sign. Spacing distance between signs should be the minimum distance indicated.
5. Downstream taper is optional. When used, it should be 100' minimum length per lane.
6. For intermediate term situations, when it is not feasible to remove and restore pavement markings, the channelization must be made dominant by using a very close spacing. This is especially important in locations of conflicting information, such as where traffic is directed over a double yellow centerline. In such locations a maximum channelizing device spacing of 10 feet is recommended. The 10 foot channelizing device spacing recommendation is intended for the area of conflicting information and not the entire work zone.

STANDARD PLANS
TEXAS DEPARTMENT OF TRANSPORTATION
Traffic Operations Division

TRAFFIC CONTROL PLAN

TCP(2-4)-03

© TxDOT December 1985

DN: LR	CK: WT	DW: DN	CK: DM	MCG NO.:

REVISIONS	STATE DISTRICT	FEDERAL REGION	FEDERAL AID PROJECT	SHEET
8-95	PAR	6		204
1-97	COUNTY		CONTROL / SECTION / JOB	HIGHWAY
4-98	HIDALGO		0255 / 08 / 091	US 281
3-03				

DN: CK: DW: CK:
DATE: ACC: FILE:

LEVELS DISPLAYED
1 2 3 4 5 6 7 8 9 10 11 12 13 14 15 16
17 18 19 20 21 22 23 24 25 26 27 28 29 30 31 32
33 34 35 36 37 38 39 40 41 42 43 44 45 46 47 48
49 50 51 52 53 54 55 56 57 58 59 60 61 62 63

DISCLAIMER
The use of this standard is governed by the "Texas Engineering Practice Act". No warranty of any kind is made by TxDOT for any purpose whatsoever. TxDOT assumes no responsibility for the conversion of this standard to other formats or for incorrect results or damages resulting from its use.

The requirement for shadow vehicles will be listed in the project GENERAL NOTES, Item 502, Barricades, Signs and Traffic Handling.

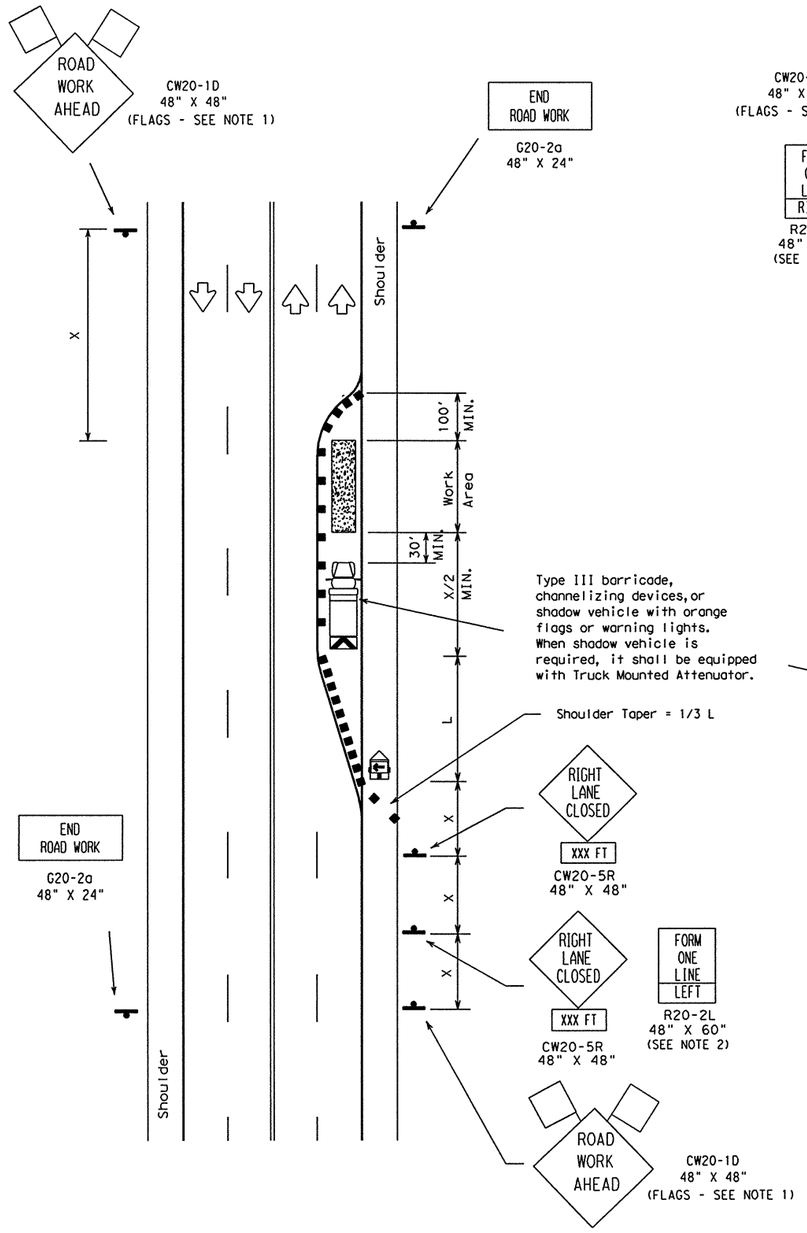

TCP (2-5a)
One Lane Closed
More Than Two Weeks

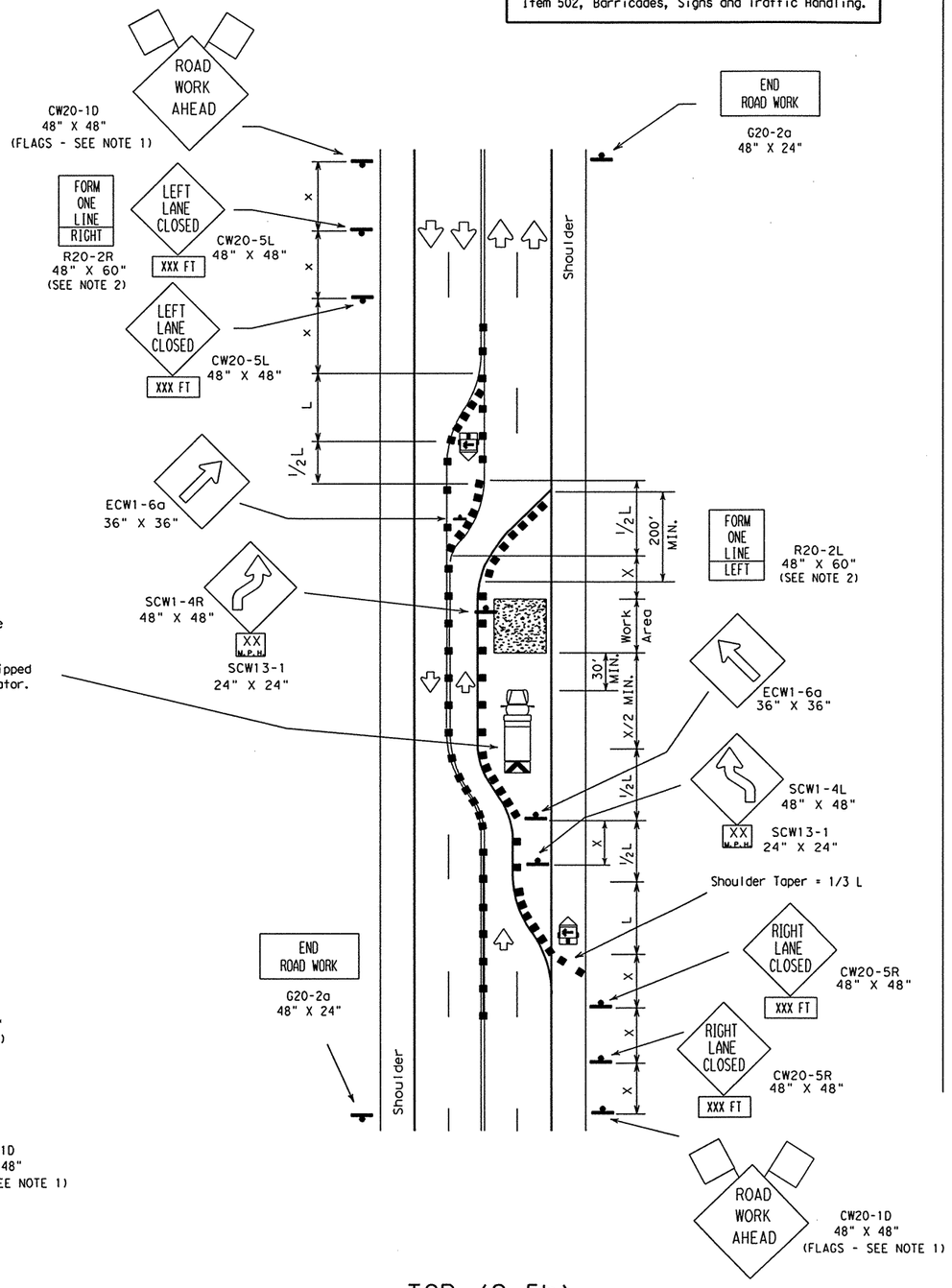

TCP (2-5b)
Two Lanes Closed
More Than Two Weeks

LEGEND

Type III Barricade ■ ■ Channelizing Devices Flag
Heavy Work Vehicle Truck Mounted Attenuator
Trailer Mounted Flashing Arrow Panel
Portable Changeable Message Sign
Flagger Sign Post

Posted Speed ✳	Formula	Minimum Desirable Taper Lengths ✳✳ 10' Offset	11' Offset	12' Offset	Suggested Maximum Spacing of Device On a Taper	On a Tangent	Minimum Sign Spacing X Distance
30	$L=\frac{WS^2}{60}$	150'	165'	180'	30'	60'-75'	120'
35		205'	225'	245'	35'	70'-90'	160'
40		265'	295'	320'	40'	80'-100'	240'
45	L=WS	450'	495'	540'	45'	90'-110'	320'
50		500'	550'	600'	50'	100'-125'	400'
55		550'	605'	660'	55'	110'-140'	500'
60		600'	660'	720'	60'	120'-150'	✳600'
65		650'	715'	780'	65'	130'-165'	✳700'
70		700'	770'	840'	70'	140'-175'	✳800'

✳ Conventional Roads Only

✳✳ Taper lengths have been rounded off.
L=Length of Taper (FT.) W=Width of Offset (FT.) S=Posted Speed (MPH)

TYPICAL USAGE:				
MOBILE	SHORT DURATION	SHORT TERM STATIONARY	INTERMEDIATE TERM STATIONARY	LONG TERM STATIONARY
			✓	✓

GENERAL NOTES:

1. Unless otherwise stated in the plans, flags attached to signs are REQUIRED.
2. The FORM ONE LINE LEFT (or RIGHT) sign may be used following the RIGHT (or LEFT) LANE CLOSED XXX FT sign. Spacing distance between signs should be the minimum distance indicated.
3. When the work zone will be in place more than two weeks, conflicting pavement markings shall be removed. New markings shall be installed and maintained to the satisfaction of the Engineer.
4. Downstream taper is optional. When used, it should be 100' minimum length per lane.
5. For intermediate term situations, when it is not feasible to remove and restore pavement markings, the channelization must be made dominant by using a very close spacing. This is especially important in locations of conflicting information, such as where traffic is directed over a double yellow centerline. In such locations a maximum channelizing device spacing of 10 feet is recommended. The 10 foot channelizing device spacing recommendation is intended for the area of conflicting information and not the entire work zone.

LEVELS DISPLAYED
1 2 3 4 5 6 7 8 9 10 11 12 13 14 15 16
17 18 19 20 21 22 23 24 25 26 27 28 29 30 31 32
33 34 35 36 37 38 39 40 41 42 43 44 45 46 47 48
49 50 51 52 53 54 55 56 57 58 59 60 61 62 63

DN: CK: CK: DW: CK: DATE: ACC: FILE:

STANDARD PLANS
TEXAS DEPARTMENT OF TRANSPORTATION
Traffic Operations Division

TRAFFIC CONTROL PLAN

TCP(2-5)-03

© TxDOT December 1985

DN: LR	CK:	DW: DN	CK: MT	MEG NO.:

REVISIONS	STATE DISTRICT	FEDERAL REGION	FEDERAL AID PROJECT	SHEET
8-95	PHR	6		205
1-97				
4-98	COUNTY		CONTROL SECTION JOB	HIGHWAY
3-03	HIDALGO		0255 08 091	US 281

DISCLAIMER
The use of this standard is governed by the "Texas Engineering Practice Act". No warranty of any kind is made by TxDOT for any purpose whatsoever. TxDOT assumes no responsibility for the conversion of this standard to other formats or for incorrect results or damages resulting from its use.

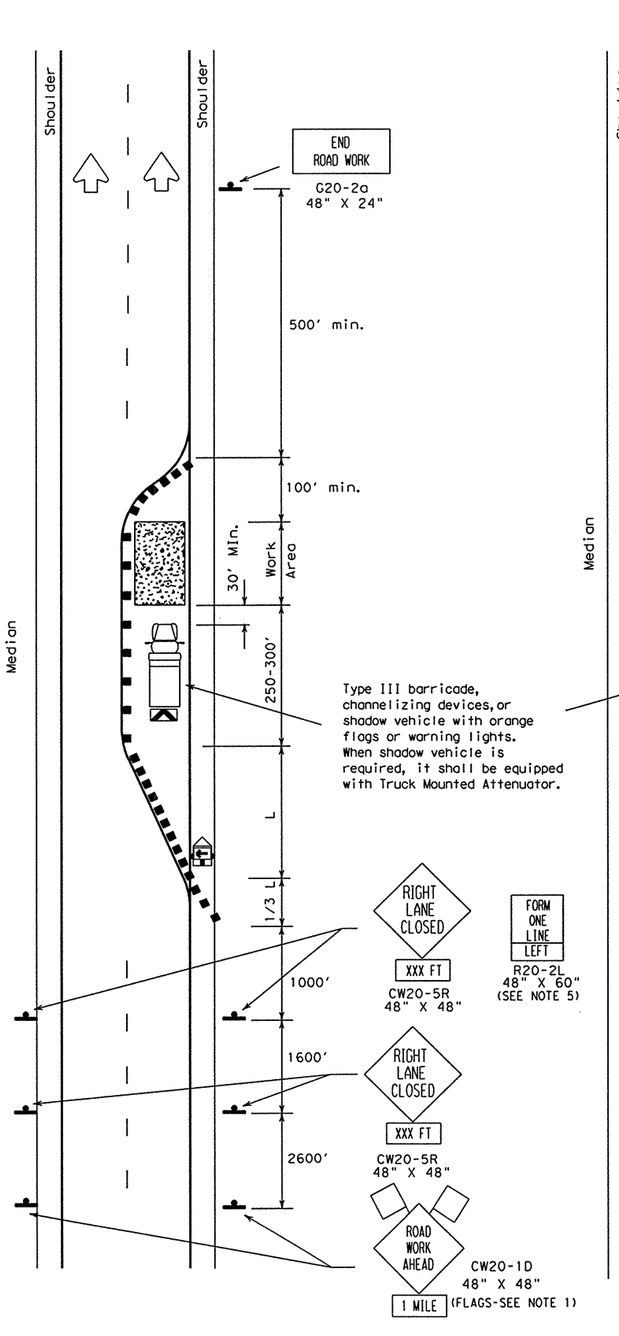

TCP (2-6a)
One Lane Closure

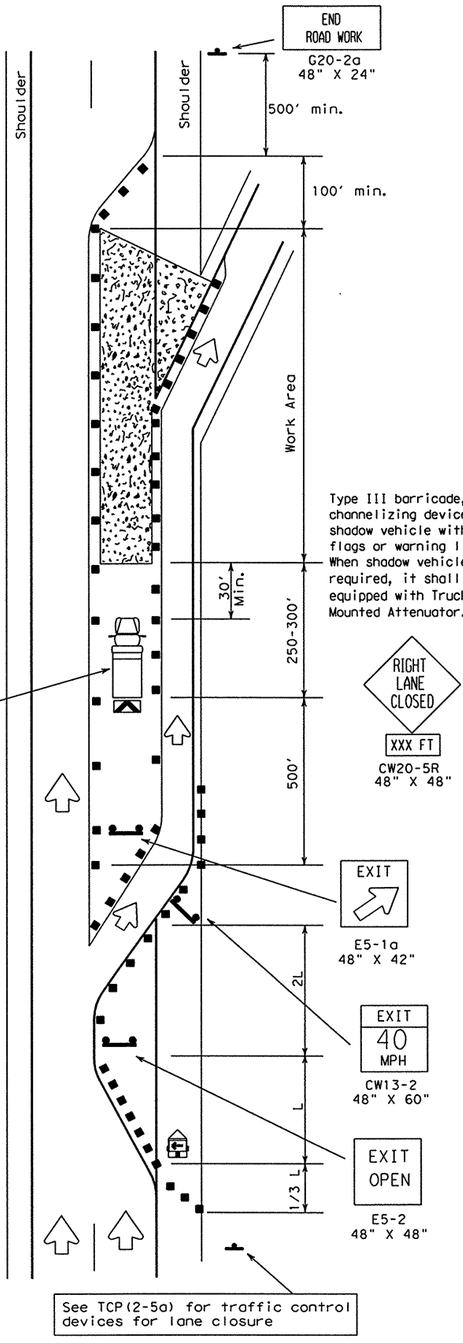

TCP (2-6b)
Lane Closure Near Exit Ramps

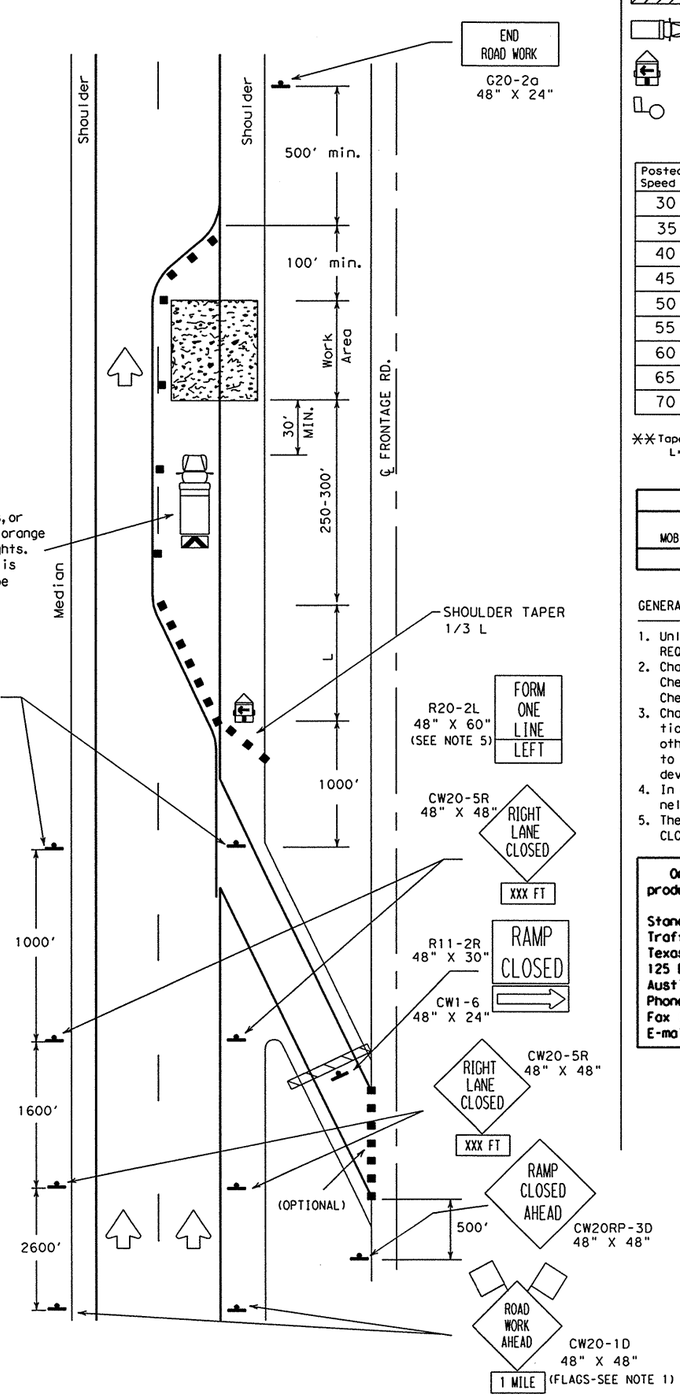

TCP (2-6c)
Lane Closure Near Entrance Ramps

LEGEND

Type III Barricade ■ ■ Channelizing Devices Flag
Heavy Work Vehicle Truck Mounted Attenuator
Trailer Mounted Flashing Arrow Panel (M) Portable Changeable Message Sign
Flagger Sign Post

Posted Speed	Formula	Minimum Desirable Taper Lengths ✻✻ 10' Offset	11' Offset	12' Offset	Suggested Maximum Spacing of Device On a Taper	On a Tangent
30	$L=\frac{WS^2}{60}$	150'	165'	180'	30'	60'-75'
35		205'	225'	245'	35'	70'-90'
40		265'	295'	320'	40'	80'-100'
45	L=WS	450'	495'	540'	45'	90'-110'
50		500'	550'	600'	50'	100'-125'
55		550'	605'	660'	55'	110'-140'
60		600'	660'	720'	60'	120'-150'
65		650'	715'	780'	65'	130'-165'
70		700'	770'	840'	70'	140'-175'

✻✻Taper lengths have been rounded off.
L=Length of Taper (FT.) W=Width of Offset (FT.) S=Posted Speed (MPH)

TYPICAL USAGE: MOBILE	SHORT DURATION	SHORT TERM STATIONARY	INTERMEDIATE TERM STATIONARY	LONG TERM STATIONARY
			✓	✓

GENERAL NOTES:

1. Unless otherwise stated in the plans, flags attached to signs are REQUIRED.
2. Channelizing devices used to close lanes may be supplemented with the Chevron Alignment Sign placed on every other channelizing device. Chevrons may be attached to plastic drums as per BC Standards.
3. Channelizing devices used along the work area or along tangent sections may be supplemented with vertical panels (VP) placed on every other channelizing device. If night time conditions make it difficult to see at least two VP's, the VP's may be placed on each channelizing device.
4. In areas with safety lighting or continuous illumination the channelizing devices can be supplemented with delineators.
5. The FORM ONE LINE LEFT sign may be used following the RIGHT LANE CLOSED sign.

Only pre-qualified products shall be used. A list of compliant products and their sources may be obtained by writing or faxing:

Standards Engineer
Traffic Operations Division - TE
Texas Department of Transportation
125 East 11th Street
Austin, Texas 78701-2483
Phone (512) 416-3335
Fax (512) 416-3161
E-mail TRF-STANDARD@mailgw.dot.state.tx.us

The requirement for shadow vehicles will be listed in the project GENERAL NOTES, Item 502, Barricades, Signs and Traffic Handling.

STANDARD PLANS
TEXAS DEPARTMENT OF TRANSPORTATION
Traffic Operations Division

TRAFFIC CONTROL PLAN

TCP(2-6)-98

© TxDOT December 1985

DN: LR	CK: MT	DW: DN	CK: DW	REQ NO.:

REVISIONS	STATE DISTRICT	FEDERAL REGION	FEDERAL AID PROJECT	SHEET
2-94	PHR	6		206
8-95				
1-97				
4-98				

COUNTY	CONTROL	SECTION	JOB	HIGHWAY
HIDALGO	0255	08	091	US 281

DN:	CK:	DW:	CK:

LEVELS DISPLAYED	DATE:
1 2 3 4 5 6 7 8 9 10 11 12 13 14 15 16 17 18 19 20 21 22 23 24 25 26 27 28 29 30 31 32 33 34 35 36 37 39 40 41 42 43 44 45 46 47 48 49 50 51 52 53 54 55 56 57 58 59 60 61 62 63	ACC:
	FILE:

DISCLAIMER
The use of this standard is governed by the "Texas Engineering Practice Act". No warranty of any kind is made by TxDOT for any purpose whatsoever. TxDOT assumes no responsibility for the conversion of this standard to other formats or for incorrect results or damages resulting from its use.

Typical Trail Vehicle
with RIGHT Directional display
Flashing Arrow Panel

TCP (3-1a)
Undivided Multilane Roadway

Work On Shoulder

Work On Travel Lane

TCP (3-1b)
Two-Way Roadway With Paved Shoulders

Typical Trail Vehicle
with (four corner flash)
CAUTION display
Flashing Arrow Panel

TCP (3-1c)
Two-Way Roadway Without Paved Shoulders

LETTERS = BLACK
BORDER = BLACK
BACKGROUND = ORANGE

CW21-10

Legend:

* TRAIL VEHICLE
** SHADOW VEHICLE
*** WORK VEHICLE
Truck mounted attenuator
HEAVY WORK VEHICLE

Arrow Panel Displays
RIGHT Directional
LEFT Directional
RIGHT or LEFT Directional
CAUTION mode

GENERAL NOTES:

1. TRAIL, SHADOW, LEAD, and work vehicles shall be equipped with arrow panels as illustrated. The Engineer will determine if the LEAD VEHICLE and/or TRAIL VEHICLE are required based on prevailing roadway conditions, traffic volume, and sight distance restrictions.
2. All traffic control devices shall be in accordance with the "Texas Manual on Uniform Traffic Control Devices" (TMUTCD), latest edition.
3. The use of yellow rotating beacons or strobe lights on vehicles are required unless otherwise stated elsewhere in the plans.
4. The use of truck mounted attenuators (TMA) on the SHADOW VEHICLE and the TRAIL VEHICLE are required.
5. Optional striping on the back panel of all truck mounted attenuators shall be 8" red and white reflective sheeting placed in an inverted "V" design. Reflective sheeting shall meet or exceed the reflectivity and color requirements of DEPARTMENTAL MATERIAL SPECIFICATION D-9-8300, TYPE C.
6. Flashing Arrow Panels shall be Type B or Type C as per BC Standards. The panel operation shall be controlled from inside the vehicle.
7. Each vehicle shall have two-way radio communication capability.
8. When work convoys must change lanes, the TRAIL VEHICLE should change lanes first to shadow the other convoy vehicles.
9. Vehicle spacing between TRAIL VEHICLE and SHADOW VEHICLE will vary depending on sight distance restrictions. Motorists approaching the work convoy should be able to see the TRAIL VEHICLE in time to slow down and/or change lanes as they approach the TRAIL VEHICLE.

Only pre-qualified products shall be used. A list of compliant products and their sources may be obtained by writing or faxing:

Standards Engineer
Traffic Operations Division - TE
Texas Department of Transportation
125 East 11th Street
Austin, Texas 78701-2483
Phone (512) 416-3335
Fax (512) 416-3161
E-mail TRF-STANDARD@mailgw.dot.state.tx.us

Shadow and trail vehicle shall be equipped with Truck Mounted Attenuator.

OPTIONAL STRIPING FOR TMA

STRIPING FOR TMA WILL BE REQUIRED ON ALL PROJECTS AWARDED AFTER JANUARY 1, 2000

STANDARD PLANS
TEXAS DEPARTMENT OF TRANSPORTATION
Traffic Operations Division

TRAFFIC CONTROL PLAN MOBILE OPERATIONS UNDIVIDED HIGHWAYS

TCP(3-1)-98

©TxDOT December 1985	DN: LR	CK: -	DW: DN	CK: DM	NEG NO.:

REVISIONS	STATE DISTRICT	FEDERAL REGION	FEDERAL AID PROJECT			SHEET
2-94 8-95	PHR	6				207
	COUNTY		CONTROL	SECTION	JOB	HIGHWAY
1-97 4-98	HIDALGO		0255	08	091	US 281

175

DN:	CK:	DW:	CK:

LEVELS DISPLAYED																DATE:
1	2	3	4	5	6	7	8	9	10	11	12	13	14	15	16	DATE:
17	18	19	20	21	22	23	24	25	26	27	28	29	30	31	32	ACC:
33	34	35	36	37	38	39	40	41	42	43	44	45	46	47	48	FILE:
49	50	51	52	53	54	55	56	57	58	59	60	61	62	63		

DISCLAIMER
The use of this standard is governed by the "Texas Engineering Practice Act". No warranty of any kind is made by TxDOT for any purpose whatsoever. TxDOT assumes no responsibility for the conversion of this standard to other formats or for incorrect results or damages resulting from its use.

Shadow and trail vehicle shall be equipped with Truck Mounted Attenuator.

LETTERS = BLACK
BORDER = BLACK
BACKGROUND = ORANGE

CW21-10

Legend:

- ✱ TRAIL VEHICLE
- ✱✱ SHADOW VEHICLE
- ✱✱✱ WORK VEHICLE
- Truck mounted attenuator
- HEAVY WORK VEHICLE

Arrow Panel Displays

- RIGHT Directional
- LEFT Directional
- RIGHT or LEFT Directional
- CAUTION mode

GENERAL NOTES:

1. TRAIL, SHADOW, LEAD, and work vehicles shall be equipped with arrow panels as illustrated. The Engineer will determine if the LEAD VEHICLE and/or TRAIL VEHICLE are required based on prevailing roadway conditions, traffic volume, and sight distance restrictions.
2. All traffic control devices shall be in accordance with the "Texas Manual on Uniform Traffic Control Devices" (TMUTCD), latest edition.
3. The use of yellow rotating beacons or strobe lights on vehicles are required unless otherwise stated elsewhere in the plans.
4. The use of truck mounted attenuators (TMA) on the SHADOW VEHICLE and the TRAIL VEHICLE are required.
5. Optional striping on the back panel of all truck mounted attenuators shall be 8" red and white reflective sheeting placed in an inverted "V" design. Reflective sheeting shall meet or exceed the reflectivity and color requirements of DEPARTMENTAL MATERIAL SPECIFICATION D-9-8300, TYPE C.
6. Flashing Arrow Panels shall be Type B or Type C as per BC Standards. The panel operation shall be controlled from inside the vehicle.
7. Each vehicle shall have two-way radio communication capability.
8. When work convoys must change lanes, the TRAIL VEHICLE should change lanes first to shadow the other convoy vehicles.
9. Vehicle spacing between TRAIL VEHICLE and SHADOW VEHICLE will vary depending on sight distance restrictions. Motorists approaching the work convoy should be able to see the TRAIL VEHICLE in time to slow down and/or change lanes as they approach the TRAIL VEHICLE.
10. The LANE BLOCKED sign (FCW20-6) shall be used on divided highways and may be mounted on a truck or trailer. For divided highways with two lanes in each direction, the RIGHT or LEFT LANE CLOSED sign (CW20-5, 48" x 48") may be substituted for the LANE BLOCKED sign (FCW20-6).

R11-2R

LETTERS = BLACK
BORDER = BLACK
BACKGROUND = WHITE

OPTIONAL STRIPING FOR TMA

STRIPING FOR TMA WILL BE REQUIRED ON ALL PROJECTS AWARDED AFTER JANUARY 1, 2000

Typical Trail Vehicle
with LEFT Directional display
Flashing Arrow Panel

Typical Advance
Warning Vehicle

FCW20-6

LETTERS = BLACK
BORDER = BLACK
BACKGROUND = ORANGE

Only pre-qualified products shall be used. A list of compliant products and their sources may be obtained by writing or faxing:

Standards Engineer
Traffic Operations Division - TE
Texas Department of Transportation
125 East 11th Street
Austin, Texas 78701-2483
Phone (512) 416-3335
Fax (512) 416-3161
E-mail TRF-STANDARD@mailgw.dot.state.tx.us

STANDARD PLANS
TEXAS DEPARTMENT OF TRANSPORTATION
Traffic Operations Division

TRAFFIC CONTROL PLAN MOBILE OPERATIONS DIVIDED HIGHWAYS

TCP(3-2)-98

©TxDOT December 1985	DN: LR	CK: -	DW: DN	CK: DM	NEG NO.:	
REVISIONS	STATE DISTRICT	FEDERAL REGION	FEDERAL AID PROJECT			SHEET
2-94 8-95	PHR	6				208
1-97 4-98	COUNTY		CONTROL	SECTION	JOB	HIGHWAY
	HIDALGO		0255	08	091	US 281

LEVELS DISPLAYED																DATE:
1	2	3	4	5	6	7	8	9	10	11	12	13	14	15	16	ACC:
17	18	19	20	21	22	23	24	25	26	27	28	29	30	31	32	FILE:
33	34	35	36	37	38	39	40	41	42	43	44	45	46	47	48	
49	50	51	52	53	54	55	56	57	58	59	60	61	62	63		

DN:
CK:
DW:
CK:

DISCLAIMER
The use of this standard is governed by the "Texas Engineering Practice Act". No warranty of any kind is made by TxDOT for any purpose whatsoever. TxDOT assumes no responsibility for the conversion of this standard to other formats or for incorrect results or damages resulting from its use.

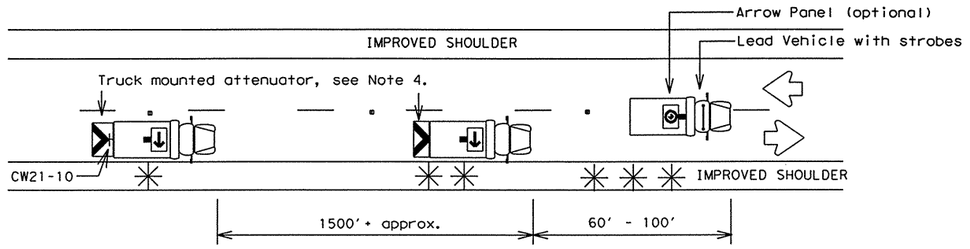

Two Lane Highway With Paved Shoulders (work on travel lane)

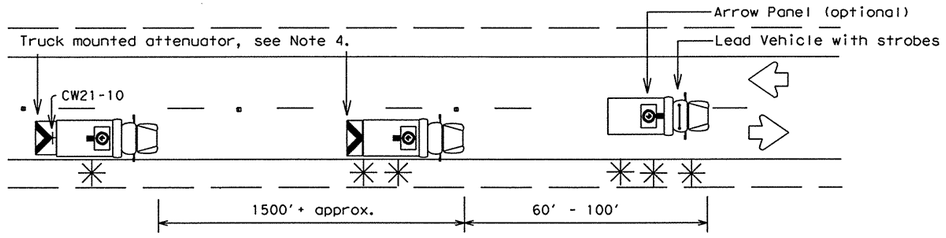

Two Lane Highway Without Paved Shoulders (work on travel lane)

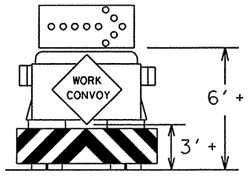

TYPICAL TRAIL VEHICLE
RIGHT Directional display
Flashing Arrow Panel

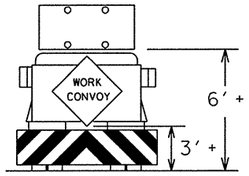

TYPICAL TRAIL VEHICLE
with (four corner flash)
CAUTION display
Flashing Arrow Panel

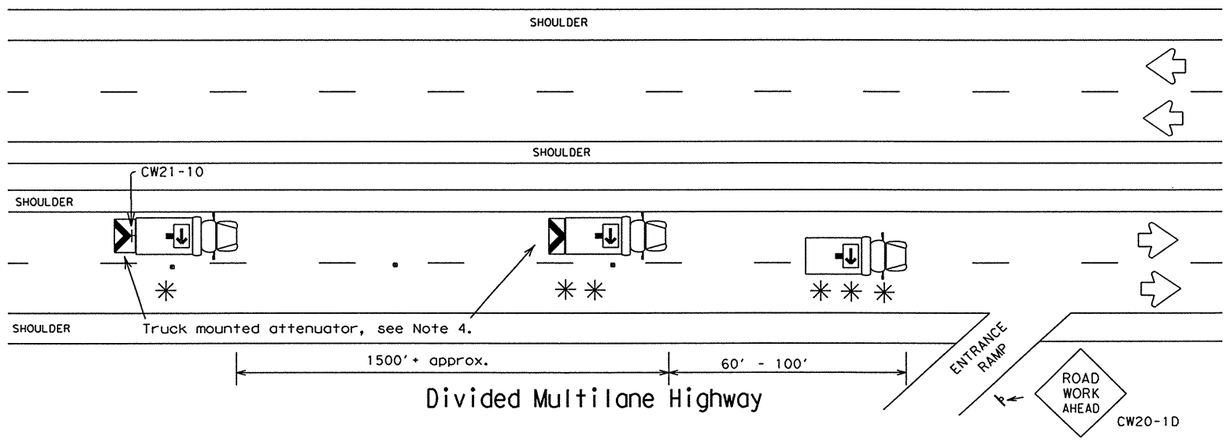

Divided Multilane Highway

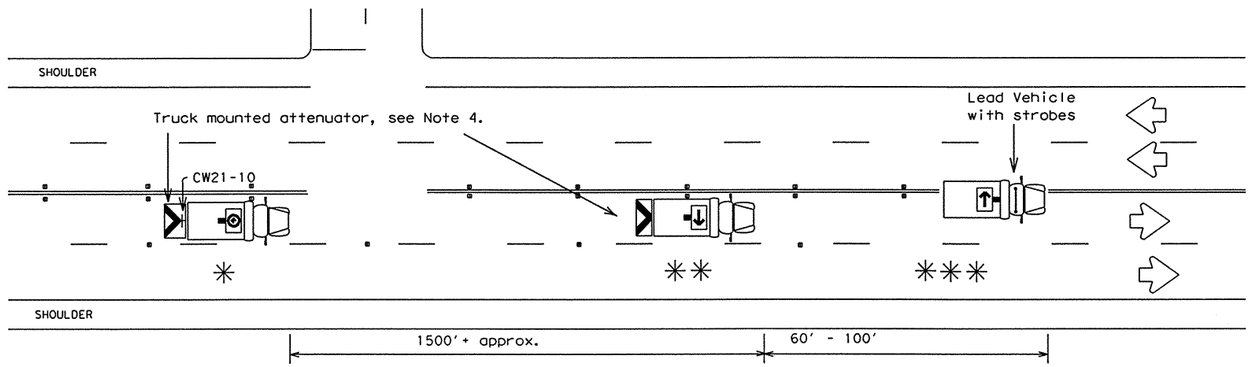

Undivided Multilane Highway

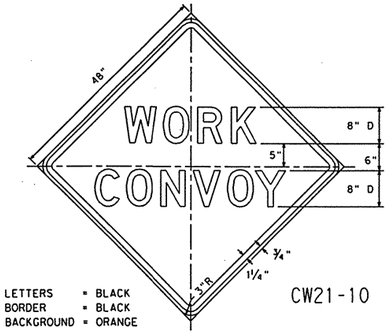

CW21-10

Legend:

- ✱ TRAIL VEHICLE
- ✱✱ SHADOW VEHICLE
- ✱✱✱ WORK VEHICLE
- Truck mounted attenuator
- HEAVY WORK VEHICLE

Arrow Panel Displays

- RIGHT Directional
- LEFT Directional
- RIGHT or LEFT Directional
- CAUTION mode

GENERAL NOTES:

1. TRAIL, SHADOW, LEAD, and work vehicles shall be equipped with arrow panels as illustrated. The Engineer will determine if the LEAD VEHICLE and/or TRAIL VEHICLE are required based on prevailing roadway conditions, traffic volume, and sight distance restrictions.
2. All traffic control devices shall be in accordance with the "Texas Manual on Uniform Traffic Control Devices" (TMUTCD), latest edition.
3. The use of yellow rotating beacons or strobe lights on vehicles are required unless otherwise stated elsewhere in the plans.
4. The use of truck mounted attenuators (TMA) on the SHADOW VEHICLE and the TRAIL VEHICLE are required.
5. Optional striping on the back panel of all truck mounted attenuators shall be 8" red and white reflective sheeting placed in an inverted "V" design. Reflective sheeting shall meet or exceed the reflectivity and color requirements of DEPARTMENTAL MATERIAL SPECIFICATION D-9-8300, TYPE C.
6. Flashing Arrow Panels shall be Type B or Type C as per BC Standards. The panel operation shall be controlled from inside the vehicle.
7. Each vehicle shall have two-way radio communication capability.
8. When work convoys must change lanes, the TRAIL VEHICLE should change lanes first to shadow the other convoy vehicles.
9. Vehicle spacing between TRAIL VEHICLE and SHADOW VEHICLE will vary depending on sight distance restrictions. Motorists approaching the work convoy should be able to see the TRAIL VEHICLE in time to slow down and/or change lanes as they approach the TRAIL VEHICLE.

Only pre-qualified products shall be used. A list of compliant products and their sources may be obtained by writing or faxing:

Standards Engineer
Traffic Operations Division - TE
Texas Department of Transportation
125 East 11th Street
Austin, Texas 78701-2483
Phone (512) 416-3335
Fax (512) 416-3161
E-mail TRF-STANDARD@mailgw.dot.state.tx.us

Shadow and trail vehicle shall be equipped with Truck Mounted Attenuator.

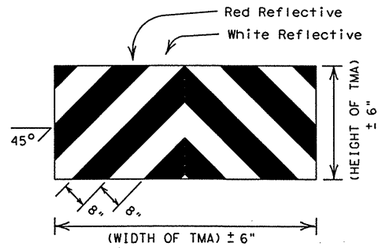

OPTIONAL STRIPING FOR TMA

STRIPING FOR TMA WILL BE REQUIRED ON ALL PROJECTS AWARDED AFTER JANUARY 1, 2000

STANDARD PLANS
TEXAS DEPARTMENT OF TRANSPORTATION
Traffic Operations Division

TRAFFIC CONTROL PLAN MOBILE OPERATIONS RAISED PAVEMENT MARKER INSTALLATION

TCP(3-3)-98

©TxDOT September 1987	DN: LR	CK: -	DW: DN	CK: DM	MSG NO.:
REVISIONS 2-94 8-95 1-97 4-98	STATE DISTRICT: PHR	FEDERAL REGION: 6	FEDERAL AID PROJECT		SHEET: 209
	COUNTY: HIDALGO	CONTROL: 0255	SECTION: 08	JOB: 091	HIGHWAY: US 281

177

DN:
CK:
DW:
CK:

LEVELS DISPLAYED
1 2 3 4 5 6 7 8 9 10 11 12 13 14 15 16
17 18 19 20 21 22 23 24 25 26 27 28 29 30 31 32
33 34 35 36 37 38 39 40 41 42 43 44 45 46 47 48
49 50 51 52 53 54 55 56 57 58 59 60 61 62 63

DATE:
ACC:
FILE:

DISCLAIMER
The use of this standard is governed by the "Texas Engineering Practice Act". No warranty of any kind is made by TxDOT for any purpose whatsoever. TxDOT assumes no responsibility for the conversion of this standard to other formats or for incorrect results or damages resulting from its use.

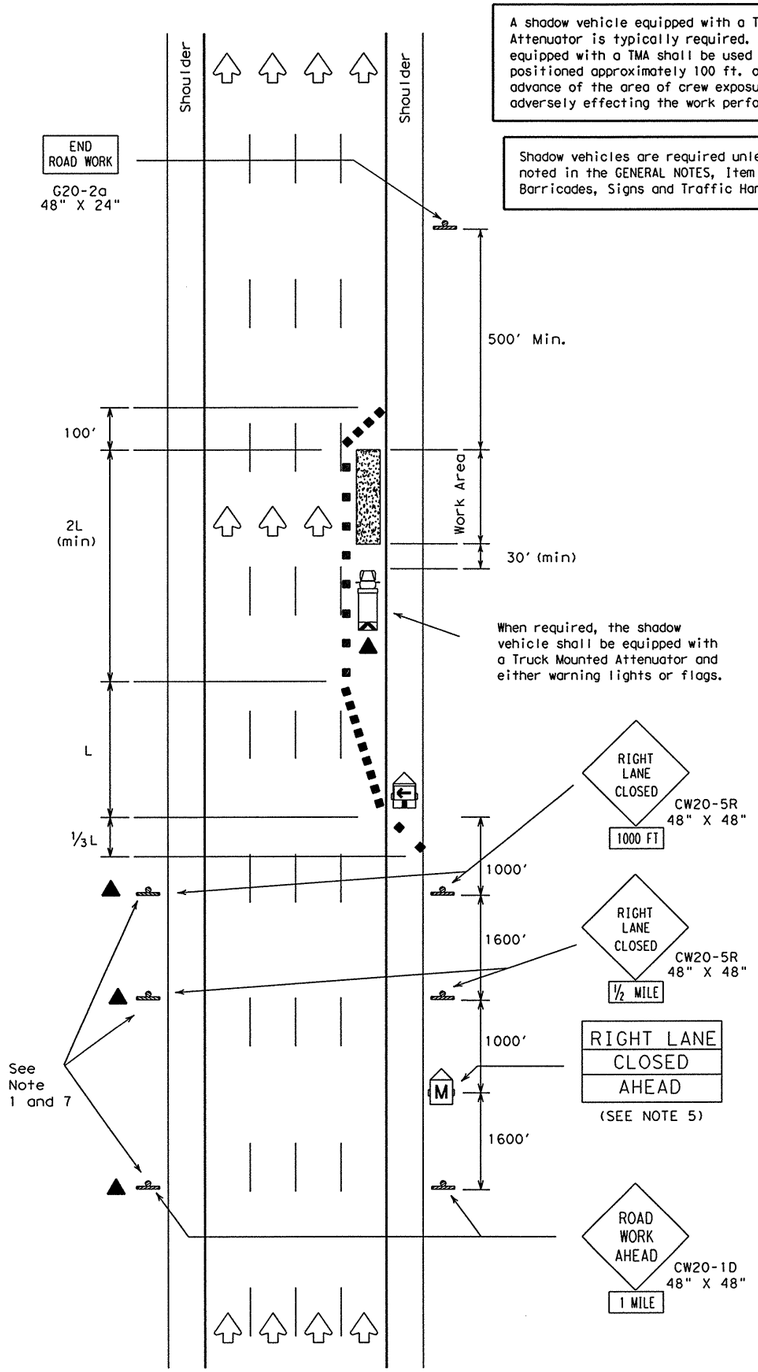

TCP (6-1a)
Typical Freeway
One Lane Closure

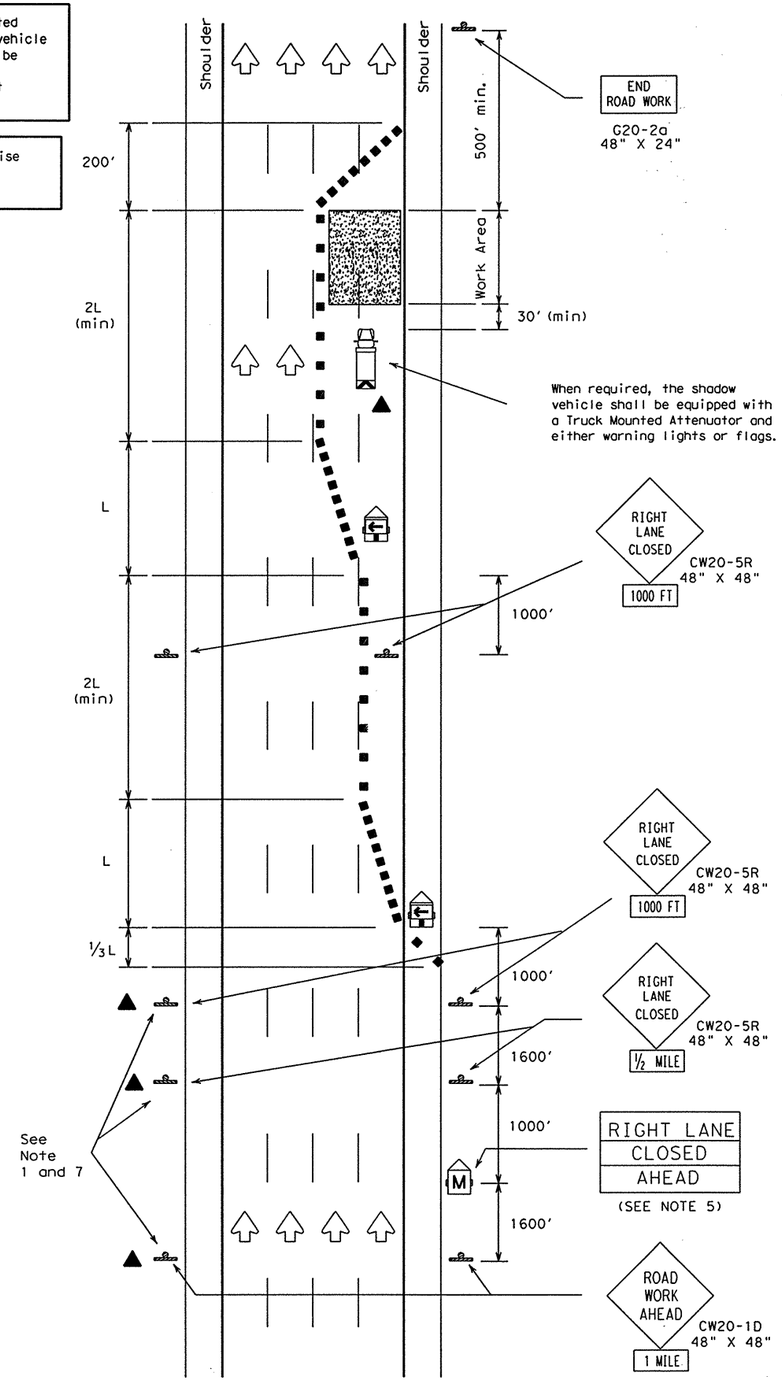

TCP (6-1b)
Typical Freeway
Two Lane Closure

LEGEND

Type III Barricade ■■ Channelizing Devices Flag
Heavy Work Vehicle Truck Mounted Attenuator
Trailer Mounted Flashing Arrow Panel (M) Portable Changeable Message Sign
Flagger Sign Post

Posted Speed	Formula	Minimum Desirable Taper Lengths ✻✻ 10' Offset	11' Offset	12' Offset	Suggested Maximum Spacing of Device On a Taper	On a Tangent
30	$L=\frac{WS^2}{60}$	150'	165'	180'	30'	60'-75'
35		205'	225'	245'	35'	70'-90'
40		265'	295'	320'	40'	80'-100'
45	L=WS	450'	495'	540'	45'	90'-110'
50		500'	550'	600'	50'	100'-125'
55		550'	605'	660'	55'	110'-140'
60		600'	660'	720'	60'	120'-150'
65		650'	715'	780'	65'	130'-165'
70		700'	770'	840'	70'	140'-175'

✻✻ Taper lengths have been rounded off.
L=Length of Taper (FT.) W=Width of Offset (FT.) S=Posted Speed (MPH)

GENERAL NOTES:

1. All traffic control devices illustrated are REQUIRED, except those denoted with the triangle symbol may be omitted when stated elsewhere in the plans.
2. Drums are the typical channelizing device. Cones or other devices may be used if approved by the Engineer. Drums shall be used during nighttime operations.
3. All construction signs and barricades placed during any phase of work shall remain in place until removal is approved by the Engineer.
4. The Engineer may direct the Contractor to furnish additional signs and barricades as required to maintain traffic flow and motorist safety during construction.
5. Static message board or changeable message signs stating the date and duration of ramp or freeway closure shall be placed a minimum of seven (7) calendar days in advance of actual closure.
6. High level warning flags should be used on advance warning signs during daytime operations. Warning lights may be used to add emphasis to advance warning signs during nighttime operations.
7. Duplicate construction warning signs should be erected on the median side of freeways where median width will permit and traffic volume justifies the signing.
8. The number of closed lanes may be increased provided the spacings of traffic control devices, taper lengths and tangent lengths meet the requirements of the TMUTCD.
9. Warning signs shown shall be appropriately altered for left lane closures.
10. The TCP details may require additional and/or relocation of route shields, guide signs, etc. to guide motorists along entire length of detour due to ramp and freeway closures.
11. See BC Standards for additional sign details.
12. When possible, changeable message signs should be located 500 feet in advance of the last available exit ramp prior to the lane closure to allow motorists an alternate route.

Only pre-qualified products shall be used. A list of compliant products and their sources may be obtained by writing or faxing:

Standards Engineer
Traffic Operations Division - TE
Texas Department of Transportation
125 East 11th Street
Austin, Texas 78701-2483
Phone (512) 416-3335
Fax (512) 416-3161
E-mail TRF-STANDARD@mailgw.dot.state.tx.us

TYPICAL USAGE:				
MOBILE	SHORT DURATION	SHORT TERM STATIONARY	INTERMEDIATE TERM STATIONARY	LONG TERM STATIONARY
	✓	✓		

STANDARD PLANS
TEXAS DEPARTMENT OF TRANSPORTATION
Traffic Operations Division

TRAFFIC CONTROL PLAN
FREEWAY LANE CLOSURE

TCP(6-1)-98A

©TxDOT Feburary 1994	DN: LR	CK: CW	DW: DN	CK: MT	REQ NO.:
REVISIONS 1-97 4-98 8-98	STATE DISTRICT: PHR	FEDERAL REGION: 6	FEDERAL AID PROJECT		SHEET: 210
	COUNTY: HIDALGO	CONTROL: 0255	SECTION: 08	JOB: 091	HIGHWAY: US 281

201

LEVELS DISPLAYED
1 2 3 4 5 6 7 8 9 10 11 12 13 14 15 16 17 18 19 20 21 22 23 24 25 26 27 28 29 30 31 32 33 34 35 36 37 38 39 40 41 42 43 44 45 46 47 48 49 50 51 52 53 54 55 56 57 58 59 60 61 62 63

DATE:
ACC:
FILE:

DISCLAIMER
The use of this standard is governed by the "Texas Engineering Practice Act". No warranty of any kind is made by TxDOT for any purpose whatsoever. TxDOT assumes no responsibility for the conversion of this standard to other formats or for incorrect results or damages resulting from its use.

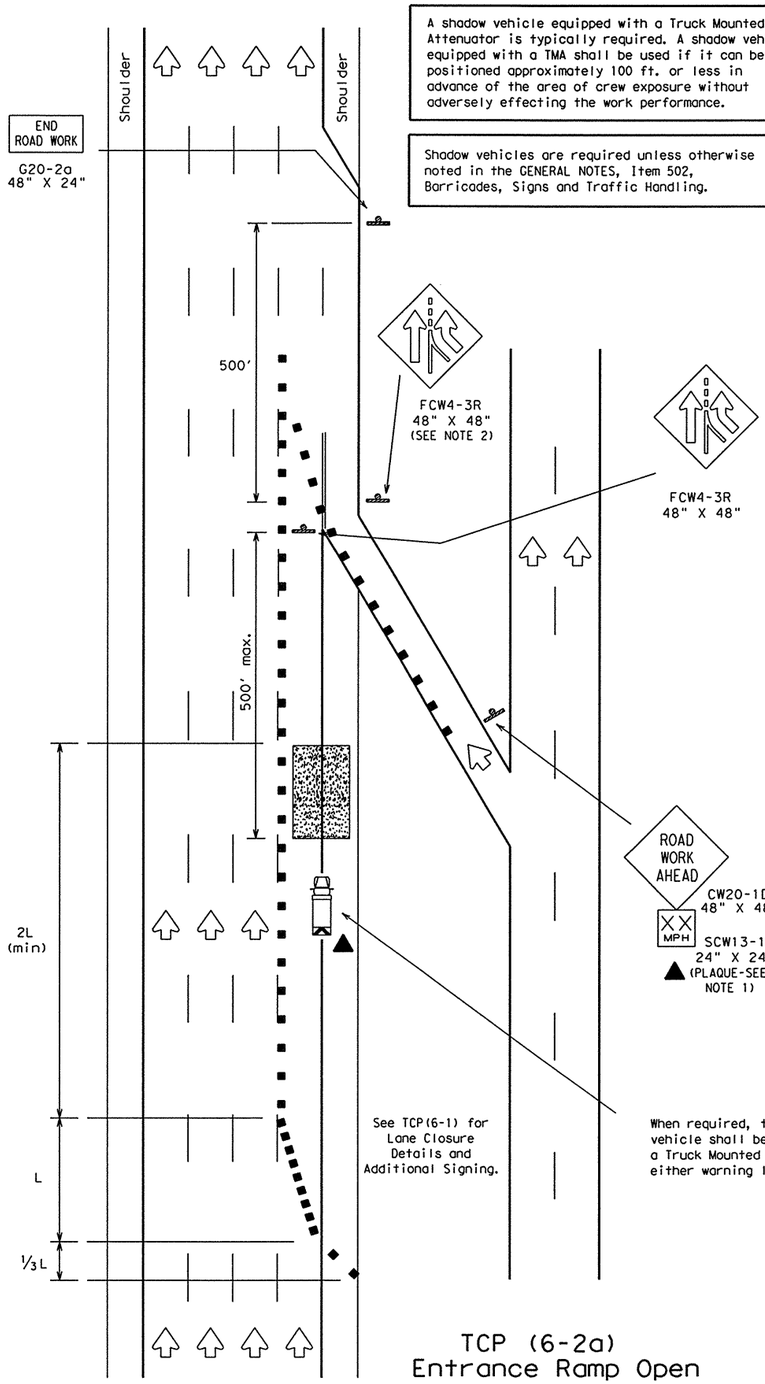

TCP (6-2a)
Entrance Ramp Open
Work Within 500' of Ramp

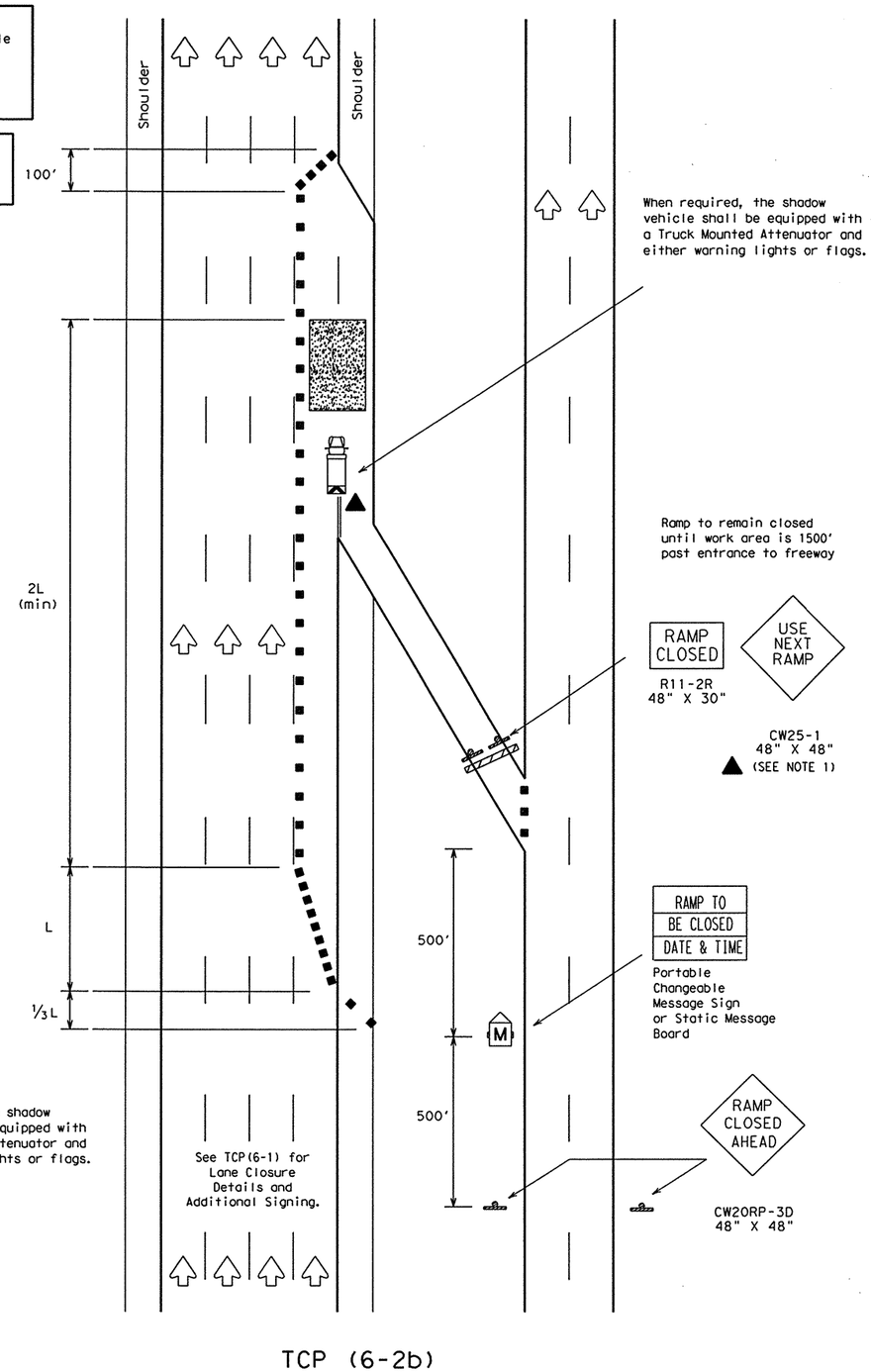

TCP (6-2b)
Entrance Ramp Closed

LEGEND

Type III Barricade ■ ■ Channelizing Devices Flag
Heavy Work Vehicle Truck Mounted Attenuator
Trailer Mounted Flashing Arrow Panel (M) Portable Changeable Message Sign
Flagger Sign Post

Posted Speed	Formula	Minimum Desirable Taper Lengths ✕✕ 10' Offset	11' Offset	12' Offset	Suggested Maximum Spacing of Device On a Taper	On a Tangent
30	$L = \frac{WS^2}{60}$	150'	165'	180'	30'	60'-75'
35		205'	225'	245'	35'	70'-90'
40		265'	295'	320'	40'	80'-100'
45	L=WS	450'	495'	540'	45'	90'-110'
50		500'	550'	600'	50'	100'-125'
55		550'	605'	660'	55'	110'-140'
60		600'	660'	720'	60'	120'-150'
65		650'	715'	780'	65'	130'-165'
70		700'	770'	840'	70'	140'-175'

✕✕ Taper lengths have been rounded off.
L-Length of Taper (FT.) W-Width of Offset (FT.) S-Posted Speed (MPH)

TYPICAL USAGE:				
MOBILE	SHORT DURATION	SHORT TERM STATIONARY	INTERMEDIATE TERM STATIONARY	LONG TERM STATIONARY
	✓	✓		

GENERAL NOTES:

1. All traffic control devices illustrated are REQUIRED, except those denoted with the triangle symbol may be omitted when stated elsewhere in the plans.
2. ADDED LANE Symbol (FCW4-3R) sign may be omitted when sign between ramp and mainlane can be seen from both roadways.

Only pre-qualified products shall be used. A list of compliant products and their sources may be obtained by writing or faxing:

Standards Engineer
Traffic Operations Division - TE
Texas Department of Transportation
125 East 11th Street
Austin, Texas 78701-2483
Phone (512) 416-3335
Fax (512) 416-3161
E-mail TRF-STANDARD@mailgw.dot.state.tx.us

ADDITIONAL REQUIREMENTS FOR LANE CLOSURES AND ADVANCE SIGNING SHALL BE AS SHOWN ON TCP (6-1) OR AS DIRECTED BY THE ENGINEER.

LEVELS DISPLAYED
1 2 3 4 5 6 7 8 9 10 11 12 13 14 15 16 17 18 19 20 21 22 23 24 25 26 27 28 29 30 31 32 33 34 35 36 37 38 39 40 41 42 43 44 45 46 47 48 49 50 51 52 53 54 55 56 57 58 59 60 61 62 63

DATE:
ACC:
FILE:
DN:
CK:
DW:
CK:

STANDARD PLANS
TEXAS DEPARTMENT OF TRANSPORTATION
Traffic Operations Division

TRAFFIC CONTROL PLAN
WORK AREA NEAR RAMP

TCP(6-2)-98A

©TxDOT Feburary 1994

DN-LR	CK-CW	DW-DN	CK-MT	REG NO.:

REVISIONS	STATE DISTRICT	FEDERAL REGION	FEDERAL AID PROJECT	SHEET
1-97	PHR	6		211
4-98				
8-98	COUNTY	CONTROL	SECTION	JOB	HIGHWAY
	HIDALGO	0255	08	091	US 281

DISCLAIMER
The use of this standard is governed by the "Texas Engineering Practice Act". No warranty of any kind is made by TxDOT for any purpose whatsoever. TxDOT assumes no responsibility for the conversion of this standard to other formats or for incorrect results or damages resulting from its use.

A shadow vehicle equipped with a Truck Mounted Attenuator is typically required. A shadow vehicle equipped with a TMA shall be used if it can be positioned approximately 100 ft. or less in advance of the area of crew exposure without adversely effecting the work performance.

Shadow vehicles are required unless otherwise noted in the GENERAL NOTES, Item 502, Barricades, Signs and Traffic Handling.

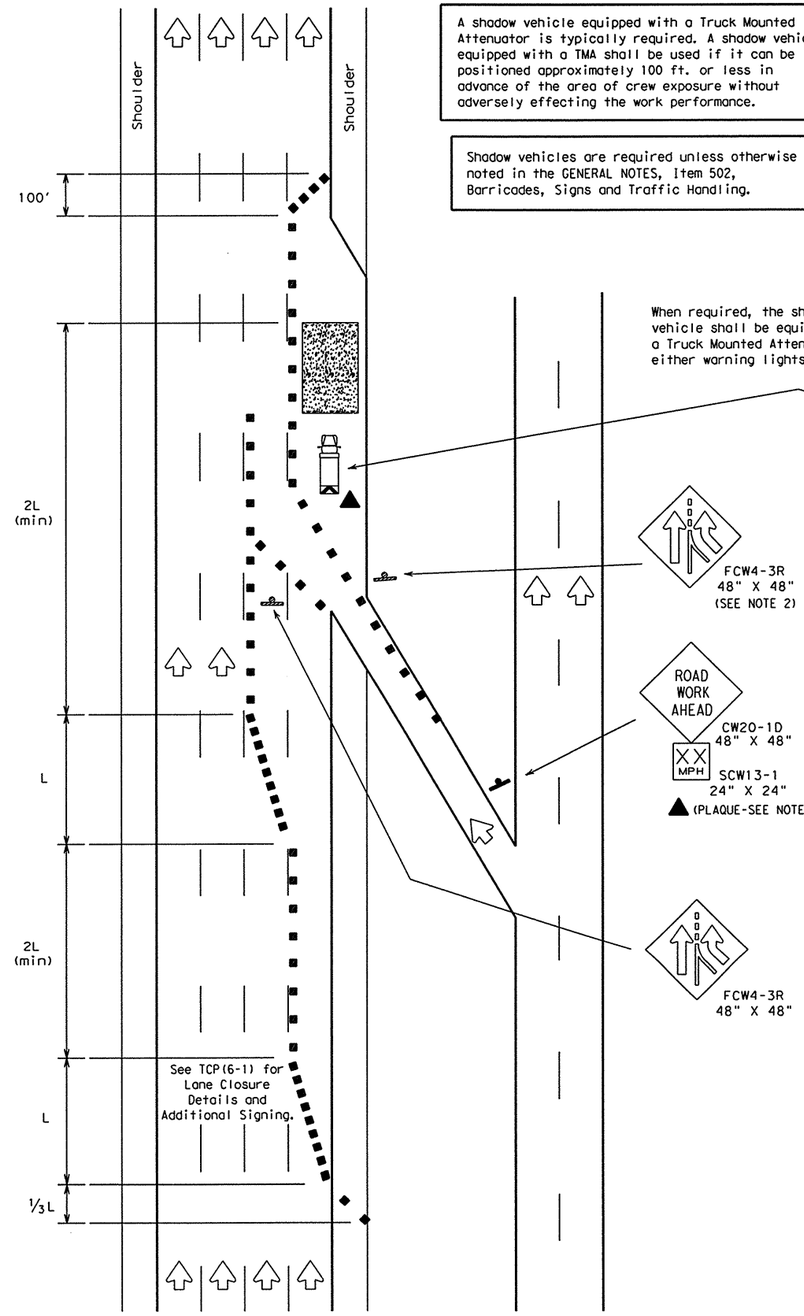

TCP (6-3a)
Entrance Ramp Open

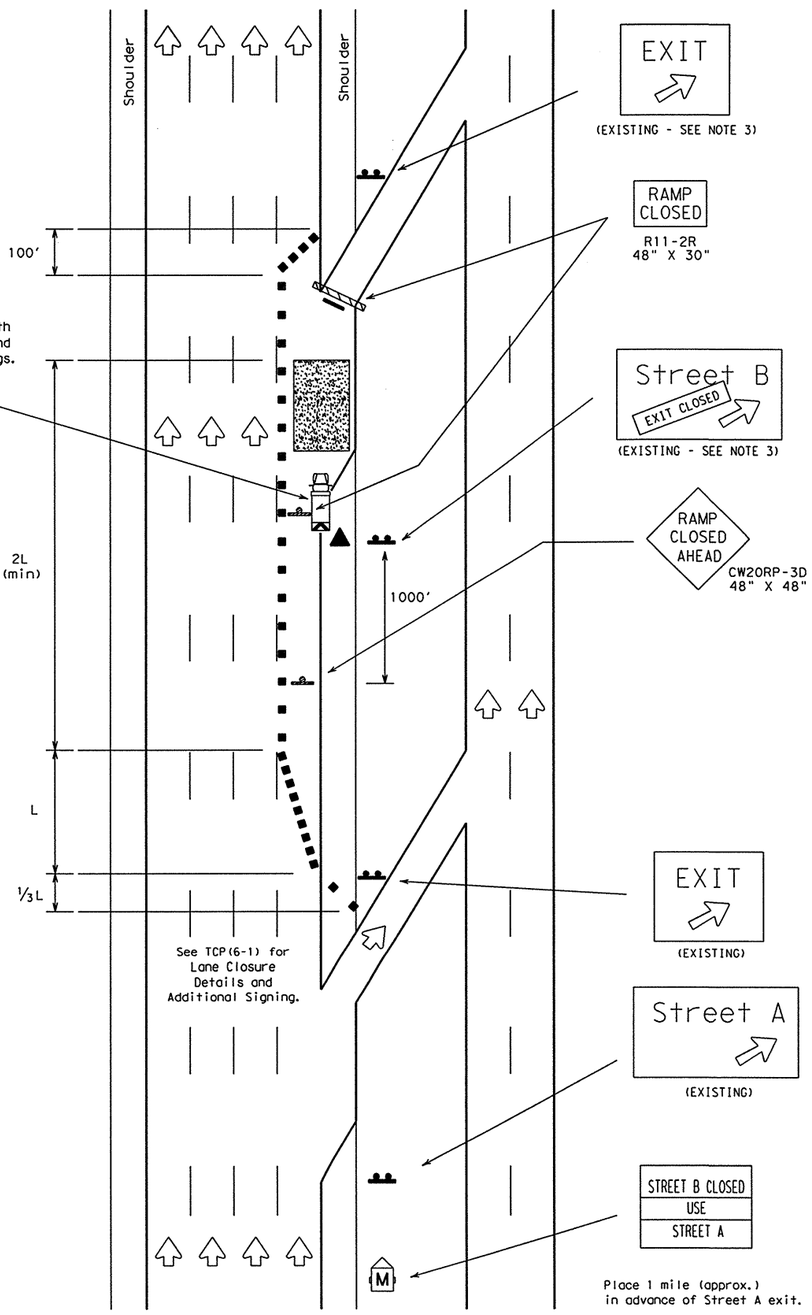

TCP (6-3b)
Exit Ramp Closed
Traffic Exits Prior to Closed Ramp

LEGEND

Type III Barricade ■ ■ Channelizing Devices Flag
Heavy Work Vehicle Truck Mounted Attenuator
Trailer Mounted Flashing Arrow Panel (M) Portable Changeable Message Sign
Flagger Sign Post

Posted Speed	Formula	Minimum Desirable Taper Lengths ✳✳ 10′ Offset	11′ Offset	12′ Offset	Suggested Maximum Spacing of Device On a Taper	On a Tangent
30	$L=\frac{WS^2}{60}$	150′	165′	180′	30′	60′-75′
35		205′	225′	245′	35′	70′-90′
40		265′	295′	320′	40′	80′-100′
45	L=WS	450′	495′	540′	45′	90′-110′
50		500′	550′	600′	50′	100′-125′
55		550′	605′	660′	55′	110′-140′
60		600′	660′	720′	60′	120′-150′
65		650′	715′	780′	65′	130′-165′
70		700′	770′	840′	70′	140′-175′

✳✳Taper lengths have been rounded off.
L=Length of Taper (FT.) W=Width of Offset (FT.) S=Posted Speed (MPH)

TYPICAL USAGE:				
MOBILE	SHORT DURATION	SHORT TERM STATIONARY	INTERMEDIATE TERM STATIONARY	LONG TERM STATIONARY
	✓	✓		

GENERAL NOTES:

1. All traffic control devices illustrated are REQUIRED, except those denoted with the triangle symbol may be omitted when stated elsewhere in the plans.
2. ADDED LANE (FCW4-3R) sign may be omitted when sign between ramp and mainlane can be seen from both roadways.
3. Existing exit gore, exit direction, and advance guide signs not in use should be covered, removed or EXIT CLOSED (CW26-1T) sign attached. See BC Standards for sign details.

Only pre-qualified products shall be used. A list of compliant products and their sources may be obtained by writing or faxing:

Standards Engineer
Traffic Operations Division - TE
Texas Department of Transportation
125 East 11th Street
Austin, Texas 78701-2483
Phone (512) 416-3335
Fax (512) 416-3161
E-mail TRF-STANDARD@mailgw.dot.state.tx.us

ADDITIONAL REQUIREMENTS FOR LANE CLOSURES AND ADVANCE SIGNING SHALL BE AS SHOWN ON TCP (6-1) OR AS DIRECTED BY THE ENGINEER.

STANDARD PLANS
TEXAS DEPARTMENT OF TRANSPORTATION
Traffic Operations Division

TRAFFIC CONTROL PLAN

TCP(6-3)-98A

© TxDOT Feburary 1994

DN: LR	CK: CW	DW: DN	CK: MT	MSG NO.:

REVISIONS	STATE DISTRICT	FEDERAL REGION	FEDERAL AID PROJECT	SHEET
1-97	PHR	6		212
4-98	COUNTY		CONTROL / SECTION / JOB	HIGHWAY
8-98	HIDALGO		0255 / 08 / 091	US 281

LEVELS DISPLAYED
1 2 3 4 5 6 7 8 9 10 11 12 13 14 15 16
17 18 19 20 22 24 25 26 27 28 29 30 31 32
33 34 35 36 37 38 39 40 41 42 43 44 45 46 47 48
49 50 51 52 53 54 55 56 57 58 59 60 61 62 63

DATE:
ACC:
FILE:
DN:
CK:
DW:
CK:

DISCLAIMER
The use of this standard is governed by the "Texas Engineering Practice Act". No warranty of any kind is made by TxDOT for any purpose whatsoever. TxDOT assumes no responsibility for the conversion of this standard to other formats or for incorrect results or damages resulting from its use.

LEVELS DISPLAYED
1 2 3 4 5 6 7 8 9 10 11 12 13 14 15 16 17 18 19 20 21 22 23 24 25 26 27 28 29 30 31 32 33 34 35 36 37 38 39 40 41 42 43 44 45 46 47 48 49 50 51 52 53 54 55 56 57 58 59 60 61 62 63 64 65 66 67 68 69 70 71 72 73 74 75 76 77 78 79 80 81 82 83 84 85 86 87 88 89 90 91 92 93 94 95 96 97 98 99 100 101 102 103 104 105 106 107 108 109 110 111 112 113 114 115 116 117 118 119 120 121 122 123 124 125 126 127 128

DATE:
ACC:
FILE:
DN:
CK:
DW:
CK:

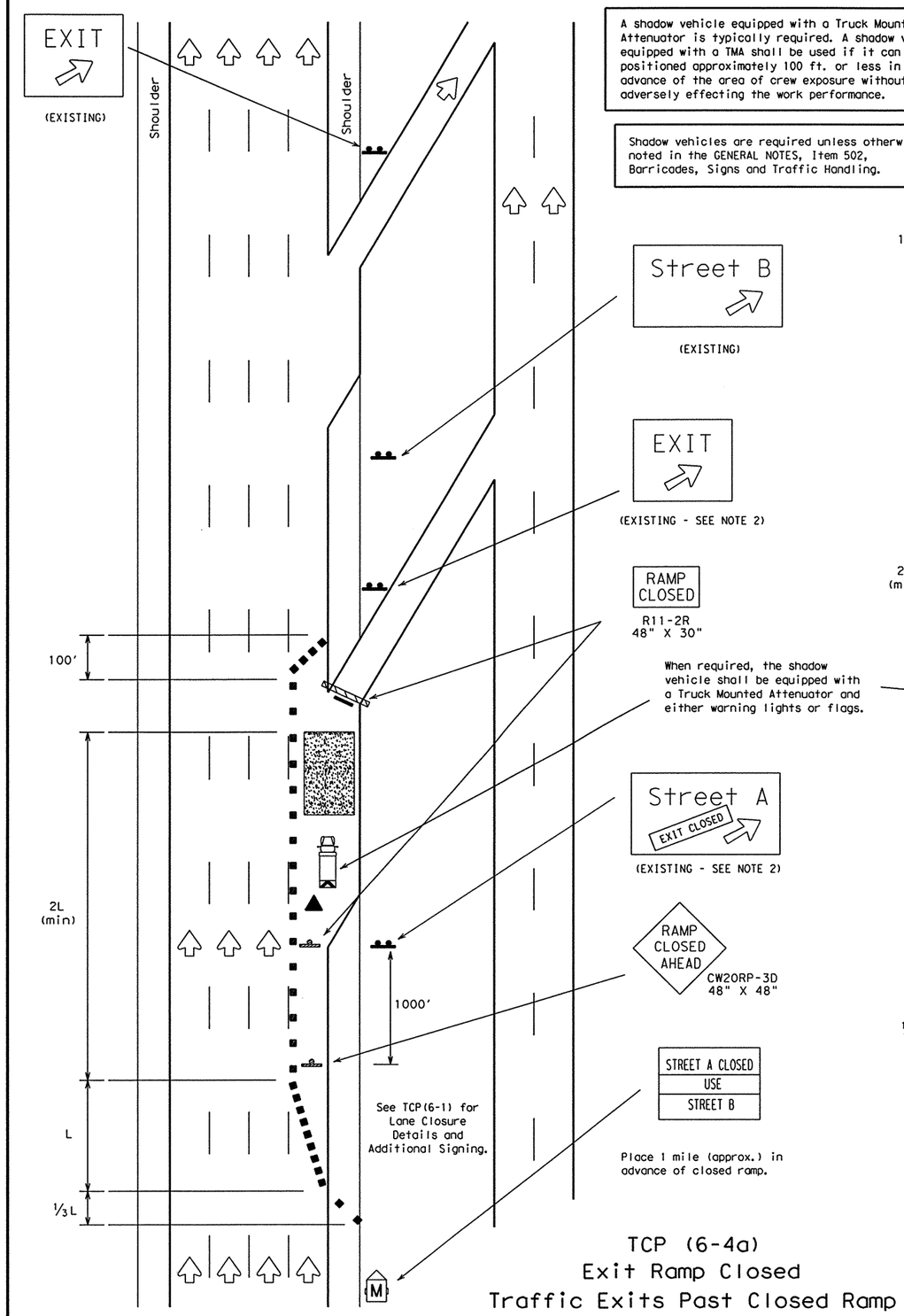

TCP (6-4a)
Exit Ramp Closed
Traffic Exits Past Closed Ramp

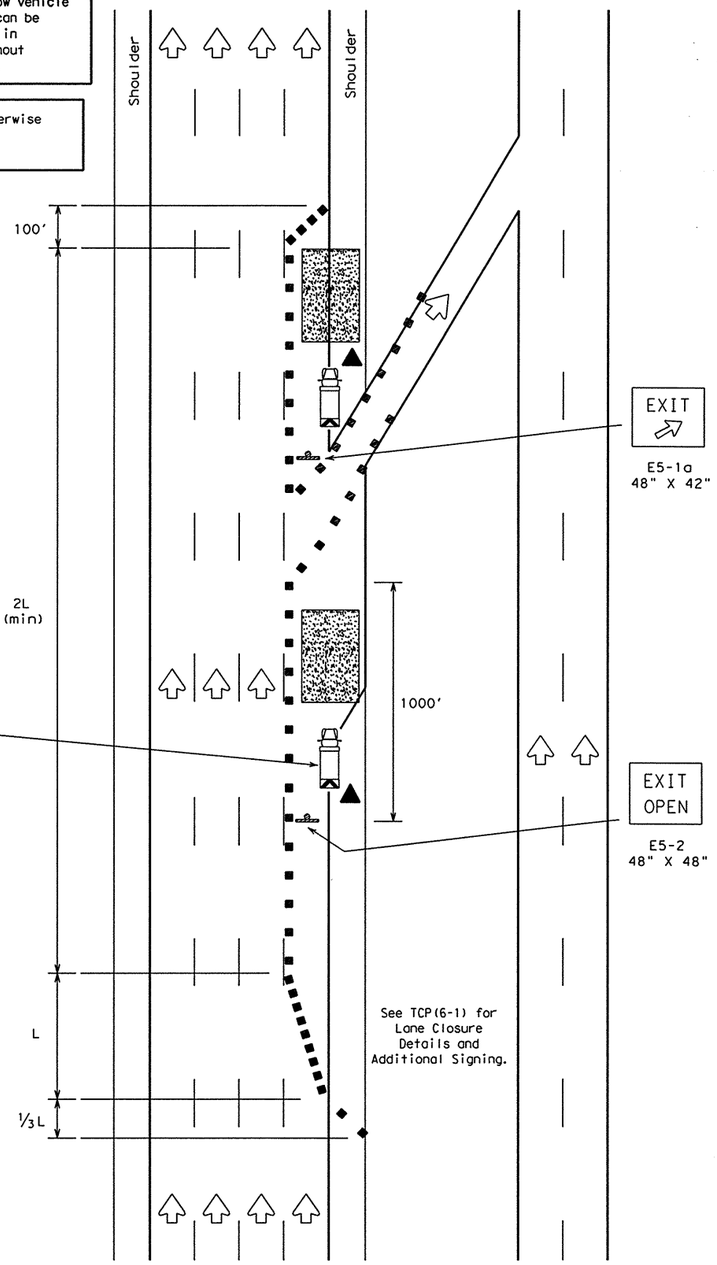

TCP (6-4b)
Exit Ramp Open

LEGEND

Type III Barricade ■ ■ Channelizing Devices Flag
Heavy Work Vehicle Truck Mounted Attenuator
Trailer Mounted Flashing Arrow Panel (M) Portable Changeable Message Sign
Flagger Sign Post

Posted Speed	Formula	Minimum Desirable Taper Lengths ✻✻ 10' Offset	11' Offset	12' Offset	Suggested Maximum Spacing of Device On a Taper	On a Tangent
30	$L = \frac{WS^2}{60}$	150'	165'	180'	30'	60'-75'
35		205'	225'	245'	35'	70'-90'
40		265'	295'	320'	40'	80'-100'
45	L=WS	450'	495'	540'	45'	90'-110'
50		500'	550'	600'	50'	100'-125'
55		550'	605'	660'	55'	110'-140'
60		600'	660'	720'	60'	120'-150'
65		650'	715'	780'	65'	130'-165'
70		700'	770'	840'	70'	140'-175'

✻✻Taper lengths have been rounded off.
L=Length of Taper (FT.) W=Width of Offset (FT.) S=Posted Speed (MPH)

TYPICAL USAGE:				
MOBILE	SHORT DURATION	SHORT TERM STATIONARY	INTERMEDIATE TERM STATIONARY	LONG TERM STATIONARY
	✓	✓		

GENERAL NOTES:

1. All traffic control devices illustrated are REQUIRED, except those denoted with the triangle symbol may be omitted when stated elsewhere in the plans.
2. Existing exit gore, exit direction, and advance guide signs not in use should be covered, removed or EXIT CLOSED (CW26-1T) sign attached.
3. See BC Standards for sign details.

Only pre-qualified products shall be used. A list of compliant products and their sources may be obtained by writing or faxing:

Standards Engineer
Traffic Operations Division - TE
Texas Department of Transportation
125 East 11th Street
Austin, Texas 78701-2483
Phone (512) 416-3335
Fax (512) 416-3161
E-mail TRF-STANDARD@mailgw.dot.state.tx.us

ADDITIONAL REQUIREMENTS FOR LANE CLOSURES AND ADVANCE SIGNING SHALL BE AS SHOWN ON TCP (6-1) OR AS DIRECTED BY THE ENGINEER.

STANDARD PLANS
TEXAS DEPARTMENT OF TRANSPORTATION
Traffic Operations Division

TRAFFIC CONTROL PLAN

TCP(6-4)-98A

©TxDOT Feburary 1994

DN: LR	CK: CW	DW: DN	CK: MT	MCG NO.:

REVISIONS	STATE DISTRICT	FEDERAL REGION	FEDERAL AID PROJECT	SHEET
1-97	PHR	6		213
4-98				
8-98	COUNTY	CONTROL	SECTION	JOB	HIGHWAY
	HIDALGO	0255	08	091	US 281

DISCLAIMER
The use of this standard is governed by the "Texas Engineering Practice Act". No warranty of any kind is made by TxDOT for any purpose whatsoever. TxDOT assumes no responsibility for the conversion of this standard to other formats or for incorrect results or damages resulting from its use.

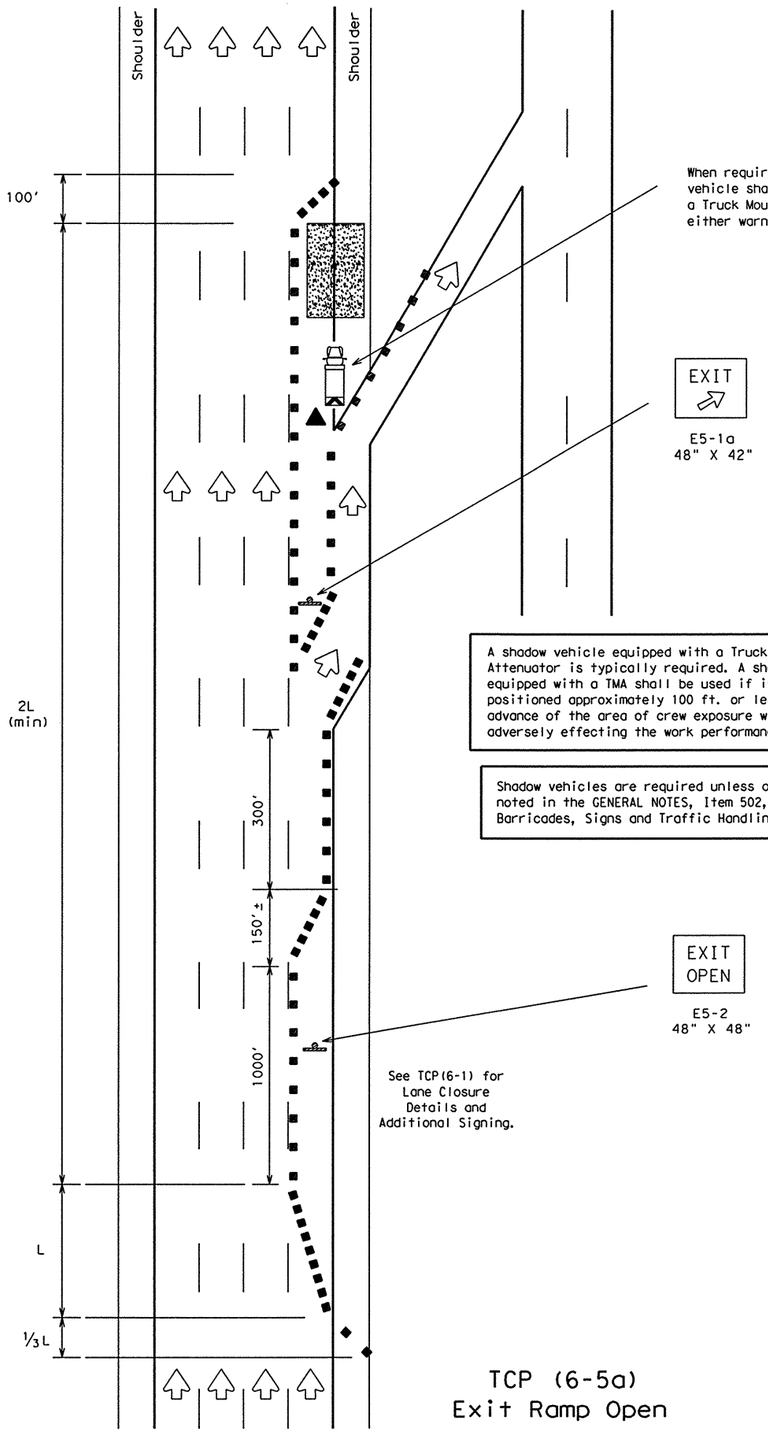

A shadow vehicle equipped with a Truck Mounted Attenuator is typically required. A shadow vehicle equipped with a TMA shall be used if it can be positioned approximately 100 ft. or less in advance of the area of crew exposure without adversely effecting the work performance.

Shadow vehicles are required unless otherwise noted in the GENERAL NOTES, Item 502, Barricades, Signs and Traffic Handling.

TCP (6-5a)
Exit Ramp Open

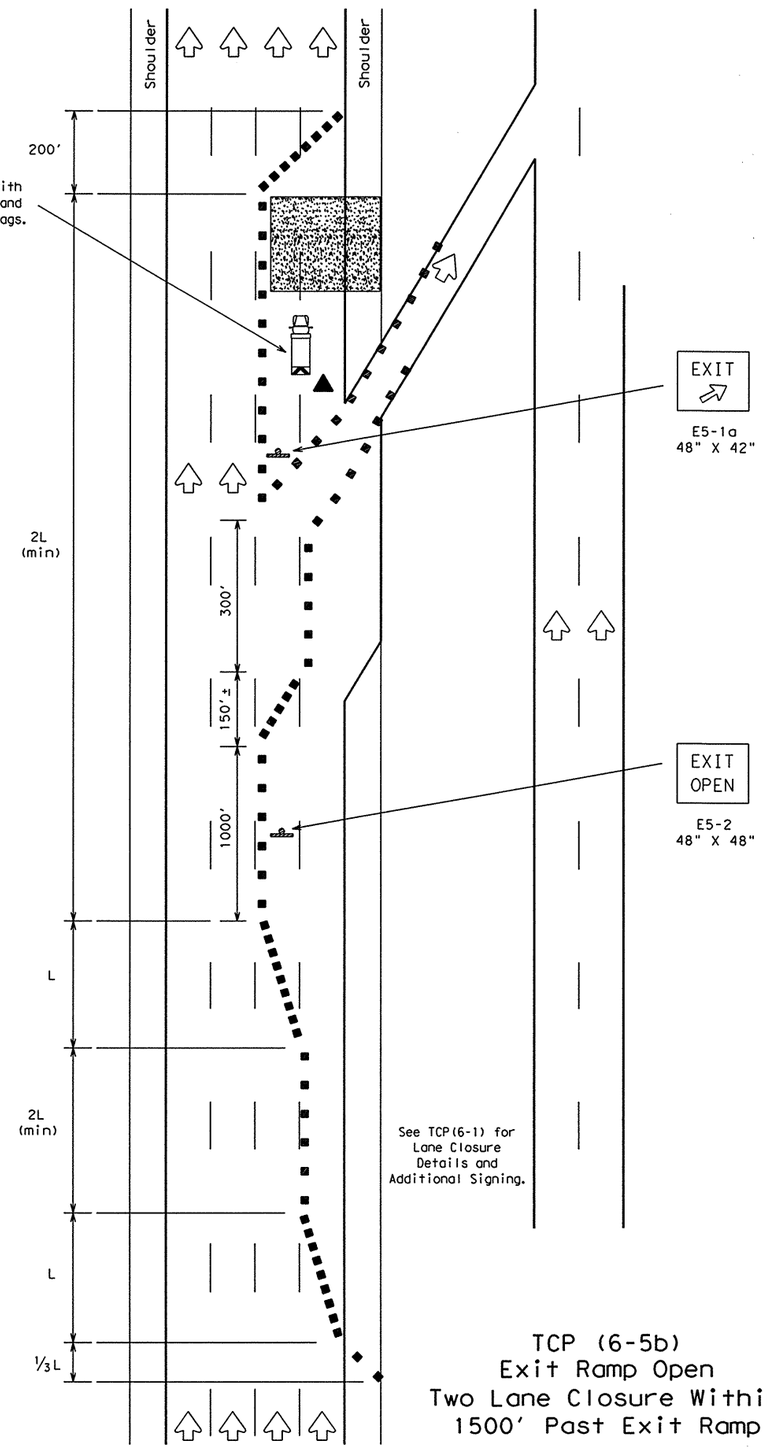

TCP (6-5b)
Exit Ramp Open
Two Lane Closure Within
1500' Past Exit Ramp

LEGEND

Type III Barricade ■ ■ Channelizing Devices Flag
Heavy Work Vehicle Truck Mounted Attenuator
Trailer Mounted Flashing Arrow Panel (M) Portable Changeable Message Sign
Flagger Sign Post

Posted Speed	Formula	Minimum Desirable Taper Lengths ✻✻ 10' Offset	11' Offset	12' Offset	Suggested Maximum Spacing of Device On a Taper	On a Tangent
30	$L=\frac{WS^2}{60}$	150'	165'	180'	30'	60'-75'
35		205'	225'	245'	35'	70'-90'
40		265'	295'	320'	40'	80'-100'
45	L=WS	450'	495'	540'	45'	90'-110'
50		500'	550'	600'	50'	100'-125'
55		550'	605'	660'	55'	110'-140'
60		600'	660'	720'	60'	120'-150'
65		650'	715'	780'	65'	130'-165'
70		700'	770'	840'	70'	140'-175'

✻✻Taper lengths have been rounded off.
L=Length of Taper (FT.) W=Width of Offset (FT.) S=Posted Speed (MPH)

TYPICAL USAGE:				
MOBILE	SHORT DURATION	SHORT TERM STATIONARY	INTERMEDIATE TERM STATIONARY	LONG TERM STATIONARY
	✓	✓		

GENERAL NOTES

1. All traffic control devices illustrated are REQUIRED, except those denoted with the triangle symbol may be omitted when stated elsewhere in the plans.
2. See BC standards for sign details.

Only pre-qualified products shall be used. A list of compliant products and their sources may be obtained by writing or faxing:

Standards Engineer
Traffic Operations Division - TE
Texas Department of Transportation
125 East 11th Street
Austin, Texas 78701-2483
Phone (512) 416-3335
Fax (512) 416-3161
E-mail TRF-STANDARD@mailgw.dot.state.tx.us

ADDITIONAL REQUIREMENTS FOR LANE CLOSURES AND ADVANCE SIGNING SHALL BE AS SHOWN ON TCP (6-1) OR AS DIRECTED BY THE ENGINEER.

STANDARD PLANS
TEXAS DEPARTMENT OF TRANSPORTATION
Traffic Operations Division

TRAFFIC CONTROL PLAN

TCP(6-5)-98A

© TxDOT Feburary 1994

DN: LR	CK: CW	DW: DN	CK: MT	MSG NO.:

REVISIONS	STATE DISTRICT	FEDERAL REGION	FEDERAL AID PROJECT	SHEET
1-97	AUR	6		214
4-98				
8-98				

COUNTY	CONTROL	SECTION	JOB	HIGHWAY
HIDALGO	0255	08	091	US 281

LEVELS DISPLAYED
1 2 3 4 5 6 7 8 9 10 11 12 13 14 15 16 17 18 19 20 21 22 23 24 25 26 27 28 29 30 31 32 33 34 35 36 37 38 39 40 41 42 43 44 45 46 47 48 49 50 51 52 53 54 55 56 57 58 59 60 61 62 63

DATE:
ACC:
FILE:
DN:
CK:
DW:
CK:

DISCLAIMER
The use of this standard is governed by the "Texas Engineering Practice Act". No warranty of any kind is made by TxDOT for any purpose whatsoever. TxDOT assumes no responsibility for the conversion of this standard to other formats or for incorrect results or damages resulting from its use.

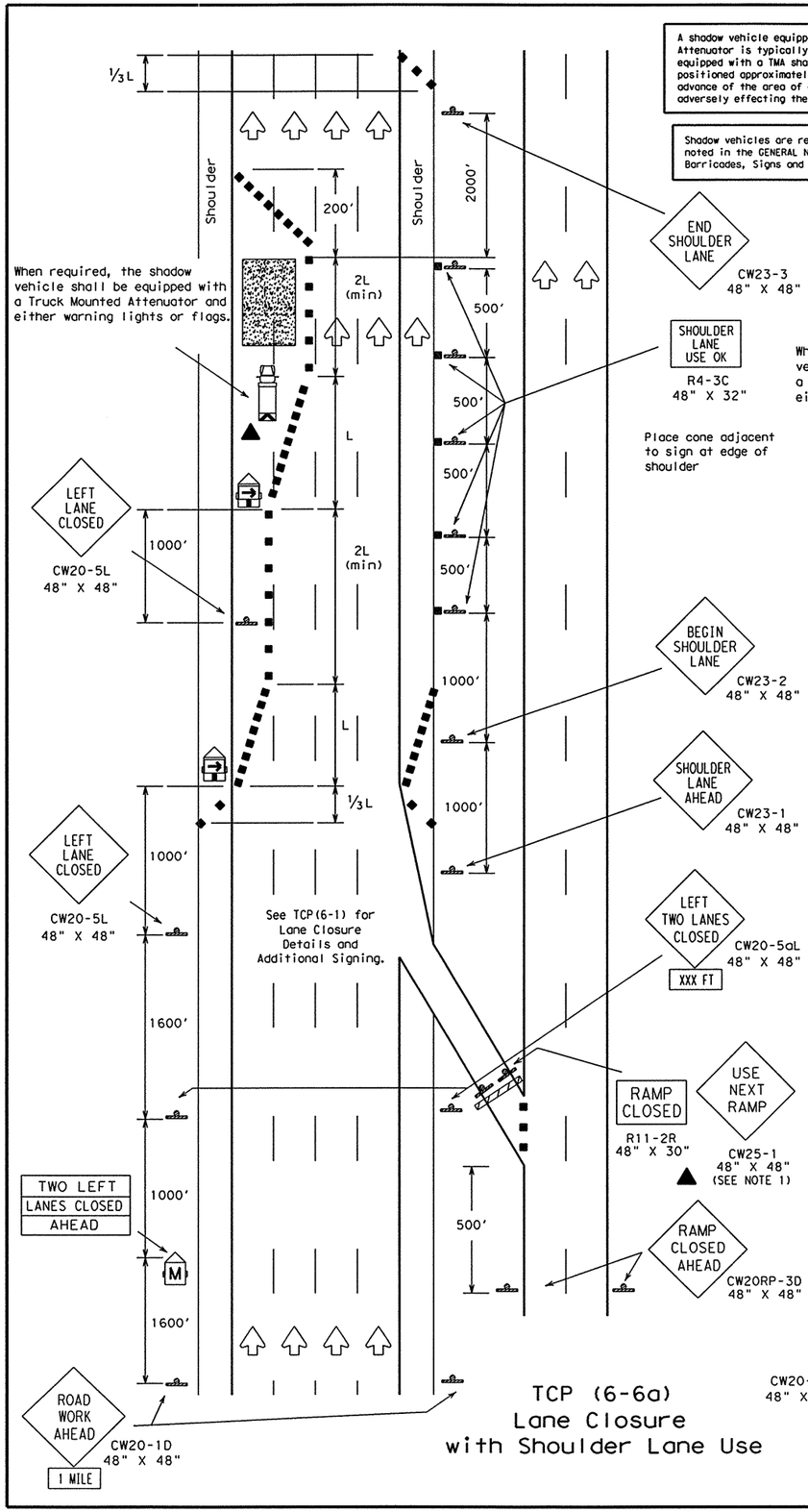

TCP (6-6a)
Lane Closure
with Shoulder Lane Use

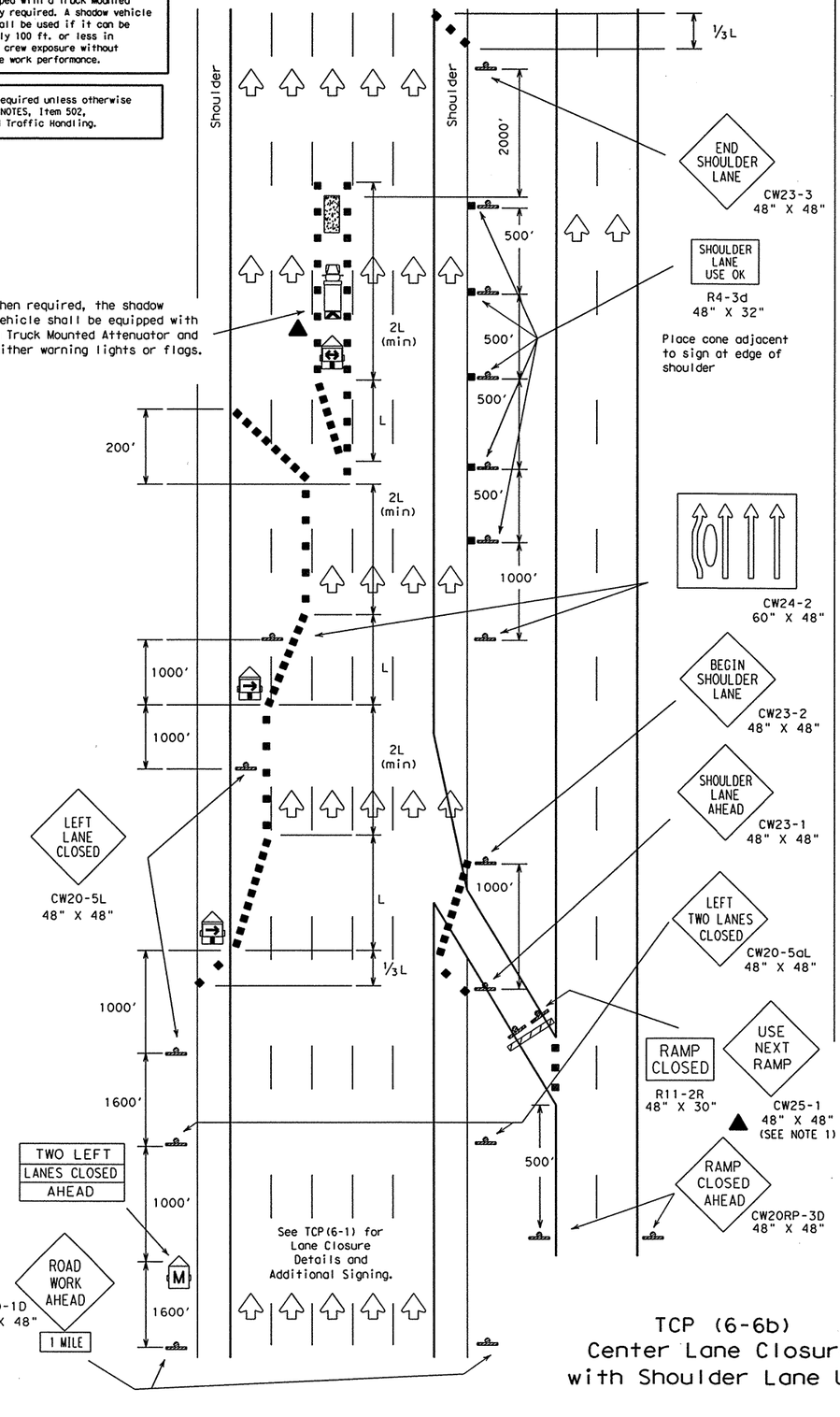

TCP (6-6b)
Center Lane Closure
with Shoulder Lane Use

LEGEND

Type III Barricade ■■ Channelizing Devices Flag
Heavy Work Vehicle Truck Mounted Attenuator
Trailer Mounted Flashing Arrow Panel (M) Portable Changeable Message Sign
Flagger Sign Post

Posted Speed	Formula	Minimum Desirable Taper Lengths ** 10' Offset	11' Offset	12' Offset	Suggested Maximum Spacing of Device On a Taper	On a Tangent
30	$L=\frac{WS^2}{60}$	150'	165'	180'	30'	60'-75'
35		205'	225'	245'	35'	70'-90'
40		265'	295'	320'	40'	80'-100'
45	L=WS	450'	495'	540'	45'	90'-110'
50		500'	550'	600'	50'	100'-125'
55		550'	605'	660'	55'	110'-140'
60		600'	660'	720'	60'	120'-150'
65		650'	715'	780'	65'	130'-165'
70		700'	770'	840'	70'	140'-175'

**Taper lengths have been rounded off.
L=Length of Taper (FT.) W=Width of Offset (FT.) S=Posted Speed (MPH)

TYPICAL USAGE:				
MOBILE	SHORT DURATION	SHORT TERM STATIONARY	INTERMEDIATE TERM STATIONARY	LONG TERM STATIONARY
	✓	✓		

GENERAL NOTES:

1. All traffic control devices illustrated are REQUIRED, except those denoted with the traingle symbol may be omitted when stated elsewhere in the plans.
2. See BC Standards for additional sign details.

Only pre-qualified products shall be used. A list of compliant products and their sources may be obtained by writing or faxing:

**Standards Engineer
Traffic Operations Division - TE
Texas Department of Transportation
125 East 11th Street
Austin, Texas 78701-2483
Phone (512) 416-3335
Fax (512) 416-3161
E-mail TRF-STANDARD@mailgw.dot.state.tx.us**

ADDITIONAL REQUIREMENTS FOR LANE CLOSURES AND ADVANCE SIGNING SHALL BE AS SHOWN ON TCP (6-1) OR AS DIRECTED BY THE ENGINEER.

DN: CK: DW: CK:

LEVELS DISPLAYED
1 2 3 4 5 6 7 8 9 10 11 12 13 14 15 16
17 18 19 20 21 22 23 24 25 26 27 28 29 30 31 32
33 34 35 36 37 38 39 40 41 42 43 44 45 46 47 48
49 50 51 52 53 54 55 56 57 58 59 60 61 62 63

DATE:
ACC:
FILE:

STANDARD PLANS
TEXAS DEPARTMENT OF TRANSPORTATION
Traffic Operations Division

TRAFFIC CONTROL PLAN

TCP(6-6)-98A

©TxDOT Feburary 1994 DN: LR CK: CW DW: DN CK: MT HCG NO.:

REVISIONS	STATE DISTRICT	FEDERAL REGION	FEDERAL AID PROJECT	SHEET
1-97	PHR	6		215
4-98	COUNTY		CONTROL / SECTION / JOB	HIGHWAY
8-98	HIDALGO		0255 / 08 / 091	US 281

A shadow vehicle equipped with a Truck Mounted Attenuator is typically required. A shadow vehicle equipped with a TMA shall be used if it can be positioned approximately 100 ft. or less in advance of the area of crew exposure without adversely effecting the work performance.

Shadow vehicles are required unless otherwise noted in the GENERAL NOTES, Item 502, Barricades, Signs and Traffic Handling.

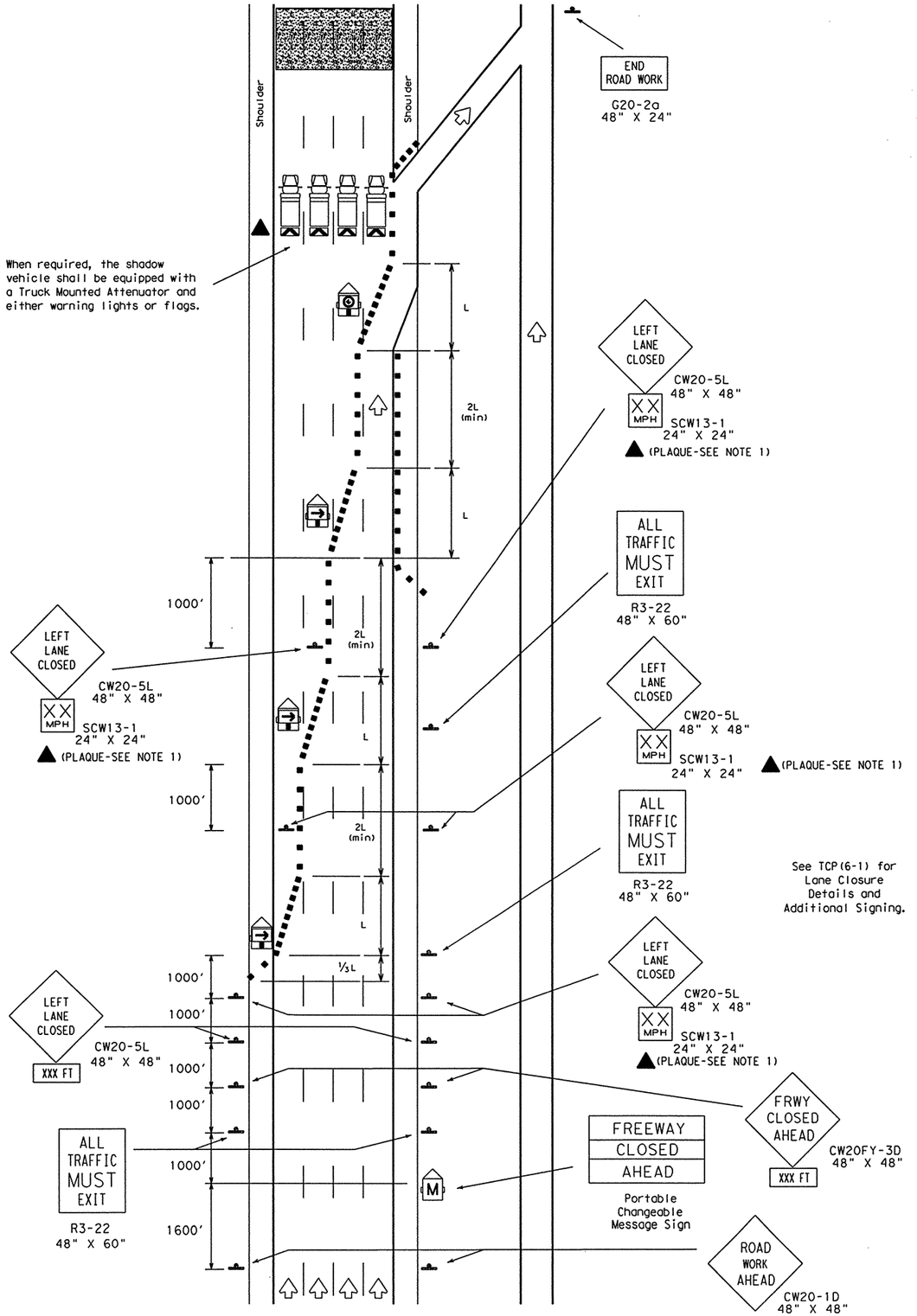

TCP (6-7)
Complete Freeway Closure

LEGEND

Type III Barricade ■ ■ Channelizing Devices Flag
Heavy Work Vehicle Truck Mounted Attenuator
Trailer Mounted Flashing Arrow Panel (arrow mode) Portable Changeable Message Sign
Trailer Mounted Flashing Arrow Panel (caution mode) Flagger Sign Post

Posted Speed	Formula	Minimum Desirable Taper Lengths ** 10' Offset	11' Offset	12' Offset	Suggested Maximum Spacing of Device On a Taper	On a Tangent
30	$L=\frac{WS^2}{60}$	150'	165'	180'	30'	60'-75'
35		205'	225'	245'	35'	70'-90'
40		265'	295'	320'	40'	80'-100'
45	L=WS	450'	495'	540'	45'	90'-110'
50		500'	550'	600'	50'	100'-125'
55		550'	605'	660'	55'	110'-140'
60		600'	660'	720'	60'	120'-150'
65		650'	715'	780'	65'	130'-165'
70		700'	770'	840'	70'	140'-175'

** Taper lengths have been rounded off.
L=Length of Taper (FT.) W=Width of Offset (FT.) S=Posted Speed (MPH)

TYPICAL USAGE:				
MOBILE	SHORT DURATION	SHORT TERM STATIONARY	INTERMEDIATE TERM STATIONARY	LONG TERM STATIONARY
	✓	✓		

GENERAL NOTES:

1. All traffic control devices illustrated are REQUIRED, except those denoted with the triangle symbol may be omitted when stated elsewhere in the plans.

Only pre-qualified products shall be used. A list of compliant products and their sources may be obtained by writing or faxing:

Standards Engineer
Traffic Operations Division - TE
Texas Department of Transportation
125 East 11th Street
Austin, Texas 78701-2483
Phone (512) 416-3335
Fax (512) 416-3161
E-mail TRF-STANDARD@mailgw.dot.state.tx.us

ADDITIONAL REQUIREMENTS FOR LANE CLOSURES AND ADVANCE SIGNING SHALL BE AS SHOWN ON TCP (6-1) OR AS DIRECTED BY THE ENGINEER.

DISCLAIMER
The use of this standard is governed by the "Texas Engineering Practice Act". No warranty of any kind is made by TxDOT for any purpose whatsoever. TxDOT assumes no responsibility for the conversion of this standard to other formats or for incorrect results or damages resulting from its use.

LEVELS DISPLAYED
1 2 3 4 5 6 7 8 9 10 11 12 13 14 15 16
17 18 19 20 21 22 23 24 25 26 27 28 29 30 31 32 33 34 35 36 37 38 39 40 41 42 43 44 45 46 47 48
49 50 51 52 53 54 55 56 57 58 59 60 61 62 63

DATE:
ACC:
FILE:
DN:
CK:
DW:
CK:

STANDARD PLANS
TEXAS DEPARTMENT OF TRANSPORTATION
Traffic Operations Division

TRAFFIC CONTROL PLAN FREEWAY CLOSURE

TCP(6-7)-98A

©TxDOT Feburary 1994 DN: LR CK: CW DW: DN CK: MT MCG NO.:

REVISIONS	STATE DISTRICT	FEDERAL REGION	FEDERAL AID PROJECT	SHEET
1-97 4-98 8-98	PHR	6		216

COUNTY	CONTROL	SECTION	JOB	HIGHWAY
HIDALGO	0255	08	091	US 281

DISCLAIMER
The use of this standard is governed by the "Texas Engineering Practice Act". No warranty of any kind is made by TxDOT for any purpose whatsoever. TxDOT assumes no responsibility for the conversion of this standard to other formats or for incorrect results or damages resulting from its use.

1

STARTING POSITIONS

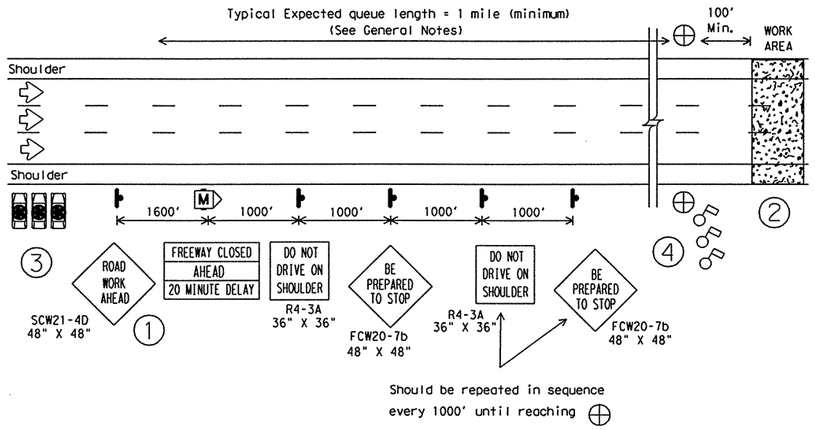

STARTING POSITION

① Traffic control devices should be installed or located near their intended position prior to beginning temporary roadway closure sequence. Duplicate signs should be erected on the median side of the roadway when median width permits and traffic density justifies the signing. To allow movement of workers, equipment, and law enforcement officer vehicles (LEOV), warning signs should not be placed on the shoulders.

② Prior to beginning the roadway closure sequence, all equipment, materials, personnel, and other items necessary to complete the work should be gathered near the work area. Entrance ramps located in area where queue is expected to build should be closed.

③ A minimum number of uniformed law enforcement officers and vehicles (LEOV) should be present:

Number of Lanes	Minimum LEOV
2	2
3	2
4	3
5	4
6	5

④ A minimum of one (1) flagger per lane is typically required for each lane of roadway to be closed. Flaggers should be placed at the CONTROL POSITION (CP) approximately 100 feet or more in advance of the work area. Use of the SLOW/STOP paddle is recommended. Flaggers should typically be at the CP as shown before the LEOV proceeds onto the roadway.

2

REDUCING SPEED OPERATIONS

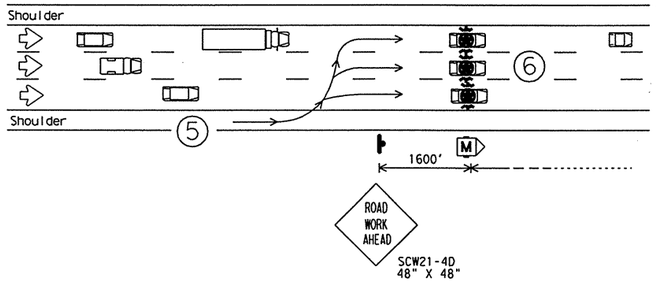

REDUCING SPEED OPERATION

⑤ Starting position of the LEOV should be in advance of the most distant warning sign(s).

⑥ Once the LEOV has achieved an abreast blocking formation while traveling toward the CP, emergency lights and headlights should be turned "ON". LEOV should maintain formation, not allow any traffic to pass, and begin to decelerate. LEOV should continue forward, gradually decelerating until all traffic is stopped at the CP as indicated by the flaggers.

3

ALL TRAFFIC STOPPED AT CP

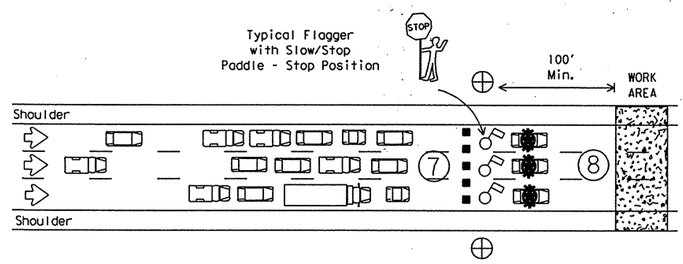

ALL TRAFFIC STOPPED AT THE CONTROL POSITION

⑦ Once the lead vehicles of traffic have stopped, CP flaggers may enter the roadway behind the LEOV and instruct traffic to remain stopped until further notice. Channelization devices may be placed in the travel lanes to prevent forward movement of traffic. Flaggers should face traffic and use the STOP paddle.

⑧ One LEOV should remain in the roadway at the CP, with emergency lights and headlights "ON", and maintain radio contact with WARNING LEOV.

LEGEND

- Channelization Device
- Flagger
- Control Position (CP)
- Portable Changeable Message Sign
- Law Enforcement Officer's Vehicle (LEOV)

Only pre-qualified products shall be used. A list of compliant products and their sources may be obtained by writing or faxing:

Standards Engineer
Traffic Operations Division - TE
Texas Department of Transportation
125 East 11th Street
Austin, Texas 78701-2483
Phone (512) 416-3335
Fax (512) 416-3161
E-mail TRF-STANDARD@mailgw.dot.state.tx.us

TYPICAL USAGE:				
MOBILE	SHORT DURATION	SHORT TERM STATIONARY	INTERMEDIATE TERM STATIONARY	LONG TERM STATIONARY
	✓	✓		

GENERAL NOTES

All traffic control devices shall conform with the Texas "Manual on Uniform Traffic Control Devices for Streets and Highways" (TMUTCD), latest edition, and any approved changes thereto. Additional guidelines for traffic control devices may be found in the TMUTCD. Signs conflicting with the roadway closure sequence should be completely covered or removed. Additional traffic control devices may be required for closure of access roads, cross streets, exit and entrance ramps as directed by the Engineer.

Flaggers, law enforcement officers, and workers should review and understand all procedures before roadway closure sequence begins. Local emergency services and media should have advance notification of roadway closure, expected dates and approximate times of closure(s).

Law enforcement officers shall be in uniform and have jurisdiction in the locale of the work area. An additional WARNING LEOV may be used on the median side of the roadway when median shoulder width permits (see ⑨).

Work should be limited to 20 minutes maximum duration. Roadway closure should be during off-peak hours, as shown in the plans, or as directed by the Engineer. If work is not complete within 20 minutes, or if the end of the traffic queue extends past the most distant advance warning sign, the work area should be cleared of all equipment, materials, personnel, and other items, and the roadway reopened. When the queue has dissipated and traffic flow appears normal, the roadway closure sequence may be repeated.

For traffic volumes greater than 1000 Passenger Car Per Hour Per Lane (PCPHPL), or for roadway closures that exceed the 20 minute maximum, see detail elsewhere in the plans.

When possible, changeable message signs should be located in advance of the last available exit prior to the lane closure to allow motorists the choice of an alternate route.

4

WARNING THE TRAFFIC QUEUE

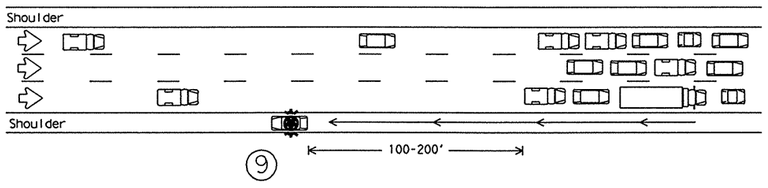

WARNING THE TRAFFIC QUEUE

⑨ The WARNING LEOV should proceed to the right shoulder of the roadway, with emergency lights and headlights "ON", and proceed 100-200 feet in advance of the traffic queue (stopped traffic) as the queue develops. When determined that limited sight distance situations may occur to motorists approaching the queue (crest of hills, sharp roadway curvatures, etc.), the WARNING LEOV may proceed 500-1000 feet in advance of the queue.

5

RELEASING STOPPED TRAFFIC

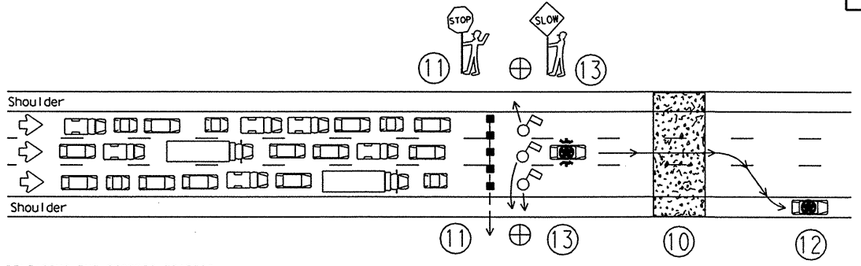

RELEASING THE STOPPED TRAFFIC

⑩ All equipment, materials, personnel, and other items should be removed from the roadway and maintain an adequate clear zone.

⑪ CP flaggers should remove channelization devices from the roadway, and remain on the shoulders with the STOP paddle facing traffic.

⑫ CP LEOV should move to the shoulder with emergency light and headlights "OFF".

⑬ CP flaggers should motion the traffic to proceed with the SLOW paddle facing traffic.

⑭ LEOV and flaggers should re-group at starting positions if necessary.

STANDARD PLANS
TEXAS DEPARTMENT OF TRANSPORTATION
Traffic Operations Division

TRAFFIC CONTROL PLAN FREEWAY (DAYTIME ONLY) CLOSURE SEQUENCE

TCP(6-8)-98

©TxDOT Feburary 1994	DN: LR	CK: CW	DW: DN	CK: MT	MSG NO.:
REVISIONS 1-97 4-98	STATE DISTRICT: PHR	FEDERAL REGION: 6	FEDERAL AID PROJECT		SHEET: 217
	COUNTY: HIDALGO	CONTROL: 0255	SECTION: 08	JOB: 091	HIGHWAY: US 281

208

LEVELS DISPLAYED
1 2 3 4 5 6 7 8 9 10 11 12 13 14 15 16 17 18 19 20 21 22 23 24 25 26 27 28 29 30 31 32 33 34 35 36 37 38 39 40 41 42 43 44 45 46 47 48 49 50 51 52 53 54 55 56 57 58 59 60 61 62 63

DATE:
ACC:
FILE:

DN:
CK:
DW:
CK:

DISCLAIMER
The use of this standard is governed by the "Texas Engineering Practice Act". No warranty of any kind is made by TxDOT for any purpose whatsoever. TxDOT assumes no responsibility for the conversion of this standard to other formats or for incorrect results or damages resulting from its use.

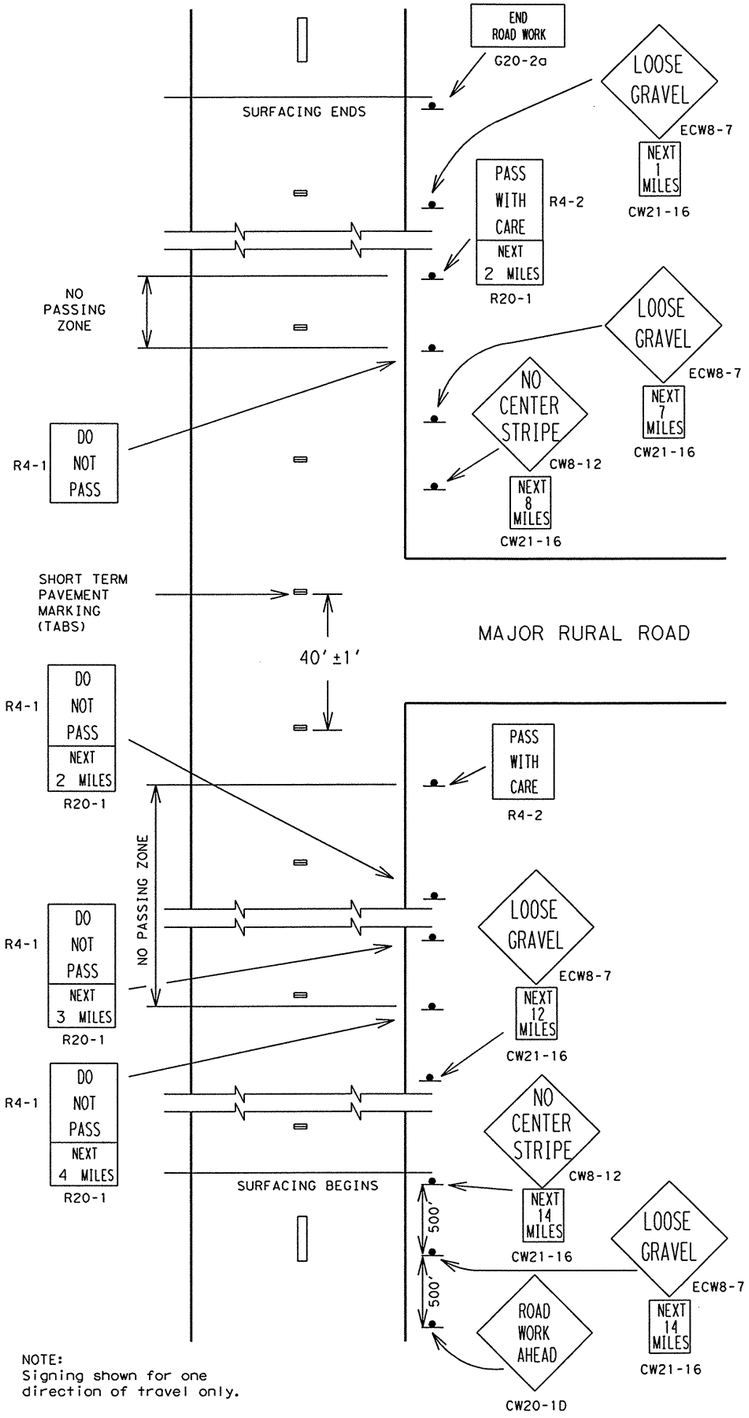

NOTE:
Signing shown for one direction of travel only.

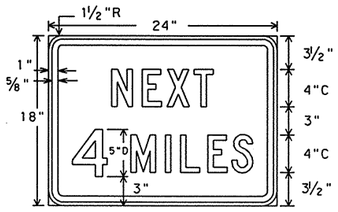

R20-1
24"x18"

Legend - Black
Border - Black
Background - White Refl.

FOR USE WITH REGULATORY SIGNS ONLY

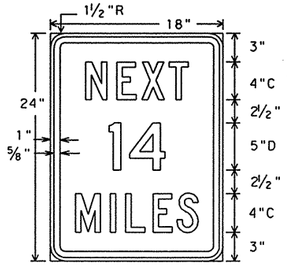

CW21-16
18"x24"

Legend - Black
Border - Black
Background - Orange Refl.

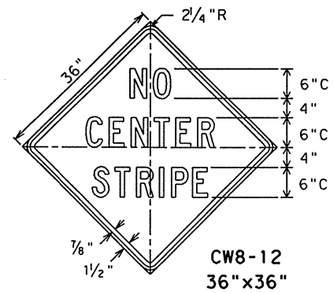

CW8-12
36"x36"

Legend - Black
Border - Black
Background - Orange Refl.

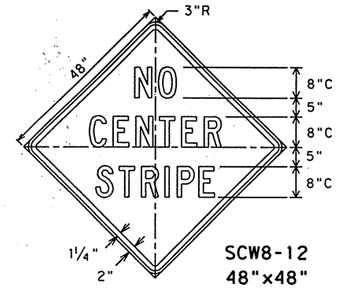

SCW8-12
48"x48"

Legend - Black
Border - Black
Background - Orange Refl.

FOR USE WITH CONSTRUCTION WARNING SIGNS ONLY

TEMPORARY FLEXIBLE-REFLECTIVE ROADWAY MARKER TABS

for surfacing projects only

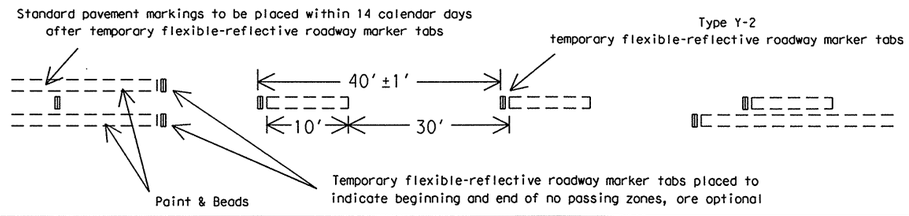

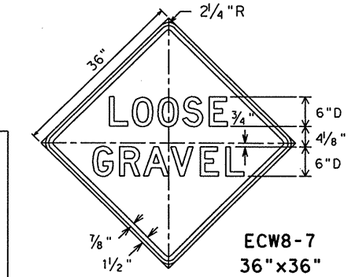

ECW8-7
36"x36"

Legend - Black
Border - Black
Background - Orange Refl.

GENERAL NOTES

The traffic control devices detailed on this sheet will be furnished and erected as directed by the Engineer on sections of roadway where the surfacing operation has covered or obliterated existing pavement markings. These traffic control devices are to be used to supplement those required by BC Standards.

"DO NOT PASS" SIGN (R4-1) and NO-PASSING ZONES

Prior to the beginning of construction, all currently striped no-passing zones should be signed with the DO NOT PASS sign (R4-1) and PASS WITH CARE sign (R4-2) placed at the beginning and end of each zone for each direction of travel except as otherwise provided herein. Signs marking these individual no-passing zones need not be covered prior to construction if the signs supplement the existing pavement markings.

At the discretion of the Engineer, in areas of numerous no-passing zones, several zones may be combined and signed as a single zone. If passing is to be prohibited over one or more lengthy sections, a DO NOT PASS sign and a NEXT XX MILES sign (R20-1) may be used at the beginning of such zones. The DO NOT PASS and NEXT XX MILES signs should be repeated every mile to the end of the no-passing zone. In areas where there is considerable distance between no-passing zones, the end of a no-passing zone may be signed with a PASS WITH CARE and NEXT XX MILES sign.

Depending on traffic volumes and length of sections, it may be desirable to prohibit passing throughout the project to prevent damage to windshields and lights. The DO NOT PASS and NEXT XX MILES sign should be used and repeated as often as necessary for this purpose. Where several existing zones are to be combined into one individual no-passing zone, the sign at the beginning of the zone should be covered until the surfacing operation has passed this location so as not to have the DO NOT PASS sign conflict with existing pavement markings. Also, unless one days operation completes the entire length of such combined zones, care must be taken to place DO NOT PASS and PASS WITH CARE signs in order to sign the beginning and end of the no-passing zones in the area where the surfacing operation has stopped for the day.

R4-1 and R4-2 signs should be mounted on fixed supports as detailed on BC Standards. These signs are to remain in place until standard pavement markings are placed.

"NO CENTER STRIPE" SIGN (CW21-15)

At the time construction activity obliterates the existing centerline (low volume roads may not have an existing centerline), a NO CENTER STRIPE sign (CW8-12) should be erected at each end of the work area and just beyond major rural intersections and other location deemed necessary by the Engineer. Where possible, the signs erected at each end of the work area should be located in such a manner that drivers can read the sign and immediately see the change to no centerline. The NO CENTER STRIPE sign should be supplemented with the NEXT XX MILES sign (CW21-16) mounted below it.

The NO CENTER STRIPE sign should be erected as detailed on BC Standards. These signs are to remain in place until standard pavement markings are placed.

"LOOSE GRAVEL" SIGN (ECW8-7)

When construction begins, a LOOSE GRAVEL sign (ECW8-7) should be erected at each end of the work area and repeated at intervals of approximately two (2) miles in rural areas and closer in urban areas. The LOOSE GRAVEL sign should be supplemented with the NEXT XX MILES sign (CW21-16) mounted below it.

The LOOSE GRAVEL sign should be erected as detailed on BC Standards. They should remain in place until the loose gravel condition no longer exists.

PAVEMENT MARKINGS

Short term pavement markings for surfacing projects shall use Temporary Flexible-reflective Roadway Marker Tabs. Tabs are to be installed to provide true alignment for striping crews or as directed by the Engineer. Tabs will be placed at the spacing indicated. Tabs should be applied to the pavement no more than two (2) days before the surfacing is applied. After the surfacing is rolled and swept the cover over the reflective strip shall be removed. Tabs shall NOT be used to simulate edge lines.

Only pre-qualified products shall be used. A list of compliant products and their sources may be obtained by writing or faxing:

Standards Engineer
Traffic Operations Division - TE
Texas Department of Transportation
125 East 11th Street
Austin, Texas 78701-2483
Phone (512) 416-3335
Fax (512) 416-3161
E-mail TRF-STANDARD@mailgw.dot.state.tx.us

TYPICAL USAGE:				
MOBILE	SHORT DURATION	SHORT TERM STATIONARY	INTERMEDIATE TERM STATIONARY	LONG TERM STATIONARY
	✓	✓	✓	✓

DN:
CK:
DW:
CK:

DATE:
ACC:
FILE:

LEVELS DISPLAYED

1	2	3	4	5	6	7	8	9	10	11	12	13	14	15	16	
17	18	19	20	21	22	23	24	25	26	27	28	29	30	31	32	
33	34	35	36	37	38	39	40	41	42	43	44	45	46	47	48	
49	50	51	52	53	54	55	56	57	58	59	60	61	62	63		

STANDARD PLANS
TEXAS DEPARTMENT OF TRANSPORTATION
Traffic Operations Division

TRAFFIC CONTROL DETAILS for SURFACING OPERATIONS

TCP(7-1)-98

©TxDOT March 1991

DN: LR	CK: MT	DW: DN	CK:	MCG NO.:

REVISIONS	STATE DISTRICT	FEDERAL REGION	FEDERAL AID PROJECT	SHEET
4-92	PHR	6		218
1-97				
4-98				

COUNTY	CONTROL	SECTION	JOB	HIGHWAY
HIDALGO	0255	08	091	US 281

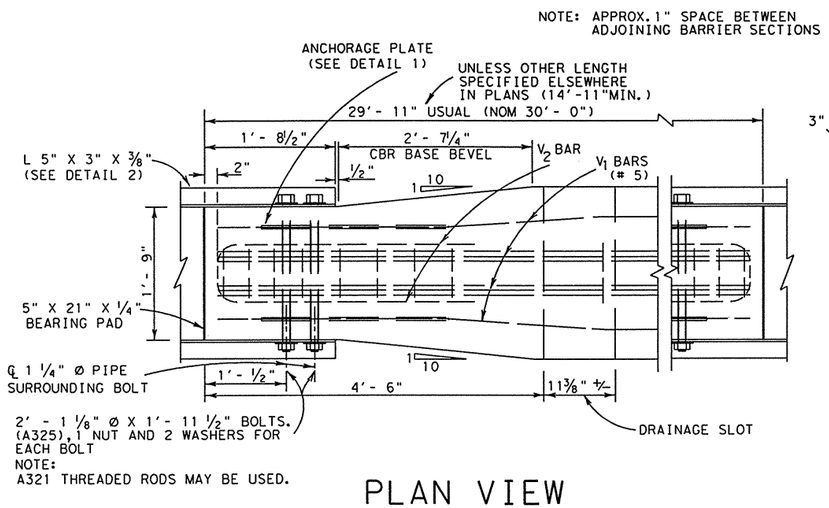

PLAN VIEW

(TYP. BOTH ENDS)

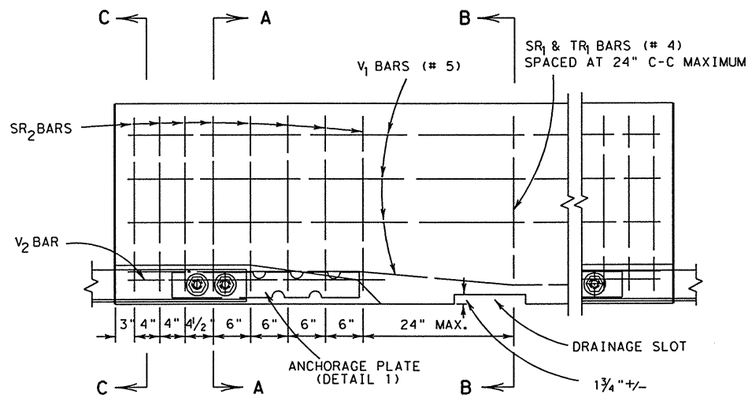

ELEVATION

(TYP. BOTH ENDS)

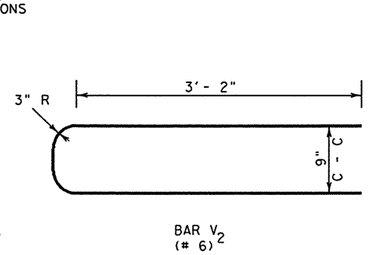

BAR V_2 (# 6)

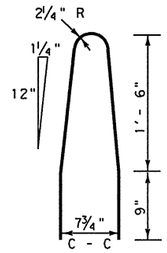

BAR SR_2 (# 4)

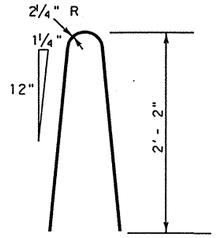

BAR SR_1 (# 4)

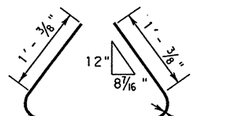

BAR TR_1 (# 4)

REINFORCING STEEL DETAILS

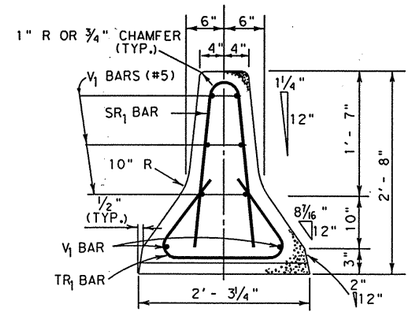

SECTION B-B

SECTION C-C

SECTION C-C IS IDENTICAL TO SECTION A-A W/O PIPE, BOLT OR ANCHORAGE PLATE

* APPROXIMATE QUANTITIES FOR A 30 FT. SECTION		
CONCRETE	CY	3.14
REINFORCING STEEL	LBS.	392

APPROX. WEIGHT PER FOOT IS 472 LBS.

* FOR CONTRACTOR'S INFORMATION ONLY

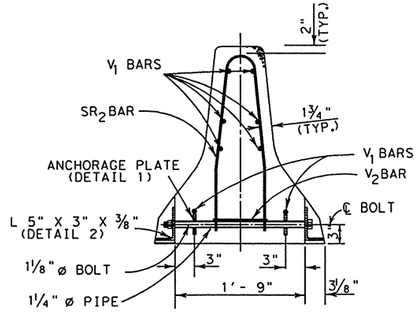

SECTION A-A

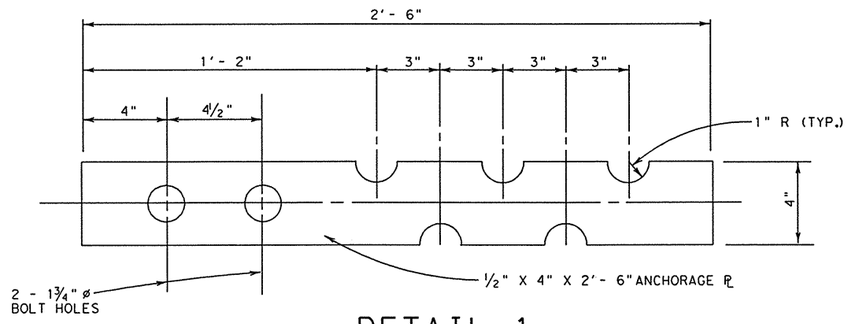

DETAIL 1

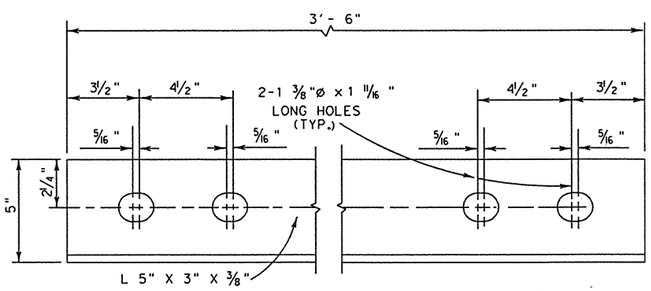

DETAIL 2

GENERAL NOTES

1. ANGLE SECTIONS AND ALL STEEL PLATES SHALL CONFORM TO ASTM DESIGNATION A36.
2. BEARING PADS SHALL BE MADE OF AN ELASTOMERIC MATERIAL WITH A HARDNESS OF 60 DUROMETER AND ARE TO BE EPOXIED TO EACH END OF BARRIER UNIT AFTER CASTING.
3. ALL CONCRETE SHALL BE CLASS A, C OR H, UNLESS OTHERWISE SPECIFIED.
4. ALL LONGITUDINAL REINFORCING STEEL SHALL BE GRADE 60; ALL VERTICAL STEEL SHALL BE GRADE 40.
5. EACH BARRIER SHALL BE DELIVERED WITH 2 SPLICE L 5" X 3" X 3/8" SECTIONS AND CONNECTING HARDWARE.
6. WHEN BARRIER IS TO BE PLACED IN A CURVING ALIGNMENT, THE ANGLE SECTIONS MAY BE HEATED AT THE MIDPOINT AND PRE-BENT.
7. ALL L 5" X 3" X ⅜" ANGLES SHALL BE HOT-DIP GALVANIZED IN CONFORMANCE TO ASTM DESIGNATION A123. BOLTS, NUTS AND WASHERS SHALL BE HOT-DIP GALVANIZED TO CONFORM TO ASTM DESIGNATION A153.
8. CHAMFER END EDGES 3/4-INCH.
9. LIFTING DEVICES OR ATTCHMENTS TO BARRIER SECTIONS SHALL BE APPROVED BY THE ENGINEER.
10. REINFORCING STEEL, BOLTS, NUTS, WASHERS, ANGLE SECTIONS AND ANCHORAGE PLATES SHALL BE CONSIDERED SUBSIDIARY TO THE BID ITEM.
11. WHEN SERVING TO CHANNELIZE TRAFFIC IN NIGHTTIME SITUATIONS, THE BARRIER SHOULD BE LIGHT IN COLOR AND SHALL BE SUPPLEMENTED BY THE USE OF STANDARD DELINEATION OR CHANNELIZATION MARKINGS OR DEVICES SUCH AS DELINEATORS OR VERTICAL PANELS.

REV. 1-87 USE ANGLE CONNECTOR, BEVEL CBR NEAR JOINT, REPOSITION REINF. STEEL AND DRAINAGE SLOT.

STATE DEPARTMENT OF HIGHWAYS AND PUBLIC TRANSPORTATION

CONCRETE BARRIER RAIL (PORTABLE AND PRECAST)

CBR (P&P)-87

© TxDOT JANUARY 1987

REVISIONS

FED. RD. DIV. NO.	STATE	FEDERAL AID PROJECT NO.				SHEET NO.
6	TEXAS					219
STATE DIST. NO.	COUNTY		CONT.	SECT.	JOB	HIGHWAY NO.
PHR	HIDALGO		0255	08	091	US 281

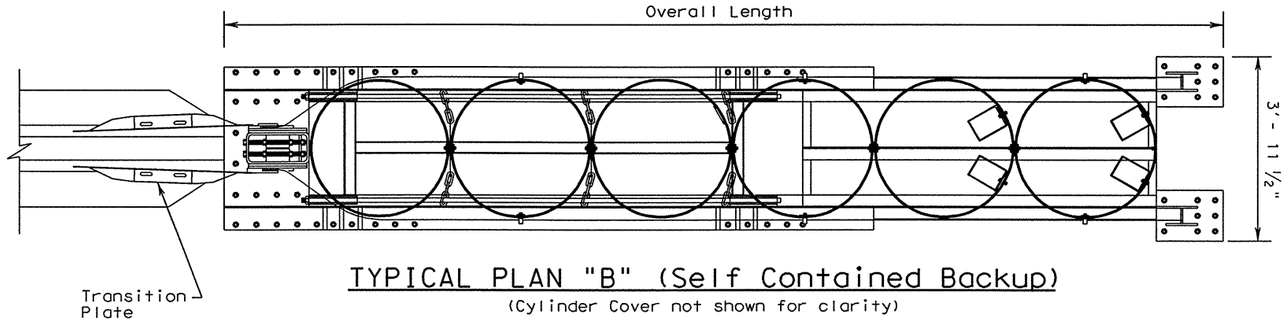

TYPICAL PLAN "B" (Self Contained Backup)

(Cylinder Cover not shown for clarity)

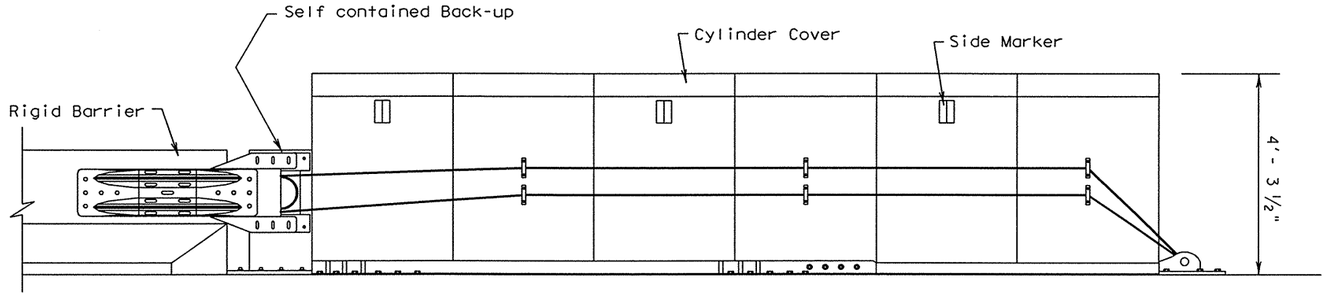

TYPICAL ELEVATION "B"

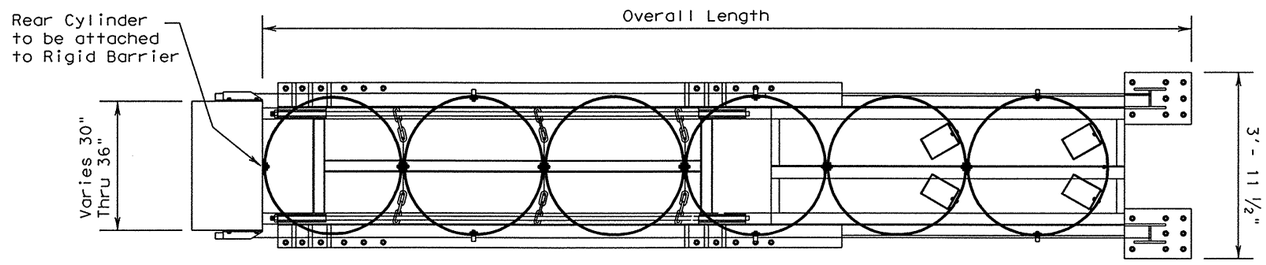

TYPICAL PLAN "S" (Side Mount, Concrete Backup Support)

(Cylinder Cover not shown for clarity)

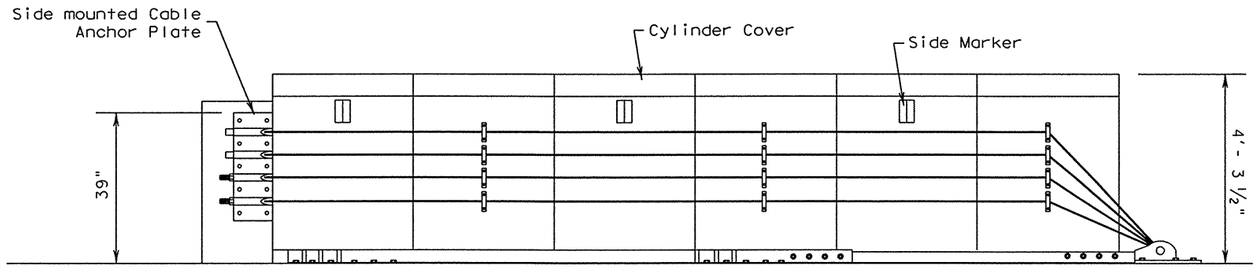

TYPICAL ELEVATION "S"

GENERAL NOTES

1. The nose of the REACT 350 shall be clad with a plastic wrap with standard delineation adhered to the wrap and shall have a series of side marker reflectors on both sides of the unit. See site plan views for marker and plastic wrap color orientation.
2. All steel components to be hot dipped galvanized except stakes, drive spikes, threaded bolts in backup unit, and wedge fittings on cables.
3. Contact QUIXOTE TRANSPORTATION SAFETY INC. (1-888-323-6374) if the REACT 350 is to span expansion joints.
4. The installation area should be free from curbs, elevated objects, or depressions.

DESIGN DATA

	REACT 350.4-B	REACT 350.4-S	REACT 350.6-B	REACT 350.6-S	REACT 350.9-B	REACT 350.9-S	REACT 350 HS-B	REACT 350 HS-S
DESIGN SPEED	45 MPH	45 MPH	55 MPH	55 MPH	65 MPH	65 MPH	70 MPH	70 MPH
OVERALL LENGTH	15'-3"	13'-9"	21'-3"	19'-9"	30'-3"	28'-9"	30'-3"	28'-9"
OVERALL WEIGHT	2580 lb.	2340 lb.	3340 lb.	3100 lb.	4310 lb.	4070 lb.	4520 lb.	4280 lb.

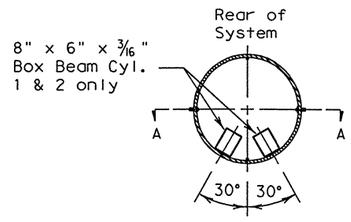

PLAN

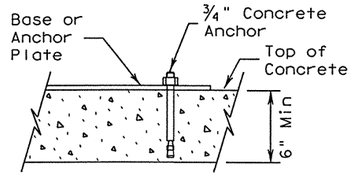

CONCRETE PAVEMENT DETAIL

NOTE: If separate pad is required for REACT, then the pad thickness shall be 8"

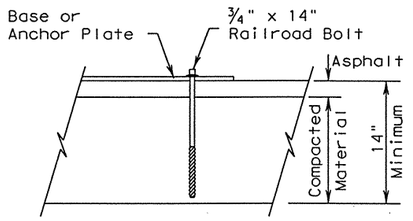

ASPHALT PAVEMENT DETAIL

Min. Asphalt thickness shall be 2"

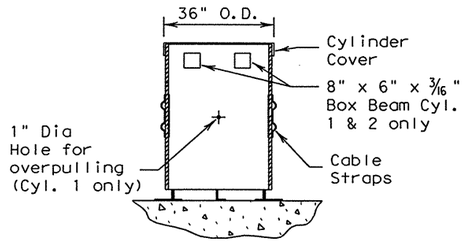

TYPICAL CYLINDER

SECTION A-A

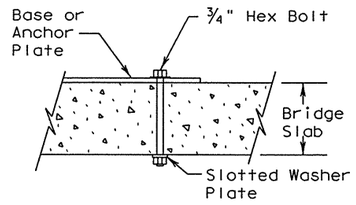

BRIDGE DECK DETAIL

Texas Department of Transportation
Design Division (Roadway)

REUSABLE ENERGY ABSORBING CRASH TERMINAL

(NARROW REACT 350)

REACT (N)-03

SHEET 1 OF 2

FILE: reactn03.dgn	DN:	CK:	DW: BGD	CK: AM
©TxDOT FEBRUARY 1998	DIST	FED REG	FEDERAL AID PROJECT #	SHEET
REVISIONS	PNR	6		220
	COUNTY		CONTROL SECT JOB	HIGHWAY
	HIDALGO		0255 08 091	0528

DISCLAIMER:
The use of this standard is governed by the "Texas Engineering Practice Act". No warranty of any kind is made by TxDOT for any purpose whatsoever. TxDOT assumes no responsibility for the conversion of this standard to other formats or for incorrect results or damages resulting from its use.

LEVELS DISPLAYED

1

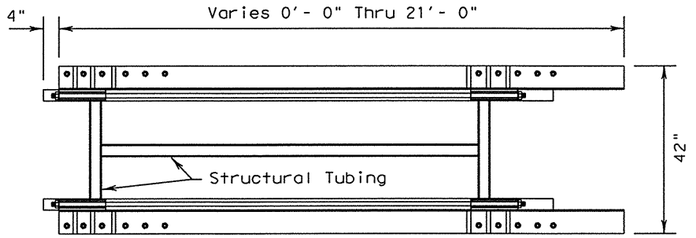

REAR SECTION OF BASE TRACK

(FOR UNITS WITHOUT SELF CONTAINED BACK-UP ONLY) "S"

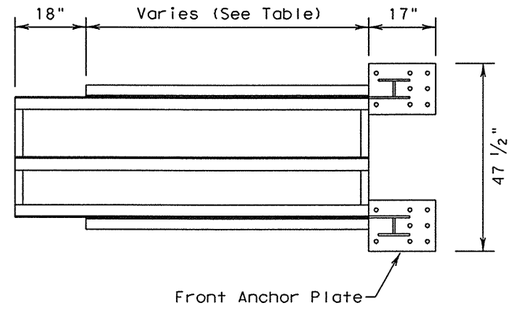

FRONT SECTION OF BASE TRACK

NUMBER OF CYLINDERS	FRONT BASE TRACK LENGTH
4	1'-5"
6	7'-5"
9	16'-5"
11	22'-5"

(The Front Section will vary depending on the size of the system)

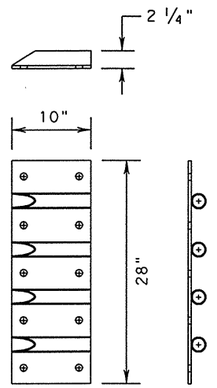

SIDE CABLE ANCHOR PLATE

(FOR UNITS WITHOUT A SELF CONTAINED BACK-UP ONLY)

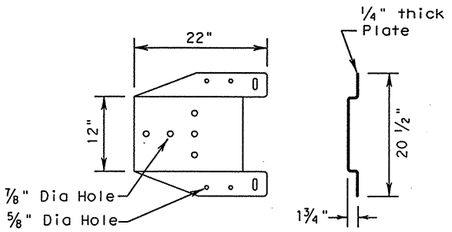

FOLDED TRANSITION PLATE

(For use in transition applications)

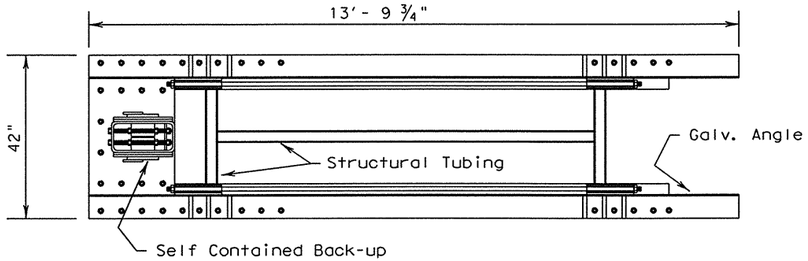

REAR SECTION OF BASE TRACK

(FOR UNITS WITH SELF CONTAINED BACK-UP ONLY) "B"

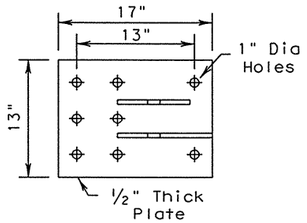

FRONT ANCHOR PLATE DETAIL

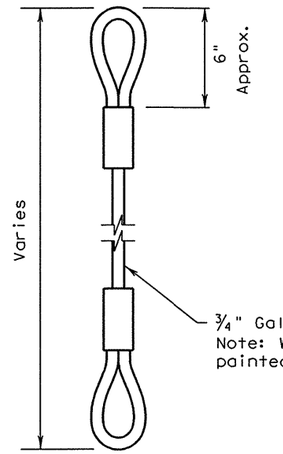

CABLE DETAIL

(FOR UNITS WITH SELF CONTAINED BACK-UP ONLY)

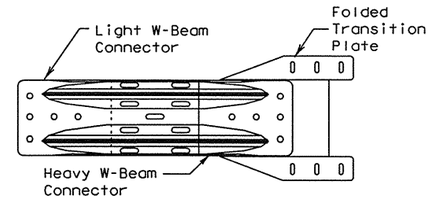

TRANSITION PLATE WITH W-BEAM CONNECTOR

(Connector overlap will vary per traffic direction - Reverse traffic shown)

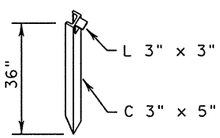

CHANNEL STAKE

(FOR USE W/ASPHALT PAVEMENT)

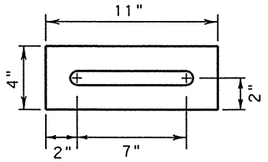

SLOTTED WASHER PLATE

(FOR BRIDGE DECK APPLICATIONS ONLY)

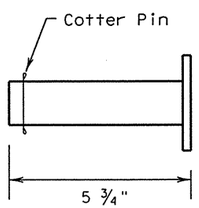

FRONT ANCHOR PIN DETAIL

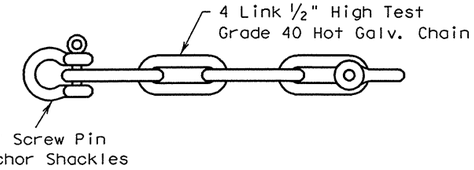

CHAIN DETAIL

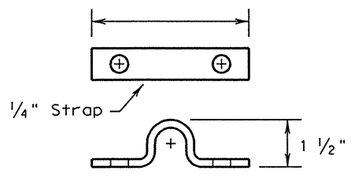

CABLE STRAP

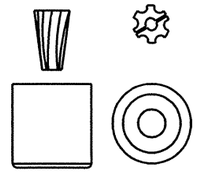

CABLE WEDGE

CABLE DETAIL

(FOR UNITS WITH SELF CONTAINED BACK-UP ONLY)

Texas Department of Transportation
Design Division (Roadway)

REUSABLE ENERGY ABSORBING CRASH TERMINAL

(NARROW REACT 350)

REACT(N)-03

SHEET 2 OF 2

FILE: reactn03.dgn	DN:	CK:	DW: BGD	CK: AM
©TxDOT FEBRUARY 1998	DIST	FED REG	FEDERAL AID PROJECT #	SHEET
REVISIONS	PHR	6		221
	COUNTY		CONTROL SECT JOB	HIGHWAY
	HIDALGO		0255 08 071	281

DISCLAIMER:
The use of this standard is governed by the "Texas Engineering Practice Act". No warranty of any kind is made by TxDOT for any purpose whatsoever. TxDOT assumes no responsibility for the conversion of this standard to other formats or for incorrect results or damages resulting from its use.

LEVELS DISPLAYED

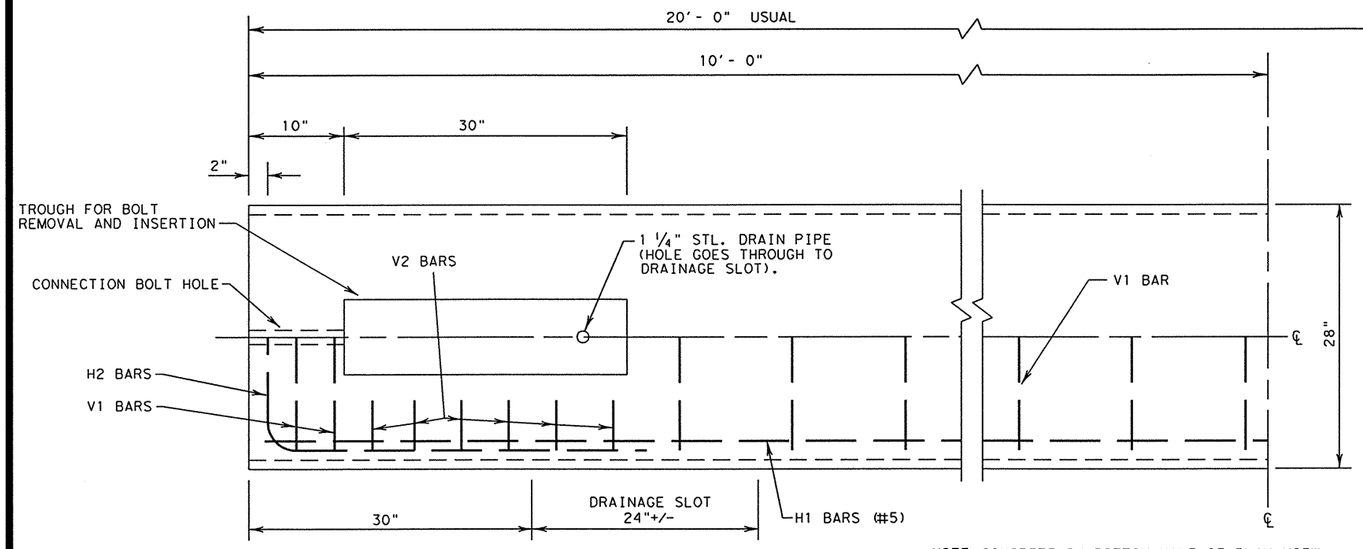

NOTE: CONCRETE ON BOTTOM HALF OF PLAN VIEW IS REMOVED IN ORDER TO SHOW DETAILS

PLAN VIEW - TYPE 1

(SYMMETRICAL ABOUT CENTER LINES)

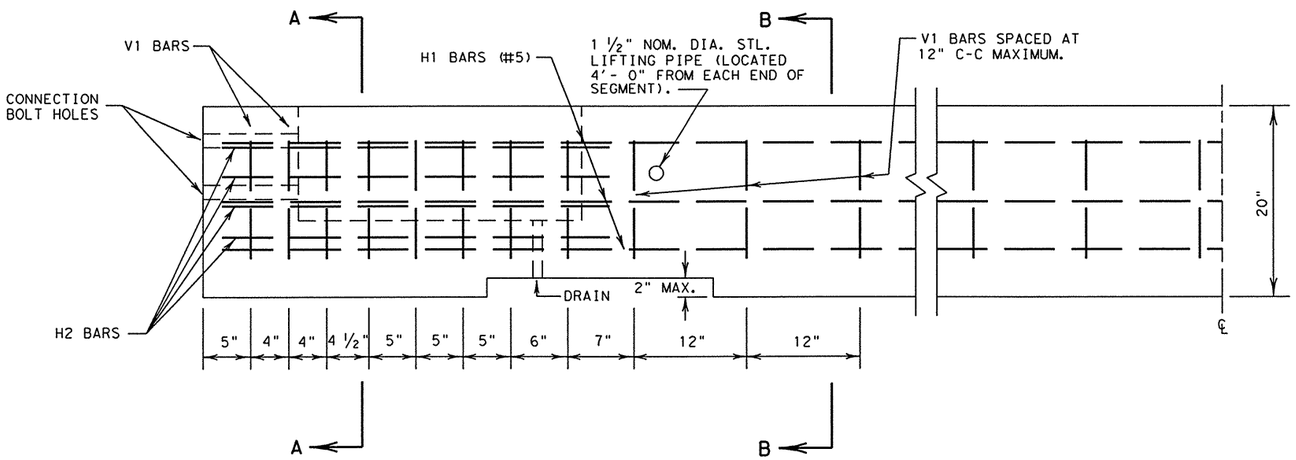

ELEVATION - TYPE 1

(SYMMETRICAL ABOUT CENTER LINES)

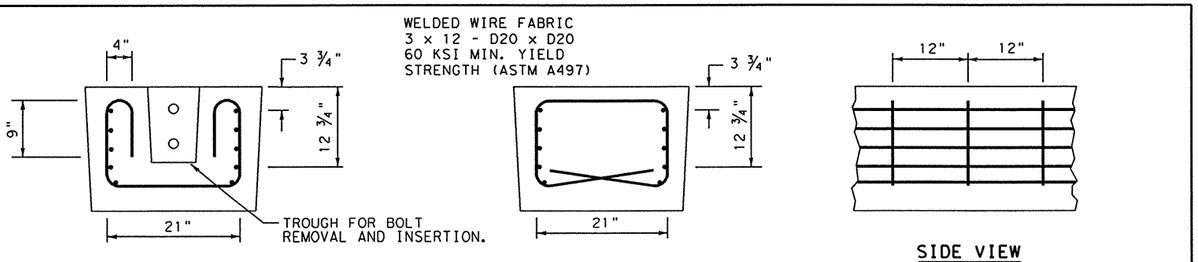

SECTION A-A

SECTION B-B

SIDE VIEW

NOTE: THIS FABRIC OPTION CAN BE USED IN PLACE OF V1, V2 AND H1 BARS. THE H2 BARS SPECIFIED ARE STILL REQUIRED.

WELDED WIRE FABRIC OPTIONAL REINFORCING

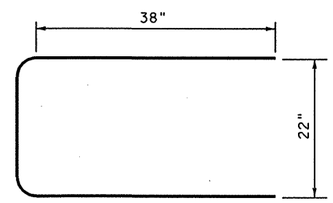

H2 BAR (#5)

(GRADE 60 MIN.)

NOTE: H2 REBAR IS TO BE BENT AT A 3" RADIUS.

NOTE: ALL BENDING OF SHEAR REBAR IS AT A 2" RADIUS, UNLESS SPECIFIED OTHERWISE.

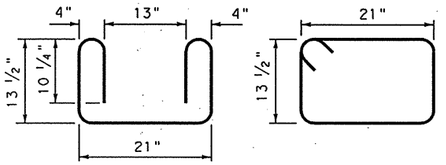

V2 BAR (#4)

V1 BAR (#4)

REINFORCING STEEL DETAILS

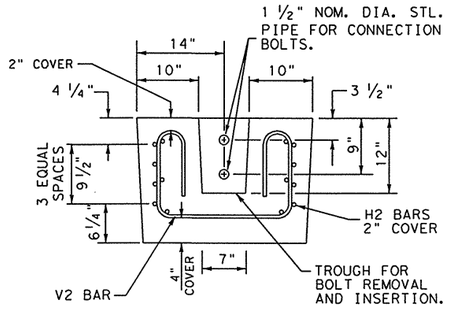

SECTION A-A

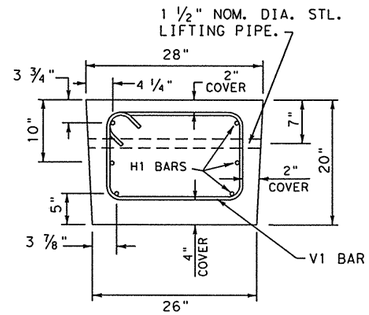

SECTION B-B

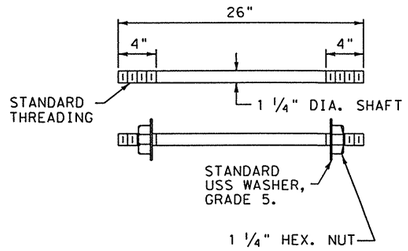

CONNECTION BOLT

FOR CONTRACTORS INFORMATION ONLY

(TYPE 1) APPROX. QUANTITIES	20 FT. SECTION	
CONCRETE	CY	2.6
REINFORCING STEEL	LBS	330
TOTAL BARRIER WT.	LBS	11000

GENERAL NOTES

1. BARRIER LENGTH SHALL BE 20 FEET (+/- 1 INCH) UNLESS OTHERWISE SPECIFIED IN THE PLANS.
2. ALL CONCRETE, REINFORCEMENT, ANCHOR BOLTS, BLOCKING, ETC., AS SHOWN ARE CONSIDERED AS PART OF THE BARRIER FOR PAYMENT.
3. ALL CONCRETE SHALL BE CLASS A, C, OR H, UNLESS OTHERWISE SPECIFIED.
4. ALL REINFORCING STEEL SHALL BE GRADE 40, UNLESS OTHERWISE SPECIFIED.
5. CHAMFER ALL EDGES 3/4 INCH, AS DIRECTED BY THE ENGINEER.
6. STEEL PIPE SHALL BE HOT DIP GALVANIZED IN CONFORMANCE TO ASTM DESIGNATION A123. BOLTS, NUTS AND WASHERS SHALL BE HOT-DIP GALVANIZED TO ASTM DESIGNATION A153.
7. BOLTS SHALL CONFORM TO ASTM A36. NUTS SHALL CONFORM TO A307 REQUIREMENTS AND SHALL BE TAPPED OR CHASED AFTER GALVANIZING. BOLTS AND NUTS SHALL HAVE CLASS 2A AND 2B FIT TOLERANCES.
8. THE BARRIER SHOULD BE LIGHT IN COLOR AND SHOULD BE SUPPLEMENTED BY DELINEATION AS DETAILED ELSEWHERE IN THE PLANS.

TEXAS DEPARTMENT OF TRANSPORTATION

LOW PROFILE CONCRETE BARRIER

(PORTABLE AND PRECAST)

LPCB(1)-92

SHEET 1 OF 2

©TxDOT SEPTEMBER 1992

MODIFICATIONS

FED. RD. DIV. NO.	STATE	FEDERAL AID PROJECT NO.	SHEET NO.
6	TEXAS		222

STATE DIST. NO.	COUNTY	CONT.	SECT.	JOB	HIGHWAY NO.
PHR	HIDALGO	0255	08	097	US281

HIGHWAY DESIGN DIVISION (D-8)

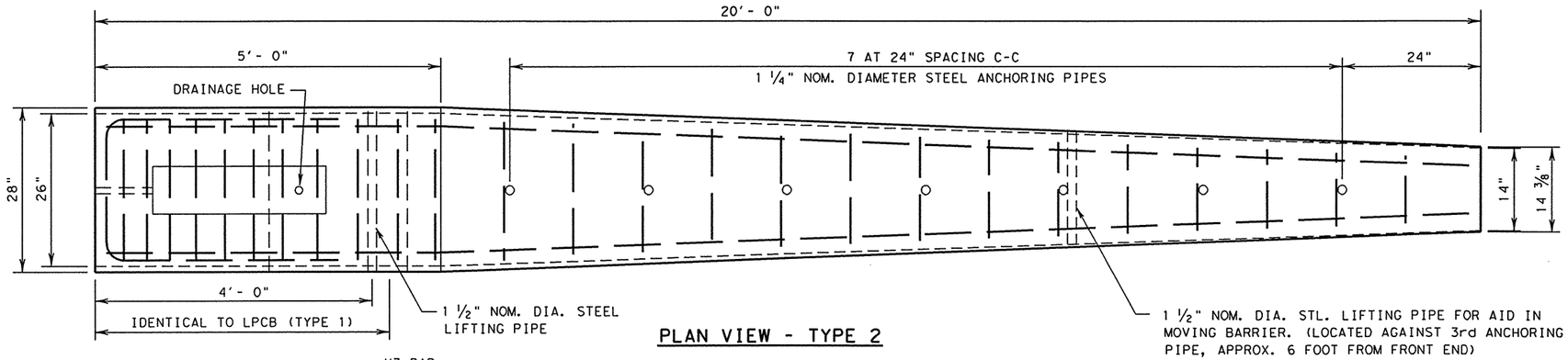

PLAN VIEW - TYPE 2

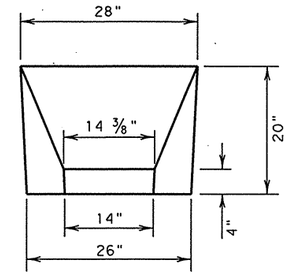

APPROACH VIEW

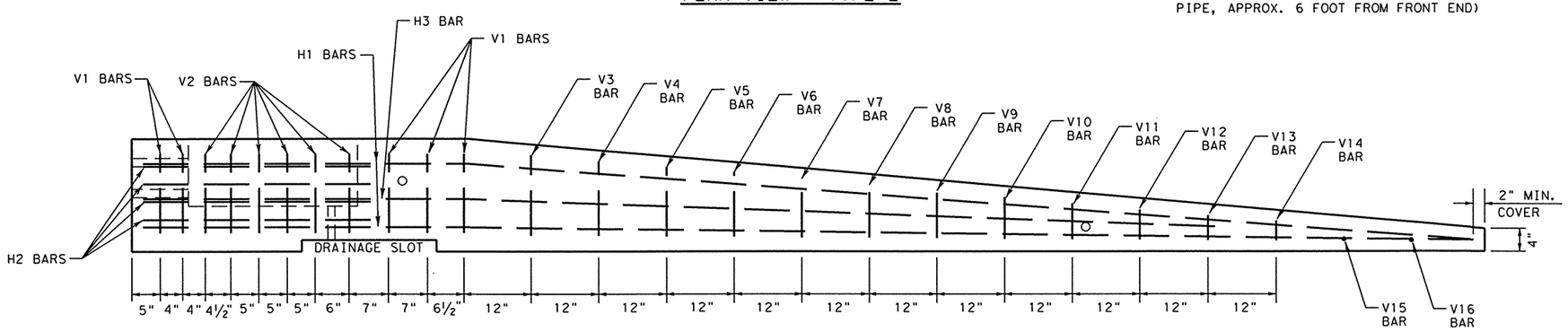

ELEVATION - TYPE 2

NOTE: ANCHORING PIPES NOT SHOWN IN ELEVATION.

GENERAL NOTES

1. TYPE 2 BARRIER SHALL BE USED AS AN END TREATMENT FOR TYPE 1 BARRIER WHEN APPROPRIATE.
2. THE ANCHORAGE PINS ARE ALL THE SAME LENGTH AND ARE INTENDED TO BE DRIVEN FLUSH WITH THE TOP OF THE BARRIER SURFACE.
3. THE BENDS IN THE H3 AND H1 BARS ARE SLIGHT, NO FORMAL BEND IS NECESSARY.
4. TYPE 2 BARRIER MUST BE LIFTED FROM REAR FIRST TO PREVENT CRACKING OF SLOPED SECTION.
5. SEE SHEET 1 OF 2 FOR ADDITIONAL INFORMATION.

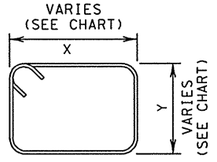

V 3-11 BARS (#4)

BAR (#4)	X (IN.)	Y (IN.)
V3 BAR	20 ¼	14 ½
V4 BAR	19 ½	13 ½
V5 BAR	18 ½	12 ¼
V6 BAR	17 ½	11 ¼
V7 BAR	17	10 ¼
V8 BAR	16 ¼	9
V9 BAR	15 ½	8
V10 BAR	14 ½	7
V11 BAR	13 ¾	6

NOTE: ALL BENDING OF SHEAR REBAR IS AT A 2" RADIUS, UNLESS SPECIFIED OTHERWISE.

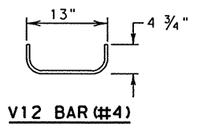

V12 BAR (#4)

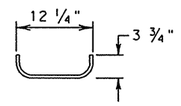

V13 BAR (#4)

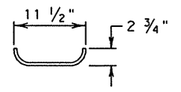

V14 BAR (#4)

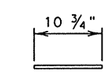

V15 BAR (#4)

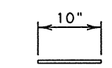

V16 BAR (#4)

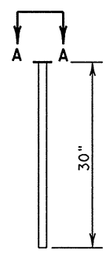

ANCHORING PIN
(1 ¼"DIA., A36 STL.)

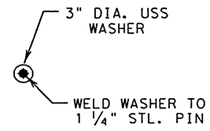

A-A
(HEAD OF ANCHORING PIN)

FOR CONTRACTORS INFORMATION ONLY

(TYPE 2) APPROX. QUANTITIES		20 FT. SECTION
CONCRETE	CY	1.65
REINFORCING STEEL	LBS	240
TOTAL BARRIER WT.	LBS	7000

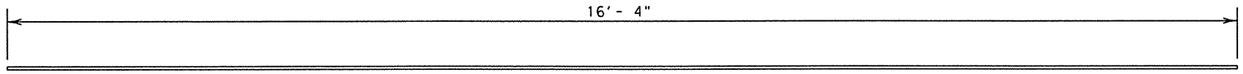

H3 BARS (#5)
(GRADE 60)

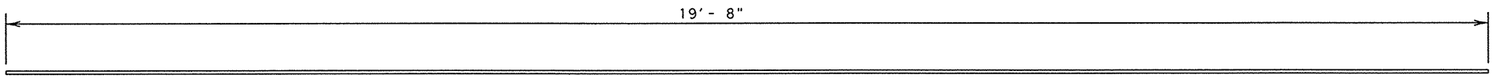

H1 BARS (#5)
(GRADE 60)

TEXAS DEPARTMENT OF TRANSPORTATION

LOW PROFILE CONCRETE BARRIER

(PORTABLE AND PRECAST)

LPCB(2)-92

SHEET 2 OF 2

©TxDOT SEPTEMBER 1992

MODIFICATIONS

FED.RD. DIV.NO.	STATE	FEDERAL AID PROJECT NO.	SHEET NO.
6	TEXAS		223

STATE DIST.NO.	COUNTY	CONT.	SECT.	JOB	HIGHWAY NO.
PHR	HIDALGO	0055	08	091	(LF)281

HIGHWAY DESIGN DIVISION (D-8)

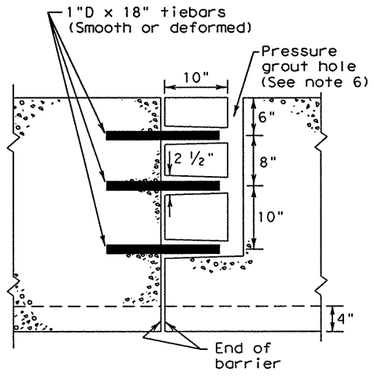

SECTION THROUGH ℄ AT JOINT
MALE-FEMALE DESIGN OPTION

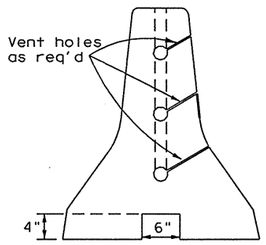

END VIEW
MALE-FEMALE DESIGN OPTION

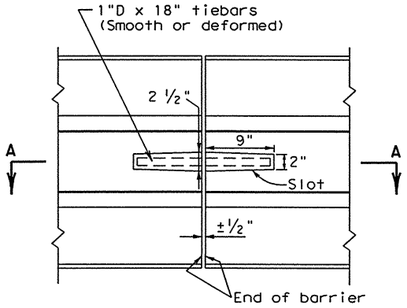

PLAN
SLOTTED DESIGN OPTION

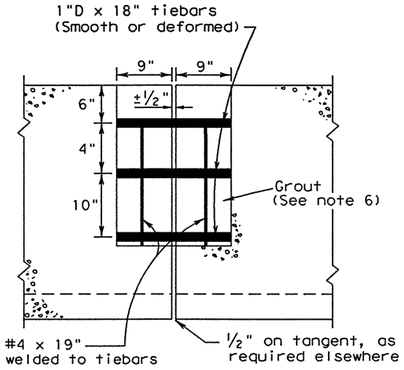

SECTION A-A (THROUGH ℄ AT JOINT)
SLOTTED DESIGN OPTION

JOINT TYPE A

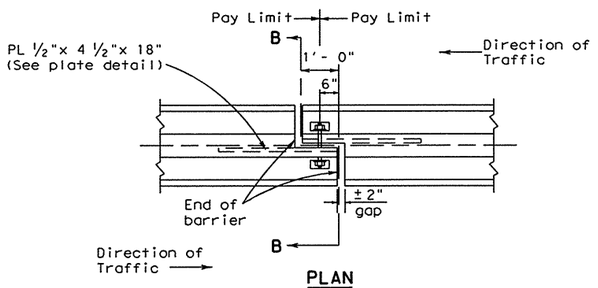

PLAN
END DETAIL

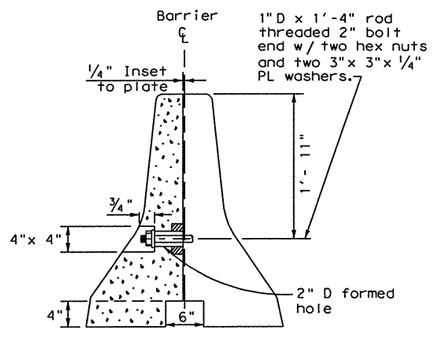

SECTION B-B

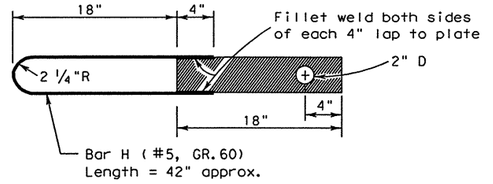

PLATE DETAIL

JOINT TYPE B

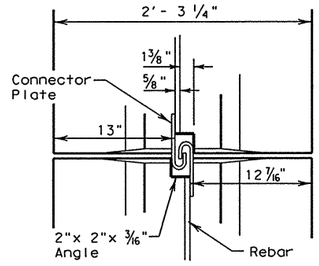

J-J HOOKS DETAIL

Note: J-J Hooks is a proprietary barrier connection system. This system can be used as an alternate bid item to a different joint type. If this connection system is exclusively specified in the plans, prior approval for sole source use must be obtained.

Details of components for the J-J Hooks connection and reinforcing details will be shown on the manufacturer's shop drawings furnished to the Engineer.

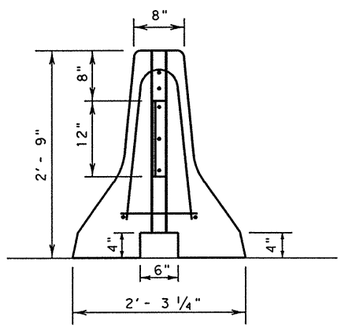

END VIEW

JOINT TYPE J

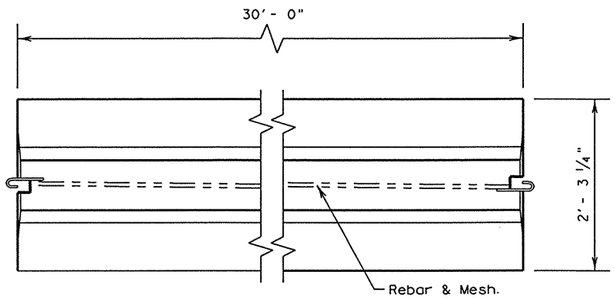

TOP VIEW
PRECAST (CTB) WITH J-J HOOKS

GENERAL NOTES

1. Where illumination is to be placed on concrete traffic barrier, a 10 ft. cast-in-place section shall be provided at each light pole location as shown on sheet CTBI(3). Pole, anchor bolt, and other illumination details are shown on sheet CTBI(4).
2. Concrete shall be class C or H.
3. Plates shall conform to ASTM A36 steel.
4. Mesh for joint Type J barrier shall conform to ASTM A185.
5. Regardless of the method of handling, barrier section lifting points shall be 6 ¼ feet from the ends of the barrier. Lifting devices and attachments to barrier sections shall be as approved by the Engineer.
6. For joint Type A barrier that is installed in a temporary location, tiebars should be placed in the slot when the slot design option is used or, for the male-female design option, the male-female connections should be mated. For joint Type A, neither of the optional joint designs should be grouted for temporary locations of barrier.
7. When installed in a permanent roadway location, end connections of the joint Type A barrier shall be grouted with a mixture of two parts sand and one part cement with enough water to make the mixture plastic. Grouting shall be done in a manner that will assure a smooth surface at the joint.
8. Surface finishing and grouting (where required) shall be considered subsidiary to the various bid items involved.
9. All steel fittings for joint Type B and Type J barrier shall be galvanized after fabrication in accordance with ASTM 123.
10. Barrier length shall be 30 feet ± 4 inches unless specified elsewhere in the plans.
11. Forms shall be constructed of steel. Edges of barrier shall be rounded or chamfered as shown on sheet PCTB(2).
12. The contractor has the option of placing precast (joint Type A, B or J) or cast-in-place Type 2 Concrete Traffic Barrier as shown on sheet CTB(2) unless otherwise shown in the plans.

R = Radius
D = Diameter

DISCLAIMER:
The use of this standard is governed by the "Texas Engineering Practice Act". No warranty of any kind is made by TxDOT for any purpose whatsoever. TxDOT assumes no responsibility for the conversion of this standard to other formats or for incorrect results or damages resulting from its use.

LEVELS DISPLAYED

Texas Department of Transportation
Design Division (Roadway)

PRECAST CONCRETE TRAFFIC BARRIER TYPE 2

PCTB(1)-02

FILE: pctb102.dgn	DN: GTH	CK: GTH	DW: BGD	CK: TGM	NEG:	
©TxDOT DECEMBER 1990	DIST	FED REG	FEDERAL AID PROJECT •			SHEET
REVISIONS	PHR	6				224
	COUNTY		CONTROL	SECT	JOB	HIGHWAY
	HIDALGO		0255	08	69/05281	

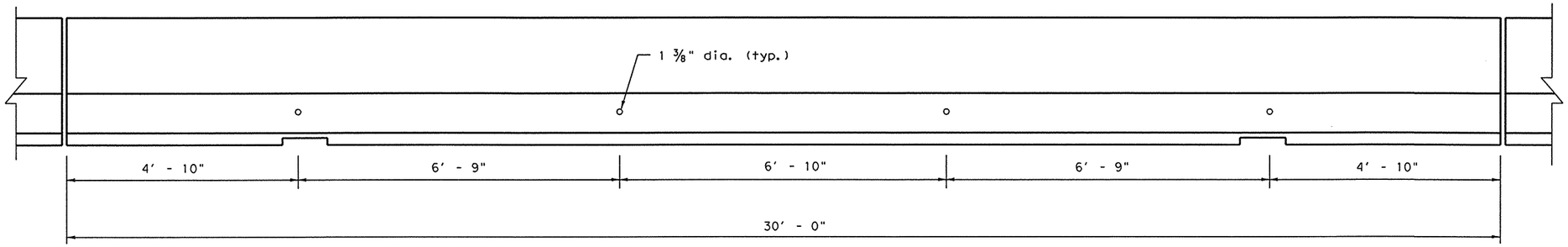

DETAIL 1

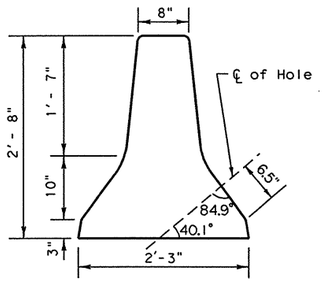

DETAIL 2

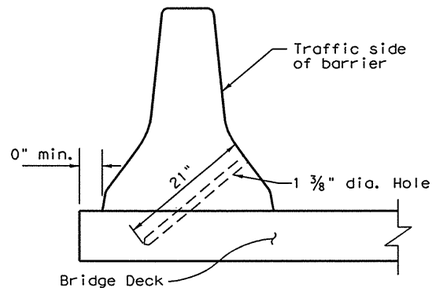

DETAIL 3

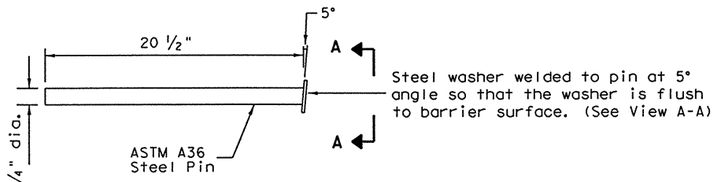

DETAIL 4

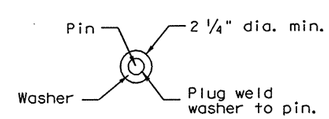

VIEW A-A

GENERAL NOTES

1. These details provide a method of laterally restraining precast concrete barrier to limit deflections under normally expected passenger vehicle impacts. These details are intended for use in work zones, primarily on bridge decks, where temporary barrier must be placed less then 2 ft. from the longitudinal edge of the deck or dropoff and parallel to the direction of travel. See Texas Transportation Institute Research Study 2-8-93-1959 for additional development information.

2. Each precast concrete barrier section shall have four 1 3/8 in. diameter holes drilled completely through the barrier. The center lines of the holes are as shown in Detail 2. As shown, the entry point of the hole is located 6 1/2 in. along the face of the barrier up from the first break. If the drill bit encounters a rebar in the barrier, the entry point may be shifted 6 in.± longitudinally along the barrier. The four holes are spaced along the lenth of the barrier as shown in Detail 1.

3. The drilling of bridge deck is accomplished by placing the pre-drilled barrier section on the bridge deck in the desired position. then the hole is drilled into the bridge deck with the bit passing though the hole in the barrier. The bit is to be inserted into the hole in the barrier to a total of 21 in. so that the bridge deck is drilled to a point which is slightly more than 5 in. ± below the surface of the bridge deck depending upon the slope of the deck as shown in Detail 3.

4. The barrier section is secured in place by inserting the four 1 1/4 in. diameter steel pins which are 20 1/2 in. long through the barrier section and into the deck. Detail 4 presents a sketch of the steel pins. Note that steel washers have been welded to the top of the steel pins to aid in removal of the pins when the barrier is to be moved.

5. These details may be used with precast barrier joint Type A, B, angle or channel connections.

6. The drilling of holes in the barrier, drilling of holes in bridge deck, fabrication and materials for the 1 1/4 in. pins, installation of pins, and any repair to bridge deck or barrier shall be considered as subsidary to the barrier bid items.

7. The barrier and new bridge deck will be repaired as directed by the Engineer with non-shrinkage grout.

8. A core drilling method approved by the Engineer will be required.

Texas Department of Transportation
Design Division (Roadway)

PRECAST CONCRETE TRAFFIC BARRIER
TYPE 3

PCTB(3)-94

©TxDOT APRIL 1994	DN: MAM	CK: MAM	DW: BGD	CK:	MEG NO.: R0000
MODIFICATIONS	STATE DISTRICT	FEDERAL REGION	FEDERAL AID PROJECT		SHEET
	PHR	6			225
	COUNTY		CONTROL	SECTION	JOB	HIGHWAY
	HIDALGO		0255	08	091	US 281

LEVELS DISPLAYED
1 3 4 5 6 7 8 9 10 11 12 13 14 15 16
17 18 19 20 21 22 23 24 25 26 27 28 29 30 31 32
33 34 35 36 37 38 39 40 41 42 43 44 45 46 47 48
49 50 51 52 53 54 55 56 57 58 59 60 61 62 63

ACC: /usc/d481303
FILE: PCTB394.DGN

DISCLAIMER
The use of this standard is governed by the "Texas Engineering Practice Act". No warranty of any kind is made by TxDOT for any purpose whatsoever. TxDOT assumes no responsibility for the conversion of this standard to other formats or for incorrect results or damages resulting from its use.

LEVELS DISPLAYED ACC:

1	2	3	4	5	6	7	8	9	10	11	12	13	14	15	16	
17	18	19	20	21	22	23	24	25	26	27	28	29	30	31	32	
33	34	35	36	37	38	39	40	41	42	43	44	45	46	47	48	
49	50	51	52	53	54	55	56	57	58	59	60	61	62	63		

DEFINITION OF TREATMENT ZONES FOR VARIOUS EDGE CONDITIONS

Edge Height (D) in Inches versus Lateral Clearance (Y) in Feet

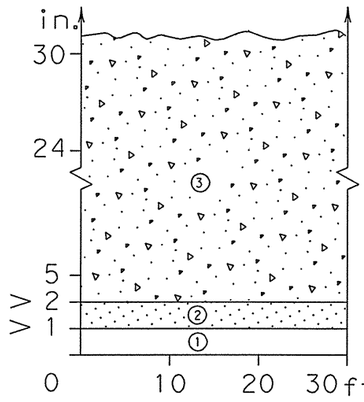

Edge Condition I
S = (3:1) (or flatter)

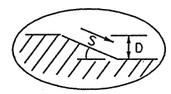

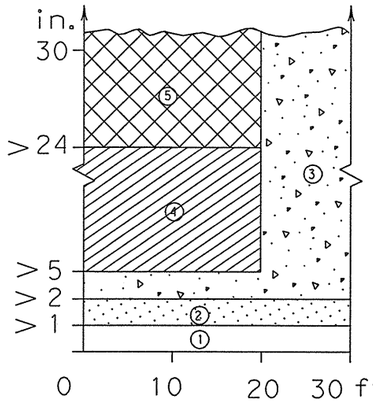

Edge Condition II
S = ((2.99):1) to (1:1)

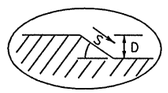

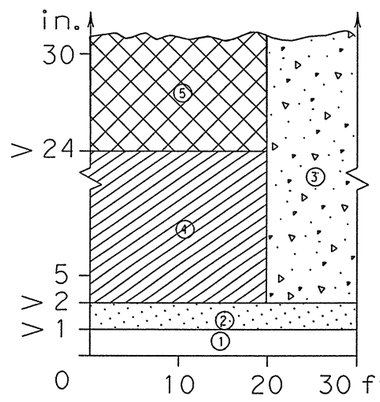

Edge Condition III
S is steeper than (1:1)

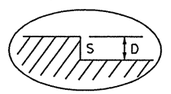

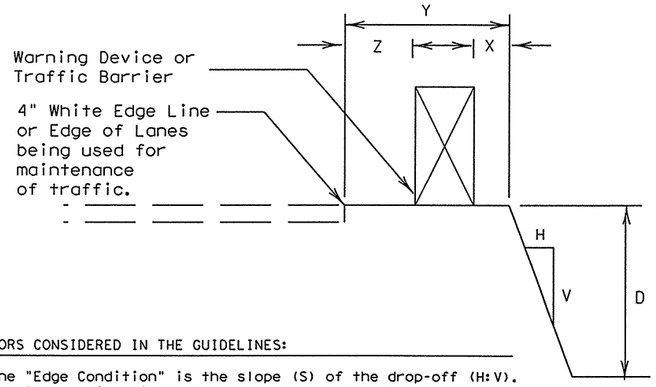

FACTORS CONSIDERED IN THE GUIDELINES:

1. The "Edge Condition" is the slope (S) of the drop-off (H:V). The "Edge Height is the depth of the drop-off "D".

2. Distance "X" is to be the maximum practical under job conditions. Two feet minimum for high speed conditions. Distance "Y" is the lateral clearance from edge of travel lane to edge of dropoff. Distance "Z" does not have a minimum.

3. In addition to the factors considered in the guidelines, each construction zone drop-off situation should be analyzed individually, taking into account other variables, such as: traffic mix, posted speed in the construction zone, horizontal curvature, and the practicality of the treatment options.

4. The conditions for indicating the use of positive or protective barriers are given by Zone-5 and Figure-1. Traffic barriers are primarily applicable for high speed conditions. Urban areas with speeds of 30 mph or less may have a lesser need for signing, delineation, and barriers. Right-angled edges, however, with "D" greater than 2 inches and located within a lateral offset of 6 feet, may indicate a higher level of treatment.

5. If the distance "Y" must be less than 3 feet, the use of a positive barrier may not be feasible. In such a case, consider either: 1) narrowing the lanes to a desired 11 to 12 feet or 10 foot minimum (see CW20-8 sign), or 2) provide an edge slope such as Edge Condition I.

Zone	Treatment Types Guidelines:
①	No treatment.
②	CW 8-11 "Uneven Lanes" signs.
③	CW 8-9a "Shoulder Drop-Off" or CW 8-11 signs plus vertical panels.
④	CW 8-9a or CW 8-11, signs plus drums. Where restricted space precludes the use of drums, use vertical panels. An edge fill may be provided to change the edge slope to that of the preferable Edge Condition I.
⑤	Check indications (Figure-1) for positive barrier. Where positive barrier is not indicated, the treatment shown above for Zone- 4 may be used after consideration of other applicable factors.

Edge Condition Notes:

1. Edge Condition I: Most vehicles are able to traverse an edge condition with a slope rate of (3 to 1) or flatter. The slope must be constructed with a compacted material capable of supporting vehicles.

2. Edge Condition II: Most vehicles are able to traverse an edge condition with a slope between (2.99 to 1) and (1to 1) so long as "D" does not exceed 5 inches. Under-carriage drag on most automobiles will occur when "D" exceeds 6 inches. As "D" exeeds 24 inches, the possibility for rollover is greater in most vehicles.

3. Edge Condition III: When slopes are greater than (1 to 1) and where "D" is greater than 2 inches, a more difficult control factor may exist for some vehicles, if not properly treated. For example, where "D" is greater than 2 inches and up to 24 inches different types of vehicles may experience different steering control at different edge heights. Automobiles might experience more steering control differential when "D" is greater than 2 inches and up to 5 inches. Trucks, particularly those with high loads, have more steering control differential when "D" is greater than 5 inches and up to 24 inches. When "D" exceeds 24 inches, the possibility of rollover is greater for most vehicles.

4. Milling or overlay operations that result in Edge Condition III should not be in place without appropriate warning treatments, and these conditions should not be left in place for extended periods of time.

FIGURE-1: CONDITIONS INDICATING USE OF POSITIVE BARRIER FOR ZONE 5 (▨)

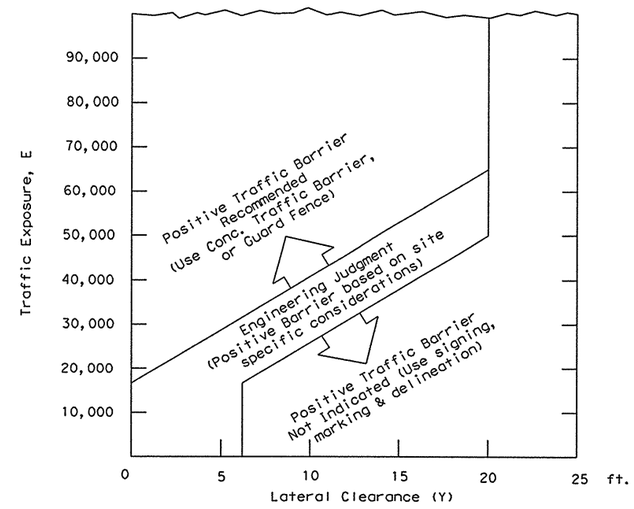

1 E = ADT x T
Where ADT is that portion of the average daily traffic volume traveling within 20 feet (generally two adjacent lanes) of the edge dropoff condition; and, T is the duration time in years of the dropoff condition.

2 Figure-1 provides a practical approach to the use of positive barriers for the protection of vehicles from pavement drop-offs. Other factors, such as the presence of heavy machinery, construction workers, or the mix and volume of traffic may make the use of positive barriers appropriate, even when the edge condition alone may not justify the use of a barrier.

3 An approved end treatment should be provided for any positive barrier end located within a lateral offset of 20 feet from the edge of the travel lane.

These guidelines apply to temporary traffic control areas or work zones where continuous pavement edges or drop-offs exists parallel and adjacent to a lane used by traffic. The edge conditions may be present between shoulders and travel lanes, between adjacent or opposing travel lanes, or at intermediate points across the width of the paved surface. Due to the variability in construction operations, tolerances in the variables may be allowed by the engineer. These guidelines do not apply to short term operations. These guidelines do not constitute a rigid standard or policy; rather, they are guidance to be used in conjunction with engineering judgement. These guidelines may be updated on the Design Division's on-line manuals.

Engineer's Seal

THE SEAL APPEARING ON THIS DOCUMENT WAS AUTHORIZED BY JOHN M PEREZ, P.E. 66425 ON 06/23/2003.

STATE OF TEXAS
JOHN M. PEREZ
66425
REGISTERED PROFESSIONAL ENGINEER

Date 6/23/03

Texas Department of Transportation

WORKSHEET FOR EDGE CONDITION TREATMENT TYPES

©TxDOT August 2000

Dsn- GRB	Ckd- JEB	Dwn- BGD	Ckd- CAL

REVISIONS	STATE DISTRICT	FEDERAL REGION	FEDERAL AID PROJECT	SHEET
03-01	TEXAS	6		225A
08-01 correct typos	COUNTY	CONTROL	SECTION	JOB	HIGHWAY
	HIDALGO	0255	08	091	US 281

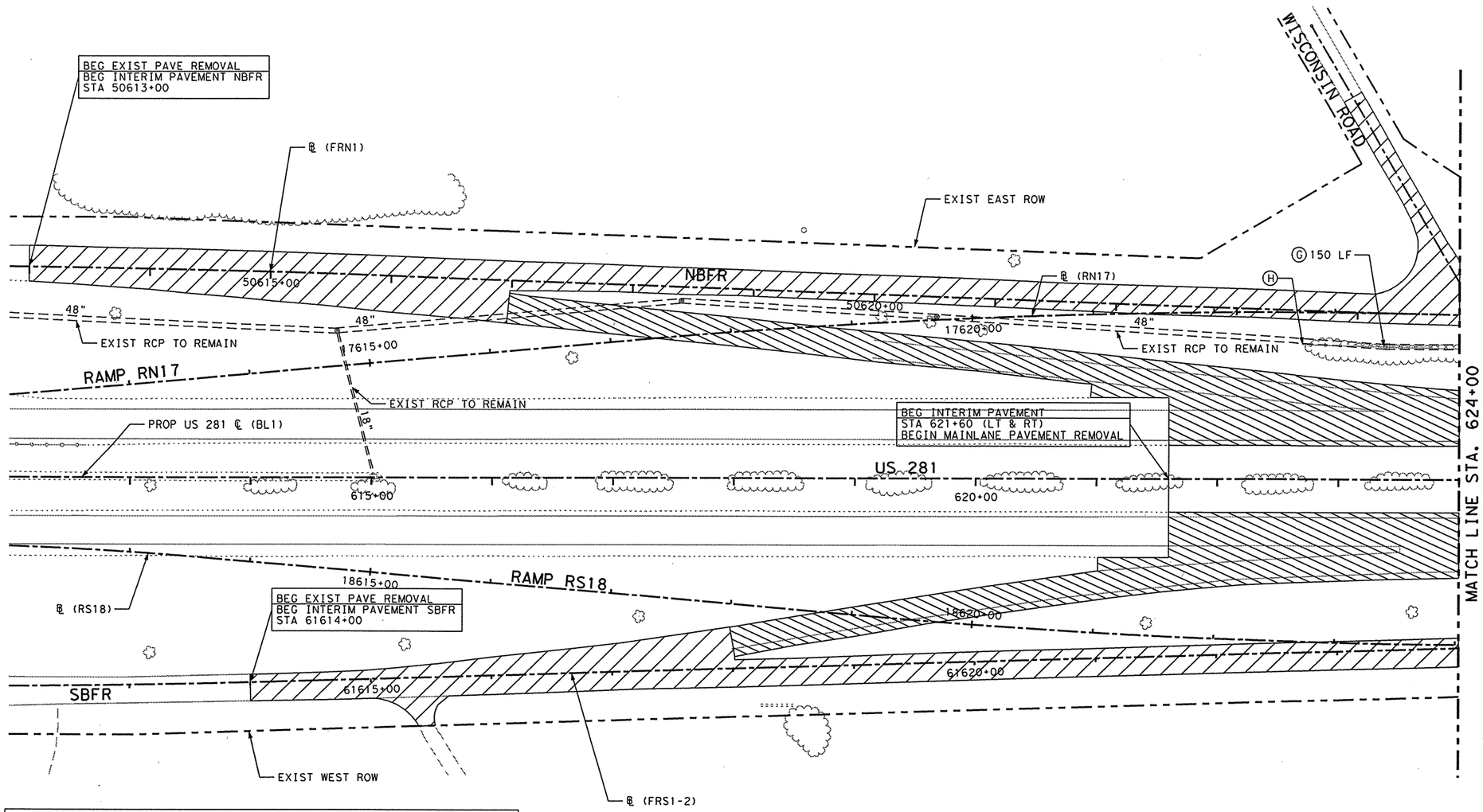

REMOVAL LEGEND:

- 22.75" PAVEMENT 8.75" A.C.P. - REWORK 14.0" FLEX - REWORK
- 14.5" PAVEMENT 5.5" A.C.P. - REWORK 9.0" FLEX - REWORK
- 15.5" PAVEMENT 6.5" A.C.P. - REWORK 9.0" FLEX - REWORK
- 13.75" PAVEMENT 6.75" A.C.P. - REWORK 7.0" FLEX - REWORK
- 12.5" PAVEMENT 5.5" A.C.P. - REWORK 7.0" FLEX - REWORK
- 11.75" PAVEMENT 2.75" A.C.P. - REWORK 9.0" FLEX - REWORK
- 16.5" PAVEMENT 6.5" A.C.P. - REWORK 10.0" FLEX - REWORK
- 8.0" PAVEMENT 8" FLEX - REWORK
- 10.0" PAVEMENT 10" FLEX - REWORK
- 4" CONCRETE SIDEWALK REMOVAL
- CONCRETE MEDIAN REMOVAL
- CONCRETE RIPRAP REMOVAL
- A.C.P. REMOVAL
- BRICK PAVER REMOVAL
- — — SAW CUT LINE
- (A) CONCRETE CURB REMOVAL
- (B) CONCRETE CURB & GUTTER REMOVAL
- (C) CONCRETE VALLEY GUTTER REMOVAL
- (D) TYPE 2 C.T.B. REMOVAL (CAST IN PLACE)
- (E) C.T.B. REMOVAL (PRE-CAST)
- (F) CONCRETE DRAIN REMOVAL
- (G) METAL BEAM GUARD FENCE REMOVAL
- (H) TERMINAL-ANCHOR-SECTION REMOVAL
- (I) SINGLE GUARD RAIL TERMINAL
- (J) TIMBER POST & CABLE RMV (PREP. ROW)
- (K) PALM TREE TO BE RELOCATED
- (L) FENCE REMOVAL (PREP. R.O.W.)
- (M) TREE REMOVAL
- (N) EXIST. STRUCTURE TO BE REMOVED

SHEET TOTALS

ITEM	EST.	FINAL	UNIT	DESCRIPTION
100			STA	PREPARATION OF R.O.W.
100			EA	PREPARATION OF R.O.W. (TREES)
104			LF	REMOVE CONC. (CURB)
104			LF	REMOVE CONC. (CURB & GUTTER)
104			LF	REMOVE CONC. (VALLEY GUTTER)
104			SY	REMOVE CONC. (MEDIAN)
104			SY	REMOVE CONC. (DRAIN)
104			SY	REMOVE CONC. (RIPRAP)
105			SY	REMOVE ASPHALTIC PAVEMENT
* 251			CY	REWORK BASE MAT'L (7" FLEX BASE)
* 251	1380		CY	REWORK BASE MAT'L (8" FLEX BASE)
* 251			CY	REWORK BASE MAT'L (9" FLEX BASE)
* 251	1333		CY	REWORK BASE MAT'L (10" FLEX BASE)
* 251			CY	REWORK BASE MAT'L (14" FLEX BASE)

ITEMIZED PREP R.O.W. TABLE

ITEM	EST.	FINAL	UNIT	DESCRIPTION
$ 100			LF	TIMBER POST & CABLE
$ 100			LF	CHAIN LINK FENCE
$ 100			STA	SHRUBS

$ TO BE PAID FOR UNDER PREP. R.O.W. (STA.) FOR CONTRACTOR'S INFORMATION ONLY.
* QUANTITIES REFLECT 85% SALVAGEABLE RATE.
# A.C.P. TO BE USED AS ITEM 251

ALL PALM TREES SHALL BE RELOCATED TO AREAS WITHIN THE PROJECT LIMITS.
CONTRACTOR IS TO CONTACT THE PROJECT ENGINEER FOR MARKING SPECIFIC LOCATIONS.

SHEET TOTALS

ITEM	EST.	FINAL	UNIT	DESCRIPTION
## 305			SY	SALVAGE A.C.P. (2.75" A.C.P.)
## 305			SY	SALVAGE A.C.P. (5.50" A.C.P.)
## 305	5645		SY	SALVAGE A.C.P. (6.50" A.C.P.)
## 305			SY	SALVAGE A.C.P. (6.75" A.C.P.)
## 305			SY	SALVAGE A.C.P. (8.75" A.C.P.)
479			EA	ADJUSTING INLET (CAP)
496			LF	REMOVE OLD STR. (PIPE)
496			EA	REMOVE OLD STR. (SMALL)
542	150		LF	REMOVE METAL BEAM GUARD FENCE
542			EA	REMOVE SINGLE GUARDRAIL TERMINAL
542	1		EA	REMOVE TERMINAL ANCHOR SECTION
1057			EA	TRANSPLANTING TREES & PALMS
5190			SY	REMOVE & RELOCATE SALVAGE LANDSCAPE PAVERS

NOTES:

1. SAVLAGED MBGF AND POSTS SHALL BE RETURNED TO THE PHARR MAINTENANCE YARD.

THE SEAL APPEARING ON THIS DOCUMENT WAS AUTHORIZED BY JAIME AGUILAR, P.E. 87606 ON 07/02/2003.

STATE OF TEXAS
JAIME AGUILAR
87606
REGISTERED PROFESSIONAL ENGINEER

Parsons Brinckerhoff Quade & Douglas Inc.

Texas Department of Transportation

© 2003 by TxDOT

US 281
REMOVAL ITEM DETAILS

STA. 612+00 "BL1" TO
STA. 624+00 "BL1"

PLAN 1"= 100' HORIZ

SHEET 1 OF 22				281REM01.DGN			
DESIGNED: TT	FED. RD DIV. No.	STATE	FEDERAL AID PROJECT No.				HIGHWAY No.
CHECKED: DM	6	TEXAS					US 281
DRAWN: JT	STATE DISTRICT	COUNTY	CONTROL No.	SECTION No.	JOB No.	SHEET No.	
CHECKED: DM	PHARR	HIDALGO	0255	08	091	226	

NAME
02:10:23 PM
07/02/2003
I:\223220\CADD\Sheets\Removals\281rem01.dgn

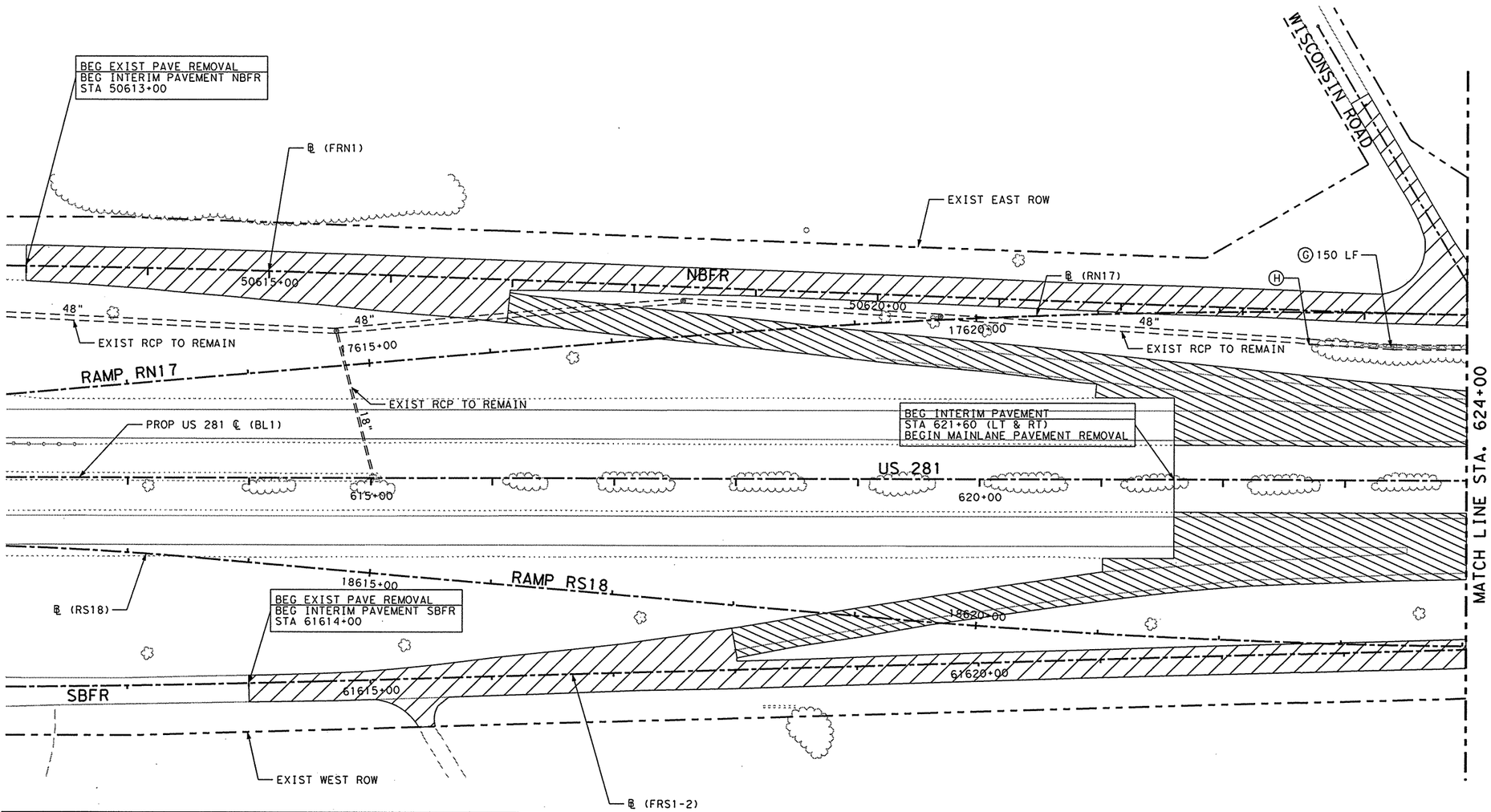

REMOVAL LEGEND:

- 22.75" PAVEMENT 8.75" A.C.P. - REWORK 14.0" FLEX - REWORK
- 14.5" PAVEMENT 5.5" A.C.P. - REWORK 9.0" FLEX - REWORK
- 15.5" PAVEMENT 6.5" A.C.P. - REWORK 9.0" FLEX - REWORK
- 13.75" PAVEMENT 6.75" A.C.P. - REWORK 7.0" FLEX - REWORK
- 12.5" PAVEMENT 5.5" A.C.P. - REWORK 7.0" FLEX - REWORK
- 11.75" PAVEMENT 2.75" A.C.P. - REWORK 9.0" FLEX - REWORK
- 16.5" PAVEMENT 6.5" A.C.P. - REWORK 10.0" FLEX - REWORK
- 8.0" PAVEMENT 8" FLEX - REWORK
- 10.0" PAVEMENT 10" FLEX - REWORK
- 4" CONCRETE SIDEWALK REMOVAL
- CONCRETE MEDIAN REMOVAL
- CONCRETE RIPRAP REMOVAL
- A.C.P. REMOVAL
- BRICK PAVER REMOVAL
- — — SAW CUT LINE
- Ⓐ CONCRETE CURB REMOVAL
- Ⓑ CONCRETE CURB & GUTTER REMOVAL
- Ⓒ CONCRETE VALLEY GUTTER REMOVAL
- Ⓓ TYPE 2 C.T.B. REMOVAL (CAST IN PLACE)
- Ⓔ C.T.B. REMOVAL (PRE-CAST)
- Ⓕ CONCRETE DRAIN REMOVAL
- Ⓖ METAL BEAM GUARD FENCE REMOVAL
- Ⓗ TERMINAL-ANCHOR-SECTION REMOVAL
- Ⓘ SINGLE GUARD RAIL TERMINAL
- Ⓙ TIMBER POST & CABLE RMV (PREP. ROW)
- Ⓚ PALM TREE TO BE RELOCATED
- Ⓛ FENCE REMOVAL (PREP. R.O.W.)
- Ⓜ TREE REMOVAL
- Ⓝ EXIST. STRUCTURE TO BE REMOVED

SHEET TOTALS				
ITEM	EST.	FINAL	UNIT	DESCRIPTION
100			STA	PREPARATION OF R.O.W.
100			EA	PREPARATION OF R.O.W. (TREES)
104			LF	REMOVE CONC. (CURB)
104			LF	REMOVE CONC. (CURB & GUTTER)
104			LF	REMOVE CONC. (VALLEY GUTTER)
104			SY	REMOVE CONC. (MEDIAN)
104			SY	REMOVE CONC. (DRAIN)
104			SY	REMOVE CONC. (RIPRAP)
105			SY	REMOVE ASPHALTIC PAVEMENT
* 251			CY	REWORK BASE MAT'L (7" FLEX BASE)
* 251	1380		CY	REWORK BASE MAT'L (8" FLEX BASE)
* 251			CY	REWORK BASE MAT'L (9" FLEX BASE)
* 251	1333		CY	REWORK BASE MAT'L (10" FLEX BASE)
* 251			CY	REWORK BASE MAT'L (14" FLEX BASE)

ITEMIZED PREP R.O.W. TABLE				
ITEM	EST.	FINAL	UNIT	DESCRIPTION
$ 100			LF	TIMBER POST & CABLE
$ 100			LF	CHAIN LINK FENCE
$ 100			STA	SHRUBS

$ TO BE PAID FOR UNDER PREP. R.O.W. (STA.) FOR CONTRACTOR'S INFORMATION ONLY.
* QUANTITIES REFLECT 85% SALVAGEABLE RATE.
# A.C.P. TO BE USED AS ITEM 251

ALL PALM TREES SHALL BE RELOCATED TO AREAS WITHIN THE PROJECT LIMITS.
CONTRACTOR IS TO CONTACT THE PROJECT ENGINEER FOR MARKING SPECIFIC LOCATIONS.

SHEET TOTALS				
ITEM	EST.	FINAL	UNIT	DESCRIPTION
# * ~~305~~			SY	SALVAGE A.C.P. (2.75" A.C.P.)
# * ~~305~~			SY	SALVAGE A.C.P. (5.50" A.C.P.)
# * ~~251~~	5645		SY	SALVAGE A.C.P. (6.50" A.C.P.)
# * ~~305~~			SY	SALVAGE A.C.P. (6.75" A.C.P.)
# * ~~305~~			SY	SALVAGE A.C.P. (8.75" A.C.P.)
479			EA	ADJUSTING INLET (CAP)
496			LF	REMOVE OLD STR. (PIPE)
496			EA	REMOVE OLD STR. (SMALL)
542	150		LF	REMOVE METAL BEAM GUARD FENCE
542			EA	REMOVE SINGLE GUARDRAIL TERMINAL
542	1		EA	REMOVE TERMINAL ANCHOR SECTION
1057			EA	TRANSPLANTING TREES & PALMS
5190			SY	REMOVE & RELOCATE SALVAGE LANDSCAPE PAVERS

1 REVISED 9-26-03

NOTES:

1. SAVLAGED MBGF AND POSTS SHALL BE RETURNED TO THE PHARR MAINTENANCE YARD.

THE SEAL APPEARING ON THIS DOCUMENT WAS AUTHORIZED BY JAIME AGUILAR, P.E. 87606 ON 07/02/2003.

STATE OF TEXAS
JAIME AGUILAR
87606
REGISTERED PROFESSIONAL ENGINEER

Parsons Brinckerhoff Quade & Douglas Inc.

Texas Department of Transportation

© 2003 by TxDOT

US 281
REMOVAL ITEM DETAILS

STA. 612+00 "BL1" TO
STA. 624+00 "BL1"

PLAN 1"= 100' HORIZ

SHEET 1 OF 22				281REM01.DGN			
DESIGNED: TT	FED. RD DIV. No.	STATE	FEDERAL AID PROJECT No.				HIGHWAY No.
CHECKED: DM	6	TEXAS					US 281
DRAWN: JT	STATE DISTRICT	COUNTY	CONTROL No.	SECTION No.	JOB No.	SHEET No.	
CHECKED: DM	PHARR	HIDALGO	0255	08	091	226	

NAME
02:10:23 PM
07/02/2003
I:\223220\CADD\Sheets\Removals\281rem01.dgn

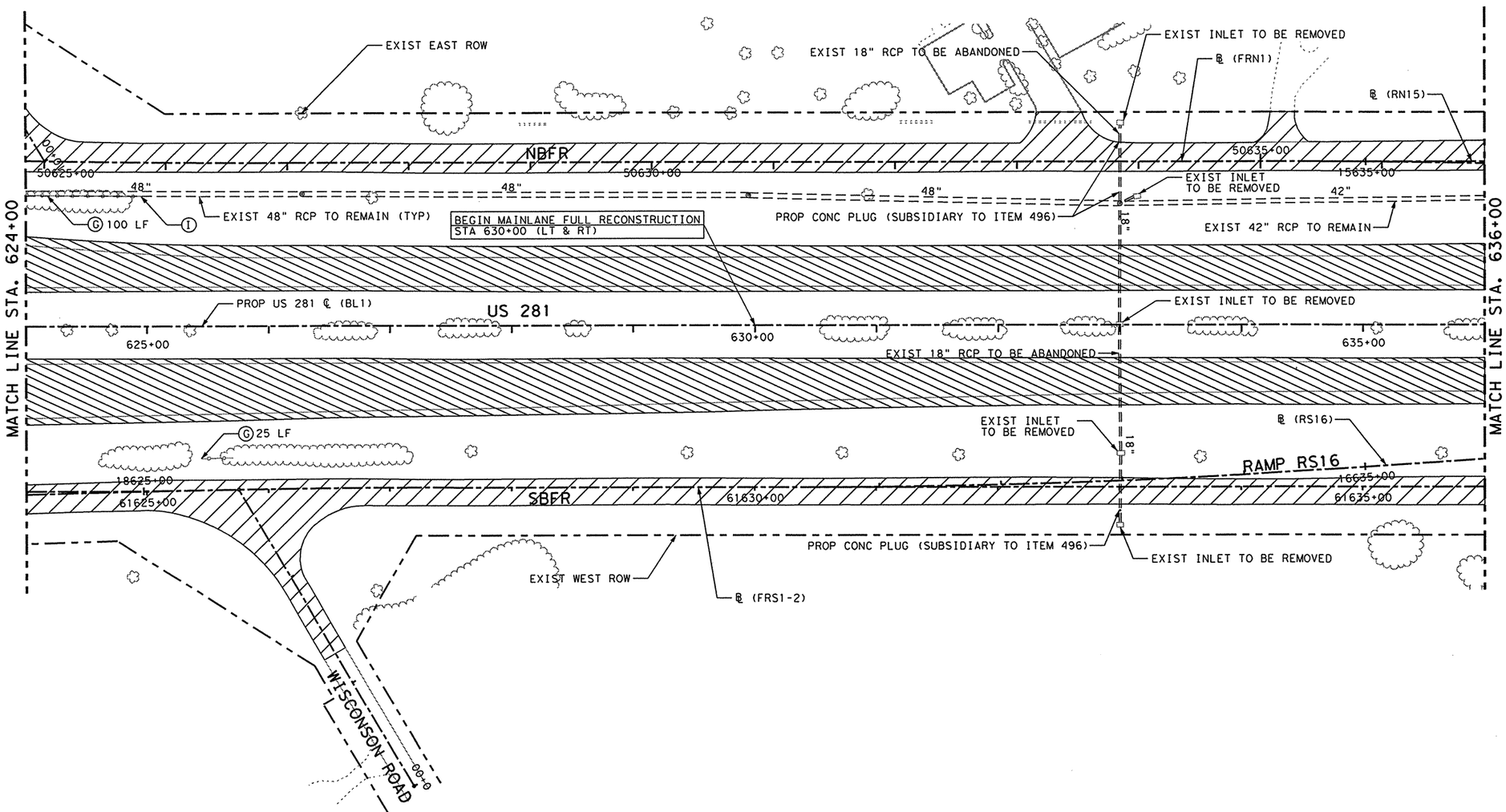

REMOVAL LEGEND:

- 22.75" PAVEMENT 8.75" A.C.P. - REWORK 14.0" FLEX - REWORK
- 14.5" PAVEMENT 5.5" A.C.P. - REWORK 9.0" FLEX - REWORK
- 15.5" PAVEMENT 6.5" A.C.P. - REWORK 9.0" FLEX - REWORK
- 13.75" PAVEMENT 6.75" A.C.P. - REWORK 7.0" FLEX - REWORK
- 12.5" PAVEMENT 5.5" A.C.P. - REWORK 7.0" FLEX - REWORK
- 11.75" PAVEMENT 2.75" A.C.P. - REWORK 9.0" FLEX - REWORK
- 16.5" PAVEMENT 6.5" A.C.P. - REWORK 10.0" FLEX - REWORK
- 8.0" PAVEMENT 8" FLEX - REWORK
- 10.0" PAVEMENT 10" FLEX - REWORK
- 4" CONCRETE SIDEWALK REMOVAL
- CONCRETE MEDIAN REMOVAL
- CONCRETE RIPRAP REMOVAL
- A.C.P. REMOVAL
- BRICK PAVER REMOVAL
- — — SAW CUT LINE
- Ⓐ CONCRETE CURB REMOVAL
- Ⓑ CONCRETE CURB & GUTTER REMOVAL
- Ⓒ CONCRETE VALLEY GUTTER REMOVAL
- Ⓓ TYPE 2 C.T.B. REMOVAL (CAST IN PLACE)
- Ⓔ C.T.B. REMOVAL (PRE-CAST)
- Ⓕ CONCRETE DRAIN REMOVAL
- Ⓖ METAL BEAM GUARD FENCE REMOVAL
- Ⓗ TERMINAL-ANCHOR-SECTION REMOVAL
- Ⓘ SINGLE GUARD RAIL TERMINAL
- Ⓙ TIMBER POST & CABLE RMV (PREP. ROW)
- Ⓚ PALM TREE TO BE RELOCATED
- Ⓛ FENCE REMOVAL (PREP. R.O.W.)
- Ⓜ TREE REMOVAL
- Ⓝ EXIST. STRUCTURE TO BE REMOVED

SHEET TOTALS				
ITEM	EST.	FINAL	UNIT	DESCRIPTION
100			STA	PREPARATION OF R.O.W.
100			EA	PREPARATION OF R.O.W. (TREES)
104			LF	REMOVE CONC. (CURB)
104			LF	REMOVE CONC. (CURB & GUTTER)
104			LF	REMOVE CONC. (VALLEY GUTTER)
104			SY	REMOVE CONC. (MEDIAN)
104			SY	REMOVE CONC. (DRAIN)
104			SY	REMOVE CONC. (RIPRAP)
105			SY	REMOVE ASPHALTIC PAVEMENT
* 251			CY	REWORK BASE MAT'L (7" FLEX BASE)
* 251	1329		CY	REWORK BASE MAT'L (8" FLEX BASE)
* 251			CY	REWORK BASE MAT'L (9" FLEX BASE)
* 251	2571		CY	REWORK BASE MAT'L (10" FLEX BASE)
* 251			CY	REWORK BASE MAT'L (14" FLEX BASE)

ITEMIZED PREP R.O.W. TABLE				
ITEM	EST.	FINAL	UNIT	DESCRIPTION
$ 100			LF	TIMBER POST & CABLE
$ 100			LF	CHAIN LINK FENCE
$ 100			STA	SHRUBS

$ TO BE PAID FOR UNDER PREP. R.O.W. (STA.) FOR CONTRACTOR'S INFORMATION ONLY.
* QUANTITIES REFLECT 85% SALVAGEABLE RATE.
# A.C.P. TO BE USED AS ITEM 251

ALL PALM TREES SHALL BE RELOCATED TO AREAS WITHIN THE PROJECT LIMITS.
CONTRACTOR IS TO CONTACT THE PROJECT ENGINEER FOR MARKING SPECIFIC LOCATIONS.

SHEET TOTALS				
ITEM	EST.	FINAL	UNIT	DESCRIPTION
** 305			SY	SALVAGE A.C.P. (2.75" A.C.P.)
** 305			SY	SALVAGE A.C.P. (5.50" A.C.P.)
** 305	10890		SY	SALVAGE A.C.P. (6.50" A.C.P.)
** 305			SY	SALVAGE A.C.P. (6.75" A.C.P.)
** 305			SY	SALVAGE A.C.P. (8.75" A.C.P.)
479			EA	ADJUSTING INLET (CAP)
496			LF	REMOVE OLD STR. (PIPE)
496	5		EA	REMOVE OLD STR. (SMALL)
542	125		LF	REMOVE METAL BEAM GUARD FENCE
542	1		EA	REMOVE SINGLE GUARDRAIL TERMINAL
542			EA	REMOVE TERMINAL ANCHOR SECTION
1057			EA	TRANSPLANTING TREES & PALMS
5190			SY	REMOVE & RELOCATE SALVAGE LANDSCAPE PAVERS

NOTES:

1. SAVLAGED MBGF AND POSTS SHALL BE RETURNED TO THE PHARR MAINTENANCE YARD.

THE SEAL APPEARING ON THIS DOCUMENT WAS AUTHORIZED BY JAIME AGUILAR, P.E. 87606 ON 07/22/2003.

STATE OF TEXAS
JAIME AGUILAR
87606
REGISTERED PROFESSIONAL ENGINEER

Parsons Brinckerhoff Quade & Douglas Inc.

Texas Department of Transportation

© 2003 by TxDOT

US 281
REMOVAL ITEM DETAILS

STA. 624+00 "BL1" TO
STA. 636+00 "BL1"

PLAN 1"= 100' HORIZ

SHEET 2 OF 22 | 281REMO2.DGN

DESIGNED: TT	FED. RD DIV. No.	STATE	FEDERAL AID PROJECT No.	HIGHWAY No.
CHECKED: DM	6	TEXAS		US 281

DRAWN: JT	STATE DISTRICT	COUNTY	CONTROL No.	SECTION No.	JOB No.	SHEET No.
CHECKED: DM	PHARR	HIDALGO	0255	08	091	227

NAME
02:04:57 PM
07/22/2003
i:\22322a\cadd\sheets\removals\281rem02.dgn

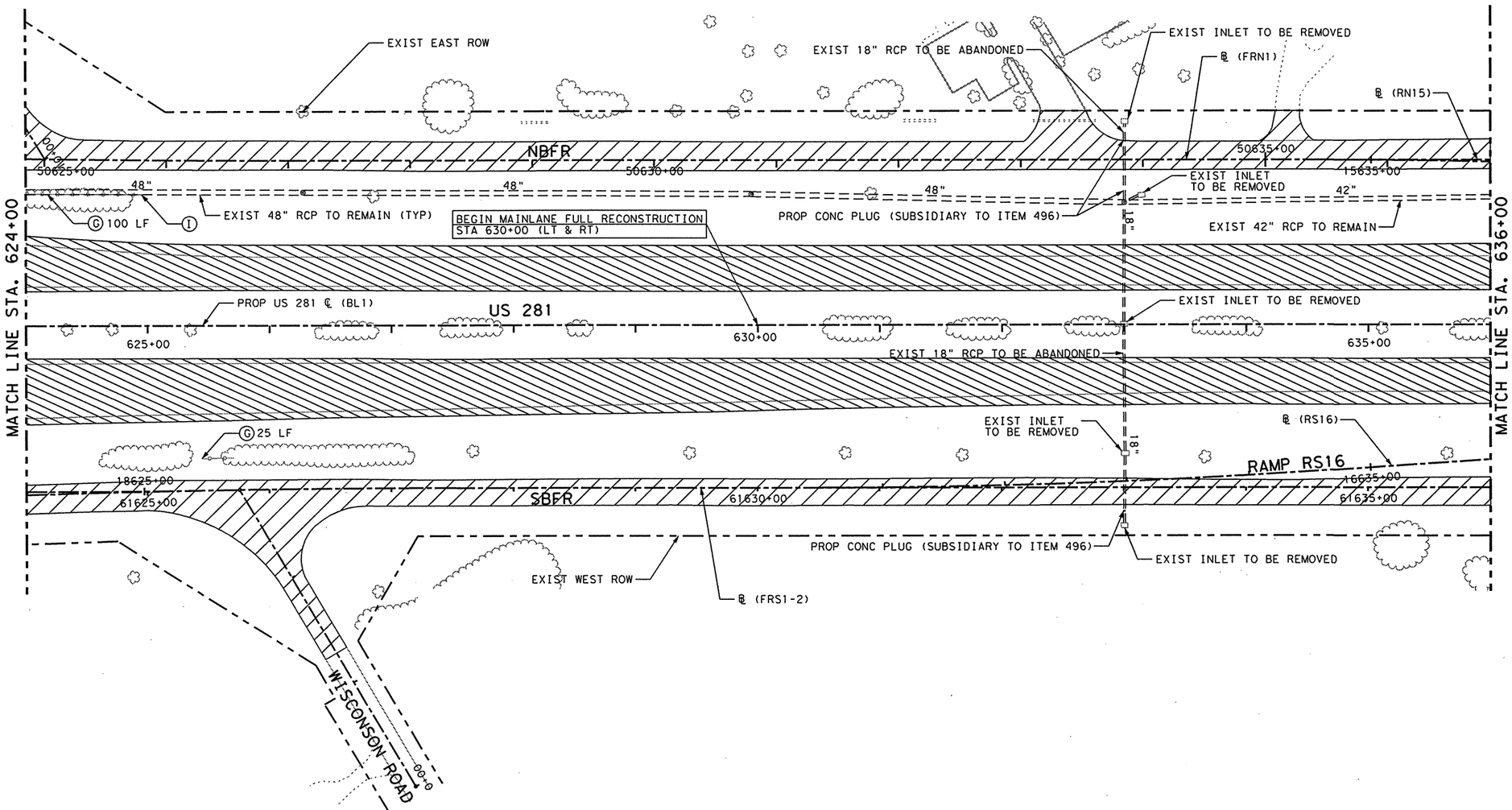

REMOVAL LEGEND:

- 22.75" PAVEMENT 8.75" A.C.P. - REWORK 14.0" FLEX - REWORK
- 14.5" PAVEMENT 5.5" A.C.P. - REWORK 9.0" FLEX - REWORK
- 15.5" PAVEMENT 6.5" A.C.P. - REWORK 9.0" FLEX - REWORK
- 13.75" PAVEMENT 6.75" A.C.P. - REWORK 7.0" FLEX - REWORK
- 12.5" PAVEMENT 5.5" A.C.P. - REWORK 7.0" FLEX - REWORK
- 11.75" PAVEMENT 2.75" A.C.P. - REWORK 9.0" FLEX - REWORK
- 16.5" PAVEMENT 6.5" A.C.P. - REWORK 10.0" FLEX - REWORK
- 8.0" PAVEMENT 8" FLEX - REWORK
- 10.0" PAVEMENT 10" FLEX - REWORK
- 4" CONCRETE SIDEWALK REMOVAL
- CONCRETE MEDIAN REMOVAL
- CONCRETE RIPRAP REMOVAL
- A.C.P. REMOVAL
- BRICK PAVER REMOVAL
- — — SAW CUT LINE
- Ⓐ CONCRETE CURB REMOVAL
- Ⓑ CONCRETE CURB & GUTTER REMOVAL
- Ⓒ CONCRETE VALLEY GUTTER REMOVAL
- Ⓓ TYPE 2 C.T.B. REMOVAL (CAST IN PLACE)
- Ⓔ C.T.B. REMOVAL (PRE-CAST)
- Ⓕ CONCRETE DRAIN REMOVAL
- Ⓖ METAL BEAM GUARD FENCE REMOVAL
- Ⓗ TERMINAL-ANCHOR-SECTION REMOVAL
- Ⓘ SINGLE GUARD RAIL TERMINAL
- Ⓙ TIMBER POST & CABLE RMV (PREP. ROW)
- Ⓚ PALM TREE TO BE RELOCATED
- Ⓛ FENCE REMOVAL (PREP. R.O.W.)
- Ⓜ TREE REMOVAL
- Ⓝ EXIST. STRUCTURE TO BE REMOVED

SHEET TOTALS				
ITEM	EST.	FINAL	UNIT	DESCRIPTION
100			STA	PREPARATION OF R.O.W.
100			EA	PREPARATION OF R.O.W. (TREES)
104			LF	REMOVE CONC. (CURB)
104			LF	REMOVE CONC. (CURB & GUTTER)
104			LF	REMOVE CONC. (VALLEY GUTTER)
104			SY	REMOVE CONC. (MEDIAN)
104			SY	REMOVE CONC. (DRAIN)
104			SY	REMOVE CONC. (RIPRAP)
105			SY	REMOVE ASPHALTIC PAVEMENT
* 251			CY	REWORK BASE MAT'L (7" FLEX BASE)
* 251	1329		CY	REWORK BASE MAT'L (8" FLEX BASE)
* 251			CY	REWORK BASE MAT'L (9" FLEX BASE)
* 251	2571		CY	REWORK BASE MAT'L (10" FLEX BASE)
* 251			CY	REWORK BASE MAT'L (14" FLEX BASE)

ITEMIZED PREP R.O.W. TABLE				
ITEM	EST.	FINAL	UNIT	DESCRIPTION
$ 100			LF	TIMBER POST & CABLE
$ 100			LF	CHAIN LINK FENCE
$ 100			STA	SHRUBS

$ TO BE PAID FOR UNDER PREP. R.O.W. (STA.) FOR CONTRACTOR'S INFORMATION ONLY.
* QUANTITIES REFLECT 85% SALVAGEABLE RATE.
# A.C.P. TO BE USED AS ITEM 251

ALL PALM TREES SHALL BE RELOCATED TO AREAS WITHIN THE PROJECT LIMITS.
CONTRACTOR IS TO CONTACT THE PROJECT ENGINEER FOR MARKING SPECIFIC LOCATIONS.

SHEET TOTALS				
ITEM	EST.	FINAL	UNIT	DESCRIPTION
# ~~306~~			SY	SALVAGE A.C.P. (2.75" A.C.P.)
# ~~306~~			SY	SALVAGE A.C.P. (5.50" A.C.P.)
# 251	10890		SY	SALVAGE A.C.P. (6.50" A.C.P.)
# ~~306~~			SY	SALVAGE A.C.P. (6.75" A.C.P.)
# ~~306~~			SY	SALVAGE A.C.P. (8.75" A.C.P.)
479			EA	ADJUSTING INLET (CAP)
496			LF	REMOVE OLD STR. (PIPE)
496	5		EA	REMOVE OLD STR. (SMALL)
542	125		LF	REMOVE METAL BEAM GUARD FENCE
542	1		EA	REMOVE SINGLE GUARDRAIL TERMINAL
542			EA	REMOVE TERMINAL ANCHOR SECTION
1057			EA	TRANSPLANTING TREES & PALMS
5190			SY	REMOVE & RELOCATE SALVAGE LANDSCAPE PAVERS

1 REVISED 9-26-03

NOTES:

1. SAVLAGED MBGF AND POSTS SHALL BE RETURNED TO THE PHARR MAINTENANCE YARD.

THE SEAL APPEARING ON THIS DOCUMENT WAS AUTHORIZED BY JAIME AGUILAR, P.E. 87606 ON 07/22/2003.

STATE OF TEXAS
JAIME AGUILAR
87606
REGISTERED PROFESSIONAL ENGINEER

Parsons Brinckerhoff Quade & Douglas Inc.

Texas Department of Transportation
© 2003 by TxDOT

US 281
REMOVAL ITEM DETAILS

STA. 624+00 "BL1" TO
STA. 636+00 "BL1"

PLAN 1"= 100' HORIZ

SHEET 2 OF 22 | 281REM02.DGN

DESIGNED: TT	FED. RD DIV. No.	STATE	FEDERAL AID PROJECT No.		HIGHWAY No.
CHECKED: DM	6	TEXAS			US 281
DRAWN: JT	STATE DISTRICT	COUNTY	CONTROL No.	SECTION No.	JOB No.	SHEET No.
CHECKED: DM	PHARR	HIDALGO	0255	08	091	227

NAME
02:04:57 PM
07/22/2003
i:\22322a\cadd\sheets\removals\281rem02.dgn

NAME
02:05:04 PM
07/22/2003
i:\22322a\cadd\sheets\removals\281rem03.dgn

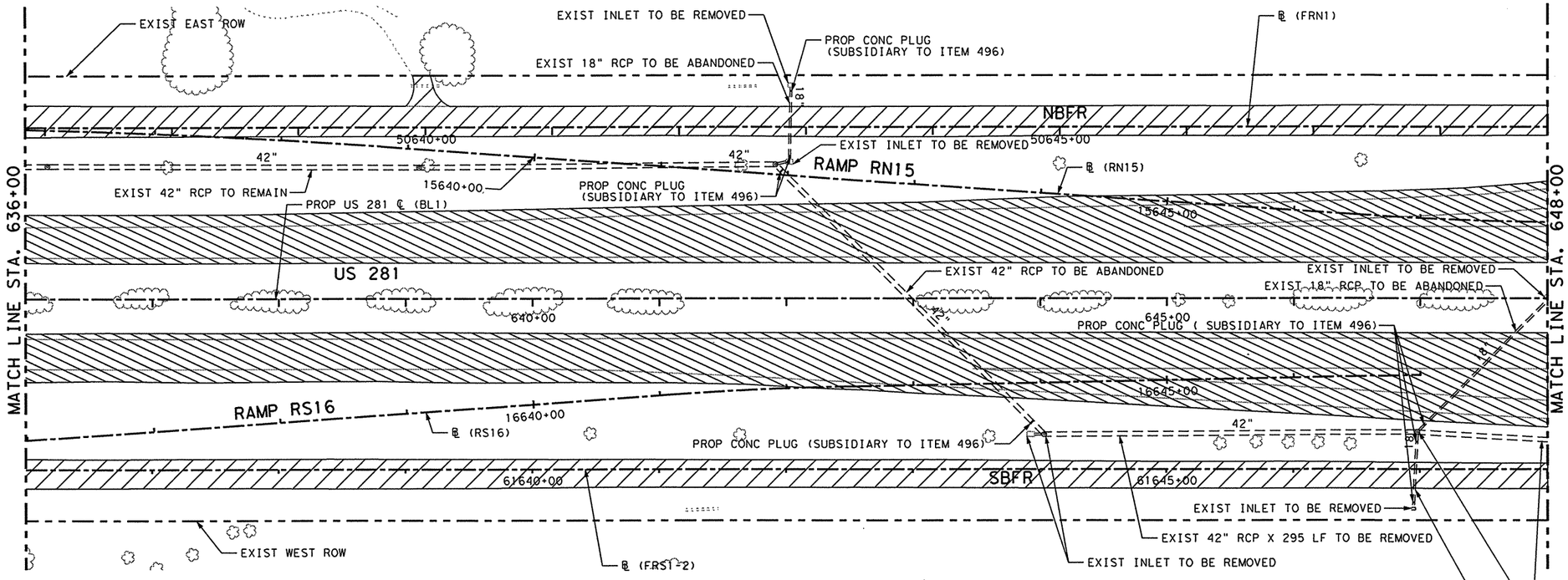

REMOVAL LEGEND:

- 22.75" PAVEMENT 8.75" A.C.P. - REWORK 14.0" FLEX - REWORK
- 14.5" PAVEMENT 5.5" A.C.P. - REWORK 9.0" FLEX - REWORK
- 15.5" PAVEMENT 6.5" A.C.P. - REWORK 9.0" FLEX - REWORK
- 13.75" PAVEMENT 6.75" A.C.P. - REWORK 7.0" FLEX - REWORK
- 12.5" PAVEMENT 5.5" A.C.P. - REWORK 7.0" FLEX - REWORK
- 11.75" PAVEMENT 2.75" A.C.P. - REWORK 9.0" FLEX - REWORK
- 16.5" PAVEMENT 6.5" A.C.P. - REWORK 10.0" FLEX - REWORK
- 8.0" PAVEMENT 8" FLEX - REWORK
- 10.0" PAVEMENT 10" FLEX - REWORK
- 4" CONCRETE SIDEWALK REMOVAL
- CONCRETE MEDIAN REMOVAL
- CONCRETE RIPRAP REMOVAL
- A.C.P. REMOVAL
- BRICK PAVER REMOVAL
- SAW CUT LINE
- (A) CONCRETE CURB REMOVAL
- (B) CONCRETE CURB & GUTTER REMOVAL
- (C) CONCRETE VALLEY GUTTER REMOVAL
- (D) TYPE 2 C.T.B. REMOVAL (CAST IN PLACE)
- (E) C.T.B. REMOVAL (PRE-CAST)
- (F) CONCRETE DRAIN REMOVAL
- (G) METAL BEAM GUARD FENCE REMOVAL
- (H) TERMINAL-ANCHOR-SECTION REMOVAL
- (I) SINGLE GUARD RAIL TERMINAL
- (J) TIMBER POST & CABLE RMV (PREP. ROW)
- (K) PALM TREE TO BE RELOCATED
- (L) FENCE REMOVAL (PREP. R.O.W.)
- (M) TREE REMOVAL
- (N) EXIST. STRUCTURE TO BE REMOVED

SHEET TOTALS

ITEM	EST.	FINAL	UNIT	DESCRIPTION
100			STA	PREPARATION OF R.O.W.
100			EA	PREPARATION OF R.O.W. (TREES)
104			LF	REMOVE CONC. (CURB)
104			LF	REMOVE CONC. (CURB & GUTTER)
104			LF	REMOVE CONC. (VALLEY GUTTER)
104			SY	REMOVE CONC. (MEDIAN)
104			SY	REMOVE CONC. (DRAIN)
104			SY	REMOVE CONC. (RIPRAP)
105			SY	REMOVE ASPHALTIC PAVEMENT
* 251			CY	REWORK BASE MAT'L (7" FLEX BASE)
* 251	1146		CY	REWORK BASE MAT'L (8" FLEX BASE)
* 251			CY	REWORK BASE MAT'L (9" FLEX BASE)
* 251	3012		CY	REWORK BASE MAT'L (10" FLEX BASE)
* 251			CY	REWORK BASE MAT'L (14" FLEX BASE)

ITEMIZED PREP R.O.W. TABLE

ITEM	EST.	FINAL	UNIT	DESCRIPTION
$ 100			LF	TIMBER POST & CABLE
$ 100			LF	CHAIN LINK FENCE
$ 100			STA	SHRUBS

$ TO BE PAID FOR UNDER PREP. R.O.W. (STA.) FOR CONTRACTOR'S INFORMATION ONLY.
* QUANTITIES REFLECT 85% SALVAGEABLE RATE.
# A.C.P. TO BE USED AS ITEM 251

ALL PALM TREES SHALL BE RELOCATED TO AREAS WITHIN THE PROJECT LIMITS.
CONTRACTOR IS TO CONTACT THE PROJECT ENGINEER FOR MARKING SPECIFIC LOCATIONS.

SHEET TOTALS

ITEM	EST.	FINAL	UNIT	DESCRIPTION
# * 305			SY	SALVAGE A.C.P. (2.75" A.C.P.)
# * 305			SY	SALVAGE A.C.P. (5.50" A.C.P.)
# * 305	12757		SY	SALVAGE A.C.P. (6.50" A.C.P.)
# * 305			SY	SALVAGE A.C.P. (6.75" A.C.P.)
# * 305			SY	SALVAGE A.C.P. (8.75" A.C.P.)
479			EA	ADJUSTING INLET (CAP)
496	397		LF	REMOVE OLD STR. (PIPE)
496	7		EA	REMOVE OLD STR. (SMALL)
542			LF	REMOVE METAL BEAM GUARD FENCE
542			EA	REMOVE SINGLE GUARDRAIL TERMINAL
542			EA	REMOVE TERMINAL ANCHOR SECTION
1057			EA	TRANSPLANTING TREES & PALMS
5190			SY	REMOVE & RELOCATE SALVAGE LANDSCAPE PAVERS

NOTES:

1. SAVLAGED MBGF AND POSTS SHALL BE RETURNED TO THE PHARR MAINTENANCE YARD.

THE SEAL APPEARING ON THIS DOCUMENT WAS AUTHORIZED BY JAIME AGUILAR, P.E. 87606 ON 07/22/2003.

STATE OF TEXAS
JAIME AGUILAR
87606
REGISTERED PROFESSIONAL ENGINEER

Parsons Brinckerhoff Quade & Douglas Inc.

Texas Department of Transportation

© 2003 by TxDOT

US 281
REMOVAL ITEM DETAILS

STA. 636+00 "BL1" TO
STA. 648+00 "BL1"

PLAN 1"= 100' HORIZ

SHEET 3 OF 22 | 281REM03.DGN

DESIGNED: TT	FED. RD DIV. No.	STATE	FEDERAL AID PROJECT No.				HIGHWAY No.
CHECKED: DM	6	TEXAS					US 281
DRAWN: JT	STATE DISTRICT	COUNTY	CONTROL No.	SECTION No.	JOB No.	SHEET No.	
CHECKED: DM	PHARR	HIDALGO	0255	08	091	228	

NAME
02:05:04 PM
07/22/2003
i:\22322o\cadd\sheets\removals\281rem03.dgn

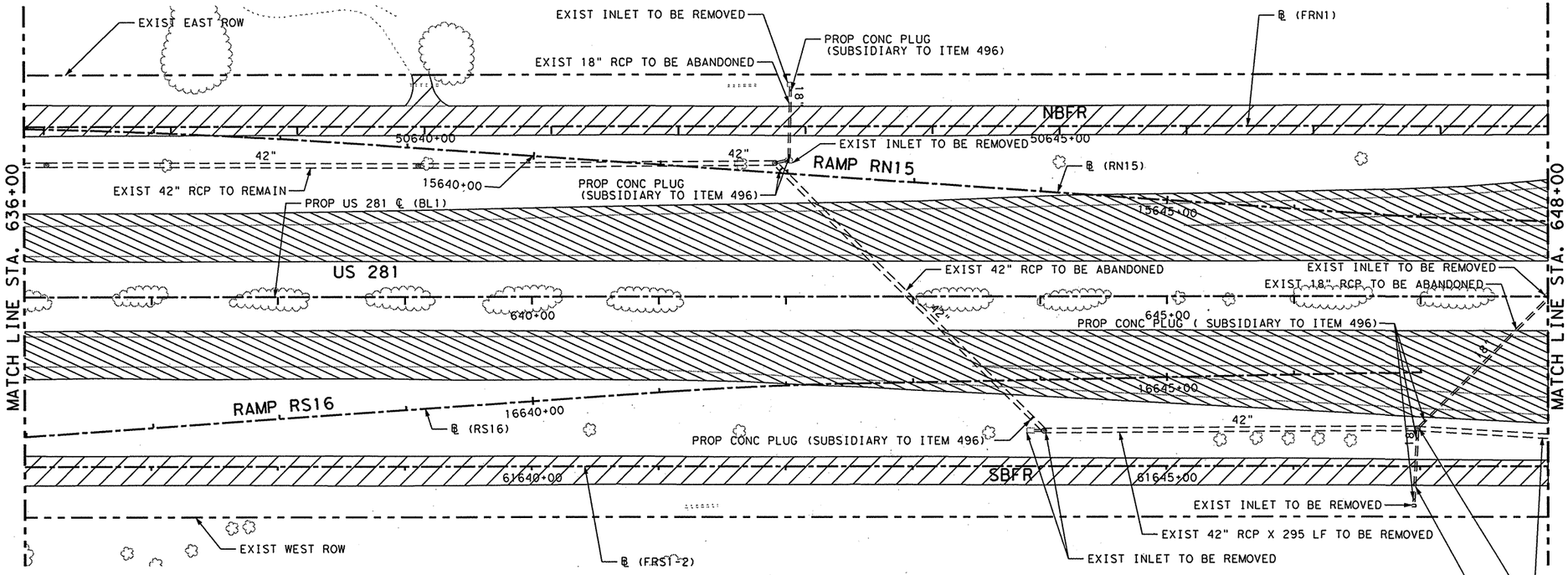

REMOVAL LEGEND:

- 22.75" PAVEMENT 8.75" A.C.P. - REWORK 14.0" FLEX - REWORK
- 14.5" PAVEMENT 5.5" A.C.P. - REWORK 9.0" FLEX - REWORK
- 15.5" PAVEMENT 6.5" A.C.P. - REWORK 9.0" FLEX - REWORK
- 13.75" PAVEMENT 6.75" A.C.P. - REWORK 7.0" FLEX - REWORK
- 12.5" PAVEMENT 5.5" A.C.P. - REWORK 7.0" FLEX - REWORK
- 11.75" PAVEMENT 2.75" A.C.P. - REWORK 9.0" FLEX - REWORK
- 16.5" PAVEMENT 6.5" A.C.P. - REWORK 10.0" FLEX - REWORK
- 8.0" PAVEMENT 8" FLEX - REWORK
- 10.0" PAVEMENT 10" FLEX - REWORK
- 4" CONCRETE SIDEWALK REMOVAL
- CONCRETE MEDIAN REMOVAL
- CONCRETE RIPRAP REMOVAL
- A.C.P. REMOVAL
- BRICK PAVER REMOVAL
- — — SAW CUT LINE
- (A) CONCRETE CURB REMOVAL
- (B) CONCRETE CURB & GUTTER REMOVAL
- (C) CONCRETE VALLEY GUTTER REMOVAL
- (D) TYPE 2 C.T.B. REMOVAL (CAST IN PLACE)
- (E) C.T.B. REMOVAL (PRE-CAST)
- (F) CONCRETE DRAIN REMOVAL
- (G) METAL BEAM GUARD FENCE REMOVAL
- (H) TERMINAL-ANCHOR-SECTION REMOVAL
- (I) SINGLE GUARD RAIL TERMINAL
- (J) TIMBER POST & CABLE RMV (PREP. ROW)
- (K) PALM TREE TO BE RELOCATED
- (L) FENCE REMOVAL (PREP. R.O.W.)
- (M) TREE REMOVAL
- (N) EXIST. STRUCTURE TO BE REMOVED

SHEET TOTALS				
ITEM	EST.	FINAL	UNIT	DESCRIPTION
100			STA	PREPARATION OF R.O.W.
100			EA	PREPARATION OF R.O.W. (TREES)
104			LF	REMOVE CONC. (CURB)
104			LF	REMOVE CONC. (CURB & GUTTER)
104			LF	REMOVE CONC. (VALLEY GUTTER)
104			SY	REMOVE CONC. (MEDIAN)
104			SY	REMOVE CONC. (DRAIN)
104			SY	REMOVE CONC. (RIPRAP)
105			SY	REMOVE ASPHALTIC PAVEMENT
* 251			CY	REWORK BASE MAT'L (7" FLEX BASE)
* 251	1146		CY	REWORK BASE MAT'L (8" FLEX BASE)
* 251			CY	REWORK BASE MAT'L (9" FLEX BASE)
* 251	3012		CY	REWORK BASE MAT'L (10" FLEX BASE)
* 251			CY	REWORK BASE MAT'L (14" FLEX BASE)

ITEMIZED PREP R.O.W. TABLE				
ITEM	EST.	FINAL	UNIT	DESCRIPTION
$ 100			LF	TIMBER POST & CABLE
$ 100			LF	CHAIN LINK FENCE
$ 100			STA	SHRUBS

$ TO BE PAID FOR UNDER PREP. R.O.W. (STA.) FOR CONTRACTOR'S INFORMATION ONLY.
* QUANTITIES REFLECT 85% SALVAGEABLE RATE.
# A.C.P. TO BE USED AS ITEM 251

ALL PALM TREES SHALL BE RELOCATED TO AREAS WITHIN THE PROJECT LIMITS.
CONTRACTOR IS TO CONTACT THE PROJECT ENGINEER FOR MARKING SPECIFIC LOCATIONS.

SHEET TOTALS				
ITEM	EST.	FINAL	UNIT	DESCRIPTION
# * ~~506~~			SY	SALVAGE A.C.P. (2.75" A.C.P.)
# * ~~506~~			SY	SALVAGE A.C.P. (5.50" A.C.P.)
⚠ # * 25L	12757		SY	SALVAGE A.C.P. (6.50" A.C.P.)
# * ~~506~~			SY	SALVAGE A.C.P. (6.75" A.C.P.)
# * ~~506~~			SY	SALVAGE A.C.P. (8.75" A.C.P.)
479			EA	ADJUSTING INLET (CAP)
496	397		LF	REMOVE OLD STR. (PIPE)
496	7		EA	REMOVE OLD STR. (SMALL)
542			LF	REMOVE METAL BEAM GUARD FENCE
542			EA	REMOVE SINGLE GUARDRAIL TERMINAL
542			EA	REMOVE TERMINAL ANCHOR SECTION
1057			EA	TRANSPLANTING TREES & PALMS
5190			SY	REMOVE & RELOCATE SALVAGE LANDSCAPE PAVERS

NOTES:

1. SAVLAGED MBGF AND POSTS SHALL BE RETURNED TO THE PHARR MAINTENANCE YARD.

⚠ REVISED 9-26-03

THE SEAL APPEARING ON THIS DOCUMENT WAS AUTHORIZED BY JAIME AGUILAR, P.E. 87606 ON 07/22/2003.

STATE OF TEXAS
JAIME AGUILAR
87606
REGISTERED PROFESSIONAL ENGINEER

Parsons Brinckerhoff Quade & Douglas Inc.

Texas Department of Transportation

© 2003 by TxDOT

US 281
REMOVAL ITEM DETAILS

STA. 636+00 "BL1" TO
STA. 648+00 "BL1"

PLAN 1"= 100' HORIZ

SHEET 3 OF 22						281REMO3.DGN	
DESIGNED: TT	FED. RD. DIV. NO.	STATE	FEDERAL AID PROJECT NO.			HIGHWAY NO.	
CHECKED: DM	6	TEXAS				US 281	
DRAWN: JT	STATE DISTRICT	COUNTY	CONTROL No.	SECTION No.	JOB No.	SHEET No.	
CHECKED: DM	PHARR	HIDALGO	0255	08	091	228	

NAME
12:19:55 PM
07/02/2003

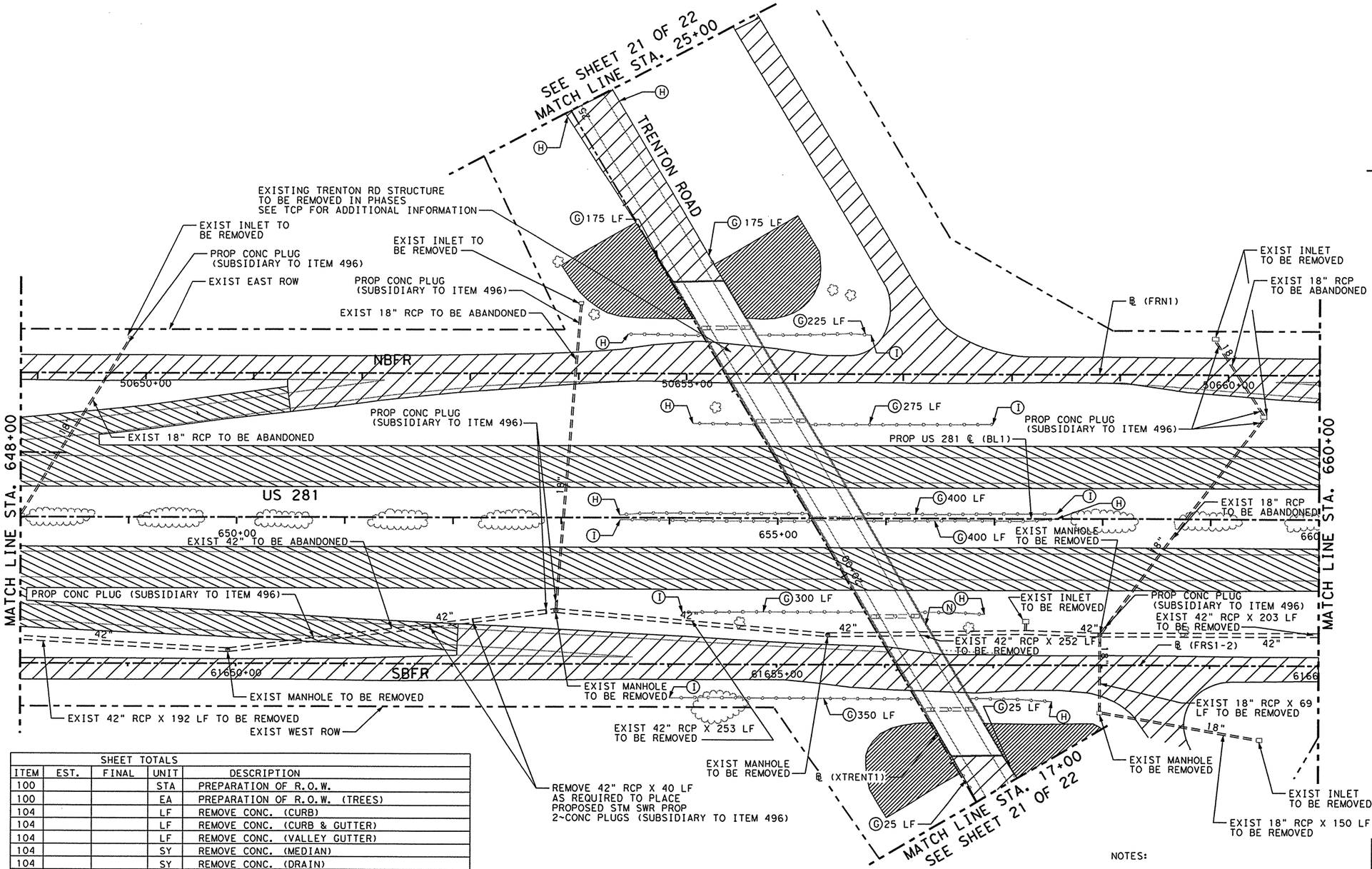

REMOVAL LEGEND:

- 22.75" PAVEMENT 8.75" A.C.P. - REWORK 14.0" FLEX - REWORK
- 14.5" PAVEMENT 5.5" A.C.P. - REWORK 9.0" FLEX - REWORK
- 15.5" PAVEMENT 6.5" A.C.P. - REWORK 9.0" FLEX - REWORK
- 13.75" PAVEMENT 6.75" A.C.P. - REWORK 7.0" FLEX - REWORK
- 12.5" PAVEMENT 5.5" A.C.P. - REWORK 7.0" FLEX - REWORK
- 11.75" PAVEMENT 2.75" A.C.P. - REWORK 9.0" FLEX - REWORK
- 16.5" PAVEMENT 6.5" A.C.P. - REWORK 10.0" FLEX - REWORK
- 8.0" PAVEMENT 8" FLEX - REWORK
- 10.0" PAVEMENT 10" FLEX - REWORK
- 4" CONCRETE SIDEWALK REMOVAL
- CONCRETE MEDIAN REMOVAL
- CONCRETE RIPRAP REMOVAL
- A.C.P. REMOVAL
- BRICK PAVER REMOVAL
- — — SAW CUT LINE
- (A) CONCRETE CURB REMOVAL
- (B) CONCRETE CURB & GUTTER REMOVAL
- (C) CONCRETE VALLEY GUTTER REMOVAL
- (D) TYPE 2 C.T.B. REMOVAL (CAST IN PLACE)
- (E) C.T.B. REMOVAL (PRE-CAST)
- (F) CONCRETE DRAIN REMOVAL
- (G) METAL BEAM GUARD FENCE REMOVAL
- (H) TERMINAL-ANCHOR-SECTION REMOVAL
- (I) SINGLE GUARD RAIL TERMINAL
- (J) TIMBER POST & CABLE RMV (PREP. ROW)
- (K) PALM TREE TO BE RELOCATED
- (L) FENCE REMOVAL (PREP. R.O.W.)
- (M) TREE REMOVAL
- (N) EXIST. STRUCTURE TO BE REMOVED

SHEET TOTALS				
ITEM	EST.	FINAL	UNIT	DESCRIPTION
100			STA	PREPARATION OF R.O.W.
100			EA	PREPARATION OF R.O.W. (TREES)
104			LF	REMOVE CONC. (CURB)
104			LF	REMOVE CONC. (CURB & GUTTER)
104			LF	REMOVE CONC. (VALLEY GUTTER)
104			SY	REMOVE CONC. (MEDIAN)
104			SY	REMOVE CONC. (DRAIN)
104	2394		SY	REMOVE CONC. (RIPRAP)
105			SY	REMOVE ASPHALTIC PAVEMENT
* 251			CY	REWORK BASE MAT'L (7" FLEX BASE)
* 251	2101		CY	REWORK BASE MAT'L (8" FLEX BASE)
* 251			CY	REWORK BASE MAT'L (9" FLEX BASE)
* 251	2856		CY	REWORK BASE MAT'L (10" FLEX BASE)
* 251			CY	REWORK BASE MAT'L (14" FLEX BASE)

ITEMIZED PREP R.O.W. TABLE				
ITEM	EST.	FINAL	UNIT	DESCRIPTION
$ 100			LF	TIMBER POST & CABLE
$ 100			LF	CHAIN LINK FENCE
$ 100			STA	SHRUBS

$ TO BE PAID FOR UNDER PREP. R.O.W. (STA.) FOR CONTRACTOR'S INFORMATION ONLY.
* QUANTITIES REFLECT 85% SALVAGEABLE RATE.
# A.C.P. TO BE USED AS ITEM 251

ALL PALM TREES SHALL BE RELOCATED TO AREAS WITHIN THE PROJECT LIMITS.
CONTRACTOR IS TO CONTACT THE PROJECT ENGINEER FOR MARKING SPECIFIC LOCATIONS.

SHEET TOTALS				
ITEM	EST.	FINAL	UNIT	DESCRIPTION
# * 305			SY	SALVAGE A.C.P. (2.75" A.C.P.)
# * 305			SY	SALVAGE A.C.P. (5.50" A.C.P.)
# * 305	12095		SY	SALVAGE A.C.P. (6.50" A.C.P.)
# * 305			SY	SALVAGE A.C.P. (6.75" A.C.P.)
# * 305			SY	SALVAGE A.C.P. (8.75" A.C.P.)
479			EA	ADJUSTING INLET (CAP)
496	1159		LF	REMOVE OLD STR. (PIPE)
496	11		EA	REMOVE OLD STR. (SMALL)
542	2350		LF	REMOVE METAL BEAM GUARD FENCE
542	6		EA	REMOVE SINGLE GUARDRAIL TERMINAL
542	8		EA	REMOVE TERMINAL ANCHOR SECTION
1057			EA	TRANSPLANTING TREES & PALMS
5190			SY	REMOVE & RELOCATE SALVAGE LANDSCAPE PAVERS

NOTES:

1. SAVLAGED MBGF AND POSTS SHALL BE RETURNED TO THE PHARR MAINTENANCE YARD.

THE SEAL APPEARING ON THIS DOCUMENT WAS AUTHORIZED BY JAIME AGUILAR, P.E. 87606 ON 07/02/2003.

STATE OF TEXAS
JAIME AGUILAR
87606
REGISTERED PROFESSIONAL ENGINEER

Parsons Brinckerhoff Quade & Douglas Inc.

Texas Department of Transportation

© 2003 by TxDOT

US 281
REMOVAL ITEM DETAILS

STA. 648+00 "BL1" TO
STA. 660+00 "BL1"

PLAN 1"= 100' HORIZ

SHEET 4 OF 22 | 281REM04.DGN

DESIGNED: TT	FED. RD DIV. No.	STATE	FEDERAL AID PROJECT No.			HIGHWAY No.	
CHECKED: DM	6	TEXAS				US 281	
DRAWN: JT	STATE DISTRICT	COUNTY	CONTROL No.	SECTION No.	JOB No.	SHEET No.	
CHECKED: DM	PHARR	HIDALGO	0255	08	091	229	

i:\22320\cadd\sheets\removals\281rem04.dgn

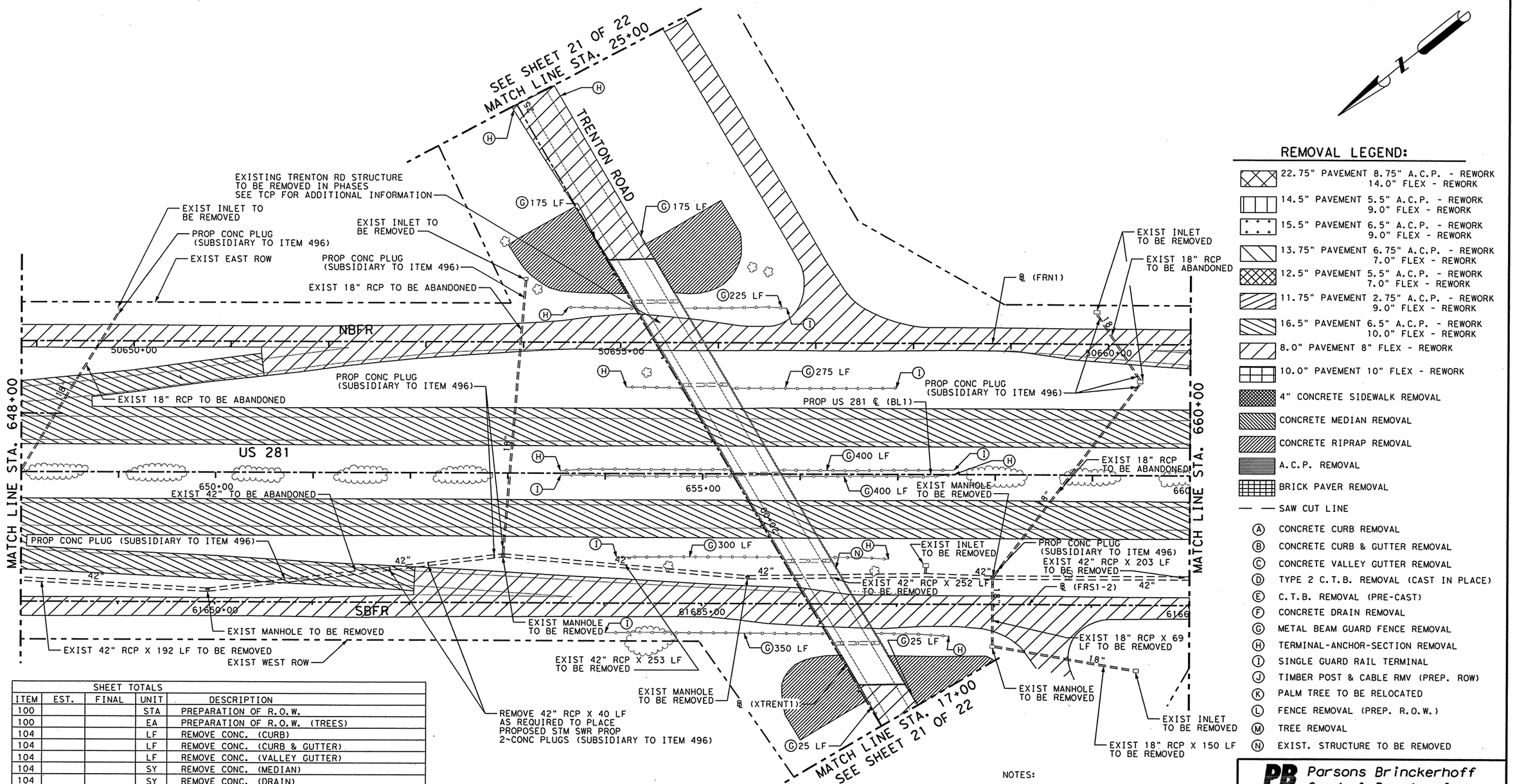

REMOVAL LEGEND:

- 22.75" PAVEMENT 8.75" A.C.P. - REWORK 14.0" FLEX - REWORK
- 14.5" PAVEMENT 5.5" A.C.P. - REWORK 9.0" FLEX - REWORK
- 15.5" PAVEMENT 6.5" A.C.P. - REWORK 9.0" FLEX - REWORK
- 13.75" PAVEMENT 6.75" A.C.P. - REWORK 7.0" FLEX - REWORK
- 12.5" PAVEMENT 5.5" A.C.P. - REWORK 7.0" FLEX - REWORK
- 11.75" PAVEMENT 2.75" A.C.P. - REWORK 9.0" FLEX - REWORK
- 16.5" PAVEMENT 6.5" A.C.P. - REWORK 10.0" FLEX - REWORK
- 8.0" PAVEMENT 8" FLEX - REWORK
- 10.0" PAVEMENT 10" FLEX - REWORK
- 4" CONCRETE SIDEWALK REMOVAL
- CONCRETE MEDIAN REMOVAL
- CONCRETE RIPRAP REMOVAL
- A.C.P. REMOVAL
- BRICK PAVER REMOVAL
- — — SAW CUT LINE
- (A) CONCRETE CURB REMOVAL
- (B) CONCRETE CURB & GUTTER REMOVAL
- (C) CONCRETE VALLEY GUTTER REMOVAL
- (D) TYPE 2 C.T.B. REMOVAL (CAST IN PLACE)
- (E) C.T.B. REMOVAL (PRE-CAST)
- (F) CONCRETE DRAIN REMOVAL
- (G) METAL BEAM GUARD FENCE REMOVAL
- (H) TERMINAL-ANCHOR-SECTION REMOVAL
- (I) SINGLE GUARD RAIL TERMINAL
- (J) TIMBER POST & CABLE RMV (PREP. ROW)
- (K) PALM TREE TO BE RELOCATED
- (L) FENCE REMOVAL (PREP. R.O.W.)
- (M) TREE REMOVAL
- (N) EXIST. STRUCTURE TO BE REMOVED

SHEET TOTALS				
ITEM	EST.	FINAL	UNIT	DESCRIPTION
100			STA	PREPARATION OF R.O.W.
100			EA	PREPARATION OF R.O.W. (TREES)
104			LF	REMOVE CONC. (CURB)
104			LF	REMOVE CONC. (CURB & GUTTER)
104			LF	REMOVE CONC. (VALLEY GUTTER)
104			SY	REMOVE CONC. (MEDIAN)
104			SY	REMOVE CONC. (DRAIN)
104	2394		SY	REMOVE CONC. (RIPRAP)
105			SY	REMOVE ASPHALTIC PAVEMENT
* 251			CY	REWORK BASE MAT'L (7" FLEX BASE)
* 251	2101		CY	REWORK BASE MAT'L (8" FLEX BASE)
* 251			CY	REWORK BASE MAT'L (9" FLEX BASE)
* 251	2856		CY	REWORK BASE MAT'L (10" FLEX BASE)
* 251			CY	REWORK BASE MAT'L (14" FLEX BASE)

ITEMIZED PREP R.O.W. TABLE				
ITEM	EST.	FINAL	UNIT	DESCRIPTION
$ 100			LF	TIMBER POST & CABLE
$ 100			LF	CHAIN LINK FENCE
$ 100			STA	SHRUBS

$ TO BE PAID FOR UNDER PREP. R.O.W. (STA.) FOR CONTRACTOR'S INFORMATION ONLY.
* QUANTITIES REFLECT 85% SALVAGEABLE RATE.
# A.C.P. TO BE USED AS ITEM 251

ALL PALM TREES SHALL BE RELOCATED TO AREAS WITHIN THE PROJECT LIMITS.
CONTRACTOR IS TO CONTACT THE PROJECT ENGINEER FOR MARKING SPECIFIC LOCATIONS.

SHEET TOTALS				
ITEM	EST.	FINAL	UNIT	DESCRIPTION
** 305			SY	SALVAGE A.C.P. (2.75" A.C.P.)
** 305			SY	SALVAGE A.C.P. (5.50" A.C.P.)
1 ** 251	12095		SY	SALVAGE A.C.P. (6.50" A.C.P.)
** 305			SY	SALVAGE A.C.P. (6.75" A.C.P.)
** 305			SY	SALVAGE A.C.P. (8.75" A.C.P.)
479			EA	ADJUSTING INLET (CAP)
496	1159		LF	REMOVE OLD STR. (PIPE)
496	11		EA	REMOVE OLD STR. (SMALL)
542	2350		LF	REMOVE METAL BEAM GUARD FENCE
542	6		EA	REMOVE SINGLE GUARDRAIL TERMINAL
542	8		EA	REMOVE TERMINAL ANCHOR SECTION
1057			EA	TRANSPLANTING TREES & PALMS
5190			SY	REMOVE & RELOCATE SALVAGE LANDSCAPE PAVERS

1 REVISED 9-26-03

NOTES:

1. SAVLAGED MBGF AND POSTS SHALL BE RETURNED TO THE PHARR MAINTENANCE YARD.

THE SEAL APPEARING ON THIS DOCUMENT WAS AUTHORIZED BY JAIME AGUILAR, P.E. 87606 ON 07/02/2003.

STATE OF TEXAS
JAIME AGUILAR
87606
REGISTERED PROFESSIONAL ENGINEER

Parsons Brinckerhoff Quade & Douglas Inc.

Texas Department of Transportation

© 2003 by TxDOT

US 281
REMOVAL ITEM DETAILS

STA. 648+00 "BL1" TO
STA. 660+00 "BL1"

PLAN 1"= 100' HORIZ

SHEET 4 OF 22 — 281REM04.DGN

DESIGNED: TT	FED. RD DIV. No.	STATE	FEDERAL AID PROJECT No.		HIGHWAY No.	
CHECKED: DM	6	TEXAS			US 281	
DRAWN: JT	STATE DISTRICT	COUNTY	CONTROL No.	SECTION No.	JOB No.	SHEET No.
CHECKED: DM	PHARR	HIDALGO	0255	08	091	229

NAME
12:20:11 PM
07/02/2003
i:\22322e\cadd\sheets\removals\281rem05.dgn

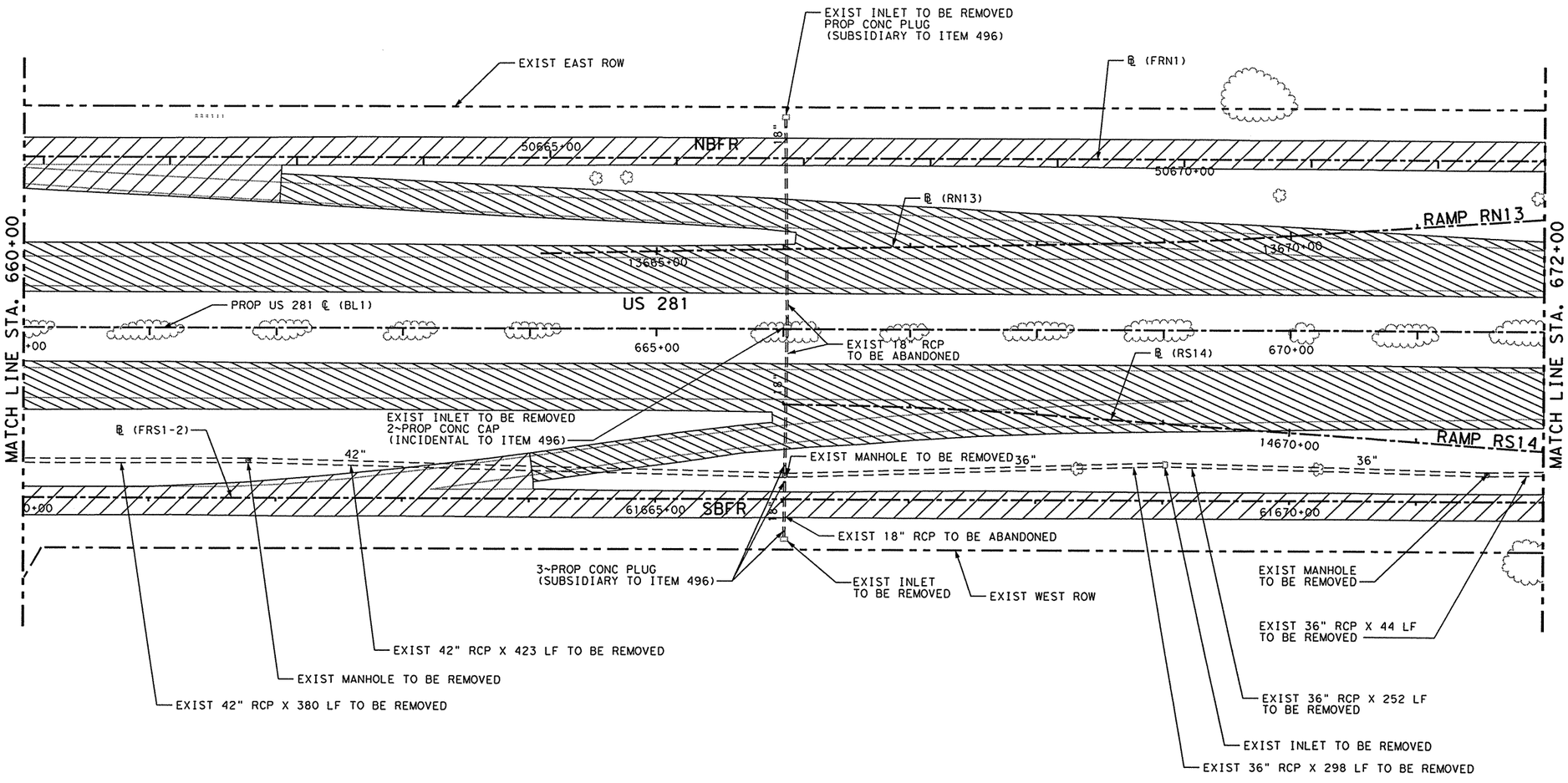

REMOVAL LEGEND:

- 22.75" PAVEMENT 8.75" A.C.P. - REWORK 14.0" FLEX - REWORK
- 14.5" PAVEMENT 5.5" A.C.P. - REWORK 9.0" FLEX - REWORK
- 15.5" PAVEMENT 6.5" A.C.P. - REWORK 9.0" FLEX - REWORK
- 13.75" PAVEMENT 6.75" A.C.P. - REWORK 7.0" FLEX - REWORK
- 12.5" PAVEMENT 5.5" A.C.P. - REWORK 7.0" FLEX - REWORK
- 11.75" PAVEMENT 2.75" A.C.P. - REWORK 9.0" FLEX - REWORK
- 16.5" PAVEMENT 6.5" A.C.P. - REWORK 10.0" FLEX - REWORK
- 8.0" PAVEMENT 8" FLEX - REWORK
- 10.0" PAVEMENT 10" FLEX - REWORK
- 4" CONCRETE SIDEWALK REMOVAL
- CONCRETE MEDIAN REMOVAL
- CONCRETE RIPRAP REMOVAL
- A.C.P. REMOVAL
- BRICK PAVER REMOVAL
- — — SAW CUT LINE
- (A) CONCRETE CURB REMOVAL
- (B) CONCRETE CURB & GUTTER REMOVAL
- (C) CONCRETE VALLEY GUTTER REMOVAL
- (D) TYPE 2 C.T.B. REMOVAL (CAST IN PLACE)
- (E) C.T.B. REMOVAL (PRE-CAST)
- (F) CONCRETE DRAIN REMOVAL
- (G) METAL BEAM GUARD FENCE REMOVAL
- (H) TERMINAL-ANCHOR-SECTION REMOVAL
- (I) SINGLE GUARD RAIL TERMINAL
- (J) TIMBER POST & CABLE RMV (PREP. ROW)
- (K) PALM TREE TO BE RELOCATED
- (L) FENCE REMOVAL (PREP. R.O.W.)
- (M) TREE REMOVAL
- (N) EXIST. STRUCTURE TO BE REMOVED

SHEET TOTALS

	ITEM	EST.	FINAL	UNIT	DESCRIPTION
	100			STA	PREPARATION OF R.O.W.
	100			EA	PREPARATION OF R.O.W. (TREES)
	104			LF	REMOVE CONC. (CURB)
	104			LF	REMOVE CONC. (CURB & GUTTER)
	104			LF	REMOVE CONC. (VALLEY GUTTER)
	104			SY	REMOVE CONC. (MEDIAN)
	104			SY	REMOVE CONC. (DRAIN)
	104			SY	REMOVE CONC. (RIPRAP)
	105			SY	REMOVE ASPHALTIC PAVEMENT
*	251			CY	REWORK BASE MAT'L (7" FLEX BASE)
*	251	1289		CY	REWORK BASE MAT'L (8" FLEX BASE)
*	251			CY	REWORK BASE MAT'L (9" FLEX BASE)
*	251	3352		CY	REWORK BASE MAT'L (10" FLEX BASE)
*	251			CY	REWORK BASE MAT'L (14" FLEX BASE)

ITEMIZED PREP R.O.W. TABLE

	ITEM	EST.	FINAL	UNIT	DESCRIPTION
$	100			LF	TIMBER POST & CABLE
$	100			LF	CHAIN LINK FENCE
$	100			STA	SHRUBS

$ TO BE PAID FOR UNDER PREP. R.O.W. (STA.) FOR CONTRACTOR'S INFORMATION ONLY.
* QUANTITIES REFLECT 85% SALVAGEABLE RATE.
# A.C.P. TO BE USED AS ITEM 251

ALL PALM TREES SHALL BE RELOCATED TO AREAS WITHIN THE PROJECT LIMITS.
CONTRACTOR IS TO CONTACT THE PROJECT ENGINEER FOR MARKING SPECIFIC LOCATIONS.

SHEET TOTALS

	ITEM	EST.	FINAL	UNIT	DESCRIPTION
#*	305			SY	SALVAGE A.C.P. (2.75" A.C.P.)
#*	305			SY	SALVAGE A.C.P. (5.50" A.C.P.)
#*	305	14194		SY	SALVAGE A.C.P. (6.50" A.C.P.)
#*	305			SY	SALVAGE A.C.P. (6.75" A.C.P.)
#*	305			SY	SALVAGE A.C.P. (8.75" A.C.P.)
	479			EA	ADJUSTING INLET (CAP)
	496	1397		LF	REMOVE OLD STR. (PIPE)
	496	7		EA	REMOVE OLD STR. (SMALL)
	542			LF	REMOVE METAL BEAM GUARD FENCE
	542			EA	REMOVE SINGLE GUARDRAIL TERMINAL
	542			EA	REMOVE TERMINAL ANCHOR SECTION
	1057			EA	TRANSPLANTING TREES & PALMS
	5190			SY	REMOVE & RELOCATE SALVAGE LANDSCAPE PAVERS

NOTES:

1. SAVLAGED MBGF AND POSTS SHALL BE RETURNED TO THE PHARR MAINTENANCE YARD.

THE SEAL APPEARING ON THIS DOCUMENT WAS AUTHORIZED BY JAIME AGUILAR, P.E. 87606 ON 07/02/2003.

STATE OF TEXAS
JAIME AGUILAR
87606
REGISTERED PROFESSIONAL ENGINEER

Parsons Brinckerhoff Quade & Douglas Inc.

Texas Department of Transportation

© 2003 by TxDOT

US 281
REMOVAL ITEM DETAILS

STA. 660+00 "BL1" TO
STA. 672+00 "BL1"

PLAN 1"= 100' HORIZ

SHEET 5 OF 22 | 281REM05.DGN

DESIGNED: TT	FED. RD DIV. No.	STATE	FEDERAL AID PROJECT No.			HIGHWAY No.
CHECKED: DM	6	TEXAS				US 281
DRAWN: JT	STATE DISTRICT	COUNTY	CONTROL No.	SECTION No.	JOB No.	SHEET No.
CHECKED: DM	PHARR	HIDALGO	0255	08	091	230

NAME
12:20:11 PM
07/02/2003
i:\22322a\cadd\sheets\removals\281rem05.dgn

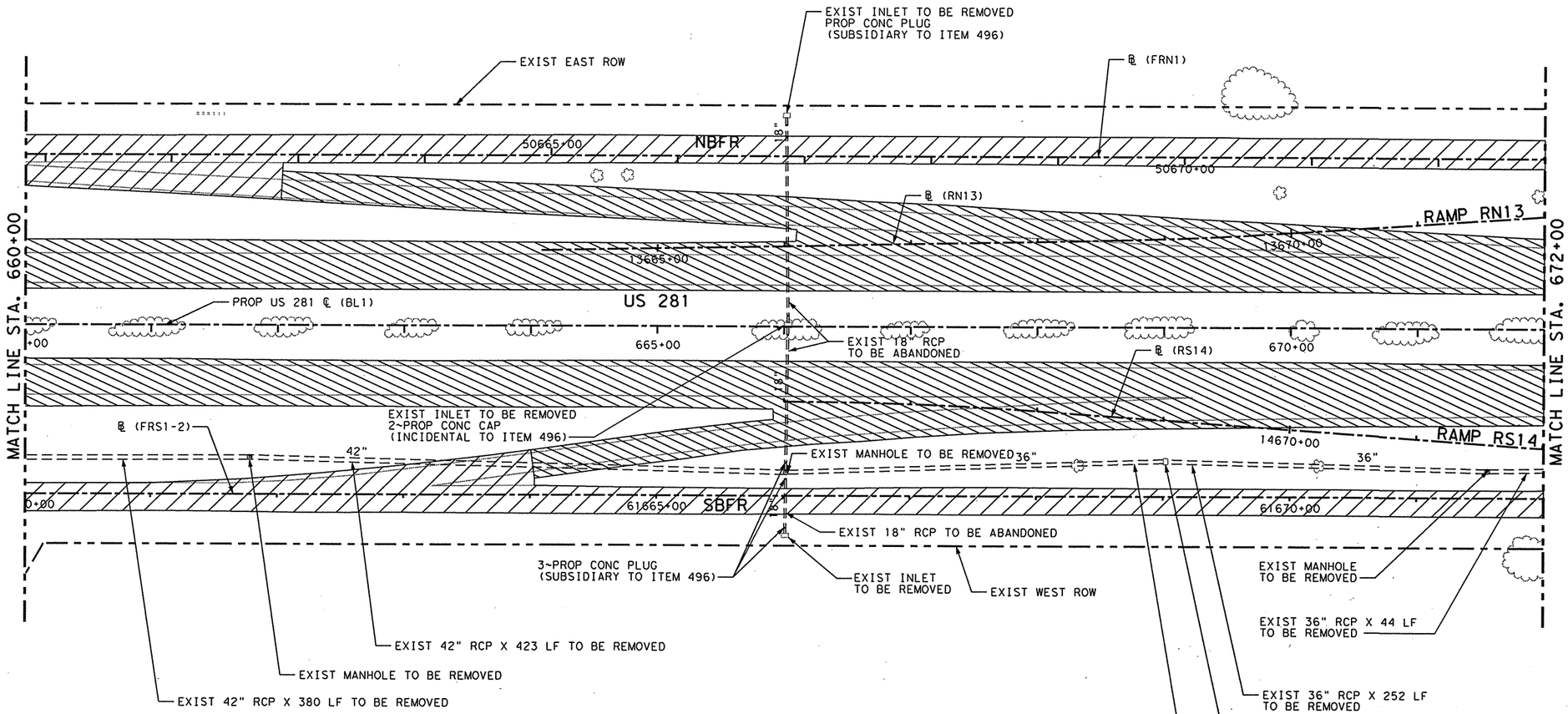

REMOVAL LEGEND:

- 22.75" PAVEMENT 8.75" A.C.P. - REWORK 14.0" FLEX - REWORK
- 14.5" PAVEMENT 5.5" A.C.P. - REWORK 9.0" FLEX - REWORK
- 15.5" PAVEMENT 6.5" A.C.P. - REWORK 9.0" FLEX - REWORK
- 13.75" PAVEMENT 6.75" A.C.P. - REWORK 7.0" FLEX - REWORK
- 12.5" PAVEMENT 5.5" A.C.P. - REWORK 7.0" FLEX - REWORK
- 11.75" PAVEMENT 2.75" A.C.P. - REWORK 9.0" FLEX - REWORK
- 16.5" PAVEMENT 6.5" A.C.P. - REWORK 10.0" FLEX - REWORK
- 8.0" PAVEMENT 8" FLEX - REWORK
- 10.0" PAVEMENT 10" FLEX - REWORK
- 4" CONCRETE SIDEWALK REMOVAL
- CONCRETE MEDIAN REMOVAL
- CONCRETE RIPRAP REMOVAL
- A.C.P. REMOVAL
- BRICK PAVER REMOVAL
- — — SAW CUT LINE
- (A) CONCRETE CURB REMOVAL
- (B) CONCRETE CURB & GUTTER REMOVAL
- (C) CONCRETE VALLEY GUTTER REMOVAL
- (D) TYPE 2 C.T.B. REMOVAL (CAST IN PLACE)
- (E) C.T.B. REMOVAL (PRE-CAST)
- (F) CONCRETE DRAIN REMOVAL
- (G) METAL BEAM GUARD FENCE REMOVAL
- (H) TERMINAL-ANCHOR-SECTION REMOVAL
- (I) SINGLE GUARD RAIL TERMINAL
- (J) TIMBER POST & CABLE RMV (PREP. ROW)
- (K) PALM TREE TO BE RELOCATED
- (L) FENCE REMOVAL (PREP. R.O.W.)
- (M) TREE REMOVAL
- (N) EXIST. STRUCTURE TO BE REMOVED

SHEET TOTALS				
ITEM	EST.	FINAL	UNIT	DESCRIPTION
100			STA	PREPARATION OF R.O.W.
100			EA	PREPARATION OF R.O.W. (TREES)
104			LF	REMOVE CONC. (CURB)
104			LF	REMOVE CONC. (CURB & GUTTER)
104			LF	REMOVE CONC. (VALLEY GUTTER)
104			SY	REMOVE CONC. (MEDIAN)
104			SY	REMOVE CONC. (DRAIN)
104			SY	REMOVE CONC. (RIPRAP)
105			SY	REMOVE ASPHALTIC PAVEMENT
* 251			CY	REWORK BASE MAT'L (7" FLEX BASE)
* 251	1289		CY	REWORK BASE MAT'L (8" FLEX BASE)
* 251			CY	REWORK BASE MAT'L (9" FLEX BASE)
* 251	3352		CY	REWORK BASE MAT'L (10" FLEX BASE)
* 251			CY	REWORK BASE MAT'L (14" FLEX BASE)

ITEMIZED PREP R.O.W. TABLE				
ITEM	EST.	FINAL	UNIT	DESCRIPTION
$ 100			LF	TIMBER POST & CABLE
$ 100			LF	CHAIN LINK FENCE
$ 100			STA	SHRUBS

$ TO BE PAID FOR UNDER PREP. R.O.W. (STA.) FOR CONTRACTOR'S INFORMATION ONLY.
* QUANTITIES REFLECT 85% SALVAGEABLE RATE.
# A.C.P. TO BE USED AS ITEM 251

ALL PALM TREES SHALL BE RELOCATED TO AREAS WITHIN THE PROJECT LIMITS.
CONTRACTOR IS TO CONTACT THE PROJECT ENGINEER FOR MARKING SPECIFIC LOCATIONS.

SHEET TOTALS				
ITEM	EST.	FINAL	UNIT	DESCRIPTION
* # [illegible]			SY	SALVAGE A.C.P. (2.75" A.C.P.)
* # [illegible]			SY	SALVAGE A.C.P. (5.50" A.C.P.)
⚠1 * # 251	14194		SY	SALVAGE A.C.P. (6.50" A.C.P.)
* # [illegible]			SY	SALVAGE A.C.P. (6.75" A.C.P.)
* # [illegible]			SY	SALVAGE A.C.P. (8.75" A.C.P.)
479			EA	ADJUSTING INLET (CAP)
496	1397		LF	REMOVE OLD STR. (PIPE)
496	7		EA	REMOVE OLD STR. (SMALL)
542			LF	REMOVE METAL BEAM GUARD FENCE
542			EA	REMOVE SINGLE GUARDRAIL TERMINAL
542			EA	REMOVE TERMINAL ANCHOR SECTION
1057			EA	TRANSPLANTING TREES & PALMS
5190			SY	REMOVE & RELOCATE SALVAGE LANDSCAPE PAVERS

⚠1 REVISED 9-26-03

NOTES:

1. SAVLAGED MBGF AND POSTS SHALL BE RETURNED TO THE PHARR MAINTENANCE YARD.

THE SEAL APPEARING ON THIS DOCUMENT WAS AUTHORIZED BY JAIME AGUILAR, P.E. 87606 ON 07/02/2003.

STATE OF TEXAS
JAIME AGUILAR
87606
REGISTERED PROFESSIONAL ENGINEER

Parsons Brinckerhoff Quade & Douglas Inc.

Texas Department of Transportation

© 2003 by TxDOT

US 281
REMOVAL ITEM DETAILS

STA. 660+00 "BL1" TO
STA. 672+00 "BL1"

PLAN 1"= 100' HORIZ

SHEET 5 OF 22				281REM05.DGN			
DESIGNED: TT	FED. RD DIV. No.	STATE	FEDERAL AID PROJECT No.			HIGHWAY No.	
CHECKED: DM	6	TEXAS				US 281	
DRAWN: JT	STATE DISTRICT	COUNTY	CONTROL No.	SECTION No.	JOB No.	SHEET No.	
CHECKED: DM	PHARR	HIDALGO	0255	08	091	230	

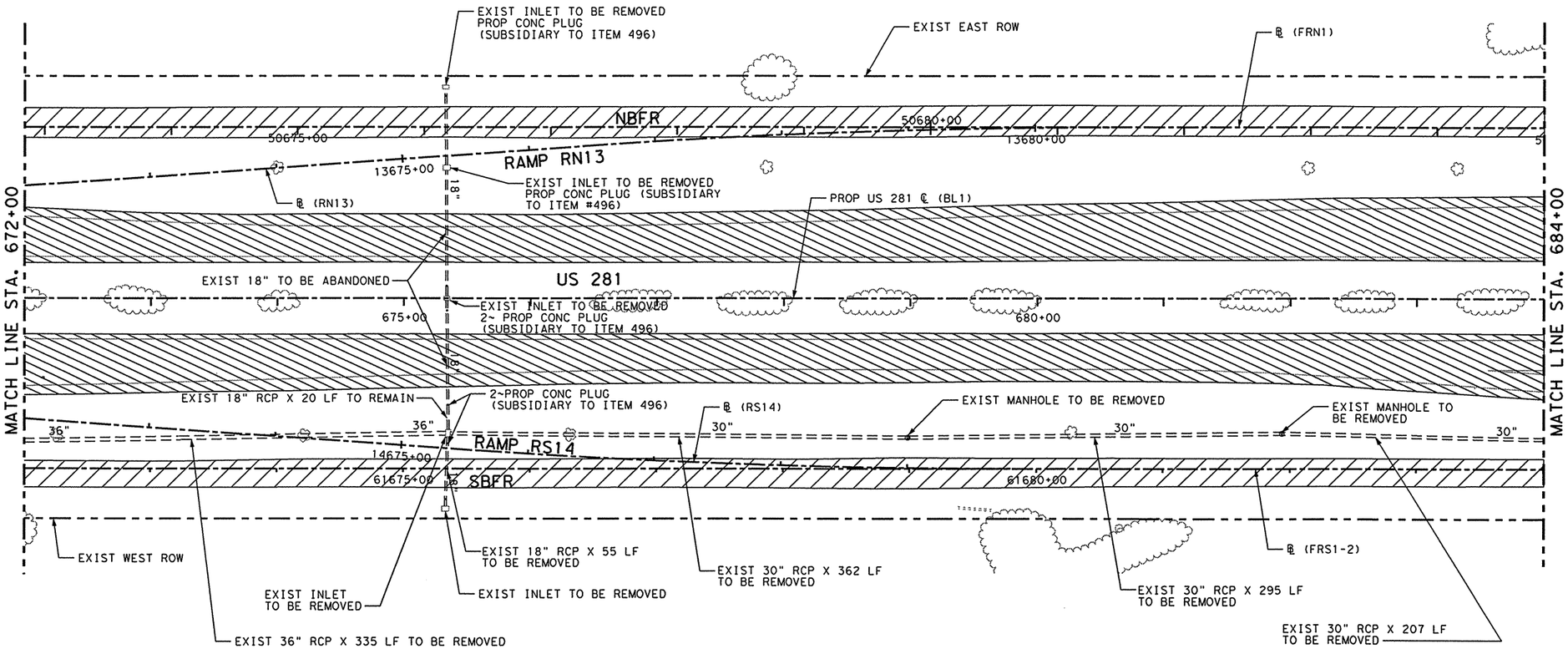

REMOVAL LEGEND:

- 22.75" PAVEMENT 8.75" A.C.P. - REWORK 14.0" FLEX - REWORK
- 14.5" PAVEMENT 5.5" A.C.P. - REWORK 9.0" FLEX - REWORK
- 15.5" PAVEMENT 6.5" A.C.P. - REWORK 9.0" FLEX - REWORK
- 13.75" PAVEMENT 6.75" A.C.P. - REWORK 7.0" FLEX - REWORK
- 12.5" PAVEMENT 5.5" A.C.P. - REWORK 7.0" FLEX - REWORK
- 11.75" PAVEMENT 2.75" A.C.P. - REWORK 9.0" FLEX - REWORK
- 16.5" PAVEMENT 6.5" A.C.P. - REWORK 10.0" FLEX - REWORK
- 8.0" PAVEMENT 8" FLEX - REWORK
- 10.0" PAVEMENT 10" FLEX - REWORK
- 4" CONCRETE SIDEWALK REMOVAL
- CONCRETE MEDIAN REMOVAL
- CONCRETE RIPRAP REMOVAL
- A.C.P. REMOVAL
- BRICK PAVER REMOVAL
- — — SAW CUT LINE
- Ⓐ CONCRETE CURB REMOVAL
- Ⓑ CONCRETE CURB & GUTTER REMOVAL
- Ⓒ CONCRETE VALLEY GUTTER REMOVAL
- Ⓓ TYPE 2 C.T.B. REMOVAL (CAST IN PLACE)
- Ⓔ C.T.B. REMOVAL (PRE-CAST)
- Ⓕ CONCRETE DRAIN REMOVAL
- Ⓖ METAL BEAM GUARD FENCE REMOVAL
- Ⓗ TERMINAL-ANCHOR-SECTION REMOVAL
- Ⓘ SINGLE GUARD RAIL TERMINAL
- Ⓙ TIMBER POST & CABLE RMV (PREP. ROW)
- Ⓚ PALM TREE TO BE RELOCATED
- Ⓛ FENCE REMOVAL (PREP. R.O.W.)
- Ⓜ TREE REMOVAL
- Ⓝ EXIST. STRUCTURE TO BE REMOVED

SHEET TOTALS				
ITEM	EST.	FINAL	UNIT	DESCRIPTION
100			STA	PREPARATION OF R.O.W.
100			EA	PREPARATION OF R.O.W. (TREES)
104			LF	REMOVE CONC. (CURB)
104			LF	REMOVE CONC. (CURB & GUTTER)
104			LF	REMOVE CONC. (VALLEY GUTTER)
104			SY	REMOVE CONC. (MEDIAN)
104			SY	REMOVE CONC. (DRAIN)
104			SY	REMOVE CONC. (RIPRAP)
105			SY	REMOVE ASPHALTIC PAVEMENT
* 251			CY	REWORK BASE MAT'L (7" FLEX BASE)
* 251	1172		CY	REWORK BASE MAT'L (8" FLEX BASE)
* 251			CY	REWORK BASE MAT'L (9" FLEX BASE)
* 251	2670		CY	REWORK BASE MAT'L (10" FLEX BASE)
* 251			CY	REWORK BASE MAT'L (14" FLEX BASE)

ITEMIZED PREP R.O.W. TABLE				
ITEM	EST.	FINAL	UNIT	DESCRIPTION
$ 100			LF	TIMBER POST & CABLE
$ 100			LF	CHAIN LINK FENCE
$ 100			STA	SHRUBS

$ TO BE PAID FOR UNDER PREP. R.O.W. (STA.) FOR CONTRACTOR'S INFORMATION ONLY.
* QUANTITIES REFLECT 85% SALVAGEABLE RATE.
# A.C.P. TO BE USED AS ITEM 251

ALL PALM TREES SHALL BE RELOCATED TO AREAS WITHIN THE PROJECT LIMITS.
CONTRACTOR IS TO CONTACT THE PROJECT ENGINEER FOR MARKING SPECIFIC LOCATIONS.

SHEET TOTALS				
ITEM	EST.	FINAL	UNIT	DESCRIPTION
## 305			SY	SALVAGE A.C.P. (2.75" A.C.P.)
## 305			SY	SALVAGE A.C.P. (5.50" A.C.P.)
## 305	11307		SY	SALVAGE A.C.P. (6.50" A.C.P.)
## 305			SY	SALVAGE A.C.P. (6.75" A.C.P.)
## 305			SY	SALVAGE A.C.P. (8.75" A.C.P.)
479			EA	ADJUSTING INLET (CAP)
496	1254		LF	REMOVE OLD STR. (PIPE)
496	7		EA	REMOVE OLD STR. (SMALL)
542			LF	REMOVE METAL BEAM GUARD FENCE
542			EA	REMOVE SINGLE GUARDRAIL TERMINAL
542			EA	REMOVE TERMINAL ANCHOR SECTION
1057			EA	TRANSPLANTING TREES & PALMS
5190			SY	REMOVE & RELOCATE SALVAGE LANDSCAPE PAVERS

NOTES:

1. SAVLAGED MBGF AND POSTS SHALL BE RETURNED TO THE PHARR MAINTENANCE YARD.

THE SEAL APPEARING ON THIS DOCUMENT WAS AUTHORIZED BY JAIME AGUILAR, P.E. 87606 ON 07/02/2003.

STATE OF TEXAS
JAIME AGUILAR
87606
REGISTERED PROFESSIONAL ENGINEER

Parsons Brinckerhoff Quade & Douglas Inc.

Texas Department of Transportation

© 2003 by TxDOT

US 281
REMOVAL ITEM DETAILS

STA. 672+00 "BL1" TO
STA. 684+00 "BL1"

PLAN 1"= 100' HORIZ

SHEET 6 OF 22							281REM06.DGN	
DESIGNED: TT	FED. RD DIV. No.	STATE	FEDERAL AID PROJECT No.				HIGHWAY No.	
CHECKED: DM	6	TEXAS					US 281	
DRAWN: JT	STATE DISTRICT	COUNTY	CONTROL No.	SECTION No.	JOB No.	SHEET No.		
CHECKED: DM	PHARR	HIDALGO	0255	08	091	231		

NAME
12:20:27 PM
07/02/2003
i:\22322e\cadd\sheets\removals\281rem06.dgn

NAME
12:20:27 PM
07/02/2003
i:\22322G\cadd\sheets\removals\281rem06.dgn

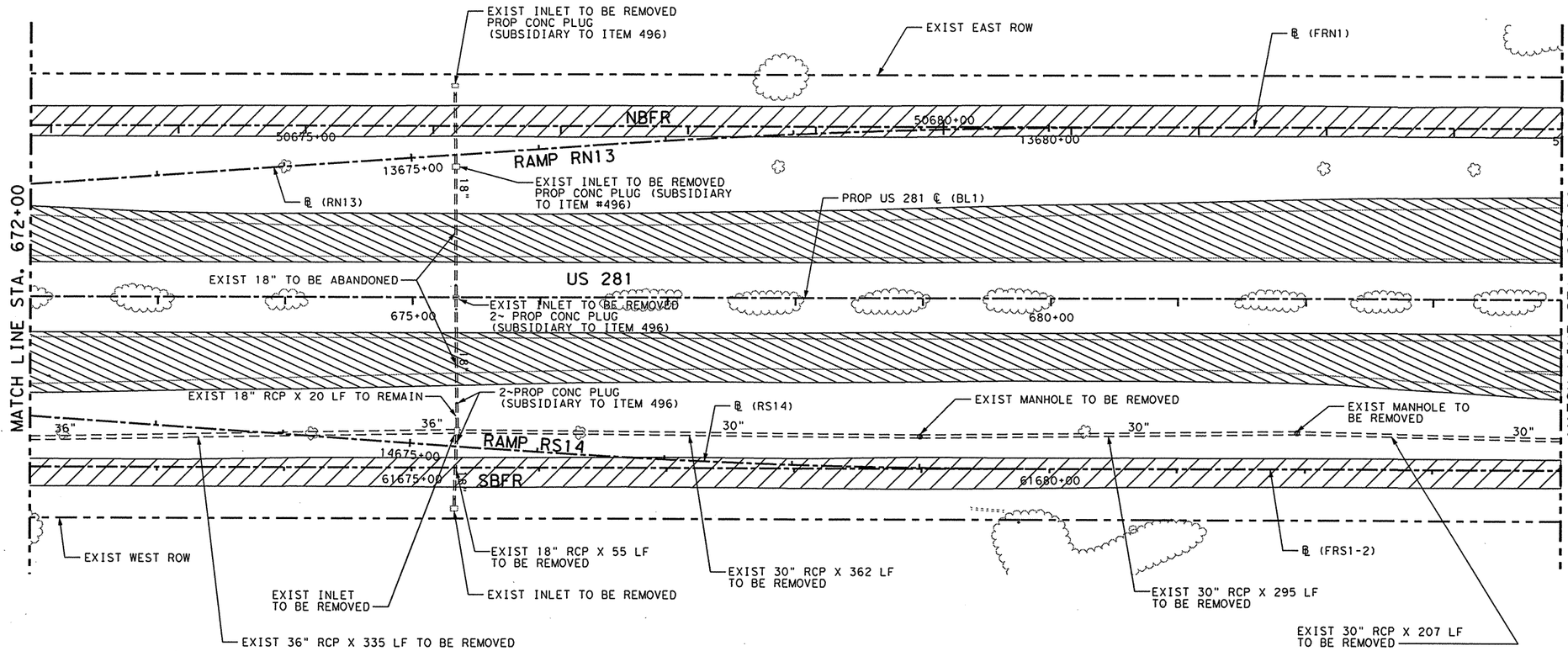

REMOVAL LEGEND:

- 22.75" PAVEMENT 8.75" A.C.P. - REWORK 14.0" FLEX - REWORK
- 14.5" PAVEMENT 5.5" A.C.P. - REWORK 9.0" FLEX - REWORK
- 15.5" PAVEMENT 6.5" A.C.P. - REWORK 9.0" FLEX - REWORK
- 13.75" PAVEMENT 6.75" A.C.P. - REWORK 7.0" FLEX - REWORK
- 12.5" PAVEMENT 5.5" A.C.P. - REWORK 7.0" FLEX - REWORK
- 11.75" PAVEMENT 2.75" A.C.P. - REWORK 9.0" FLEX - REWORK
- 16.5" PAVEMENT 6.5" A.C.P. - REWORK 10.0" FLEX - REWORK
- 8.0" PAVEMENT 8" FLEX - REWORK
- 10.0" PAVEMENT 10" FLEX - REWORK
- 4" CONCRETE SIDEWALK REMOVAL
- CONCRETE MEDIAN REMOVAL
- CONCRETE RIPRAP REMOVAL
- A.C.P. REMOVAL
- BRICK PAVER REMOVAL
- — — SAW CUT LINE
- (A) CONCRETE CURB REMOVAL
- (B) CONCRETE CURB & GUTTER REMOVAL
- (C) CONCRETE VALLEY GUTTER REMOVAL
- (D) TYPE 2 C.T.B. REMOVAL (CAST IN PLACE)
- (E) C.T.B. REMOVAL (PRE-CAST)
- (F) CONCRETE DRAIN REMOVAL
- (G) METAL BEAM GUARD FENCE REMOVAL
- (H) TERMINAL-ANCHOR-SECTION REMOVAL
- (I) SINGLE GUARD RAIL TERMINAL
- (J) TIMBER POST & CABLE RMV (PREP. ROW)
- (K) PALM TREE TO BE RELOCATED
- (L) FENCE REMOVAL (PREP. R.O.W.)
- (M) TREE REMOVAL
- (N) EXIST. STRUCTURE TO BE REMOVED

SHEET TOTALS				
ITEM	EST.	FINAL	UNIT	DESCRIPTION
100			STA	PREPARATION OF R.O.W.
100			EA	PREPARATION OF R.O.W. (TREES)
104			LF	REMOVE CONC. (CURB)
104			LF	REMOVE CONC. (CURB & GUTTER)
104			LF	REMOVE CONC. (VALLEY GUTTER)
104			SY	REMOVE CONC. (MEDIAN)
104			SY	REMOVE CONC. (DRAIN)
104			SY	REMOVE CONC. (RIPRAP)
105			SY	REMOVE ASPHALTIC PAVEMENT
* 251			CY	REWORK BASE MAT'L (7" FLEX BASE)
* 251	1172		CY	REWORK BASE MAT'L (8" FLEX BASE)
* 251			CY	REWORK BASE MAT'L (9" FLEX BASE)
* 251	2670		CY	REWORK BASE MAT'L (10" FLEX BASE)
* 251			CY	REWORK BASE MAT'L (14" FLEX BASE)

ITEMIZED PREP R.O.W. TABLE					
	ITEM	EST.	FINAL	UNIT	DESCRIPTION
$	100			LF	TIMBER POST & CABLE
$	100			LF	CHAIN LINK FENCE
$	100			STA	SHRUBS

$ TO BE PAID FOR UNDER PREP. R.O.W. (STA.) FOR CONTRACTOR'S INFORMATION ONLY.
* QUANTITIES REFLECT 85% SALVAGEABLE RATE.
# A.C.P. TO BE USED AS ITEM 251

ALL PALM TREES SHALL BE RELOCATED TO AREAS WITHIN THE PROJECT LIMITS.
CONTRACTOR IS TO CONTACT THE PROJECT ENGINEER FOR MARKING SPECIFIC LOCATIONS.

SHEET TOTALS				
ITEM	EST.	FINAL	UNIT	DESCRIPTION
# * ~~295~~			SY	SALVAGE A.C.P. (2.75" A.C.P.)
# * ~~550~~			SY	SALVAGE A.C.P. (5.50" A.C.P.)
1 # * 251	11307		SY	SALVAGE A.C.P. (6.50" A.C.P.)
# * ~~675~~			SY	SALVAGE A.C.P. (6.75" A.C.P.)
# * ~~825~~			SY	SALVAGE A.C.P. (8.75" A.C.P.)
479			EA	ADJUSTING INLET (CAP)
496	1254		LF	REMOVE OLD STR. (PIPE)
496	7		EA	REMOVE OLD STR. (SMALL)
542			LF	REMOVE METAL BEAM GUARD FENCE
542			EA	REMOVE SINGLE GUARDRAIL TERMINAL
542			EA	REMOVE TERMINAL ANCHOR SECTION
1057			EA	TRANSPLANTING TREES & PALMS
5190			SY	REMOVE & RELOCATE SALVAGE LANDSCAPE PAVERS

1 REVISED 9-26-03

NOTES:

1. SAVLAGED MBGF AND POSTS SHALL BE RETURNED TO THE PHARR MAINTENANCE YARD.

THE SEAL APPEARING ON THIS DOCUMENT WAS AUTHORIZED BY JAIME AGUILAR, P.E. 87606 ON 07/02/2003.

STATE OF TEXAS
JAIME AGUILAR
87606
REGISTERED
PROFESSIONAL ENGINEER

Parsons Brinckerhoff Quade & Douglas Inc.

Texas Department of Transportation

© 2003 by TxDOT

US 281
REMOVAL ITEM DETAILS

STA. 672+00 "BL1" TO
STA. 684+00 "BL1"

PLAN 1"= 100' HORIZ

SHEET 6 OF 22 | 281REM06.DGN

DESIGNED: TT	FED. RD DIV. No.	STATE	FEDERAL AID PROJECT No.			HIGHWAY No.
CHECKED: DM	6	TEXAS				US 281
DRAWN: JT	STATE DISTRICT	COUNTY	CONTROL No.	SECTION No.	JOB No.	SHEET No.
CHECKED: DM	PHARR	HIDALGO	0255	08	091	231

NAME
02:05:11 PM
07/22/2003
i:\22322g\cadd\sheets\removals\281rem07.dgn

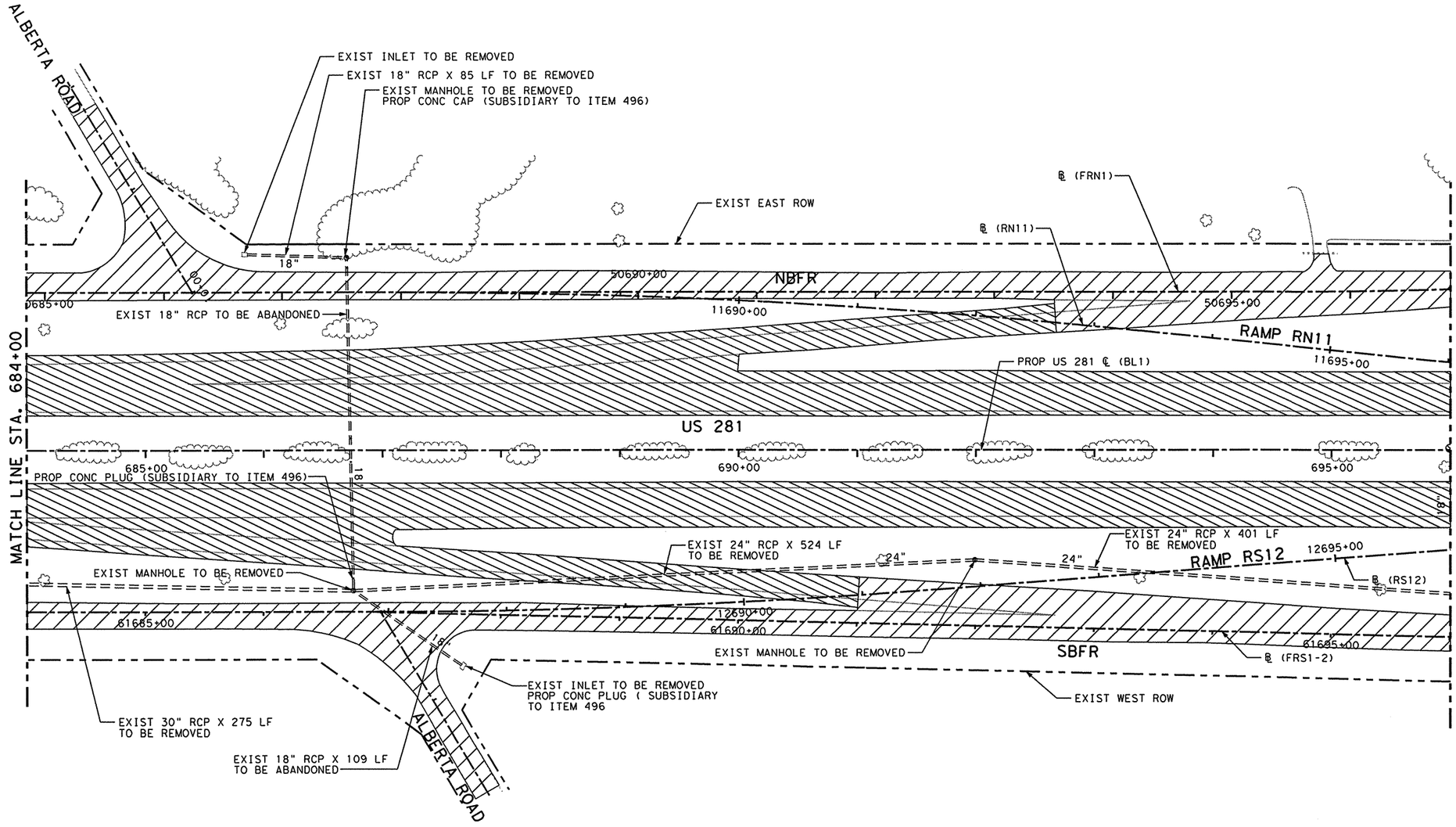

REMOVAL LEGEND:

- 22.75" PAVEMENT 8.75" A.C.P. - REWORK 14.0" FLEX - REWORK
- 14.5" PAVEMENT 5.5" A.C.P. - REWORK 9.0" FLEX - REWORK
- 15.5" PAVEMENT 6.5" A.C.P. - REWORK 9.0" FLEX - REWORK
- 13.75" PAVEMENT 6.75" A.C.P. - REWORK 7.0" FLEX - REWORK
- 12.5" PAVEMENT 5.5" A.C.P. - REWORK 7.0" FLEX - REWORK
- 11.75" PAVEMENT 2.75" A.C.P. - REWORK 9.0" FLEX - REWORK
- 16.5" PAVEMENT 6.5" A.C.P. - REWORK 10.0" FLEX - REWORK
- 8.0" PAVEMENT 8" FLEX - REWORK
- 10.0" PAVEMENT 10" FLEX - REWORK
- 4" CONCRETE SIDEWALK REMOVAL
- CONCRETE MEDIAN REMOVAL
- CONCRETE RIPRAP REMOVAL
- A.C.P. REMOVAL
- BRICK PAVER REMOVAL
- SAW CUT LINE
- (A) CONCRETE CURB REMOVAL
- (B) CONCRETE CURB & GUTTER REMOVAL
- (C) CONCRETE VALLEY GUTTER REMOVAL
- (D) TYPE 2 C.T.B. REMOVAL (CAST IN PLACE)
- (E) C.T.B. REMOVAL (PRE-CAST)
- (F) CONCRETE DRAIN REMOVAL
- (G) METAL BEAM GUARD FENCE REMOVAL
- (H) TERMINAL-ANCHOR-SECTION REMOVAL
- (I) SINGLE GUARD RAIL TERMINAL
- (J) TIMBER POST & CABLE RMV (PREP. ROW)
- (K) PALM TREE TO BE RELOCATED
- (L) FENCE REMOVAL (PREP. R.O.W.)
- (M) TREE REMOVAL
- (N) EXIST. STRUCTURE TO BE REMOVED

SHEET TOTALS

ITEM	EST.	FINAL	UNIT	DESCRIPTION
100			STA	PREPARATION OF R.O.W.
100			EA	PREPARATION OF R.O.W. (TREES)
104			LF	REMOVE CONC. (CURB)
104			LF	REMOVE CONC. (CURB & GUTTER)
104			LF	REMOVE CONC. (VALLEY GUTTER)
104			SY	REMOVE CONC. (MEDIAN)
104			SY	REMOVE CONC. (DRAIN)
104			SY	REMOVE CONC. (RIPRAP)
105			SY	REMOVE ASPHALTIC PAVEMENT
* 251			CY	REWORK BASE MAT'L (7" FLEX BASE)
* 251	1665		CY	REWORK BASE MAT'L (8" FLEX BASE)
* 251			CY	REWORK BASE MAT'L (9" FLEX BASE)
* 251	3318		CY	REWORK BASE MAT'L (10" FLEX BASE)
* 251			CY	REWORK BASE MAT'L (14" FLEX BASE)

ITEMIZED PREP R.O.W. TABLE

ITEM	EST.	FINAL	UNIT	DESCRIPTION
$ 100			LF	TIMBER POST & CABLE
$ 100			LF	CHAIN LINK FENCE
$ 100			STA	SHRUBS

$ TO BE PAID FOR UNDER PREP. R.O.W. (STA.) FOR CONTRACTOR'S INFORMATION ONLY.
* QUANTITIES REFLECT 85% SALVAGEABLE RATE.
# A.C.P. TO BE USED AS ITEM 251

ALL PALM TREES SHALL BE RELOCATED TO AREAS WITHIN THE PROJECT LIMITS. CONTRACTOR IS TO CONTACT THE PROJECT ENGINEER FOR MARKING SPECIFIC LOCATIONS.

SHEET TOTALS

ITEM	EST.	FINAL	UNIT	DESCRIPTION
# * 305			SY	SALVAGE A.C.P. (2.75" A.C.P.)
# * 305			SY	SALVAGE A.C.P. (5.50" A.C.P.)
# * 305	14051		SY	SALVAGE A.C.P. (6.50" A.C.P.)
# * 305			SY	SALVAGE A.C.P. (6.75" A.C.P.)
# * 305			SY	SALVAGE A.C.P. (8.75" A.C.P.)
479			EA	ADJUSTING INLET (CAP)
496	1285		LF	REMOVE OLD STR. (PIPE)
496	5		EA	REMOVE OLD STR. (SMALL)
542			LF	REMOVE METAL BEAM GUARD FENCE
542			EA	REMOVE SINGLE GUARDRAIL TERMINAL
542			EA	REMOVE TERMINAL ANCHOR SECTION
1057			EA	TRANSPLANTING TREES & PALMS
5190			SY	REMOVE & RELOCATE SALVAGE LANDSCAPE PAVERS

NOTES:

1. SAVLAGED MBGF AND POSTS SHALL BE RETURNED TO THE PHARR MAINTENANCE YARD.

THE SEAL APPEARING ON THIS DOCUMENT WAS AUTHORIZED BY JAIME AGUILAR, P.E. 87606 ON 07/22/2003.

STATE OF TEXAS
JAIME AGUILAR
87606
REGISTERED PROFESSIONAL ENGINEER

Parsons Brinckerhoff Quade & Douglas Inc.

Texas Department of Transportation

© 2003 by TxDOT

US 281
REMOVAL ITEM DETAILS

STA. 684+00 "BL1" TO
STA. 696+00 "BL1"

PLAN 1"= 100' HORIZ

SHEET 7 OF 22				281REM07.DGN			
DESIGNED: TT	FED. RD DIV. NO.	STATE	FEDERAL AID PROJECT No.			HIGHWAY No.	
CHECKED: DM	6	TEXAS				US 281	
DRAWN: JT	STATE DISTRICT	COUNTY	CONTROL No.	SECTION No.	JOB No.	SHEET No.	
CHECKED: DM	PHARR	HIDALGO	0255	08	091	232	

NAME
02:05:11 PM
07/22/2003
i:\22320\coddl\sheets\removals\281rem07.dgn

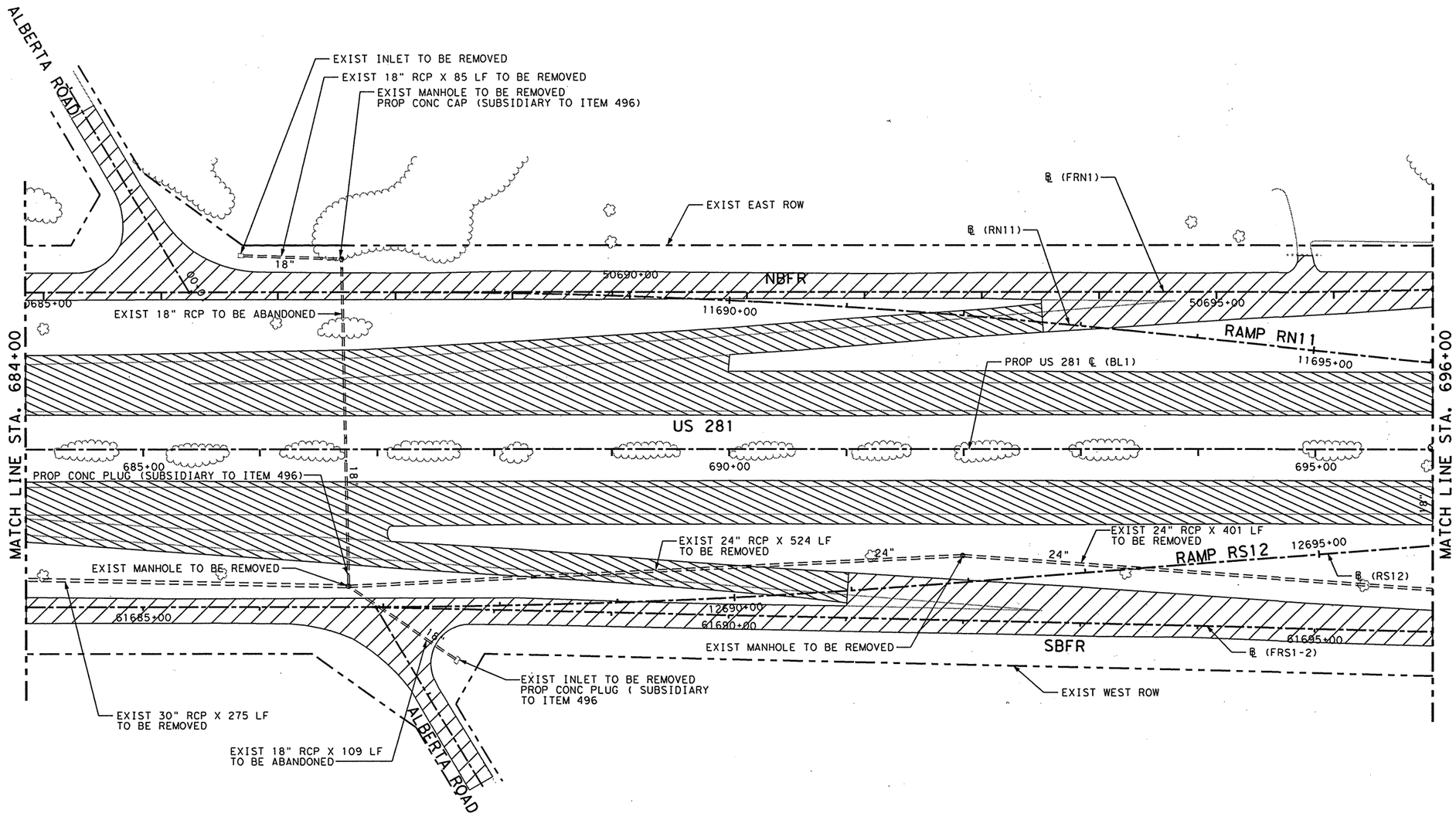

REMOVAL LEGEND:

- 22.75" PAVEMENT 8.75" A.C.P. - REWORK 14.0" FLEX - REWORK
- 14.5" PAVEMENT 5.5" A.C.P. - REWORK 9.0" FLEX - REWORK
- 15.5" PAVEMENT 6.5" A.C.P. - REWORK 9.0" FLEX - REWORK
- 13.75" PAVEMENT 6.75" A.C.P. - REWORK 7.0" FLEX - REWORK
- 12.5" PAVEMENT 5.5" A.C.P. - REWORK 7.0" FLEX - REWORK
- 11.75" PAVEMENT 2.75" A.C.P. - REWORK 9.0" FLEX - REWORK
- 16.5" PAVEMENT 6.5" A.C.P. - REWORK 10.0" FLEX - REWORK
- 8.0" PAVEMENT 8" FLEX - REWORK
- 10.0" PAVEMENT 10" FLEX - REWORK
- 4" CONCRETE SIDEWALK REMOVAL
- CONCRETE MEDIAN REMOVAL
- CONCRETE RIPRAP REMOVAL
- A.C.P. REMOVAL
- BRICK PAVER REMOVAL
- SAW CUT LINE
- (A) CONCRETE CURB REMOVAL
- (B) CONCRETE CURB & GUTTER REMOVAL
- (C) CONCRETE VALLEY GUTTER REMOVAL
- (D) TYPE 2 C.T.B. REMOVAL (CAST IN PLACE)
- (E) C.T.B. REMOVAL (PRE-CAST)
- (F) CONCRETE DRAIN REMOVAL
- (G) METAL BEAM GUARD FENCE REMOVAL
- (H) TERMINAL-ANCHOR-SECTION REMOVAL
- (I) SINGLE GUARD RAIL TERMINAL
- (J) TIMBER POST & CABLE RMV (PREP. ROW)
- (K) PALM TREE TO BE RELOCATED
- (L) FENCE REMOVAL (PREP. R.O.W.)
- (M) TREE REMOVAL
- (N) EXIST. STRUCTURE TO BE REMOVED

SHEET TOTALS				
ITEM	EST.	FINAL	UNIT	DESCRIPTION
100			STA	PREPARATION OF R.O.W.
100			EA	PREPARATION OF R.O.W. (TREES)
104			LF	REMOVE CONC. (CURB)
104			LF	REMOVE CONC. (CURB & GUTTER)
104			LF	REMOVE CONC. (VALLEY GUTTER)
104			SY	REMOVE CONC. (MEDIAN)
104			SY	REMOVE CONC. (DRAIN)
104			SY	REMOVE CONC. (RIPRAP)
105			SY	REMOVE ASPHALTIC PAVEMENT
* 251			CY	REWORK BASE MAT'L (7" FLEX BASE)
* 251	1665		CY	REWORK BASE MAT'L (8" FLEX BASE)
* 251			CY	REWORK BASE MAT'L (9" FLEX BASE)
* 251	3318		CY	REWORK BASE MAT'L (10" FLEX BASE)
* 251			CY	REWORK BASE MAT'L (14" FLEX BASE)

ITEMIZED PREP R.O.W. TABLE				
ITEM	EST.	FINAL	UNIT	DESCRIPTION
$ 100			LF	TIMBER POST & CABLE
$ 100			LF	CHAIN LINK FENCE
$ 100			STA	SHRUBS

SHEET TOTALS				
ITEM	EST.	FINAL	UNIT	DESCRIPTION
# * ~~246~~			SY	SALVAGE A.C.P. (2.75" A.C.P.)
# * ~~250~~			SY	SALVAGE A.C.P. (5.50" A.C.P.)
1 # * 251	14051		SY	SALVAGE A.C.P. (6.50" A.C.P.)
# * ~~265~~			SY	SALVAGE A.C.P. (6.75" A.C.P.)
# * ~~275~~			SY	SALVAGE A.C.P. (8.75" A.C.P.)
479			EA	ADJUSTING INLET (CAP)
496	1285		LF	REMOVE OLD STR. (PIPE)
496	5		EA	REMOVE OLD STR. (SMALL)
542			LF	REMOVE METAL BEAM GUARD FENCE
542			EA	REMOVE SINGLE GUARDRAIL TERMINAL
542			EA	REMOVE TERMINAL ANCHOR SECTION
1057			EA	TRANSPLANTING TREES & PALMS
5190			SY	REMOVE & RELOCATE SALVAGE LANDSCAPE PAVERS

$ TO BE PAID FOR UNDER PREP. R.O.W. (STA.) FOR CONTRACTOR'S INFORMATION ONLY.
* QUANTITIES REFLECT 85% SALVAGEABLE RATE.
# A.C.P. TO BE USED AS ITEM 251

ALL PALM TREES SHALL BE RELOCATED TO AREAS WITHIN THE PROJECT LIMITS.
CONTRACTOR IS TO CONTACT THE PROJECT ENGINEER FOR MARKING SPECIFIC LOCATIONS.

1 REVISED 9-26-03

NOTES:

1. SAVLAGED MBGF AND POSTS SHALL BE RETURNED TO THE PHARR MAINTENANCE YARD.

THE SEAL APPEARING ON THIS DOCUMENT WAS AUTHORIZED BY JAIME AGUILAR, P.E. 87606 ON 07/22/2003.

STATE OF TEXAS
JAIME AGUILAR
87606
REGISTERED
PROFESSIONAL ENGINEER

Parsons Brinckerhoff Quade & Douglas Inc.

Texas Department of Transportation

© 2003 by TxDOT

US 281
REMOVAL ITEM DETAILS

STA. 684+00 "BL1" TO
STA. 696+00 "BL1"

PLAN 1"= 100' HORIZ

SHEET 7 OF 22				281REM07.DGN			
DESIGNED: TT	FED. RD DIV. No.	STATE	FEDERAL AID PROJECT No.			HIGHWAY No.	
CHECKED: DM	6	TEXAS				US 281	
DRAWN: JT	STATE DISTRICT	COUNTY	CONTROL No.	SECTION No.	JOB No.	SHEET No.	
CHECKED: DM	PHARR	HIDALGO	0255	08	091	232	

Carlos F. Gonzalez
06:48:57 PM
08/06/2003
T:\22322a\CADD\Sheets\Removals\281rem08.dgn

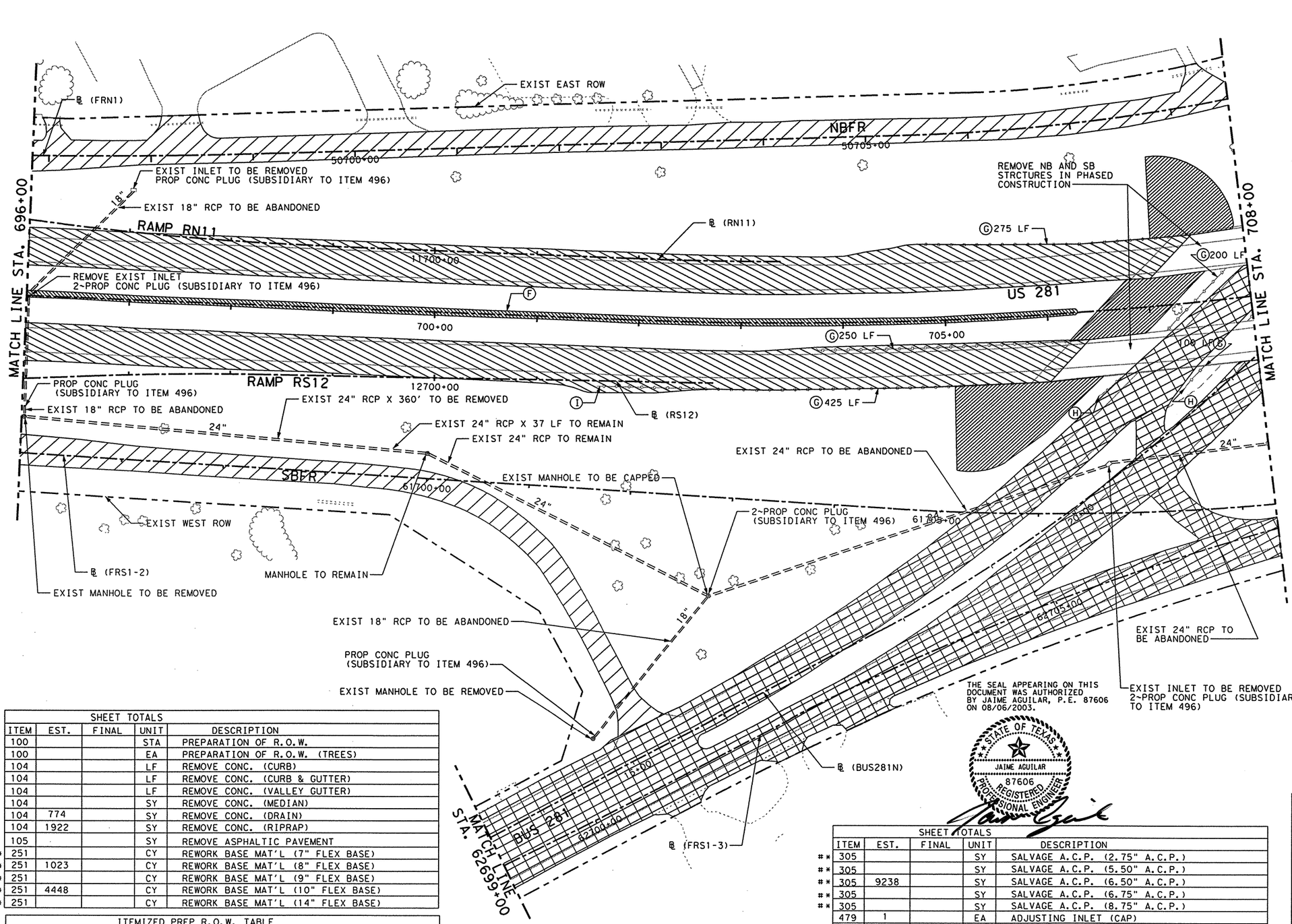

REMOVAL LEGEND:

- 22.75" PAVEMENT 8.75" A.C.P. - REWORK 14.0" FLEX - REWORK
- 14.5" PAVEMENT 5.5" A.C.P. - REWORK 9.0" FLEX - REWORK
- 15.5" PAVEMENT 6.5" A.C.P. - REWORK 9.0" FLEX - REWORK
- 13.75" PAVEMENT 6.75" A.C.P. - REWORK 7.0" FLEX - REWORK
- 12.5" PAVEMENT 5.5" A.C.P. - REWORK 7.0" FLEX - REWORK
- 11.75" PAVEMENT 2.75" A.C.P. - REWORK 9.0" FLEX - REWORK
- 16.5" PAVEMENT 6.5" A.C.P. - REWORK 10.0" FLEX - REWORK
- 8.0" PAVEMENT 8" FLEX - REWORK
- 10.0" PAVEMENT 10" FLEX - REWORK
- 4" CONCRETE SIDEWALK REMOVAL
- CONCRETE MEDIAN REMOVAL
- CONCRETE RIPRAP REMOVAL
- A.C.P. REMOVAL
- BRICK PAVER REMOVAL
- — — SAW CUT LINE
- Ⓐ CONCRETE CURB REMOVAL
- Ⓑ CONCRETE CURB & GUTTER REMOVAL
- Ⓒ CONCRETE VALLEY GUTTER REMOVAL
- Ⓓ TYPE 2 C.T.B. REMOVAL (CAST IN PLACE)
- Ⓔ C.T.B. REMOVAL (PRE-CAST)
- Ⓕ CONCRETE DRAIN REMOVAL
- Ⓖ METAL BEAM GUARD FENCE REMOVAL
- Ⓗ TERMINAL-ANCHOR-SECTION REMOVAL
- Ⓘ SINGLE GUARD RAIL TERMINAL
- Ⓙ TIMBER POST & CABLE RMV (PREP. ROW)
- Ⓚ PALM TREE TO BE RELOCATED
- Ⓛ FENCE REMOVAL (PREP. R.O.W.)
- Ⓜ TREE REMOVAL
- Ⓝ EXIST. STRUCTURE TO BE REMOVED

SHEET TOTALS				
ITEM	EST.	FINAL	UNIT	DESCRIPTION
100			STA	PREPARATION OF R.O.W.
100			EA	PREPARATION OF R.O.W. (TREES)
104			LF	REMOVE CONC. (CURB)
104			LF	REMOVE CONC. (CURB & GUTTER)
104			LF	REMOVE CONC. (VALLEY GUTTER)
104			SY	REMOVE CONC. (MEDIAN)
104	774		SY	REMOVE CONC. (DRAIN)
104	1922		SY	REMOVE CONC. (RIPRAP)
105			SY	REMOVE ASPHALTIC PAVEMENT
* 251			CY	REWORK BASE MAT'L (7" FLEX BASE)
* 251	1023		CY	REWORK BASE MAT'L (8" FLEX BASE)
* 251			CY	REWORK BASE MAT'L (9" FLEX BASE)
* 251	4448		CY	REWORK BASE MAT'L (10" FLEX BASE)
* 251			CY	REWORK BASE MAT'L (14" FLEX BASE)

ITEMIZED PREP R.O.W. TABLE				
ITEM	EST.	FINAL	UNIT	DESCRIPTION
$ 100			LF	TIMBER POST & CABLE
$ 100			LF	CHAIN LINK FENCE
$ 100			STA	SHRUBS

$ TO BE PAID FOR UNDER PREP. R.O.W. (STA.) FOR CONTRACTOR'S INFORMATION ONLY.
* QUANTITIES REFLECT 85% SALVAGEABLE RATE.
# A.C.P. TO BE USED AS ITEM 251

ALL PALM TREES SHALL BE RELOCATED TO AREAS WITHIN THE PROJECT LIMITS.
CONTRACTOR IS TO CONTACT THE PROJECT ENGINEER FOR MARKING SPECIFIC LOCATIONS.

NOTES:

1. SAVLAGED MBGF AND POSTS SHALL BE RETURNED TO THE PHARR MAINTENANCE YARD.

SHEET TOTALS				
ITEM	EST.	FINAL	UNIT	DESCRIPTION
# * 305			SY	SALVAGE A.C.P. (2.75" A.C.P.)
# * 305			SY	SALVAGE A.C.P. (5.50" A.C.P.)
# * 305	9238		SY	SALVAGE A.C.P. (6.50" A.C.P.)
# * 305			SY	SALVAGE A.C.P. (6.75" A.C.P.)
# * 305			SY	SALVAGE A.C.P. (8.75" A.C.P.)
479	1		EA	ADJUSTING INLET (CAP)
496	360		LF	REMOVE OLD STR. (PIPE)
496	5		EA	REMOVE OLD STR. (SMALL)
496	2		EA	REMOVE OLD STR. (LARGE) (BRIDGE)
542	1250		LF	REMOVE METAL BEAM GUARD FENCE
542	2		EA	REMOVE SINGLE GUARDRAIL TERMINAL
542	3		EA	REMOVE TERMINAL ANCHOR SECTION
1057			EA	TRANSPLANTING TREES & PALMS
5190			SY	REMOVE & RELOCATE SALVAGE LANDSPLUGE PAVERS

STATE OF TEXAS
JAIME AGUILAR
87606
REGISTERED
PROFESSIONAL ENGINEER

Parsons Brinckerhoff Quade & Douglas Inc.

Texas Department of Transportation
© 2003 by TxDOT

US 281
REMOVAL ITEM DETAILS

STA. 696+00 "BL1" TO
STA. 708+00 "BL1"

PLAN 1"= 100' HORIZ

SHEET 8 OF 22				281REM08.DGN			
DESIGNED: TT	FED. RD DIV. NO.	STATE	FEDERAL AID PROJECT NO.				HIGHWAY No.
CHECKED: DM	6	TEXAS					US 281
DRAWN: JT	STATE DISTRICT	COUNTY	CONTROL No.	SECTION No.	JOB No.	SHEET No.	
CHECKED: DM	PHARR	HIDALGO	0255	08	091	233	

Carlos F. Gonzalez
06:48:57 PM
08/06/2003
T:\223220\CADD\Sheets\Removals\281rem08.dgn

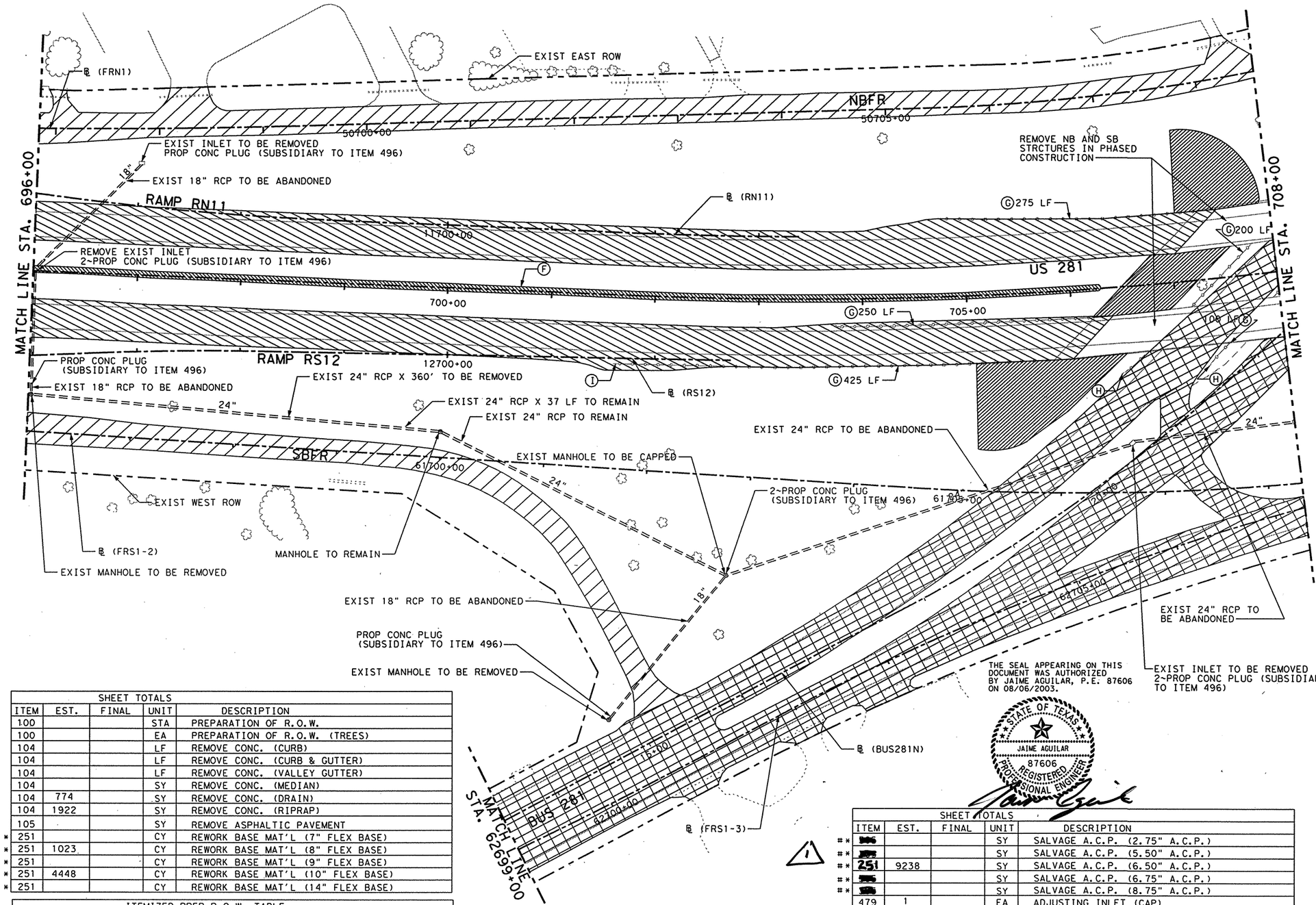

REMOVAL LEGEND:

- 22.75" PAVEMENT 8.75" A.C.P. - REWORK 14.0" FLEX - REWORK
- 14.5" PAVEMENT 5.5" A.C.P. - REWORK 9.0" FLEX - REWORK
- 15.5" PAVEMENT 6.5" A.C.P. - REWORK 9.0" FLEX - REWORK
- 13.75" PAVEMENT 6.75" A.C.P. - REWORK 7.0" FLEX - REWORK
- 12.5" PAVEMENT 5.5" A.C.P. - REWORK 7.0" FLEX - REWORK
- 11.75" PAVEMENT 2.75" A.C.P. - REWORK 9.0" FLEX - REWORK
- 16.5" PAVEMENT 6.5" A.C.P. - REWORK 10.0" FLEX - REWORK
- 8.0" PAVEMENT 8" FLEX - REWORK
- 10.0" PAVEMENT 10" FLEX - REWORK
- 4" CONCRETE SIDEWALK REMOVAL
- CONCRETE MEDIAN REMOVAL
- CONCRETE RIPRAP REMOVAL
- A.C.P. REMOVAL
- BRICK PAVER REMOVAL
- SAW CUT LINE
- Ⓐ CONCRETE CURB REMOVAL
- Ⓑ CONCRETE CURB & GUTTER REMOVAL
- Ⓒ CONCRETE VALLEY GUTTER REMOVAL
- Ⓓ TYPE 2 C.T.B. REMOVAL (CAST IN PLACE)
- Ⓔ C.T.B. REMOVAL (PRE-CAST)
- Ⓕ CONCRETE DRAIN REMOVAL
- Ⓖ METAL BEAM GUARD FENCE REMOVAL
- Ⓗ TERMINAL-ANCHOR-SECTION REMOVAL
- Ⓘ SINGLE GUARD RAIL TERMINAL
- Ⓙ TIMBER POST & CABLE RMV (PREP. ROW)
- Ⓚ PALM TREE TO BE RELOCATED
- Ⓛ FENCE REMOVAL (PREP. R.O.W.)
- Ⓜ TREE REMOVAL
- Ⓝ EXIST. STRUCTURE TO BE REMOVED

SHEET TOTALS				
ITEM	EST.	FINAL	UNIT	DESCRIPTION
100			STA	PREPARATION OF R.O.W.
100			EA	PREPARATION OF R.O.W. (TREES)
104			LF	REMOVE CONC. (CURB)
104			LF	REMOVE CONC. (CURB & GUTTER)
104			LF	REMOVE CONC. (VALLEY GUTTER)
104			SY	REMOVE CONC. (MEDIAN)
104	774		SY	REMOVE CONC. (DRAIN)
104	1922		SY	REMOVE CONC. (RIPRAP)
105			SY	REMOVE ASPHALTIC PAVEMENT
* 251			CY	REWORK BASE MAT'L (7" FLEX BASE)
* 251	1023		CY	REWORK BASE MAT'L (8" FLEX BASE)
* 251			CY	REWORK BASE MAT'L (9" FLEX BASE)
* 251	4448		CY	REWORK BASE MAT'L (10" FLEX BASE)
* 251			CY	REWORK BASE MAT'L (14" FLEX BASE)

ITEMIZED PREP R.O.W. TABLE				
ITEM	EST.	FINAL	UNIT	DESCRIPTION
$ 100			LF	TIMBER POST & CABLE
$ 100			LF	CHAIN LINK FENCE
$ 100			STA	SHRUBS

$ TO BE PAID FOR UNDER PREP. R.O.W. (STA.) FOR CONTRACTOR'S INFORMATION ONLY.
* QUANTITIES REFLECT 85% SALVAGEABLE RATE.
# A.C.P. TO BE USED AS ITEM 251

ALL PALM TREES SHALL BE RELOCATED TO AREAS WITHIN THE PROJECT LIMITS.
CONTRACTOR IS TO CONTACT THE PROJECT ENGINEER FOR MARKING SPECIFIC LOCATIONS.

NOTES:

1. SAVLAGED MBGF AND POSTS SHALL BE RETURNED TO THE PHARR MAINTENANCE YARD.

1 REVISED 9-26-03

SHEET TOTALS				
ITEM	EST.	FINAL	UNIT	DESCRIPTION
** [illegible]			SY	SALVAGE A.C.P. (2.75" A.C.P.)
** [illegible]			SY	SALVAGE A.C.P. (5.50" A.C.P.)
** 251	9238		SY	SALVAGE A.C.P. (6.50" A.C.P.)
** [illegible]			SY	SALVAGE A.C.P. (6.75" A.C.P.)
** [illegible]			SY	SALVAGE A.C.P. (8.75" A.C.P.)
479	1		EA	ADJUSTING INLET (CAP)
496	360		LF	REMOVE OLD STR. (PIPE)
496	5		EA	REMOVE OLD STR. (SMALL)
496	2		EA	REMOVE OLD STR. (LARGE) (BRIDGE)
542	1250		LF	REMOVE METAL BEAM GUARD FENCE
542	2		EA	REMOVE SINGLE GUARDRAIL TERMINAL
542	3		EA	REMOVE TERMINAL ANCHOR SECTION
1057			EA	TRANSPLANTING TREES & PALMS
5190			SY	REMOVE & RELOCATE SALVAGE LANDSPLUGE PAVERS

STATE OF TEXAS
JAIME AGUILAR
87606
REGISTERED PROFESSIONAL ENGINEER

Parsons Brinckerhoff Quade & Douglas Inc.

Texas Department of Transportation
© 2003 by TxDOT

US 281
REMOVAL ITEM DETAILS

STA. 696+00 "BL1" TO
STA. 708+00 "BL1"

PLAN 1"= 100' HORIZ

SHEET 8 OF 22				281REM08.DGN			
DESIGNED: TT	FED. RD DIV. No.	STATE	FEDERAL AID PROJECT No.			HIGHWAY No.	
CHECKED: DM	6	TEXAS				US 281	
DRAWN: JT	STATE DISTRICT	COUNTY	CONTROL No.	SECTION No.	JOB No.	SHEET No.	
CHECKED: DM	PHARR	HIDALGO	0255	08	091	233	

NAME
12:20:54 PM
07/02/2003
i:\22322o\cadd\sheets\removals\281rem08a.dgn

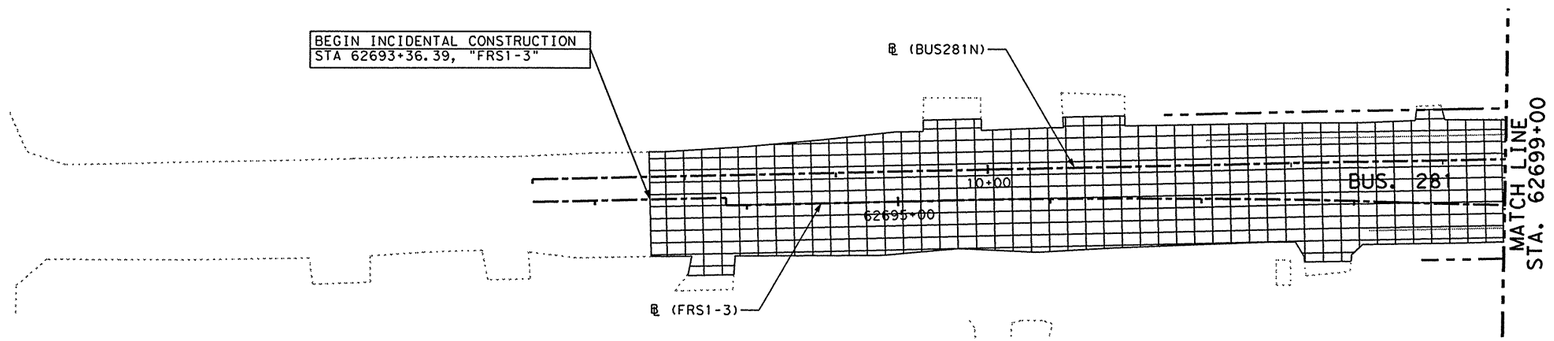

REMOVAL LEGEND:

- 22.75" PAVEMENT 8.75" A.C.P. - REWORK 14.0" FLEX - REWORK
- 14.5" PAVEMENT 5.5" A.C.P. - REWORK 9.0" FLEX - REWORK
- 15.5" PAVEMENT 6.5" A.C.P. - REWORK 9.0" FLEX - REWORK
- 13.75" PAVEMENT 6.75" A.C.P. - REWORK 7.0" FLEX - REWORK
- 12.5" PAVEMENT 5.5" A.C.P. - REWORK 7.0" FLEX - REWORK
- 11.75" PAVEMENT 2.75" A.C.P. - REWORK 9.0" FLEX - REWORK
- 16.5" PAVEMENT 6.5" A.C.P. - REWORK 10.0" FLEX - REWORK
- 8.0" PAVEMENT 8" FLEX - REWORK
- 10.0" PAVEMENT 10" FLEX - REWORK
- 4" CONCRETE SIDEWALK REMOVAL
- CONCRETE MEDIAN REMOVAL
- CONCRETE RIPRAP REMOVAL
- A.C.P. REMOVAL
- BRICK PAVER REMOVAL
- — — SAW CUT LINE
- (A) CONCRETE CURB REMOVAL
- (B) CONCRETE CURB & GUTTER REMOVAL
- (C) CONCRETE VALLEY GUTTER REMOVAL
- (D) TYPE 2 C.T.B. REMOVAL (CAST IN PLACE)
- (E) C.T.B. REMOVAL (PRE-CAST)
- (F) CONCRETE DRAIN REMOVAL
- (G) METAL BEAM GUARD FENCE REMOVAL
- (H) TERMINAL-ANCHOR-SECTION REMOVAL
- (I) SINGLE GUARD RAIL TERMINAL
- (J) TIMBER POST & CABLE RMV (PREP. ROW)
- (K) PALM TREE TO BE RELOCATED
- (L) FENCE REMOVAL (PREP. R.O.W.)
- (M) TREE REMOVAL
- (N) EXIST. STRUCTURE TO BE REMOVED

SHEET TOTALS				
ITEM	EST.	FINAL	UNIT	DESCRIPTION
100			STA	PREPARATION OF R.O.W.
100			EA	PREPARATION OF R.O.W. (TREES)
104			LF	REMOVE CONC. (CURB)
104			LF	REMOVE CONC. (CURB & GUTTER)
104			LF	REMOVE CONC. (VALLEY GUTTER)
104			SY	REMOVE CONC. (MEDIAN)
104			SY	REMOVE CONC. (DRAIN)
104			SY	REMOVE CONC. (RIPRAP)
105			SY	REMOVE ASPHALTIC PAVEMENT
* 251			CY	REWORK BASE MAT'L (7" FLEX BASE)
* 251			CY	REWORK BASE MAT'L (8" FLEX BASE)
* 251			CY	REWORK BASE MAT'L (9" FLEX BASE)
* 251	1203		CY	REWORK BASE MAT'L (10" FLEX BASE)
* 251			CY	REWORK BASE MAT'L (14" FLEX BASE)

ITEMIZED PREP R.O.W. TABLE				
ITEM	EST.	FINAL	UNIT	DESCRIPTION
$ 100			LF	TIMBER POST & CABLE
$ 100			LF	CHAIN LINK FENCE
$ 100			STA	SHRUBS

$ TO BE PAID FOR UNDER PREP. R.O.W. (STA.) FOR CONTRACTOR'S INFORMATION ONLY.
* QUANTITIES REFLECT 85% SALVAGEABLE RATE.
# A.C.P. TO BE USED AS ITEM 251

ALL PALM TREES SHALL BE RELOCATED TO AREAS WITHIN THE PROJECT LIMITS.
CONTRACTOR IS TO CONTACT THE PROJECT ENGINEER FOR MARKING SPECIFIC LOCATIONS.

THE SEAL APPEARING ON THIS DOCUMENT WAS AUTHORIZED BY JAIME AGUILAR, P.E. 87606 ON 07/02/2003.

STATE OF TEXAS
JAIME AGUILAR
87606
REGISTERED PROFESSIONAL ENGINEER

SHEET TOTALS				
ITEM	EST.	FINAL	UNIT	DESCRIPTION
#* 305			SY	SALVAGE A.C.P. (2.75" A.C.P.)
#* 305			SY	SALVAGE A.C.P. (5.50" A.C.P.)
#* 305			SY	SALVAGE A.C.P. (6.50" A.C.P.)
#* 305			SY	SALVAGE A.C.P. (6.75" A.C.P.)
#* 305			SY	SALVAGE A.C.P. (8.75" A.C.P.)
479			EA	ADJUSTING INLET (PLUG)
496			LF	REMOVE OLD STR. (PIPE)
496			EA	REMOVE OLD STR. (SMALL)
542			LF	REMOVE METAL BEAM GUARD FENCE
542			EA	REMOVE SINGLE GUARDRAIL TERMINAL
542			EA	REMOVE TERMINAL ANCHOR SECTION
1057			EA	TRANSPLANTING TREES & PALMS
5190			SY	REMOVE & RELOCATE SALVAGE LANDSPLUGE PAVERS

Parsons Brinckerhoff Quade & Douglas Inc.

Texas Department of Transportation

© 2003 by TxDOT

US 281
REMOVAL ITEM DETAILS

STA. 62692+59.24 "FRS1-3" TO
STA. 62699+00.00 "FRS1-3"

PLAN 1"= 100' HORIZ

SHEET 8A OF 22 | 281REM08A.DGN

DESIGNED: TT	FED. RD DIV. No.	STATE	FEDERAL AID PROJECT No.			HIGHWAY No.
CHECKED: DM	6	TEXAS				US 281
DRAWN: JT	STATE DISTRICT	COUNTY	CONTROL No.	SECTION No.	JOB No.	SHEET No.
CHECKED: DM	PHARR	HIDALGO	0255	08	091	233A

NAME
12:20:54 PM
07/02/2003
i:\22322\coadd\sheets\removals\281rem08a.dgn

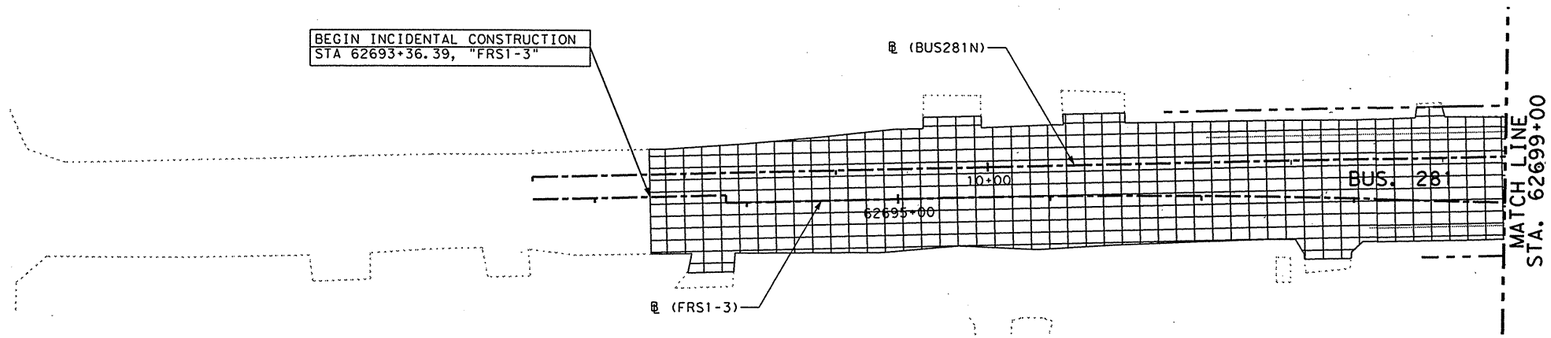

REMOVAL LEGEND:

- 22.75" PAVEMENT 8.75" A.C.P. - REWORK 14.0" FLEX - REWORK
- 14.5" PAVEMENT 5.5" A.C.P. - REWORK 9.0" FLEX - REWORK
- 15.5" PAVEMENT 6.5" A.C.P. - REWORK 9.0" FLEX - REWORK
- 13.75" PAVEMENT 6.75" A.C.P. - REWORK 7.0" FLEX - REWORK
- 12.5" PAVEMENT 5.5" A.C.P. - REWORK 7.0" FLEX - REWORK
- 11.75" PAVEMENT 2.75" A.C.P. - REWORK 9.0" FLEX - REWORK
- 16.5" PAVEMENT 6.5" A.C.P. - REWORK 10.0" FLEX - REWORK
- 8.0" PAVEMENT 8" FLEX - REWORK
- 10.0" PAVEMENT 10" FLEX - REWORK
- 4" CONCRETE SIDEWALK REMOVAL
- CONCRETE MEDIAN REMOVAL
- CONCRETE RIPRAP REMOVAL
- A.C.P. REMOVAL
- BRICK PAVER REMOVAL
- — — SAW CUT LINE
- (A) CONCRETE CURB REMOVAL
- (B) CONCRETE CURB & GUTTER REMOVAL
- (C) CONCRETE VALLEY GUTTER REMOVAL
- (D) TYPE 2 C.T.B. REMOVAL (CAST IN PLACE)
- (E) C.T.B. REMOVAL (PRE-CAST)
- (F) CONCRETE DRAIN REMOVAL
- (G) METAL BEAM GUARD FENCE REMOVAL
- (H) TERMINAL-ANCHOR-SECTION REMOVAL
- (I) SINGLE GUARD RAIL TERMINAL
- (J) TIMBER POST & CABLE RMV (PREP. ROW)
- (K) PALM TREE TO BE RELOCATED
- (L) FENCE REMOVAL (PREP. R.O.W.)
- (M) TREE REMOVAL
- (N) EXIST. STRUCTURE TO BE REMOVED

SHEET TOTALS				
ITEM	EST.	FINAL	UNIT	DESCRIPTION
100			STA	PREPARATION OF R.O.W.
100			EA	PREPARATION OF R.O.W. (TREES)
104			LF	REMOVE CONC. (CURB)
104			LF	REMOVE CONC. (CURB & GUTTER)
104			LF	REMOVE CONC. (VALLEY GUTTER)
104			SY	REMOVE CONC. (MEDIAN)
104			SY	REMOVE CONC. (DRAIN)
104			SY	REMOVE CONC. (RIPRAP)
105			SY	REMOVE ASPHALTIC PAVEMENT
* 251			CY	REWORK BASE MAT'L (7" FLEX BASE)
* 251			CY	REWORK BASE MAT'L (8" FLEX BASE)
* 251			CY	REWORK BASE MAT'L (9" FLEX BASE)
* 251	1203		CY	REWORK BASE MAT'L (10" FLEX BASE)
* 251			CY	REWORK BASE MAT'L (14" FLEX BASE)

ITEMIZED PREP R.O.W. TABLE				
ITEM	EST.	FINAL	UNIT	DESCRIPTION
$ 100			LF	TIMBER POST & CABLE
$ 100			LF	CHAIN LINK FENCE
$ 100			STA	SHRUBS

$ TO BE PAID FOR UNDER PREP. R.O.W. (STA.) FOR CONTRACTOR'S INFORMATION ONLY.
* QUANTITIES REFLECT 85% SALVAGEABLE RATE.
# A.C.P. TO BE USED AS ITEM 251

ALL PALM TREES SHALL BE RELOCATED TO AREAS WITHIN THE PROJECT LIMITS.
CONTRACTOR IS TO CONTACT THE PROJECT ENGINEER FOR MARKING SPECIFIC LOCATIONS.

1 REVISED 9-26-03

THE SEAL APPEARING ON THIS DOCUMENT WAS AUTHORIZED BY JAIME AGUILAR, P.E. 87606 ON 07/02/2003.

STATE OF TEXAS
JAIME AGUILAR
87606
REGISTERED
PROFESSIONAL ENGINEER

SHEET TOTALS				
ITEM	EST.	FINAL	UNIT	DESCRIPTION
# * ~~256~~			SY	SALVAGE A.C.P. (2.75" A.C.P.)
# * ~~255~~			SY	SALVAGE A.C.P. (5.50" A.C.P.)
# * ~~268~~			SY	SALVAGE A.C.P. (6.50" A.C.P.)
# * ~~276~~			SY	SALVAGE A.C.P. (6.75" A.C.P.)
# * ~~285~~			SY	SALVAGE A.C.P. (8.75" A.C.P.)
479			EA	ADJUSTING INLET (PLUG)
496			LF	REMOVE OLD STR. (PIPE)
496			EA	REMOVE OLD STR. (SMALL)
542			LF	REMOVE METAL BEAM GUARD FENCE
542			EA	REMOVE SINGLE GUARDRAIL TERMINAL
542			EA	REMOVE TERMINAL ANCHOR SECTION
1057			EA	TRANSPLANTING TREES & PALMS
5190			SY	REMOVE & RELOCATE SALVAGE LANDSPLUGE PAVERS

Parsons Brinckerhoff Quade & Douglas Inc.

Texas Department of Transportation

© 2003 by TxDOT

US 281
REMOVAL ITEM DETAILS

STA. 62692+59.24 "FRS1-3" TO
STA. 62699+00.00 "FRS1-3"

PLAN 1"= 100' HORIZ

SHEET 8A OF 22 | 281REM08A.DGN

DESIGNED: TT	FED. RD DIV. NO.	STATE	FEDERAL AID PROJECT NO.		HIGHWAY NO.	
CHECKED: DM	6	TEXAS			US 281	
DRAWN: JT	STATE DISTRICT	COUNTY	CONTROL NO.	SECTION NO.	JOB NO.	SHEET NO.
CHECKED: DM	PHARR	HIDALGO	0255	08	091	233A

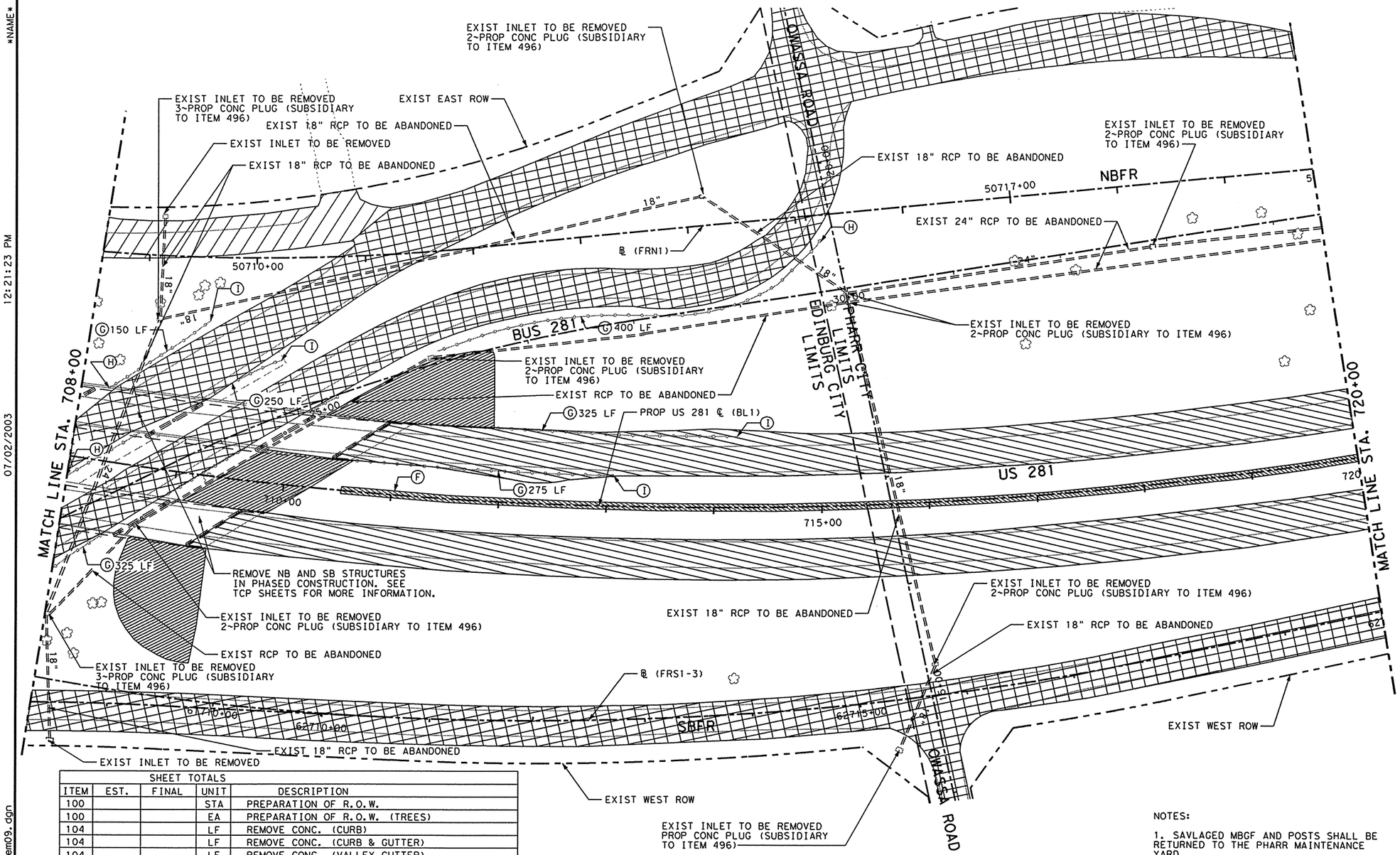

REMOVAL LEGEND:

- 22.75" PAVEMENT 8.75" A.C.P. - REWORK 14.0" FLEX - REWORK
- 14.5" PAVEMENT 5.5" A.C.P. - REWORK 9.0" FLEX - REWORK
- 15.5" PAVEMENT 6.5" A.C.P. - REWORK 9.0" FLEX - REWORK
- 13.75" PAVEMENT 6.75" A.C.P. - REWORK 7.0" FLEX - REWORK
- 12.5" PAVEMENT 5.5" A.C.P. - REWORK 7.0" FLEX - REWORK
- 11.75" PAVEMENT 2.75" A.C.P. - REWORK 9.0" FLEX - REWORK
- 16.5" PAVEMENT 6.5" A.C.P. - REWORK 10.0" FLEX - REWORK
- 8.0" PAVEMENT 8" FLEX - REWORK
- 10.0" PAVEMENT 10" FLEX - REWORK
- 4" CONCRETE SIDEWALK REMOVAL
- CONCRETE MEDIAN REMOVAL
- CONCRETE RIPRAP REMOVAL
- A.C.P. REMOVAL
- BRICK PAVER REMOVAL
- SAW CUT LINE
- (A) CONCRETE CURB REMOVAL
- (B) CONCRETE CURB & GUTTER REMOVAL
- (C) CONCRETE VALLEY GUTTER REMOVAL
- (D) TYPE 2 C.T.B. REMOVAL (CAST IN PLACE)
- (E) C.T.B. REMOVAL (PRE-CAST)
- (F) CONCRETE DRAIN REMOVAL
- (G) METAL BEAM GUARD FENCE REMOVAL
- (H) TERMINAL-ANCHOR-SECTION REMOVAL
- (I) SINGLE GUARD RAIL TERMINAL
- (J) TIMBER POST & CABLE RMV (PREP. ROW)
- (K) PALM TREE TO BE RELOCATED
- (L) FENCE REMOVAL (PREP. R.O.W.)
- (M) TREE REMOVAL
- (N) EXIST. STRUCTURE TO BE REMOVED

SHEET TOTALS				
ITEM	EST.	FINAL	UNIT	DESCRIPTION
100			STA	PREPARATION OF R.O.W.
100			EA	PREPARATION OF R.O.W. (TREES)
104			LF	REMOVE CONC. (CURB)
104			LF	REMOVE CONC. (CURB & GUTTER)
104			LF	REMOVE CONC. (VALLEY GUTTER)
104			SY	REMOVE CONC. (MEDIAN)
104	694		SY	REMOVE CONC. (DRAIN)
104	2155		SY	REMOVE CONC. (RIPRAP)
105			SY	REMOVE ASPHALTIC PAVEMENT
* 251			CY	REWORK BASE MAT'L (7" FLEX BASE)
* 251	193		CY	REWORK BASE MAT'L (8" FLEX BASE)
* 251			CY	REWORK BASE MAT'L (9" FLEX BASE)
* 251	5676		CY	REWORK BASE MAT'L (10" FLEX BASE)
* 251			CY	REWORK BASE MAT'L (14" FLEX BASE)

ITEMIZED PREP R.O.W. TABLE				
ITEM	EST.	FINAL	UNIT	DESCRIPTION
$ 100			LF	TIMBER POST & CABLE
$ 100			LF	CHAIN LINK FENCE
$ 100			STA	SHRUBS

$ TO BE PAID FOR UNDER PREP. R.O.W. (STA.) FOR CONTRACTOR'S INFORMATION ONLY.
* QUANTITIES REFLECT 85% SALVAGEABLE RATE.
# A.C.P. TO BE USED AS ITEM 251
ALL PALM TREES SHALL BE RELOCATED TO AREAS WITHIN THE PROJECT LIMITS.
CONTRACTOR IS TO CONTACT THE PROJECT ENGINEER FOR MARKING SPECIFIC LOCATIONS.

SHEET TOTALS				
ITEM	EST.	FINAL	UNIT	DESCRIPTION
## 305			SY	SALVAGE A.C.P. (2.75" A.C.P.)
## 305			SY	SALVAGE A.C.P. (5.50" A.C.P.)
## 305	8526		SY	SALVAGE A.C.P. (6.50" A.C.P.)
## 305			SY	SALVAGE A.C.P. (6.75" A.C.P.)
## 305			SY	SALVAGE A.C.P. (8.75" A.C.P.)
479			EA	ADJUSTING INLET (CAP)
496			LF	REMOVE OLD STR. (PIPE)
496	12		EA	REMOVE OLD STR. (SMALL)
542	1725		LF	REMOVE METAL BEAM GUARD FENCE
542	4		EA	REMOVE SINGLE GUARDRAIL TERMINAL
542	3		EA	REMOVE TERMINAL ANCHOR SECTION
1057			EA	TRANSPLANTING TREES & PALMS
5190			SY	REMOVE & RELOCATE SALVAGE LANDSCAPE PAVERS

NOTES:

1. SAVLAGED MBGF AND POSTS SHALL BE RETURNED TO THE PHARR MAINTENANCE YARD.

THE SEAL APPEARING ON THIS DOCUMENT WAS AUTHORIZED BY JAIME AGUILAR, P.E. 87606 ON 07/02/2003.

STATE OF TEXAS
JAIME AGUILAR
87606
REGISTERED PROFESSIONAL ENGINEER

Parsons Brinckerhoff Quade & Douglas Inc.

Texas Department of Transportation

© 2003 by TxDOT

US 281
REMOVAL ITEM DETAILS

STA. 708+00 "BL1" TO
STA. 720+00 "BL1"

PLAN 1"= 100' HORIZ

SHEET 9 OF 22			281REM09.DGN					
DESIGNED: TT	FED. RD DIV. No.	STATE	FEDERAL AID PROJECT No.				HIGHWAY No.	
CHECKED: DM	6	TEXAS					US 281	
DRAWN: JT	STATE DISTRICT	COUNTY	CONTROL No.	SECTION No.	JOB No.	SHEET No.		
CHECKED: DM	PHARR	HIDALGO	0255	08	091	234		

NAME
12:21:23 PM
07/02/2003
i:\22322e\cadd\sheets\removals\281rem09.dgn

NAME
12:21:23 PM
07/02/2003
i:\22322o\cadd\sheets\removals\281rem09.dgn

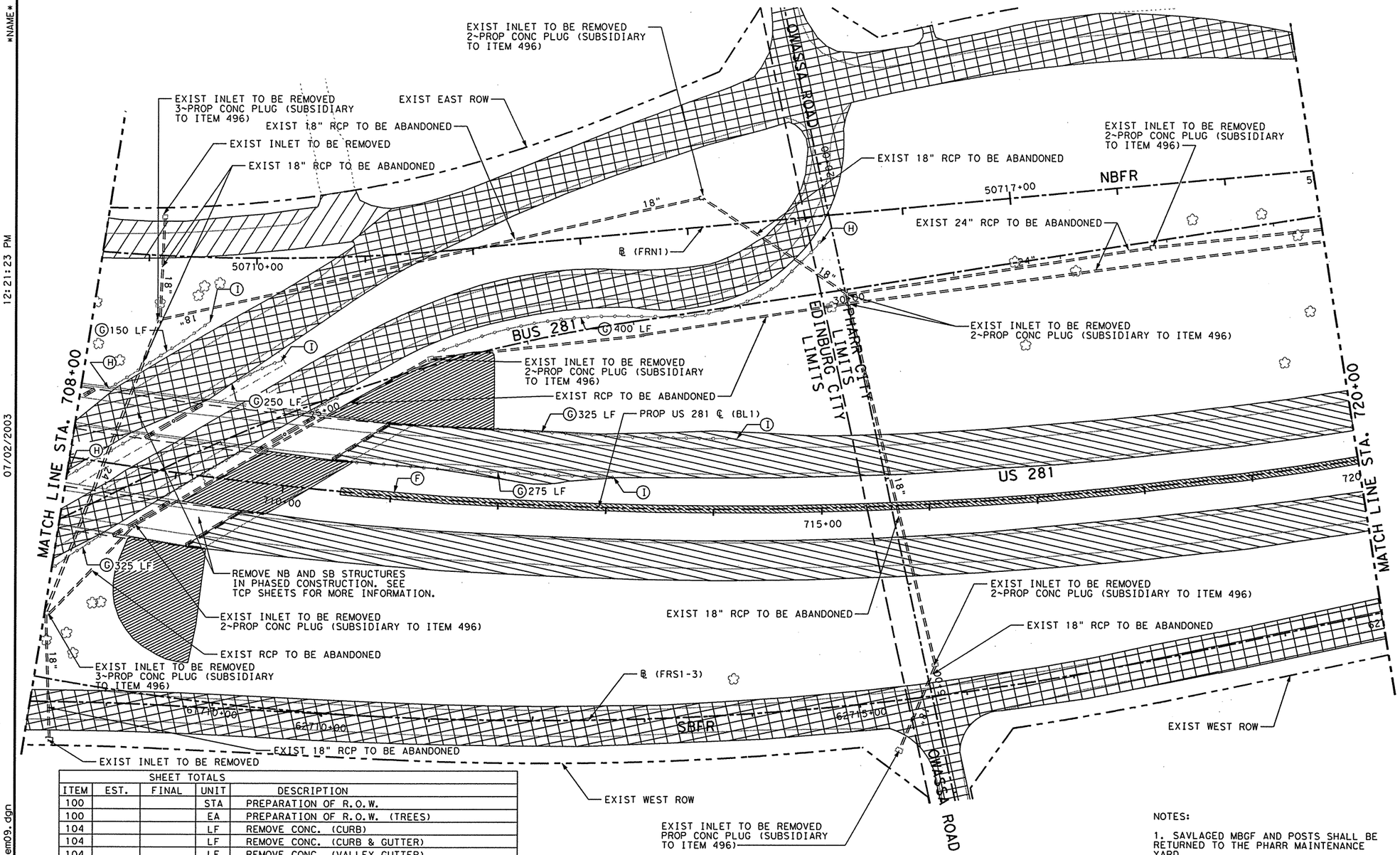

REMOVAL LEGEND:

- 22.75" PAVEMENT 8.75" A.C.P. - REWORK 14.0" FLEX - REWORK
- 14.5" PAVEMENT 5.5" A.C.P. - REWORK 9.0" FLEX - REWORK
- 15.5" PAVEMENT 6.5" A.C.P. - REWORK 9.0" FLEX - REWORK
- 13.75" PAVEMENT 6.75" A.C.P. - REWORK 7.0" FLEX - REWORK
- 12.5" PAVEMENT 5.5" A.C.P. - REWORK 7.0" FLEX - REWORK
- 11.75" PAVEMENT 2.75" A.C.P. - REWORK 9.0" FLEX - REWORK
- 16.5" PAVEMENT 6.5" A.C.P. - REWORK 10.0" FLEX - REWORK
- 8.0" PAVEMENT 8" FLEX - REWORK
- 10.0" PAVEMENT 10" FLEX - REWORK
- 4" CONCRETE SIDEWALK REMOVAL
- CONCRETE MEDIAN REMOVAL
- CONCRETE RIPRAP REMOVAL
- A.C.P. REMOVAL
- BRICK PAVER REMOVAL
- — — SAW CUT LINE
- (A) CONCRETE CURB REMOVAL
- (B) CONCRETE CURB & GUTTER REMOVAL
- (C) CONCRETE VALLEY GUTTER REMOVAL
- (D) TYPE 2 C.T.B. REMOVAL (CAST IN PLACE)
- (E) C.T.B. REMOVAL (PRE-CAST)
- (F) CONCRETE DRAIN REMOVAL
- (G) METAL BEAM GUARD FENCE REMOVAL
- (H) TERMINAL-ANCHOR-SECTION REMOVAL
- (I) SINGLE GUARD RAIL TERMINAL
- (J) TIMBER POST & CABLE RMV (PREP. ROW)
- (K) PALM TREE TO BE RELOCATED
- (L) FENCE REMOVAL (PREP. R.O.W.)
- (M) TREE REMOVAL
- (N) EXIST. STRUCTURE TO BE REMOVED

SHEET TOTALS				
ITEM	EST.	FINAL	UNIT	DESCRIPTION
100			STA	PREPARATION OF R.O.W.
100			EA	PREPARATION OF R.O.W. (TREES)
104			LF	REMOVE CONC. (CURB)
104			LF	REMOVE CONC. (CURB & GUTTER)
104			LF	REMOVE CONC. (VALLEY GUTTER)
104			SY	REMOVE CONC. (MEDIAN)
104	694		SY	REMOVE CONC. (DRAIN)
104	2155		SY	REMOVE CONC. (RIPRAP)
105			SY	REMOVE ASPHALTIC PAVEMENT
* 251			CY	REWORK BASE MAT'L (7" FLEX BASE)
* 251	193		CY	REWORK BASE MAT'L (8" FLEX BASE)
* 251			CY	REWORK BASE MAT'L (9" FLEX BASE)
* 251	5676		CY	REWORK BASE MAT'L (10" FLEX BASE)
* 251			CY	REWORK BASE MAT'L (14" FLEX BASE)

ITEMIZED PREP R.O.W. TABLE				
ITEM	EST.	FINAL	UNIT	DESCRIPTION
$ 100			LF	TIMBER POST & CABLE
$ 100			LF	CHAIN LINK FENCE
$ 100			STA	SHRUBS

$ TO BE PAID FOR UNDER PREP. R.O.W. (STA.) FOR CONTRACTOR'S INFORMATION ONLY.
* QUANTITIES REFLECT 85% SALVAGEABLE RATE.
# A.C.P. TO BE USED AS ITEM 251
ALL PALM TREES SHALL BE RELOCATED TO AREAS WITHIN THE PROJECT LIMITS.
CONTRACTOR IS TO CONTACT THE PROJECT ENGINEER FOR MARKING SPECIFIC LOCATIONS.

SHEET TOTALS				
ITEM	EST.	FINAL	UNIT	DESCRIPTION
# * ~~300~~			SY	SALVAGE A.C.P. (2.75" A.C.P.)
# * ~~55~~			SY	SALVAGE A.C.P. (5.50" A.C.P.)
# * 251	8526		SY	SALVAGE A.C.P. (6.50" A.C.P.)
# * ~~505~~			SY	SALVAGE A.C.P. (6.75" A.C.P.)
# * ~~75~~			SY	SALVAGE A.C.P. (8.75" A.C.P.)
479			EA	ADJUSTING INLET (CAP)
496			LF	REMOVE OLD STR. (PIPE)
496	12		EA	REMOVE OLD STR. (SMALL)
542	1725		LF	REMOVE METAL BEAM GUARD FENCE
542	4		EA	REMOVE SINGLE GUARDRAIL TERMINAL
542	3		EA	REMOVE TERMINAL ANCHOR SECTION
1057			EA	TRANSPLANTING TREES & PALMS
5190			SY	REMOVE & RELOCATE SALVAGE LANDSCAPE PAVERS

NOTES:

1. SAVLAGED MBGF AND POSTS SHALL BE RETURNED TO THE PHARR MAINTENANCE YARD.

1 REVISED 9-26-03

THE SEAL APPEARING ON THIS DOCUMENT WAS AUTHORIZED BY JAIME AGUILAR, P.E. 87606 ON 07/02/2003.

STATE OF TEXAS
JAIME AGUILAR
87606
REGISTERED
PROFESSIONAL ENGINEER

Parsons Brinckerhoff Quade & Douglas Inc.

Texas Department of Transportation

© 2003 by TxDOT

US 281
REMOVAL ITEM DETAILS

STA. 708+00 "BL1" TO
STA. 720+00 "BL1"

PLAN 1"= 100' HORIZ

SHEET 9 OF 22						281REM09.DGN	
DESIGNED: TT	FED. RD DIV. No.	STATE	FEDERAL AID PROJECT No.			HIGHWAY No.	
CHECKED: DM	6	TEXAS				US 281	
DRAWN: JT	STATE DISTRICT	COUNTY	CONTROL No.	SECTION No.	JOB No.	SHEET No.	
CHECKED: DM	PHARR	HIDALGO	0255	08	091	234	

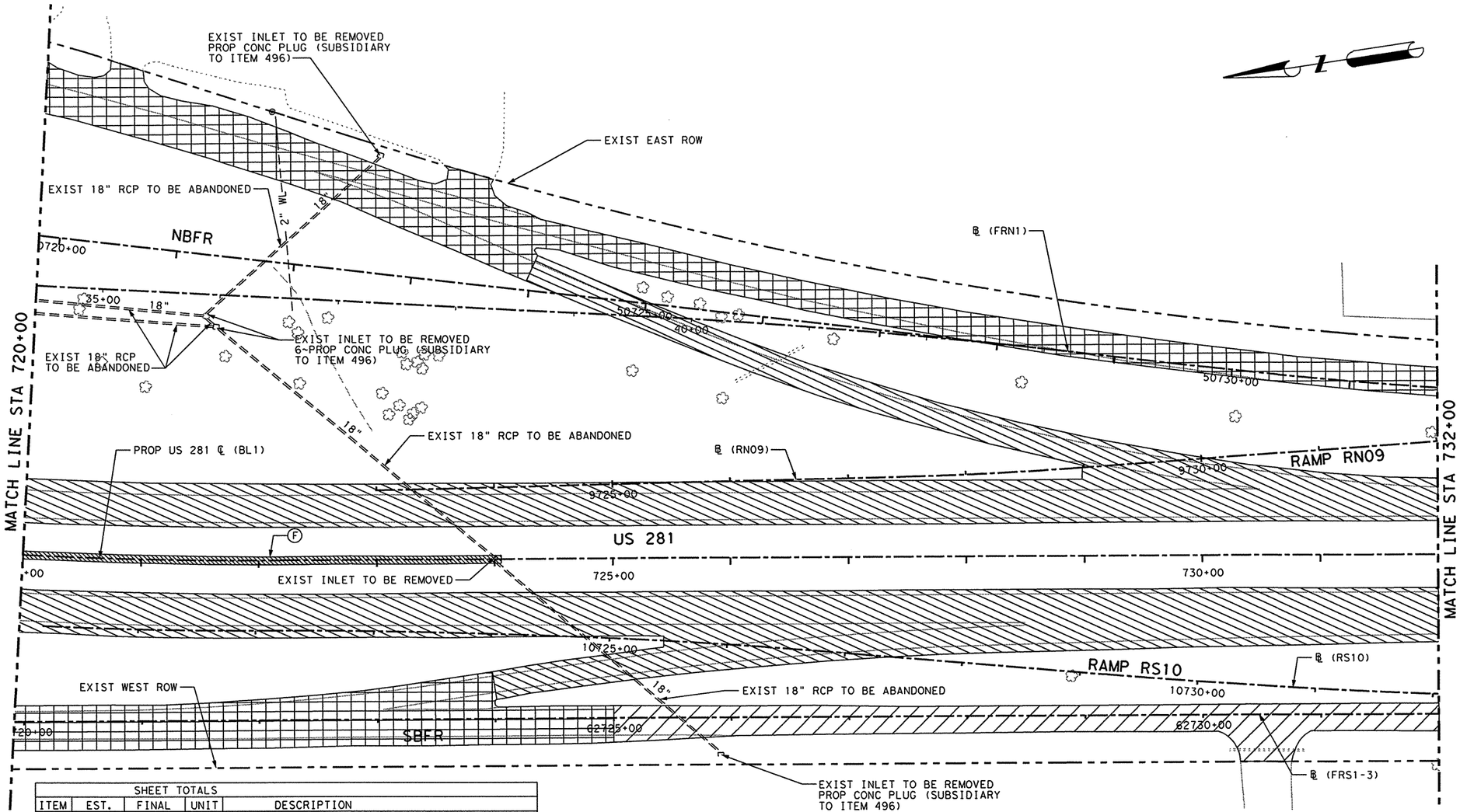

REMOVAL LEGEND:

- 22.75" PAVEMENT 8.75" A.C.P. - REWORK 14.0" FLEX - REWORK
- 14.5" PAVEMENT 5.5" A.C.P. - REWORK 9.0" FLEX - REWORK
- 15.5" PAVEMENT 6.5" A.C.P. - REWORK 9.0" FLEX - REWORK
- 13.75" PAVEMENT 6.75" A.C.P. - REWORK 7.0" FLEX - REWORK
- 12.5" PAVEMENT 5.5" A.C.P. - REWORK 7.0" FLEX - REWORK
- 11.75" PAVEMENT 2.75" A.C.P. - REWORK 9.0" FLEX - REWORK
- 16.5" PAVEMENT 6.5" A.C.P. - REWORK 10.0" FLEX - REWORK
- 8.0" PAVEMENT 8" FLEX - REWORK
- 10.0" PAVEMENT 10" FLEX - REWORK
- 4" CONCRETE SIDEWALK REMOVAL
- CONCRETE MEDIAN REMOVAL
- CONCRETE RIPRAP REMOVAL
- A.C.P. REMOVAL
- BRICK PAVER REMOVAL
- — — SAW CUT LINE
- (A) CONCRETE CURB REMOVAL
- (B) CONCRETE CURB & GUTTER REMOVAL
- (C) CONCRETE VALLEY GUTTER REMOVAL
- (D) TYPE 2 C.T.B. REMOVAL (CAST IN PLACE)
- (E) C.T.B. REMOVAL (PRE-CAST)
- (F) CONCRETE DRAIN REMOVAL
- (G) METAL BEAM GUARD FENCE REMOVAL
- (H) TERMINAL-ANCHOR-SECTION REMOVAL
- (I) SINGLE GUARD RAIL TERMINAL
- (J) TIMBER POST & CABLE RMV (PREP. ROW)
- (K) PALM TREE TO BE RELOCATED
- (L) FENCE REMOVAL (PREP. R.O.W.)
- (M) TREE REMOVAL
- (N) EXIST. STRUCTURE TO BE REMOVED

SHEET TOTALS				
ITEM	EST.	FINAL	UNIT	DESCRIPTION
100			STA	PREPARATION OF R.O.W.
100			EA	PREPARATION OF R.O.W. (TREES)
104			LF	REMOVE CONC. (CURB)
104			LF	REMOVE CONC. (CURB & GUTTER)
104			LF	REMOVE CONC. (VALLEY GUTTER)
104			SY	REMOVE CONC. (MEDIAN)
104	303		SY	REMOVE CONC. (DRAIN)
104			SY	REMOVE CONC. (RIPRAP)
105			SY	REMOVE ASPHALTIC PAVEMENT
* 251			CY	REWORK BASE MAT'L (7" FLEX BASE)
* 251	383		CY	REWORK BASE MAT'L (8" FLEX BASE)
* 251			CY	REWORK BASE MAT'L (9" FLEX BASE)
* 251	4743		CY	REWORK BASE MAT'L (10" FLEX BASE)
* 251			CY	REWORK BASE MAT'L (14" FLEX BASE)

ITEMIZED PREP R.O.W. TABLE				
ITEM	EST.	FINAL	UNIT	DESCRIPTION
$ 100			LF	TIMBER POST & CABLE
$ 100			LF	CHAIN LINK FENCE
$ 100			STA	SHRUBS

$ TO BE PAID FOR UNDER PREP. R.O.W. (STA.) FOR CONTRACTOR'S INFORMATION ONLY.
* QUANTITIES REFLECT 85% SALVAGEABLE RATE.
# A.C.P. TO BE USED AS ITEM 251

ALL PALM TREES SHALL BE RELOCATED TO AREAS WITHIN THE PROJECT LIMITS.
CONTRACTOR IS TO CONTACT THE PROJECT ENGINEER FOR MARKING SPECIFIC LOCATIONS.

SHEET TOTALS				
ITEM	EST.	FINAL	UNIT	DESCRIPTION
** 305			SY	SALVAGE A.C.P. (2.75" A.C.P.)
** 305			SY	SALVAGE A.C.P. (5.50" A.C.P.)
** 305	13404		SY	SALVAGE A.C.P. (6.50" A.C.P.)
** 305			SY	SALVAGE A.C.P. (6.75" A.C.P.)
** 305			SY	SALVAGE A.C.P. (8.75" A.C.P.)
479			EA	ADJUSTING INLET (CAP)
496			LF	REMOVE OLD STR. (PIPE)
496	5		EA	REMOVE OLD STR. (SMALL)
542			LF	REMOVE METAL BEAM GUARD FENCE
542			EA	REMOVE SINGLE GUARDRAIL TERMINAL
542			EA	REMOVE TERMINAL ANCHOR SECTION
1057			EA	TRANSPLANTING TREES & PALMS
5190			SY	REMOVE & RELOCATE SALVAGE LANDSCAPE PAVERS

NOTES:

1. SAVLAGED MBGF AND POSTS SHALL BE RETURNED TO THE PHARR MAINTENANCE YARD.

THE SEAL APPEARING ON THIS DOCUMENT WAS AUTHORIZED BY JAIME AGUILAR, P.E. 87606 ON 07/22/2003.

STATE OF TEXAS
JAIME AGUILAR
87606
REGISTERED PROFESSIONAL ENGINEER

Parsons Brinckerhoff Quade & Douglas Inc.

Texas Department of Transportation

© 2003 by TxDOT

US 281
REMOVAL ITEM DETAILS

STA 720+00 "BL1" TO
STA 732+00 "BL1"

PLAN 1"= 100' HORIZ

SHEET 10 OF 22				281REM10.DGN				
DESIGNED: TT	FED. RD DIV. No.	STATE	FEDERAL AID PROJECT No.				HIGHWAY No.	
CHECKED: DM	6	TEXAS					US 281	
DRAWN: JT	STATE DISTRICT	COUNTY	CONTROL No.	SECTION No.	JOB No.	SHEET No.		
CHECKED: DM	PHARR	HIDALGO	0255	08	091	235		

NAME
02:05:18 PM
07/22/2003
i:\22322o\cadd\sheets\removals\281rem10.dgn

NAME
02:05:18 PM
07/22/2003
i:\22322o\cadd\sheets\removals\281rem10.dgn

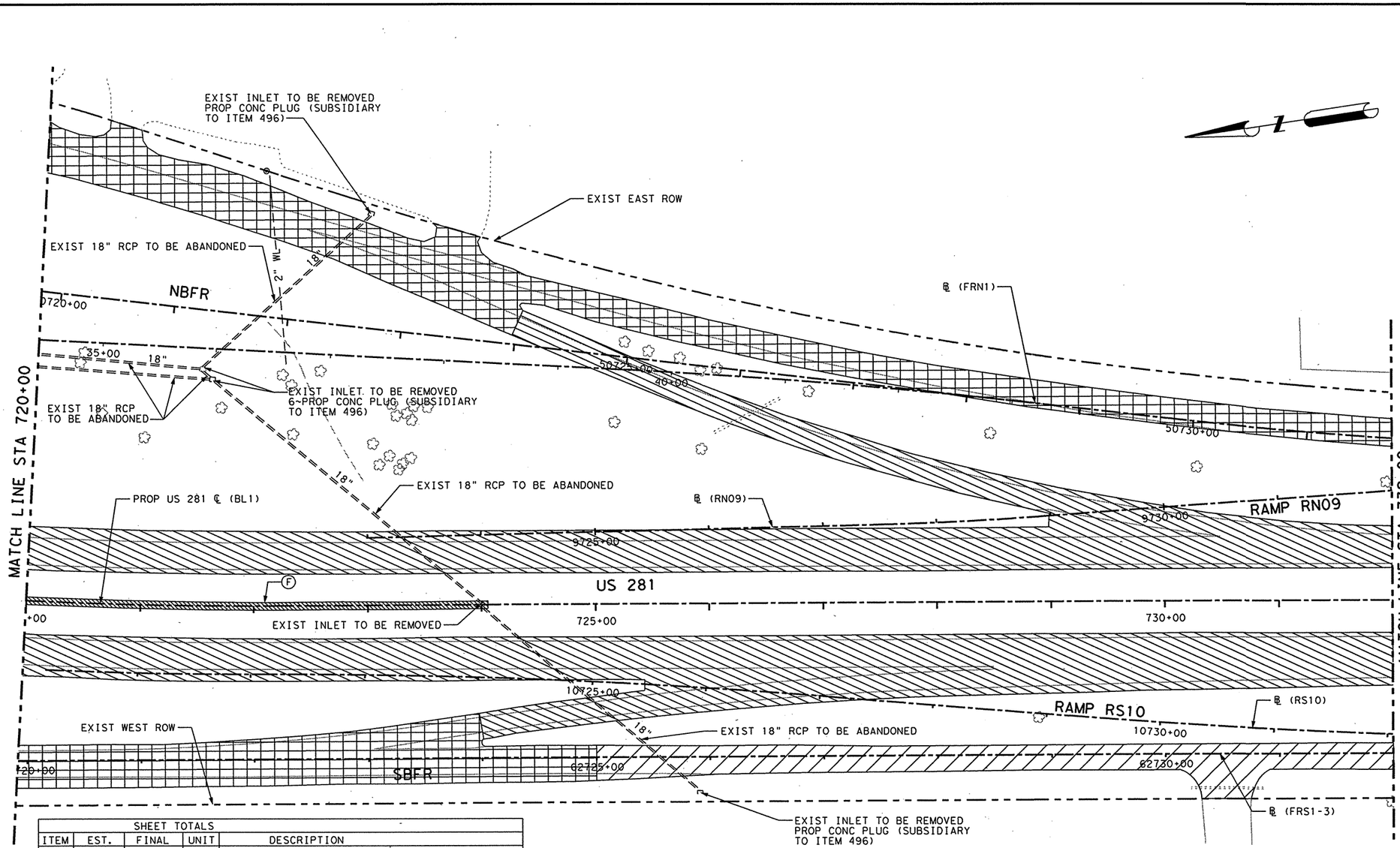

REMOVAL LEGEND:

- 22.75" PAVEMENT 8.75" A.C.P. - REWORK 14.0" FLEX - REWORK
- 14.5" PAVEMENT 5.5" A.C.P. - REWORK 9.0" FLEX - REWORK
- 15.5" PAVEMENT 6.5" A.C.P. - REWORK 9.0" FLEX - REWORK
- 13.75" PAVEMENT 6.75" A.C.P. - REWORK 7.0" FLEX - REWORK
- 12.5" PAVEMENT 5.5" A.C.P. - REWORK 7.0" FLEX - REWORK
- 11.75" PAVEMENT 2.75" A.C.P. - REWORK 9.0" FLEX - REWORK
- 16.5" PAVEMENT 6.5" A.C.P. - REWORK 10.0" FLEX - REWORK
- 8.0" PAVEMENT 8" FLEX - REWORK
- 10.0" PAVEMENT 10" FLEX - REWORK
- 4" CONCRETE SIDEWALK REMOVAL
- CONCRETE MEDIAN REMOVAL
- CONCRETE RIPRAP REMOVAL
- A.C.P. REMOVAL
- BRICK PAVER REMOVAL
- SAW CUT LINE
- (A) CONCRETE CURB REMOVAL
- (B) CONCRETE CURB & GUTTER REMOVAL
- (C) CONCRETE VALLEY GUTTER REMOVAL
- (D) TYPE 2 C.T.B. REMOVAL (CAST IN PLACE)
- (E) C.T.B. REMOVAL (PRE-CAST)
- (F) CONCRETE DRAIN REMOVAL
- (G) METAL BEAM GUARD FENCE REMOVAL
- (H) TERMINAL-ANCHOR-SECTION REMOVAL
- (I) SINGLE GUARD RAIL TERMINAL
- (J) TIMBER POST & CABLE RMV (PREP. ROW)
- (K) PALM TREE TO BE RELOCATED
- (L) FENCE REMOVAL (PREP. R.O.W.)
- (M) TREE REMOVAL
- (N) EXIST. STRUCTURE TO BE REMOVED

SHEET TOTALS				
ITEM	EST.	FINAL	UNIT	DESCRIPTION
100			STA	PREPARATION OF R.O.W.
100			EA	PREPARATION OF R.O.W. (TREES)
104			LF	REMOVE CONC. (CURB)
104			LF	REMOVE CONC. (CURB & GUTTER)
104			LF	REMOVE CONC. (VALLEY GUTTER)
104			SY	REMOVE CONC. (MEDIAN)
104	303		SY	REMOVE CONC. (DRAIN)
104			SY	REMOVE CONC. (RIPRAP)
105			SY	REMOVE ASPHALTIC PAVEMENT
* 251			CY	REWORK BASE MAT'L (7" FLEX BASE)
* 251	383		CY	REWORK BASE MAT'L (8" FLEX BASE)
* 251			CY	REWORK BASE MAT'L (9" FLEX BASE)
* 251	4743		CY	REWORK BASE MAT'L (10" FLEX BASE)
* 251			CY	REWORK BASE MAT'L (14" FLEX BASE)

ITEMIZED PREP R.O.W. TABLE				
ITEM	EST.	FINAL	UNIT	DESCRIPTION
$ 100			LF	TIMBER POST & CABLE
$ 100			LF	CHAIN LINK FENCE
$ 100			STA	SHRUBS

$ TO BE PAID FOR UNDER PREP. R.O.W. (STA.) FOR CONTRACTOR'S INFORMATION ONLY.
* QUANTITIES REFLECT 85% SALVAGEABLE RATE.
# A.C.P. TO BE USED AS ITEM 251

ALL PALM TREES SHALL BE RELOCATED TO AREAS WITHIN THE PROJECT LIMITS.
CONTRACTOR IS TO CONTACT THE PROJECT ENGINEER FOR MARKING SPECIFIC LOCATIONS.

SHEET TOTALS				
ITEM	EST.	FINAL	UNIT	DESCRIPTION
## ~~300~~			SY	SALVAGE A.C.P. (2.75" A.C.P.)
## ~~302~~			SY	SALVAGE A.C.P. (5.50" A.C.P.)
## 251	13404		SY	SALVAGE A.C.P. (6.50" A.C.P.)
## ~~303~~			SY	SALVAGE A.C.P. (6.75" A.C.P.)
## ~~306~~			SY	SALVAGE A.C.P. (8.75" A.C.P.)
479			EA	ADJUSTING INLET (CAP)
496			LF	REMOVE OLD STR. (PIPE)
496	5		EA	REMOVE OLD STR. (SMALL)
542			LF	REMOVE METAL BEAM GUARD FENCE
542			EA	REMOVE SINGLE GUARDRAIL TERMINAL
542			EA	REMOVE TERMINAL ANCHOR SECTION
1057			EA	TRANSPLANTING TREES & PALMS
5190			SY	REMOVE & RELOCATE SALVAGE LANDSCAPE PAVERS

⚠1 REVISED 9-26-03

NOTES:

1. SAVLAGED MBGF AND POSTS SHALL BE RETURNED TO THE PHARR MAINTENANCE YARD.

THE SEAL APPEARING ON THIS DOCUMENT WAS AUTHORIZED BY JAIME AGUILAR, P.E. 87606 ON 07/22/2003.

STATE OF TEXAS
JAIME AGUILAR
87606
REGISTERED PROFESSIONAL ENGINEER

Parsons Brinckerhoff Quade & Douglas Inc.

Texas Department of Transportation

© 2003 by TxDOT

US 281
REMOVAL ITEM DETAILS

STA 720+00 "BL1" TO
STA 732+00 "BL1"

PLAN 1"= 100' HORIZ

SHEET 10 OF 22 | 281REM10.DGN

DESIGNED: TT	FED. RD DIV. NO.	STATE	FEDERAL AID PROJECT NO.	HIGHWAY NO.
CHECKED: DM	6	TEXAS		US 281

DRAWN: JT	STATE DISTRICT	COUNTY	CONTROL NO.	SECTION NO.	JOB NO.	SHEET NO.
CHECKED: DM	PHARR	HIDALGO	0255	08	091	235

NAME
02:05:25 PM
07/22/2003
i:\22322a\cadd\sheets\removals\281reml1.dgn

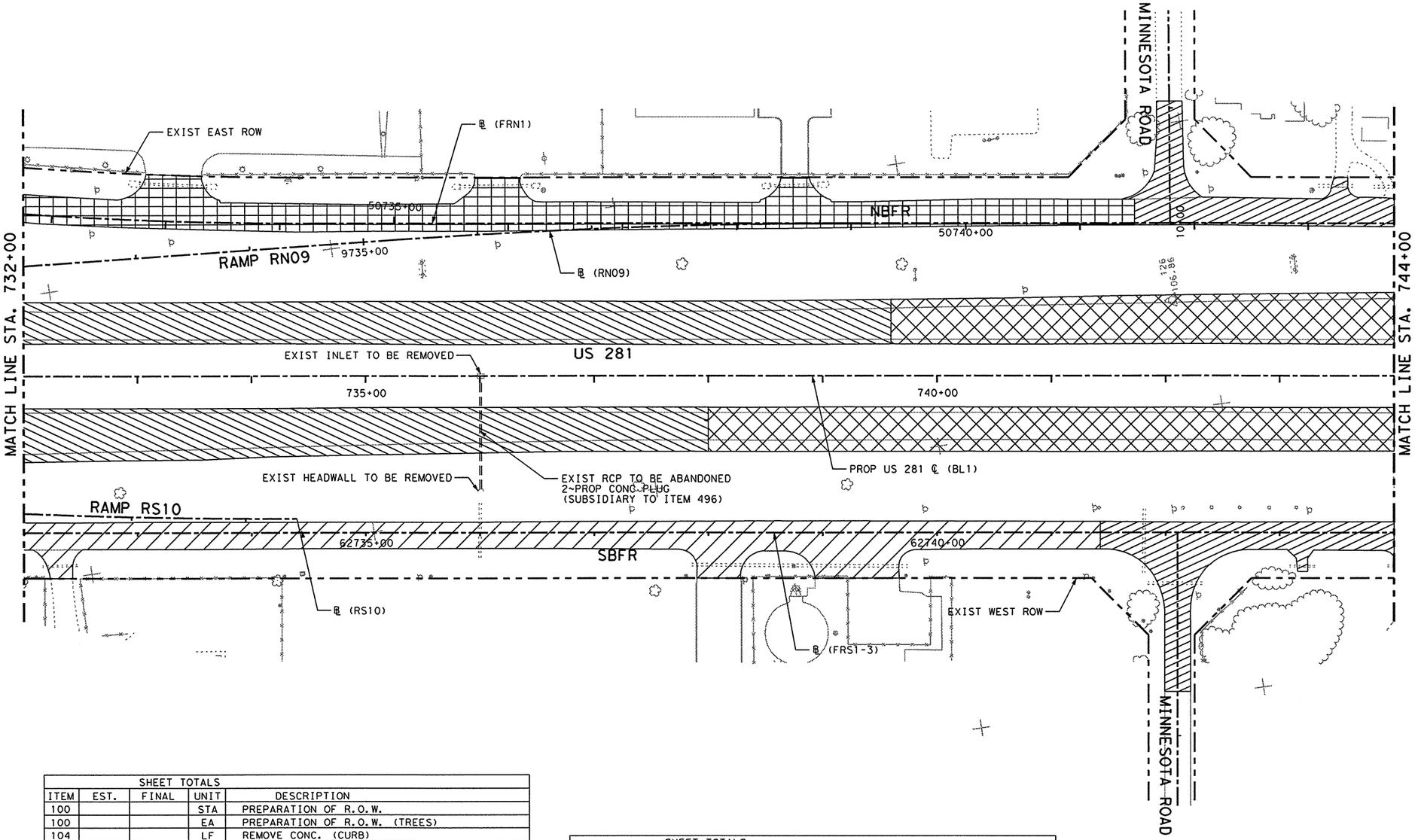

REMOVAL LEGEND:

- 22.75" PAVEMENT 8.75" A.C.P. - REWORK 14.0" FLEX - REWORK
- 14.5" PAVEMENT 5.5" A.C.P. - REWORK 9.0" FLEX - REWORK
- 15.5" PAVEMENT 6.5" A.C.P. - REWORK 9.0" FLEX - REWORK
- 13.75" PAVEMENT 6.75" A.C.P. - REWORK 7.0" FLEX - REWORK
- 12.5" PAVEMENT 5.5" A.C.P. - REWORK 7.0" FLEX - REWORK
- 11.75" PAVEMENT 2.75" A.C.P. - REWORK 9.0" FLEX - REWORK
- 16.5" PAVEMENT 6.5" A.C.P. - REWORK 10.0" FLEX - REWORK
- 8.0" PAVEMENT 8" FLEX - REWORK
- 10.0" PAVEMENT 10" FLEX - REWORK
- 4" CONCRETE SIDEWALK REMOVAL
- CONCRETE MEDIAN REMOVAL
- CONCRETE RIPRAP REMOVAL
- A.C.P. REMOVAL
- BRICK PAVER REMOVAL
- SAW CUT LINE
- (A) CONCRETE CURB REMOVAL
- (B) CONCRETE CURB & GUTTER REMOVAL
- (C) CONCRETE VALLEY GUTTER REMOVAL
- (D) TYPE 2 C.T.B. REMOVAL (CAST IN PLACE)
- (E) C.T.B. REMOVAL (PRE-CAST)
- (F) CONCRETE DRAIN REMOVAL
- (G) METAL BEAM GUARD FENCE REMOVAL
- (H) TERMINAL-ANCHOR-SECTION REMOVAL
- (I) SINGLE GUARD RAIL TERMINAL
- (J) TIMBER POST & CABLE RMV (PREP. ROW)
- (K) PALM TREE TO BE RELOCATED
- (L) FENCE REMOVAL (PREP. R.O.W.)
- (M) TREE REMOVAL
- (N) EXIST. STRUCTURE TO BE REMOVED

SHEET TOTALS				
ITEM	EST.	FINAL	UNIT	DESCRIPTION
100			STA	PREPARATION OF R.O.W.
100			EA	PREPARATION OF R.O.W. (TREES)
104			LF	REMOVE CONC. (CURB)
104			LF	REMOVE CONC. (CURB & GUTTER)
104			LF	REMOVE CONC. (VALLEY GUTTER)
104			SY	REMOVE CONC. (MEDIAN)
104			SY	REMOVE CONC. (DRAIN)
104			SY	REMOVE CONC. (RIPRAP)
105			SY	REMOVE ASPHALTIC PAVEMENT
* 251			CY	REWORK BASE MAT'L (7" FLEX BASE)
* 251	551		CY	REWORK BASE MAT'L (8" FLEX BASE)
* 251	437		CY	REWORK BASE MAT'L (9" FLEX BASE)
* 251	2099		CY	REWORK BASE MAT'L (10" FLEX BASE)
* 251	1537		CY	REWORK BASE MAT'L (14" FLEX BASE)

ITEMIZED PREP R.O.W. TABLE				
ITEM	EST.	FINAL	UNIT	DESCRIPTION
$ 100			LF	TIMBER POST & CABLE
$ 100			LF	CHAIN LINK FENCE
$ 100			STA	SHRUBS

$ TO BE PAID FOR UNDER PREP. R.O.W. (STA.) FOR CONTRACTOR'S INFORMATION ONLY.
* QUANTITIES REFLECT 85% SALVAGEABLE RATE.
# A.C.P. TO BE USED AS ITEM 251

ALL PALM TREES SHALL BE RELOCATED TO AREAS WITHIN THE PROJECT LIMITS.
CONTRACTOR IS TO CONTACT THE PROJECT ENGINEER FOR MARKING SPECIFIC LOCATIONS.

SHEET TOTALS				
ITEM	EST.	FINAL	UNIT	DESCRIPTION
# * 305	2055		SY	SALVAGE A.C.P. (2.75" A.C.P.)
# * 305			SY	SALVAGE A.C.P. (5.50" A.C.P.)
# * 305	5958		SY	SALVAGE A.C.P. (6.50" A.C.P.)
# * 305			SY	SALVAGE A.C.P. (6.75" A.C.P.)
# * 305	4649		SY	SALVAGE A.C.P. (8.75" A.C.P.)
479			EA	ADJUSTING INLET (CAP)
496			LF	REMOVE OLD STR. (PIPE)
496	2		EA	REMOVE OLD STR. (SMALL)
496			EA	REMOVE OLD STR. (LARGE)
542			LF	REMOVE METAL BEAM GUARD FENCE
542			EA	REMOVE SINGLE GUARDRAIL TERMINAL
542			EA	REMOVE TERMINAL ANCHOR SECTION
1057			EA	TRANSPLANTING TREES & PALMS
5190			SY	REMOVE & RELOCATE SALVAGE LANDSCAPE PAVERS

NOTES:

1. SAVLAGED MBGF AND POSTS SHALL BE RETURNED TO THE PHARR MAINTENANCE YARD.

THE SEAL APPEARING ON THIS DOCUMENT WAS AUTHORIZED BY JAIME AGUILAR, P.E. 87606 ON 07/22/2003.

STATE OF TEXAS
JAIME AGUILAR
87606
REGISTERED
PROFESSIONAL ENGINEER

Parsons Brinckerhoff Quade & Douglas Inc.

Texas Department of Transportation

© 2003 by TxDOT

US 281
REMOVAL ITEM DETAILS

STA. 732+00 "BL1" TO
STA. 744+00 "BL1"

PLAN 1"= 100' HORIZ

SHEET 11 OF 22			281REM11.DGN				
DESIGNED: TT	FED. RD DIV. No.	STATE	FEDERAL AID PROJECT No.			HIGHWAY No.	
CHECKED: DM	6	TEXAS				US 281	
DRAWN: JT	STATE DISTRICT	COUNTY	CONTROL No.	SECTION No.	JOB No.	SHEET No.	
CHECKED: DM	PHARR	HIDALGO	0255	08	091	236	

NAME
02:05:25 PM
07/22/2003
i:\22322a\cadd\sheets\removals\281rem11.dgn

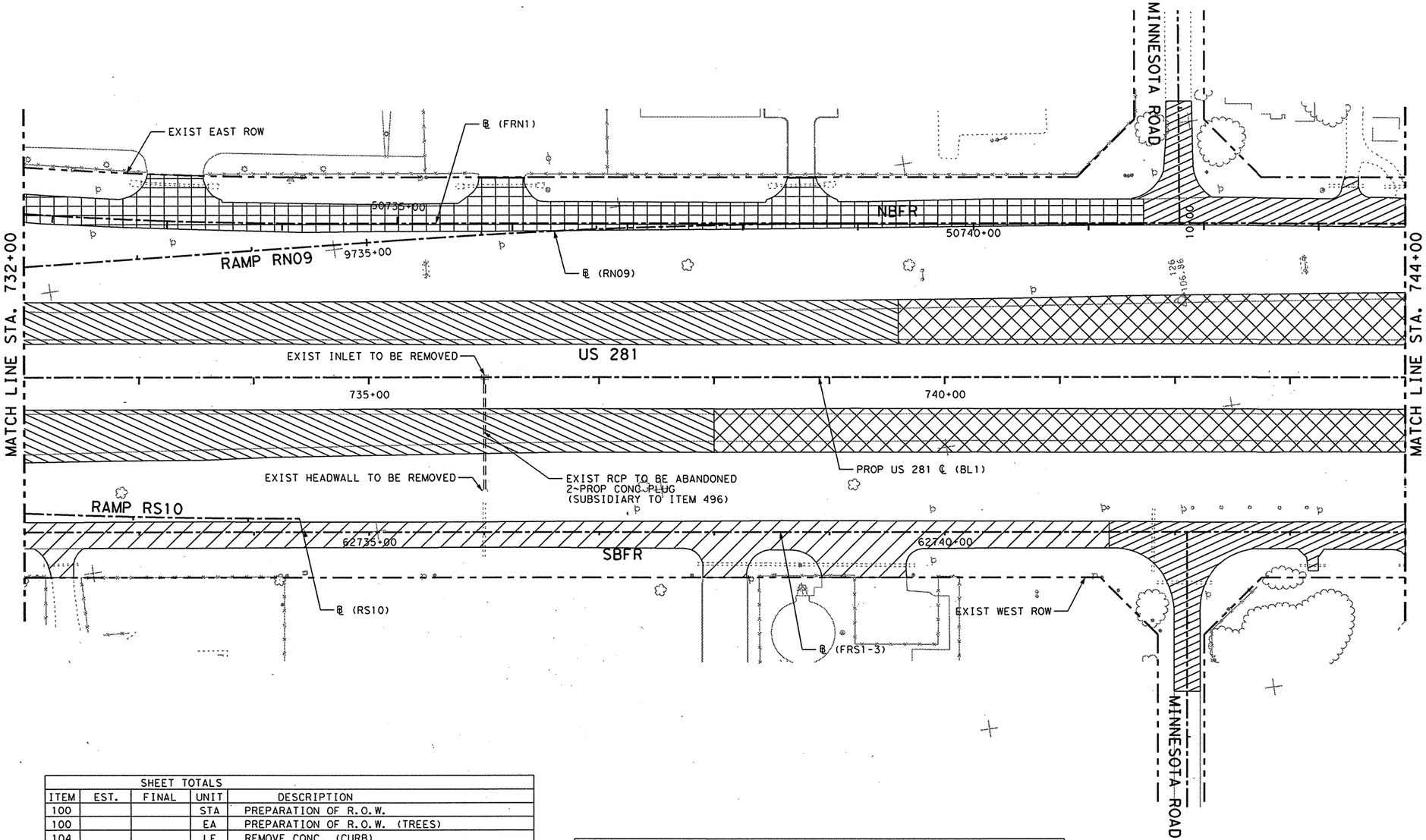

REMOVAL LEGEND:

- 22.75" PAVEMENT 8.75" A.C.P. - REWORK 14.0" FLEX - REWORK
- 14.5" PAVEMENT 5.5" A.C.P. - REWORK 9.0" FLEX - REWORK
- 15.5" PAVEMENT 6.5" A.C.P. - REWORK 9.0" FLEX - REWORK
- 13.75" PAVEMENT 6.75" A.C.P. - REWORK 7.0" FLEX - REWORK
- 12.5" PAVEMENT 5.5" A.C.P. - REWORK 7.0" FLEX - REWORK
- 11.75" PAVEMENT 2.75" A.C.P. - REWORK 9.0" FLEX - REWORK
- 16.5" PAVEMENT 6.5" A.C.P. - REWORK 10.0" FLEX - REWORK
- 8.0" PAVEMENT 8" FLEX - REWORK
- 10.0" PAVEMENT 10" FLEX - REWORK
- 4" CONCRETE SIDEWALK REMOVAL
- CONCRETE MEDIAN REMOVAL
- CONCRETE RIPRAP REMOVAL
- A.C.P. REMOVAL
- BRICK PAVER REMOVAL
- — — SAW CUT LINE
- (A) CONCRETE CURB REMOVAL
- (B) CONCRETE CURB & GUTTER REMOVAL
- (C) CONCRETE VALLEY GUTTER REMOVAL
- (D) TYPE 2 C.T.B. REMOVAL (CAST IN PLACE)
- (E) C.T.B. REMOVAL (PRE-CAST)
- (F) CONCRETE DRAIN REMOVAL
- (G) METAL BEAM GUARD FENCE REMOVAL
- (H) TERMINAL-ANCHOR-SECTION REMOVAL
- (I) SINGLE GUARD RAIL TERMINAL
- (J) TIMBER POST & CABLE RMV (PREP. ROW)
- (K) PALM TREE TO BE RELOCATED
- (L) FENCE REMOVAL (PREP. R.O.W.)
- (M) TREE REMOVAL
- (N) EXIST. STRUCTURE TO BE REMOVED

SHEET TOTALS				
ITEM	EST.	FINAL	UNIT	DESCRIPTION
100			STA	PREPARATION OF R.O.W.
100			EA	PREPARATION OF R.O.W. (TREES)
104			LF	REMOVE CONC. (CURB)
104			LF	REMOVE CONC. (CURB & GUTTER)
104			LF	REMOVE CONC. (VALLEY GUTTER)
104			SY	REMOVE CONC. (MEDIAN)
104			SY	REMOVE CONC. (DRAIN)
104			SY	REMOVE CONC. (RIPRAP)
105			SY	REMOVE ASPHALTIC PAVEMENT
* 251			CY	REWORK BASE MAT'L (7" FLEX BASE)
* 251	551		CY	REWORK BASE MAT'L (8" FLEX BASE)
* 251	437		CY	REWORK BASE MAT'L (9" FLEX BASE)
* 251	2099		CY	REWORK BASE MAT'L (10" FLEX BASE)
* 251	1537		CY	REWORK BASE MAT'L (14" FLEX BASE)

ITEMIZED PREP R.O.W. TABLE				
ITEM	EST.	FINAL	UNIT	DESCRIPTION
$ 100			LF	TIMBER POST & CABLE
$ 100			LF	CHAIN LINK FENCE
$ 100			STA	SHRUBS

$ TO BE PAID FOR UNDER PREP. R.O.W. (STA.) FOR CONTRACTOR'S INFORMATION ONLY.
* QUANTITIES REFLECT 85% SALVAGEABLE RATE.
# A.C.P. TO BE USED AS ITEM 251

ALL PALM TREES SHALL BE RELOCATED TO AREAS WITHIN THE PROJECT LIMITS.
CONTRACTOR IS TO CONTACT THE PROJECT ENGINEER FOR MARKING SPECIFIC LOCATIONS.

SHEET TOTALS				
ITEM	EST.	FINAL	UNIT	DESCRIPTION
## ~~251~~	2055		SY	SALVAGE A.C.P. (2.75" A.C.P.)
## ~~[illegible]~~			SY	SALVAGE A.C.P. (5.50" A.C.P.)
## ~~251~~	5958		SY	SALVAGE A.C.P. (6.50" A.C.P.)
## ~~[illegible]~~			SY	SALVAGE A.C.P. (6.75" A.C.P.)
## ~~251~~	4649		SY	SALVAGE A.C.P. (8.75" A.C.P.)
479			EA	ADJUSTING INLET (CAP)
496			LF	REMOVE OLD STR. (PIPE)
496	2		EA	REMOVE OLD STR. (SMALL)
496			EA	REMOVE OLD STR. (LARGE)
542			LF	REMOVE METAL BEAM GUARD FENCE
542			EA	REMOVE SINGLE GUARDRAIL TERMINAL
542			EA	REMOVE TERMINAL ANCHOR SECTION
1057			EA	TRANSPLANTING TREES & PALMS
5190			SY	REMOVE & RELOCATE SALVAGE LANDSCAPE PAVERS

1 REVISED 9-26-03

NOTES:

1. SAVLAGED MBGF AND POSTS SHALL BE RETURNED TO THE PHARR MAINTENANCE YARD.

THE SEAL APPEARING ON THIS DOCUMENT WAS AUTHORIZED BY JAIME AGUILAR, P.E. 87606 ON 07/22/2003.

STATE OF TEXAS
JAIME AGUILAR
87606
REGISTERED PROFESSIONAL ENGINEER

Parsons Brinckerhoff Quade & Douglas Inc.

Texas Department of Transportation

© 2003 by TxDOT

US 281
REMOVAL ITEM DETAILS

STA. 732+00 "BL1" TO
STA. 744+00 "BL1"

PLAN 1"= 100' HORIZ

SHEET 11 OF 22				281REM11.DGN			
DESIGNED: TT	FED. RD DIV. No.	STATE	FEDERAL AID PROJECT No.			HIGHWAY No.	
CHECKED: DM	6	TEXAS				US 281	
DRAWN: JT	STATE DISTRICT	COUNTY	CONTROL No.	SECTION No.	JOB No.	SHEET No.	
CHECKED: DM	PHARR	HIDALGO	0255	08	091	236	

NAME
12:22:04 PM
07/02/2003
i:\22322ot\cadd\sheets\removals\281rem12.dgn

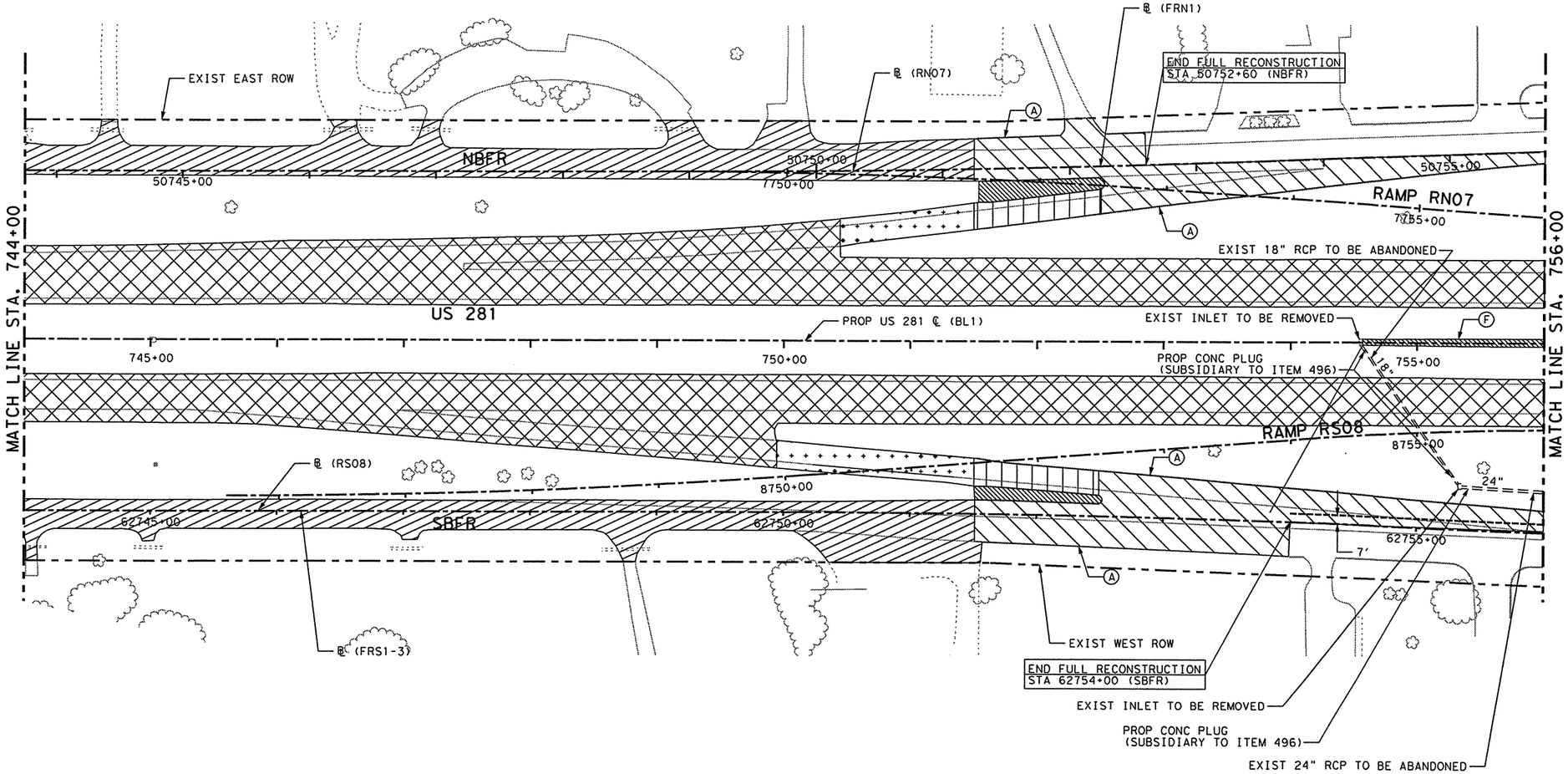

REMOVAL LEGEND:

- 22.75" PAVEMENT 8.75" A.C.P. - REWORK 14.0" FLEX - REWORK
- 14.5" PAVEMENT 5.5" A.C.P. - REWORK 9.0" FLEX - REWORK
- 15.5" PAVEMENT 6.5" A.C.P. - REWORK 9.0" FLEX - REWORK
- 13.75" PAVEMENT 6.75" A.C.P. - REWORK 7.0" FLEX - REWORK
- 12.5" PAVEMENT 5.5" A.C.P. - REWORK 7.0" FLEX - REWORK
- 11.75" PAVEMENT 2.75" A.C.P. - REWORK 9.0" FLEX - REWORK
- 16.5" PAVEMENT 6.5" A.C.P. - REWORK 10.0" FLEX - REWORK
- 8.0" PAVEMENT 8" FLEX - REWORK
- 10.0" PAVEMENT 10" FLEX - REWORK
- 4" CONCRETE SIDEWALK REMOVAL
- CONCRETE MEDIAN REMOVAL
- CONCRETE RIPRAP REMOVAL
- A.C.P. REMOVAL
- BRICK PAVER REMOVAL
- — — SAW CUT LINE
- (A) CONCRETE CURB REMOVAL
- (B) CONCRETE CURB & GUTTER REMOVAL
- (C) CONCRETE VALLEY GUTTER REMOVAL
- (D) TYPE 2 C.T.B. REMOVAL (CAST IN PLACE)
- (E) C.T.B. REMOVAL (PRE-CAST)
- (F) CONCRETE DRAIN REMOVAL
- (G) METAL BEAM GUARD FENCE REMOVAL
- (H) TERMINAL-ANCHOR-SECTION REMOVAL
- (I) SINGLE GUARD RAIL TERMINAL
- (J) TIMBER POST & CABLE RMV (PREP. ROW)
- (K) PALM TREE TO BE RELOCATED
- (L) FENCE REMOVAL (PREP. R.O.W.)
- (M) TREE REMOVAL
- (N) EXIST. STRUCTURE TO BE REMOVED

SHEET TOTALS				
ITEM	EST.	FINAL	UNIT	DESCRIPTION
100			STA	PREPARATION OF R.O.W.
100			EA	PREPARATION OF R.O.W. (TREES)
104	1640		LF	REMOVE CONC. (CURB)
104			LF	REMOVE CONC. (CURB & GUTTER)
104			LF	REMOVE CONC. (VALLEY GUTTER)
104	248		SY	REMOVE CONC. (MEDIAN)
104	91		SY	REMOVE CONC. (DRAIN)
104			SY	REMOVE CONC. (RIPRAP)
105			SY	REMOVE ASPHALTIC PAVEMENT
* 251	526		CY	REWORK BASE MAT'L (7" FLEX BASE)
* 251			CY	REWORK BASE MAT'L (8" FLEX BASE)
* 251	1249		CY	REWORK BASE MAT'L (9" FLEX BASE)
* 251			CY	REWORK BASE MAT'L (10" FLEX BASE)
* 251	4008		CY	REWORK BASE MAT'L (14" FLEX BASE)

ITEMIZED PREP R.O.W. TABLE				
ITEM	EST.	FINAL	UNIT	DESCRIPTION
$ 100			LF	TIMBER POST & CABLE
$ 100			LF	CHAIN LINK FENCE
$ 100			STA	SHRUBS

$ TO BE PAID FOR UNDER PREP. R.O.W. (STA.) FOR CONTRACTOR'S INFORMATION ONLY.
* QUANTITIES REFLECT 85% SALVAGEABLE RATE.
# A.C.P. TO BE USED AS ITEM 251

ALL PALM TREES SHALL BE RELOCATED TO AREAS WITHIN THE PROJECT LIMITS.
CONTRACTOR IS TO CONTACT THE PROJECT ENGINEER FOR MARKING SPECIFIC LOCATIONS.

SHEET TOTALS				
ITEM	EST.	FINAL	UNIT	DESCRIPTION
** 305	4817		SY	SALVAGE A.C.P. (2.75" A.C.P.)
** 305	437		SY	SALVAGE A.C.P. (5.50" A.C.P.)
** 305	622		SY	SALVAGE A.C.P. (6.50" A.C.P.)
** 305	3182		SY	SALVAGE A.C.P. (6.75" A.C.P.)
** 305	12124		SY	SALVAGE A.C.P. (8.75" A.C.P.)
479			EA	ADJUSTING INLET (CAP)
496			LF	REMOVE OLD STR. (PIPE)
496	2		EA	REMOVE OLD STR. (SMALL)
542			LF	REMOVE METAL BEAM GUARD FENCE
542			EA	REMOVE SINGLE GUARDRAIL TERMINAL
542			EA	REMOVE TERMINAL ANCHOR SECTION
1057			EA	TRANSPLANTING TREES & PALMS
5190			SY	REMOVE & RELOCATE SALVAGE LANDSCAPE PAVERS

NOTES:

1. SAVLAGED MBGF AND POSTS SHALL BE RETURNED TO THE PHARR MAINTENANCE YARD.

THE SEAL APPEARING ON THIS DOCUMENT WAS AUTHORIZED BY JAIME AGUILAR, P.E. 87606 ON 07/02/2003.

STATE OF TEXAS
JAIME AGUILAR
87606
REGISTERED PROFESSIONAL ENGINEER

Parsons Brinckerhoff Quade & Douglas Inc.

Texas Department of Transportation

© 2003 by TxDOT

US 281
REMOVAL ITEM DETAILS

STA. 744+00 "BL1" TO
STA. 756+00 "BL1"

PLAN 1"= 100' HORIZ

SHEET 12 OF 22				281REM12.DGN			
DESIGNED: TT	FED. RD DIV. NO.	STATE	FEDERAL AID PROJECT No.			HIGHWAY No.	
CHECKED: DM	6	TEXAS				US 281	
DRAWN: JT	STATE DISTRICT	COUNTY	CONTROL No.	SECTION No.	JOB No.	SHEET No.	
CHECKED: DM	PHARR	HIDALGO	0255	08	091	237	

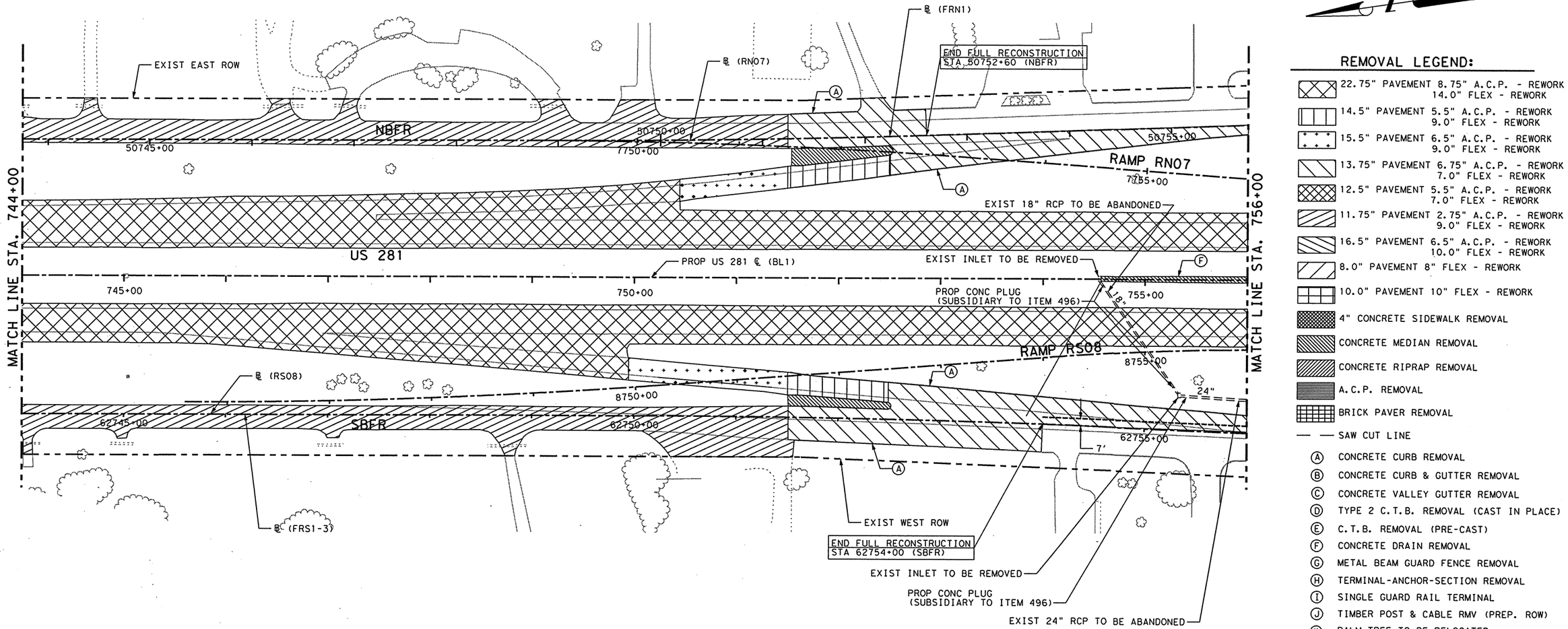

REMOVAL LEGEND:

- 22.75" PAVEMENT 8.75" A.C.P. - REWORK 14.0" FLEX - REWORK
- 14.5" PAVEMENT 5.5" A.C.P. - REWORK 9.0" FLEX - REWORK
- 15.5" PAVEMENT 6.5" A.C.P. - REWORK 9.0" FLEX - REWORK
- 13.75" PAVEMENT 6.75" A.C.P. - REWORK 7.0" FLEX - REWORK
- 12.5" PAVEMENT 5.5" A.C.P. - REWORK 7.0" FLEX - REWORK
- 11.75" PAVEMENT 2.75" A.C.P. - REWORK 9.0" FLEX - REWORK
- 16.5" PAVEMENT 6.5" A.C.P. - REWORK 10.0" FLEX - REWORK
- 8.0" PAVEMENT 8" FLEX - REWORK
- 10.0" PAVEMENT 10" FLEX - REWORK
- 4" CONCRETE SIDEWALK REMOVAL
- CONCRETE MEDIAN REMOVAL
- CONCRETE RIPRAP REMOVAL
- A.C.P. REMOVAL
- BRICK PAVER REMOVAL
- — — SAW CUT LINE
- (A) CONCRETE CURB REMOVAL
- (B) CONCRETE CURB & GUTTER REMOVAL
- (C) CONCRETE VALLEY GUTTER REMOVAL
- (D) TYPE 2 C.T.B. REMOVAL (CAST IN PLACE)
- (E) C.T.B. REMOVAL (PRE-CAST)
- (F) CONCRETE DRAIN REMOVAL
- (G) METAL BEAM GUARD FENCE REMOVAL
- (H) TERMINAL-ANCHOR-SECTION REMOVAL
- (I) SINGLE GUARD RAIL TERMINAL
- (J) TIMBER POST & CABLE RMV (PREP. ROW)
- (K) PALM TREE TO BE RELOCATED
- (L) FENCE REMOVAL (PREP. R.O.W.)
- (M) TREE REMOVAL
- (N) EXIST. STRUCTURE TO BE REMOVED

SHEET TOTALS

ITEM	EST.	FINAL	UNIT	DESCRIPTION
100			STA	PREPARATION OF R.O.W.
100			EA	PREPARATION OF R.O.W. (TREES)
104	1640		LF	REMOVE CONC. (CURB)
104			LF	REMOVE CONC. (CURB & GUTTER)
104			LF	REMOVE CONC. (VALLEY GUTTER)
104	248		SY	REMOVE CONC. (MEDIAN)
104	91		SY	REMOVE CONC. (DRAIN)
104			SY	REMOVE CONC. (RIPRAP)
105			SY	REMOVE ASPHALTIC PAVEMENT
* 251	526		CY	REWORK BASE MAT'L (7" FLEX BASE)
* 251			CY	REWORK BASE MAT'L (8" FLEX BASE)
* 251	1249		CY	REWORK BASE MAT'L (9" FLEX BASE)
* 251			CY	REWORK BASE MAT'L (10" FLEX BASE)
* 251	4008		CY	REWORK BASE MAT'L (14" FLEX BASE)

ITEMIZED PREP R.O.W. TABLE

ITEM	EST.	FINAL	UNIT	DESCRIPTION
$ 100			LF	TIMBER POST & CABLE
$ 100			LF	CHAIN LINK FENCE
$ 100			STA	SHRUBS

$ TO BE PAID FOR UNDER PREP. R.O.W. (STA.) FOR CONTRACTOR'S INFORMATION ONLY.
* QUANTITIES REFLECT 85% SALVAGEABLE RATE.
# A.C.P. TO BE USED AS ITEM 251

ALL PALM TREES SHALL BE RELOCATED TO AREAS WITHIN THE PROJECT LIMITS.
CONTRACTOR IS TO CONTACT THE PROJECT ENGINEER FOR MARKING SPECIFIC LOCATIONS.

SHEET TOTALS

ITEM	EST.	FINAL	UNIT	DESCRIPTION
# * 251	4817		SY	SALVAGE A.C.P. (2.75" A.C.P.)
# * 251	437		SY	SALVAGE A.C.P. (5.50" A.C.P.)
# * 251	622		SY	SALVAGE A.C.P. (6.50" A.C.P.)
# * 251	3182		SY	SALVAGE A.C.P. (6.75" A.C.P.)
# * 251	12124		SY	SALVAGE A.C.P. (8.75" A.C.P.)
479			EA	ADJUSTING INLET (CAP)
496			LF	REMOVE OLD STR. (PIPE)
496	2		EA	REMOVE OLD STR. (SMALL)
542			LF	REMOVE METAL BEAM GUARD FENCE
542			EA	REMOVE SINGLE GUARDRAIL TERMINAL
542			EA	REMOVE TERMINAL ANCHOR SECTION
1057			EA	TRANSPLANTING TREES & PALMS
5190			SY	REMOVE & RELOCATE SALVAGE LANDSCAPE PAVERS

1 REVISED 9-26-03

NOTES:

1. SAVLAGED MBGF AND POSTS SHALL BE RETURNED TO THE PHARR MAINTENANCE YARD.

THE SEAL APPEARING ON THIS DOCUMENT WAS AUTHORIZED BY JAIME AGUILAR, P.E. 87606 ON 07/02/2003.

STATE OF TEXAS · JAIME AGUILAR · 87606 · REGISTERED PROFESSIONAL ENGINEER

Parsons Brinckerhoff Quade & Douglas Inc.

Texas Department of Transportation

© 2003 by TxDOT

US 281
REMOVAL ITEM DETAILS

STA. 744+00 "BL1" TO
STA. 756+00 "BL1"

PLAN 1"= 100' HORIZ

SHEET 12 OF 22 | 281REM12.DGN

DESIGNED: TT	FED. RD DIV. No.	STATE	FEDERAL AID PROJECT No.	HIGHWAY No.
CHECKED: DM	6	TEXAS		US 281

DRAWN: JT	STATE DISTRICT	COUNTY	CONTROL No.	SECTION No.	JOB No.	SHEET No.
CHECKED: DM	PHARR	HIDALGO	0255	08	091	237

NAME 12:22:04 PM 07/02/2003 i:\22322a\cadd\sheets\removals\281rem12.dgn

NAME
02:05:31 PM
07/22/2003
i:\223220\cadd\sheets\removals\281rem13.dgn

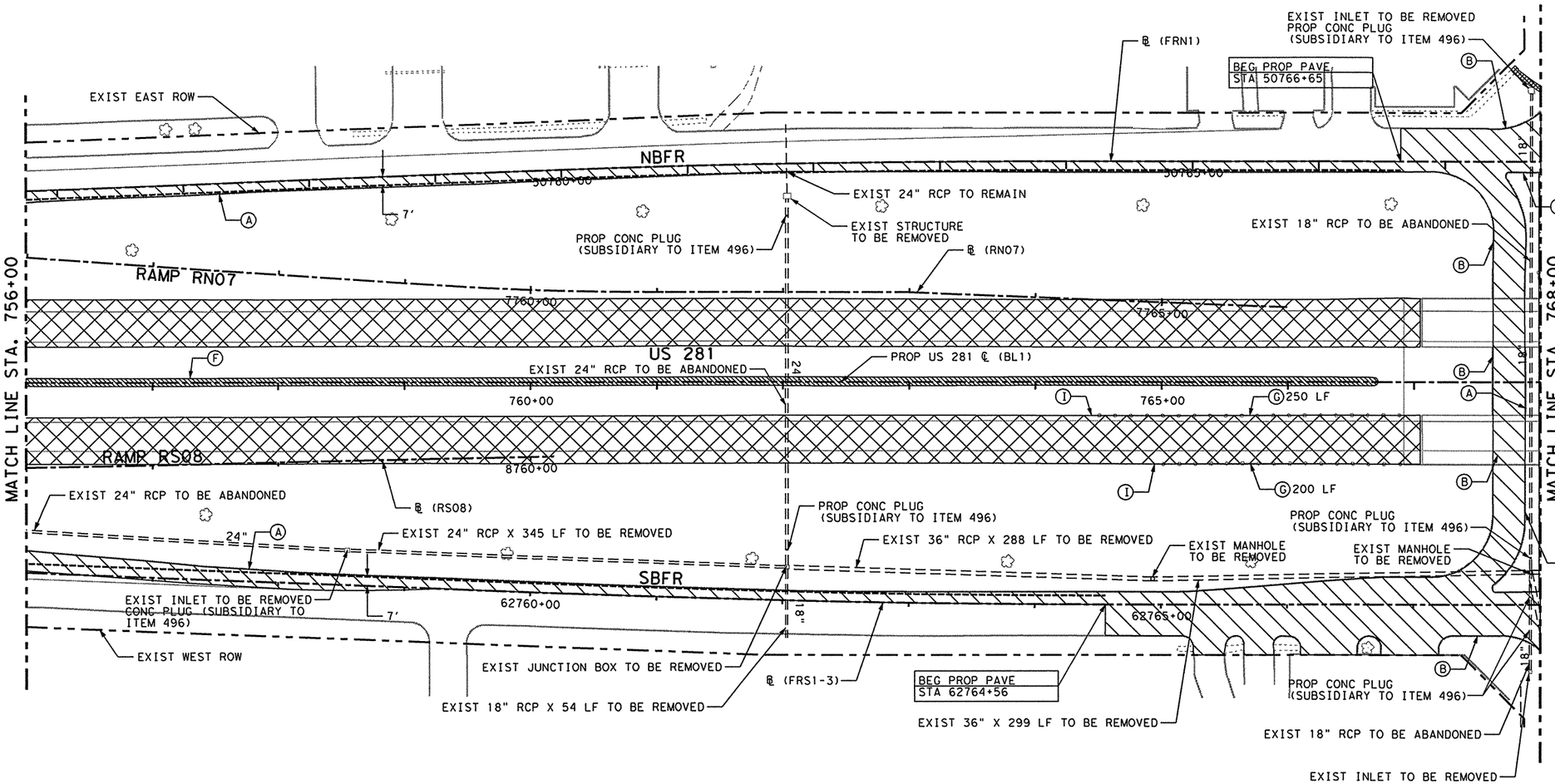

REMOVAL LEGEND:

- 22.75" PAVEMENT 8.75" A.C.P. - REWORK 14.0" FLEX - REWORK
- 14.5" PAVEMENT 5.5" A.C.P. - REWORK 9.0" FLEX - REWORK
- 15.5" PAVEMENT 6.5" A.C.P. - REWORK 9.0" FLEX - REWORK
- 13.75" PAVEMENT 6.75" A.C.P. - REWORK 7.0" FLEX - REWORK
- 12.5" PAVEMENT 5.5" A.C.P. - REWORK 7.0" FLEX - REWORK
- 11.75" PAVEMENT 2.75" A.C.P. - REWORK 9.0" FLEX - REWORK
- 16.5" PAVEMENT 6.5" A.C.P. - REWORK 10.0" FLEX - REWORK
- 8.0" PAVEMENT 8" FLEX - REWORK
- 10.0" PAVEMENT 10" FLEX - REWORK
- 4" CONCRETE SIDEWALK REMOVAL
- CONCRETE MEDIAN REMOVAL
- CONCRETE RIPRAP REMOVAL
- A.C.P. REMOVAL
- BRICK PAVER REMOVAL
- SAW CUT LINE
- (A) CONCRETE CURB REMOVAL
- (B) CONCRETE CURB & GUTTER REMOVAL
- (C) CONCRETE VALLEY GUTTER REMOVAL
- (D) TYPE 2 C.T.B. REMOVAL (CAST IN PLACE)
- (E) C.T.B. REMOVAL (PRE-CAST)
- (F) CONCRETE DRAIN REMOVAL
- (G) METAL BEAM GUARD FENCE REMOVAL
- (H) TERMINAL-ANCHOR-SECTION REMOVAL
- (I) SINGLE GUARD RAIL TERMINAL
- (J) TIMBER POST & CABLE RMV (PREP. ROW)
- (K) PALM TREE TO BE RELOCATED
- (L) FENCE REMOVAL (PREP. R.O.W.)
- (M) TREE REMOVAL
- (N) EXIST. STRUCTURE TO BE REMOVED

SHEET TOTALS				
ITEM	EST.	FINAL	UNIT	DESCRIPTION
100			STA	PREPARATION OF R.O.W.
100			EA	PREPARATION OF R.O.W. (TREES)
104	2561		LF	REMOVE CONC. (CURB)
104	854		LF	REMOVE CONC. (CURB & GUTTER)
104			LF	REMOVE CONC. (VALLEY GUTTER)
104			SY	REMOVE CONC. (MEDIAN)
104	795		SY	REMOVE CONC. (DRAIN)
104			SY	REMOVE CONC. (RIPRAP)
104	14		SY	REMOVE CONC. (SDWLK)
105			SY	REMOVE ASPHALTIC PAVEMENT
* 251	847		CY	REWORK BASE MAT'L (7" FLEX BASE)
* 251			CY	REWORK BASE MAT'L (8" FLEX BASE)
* 251			CY	REWORK BASE MAT'L (9" FLEX BASE)
* 251			CY	REWORK BASE MAT'L (10" FLEX BASE)
* 251	3099		CY	REWORK BASE MAT'L (14" FLEX BASE)

ITEMIZED PREP R.O.W. TABLE					
	ITEM	EST.	FINAL	UNIT	DESCRIPTION
$	100			LF	TIMBER POST & CABLE
$	100			LF	CHAIN LINK FENCE
$	100			STA	SHRUBS

$ TO BE PAID FOR UNDER PREP. R.O.W. (STA.) FOR CONTRACTOR'S INFORMATION ONLY.
* QUANTITIES REFLECT 85% SALVAGEABLE RATE.
# A.C.P. TO BE USED AS ITEM 251

ALL PALM TREES SHALL BE RELOCATED TO AREAS WITHIN THE PROJECT LIMITS.
CONTRACTOR IS TO CONTACT THE PROJECT ENGINEER FOR MARKING SPECIFIC LOCATIONS.

SHEET TOTALS					
	ITEM	EST.	FINAL	UNIT	DESCRIPTION
# *	305			SY	SALVAGE A.C.P. (2.75" A.C.P.)
# *	305			SY	SALVAGE A.C.P. (5.50" A.C.P.)
# *	305			SY	SALVAGE A.C.P. (6.50" A.C.P.)
# *	305	5124		SY	SALVAGE A.C.P. (6.75" A.C.P.)
# *	305	9374		SY	SALVAGE A.C.P. (8.75" A.C.P.)
	479	1		EA	ADJUSTING INLET (CAP)
	496	986		LF	REMOVE OLD STR. (PIPE)
	496	5		EA	REMOVE OLD STR. (SMALL)
	542	450		LF	REMOVE METAL BEAM GUARD FENCE
	542	2		EA	REMOVE SINGLE GUARDRAIL TERMINAL
	542			EA	REMOVE TERMINAL ANCHOR SECTION
	1057			EA	TRANSPLANTING TREES & PALMS
	5190			SY	REMOVE & RELOCATE SALVAGE LANDSCAPE PAVERS

NOTES:

1. SAVLAGED MBGF AND POSTS SHALL BE RETURNED TO THE PHARR MAINTENANCE YARD.

THE SEAL APPEARING ON THIS DOCUMENT WAS AUTHORIZED BY JAIME AGUILAR, P.E. 87606 ON 07/22/2003.

STATE OF TEXAS
JAIME AGUILAR
87606
REGISTERED PROFESSIONAL ENGINEER

Parsons Brinckerhoff Quade & Douglas Inc.

Texas Department of Transportation

© 2003 by TxDOT

US 281
REMOVAL ITEM DETAILS

STA. 756+00 "BL1" TO
STA. 768+00 "BL1"

PLAN 1"= 100' HORIZ

SHEET 13 OF 22				281REM13.DGN				
DESIGNED: TT	FED. RD DIV. No.	STATE	FEDERAL AID PROJECT No.				HIGHWAY No.	
CHECKED: DM	6	TEXAS					US 281	
DRAWN: JT	STATE DISTRICT	COUNTY		CONTROL No.	SECTION No.	JOB No.	SHEET No.	
CHECKED: DM	PHARR	HIDALGO		0255	08	091	238	

NAME
02:05:31 PM
07/22/2003
i:\22322o\cadd\sheets\removals\281rem13.dgn

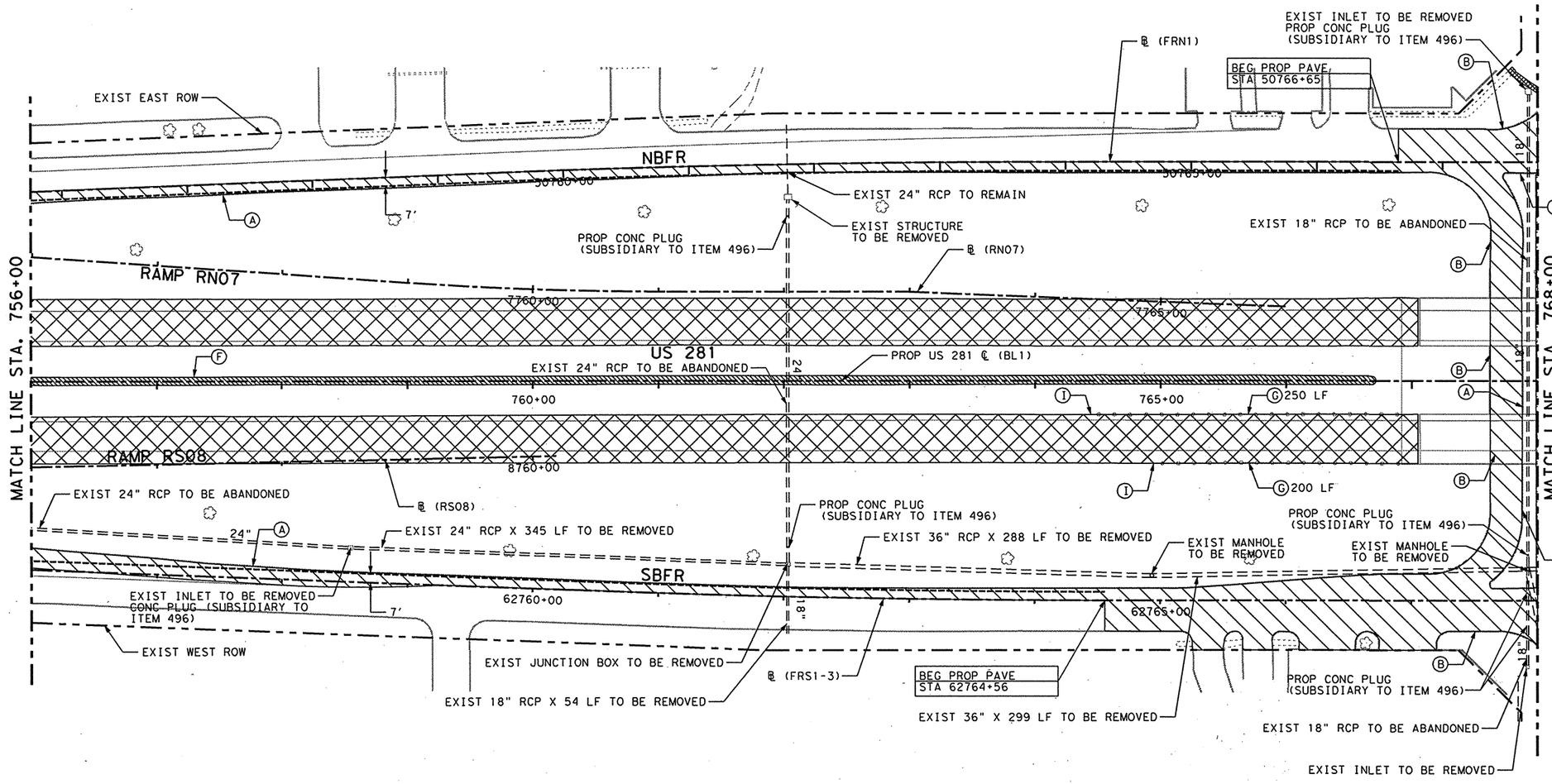

REMOVAL LEGEND:

- 22.75" PAVEMENT 8.75" A.C.P. - REWORK 14.0" FLEX - REWORK
- 14.5" PAVEMENT 5.5" A.C.P. - REWORK 9.0" FLEX - REWORK
- 15.5" PAVEMENT 6.5" A.C.P. - REWORK 9.0" FLEX - REWORK
- 13.75" PAVEMENT 6.75" A.C.P. - REWORK 7.0" FLEX - REWORK
- 12.5" PAVEMENT 5.5" A.C.P. - REWORK 7.0" FLEX - REWORK
- 11.75" PAVEMENT 2.75" A.C.P. - REWORK 9.0" FLEX - REWORK
- 16.5" PAVEMENT 6.5" A.C.P. - REWORK 10.0" FLEX - REWORK
- 8.0" PAVEMENT 8" FLEX - REWORK
- 10.0" PAVEMENT 10" FLEX - REWORK
- 4" CONCRETE SIDEWALK REMOVAL
- CONCRETE MEDIAN REMOVAL
- CONCRETE RIPRAP REMOVAL
- A.C.P. REMOVAL
- BRICK PAVER REMOVAL
- — — SAW CUT LINE
- (A) CONCRETE CURB REMOVAL
- (B) CONCRETE CURB & GUTTER REMOVAL
- (C) CONCRETE VALLEY GUTTER REMOVAL
- (D) TYPE 2 C.T.B. REMOVAL (CAST IN PLACE)
- (E) C.T.B. REMOVAL (PRE-CAST)
- (F) CONCRETE DRAIN REMOVAL
- (G) METAL BEAM GUARD FENCE REMOVAL
- (H) TERMINAL-ANCHOR-SECTION REMOVAL
- (I) SINGLE GUARD RAIL TERMINAL
- (J) TIMBER POST & CABLE RMV (PREP. ROW)
- (K) PALM TREE TO BE RELOCATED
- (L) FENCE REMOVAL (PREP. R.O.W.)
- (M) TREE REMOVAL
- (N) EXIST. STRUCTURE TO BE REMOVED

SHEET TOTALS				
ITEM	EST.	FINAL	UNIT	DESCRIPTION
100			STA	PREPARATION OF R.O.W.
100			EA	PREPARATION OF R.O.W. (TREES)
104	2561		LF	REMOVE CONC. (CURB)
104	854		LF	REMOVE CONC. (CURB & GUTTER)
104			LF	REMOVE CONC. (VALLEY GUTTER)
104			SY	REMOVE CONC. (MEDIAN)
104	795		SY	REMOVE CONC. (DRAIN)
104			SY	REMOVE CONC. (RIPRAP)
104	14		SY	REMOVE CONC. (SDWLK)
105			SY	REMOVE ASPHALTIC PAVEMENT
* 251	847		CY	REWORK BASE MAT'L (7" FLEX BASE)
* 251			CY	REWORK BASE MAT'L (8" FLEX BASE)
* 251			CY	REWORK BASE MAT'L (9" FLEX BASE)
* 251			CY	REWORK BASE MAT'L (10" FLEX BASE)
* 251	3099		CY	REWORK BASE MAT'L (14" FLEX BASE)

ITEMIZED PREP R.O.W. TABLE				
ITEM	EST.	FINAL	UNIT	DESCRIPTION
$ 100			LF	TIMBER POST & CABLE
$ 100			LF	CHAIN LINK FENCE
$ 100			STA	SHRUBS

$ TO BE PAID FOR UNDER PREP. R.O.W. (STA.) FOR CONTRACTOR'S INFORMATION ONLY.
* QUANTITIES REFLECT 85% SALVAGEABLE RATE.
# A.C.P. TO BE USED AS ITEM 251

ALL PALM TREES SHALL BE RELOCATED TO AREAS WITHIN THE PROJECT LIMITS.
CONTRACTOR IS TO CONTACT THE PROJECT ENGINEER FOR MARKING SPECIFIC LOCATIONS.

SHEET TOTALS				
ITEM	EST.	FINAL	UNIT	DESCRIPTION
# * ~~246~~			SY	SALVAGE A.C.P. (2.75" A.C.P.)
# * ~~250~~			SY	SALVAGE A.C.P. (5.50" A.C.P.)
# * ~~250~~			SY	SALVAGE A.C.P. (6.50" A.C.P.)
# * ~~251~~	5124		SY	SALVAGE A.C.P. (6.75" A.C.P.)
# * ~~251~~	9374		SY	SALVAGE A.C.P. (8.75" A.C.P.)
~~432~~	1		EA	ADJUSTING INLET (CAP)
~~496~~	986		LF	REMOVE OLD STR. (PIPE)
~~496~~	5		EA	REMOVE OLD STR. (SMALL)
~~542~~	450		LF	REMOVE METAL BEAM GUARD FENCE
~~542~~	2		EA	REMOVE SINGLE GUARDRAIL TERMINAL
~~542~~			EA	REMOVE TERMINAL ANCHOR SECTION
1057			EA	TRANSPLANTING TREES & PALMS
5190			SY	REMOVE & RELOCATE SALVAGE LANDSCAPE PAVERS

1 REVISED 9-26-03

NOTES:

1. SAVLAGED MBGF AND POSTS SHALL BE RETURNED TO THE PHARR MAINTENANCE YARD.

THE SEAL APPEARING ON THIS DOCUMENT WAS AUTHORIZED BY JAIME AGUILAR, P.E. 87606 ON 07/22/2003.

STATE OF TEXAS
JAIME AGUILAR
87606
REGISTERED PROFESSIONAL ENGINEER

Parsons Brinckerhoff Quade & Douglas Inc.

Texas Department of Transportation

© 2003 by TxDOT

US 281
REMOVAL ITEM DETAILS

STA. 756+00 "BL1" TO
STA. 768+00 "BL1"

PLAN 1"= 100' HORIZ

SHEET 13 OF 22 | 281REM13.DGN

DESIGNED: TT	FED. RD DIV. NO.	STATE	FEDERAL AID PROJECT No.				HIGHWAY No.
	6	TEXAS					US 281
CHECKED: DM	STATE DISTRICT	COUNTY	CONTROL No.	SECTION No.	JOB No.	SHEET No.	
DRAWN: JT	PHARR	HIDALGO	0255	08	091	238	
CHECKED: DM							

NAME
02:05:38 PM
07/22/2003
i:\22322o\cadd\sheets\removals\281rem14.dgn

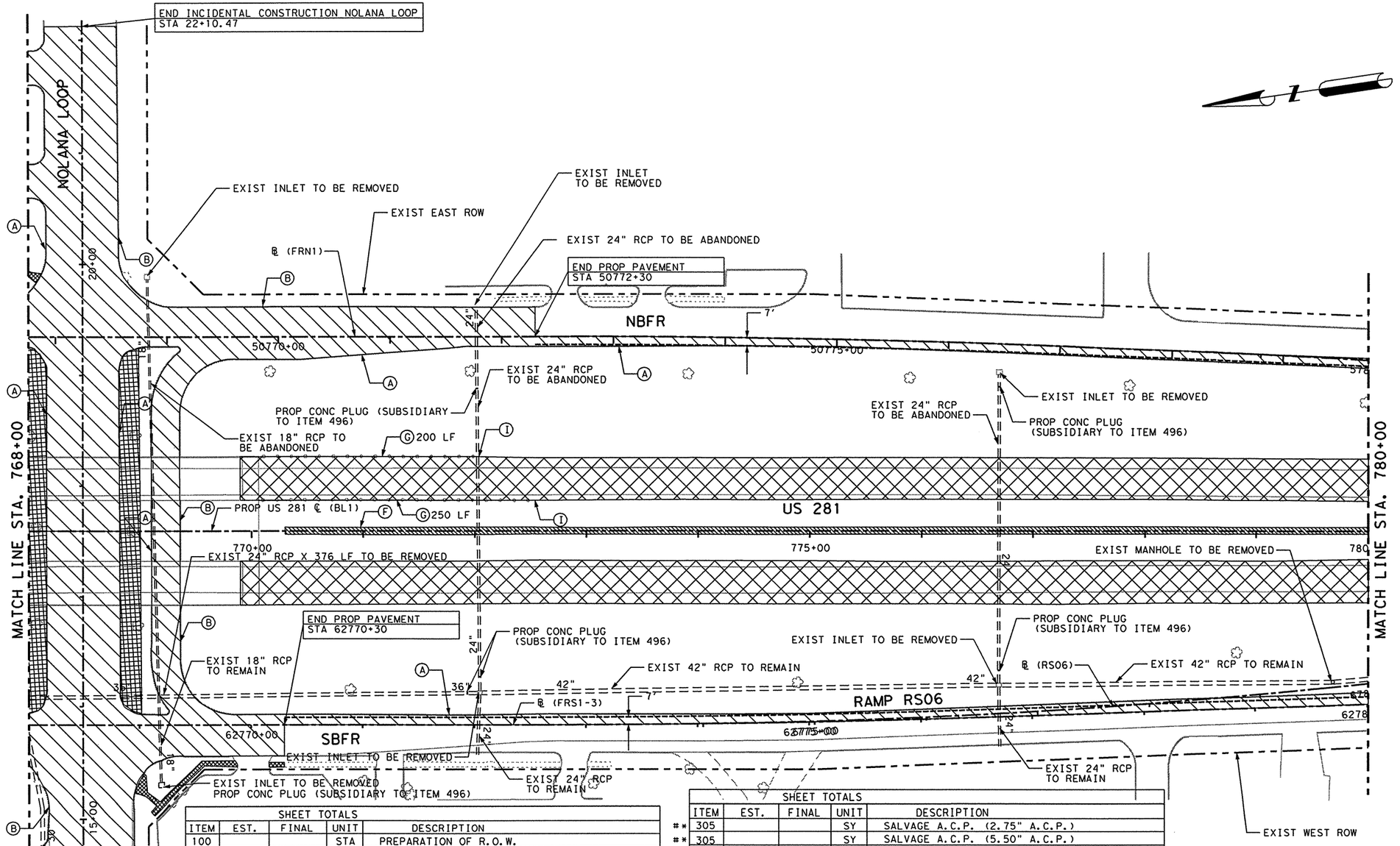

SHEET TOTALS				
ITEM	EST.	FINAL	UNIT	DESCRIPTION
100			STA	PREPARATION OF R.O.W.
100			EA	PREPARATION OF R.O.W. (TREES)
104	3121		LF	REMOVE CONC. (CURB)
104	1691		LF	REMOVE CONC. (CURB & GUTTER)
104			LF	REMOVE CONC. (VALLEY GUTTER)
104			SY	REMOVE CONC. (MEDIAN)
104	690		SY	REMOVE CONC. (DRAIN)
104			SY	REMOVE CONC. (RIPRAP)
104	84		SY	REMOVE CONC. (SDWLK)
105			SY	REMOVE ASPHALTIC PAVEMENT
* 251	2160		CY	REWORK BASE MAT'L (7" FLEX BASE)
* 251			CY	REWORK BASE MAT'L (8" FLEX BASE)
* 251			CY	REWORK BASE MAT'L (9" FLEX BASE)
* 251			CY	REWORK BASE MAT'L (10" FLEX BASE)
* 251	2856		CY	REWORK BASE MAT'L (14" FLEX BASE)

ITEMIZED PREP R.O.W. TABLE				
ITEM	EST.	FINAL	UNIT	DESCRIPTION
$ 100			LF	TIMBER POST & CABLE
$ 100			LF	CHAIN LINK FENCE
$ 100			STA	SHRUBS

SHEET TOTALS				
ITEM	EST.	FINAL	UNIT	DESCRIPTION
# * 305			SY	SALVAGE A.C.P. (2.75" A.C.P.)
# * 305			SY	SALVAGE A.C.P. (5.50" A.C.P.)
# * 305			SY	SALVAGE A.C.P. (6.50" A.C.P.)
# * 305	13064		SY	SALVAGE A.C.P. (6.75" A.C.P.)
# * 305	8640		SY	SALVAGE A.C.P. (8.75" A.C.P.)
479			EA	ADJUSTING INLET (CAP)
496	376		LF	REMOVE OLD STR. (PIPE)
496	7		EA	REMOVE OLD STR. (SMALL)
542	450		LF	REMOVE METAL BEAM GUARD FENCE
542	2		EA	REMOVE SINGLE GUARDRAIL TERMINAL
542			EA	REMOVE TERMINAL ANCHOR SECTION
1057			EA	TRANSPLANTING TREES & PALMS
5190	1280		SY	REMOVE & RELOCATE SALVAGE LANDSCAPE PAVERS

ALL PALM TREES SHALL BE RELOCATED TO AREAS WITHIN THE PROJECT LIMITS. CONTRACTOR IS TO CONTACT THE PROJECT ENGINEER FOR MARKING SPECIFIC LOCATIONS.

$ TO BE PAID FOR UNDER PREP. R.O.W. (STA.) FOR CONTRACTOR'S INFORMATION ONLY.
* QUANTITIES REFLECT 85% SALVAGEABLE RATE.
# A.C.P. TO BE USED AS ITEM 251

REMOVAL LEGEND:

- 22.75" PAVEMENT 8.75" A.C.P. - REWORK 14.0" FLEX - REWORK
- 14.5" PAVEMENT 5.5" A.C.P. - REWORK 9.0" FLEX - REWORK
- 15.5" PAVEMENT 6.5" A.C.P. - REWORK 9.0" FLEX - REWORK
- 13.75" PAVEMENT 6.75" A.C.P. - REWORK 7.0" FLEX - REWORK
- 12.5" PAVEMENT 5.5" A.C.P. - REWORK 7.0" FLEX - REWORK
- 11.75" PAVEMENT 2.75" A.C.P. - REWORK 9.0" FLEX - REWORK
- 16.5" PAVEMENT 6.5" A.C.P. - REWORK 10.0" FLEX - REWORK
- 8.0" PAVEMENT 8" FLEX - REWORK
- 10.0" PAVEMENT 10" FLEX - REWORK
- 4" CONCRETE SIDEWALK REMOVAL
- CONCRETE MEDIAN REMOVAL
- CONCRETE RIPRAP REMOVAL
- A.C.P. REMOVAL
- BRICK PAVER REMOVAL
- — — SAW CUT LINE
- (A) CONCRETE CURB REMOVAL
- (B) CONCRETE CURB & GUTTER REMOVAL
- (C) CONCRETE VALLEY GUTTER REMOVAL
- (D) TYPE 2 C.T.B. REMOVAL (CAST IN PLACE)
- (E) C.T.B. REMOVAL (PRE-CAST)
- (F) CONCRETE DRAIN REMOVAL
- (G) METAL BEAM GUARD FENCE REMOVAL
- (H) TERMINAL-ANCHOR-SECTION REMOVAL
- (I) SINGLE GUARD RAIL TERMINAL
- (J) TIMBER POST & CABLE RMV (PREP. ROW)
- (K) PALM TREE TO BE RELOCATED
- (L) FENCE REMOVAL (PREP. R.O.W.)
- (M) TREE REMOVAL
- (N) EXIST. STRUCTURE TO BE REMOVED

NOTES:

1. SAVLAGED MBGF AND POSTS SHALL BE RETURNED TO THE PHARR MAINTENANCE YARD.

THE SEAL APPEARING ON THIS DOCUMENT WAS AUTHORIZED BY JAIME AGUILAR, P.E. 87606 ON 07/22/2003.

STATE OF TEXAS
JAIME AGUILAR
87606
REGISTERED PROFESSIONAL ENGINEER

Parsons Brinckerhoff Quade & Douglas Inc.

Texas Department of Transportation

© 2003 by TxDOT

US 281
REMOVAL ITEM DETAILS

STA. 768+00 "BL1" TO
STA. 780+00 "BL1"

PLAN 1"= 100' HORIZ

SHEET 14 OF 22			281REM14.DGN				
DESIGNED: TT	FED. RD DIV. NO.	STATE	FEDERAL AID PROJECT No.			HIGHWAY No.	
CHECKED: DM	6	TEXAS				US 281	
DRAWN: JT	STATE DISTRICT	COUNTY	CONTROL No.	SECTION No.	JOB No.	SHEET No.	
CHECKED: DM	PHARR	HIDALGO	0255	08	091	239	

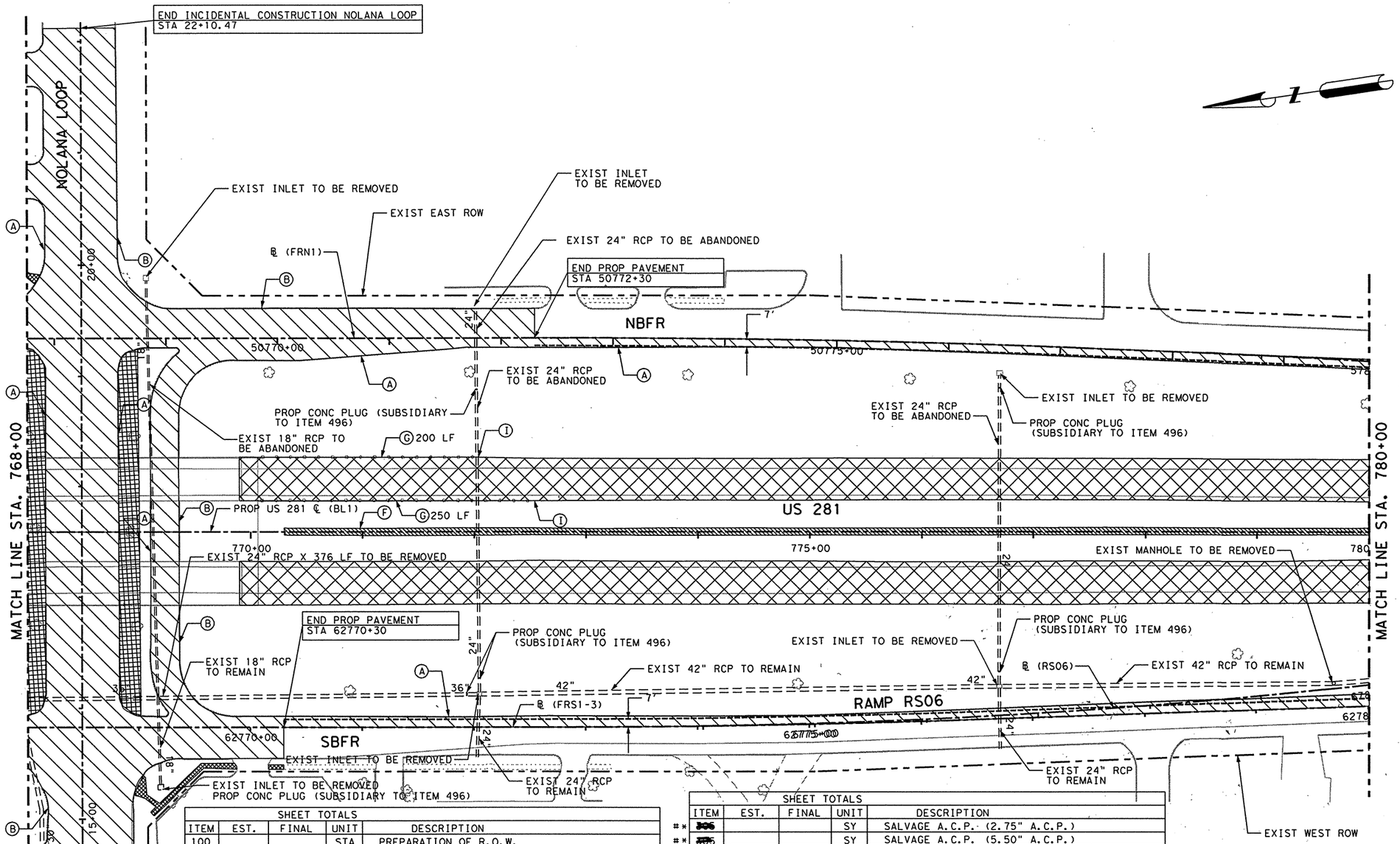

SHEET TOTALS				
ITEM	EST.	FINAL	UNIT	DESCRIPTION
100			STA	PREPARATION OF R.O.W.
100			EA	PREPARATION OF R.O.W. (TREES)
104	3121		LF	REMOVE CONC. (CURB)
104	1691		LF	REMOVE CONC. (CURB & GUTTER)
104			LF	REMOVE CONC. (VALLEY GUTTER)
104			SY	REMOVE CONC. (MEDIAN)
104	690		SY	REMOVE CONC. (DRAIN)
104			SY	REMOVE CONC. (RIPRAP)
104	84		SY	REMOVE CONC. (SDWLK)
105			SY	REMOVE ASPHALTIC PAVEMENT
* 251	2160		CY	REWORK BASE MAT'L (7" FLEX BASE)
* 251			CY	REWORK BASE MAT'L (8" FLEX BASE)
* 251			CY	REWORK BASE MAT'L (9" FLEX BASE)
* 251			CY	REWORK BASE MAT'L (10" FLEX BASE)
* 251	2856		CY	REWORK BASE MAT'L (14" FLEX BASE)

ITEMIZED PREP R.O.W. TABLE				
ITEM	EST.	FINAL	UNIT	DESCRIPTION
$ 100			LF	TIMBER POST & CABLE
$ 100			LF	CHAIN LINK FENCE
$ 100			STA	SHRUBS

SHEET TOTALS				
ITEM	EST.	FINAL	UNIT	DESCRIPTION
# * ~~306~~			SY	SALVAGE A.C.P. (2.75" A.C.P.)
# * ~~305~~			SY	SALVAGE A.C.P. (5.50" A.C.P.)
# * ~~306~~			SY	SALVAGE A.C.P. (6.50" A.C.P.)
# * 251	13064		SY	SALVAGE A.C.P. (6.75" A.C.P.)
# * 251	8640		SY	SALVAGE A.C.P. (8.75" A.C.P.)
~~439~~			EA	ADJUSTING INLET (CAP)
496	376		LF	REMOVE OLD STR. (PIPE)
496	7		EA	REMOVE OLD STR. (SMALL)
542	450		LF	REMOVE METAL BEAM GUARD FENCE
542	2		EA	REMOVE SINGLE GUARDRAIL TERMINAL
542			EA	REMOVE TERMINAL ANCHOR SECTION
1057			EA	TRANSPLANTING TREES & PALMS
5190	1280		SY	REMOVE & RELOCATE SALVAGE LANDSCAPE PAVERS

$ TO BE PAID FOR UNDER PREP. R.O.W. (STA.) FOR CONTRACTOR'S INFORMATION ONLY.
* QUANTITIES REFLECT 85% SALVAGEABLE RATE.
# A.C.P. TO BE USED AS ITEM 251

ALL PALM TREES SHALL BE RELOCATED TO AREAS WITHIN THE PROJECT LIMITS. CONTRACTOR IS TO CONTACT THE PROJECT ENGINEER FOR MARKING SPECIFIC LOCATIONS.

1 REVISED 9-26-03

NOTES:

1. SAVLAGED MBGF AND POSTS SHALL BE RETURNED TO THE PHARR MAINTENANCE YARD.

THE SEAL APPEARING ON THIS DOCUMENT WAS AUTHORIZED BY JAIME AGUILAR, P.E. 87606 ON 07/22/2003.

STATE OF TEXAS
JAIME AGUILAR
87606
REGISTERED
PROFESSIONAL ENGINEER

REMOVAL LEGEND:

- 22.75" PAVEMENT 8.75" A.C.P. - REWORK 14.0" FLEX - REWORK
- 14.5" PAVEMENT 5.5" A.C.P. - REWORK 9.0" FLEX - REWORK
- 15.5" PAVEMENT 6.5" A.C.P. - REWORK 9.0" FLEX - REWORK
- 13.75" PAVEMENT 6.75" A.C.P. - REWORK 7.0" FLEX - REWORK
- 12.5" PAVEMENT 5.5" A.C.P. - REWORK 7.0" FLEX - REWORK
- 11.75" PAVEMENT 2.75" A.C.P. - REWORK 9.0" FLEX - REWORK
- 16.5" PAVEMENT 6.5" A.C.P. - REWORK 10.0" FLEX - REWORK
- 8.0" PAVEMENT 8" FLEX - REWORK
- 10.0" PAVEMENT 10" FLEX - REWORK
- 4" CONCRETE SIDEWALK REMOVAL
- CONCRETE MEDIAN REMOVAL
- CONCRETE RIPRAP REMOVAL
- A.C.P. REMOVAL
- BRICK PAVER REMOVAL
- — — SAW CUT LINE
- (A) CONCRETE CURB REMOVAL
- (B) CONCRETE CURB & GUTTER REMOVAL
- (C) CONCRETE VALLEY GUTTER REMOVAL
- (D) TYPE 2 C.T.B. REMOVAL (CAST IN PLACE)
- (E) C.T.B. REMOVAL (PRE-CAST)
- (F) CONCRETE DRAIN REMOVAL
- (G) METAL BEAM GUARD FENCE REMOVAL
- (H) TERMINAL-ANCHOR-SECTION REMOVAL
- (I) SINGLE GUARD RAIL TERMINAL
- (J) TIMBER POST & CABLE RMV (PREP. ROW)
- (K) PALM TREE TO BE RELOCATED
- (L) FENCE REMOVAL (PREP. R.O.W.)
- (M) TREE REMOVAL
- (N) EXIST. STRUCTURE TO BE REMOVED

Parsons Brinckerhoff Quade & Douglas Inc.

Texas Department of Transportation

© 2003 by TxDOT

US 281
REMOVAL ITEM DETAILS

STA. 768+00 "BL1" TO
STA. 780+00 "BL1"

PLAN 1"= 100' HORIZ

SHEET 14 OF 22 | 281REM14.DGN

DESIGNED: TT	FED. RD DIV. NO.	STATE	FEDERAL AID PROJECT No.	HIGHWAY No.
CHECKED: DM	6	TEXAS		US 281

DRAWN: JT	STATE DISTRICT	COUNTY	CONTROL No.	SECTION No.	JOB No.	SHEET No.
CHECKED: DM	PHARR	HIDALGO	0255	08	091	239

NAME 02:05:38 PM 07/22/2003

i:\22322g\cadd\sheets\removals\281rem14.dgn

NAME
12:22:56 PM
07/02/2003
i:\22320\coddl\sheets\removals\281rem15.dgn

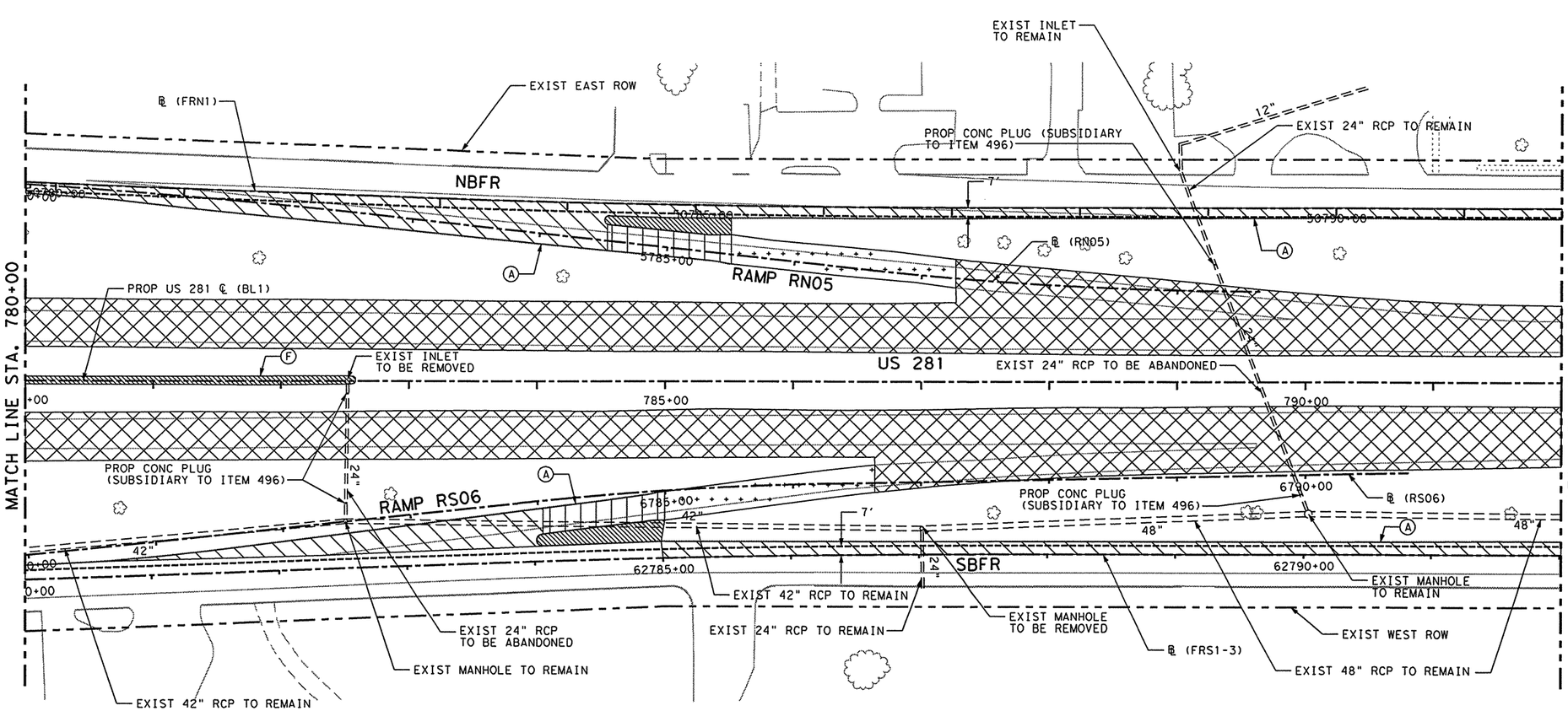

REMOVAL LEGEND:

- 22.75" PAVEMENT 8.75" A.C.P. - REWORK 14.0" FLEX - REWORK
- 14.5" PAVEMENT 5.5" A.C.P. - REWORK 9.0" FLEX - REWORK
- 15.5" PAVEMENT 6.5" A.C.P. - REWORK 9.0" FLEX - REWORK
- 13.75" PAVEMENT 6.75" A.C.P. - REWORK 7.0" FLEX - REWORK
- 12.5" PAVEMENT 5.5" A.C.P. - REWORK 7.0" FLEX - REWORK
- 11.75" PAVEMENT 2.75" A.C.P. - REWORK 9.0" FLEX - REWORK
- 16.5" PAVEMENT 6.5" A.C.P. - REWORK 10.0" FLEX - REWORK
- 8.0" PAVEMENT 8" FLEX - REWORK
- 10.0" PAVEMENT 10" FLEX - REWORK
- 4" CONCRETE SIDEWALK REMOVAL
- CONCRETE MEDIAN REMOVAL
- CONCRETE RIPRAP REMOVAL
- A.C.P. REMOVAL
- BRICK PAVER REMOVAL
- — — SAW CUT LINE
- (A) CONCRETE CURB REMOVAL
- (B) CONCRETE CURB & GUTTER REMOVAL
- (C) CONCRETE VALLEY GUTTER REMOVAL
- (D) TYPE 2 C.T.B. REMOVAL (CAST IN PLACE)
- (E) C.T.B. REMOVAL (PRE-CAST)
- (F) CONCRETE DRAIN REMOVAL
- (G) METAL BEAM GUARD FENCE REMOVAL
- (H) TERMINAL-ANCHOR-SECTION REMOVAL
- (I) SINGLE GUARD RAIL TERMINAL
- (J) TIMBER POST & CABLE RMV (PREP. ROW)
- (K) PALM TREE TO BE RELOCATED
- (L) FENCE REMOVAL (PREP. R.O.W.)
- (M) TREE REMOVAL
- (N) EXIST. STRUCTURE TO BE REMOVED

SHEET TOTALS				
ITEM	EST.	FINAL	UNIT	DESCRIPTION
100			STA	PREPARATION OF R.O.W.
100			EA	PREPARATION OF R.O.W. (TREES)
104	2661		LF	REMOVE CONC. (CURB)
104			LF	REMOVE CONC. (CURB & GUTTER)
104			LF	REMOVE CONC. (VALLEY GUTTER)
104	261		SY	REMOVE CONC. (MEDIAN)
104	188		SY	REMOVE CONC. (DRAIN)
104			SY	REMOVE CONC. (RIPRAP)
105			SY	REMOVE ASPHALTIC PAVEMENT
* 251	521		CY	REWORK BASE MAT'L (7" FLEX BASE)
* 251			CY	REWORK BASE MAT'L (8" FLEX BASE)
* 251	269		CY	REWORK BASE MAT'L (9" FLEX BASE)
* 251			CY	REWORK BASE MAT'L (10" FLEX BASE)
* 251	3977		CY	REWORK BASE MAT'L (14" FLEX BASE)

ITEMIZED PREP R.O.W. TABLE				
ITEM	EST.	FINAL	UNIT	DESCRIPTION
$ 100			LF	TIMBER POST & CABLE
$ 100			LF	CHAIN LINK FENCE
$ 100			STA	SHRUBS

$ TO BE PAID FOR UNDER PREP. R.O.W. (STA.) FOR CONTRACTOR'S INFORMATION ONLY.
* QUANTITIES REFLECT 85% SALVAGEABLE RATE.
# A.C.P. TO BE USED AS ITEM 251

ALL PALM TREES SHALL BE RELOCATED TO AREAS WITHIN THE PROJECT LIMITS.
CONTRACTOR IS TO CONTACT THE PROJECT ENGINEER FOR MARKING SPECIFIC LOCATIONS.

SHEET TOTALS				
ITEM	EST.	FINAL	UNIT	DESCRIPTION
** 305			SY	SALVAGE A.C.P. (2.75" A.C.P.)
** 305	425		SY	SALVAGE A.C.P. (5.50" A.C.P.)
** 305	836		SY	SALVAGE A.C.P. (6.50" A.C.P.)
** 305	3148		SY	SALVAGE A.C.P. (6.75" A.C.P.)
** 305	12030		SY	SALVAGE A.C.P. (8.75" A.C.P.)
479			EA	ADJUSTING INLET (CAP)
496			LF	REMOVE OLD STR. (PIPE)
496	2		EA	REMOVE OLD STR. (SMALL)
542			LF	REMOVE METAL BEAM GUARD FENCE
542			EA	REMOVE SINGLE GUARDRAIL TERMINAL
542			EA	REMOVE TERMINAL ANCHOR SECTION
1057			EA	TRANSPLANTING TREES & PALMS
5190			SY	REMOVE & RELOCATE SALVAGE LANDSCAPE PAVERS

NOTES:

1. SAVLAGED MBGF AND POSTS SHALL BE RETURNED TO THE PHARR MAINTENANCE YARD.

THE SEAL APPEARING ON THIS DOCUMENT WAS AUTHORIZED BY JAIME AGUILAR, P.E. 87606 ON 07/02/2003.

STATE OF TEXAS
JAIME AGUILAR
87606
REGISTERED PROFESSIONAL ENGINEER

Parsons Brinckerhoff Quade & Douglas Inc.

Texas Department of Transportation

© 2003 by TxDOT

US 281
REMOVAL ITEM DETAILS

STA. 780+00 "BL1" TO
STA. 792+00 "BL1"

PLAN 1"= 100' HORIZ

SHEET 15 OF 22 | 281REM15.DGN

DESIGNED: TT	FED. RD DIV. NO.	STATE	FEDERAL AID PROJECT No.		HIGHWAY No.	
CHECKED: DM	6	TEXAS			US 281	
DRAWN: JT	STATE DISTRICT	COUNTY	CONTROL No.	SECTION No.	JOB No.	SHEET No.
CHECKED: DM	PHARR	HIDALGO	0255	08	091	240

NAME
12:22:56 PM
07/02/2003
i:\22322a\cadd\sheets\removals\281rem15.dgn

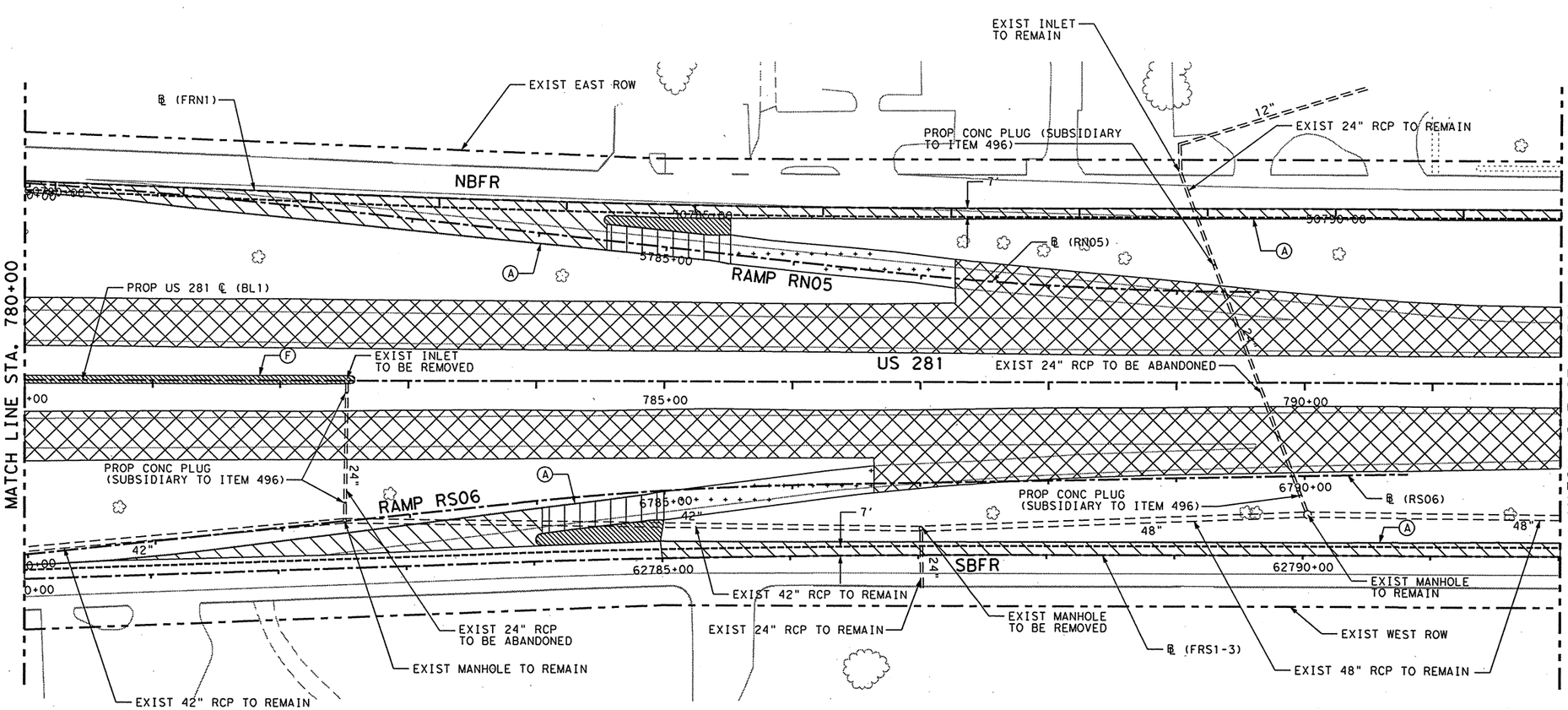

REMOVAL LEGEND:

- 22.75" PAVEMENT 8.75" A.C.P. - REWORK 14.0" FLEX - REWORK
- 14.5" PAVEMENT 5.5" A.C.P. - REWORK 9.0" FLEX - REWORK
- 15.5" PAVEMENT 6.5" A.C.P. - REWORK 9.0" FLEX - REWORK
- 13.75" PAVEMENT 6.75" A.C.P. - REWORK 7.0" FLEX - REWORK
- 12.5" PAVEMENT 5.5" A.C.P. - REWORK 7.0" FLEX - REWORK
- 11.75" PAVEMENT 2.75" A.C.P. - REWORK 9.0" FLEX - REWORK
- 16.5" PAVEMENT 6.5" A.C.P. - REWORK 10.0" FLEX - REWORK
- 8.0" PAVEMENT 8" FLEX - REWORK
- 10.0" PAVEMENT 10" FLEX - REWORK
- 4" CONCRETE SIDEWALK REMOVAL
- CONCRETE MEDIAN REMOVAL
- CONCRETE RIPRAP REMOVAL
- A.C.P. REMOVAL
- BRICK PAVER REMOVAL
- — — SAW CUT LINE
- Ⓐ CONCRETE CURB REMOVAL
- Ⓑ CONCRETE CURB & GUTTER REMOVAL
- Ⓒ CONCRETE VALLEY GUTTER REMOVAL
- Ⓓ TYPE 2 C.T.B. REMOVAL (CAST IN PLACE)
- Ⓔ C.T.B. REMOVAL (PRE-CAST)
- Ⓕ CONCRETE DRAIN REMOVAL
- Ⓖ METAL BEAM GUARD FENCE REMOVAL
- Ⓗ TERMINAL-ANCHOR-SECTION REMOVAL
- Ⓘ SINGLE GUARD RAIL TERMINAL
- Ⓙ TIMBER POST & CABLE RMV (PREP. ROW)
- Ⓚ PALM TREE TO BE RELOCATED
- Ⓛ FENCE REMOVAL (PREP. R.O.W.)
- Ⓜ TREE REMOVAL
- Ⓝ EXIST. STRUCTURE TO BE REMOVED

SHEET TOTALS				
ITEM	EST.	FINAL	UNIT	DESCRIPTION
100			STA	PREPARATION OF R.O.W.
100			EA	PREPARATION OF R.O.W. (TREES)
104	2661		LF	REMOVE CONC. (CURB)
104			LF	REMOVE CONC. (CURB & GUTTER)
104			LF	REMOVE CONC. (VALLEY GUTTER)
104	261		SY	REMOVE CONC. (MEDIAN)
104	188		SY	REMOVE CONC. (DRAIN)
104			SY	REMOVE CONC. (RIPRAP)
105			SY	REMOVE ASPHALTIC PAVEMENT
* 251	521		CY	REWORK BASE MAT'L (7" FLEX BASE)
* 251			CY	REWORK BASE MAT'L (8" FLEX BASE)
* 251	269		CY	REWORK BASE MAT'L (9" FLEX BASE)
* 251			CY	REWORK BASE MAT'L (10" FLEX BASE)
* 251	3977		CY	REWORK BASE MAT'L (14" FLEX BASE)

ITEMIZED PREP R.O.W. TABLE				
ITEM	EST.	FINAL	UNIT	DESCRIPTION
$ 100			LF	TIMBER POST & CABLE
$ 100			LF	CHAIN LINK FENCE
$ 100			STA	SHRUBS

$ TO BE PAID FOR UNDER PREP. R.O.W. (STA.) FOR CONTRACTOR'S INFORMATION ONLY.
* QUANTITIES REFLECT 85% SALVAGEABLE RATE.
# A.C.P. TO BE USED AS ITEM 251

ALL PALM TREES SHALL BE RELOCATED TO AREAS WITHIN THE PROJECT LIMITS.
CONTRACTOR IS TO CONTACT THE PROJECT ENGINEER FOR MARKING SPECIFIC LOCATIONS.

SHEET TOTALS				
ITEM	EST.	FINAL	UNIT	DESCRIPTION
# * ~~3977~~			SY	SALVAGE A.C.P. (2.75" A.C.P.)
# * 251	425		SY	SALVAGE A.C.P. (5.50" A.C.P.)
# * 251	836		SY	SALVAGE A.C.P. (6.50" A.C.P.)
# * 251	3148		SY	SALVAGE A.C.P. (6.75" A.C.P.)
# * 251	12030		SY	SALVAGE A.C.P. (8.75" A.C.P.)
479			EA	ADJUSTING INLET (CAP)
496			LF	REMOVE OLD STR. (PIPE)
496	2		EA	REMOVE OLD STR. (SMALL)
542			LF	REMOVE METAL BEAM GUARD FENCE
542			EA	REMOVE SINGLE GUARDRAIL TERMINAL
542			EA	REMOVE TERMINAL ANCHOR SECTION
1057			EA	TRANSPLANTING TREES & PALMS
5190			SY	REMOVE & RELOCATE SALVAGE LANDSCAPE PAVERS

⚠ 1 REVISED 9-26-03

NOTES:

1. SAVLAGED MBGF AND POSTS SHALL BE RETURNED TO THE PHARR MAINTENANCE YARD.

THE SEAL APPEARING ON THIS DOCUMENT WAS AUTHORIZED BY JAIME AGUILAR, P.E. 87606 ON 07/02/2003.

STATE OF TEXAS
JAIME AGUILAR
87606
REGISTERED PROFESSIONAL ENGINEER

Parsons Brinckerhoff Quade & Douglas Inc.

Texas Department of Transportation

© 2003 by TxDOT

US 281
REMOVAL ITEM DETAILS

STA. 780+00 "BL1" TO
STA. 792+00 "BL1"

PLAN 1"= 100' HORIZ

SHEET 15 OF 22				281REM15.DGN			
DESIGNED: TT	FED. RD DIV. No.	STATE	FEDERAL AID PROJECT No.				HIGHWAY No.
CHECKED: DM	6	TEXAS					US 281
DRAWN: JT	STATE DISTRICT	COUNTY	CONTROL No.	SECTION No.	JOB No.	SHEET No.	
CHECKED: DM	PHARR	HIDALGO	0255	08	091	240	

NAME
02:05:45 PM
07/22/2003
i:\22322o\cadd\sheets\removals\281rem16.dgn

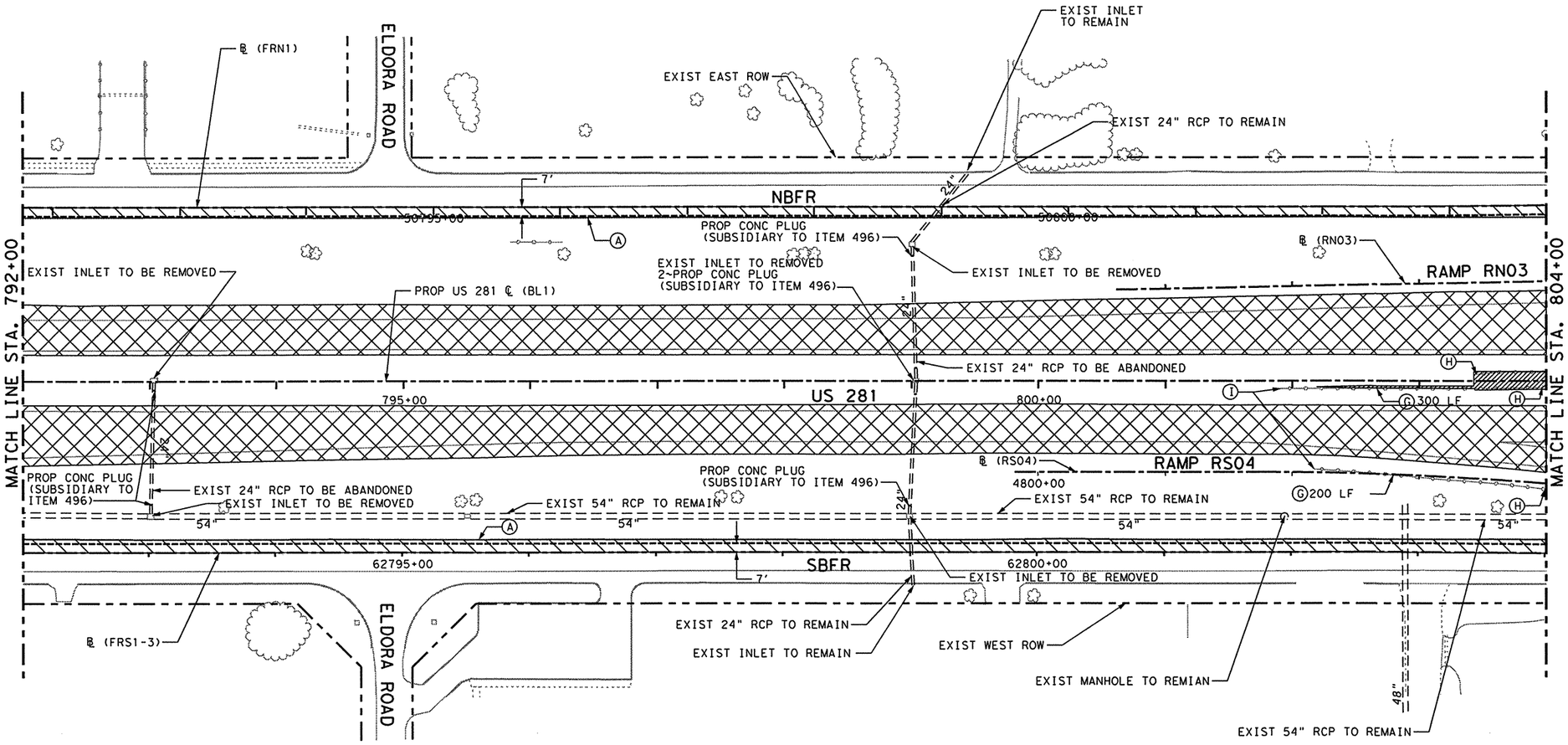

REMOVAL LEGEND:

- 22.75" PAVEMENT 8.75" A.C.P. - REWORK 14.0" FLEX - REWORK
- 14.5" PAVEMENT 5.5" A.C.P. - REWORK 9.0" FLEX - REWORK
- 15.5" PAVEMENT 6.5" A.C.P. - REWORK 9.0" FLEX - REWORK
- 13.75" PAVEMENT 6.75" A.C.P. - REWORK 7.0" FLEX - REWORK
- 12.5" PAVEMENT 5.5" A.C.P. - REWORK 7.0" FLEX - REWORK
- 11.75" PAVEMENT 2.75" A.C.P. - REWORK 9.0" FLEX - REWORK
- 16.5" PAVEMENT 6.5" A.C.P. - REWORK 10.0" FLEX - REWORK
- 8.0" PAVEMENT 8" FLEX - REWORK
- 10.0" PAVEMENT 10" FLEX - REWORK
- 4" CONCRETE SIDEWALK REMOVAL
- CONCRETE MEDIAN REMOVAL
- CONCRETE RIPRAP REMOVAL
- A.C.P. REMOVAL
- BRICK PAVER REMOVAL
- SAW CUT LINE
- (A) CONCRETE CURB REMOVAL
- (B) CONCRETE CURB & GUTTER REMOVAL
- (C) CONCRETE VALLEY GUTTER REMOVAL
- (D) TYPE 2 C.T.B. REMOVAL (CAST IN PLACE)
- (E) C.T.B. REMOVAL (PRE-CAST)
- (F) CONCRETE DRAIN REMOVAL
- (G) METAL BEAM GUARD FENCE REMOVAL
- (H) TERMINAL-ANCHOR-SECTION REMOVAL
- (I) SINGLE GUARD RAIL TERMINAL
- (J) TIMBER POST & CABLE RMV (PREP. ROW)
- (K) PALM TREE TO BE RELOCATED
- (L) FENCE REMOVAL (PREP. R.O.W.)
- (M) TREE REMOVAL
- (N) EXIST. STRUCTURE TO BE REMOVED

SHEET TOTALS				
ITEM	EST.	FINAL	UNIT	DESCRIPTION
100			STA	PREPARATION OF R.O.W.
100			EA	PREPARATION OF R.O.W. (TREES)
104	2400		LF	REMOVE CONC. (CURB)
104			LF	REMOVE CONC. (CURB & GUTTER)
104			LF	REMOVE CONC. (VALLEY GUTTER)
104			SY	REMOVE CONC. (MEDIAN)
104			SY	REMOVE CONC. (DRAIN)
104	114		SY	REMOVE CONC. (RIPRAP)
105			SY	REMOVE ASPHALTIC PAVEMENT
* 251	400		CY	REWORK BASE MAT'L (7" FLEX BASE)
* 251			CY	REWORK BASE MAT'L (8" FLEX BASE)
* 251			CY	REWORK BASE MAT'L (9" FLEX BASE)
* 251			CY	REWORK BASE MAT'L (10" FLEX BASE)
* 251	3686		CY	REWORK BASE MAT'L (14" FLEX BASE)

ITEMIZED PREP R.O.W. TABLE				
ITEM	EST.	FINAL	UNIT	DESCRIPTION
$ 100			LF	TIMBER POST & CABLE
$ 100			LF	CHAIN LINK FENCE
$ 100			STA	SHRUBS

$ TO BE PAID FOR UNDER PREP. R.O.W. (STA.) FOR CONTRACTOR'S INFORMATION ONLY.
* QUANTITIES REFLECT 85% SALVAGEABLE RATE.
# A.C.P. TO BE USED AS ITEM 251

ALL PALM TREES SHALL BE RELOCATED TO AREAS WITHIN THE PROJECT LIMITS.
CONTRACTOR IS TO CONTACT THE PROJECT ENGINEER FOR MARKING SPECIFIC LOCATIONS.

SHEET TOTALS				
ITEM	EST.	FINAL	UNIT	DESCRIPTION
** 305			SY	SALVAGE A.C.P. (2.75" A.C.P.)
** 305			SY	SALVAGE A.C.P. (5.50" A.C.P.)
** 305			SY	SALVAGE A.C.P. (6.50" A.C.P.)
** 305	2414		SY	SALVAGE A.C.P. (6.75" A.C.P.)
** 305	11149		SY	SALVAGE A.C.P. (8.75" A.C.P.)
479			EA	ADJUSTING INLET (CAP)
496			LF	REMOVE OLD STR. (PIPE)
496	5		EA	REMOVE OLD STR. (SMALL)
542	500		LF	REMOVE METAL BEAM GUARD FENCE
542	2		EA	REMOVE SINGLE GUARDRAIL TERMINAL
542	3		EA	REMOVE TERMINAL ANCHOR SECTION
1057			EA	TRANSPLANTING TREES AND PALMS
5190			SY	REMOVE & RELOCATE SALVAGE LANDSCAPE PAVERS

NOTES:

1. SAVLAGED MBGF AND POSTS SHALL BE RETURNED TO THE PHARR MAINTENANCE YARD.

THE SEAL APPEARING ON THIS DOCUMENT WAS AUTHORIZED BY JAIME AGUILAR, P.E. 87606 ON 07/22/2003.

STATE OF TEXAS
JAIME AGUILAR
87606
REGISTERED PROFESSIONAL ENGINEER

Parsons Brinckerhoff Quade & Douglas Inc.

Texas Department of Transportation
© 2003 by TxDOT

US 281
REMOVAL ITEM DETAILS

STA. 792+00 "BL1" TO
STA. 804+00 "BL1"

PLAN 1"= 100' HORIZ

SHEET 16 OF 22 | 281REM16.DGN

DESIGNED: TT	FED. RD DIV. NO.	STATE	FEDERAL AID PROJECT No.				HIGHWAY No.
CHECKED: DM	6	TEXAS					US 281
DRAWN: JT	STATE DISTRICT	COUNTY	CONTROL No.	SECTION No.	JOB No.	SHEET No.	
CHECKED: DM	PHARR	HIDALGO	0255	08	091	241	

NAME
02:05:45 PM
07/22/2003
i:\2232a\cadd\sheets\removals\281reml6.dgn

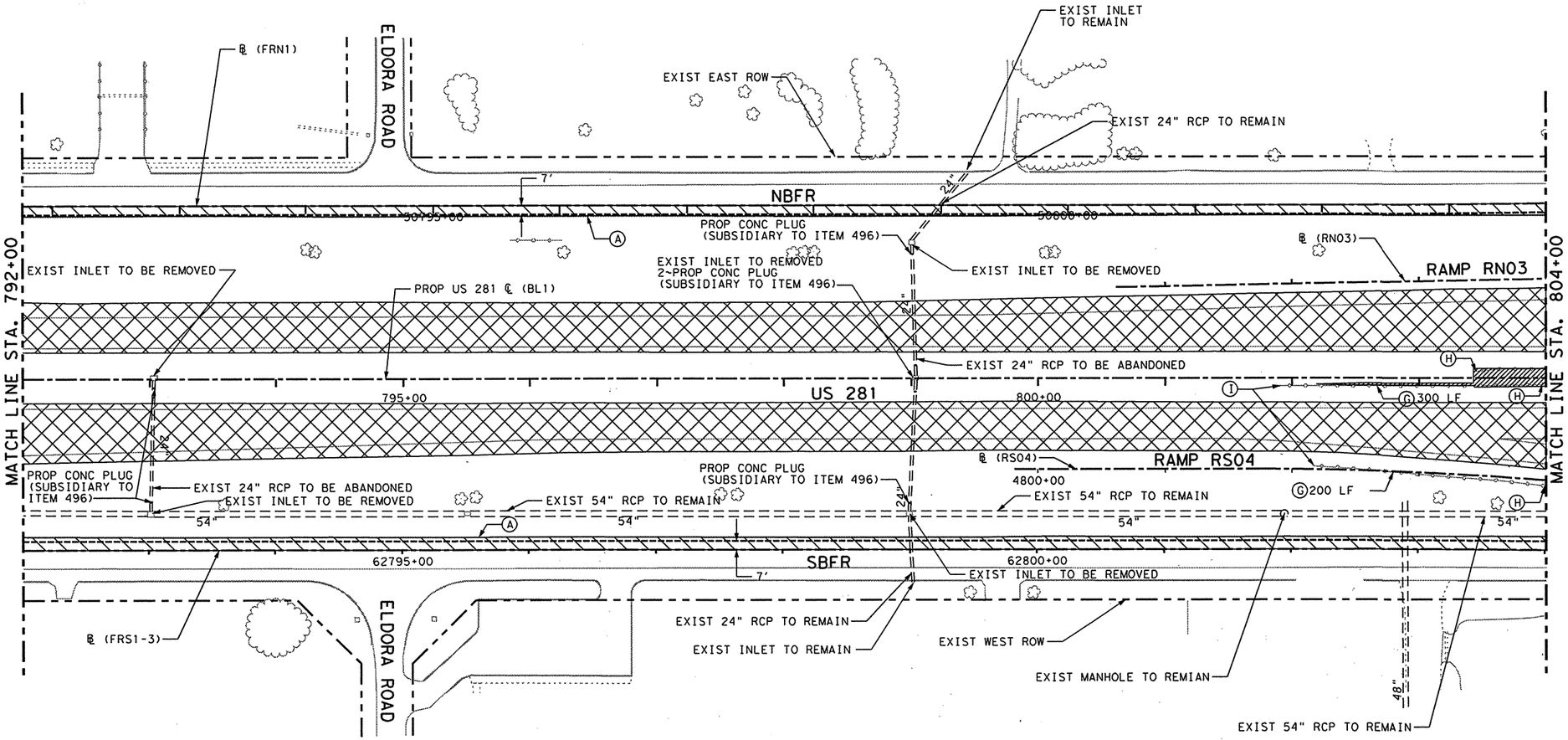

REMOVAL LEGEND:

- 22.75" PAVEMENT 8.75" A.C.P. - REWORK 14.0" FLEX - REWORK
- 14.5" PAVEMENT 5.5" A.C.P. - REWORK 9.0" FLEX - REWORK
- 15.5" PAVEMENT 6.5" A.C.P. - REWORK 9.0" FLEX - REWORK
- 13.75" PAVEMENT 6.75" A.C.P. - REWORK 7.0" FLEX - REWORK
- 12.5" PAVEMENT 5.5" A.C.P. - REWORK 7.0" FLEX - REWORK
- 11.75" PAVEMENT 2.75" A.C.P. - REWORK 9.0" FLEX - REWORK
- 16.5" PAVEMENT 6.5" A.C.P. - REWORK 10.0" FLEX - REWORK
- 8.0" PAVEMENT 8" FLEX - REWORK
- 10.0" PAVEMENT 10" FLEX - REWORK
- 4" CONCRETE SIDEWALK REMOVAL
- CONCRETE MEDIAN REMOVAL
- CONCRETE RIPRAP REMOVAL
- A.C.P. REMOVAL
- BRICK PAVER REMOVAL
- — — SAW CUT LINE
- (A) CONCRETE CURB REMOVAL
- (B) CONCRETE CURB & GUTTER REMOVAL
- (C) CONCRETE VALLEY GUTTER REMOVAL
- (D) TYPE 2 C.T.B. REMOVAL (CAST IN PLACE)
- (E) C.T.B. REMOVAL (PRE-CAST)
- (F) CONCRETE DRAIN REMOVAL
- (G) METAL BEAM GUARD FENCE REMOVAL
- (H) TERMINAL-ANCHOR-SECTION REMOVAL
- (I) SINGLE GUARD RAIL TERMINAL
- (J) TIMBER POST & CABLE RMV (PREP. ROW)
- (K) PALM TREE TO BE RELOCATED
- (L) FENCE REMOVAL (PREP. R.O.W.)
- (M) TREE REMOVAL
- (N) EXIST. STRUCTURE TO BE REMOVED

SHEET TOTALS				
ITEM	EST.	FINAL	UNIT	DESCRIPTION
100			STA	PREPARATION OF R.O.W.
100			EA	PREPARATION OF R.O.W. (TREES)
104	2400		LF	REMOVE CONC. (CURB)
104			LF	REMOVE CONC. (CURB & GUTTER)
104			LF	REMOVE CONC. (VALLEY GUTTER)
104			SY	REMOVE CONC. (MEDIAN)
104			SY	REMOVE CONC. (DRAIN)
104	114		SY	REMOVE CONC. (RIPRAP)
105			SY	REMOVE ASPHALTIC PAVEMENT
* 251	400		CY	REWORK BASE MAT'L (7" FLEX BASE)
* 251			CY	REWORK BASE MAT'L (8" FLEX BASE)
* 251			CY	REWORK BASE MAT'L (9" FLEX BASE)
* 251			CY	REWORK BASE MAT'L (10" FLEX BASE)
* 251	3686		CY	REWORK BASE MAT'L (14" FLEX BASE)

ITEMIZED PREP R.O.W. TABLE				
ITEM	EST.	FINAL	UNIT	DESCRIPTION
$ 100			LF	TIMBER POST & CABLE
$ 100			LF	CHAIN LINK FENCE
$ 100			STA	SHRUBS

$ TO BE PAID FOR UNDER PREP. R.O.W. (STA.) FOR CONTRACTOR'S INFORMATION ONLY.
* QUANTITIES REFLECT 85% SALVAGEABLE RATE.
# A.C.P. TO BE USED AS ITEM 251

ALL PALM TREES SHALL BE RELOCATED TO AREAS WITHIN THE PROJECT LIMITS.
CONTRACTOR IS TO CONTACT THE PROJECT ENGINEER FOR MARKING SPECIFIC LOCATIONS.

SHEET TOTALS				
ITEM	ESi.	FINAL	UNIT	DESCRIPTION
# * ~~265~~			SY	SALVAGE A.C.P. (2.75" A.C.P.)
# * ~~330~~			SY	SALVAGE A.C.P. (5.50" A.C.P.)
# * ~~395~~			SY	SALVAGE A.C.P. (6.50" A.C.P.)
# * ~~251~~ 251	2414		SY	SALVAGE A.C.P. (6.75" A.C.P.)
# * ~~251~~ 251	11149		SY	SALVAGE A.C.P. (8.75" A.C.P.)
479			EA	ADJUSTING INLET (CAP)
496			LF	REMOVE OLD STR. (PIPE)
496	5		EA	REMOVE OLD STR. (SMALL)
542	500		LF	REMOVE METAL BEAM GUARD FENCE
542	2		EA	REMOVE SINGLE GUARDRAIL TERMINAL
542	3		EA	REMOVE TERMINAL ANCHOR SECTION
1057			EA	TRANSPLANTING TREES AND PALMS
5190			SY	REMOVE & RELOCATE SALVAGE LANDSCAPE PAVERS

1 REVISED 9-26-03

NOTES:

1. SAVLAGED MBGF AND POSTS SHALL BE RETURNED TO THE PHARR MAINTENANCE YARD.

THE SEAL APPEARING ON THIS DOCUMENT WAS AUTHORIZED BY JAIME AGUILAR, P.E. 87606 ON 07/22/2003.

STATE OF TEXAS
JAIME AGUILAR
87606
REGISTERED
PROFESSIONAL ENGINEER

Parsons Brinckerhoff Quade & Douglas Inc.

Texas Department of Transportation

© 2003 by TxDOT

US 281
REMOVAL ITEM DETAILS

STA. 792+00 "BL1" TO
STA. 804+00 "BL1"

PLAN 1"= 100' HORIZ

SHEET 16 OF 22 | 281REM16.DGN

DESIGNED: TT	FED. RD DIV. NO.	STATE	FEDERAL AID PROJECT NO.			HIGHWAY NO.	
CHECKED: DM	6	TEXAS				US 281	
DRAWN: JT	STATE DISTRICT	COUNTY	CONTROL NO.	SECTION NO.	JOB NO.	SHEET NO.	
CHECKED: DM	PHARR	HIDALGO	0255	08	091	241	

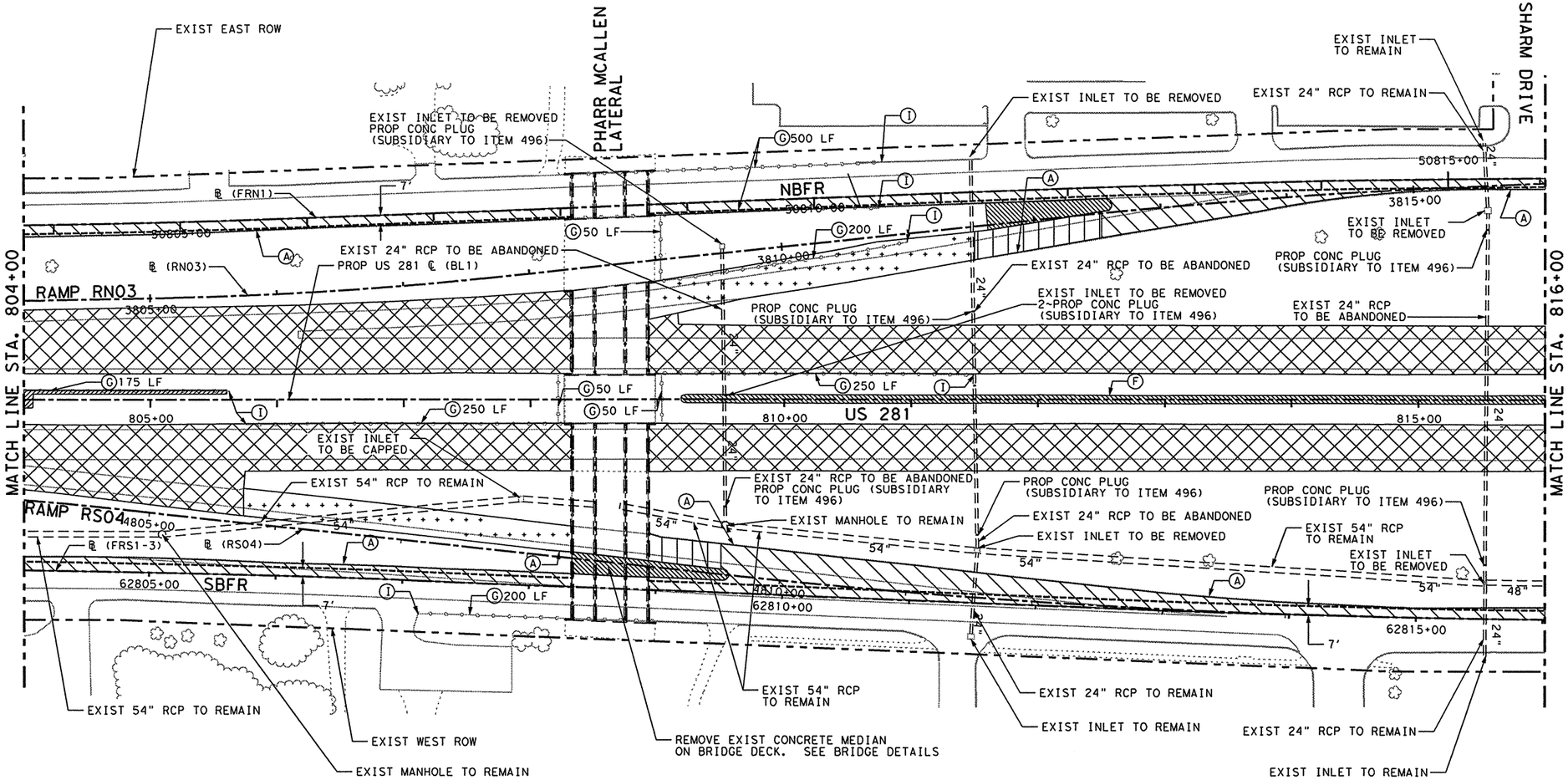

REMOVAL LEGEND:

- 22.75" PAVEMENT 8.75" A.C.P. - REWORK 14.0" FLEX - REWORK
- 14.5" PAVEMENT 5.5" A.C.P. - REWORK 9.0" FLEX - REWORK
- 15.5" PAVEMENT 6.5" A.C.P. - REWORK 9.0" FLEX - REWORK
- 13.75" PAVEMENT 6.75" A.C.P. - REWORK 7.0" FLEX - REWORK
- 12.5" PAVEMENT 5.5" A.C.P. - REWORK 7.0" FLEX - REWORK
- 11.75" PAVEMENT 2.75" A.C.P. - REWORK 9.0" FLEX - REWORK
- 16.5" PAVEMENT 6.5" A.C.P. - REWORK 10.0" FLEX - REWORK
- 8.0" PAVEMENT 8" FLEX - REWORK
- 10.0" PAVEMENT 10" FLEX - REWORK
- 4" CONCRETE SIDEWALK REMOVAL
- CONCRETE MEDIAN REMOVAL
- CONCRETE RIPRAP REMOVAL
- A.C.P. REMOVAL
- BRICK PAVER REMOVAL
- SAW CUT LINE
- (A) CONCRETE CURB REMOVAL
- (B) CONCRETE CURB & GUTTER REMOVAL
- (C) CONCRETE VALLEY GUTTER REMOVAL
- (D) TYPE 2 C.T.B. REMOVAL (CAST IN PLACE)
- (E) C.T.B. REMOVAL (PRE-CAST)
- (F) CONCRETE DRAIN REMOVAL
- (G) METAL BEAM GUARD FENCE REMOVAL
- (H) TERMINAL-ANCHOR-SECTION REMOVAL
- (I) SINGLE GUARD RAIL TERMINAL
- (J) TIMBER POST & CABLE RMV (PREP. ROW)
- (K) PALM TREE TO BE RELOCATED
- (L) FENCE REMOVAL (PREP. R.O.W.)
- (M) TREE REMOVAL
- (N) EXIST. STRUCTURE TO BE REMOVED

SHEET TOTALS

ITEM	EST.	FINAL	UNIT	DESCRIPTION
100			STA	PREPARATION OF R.O.W.
100			EA	PREPARATION OF R.O.W. (TREES)
104	2759		LF	REMOVE CONC. (CURB)
104			LF	REMOVE CONC. (CURB & GUTTER)
104			LF	REMOVE CONC. (VALLEY GUTTER)
104	344		SY	REMOVE CONC. (MEDIAN)
104	501		SY	REMOVE CONC. (DRAIN)
104	67		SY	REMOVE CONC. (RIPRAP)
105			SY	REMOVE ASPHALTIC PAVEMENT
* 251	556		CY	REWORK BASE MAT'L (7" FLEX BASE)
* 251			CY	REWORK BASE MAT'L (8" FLEX BASE)
* 251	371		CY	REWORK BASE MAT'L (9" FLEX BASE)
* 251			CY	REWORK BASE MAT'L (10" FLEX BASE)
* 251	3635		CY	REWORK BASE MAT'L (14" FLEX BASE)

ITEMIZED PREP R.O.W. TABLE

ITEM	EST.	FINAL	UNIT	DESCRIPTION
$ 100			LF	TIMBER POST & CABLE
$ 100			LF	CHAIN LINK FENCE
$ 100			STA	SHRUBS

$ TO BE PAID FOR UNDER PREP. R.O.W. (STA.) FOR CONTRACTOR'S INFORMATION ONLY.
* QUANTITIES REFLECT 85% SALVAGEABLE RATE.
# A.C.P. TO BE USED AS ITEM 251

ALL PALM TREES SHALL BE RELOCATED TO AREAS WITHIN THE PROJECT LIMITS.
CONTRACTOR IS TO CONTACT THE PROJECT ENGINEER FOR MARKING SPECIFIC LOCATIONS.

SHEET TOTALS

ITEM	EST.	FINAL	UNIT	DESCRIPTION
# * 305			SY	SALVAGE A.C.P. (2.75" A.C.P.)
# * 305	362		SY	SALVAGE A.C.P. (5.50" A.C.P.)
# * 305	1379		SY	SALVAGE A.C.P. (6.50" A.C.P.)
# * 305	3364		SY	SALVAGE A.C.P. (6.75" A.C.P.)
# * 305	10995		SY	SALVAGE A.C.P. (8.75" A.C.P.)
479	1		EA	ADJUSTING INLET (CAP)
496			LF	REMOVE OLD STR. (PIPE)
496	6		EA	REMOVE OLD STR. (SMALL)
542	1725		LF	REMOVE METAL BEAM GUARD FENCE
542	7		EA	REMOVE SINGLE GUARDRAIL TERMINAL
542			EA	REMOVE TERMINAL ANCHOR SECTION
1057			EA	TRANSPLANTING TREES & PALMS
5190			SY	REMOVE & RELOCATE SALVAGE LANDSCAPE PAVERS

NOTES:

1. SAVLAGED MBGF AND POSTS SHALL BE RETURNED TO THE PHARR MAINTENANCE YARD.

THE SEAL APPEARING ON THIS DOCUMENT WAS AUTHORIZED BY JAIME AGUILAR, P.E. 87606 ON 07/22/2003.

STATE OF TEXAS
JAIME AGUILAR
87606
REGISTERED
PROFESSIONAL ENGINEER

Parsons Brinckerhoff Quade & Douglas Inc.

Texas Department of Transportation

© 2003 by TxDOT

US 281
REMOVAL ITEM DETAILS

STA. 804+00 "BL1" TO
STA. 816+00 "BL1"

PLAN 1"= 100' HORIZ

SHEET 17 OF 22				281REM17.DGN	
DESIGNED: TT	FED. RD DIV. NO.	STATE	FEDERAL AID PROJECT No.		HIGHWAY No.
CHECKED: DM	6	TEXAS			US 281

DRAWN: JT	STATE DISTRICT	COUNTY	CONTROL No.	SECTION No.	JOB No.	SHEET No.
CHECKED: DM	PHARR	HIDALGO	0255	08	091	242

NAME
02:05:54 PM
07/22/2003
i:\22322a\cadd\sheets\removals\281rem17.dgn

NAME
02:05:54 PM
07/22/2003
i:\22322o\cadd\sheets\removals\281rem17.dgn

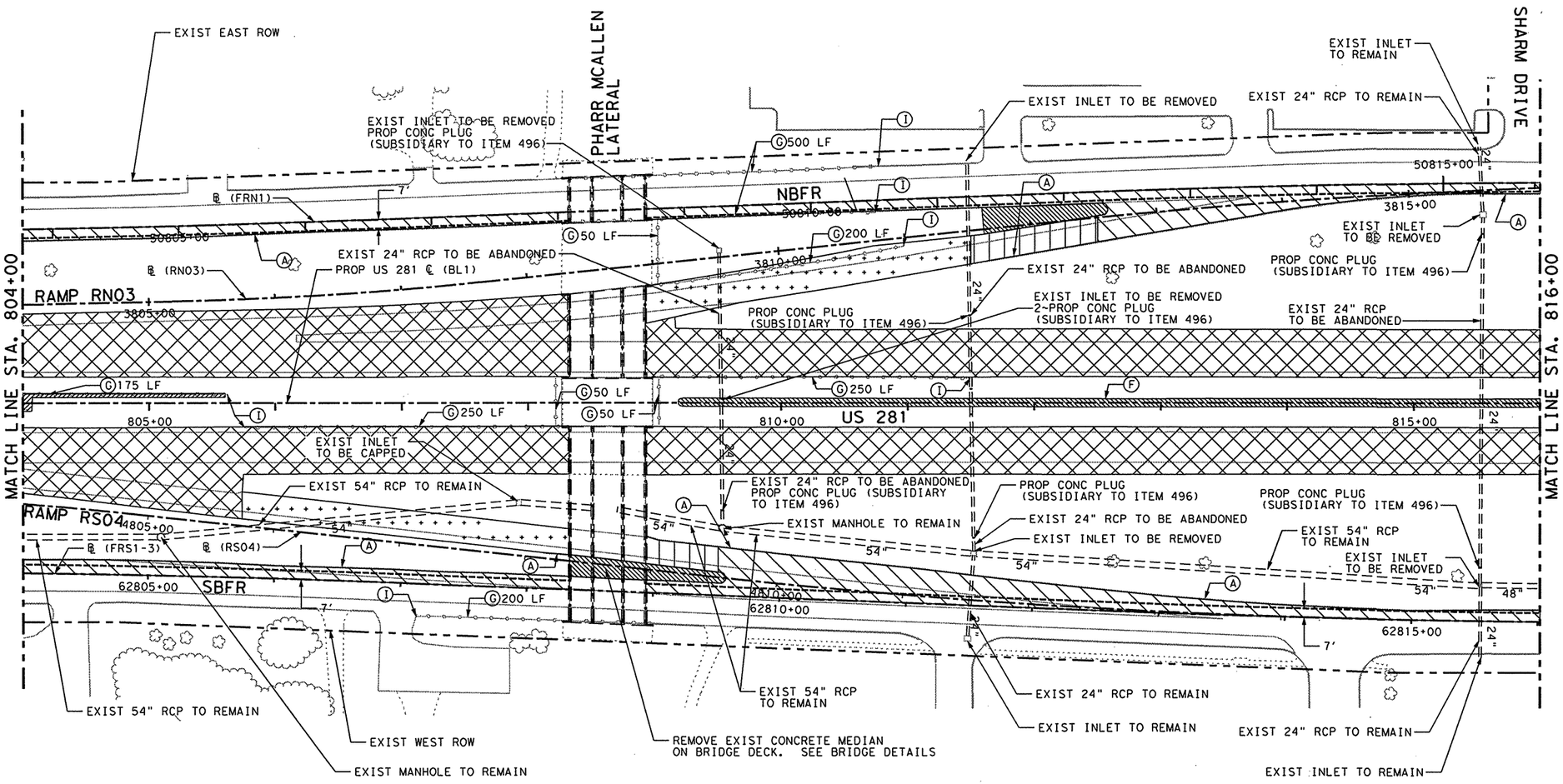

REMOVAL LEGEND:

- 22.75" PAVEMENT 8.75" A.C.P. - REWORK 14.0" FLEX - REWORK
- 14.5" PAVEMENT 5.5" A.C.P. - REWORK 9.0" FLEX - REWORK
- 15.5" PAVEMENT 6.5" A.C.P. - REWORK 9.0" FLEX - REWORK
- 13.75" PAVEMENT 6.75" A.C.P. - REWORK 7.0" FLEX - REWORK
- 12.5" PAVEMENT 5.5" A.C.P. - REWORK 7.0" FLEX - REWORK
- 11.75" PAVEMENT 2.75" A.C.P. - REWORK 9.0" FLEX - REWORK
- 16.5" PAVEMENT 6.5" A.C.P. - REWORK 10.0" FLEX - REWORK
- 8.0" PAVEMENT 8" FLEX - REWORK
- 10.0" PAVEMENT 10" FLEX - REWORK
- 4" CONCRETE SIDEWALK REMOVAL
- CONCRETE MEDIAN REMOVAL
- CONCRETE RIPRAP REMOVAL
- A.C.P. REMOVAL
- BRICK PAVER REMOVAL
- SAW CUT LINE
- (A) CONCRETE CURB REMOVAL
- (B) CONCRETE CURB & GUTTER REMOVAL
- (C) CONCRETE VALLEY GUTTER REMOVAL
- (D) TYPE 2 C.T.B. REMOVAL (CAST IN PLACE)
- (E) C.T.B. REMOVAL (PRE-CAST)
- (F) CONCRETE DRAIN REMOVAL
- (G) METAL BEAM GUARD FENCE REMOVAL
- (H) TERMINAL-ANCHOR-SECTION REMOVAL
- (I) SINGLE GUARD RAIL TERMINAL
- (J) TIMBER POST & CABLE RMV (PREP. ROW)
- (K) PALM TREE TO BE RELOCATED
- (L) FENCE REMOVAL (PREP. R.O.W.)
- (M) TREE REMOVAL
- (N) EXIST. STRUCTURE TO BE REMOVED

SHEET TOTALS

ITEM	EST.	FINAL	UNIT	DESCRIPTION
100			STA	PREPARATION OF R.O.W.
100			EA	PREPARATION OF R.O.W. (TREES)
104	2759		LF	REMOVE CONC. (CURB)
104			LF	REMOVE CONC. (CURB & GUTTER)
104			LF	REMOVE CONC. (VALLEY GUTTER)
104	344		SY	REMOVE CONC. (MEDIAN)
104	501		SY	REMOVE CONC. (DRAIN)
104	67		SY	REMOVE CONC. (RIPRAP)
105			SY	REMOVE ASPHALTIC PAVEMENT
* 251	556		CY	REWORK BASE MAT'L (7" FLEX BASE)
* 251			CY	REWORK BASE MAT'L (8" FLEX BASE)
* 251	371		CY	REWORK BASE MAT'L (9" FLEX BASE)
* 251			CY	REWORK BASE MAT'L (10" FLEX BASE)
* 251	3635		CY	REWORK BASE MAT'L (14" FLEX BASE)

ITEMIZED PREP R.O.W. TABLE

ITEM	EST.	FINAL	UNIT	DESCRIPTION
$ 100			LF	TIMBER POST & CABLE
$ 100			LF	CHAIN LINK FENCE
$ 100			STA	SHRUBS

$ TO BE PAID FOR UNDER PREP. R.O.W. (STA.) FOR CONTRACTOR'S INFORMATION ONLY.
* QUANTITIES REFLECT 85% SALVAGEABLE RATE.
# A.C.P. TO BE USED AS ITEM 251

ALL PALM TREES SHALL BE RELOCATED TO AREAS WITHIN THE PROJECT LIMITS.
CONTRACTOR IS TO CONTACT THE PROJECT ENGINEER FOR MARKING SPECIFIC LOCATIONS.

SHEET TOTALS

ITEM	EST.	FINAL	UNIT	DESCRIPTION
# * ~~305~~			SY	SALVAGE A.C.P. (2.75" A.C.P.)
# * 251	362		SY	SALVAGE A.C.P. (5.50" A.C.P.)
# * 251	1379		SY	SALVAGE A.C.P. (6.50" A.C.P.)
# * 251	3364		SY	SALVAGE A.C.P. (6.75" A.C.P.)
# * 251	10995		SY	SALVAGE A.C.P. (8.75" A.C.P.)
479	1		EA	ADJUSTING INLET (CAP)
496			LF	REMOVE OLD STR. (PIPE)
496	6		EA	REMOVE OLD STR. (SMALL)
542	1725		LF	REMOVE METAL BEAM GUARD FENCE
542	7		EA	REMOVE SINGLE GUARDRAIL TERMINAL
542			EA	REMOVE TERMINAL ANCHOR SECTION
1057			EA	TRANSPLANTING TREES & PALMS
5190			SY	REMOVE & RELOCATE SALVAGE LANDSCAPE PAVERS

1 REVISED 9-26-03

NOTES:

1. SAVLAGED MBGF AND POSTS SHALL BE RETURNED TO THE PHARR MAINTENANCE YARD.

THE SEAL APPEARING ON THIS DOCUMENT WAS AUTHORIZED BY JAIME AGUILAR, P.E. 87606 ON 07/22/2003.

STATE OF TEXAS
JAIME AGUILAR
87606
REGISTERED PROFESSIONAL ENGINEER

Parsons Brinckerhoff Quade & Douglas Inc.

Texas Department of Transportation

© 2003 by TxDOT

US 281
REMOVAL ITEM DETAILS

STA. 804+00 "BL1" TO
STA. 816+00 "BL1"

PLAN 1"= 100' HORIZ

SHEET 17 OF 22 | 281REM17.DGN

DESIGNED: TT	FED. RD DIV. NO.	STATE	FEDERAL AID PROJECT NO.			HIGHWAY NO.	
CHECKED: DM	6	TEXAS				US 281	
DRAWN: JT	STATE DISTRICT	COUNTY	CONTROL NO.	SECTION NO.	JOB NO.	SHEET NO.	
CHECKED: DM	PHARR	HIDALGO	0255	08	091	242	

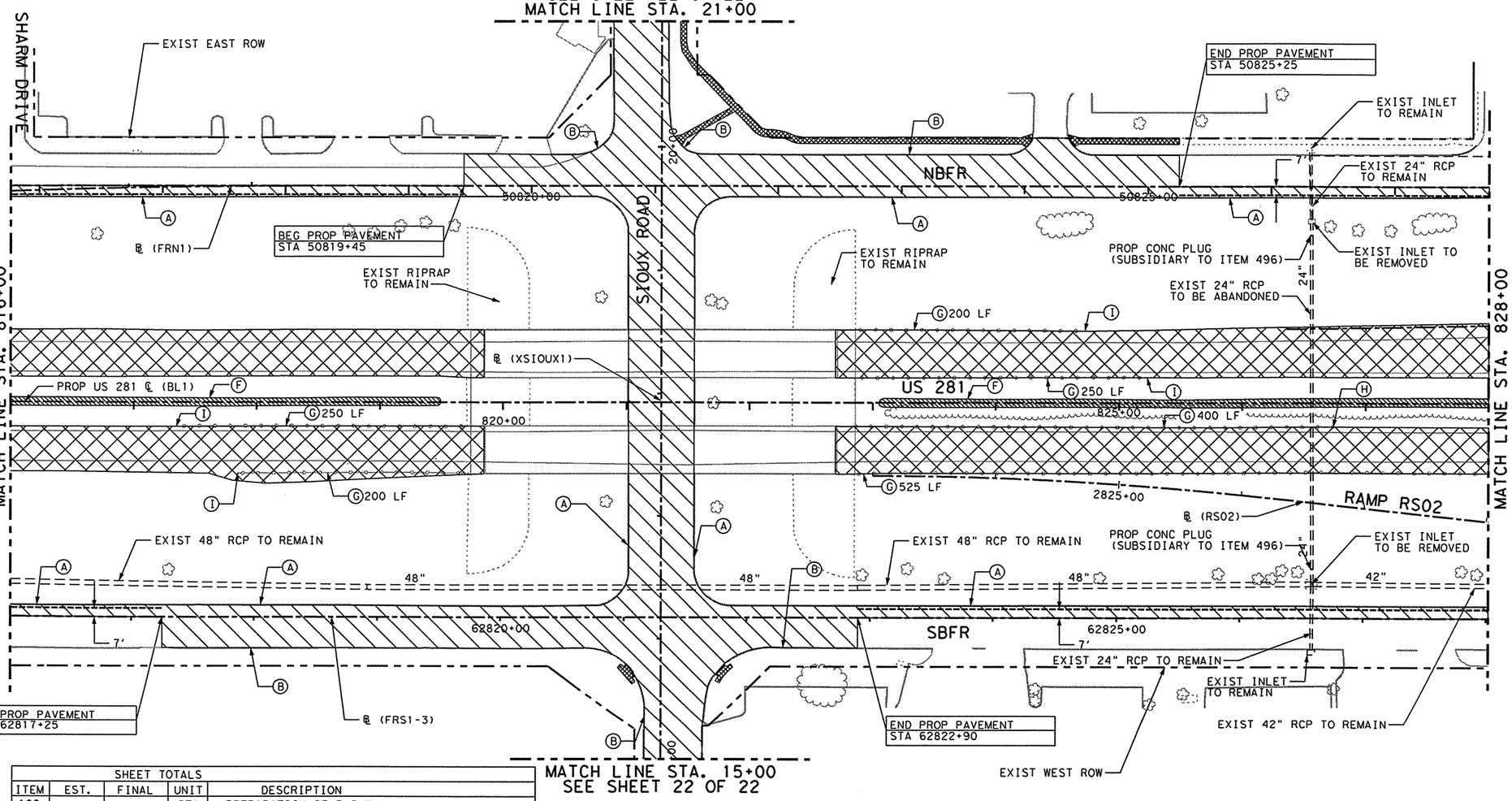

SHEET TOTALS				
ITEM	EST.	FINAL	UNIT	DESCRIPTION
100			STA	PREPARATION OF R.O.W.
100			EA	PREPARATION OF R.O.W. (TREES)
104	2905		LF	REMOVE CONC. (CURB)
104	936		LF	REMOVE CONC. (CURB & GUTTER)
104			LF	REMOVE CONC. (VALLEY GUTTER)
104			SY	REMOVE CONC. (MEDIAN)
104	626		SY	REMOVE CONC. (DRAIN)
104			SY	REMOVE CONC. (RIPRAP)
104	289		SY	REMOVE CONC. (SDWLK)
105			SY	REMOVE ASPHALTIC PAVEMENT
* 251	2106		CY	REWORK BASE MAT'L (7" FLEX BASE)
* 251			CY	REWORK BASE MAT'L (8" FLEX BASE)
* 251			CY	REWORK BASE MAT'L (9" FLEX BASE)
* 251			CY	REWORK BASE MAT'L (10" FLEX BASE)
* 251	2644		CY	REWORK BASE MAT'L (14" FLEX BASE)

ITEMIZED PREP R.O.W. TABLE				
ITEM	EST.	FINAL	UNIT	DESCRIPTION
$ 100			LF	TIMBER POST & CABLE
$ 100			LF	CHAIN LINK FENCE
$ 100			STA	SHRUBS

$ TO BE PAID FOR UNDER PREP. R.O.W. (STA.) FOR CONTRACTOR'S INFORMATION ONLY.
* QUANTITIES REFLECT 85% SALVAGEABLE RATE.
# A.C.P. TO BE USED AS ITEM 251

ALL PALM TREES SHALL BE RELOCATED TO AREAS WITHIN THE PROJECT LIMITS.
CONTRACTOR IS TO CONTACT THE PROJECT ENGINEER FOR MARKING SPECIFIC LOCATIONS.

SHEET TOTALS				
ITEM	EST.	FINAL	UNIT	DESCRIPTION
# * 305			SY	SALVAGE A.C.P. (2.75" A.C.P.)
# * 305			SY	SALVAGE A.C.P. (5.50" A.C.P.)
# * 305			SY	SALVAGE A.C.P. (6.50" A.C.P.)
# * 305	12739		SY	SALVAGE A.C.P. (6.75" A.C.P.)
# * 305	7998		SY	SALVAGE A.C.P. (8.75" A.C.P.)
479			EA	ADJUSTING INLET (CAP)
496			LF	REMOVE OLD STR. (PIPE)
496	2		EA	REMOVE OLD STR. (SMALL)
542	1825		LF	REMOVE METAL BEAM GUARD FENCE
542	4		EA	REMOVE SINGLE GUARDRAIL TERMINAL
542	1		EA	REMOVE TERMINAL ANCHOR SECTION
1057			EA	TRANSPLANTING TREES & PALMS
5190			SY	REMOVE & RELOCATE SALVAGE LANDSCAPE PAVERS

NOTES:

1. SAVLAGED MBGF AND POSTS SHALL BE RETURNED TO THE PHARR MAINTENANCE YARD.

THE SEAL APPEARING ON THIS DOCUMENT WAS AUTHORIZED BY JAIME AGUILAR, P.E. 87606 ON 07/02/2003.

STATE OF TEXAS
JAIME AGUILAR
87606
REGISTERED PROFESSIONAL ENGINEER

REMOVAL LEGEND:

- 22.75" PAVEMENT 8.75" A.C.P. - REWORK 14.0" FLEX - REWORK
- 14.5" PAVEMENT 5.5" A.C.P. - REWORK 9.0" FLEX - REWORK
- 15.5" PAVEMENT 6.5" A.C.P. - REWORK 9.0" FLEX - REWORK
- 13.75" PAVEMENT 6.75" A.C.P. - REWORK 7.0" FLEX - REWORK
- 12.5" PAVEMENT 5.5" A.C.P. - REWORK 7.0" FLEX - REWORK
- 11.75" PAVEMENT 2.75" A.C.P. - REWORK 9.0" FLEX - REWORK
- 16.5" PAVEMENT 6.5" A.C.P. - REWORK 10.0" FLEX - REWORK
- 8.0" PAVEMENT 8" FLEX - REWORK
- 10.0" PAVEMENT 10" FLEX - REWORK
- 4" CONCRETE SIDEWALK REMOVAL
- CONCRETE MEDIAN REMOVAL
- CONCRETE RIPRAP REMOVAL
- A.C.P. REMOVAL
- BRICK PAVER REMOVAL
- — — SAW CUT LINE
- (A) CONCRETE CURB REMOVAL
- (B) CONCRETE CURB & GUTTER REMOVAL
- (C) CONCRETE VALLEY GUTTER REMOVAL
- (D) TYPE 2 C.T.B. REMOVAL (CAST IN PLACE)
- (E) C.T.B. REMOVAL (PRE-CAST)
- (F) CONCRETE DRAIN REMOVAL
- (G) METAL BEAM GUARD FENCE REMOVAL
- (H) TERMINAL-ANCHOR-SECTION REMOVAL
- (I) SINGLE GUARD RAIL TERMINAL
- (J) TIMBER POST & CABLE RMV (PREP. ROW)
- (K) PALM TREE TO BE RELOCATED
- (L) FENCE REMOVAL (PREP. R.O.W.)
- (M) TREE REMOVAL
- (N) EXIST. STRUCTURE TO BE REMOVED

Parsons Brinckerhoff Quade & Douglas Inc.

Texas Department of Transportation

© 2003 by TxDOT

US 281
REMOVAL ITEM DETAILS

STA. 816+00 "BL1" TO
STA. 828+00 "BL1"

PLAN 1"= 100' HORIZ

SHEET 18 OF 22			281REM18.DGN				
DESIGNED: TT	FED. RD DIV. NO.	STATE	FEDERAL AID PROJECT No.			HIGHWAY No.	
	6	TEXAS				US 281	
CHECKED: DM	STATE DISTRICT	COUNTY	CONTROL No.	SECTION No.	JOB No.	SHEET No.	
DRAWN: JT	PHARR	HIDALGO	0255	08	091	243	
CHECKED: DM							

NAME
12:23:42 PM
07/02/2003
i:\22322o\cadd\sheets\removals\281rem18.dgn

NAME
12:23:42 PM
07/02/2003
i:\2232a\cadd\sheets\removals\281rem18.dgn

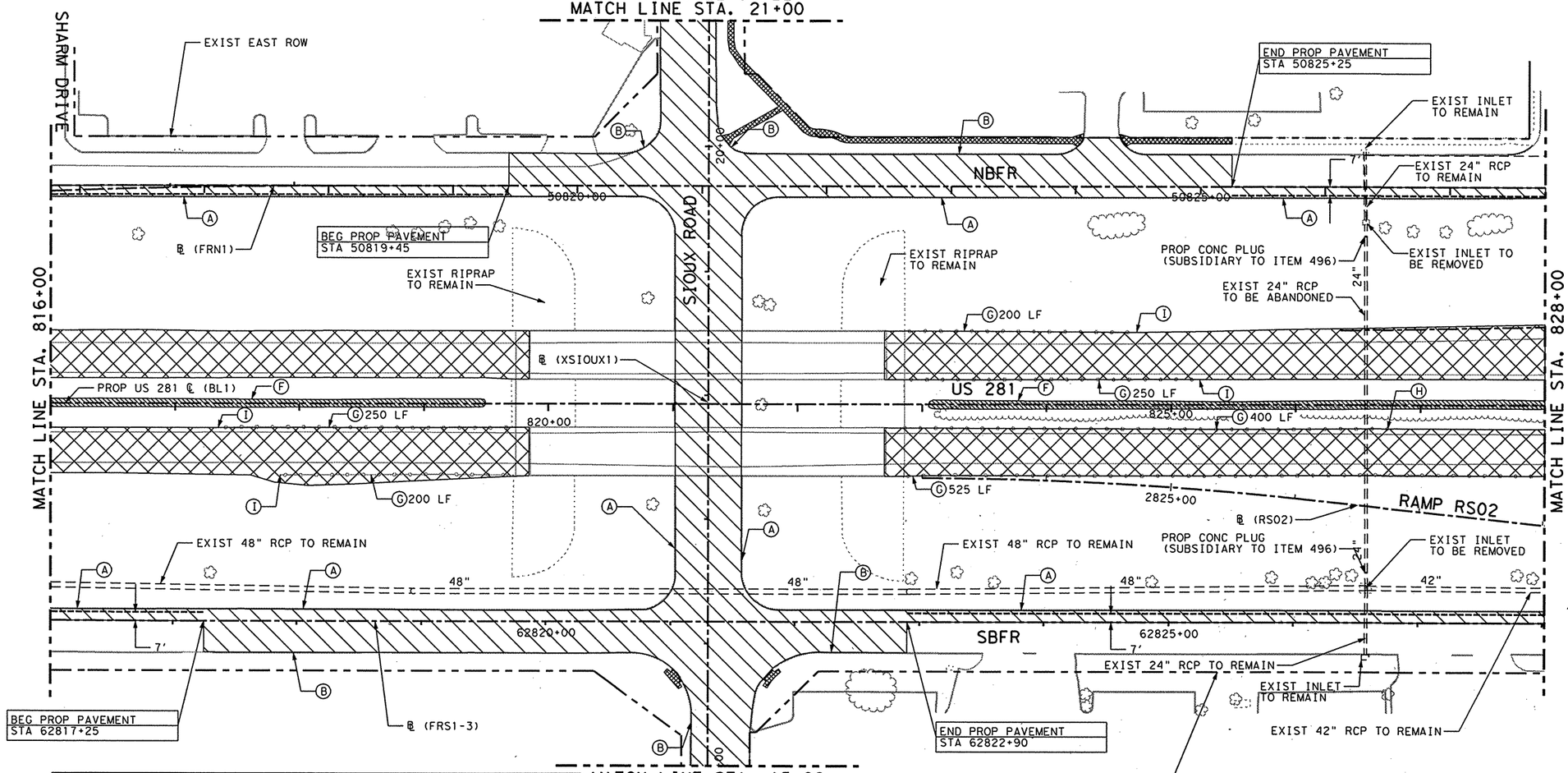

REMOVAL LEGEND:

- 22.75" PAVEMENT 8.75" A.C.P. - REWORK 14.0" FLEX - REWORK
- 14.5" PAVEMENT 5.5" A.C.P. - REWORK 9.0" FLEX - REWORK
- 15.5" PAVEMENT 6.5" A.C.P. - REWORK 9.0" FLEX - REWORK
- 13.75" PAVEMENT 6.75" A.C.P. - REWORK 7.0" FLEX - REWORK
- 12.5" PAVEMENT 5.5" A.C.P. - REWORK 7.0" FLEX - REWORK
- 11.75" PAVEMENT 2.75" A.C.P. - REWORK 9.0" FLEX - REWORK
- 16.5" PAVEMENT 6.5" A.C.P. - REWORK 10.0" FLEX - REWORK
- 8.0" PAVEMENT 8" FLEX - REWORK
- 10.0" PAVEMENT 10" FLEX - REWORK
- 4" CONCRETE SIDEWALK REMOVAL
- CONCRETE MEDIAN REMOVAL
- CONCRETE RIPRAP REMOVAL
- A.C.P. REMOVAL
- BRICK PAVER REMOVAL
- — — SAW CUT LINE
- (A) CONCRETE CURB REMOVAL
- (B) CONCRETE CURB & GUTTER REMOVAL
- (C) CONCRETE VALLEY GUTTER REMOVAL
- (D) TYPE 2 C.T.B. REMOVAL (CAST IN PLACE)
- (E) C.T.B. REMOVAL (PRE-CAST)
- (F) CONCRETE DRAIN REMOVAL
- (G) METAL BEAM GUARD FENCE REMOVAL
- (H) TERMINAL-ANCHOR-SECTION REMOVAL
- (I) SINGLE GUARD RAIL TERMINAL
- (J) TIMBER POST & CABLE RMV (PREP. ROW)
- (K) PALM TREE TO BE RELOCATED
- (L) FENCE REMOVAL (PREP. R.O.W.)
- (M) TREE REMOVAL
- (N) EXIST. STRUCTURE TO BE REMOVED

SHEET TOTALS

ITEM	EST.	FINAL	UNIT	DESCRIPTION
100			STA	PREPARATION OF R.O.W.
100			EA	PREPARATION OF R.O.W. (TREES)
104	2905		LF	REMOVE CONC. (CURB)
104	936		LF	REMOVE CONC. (CURB & GUTTER)
104			LF	REMOVE CONC. (VALLEY GUTTER)
104			SY	REMOVE CONC. (MEDIAN)
104	626		SY	REMOVE CONC. (DRAIN)
104			SY	REMOVE CONC. (RIPRAP)
104	289		SY	REMOVE CONC. (SDWLK)
105			SY	REMOVE ASPHALTIC PAVEMENT
* 251	2106		CY	REWORK BASE MAT'L (7" FLEX BASE)
* 251			CY	REWORK BASE MAT'L (8" FLEX BASE)
* 251			CY	REWORK BASE MAT'L (9" FLEX BASE)
* 251			CY	REWORK BASE MAT'L (10" FLEX BASE)
* 251	2644		CY	REWORK BASE MAT'L (14" FLEX BASE)

ITEMIZED PREP R.O.W. TABLE

ITEM	EST.	FINAL	UNIT	DESCRIPTION
$ 100			LF	TIMBER POST & CABLE
$ 100			LF	CHAIN LINK FENCE
$ 100			STA	SHRUBS

$ TO BE PAID FOR UNDER PREP. R.O.W. (STA.) FOR CONTRACTOR'S INFORMATION ONLY.
* QUANTITIES REFLECT 85% SALVAGEABLE RATE.
# A.C.P. TO BE USED AS ITEM 251

ALL PALM TREES SHALL BE RELOCATED TO AREAS WITHIN THE PROJECT LIMITS.
CONTRACTOR IS TO CONTACT THE PROJECT ENGINEER FOR MARKING SPECIFIC LOCATIONS.

SHEET TOTALS

ITEM	EST.	FINAL	UNIT	DESCRIPTION
# * ~~205~~			SY	SALVAGE A.C.P. (2.75" A.C.P.)
# * ~~251~~			SY	SALVAGE A.C.P. (5.50" A.C.P.)
# * ~~251~~			SY	SALVAGE A.C.P. (6.50" A.C.P.)
# * ~~251~~ 261	12739		SY	SALVAGE A.C.P. (6.75" A.C.P.)
# * ~~251~~ 251	7998		SY	SALVAGE A.C.P. (8.75" A.C.P.)
479			EA	ADJUSTING INLET (CAP)
496			LF	REMOVE OLD STR. (PIPE)
496	2		EA	REMOVE OLD STR. (SMALL)
542	1825		LF	REMOVE METAL BEAM GUARD FENCE
542	4		EA	REMOVE SINGLE GUARDRAIL TERMINAL
542	1		EA	REMOVE TERMINAL ANCHOR SECTION
1057			EA	TRANSPLANTING TREES & PALMS
5190			SY	REMOVE & RELOCATE SALVAGE LANDSCAPE PAVERS

⚠1 REVISED 9-26-03

NOTES:

1. SAVLAGED MBGF AND POSTS SHALL BE RETURNED TO THE PHARR MAINTENANCE YARD.

THE SEAL APPEARING ON THIS DOCUMENT WAS AUTHORIZED BY JAIME AGUILAR, P.E. 87606 ON 07/02/2003.

STATE OF TEXAS
JAIME AGUILAR
87606
REGISTERED PROFESSIONAL ENGINEER

Parsons Brinckerhoff Quade & Douglas Inc.

Texas Department of Transportation

© 2003 by TxDOT

US 281
REMOVAL ITEM DETAILS

STA. 816+00 "BL1" TO
STA. 828+00 "BL1"

PLAN 1"= 100' HORIZ

SHEET 18 OF 22 — 281REM18.DGN

DESIGNED: TT	FED. RD DIV. No.	STATE	FEDERAL AID PROJECT No.			HIGHWAY No.
CHECKED: DM	6	TEXAS				US 281
DRAWN: JT	STATE DISTRICT	COUNTY	CONTROL No.	SECTION No.	JOB No.	SHEET No.
CHECKED: DM	PHARR	HIDALGO	0255	08	091	243

NAME
02:06:01 PM
07/22/2003
i:\22322a\cadd\sheets\removals\281rem19.dgn

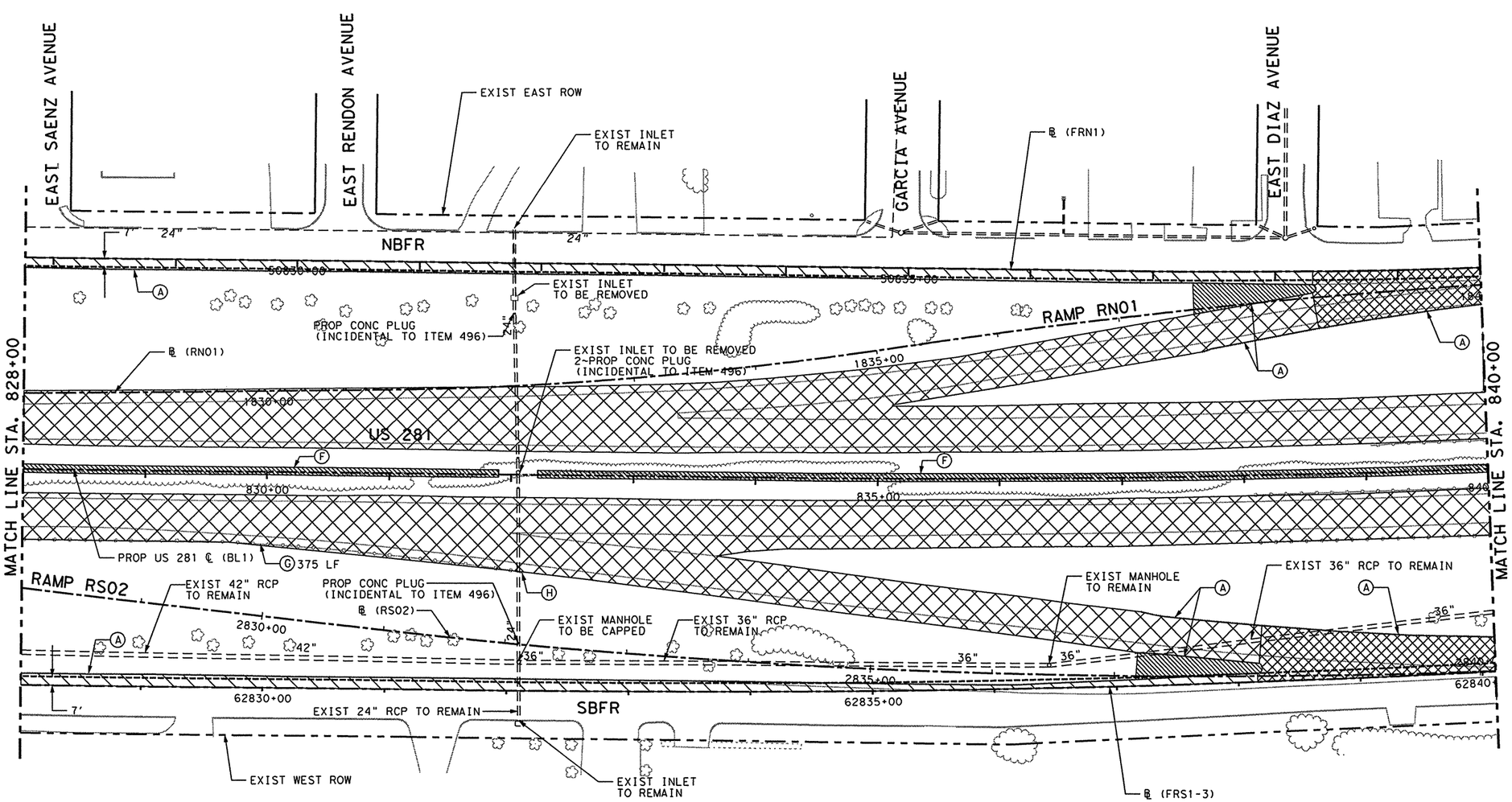

REMOVAL LEGEND:

- 22.75" PAVEMENT 8.75" A.C.P. - REWORK 14.0" FLEX - REWORK
- 14.5" PAVEMENT 5.5" A.C.P. - REWORK 9.0" FLEX - REWORK
- 15.5" PAVEMENT 6.5" A.C.P. - REWORK 9.0" FLEX - REWORK
- 13.75" PAVEMENT 6.75" A.C.P. - REWORK 7.0" FLEX - REWORK
- 12.5" PAVEMENT 5.5" A.C.P. - REWORK 7.0" FLEX - REWORK
- 11.75" PAVEMENT 2.75" A.C.P. - REWORK 9.0" FLEX - REWORK
- 16.5" PAVEMENT 6.5" A.C.P. - REWORK 10.0" FLEX - REWORK
- 8.0" PAVEMENT 8" FLEX - REWORK
- 10.0" PAVEMENT 10" FLEX - REWORK
- 4" CONCRETE SIDEWALK REMOVAL
- CONCRETE MEDIAN REMOVAL
- CONCRETE RIPRAP REMOVAL
- A.C.P. REMOVAL
- BRICK PAVER REMOVAL
- — — SAW CUT LINE
- (A) CONCRETE CURB REMOVAL
- (B) CONCRETE CURB & GUTTER REMOVAL
- (C) CONCRETE VALLEY GUTTER REMOVAL
- (D) TYPE 2 C.T.B. REMOVAL (CAST IN PLACE)
- (E) C.T.B. REMOVAL (PRE-CAST)
- (F) CONCRETE DRAIN REMOVAL
- (G) METAL BEAM GUARD FENCE REMOVAL
- (H) TERMINAL-ANCHOR-SECTION REMOVAL
- (I) SINGLE GUARD RAIL TERMINAL
- (J) TIMBER POST & CABLE RMV (PREP. ROW)
- (K) PALM TREE TO BE RELOCATED
- (L) FENCE REMOVAL (PREP. R.O.W.)
- (M) TREE REMOVAL
- (N) EXIST. STRUCTURE TO BE REMOVED

SHEET TOTALS				
ITEM	EST.	FINAL	UNIT	DESCRIPTION
100			STA	PREPARATION OF R.O.W.
100			EA	PREPARATION OF R.O.W. (TREES)
104	2809		LF	REMOVE CONC. (CURB)
104			LF	REMOVE CONC. (CURB & GUTTER)
104			LF	REMOVE CONC. (VALLEY GUTTER)
104	358		SY	REMOVE CONC. (MEDIAN)
104	841		SY	REMOVE CONC. (DRAIN)
104			SY	REMOVE CONC. (RIPRAP)
105			SY	REMOVE ASPHALTIC PAVEMENT
* 251	532		CY	REWORK BASE MAT'L (7" FLEX BASE)
* 251			CY	REWORK BASE MAT'L (8" FLEX BASE)
* 251			CY	REWORK BASE MAT'L (9" FLEX BASE)
* 251			CY	REWORK BASE MAT'L (10" FLEX BASE)
* 251	5001		CY	REWORK BASE MAT'L (14" FLEX BASE)

ITEMIZED PREP R.O.W. TABLE				
ITEM	EST.	FINAL	UNIT	DESCRIPTION
$ 100			LF	TIMBER POST & CABLE
$ 100			LF	CHAIN LINK FENCE
$ 100			STA	SHRUBS

$ TO BE PAID FOR UNDER PREP. R.O.W. (STA.) FOR CONTRACTOR'S INFORMATION ONLY.
* QUANTITIES REFLECT 85% SALVAGEABLE RATE.
# A.C.P. TO BE USED AS ITEM 251

ALL PALM TREES SHALL BE RELOCATED TO AREAS WITHIN THE PROJECT LIMITS.
CONTRACTOR IS TO CONTACT THE PROJECT ENGINEER FOR MARKING SPECIFIC LOCATIONS.

SHEET TOTALS				
ITEM	EST.	FINAL	UNIT	DESCRIPTION
## 305			SY	SALVAGE A.C.P. (2.75" A.C.P.)
## 305	1334		SY	SALVAGE A.C.P. (5.50" A.C.P.)
## 305			SY	SALVAGE A.C.P. (6.50" A.C.P.)
## 305	1885		SY	SALVAGE A.C.P. (6.75" A.C.P.)
## 305	15126		SY	SALVAGE A.C.P. (8.75" A.C.P.)
479	1		EA	ADJUSTING INLET (CAP)
496			LF	REMOVE OLD STR. (PIPE)
496	2		EA	REMOVE OLD STR. (SMALL)
542	375		LF	REMOVE METAL BEAM GUARD FENCE
542			EA	REMOVE SINGLE GUARDRAIL TERMINAL
542	1		EA	REMOVE TERMINAL ANCHOR SECTION
1057			EA	TRANSPLANTING PALM TREES
5190			SY	REMOVE & RELOCATE SALVAGE LANDSCAPE PAVERS

NOTES:

1. SAVLAGED MBGF AND POSTS SHALL BE RETURNED TO THE PHARR MAINTENANCE YARD.

THE SEAL APPEARING ON THIS DOCUMENT WAS AUTHORIZED BY JAIME AGUILAR, P.E. 87606 ON 07/22/2003.

STATE OF TEXAS
JAIME AGUILAR
87606
REGISTERED PROFESSIONAL ENGINEER

Parsons Brinckerhoff Quade & Douglas Inc.

Texas Department of Transportation

© 2003 by TxDOT

US 281
REMOVAL ITEM DETAILS

STA. 828+00 "BL1" TO
STA. 840+00 "BL1"

PLAN 1"= 100' HORIZ

SHEET 19 OF 22 — 281REM19.DGN

DESIGNED: TT	FED. RD DIV. No.	STATE	FEDERAL AID PROJECT No.			HIGHWAY No.	
CHECKED: DM	6	TEXAS				US 281	
DRAWN: JT	STATE DISTRICT	COUNTY	CONTROL No.	SECTION No.	JOB No.	SHEET No.	
CHECKED: DM	PHARR	HIDALGO	0255	08	091	244	

NAME
02:06:01 PM
07/22/2003
i:\22320\coddi\sheets\removals\281rem19.dgn

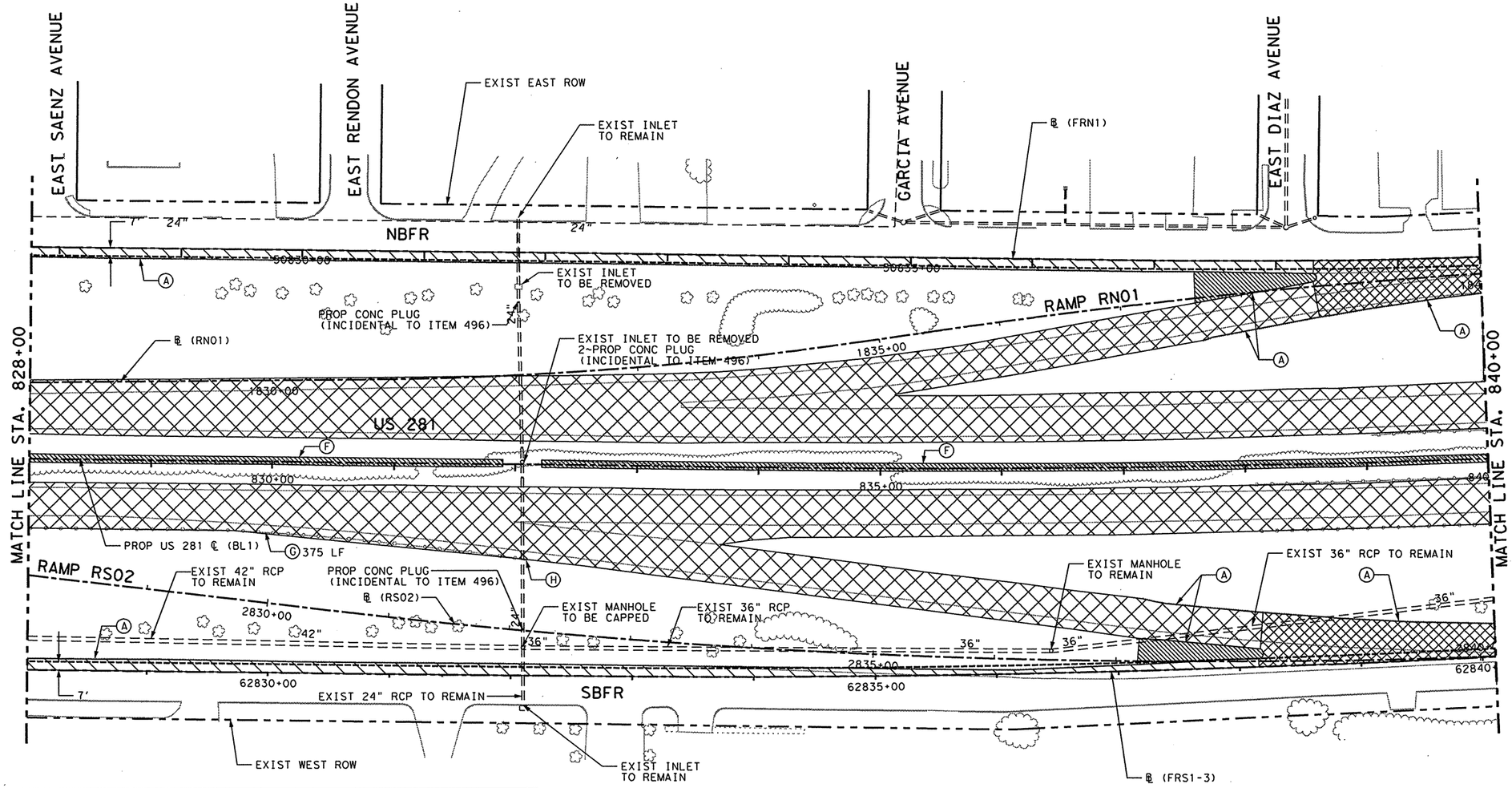

REMOVAL LEGEND:

- 22.75" PAVEMENT 8.75" A.C.P. - REWORK 14.0" FLEX - REWORK
- 14.5" PAVEMENT 5.5" A.C.P. - REWORK 9.0" FLEX - REWORK
- 15.5" PAVEMENT 6.5" A.C.P. - REWORK 9.0" FLEX - REWORK
- 13.75" PAVEMENT 6.75" A.C.P. - REWORK 7.0" FLEX - REWORK
- 12.5" PAVEMENT 5.5" A.C.P. - REWORK 7.0" FLEX - REWORK
- 11.75" PAVEMENT 2.75" A.C.P. - REWORK 9.0" FLEX - REWORK
- 16.5" PAVEMENT 6.5" A.C.P. - REWORK 10.0" FLEX - REWORK
- 8.0" PAVEMENT 8" FLEX - REWORK
- 10.0" PAVEMENT 10" FLEX - REWORK
- 4" CONCRETE SIDEWALK REMOVAL
- CONCRETE MEDIAN REMOVAL
- CONCRETE RIPRAP REMOVAL
- A.C.P. REMOVAL
- BRICK PAVER REMOVAL
- — — SAW CUT LINE
- (A) CONCRETE CURB REMOVAL
- (B) CONCRETE CURB & GUTTER REMOVAL
- (C) CONCRETE VALLEY GUTTER REMOVAL
- (D) TYPE 2 C.T.B. REMOVAL (CAST IN PLACE)
- (E) C.T.B. REMOVAL (PRE-CAST)
- (F) CONCRETE DRAIN REMOVAL
- (G) METAL BEAM GUARD FENCE REMOVAL
- (H) TERMINAL-ANCHOR-SECTION REMOVAL
- (I) SINGLE GUARD RAIL TERMINAL
- (J) TIMBER POST & CABLE RMV (PREP. ROW)
- (K) PALM TREE TO BE RELOCATED
- (L) FENCE REMOVAL (PREP. R.O.W.)
- (M) TREE REMOVAL
- (N) EXIST. STRUCTURE TO BE REMOVED

SHEET TOTALS				
ITEM	EST.	FINAL	UNIT	DESCRIPTION
100			STA	PREPARATION OF R.O.W.
100			EA	PREPARATION OF R.O.W. (TREES)
104	2809		LF	REMOVE CONC. (CURB)
104			LF	REMOVE CONC. (CURB & GUTTER)
104			LF	REMOVE CONC. (VALLEY GUTTER)
104	358		SY	REMOVE CONC. (MEDIAN)
104	841		SY	REMOVE CONC. (DRAIN)
104			SY	REMOVE CONC. (RIPRAP)
105			SY	REMOVE ASPHALTIC PAVEMENT
* 251	532		CY	REWORK BASE MAT'L (7" FLEX BASE)
* 251			CY	REWORK BASE MAT'L (8" FLEX BASE)
* 251			CY	REWORK BASE MAT'L (9" FLEX BASE)
* 251			CY	REWORK BASE MAT'L (10" FLEX BASE)
* 251	5001		CY	REWORK BASE MAT'L (14" FLEX BASE)

ITEMIZED PREP R.O.W. TABLE				
ITEM	EST.	FINAL	UNIT	DESCRIPTION
$ 100			LF	TIMBER POST & CABLE
$ 100			LF	CHAIN LINK FENCE
$ 100			STA	SHRUBS

$ TO BE PAID FOR UNDER PREP. R.O.W. (STA.) FOR CONTRACTOR'S INFORMATION ONLY.
* QUANTITIES REFLECT 85% SALVAGEABLE RATE.
# A.C.P. TO BE USED AS ITEM 251

ALL PALM TREES SHALL BE RELOCATED TO AREAS WITHIN THE PROJECT LIMITS.
CONTRACTOR IS TO CONTACT THE PROJECT ENGINEER FOR MARKING SPECIFIC LOCATIONS.

SHEET TOTALS				
ITEM	EST.	FINAL	UNIT	DESCRIPTION
# * ~~503~~			SY	SALVAGE A.C.P. (2.75" A.C.P.)
# * 251	1334		SY	SALVAGE A.C.P. (5.50" A.C.P.)
# * ~~358~~			SY	SALVAGE A.C.P. (6.50" A.C.P.)
# * 251	1885		SY	SALVAGE A.C.P. (6.75" A.C.P.)
# * 251	15126		SY	SALVAGE A.C.P. (8.75" A.C.P.)
479	1		EA	ADJUSTING INLET (CAP)
496			LF	REMOVE OLD STR. (PIPE)
496	2		EA	REMOVE OLD STR. (SMALL)
542	375		LF	REMOVE METAL BEAM GUARD FENCE
542			EA	REMOVE SINGLE GUARDRAIL TERMINAL
542	1		EA	REMOVE TERMINAL ANCHOR SECTION
1057			EA	TRANSPLANTING PALM TREES
5190			SY	REMOVE & RELOCATE SALVAGE LANDSCAPE PAVERS

1 REVISED 9-26-03

NOTES:

1. SAVLAGED MBGF AND POSTS SHALL BE RETURNED TO THE PHARR MAINTENANCE YARD.

THE SEAL APPEARING ON THIS DOCUMENT WAS AUTHORIZED BY JAIME AGUILAR, P.E. 87606 ON 07/22/2003.

STATE OF TEXAS
JAIME AGUILAR
87606
REGISTERED PROFESSIONAL ENGINEER

Parsons Brinckerhoff Quade & Douglas Inc.

Texas Department of Transportation

© 2003 by TxDOT

US 281
REMOVAL ITEM DETAILS

STA. 828+00 "BL1" TO
STA. 840+00 "BL1"

PLAN 1"= 100' HORIZ

SHEET 19 OF 22 | 281REM19.DGN

DESIGNED: TT	FED. RD DIV. No.	STATE	FEDERAL AID PROJECT No.			HIGHWAY No.	
CHECKED: DM	6	TEXAS				US 281	
DRAWN: JT	STATE DISTRICT	COUNTY	CONTROL No.	SECTION No.	JOB No.	SHEET No.	
CHECKED: DM	PHARR	HIDALGO	0255	08	091	244	

NAME
02:06:08 PM
07/22/2003
i:\22322a\cadd\sheets\removals\281rem20.dgn

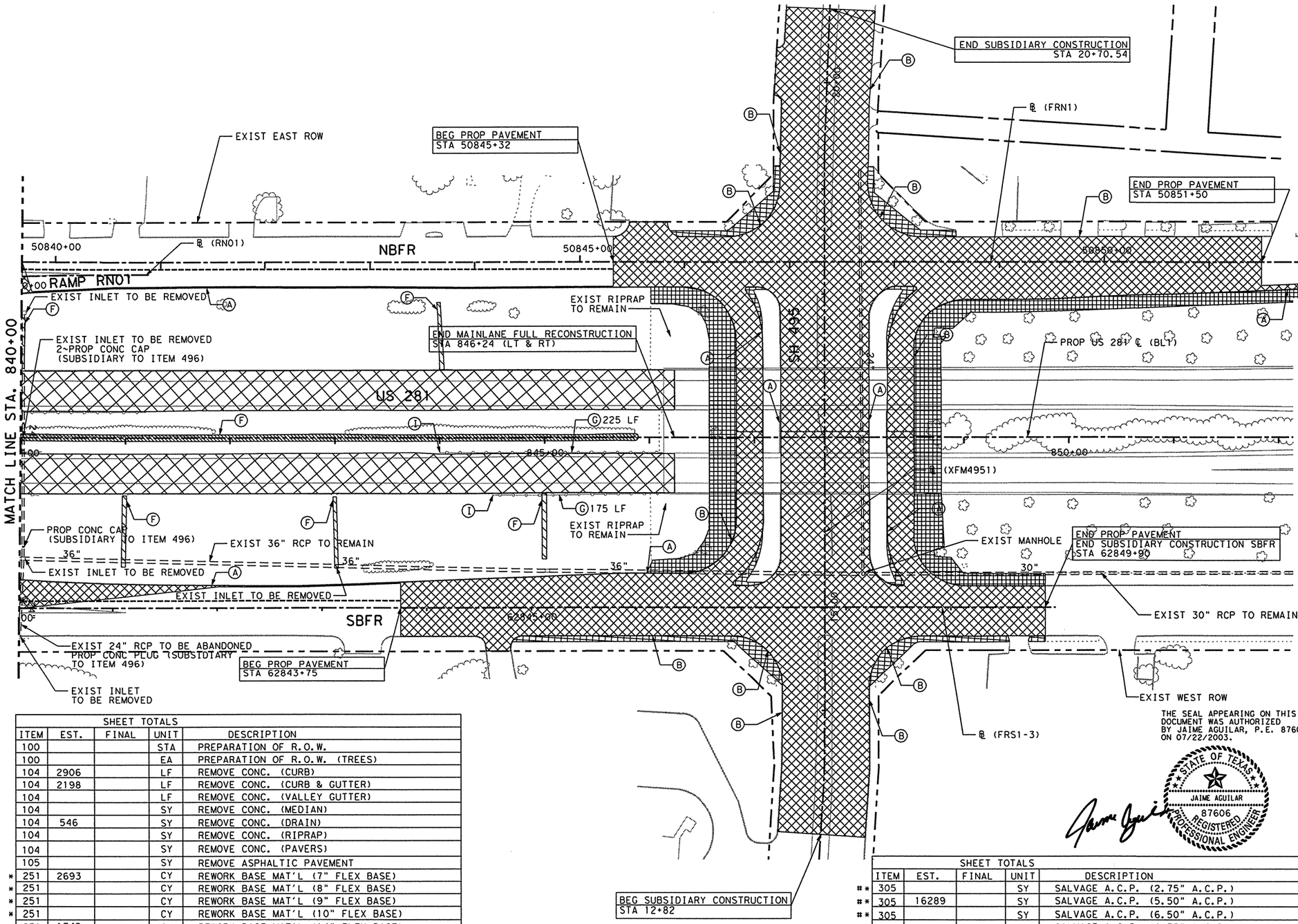

REMOVAL LEGEND:

- 22.75" PAVEMENT 8.75" A.C.P. - REWORK 14.0" FLEX - REWORK
- 14.5" PAVEMENT 5.5" A.C.P. - REWORK 9.0" FLEX - REWORK
- 15.5" PAVEMENT 6.5" A.C.P. - REWORK 9.0" FLEX - REWORK
- 13.75" PAVEMENT 6.75" A.C.P. - REWORK 7.0" FLEX - REWORK
- 12.5" PAVEMENT 5.5" A.C.P. - REWORK 7.0" FLEX - REWORK
- 11.75" PAVEMENT 2.75" A.C.P. - REWORK 9.0" FLEX - REWORK
- 16.5" PAVEMENT 6.5" A.C.P. - REWORK 10.0" FLEX - REWORK
- 8.0" PAVEMENT 8" FLEX - REWORK
- 10.0" PAVEMENT 10" FLEX - REWORK
- 4" CONCRETE SIDEWALK REMOVAL
- CONCRETE MEDIAN REMOVAL
- CONCRETE RIPRAP REMOVAL
- A.C.P. REMOVAL
- BRICK PAVER REMOVAL
- — — SAW CUT LINE
- (A) CONCRETE CURB REMOVAL
- (B) CONCRETE CURB & GUTTER REMOVAL
- (C) CONCRETE VALLEY GUTTER REMOVAL
- (D) TYPE 2 C.T.B. REMOVAL (CAST IN PLACE)
- (E) C.T.B. REMOVAL (PRE-CAST)
- (F) CONCRETE DRAIN REMOVAL
- (G) METAL BEAM GUARD FENCE REMOVAL
- (H) TERMINAL-ANCHOR-SECTION REMOVAL
- (I) SINGLE GUARD RAIL TERMINAL
- (J) TIMBER POST & CABLE RMV (PREP. ROW)
- (K) PALM TREE TO BE RELOCATED
- (L) FENCE REMOVAL (PREP. R.O.W.)
- (M) TREE REMOVAL
- (N) EXIST. STRUCTURE TO BE REMOVED

SHEET TOTALS				
ITEM	EST.	FINAL	UNIT	DESCRIPTION
100			STA	PREPARATION OF R.O.W.
100			EA	PREPARATION OF R.O.W. (TREES)
104	2906		LF	REMOVE CONC. (CURB)
104	2198		LF	REMOVE CONC. (CURB & GUTTER)
104			LF	REMOVE CONC. (VALLEY GUTTER)
104			SY	REMOVE CONC. (MEDIAN)
104	546		SY	REMOVE CONC. (DRAIN)
104			SY	REMOVE CONC. (RIPRAP)
104			SY	REMOVE CONC. (PAVERS)
105			SY	REMOVE ASPHALTIC PAVEMENT
* 251	2693		CY	REWORK BASE MAT'L (7" FLEX BASE)
* 251			CY	REWORK BASE MAT'L (8" FLEX BASE)
* 251			CY	REWORK BASE MAT'L (9" FLEX BASE)
* 251			CY	REWORK BASE MAT'L (10" FLEX BASE)
* 251	1749		CY	REWORK BASE MAT'L (14" FLEX BASE)

ITEMIZED PREP R.O.W. TABLE				
ITEM	EST.	FINAL	UNIT	DESCRIPTION
$ 100			LF	TIMBER POST & CABLE
$ 100			LF	CHAIN LINK FENCE
$ 100			STA	SHRUBS

$ TO BE PAID FOR UNDER PREP. R.O.W. (STA.) FOR CONTRACTOR'S INFORMATION ONLY.
* QUANTITIES REFLECT 85% SALVAGEABLE RATE.
# A.C.P. TO BE USED AS ITEM 251

ALL PALM TREES SHALL BE RELOCATED TO AREAS WITHIN THE PROJECT LIMITS.
CONTRACTOR IS TO CONTACT THE PROJECT ENGINEER FOR MARKING SPECIFIC LOCATIONS.

NOTES:

1. SAVLAGED MBGF AND POSTS SHALL BE RETURNED TO THE PHARR MAINTENANCE YARD.

SHEET TOTALS				
ITEM	EST.	FINAL	UNIT	DESCRIPTION
** 305			SY	SALVAGE A.C.P. (2.75" A.C.P.)
** 305	16289		SY	SALVAGE A.C.P. (5.50" A.C.P.)
** 305			SY	SALVAGE A.C.P. (6.50" A.C.P.)
** 305			SY	SALVAGE A.C.P. (6.75" A.C.P.)
** 305	5291		SY	SALVAGE A.C.P. (8.75" A.C.P.)
479			EA	ADJUSTING INLET (CAP)
496			LF	REMOVE OLD STR. (PIPE)
496	5		EA	REMOVE OLD STR. (SMALL)
542	400		LF	REMOVE METAL BEAM GUARD FENCE
542	2		EA	REMOVE SINGLE GUARDRAIL TERMINAL
542			EA	REMOVE TERMINAL ANCHOR SECTION
1057			EA	TRANSPLANTING TREES & PALMS
5190	3240		SF	REMOVE & SALVAGE LANDSCAPE PAVERS

THE SEAL APPEARING ON THIS DOCUMENT WAS AUTHORIZED BY JAIME AGUILAR, P.E. 87606 ON 07/22/2003.

STATE OF TEXAS
JAIME AGUILAR
87606
REGISTERED PROFESSIONAL ENGINEER

Parsons Brinckerhoff Quade & Douglas Inc.

Texas Department of Transportation

© 2003 by TxDOT

US 281
REMOVAL ITEM DETAILS

STA. 840+00 "BL1" TO
STA. 852+00 "BL1"

PLAN 1"= 100' HORIZ

SHEET 20 OF 22				281REM20.DGN			
DESIGNED: TT	FED. RD DIV. No.	STATE	FEDERAL AID PROJECT No.			HIGHWAY No.	
CHECKED: DM	6	TEXAS				US 281	
DRAWN: JT	STATE DISTRICT	COUNTY	CONTROL No.	SECTION No.	JOB No.	SHEET No.	
CHECKED: DM	PHARR	HIDALGO	0255	08	091	245	

NAME
02:06:08 PM
07/22/2003
i:\22322o\cadd\sheets\removals\281rem20.dgn

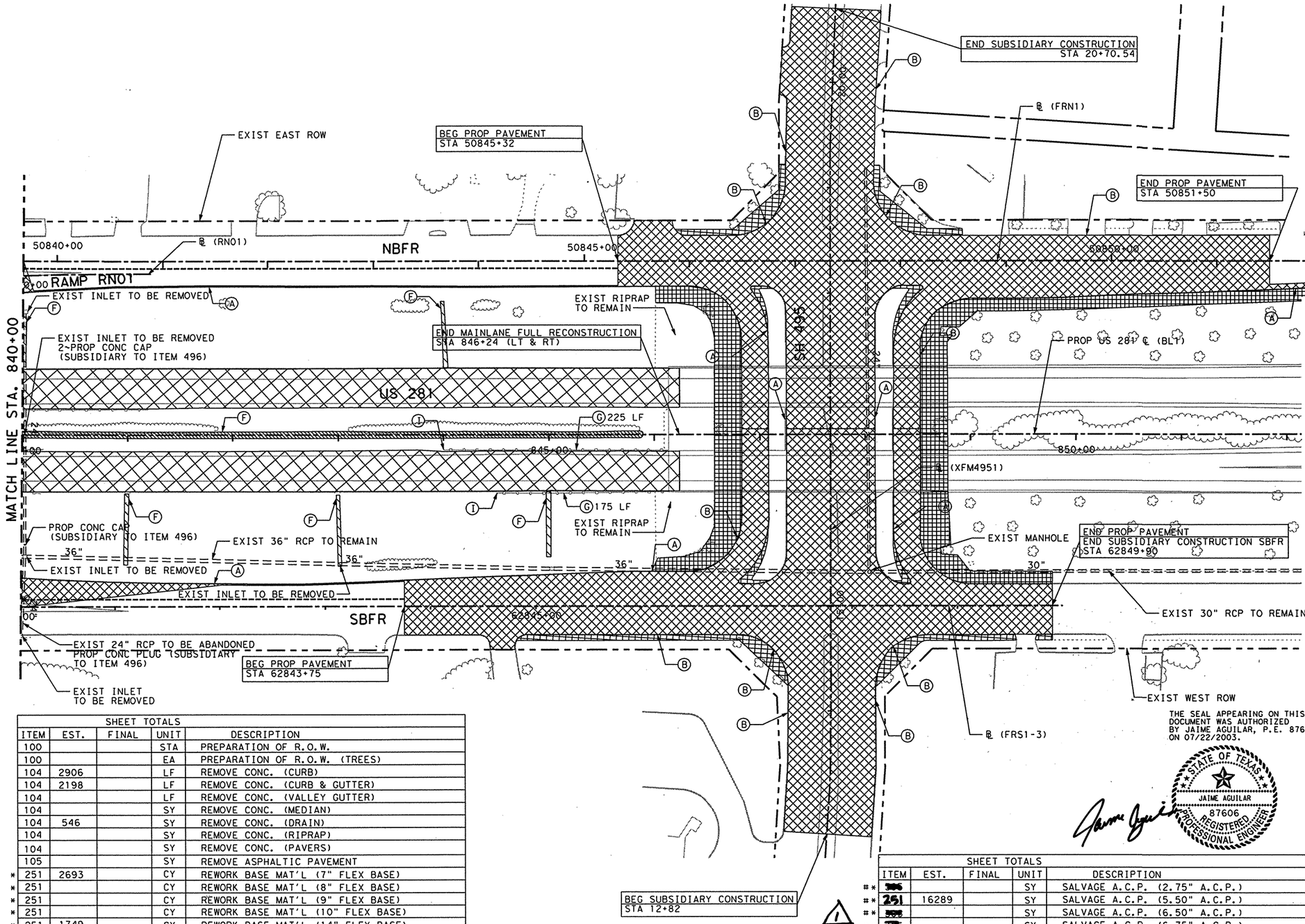

REMOVAL LEGEND:

- 22.75" PAVEMENT 8.75" A.C.P. - REWORK 14.0" FLEX - REWORK
- 14.5" PAVEMENT 5.5" A.C.P. - REWORK 9.0" FLEX - REWORK
- 15.5" PAVEMENT 6.5" A.C.P. - REWORK 9.0" FLEX - REWORK
- 13.75" PAVEMENT 6.75" A.C.P. - REWORK 7.0" FLEX - REWORK
- 12.5" PAVEMENT 5.5" A.C.P. - REWORK 7.0" FLEX - REWORK
- 11.75" PAVEMENT 2.75" A.C.P. - REWORK 9.0" FLEX - REWORK
- 16.5" PAVEMENT 6.5" A.C.P. - REWORK 10.0" FLEX - REWORK
- 8.0" PAVEMENT 8" FLEX - REWORK
- 10.0" PAVEMENT 10" FLEX - REWORK
- 4" CONCRETE SIDEWALK REMOVAL
- CONCRETE MEDIAN REMOVAL
- CONCRETE RIPRAP REMOVAL
- A.C.P. REMOVAL
- BRICK PAVER REMOVAL
- — — SAW CUT LINE
- (A) CONCRETE CURB REMOVAL
- (B) CONCRETE CURB & GUTTER REMOVAL
- (C) CONCRETE VALLEY GUTTER REMOVAL
- (D) TYPE 2 C.T.B. REMOVAL (CAST IN PLACE)
- (E) C.T.B. REMOVAL (PRE-CAST)
- (F) CONCRETE DRAIN REMOVAL
- (G) METAL BEAM GUARD FENCE REMOVAL
- (H) TERMINAL-ANCHOR-SECTION REMOVAL
- (I) SINGLE GUARD RAIL TERMINAL
- (J) TIMBER POST & CABLE RMV (PREP. ROW)
- (K) PALM TREE TO BE RELOCATED
- (L) FENCE REMOVAL (PREP. R.O.W.)
- (M) TREE REMOVAL
- (N) EXIST. STRUCTURE TO BE REMOVED

SHEET TOTALS				
ITEM	EST.	FINAL	UNIT	DESCRIPTION
100			STA	PREPARATION OF R.O.W.
100			EA	PREPARATION OF R.O.W. (TREES)
104	2906		LF	REMOVE CONC. (CURB)
104	2198		LF	REMOVE CONC. (CURB & GUTTER)
104			LF	REMOVE CONC. (VALLEY GUTTER)
104			SY	REMOVE CONC. (MEDIAN)
104	546		SY	REMOVE CONC. (DRAIN)
104			SY	REMOVE CONC. (RIPRAP)
104			SY	REMOVE CONC. (PAVERS)
105			SY	REMOVE ASPHALTIC PAVEMENT
* 251	2693		CY	REWORK BASE MAT'L (7" FLEX BASE)
* 251			CY	REWORK BASE MAT'L (8" FLEX BASE)
* 251			CY	REWORK BASE MAT'L (9" FLEX BASE)
* 251			CY	REWORK BASE MAT'L (10" FLEX BASE)
* 251	1749		CY	REWORK BASE MAT'L (14" FLEX BASE)

ITEMIZED PREP R.O.W. TABLE				
ITEM	EST.	FINAL	UNIT	DESCRIPTION
$ 100			LF	TIMBER POST & CABLE
$ 100			LF	CHAIN LINK FENCE
$ 100			STA	SHRUBS

$ TO BE PAID FOR UNDER PREP. R.O.W. (STA.) FOR CONTRACTOR'S INFORMATION ONLY.
* QUANTITIES REFLECT 85% SALVAGEABLE RATE.
# A.C.P. TO BE USED AS ITEM 251

ALL PALM TREES SHALL BE RELOCATED TO AREAS WITHIN THE PROJECT LIMITS.
CONTRACTOR IS TO CONTACT THE PROJECT ENGINEER FOR MARKING SPECIFIC LOCATIONS.

NOTES:

1. SAVLAGED MBGF AND POSTS SHALL BE RETURNED TO THE PHARR MAINTENANCE YARD.

1 REVISED 9-26-03

SHEET TOTALS				
ITEM	EST.	FINAL	UNIT	DESCRIPTION
# * ~~306~~			SY	SALVAGE A.C.P. (2.75" A.C.P.)
# * 251	16289		SY	SALVAGE A.C.P. (5.50" A.C.P.)
# * ~~502~~			SY	SALVAGE A.C.P. (6.50" A.C.P.)
# * ~~506~~			SY	SALVAGE A.C.P. (6.75" A.C.P.)
# * 251	5291		SY	SALVAGE A.C.P. (8.75" A.C.P.)
479			EA	ADJUSTING INLET (CAP)
496			LF	REMOVE OLD STR. (PIPE)
496	5		EA	REMOVE OLD STR. (SMALL)
542	400		LF	REMOVE METAL BEAM GUARD FENCE
542	2		EA	REMOVE SINGLE GUARDRAIL TERMINAL
542			EA	REMOVE TERMINAL ANCHOR SECTION
1057			EA	TRANSPLANTING TREES & PALMS
5190	3240		SF	REMOVE & SALVAGE LANDSCAPE PAVERS

THE SEAL APPEARING ON THIS DOCUMENT WAS AUTHORIZED BY JAIME AGUILAR, P.E. 87606 ON 07/22/2003.

STATE OF TEXAS
JAIME AGUILAR
87606
REGISTERED PROFESSIONAL ENGINEER

Parsons Brinckerhoff Quade & Douglas Inc.

Texas Department of Transportation

© 2003 by TxDOT

US 281
REMOVAL ITEM DETAILS

STA. 840+00 "BL1" TO
STA. 852+00 "BL1"

PLAN 1"= 100' HORIZ

SHEET 20 OF 22 | 281REM20.DGN

DESIGNED: TT	FED. RD DIV. NO.	STATE	FEDERAL AID PROJECT NO.	HIGHWAY NO.
CHECKED: DM	6	TEXAS		US 281

DRAWN: JT	STATE DISTRICT	COUNTY	CONTROL NO.	SECTION NO.	JOB NO.	SHEET NO.
CHECKED: DM	PHARR	HIDALGO	0255	08	091	245

NAME
07/02/2003 12:24:32 PM
i:\22322a\cadd\sheets\removals\281rem21.dgn

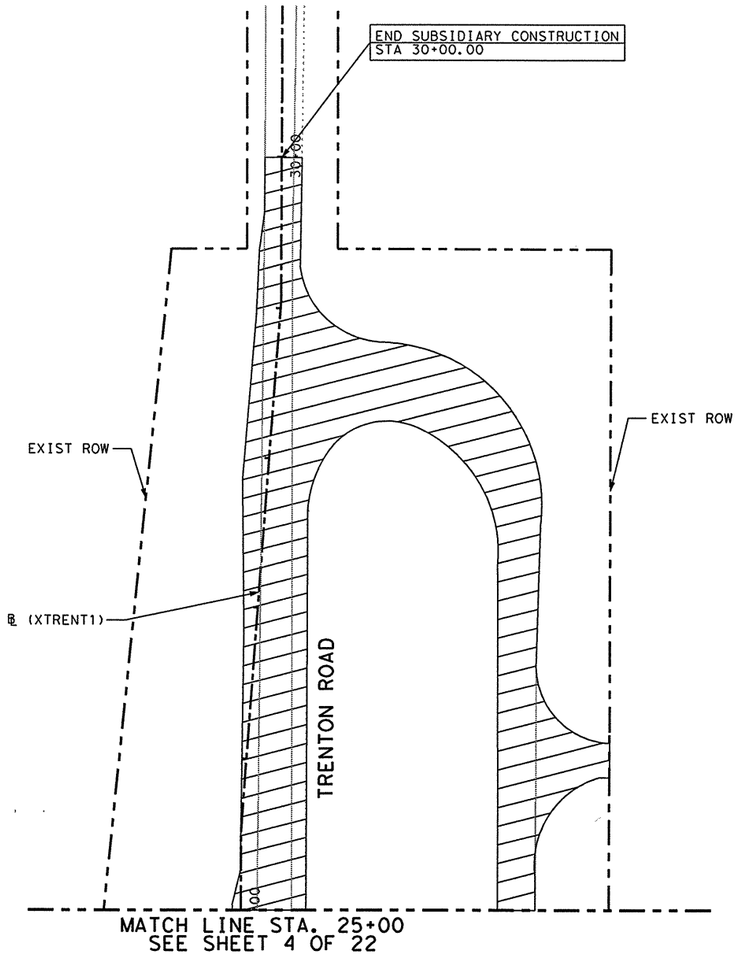

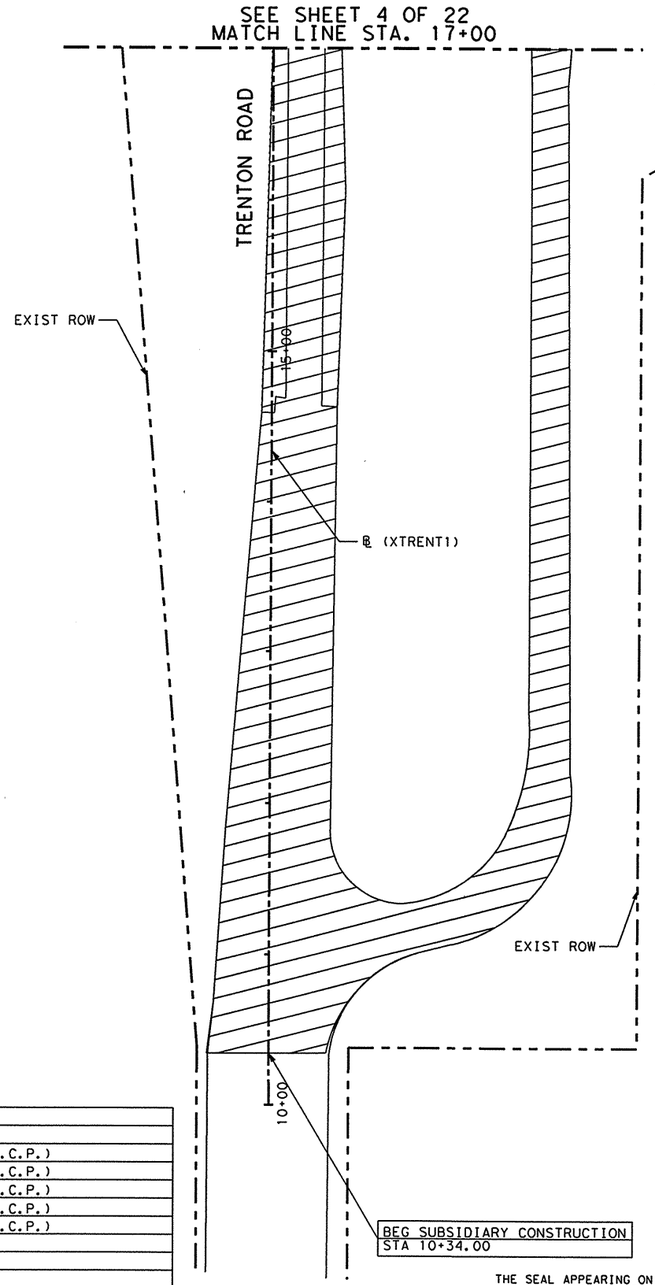

REMOVAL LEGEND:

- 22.75" PAVEMENT 8.75" A.C.P. - REWORK 14.0" FLEX - REWORK
- 14.5" PAVEMENT 5.5" A.C.P. - REWORK 9.0" FLEX - REWORK
- 15.5" PAVEMENT 6.5" A.C.P. - REWORK 9.0" FLEX - REWORK
- 13.75" PAVEMENT 6.75" A.C.P. - REWORK 7.0" FLEX - REWORK
- 12.5" PAVEMENT 5.5" A.C.P. - REWORK 7.0" FLEX - REWORK
- 11.75" PAVEMENT 2.75" A.C.P. - REWORK 9.0" FLEX - REWORK
- 16.5" PAVEMENT 6.5" A.C.P. - REWORK 10.0" FLEX - REWORK
- 8.0" PAVEMENT 8" FLEX - REWORK
- 10.0" PAVEMENT 10" FLEX - REWORK
- 4" CONCRETE SIDEWALK REMOVAL
- CONCRETE MEDIAN REMOVAL
- CONCRETE RIPRAP REMOVAL
- A.C.P. REMOVAL
- BRICK PAVER REMOVAL
- — — SAW CUT LINE
- (A) CONCRETE CURB REMOVAL
- (B) CONCRETE CURB & GUTTER REMOVAL
- (C) CONCRETE VALLEY GUTTER REMOVAL
- (D) TYPE 2 C.T.B. REMOVAL (CAST IN PLACE)
- (E) C.T.B. REMOVAL (PRE-CAST)
- (F) CONCRETE DRAIN REMOVAL
- (G) METAL BEAM GUARD FENCE REMOVAL
- (H) TERMINAL-ANCHOR-SECTION REMOVAL
- (I) SINGLE GUARD RAIL TERMINAL
- (J) TIMBER POST & CABLE RMV (PREP. ROW)
- (K) PALM TREE TO BE RELOCATED
- (L) FENCE REMOVAL (PREP. R.O.W.)
- (M) TREE REMOVAL
- (N) EXIST. STRUCTURE TO BE REMOVED

NOTES:

1. SAVLAGED MBGF AND POSTS SHALL BE RETURNED TO THE PHARR MAINTENANCE YARD.

SHEET TOTALS				
ITEM	EST.	FINAL	UNIT	DESCRIPTION
100			STA	PREPARATION OF R.O.W.
100			EA	PREPARATION OF R.O.W. (TREES)
104			LF	REMOVE CONC. (CURB)
104			LF	REMOVE CONC. (CURB & GUTTER)
104			LF	REMOVE CONC. (VALLEY GUTTER)
104			SY	REMOVE CONC. (MEDIAN)
104			SY	REMOVE CONC. (DRAIN)
104			SY	REMOVE CONC. (RIPRAP)
105			SY	REMOVE ASPHALTIC PAVEMENT
* 251			CY	REWORK BASE MAT'L (7" FLEX BASE)
* 251	2069		CY	REWORK BASE MAT'L (8" FLEX BASE)
* 251			CY	REWORK BASE MAT'L (9" FLEX BASE)
* 251			CY	REWORK BASE MAT'L (10" FLEX BASE)
* 251			CY	REWORK BASE MAT'L (14" FLEX BASE)

ITEMIZED PREP R.O.W. TABLE				
ITEM	EST.	FINAL	UNIT	DESCRIPTION
$ 100			LF	TIMBER POST & CABLE
$ 100			LF	CHAIN LINK FENCE
$ 100			STA	SHRUBS

$ TO BE PAID FOR UNDER PREP. R.O.W. (STA.) FOR CONTRACTOR'S INFORMATION ONLY.
* QUANTITIES REFLECT 85% SALVAGEABLE RATE.
# A.C.P. TO BE USED AS ITEM 251

ALL PALM TREES SHALL BE RELOCATED TO AREAS WITHIN THE PROJECT LIMITS. CONTRACTOR IS TO CONTACT THE PROJECT ENGINEER FOR MARKING SPECIFIC LOCATIONS.

SHEET TOTALS				
ITEM	EST.	FINAL	UNIT	DESCRIPTION
** 305			SY	SALVAGE A.C.P. (2.75" A.C.P.)
** 305			SY	SALVAGE A.C.P. (5.50" A.C.P.)
** 305			SY	SALVAGE A.C.P. (6.50" A.C.P.)
** 305			SY	SALVAGE A.C.P. (6.75" A.C.P.)
** 305			SY	SALVAGE A.C.P. (8.75" A.C.P.)
479			EA	ADJUSTING INLET (CAP)
496			LF	REMOVE OLD STR. (PIPE)
496			EA	REMOVE OLD STR. (SMALL)
542			LF	REMOVE METAL BEAM GUARD FENCE
542			EA	REMOVE SINGLE GUARDRAIL TERMINAL
542			EA	REMOVE TERMINAL ANCHOR SECTION
1057			EA	TRANSPLANTING TREES & PALMS
5190			SY	REMOVE & RELOCATE LANDSCAPE PAVERS

THE SEAL APPEARING ON THIS DOCUMENT WAS AUTHORIZED BY JAIME AGUILAR, P.E. 87606 ON 07/02/2003.

STATE OF TEXAS
JAIME AGUILAR
87606
REGISTERED PROFESSIONAL ENGINEER

Parsons Brinckerhoff Quade & Douglas Inc.

Texas Department of Transportation

© 2003 by TxDOT

US 281
REMOVAL ITEM DETAILS

TRENTON ROAD

PLAN 1"= 100' HORIZ

SHEET 21 OF 22 | 281REM21.DGN

DESIGNED: TT	FED. RD DIV. No.	STATE	FEDERAL AID PROJECT No.				HIGHWAY No.
CHECKED: DM	6	TEXAS					US 281
DRAWN: JT	STATE DISTRICT	COUNTY	CONTROL No.	SECTION No.	JOB No.	SHEET No.	
CHECKED: DM	PHARR	HIDALGO	0255	08	091	246	

NAME
07/02/2003 12:24:32 PM
i:\22322o\cadd\sheets\removals\281rem21.dgn

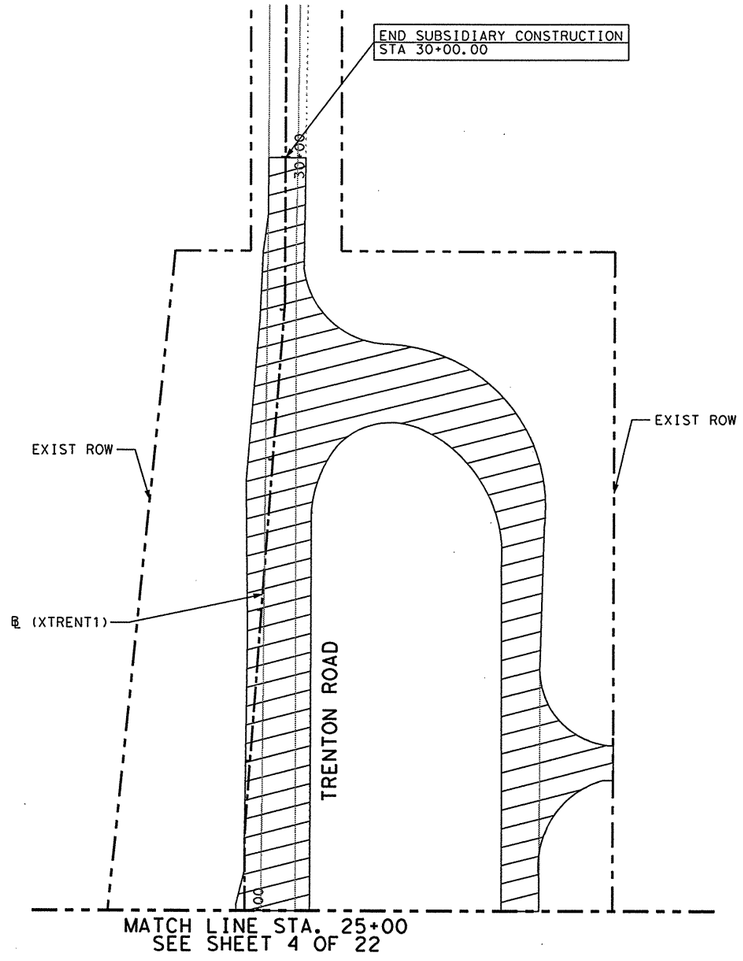

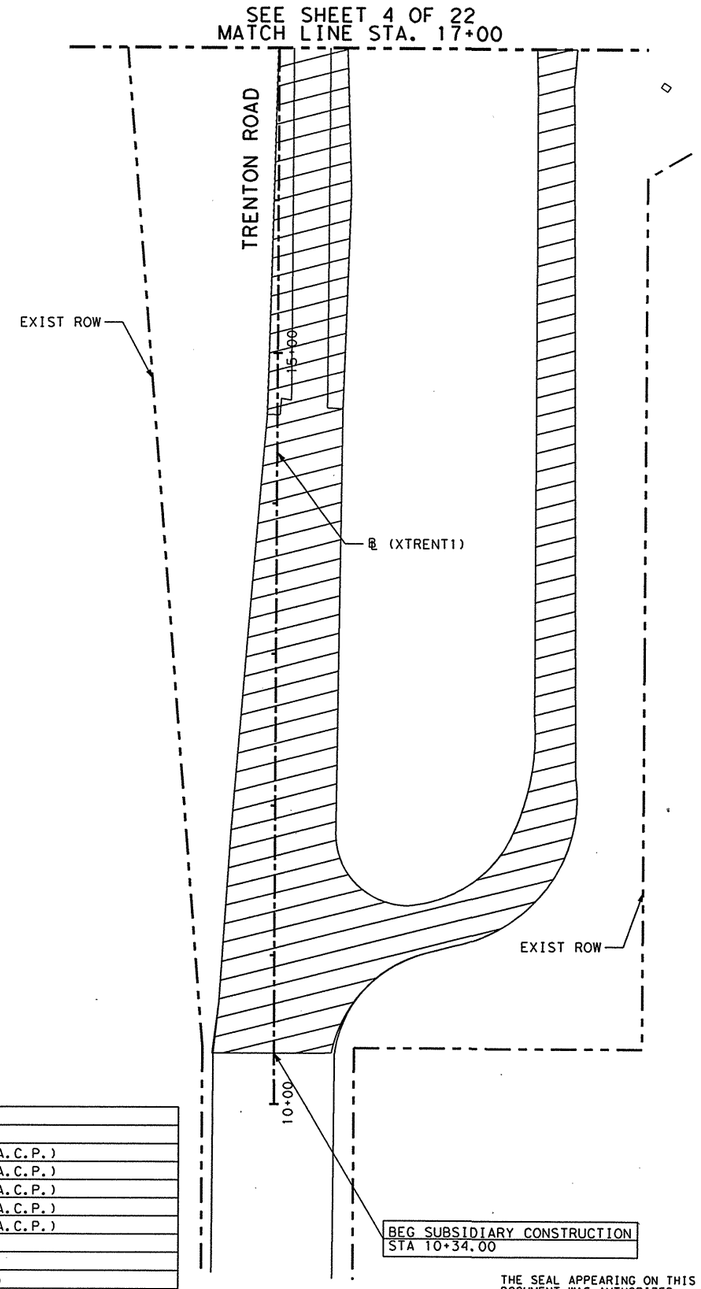

REMOVAL LEGEND:

- 22.75" PAVEMENT 8.75" A.C.P. - REWORK 14.0" FLEX - REWORK
- 14.5" PAVEMENT 5.5" A.C.P. - REWORK 9.0" FLEX - REWORK
- 15.5" PAVEMENT 6.5" A.C.P. - REWORK 9.0" FLEX - REWORK
- 13.75" PAVEMENT 6.75" A.C.P. - REWORK 7.0" FLEX - REWORK
- 12.5" PAVEMENT 5.5" A.C.P. - REWORK 7.0" FLEX - REWORK
- 11.75" PAVEMENT 2.75" A.C.P. - REWORK 9.0" FLEX - REWORK
- 16.5" PAVEMENT 6.5" A.C.P. - REWORK 10.0" FLEX - REWORK
- 8.0" PAVEMENT 8" FLEX - REWORK
- 10.0" PAVEMENT 10" FLEX - REWORK
- 4" CONCRETE SIDEWALK REMOVAL
- CONCRETE MEDIAN REMOVAL
- CONCRETE RIPRAP REMOVAL
- A.C.P. REMOVAL
- BRICK PAVER REMOVAL
- — — SAW CUT LINE
- (A) CONCRETE CURB REMOVAL
- (B) CONCRETE CURB & GUTTER REMOVAL
- (C) CONCRETE VALLEY GUTTER REMOVAL
- (D) TYPE 2 C.T.B. REMOVAL (CAST IN PLACE)
- (E) C.T.B. REMOVAL (PRE-CAST)
- (F) CONCRETE DRAIN REMOVAL
- (G) METAL BEAM GUARD FENCE REMOVAL
- (H) TERMINAL-ANCHOR-SECTION REMOVAL
- (I) SINGLE GUARD RAIL TERMINAL
- (J) TIMBER POST & CABLE RMV (PREP. ROW)
- (K) PALM TREE TO BE RELOCATED
- (L) FENCE REMOVAL (PREP. R.O.W.)
- (M) TREE REMOVAL
- (N) EXIST. STRUCTURE TO BE REMOVED

NOTES:

1. SAVLAGED MBGF AND POSTS SHALL BE RETURNED TO THE PHARR MAINTENANCE YARD.

SHEET TOTALS				
ITEM	EST.	FINAL	UNIT	DESCRIPTION
100			STA	PREPARATION OF R.O.W.
100			EA	PREPARATION OF R.O.W. (TREES)
104			LF	REMOVE CONC. (CURB)
104			LF	REMOVE CONC. (CURB & GUTTER)
104			LF	REMOVE CONC. (VALLEY GUTTER)
104			SY	REMOVE CONC. (MEDIAN)
104			SY	REMOVE CONC. (DRAIN)
104			SY	REMOVE CONC. (RIPRAP)
105			SY	REMOVE ASPHALTIC PAVEMENT
* 251			CY	REWORK BASE MAT'L (7" FLEX BASE)
* 251	2069		CY	REWORK BASE MAT'L (8" FLEX BASE)
* 251			CY	REWORK BASE MAT'L (9" FLEX BASE)
* 251			CY	REWORK BASE MAT'L (10" FLEX BASE)
* 251			CY	REWORK BASE MAT'L (14" FLEX BASE)

ITEMIZED PREP R.O.W. TABLE				
ITEM	EST.	FINAL	UNIT	DESCRIPTION
$ 100			LF	TIMBER POST & CABLE
$ 100			LF	CHAIN LINK FENCE
$ 100			STA	SHRUBS

$ TO BE PAID FOR UNDER PREP. R.O.W. (STA.) FOR CONTRACTOR'S INFORMATION ONLY.
* QUANTITIES REFLECT 85% SALVAGEABLE RATE.
# A.C.P. TO BE USED AS ITEM 251

ALL PALM TREES SHALL BE RELOCATED TO AREAS WITHIN THE PROJECT LIMITS.
CONTRACTOR IS TO CONTACT THE PROJECT ENGINEER FOR MARKING SPECIFIC LOCATIONS.

SHEET TOTALS				
ITEM	EST.	FINAL	UNIT	DESCRIPTION
# * ~~305~~			SY	SALVAGE A.C.P. (2.75" A.C.P.)
# * ~~305~~			SY	SALVAGE A.C.P. (5.50" A.C.P.)
# * ~~305~~			SY	SALVAGE A.C.P. (6.50" A.C.P.)
# * ~~305~~			SY	SALVAGE A.C.P. (6.75" A.C.P.)
# * ~~305~~			SY	SALVAGE A.C.P. (8.75" A.C.P.)
479			EA	ADJUSTING INLET (CAP)
496			LF	REMOVE OLD STR. (PIPE)
496			EA	REMOVE OLD STR. (SMALL)
542			LF	REMOVE METAL BEAM GUARD FENCE
542			EA	REMOVE SINGLE GUARDRAIL TERMINAL
542			EA	REMOVE TERMINAL ANCHOR SECTION
1057			EA	TRANSPLANTING TREES & PALMS
5190			SY	REMOVE & RELOCATE LANDSCAPE PAVERS

1 REVISED 9-26-03

THE SEAL APPEARING ON THIS DOCUMENT WAS AUTHORIZED BY JAIME AGUILAR, P.E. 87606 ON 07/02/2003.

STATE OF TEXAS
JAIME AGUILAR
87606
REGISTERED PROFESSIONAL ENGINEER

Parsons Brinckerhoff Quade & Douglas Inc.

Texas Department of Transportation

© 2003 by TxDOT

US 281
REMOVAL ITEM DETAILS

TRENTON ROAD

PLAN 1"= 100' HORIZ

SHEET 21 OF 22 | 281REM21.DGN

DESIGNED: TT	FED. RD DIV. No.	STATE	FEDERAL AID PROJECT No.		HIGHWAY No.	
CHECKED: DM	6	TEXAS			US 281	
DRAWN: JT	STATE DISTRICT	COUNTY	CONTROL No.	SECTION No.	JOB No.	SHEET No.
CHECKED: DM	PHARR	HIDALGO	0255	08	091	246

NAME
12:24:50 PM
07/02/2003
i:\223220\cadd\sheets\removals\281rem22.dgn

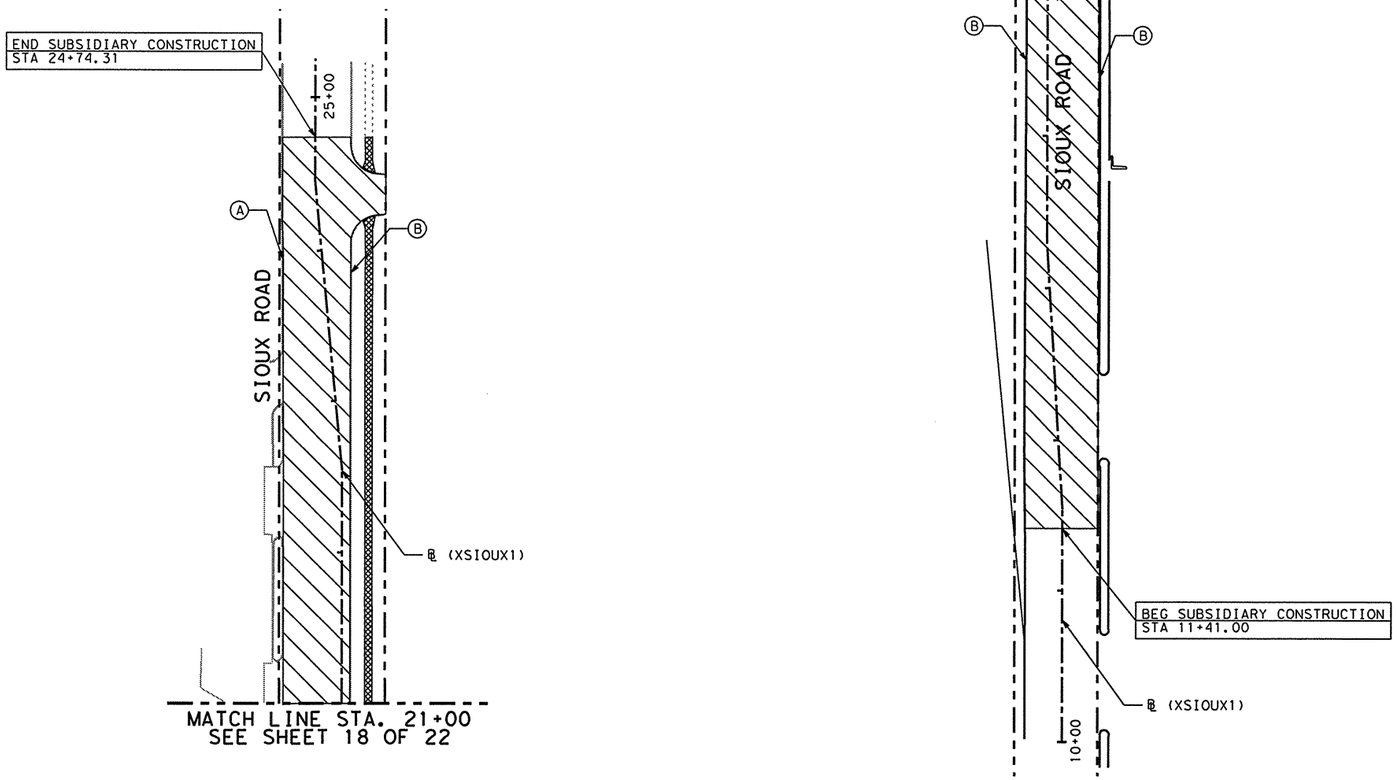

SHEET TOTALS				
ITEM	EST.	FINAL	UNIT	DESCRIPTION
100			STA	PREPARATION OF R.O.W.
100			EA	PREPARATION OF R.O.W. (TREES)
104			LF	REMOVE CONC. (CURB)
104	1256		LF	REMOVE CONC. (CURB & GUTTER)
104			LF	REMOVE CONC. (VALLEY GUTTER)
104			SY	REMOVE CONC. (MEDIAN)
104			SY	REMOVE CONC. (DRAIN)
104			SY	REMOVE CONC. (RIPRAP)
104	188		SY	REMOVE CONC. (SDWLK)
105			SY	REMOVE ASPHALTIC PAVEMENT
* 251	635		CY	REWORK BASE MAT'L (7" FLEX BASE)
* 251			CY	REWORK BASE MAT'L (8" FLEX BASE)
* 251			CY	REWORK BASE MAT'L (9" FLEX BASE)
* 251			CY	REWORK BASE MAT'L (10" FLEX BASE)
* 251			CY	REWORK BASE MAT'L (14" FLEX BASE)

ITEMIZED PREP R.O.W. TABLE				
ITEM	EST.	FINAL	UNIT	DESCRIPTION
$ 100			LF	TIMBER POST & CABLE
$ 100			LF	CHAIN LINK FENCE
$ 100			STA	SHRUBS

$ TO BE PAID FOR UNDER PREP. R.O.W. (STA.) FOR CONTRACTOR'S INFORMATION ONLY.
* QUANTITIES REFLECT 85% SALVAGEABLE RATE.
# A.C.P. TO BE USED AS ITEM 251

ALL PALM TREES SHALL BE RELOCATED TO AREAS WITHIN THE PROJECT LIMITS.
CONTRACTOR IS TO CONTACT THE PROJECT ENGINEER FOR MARKING SPECIFIC LOCATIONS.

SHEET TOTALS				
ITEM	EST.	FINAL	UNIT	DESCRIPTION
# * 305			SY	SALVAGE A.C.P. (2.75" A.C.P.)
# * 305			SY	SALVAGE A.C.P. (5.50" A.C.P.)
# * 305			SY	SALVAGE A.C.P. (6.50" A.C.P.)
# * 305	3842		SY	SALVAGE A.C.P. (6.75" A.C.P.)
# * 305			SY	SALVAGE A.C.P. (8.75" A.C.P.)
479			EA	ADJUSTING INLET (CAP)
496			LF	REMOVE OLD STR. (PIPE)
496			EA	REMOVE OLD STR. (SMALL)
542			LF	REMOVE METAL BEAM GUARD FENCE
542			EA	REMOVE SINGLE GUARDRAIL TERMINAL
542			EA	REMOVE TERMINAL ANCHOR SECTION
1057			EA	TRANSPLANTING TREES & PALMS
5190			SY	REMOVE & RELOCATE SALVAGE LANDSCAPE PAVERS

REMOVAL LEGEND:

- 22.75" PAVEMENT 8.75" A.C.P. - REWORK 14.0" FLEX - REWORK
- 14.5" PAVEMENT 5.5" A.C.P. - REWORK 9.0" FLEX - REWORK
- 15.5" PAVEMENT 6.5" A.C.P. - REWORK 9.0" FLEX - REWORK
- 13.75" PAVEMENT 6.75" A.C.P. - REWORK 7.0" FLEX - REWORK
- 12.5" PAVEMENT 5.5" A.C.P. - REWORK 7.0" FLEX - REWORK
- 11.75" PAVEMENT 2.75" A.C.P. - REWORK 9.0" FLEX - REWORK
- 16.5" PAVEMENT 6.5" A.C.P. - REWORK 10.0" FLEX - REWORK
- 8.0" PAVEMENT 8" FLEX - REWORK
- 10.0" PAVEMENT 10" FLEX - REWORK
- 4" CONCRETE SIDEWALK REMOVAL
- CONCRETE MEDIAN REMOVAL
- CONCRETE RIPRAP REMOVAL
- A.C.P. REMOVAL
- BRICK PAVER REMOVAL
- — — SAW CUT LINE
- (A) CONCRETE CURB REMOVAL
- (B) CONCRETE CURB & GUTTER REMOVAL
- (C) CONCRETE VALLEY GUTTER REMOVAL
- (D) TYPE 2 C.T.B. REMOVAL (CAST IN PLACE)
- (E) C.T.B. REMOVAL (PRE-CAST)
- (F) CONCRETE DRAIN REMOVAL
- (G) METAL BEAM GUARD FENCE REMOVAL
- (H) TERMINAL-ANCHOR-SECTION REMOVAL
- (I) SINGLE GUARD RAIL TERMINAL
- (J) TIMBER POST & CABLE RMV (PREP. ROW)
- (K) PALM TREE TO BE RELOCATED
- (L) FENCE REMOVAL (PREP. R.O.W.)
- (M) TREE REMOVAL
- (N) EXIST. STRUCTURE TO BE REMOVED

NOTES:

1. SAVLAGED MBGF AND POSTS SHALL BE RETURNED TO THE PHARR MAINTENANCE YARD.

THE SEAL APPEARING ON THIS DOCUMENT WAS AUTHORIZED BY JAIME AGUILAR, P.E. 87606 ON 07/02/2003.

STATE OF TEXAS
JAIME AGUILAR
87606
REGISTERED PROFESSIONAL ENGINEER

Parsons Brinckerhoff Quade & Douglas Inc.

Texas Department of Transportation

© 2003 by TxDOT

US 281
REMOVAL ITEM DETAILS

SIOUX ROAD

PLAN 1"= 100' HORIZ

SHEET 22 OF 22 | 281REM22.DGN

DESIGNED: TT	FED. RD DIV. No.	STATE	FEDERAL AID PROJECT No.			HIGHWAY No.
CHECKED: DM	6	TEXAS				US 281
DRAWN: JT	STATE DISTRICT	COUNTY	CONTROL No.	SECTION No.	JOB No.	SHEET No.
CHECKED: DM	PHARR	HIDALGO	0255	08	091	247

NAME
12:24:50 PM
07/02/2003
i:\22322a\cadd\sheets\removals\281rem22.dgn

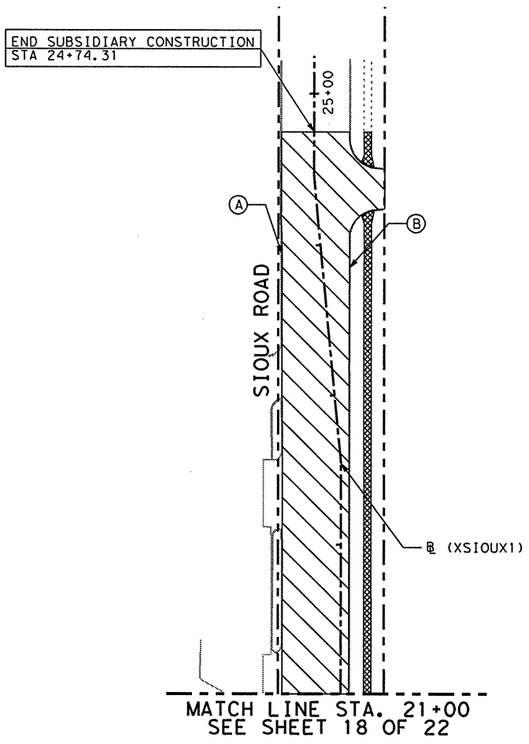

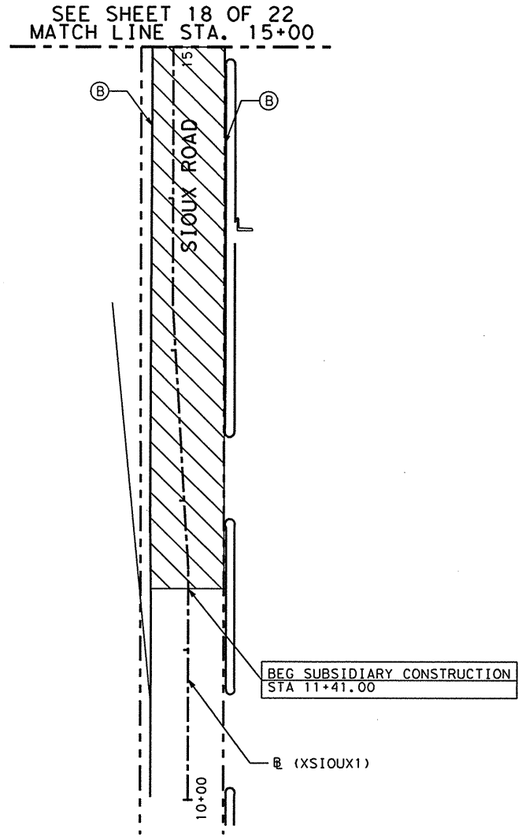

REMOVAL LEGEND:

- 22.75" PAVEMENT 8.75" A.C.P. - REWORK 14.0" FLEX - REWORK
- 14.5" PAVEMENT 5.5" A.C.P. - REWORK 9.0" FLEX - REWORK
- 15.5" PAVEMENT 6.5" A.C.P. - REWORK 9.0" FLEX - REWORK
- 13.75" PAVEMENT 6.75" A.C.P. - REWORK 7.0" FLEX - REWORK
- 12.5" PAVEMENT 5.5" A.C.P. - REWORK 7.0" FLEX - REWORK
- 11.75" PAVEMENT 2.75" A.C.P. - REWORK 9.0" FLEX - REWORK
- 16.5" PAVEMENT 6.5" A.C.P. - REWORK 10.0" FLEX - REWORK
- 8.0" PAVEMENT 8" FLEX - REWORK
- 10.0" PAVEMENT 10" FLEX - REWORK
- 4" CONCRETE SIDEWALK REMOVAL
- CONCRETE MEDIAN REMOVAL
- CONCRETE RIPRAP REMOVAL
- A.C.P. REMOVAL
- BRICK PAVER REMOVAL
- — — SAW CUT LINE
- (A) CONCRETE CURB REMOVAL
- (B) CONCRETE CURB & GUTTER REMOVAL
- (C) CONCRETE VALLEY GUTTER REMOVAL
- (D) TYPE 2 C.T.B. REMOVAL (CAST IN PLACE)
- (E) C.T.B. REMOVAL (PRE-CAST)
- (F) CONCRETE DRAIN REMOVAL
- (G) METAL BEAM GUARD FENCE REMOVAL
- (H) TERMINAL-ANCHOR-SECTION REMOVAL
- (I) SINGLE GUARD RAIL TERMINAL
- (J) TIMBER POST & CABLE RMV (PREP. ROW)
- (K) PALM TREE TO BE RELOCATED
- (L) FENCE REMOVAL (PREP. R.O.W.)
- (M) TREE REMOVAL
- (N) EXIST. STRUCTURE TO BE REMOVED

SHEET TOTALS				
ITEM	EST.	FINAL	UNIT	DESCRIPTION
100			STA	PREPARATION OF R.O.W.
100			EA	PREPARATION OF R.O.W. (TREES)
104			LF	REMOVE CONC. (CURB)
104	1256		LF	REMOVE CONC. (CURB & GUTTER)
104			LF	REMOVE CONC. (VALLEY GUTTER)
104			SY	REMOVE CONC. (MEDIAN)
104			SY	REMOVE CONC. (DRAIN)
104			SY	REMOVE CONC. (RIPRAP)
104	188		SY	REMOVE CONC. (SDWLK)
105			SY	REMOVE ASPHALTIC PAVEMENT
* 251	635		CY	REWORK BASE MAT'L (7" FLEX BASE)
* 251			CY	REWORK BASE MAT'L (8" FLEX BASE)
* 251			CY	REWORK BASE MAT'L (9" FLEX BASE)
* 251			CY	REWORK BASE MAT'L (10" FLEX BASE)
* 251			CY	REWORK BASE MAT'L (14" FLEX BASE)

ITEMIZED PREP R.O.W. TABLE				
ITEM	EST.	FINAL	UNIT	DESCRIPTION
$ 100			LF	TIMBER POST & CABLE
$ 100			LF	CHAIN LINK FENCE
$ 100			STA	SHRUBS

$ TO BE PAID FOR UNDER PREP. R.O.W. (STA.) FOR CONTRACTOR'S INFORMATION ONLY.
* QUANTITIES REFLECT 85% SALVAGEABLE RATE.
# A.C.P. TO BE USED AS ITEM 251

ALL PALM TREES SHALL BE RELOCATED TO AREAS WITHIN THE PROJECT LIMITS.
CONTRACTOR IS TO CONTACT THE PROJECT ENGINEER FOR MARKING SPECIFIC LOCATIONS.

SHEET TOTALS				
ITEM	EST.	FINAL	UNIT	DESCRIPTION
## ~~266~~			SY	SALVAGE A.C.P. (2.75" A.C.P.)
## ~~[illegible]~~			SY	SALVAGE A.C.P. (5.50" A.C.P.)
## ~~[illegible]~~			SY	SALVAGE A.C.P. (6.50" A.C.P.)
## 251	3842		SY	SALVAGE A.C.P. (6.75" A.C.P.)
## 305			SY	SALVAGE A.C.P. (8.75" A.C.P.)
479			EA	ADJUSTING INLET (CAP)
496			LF	REMOVE OLD STR. (PIPE)
496			EA	REMOVE OLD STR. (SMALL)
542			LF	REMOVE METAL BEAM GUARD FENCE
542			EA	REMOVE SINGLE GUARDRAIL TERMINAL
542			EA	REMOVE TERMINAL ANCHOR SECTION
1057			EA	TRANSPLANTING TREES & PALMS
5190			SY	REMOVE & RELOCATE SALVAGE LANDSCAPE PAVERS

1 REVISED 9-26-03

NOTES:

1. SAVLAGED MBGF AND POSTS SHALL BE RETURNED TO THE PHARR MAINTENANCE YARD.

THE SEAL APPEARING ON THIS DOCUMENT WAS AUTHORIZED BY JAIME AGUILAR, P.E. 87606 ON 07/02/2003.

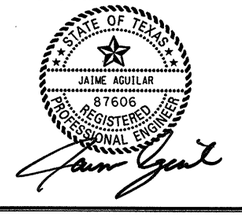

Parsons Brinckerhoff Quade & Douglas Inc.

Texas Department of Transportation

© 2003 by TxDOT

US 281
REMOVAL ITEM DETAILS

SIOUX ROAD

PLAN 1"= 100' HORIZ

SHEET 22 OF 22 | 281REM22.DGN

DESIGNED: TT	FED. RD DIV. No.	STATE	FEDERAL AID PROJECT No.				HIGHWAY No.
CHECKED: DM	6	TEXAS					US 281
DRAWN: JT	STATE DISTRICT	COUNTY	CONTROL No.	SECTION No.	JOB No.	SHEET No.	
CHECKED: DM	PHARR	HIDALGO	0255	08	091	247	

NAME

11:28:19 AM

06/23/2003

I:\22322a\CADD\Sheets\Roadway\281dat01.dgn

US 281 MAIN LANE CENTERLINE

Beginning chain BL1 description

Point 1000 N 16,634,908.15 E 1,099,966.46 Sta 500+00.00

Course from 1000 to PC BL1-1 S 8° 44' 33.46" W Dist 7,642.44

Curve Data

Curve BL1-1

P.I. Station	586+72.75	N	16,626,336.17	E	1,098,648.24
Delta =	30° 11' 26.55"	(RT)			
Degree =	1° 30' 00.00"				
Tangent =	1,030.31				
Length =	2,012.71				
Radius =	3,819.72				
External =	136.51				
Long Chord =	1,989.51				
Mid. Ord. =	131.80				
P.C. Station	576+42.44	N	16,627,354.51	E	1,098,804.84
P.T. Station	596+55.16	N	16,625,534.72	E	1,098,000.78
C.C.		N	16,627,935.09	E	1,095,029.50
Back = S	8° 44' 33.46" W				
Ahead = S	38° 56' 00.01" W				
Chord Bear = S	23° 50' 16.74" W				

Course from PT BL1-1 to PC BL1-2 S 38° 56' 00.01" W Dist 10,534.28

Curve Data

Curve BL1-2

P.I. Station	712+28.45	N	16,616,532.11	E	1,090,727.94
Delta =	30° 26' 02.38"	(LT)			
Degree =	1° 30' 00.00"				
Tangent =	1,039.01				
Length =	2,028.93				
Radius =	3,819.72				
External =	138.79				
Long Chord =	2,005.17				
Mid. Ord. =	133.92				
P.C. Station	701+89.44	N	16,617,340.34	E	1,091,380.87
P.T. Station	722+18.37	N	16,615,504.51	E	1,090,574.37
C.C.		N	16,614,939.96	E	1,094,352.14
Back = S	38° 56' 00.01" W				
Ahead = S	8° 29' 57.64" W				
Chord Bear = S	23° 42' 58.83" W				

Course from PT BL1-2 to PC BL1-3 S 8° 29' 57.64" W Dist 11,181.96

Curve Data

Curve BL1-3

P.I. Station	837+63.79	N	16,604,085.89	E	1,088,867.98
Delta =	3° 38' 00.00"	(LT)			
Degree =	0° 30' 00.00"				
Tangent =	363.46				
Length =	726.67				
Radius =	11,459.16				
External =	5.76				
Long Chord =	726.55				
Mid. Ord. =	5.76				
P.C. Station	834+00.33	N	16,604,445.36	E	1,088,921.70
P.T. Station	841+27.00	N	16,603,723.75	E	1,088,837.15
C.C.		N	16,602,751.72	E	1,100,255.01
Back = S	8° 29' 57.64" W				
Ahead = S	4° 51' 57.63" W				
Chord Bear = S	6° 40' 57.64" W				

Course from PT BL1-3 to PC BL1-4 S 4° 51' 57.63" W Dist 1,260.23

Curve Data

Curve BL1-4

P.I. Station	856+77.06	N	16,602,179.27	E	1,088,705.67
Delta =	2° 53' 51.81"	(RT)			
Degree =	0° 30' 00.00"				
Tangent =	289.83				
Length =	579.55				
Radius =	11,459.16				
External =	3.66				
Long Chord =	579.48				
Mid. Ord. =	3.66				
P.C. Station	853+87.22	N	16,602,468.06	E	1,088,730.25
P.T. Station	859+66.77	N	16,601,892.10	E	1,088,666.52
C.C.		N	16,603,440.10	E	1,077,312.39
Back = S	4° 51' 57.63" W				
Ahead = S	7° 45' 49.44" W				
Chord Bear = S	6° 18' 53.54" W				

Course from PT BL1-4 to 1001 S 7° 45' 49.46" W Dist 0.35

Point 1001 N 16,601,891.75 E 1,088,666.47 Sta 859+67.12

Ending chain BL1 description

US 281 MAIN LANE BASELINES

Beginning chain MLN1 description

Point 500 N 16,635,794.05 E 1,100,126.98 Sta 491+00.00

Course from 500 to 501 S 8° 44' 33.62" W Dist 900.00

Point 501 N 16,634,904.50 E 1,099,990.19 Sta 500+00.00

Course from 501 to PC MLN1-1 S 8° 44' 33.46" W Dist 7,642.44

Curve Data

Curve MLN1-1

P.I. Station	586+79.22	N	16,626,326.12	E	1,098,670.98
Delta =	30° 11' 26.55"	(RT)			
Degree =	1° 29' 26.28"				
Tangent =	1,036.78				
Length =	2,025.36				
Radius =	3,843.72				
External =	137.37				
Long Chord =	2,002.01				
Mid. Ord. =	132.63				
P.C. Station	576+42.44	N	16,627,350.86	E	1,098,828.56
P.T. Station	596+67.80	N	16,625,519.63	E	1,098,019.45
C.C.		N	16,627,935.09	E	1,095,029.50
Back = S	8° 44' 33.46" W				
Ahead = S	38° 56' 00.01" W				
Chord Bear = S	23° 50' 16.74" W				

Course from PT MLN1-1 to PC MLN1-2 S 38° 56' 00.01" W Dist 10,534.28

Curve Data

Curve MLN1-2

P.I. Station	712+34.57	N	16,616,522.11	E	1,090,750.71
Delta =	30° 26' 02.38"	(LT)			
Degree =	1° 30' 34.14"				
Tangent =	1,032.48				
Length =	2,016.19				
Radius =	3,795.72				
External =	137.92				
Long Chord =	1,992.57				
Mid. Ord. =	133.08				
P.C. Station	702+02.09	N	16,617,325.25	E	1,091,399.54
P.T. Station	722+18.27	N	16,615,500.96	E	1,090,598.11
C.C.		N	16,614,939.96	E	1,094,352.14
Back = S	38° 56' 00.01" W				
Ahead = S	8° 29' 57.64" W				
Chord Bear = S	23° 42' 58.83" W				

Course from PT MLN1-2 to 502 S 8° 29' 57.64" W Dist 10,659.73

Point 502 N 16,604,958.30 E 1,089,022.62 Sta 828+78.00

----- Shift: 12.00 (LT) at station 828+78.00

Point 503 N 16,604,956.53 E 1,089,034.49 Sta 828+78.00

Course from 503 to PC MLN1-3 S 8° 29' 57.64" W Dist 424.40

Curve Data

Curve MLN1-3

P.I. Station	836+64.62	N	16,604,178.55	E	1,088,918.23
Delta =	3° 37' 15.64"	(LT)			
Degree =	0° 30' 00.02"				
Tangent =	362.22				
Length =	724.19				
Radius =	11,459.00				
External =	5.72				
Long Chord =	724.07				
Mid. Ord. =	5.72				
P.C. Station	833+02.40	N	16,604,536.79	E	1,088,971.77
P.T. Station	840+26.59	N	16,603,817.65	E	1,088,887.43
C.C.		N	16,602,843.17	E	1,100,304.92
Back = S	8° 29' 57.64" W				
Ahead = S	4° 52' 42.00" W				
Chord Bear = S	6° 41' 19.82" W				

Course from PT MLN1-3 to 504 S 4° 52' 42.00" W Dist 1,230.36

Point 504 N 16,602,591.74 E 1,088,782.80 Sta 852+56.96

Ending chain MLN1 description

US 281 MAIN LANE BASELINES(CONT)

Beginning chain MLS1 description

Point 510 N 16,635,801.34 E 1,100,079.54 Sta 491+00.00

Course from 510 to 511 S 8° 44' 33.68" W Dist 900.00

Point 511 N 16,634,911.80 E 1,099,942.74 Sta 500+00.00

Course from 511 to PC MLS1-1 S 8° 44' 33.46" W Dist 7,642.44

Curve Data

Curve MLS1-1

P.I. Station	586+66.28	N	16,626,346.22	E	1,098,625.50
Delta =	30° 11' 26.55"	(RT)			
Degree =	1° 30' 34.14"				
Tangent =	1,023.83				
Length =	2,000.07				
Radius =	3,795.72				
External =	135.66				
Long Chord =	1,977.01				
Mid. Ord. =	130.98				
P.C. Station	576+42.44	N	16,627,358.15	E	1,098,781.12
P.T. Station	596+42.51	N	16,625,549.80	E	1,097,982.11
C.C.		N	16,627,935.09	E	1,095,029.50
Back = S	8° 44' 33.46" W				
Ahead = S	38° 56' 00.01" W				
Chord Bear = S	23° 50' 16.74" W				

Course from PT MLS1-1 to PC MLS1-2 S 38° 56' 00.01" W Dist 10,534.28

Curve Data

Curve MLS1-2

P.I. Station	712+22.33	N	16,616,542.11	E	1,090,705.17
Delta =	30° 26' 02.38"	(LT)			
Degree =	1° 29' 26.28"				
Tangent =	1,045.54				
Length =	2,041.68				
Radius =	3,843.72				
External =	139.66				
Long Chord =	2,017.76				
Mid. Ord. =	134.77				
P.C. Station	701+76.79	N	16,617,355.42	E	1,091,362.20
P.T. Station	722+18.48	N	16,615,508.06	E	1,090,550.64
C.C.		N	16,614,939.96	E	1,094,352.14
Back = S	38° 56' 00.01" W				
Ahead = S	8° 29' 57.64" W				
Chord Bear = S	23° 42' 58.83" W				

Course from PT MLS1-2 to PC MLS1-3 S 8° 29' 57.64" W Dist 11,307.70

Curve Data

Curve MLS1-3

P.I. Station	838+88.39	N	16,603,966.31	E	1,088,825.85
Delta =	3° 37' 15.64"	(LT)			
Degree =	0° 30' 00.02"				
Tangent =	362.22				
Length =	724.19				
Radius =	11,459.00				
External =	5.72				
Long Chord =	724.07				
Mid. Ord. =	5.72				
P.C. Station	835+26.17	N	16,604,324.54	E	1,088,879.38
P.T. Station	842+50.37	N	16,603,605.40	E	1,088,795.04
C.C.		N	16,602,630.93	E	1,100,212.53
Back = S	8° 29' 57.64" W				
Ahead = S	4° 52' 42.00" W				
Chord Bear = S	6° 41' 19.82" W				

Course from PT MLS1-3 to 512 S 4° 52' 42.00" W Dist 1,011.03

Point 512 N 16,602,598.03 E 1,088,709.07 Sta 852+61.40

Ending chain MLS1 description

THE SEAL APPEARING ON THIS DOCUMENT WAS AUTHORIZED BY JAIME AGUILAR, P.E. 87606 ON 06/23/2003.

STATE OF TEXAS · JAIME AGUILAR · 87606 · REGISTERED PROFESSIONAL ENGINEER

Parsons Brinckerhoff Quade & Douglas Inc.

Texas Department of Transportation

© 2003 by TxDOT

US 281
ROADWAY DATA SHEETS

SHEET 1 OF 14				281DAT01.DGN				
DESIGNED: PAF	FED. RD DIV. No.	STATE	FEDERAL AID PROJECT No.				HIGHWAY No.	
CHECKED: JP	6	TEXAS					US 281	
DRAWN: JA	STATE DISTRICT	COUNTY	CONTROL No.	SECTION No.	JOB No.	SHEET No.		
CHECKED: JDH	PHARR	HIDALGO	0255	08	091	248		

NAME

11:28:24 AM

06/23/2003

i:\22322c\cadd\sheets\roadway\281dat02.dgn

US 281 MAIN LANE BASELINES(CONT)

Beginning chain MLN1-1 description

Point 520 N 16,623,721.96 E 1,096,592.89 Sta 619+50.00

Course from 520 to PC MLN1-1-1 S 38° 56′ 00.01" W Dist 55.60

	Curve Data				
Curve MLN1-1-1					
P.I. Station	622+80.00	N	16,623,465.26	E	1,096,385.51
Delta =	2° 14′ 44.67"	(RT)			
Degree =	0° 24′ 33.32"				
Tangent =	274.40				
Length =	548.74				
Radius =	14,000.00				
External =	2.69				
Long Chord =	548.70				
Mid. Ord. =	2.69				
P.C. Station	620+05.60	N	16,623,678.71	E	1,096,557.95
P.T. Station	625+54.33	N	16,623,258.73	E	1,096,204.84
C.C.		N	16,632,476.53	E	1,085,667.66
Back = S 38° 56′ 00.01" W					
Ahead = S 41° 10′ 44.69" W					
Chord Bear = S 40° 03′ 22.35" W					

Course from PT MLN1-1-1 to PC MLN1-1-2 S 41° 10′ 44.69" W Dist 39.98

	Curve Data				
Curve MLN1-1-2					
P.I. Station	627+90.32	N	16,623,081.11	E	1,096,049.46
Delta =	2° 14′ 44.67"	(LT)			
Degree =	0° 34′ 22.65"				
Tangent =	196.00				
Length =	391.96				
Radius =	10,000.00				
External =	1.92				
Long Chord =	391.93				
Mid. Ord. =	1.92				
P.C. Station	625+94.32	N	16,623,228.63	E	1,096,178.51
P.T. Station	629+86.27	N	16,622,928.64	E	1,095,926.29
C.C.		N	16,616,644.49	E	1,103,705.07
Back = S 41° 10′ 44.69" W					
Ahead = S 38° 56′ 00.01" W					
Chord Bear = S 40° 03′ 22.35" W					

Course from PT MLN1-1-2 to 521 S 38° 56′ 00.02" W Dist 14.00

Point 521 N 16,622,917.76 E 1,095,917.50 Sta 630+00.27

Ending chain MLN1-1 description

Beginning chain MLS1-1 description

Point 530 N 16,623,777.26 E 1,096,524.44 Sta 619+50.00

Course from 530 to PC MLS1-1-1 S 38° 56′ 00.01" W Dist 55.60

	Curve Data				
Curve MLS1-1-1					
P.I. Station	622+80.00	N	16,623,520.56	E	1,096,317.06
Delta =	2° 14′ 44.67"	(LT)			
Degree =	0° 24′ 33.32"				
Tangent =	274.40				
Length =	548.74				
Radius =	14,000.00				
External =	2.69				
Long Chord =	548.70				
Mid. Ord. =	2.69				
P.C. Station	620+05.60	N	16,623,734.01	E	1,096,489.50
P.T. Station	625+54.33	N	16,623,300.51	E	1,096,153.12
C.C.		N	16,614,936.19	E	1,107,379.79
Back = S 38° 56′ 00.01" W					
Ahead = S 36° 41′ 15.34" W					
Chord Bear = S 37° 48′ 37.68" W					

Course from PT MLS1-1-1 to PC MLS1-1-2 S 36° 41′ 15.34" W Dist 39.98

	Curve Data				
Curve MLS1-1-2					
P.I. Station	627+90.32	N	16,623,111.28	E	1,096,012.12
Delta =	2° 14′ 44.67"	(RT)			
Degree =	0° 34′ 22.65"				
Tangent =	196.00				
Length =	391.96				
Radius =	10,000.00				
External =	1.92				
Long Chord =	391.93				
Mid. Ord. =	1.92				
P.C. Station	625+94.32	N	16,623,268.45	E	1,096,129.23
P.T. Station	629+86.27	N	16,622,958.81	E	1,095,888.95
C.C.		N	16,629,242.97	E	1,088,110.18
Back = S 36° 41′ 15.34" W					
Ahead = S 38° 56′ 00.01" W					
Chord Bear = S 37° 48′ 37.68" W					

Course from PT MLS1-1-2 to 531 S 38° 56′ 00.02" W Dist 14.00

Point 531 N 16,622,947.92 E 1,095,880.16 Sta 630+00.27

Ending chain MLS1-1 description

US 281 NORTHBOUND FRONTAGE ROAD

Beginning chain FRN1 description

Point 400 N 16,635,579.50 E 1,100,206.29 Sta 50493+00.00

Course from 400 to 401 S 8° 44′ 33.15" W Dist 700.00

Point 401 N 16,634,887.63 E 1,100,099.90 Sta 50500+00.00

Course from 401 to PC FRN1-1 S 8° 44′ 33.42" W Dist 7,759.39

	Curve Data				
Curve FRN1-1					
P.I. Station	50587+89.70	N	16,626,200.06	E	1,098,763.90
Delta =	30° 11′ 26.68"	(RT)			
Degree =	1° 30′ 00.00"				
Tangent =	1,030.31				
Length =	2,012.72				
Radius =	3,819.72				
External =	136.52				
Long Chord =	1,989.51				
Mid. Ord. =	131.80				
P.C. Station	50577+59.39	N	16,627,218.40	E	1,098,920.50
P.T. Station	50597+72.11	N	16,625,398.61	E	1,098,116.44
C.C.		N	16,627,798.98	E	1,095,145.16
Back = S 8° 44′ 33.42" W					
Ahead = S 38° 56′ 00.11" W					
Chord Bear = S 23° 50′ 16.77" W					

Course from PT FRN1-1 to PC FRN1-2 S 38° 56′ 00.11" W Dist 1,402.94

	Curve Data				
Curve FRN1-2					
P.I. Station	50613+85.60	N	16,624,143.51	E	1,097,102.49
Delta =	2° 06′ 18.83"	(RT)			
Degree =	0° 30′ 00.00"				
Tangent =	210.55				
Length =	421.05				
Radius =	11,459.16				
External =	1.93				
Long Chord =	421.02				
Mid. Ord. =	1.93				
P.C. Station	50611+75.05	N	16,624,307.29	E	1,097,234.80
P.T. Station	50615+96.10	N	16,623,984.70	E	1,096,964.26
C.C.		N	16,631,508.41	E	1,088,320.99
Back = S 38° 56′ 00.11" W					
Ahead = S 41° 02′ 18.94" W					
Chord Bear = S 39° 59′ 09.52" W					

Course from PT FRN1-2 to PC FRN1-3 S 41° 02′ 18.94" W Dist 681.39

	Curve Data				
Curve FRN1-3					
P.I. Station	50624+88.03	N	16,623,311.94	E	1,096,378.64
Delta =	2° 06′ 18.93"	(LT)			
Degree =	0° 30′ 00.00"				
Tangent =	210.55				
Length =	421.05				
Radius =	11,459.16				
External =	1.93				
Long Chord =	421.03				
Mid. Ord. =	1.93				
P.C. Station	50622+77.48	N	16,623,470.76	E	1,096,516.88
P.T. Station	50626+98.54	N	16,623,148.16	E	1,096,246.33
C.C.		N	16,615,947.05	E	1,105,160.15
Back = S 41° 02′ 18.94" W					
Ahead = S 38° 56′ 00.01" W					
Chord Bear = S 39° 59′ 09.47" W					

Course from PT FRN1-3 to PC FRN1-4 S 38° 56′ 00.01" W Dist 6,820.56

	Curve Data				
Curve FRN1-4					
P.I. Station	50697+19.05	N	16,617,687.06	E	1,091,834.53
Delta =	3° 59′ 50.33"	(LT)			
Degree =	1° 00′ 00.00"				
Tangent =	199.95				
Length =	399.73				
Radius =	5,729.58				
External =	3.49				
Long Chord =	399.65				
Mid. Ord. =	3.49				
P.C. Station	50695+19.10	N	16,617,842.60	E	1,091,960.18
P.T. Station	50699+18.83	N	16,617,523.15	E	1,091,720.03
C.C.		N	16,614,242.04	E	1,096,417.09
Back = S 38° 56′ 00.01" W					
Ahead = S 34° 56′ 09.68" W					
Chord Bear = S 36° 56′ 04.84" W					

Course from PT FRN1-4 to PC FRN1-5 S 34° 56′ 09.68" W Dist 617.77

US 281 NORTHBOUND FRONTAGE ROAD(CONT)

	Curve Data				
Curve FRN1-5					
P.I. Station	50708+66.75	N	16,616,746.06	E	1,091,177.19
Delta =	19° 36′ 52.66"	(LT)			
Degree =	3° 00′ 00.00"				
Tangent =	330.14				
Length =	653.82				
Radius =	1,909.86				
External =	28.32				
Long Chord =	650.63				
Mid. Ord. =	27.91				
P.C. Station	50705+36.60	N	16,617,016.70	E	1,091,366.25
P.T. Station	50711+90.43	N	16,616,427.65	E	1,091,089.96
C.C.		N	16,615,923.00	E	1,092,931.94
Back = S 34° 56′ 09.68" W					
Ahead = S 15° 19′ 17.02" W					
Chord Bear = S 25° 07′ 43.35" W					

Course from PT FRN1-5 to PC FRN1-6 S 15° 19′ 17.02" W Dist 1,786.73

	Curve Data				
Curve FRN1-6					
P.I. Station	50732+05.17	N	16,614,484.51	E	1,090,557.59
Delta =	6° 49′ 56.64"	(LT)			
Degree =	1° 30′ 00.00"				
Tangent =	228.02				
Length =	455.49				
Radius =	3,819.72				
External =	6.80				
Long Chord =	455.22				
Mid. Ord. =	6.79				
P.C. Station	50729+77.16	N	16,614,704.42	E	1,090,617.84
P.T. Station	50734+32.65	N	16,614,258.99	E	1,090,523.93
C.C.		N	16,613,695.12	E	1,094,301.80
Back = S 15° 19′ 17.02" W					
Ahead = S 8° 29′ 20.38" W					
Chord Bear = S 11° 54′ 18.70" W					

Course from PT FRN1-6 to PC FRN1-7 S 8° 29′ 20.38" W Dist 1,447.90

	Curve Data				
Curve FRN1-7					
P.I. Station	50751+00.59	N	16,612,609.32	E	1,090,277.71
Delta =	2° 12′ 00.62"	(LT)			
Degree =	0° 30′ 00.00"				
Tangent =	220.04				
Length =	440.03				
Radius =	11,459.16				
External =	2.11				
Long Chord =	440.01				
Mid. Ord. =	2.11				
P.C. Station	50748+80.55	N	16,612,826.96	E	1,090,310.20
P.T. Station	50753+20.58	N	16,612,390.60	E	1,090,253.61
C.C.		N	16,611,135.36	E	1,101,643.81
Back = S 8° 29′ 20.38" W					
Ahead = S 6° 17′ 19.76" W					
Chord Bear = S 7° 23′ 20.07" W					

Course from PT FRN1-7 to PC FRN1-8 S 6° 17′ 19.76" W Dist 622.22

	Curve Data				
Curve FRN1-8					
P.I. Station	50761+63.49	N	16,611,552.77	E	1,090,161.28
Delta =	2° 12′ 23.77"	(RT)			
Degree =	0° 30′ 00.00"				
Tangent =	220.69				
Length =	441.32				
Radius =	11,459.16				
External =	2.12				
Long Chord =	441.29				
Mid. Ord. =	2.12				
P.C. Station	50759+42.80	N	16,611,772.13	E	1,090,185.45
P.T. Station	50763+84.12	N	16,611,334.50	E	1,090,128.67
C.C.		N	16,613,027.37	E	1,078,795.25
Back = S 6° 17′ 19.76" W					
Ahead = S 8° 29′ 43.52" W					
Chord Bear = S 7° 23′ 31.64" W					

Course from PT FRN1-8 to PC FRN1-9 S 8° 29′ 43.52" W Dist 877.71

THE SEAL APPEARING ON THIS DOCUMENT WAS AUTHORIZED BY JAIME AGUILAR, P.E. 87606 ON 06/23/2003.

STATE OF TEXAS · JAIME AGUILAR · 87606 · REGISTERED PROFESSIONAL ENGINEER

Parsons Brinckerhoff Quade & Douglas Inc.

Texas Department of Transportation

© 2003 by TxDOT

US 281
ROADWAY DATA SHEETS

SHEET 2 OF 14				281DAT02.DGN				
DESIGNED: PAF	FED. RD DIV. No.	STATE	FEDERAL AID PROJECT No.				HIGHWAY No.	
CHECKED: JP	6	TEXAS					US 281	
DRAWN: JA	STATE DISTRICT	COUNTY	CONTROL No.	SECTION No.	JOB No.	SHEET No.		
CHECKED: JDH	PHARR	HIDALGO	0255	08	091	249		

NAME

11:28:29 AM

06/23/2003

i:\22322a\cadd\sheets\roadway\281dat03.dgn

US 281 NORTHBOUND FRONTAGE ROAD (CONT)

Curve Data

Curve FRN1-9

P.I. Station	50774+87.68	N	16,610,243.05	E	1,089,965.65
Delta =	2° 15' 29.64"	(RT)			
Degree =	0° 30' 00.00"				
Tangent =	225.85				
Length =	451.65				
Radius =	11,459.16				
External =	2.23				
Long Chord =	451.62				
Mid. Ord. =	2.23				
P.C. Station	50772+61.83	N	16,610,466.42	E	1,089,999.01
P.T. Station	50777+13.48	N	16,610,021.16	E	1,089,923.50
C.C.		N	16,612,159.29	E	1,078,665.59
Back = S	8° 29' 43.52" W				
Ahead = S	10° 45' 13.16" W				
Chord Bear = S	9° 37' 28.34" W				

Course from PT FRN1-9 to PC FRN1-10 S 10° 45' 13.16" W Dist 531.91

Curve Data

Curve FRN1-10

P.I. Station	50784+70.23	N	16,609,277.69	E	1,089,782.30
Delta =	2° 14' 53.36"	(LT)			
Degree =	0° 30' 00.00"				
Tangent =	224.84				
Length =	449.63				
Radius =	11,459.16				
External =	2.21				
Long Chord =	449.60				
Mid. Ord. =	2.21				
P.C. Station	50782+45.39	N	16,609,498.59	E	1,089,824.26
P.T. Station	50786+95.02	N	16,609,055.32	E	1,089,749.05
C.C.		N	16,607,360.46	E	1,101,082.17
Back = S	10° 45' 13.16" W				
Ahead = S	8° 30' 19.80" W				
Chord Bear = S	9° 37' 46.48" W				

Course from PT FRN1-10 to PC FRN1-11 S 8° 30' 19.80" W Dist 1,506.82

Curve Data

Curve FRN1-11

P.I. Station	50804+21.65	N	16,607,347.69	E	1,089,493.67
Delta =	2° 11' 52.04"	(LT)			
Degree =	0° 30' 00.00"				
Tangent =	219.81				
Length =	439.56				
Radius =	11,459.16				
External =	2.11				
Long Chord =	439.53				
Mid. Ord. =	2.11				
P.C. Station	50802+01.84	N	16,607,565.07	E	1,089,526.18
P.T. Station	50806+41.40	N	16,607,129.21	E	1,089,469.52
C.C.		N	16,605,870.22	E	1,100,859.31
Back = S	8° 30' 19.80" W				
Ahead = S	6° 18' 27.76" W				
Chord Bear = S	7° 24' 23.78" W				

Course from PT FRN1-11 to PC FRN1-12 S 6° 18' 27.76" W Dist 571.05

Curve Data

Curve FRN1-12

P.I. Station	50814+31.23	N	16,606,344.16	E	1,089,382.74
Delta =	2° 11' 15.34"	(RT)			
Degree =	0° 30' 00.00"				
Tangent =	218.79				
Length =	437.52				
Radius =	11,459.16				
External =	2.09				
Long Chord =	437.49				
Mid. Ord. =	2.09				
P.C. Station	50812+12.45	N	16,606,561.62	E	1,089,406.78
P.T. Station	50816+49.96	N	16,606,127.77	E	1,089,350.42
C.C.		N	16,607,820.62	E	1,078,017.00
Back = S	6° 18' 27.76" W				
Ahead = S	8° 29' 43.10" W				
Chord Bear = S	7° 24' 05.43" W				

Course from PT FRN1-12 to PC FRN1-13 S 8° 29' 43.10" W Dist 2,034.99

Curve Data

Curve FRN1-13

P.I. Station	50838+64.43	N	16,603,937.61	E	1,089,023.29
Delta =	3° 35' 18.09"	(LT)			
Degree =	1° 00' 00.00"				
Tangent =	179.48				
Length =	358.84				
Radius =	5,729.58				
External =	2.81				
Long Chord =	358.78				
Mid. Ord. =	2.81				
P.C. Station	50836+84.95	N	16,604,115.12	E	1,089,049.80
P.T. Station	50840+43.79	N	16,603,758.79	E	1,089,007.93
C.C.		N	16,603,268.69	E	1,094,716.51
Back = S	8° 29' 43.10" W				
Ahead = S	4° 54' 25.00" W				
Chord Bear = S	6° 42' 04.05" W				

Course from PT FRN1-13 to 402 S 4° 54' 25.00" W Dist 1,285.65

Point 402 N 16,602,477.85 E 1,088,897.96 Sta 50853+29.44

Ending chain FRN1 description

US 281 SOUTHBOUND FRONTAGE ROAD (SEG 2&3)

Beginning chain FRS1-2 description

Point 420 N 16,625,483.44 E 1,097,735.15 Sta 61598+61.97

Course from 420 to PC FRS1-2-1 S 38° 56' 09.86" W Dist 1,240.35

Curve Data

Curve FRS1-2-1

P.I. Station	61612+79.22	N	16,624,381.04	E	1,096,844.48
Delta =	1° 46' 07.89"	(LT)			
Degree =	0° 30' 00.00"				
Tangent =	176.90				
Length =	353.77				
Radius =	11,459.16				
External =	1.37				
Long Chord =	353.76				
Mid. Ord. =	1.37				
P.C. Station	61611+02.32	N	16,624,518.64	E	1,096,955.65
P.T. Station	61614+56.09	N	16,624,240.07	E	1,096,737.60
C.C.		N	16,617,317.10	E	1,105,869.13
Back = S	38° 56' 09.86" W				
Ahead = S	37° 10' 01.97" W				
Chord Bear = S	38° 03' 05.92" W				

Course from PT FRS1-2-1 to PC FRS1-2-2 S 37° 10' 01.97" W Dist 941.71

Curve Data

Curve FRS1-2-2

P.I. Station	61625+74.70	N	16,623,348.67	E	1,096,061.80
Delta =	1° 46' 08.04"	(RT)			
Degree =	0° 30' 00.00"				
Tangent =	176.90				
Length =	353.78				
Radius =	11,459.16				
External =	1.37				
Long Chord =	353.77				
Mid. Ord. =	1.37				
P.C. Station	61623+97.80	N	16,623,489.64	E	1,096,168.68
P.T. Station	61627+51.58	N	16,623,211.07	E	1,095,950.62
C.C.		N	16,630,412.61	E	1,087,037.15
Back = S	37° 10' 01.97" W				
Ahead = S	38° 56' 10.01" W				
Chord Bear = S	38° 03' 05.99" W				

Course from PT FRS1-2-2 to 421 S 38° 56' 10.01" W Dist 5,943.48

Point 421 N 16,618,587.95 E 1,092,215.42 Sta 61686+95.06

Course from 421 to PC FRS1-2-3 S 40° 15' 45.91" W Dist 1,762.56

Curve Data

Curve FRS1-2-3

P.I. Station	61708+06.51	N	16,616,976.72	E	1,090,850.80
Delta =	16° 32' 32.84"	(LT)			
Degree =	2° 23' 14.37"				
Tangent =	348.89				
Length =	692.93				
Radius =	2,400.00				
External =	25.23				
Long Chord =	690.52				
Mid. Ord. =	24.96				
P.C. Station	61704+57.62	N	16,617,242.96	E	1,091,076.29
P.T. Station	61711+50.55	N	16,616,657.30	E	1,090,710.45
C.C.		N	16,615,691.85	E	1,092,907.70
Back = S	40° 15' 45.91" W				
Ahead = S	23° 43' 13.06" W				
Chord Bear = S	31° 59' 29.49" W				

Ending chain FRS1-2 description

Beginning chain FRS1-2A description

Curve Data

Curve FRS1-2A-1

P.I. Station	9+13.22	N	16,617,428.86	E	1,091,207.53
Delta =	58° 53' 57.49"	(RT)			
Degree =	43° 44' 14.05"				
Tangent =	73.96				
Length =	134.67				
Radius =	131.00				
External =	19.44				
Long Chord =	128.81				
Mid. Ord. =	16.93				
P.C. Station	8+39.26	N	16,617,485.30	E	1,091,255.34
P.T. Station	9+73.92	N	16,617,440.64	E	1,091,134.51
C.C.		N	16,617,569.97	E	1,091,155.37
Back = S	40° 15' 45.95" W				
Ahead = N	80° 50' 16.56" W				
Chord Bear = S	69° 42' 44.70" W				

Course from PT FRS1-2A-1 to 1778 N 80° 50' 16.56" W Dist 163.23

Point 1778 N 16,617,466.63 E 1,090,973.36 Sta 11+37.16

Ending chain FRS1-2A description

US 281 SOUTHBOUND FRONTAGE ROAD (SEG 3)

Beginning chain FRS1-3 description

Point 435 N 16,618,389.06 E 1,091,131.28 Sta 62692+59.24

Course from 435 to 436 S 8° 29' 13.61" W Dist 127.15

Point 436 N 16,618,263.30 E 1,091,112.51 Sta 62693+86.39

----- Shift: 5.00 (RT) at station 62693+86.39

Point 430 N 16,618,264.03 E 1,091,107.56 Sta 62693+86.39

Course from 430 to PC FRS1-3-1 S 8° 29' 13.61" W Dist 140.59

Curve Data

Curve FRS1-3-1

P.I. Station	62696+77.03	N	16,617,976.58	E	1,091,064.67
Delta =	2° 51' 54.31"	(RT)			
Degree =	0° 57' 17.75"				
Tangent =	150.05				
Length =	300.03				
Radius =	6,000.00				
External =	1.88				
Long Chord =	300.00				
Mid. Ord. =	1.88				
P.C. Station	62695+26.98	N	16,618,124.98	E	1,091,086.82
P.T. Station	62698+27.01	N	16,617,829.47	E	1,091,035.14
C.C.		N	16,619,010.50	E	1,085,152.52
Back = S	8° 29' 13.61" W				
Ahead = S	11° 21' 07.92" W				
Chord Bear = S	9° 55' 10.77" W				

Curve Data

Curve FRS1-3-2

P.I. Station	62699+77.06	N	16,617,682.36	E	1,091,005.60
Delta =	2° 51' 54.32"	(LT)			
Degree =	0° 57' 17.75"				
Tangent =	150.05				
Length =	300.03				
Radius =	6,000.00				
External =	1.88				
Long Chord =	300.00				
Mid. Ord. =	1.88				
P.C. Station	62698+27.01	N	16,617,829.47	E	1,091,035.14
P.T. Station	62701+27.05	N	16,617,533.95	E	1,090,983.46
C.C.		N	16,616,648.43	E	1,096,917.75
Back = S	11° 21' 07.92" W				
Ahead = S	8° 29' 13.60" W				
Chord Bear = S	9° 55' 10.76" W				

Course from PT FRS1-3-2 to PC FRS1-3-3 S 8° 29' 13.60" W Dist 52.87

Curve Data

Curve FRS1-3-3

P.I. Station	62705+17.97	N	16,617,147.31	E	1,090,925.76
Delta =	15° 13' 59.45"	(RT)			
Degree =	2° 15' 59.21"				
Tangent =	338.05				
Length =	672.12				
Radius =	2,528.00				
External =	22.50				
Long Chord =	670.14				
Mid. Ord. =	22.30				
P.C. Station	62701+79.92	N	16,617,481.66	E	1,090,975.65
P.T. Station	62708+52.03	N	16,616,837.82	E	1,090,789.77
C.C.		N	16,617,854.76	E	1,088,475.34
Back = S	8° 29' 13.60" W				
Ahead = S	23° 43' 13.06" W				
Chord Bear = S	16° 06' 13.33" W				

Course from PT FRS1-3-3 to PC FRS1-3-4 S 23° 43' 13.06" W Dist 197.17

NOTE:

SOUTHBOUND FRONTAGE ROAD BASELINE SEGMENT 1 IS OUTSIDE THE PROJECT LIMITS.

THE SEAL APPEARING ON THIS DOCUMENT WAS AUTHORIZED BY JAIME AGUILAR, P.E. 87606 ON 06/23/2003.

STATE OF TEXAS · JAIME AGUILAR · 87606 · REGISTERED PROFESSIONAL ENGINEER

Parsons Brinckerhoff Quade & Douglas Inc.

Texas Department of Transportation

© 2003 by TxDOT

US 281
ROADWAY DATA SHEETS

SHEET 3 OF 14					281DAT03.DGN		
DESIGNED: PAF	FED. RD DIV. No.	STATE	FEDERAL AID PROJECT No.		HIGHWAY No.		
CHECKED: JP	6	TEXAS			US 281		
DRAWN: JA	STATE DISTRICT	COUNTY	CONTROL No.	SECTION No.	JOB No.	SHEET No.	
CHECKED: JDH	PHARR	HIDALGO	0255	08	091	250	

US 281 SOUTHBOUND FRONTAGE ROAD (SEG 3) (CONT)

Curve Data

Curve FRS1-3-4

P.I. Station	62714+32.08	N	16,616,306.78	E	1,090,556.43
Delta =	15° 13' 29.09"	(LT)			
Degree =	2° 00' 00.00"				
Tangent =	382.87				
Length =	761.24				
Radius =	2,864.79				
External =	25.47				
Long Chord =	759.00				
Mid. Ord. =	25.25				
P.C. Station	62710+49.20	N	16,616,657.30	E	1,090,710.45
P.T. Station	62718+10.44	N	16,615,928.10	E	1,090,499.87
C.C.		N	16,615,504.88	E	1,093,333.23
Back = S	23° 43' 13.06" W				
Ahead = S	8° 29' 43.97" W				
Chord Bear = S	16° 06' 28.51" W				

Course from PT FRS1-3-4 to PC FRS1-3-5 S 8° 29' 43.97" W Dist 3,196.02

Curve Data

Curve FRS1-3-5

P.I. Station	62752+30.41	N	16,612,545.66	E	1,089,994.63
Delta =	2° 14' 21.14"	(RT)			
Degree =	0° 30' 00.00"				
Tangent =	223.95				
Length =	447.84				
Radius =	11,459.16				
External =	2.19				
Long Chord =	447.81				
Mid. Ord. =	2.19				
P.C. Station	62750+06.46	N	16,612,767.16	E	1,090,027.72
P.T. Station	62754+54.30	N	16,612,325.63	E	1,089,952.92
C.C.		N	16,614,460.05	E	1,078,694.30
Back = S	8° 29' 43.97" W				
Ahead = S	10° 44' 05.11" W				
Chord Bear = S	9° 36' 54.54" W				

Course from PT FRS1-3-5 to PC FRS1-3-6 S 10° 44' 05.11" W Dist 575.89

Curve Data

Curve FRS1-3-6

P.I. Station	62762+54.14	N	16,611,539.79	E	1,089,803.94
Delta =	2° 14' 21.13"	(LT)			
Degree =	0° 30' 00.00"				
Tangent =	223.95				
Length =	447.84				
Radius =	11,459.16				
External =	2.19				
Long Chord =	447.81				
Mid. Ord. =	2.19				
P.C. Station	62760+30.19	N	16,611,759.82	E	1,089,845.65
P.T. Station	62764+78.03	N	16,611,318.30	E	1,089,770.85
C.C.		N	16,609,625.41	E	1,101,104.27
Back = S	10° 44' 05.11" W				
Ahead = S	8° 29' 43.98" W				
Chord Bear = S	9° 36' 54.54" W				

Course from PT FRS1-3-6 to PC FRS1-3-7 S 8° 29' 43.98" W Dist 777.27

Curve Data

Curve FRS1-3-7

P.I. Station	62774+62.02	N	16,610,345.10	E	1,089,625.49
Delta =	2° 04' 01.20"	(LT)			
Degree =	0° 30' 00.00"				
Tangent =	206.72				
Length =	413.40				
Radius =	11,459.16				
External =	1.86				
Long Chord =	413.38				
Mid. Ord. =	1.86				
P.C. Station	62772+55.30	N	16,610,549.56	E	1,089,656.03
P.T. Station	62776+68.70	N	16,610,139.68	E	1,089,602.34
C.C.		N	16,608,856.67	E	1,100,989.44
Back = S	8° 29' 43.98" W				
Ahead = S	6° 25' 42.78" W				
Chord Bear = S	7° 27' 43.38" W				

Course from PT FRS1-3-7 to PC FRS1-3-8 S 6° 25' 42.78" W Dist 695.64

Curve Data

Curve FRS1-3-8

P.I. Station	62785+71.07	N	16,609,242.99	E	1,089,501.31
Delta =	2° 04' 01.41"	(RT)			
Degree =	0° 30' 00.00"				
Tangent =	206.73				
Length =	413.41				
Radius =	11,459.16				
External =	1.86				
Long Chord =	413.39				
Mid. Ord. =	1.86				
P.C. Station	62783+64.34	N	16,609,448.42	E	1,089,524.45
P.T. Station	62787+77.75	N	16,609,038.53	E	1,089,470.77
C.C.		N	16,610,731.43	E	1,078,137.35
Back = S	6° 25' 42.78" W				
Ahead = S	8° 29' 44.19" W				
Chord Bear = S	7° 27' 43.49" W				

Course from PT FRS1-3-8 to PC FRS1-3-9 S 8° 29' 44.19" W Dist 1,472.63

US 281 SOUTHBOUND FRONTAGE ROAD (SEG 3) (CONT)

Curve Data

Curve FRS1-3-9

P.I. Station	62804+78.72	N	16,607,356.22	E	1,089,219.48
Delta =	2° 16' 59.45"	(RT)			
Degree =	0° 30' 00.00"				
Tangent =	228.35				
Length =	456.64				
Radius =	11,459.16				
External =	2.27				
Long Chord =	456.61				
Mid. Ord. =	2.27				
P.C. Station	62802+50.38	N	16,607,582.06	E	1,089,253.21
P.T. Station	62807+07.01	N	16,607,131.90	E	1,089,176.77
C.C.		N	16,609,274.96	E	1,077,919.79
Back = S	8° 29' 44.19" W				
Ahead = S	10° 46' 43.65" W				
Chord Bear = S	9° 38' 13.92" W				

Course from PT FRS1-3-9 to PC FRS1-3-10 S 10° 46' 43.65" W Dist 547.32

Curve Data

Curve FRS1-3-10

P.I. Station	62814+82.68	N	16,606,369.92	E	1,089,031.71
Delta =	2° 16' 59.49"	(LT)			
Degree =	0° 30' 00.00"				
Tangent =	228.35				
Length =	456.64				
Radius =	11,459.16				
External =	2.27				
Long Chord =	456.61				
Mid. Ord. =	2.27				
P.C. Station	62812+54.33	N	16,606,594.24	E	1,089,074.41
P.T. Station	62817+10.97	N	16,606,144.07	E	1,088,997.97
C.C.		N	16,604,451.17	E	1,100,331.39
Back = S	10° 46' 43.65" W				
Ahead = S	8° 29' 44.16" W				
Chord Bear = S	9° 38' 13.90" W				

Course from PT FRS1-3-10 to PC FRS1-3-11 S 8° 29' 44.16" W Dist 1,515.36

Curve Data

Curve FRS1-3-11

P.I. Station	62835+89.79	N	16,604,285.86	E	1,088,720.41
Delta =	3° 38' 00.17"	(LT)			
Degree =	0° 30' 00.00"				
Tangent =	363.46				
Length =	726.68				
Radius =	11,459.16				
External =	5.76				
Long Chord =	726.55				
Mid. Ord. =	5.76				
P.C. Station	62832+26.33	N	16,604,645.34	E	1,088,774.10
P.T. Station	62839+53.01	N	16,603,923.71	E	1,088,689.60
C.C.		N	16,602,952.44	E	1,100,107.52
Back = S	8° 29' 44.16" W				
Ahead = S	4° 51' 43.99" W				
Chord Bear = S	6° 40' 44.07" W				

Course from PT FRS1-3-11 to 431 S 4° 51' 43.99" W Dist 817.96

Point 431 N 16,603,108.70 E 1,088,620.27 Sta 62847+70.97

Course from 431 to 432 S 4° 51' 43.70" W Dist 229.03

Point 432 N 16,602,880.49 E 1,088,600.86 Sta 62850+00.00

Ending chain FRS1-3 description

US 281 CROSS STREETS

Beginning chain XWISNB1 description

Point 1960 N 16,623,301.35 E 1,096,372.29 Sta 10+00.00

Course from 1960 to 1961 S 81° 30' 29.99" E Dist 275.00

Point 1961 N 16,623,260.74 E 1,096,644.27 Sta 12+75.00

Ending chain XWISNB1 description

Beginning chain XWISSB1 description

Point 1965 N 16,623,390.90 E 1,095,779.15 Sta 10+00.00

Course from 1965 to 1966 S 81° 30' 30.19" E Dist 284.23

Point 1966 N 16,623,348.93 E 1,096,060.27 Sta 12+84.23

Ending chain XWISSB1 description

US 281 CROSS STREETS(CONT)

Beginning chain XTRENT1 description

Point 1900 N 16,621,120.84 E 1,093,259.33 Sta 10+00.00

Course from 1900 to 1901 S 81° 44' 38.05" E Dist 60.02

Point 1901 N 16,621,112.22 E 1,093,318.73 Sta 10+60.02

Course from 1901 to 1902 S 81° 30' 43.00" E Dist 1,494.52

Point 1902 N 16,620,891.63 E 1,094,796.87 Sta 25+54.54

Course from 1902 to 1903 S 77° 22' 05.89" E Dist 350.98

Point 1903 N 16,620,814.87 E 1,095,139.36 Sta 29+05.52

Course from 1903 to 1904 S 81° 24' 41.01" E Dist 594.30

Point 1904 N 16,620,726.12 E 1,095,726.99 Sta 34+99.81

Ending chain XTRENT1 description

Beginning chain XALBNB1 description

Point 1970 N 16,618,539.04 E 1,092,522.81 Sta 10+00.00

Course from 1970 to 1971 S 81° 30' 48.13" E Dist 275.00

Point 1971 N 16,618,498.46 E 1,092,794.79 Sta 12+75.00

Ending chain XALBNB1 description

THE SEAL APPEARING ON THIS DOCUMENT WAS AUTHORIZED BY JAIME AGUILAR, P.E. 87606 ON 06/23/2003.

STATE OF TEXAS · JAIME AGUILAR · 87606 · REGISTERED PROFESSIONAL ENGINEER

Parsons Brinckerhoff Quade & Douglas Inc.

Texas Department of Transportation

© 2003 by TxDOT

US 281 ROADWAY DATA SHEETS

SHEET 4 OF 14			281DAT04.DGN				
DESIGNED: PAF	FED. RD DIV. No.	STATE	FEDERAL AID PROJECT No.			HIGHWAY No.	
CHECKED: JP	6	TEXAS				US 281	
DRAWN: JA	STATE DISTRICT	COUNTY	CONTROL No.	SECTION No.	JOB No.	SHEET No.	
CHECKED: JDH	PHARR	HIDALGO	0255	08	091	251	

NAME
11:28:34 AM
06/23/2003
i:\22322a\cadd\sheets\roadway\281dat04.dgn

NAME

11:28:38 AM

06/23/2003

i:\22322a\cadd\sheets\roadway\281dat05.dgn

US 281 CROSS STREETS (CONT)

Beginning chain XALBSB1 description

Point 1975	N	16,618,627.41	E	1,091,929.35	Sta	10+00.00
Course from 1975 to 1976	S 81° 30′ 50.56" E		Dist 286.79			
Point 1976	N	16,618,585.09	E	1,092,213.00	Sta	12+86.79

Ending chain XALBSB1 description

Beginning chain XOWA1 description

Point 1980	N	16,616,238.92	E	1,090,058.35	Sta	10+00.00
Course from 1980 to 1981	S 81° 31′ 01.77" E		Dist 1,410.45			
Point 1981	N	16,616,030.86	E	1,091,453.37	Sta	24+10.45

Ending chain XOWA1 description

Beginning chain XMINNB1 description

Point 1985	N	16,613,521.10	E	1,090,413.80	Sta	10+00.00
Course from 1985 to 1986	S 81° 52′ 05.48" E		Dist 275.00			
Point 1986	N	16,613,482.20	E	1,090,686.03	Sta	12+75.00

Ending chain XMINNB1 description

Beginning chain XMINSB1 description

Point 1990	N	16,613,595.86	E	1,089,868.90	Sta	10+00.00
Course from 1990 to 1991	S 81° 30′ 12.44" E		Dist 279.50			
Point 1991	N	16,613,554.56	E	1,090,145.33	Sta	12+79.50

Ending chain XMINSB1 description

Beginning chain XNOLAN1 description

Point 1920	N	16,611,036.09	E	1,089,139.28	Sta	10+00.00
Course from 1920 to 1921	S 81° 45′ 46.10" E		Dist 242.48			
Point 1921	N	16,611,001.35	E	1,089,379.26	Sta	12+42.48
Course from 1921 to 1922	S 81° 30′ 04.57" E		Dist 967.98			
Point 1922	N	16,610,858.29	E	1,090,336.61	Sta	22+10.47
Course from 1922 to 1923	S 81° 18′ 52.42" E		Dist 344.77			
Point 1923	N	16,610,806.23	E	1,090,677.43	Sta	25+55.23

Ending chain XNOLAN1 description

US 281 CROSS STREETS (CONT)

Beginning chain XSIOUX1 description

Point 1930	N	16,605,810.31	E	1,088,324.14	Sta	10+00.00
Course from 1930 to 1931	S 81° 30′ 15.84" E		Dist 153.85			
Point 1931	N	16,605,787.58	E	1,088,476.31	Sta	11+53.85
Course from 1931 to 1932	S 84° 52′ 45.52" E		Dist 177.58			
Point 1932	N	16,605,771.73	E	1,088,653.18	Sta	13+31.43
Course from 1932 to 1933	S 81° 30′ 02.36" E		Dist 230.11			
Point 1933	N	16,605,737.72	E	1,088,880.76	Sta	15+61.54
Course from 1933 to 1934	S 81° 30′ 02.36" E		Dist 450.98			
Point 1934	N	16,605,671.06	E	1,089,326.79	Sta	20+12.52
Course from 1934 to 1935	S 81° 30′ 02.36" E		Dist 241.90			
Point 1935	N	16,605,635.31	E	1,089,566.03	Sta	22+54.42
Course from 1935 to 1936	S 86° 57′ 57.97" E		Dist 190.87			
Point 1936	N	16,605,625.21	E	1,089,756.63	Sta	24+45.29
Course from 1936 to 1937	S 81° 30′ 02.36" E		Dist 79.43			
Point 1937	N	16,605,613.47	E	1,089,835.18	Sta	25+24.72

Ending chain XSIOUX1 description

Beginning chain XFM4951 description

Point 1940	N	16,603,164.66	E	1,088,123.44	Sta	10+00.00
Course from 1940 to PC XFM4951-1	S 81° 27′ 40.87" E		Dist 313.28			

Curve Data

Curve XFM4951-1

P.I. Station	13+40.05	N	16,603,114.17	E	1,088,459.72
Delta =	3° 12′ 37.89" (LT)				
Degree =	5° 59′ 58.41"				
Tangent =	26.76				
Length =	53.51				
Radius =	955.00				
External =	0.37				
Long Chord =	53.51				
Mid. Ord. =	0.37				
P.C. Station	13+13.28	N	16,603,118.15	E	1,088,433.25
P.T. Station	13+66.80	N	16,603,111.69	E	1,088,486.37
C.C.		N	16,604,062.56	E	1,088,575.05
Back	= S 81° 27′ 40.87" E				
Ahead	= S 84° 40′ 18.75" E				
Chord Bear	= S 83° 03′ 59.81" E				

Course from PT XFM4951-1 to 1941	S 84° 40′ 18.76" E		Dist 57.27			
Point 1941	N	16,603,106.37	E	1,088,543.39	Sta	14+24.07
Course from 1941 to 1942	S 85° 08′ 02.37" E		Dist 511.83			
Point 1942	N	16,603,062.95	E	1,089,053.38	Sta	19+35.90
Course from 1942 to 1943	S 82° 51′ 29.91" E		Dist 134.64			
Point 1943	N	16,603,046.22	E	1,089,186.97	Sta	20+70.54
Course from 1943 to 1944	S 81° 00′ 26.41" E		Dist 130.54			
Point 1944	N	16,603,025.81	E	1,089,315.91	Sta	22+01.08

Ending chain XFM4951 description

THE SEAL APPEARING ON THIS DOCUMENT WAS AUTHORIZED BY JAIME AGUILAR, P.E. 87606 ON 06/23/2003.

STATE OF TEXAS · JAIME AGUILAR · 87606 · REGISTERED PROFESSIONAL ENGINEER

Parsons Brinckerhoff Quade & Douglas Inc.

Texas Department of Transportation

© 2003 by TxDOT

US 281
ROADWAY DATA SHEETS

SHEET 5 OF 14				281DAT05.DGN				
DESIGNED: PAF	FED. RD DIV. No.	STATE	FEDERAL AID PROJECT No.				HIGHWAY No.	
CHECKED: JP	6	TEXAS					US 281	
DRAWN: JA	STATE DISTRICT	COUNTY	CONTROL No.	SECTION No.	JOB No.	SHEET No.		
CHECKED: JDH	PHARR	HIDALGO	0255	08	091	252		

NAME
11:28:43 AM
06/23/2003
i:\22322a\cadd\sheets\roadway\281dat06.dgn

US 281 TURN-AROUNDS

Beginning chain TTRENTN description

Point 1800 N 16,621,481.50 E 1,094,569.31 Sta 10+00.00

Course from 1800 to 1801 S 35° 19' 20.04" W Dist 190.33

Point 1801 N 16,621,326.20 E 1,094,459.26 Sta 11+90.33

Course from 1801 to PC TTRENTN-1 S 38° 56' 10.01" W Dist 248.44

Curve Data

Curve TTRENTN-1

P.I. Station	15+28.78	N	16,621,062.94	E	1,094,246.56
Delta =	120° 26' 52.85" (LT)				
Degree =	111° 15' 14.19"				
Tangent =	90.01				
Length =	108.26				
Radius =	51.50				
External =	52.20				
Long Chord =	89.40				
Mid. Ord. =	25.92				
P.C. Station	14+38.77	N	16,621,132.96	E	1,094,303.13
P.T. Station	15+47.03	N	16,621,049.65	E	1,094,335.59
C.C.		N	16,621,100.59	E	1,094,343.19
Back = S	38° 56' 10.01" W				
Ahead = S	81° 30' 42.84" E				
Chord Bear = S	21° 17' 16.41" E				

Course from PT TTRENTN-1 to PC TTRENTN-2 S 81° 30' 42.84" E Dist 134.61

Curve Data

Curve TTRENTN-2

P.I. Station	17+06.25	N	16,621,026.15	E	1,094,493.06
Delta =	55° 46' 16.13" (LT)				
Degree =	123° 13' 00.23"				
Tangent =	24.61				
Length =	45.26				
Radius =	46.50				
External =	6.11				
Long Chord =	43.50				
Mid. Ord. =	5.40				
P.C. Station	16+81.65	N	16,621,029.78	E	1,094,468.73
P.T. Station	17+26.91	N	16,621,044.23	E	1,094,509.76
C.C.		N	16,621,075.78	E	1,094,475.59
Back = S	81° 30' 42.84" E				
Ahead = N	42° 43' 01.03" E				
Chord Bear = N	70° 36' 09.09" E				

Course from PT TTRENTN-2 to 1802 N 42° 43' 01.03" E Dist 63.57

Point 1802 N 16,621,090.94 E 1,094,552.88 Sta 17+90.48

Course from 1802 to 1803 N 38° 56' 00.01" E Dist 132.87

Point 1803 N 16,621,194.29 E 1,094,636.38 Sta 19+23.35

Course from 1803 to 1804 N 42° 32' 59.86" E Dist 190.20

Point 1804 N 16,621,334.41 E 1,094,765.00 Sta 21+13.55

Ending chain TTRENTN description

Beginning chain TTRENTS description

Point 1805 N 16,620,594.74 E 1,093,852.86 Sta 10+00.00

Course from 1805 to 1806 N 42° 33' 09.82" E Dist 190.20

Point 1806 N 16,620,734.85 E 1,093,981.49 Sta 11+90.20

Course from 1806 to 1807 N 38° 56' 10.01" E Dist 132.87

Point 1807 N 16,620,838.20 E 1,094,064.99 Sta 13+23.07

Course from 1807 to PC TTRENTS-1 N 42° 45' 00.68" E Dist 63.42

Curve Data

Curve TTRENTS-1

P.I. Station	14+11.08	N	16,620,902.83	E	1,094,124.73
Delta =	55° 44' 16.48" (RT)				
Degree =	123° 13' 00.23"				
Tangent =	24.59				
Length =	45.24				
Radius =	46.50				
External =	6.10				
Long Chord =	43.47				
Mid. Ord. =	5.39				
P.C. Station	13+86.50	N	16,620,884.77	E	1,094,108.04
P.T. Station	14+31.73	N	16,620,899.20	E	1,094,149.05
C.C.		N	16,620,853.21	E	1,094,142.19
Back = N	42° 45' 00.68" E				
Ahead = S	81° 30' 42.84" E				
Chord Bear = N	70° 37' 08.92" E				

Course from PT TTRENTS-1 to PC TTRENTS-2 S 81° 30' 42.84" E Dist 134.60

US 281 TURN-AROUNDS (CONT)

Curve Data

Curve TTRENTS-2

P.I. Station	16+56.34	N	16,620,866.05	E	1,094,371.20
Delta =	120° 26' 42.85" (RT)				
Degree =	111° 15' 14.19"				
Tangent =	90.01				
Length =	108.26				
Radius =	51.50				
External =	52.20				
Long Chord =	89.40				
Mid. Ord. =	25.92				
P.C. Station	15+66.34	N	16,620,879.33	E	1,094,282.18
P.T. Station	16+74.60	N	16,620,796.03	E	1,094,314.64
C.C.		N	16,620,828.40	E	1,094,274.58
Back = S	81° 30' 42.84" E				
Ahead = S	38° 56' 00.01" W				
Chord Bear = S	21° 17' 21.42" E				

Course from PT TTRENTS-2 to 1808 S 38° 56' 00.01" W Dist 248.25

Point 1808 N 16,620,602.92 E 1,094,158.63 Sta 19+22.85

Course from 1808 to 1809 S 35° 19' 10.04" W Dist 190.33

Point 1809 N 16,620,447.62 E 1,094,048.60 Sta 21+13.18

Ending chain TTRENTS description

Beginning chain TUS281W description

Curve Data

Curve TUS281W-1

P.I. Station	10+71.42	N	16,617,433.71	E	1,091,205.74
Delta =	58° 53' 57.92" (RT)				
Degree =	45° 17' 35.18"				
Tangent =	71.42				
Length =	130.04				
Radius =	126.50				
External =	18.77				
Long Chord =	124.39				
Mid. Ord. =	16.35				
P.C. Station	10+00.00	N	16,617,488.21	E	1,091,251.90
P.T. Station	11+30.04	N	16,617,445.08	E	1,091,135.23
C.C.		N	16,617,569.97	E	1,091,155.37
Back = S	40° 15' 45.95" W				
Ahead = N	80° 50' 16.13" W				
Chord Bear = S	69° 42' 44.91" W				

Course from PT TUS281W-1 to PC TUS281W-2 N 80° 50' 16.13" W Dist 39.09

Curve Data

Curve TUS281W-2

P.I. Station	12+15.18	N	16,617,458.64	E	1,091,051.17
Delta =	83° 36' 51.67" (RT)				
Degree =	111° 15' 14.19"				
Tangent =	46.06				
Length =	75.16				
Radius =	51.50				
External =	17.59				
Long Chord =	68.66				
Mid. Ord. =	13.11				
P.C. Station	11+69.13	N	16,617,451.30	E	1,091,096.64
P.T. Station	12+44.28	N	16,617,504.64	E	1,091,053.40
C.C.		N	16,617,502.15	E	1,091,104.84
Back = N	80° 50' 16.13" W				
Ahead = N	2° 46' 35.53" E				
Chord Bear = N	39° 01' 50.30" W				

Course from PT TUS281W-2 to 1781 N 2° 46' 35.53" E Dist 160.86

Point 1781 N 16,617,665.31 E 1,091,061.19 Sta 14+05.14

Course from 1781 to 1782 N 8° 29' 13.60" E Dist 349.02

Point 1782 N 16,618,010.51 E 1,091,112.70 Sta 17+54.16

Course from 1782 to 1783 N 7° 06' 44.20" E Dist 250.07

Point 1783 N 16,618,258.65 E 1,091,143.67 Sta 20+04.23

Course from 1783 to 1784 N 8° 29' 13.60" E Dist 127.15

Point 1784 N 16,618,384.41 E 1,091,162.43 Sta 21+31.38

Ending chain TUS281W description

US 281 TURN-AROUNDS (CONT)

Beginning chain TB281W2 description

Point 445 N 16,617,250.04 E 1,090,929.94 Sta 10+00.00

Course from 445 to PC TB281W2-1 S 2° 50' 40.26" W Dist 17.65

Curve Data

Curve TB281W2-1

P.I. Station	21+73.88	N	16,616,077.60	E	1,090,871.69
Delta =	175° 41' 27.06" (LT)				
Degree =	131° 42' 51.97"				
Tangent =	1,156.23				
Length =	133.39				
Radius =	43.50				
External =	1,113.55				
Long Chord =	86.94				
Mid. Ord. =	41.86				
P.C. Station	10+17.65	N	16,617,232.41	E	1,090,929.07
P.T. Station	11+51.04	N	16,617,224.83	E	1,091,015.67
C.C.		N	16,617,230.25	E	1,090,972.51
Back = S	2° 50' 40.26" W				
Ahead = N	7° 09' 13.20" E				
Chord Bear = S	85° 00' 03.27" E				

Course from PT TB281W2-1 to 446 N 7° 09' 13.20" E Dist 232.12

Point 446 N 16,617,455.14 E 1,091,044.58 Sta 13+83.15

Ending chain TB281W2 description

Beginning chain TOWAN description

Curve Data

Curve TOWAN-1

P.I. Station	11+10.51	N	16,616,400.06	E	1,090,635.82
Delta =	4° 03' 11.67" (LT)				
Degree =	2° 01' 02.11"				
Tangent =	100.51				
Length =	200.93				
Radius =	2,840.29				
External =	1.78				
Long Chord =	200.89				
Mid. Ord. =	1.78				
P.C. Station	10+10.00	N	16,616,494.27	E	1,090,670.83
P.T. Station	12+10.93	N	16,616,303.61	E	1,090,607.56
C.C.		N	16,615,504.88	E	1,093,333.23
Back = S	20° 23' 09.51" W				
Ahead = S	16° 19' 57.84" W				
Chord Bear = S	18° 21' 33.67" W				

Curve Data

Curve TOWAN-2

P.I. Station	12+68.30	N	16,616,248.56	E	1,090,591.43
Delta =	97° 50' 59.61" (LT)				
Degree =	114° 35' 29.61"				
Tangent =	57.37				
Length =	85.39				
Radius =	50.00				
External =	26.10				
Long Chord =	75.38				
Mid. Ord. =	17.15				
P.C. Station	12+10.93	N	16,616,303.61	E	1,090,607.56
P.T. Station	12+96.32	N	16,616,240.10	E	1,090,648.16
C.C.		N	16,616,289.55	E	1,090,655.54
Back = S	16° 19' 57.84" W				
Ahead = S	81° 31' 01.77" E				
Chord Bear = S	32° 35' 31.97" E				

Course from PT TOWAN-2 to PC TOWAN-3 S 81° 31' 01.77" E Dist 308.86

THE SEAL APPEARING ON THIS DOCUMENT WAS AUTHORIZED BY JAIME AGUILAR, P.E. 87606 ON 06/23/2003.

STATE OF TEXAS · JAIME AGUILAR · 87606 · REGISTERED PROFESSIONAL ENGINEER

Parsons Brinckerhoff Quade & Douglas Inc.

Texas Department of Transportation

© 2003 by TxDOT

US 281
ROADWAY DATA SHEETS

SHEET 6 OF 14				281DAT06.DGN			
DESIGNED: PAF	FED. RD DIV. No.	STATE	FEDERAL AID PROJECT No.			HIGHWAY No.	
CHECKED: JP	6	TEXAS				US 281	
DRAWN: JA	STATE DISTRICT	COUNTY	CONTROL No.	SECTION No.	JOB No.	SHEET No.	
CHECKED: JDH	PHARR	HIDALGO	0255	08	091	253	

US 281 TURN-AROUNDS (CONT)

Curve Data

Curve TOWAN-3

P.I. Station	16+50.87	N	16,616,187.80	E	1,090,998.84
Delta =	83° 09′ 41.21"	(LT)			
Degree =	111° 15′ 14.19"				
Tangent =	45.69				
Length =	74.75				
Radius =	51.50				
External =	17.35				
Long Chord =	68.36				
Mid. Ord. =	12.98				
P.C. Station	16+05.18	N	16,616,194.54	E	1,090,953.65
P.T. Station	16+79.93	N	16,616,231.87	E	1,091,010.91
C.C.		N	16,616,245.47	E	1,090,961.25
Back = S	81° 31′ 01.77" E				
Ahead = N	15° 19′ 17.02" E				
Chord Bear = N	56° 54′ 07.63" E				

Course from PT TOWAN-3 to 1793 N 15° 19′ 17.02" E Dist 190.00

Point 1793 N 16,616,415.11 E 1,091,061.12 Sta 18+69.93

Ending chain TOWAN description

Beginning chain TOWAS description

Curve Data

Curve TOWAS-1

P.I. Station	10+52.28	N	16,615,977.96	E	1,090,519.96
Delta =	2° 06′ 00.05"	(RT)			
Degree =	2° 00′ 31.55"				
Tangent =	52.28				
Length =	104.54				
Radius =	2,852.29				
External =	0.48				
Long Chord =	104.54				
Mid. Ord. =	0.48				
P.C. Station	10+00.00	N	16,615,926.26	E	1,090,512.23
P.T. Station	11+04.54	N	16,616,029.35	E	1,090,529.57
C.C.		N	16,615,504.88	E	1,093,333.23
Back = N	8° 29′ 43.97" E				
Ahead = N	10° 35′ 44.03" E				
Chord Bear = N	9° 32′ 44.00" E				

Curve Data

Curve TOWAS-2

P.I. Station	11+54.18	N	16,616,078.13	E	1,090,538.70
Delta =	87° 53′ 14.20"	(RT)			
Degree =	111° 15′ 14.18"				
Tangent =	49.64				
Length =	79.00				
Radius =	51.50				
External =	20.03				
Long Chord =	71.48				
Mid. Ord. =	14.42				
P.C. Station	11+04.54	N	16,616,029.35	E	1,090,529.57
P.T. Station	11+83.54	N	16,616,070.81	E	1,090,587.79
C.C.		N	16,616,019.88	E	1,090,580.19
Back = N	10° 35′ 44.03" E				
Ahead = S	81° 31′ 01.77" E				
Chord Bear = N	54° 32′ 21.13" E				

Course from PT TOWAS-2 to PC TOWAS-3 S 81° 31′ 01.77" E Dist 310.11

Curve Data

Curve TOWAS-3

P.I. Station	15+51.69	N	16,616,016.51	E	1,090,951.91
Delta =	96° 50′ 18.79"	(RT)			
Degree =	111° 15′ 14.19"				
Tangent =	58.05				
Length =	87.04				
Radius =	51.50				
External =	26.10				
Long Chord =	77.05				
Mid. Ord. =	17.32				
P.C. Station	14+93.65	N	16,616,025.07	E	1,090,894.50
P.T. Station	15+80.69	N	16,615,960.52	E	1,090,936.57
C.C.		N	16,615,974.13	E	1,090,886.91
Back = S	81° 31′ 01.77" E				
Ahead = S	15° 19′ 17.02" W				
Chord Bear = S	33° 05′ 52.37" E				

Course from PT TOWAS-3 to 1797 S 15° 19′ 17.02" W Dist 250.00

Point 1797 N 16,615,719.41 E 1,090,870.52 Sta 18+30.69

Ending chain TOWAS description

US 281 TURN-AROUNDS (CONT)

Beginning chain TNOLANN description

Point 1820 N 16,611,565.21 E 1,089,823.18 Sta 10+00.00

Course from 1820 to 1821 S 5° 48′ 42.01" W Dist 230.23

Point 1821 N 16,611,336.16 E 1,089,799.87 Sta 12+30.23

Course from 1821 to PC TNOLANN-1 S 8° 52′ 26.33" W Dist 248.24

Curve Data

Curve TNOLANN-1

P.I. Station	15+40.50	N	16,611,029.60	E	1,089,752.00
Delta =	90° 29′ 37.97"	(LT)			
Degree =	93° 09′ 49.93"				
Tangent =	62.03				
Length =	97.13				
Radius =	61.50				
External =	25.85				
Long Chord =	87.35				
Mid. Ord. =	18.20				
P.C. Station	14+78.47	N	16,611,090.89	E	1,089,761.57
P.T. Station	15+75.60	N	16,611,020.56	E	1,089,813.37
C.C.		N	16,611,081.41	E	1,089,822.34
Back = S	8° 52′ 26.33" W				
Ahead = S	81° 37′ 11.64" E				
Chord Bear = S	36° 22′ 22.65" E				

Course from PT TNOLANN-1 to PC TNOLANN-2 S 81° 30′ 02.36" E Dist 179.46

Curve Data

Curve TNOLANN-2

P.I. Station	18+16.56	N	16,610,984.95	E	1,090,051.69
Delta =	90° 00′ 13.68"	(LT)			
Degree =	93° 09′ 49.93"				
Tangent =	61.50				
Length =	96.61				
Radius =	61.50				
External =	25.48				
Long Chord =	86.98				
Mid. Ord. =	18.01				
P.C. Station	17+55.06	N	16,610,994.04	E	1,089,990.86
P.T. Station	18+51.67	N	16,611,045.78	E	1,090,060.78
C.C.		N	16,611,054.86	E	1,089,999.95
Back = S	81° 30′ 02.36" E				
Ahead = N	8° 29′ 43.96" E				
Chord Bear = N	53° 29′ 50.80" E				

Course from PT TNOLANN-2 to 1822 N 8° 29′ 43.96" E Dist 260.55

Point 1822 N 16,611,303.47 E 1,090,099.27 Sta 21+12.22

Course from 1822 to 1823 N 10° 45′ 44.85" E Dist 251.63

Point 1823 N 16,611,550.68 E 1,090,146.26 Sta 23+63.85

Ending chain TNOLANN description

Beginning chain TNOLANS description

Point 1825 N 16,610,547.71 E 1,089,668.39 Sta 10+00.00

Course from 1825 to PC TNOLANS-1 N 8° 29′ 43.98" E Dist 260.58

Curve Data

Curve TNOLANS-1

P.I. Station	13+22.09	N	16,610,866.26	E	1,089,715.97
Delta =	90° 00′ 13.66"	(RT)			
Degree =	93° 09′ 49.93"				
Tangent =	61.50				
Length =	96.61				
Radius =	61.50				
External =	25.48				
Long Chord =	86.98				
Mid. Ord. =	18.01				
P.C. Station	12+60.58	N	16,610,805.43	E	1,089,706.89
P.T. Station	13+57.19	N	16,610,857.17	E	1,089,776.80
C.C.		N	16,610,796.35	E	1,089,767.71
Back = N	8° 29′ 43.98" E				
Ahead = S	81° 30′ 02.36" E				
Chord Bear = N	53° 29′ 50.81" E				

Course from PT TNOLANS-1 to PC TNOLANS-2 S 81° 30′ 02.36" E Dist 191.50

US 281 TURN-AROUNDS (CONT)

Curve Data

Curve TNOLANS-2

P.I. Station	16+10.19	N	16,610,819.78	E	1,090,027.02
Delta =	89° 59′ 45.88"	(RT)			
Degree =	93° 09′ 49.93"				
Tangent =	61.50				
Length =	96.60				
Radius =	61.50				
External =	25.47				
Long Chord =	86.97				
Mid. Ord. =	18.01				
P.C. Station	15+48.69	N	16,610,828.87	E	1,089,966.20
P.T. Station	16+45.29	N	16,610,758.96	E	1,090,017.93
C.C.		N	16,610,768.05	E	1,089,957.11
Back = S	81° 30′ 02.36" E				
Ahead = S	8° 29′ 43.52" W				
Chord Bear = S	36° 30′ 09.42" E				

Course from PT TNOLANS-2 to 1826 S 8° 29′ 43.52" W Dist 246.22

Point 1826 N 16,610,515.44 E 1,089,981.56 Sta 18+91.51

Course from 1826 to 1827 S 5° 09′ 12.02" W Dist 190.24

Point 1827 N 16,610,325.97 E 1,089,964.47 Sta 20+81.75

Ending chain TNOLANS description

THE SEAL APPEARING ON THIS DOCUMENT WAS AUTHORIZED BY JAIME AGUILAR, P.E. 87606 ON 06/23/2003.

STATE OF TEXAS · JAIME AGUILAR · 87606 · REGISTERED PROFESSIONAL ENGINEER

Parsons Brinckerhoff Quade & Douglas Inc.

Texas Department of Transportation

© 2003 by TxDOT

US 281 ROADWAY DATA SHEETS

SHEET 7 OF 14			281DAT07.DGN				
DESIGNED: PAF	FED. RD DIV. NO.	STATE	FEDERAL AID PROJECT No.		HIGHWAY No.		
CHECKED: JP	6	TEXAS			US 281		
DRAWN: JA	STATE DISTRICT	COUNTY	CONTROL No.	SECTION No.	JOB No.	SHEET No.	
CHECKED: JDH	PHARR	HIDALGO	0255	08	091	254	

NAME 11:28:47 AM 06/23/2003 i:\223220\cadd\sheets\roadway\281dat07.dgn

Beginning chain TSIOUXN description

Point 1830 N 16,606,301.78 E 1,089,035.32 Sta 10+00.00

Course from 1830 to 1831 S 5° 13' 15.98" W Dist 189.97

Point 1831 N 16,606,112.59 E 1,089,018.04 Sta 11+89.97

Course from 1831 to PC TSIOUXN-1 S 8° 29' 44.16" W Dist 256.05

Curve Data

Curve TSIOUXN-1

P.I. Station		14+97.52	N	16,605,808.42	E	1,088,972.60
Delta	=	89° 59' 46.52"	(LT)			
Degree	=	111° 15' 14.19"				
Tangent	=	51.50				
Length	=	80.89				
Radius	=	51.50				
External	=	21.33				
Long Chord	=	72.83				
Mid. Ord.	=	15.08				
P.C. Station		14+46.03	N	16,605,859.35	E	1,088,980.21
P.T. Station		15+26.92	N	16,605,800.81	E	1,089,023.53
C.C.			N	16,605,851.74	E	1,089,031.14
Back	= S	8° 29' 44.16" W				
Ahead	= S	81° 30' 02.36" E				
Chord Bear	= S	36° 30' 09.10" E				

Course from PT TSIOUXN-1 to PC TSIOUXN-2 S 81° 30' 02.36" E Dist 196.87

Curve Data

Curve TSIOUXN-2

P.I. Station		17+81.32	N	16,605,763.21	E	1,089,275.14
Delta	=	86° 11' 23.87"	(LT)			
Degree	=	93° 09' 49.93"				
Tangent	=	57.54				
Length	=	92.51				
Radius	=	61.50				
External	=	22.72				
Long Chord	=	84.03				
Mid. Ord.	=	16.59				
P.C. Station		17+23.78	N	16,605,771.71	E	1,089,218.24
P.T. Station		18+16.30	N	16,605,819.43	E	1,089,287.41
C.C.			N	16,605,832.54	E	1,089,227.33
Back	= S	81° 30' 02.36" E				
Ahead	= N	12° 18' 33.77" E				
Chord Bear	= N	55° 24' 15.70" E				

Course from PT TSIOUXN-2 to 1832 N 12° 18' 33.77" E Dist 64.18

Point 1832 N 16,605,882.13 E 1,089,301.09 Sta 18+80.48

Course from 1832 to 1833 N 8° 29' 43.69" E Dist 94.29

Point 1833 N 16,605,975.39 E 1,089,315.02 Sta 19+74.77

Ending chain TSIOUXN description

Beginning chain TSIOUXS description

Point 1835 N 16,605,218.35 E 1,088,872.34 Sta 10+00.00

Course from 1835 to 1836 N 12° 06' 34.18" E Dist 190.33

Point 1836 N 16,605,404.44 E 1,088,912.26 Sta 11+90.33

Course from 1836 to PC TSIOUXS-1 N 8° 29' 44.16" E Dist 189.95

Curve Data

Curve TSIOUXS-1

P.I. Station		14+31.79	N	16,605,643.25	E	1,088,947.94
Delta	=	90° 00' 13.48"	(RT)			
Degree	=	111° 15' 14.19"				
Tangent	=	51.50				
Length	=	80.90				
Radius	=	51.50				
External	=	21.33				
Long Chord	=	72.83				
Mid. Ord.	=	15.09				
P.C. Station		13+80.28	N	16,605,592.31	E	1,088,940.33
P.T. Station		14+61.18	N	16,605,635.64	E	1,088,998.87
C.C.			N	16,605,584.70	E	1,088,991.26
Back	= N	8° 29' 44.16" E				
Ahead	= S	81° 30' 02.36" E				
Chord Bear	= N	53° 29' 50.90" E				

Course from PT TSIOUXS-1 to PC TSIOUXS-2 S 81° 30' 02.36" E Dist 199.00

US 281 TURN-AROUNDS (CONT)

Curve Data

Curve TSIOUXS-2

P.I. Station		17+11.68	N	16,605,598.62	E	1,089,246.62
Delta	=	89° 59' 45.46"	(RT)			
Degree	=	111° 15' 14.19"				
Tangent	=	51.50				
Length	=	80.89				
Radius	=	51.50				
External	=	21.33				
Long Chord	=	72.83				
Mid. Ord.	=	15.08				
P.C. Station		16+60.18	N	16,605,606.23	E	1,089,195.69
P.T. Station		17+41.08	N	16,605,547.68	E	1,089,239.01
C.C.			N	16,605,555.29	E	1,089,188.08
Back	= S	81° 30' 02.36" E				
Ahead	= S	8° 29' 43.10" W				
Chord Bear	= S	36° 30' 09.63" E				

Course from PT TSIOUXS-2 to 1837 S 8° 29' 43.10" W Dist 256.22

Point 1837 N 16,605,294.28 E 1,089,201.16 Sta 19+97.29

Course from 1837 to 1838 S 4° 52' 59.25" W Dist 190.33

Point 1838 N 16,605,104.64 E 1,089,184.96 Sta 21+87.62

Ending chain TSIOUXS description

Beginning chain TFM495N description

Point 1840 N 16,603,479.53 E 1,088,684.43 Sta 11+97.46

Course from 1840 to PC TFM495N-1 S 4° 51' 44.12" W Dist 248.78

Curve Data

Curve TFM495N-1

P.I. Station		14+97.74	N	16,603,180.33	E	1,088,658.98
Delta	=	89° 59' 46.35"	(LT)			
Degree	=	111° 15' 14.19"				
Tangent	=	51.50				
Length	=	80.89				
Radius	=	51.50				
External	=	21.33				
Long Chord	=	72.83				
Mid. Ord.	=	15.08				
P.C. Station		14+46.24	N	16,603,231.64	E	1,088,663.35
P.T. Station		15+27.13	N	16,603,175.96	E	1,088,710.29
C.C.			N	16,603,227.28	E	1,088,714.66
Back	= S	4° 51' 43.99" W				
Ahead	= S	85° 08' 02.37" E				
Chord Bear	= S	40° 08' 09.19" E				

Course from PT TFM495N-1 to PC TFM495N-2 S 85° 08' 02.37" E Dist 158.59

Curve Data

Curve TFM495N-2

P.I. Station		17+43.22	N	16,603,157.64	E	1,088,925.60
Delta	=	86° 08' 41.96"	(LT)			
Degree	=	93° 09' 49.93"				
Tangent	=	57.50				
Length	=	92.47				
Radius	=	61.50				
External	=	22.69				
Long Chord	=	84.00				
Mid. Ord.	=	16.57				
P.C. Station		16+85.72	N	16,603,162.51	E	1,088,868.31
P.T. Station		17+78.19	N	16,603,214.47	E	1,088,934.31
C.C.			N	16,603,223.79	E	1,088,873.53
Back	= S	85° 08' 02.37" E				
Ahead	= N	8° 43' 15.67" E				
Chord Bear	= N	51° 47' 36.65" E				

Course from PT TFM495N-2 to 1841 N 8° 43' 16.66" E Dist 60.54

Point 1841 N 16,603,274.31 E 1,088,943.50 Sta 18+38.73

Ending chain TFM495N description

THE SEAL APPEARING ON THIS DOCUMENT WAS AUTHORIZED BY JAIME AGUILAR, P.E. 87606 ON 06/23/2003.

STATE OF TEXAS · JAIME AGUILAR · 87606 · REGISTERED PROFESSIONAL ENGINEER

Parsons Brinckerhoff Quade & Douglas Inc.

Texas Department of Transportation

© 2003 by TxDOT

US 281 ROADWAY DATA SHEETS

SHEET 8 OF 14				281DAT08.DGN			
DESIGNED: PAF	FED. RD DIV. No.	STATE	FEDERAL AID PROJECT No.			HIGHWAY No.	
CHECKED: JP	6	TEXAS				US 281	
DRAWN: JA	STATE DISTRICT	COUNTY	CONTROL No.	SECTION No.	JOB No.	SHEET No.	
CHECKED: JDH	PHARR	HIDALGO	0255	08	091	255	

NAME 11:28:52 AM 06/23/2003 i:\22322a\cadd\sheets\roadway\281dat08.dgn

NAME

11:28:56 AM

06/23/2003

i:\22322g\cadd\sheets\roadway\281dat09.dgn

US 281 TURN-AROUNDS (CONT)

Beginning chain TFM495S description

Point 1845 N 16,602,888.84 E 1,088,620.78 Sta 10+00.00

Course from 1845 to 1846 N 5° 04′ 48.73" E Dist 5.07

Point 1846 N 16,602,893.89 E 1,088,621.23 Sta 10+05.07

Course from 1846 to PC TFM495S-1 N 8° 50′ 15.64" E Dist 64.53

		Curve Data
Curve TFM495S-1		
P.I. Station	11+26.98	N 16,603,014.35 E 1,088,639.96
Delta =	86° 01′ 42.00"	(RT)
Degree =	93° 09′ 49.93"	
Tangent =	57.38	
Length =	92.34	
Radius =	61.50	
External =	22.61	
Long Chord =	83.91	
Mid. Ord. =	16.53	
P.C. Station	10+69.60	N 16,602,957.65 E 1,088,631.14
P.T. Station	11+61.94	N 16,603,009.48 E 1,088,697.13
C.C.		N 16,602,948.20 E 1,088,691.91
Back = N	8° 50′ 15.64"	E
Ahead = S	85° 08′ 02.36"	E
Chord Bear = N	51° 51′ 06.64"	E

Course from PT TFM495S-1 to PC TFM495S-2 S 85° 08′ 02.36" E Dist 159.53

		Curve Data
Curve TFM495S-2		
P.I. Station	13+73.01	N 16,602,991.58 E 1,088,907.44
Delta =	90° 02′ 27.37"	(RT)
Degree =	111° 15′ 14.19"	
Tangent =	51.54	
Length =	80.93	
Radius =	51.50	
External =	21.36	
Long Chord =	72.86	
Mid. Ord. =	15.10	
P.C. Station	13+21.47	N 16,602,995.95 E 1,088,856.09
P.T. Station	14+02.41	N 16,602,940.23 E 1,088,903.03
C.C.		N 16,602,944.63 E 1,088,851.72
Back = S	85° 08′ 02.36"	E
Ahead = S	4° 54′ 25.00"	W
Chord Bear = S	40° 06′ 48.68"	E

Course from PT TFM495S-2 to 1847 S 4° 54′ 25.00" W Dist 255.90

Point 1847 N 16,602,685.26 E 1,088,881.14 Sta 16+58.31

Course from 1847 to 1848 S 1° 38′ 48.34" W Dist 190.27

Point 1848 N 16,602,495.08 E 1,088,875.67 Sta 18+48.57

Ending chain TFM495S description

US 281 RAMPS

Beginning chain RN01 description

Point 100 N 16,605,192.88 E 1,089,094.08 Sta 1826+35.54

Course from 100 to PC RN01-1 S 7° 21′ 12.89" W Dist 450.09

		Curve Data
Curve RN01-1		
P.I. Station	1832+84.61	N 16,604,549.15 E 1,089,011.00
Delta =	7° 56′ 47.89"	(LT)
Degree =	2° 00′ 00.00"	
Tangent =	198.98	
Length =	397.33	
Radius =	2,864.79	
External =	6.90	
Long Chord =	397.01	
Mid. Ord. =	6.89	
P.C. Station	1830+85.63	N 16,604,746.50 E 1,089,036.47
P.T. Station	1834+82.96	N 16,604,350.17 E 1,089,013.06
C.C.		N 16,604,379.83 E 1,091,877.70
Back = S	7° 21′ 12.89"	W
Ahead = S	0° 35′ 35.00"	E
Chord Bear = S	3° 22′ 48.95"	W

Course from PT RN01-1 to PC RN01-2 S 0° 35′ 35.00" E Dist 61.07

US 281 RAMPS (CONT)

		Curve Data
Curve RN01-2		
P.I. Station	1838+32.23	N 16,604,000.92 E 1,089,016.68
Delta =	5° 30′ 00.00"	(RT)
Degree =	0° 57′ 17.75"	
Tangent =	288.20	
Length =	575.96	
Radius =	6,000.00	
External =	6.92	
Long Chord =	575.74	
Mid. Ord. =	6.91	
P.C. Station	1835+44.03	N 16,604,289.10 E 1,089,013.69
P.T. Station	1841+19.99	N 16,603,713.77 E 1,088,992.02
C.C.		N 16,604,227.00 E 1,083,014.01
Back = S	0° 35′ 35.00"	E
Ahead = S	4° 54′ 25.00"	W
Chord Bear = S	2° 09′ 25.00"	W

Ending chain RN01 description

Beginning chain RN03 description

Point 111 N 16,607,736.93 E 1,089,486.39 Sta 3800+61.58

Course from 111 to PC RN03-1 S 7° 22′ 16.05" W Dist 457.09

		Curve Data
Curve RN03-1		
P.I. Station	3806+40.64	N 16,607,162.66 E 1,089,412.10
Delta =	4° 52′ 32.96"	(LT)
Degree =	2° 00′ 00.00"	
Tangent =	121.97	
Length =	243.79	
Radius =	2,864.79	
External =	2.60	
Long Chord =	243.72	
Mid. Ord. =	2.59	
P.C. Station	3805+18.67	N 16,607,283.62 E 1,089,427.75
P.T. Station	3807+62.46	N 16,607,040.80 E 1,089,406.79
C.C.		N 16,606,916.08 E 1,092,268.86
Back = S	7° 22′ 16.05"	W
Ahead = S	2° 29′ 43.10"	W
Chord Bear = S	4° 55′ 59.58"	W

Course from PT RN03-1 to PC RN03-2 S 2° 29′ 43.10" W Dist 442.59

		Curve Data
Curve RN03-2		
P.I. Station	3815+19.50	N 16,606,284.48 E 1,089,373.83
Delta =	6° 00′ 00.00"	(RT)
Degree =	0° 57′ 17.75"	
Tangent =	314.45	
Length =	628.32	
Radius =	6,000.00	
External =	8.23	
Long Chord =	628.03	
Mid. Ord. =	8.22	
P.C. Station	3812+05.05	N 16,606,598.63 E 1,089,387.52
P.T. Station	3818+33.37	N 16,605,973.49 E 1,089,327.38
C.C.		N 16,606,859.86 E 1,083,393.21
Back = S	2° 29′ 43.10"	W
Ahead = S	8° 29′ 43.10"	W
Chord Bear = S	5° 29′ 43.10"	W

Ending chain RN03 description

Beginning chain RN05 description

		Curve Data
Curve RN05-1		
P.I. Station	5780+59.30	N 16,609,700.98 E 1,089,862.70
Delta =	4° 00′ 00.00"	(RT)
Degree =	0° 57′ 17.75"	
Tangent =	209.52	
Length =	418.88	
Radius =	6,000.00	
External =	3.66	
Long Chord =	418.79	
Mid. Ord. =	3.66	
P.C. Station	5778+49.78	N 16,609,906.83 E 1,089,901.79
P.T. Station	5782+68.66	N 16,609,498.37 E 1,089,809.34
C.C.		N 16,611,026.35 E 1,084,007.16
Back = S	10° 45′ 13.16"	W
Ahead = S	14° 45′ 13.16"	W
Chord Bear = S	12° 45′ 13.16"	W

Course from PT RN05-1 to PC RN05-2 S 14° 45′ 13.16" W Dist 385.62

THE SEAL APPEARING ON THIS DOCUMENT WAS AUTHORIZED BY JAIME AGUILAR, P.E. 87606 ON 06/23/2003.

STATE OF TEXAS · JAIME AGUILAR · 87606 · REGISTERED PROFESSIONAL ENGINEER

PB Parsons Brinckerhoff Quade & Douglas Inc.

Texas Department of Transportation

© 2003 by TxDOT

US 281 ROADWAY DATA SHEETS

SHEET 9 OF 14					281DAT09.DGN	
DESIGNED: PAF	FED. RD DIV. No.	STATE	FEDERAL AID PROJECT No.			HIGHWAY No.
CHECKED: JP	6	TEXAS				US 281
DRAWN: JA	STATE DISTRICT	COUNTY	CONTROL No.	SECTION No.	JOB No.	SHEET No.
CHECKED: JDH	PHARR	HIDALGO	0255	08	091	256

NAME

08:20:33 AM

06/24/2003

I:\22322a\CADD\Sheets\Roadway\281dat10.dgn

US 281 RAMPS (CONT)

Curve Data

Curve RN05-2

P.I. Station		5788+10.79	N	16,608,974.11	E	1,089,671.27
Delta	=	6° 15′ 15.52"	(LT)			
Degree	=	2° 00′ 00.00"				
Tangent	=	156.51				
Length	=	312.72				
Radius	=	2,864.79				
External	=	4.27				
Long Chord	=	312.56				
Mid. Ord.	=	4.27				
P.C. Station		5786+54.28	N	16,609,125.46	E	1,089,711.13
P.T. Station		5789+67.00	N	16,608,819.31	E	1,089,648.14
C.C.			N	16,608,395.90	E	1,092,481.47
Back	= S	14° 45′ 13.16" W				
Ahead	= S	8° 29′ 57.64" W				
Chord Bear	= S	11° 37′ 35.40" W				

Ending chain RN05 description

Beginning chain RN07 description

Curve Data

Curve RN07-1

P.I. Station		7751+10.64	N	16,612,622.05	E	1,090,279.61
Delta	=	4° 00′ 36.99"	(RT)			
Degree	=	0° 57′ 17.75"				
Tangent	=	210.06				
Length	=	419.95				
Radius	=	6,000.00				
External	=	3.68				
Long Chord	=	419.87				
Mid. Ord.	=	3.67				
P.C. Station		7749+00.58	N	16,612,829.81	E	1,090,310.62
P.T. Station		7753+20.53	N	16,612,416.96	E	1,090,234.15
C.C.			N	16,613,715.53	E	1,084,376.36
Back	= S	8° 29′ 20.37" W				
Ahead	= S	12° 29′ 57.36" W				
Chord Bear	= S	10° 29′ 38.87" W				

Course from PT RN07-1 to PC RN07-2 S 12° 29′ 57.36" W Dist 585.85

Curve Data

Curve RN07-2

P.I. Station		7760+06.42	N	16,611,747.33	E	1,090,085.70
Delta	=	3° 59′ 59.50"	(LT)			
Degree	=	2° 00′ 00.00"				
Tangent	=	100.04				
Length	=	199.99				
Radius	=	2,864.79				
External	=	1.75				
Long Chord	=	199.95				
Mid. Ord.	=	1.75				
P.C. Station		7759+06.39	N	16,611,844.99	E	1,090,107.35
P.T. Station		7761+06.38	N	16,611,648.39	E	1,090,070.92
C.C.			N	16,611,224.98	E	1,092,904.24
Back	= S	12° 29′ 57.36" W				
Ahead	= S	8° 29′ 57.87" W				
Chord Bear	= S	10° 29′ 57.61" W				

Course from PT RN07-2 to 131 S 8° 29′ 57.87" W Dist 192.70

Point 131 N 16,611,457.81 E 1,090,042.44 Sta 7762+99.08

Course from 131 to 132 S 10° 47′ 24.04" W Dist 300.24

Point 132 N 16,611,162.87 E 1,089,986.23 Sta 7765+99.32

Ending chain RN07 description

US 281 RAMPS (CONT)

Beginning chain RN09 description

Point 140 N 16,615,415.82 E 1,090,621.79 Sta 9722+99.07

Course from 140 to PC RN09-1 S 7° 21′ 12.91" W Dist 450.09

Curve Data

Curve RN09-1

P.I. Station		9728+20.53	N	16,614,898.65	E	1,090,555.04
Delta	=	2° 51′ 15.26"	(LT)			
Degree	=	2° 00′ 00.00"				
Tangent	=	71.37				
Length	=	142.71				
Radius	=	2,864.79				
External	=	0.89				
Long Chord	=	142.70				
Mid. Ord.	=	0.89				
P.C. Station		9727+49.16	N	16,614,969.43	E	1,090,564.18
P.T. Station		9728+91.87	N	16,614,827.50	E	1,090,549.44
C.C.			N	16,614,602.76	E	1,093,405.40
Back	= S	7° 21′ 12.91" W				
Ahead	= S	4° 29′ 57.65" W				
Chord Bear	= S	5° 55′ 35.28" W				

Course from PT RN09-1 to PC RN09-2 S 4° 29′ 57.65" W Dist 634.58

Curve Data

Curve RN09-2

P.I. Station		9737+35.43	N	16,613,986.54	E	1,090,483.27
Delta	=	3° 59′ 22.73"	(RT)			
Degree	=	0° 57′ 17.75"				
Tangent	=	208.98				
Length	=	417.79				
Radius	=	6,000.00				
External	=	3.64				
Long Chord	=	417.71				
Mid. Ord.	=	3.64				
P.C. Station		9735+26.45	N	16,614,194.87	E	1,090,499.66
P.T. Station		9739+44.24	N	16,613,779.84	E	1,090,452.42
C.C.			N	16,614,665.56	E	1,084,518.15
Back	= S	4° 29′ 57.65" W				
Ahead	= S	8° 29′ 20.38" W				
Chord Bear	= S	6° 29′ 39.01" W				

Ending chain RN09 description

Beginning chain RN11 description

Curve Data

Curve RN11-1

P.I. Station		11690+25.02	N	16,618,160.78	E	1,092,217.22
Delta	=	5° 59′ 59.88"	(RT)			
Degree	=	0° 57′ 17.75"				
Tangent	=	314.44				
Length	=	628.31				
Radius	=	6,000.00				
External	=	8.23				
Long Chord	=	628.03				
Mid. Ord.	=	8.22				
P.C. Station		11687+10.58	N	16,618,405.38	E	1,092,414.83
P.T. Station		11693+38.89	N	16,617,938.18	E	1,091,995.14
C.C.			N	16,622,175.88	E	1,087,747.56
Back	= S	38° 56′ 00.01" W				
Ahead	= S	44° 55′ 59.88" W				
Chord Bear	= S	41° 55′ 59.94" W				

Course from PT RN11-1 to PC RN11-2 S 44° 55′ 59.88" W Dist 252.93

Curve Data

Curve RN11-2

P.I. Station		11697+41.96	N	16,617,652.84	E	1,091,710.46
Delta	=	5° 59′ 59.87"	(LT)			
Degree	=	2° 00′ 00.00"				
Tangent	=	150.14				
Length	=	300.00				
Radius	=	2,864.79				
External	=	3.93				
Long Chord	=	299.86				
Mid. Ord.	=	3.93				
P.C. Station		11695+91.82	N	16,617,759.12	E	1,091,816.50
P.T. Station		11698+91.82	N	16,617,536.05	E	1,091,616.11
C.C.			N	16,615,735.77	E	1,093,844.57
Back	= S	44° 55′ 59.88" W				
Ahead	= S	38° 56′ 00.01" W				
Chord Bear	= S	41° 55′ 59.95" W				

Course from PT RN11-2 to PC RN11-3 S 38° 56′ 00.01" W Dist 300.07

THE SEAL APPEARING ON THIS DOCUMENT WAS AUTHORIZED BY JAIME AGUILAR, P.E. 87606 ON 06/24/2003.

STATE OF TEXAS
JAIME AGUILAR
87606
REGISTERED PROFESSIONAL ENGINEER

PB Parsons Brinckerhoff Quade & Douglas Inc.

Texas Department of Transportation

© 2003 by TxDOT

US 281 ROADWAY DATA SHEETS

SHEET 10 OF 14			281DAT10.DGN					
DESIGNED: DM	FED. RD DIV. NO.	STATE	FEDERAL AID PROJECT No.		HIGHWAY No.			
CHECKED: JP	6	TEXAS			US 281			
DRAWN: JA	STATE DISTRICT	COUNTY	CONTROL No.	SECTION No.	JOB No.	SHEET No.		
CHECKED: DM	PHARR	HIDALGO	0255	08	091	257		

US 281 RAMPS (CONT)

Curve Data

Curve RN11-3

P.I. Station	11702+65.72	N	16,617,245.20	E	1,091,381.14
Delta =	2° 15′ 00.09" (LT)				
Degree =	1° 31′ 26.17"				
Tangent =	73.83				
Length =	147.65				
Radius =	3,759.72				
External =	0.72				
Long Chord =	147.64				
Mid. Ord. =	0.72				
P.C. Station	11701+91.89	N	16,617,302.63	E	1,091,427.54
P.T. Station	11703+39.53	N	16,617,185.99	E	1,091,337.04
C.C.		N	16,614,939.96	E	1,094,352.14
Back =	S 38° 56′ 00.01" W				
Ahead =	S 36° 40′ 59.92" W				
Chord Bear =	S 37° 48′ 29.97" W				

Ending chain RN11 description

Beginning chain RN13 description

Point 160 N 16,620,243.83 E 1,093,803.62 Sta 13664+08.36

Course from 160 to PC RN13-1 S 37° 47′ 15.75" W Dist 450.09

Curve Data

Curve RN13-1

P.I. Station	13669+29.82	N	16,619,831.73	E	1,093,484.10
Delta =	2° 51′ 15.73" (LT)				
Degree =	2° 00′ 00.00"				
Tangent =	71.37				
Length =	142.72				
Radius =	2,864.79				
External =	0.89				
Long Chord =	142.70				
Mid. Ord. =	0.89				
P.C. Station	13668+58.45	N	16,619,888.13	E	1,093,527.83
P.T. Station	13670+01.17	N	16,619,773.21	E	1,093,443.23
C.C.		N	16,618,132.77	E	1,095,791.84
Back =	S 37° 47′ 15.75" W				
Ahead =	S 34° 56′ 00.02" W				
Chord Bear =	S 36° 21′ 37.89" W				

Course from PT RN13-1 to PC RN13-2 S 34° 56′ 00.02" W Dist 644.80

Curve Data

Curve RN13-2

P.I. Station	13678+55.50	N	16,619,072.82	E	1,092,954.02
Delta =	3° 59′ 59.99" (RT)				
Degree =	0° 57′ 17.75"				
Tangent =	209.52				
Length =	418.88				
Radius =	6,000.00				
External =	3.66				
Long Chord =	418.79				
Mid. Ord. =	3.66				
P.C. Station	13676+45.97	N	16,619,244.59	E	1,093,074.00
P.T. Station	13680+64.85	N	16,618,909.84	E	1,092,822.35
C.C.		N	16,622,680.33	E	1,088,155.09
Back =	S 34° 56′ 00.02" W				
Ahead =	S 38° 56′ 00.01" W				
Chord Bear =	S 36° 56′ 00.02" W				

Ending chain RN13 description

Beginning chain RN15 description

Curve Data

Curve RN15-1

P.I. Station	15636+69.39	N	16,622,325.50	E	1,095,581.73
Delta =	3° 59′ 59.88" (RT)				
Degree =	0° 57′ 17.75"				
Tangent =	209.52				
Length =	418.88				
Radius =	6,000.00				
External =	3.66				
Long Chord =	418.79				
Mid. Ord. =	3.65				
P.C. Station	15634+59.87	N	16,622,488.48	E	1,095,713.39
P.T. Station	15638+78.74	N	16,622,172.09	E	1,095,439.01
C.C.		N	16,626,258.97	E	1,091,046.13
Back =	S 38° 56′ 00.01" W				
Ahead =	S 42° 55′ 59.90" W				
Chord Bear =	S 40° 55′ 59.96" W				

Course from PT RN15-1 to PC RN15-2 S 42° 55′ 59.90" W Dist 765.61

US 281 RAMPS (CONT)

Curve Data

Curve RN15-2

P.I. Station	15647+44.39	N	16,621,538.31	E	1,094,849.38
Delta =	3° 59′ 59.64" (LT)				
Degree =	2° 00′ 00.00"				
Tangent =	100.04				
Length =	200.00				
Radius =	2,864.79				
External =	1.75				
Long Chord =	199.95				
Mid. Ord. =	1.75				
P.C. Station	15646+44.35	N	16,621,611.56	E	1,094,917.52
P.T. Station	15648+44.35	N	16,621,460.49	E	1,094,786.51
C.C.		N	16,619,660.21	E	1,097,014.97
Back =	S 42° 55′ 59.90" W				
Ahead =	S 38° 56′ 00.26" W				
Chord Bear =	S 40° 56′ 00.08" W				

Ending chain RN15 description

Beginning chain RN17 description

Curve Data

Curve RN17-1

P.I. Station	17610+81.82	N	16,624,388.30	E	1,097,149.63
Delta =	4° 00′ 45.63" (LT)				
Degree =	1° 59′ 59.47"				
Tangent =	100.37				
Length =	200.65				
Radius =	2,865.00				
External =	1.76				
Long Chord =	200.61				
Mid. Ord. =	1.76				
P.C. Station	17609+81.45	N	16,624,467.50	E	1,097,211.29
P.T. Station	17611+82.10	N	16,624,304.99	E	1,097,093.67
C.C.		N	16,622,707.47	E	1,099,471.94
Back =	S 37° 54′ 09.41" W				
Ahead =	S 33° 53′ 23.78" W				
Chord Bear =	S 35° 53′ 46.59" W				

Course from PT RN17-1 to PC RN17-2 S 33° 53′ 23.78" W Dist 549.14

Curve Data

Curve RN17-2

P.I. Station	17620+57.13	N	16,623,578.61	E	1,096,605.75
Delta =	6° 13′ 04.51" (RT)				
Degree =	0° 57′ 17.75"				
Tangent =	325.89				
Length =	651.14				
Radius =	6,000.00				
External =	8.84				
Long Chord =	650.82				
Mid. Ord. =	8.83				
P.C. Station	17617+31.24	N	16,623,849.14	E	1,096,787.47
P.T. Station	17623+82.38	N	16,623,329.36	E	1,096,395.81
C.C.		N	16,627,194.73	E	1,091,806.81
Back =	S 33° 53′ 23.78" W				
Ahead =	S 40° 06′ 28.29" W				
Chord Bear =	S 36° 59′ 56.03" W				

Ending chain RN17 description

Beginning chain RS02 description

Curve Data

Curve RS02-1

P.I. Station	2824+50.14	N	16,605,393.98	E	1,089,002.79
Delta =	6° 00′ 00.54" (RT)				
Degree =	2° 00′ 00.00"				
Tangent =	150.14				
Length =	300.01				
Radius =	2,864.79				
External =	3.93				
Long Chord =	299.87				
Mid. Ord. =	3.93				
P.C. Station	2823+00.00	N	16,605,542.47	E	1,089,024.98
P.T. Station	2826+00.01	N	16,605,248.62	E	1,088,965.20
C.C.		N	16,605,965.88	E	1,086,191.65
Back =	S 8° 29′ 57.14" W				
Ahead =	S 14° 29′ 57.68" W				
Chord Bear =	S 11° 29′ 57.41" W				

Course from PT RS02-1 to PC RS02-2 S 14° 29′ 57.68" W Dist 463.75

THE SEAL APPEARING ON THIS DOCUMENT WAS AUTHORIZED BY JAIME AGUILAR, P.E. 87606 ON 06/24/2003.

STATE OF TEXAS
JAIME AGUILAR
87606
REGISTERED PROFESSIONAL ENGINEER

Parsons Brinckerhoff Quade & Douglas Inc.

Texas Department of Transportation

© 2003 by TxDOT

US 281
ROADWAY DATA SHEETS

SHEET 11 OF 14					281DAT11.DGN			
DESIGNED: DM	FED. RD DIV. NO.	STATE	FEDERAL AID PROJECT No.			HIGHWAY No.		
CHECKED: JP	6	TEXAS				US 281		
DRAWN: JA	STATE DISTRICT	COUNTY	CONTROL No.	SECTION No.	JOB No.	SHEET No.		
CHECKED: DM	PHARR	HIDALGO	0255	08	091	258		

Curve Data

Curve RS02-2

P.I. Station	2835+69.55	N	16,604,309.96	E	1,088,722.46	
Delta =	9° 38′ 13.70"	(LT)				
Degree =	0° 57′ 17.75"					
Tangent =	505.79					
Length =	1,009.20					
Radius =	6,000.00					
External =	21.28					
Long Chord =	1,008.01					
Mid. Ord. =	21.21					
P.C. Station	2830+63.76	N	16,604,799.64	E	1,088,849.09	
P.T. Station	2840+72.96	N	16,603,805.99	E	1,088,679.59	
C.C.		N	16,603,297.43	E	1,094,657.99	
Back = S	14° 29′ 57.68" W					
Ahead = S	4° 51′ 43.99" W					
Chord Bear = S	9° 40′ 50.83" W					

Ending chain RS02 description

Beginning chain RS04 description

Point 200 N 16,607,837.35 E 1,089,355.80 Sta 4799+81.67

Course from 200 to PC RS04-1 S 8° 29′ 57.64" W Dist 192.71

Curve Data

Curve RS04-1

P.I. Station	4803+31.52	N	16,607,491.34	E	1,089,304.09	
Delta =	6° 16′ 46.01"	(RT)				
Degree =	2° 00′ 00.00"					
Tangent =	157.14					
Length =	313.97					
Radius =	2,864.79					
External =	4.31					
Long Chord =	313.82					
Mid. Ord. =	4.30					
P.C. Station	4801+74.38	N	16,607,646.76	E	1,089,327.32	
P.T. Station	4804+88.35	N	16,607,339.40	E	1,089,264.01	
C.C.		N	16,608,070.17	E	1,086,493.99	
Back = S	8° 29′ 57.64" W					
Ahead = S	14° 46′ 43.65" W					
Chord Bear = S	11° 38′ 20.64" W					

Course from PT RS04-1 to PC RS04-2 S 14° 46′ 43.65" W Dist 449.66

Curve Data

Curve RS04-2

P.I. Station	4812+02.37	N	16,606,649.00	E	1,089,081.87	
Delta =	5° 02′ 44.49"	(LT)				
Degree =	0° 57′ 17.75"					
Tangent =	264.36					
Length =	528.38					
Radius =	6,000.00					
External =	5.82					
Long Chord =	528.21					
Mid. Ord. =	5.82					
P.C. Station	4809+38.01	N	16,606,904.62	E	1,089,149.31	
P.T. Station	4814+66.39	N	16,606,388.44	E	1,089,037.18	
C.C.		N	16,605,374.09	E	1,094,950.81	
Back = S	14° 46′ 43.65" W					
Ahead = S	9° 43′ 59.16" W					
Chord Bear = S	12° 15′ 21.40" W					

Ending chain RS04 description

Beginning chain RS06 description

Curve Data

Curve RS06-1

P.I. Station	6776+77.20	N	16,610,126.78	E	1,089,597.47	
Delta =	5° 19′ 45.36"	(LT)				
Degree =	0° 57′ 17.75"					
Tangent =	279.24					
Length =	558.08					
Radius =	6,000.00					
External =	6.49					
Long Chord =	557.88					
Mid. Ord. =	6.49					
P.C. Station	6773+97.96	N	16,610,403.47	E	1,089,635.16	
P.T. Station	6779+56.04	N	16,609,847.79	E	1,089,585.64	
C.C.		N	16,609,593.57	E	1,095,580.25	
Back = S	7° 45′ 27.68" W					
Ahead = S	2° 25′ 42.32" W					
Chord Bear = S	5° 05′ 35.00" W					

Course from PT RS06-1 to PC RS06-2 S 2° 25′ 42.32" W Dist 428.61

US 281 RAMPS (CONT)

Curve Data

Curve RS06-2

P.I. Station	6785+07.86	N	16,609,296.47	E	1,089,562.26	
Delta =	4° 55′ 30.57"	(RT)				
Degree =	2° 00′ 00.00"					
Tangent =	123.20					
Length =	246.26					
Radius =	2,864.79					
External =	2.65					
Long Chord =	246.18					
Mid. Ord. =	2.65					
P.C. Station	6783+84.65	N	16,609,419.57	E	1,089,567.48	
P.T. Station	6786+30.91	N	16,609,174.28	E	1,089,546.49	
C.C.		N	16,609,540.95	E	1,086,705.26	
Back = S	2° 25′ 42.32" W					
Ahead = S	7° 21′ 12.89" W					
Chord Bear = S	4° 53′ 27.60" W					

Course from PT RS06-2 to 211 S 7° 21′ 12.89" W Dist 450.09

Point 211 N 16,608,727.89 E 1,089,488.88 Sta 6790+81.00

Ending chain RS06 description

Beginning chain RS08 description

Curve Data

Curve RS08-1

P.I. Station	8747+87.92	N	16,612,979.74	E	1,090,071.60	
Delta =	4° 22′ 41.36"	(LT)				
Degree =	0° 57′ 17.75"					
Tangent =	229.35					
Length =	458.48					
Radius =	6,000.00					
External =	4.38					
Long Chord =	458.37					
Mid. Ord. =	4.38					
P.C. Station	8745+58.56	N	16,613,206.58	E	1,090,105.49	
P.T. Station	8750+17.04	N	16,612,750.98	E	1,090,055.14	
C.C.		N	16,612,320.18	E	1,096,039.65	
Back = S	8° 29′ 43.97" W					
Ahead = S	4° 07′ 02.61" W					
Chord Bear = S	6° 18′ 23.29" W					

Course from PT RS08-1 to PC RS08-2 S 4° 07′ 02.61" W Dist 389.60

Curve Data

Curve RS08-2

P.I. Station	8754+87.58	N	16,612,281.66	E	1,090,021.35	
Delta =	3° 14′ 10.61"	(RT)				
Degree =	2° 00′ 00.00"					
Tangent =	80.93					
Length =	161.81					
Radius =	2,864.79					
External =	1.14					
Long Chord =	161.79					
Mid. Ord. =	1.14					
P.C. Station	8754+06.65	N	16,612,362.38	E	1,090,027.16	
P.T. Station	8755+68.46	N	16,612,201.40	E	1,090,010.99	
C.C.		N	16,612,568.08	E	1,087,169.77	
Back = S	4° 07′ 02.61" W					
Ahead = S	7° 21′ 13.21" W					
Chord Bear = S	5° 44′ 07.91" W					

Course from PT RS08-2 to 221 S 7° 21′ 13.21" W Dist 450.11

Point 221 N 16,611,754.99 E 1,089,953.38 Sta 8760+18.57

Ending chain RS08 description

Beginning chain RS10 description

Curve Data

Curve RS10-1

P.I. Station	10721+12.90	N	16,615,620.76	E	1,090,531.47	
Delta =	2° 46′ 17.41"	(LT)				
Degree =	1° 28′ 36.49"					
Tangent =	93.85					
Length =	187.67					
Radius =	3,879.72					
External =	1.14					
Long Chord =	187.65					
Mid. Ord. =	1.13					
P.C. Station	10720+19.05	N	16,615,712.74	E	1,090,550.16	
P.T. Station	10722+06.72	N	16,615,527.99	E	1,090,517.25	
C.C.		N	16,614,939.96	E	1,094,352.14	
Back = S	11° 29′ 20.97" W					
Ahead = S	8° 43′ 03.56" W					
Chord Bear = S	10° 06′ 12.26" W					

THE SEAL APPEARING ON THIS DOCUMENT WAS AUTHORIZED BY JAIME AGUILAR, P.E. 87606 ON 06/24/2003.

STATE OF TEXAS · JAIME AGUILAR · 87606 · REGISTERED PROFESSIONAL ENGINEER

Parsons Brinckerhoff Quade & Douglas Inc.

Texas Department of Transportation

© 2003 by TxDOT

US 281 ROADWAY DATA SHEETS

SHEET 12 OF 14			281DAT12.DGN				
DESIGNED: DM	FED. RD DIV. NO.	STATE	FEDERAL AID PROJECT No.			HIGHWAY No.	
CHECKED: JP	6	TEXAS				US 281	
DRAWN: JA	STATE DISTRICT	COUNTY	CONTROL No.	SECTION No.	JOB No.	SHEET No.	
CHECKED: DM	PHARR	HIDALGO	0255	08	091	259	

NAME 08:20:38 AM 06/24/2003

i:\223220\cadd\sheets\roadway\281dat12.dgn

Curve Data

Curve RS10-2

P.I. Station	10724+57.23	N	16,615,280.37	E	1,090,479.28
Delta =	4° 46′ 54.08" (RT)				
Degree =	0° 57′ 17.75"				
Tangent =	250.51				
Length =	500.74				
Radius =	6,000.00				
External =	5.23				
Long Chord =	500.59				
Mid. Ord. =	5.22				
P.C. Station	10722+06.72	N	16,615,527.99	E	1,090,517.25
P.T. Station	10727+07.46	N	16,615,036.78	E	1,090,420.80
C.C.		N	16,616,437.39	E	1,084,586.56
Back = S	8° 43′ 03.56" W				
Ahead = S	13° 29′ 57.64" W				
Chord Bear = S	11° 06′ 30.60" W				

Course from PT RS10-2 to PC RS10-3 S 13° 29′ 57.64" W Dist 213.30

Curve Data

Curve RS10-3

P.I. Station	10731+82.92	N	16,614,574.46	E	1,090,309.81
Delta =	5° 00′ 13.67" (LT)				
Degree =	0° 57′ 17.75"				
Tangent =	262.16				
Length =	524.00				
Radius =	6,000.00				
External =	5.72				
Long Chord =	523.83				
Mid. Ord. =	5.72				
P.C. Station	10729+20.75	N	16,614,829.38	E	1,090,371.01
P.T. Station	10734+44.75	N	16,614,315.17	E	1,090,271.08
C.C.		N	16,613,428.77	E	1,096,205.24
Back = S	13° 29′ 57.64" W				
Ahead = S	8° 29′ 43.97" W				
Chord Bear = S	10° 59′ 50.80" W				

Ending chain RS10 description

Beginning chain RS12 description

Curve Data

Curve RS12-1

P.I. Station	12689+25.75	N	16,618,404.50	E	1,092,067.21
Delta =	4° 30′ 06.46" (LT)				
Degree =	0° 57′ 17.75"				
Tangent =	235.83				
Length =	471.43				
Radius =	6,000.00				
External =	4.63				
Long Chord =	471.31				
Mid. Ord. =	4.63				
P.C. Station	12686+89.92	N	16,618,587.95	E	1,092,215.42
P.T. Station	12691+61.35	N	16,618,209.99	E	1,091,933.86
C.C.		N	16,614,817.23	E	1,096,882.51
Back = S	38° 56′ 10.01" W				
Ahead = S	34° 26′ 03.55" W				
Chord Bear = S	36° 41′ 06.78" W				

Course from PT RS12-1 to PC RS12-2 S 34° 26′ 03.55" W Dist 500.03

Curve Data

Curve RS12-2

P.I. Station	12697+42.20	N	16,617,730.92	E	1,091,605.41
Delta =	3° 13′ 56.12" (RT)				
Degree =	2° 00′ 00.00"				
Tangent =	80.83				
Length =	161.61				
Radius =	2,864.79				
External =	1.14				
Long Chord =	161.59				
Mid. Ord. =	1.14				
P.C. Station	12696+61.37	N	16,617,797.58	E	1,091,651.11
P.T. Station	12698+22.99	N	16,617,666.94	E	1,091,556.01
C.C.		N	16,619,417.51	E	1,089,288.30
Back = S	34° 26′ 03.55" W				
Ahead = S	37° 39′ 59.67" W				
Chord Bear = S	36° 03′ 01.61" W				

Course from PT RS12-2 to 241 S 37° 39′ 59.67" W Dist 450.00

Point 241 N 16,617,310.73 E 1,091,281.03 Sta 12702+72.99

Ending chain RS12 description

Beginning chain RS14 description

Curve Data

Curve RS14-1

P.I. Station	14667+00.04	N	16,620,092.37	E	1,093,526.99
Delta =	3° 59′ 59.88" (RT)				
Degree =	2° 00′ 00.00"				
Tangent =	100.04				
Length =	200.00				
Radius =	2,864.79				
External =	1.75				
Long Chord =	199.96				
Mid. Ord. =	1.75				
P.C. Station	14666+00.00	N	16,620,170.18	E	1,093,589.86
P.T. Station	14668+00.00	N	16,620,019.12	E	1,093,458.85
C.C.		N	16,621,970.47	E	1,091,361.40
Back = S	38° 56′ 00.26" W				
Ahead = S	42° 56′ 00.14" W				
Chord Bear = S	40° 56′ 00.20" W				

Course from PT RS14-1 to PC RS14-2 S 42° 56′ 00.14" W Dist 762.78

Curve Data

Curve RS14-2

P.I. Station	14677+72.16	N	16,619,307.35	E	1,092,796.66
Delta =	3° 59′ 50.13" (LT)				
Degree =	0° 57′ 17.75"				
Tangent =	209.38				
Length =	418.59				
Radius =	6,000.00				
External =	3.65				
Long Chord =	418.51				
Mid. Ord. =	3.65				
P.C. Station	14675+62.78	N	16,619,460.65	E	1,092,939.28
P.T. Station	14679+81.37	N	16,619,144.49	E	1,092,665.07
C.C.		N	16,615,373.77	E	1,097,332.16
Back = S	42° 56′ 00.14" W				
Ahead = S	38° 56′ 10.01" W				
Chord Bear = S	40° 56′ 05.08" W				

Ending chain RS14 description

Beginning chain RS16 description

Curve Data

Curve RS16-1

P.I. Station	16632+60.13	N	16,622,813.45	E	1,095,629.38
Delta =	4° 00′ 09.95" (LT)				
Degree =	0° 57′ 17.75"				
Tangent =	209.67				
Length =	419.17				
Radius =	6,000.00				
External =	3.66				
Long Chord =	419.08				
Mid. Ord. =	3.66				
P.C. Station	16630+50.46	N	16,622,976.54	E	1,095,761.14
P.T. Station	16634+69.63	N	16,622,641.56	E	1,095,509.31
C.C.		N	16,619,205.82	E	1,100,428.23
Back = S	38° 56′ 10.02" W				
Ahead = S	34° 56′ 00.07" W				
Chord Bear = S	36° 56′ 05.04" W				

Course from PT RS16-1 to PC RS16-2 S 34° 56′ 00.07" W Dist 638.56

Curve Data

Curve RS16-2

P.I. Station	16641+79.56	N	16,622,059.55	E	1,095,102.79
Delta =	2° 51′ 15.40" (RT)				
Degree =	2° 00′ 00.00"				
Tangent =	71.37				
Length =	142.71				
Radius =	2,864.79				
External =	0.89				
Long Chord =	142.70				
Mid. Ord. =	0.89				
P.C. Station	16641+08.19	N	16,622,118.06	E	1,095,143.66
P.T. Station	16642+50.90	N	16,622,003.14	E	1,095,059.06
C.C.		N	16,623,758.50	E	1,092,795.05
Back = S	34° 56′ 00.07" W				
Ahead = S	37° 47′ 15.47" W				
Chord Bear = S	36° 21′ 37.77" W				

Course from PT RS16-2 to 261 S 37° 47′ 15.47" W Dist 450.18

Point 261 N 16,621,647.37 E 1,094,783.22 Sta 16647+01.08

Ending chain RS16 description

THE SEAL APPEARING ON THIS DOCUMENT WAS AUTHORIZED BY JAIME AGUILAR, P.E. 87606 ON 06/23/2003.

STATE OF TEXAS · JAIME AGUILAR · 87606 · REGISTERED PROFESSIONAL ENGINEER

Parsons Brinckerhoff Quade & Douglas Inc.

Texas Department of Transportation

© 2003 by TxDOT

US 281 ROADWAY DATA SHEETS

SHEET 13 OF 14					281DAT13.DGN		
DESIGNED: PAF	FED. RD DIV. No.	STATE	FEDERAL AID PROJECT No.		HIGHWAY No.		
CHECKED: JP	6	TEXAS			US 281		
DRAWN: JA	STATE DISTRICT	COUNTY	CONTROL No.	SECTION No.	JOB No.	SHEET No.	
CHECKED: JDH	PHARR	HIDALGO	0255	08	091	260	

NAME 11:29:08 AM 06/23/2003 i:\22322a\cadd\sheets\roadway\281dat13.dgn

NAME
06/23/2003 11:29:11 AM
i:\22322o\cadd\sheets\roadway\281dat14.dgn

US 281 RAMPS (CONT)

Beginning chain RS18 description

		Curve Data *----------*			
Curve RS18-1					
P.I. Station	18612+43.31	N	16,624,334.56	E	1,096,959.16
Delta =	4° 40′ 42.00"	(RT)			
Degree =	2° 00′ 00.00"				
Tangent =	117.02				
Length =	233.92				
Radius =	2,864.79				
External =	2.39				
Long Chord =	233.85				
Mid. Ord. =	2.39				
P.C. Station	18611+26.29	N	16,624,425.17	E	1,097,033.21
P.T. Station	18613+60.21	N	16,624,250.28	E	1,096,877.96
C.C.		N	16,626,237.93	E	1,094,814.89
Back = S	39° 15′ 18.13" W				
Ahead = S	43° 56′ 00.13" W				
Chord Bear = S	41° 35′ 39.13" W				

Course from PT RS18-1 to PC RS18-2 S 43° 56′ 00.13" W Dist 554.35

		Curve Data *----------*			
Curve RS18-2					
P.I. Station	18622+30.85	N	16,623,623.29	E	1,096,273.89
Delta =	6° 02′ 06.53"	(LT)			
Degree =	0° 57′ 17.75"				
Tangent =	316.29				
Length =	632.00				
Radius =	6,000.00				
External =	8.33				
Long Chord =	631.71				
Mid. Ord. =	8.32				
P.C. Station	18619+14.56	N	16,623,851.07	E	1,096,493.34
P.T. Station	18625+46.56	N	16,623,373.70	E	1,096,079.61
C.C.		N	16,619,688.14	E	1,100,814.23
Back = S	43° 56′ 00.13" W				
Ahead = S	37° 53′ 53.60" W				
Chord Bear = S	40° 54′ 56.87" W				

Ending chain RS18 description

US 281 DIRECT CONNECTOR

Beginning chain BUS281N description

Point 92 N 16,618,386.84 E 1,091,146.11 Sta 7+00.00

Course from 92 to PC BUS281N-1 S 8° 29′ 13.60" W Dist 1,074.14

		Curve Data *----------*			
Curve BUS281N-1					
P.I. Station	19+52.48	N	16,617,148.08	E	1,090,961.26
Delta =	13° 33′ 38.25"	(LT)			
Degree =	3° 49′ 10.99"				
Tangent =	178.34				
Length =	355.02				
Radius =	1,500.00				
External =	10.56				
Long Chord =	354.19				
Mid. Ord. =	10.49				
P.C. Station	17+74.14	N	16,617,324.47	E	1,090,987.58
P.T. Station	21+29.16	N	16,616,970.43	E	1,090,977.03
C.C.		N	16,617,103.09	E	1,092,471.16
Back = S	8° 29′ 13.60" W				
Ahead = S	5° 04′ 24.65" E				
Chord Bear = S	1° 42′ 24.48" W				

Course from PT BUS281N-1 to PC BUS281N-2 S 5° 04′ 24.65" E Dist 227.03

		Curve Data *----------*			
Curve BUS281N-2					
P.I. Station	25+78.96	N	16,616,522.39	E	1,091,016.81
Delta =	16° 53′ 41.67"	(RT)			
Degree =	3° 49′ 10.99"				
Tangent =	222.77				
Length =	442.31				
Radius =	1,500.00				
External =	16.45				
Long Chord =	440.71				
Mid. Ord. =	16.27				
P.C. Station	23+56.19	N	16,616,744.29	E	1,090,997.11
P.T. Station	27+98.50	N	16,616,304.35	E	1,090,971.17
C.C.		N	16,616,611.64	E	1,089,502.99
Back = S	5° 04′ 24.65" E				
Ahead = S	11° 49′ 17.02" W				
Chord Bear = S	3° 22′ 26.19" W				

Course from PT BUS281N-2 to PC BUS281N-3 S 11° 49′ 17.02" W Dist 1,159.56

US 281 DIRECT CONNECTOR (CONT)

		Curve Data *----------*			
Curve BUS281N-3					
P.I. Station	41+41.37	N	16,614,989.95	E	1,090,696.07
Delta =	3° 30′ 00.00"	(RT)			
Degree =	0° 57′ 17.75"				
Tangent =	183.32				
Length =	366.52				
Radius =	6,000.00				
External =	2.80				
Long Chord =	366.46				
Mid. Ord. =	2.80				
P.C. Station	39+58.06	N	16,615,169.38	E	1,090,733.62
P.T. Station	43+24.58	N	16,614,813.15	E	1,090,647.63
C.C.		N	16,616,398.55	E	1,084,860.88
Back = S	11° 49′ 17.02" W				
Ahead = S	15° 19′ 17.02" W				
Chord Bear = S	13° 34′ 17.02" W				

Ending chain BUS281N description

THE SEAL APPEARING ON THIS DOCUMENT WAS AUTHORIZED BY JAIME AGUILAR, P.E. 87606 ON 06/23/2003.

STATE OF TEXAS · JAIME AGUILAR · 87606 · REGISTERED PROFESSIONAL ENGINEER

Parsons Brinckerhoff Quade & Douglas Inc.

Texas Department of Transportation

© 2003 by TxDOT

US 281
ROADWAY DATA SHEETS

SHEET 14 OF 14						281DAT14.DGN	
DESIGNED: PAF	FED. RD DIV. No.	STATE	FEDERAL AID PROJECT No.				HIGHWAY No.
CHECKED: JP	6	TEXAS					US 281
DRAWN: JA	STATE DISTRICT	COUNTY	CONTROL No.	SECTION No.	JOB No.	SHEET No.	
CHECKED: JDH	PHARR	HIDALGO	0255	08	091	261	

NAME
11:42:54 AM
06/23/2003
I:\22322g\CADD\Sheets\Roadway\Hor*Control\281Hc01.dgn

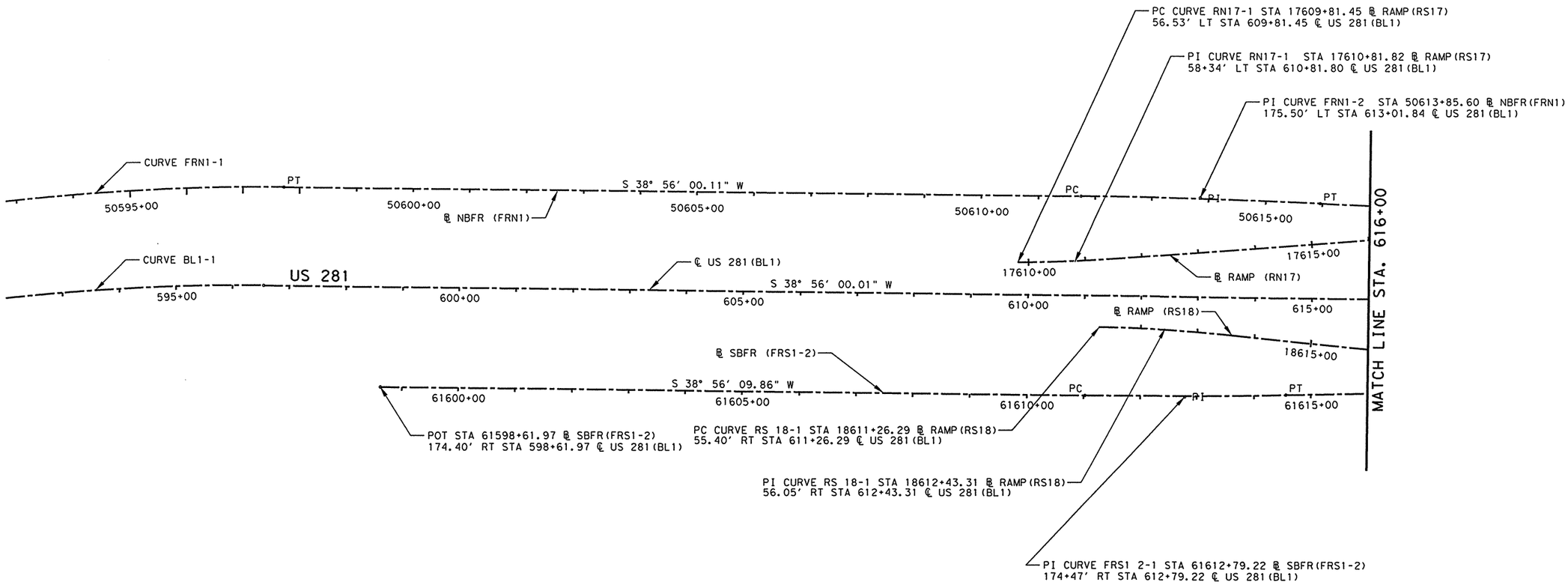

THE SEAL APPEARING ON THIS DOCUMENT WAS AUTHORIZED BY JAIME AGUILAR, P.E. 87606 ON 06/23/2003.

STATE OF TEXAS
JAIME AGUILAR
87606
REGISTERED PROFESSIONAL ENGINEER

Parsons Brinckerhoff Quade & Douglas Inc.

Texas Department of Transportation

© 2003 by TxDOT

US 281
HORIZONTAL CONTROL LAYOUT

BEGIN PROJECT TO
STA. 616+00 "BL1"

PLAN 1"= 200' HORIZ

SHEET 1 OF 11 | 281HC01.DGN

DESIGNED: PAF	FED. RD DIV. No.	STATE	FEDERAL AID PROJECT No.			HIGHWAY No.	
CHECKED: JP	6	TEXAS				US 281	
DRAWN: CS	STATE DISTRICT	COUNTY	CONTROL No.	SECTION No.	JOB No.	SHEET No.	
CHECKED: JDH	PHARR	HIDALGO	0255	08	091	262	

NAME
06/23/2003 11:42:57 AM
i:\22322o\cadd\sheets\roadway\hor*control\281hc02.dgn

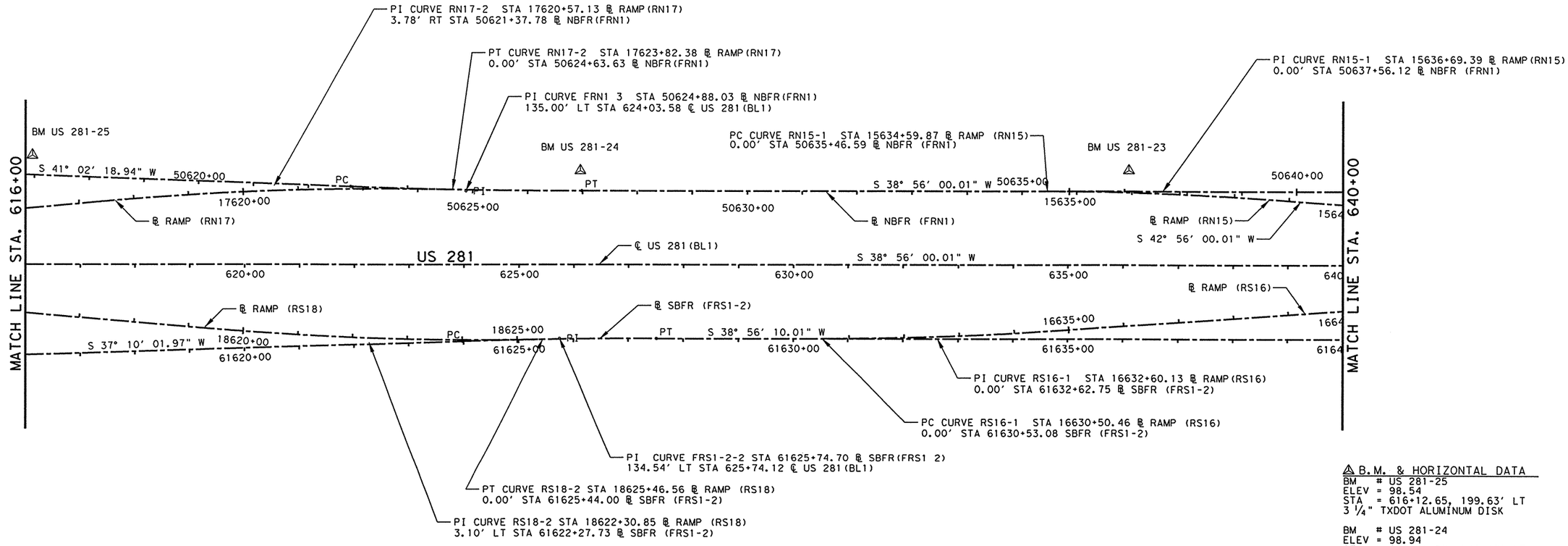

⚠ B.M. & HORIZONTAL DATA

BM # US 281-25
ELEV = 98.54
STA = 616+12.65, 199.63' LT
3 1/4" TXDOT ALUMINUM DISK

BM # US 281-24
ELEV = 98.94
STA = 626+11.32, 171.49' LT
3 1/4" TXDOT ALUMINUM DISK

BM # US 281-23
ELEV = 98.72
STA = 636+10.30, 172.95' LT
3 1/4" TXDOT ALUMINUM DISK

THE SEAL APPEARING ON THIS DOCUMENT WAS AUTHORIZED BY JAIME AGUILAR, P.E. 87606 ON 06/23/2003.

STATE OF TEXAS · JAIME AGUILAR · 87606 · REGISTERED PROFESSIONAL ENGINEER

Parsons Brinckerhoff Quade & Douglas Inc.

Texas Department of Transportation

© 2003 by TxDOT

US 281
HORIZONTAL CONTROL LAYOUT

STA. 616+00 "BL1" TO
STA. 640+00 "BL1"

PLAN 1"= 200' HORIZ

SHEET 2 OF 11 | 281HC02.DGN

DESIGNED: PAF	FED. RD DIV. No.	STATE	FEDERAL AID PROJECT No.			HIGHWAY No.	
CHECKED: JP	6	TEXAS				US 281	
DRAWN: CS	STATE DISTRICT	COUNTY	CONTROL No.	SECTION No.	JOB No.	SHEET No.	
CHECKED: JDH	PHARR	HIDALGO	0255	08	091	263	

NAME
11:43:00 AM
06/23/2003

POT STA 34+99.81 ℄ TRENTON ROAD (XTRENT1)
= 1253.07', LT STA 648+24.54 ℄ US 281 (BL1)

30+00

POT STA 29+05.52 ℄ TRENTON ROAD (XTRENT1)
= 740.19', LT STA 651+24.78 ℄ US 281 (BL1)

S 77° 22' 05.89" E

25+00

POT STA 25+54.54 ℄ TRENTON ROAD (XTRENT1)
= 425.55', LT STA 652+80.30 ℄ US 281 (BL1)

PT CURVE RN15-2 STA 15646+44.35 ℄ RAMP(RN15)
60.00' LT STA 648+44.30 ℄ US 281(BL1)

PI CURVE RN15-2 STA 15647+44.39 ℄ RAMP(RN15)
60.00' LT. STA 647+44.26 ℄ US 281(BL1)

℄ TRENTON ROAD(XTRENT1)

BM US 281-22

BM US 281-21

℄ NBFR (FRN1)

S 38° 56' 00.01" W

MATCH LINE STA. 640+00

0+00 50645+00 50650+00 50655+00 50660+00 506

℄ RAMP (RN15)

15645+00

℄ US 281(BL1)

S 38° 56' 00.01" W

+00 645+00 650+00 655+00 660+00

MATCH LINE STA. 664+00

S 34° 56' 00.07" W

16645+00

0+00

℄ RAMP (RS16)

℄ SBFR (FRS1-2)

S 38° 56' 10.01" W

0+00 61645+00 61650+00 61655+00 61660+00

20+00

S 81° 30' 43" E

TRENTON RD

15+00

S 81° 44' 37.05" E

10+00

POT STA 16647+01.08 ℄ RAMP (RN16)
60.00' RT. STA 647+01.00 ℄ US 281(BL1)

PI CURVE RS16-2 STA 16641+79.56 ℄ RAMP(RN16)
70.43' RT STA 641+79.55 ℄ US 281(BL1)

POT STA 10+60.02 ℄ TRENTON ROAD (XTRENT1)
= 862.90', RT STA 660+37.59 ℄ US 281 (BL1)

POT STA 10+00.00 ℄ TRENTON ROAD (XTRENT1)
= 914.52', LT STA 660+68.21 ℄ US 281 (BL1)

THE SEAL APPEARING ON THIS DOCUMENT WAS AUTHORIZED BY JAIME AGUILAR, P.E. 87606 ON 06/23/2003.

STATE OF TEXAS
JAIME AGUILAR
87606
REGISTERED PROFESSIONAL ENGINEER

△ B.M. & HORIZONTAL DATA

BM # US 281-22
ELEV = 98.53
STA = 646+08.07, 171.87' LT
3 1/4" TXDOT ALUMINUM DISK

BM # US 281-21
ELEV = 98.66
STA = 655+88.78, 173.20' LT
3 1/4" TXDOT ALUMINUM DISK

Parsons Brinckerhoff Quade & Douglas Inc.

Texas Department of Transportation

© 2003 by TxDOT

US 281
HORIZONTAL CONTROL LAYOUT

STA. 640+00 "BL1" TO
STA. 664+00 "BL1"

PLAN 1"= 200' HORIZ

SHEET 3 OF 11 | 281HC03.DGN

DESIGNED: PAF	FED. RD DIV. No.	STATE	FEDERAL AID PROJECT No.			HIGHWAY No.
CHECKED: JP	6	TEXAS				US 281

DRAWN: CS	STATE DISTRICT	COUNTY	CONTROL No.	SECTION No.	JOB No.	SHEET No.
CHECKED: JDH	PHARR	HIDALGO	0255	08	091	264

i:\22322a\cadd\sheets\roadway\hor*control\281hc03.dgn

NAME
11:43:04 AM
06/23/2003
i:\22322a\cadd\sheets\roadway\hor*control\281hc04.dgn

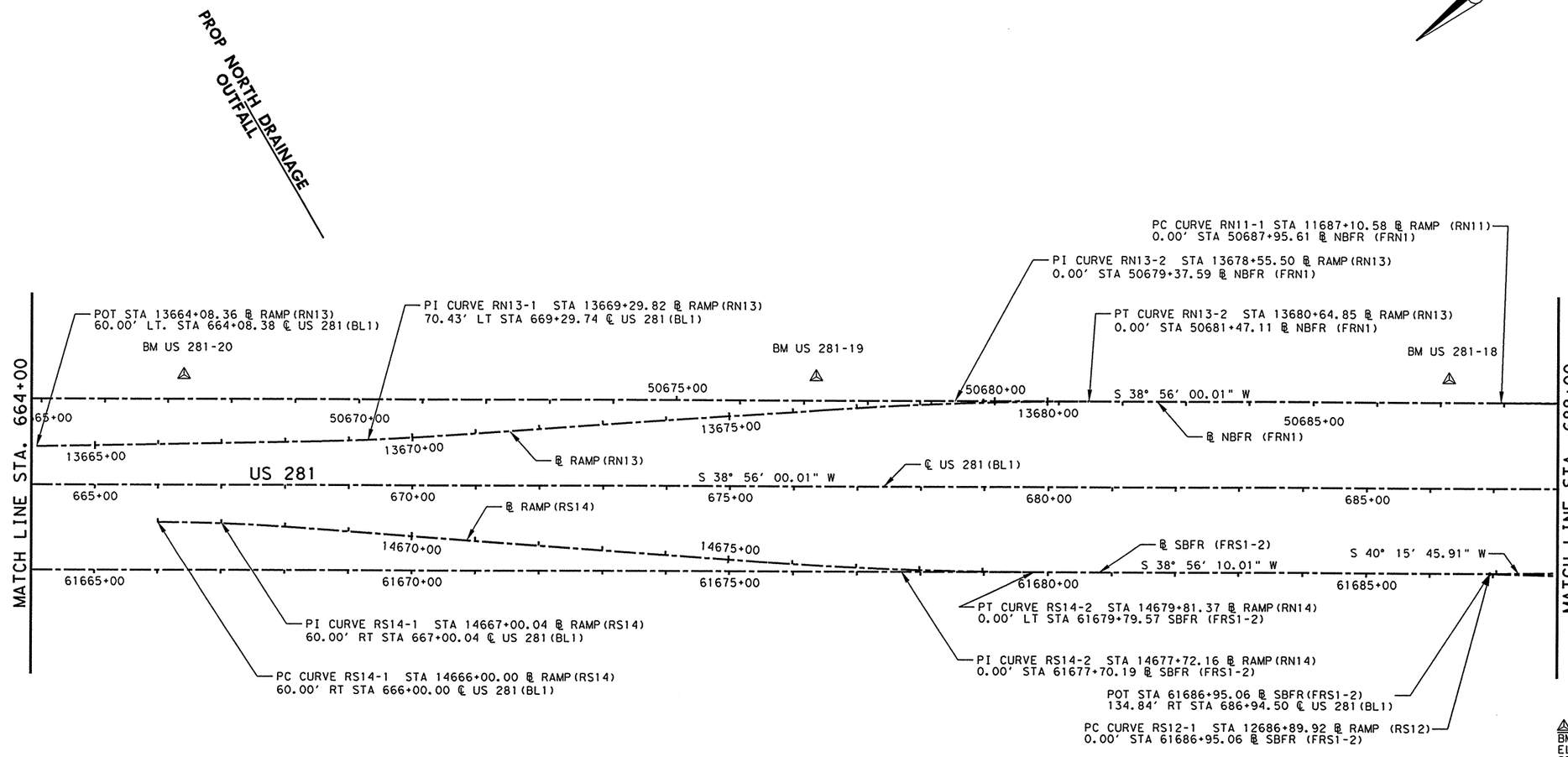

△ B.M. & HORIZONTAL DATA

BM # US 281-20
ELEV = 98.51
STA = 666+40.54, 172.14' LT
3 1/4" TXDOT ALUMINUM DISK

BM # US 281-19
ELEV = 101.97
STA = 676+34.62, 172.09' LT
3 1/4" TXDOT ALUMINUM DISK

BM # US 281-18
ELEV = 105.53
STA = 686+28.97, 170.87' LT
3 1/4" TXDOT ALUMINUM DISK

THE SEAL APPEARING ON THIS DOCUMENT WAS AUTHORIZED BY JAIME AGUILAR, P.E. 87606 ON 06/23/2003.

STATE OF TEXAS
JAIME AGUILAR
87606
REGISTERED PROFESSIONAL ENGINEER

Parsons Brinckerhoff Quade & Douglas Inc.

Texas Department of Transportation

© 2003 by TxDOT

US 281
HORIZONTAL CONTROL LAYOUT

STA. 664+00 "BL1" TO
STA. 688+00 "BL1"

PLAN 1"= 200' HORIZ

SHEET 4 OF 11 | 281HC04.DGN

DESIGNED: PAF	FED. RD DIV. No.	STATE	FEDERAL AID PROJECT No.			HIGHWAY No.
CHECKED: JP	6	TEXAS				US 281
DRAWN: CS	STATE DISTRICT	COUNTY	CONTROL No.	SECTION No.	JOB No.	SHEET No.
CHECKED: JDH	PHARR	HIDALGO	0255	08	091	265

NAME
11:43:07 AM
06/23/2003
i:\22322a\cadd\sheets\roadway\hor*control\281hc05.dgn

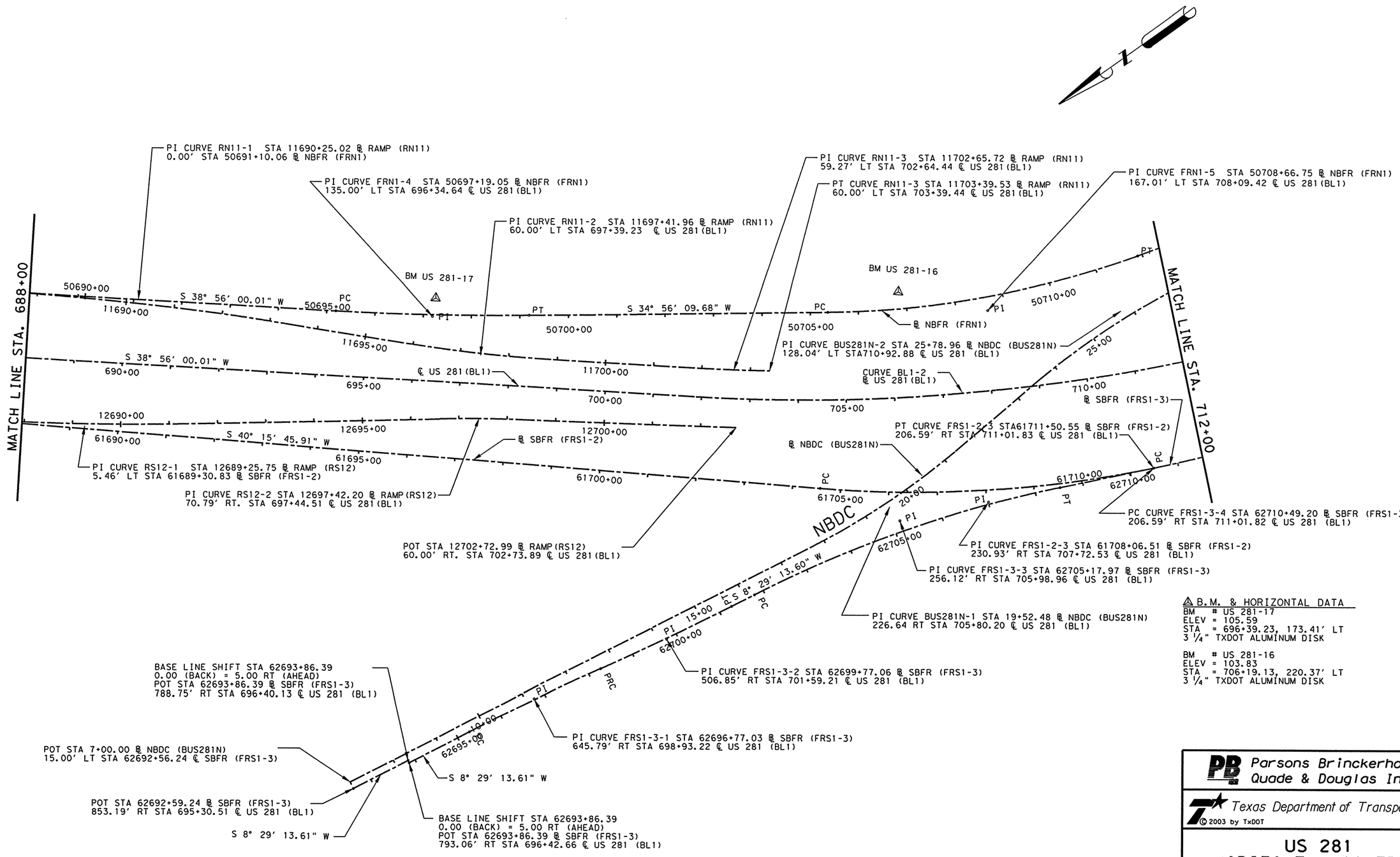

⚠ B.M. & HORIZONTAL DATA

BM # US 281-17
ELEV = 105.59
STA = 696+39.23, 173.41' LT
3 1/4" TXDOT ALUMINUM DISK

BM # US 281-16
ELEV = 103.83
STA = 706+19.13, 220.37' LT
3 1/4" TXDOT ALUMINUM DISK

THE SEAL APPEARING ON THIS DOCUMENT WAS AUTHORIZED BY JAIME AGUILAR, P.E. 87606 ON 06/23/2003.

STATE OF TEXAS
JAIME AGUILAR
87606
REGISTERED PROFESSIONAL ENGINEER

Parsons Brinckerhoff Quade & Douglas Inc.

Texas Department of Transportation

© 2003 by TxDOT

US 281
HORIZONTAL CONTROL LAYOUT

STA. 688+00 "BL1" TO
STA. 712+00 "BL1"

PLAN 1"= 200' HORIZ

SHEET 5 OF 11 | 281HC05.DGN

DESIGNED: PAF	FED. RD DIV. No.	STATE	FEDERAL AID PROJECT No.		HIGHWAY No.	
CHECKED: JP	6	TEXAS			US 281	
DRAWN: CS	STATE DISTRICT	COUNTY	CONTROL No.	SECTION No.	JOB No.	SHEET No.
CHECKED: JDH	PHARR	HIDALGO	0255	08	091	266

NAME
11:43:11 AM
06/23/2003
i:\22322a\cadd\sheets\roadway\hor*control\281hc06.dgn

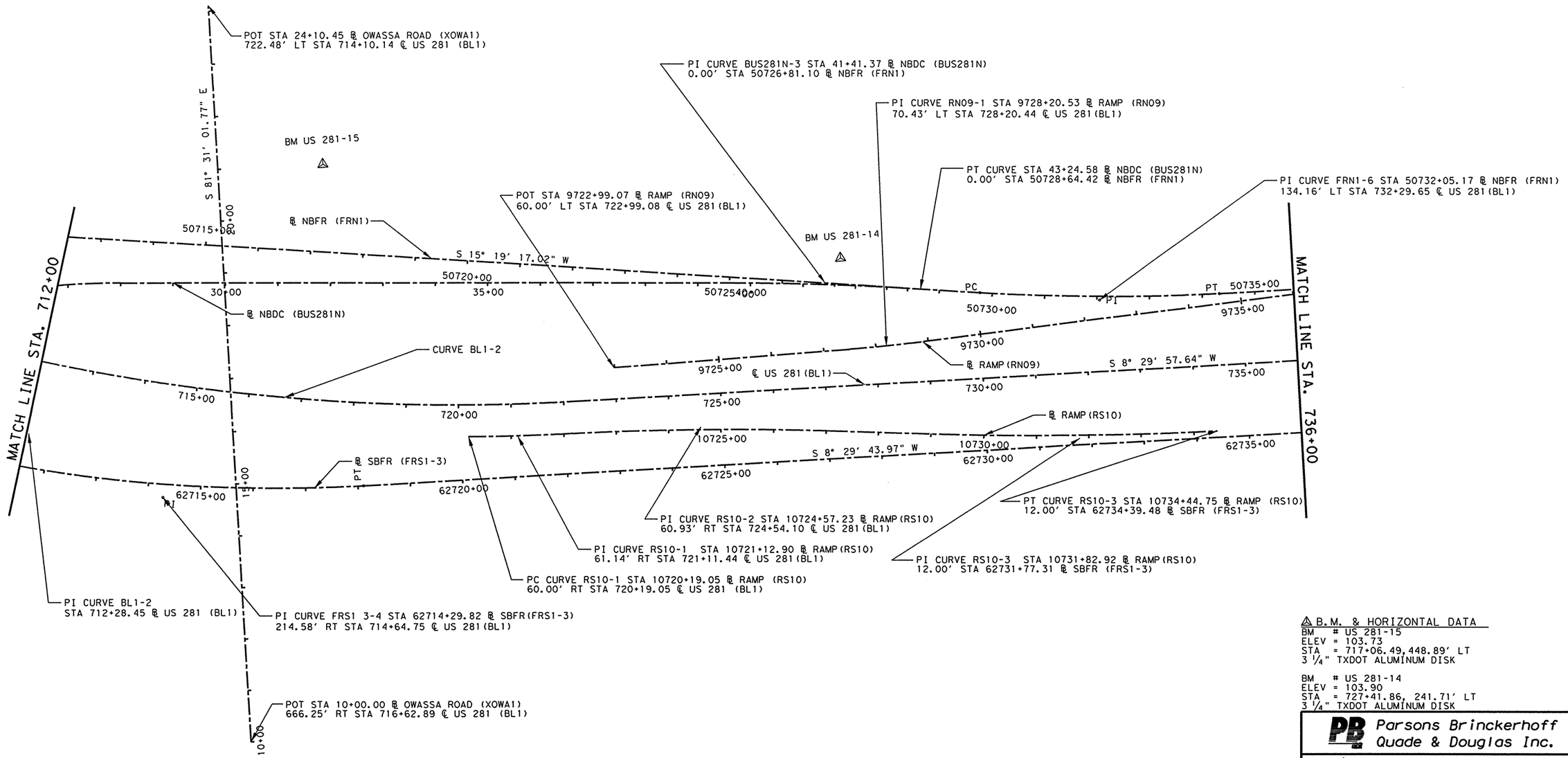

△ B.M. & HORIZONTAL DATA

BM # US 281-15
ELEV = 103.73
STA = 717+06.49, 448.89' LT
3 1/4" TXDOT ALUMINUM DISK

BM # US 281-14
ELEV = 103.90
STA = 727+41.86, 241.71' LT
3 1/4" TXDOT ALUMINUM DISK

THE SEAL APPEARING ON THIS DOCUMENT WAS AUTHORIZED BY JAIME AGUILAR, P.E. 87606 ON 06/23/2003.

STATE OF TEXAS
JAIME AGUILAR
87606
REGISTERED PROFESSIONAL ENGINEER

Parsons Brinckerhoff Quade & Douglas Inc.

Texas Department of Transportation

© 2003 by TxDOT

US 281
HORIZONTAL CONTROL LAYOUT

STA. 712+00 "BL1" TO
STA. 736+00 "BL1"

PLAN 1"= 200' HORIZ

SHEET 6 OF 11 | 281HC06.DGN

DESIGNED: PAF	FED. RD DIV. No.	STATE	FEDERAL AID PROJECT No.	HIGHWAY No.
CHECKED: JP	6	TEXAS		US 281

DRAWN: JA	STATE DISTRICT	COUNTY	CONTROL No.	SECTION No.	JOB No.	SHEET No.
CHECKED: JDH	PHARR	HIDALGO	0255	08	091	267

NAME
06/23/2003 11:43:14 AM
i:\22322a\cadd\sheets\roadway\hor*control\281hc07.dgn

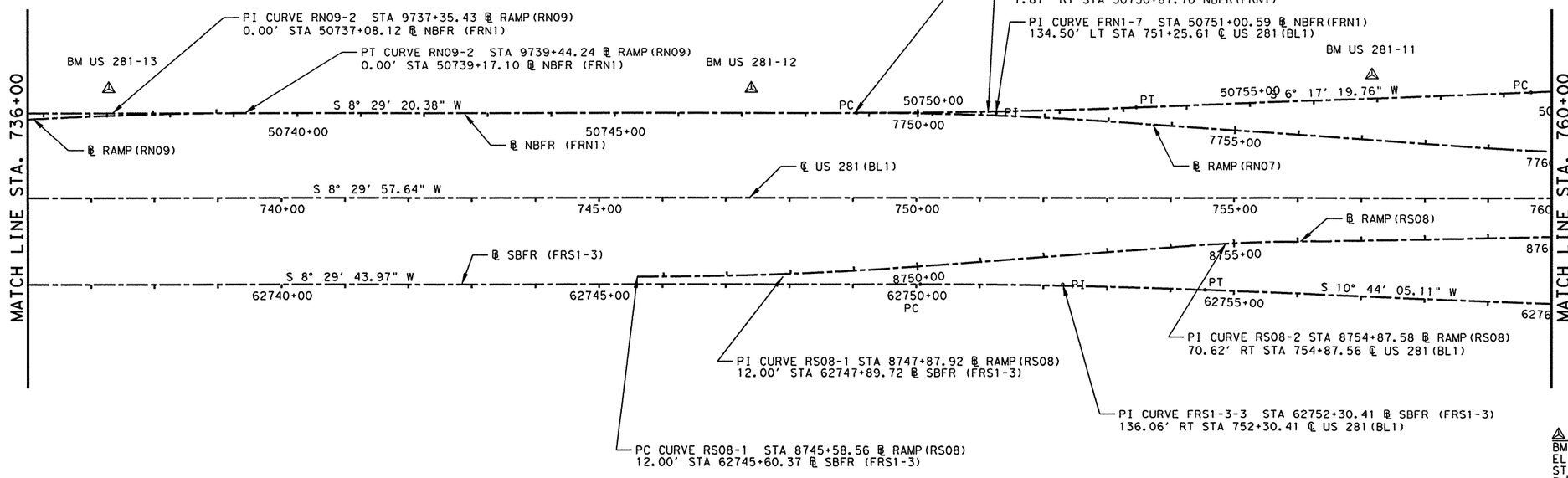

△ B.M. & HORIZONTAL DATA

BM # US 281-13
ELEV = 104.90
STA = 737+28.11, 172.67' LT
3 1/4" TXDOT ALUMINUM DISK

BM # US 281-12
ELEV = 104.33
STA = 747+40.09, 172.11' LT
3 1/4" TXDOT ALUMINUM DISK

BM # US 281-11
ELEV = 104.77
STA = 757+16.56, 194.71' LT
3 1/4" TXDOT ALUMINUM

THE SEAL APPEARING ON THIS DOCUMENT WAS AUTHORIZED BY JAIME AGUILAR, P.E. 87606 ON 06/23/2003.

STATE OF TEXAS
JAIME AGUILAR
87606
REGISTERED PROFESSIONAL ENGINEER

Parsons Brinckerhoff Quade & Douglas Inc.

Texas Department of Transportation

© 2003 by TxDOT

US 281
HORIZONTAL CONTROL LAYOUT

STA. 736+00 "BL1" TO
STA. 760+00 "BL1"

PLAN 1"= 200' HORIZ

SHEET 7 OF 11 | 281HC07.DGN

DESIGNED: PAF	FED. RD DIV. No.	STATE	FEDERAL AID PROJECT No.				HIGHWAY No.
CHECKED: JP	6	TEXAS					US 281
DRAWN: CS	STATE DISTRICT	COUNTY	CONTROL No.	SECTION No.	JOB No.	SHEET No.	
CHECKED: JDH	PHARR	HIDALGO	0255	08	091	268	

NAME
11:43:17 AM
06/23/2003
i:\22322a\cadd\sheets\roadway\hor*control\281hc08.dgn

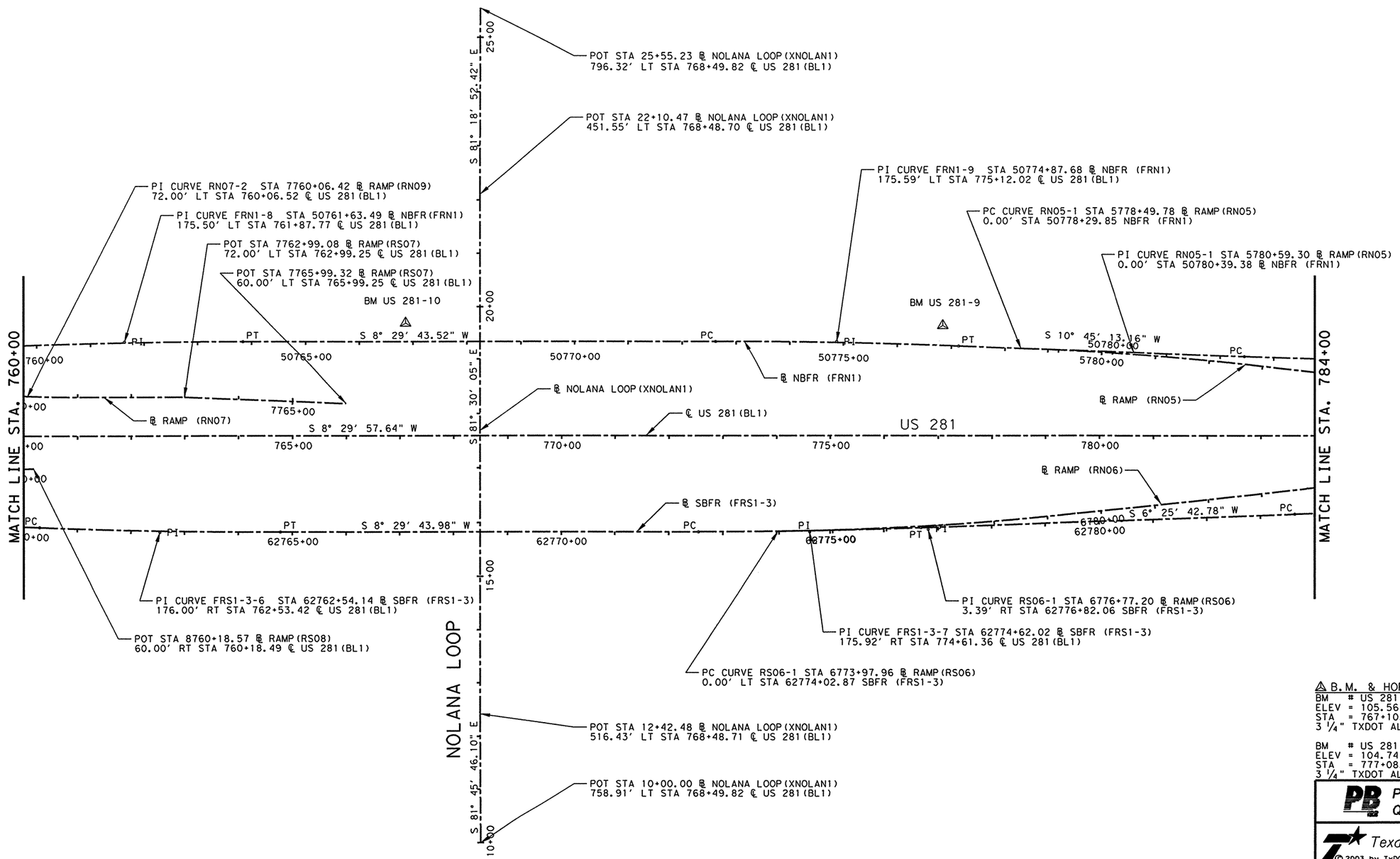

△ B.M. & HORIZONTAL DATA
BM # US 281-10
ELEV = 105.56
STA = 767+10.57, 210.84' LT
3 1/4" TXDOT ALUMINUM DISK

BM # US 281-9
ELEV = 104.74
STA = 777+08.34, 205.90' LT
3 1/4" TXDOT ALUMINUM DISK

Parsons Brinckerhoff Quade & Douglas Inc.

Texas Department of Transportation

© 2003 by TxDOT

US 281
HORIZONTAL CONTROL LAYOUT

STA. 760+00 "BL1" TO
STA. 784+00 "BL1"

PLAN 1"= 200' HORIZ

THE SEAL APPEARING ON THIS DOCUMENT WAS AUTHORIZED BY JAIME AGUILAR, P.E. 87606 ON 06/23/2003.

STATE OF TEXAS
JAIME AGUILAR
87606
REGISTERED PROFESSIONAL ENGINEER

SHEET 8 OF 11				281HC08.DGN	
DESIGNED: PAF	FED. RD DIV. No.	STATE	FEDERAL AID PROJECT No.		HIGHWAY No.
CHECKED: JP	6	TEXAS			US 281
DRAWN: CS	STATE DISTRICT	COUNTY	CONTROL No.	SECTION No.	JOB No.	SHEET No.
CHECKED: JDH	PHARR	HIDALGO	0255	08	091	269

NAME
11:43:20 AM
06/23/2003
i:\22322a\cadd\sheets\roadway\hor*control\281hc09.dgn

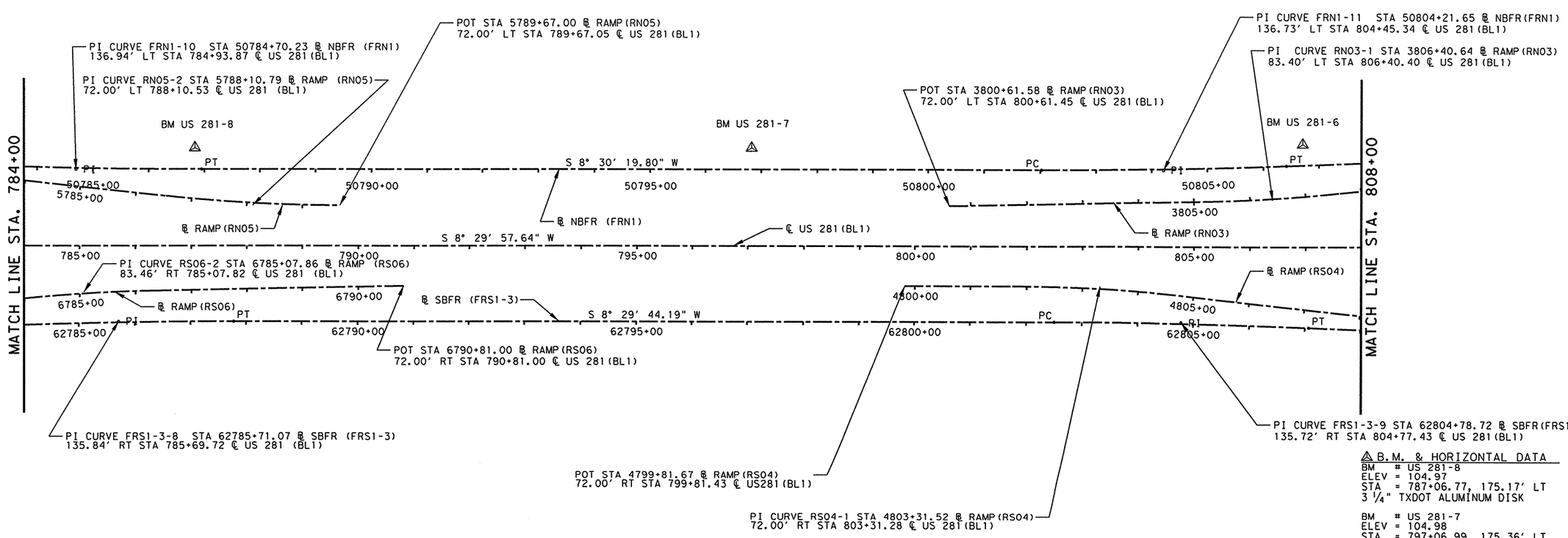

△ B.M. & HORIZONTAL DATA

BM # US 281-8
ELEV = 104.97
STA = 787+06.77, 175.17' LT
3 1/4" TXDOT ALUMINUM DISK

BM # US 281-7
ELEV = 104.98
STA = 797+06.99, 175.36' LT
3 1/4" TXDOT ALUMINUM DISK

BM # US 281-6
ELEV = 105.28
STA = 806+94.49, 183.50' LT
3 1/4" TXDOT ALUMINUM DISK

THE SEAL APPEARING ON THIS DOCUMENT WAS AUTHORIZED BY JAIME AGUILAR, P.E. 87606 ON 06/23/2003.

STATE OF TEXAS
JAIME AGUILAR
87606
REGISTERED PROFESSIONAL ENGINEER

Parsons Brinckerhoff Quade & Douglas Inc.

Texas Department of Transportation

© 2003 by TxDOT

US 281
HORIZONTAL CONTROL LAYOUT

STA. 784+00 "BL1" TO
STA. 808+00 "BL1"

PLAN 1"= 200' HORIZ

SHEET 9 OF 11 | 281HC09.DGN

DESIGNED: PAF	FED. RD DIV. NO.	STATE	FEDERAL AID PROJECT No.			HIGHWAY No.
CHECKED: JP	6	TEXAS				US 281
DRAWN: CS	STATE DISTRICT	COUNTY	CONTROL No.	SECTION No.	JOB No.	SHEET No.
CHECKED: JDH	PHARR	HIDALGO	0255	08	091	270

NAME
11:43:24 AM
06/23/2003
i:\22322a\cadd\sheets\roadway\hor*control\281hc10.dgn

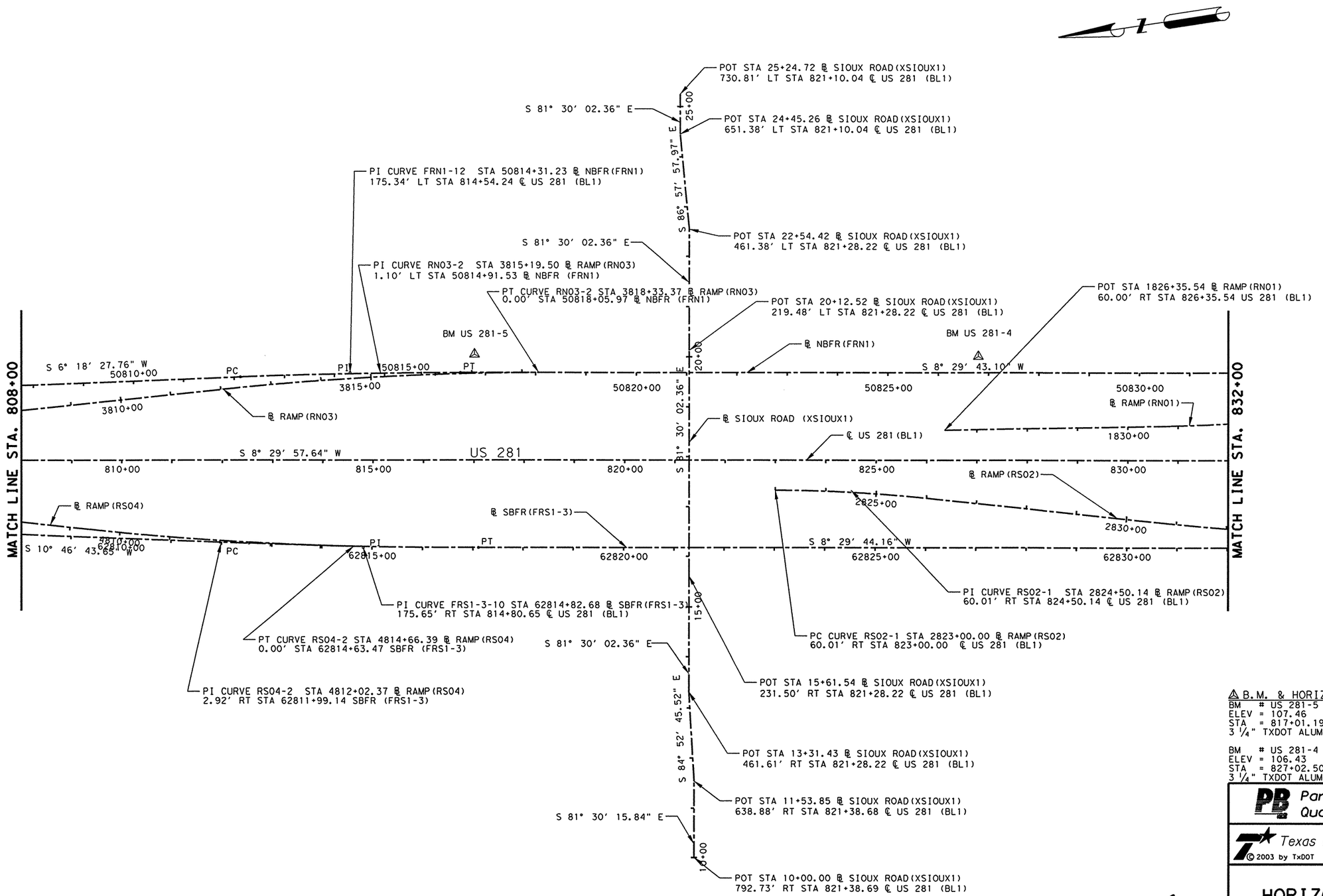

△ B.M. & HORIZONTAL DATA

BM # US 281-5
ELEV = 107.46
STA = 817+01.19, 211.65' LT
3 1/4" TXDOT ALUMINUM DISK

BM # US 281-4
ELEV = 106.43
STA = 827+02.50, 207.77' LT
3 1/4" TXDOT ALUMINUM DISK

THE SEAL APPEARING ON THIS DOCUMENT WAS AUTHORIZED BY JAIME AGUILAR, P.E. 87606 ON 06/23/2003.

STATE OF TEXAS
JAIME AGUILAR
87606
REGISTERED PROFESSIONAL ENGINEER

Parsons Brinckerhoff Quade & Douglas Inc.

Texas Department of Transportation

© 2003 by TxDOT

US 281
HORIZONTAL CONTROL LAYOUT

STA. 808+00 "BL1" TO
STA. 832+00 "BL1"

PLAN 1"= 200' HORIZ

SHEET 10 OF 11				281HC10.DGN			
DESIGNED: PAF	FED. RD DIV. No.	STATE	FEDERAL AID PROJECT No.			HIGHWAY No.	
CHECKED: JP	6	TEXAS				US 281	
DRAWN: CS	STATE DISTRICT	COUNTY	CONTROL No.	SECTION No.	JOB No.	SHEET No.	
CHECKED: JDH	PHARR	HIDALGO	0255	08	091	271	

NAME
06/23/2003 11:43:27 AM
i:\22322o\cadd\sheets\roadway\hor*control\281hc11.dgn

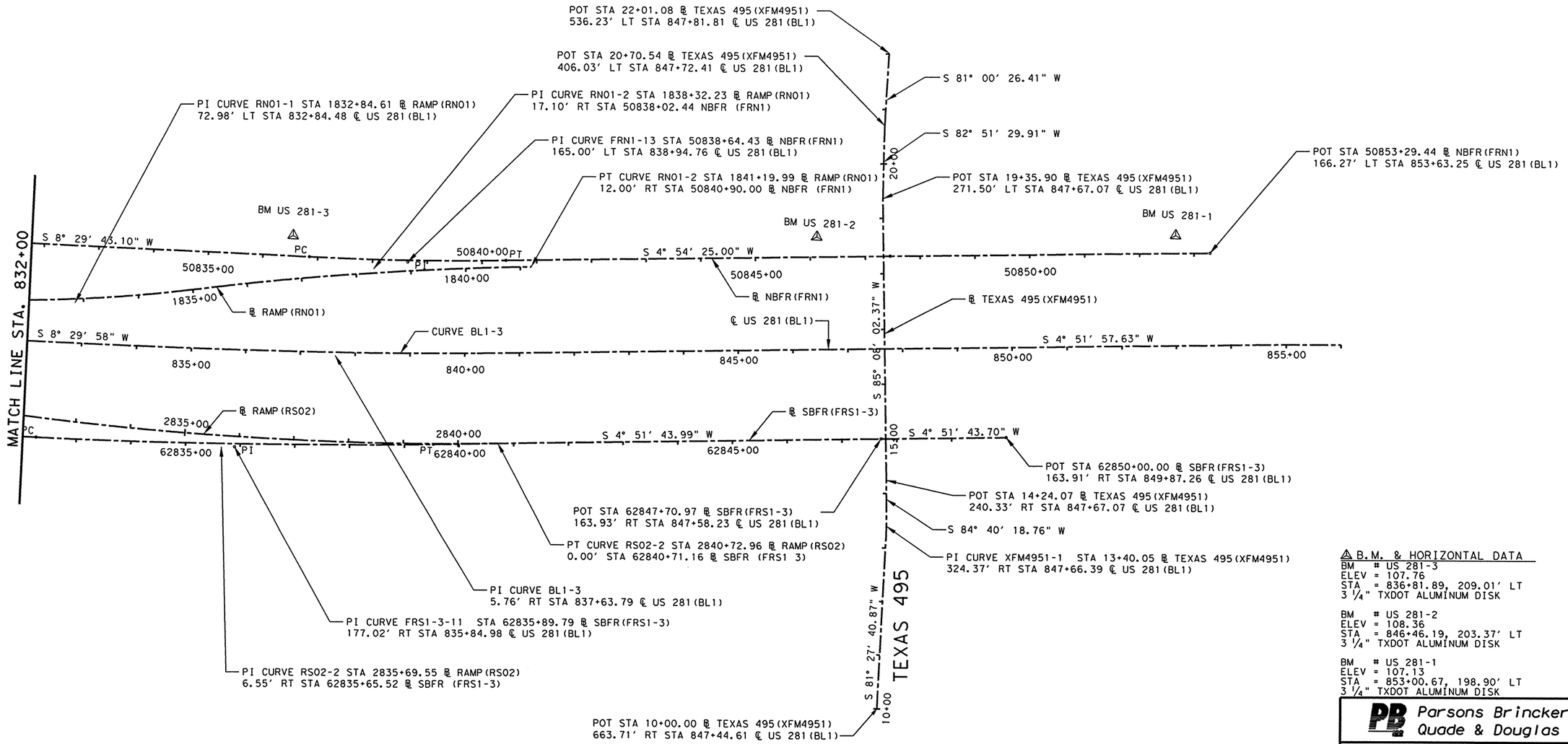

△ B.M. & HORIZONTAL DATA

BM # US 281-3
ELEV = 107.76
STA = 836+81.89, 209.01' LT
3 1/4" TXDOT ALUMINUM DISK

BM # US 281-2
ELEV = 108.36
STA = 846+46.19, 203.37' LT
3 1/4" TXDOT ALUMINUM DISK

BM # US 281-1
ELEV = 107.13
STA = 853+00.67, 198.90' LT
3 1/4" TXDOT ALUMINUM DISK

THE SEAL APPEARING ON THIS DOCUMENT WAS AUTHORIZED BY JAIME AGUILAR, P.E. 87606 ON 06/23/2003.

STATE OF TEXAS
JAIME AGUILAR
87606
REGISTERED PROFESSIONAL ENGINEER

Parsons Brinckerhoff Quade & Douglas Inc.

Texas Department of Transportation

© 2003 by TxDOT

US 281
HORIZONTAL CONTROL LAYOUT

STA. 832+00 "BL1" TO
STA. 856+00 "BL1"

PLAN 1"= 200' HORIZ

SHEET 11 OF 11 | 281HC11.DGN

DESIGNED: PAF	FED. RD DIV. NO.	STATE	FEDERAL AID PROJECT No.			HIGHWAY No.
CHECKED: JP	6	TEXAS				US 281
DRAWN: CS	STATE DISTRICT	COUNTY	CONTROL No.	SECTION No.	JOB No.	SHEET No.
CHECKED: JDH	PHARR	HIDALGO	0255	08	091	272

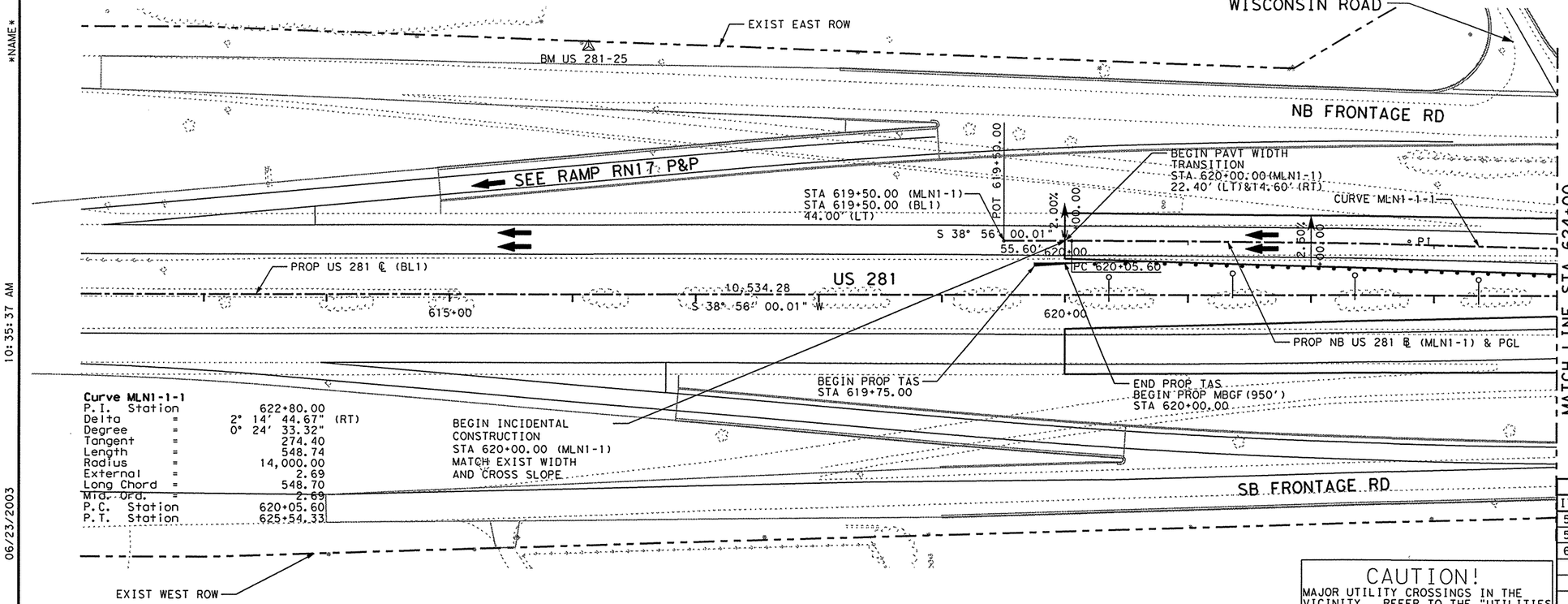

Curve MLN1-1-1

P.I. Station		622+80.00
Delta	=	2° 14' 44.67" (RT)
Degree	=	0° 24' 33.32"
Tangent	=	274.40
Length	=	548.74
Radius	=	14,000.00
External	=	2.69
Long Chord	=	548.70
Mid. Ord.	=	2.69
P.C. Station		620+05.60
P.T. Station		625+54.33

LEGEND:

- MC - MOUNTABLE CONC CURB
- BC - BARRIER CONC CURB
- MCG - MOUNTABLE CONC CURB & GUTTER
- BCG - BARRIER CONC CURB & GUTTER
- RW - RETAINING WALL
- RR - RIP RAP
- SGT - SINGLE GUARD RAIL TERMINAL
- SSCB - SINGLE SLOPE CONC BARRIER
- SSTR - SINGLE SLOPE TRAFFIC RAILING
- SW - SIDEWALK
- WCR - WHEEL CHAIR RAMP
- VG - 4' VALLEY GUTTER
- MBGF - METAL BEAM GUARD FENCE
- TAS - TERMINAL ANCHOR SECTION
- ⊠ - CENTER OF 10' SSCB (TY 4)
- ⊠ - CENTER OF 70' SSCB (TY 3)
- ⊸ - DEL ASM TY B (D-SW)
- ⊸▨ - OBJ MRK ASM TY 3 (OM-3R)

△ B.M. & HORIZONTAL DATA
BM # US 281-25
ELEV = 98.54
STA = 616+12.65, 199.63' LT
3 1/4" TXDOT ALUMINUM DISK

CAUTION!
MAJOR UTILITY CROSSINGS IN THE VICINITY. REFER TO THE "UTILITIES AND DRAINAGE PLAN & PROFILE" SHEETS FOR ADDITIONAL INFORMATION.

SHEET TOTALS

ITEM	EST.	FINAL	UNIT	DESCRIPTION
540	400		LF	MTL BEAM GD FEN (12 GA) (TIM POST)
540	1		EA	TERM ANCH SECT (12 GA)
658	4		EA	DEL ASM TY B (D-SW)

EXIST AND PROP PGL

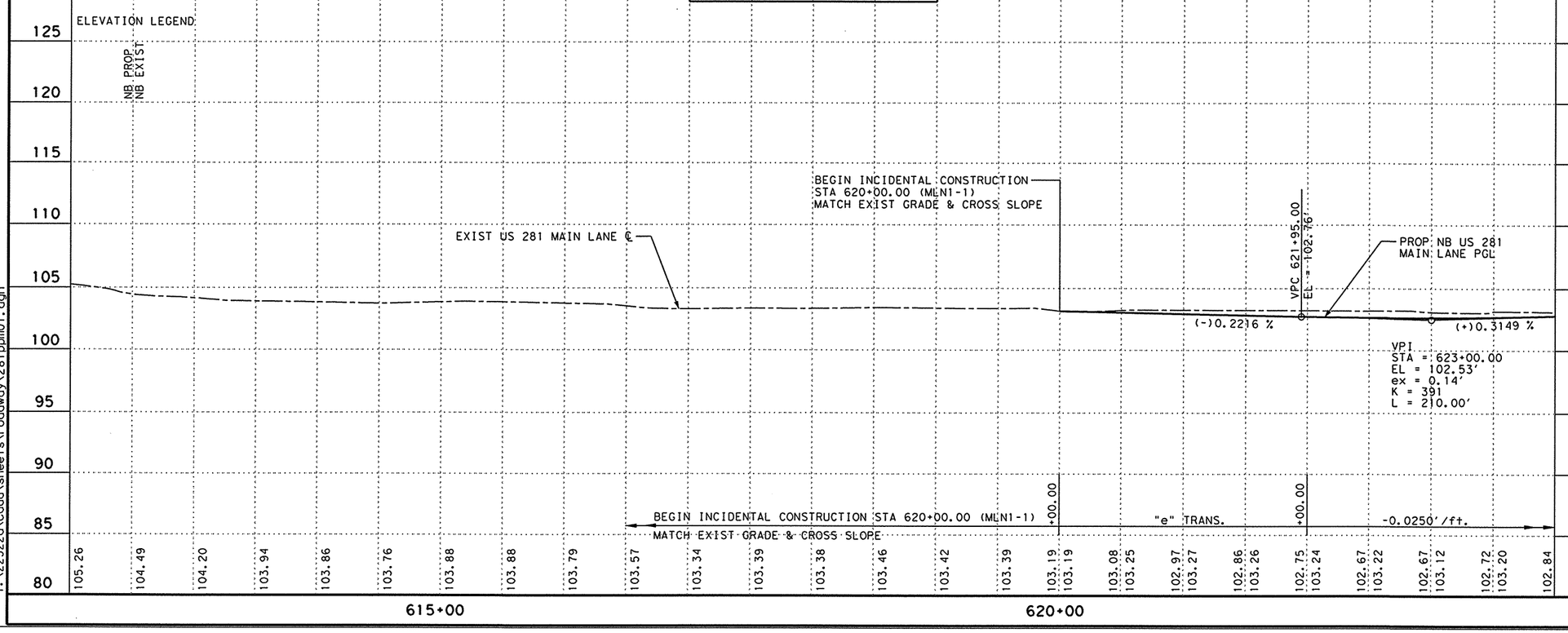

PROFILE LEGEND
——— PROP US 281 MAIN LANE P.G.L.
– – – – EXIST US 281 MAIN LANE NATURAL GROU
SSD STOPPING SIGHT DISTANCE

THE SEAL APPEARING ON THIS DOCUMENT WAS AUTHORIZED BY JAIME AGUILAR, P.E. 87606 ON 06/23/2003.

THE SEAL APPEARING ON THIS DOCUMENT WAS AUTHORIZED BY PHAISARN CWATANAPHOL, P.E. 89252 ON 06/23/2003.

STATE OF TEXAS · JAIME AGUILAR · 87606 · REGISTERED PROFESSIONAL ENGINEER

STATE OF TEXAS · PHAISARN CWATANAPHOL · 89252 · REGISTERED PROFESSIONAL ENGINEER

Parsons Brinckerhoff Quade & Douglas Inc.

Texas Department of Transportation

© 2003 by TxDOT

US 281
PLAN & PROFILE
NORTHBOUND MAINLANES

STA. 612+00 "BL1" TO
STA. 624+00 "BL1"

PLAN 1"= 100' HORIZ
PROFILE 1"= 10' VERT

SHEET 1 OF 20 | 281PPM01.DGN

DESIGNED: JA	FED. RD DIV. No.	STATE	FEDERAL AID PROJECT No.	HIGHWAY No.
CHECKED: JP	6	TEXAS		US 281

DRAWN:	STATE DISTRICT	COUNTY	CONTROL No.	SECTION No.	JOB No.	SHEET No.
CHECKED: JDH	PHARR	HIDALGO	0255	08	091	273

NAME
10:35:54 AM
06/23/2003

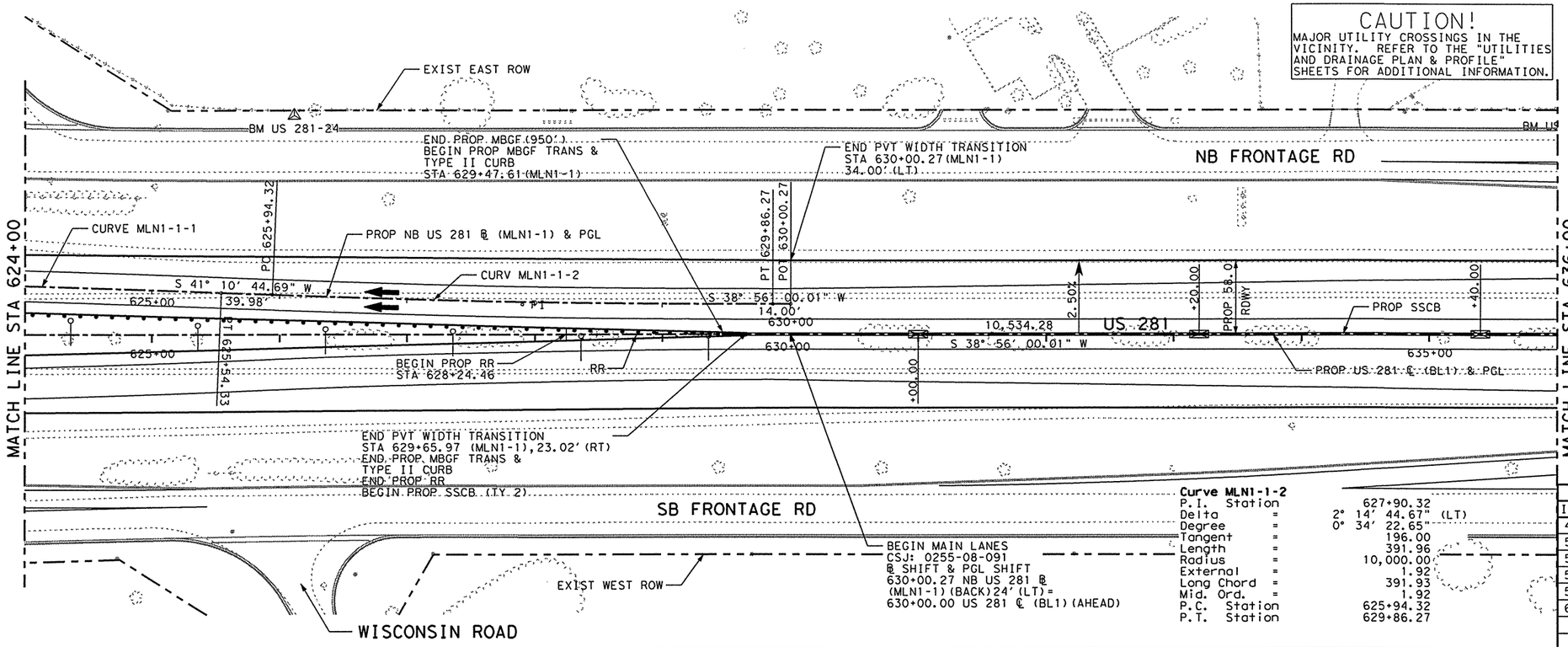

CAUTION!
MAJOR UTILITY CROSSINGS IN THE VICINITY. REFER TO THE "UTILITIES AND DRAINAGE PLAN & PROFILE" SHEETS FOR ADDITIONAL INFORMATION.

LEGEND:

MC	- MOUNTABLE CONC CURB
BC	- BARRIER CONC CURB
MCG	- MOUNTABLE CONC CURB & GUTTER
BCG	- BARRIER CONC CURB & GUTTER
RW	- RETAINING WALL
RR	- RIP RAP
SGT	- SINGLE GUARD RAIL TERMINAL
SSCB	- SINGLE SLOPE CONC BARRIER
SSTR	- SINGLE SLOPE TRAFFIC RAILING
SW	- SIDEWALK
WCR	- WHEEL CHAIR RAMP
VG	- 4' VALLEY GUTTER
MBGF	- METAL BEAM GUARD FENCE
TAS	- TERMINAL ANCHOR SECTION
	- CENTER OF 10' SSCB (TY 4)
	- CENTER OF 70' SSCB (TY 3)
	- DEL ASM TY B (D-SW)
	- OBJ MRK ASM TY 3 (OM-3R)

Curve MLN1-1-2

P.I. Station		627+90.32
Delta	=	2° 14' 44.67" (LT)
Degree	=	0° 34' 22.65"
Tangent	=	196.00
Length	=	391.96
Radius	=	10,000.00
External	=	1.92
Long Chord	=	391.93
Mid. Ord.	=	1.92
P.C. Station		625+94.32
P.T. Station		629+86.27

⚠ B.M. & HORIZONTAL DATA
BM # US 281-24
ELEV = 98.94
STA = 626+11.32, 171.49' LT
3 1/4" TXDOT ALUMINUM DISK

SHEET TOTALS

ITEM	EST.	FINAL	UNIT	DESCRIPTION
432	11		CY	RIP RAP (CONC) (CLB) (4 IN)
514	604		LF	PERM CONC TRF BAR SGL SLP (TY 2) (H=42")
514	30		LF	PERM CONC TRF BAR SGL SLP (TY 4) (H=42")
540	1		EA	MTL BEAM GD FENCE TRANS (12 GA)
540	550		LF	MTL BEAM GD FEN (12 GA) (TIM POST)
658	6		EA	DEL ASM TY B (D-SW)

EXIST AND PROP PGL

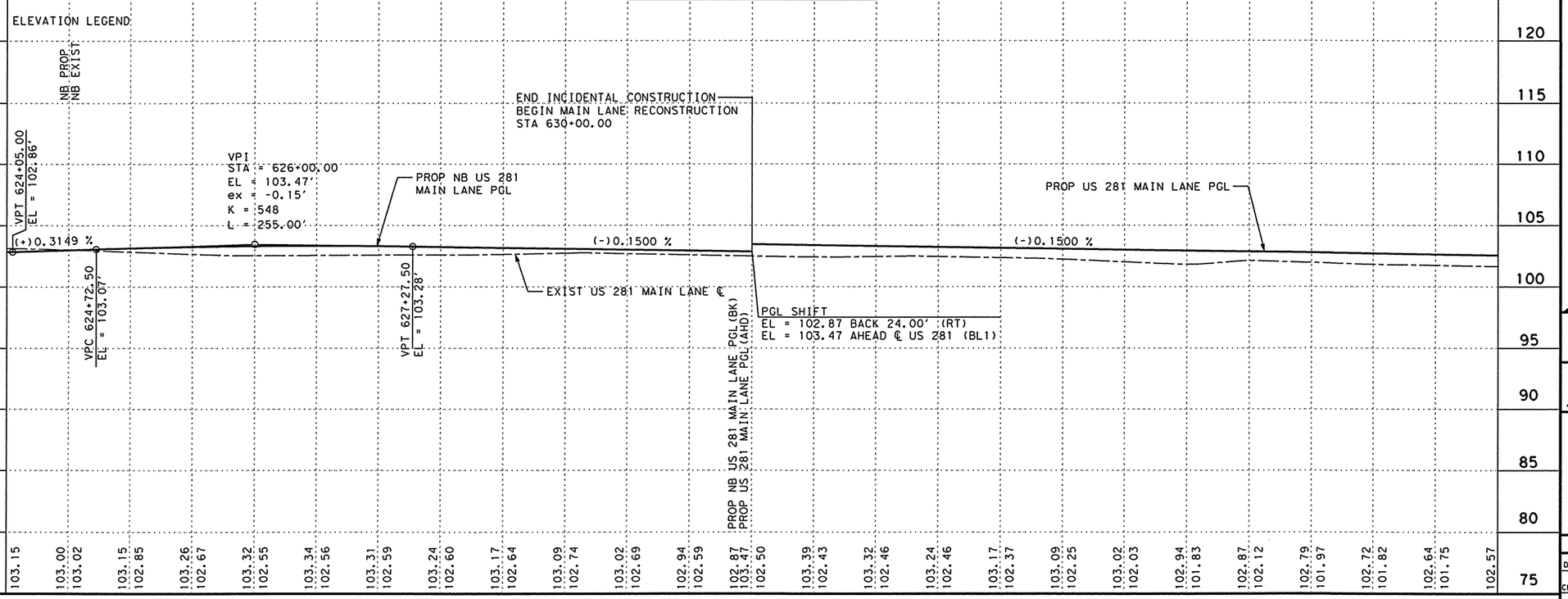

PROFILE LEGEND
——— PROP US 281 MAIN LANE P.G.L.
– – – – EXIST US 281 MAIN LANE NATURAL GRO
SSD STOPPING SIGHT DISTANCE

THE SEAL APPEARING ON THIS DOCUMENT WAS AUTHORIZED BY JAIME AGUILAR, P.E. 87606 ON 06/23/2003.

THE SEAL APPEARING ON THIS DOCUMENT WAS AUTHORIZED BY PHAISARN CHATANAPHOL, P.E. 89252 ON 06/23/2003.

STATE OF TEXAS · JAIME AGUILAR · 87606 · REGISTERED PROFESSIONAL ENGINEER

STATE OF TEXAS · PHAISARN CHATANAPHOL · 89252 · REGISTERED PROFESSIONAL ENGINEER

Parsons Brinckerhoff Quade & Douglas Inc.

Texas Department of Transportation

© 2003 by TxDOT

US 281
PLAN & PROFILE
NORTHBOUND MAINLANES

STA. 624+00 "BL1" TO
STA. 636+00 "BL1"

PLAN 1"= 100' HORIZ
PROFILE 1"= 10' VERT

SHEET 2 OF 20 | 281PPM02.DGN

DESIGNED: JA	FED. RD DIV. No.	STATE	FEDERAL AID PROJECT No.	HIGHWAY No.
CHECKED: JP	6	TEXAS		US 281

DRAWN:	STATE DISTRICT	COUNTY	CONTROL No.	SECTION No.	JOB No.	SHEET No.
CHECKED: JDH	PHARR	HIDALGO	0255	08	091	274

i:\2322a\cadd\sheets\roadway\281ppm02.dgn

NAME
10:36:10 AM
06/23/2003

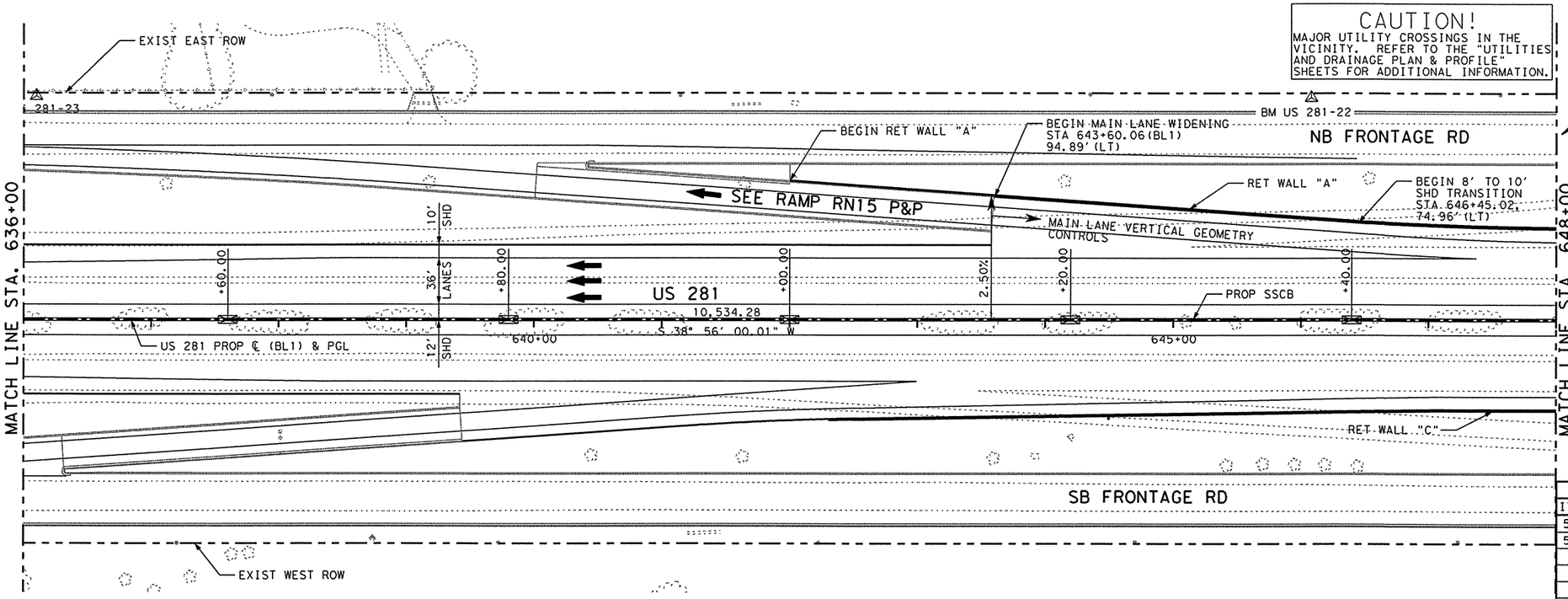

CAUTION!
MAJOR UTILITY CROSSINGS IN THE VICINITY. REFER TO THE "UTILITIES AND DRAINAGE PLAN & PROFILE" SHEETS FOR ADDITIONAL INFORMATION.

LEGEND:

MC	- MOUNTABLE CONC CURB
BC	- BARRIER CONC CURB
MCG	- MOUNTABLE CONC CURB & GUTTER
BCG	- BARRIER CONC CURB & GUTTER
RW	- RETAINING WALL
RR	- RIP RAP
SGT	- SINGLE GUARD RAIL TERMINAL
SSCB	- SINGLE SLOPE CONC BARRIER
SSTR	- SINGLE SLOPE TRAFFIC RAILING
SW	- SIDEWALK
WCR	- WHEEL CHAIR RAMP
VG	- 4' VALLEY GUTTER
MBGF	- METAL BEAM GUARD FENCE
TAS	- TERMINAL ANCHOR SECTION
⊠	- CENTER OF 10' SSCB (TY 4)
⊠	- CENTER OF 70' SSCB (TY 3)
—o	- DEL ASM TY B (D-SW)
—▨	- OBJ MRK ASM TY 3 (OM-3R)

△ B.M. & HORIZONTAL DATA

BM # US 281-23
ELEV = 98.73
STA = 636+10.30, 172.95' LT
3 1/4" TXDOT ALUMINUM DISK

BM # US 281-22
ELEV = 98.54
STA = 646+08.07, 171.87' LT
3 1/4" TXDOT ALUMINUM DISK

SHEET TOTALS

ITEM	EST.	FINAL	UNIT	DESCRIPTION
514	1150		LF	PERM CONC TRF BAR SGL SLP (TY 2)(H=42")
514	50		LF	PERM CONC TRF BAR SGL SLP (TY 4)(H=42")

EXIST AND PROP PGL

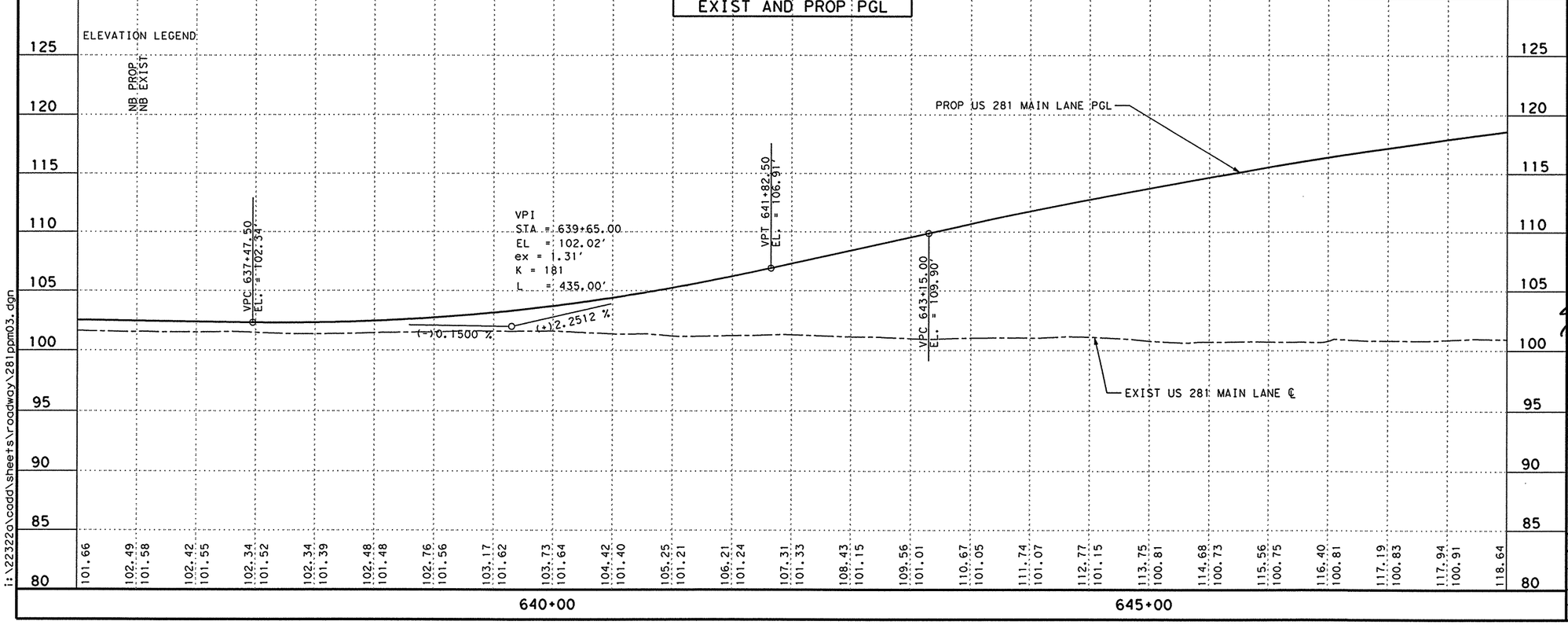

PROFILE LEGEND
PROP US 281 MAIN LANE P.G.L.
EXIST US 281 MAIN LANE NATURAL GRO
SSD STOPPING SIGHT DISTANCE

THE SEAL APPEARING ON THIS DOCUMENT WAS AUTHORIZED BY JAIME AGUILAR, P.E. 87606 ON 06/23/2003.

THE SEAL APPEARING ON THIS DOCUMENT WAS AUTHORIZED BY PHAISARN CWATANAPHOL, P.E. 89252 ON 06/23/2003.

STATE OF TEXAS
JAIME AGUILAR
87606
REGISTERED PROFESSIONAL ENGINEER

STATE OF TEXAS
PHAISARN CWATANAPHOL
89252
REGISTERED PROFESSIONAL ENGINEER

Parsons Brinckerhoff Quade & Douglas Inc.

Texas Department of Transportation

© 2003 by TxDOT

US 281
PLAN & PROFILE
NORTHBOUND MAINLANES

STA. 636+00 "BL1" TO
STA. 648+00 "BL1"

PLAN 1"= 100' HORIZ
PROFILE 1"= 10' VERT

SHEET 3 OF 20				281PPM03.DGN				
DESIGNED: JA	FED. RD DIV. No.	STATE	FEDERAL AID PROJECT No.				HIGHWAY No.	
CHECKED: JP	6	TEXAS					US 281	
DRAWN:	STATE DISTRICT	COUNTY	CONTROL No.	SECTION No.	JOB No.	SHEET No.		
CHECKED: JDH	PHARR	HIDALGO	0255	08	091	275		

i:\22322a\cadd\sheets\roadway\281ppm03.dgn

NAME
10:36:10 AM
06/23/2003

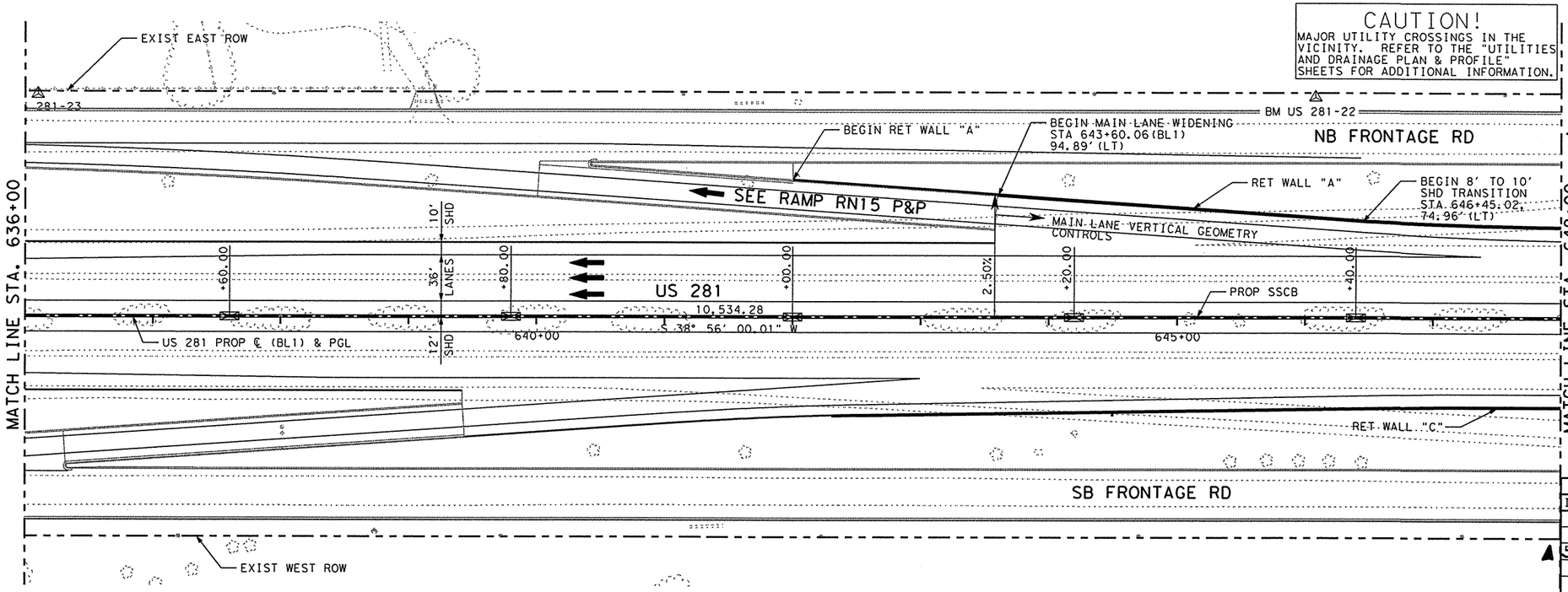

CAUTION!
MAJOR UTILITY CROSSINGS IN THE VICINITY. REFER TO THE "UTILITIES AND DRAINAGE PLAN & PROFILE" SHEETS FOR ADDITIONAL INFORMATION.

LEGEND:

- MC - MOUNTABLE CONC CURB
- BC - BARRIER CONC CURB
- MCG - MOUNTABLE CONC CURB & GUTTER
- BCG - BARRIER CONC CURB & GUTTER
- RW - RETAINING WALL
- RR - RIP RAP
- SGT - SINGLE GUARD RAIL TERMINAL
- SSCB - SINGLE SLOPE CONC BARRIER
- SSTR - SINGLE SLOPE TRAFFIC RAILING
- SW - SIDEWALK
- WCR - WHEEL CHAIR RAMP
- VG - 4' VALLEY GUTTER
- MBGF - METAL BEAM GUARD FENCE
- TAS - TERMINAL ANCHOR SECTION
- ⊠ - CENTER OF 10' SSCB (TY 4)
- ⊠ - CENTER OF 70' SSCB (TY 3)
- DEL ASM TY B (D-SW)
- OBJ MRK ASM TY 3 (OM-3R)

△ B.M. & HORIZONTAL DATA

BM # US 281-23
ELEV = 98.73
STA = 636+10.30, 172.95' LT
3 1/4" TXDOT ALUMINUM DISK

BM # US 281-22
ELEV = 98.54
STA = 646+08.07, 171.87' LT
3 1/4" TXDOT ALUMINUM DISK

SHEET TOTALS

ITEM	EST.	FINAL	UNIT	DESCRIPTION
514	1150		LF	PERM CONC TRF BAR SGL SLP (TY 2)(H=42")
514	50		LF	PERM CONC TRF BAR SGL SLP (TY 4)(H=42")
529	600		LF	CONC GUTTER (VALLEY)(TY "B") (RET WALL A)

EXIST AND PROP PGL

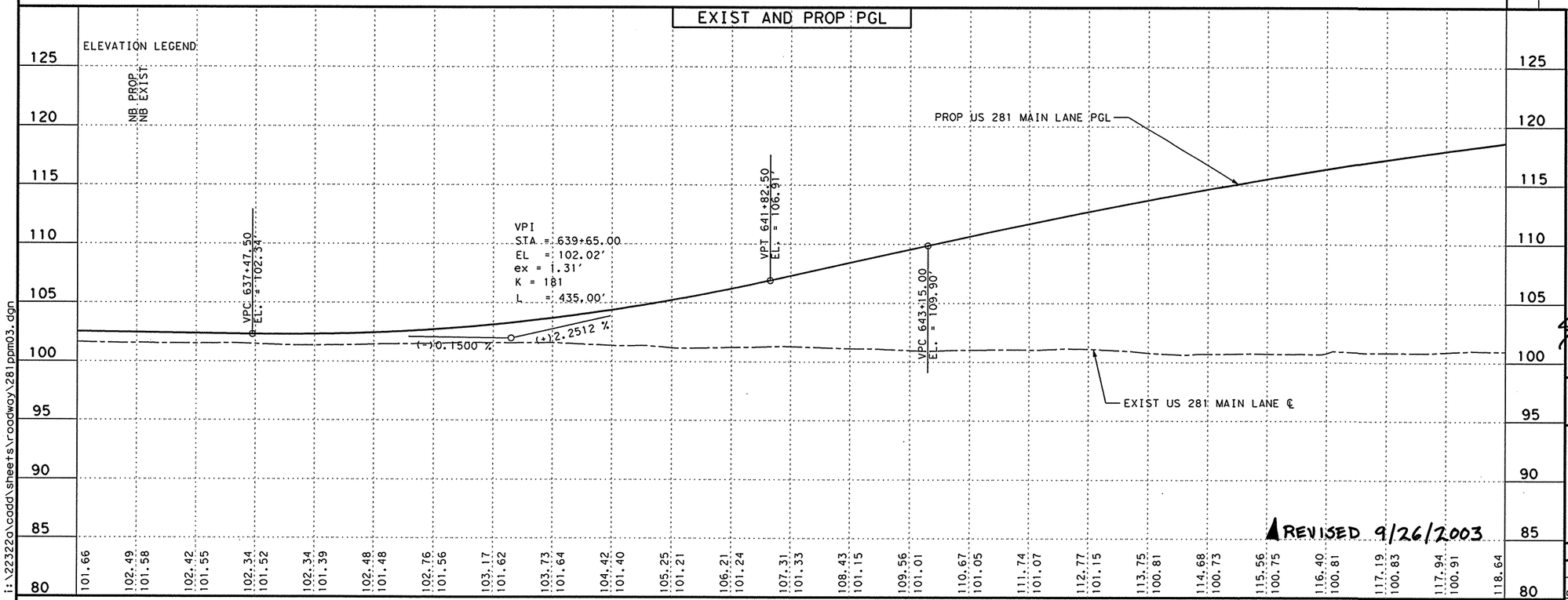

REVISED 9/26/2003

PROFILE LEGEND
PROP US 281 MAIN LANE P.G.L.
EXIST US 281 MAIN LANE NATURAL GRO
SSD STOPPING SIGHT DISTANCE

THE SEAL APPEARING ON THIS DOCUMENT WAS AUTHORIZED BY JAIME AGUILAR, P.E. 87606 ON 06/23/2003.

THE SEAL APPEARING ON THIS DOCUMENT WAS AUTHORIZED BY PHAISARN CWATANAPHOL, P.E. 89252 ON 06/23/2003.

STATE OF TEXAS
JAIME AGUILAR
87606
REGISTERED PROFESSIONAL ENGINEER

STATE OF TEXAS
PHAISARN CWATANAPHOL
89252
REGISTERED PROFESSIONAL ENGINEER

Parsons Brinckerhoff Quade & Douglas Inc.

Texas Department of Transportation

© 2003 by TxDOT

US 281
PLAN & PROFILE
NORTHBOUND MAINLANES

STA. 636+00 "BL1" TO
STA. 648+00 "BL1"

PLAN 1"= 100' HORIZ
PROFILE 1"= 10' VERT

SHEET 3 OF 20 | 281PPM03.DGN

DESIGNED: JA	FED. RD DIV. No.	STATE	FEDERAL AID PROJECT No.	HIGHWAY No.
CHECKED: JP	6	TEXAS		US 281

DRAWN:	STATE DISTRICT	COUNTY	CONTROL No.	SECTION No.	JOB No.	SHEET No.
CHECKED: JDH	PHARR	HIDALGO	0255	08	091	275

i:\22322o\cadd\sheets\roadway\281ppm03.dgn

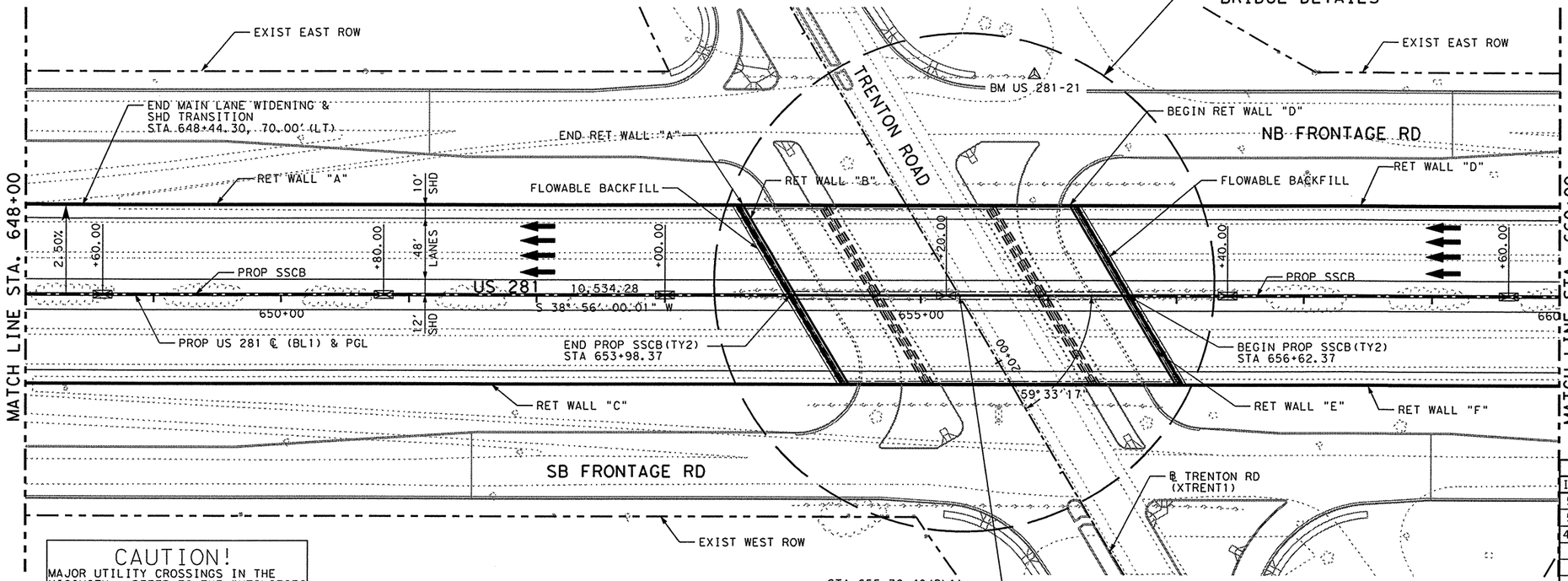

CAUTION!
MAJOR UTILITY CROSSINGS IN THE VICINITY. REFER TO THE "UTILITIES AND DRAINAGE PLAN & PROFILE" SHEETS FOR ADDITIONAL INFORMATION.

LEGEND:

MC	- MOUNTABLE CONC CURB
BC	- BARRIER CONC CURB
MCG	- MOUNTABLE CONC CURB & GUTTER
BCG	- BARRIER CONC CURB & GUTTER
RW	- RETAINING WALL
RR	- RIP RAP
SGT	- SINGLE GUARD RAIL TERMINAL
SSCB	- SINGLE SLOPE CONC BARRIER
SSTR	- SINGLE SLOPE TRAFFIC RAILING
SW	- SIDEWALK
WCR	- WHEEL CHAIR RAMP
VG	- 4' VALLEY GUTTER
MBGF	- METAL BEAM GUARD FENCE
TAS	- TERMINAL ANCHOR SECTION
⊠	- CENTER OF 10' SSCB (TY 4)
⊠	- CENTER OF 70' SSCB (TY 3)
—o	- DEL ASM TY B (D-SW)
—⊠	- OBJ MRK ASM TY 3 (OM-3R)

△ B.M. & HORIZONTAL DATA
BM # US 281-21
ELEV = 98.66
STA = 655+88.78, 173.20' LT
3 1/4" TXDOT ALUMINUM DISK

SHEET TOTALS

ITEM	EST.	FINAL	UNIT	DESCRIPTION
514	886		LF	PERM CONC TRF BAR SGL SLP (TY 2)(H=42")
514	50		LF	PERM CONC TRF BAR SGL SLP (TY 4)(H=42")
4438	206		CY	FLOWABLE BACKFILL

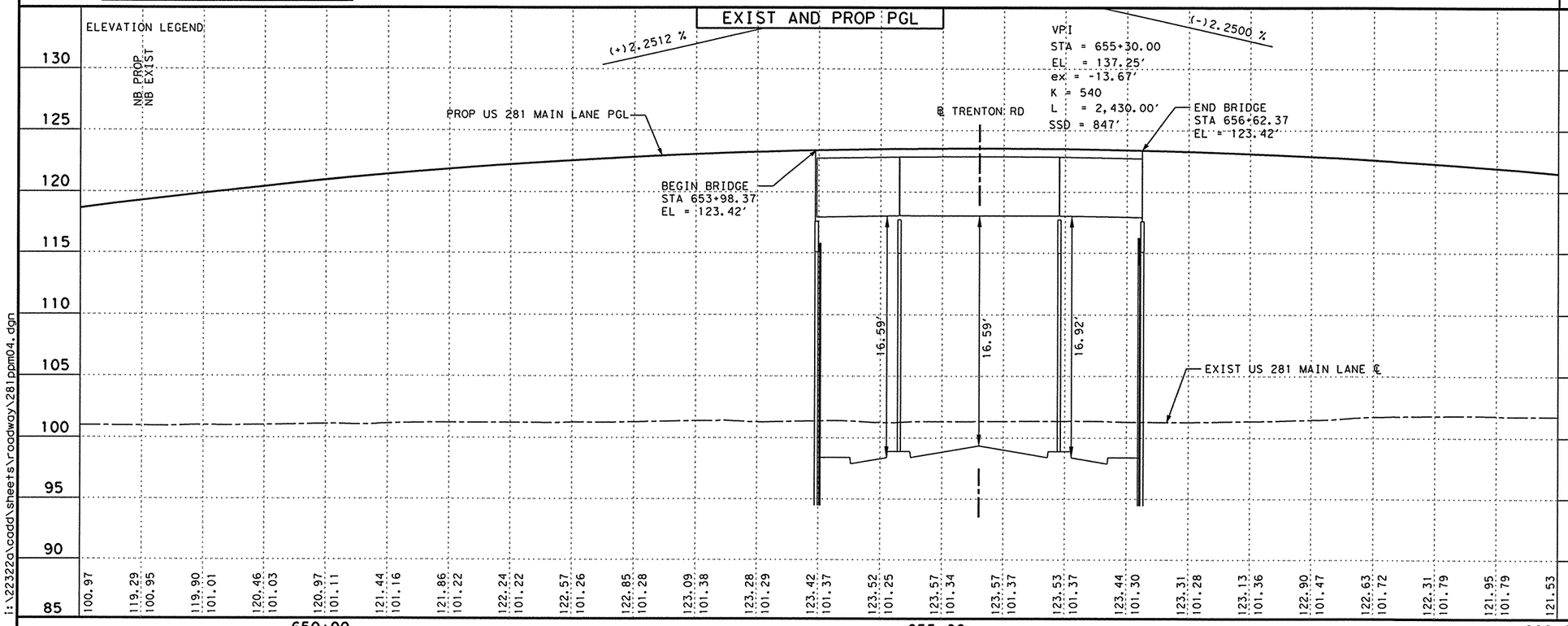

PROFILE LEGEND
PROP US 281 MAIN LANE P.G.L.
EXIST US 281 MAIN LANE NATURAL GROU
SSD STOPPING SIGHT DISTANCE

THE SEAL APPEARING ON THIS DOCUMENT WAS AUTHORIZED BY JAIME AGUILAR, P.E. 87606 ON 06/23/2003.

THE SEAL APPEARING ON THIS DOCUMENT WAS AUTHORIZED BY PHAISARN CWATANAPHOL, P.E. 89252 ON 06/23/2003.

STATE OF TEXAS · JAIME AGUILAR · 87606 · REGISTERED PROFESSIONAL ENGINEER

STATE OF TEXAS · PHAISARN CWATANAPHOL · 89252 · REGISTERED PROFESSIONAL ENGINEER

Parsons Brinckerhoff Quade & Douglas Inc.

Texas Department of Transportation

© 2003 by TxDOT

US 281
PLAN & PROFILE
NORTHBOUND MAINLANES

STA. 648+00 "BL1" TO
STA. 660+00 "BL1"

PLAN 1"= 100' HORIZ
PROFILE 1"= 10' VERT

SHEET 4 OF 20 — 281PPM04.DGN

DESIGNED: JA	FED. RD DIV. No.	STATE	FEDERAL AID PROJECT No.		HIGHWAY No.	
CHECKED: JP	6	TEXAS			US 281	
DRAWN:	STATE DISTRICT	COUNTY	CONTROL No.	SECTION No.	JOB No.	SHEET No.
CHECKED: JDH	PHARR	HIDALGO	0255	08	091	276

NAME
10:36:26 AM
06/23/2003
i:\22322\cadd\sheets\roadway\281ppm04.dgn

NAME
10:36:26 AM
06/23/2003

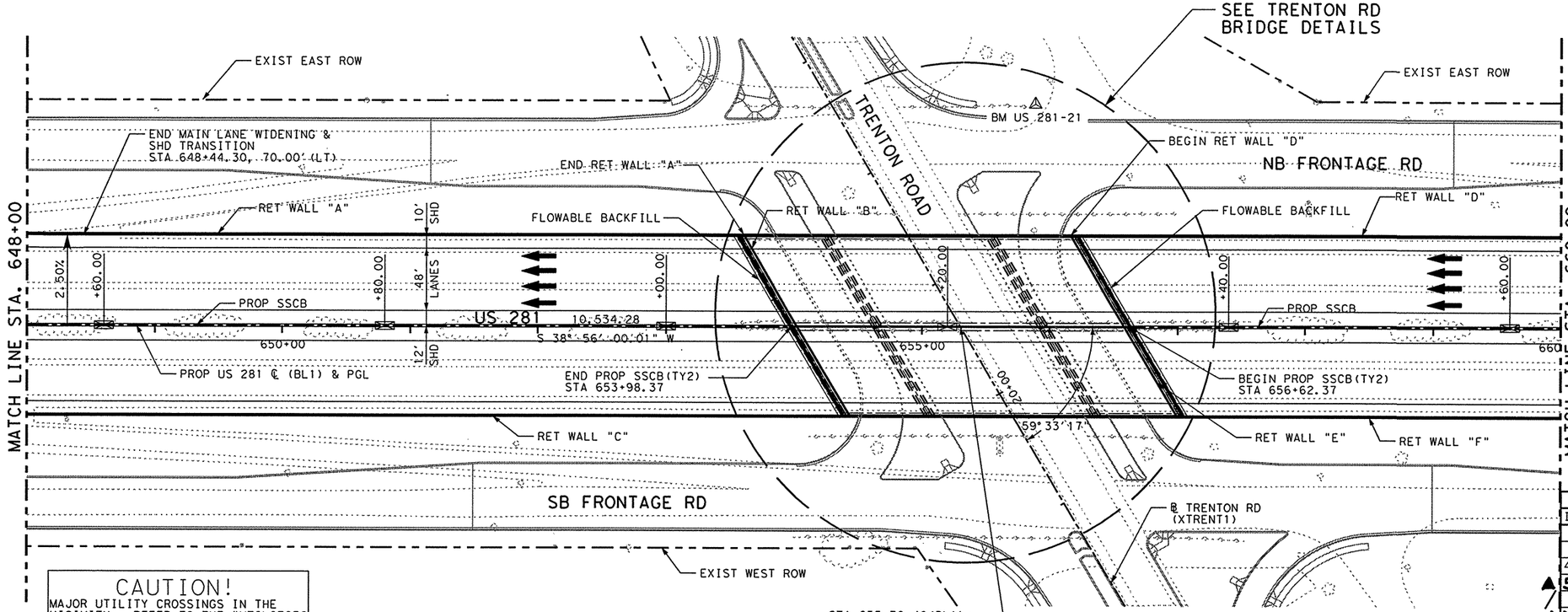

LEGEND:

MC	- MOUNTABLE CONC CURB
BC	- BARRIER CONC CURB
MCG	- MOUNTABLE CONC CURB & GUTTER
BCG	- BARRIER CONC CURB & GUTTER
RW	- RETAINING WALL
RR	- RIP RAP
SGT	- SINGLE GUARD RAIL TERMINAL
SSCB	- SINGLE SLOPE CONC BARRIER
SSTR	- SINGLE SLOPE TRAFFIC RAILING
SW	- SIDEWALK
WCR	- WHEEL CHAIR RAMP
VG	- 4' VALLEY GUTTER
MBGF	- METAL BEAM GUARD FENCE
TAS	- TERMINAL ANCHOR SECTION
⊠	- CENTER OF 10' SSCB (TY 4)
⊠	- CENTER OF 70' SSCB (TY 3)
⊣o	- DEL ASM TY B (D-SW)
⊣▨	- OBJ MRK ASM TY 3 (OM-3R)

CAUTION!
MAJOR UTILITY CROSSINGS IN THE VICINITY. REFER TO THE "UTILITIES AND DRAINAGE PLAN & PROFILE" SHEETS FOR ADDITIONAL INFORMATION.

△ B.M. & HORIZONTAL DATA
BM # US 281-21
ELEV = 98.66
STA = 655+88.78, 173.20' LT
3 1/4" TXDOT ALUMINUM DISK

SHEET TOTALS

ITEM	EST.	FINAL	UNIT	DESCRIPTION
514	886		LF	PERM CONC TRF BAR SGL SLP (TY 2)(H=42")
514	50		LF	PERM CONC TRF BAR SGL SLP (TY 4)(H=42")
4438	206		CY	FLOWABLE BACKFILL
▲529	554		LF	CONC GUTTER (VALLEY)(TY "B") (RET WALL A)
▲529	374		LF	CONC GUTTER (VALLEY)(TY "B") (RET WALL D)

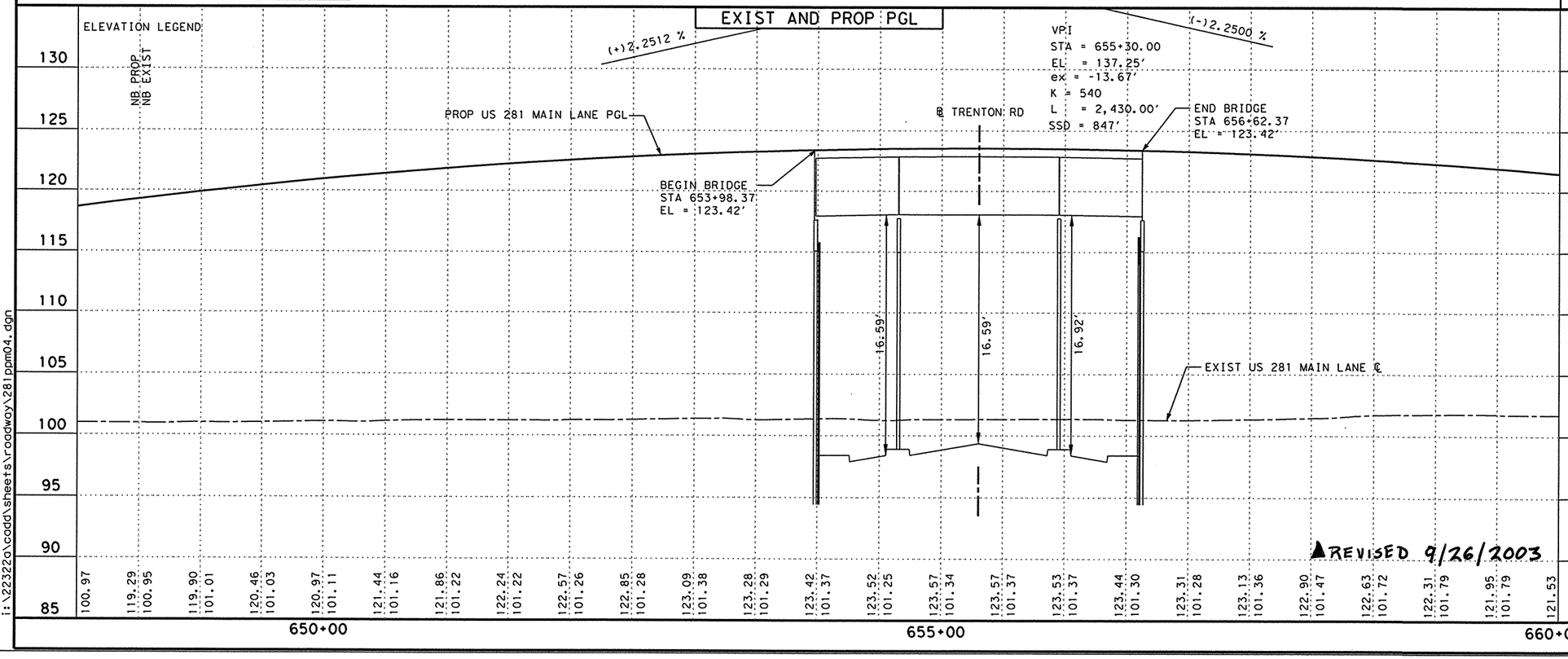

▲REVISED 9/26/2003

PROFILE LEGEND
PROP US 281 MAIN LANE P.G.L.
EXIST US 281 MAIN LANE NATURAL GROU
SSD STOPPING SIGHT DISTANCE

THE SEAL APPEARING ON THIS DOCUMENT WAS AUTHORIZED BY JAIME AGUILAR, P.E. 87606 ON 06/23/2003.

THE SEAL APPEARING ON THIS DOCUMENT WAS AUTHORIZED BY PHAISARN CHATANAPHOL, P.E. 89252 ON 06/23/2003.

STATE OF TEXAS · JAIME AGUILAR · 87606 · REGISTERED PROFESSIONAL ENGINEER

STATE OF TEXAS · PHAISARN CHATANAPHOL · 89252 · REGISTERED PROFESSIONAL ENGINEER

Parsons Brinckerhoff Quade & Douglas Inc.

Texas Department of Transportation

© 2003 by TxDOT

US 281
PLAN & PROFILE
NORTHBOUND MAINLANES

STA. 648+00 "BL1" TO
STA. 660+00 "BL1"

PLAN 1"= 100' HORIZ
PROFILE 1"= 10' VERT

SHEET 4 OF 20 | 281PPM04.DGN

DESIGNED: JA	FED. RD DIV. No.	STATE	FEDERAL AID PROJECT No.	HIGHWAY No.
CHECKED: JP	6	TEXAS		US 281

DRAWN:	STATE DISTRICT	COUNTY	CONTROL No.	SECTION No.	JOB No.	SHEET No.
CHECKED: JDH	PHARR	HIDALGO	0255	08	091	276

I:\22322G\cadd\sheets\roadway\281ppm04.dgn

NAME
10:36:42 AM
06/23/2003

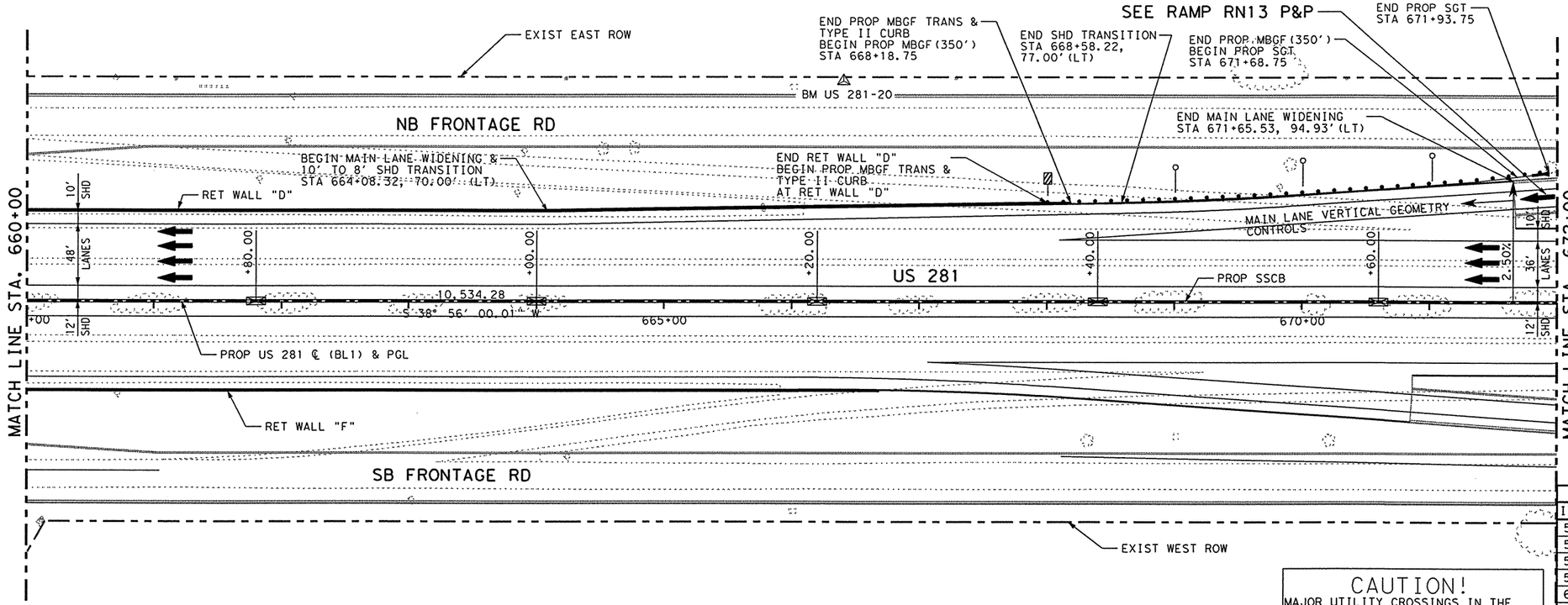

LEGEND:

- MC - MOUNTABLE CONC CURB
- BC - BARRIER CONC CURB
- MCG - MOUNTABLE CONC CURB & GUTTER
- BCG - BARRIER CONC CURB & GUTTER
- RW - RETAINING WALL
- RR - RIP RAP
- SGT - SINGLE GUARD RAIL TERMINAL
- SSCB - SINGLE SLOPE CONC BARRIER
- SSTR - SINGLE SLOPE TRAFFIC RAILING
- SW - SIDEWALK
- WCR - WHEEL CHAIR RAMP
- VG - 4' VALLEY GUTTER
- MBGF - METAL BEAM GUARD FENCE
- TAS - TERMINAL ANCHOR SECTION
- ⊠ - CENTER OF 10' SSCB (TY 4)
- ⊠ - CENTER OF 70' SSCB (TY 3)
- —o — DEL ASM TY B (D-SW)
- —▨ — OBJ MRK ASM TY 3 (OM-3R)

△ B.M. & HORIZONTAL DATA
BM # US 281-20
ELEV = 98.51
STA = 666+40.54, 172.14' LT
3 1/4" TXDOT ALUMINUM DISK

SHEET TOTALS

ITEM	EST.	FINAL	UNIT	DESCRIPTION
514	1150		LF	PERM CONC TRF BAR SGL SLP (TY 2) (H=42")
514	50		LF	PERM CONC TRF BAR SGL SLP (TY 4) (H=42")
540	350		LF	MTL BEAM GD FEN (12 GA) (TIM POST)
540	1		EA	MTL BEAM GD FEN TRANS (12 GA)
658	3		EA	DEL ASM TY B(D-SW)
658	1		EA	OBJ MRK ASM TY 3 (OM-3R)
5819	1		EA	SINGLE GDRAIL TERM (TY II)

CAUTION!
MAJOR UTILITY CROSSINGS IN THE VICINITY. REFER TO THE "UTILITIES AND DRAINAGE PLAN & PROFILE" SHEETS FOR ADDITIONAL INFORMATION.

EXIST AND PROP PGL

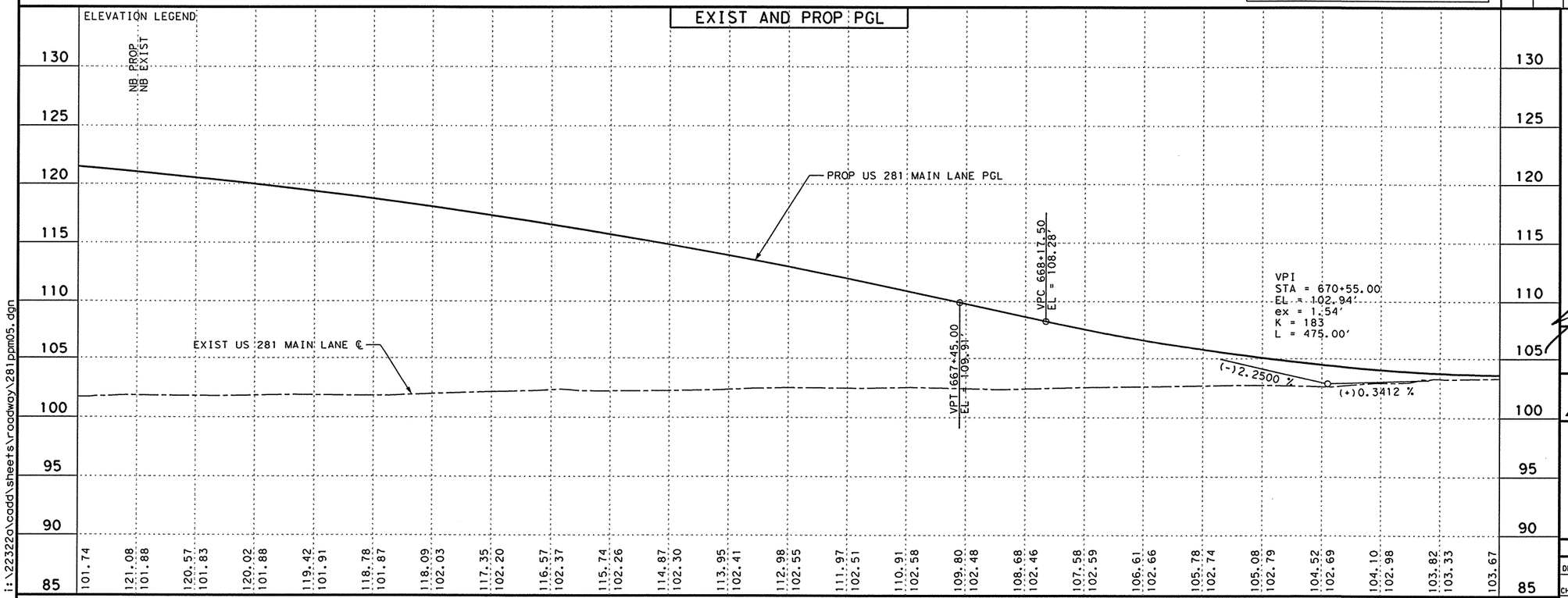

PROFILE LEGEND
- PROP US 281 MAIN LANE P.G.L.
- EXIST US 281 MAIN LANE NATURAL GROU
- SSD STOPPING SIGHT DISTANCE

THE SEAL APPEARING ON THIS DOCUMENT WAS AUTHORIZED BY JAIME AGUILAR, P.E. 87606 ON 06/23/2003.

THE SEAL APPEARING ON THIS DOCUMENT WAS AUTHORIZED BY PHAISARN CWATANAPHOL, P.E. 89252 ON 06/23/2003.

STATE OF TEXAS · JAIME AGUILAR · 87606 · REGISTERED PROFESSIONAL ENGINEER

STATE OF TEXAS · PHAISARN CWATANAPHOL · 89252 · REGISTERED PROFESSIONAL ENGINEER

Parsons Brinckerhoff Quade & Douglas Inc.

Texas Department of Transportation

© 2003 by TxDOT

US 281
PLAN & PROFILE
NORTHBOUND MAINLANES

STA. 660+00 "BL1" TO
STA. 672+00 "BL1"

PLAN 1"= 100' HORIZ
PROFILE 1"= 10' VERT

SHEET 5 OF 20 | 281PPM05.DGN

DESIGNED: JA	FED. RD DIV. No.	STATE	FEDERAL AID PROJECT No.			HIGHWAY No.
CHECKED: JP	6	TEXAS				US 281
DRAWN:	STATE DISTRICT	COUNTY	CONTROL No.	SECTION No.	JOB No.	SHEET No.
CHECKED: JDH	PHARR	HIDALGO	0255	08	091	277

i:\22322o\cadd\sheets\roadway\281ppm05.dgn

NAME
10:36:42 AM
06/23/2003

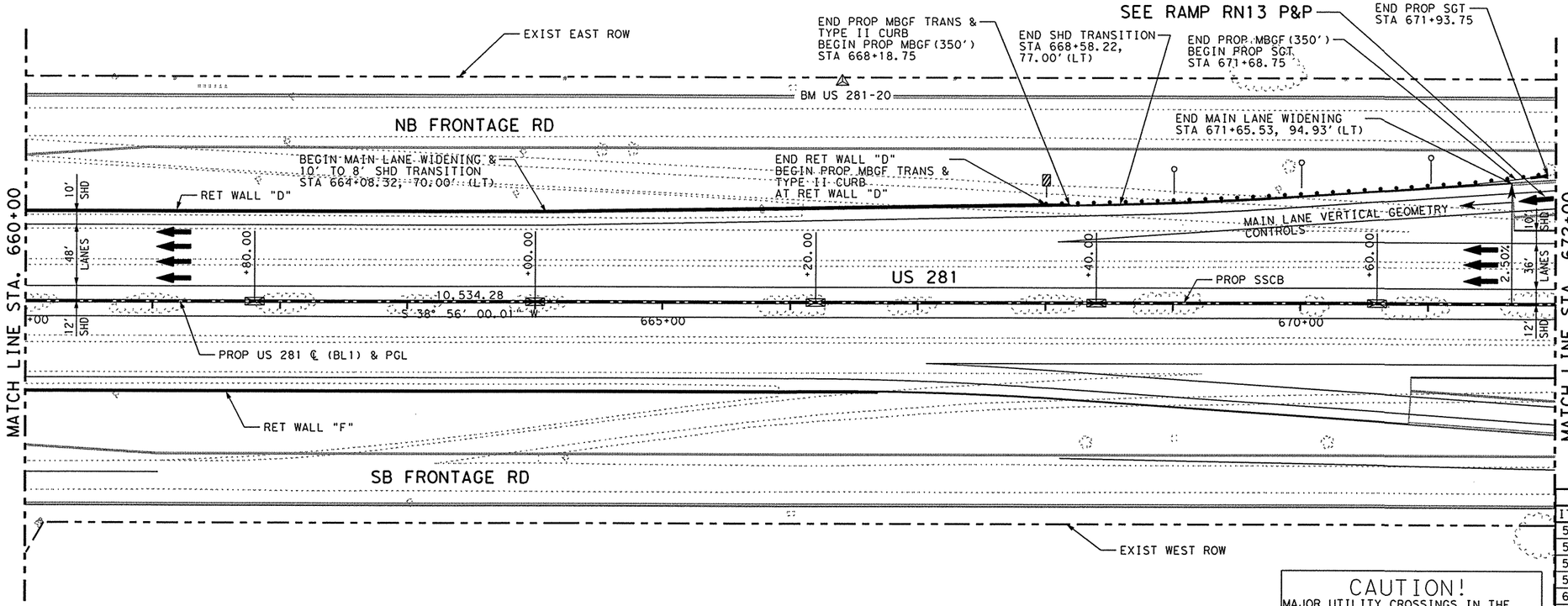

LEGEND:

- MC - MOUNTABLE CONC CURB
- BC - BARRIER CONC CURB
- MCG - MOUNTABLE CONC CURB & GUTTER
- BCG - BARRIER CONC CURB & GUTTER
- RW - RETAINING WALL
- RR - RIP RAP
- SGT - SINGLE GUARD RAIL TERMINAL
- SSCB - SINGLE SLOPE CONC BARRIER
- SSTR - SINGLE SLOPE TRAFFIC RAILING
- SW - SIDEWALK
- WCR - WHEEL CHAIR RAMP
- VG - 4' VALLEY GUTTER
- MBGF - METAL BEAM GUARD FENCE
- TAS - TERMINAL ANCHOR SECTION
- ⊠ - CENTER OF 10' SSCB (TY 4)
- ▭ - CENTER OF 70' SSCB (TY 3)
- —|—○ - DEL ASM TY B (D-SW)
- —|—▨ - OBJ MRK ASM TY 3 (OM-3R)

△ B.M. & HORIZONTAL DATA
BM # US 281-20
ELEV = 98.51
STA = 666+40.54, 172.14' LT
3 1/4" TXDOT ALUMINUM DISK

SHEET TOTALS

ITEM	EST.	FINAL	UNIT	DESCRIPTION
514	1150		LF	PERM CONC TRF BAR SGL SLP (TY 2)(H=42")
514	50		LF	PERM CONC TRF BAR SGL SLP (TY 4)(H=42")
540	350		LF	MTL BEAM GD FEN (12 GA)(TIM POST)
540	1		EA	MTL BEAM GD FEN TRANS (12 GA)
658	3		EA	DEL ASM TY B(D-SW)
658	1		EA	OBJ MRK ASM TY 3 (OM-3R)
5819	1		EA	SINGLE GDRAIL TERM (TY II)
529375			LF	CONC GUTTER(VALLEY)(TY "B") (RET WALL D)

CAUTION!
MAJOR UTILITY CROSSINGS IN THE VICINITY. REFER TO THE "UTILITIES AND DRAINAGE PLAN & PROFILE" SHEETS FOR ADDITIONAL INFORMATION.

EXIST AND PROP PGL

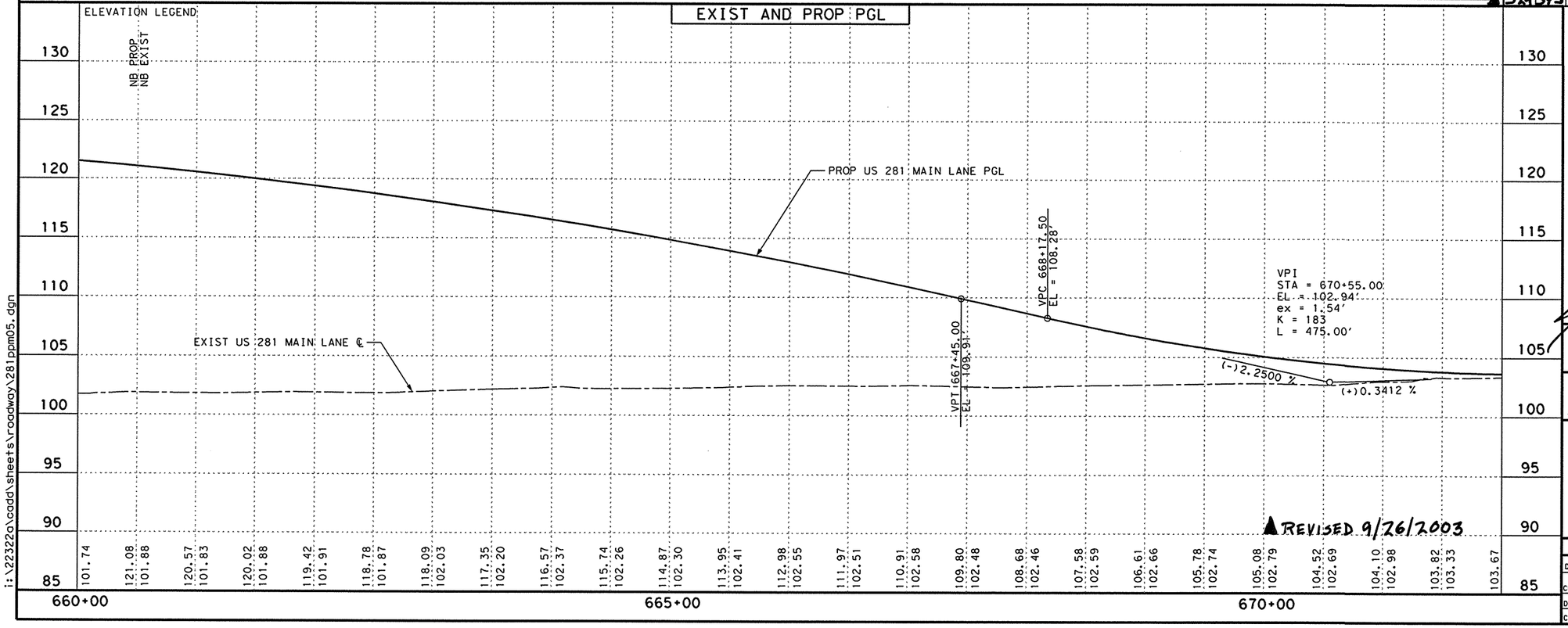

▲ REVISED 9/26/2003

PROFILE LEGEND
——— PROP US 281 MAIN LANE P.G.L.
– – – – EXIST US 281 MAIN LANE NATURAL GROU
SSD STOPPING SIGHT DISTANCE

THE SEAL APPEARING ON THIS DOCUMENT WAS AUTHORIZED BY JAIME AGUILAR, P.E. 87606 ON 06/23/2003.

THE SEAL APPEARING ON THIS DOCUMENT WAS AUTHORIZED BY PHAISARN CWATANAPHOL, P.E. 89252 ON 06/23/2003.

STATE OF TEXAS · JAIME AGUILAR · 87606 · REGISTERED PROFESSIONAL ENGINEER

STATE OF TEXAS · PHAISARN CWATANAPHOL · 89252 · REGISTERED PROFESSIONAL ENGINEER

Parsons Brinckerhoff Quade & Douglas Inc.

Texas Department of Transportation

© 2003 by TxDOT

US 281
PLAN & PROFILE
NORTHBOUND MAINLANES

STA. 660+00 "BL1" TO
STA. 672+00 "BL1"

PLAN 1"= 100' HORIZ
PROFILE 1"= 10' VERT

SHEET 5 OF 20 | 281PPM05.DGN

DESIGNED: JA	FED. RD DIV. No.	STATE	FEDERAL AID PROJECT No.			HIGHWAY No.
CHECKED: JP	6	TEXAS				US 281
DRAWN:	STATE DISTRICT	COUNTY	CONTROL No.	SECTION No.	JOB No.	SHEET No.
CHECKED: JDH	PHARR	HIDALGO	0255	08	091	277

i:\22322a\cadd\sheets\roadway\281ppm05.dgn

NAME
10:36:57 AM
06/23/2003

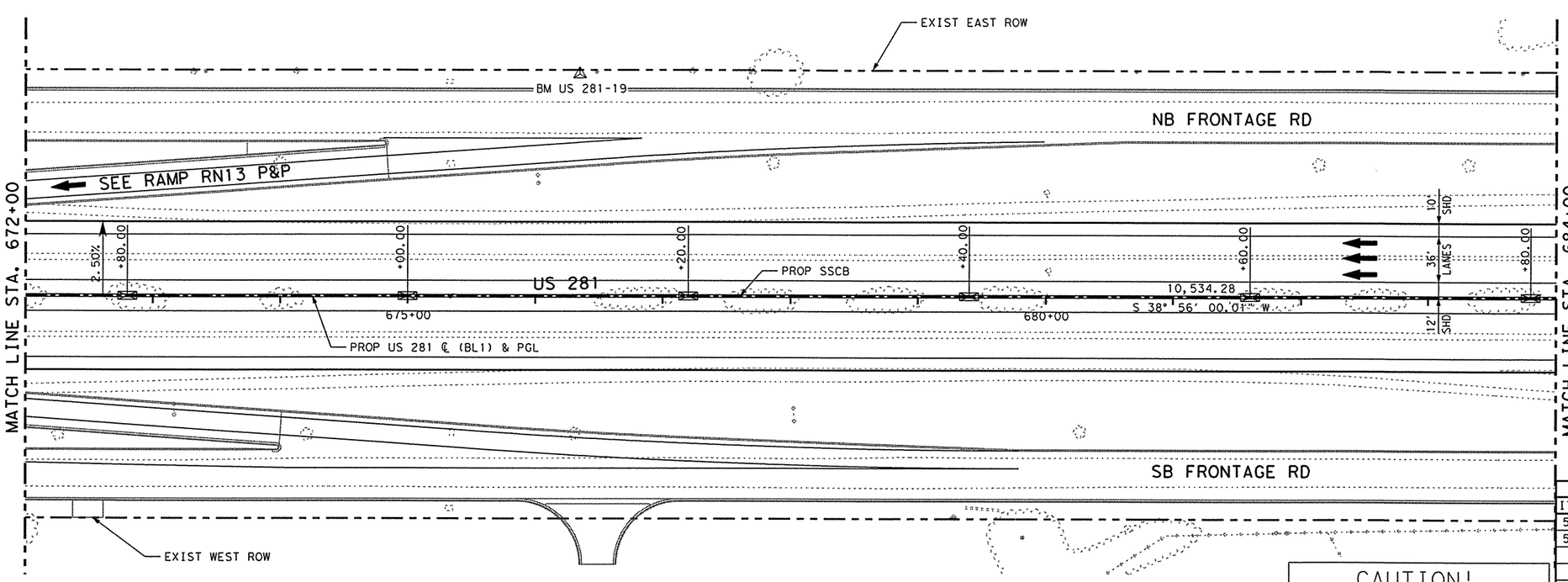

LEGEND:

MC	- MOUNTABLE CONC CURB
BC	- BARRIER CONC CURB
MCG	- MOUNTABLE CONC CURB & GUTTER
BCG	- BARRIER CONC CURB & GUTTER
RW	- RETAINING WALL
RR	- RIP RAP
SGT	- SINGLE GUARD RAIL TERMINAL
SSCB	- SINGLE SLOPE CONC BARRIER
SSTR	- SINGLE SLOPE TRAFFIC RAILING
SW	- SIDEWALK
WCR	- WHEEL CHAIR RAMP
VG	- 4' VALLEY GUTTER
MBGF	- METAL BEAM GUARD FENCE
TAS	- TERMINAL ANCHOR SECTION
⊠	- CENTER OF 10' SSCB (TY 4)
⊠	- CENTER OF 70' SSCB (TY 3)
	- DEL ASM TY B (D-SW)
	- OBJ MRK ASM TY 3 (OM-3R)

△ B.M. & HORIZONTAL DATA
BM # US 281-19
ELEV = 101.97
STA = 676+34.62, 172.09' LT
3 1/4" TXDOT ALUMINUM DISK

SHEET TOTALS

ITEM	EST.	FINAL	UNIT	DESCRIPTION
514	1140		LF	PERM CONC TRF BAR SGL SLP (TY 2)(H=42")
514	60		LF	PERM CONC TRF BAR SGL SLP (TY 4)(H=42")

CAUTION!
MAJOR UTILITY CROSSINGS IN THE VICINITY. REFER TO THE "UTILITIES AND DRAINAGE PLAN & PROFILE" SHEETS FOR ADDITIONAL INFORMATION.

EXIST AND PROP PGL

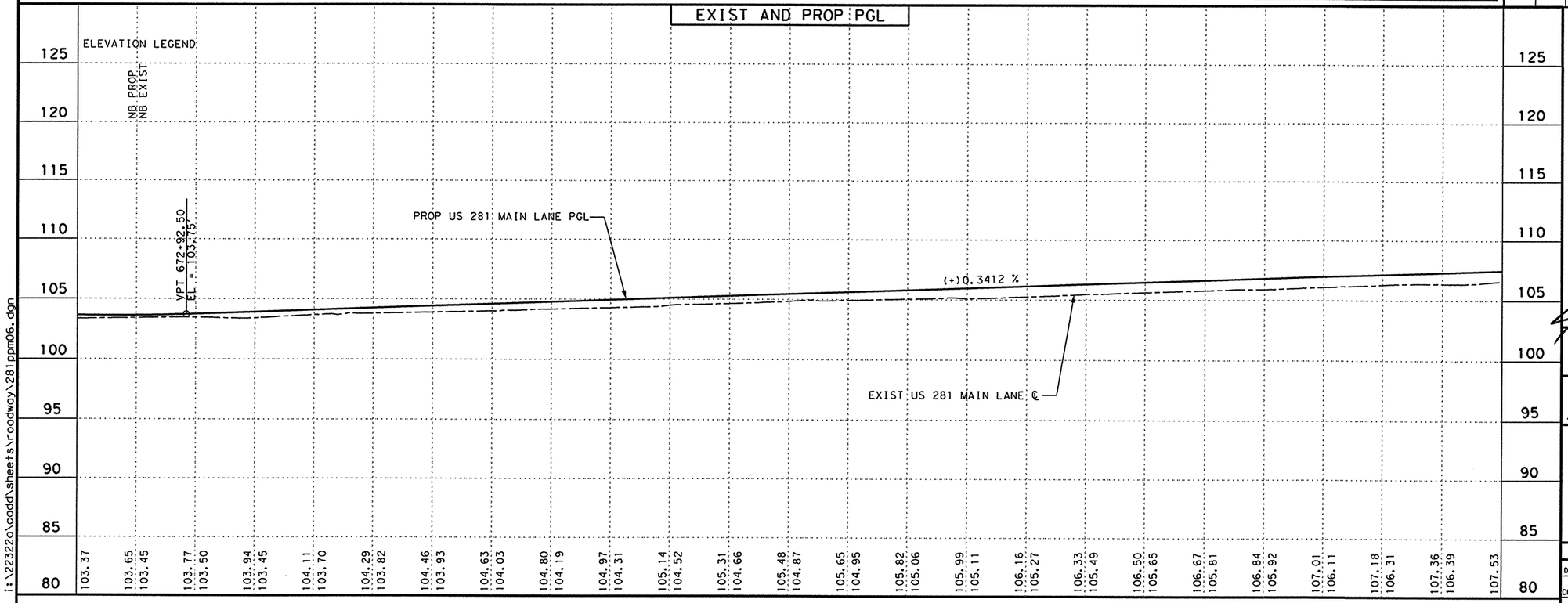

PROFILE LEGEND
PROP US 281 MAIN LANE P.G.L.
EXIST US 281 MAIN LANE NATURAL GROU
SSD STOPPING SIGHT DISTANCE

THE SEAL APPEARING ON THIS DOCUMENT WAS AUTHORIZED BY JAIME AGUILAR, P.E. 87606 ON 06/23/2003.

THE SEAL APPEARING ON THIS DOCUMENT WAS AUTHORIZED BY PHAISARN CWATANAPHOL, P.E. 89252 ON 06/23/2003.

STATE OF TEXAS
JAIME AGUILAR
87606
REGISTERED PROFESSIONAL ENGINEER

STATE OF TEXAS
PHAISARN CWATANAPHOL
89252
REGISTERED PROFESSIONAL ENGINEER

Parsons Brinckerhoff Quade & Douglas Inc.

Texas Department of Transportation

© 2003 by TxDOT

US 281
PLAN & PROFILE
NORTHBOUND MAINLANES

STA. 672+00 "BL1" TO
STA. 684+00 "BL1"

PLAN 1"= 100' HORIZ
PROFILE 1"= 10' VERT

SHEET 6 OF 20 | 281PPM06.DGN

DESIGNED: JA	FED. RD DIV. NO.	STATE	FEDERAL AID PROJECT No.	HIGHWAY No.
CHECKED: JP	6	TEXAS		US 281

DRAWN:	STATE DISTRICT	COUNTY	CONTROL No.	SECTION No.	JOB No.	SHEET No.
CHECKED: JDH	PHARR	HIDALGO	0255	08	091	278

i:\22322a\cadd\sheets\roadway\281ppm06.dgn

NAME
10:37:13 AM
06/23/2003

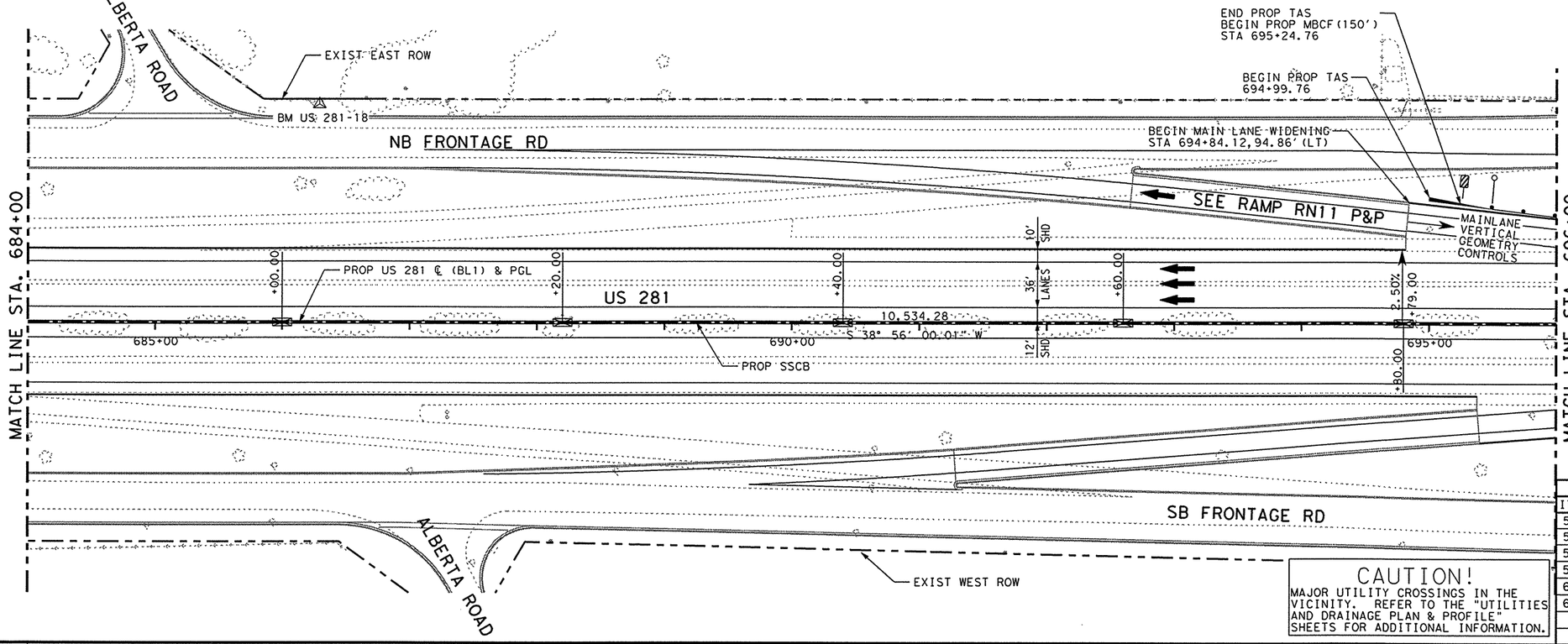

LEGEND:

MC	- MOUNTABLE CONC CURB
BC	- BARRIER CONC CURB
MCG	- MOUNTABLE CONC CURB & GUTTER
BCG	- BARRIER CONC CURB & GUTTER
RW	- RETAINING WALL
RR	- RIP RAP
SGT	- SINGLE GUARD RAIL TERMINAL
SSCB	- SINGLE SLOPE CONC BARRIER
SSTR	- SINGLE SLOPE TRAFFIC RAILING
SW	- SIDEWALK
WCR	- WHEEL CHAIR RAMP
VG	- 4' VALLEY GUTTER
MBGF	- METAL BEAM GUARD FENCE
TAS	- TERMINAL ANCHOR SECTION
⊠	- CENTER OF 10' SSCB (TY 4)
⊠	- CENTER OF 70' SSCB (TY 3)
—o	- DEL ASM TY B (D-SW)
—▨	- OBJ MRK ASM TY 3 (OM-3R)

△ B.M. & HORIZONTAL DATA
BM # US 281-18
ELEV = 105.52
STA = 686+28.97, 170.87' LT
3 1/4" TXDOT ALUMINUM DISK

SHEET TOTALS

ITEM	EST.	FINAL	UNIT	DESCRIPTION
514	1150		LF	PERM CONC TRF BAR SGL SLP (TY 2) (H=42")
514	50		LF	PERM CONC TRF BAR SGL SLP (TY 4) (H=42")
540	75		LF	MTL BEAM GD FEN (12 GA) (TIM POST)
540	1		EA	TERM ANCH SECT (12 GA)
658	1		EA	DEL ASM TY B(D-SW)
658	1		EA	OBJ MRK ASM TY 3(OM-3R)

CAUTION!
MAJOR UTILITY CROSSINGS IN THE VICINITY. REFER TO THE "UTILITIES AND DRAINAGE PLAN & PROFILE" SHEETS FOR ADDITIONAL INFORMATION.

EXIST AND PROP PGL

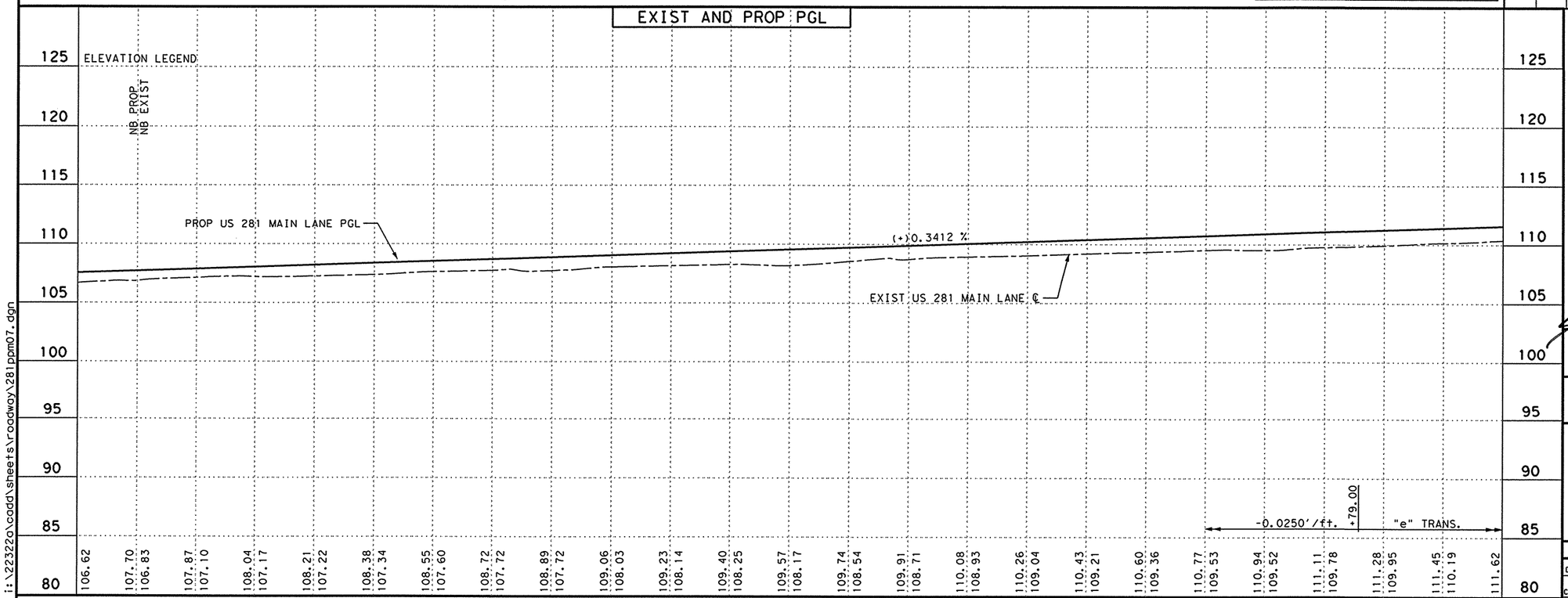

PROFILE LEGEND
PROP US 281 MAIN LANE P.G.L.
EXIST US 281 MAIN LANE NATURAL GROU
SSD STOPPING SIGHT DISTANCE

THE SEAL APPEARING ON THIS DOCUMENT WAS AUTHORIZED BY JAIME AGUILAR, P.E. 87606 ON 06/23/2003.

THE SEAL APPEARING ON THIS DOCUMENT WAS AUTHORIZED BY PHAISARN CWATANAPHOL, P.E. 89252 ON 06/23/2003.

STATE OF TEXAS · JAIME AGUILAR · 87606 · REGISTERED PROFESSIONAL ENGINEER

STATE OF TEXAS · PHAISARN CWATANAPHOL · 89252 · REGISTERED PROFESSIONAL ENGINEER

Parsons Brinckerhoff Quade & Douglas Inc.

Texas Department of Transportation

© 2003 by TxDOT

US 281
PLAN & PROFILE
NORTHBOUND MAINLANES

STA. 684+00 "BL1" TO
STA. 696+00 "BL1"

PLAN 1"= 100' HORIZ
PROFILE 1"= 10' VERT

SHEET 7 OF 20 | 281PPM07.DGN

DESIGNED: JA	FED. RD DIV. No.	STATE	FEDERAL AID PROJECT No.		HIGHWAY No.
CHECKED: JP	6	TEXAS			US 281
DRAWN:	STATE DISTRICT	COUNTY	CONTROL No.	SECTION No.	JOB No. / SHEET No.
CHECKED: JDH	PHARR	HIDALGO	0255	08	091 / 279

i:\22322a\cadd\sheets\roadway\281ppm07.dgn

NAME

10:37:29 AM

06/23/2003

i:\22322o\cadd\sheets\roadway\281ppm08.dgn

CAUTION!

MAJOR UTILITY CROSSINGS IN THE VICINITY. REFER TO THE "UTILITIES AND DRAINAGE PLAN & PROFILE" SHEETS FOR ADDITIONAL INFORMATION.

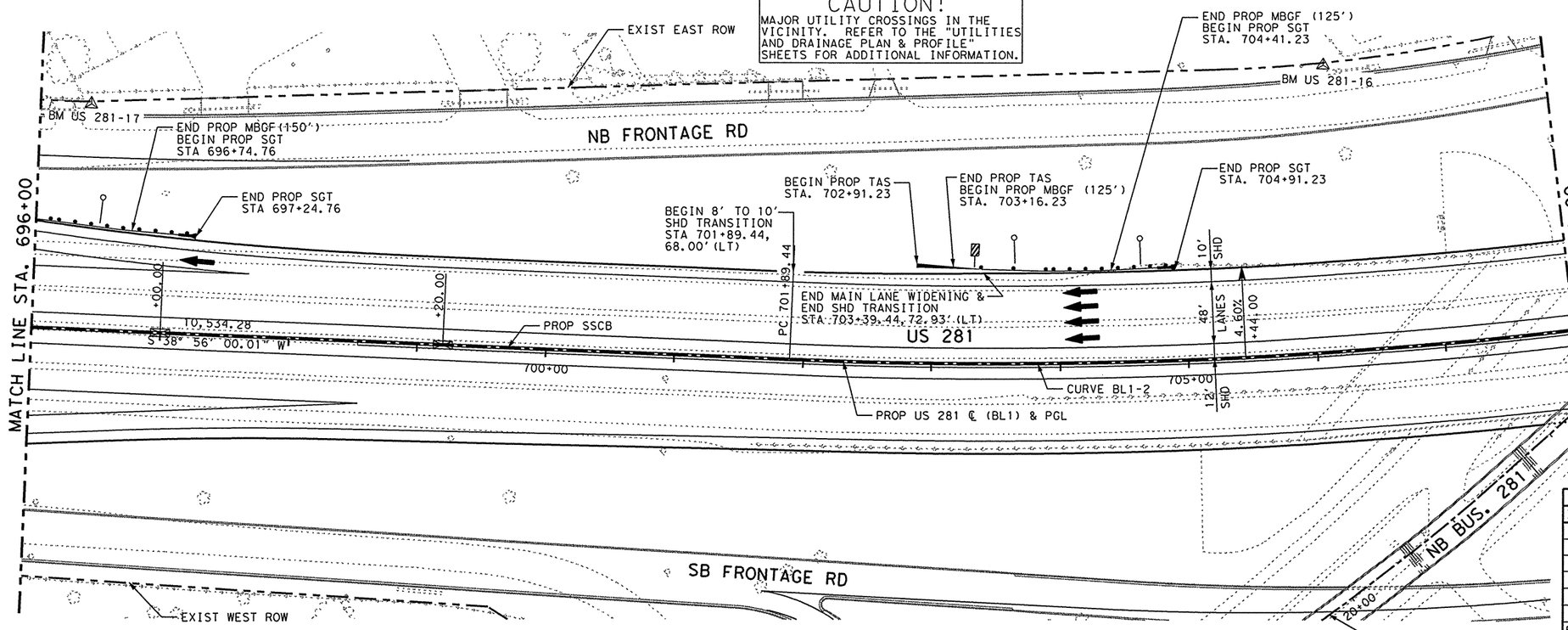

LEGEND:

- MC - MOUNTABLE CONC CURB
- BC - BARRIER CONC CURB
- MCG - MOUNTABLE CONC CURB & GUTTER
- BCG - BARRIER CONC CURB & GUTTER
- RW - RETAINING WALL
- RR - RIP RAP
- SGT - SINGLE GUARD RAIL TERMINAL
- SSCB - SINGLE SLOPE CONC BARRIER
- SSTR - SINGLE SLOPE TRAFFIC RAILING
- SW - SIDEWALK
- WCR - WHEEL CHAIR RAMP
- VG - 4' VALLEY GUTTER
- MBGF - METAL BEAM GUARD FENCE
- TAS - TERMINAL ANCHOR SECTION
- ⊠ - CENTER OF 10' SSCB (TY 4)
- ▭ - CENTER OF 70' SSCB (TY 3)
- —o— - DEL ASM TY B (D-SW)
- —⊠— - OBJ MRK ASM TY 3 (OM-3R)

⚠ B.M. & HORIZONTAL DATA

BM # US 281-17
ELEV = 105.58
STA = 696+39.23, 173.41' LT
3 1/4" TXDOT ALUMINUM DISK

BM # US 281-16
ELEV = 103.82
STA = 706+19.13, 220.37' LT
3 1/4" TXDOT ALUMINUM DISK

SHEET TOTALS

ITEM	EST.	FINAL	UNIT	DESCRIPTION
514	1180		LF	PERM CONC TRF BAR SGL SLP (TY 2)(H=42")
514	20		LF	PERM CONC TRF BAR SGL SLP (TY 4)(H=42")
540	200		LF	MTL BEAM GD FEN (12 GA)(TIM POST)
540	1		EA	TERM ANCH SECT (12 GA)
658	3		EA	DEL ASM TY B(D-SW)
658	1		EA	OBJ MRK ASM TY 3(OM-3R)
5819	2		EA	SINGLE GDRAIL TERM (TY II)

EXIST AND PROP PGL

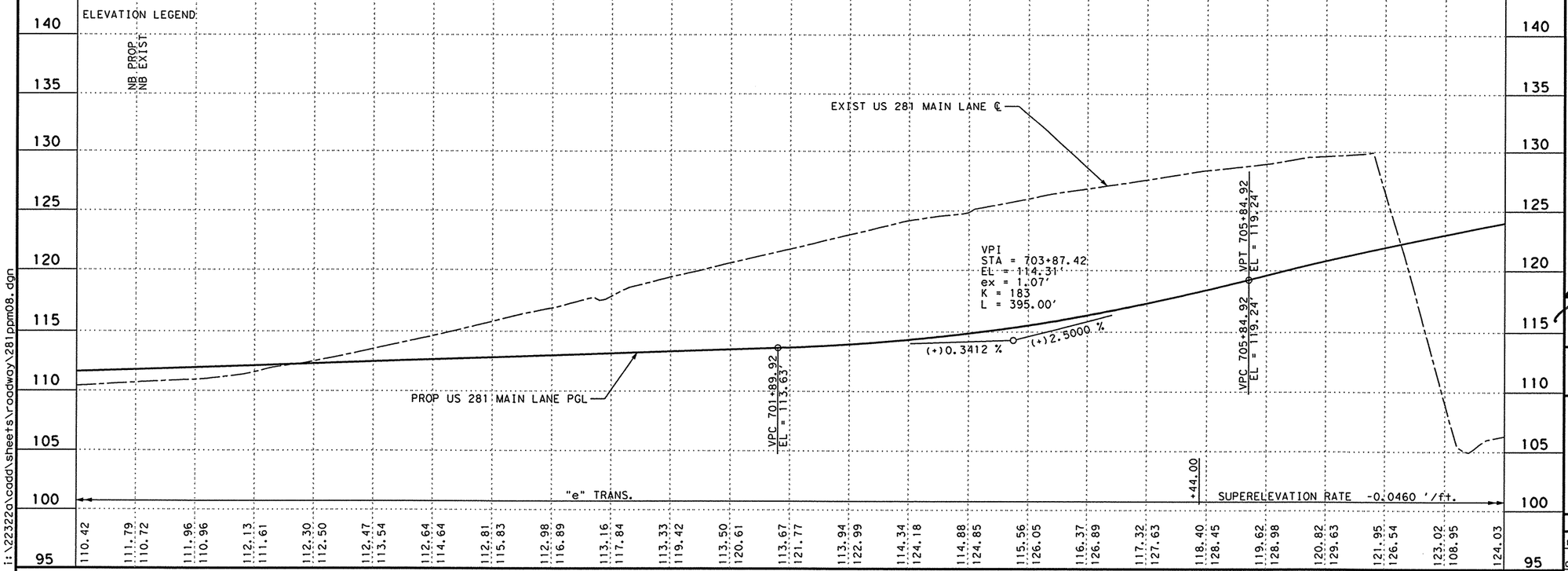

PROFILE LEGEND

- PROP US 281 MAIN LANE P.G.L.
- EXIST US 281 MAIN LANE NATURAL GROU
- SSD STOPPING SIGHT DISTANCE

THE SEAL APPEARING ON THIS DOCUMENT WAS AUTHORIZED BY JAIME AGUILAR, P.E. 87606 ON 06/23/2003.

THE SEAL APPEARING ON THIS DOCUMENT WAS AUTHORIZED BY PHAISARN CWATANAPHOL, P.E. 89252 ON 06/23/2003.

STATE OF TEXAS — JAIME AGUILAR — 87606 — REGISTERED PROFESSIONAL ENGINEER

STATE OF TEXAS — PHAISARN CWATANAPHOL — 89252 — REGISTERED PROFESSIONAL ENGINEER

Parsons Brinckerhoff Quade & Douglas Inc.

Texas Department of Transportation

© 2003 by TxDOT

US 281
PLAN & PROFILE
NORTHBOUND MAINLANES

STA. 696+00 "BL1" TO
STA. 708+00 "BL1"

PLAN 1"= 100' HORIZ
PROFILE 1"= 10' VERT

SHEET 8 OF 20 | 281PPM08.DGN

DESIGNED: JA	FED. RD DIV. No.	STATE	FEDERAL AID PROJECT No.			HIGHWAY No.
CHECKED: JP	6	TEXAS				US 281
DRAWN:	STATE DISTRICT	COUNTY	CONTROL No.	SECTION No.	JOB No.	SHEET No.
CHECKED: JDH	PHARR	HIDALGO	0255	08	091	280

Phaisarn C.

09:12:24 AM

09/11/2003

I:\22322e\CADD\Sheets\Roadway\281ppm08.dgn

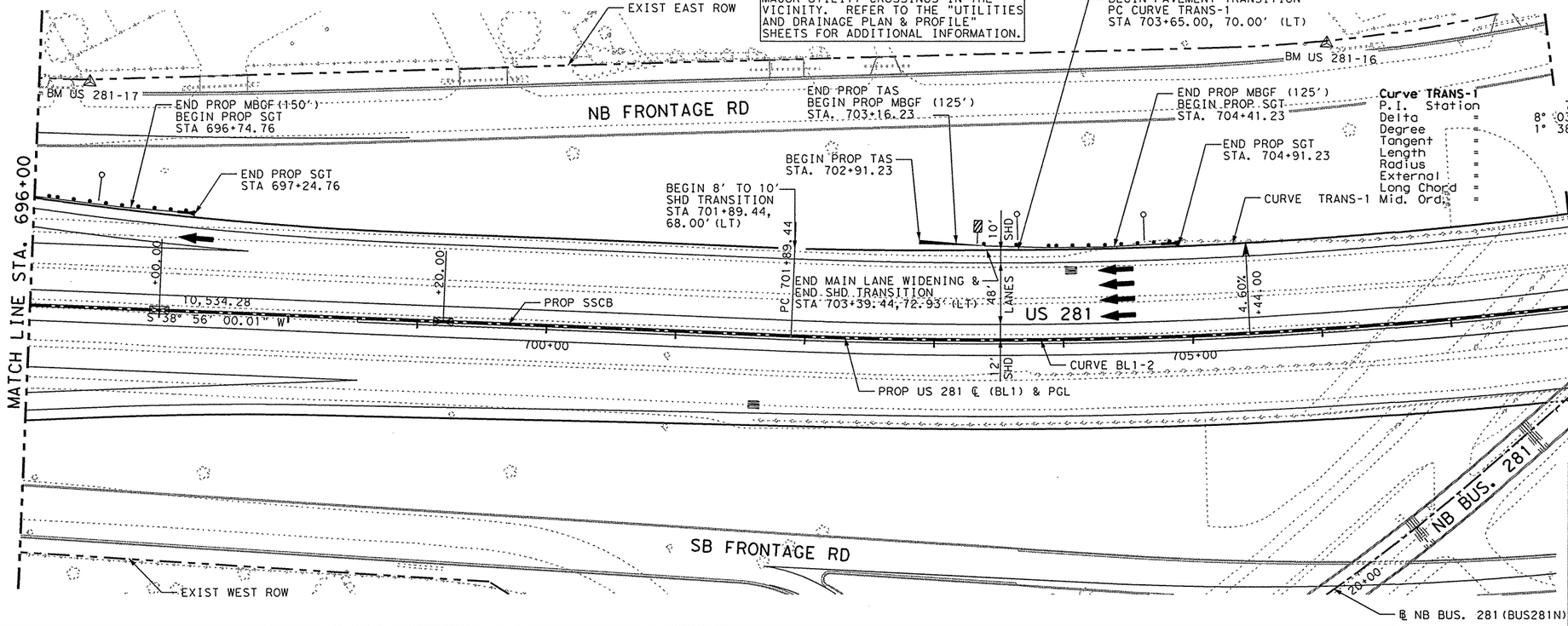

LEGEND:

MC	- MOUNTABLE CONC CURB
BC	- BARRIER CONC CURB
MCG	- MOUNTABLE CONC CURB & GUTTER
BCG	- BARRIER CONC CURB & GUTTER
RW	- RETAINING WALL
RR	- RIP RAP
SGT	- SINGLE GUARD RAIL TERMINAL
SSCB	- SINGLE SLOPE CONC BARRIER
SSTR	- SINGLE SLOPE TRAFFIC RAILING
SW	- SIDEWALK
WCR	- WHEEL CHAIR RAMP
VG	- 4' VALLEY GUTTER
MBGF	- METAL BEAM GUARD FENCE
TAS	- TERMINAL ANCHOR SECTION
	- CENTER OF 10' SSCB (TY 4)
	- CENTER OF 70' SSCB (TY 3)
	- DEL ASM TY B (D-SW)
	- OBJ MRK ASM TY 3 (OM-3R)

B.M. & HORIZONTAL DATA

BM # US 281-17
ELEV = 105.58
STA = 696+39.23, 173.41' LT
3 1/4" TXDOT ALUMINUM DISK

BM # US 281-16
ELEV = 103.82
STA = 706+19.13, 220.37' LT
3 1/4" TXDOT ALUMINUM DISK

SHEET TOTALS

ITEM	EST.	FINAL	UNIT	DESCRIPTION
514	1180		LF	PERM CONC TRF BAR SGL SLP (TY 2) (H=42")
514	20		LF	PERM CONC TRF BAR SGL SLP (TY 4) (H=42")
540	200		LF	MTL BEAM GD FEN (12 GA) (TIM POST)
540	1		EA	TERM ANCH SECT (12 GA)
658	3		EA	DEL ASM TY B (D-SW)
658	1		EA	OBJ MRK ASM TY 3 (OM-3R)
5819	2		EA	SINGLE GDRAIL TERM (TY II)

EXIST AND PROP PGL

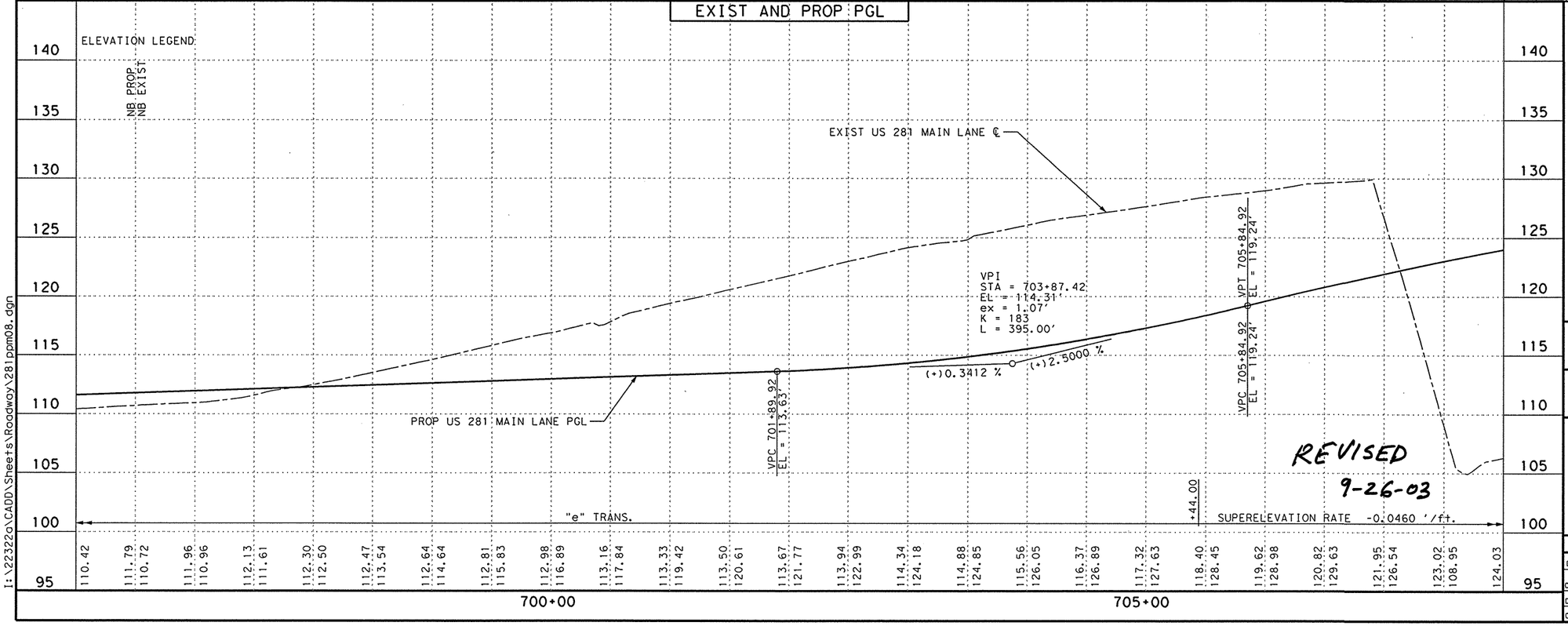

PROFILE LEGEND

———	PROP US 281 MAIN LANE P.G.L.
– – – –	EXIST US 281 MAIN LANE NATURAL GROU
SSD	STOPPING SIGHT DISTANCE

THE SEAL APPEARING ON THIS DOCUMENT WAS AUTHORIZED BY JOHN M PEREZ, P.E. 66425 ON 09/11/2003.

THE SEAL APPEARING ON THIS DOCUMENT WAS AUTHORIZED BY PHAISARN CWATANAPHOL, P.E. 89252 ON 09/11/2003.

STATE OF TEXAS — JOHN M. PEREZ — 66425 — REGISTERED PROFESSIONAL ENGINEER

STATE OF TEXAS — PHAISARN CWATANAPHOL — 89252 — REGISTERED PROFESSIONAL ENGINEER

Parsons Brinckerhoff Quade & Douglas Inc.

Texas Department of Transportation

© 2003 by TxDOT

US 281
PLAN & PROFILE
NORTHBOUND MAINLANES

STA. 696+00 "BL1" TO
STA. 708+00 "BL1"

PLAN 1"= 100' HORIZ
PROFILE 1"= 10' VERT

SHEET 8 OF 20				281PPM08.DGN			
DESIGNED: TT	FED. RD DIV. No.	STATE	FEDERAL AID PROJECT No.			HIGHWAY No.	
CHECKED: DM	6	TEXAS				US 281	
DRAWN:	STATE DISTRICT	COUNTY	CONTROL No.	SECTION No.	JOB No.	SHEET No.	
CHECKED: DM	PHARR	HIDALGO	0255	08	091	280	

NAME
10:37:47 AM
06/23/2003

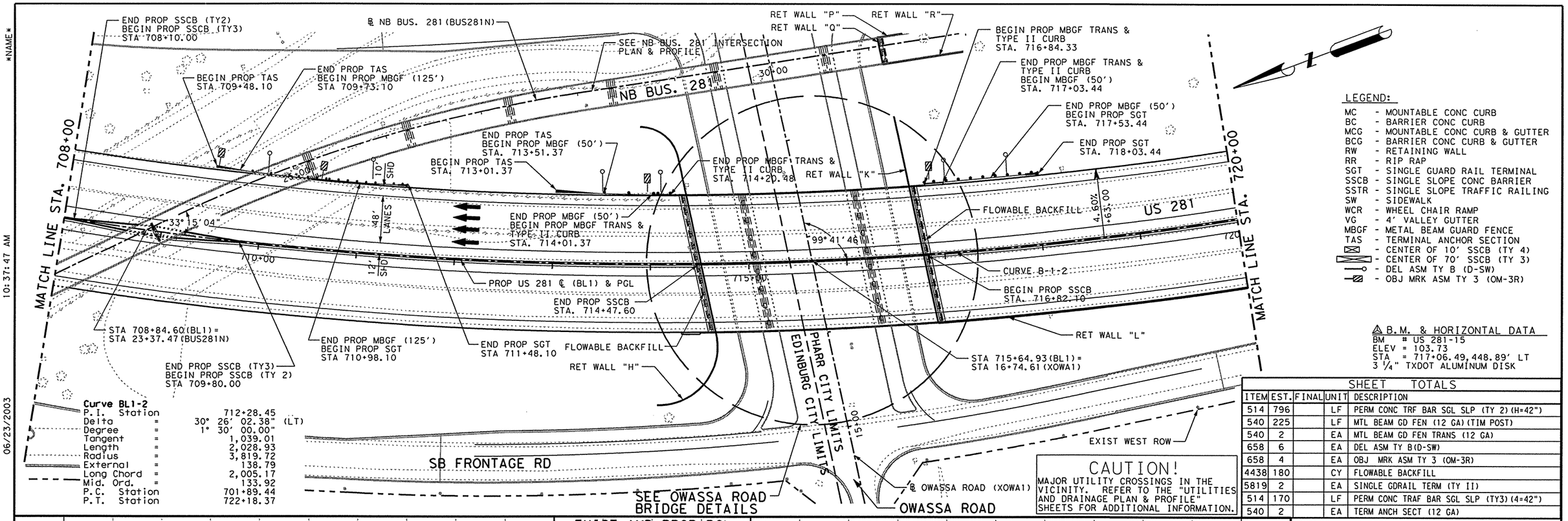

Curve BL1-2

P.I. Station	=	712+28.45
Delta	=	30° 26' 02.38" (LT)
Degree	=	1° 30' 00.00"
Tangent	=	1,039.01
Length	=	2,028.93
Radius	=	3,819.72
External	=	138.79
Long Chord	=	2,005.17
Mid. Ord.	=	133.92
P.C. Station		701+89.44
P.T. Station		722+18.37

CAUTION!
MAJOR UTILITY CROSSINGS IN THE VICINITY. REFER TO THE "UTILITIES AND DRAINAGE PLAN & PROFILE" SHEETS FOR ADDITIONAL INFORMATION.

LEGEND:

MC	- MOUNTABLE CONC CURB
BC	- BARRIER CONC CURB
MCG	- MOUNTABLE CONC CURB & GUTTER
BCG	- BARRIER CONC CURB & GUTTER
RW	- RETAINING WALL
RR	- RIP RAP
SGT	- SINGLE GUARD RAIL TERMINAL
SSCB	- SINGLE SLOPE CONC BARRIER
SSTR	- SINGLE SLOPE TRAFFIC RAILING
SW	- SIDEWALK
WCR	- WHEEL CHAIR RAMP
VG	- 4' VALLEY GUTTER
MBGF	- METAL BEAM GUARD FENCE
TAS	- TERMINAL ANCHOR SECTION
⊠	- CENTER OF 10' SSCB (TY 4)
⊠	- CENTER OF 70' SSCB (TY 3)
—o—	- DEL ASM TY B (D-SW)
—⊠—	- OBJ MRK ASM TY 3 (OM-3R)

△ B.M. & HORIZONTAL DATA
BM # US 281-15
ELEV = 103.73
STA = 717+06.49, 448.89' LT
3 1/4" TXDOT ALUMINUM DISK

SHEET TOTALS

ITEM	EST.	FINAL	UNIT	DESCRIPTION
514	796		LF	PERM CONC TRF BAR SGL SLP (TY 2) (H=42")
540	225		LF	MTL BEAM GD FEN (12 GA) (TIM POST)
540	2		EA	MTL BEAM GD FEN TRANS (12 GA)
658	6		EA	DEL ASM TY B (D-SW)
658	4		EA	OBJ MRK ASM TY 3 (OM-3R)
4438	180		CY	FLOWABLE BACKFILL
5819	2		EA	SINGLE GDRAIL TERM (TY II)
514	170		LF	PERM CONC TRAF BAR SGL SLP (TY3) (4=42")
540	2		EA	TERM ANCH SECT (12 GA)

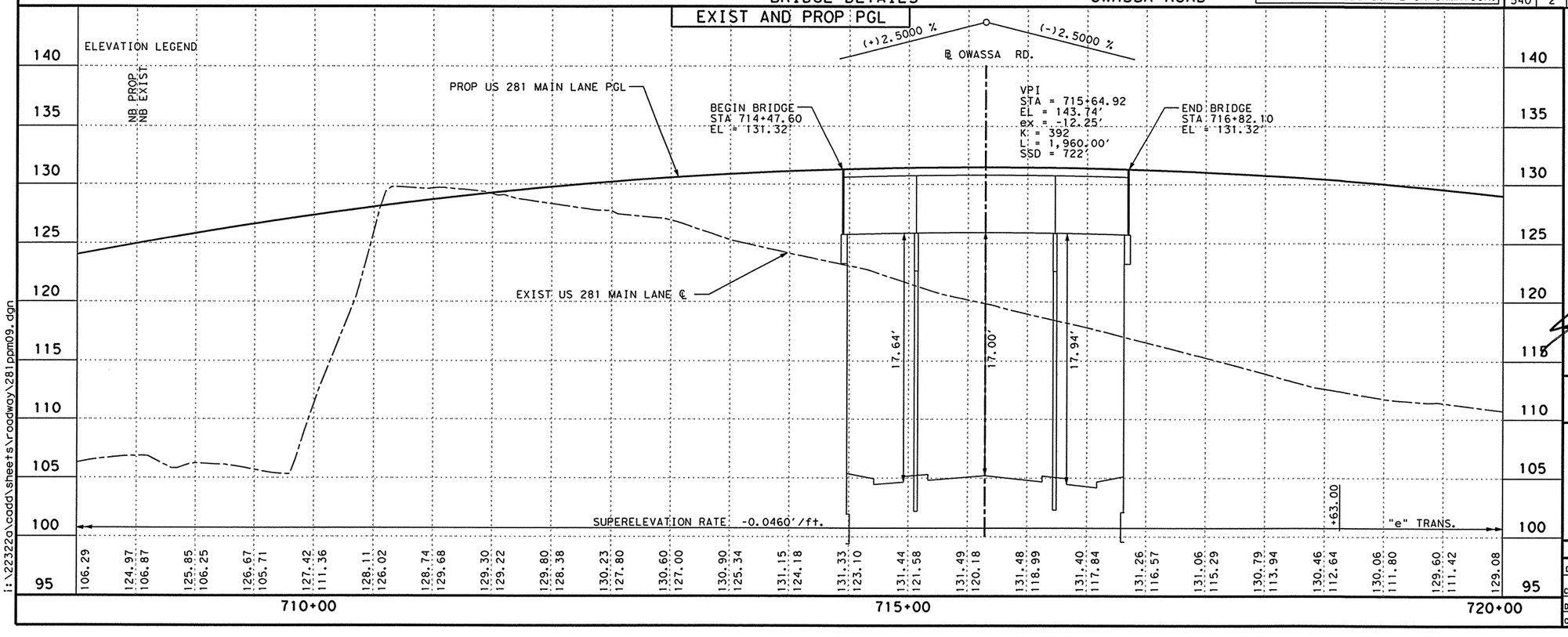

PROFILE LEGEND
PROP US 281 MAIN LANE P.G.L.
EXIST US 281 MAIN LANE NATURAL GROU
SSD STOPPING SIGHT DISTANCE

THE SEAL APPEARING ON THIS DOCUMENT WAS AUTHORIZED BY JAIME AGUILAR, P.E. 87606 ON 06/23/2003.

THE SEAL APPEARING ON THIS DOCUMENT WAS AUTHORIZED BY PHAISARN CWATANAPHOL, P.E. 89252 ON 06/23/2003.

STATE OF TEXAS
JAIME AGUILAR
87606
REGISTERED PROFESSIONAL ENGINEER

STATE OF TEXAS
PHAISARN CWATANAPHOL
89252
REGISTERED PROFESSIONAL ENGINEER

Parsons Brinckerhoff Quade & Douglas Inc.

Texas Department of Transportation

© 2003 by TxDOT

US 281
PLAN & PROFILE
NORTHBOUND MAINLANES

STA. 708+00 "BL1" TO
STA. 720+00 "BL1"

PLAN 1"= 100' HORIZ
PROFILE 1"= 10' VERT

SHEET 9 OF 20 | 281PPM09.DGN

DESIGNED: JA	FED. RD DIV. No.	STATE	FEDERAL AID PROJECT No.			HIGHWAY No.
CHECKED: JP	6	TEXAS				US 281
DRAWN:	STATE DISTRICT	COUNTY	CONTROL No.	SECTION No.	JOB No.	SHEET No.
CHECKED: JDH	PHARR	HIDALGO	0255	08	091	281

i:\22322o\cadd\sheets\roadway\281ppm09.dgn

Phaisarn C.
04:00:55 PM
09/11/2003

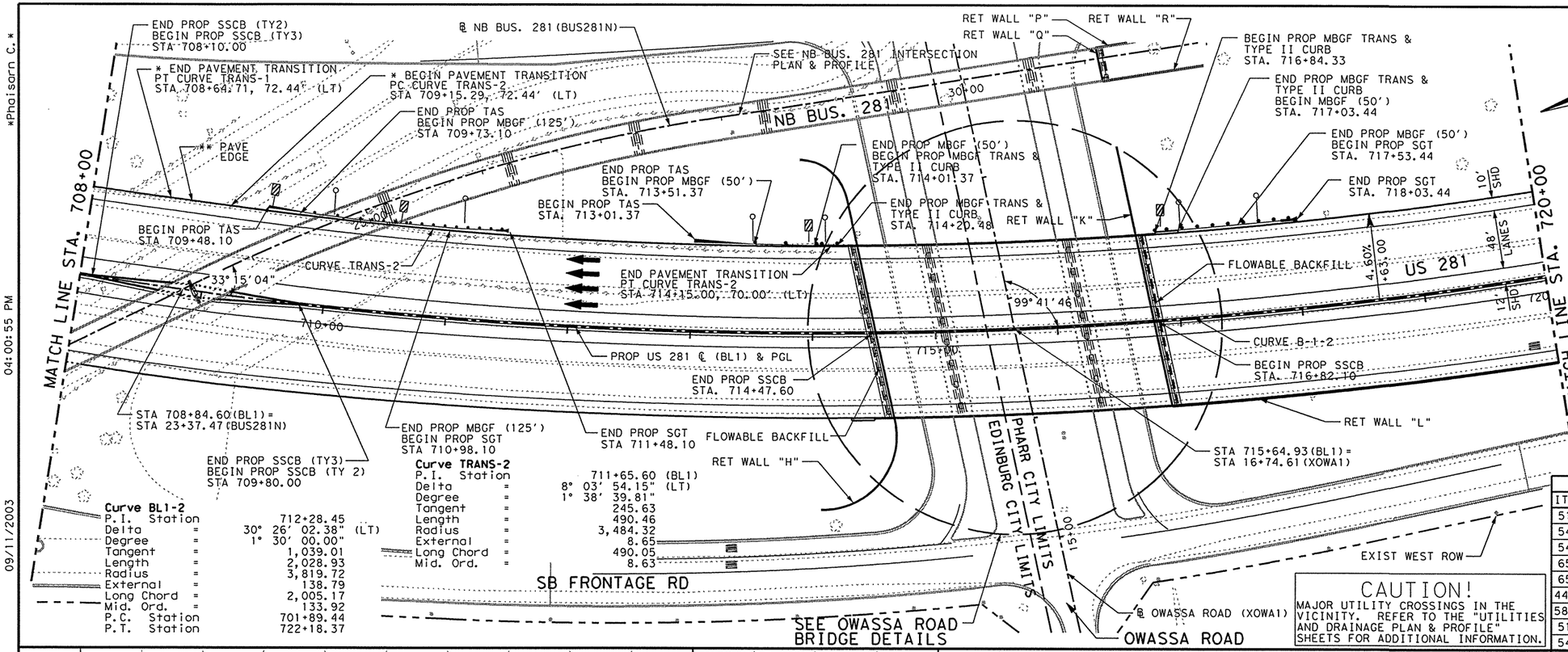

Curve BL1-2

P.I. Station	=	712+28.45
Delta	=	30° 26' 02.38" (LT)
Degree	=	1° 30' 00.00"
Tangent	=	1,039.01
Length	=	2,028.93
Radius	=	3,819.72
External	=	138.79
Long Chord	=	2,005.17
Mid. Ord.	=	133.92
P.C. Station	=	701+89.44
P.T. Station	=	722+18.37

Curve TRANS-2

P.I. Station	=	711+65.60 (BL1)
Delta	=	8° 03' 54.15" (LT)
Degree	=	1° 38' 39.81"
Tangent	=	245.63
Length	=	490.46
Radius	=	3,484.32
External	=	8.65
Long Chord	=	490.05
Mid. Ord.	=	8.63

LEGEND:

- MC - MOUNTABLE CONC CURB
- BC - BARRIER CONC CURB
- MCG - MOUNTABLE CONC CURB & GUTTER
- BCG - BARRIER CONC CURB & GUTTER
- RW - RETAINING WALL
- RR - RIP RAP
- SGT - SINGLE GUARD RAIL TERMINAL
- SSCB - SINGLE SLOPE CONC BARRIER
- SSTR - SINGLE SLOPE TRAFFIC RAILING
- SW - SIDEWALK
- WCR - WHEEL CHAIR RAMP
- VG - 4' VALLEY GUTTER
- MBGF - METAL BEAM GUARD FENCE
- TAS - TERMINAL ANCHOR SECTION
- ⊠ - CENTER OF 10' SSCB (TY 4)
- ⊠ - CENTER OF 70' SSCB (TY 3)
- DEL ASM TY B (D-SW)
- OBJ MRK ASM TY 3 (OM-3R)

NOTE: * CURVES NOT TANGENT
** PAVEMENT EDGE SHALL BE CONCENTRIC TO US 281 ℄ (BL1)

△ B.M. & HORIZONTAL DATA
BM # US 281-15
ELEV = 103.73
STA = 717+06.49, 448.89' LT
3 ¼" TXDOT ALUMINUM DISK

SHEET TOTALS

ITEM	EST.	FINAL	UNIT	DESCRIPTION
514	796		LF	PERM CONC TRF BAR SGL SLP (TY 2) (H=42")
540	225		LF	MTL BEAM GD FEN (12 GA) (TIM POST)
540	2		EA	MTL BEAM GD FEN TRANS (12 GA)
658	6		EA	DEL ASM TY B (D-SW)
658	4		EA	OBJ MRK ASM TY 3 (OM-3R)
4438	180		CY	FLOWABLE BACKFILL
5819	2		EA	SINGLE GDRAIL TERM (TY II)
514	170		LF	PERM CONC TRAF BAR SGL SLP (TY3) (4=42")
540	2		EA	TERM ANCH SECT (12 GA)

CAUTION!
MAJOR UTILITY CROSSINGS IN THE VICINITY. REFER TO THE "UTILITIES AND DRAINAGE PLAN & PROFILE" SHEETS FOR ADDITIONAL INFORMATION.

EXIST AND PROP PGL

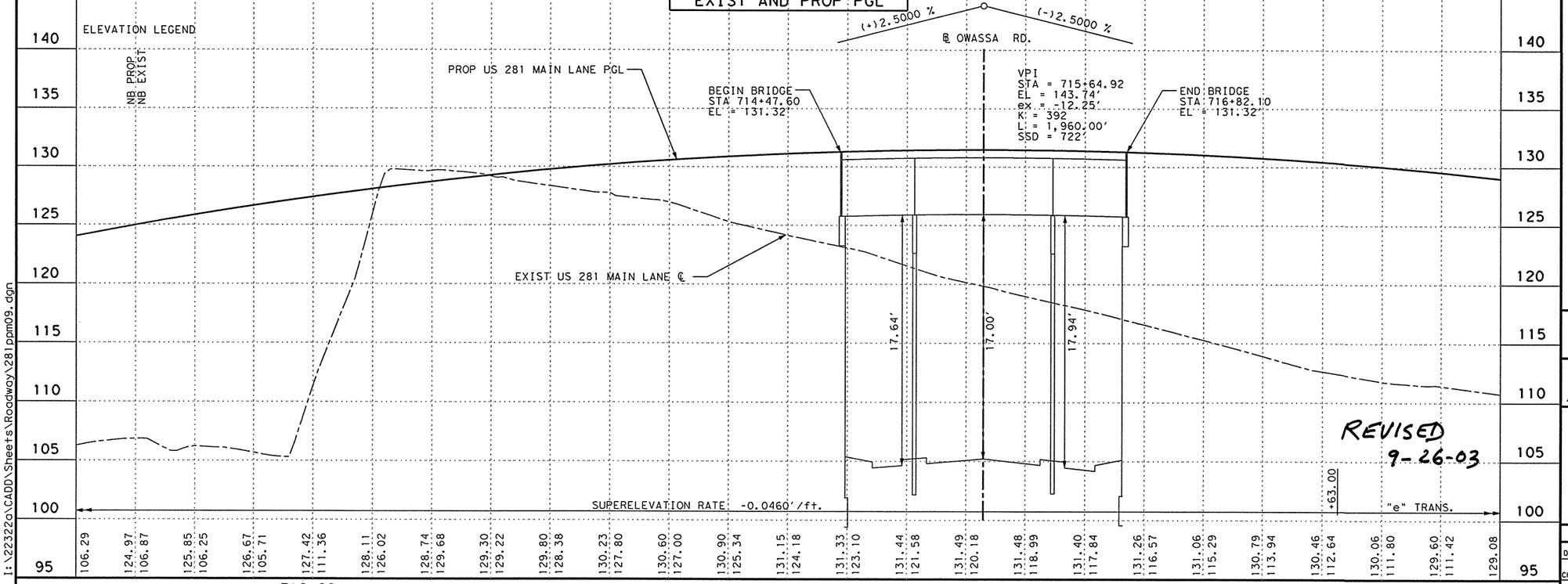

PROFILE LEGEND
——— PROP US 281 MAIN LANE P.G.L.
– – – – EXIST US 281 MAIN LANE NATURAL GROU
SSD STOPPING SIGHT DISTANCE

THE SEAL APPEARING ON THIS DOCUMENT WAS AUTHORIZED BY JOHN M PEREZ, P.E. 66425 ON 09/11/2003.

THE SEAL APPEARING ON THIS DOCUMENT WAS AUTHORIZED BY PHAISARN CWATANAPHOL P.E. 89252 ON 09/11/2003.

STATE OF TEXAS · JOHN M. PEREZ · 66425 · REGISTERED PROFESSIONAL ENGINEER

STATE OF TEXAS · PHAISARN CWATANAPHOL · 89252 · REGISTERED PROFESSIONAL ENGINEER

Parsons Brinckerhoff Quade & Douglas Inc.

Texas Department of Transportation

© 2003 by TxDOT

US 281
PLAN & PROFILE
NORTHBOUND MAINLANES

STA. 708+00 "BL1" TO
STA. 720+00 "BL1"

PLAN 1"= 100' HORIZ
PROFILE 1"= 10' VERT

SHEET 9 OF 20 — 281PPM09.DGN

DESIGNED: TT	FED. RD DIV. No.	STATE	FEDERAL AID PROJECT No.		HIGHWAY No.
CHECKED: DM	6	TEXAS			US 281

DRAWN:	STATE DISTRICT	COUNTY	CONTROL No.	SECTION No.	JOB No.	SHEET No.
CHECKED: DM	PHARR	HIDALGO	0255	08	091	281

I:\22322o\CADD\Sheets\Roadway\281ppm09.dgn

NAME
10:38:04 AM
06/23/2003

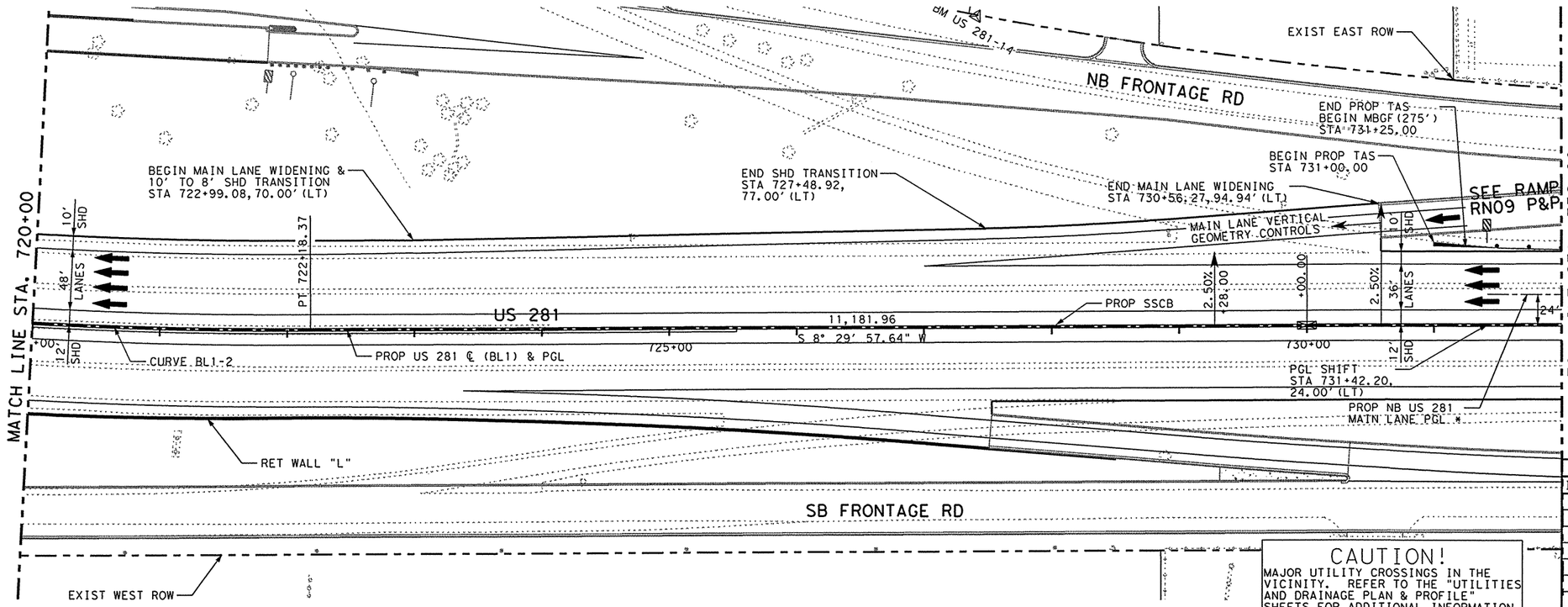

LEGEND:

MC	- MOUNTABLE CONC CURB
BC	- BARRIER CONC CURB
MCG	- MOUNTABLE CONC CURB & GUTTER
BCG	- BARRIER CONC CURB & GUTTER
RW	- RETAINING WALL
RR	- RIP RAP
SGT	- SINGLE GUARD RAIL TERMINAL
SSCB	- SINGLE SLOPE CONC BARRIER
SSTR	- SINGLE SLOPE TRAFFIC RAILING
SW	- SIDEWALK
WCR	- WHEEL CHAIR RAMP
VG	- 4' VALLEY GUTTER
MBGF	- METAL BEAM GUARD FENCE
TAS	- TERMINAL ANCHOR SECTION
⊠	- CENTER OF 10' SSCB (TY 4)
⊠	- CENTER OF 70' SSCB (TY 3)
—o	- DEL ASM TY B (D-SW)
—▨	- OBJ MRK ASM TY 3 (OM-3R)

*NOTE: PGL FOLLOWS US 281 ℄ (BL1) STATIONING

△ B.M. & HORIZONTAL DATA
BM # US 281-14
ELEV = 103.90
STA = 727+41.86, 241.71' LT
3 1/4" TXDOT ALUMINUM DISK

CAUTION!
MAJOR UTILITY CROSSINGS IN THE VICINITY. REFER TO THE "UTILITIES AND DRAINAGE PLAN & PROFILE" SHEETS FOR ADDITIONAL INFORMATION.

SHEET TOTALS

ITEM	EST.	FINAL	UNIT	DESCRIPTION
514	1190		LF	PERM CONC TRF BAR SGL SLP (TY 2) (H=42")
514	10		LF	PERM CONC TRF BAR SGL SLP (TY 4) (H=42")
540	75		LF	MTL BEAM GD FEN (12 GA) (TIM POST)
540	1		EA	TERM ANCH SECT (12 GA)
658	1		EA	OBJ MRK ASM TY 3 (OM-3R)

EXIST AND PROP PGL

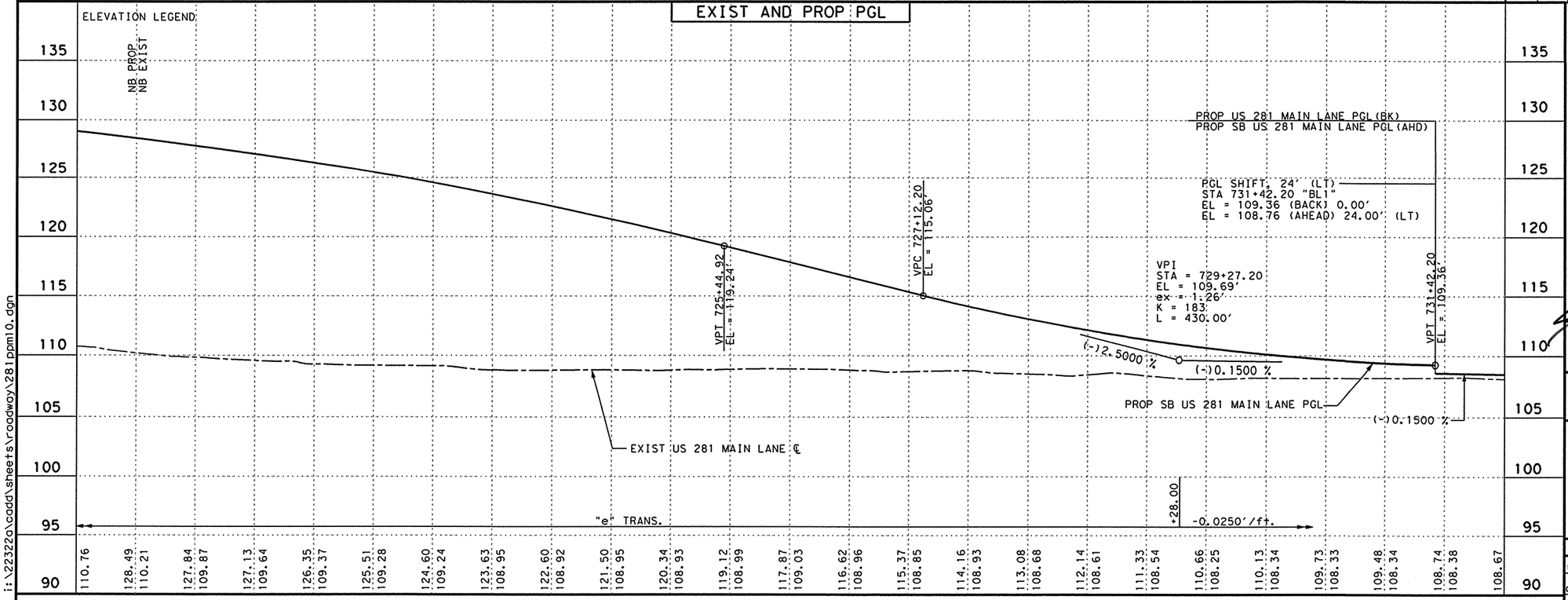

PROFILE LEGEND
PROP US 281 MAIN LANE P.G.L.
EXIST US 281 MAIN LANE NATURAL GROU
SSD STOPPING SIGHT DISTANCE

THE SEAL APPEARING ON THIS DOCUMENT WAS AUTHORIZED BY JAIME AGUILAR, P.E. 87606 ON 06/23/2003.

THE SEAL APPEARING ON THIS DOCUMENT WAS AUTHORIZED BY PHAISARN CWATANAPHOL, P.E. 89252 ON 06/23/2003.

STATE OF TEXAS · JAIME AGUILAR · 87606 · REGISTERED PROFESSIONAL ENGINEER

STATE OF TEXAS · PHAISARN CWATANAPHOL · 89252 · REGISTERED PROFESSIONAL ENGINEER

Parsons Brinckerhoff Quade & Douglas Inc.

Texas Department of Transportation

© 2003 by TxDOT

US 281
PLAN & PROFILE
NORTHBOUND MAINLANES

STA. 720+00 "BL1" TO
STA. 732+00 "BL1"

PLAN 1"= 100' HORIZ
PROFILE 1"= 10' VERT

SHEET 10 OF 20 | 281PPM10.DGN

DESIGNED: JA	FED. RD DIV. No.	STATE	FEDERAL AID PROJECT No.	HIGHWAY No.
CHECKED: JP	6	TEXAS		US 281

DRAWN:	STATE DISTRICT	COUNTY	CONTROL No.	SECTION No.	JOB No.	SHEET No.
CHECKED: JDH	PHARR	HIDALGO	0255	08	091	282

i:\22322o\cadd\sheets\roadway\281ppm10.dgn

NAME
10:38:20 AM
06/23/2003
i:\22322a\cadd\sheets\roadway\281ppm11.dgn

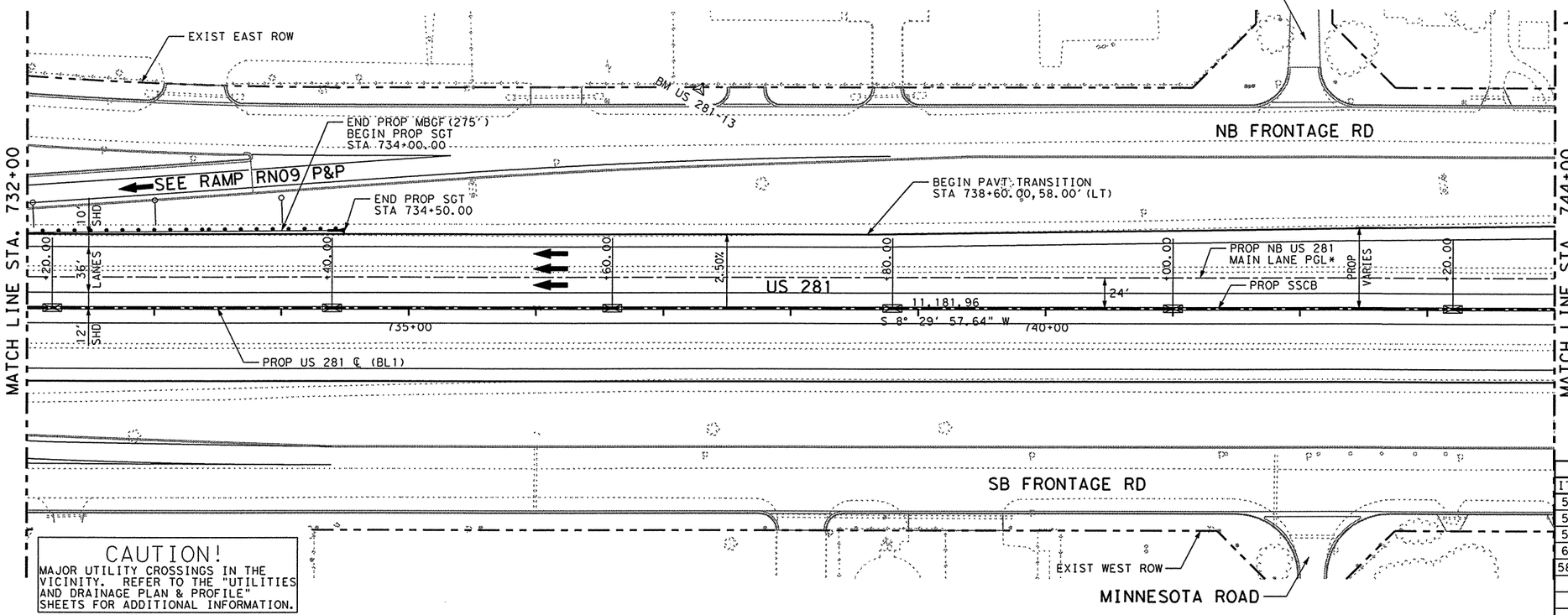

CAUTION!
MAJOR UTILITY CROSSINGS IN THE VICINITY. REFER TO THE "UTILITIES AND DRAINAGE PLAN & PROFILE" SHEETS FOR ADDITIONAL INFORMATION.

LEGEND:

MC	- MOUNTABLE CONC CURB
BC	- BARRIER CONC CURB
MCG	- MOUNTABLE CONC CURB & GUTTER
BCG	- BARRIER CONC CURB & GUTTER
RW	- RETAINING WALL
RR	- RIP RAP
SGT	- SINGLE GUARD RAIL TERMINAL
SSCB	- SINGLE SLOPE CONC BARRIER
SSTR	- SINGLE SLOPE TRAFFIC RAILING
SW	- SIDEWALK
WCR	- WHEEL CHAIR RAMP
VG	- 4' VALLEY GUTTER
MBGF	- METAL BEAM GUARD FENCE
TAS	- TERMINAL ANCHOR SECTION
⊠	- CENTER OF 10' SSCB (TY 4)
⊠	- CENTER OF 70' SSCB (TY 3)
—o	- DEL ASM TY B (D-SW)
—▨	- OBJ MRK ASM TY 3 (OM-3R)

*NOTE: PGL FOLLOWS US 281 ℄ (BL1) STATIONING

△ B.M. & HORIZONTAL DATA
BM # US 281-13
ELEV = 104.89
STA = 737+28.11, 172.67' LT
3 1/4" TXDOT ALUMINUM DISK

SHEET TOTALS

ITEM	EST.	FINAL	UNIT	DESCRIPTION
514	1140		LF	PERM CONC TRF BAR SGL SLP (TY 2) (H=42")
514	60		LF	PERM CONC TRF BAR SGL SLP (TY 4) (H=42")
540	200		LF	MTL BEAM GD FEN (12 GA) (TIM POST)
658	3		EA	DEL ASM TY B (D-SW)
5819	1		EA	SINGLE GDRAIL TERM (TY II)

EXIST AND PROP PGL

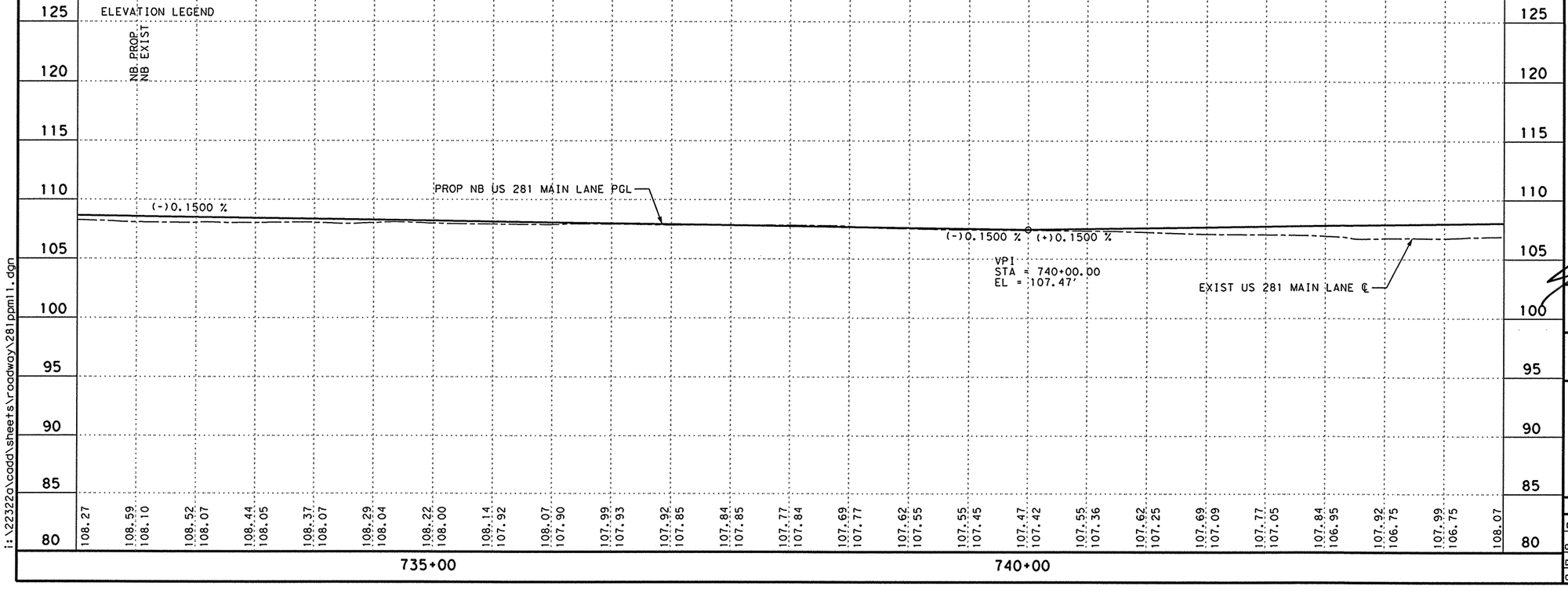

PROFILE LEGEND
PROP US 281 MAIN LANE P.G.L.
EXIST US 281 MAIN LANE NATURAL GROU
SSD STOPPING SIGHT DISTANCE

THE SEAL APPEARING ON THIS DOCUMENT WAS AUTHORIZED BY JAIME AGUILAR, P.E. 87606 ON 06/23/2003.

THE SEAL APPEARING ON THIS DOCUMENT WAS AUTHORIZED BY PHAISARN CWATANAPHOL, P.E. 89252 ON 06/23/2003.

STATE OF TEXAS
JAIME AGUILAR
87606
REGISTERED PROFESSIONAL ENGINEER

STATE OF TEXAS
PHAISARN CWATANAPHOL
89252
REGISTERED PROFESSIONAL ENGINEER

Parsons Brinckerhoff Quade & Douglas Inc.

Texas Department of Transportation
© 2003 by TxDOT

US 281
PLAN & PROFILE
NORTHBOUND MAINLANES

STA. 732+00 "BL1" TO
STA. 744+00 "BL1"

PLAN 1"= 100' HORIZ
PROFILE 1"= 10' VERT

SHEET 11 OF 20				281PPM11.DGN			
DESIGNED: JA	FED. RD DIV. No.	STATE	FEDERAL AID PROJECT No.				HIGHWAY No.
CHECKED: JP	6	TEXAS					US 281
DRAWN:	STATE DISTRICT	COUNTY	CONTROL No.	SECTION No.	JOB No.	SHEET No.	
CHECKED: JDH	PHARR	HIDALGO	0255	08	091	283	

NAME
10:38:36 AM
06/23/2003

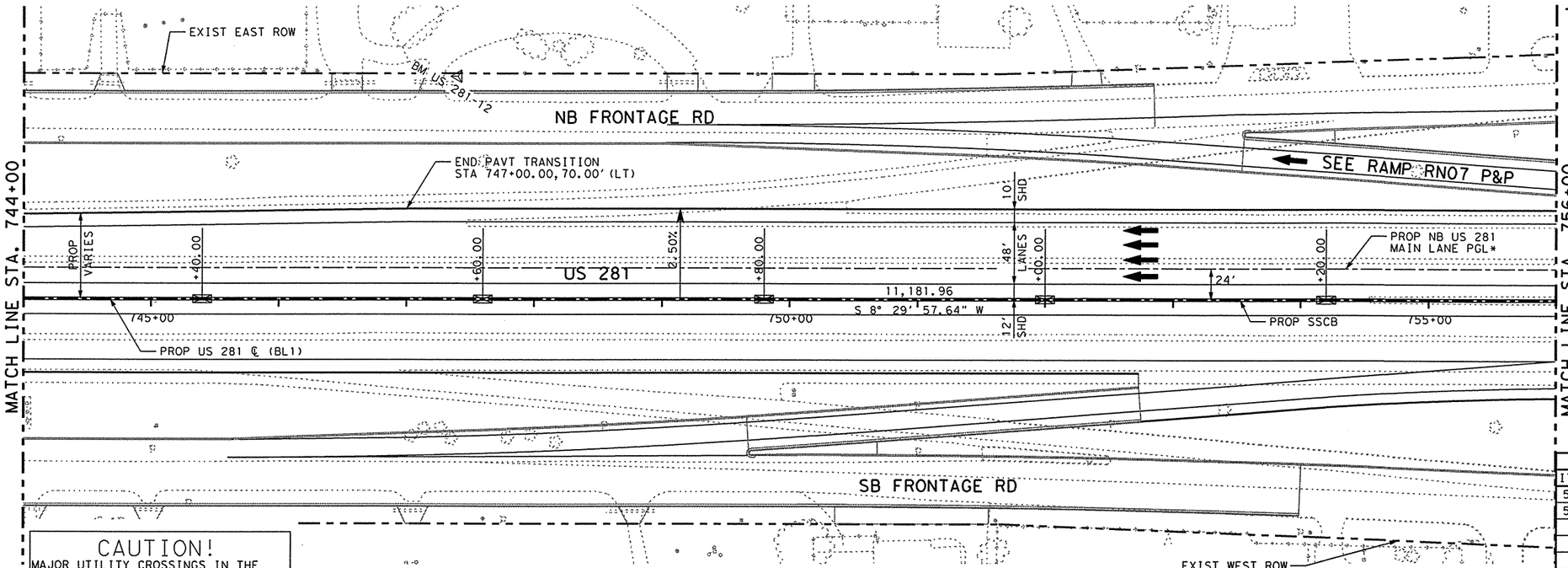

CAUTION!
MAJOR UTILITY CROSSINGS IN THE VICINITY. REFER TO THE "UTILITIES AND DRAINAGE PLAN & PROFILE" SHEETS FOR ADDITIONAL INFORMATION.

LEGEND:

MC	- MOUNTABLE CONC CURB
BC	- BARRIER CONC CURB
MCG	- MOUNTABLE CONC CURB & GUTTER
BCG	- BARRIER CONC CURB & GUTTER
RW	- RETAINING WALL
RR	- RIP RAP
SGT	- SINGLE GUARD RAIL TERMINAL
SSCB	- SINGLE SLOPE CONC BARRIER
SSTR	- SINGLE SLOPE TRAFFIC RAILING
SW	- SIDEWALK
WCR	- WHEEL CHAIR RAMP
VG	- 4' VALLEY GUTTER
MBGF	- METAL BEAM GUARD FENCE
TAS	- TERMINAL ANCHOR SECTION
	- CENTER OF 10' SSCB (TY 4)
	- CENTER OF 70' SSCB (TY 3)
	- DEL ASM TY B (D-SW)
	- OBJ MRK ASM TY 3 (OM-3R)

*NOTE: PGL FOLLOWS US 281 ℄ (BL1) STATIONING

B.M. & HORIZONTAL DATA
BM # US 281-12
ELEV = 104.33
STA = 747+40.09, 172.11' LT
3 1/4" TXDOT ALUMINUM DISK

SHEET TOTALS

ITEM	EST.	FINAL	UNIT	DESCRIPTION
514	1150		LF	PERM CONC TRF BAR SGL SLP (TY 2)(H=42")
514	50		LF	PERM CONC TRF BAR SGL SLP (TY 4)(H=42")

EXIST AND PROP PGL

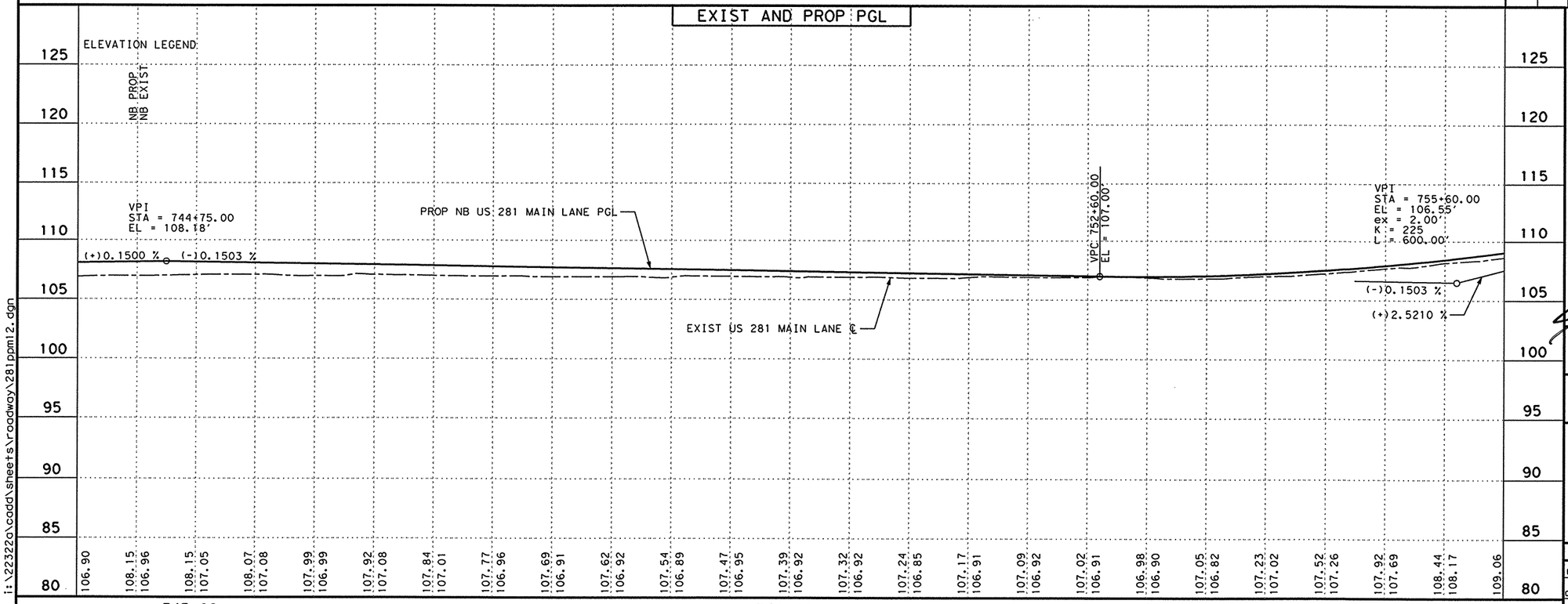

PROFILE LEGEND
PROP US 281 MAIN LANE P.G.L.
EXIST US 281 MAIN LANE NATURAL GROU
SSD STOPPING SIGHT DISTANCE

THE SEAL APPEARING ON THIS DOCUMENT WAS AUTHORIZED BY JAIME AGUILAR, P.E. 87606 ON 06/23/2003.

THE SEAL APPEARING ON THIS DOCUMENT WAS AUTHORIZED BY PHAISARN CHATANAPHOL, P.E. 89252 ON 06/23/2003.

STATE OF TEXAS · JAIME AGUILAR · 87606 · REGISTERED PROFESSIONAL ENGINEER

STATE OF TEXAS · PHAISARN CHATANAPHOL · 89252 · REGISTERED PROFESSIONAL ENGINEER

Parsons Brinckerhoff Quade & Douglas Inc.

Texas Department of Transportation

© 2003 by TxDOT

US 281
PLAN & PROFILE
NORTHBOUND MAINLANES

STA. 744+00 "BL1" TO
STA. 756+00 "BL1"

PLAN 1"= 100' HORIZ
PROFILE 1"= 10' VERT

SHEET 12 OF 20 | 281PPM12.DGN

DESIGNED: JA	FED. RD DIV. No.	STATE	FEDERAL AID PROJECT No.		HIGHWAY No.	
CHECKED: JP	6	TEXAS			US 281	
DRAWN:	STATE DISTRICT	COUNTY	CONTROL No.	SECTION No.	JOB No.	SHEET No.
CHECKED: JDH	PHARR	HIDALGO	0255	08	091	284

i:\22322a\cadd\sheets\roadway\281ppm12.dgn

NAME
10:38:52 AM
06/23/2003

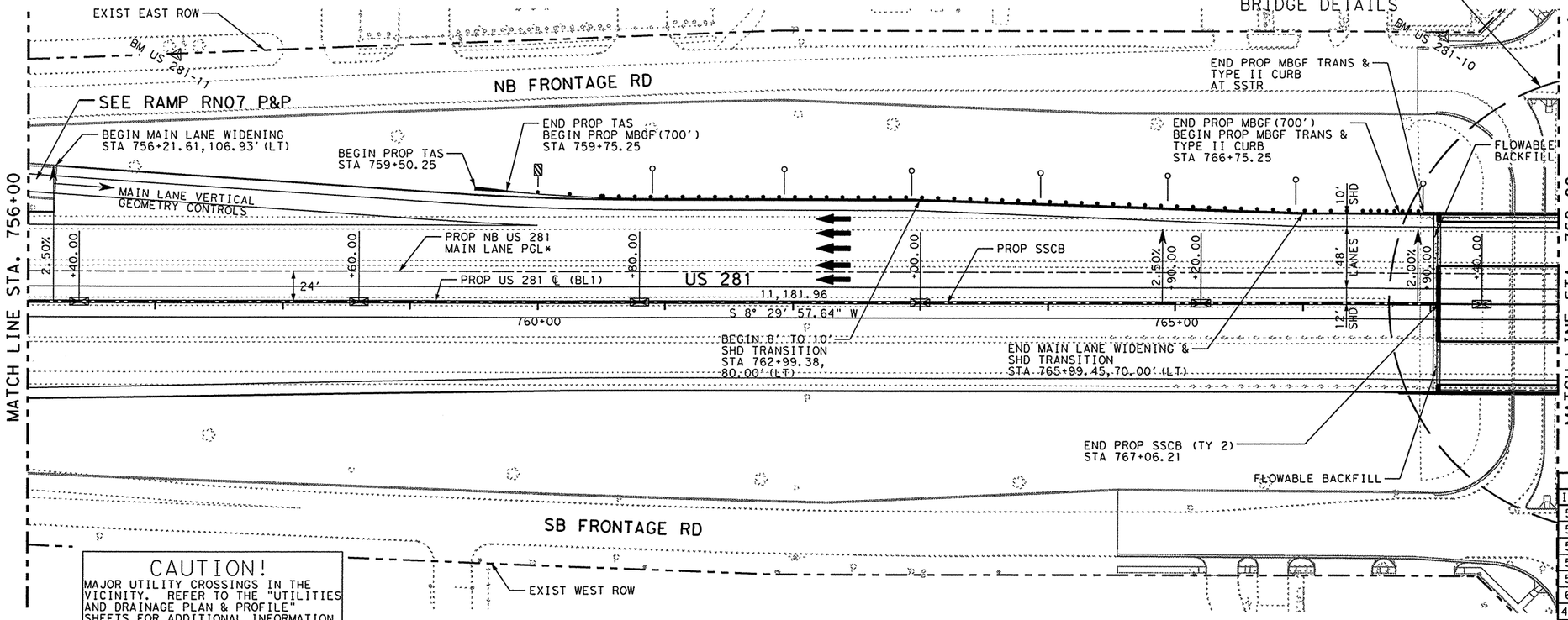

CAUTION!
MAJOR UTILITY CROSSINGS IN THE VICINITY. REFER TO THE "UTILITIES AND DRAINAGE PLAN & PROFILE" SHEETS FOR ADDITIONAL INFORMATION.

LEGEND:

- MC - MOUNTABLE CONC CURB
- BC - BARRIER CONC CURB
- MCG - MOUNTABLE CONC CURB & GUTTER
- BCG - BARRIER CONC CURB & GUTTER
- RW - RETAINING WALL
- RR - RIP RAP
- SGT - SINGLE GUARD RAIL TERMINAL
- SSCB - SINGLE SLOPE CONC BARRIER
- SSTR - SINGLE SLOPE TRAFFIC RAILING
- SW - SIDEWALK
- WCR - WHEEL CHAIR RAMP
- VG - 4' VALLEY GUTTER
- MBGF - METAL BEAM GUARD FENCE
- TAS - TERMINAL ANCHOR SECTION
- ⊠ - CENTER OF 10' SSCB (TY 4)
- ▭ - CENTER OF 70' SSCB (TY 3)
- ⊸ - DEL ASM TY B (D-SW)
- ⊸▨ - OBJ MRK ASM TY 3 (OM-3R)

*NOTE: PGL FOLLOWS US 281 ℄ (BL1) STATIONING

△ B.M. & HORIZONTAL DATA

BM # US 281-11
ELEV = 104.75
STA = 757+16.56, 194.71' LT
3 1/4" TXDOT ALUMINUM DISK

BM # US 281-10
ELEV = 105.56
STA = 767+10.57, 210.84' LT
3 1/4" TXDOT ALUMINUM DISK

SHEET TOTALS

ITEM	EST.	FINAL	UNIT	DESCRIPTION
514	1056		LF	PERM CONC TRF BAR SGL SLP (TY 2) (H=42")
514	50		LF	PERM CONC TRF BAR SGL SLP (TY 4) (H=42")
540	700		LF	MTL BEAM GD FEN (12 GA) (TIM POST)
540	1		EA	MTL BEAM GD FEN TRANS (12 GA)
540	1		EA	TERM ANCH SECT (12 GA)
658	7		EA	DEL ASM TY B(D-SW)
4438	89		CY	FLOWABLE BACKFILL
658	1		EA	OBJ MRK ASM TY 3(OM-3R)

EXIST AND PROP PGL

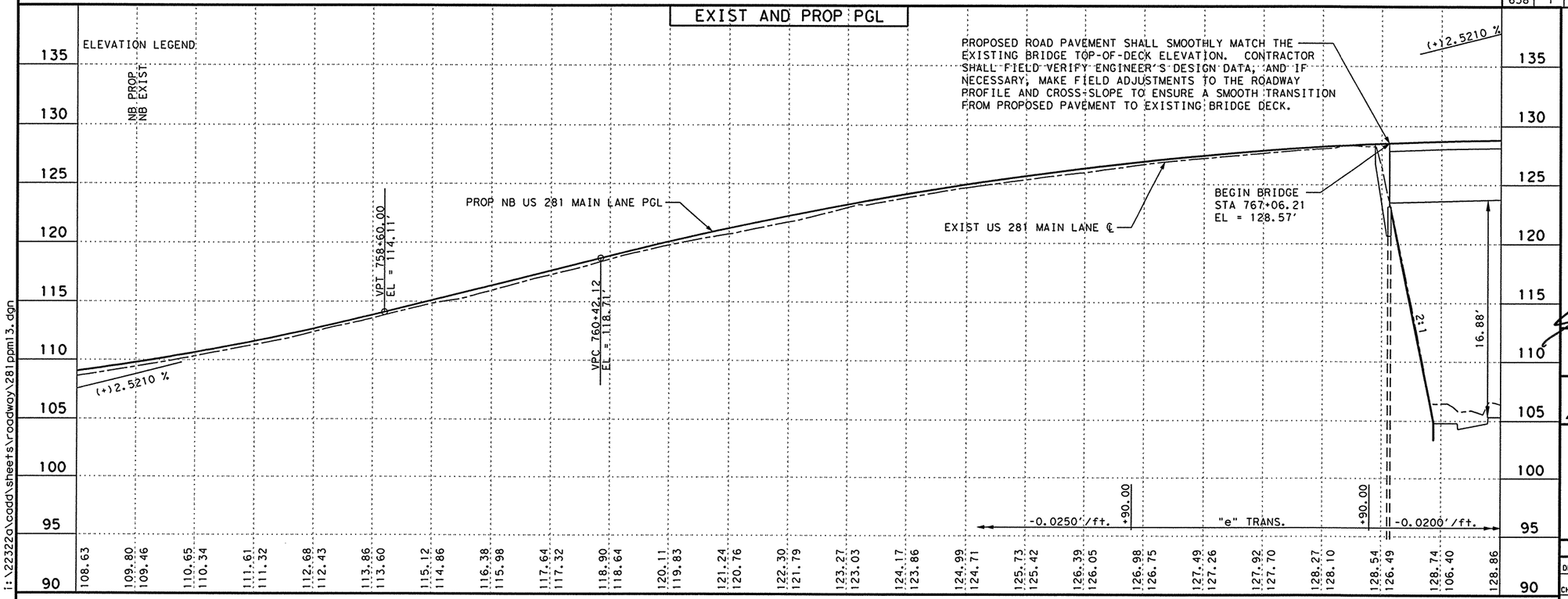

PROFILE LEGEND

- PROP US 281 MAIN LANE P.G.L.
- EXIST US 281 MAIN LANE NATURAL GROU
- SSD STOPPING SIGHT DISTANCE

THE SEAL APPEARING ON THIS DOCUMENT WAS AUTHORIZED BY JAIME AGUILAR, P.E. 87606 ON 06/23/2003.

STATE OF TEXAS
JAIME AGUILAR
87606
REGISTERED PROFESSIONAL ENGINEER

THE SEAL APPEARING ON THIS DOCUMENT WAS AUTHORIZED BY PHAISARN CWATANAPHOL, P.E. 89252 ON 06/23/2003.

STATE OF TEXAS
PHAISARN CWATANAPHOL
89252
REGISTERED PROFESSIONAL ENGINEER

Parsons Brinckerhoff Quade & Douglas Inc.

Texas Department of Transportation

© 2003 by TxDOT

US 281
PLAN & PROFILE
NORTHBOUND MAINLANES

STA. 756+00 "BL1" TO
STA. 768+00 "BL1"

PLAN 1"= 100' HORIZ
PROFILE 1"= 10' VERT

SHEET 13 OF 20 | 281PPM13.DGN

DESIGNED: JA	FED. RD DIV. No.	STATE	FEDERAL AID PROJECT No.	HIGHWAY No.
CHECKED: JP	6	TEXAS		US 281

DRAWN:	STATE DISTRICT	COUNTY	CONTROL No.	SECTION No.	JOB No.	SHEET No.
CHECKED: JDH	PHARR	HIDALGO	0255	08	091	285

i:\22322a\cadd\sheets\roadway\281ppm13.dgn

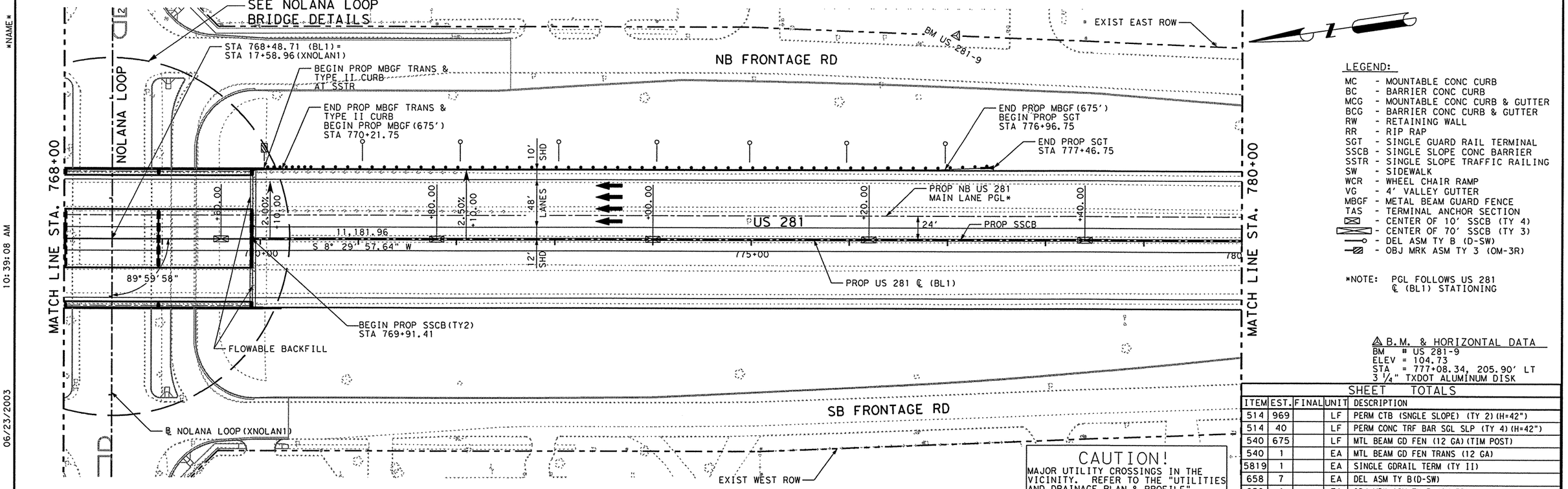

LEGEND:

- MC - MOUNTABLE CONC CURB
- BC - BARRIER CONC CURB
- MCG - MOUNTABLE CONC CURB & GUTTER
- BCG - BARRIER CONC CURB & GUTTER
- RW - RETAINING WALL
- RR - RIP RAP
- SGT - SINGLE GUARD RAIL TERMINAL
- SSCB - SINGLE SLOPE CONC BARRIER
- SSTR - SINGLE SLOPE TRAFFIC RAILING
- SW - SIDEWALK
- WCR - WHEEL CHAIR RAMP
- VG - 4' VALLEY GUTTER
- MBGF - METAL BEAM GUARD FENCE
- TAS - TERMINAL ANCHOR SECTION
- ⊠ - CENTER OF 10' SSCB (TY 4)
- ⊠ - CENTER OF 70' SSCB (TY 3)
- —o— - DEL ASM TY B (D-SW)
- —▨— - OBJ MRK ASM TY 3 (OM-3R)

*NOTE: PGL FOLLOWS US 281 ℄ (BL1) STATIONING

△ B.M. & HORIZONTAL DATA
BM # US 281-9
ELEV = 104.73
STA = 777+08.34, 205.90' LT
3 1/4" TXDOT ALUMINUM DISK

SHEET TOTALS

ITEM	EST.	FINAL	UNIT	DESCRIPTION
514	969		LF	PERM CTB (SNGLE SLOPE) (TY 2) (H=42")
514	40		LF	PERM CONC TRF BAR SGL SLP (TY 4) (H=42")
540	675		LF	MTL BEAM GD FEN (12 GA) (TIM POST)
540	1		EA	MTL BEAM GD FEN TRANS (12 GA)
5819	1		EA	SINGLE GDRAIL TERM (TY II)
658	7		EA	DEL ASM TY B (D-SW)
658	1		EA	OBJ MRK ASM TY 3 (OM-3R)
4438	89		CY	FLOWABLE BACKFILL

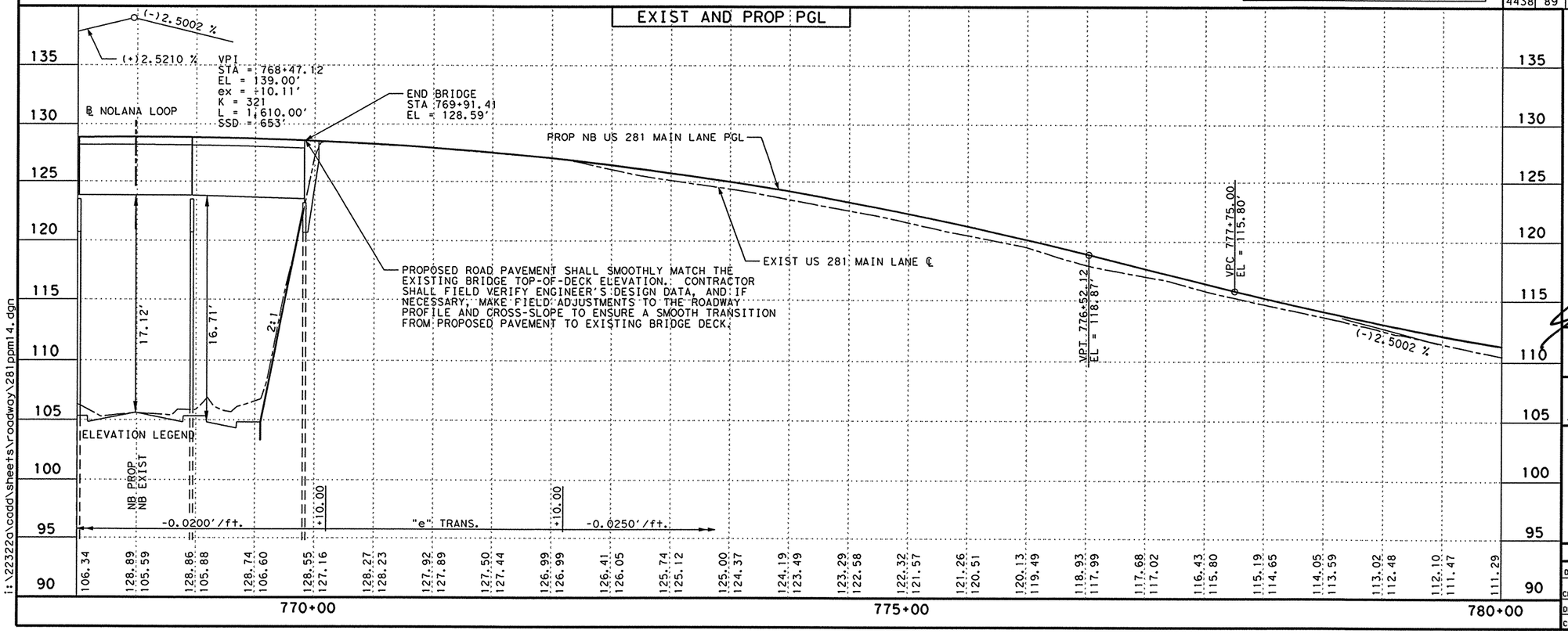

PROFILE LEGEND
——— PROP US 281 MAIN LANE P.G.L.
– – – – EXIST US 281 MAIN LANE NATURAL GROU
SSD STOPPING SIGHT DISTANCE

THE SEAL APPEARING ON THIS DOCUMENT WAS AUTHORIZED BY JAIME AGUILAR, P.E. 87606 ON 06/23/2003.

THE SEAL APPEARING ON THIS DOCUMENT WAS AUTHORIZED BY PHAISARN CWATANAPHOL, P.E. 89252 ON 06/23/2003.

STATE OF TEXAS · JAIME AGUILAR · 87606 · REGISTERED PROFESSIONAL ENGINEER

STATE OF TEXAS · PHAISARN CWATANAPHOL · 89252 · REGISTERED PROFESSIONAL ENGINEER

Parsons Brinckerhoff Quade & Douglas Inc.

Texas Department of Transportation

© 2003 by TxDOT

US 281
PLAN & PROFILE
NORTHBOUND MAINLANES

STA. 768+00 "BL1" TO
STA. 780+00 "BL1"

PLAN 1"= 100' HORIZ
PROFILE 1"= 10' VERT

SHEET 14 OF 20 | 281PPM14.DGN

DESIGNED: JA	FED. RD DIV. NO.	STATE	FEDERAL AID PROJECT No.	HIGHWAY No.
CHECKED: JP	6	TEXAS		US 281

DRAWN:	STATE DISTRICT	COUNTY	CONTROL No.	SECTION No.	JOB No.	SHEET No.
CHECKED: JDH	PHARR	HIDALGO	0255	08	091	286

NAME
10:39:08 AM
06/23/2003
i:\22322o\cadd\sheets\roadway\281ppm14.dgn

NAME

10:39:26 AM

06/23/2003

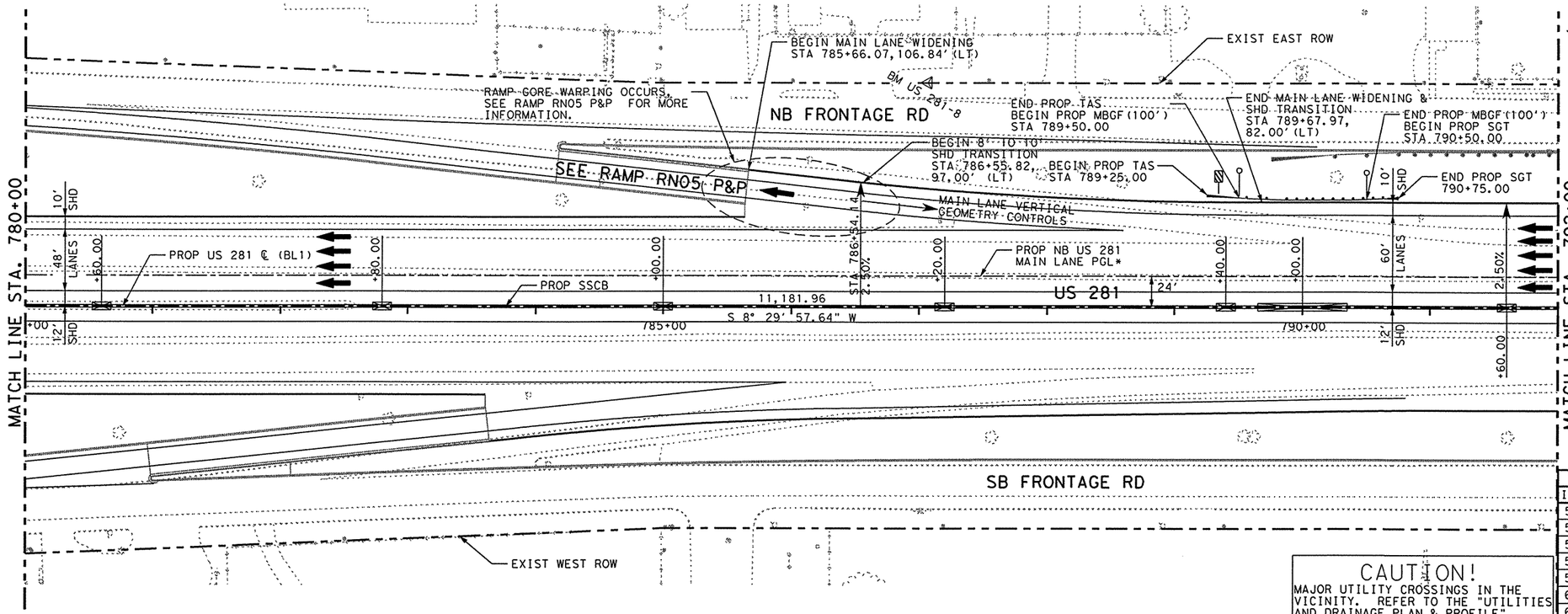

LEGEND:

MC	- MOUNTABLE CONC CURB
BC	- BARRIER CONC CURB
MCG	- MOUNTABLE CONC CURB & GUTTER
BCG	- BARRIER CONC CURB & GUTTER
RW	- RETAINING WALL
RR	- RIP RAP
SGT	- SINGLE GUARD RAIL TERMINAL
SSCB	- SINGLE SLOPE CONC BARRIER
SSTR	- SINGLE SLOPE TRAFFIC RAILING
SW	- SIDEWALK
WCR	- WHEEL CHAIR RAMP
VG	- 4' VALLEY GUTTER
MBGF	- METAL BEAM GUARD FENCE
TAS	- TERMINAL ANCHOR SECTION
	- CENTER OF 10' SSCB (TY 4)
	- CENTER OF 70' SSCB (TY 3)
	- DEL ASM TY B (D-SW)
	- OBJ MRK ASM TY 3 (OM-3R)

*NOTE: PGL FOLLOWS US 281 ℄ (BL1) STATIONING

△ B.M. & HORIZONTAL DATA
BM # US 281-8
ELEV = 104.98
STA = 787+06.77, 175.17' LT
3 1/4" TXDOT ALUMINUM DISK

SHEET TOTALS

ITEM	EST.	FINAL	UNIT	DESCRIPTION
514	1070		LF	PERM CONC TRF BAR SGL SLP (TY 2) (H=42")
514	70		LF	PERM CONC TRF BAR SGL SLP (TY 3) (H=42")
514	60		LF	PERM CONC TRF BAR SGL SLP (TY 4) (H=42")
540	100		LF	MTL BEAM GD FEN (12 GA) (TIM POST)
540	1		EA	TERM ANCH SECT (12 GA)
658	2		EA	DEL ASM TY B(D-SW)
658	1		EA	OBJ MRK ASM TY 3(OM-3R)
5819	1		EA	SINGLE GDRAIL TERM (TY II)

CAUTION!
MAJOR UTILITY CROSSINGS IN THE VICINITY. REFER TO THE "UTILITIES AND DRAINAGE PLAN & PROFILE" SHEETS FOR ADDITIONAL INFORMATION.

EXIST AND PROP PGL

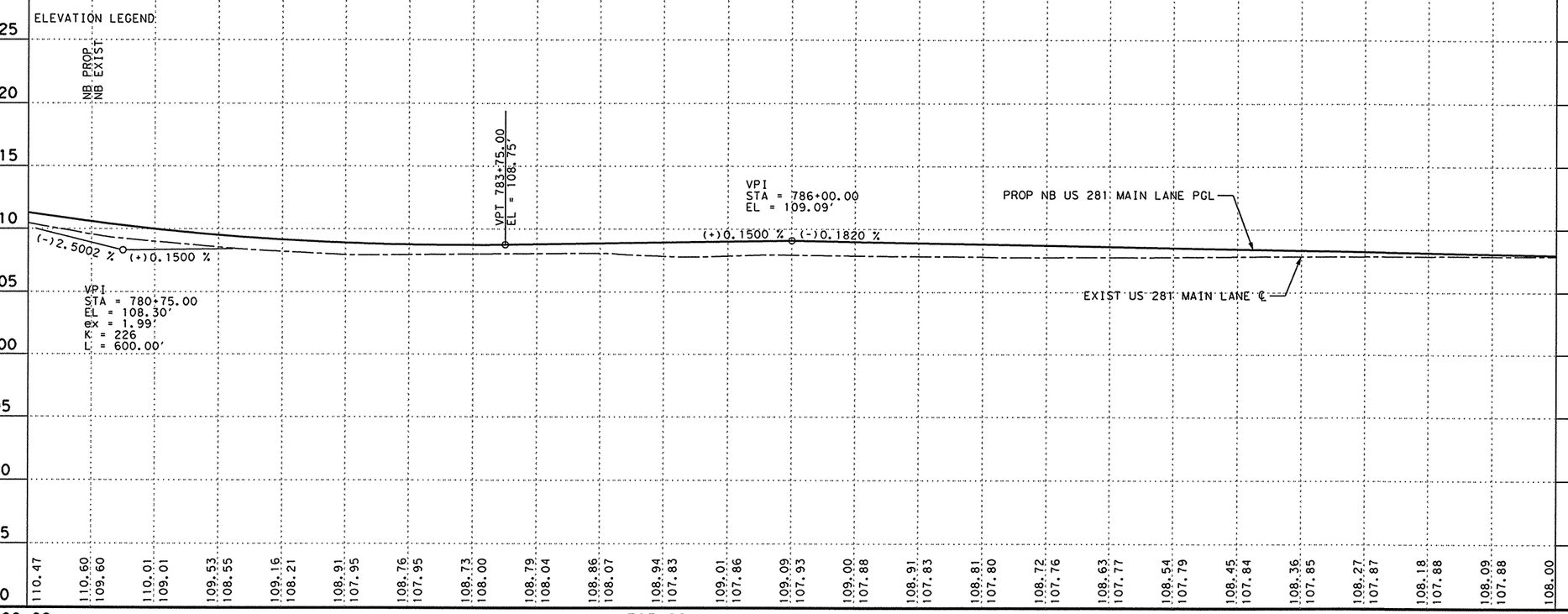

PROFILE LEGEND
PROP US 281 MAIN LANE P.G.L.
EXIST US 281 MAIN LANE NATURAL GROU
SSD STOPPING SIGHT DISTANCE

THE SEAL APPEARING ON THIS DOCUMENT WAS AUTHORIZED BY JAIME AGUILAR, P.E. 87606 ON 06/23/2003.

THE SEAL APPEARING ON THIS DOCUMENT WAS AUTHORIZED BY PHAISARN CWATANAPHOL, P.E. 89252 ON 06/23/2003.

STATE OF TEXAS — JAIME AGUILAR — 87606 — REGISTERED PROFESSIONAL ENGINEER

STATE OF TEXAS — PHAISARN CWATANAPHOL — 89252 — REGISTERED PROFESSIONAL ENGINEER

Parsons Brinckerhoff Quade & Douglas Inc.

Texas Department of Transportation

© 2003 by TxDOT

US 281
PLAN & PROFILE
NORTHBOUND MAINLANES

STA. 780+00 "BL1" TO
STA. 792+00 "BL1"

PLAN 1"= 100' HORIZ
PROFILE 1"= 10' VERT

SHEET 15 OF 20 | 281PPM15.DGN

DESIGNED: JA	FED. RD DIV. NO.	STATE	FEDERAL AID PROJECT No.			HIGHWAY No.	
CHECKED: JP	6	TEXAS				US 281	
DRAWN:	STATE DISTRICT	COUNTY	CONTROL No.	SECTION No.	JOB No.	SHEET No.	
CHECKED: JDH	PHARR	HIDALGO	0255	08	091	287	

i:\22322a\cadd\sheets\roadway\281ppm15.dgn

NAME
10:39:43 AM
06/23/2003

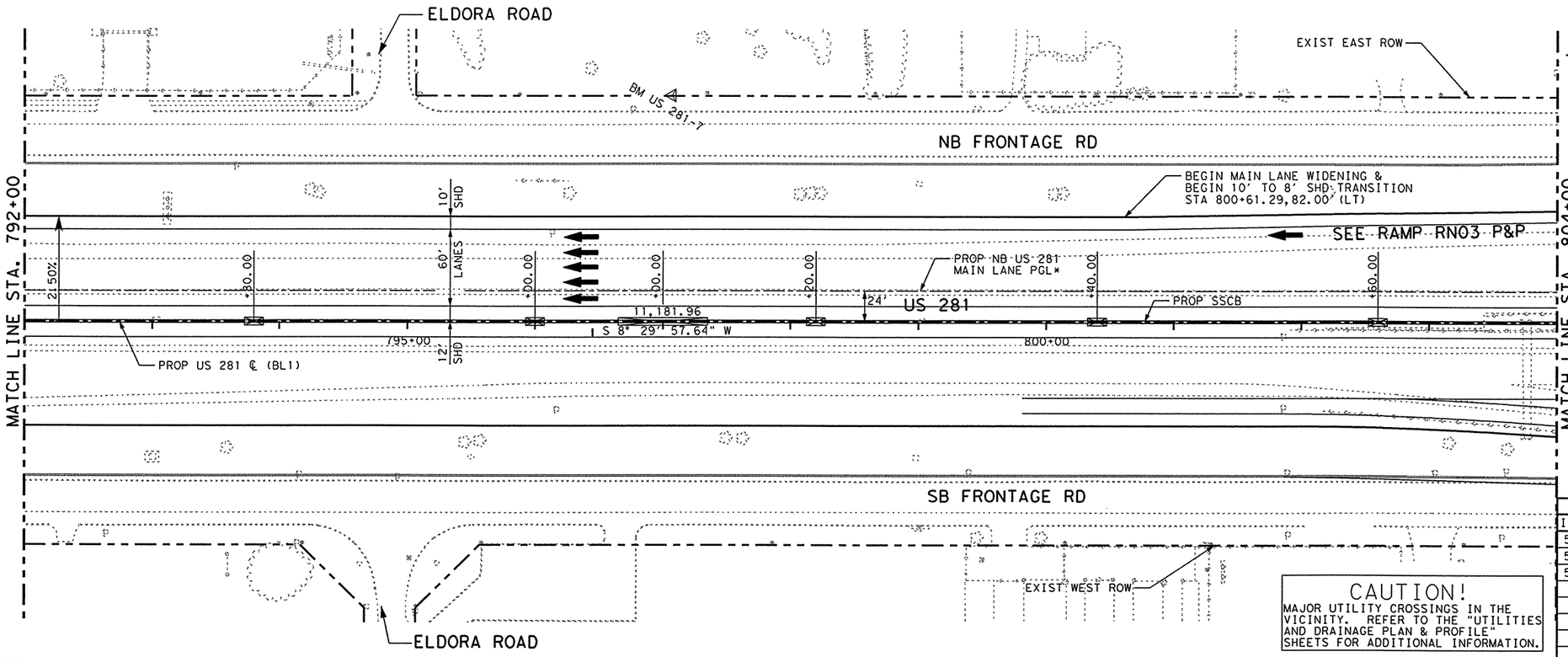

LEGEND:

MC	- MOUNTABLE CONC CURB
BC	- BARRIER CONC CURB
MCG	- MOUNTABLE CONC CURB & GUTTER
BCG	- BARRIER CONC CURB & GUTTER
RW	- RETAINING WALL
RR	- RIP RAP
SGT	- SINGLE GUARD RAIL TERMINAL
SSCB	- SINGLE SLOPE CONC BARRIER
SSTR	- SINGLE SLOPE TRAFFIC RAILING
SW	- SIDEWALK
WCR	- WHEEL CHAIR RAMP
VG	- 4' VALLEY GUTTER
MBGF	- METAL BEAM GUARD FENCE
TAS	- TERMINAL ANCHOR SECTION
⊠	- CENTER OF 10' SSCB (TY 4)
⊠	- CENTER OF 70' SSCB (TY 3)
—o	- DEL ASM TY B (D-SW)
—▨	- OBJ MRK ASM TY 3 (OM-3R)

*NOTE: PGL FOLLOWS US 281 ℄ (BL1) STATIONING

⚠ B.M. & HORIZONTAL DATA
BM # US 281-7
ELEV = 104.99
STA = 797+06.99, 175.36' LT
3 1/4" TXDOT ALUMINUM DISK

SHEET TOTALS

ITEM	EST.	FINAL	UNIT	DESCRIPTION
514	1080		LF	PERM CONC TRF BAR SGL SLP (TY 2) (H=42")
514	70		LF	PERM CONC TRF BAR SGL SLP (TY3) (H=42")
514	50		LF	PERM CONC TRF BAR SGL SLP (TY4) (H=42")

CAUTION!
MAJOR UTILITY CROSSINGS IN THE VICINITY. REFER TO THE "UTILITIES AND DRAINAGE PLAN & PROFILE" SHEETS FOR ADDITIONAL INFORMATION.

EXIST AND PROP PGL

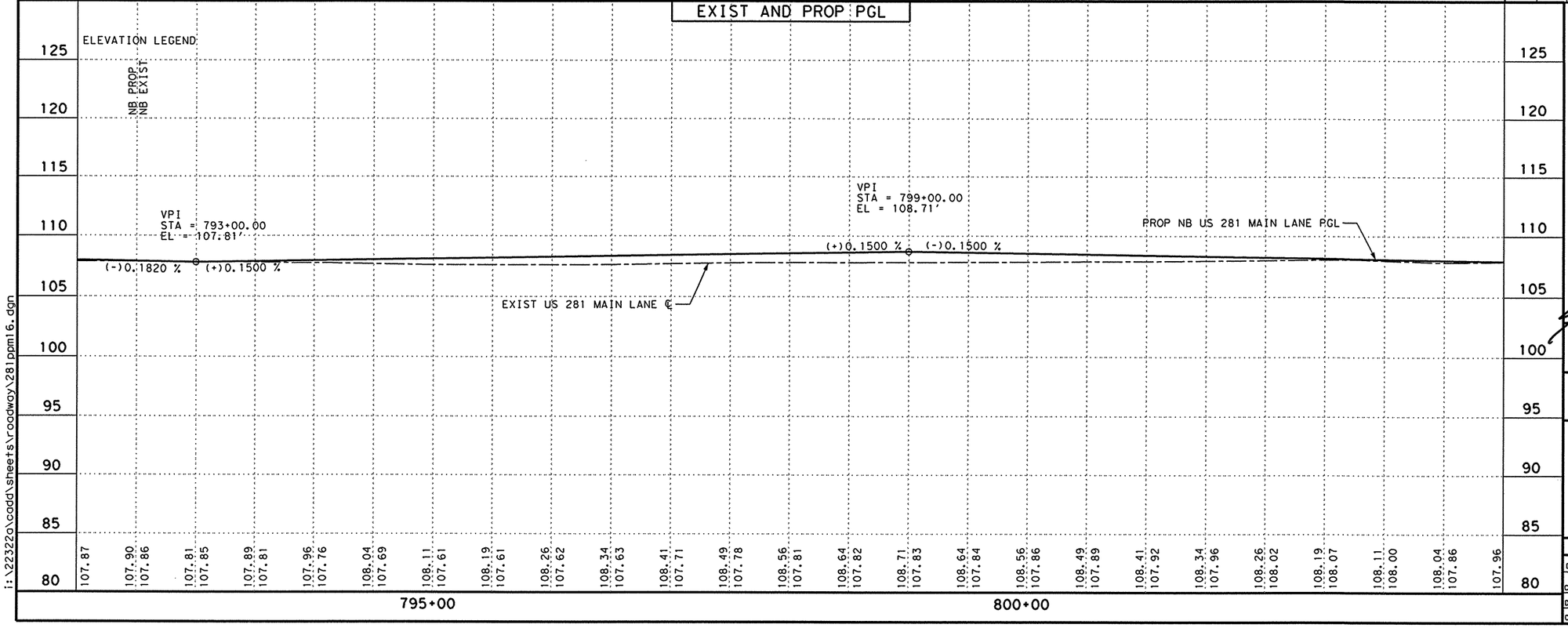

PROFILE LEGEND
——— PROP US 281 MAIN LANE P.G.L.
– – – – EXIST US 281 MAIN LANE NATURAL GROU
SSD STOPPING SIGHT DISTANCE

THE SEAL APPEARING ON THIS DOCUMENT WAS AUTHORIZED BY JAIME AGUILAR, P.E. 87606 ON 06/23/2003.

THE SEAL APPEARING ON THIS DOCUMENT WAS AUTHORIZED BY PHAISARN CHATANAPHOL, P.E. 89252 ON 06/23/2003.

STATE OF TEXAS · JAIME AGUILAR · 87606 · REGISTERED PROFESSIONAL ENGINEER

STATE OF TEXAS · PHAISARN CHATANAPHOL · 89252 · REGISTERED PROFESSIONAL ENGINEER

Parsons Brinckerhoff Quade & Douglas Inc.

Texas Department of Transportation

© 2003 by TxDOT

US 281
PLAN & PROFILE
NORTHBOUND MAINLANES

STA. 792+00 "BL1" TO
STA. 804+00 "BL1"

PLAN 1"= 100' HORIZ
PROFILE 1"= 10' VERT

SHEET 16 OF 20				281PPM16.DGN				
DESIGNED: JA	FED. RD DIV. No.	STATE	FEDERAL AID PROJECT No.				HIGHWAY No.	
CHECKED: JP	6	TEXAS					US 281	
DRAWN:	STATE DISTRICT	COUNTY	CONTROL No.	SECTION	JOB No.	SHEET No.		
CHECKED: JDH	PHARR	HIDALGO	0255	08	091	288		

i:\22322o\cadd\sheets\roadway\281ppm16.dgn

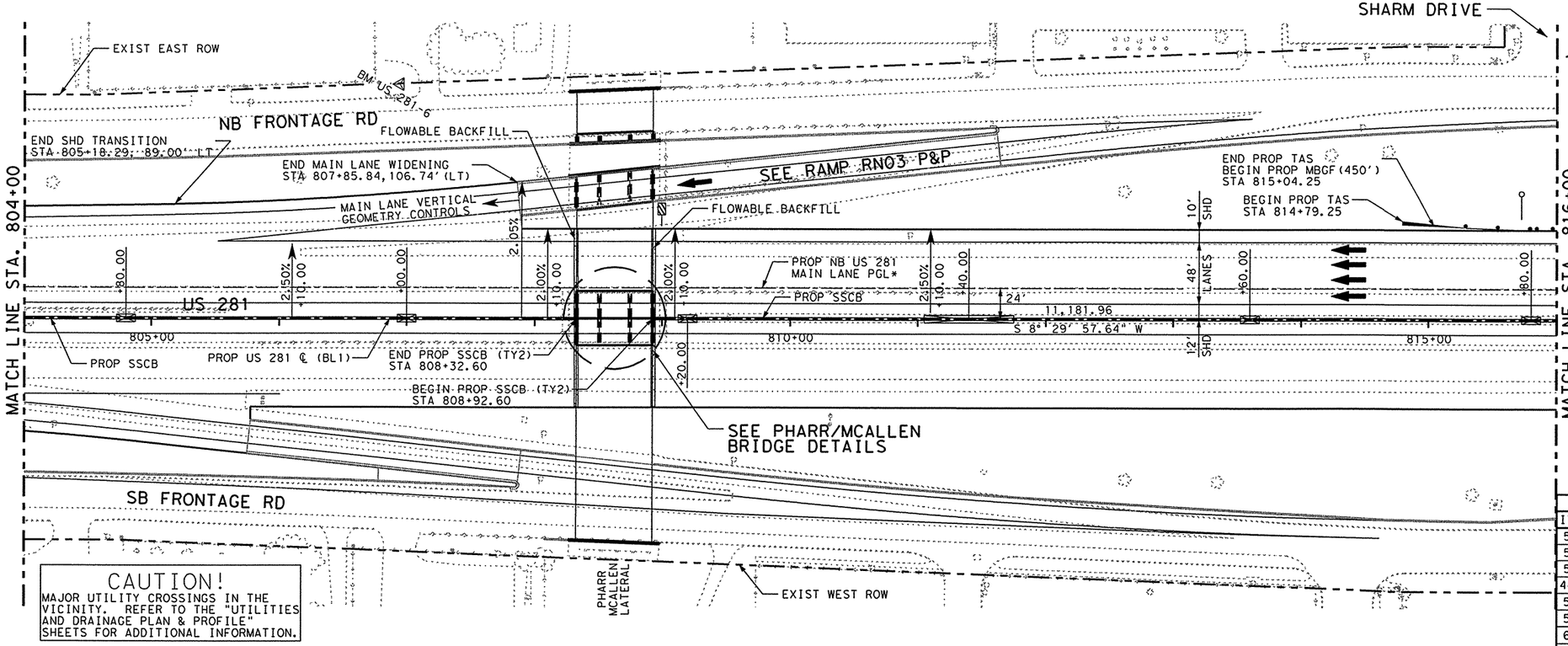

CAUTION!
MAJOR UTILITY CROSSINGS IN THE VICINITY. REFER TO THE "UTILITIES AND DRAINAGE PLAN & PROFILE" SHEETS FOR ADDITIONAL INFORMATION.

LEGEND:

MC	- MOUNTABLE CONC CURB
BC	- BARRIER CONC CURB
MCG	- MOUNTABLE CONC CURB & GUTTER
BCG	- BARRIER CONC CURB & GUTTER
RW	- RETAINING WALL
RR	- RIP RAP
SGT	- SINGLE GUARD RAIL TERMINAL
SSCB	- SINGLE SLOPE CONC BARRIER
SSTR	- SINGLE SLOPE TRAFFIC RAILING
SW	- SIDEWALK
WCR	- WHEEL CHAIR RAMP
VG	- 4' VALLEY GUTTER
MBGF	- METAL BEAM GUARD FENCE
TAS	- TERMINAL ANCHOR SECTION
	- CENTER OF 10' SSCB (TY 4)
	- CENTER OF 70' SSCB (TY 3)
	- DEL ASM TY B (D-SW)
	- OBJ MRK ASM TY 3 (OM-3R)

*NOTE: PGL FOLLOWS US 281 ℄ (BL1) STATIONING

B.M. & HORIZONTAL DATA
BM # US 281-6
ELEV = 105.29
STA = 806+94.49, 183.50' LT
3 1/4" TXDOT ALUMINUM DISK

SHEET TOTALS

ITEM	EST.	FINAL	UNIT	DESCRIPTION
514	1080		LF	PERM CONC TRF BAR SGL SLP (TY 2) (H=42")
514	70		LF	PERM CONC TRF BAR SGL SLP (TY 3) (H=42")
514	50		LF	PERM CONC TRF BAR SGL SLP (TY 4) (H=42")
4438	38		CY	FLOWABLE BACKFILL
540	95		LF	MTL BEAM GD FEN (12 GA) (TIM POST)
540	1		EA	TERM ANCH SECT (12 GA)
658	1		EA	DEL ASM TY B (D-SW)
658	1		EA	OBJ MRK ASM TY 3 (OM-3R)

EXIST AND PROP PGL

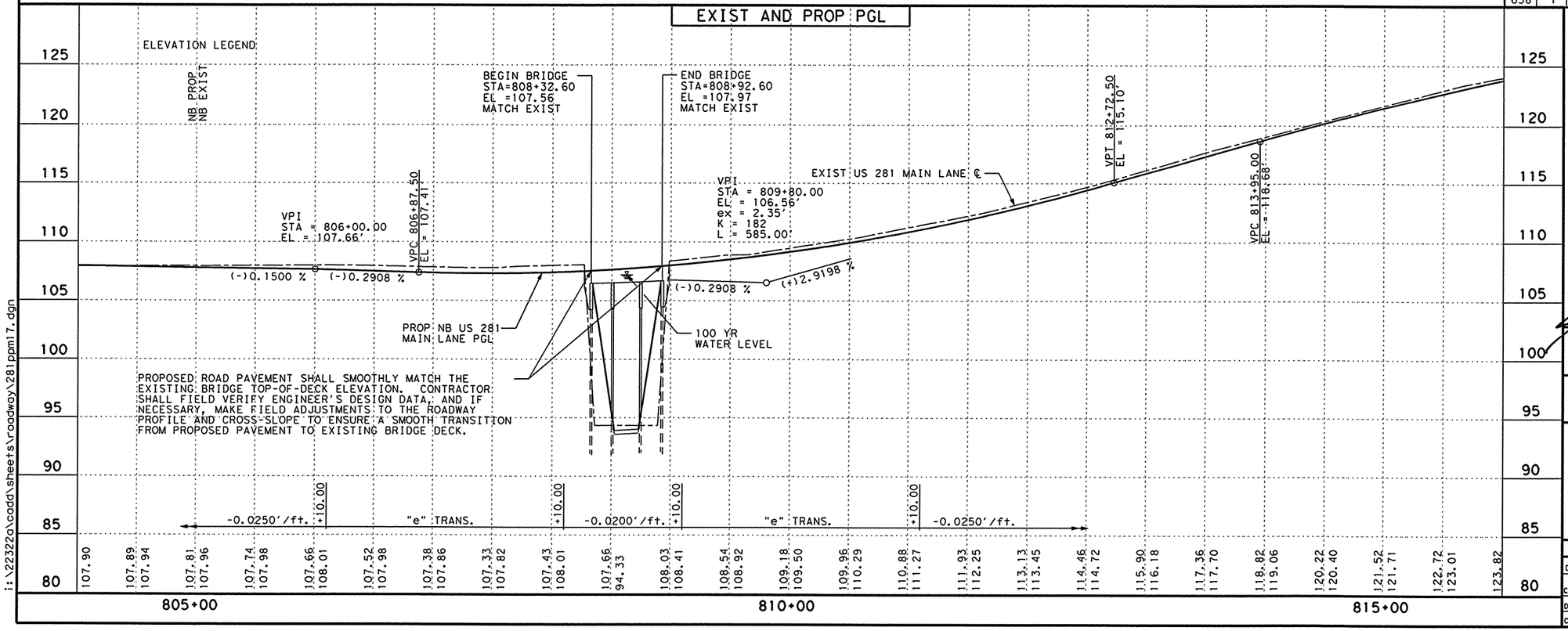

PROFILE LEGEND
PROP US 281 MAIN LANE P.G.L.
EXIST US 281 MAIN LANE NATURAL GROU
SSD STOPPING SIGHT DISTANCE

THE SEAL APPEARING ON THIS DOCUMENT WAS AUTHORIZED BY JAIME AGUILAR, P.E. 87606 ON 06/23/2003.

THE SEAL APPEARING ON THIS DOCUMENT WAS AUTHORIZED BY PHAISARN CWATANAPHOL, P.E. 89252 ON 06/23/2003.

STATE OF TEXAS
JAIME AGUILAR
87606
REGISTERED
PROFESSIONAL ENGINEER

STATE OF TEXAS
PHAISARN CWATANAPHOL
89252
REGISTERED
PROFESSIONAL ENGINEER

Parsons Brinckerhoff
Quade & Douglas Inc.

Texas Department of Transportation
© 2003 by TxDOT

US 281
PLAN & PROFILE
NORTHBOUND MAINLANES
STA. 804+00 "BL1" TO
STA. 816+00 "BL1"

PLAN 1"= 100' HORIZ
PROFILE 1"= 10' VERT

SHEET 17 OF 20 | 281PPM17.DGN

DESIGNED: JA	FED. RD DIV. No.	STATE	FEDERAL AID PROJECT No.	HIGHWAY No.
CHECKED: JP	6	TEXAS		US 281

DRAWN:	STATE DISTRICT	COUNTY	CONTROL No.	SECTION No.	JOB No.	SHEET No.
CHECKED: JDH	PHARR	HIDALGO	0255	08	091	289

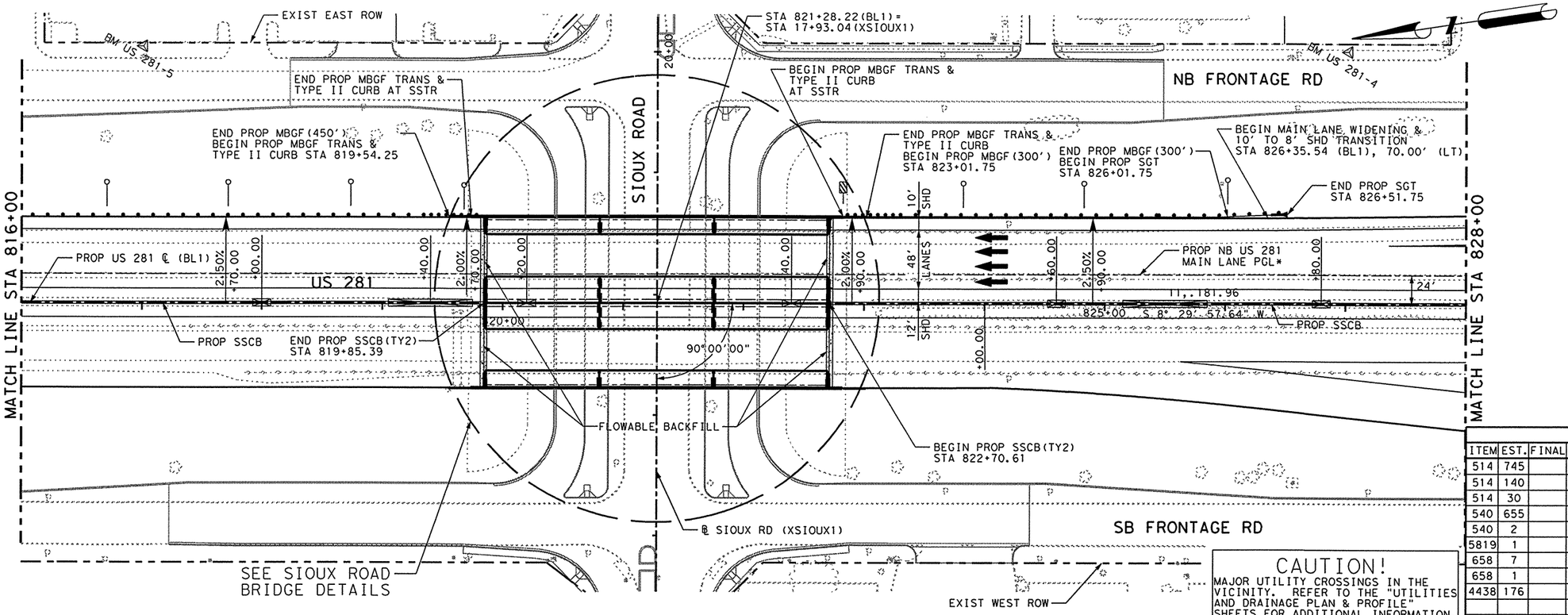

LEGEND:

MC	- MOUNTABLE CONC CURB
BC	- BARRIER CONC CURB
MCG	- MOUNTABLE CONC CURB & GUTTER
BCG	- BARRIER CONC CURB & GUTTER
RW	- RETAINING WALL
RR	- RIP RAP
SGT	- SINGLE GUARD RAIL TERMINAL
SSCB	- SINGLE SLOPE CONC BARRIER
SSTR	- SINGLE SLOPE TRAFFIC RAILING
SW	- SIDEWALK
WCR	- WHEEL CHAIR RAMP
VG	- 4' VALLEY GUTTER
MBGF	- METAL BEAM GUARD FENCE
TAS	- TERMINAL ANCHOR SECTION
	- CENTER OF 10' SSCB (TY 4)
	- CENTER OF 70' SSCB (TY 3)
	- DEL ASM TY B (D-SW)
	- OBJ MRK ASM TY 3 (OM-3R)

*NOTE: PGL FOLLOWS US 281 ℄ (BL1) STATIONING

△ B.M. & HORIZONTAL DATA

BM # US 281-5
ELEV = 107.46
STA = 817+01.19, 211.65' LT
3 1/4" TXDOT ALUMINUM DISK

BM # US 281-4
ELEV = 106.43
STA = 827+02.50, 207.77' LT
3 1/4" TXDOT ALUMINUM DISK

SHEET TOTALS

ITEM	EST.	FINAL	UNIT	DESCRIPTION
514	745		LF	PERM TRF BAR SGL SLP (TY 2) (H=42")
514	140		LF	PERM TRF BAR SGL SLP (TY 3) (H=42")
514	30		LF	PERM CONC TRF BAR SGL SLP (TY 4) (H=42")
540	655		LF	MTL BEAM GD FEN (12 GA) (TIM POST)
540	2		EA	MTL BEAM GD FEN TRANS (12 GA)
5819	1		EA	SINGLE GDRAIL TERM (TY II)
658	7		EA	DEL ASM TY B(D-SW)
658	1		EA	OBJ MRK ASM TY 3(OM-3R)
4438	176		CY	FLOWABLE BACKFILL

EXIST AND PROP PGL

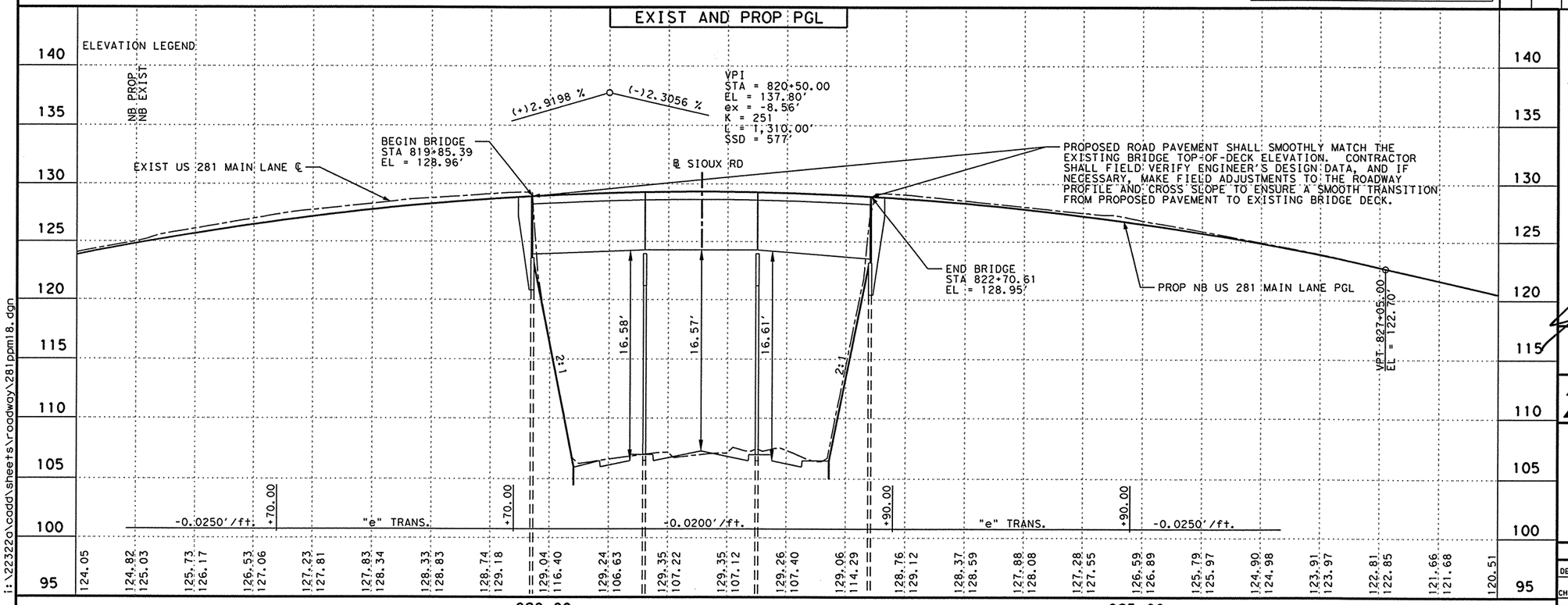

PROFILE LEGEND

PROP US 281 MAIN LANE P.G.L.
EXIST US 281 MAIN LANE NATURAL GROU
SSD STOPPING SIGHT DISTANCE

THE SEAL APPEARING ON THIS DOCUMENT WAS AUTHORIZED BY JAIME AGUILAR, P.E. 87606 ON 06/23/2003.

THE SEAL APPEARING ON THIS DOCUMENT WAS AUTHORIZED BY PHAISARN CWATANAPHOL, P.E. 89252 ON 06/23/2003.

STATE OF TEXAS — JAIME AGUILAR — 87606 — REGISTERED PROFESSIONAL ENGINEER

STATE OF TEXAS — PHAISARN CWATANAPHOL — 89252 — REGISTERED PROFESSIONAL ENGINEER

Parsons Brinckerhoff Quade & Douglas Inc.

Texas Department of Transportation

© 2003 by TxDOT

US 281
PLAN & PROFILE
NORTHBOUND MAINLANES

STA. 816+00 "BL1" TO
STA. 828+00 "BL1"

PLAN 1"= 100' HORIZ
PROFILE 1"= 10' VERT

SHEET 18 OF 20 | 281PPM18.DGN

DESIGNED: JA	FED. RD DIV. No.	STATE	FEDERAL AID PROJECT No.	HIGHWAY No.
CHECKED: JP	6	TEXAS		US 281

DRAWN:	STATE DISTRICT	COUNTY	CONTROL No.	SECTION No.	JOB No.	SHEET No.
CHECKED: JDH	PHARR	HIDALGO	0255	08	091	290

NAME
10:40:16 AM
06/23/2003
i:\22322g\cadd\sheets\roadway\281ppm18.dgn

NAME
10:40:39 AM
06/23/2003

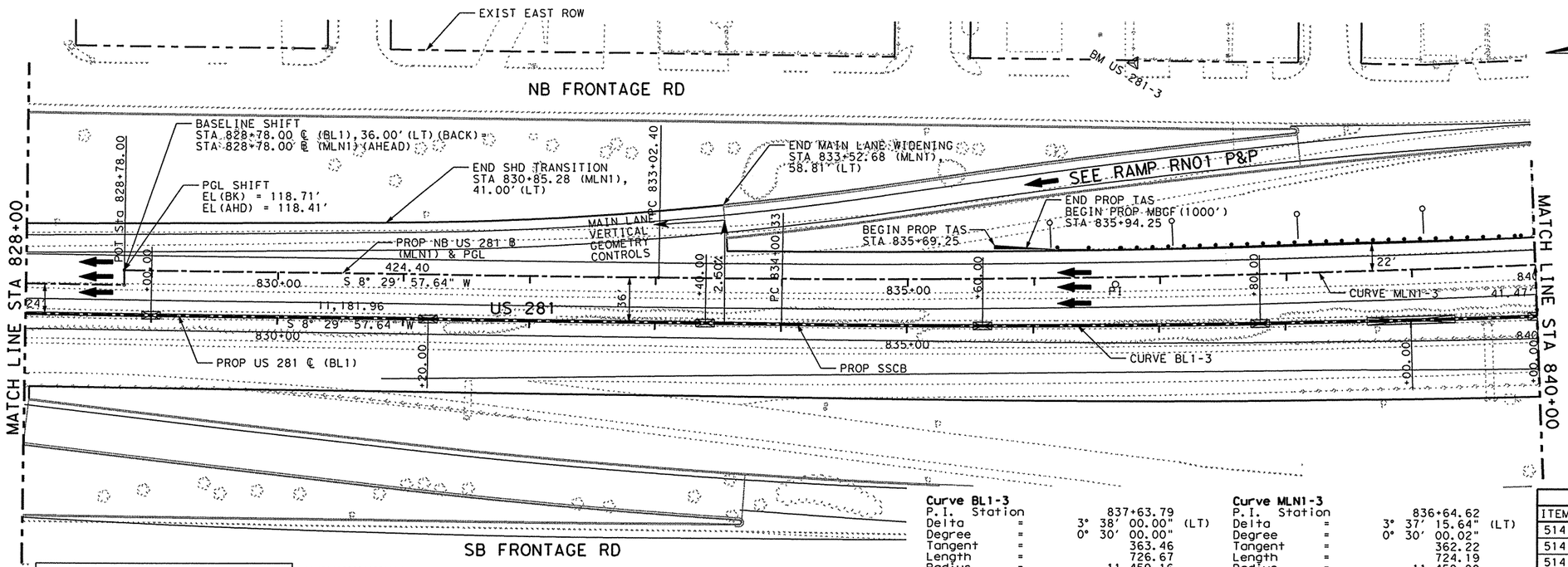

CAUTION!
MAJOR UTILITY CROSSINGS IN THE VICINITY. REFER TO THE "UTILITIES AND DRAINAGE PLAN & PROFILE" SHEETS FOR ADDITIONAL INFORMATION.

Curve BL1-3

P.I. Station	=	837+63.79
Delta	=	3° 38' 00.00" (LT)
Degree	=	0° 30' 00.00"
Tangent	=	363.46
Length	=	726.67
Radius	=	11,459.16
External	=	5.76
Long Chord	=	726.55
Mid. Ord.	=	5.76
P.C. Station	=	834+00.33
P.T. Station	=	841+27.00

Curve MLN1-3

P.I. Station	=	836+64.62
Delta	=	3° 37' 15.64" (LT)
Degree	=	0° 30' 00.02"
Tangent	=	362.22
Length	=	724.19
Radius	=	11,459.00
External	=	5.72
Long Chord	=	724.07
Mid. Ord.	=	5.72
P.C. Station	=	833+02.40
P.T. Station	=	840+26.59

LEGEND:

MC	- MOUNTABLE CONC CURB
BC	- BARRIER CONC CURB
MCG	- MOUNTABLE CONC CURB & GUTTER
BCG	- BARRIER CONC CURB & GUTTER
RW	- RETAINING WALL
RR	- RIP RAP
SGT	- SINGLE GUARD RAIL TERMINAL
SSCB	- SINGLE SLOPE CONC BARRIER
SSTR	- SINGLE SLOPE TRAFFIC RAILING
SW	- SIDEWALK
WCR	- WHEEL CHAIR RAMP
VG	- 4' VALLEY GUTTER
MBGF	- METAL BEAM GUARD FENCE
TAS	- TERMINAL ANCHOR SECTION
⊠	- CENTER OF 10' SSCB (TY 4)
⊠	- CENTER OF 70' SSCB (TY 3)
	- DEL ASM TY B (D-SW)
	- OBJ MRK ASM TY 3 (OM-3R)

B.M. & HORIZONTAL DATA
BM # US 281-3
ELEV = 107.76
STA = 836+81.89, 209.01' LT
3 1/4" TXDOT ALUMINUM DISK

SHEET TOTALS

ITEM	EST.	FINAL	UNIT	DESCRIPTION
514	1070		LF	PERM CONC TRF BAR SGL SLP (TY 2) (H=42")
514	70		LF	PERM CONC TRF BAR SGL SLP (TY 3) (H=42")
514	60		LF	PERM CONC TRF BAR SGL SLP (TY 4) (H=42")
540	405		LF	MTL BEAM GD FEN (12 GA) (TIM POST)
540	1		EA	TERM ANCH SECT (12 GA)
658	4		EA	DEL ASM TY B (D-SW)

EXIST AND PROP PGL

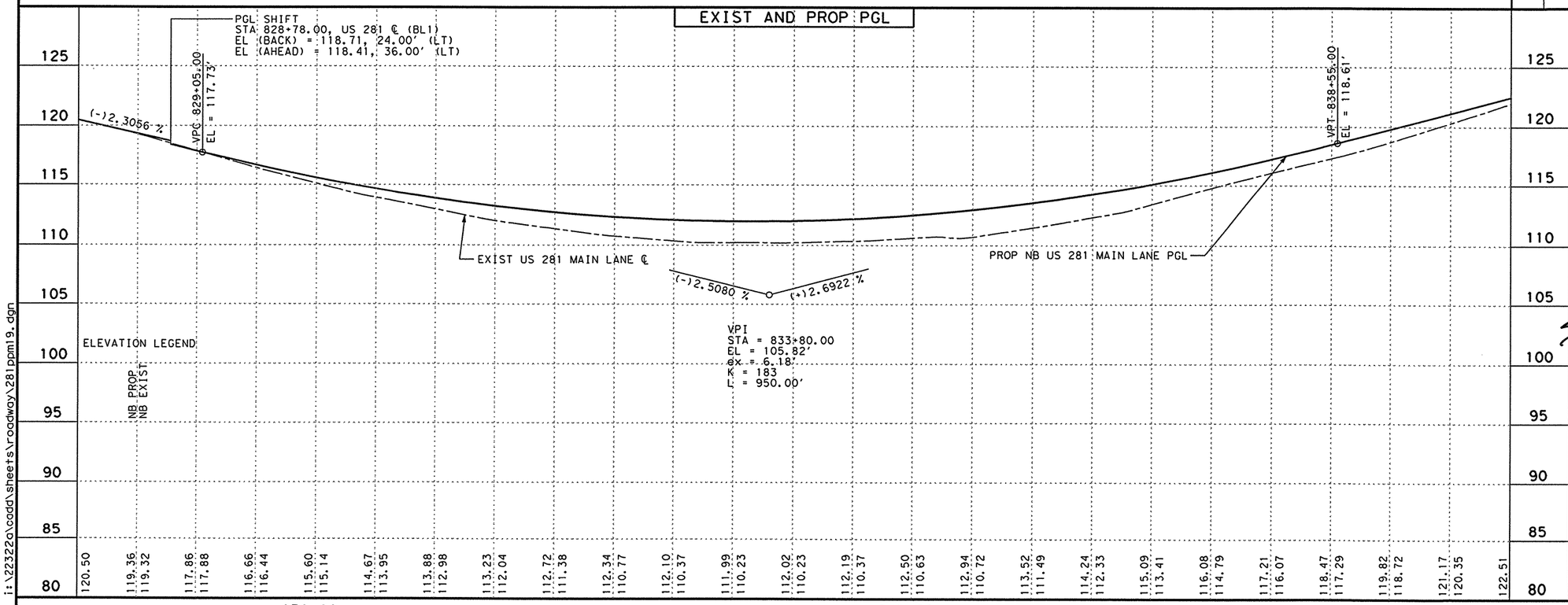

PROFILE LEGEND
PROP US 281 MAIN LANE P.G.L.
EXIST US 281 MAIN LANE NATURAL GROU
SSD STOPPING SIGHT DISTANCE

THE SEAL APPEARING ON THIS DOCUMENT WAS AUTHORIZED BY JAIME AGUILAR, P.E. 87606 ON 06/23/2003.

THE SEAL APPEARING ON THIS DOCUMENT WAS AUTHORIZED BY PHAISARN CWATANAPHOL, P.E. 89252 ON 06/23/2003.

STATE OF TEXAS · JAIME AGUILAR · 87606 · REGISTERED PROFESSIONAL ENGINEER

STATE OF TEXAS · PHAISARN CWATANAPHOL · 89252 · REGISTERED PROFESSIONAL ENGINEER

Parsons Brinckerhoff Quade & Douglas Inc.

Texas Department of Transportation

© 2003 by TxDOT

US 281
PLAN & PROFILE
NORTHBOUND MAINLANES

STA. 828+00 "BL1" TO
STA. 840+00 "BL1"

PLAN 1"= 100' HORIZ
PROFILE 1"= 10' VERT

SHEET 19 OF 20 | 281PPM19.DGN

DESIGNED: JA	FED. RD DIV. NO.	STATE	FEDERAL AID PROJECT No.	HIGHWAY No.
CHECKED: JP	6	TEXAS		US 281

DRAWN:	STATE DISTRICT	COUNTY	CONTROL No.	SECTION No.	JOB No.	SHEET No.
CHECKED: JDH	PHARR	HIDALGO	0255	08	091	291

i:\22322a\cadd\sheets\roadway\281ppm19.dgn

Carlos F. Gonzalez
06:48:08 PM
08/06/2003

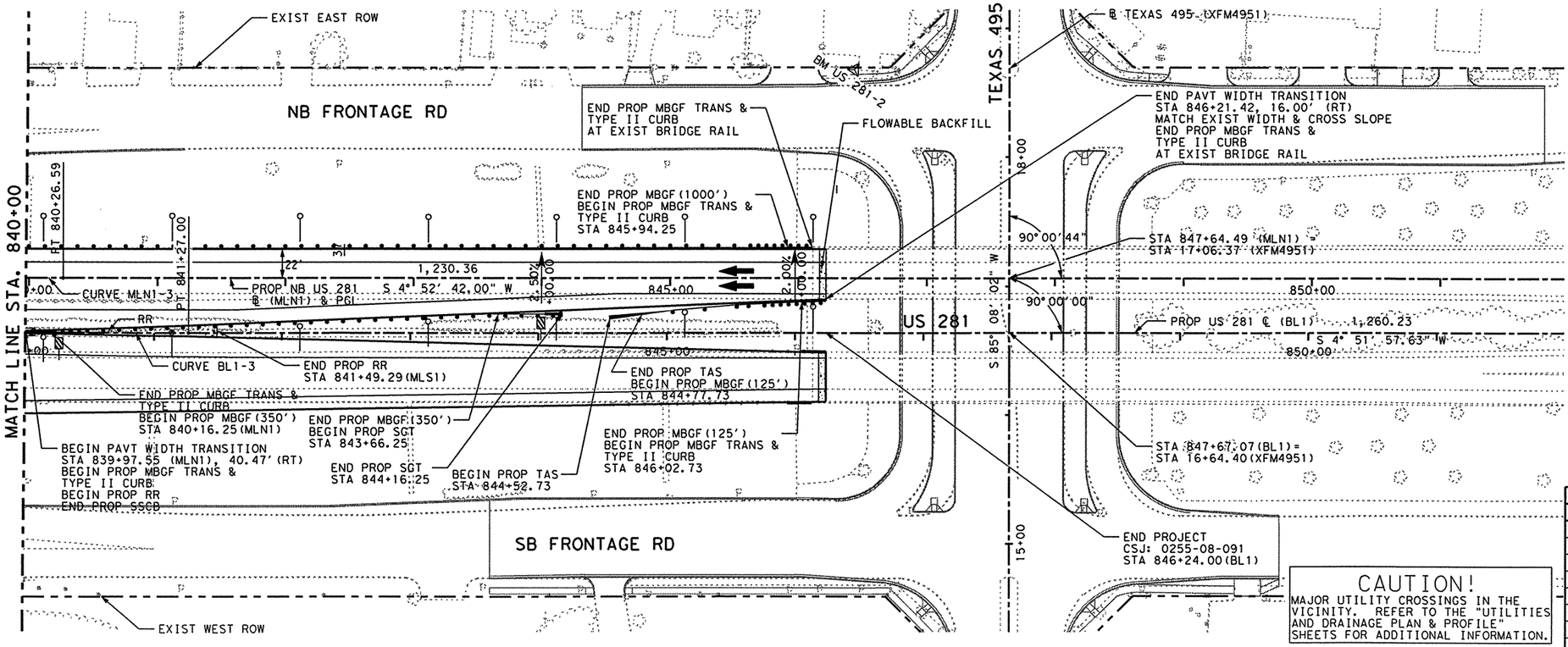

LEGEND:

MC	- MOUNTABLE CONC CURB
BC	- BARRIER CONC CURB
MCG	- MOUNTABLE CONC CURB & GUTTER
BCG	- BARRIER CONC CURB & GUTTER
RW	- RETAINING WALL
RR	- RIP RAP
SGT	- SINGLE GUARD RAIL TERMINAL
SSCB	- SINGLE SLOPE CONC BARRIER
SSTR	- SINGLE SLOPE TRAFFIC RAILING
SW	- SIDEWALK
WCR	- WHEEL CHAIR RAMP
VG	- 4' VALLEY GUTTER
MBGF	- METAL BEAM GUARD FENCE
TAS	- TERMINAL ANCHOR SECTION
⊠	- CENTER OF 10' SSCB (TY 4)
▭	- CENTER OF 70' SSCB (TY 3)
—o	- DEL ASM TY B (D-SW)
—▨	- OBJ MRK ASM TY 3 (OM-3R)

⚠ B.M. & HORIZONTAL DATA

BM # US 281-2
ELEV = 108.36
STA = 846+46.19, 203.37' LT
3 1/4" TXDOT ALUMINUM DISK

BM # US 281-1
ELEV = 107.13
STA = 853+00.67, 198.90' LT
3 1/4" TXDOT ALUMINUM DISK

SHEET TOTALS

ITEM	EST.	FINAL	UNIT	DESCRIPTION
432	11		CY	RIPRAP (CONC) (CL B) (4 IN)
540	1070		LF	MTL BEAM GD FEN (12 GA)(TIM POST)
540	3		EA	MTL BEAM GD FEN TRANS (12 GA)
658	14		EA	DEL ASM TY B(D-SW)
4438	25		CY	FLOWABLE BACKFILL
658	2		EA	OBJ MRK ASM TY 3(OM-3R)
540	1		EA	TERM ANCH SECT (12 GA)
5819	1		EA	SINGLE GDRAIL TERM (TY II)

CAUTION!
MAJOR UTILITY CROSSINGS IN THE VICINITY. REFER TO THE "UTILITIES AND DRAINAGE PLAN & PROFILE" SHEETS FOR ADDITIONAL INFORMATION.

EXIST AND PROP PGL

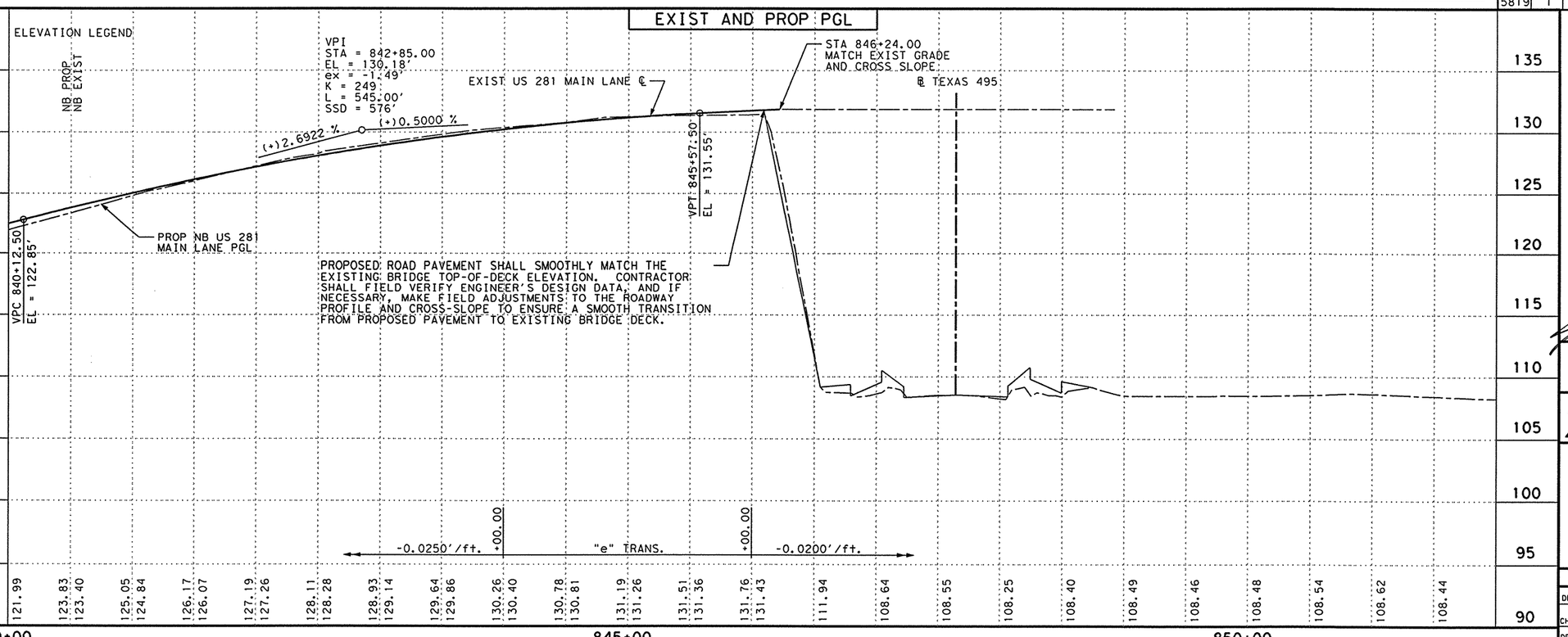

PROFILE LEGEND

——— PROP US 281 MAIN LANE P.G.L.
– – – – EXIST US 281 MAIN LANE NATURAL GROU
SSD STOPPING SIGHT DISTANCE

THE SEAL APPEARING ON THIS DOCUMENT WAS AUTHORIZED BY JAIME AGUILAR, P.E. 87606 ON 08/06/2003.

THE SEAL APPEARING ON THIS DOCUMENT WAS AUTHORIZED BY PHAISARN CWATANAPHOL, P.E. 89252 ON 08/06/2003.

STATE OF TEXAS — JAIME AGUILAR — 87606 — REGISTERED PROFESSIONAL ENGINEER

STATE OF TEXAS — PHAISARN CWATANAPHOL — 89252 — REGISTERED PROFESSIONAL ENGINEER

Parsons Brinckerhoff Quade & Douglas Inc.

Texas Department of Transportation

© 2003 by TxDOT

US 281
PLAN & PROFILE
NORTHBOUND MAINLANES

STA. 840+00 "BL1" TO END

PLAN 1"= 100' HORIZ
PROFILE 1"= 10' VERT

SHEET 20 OF 20 — 281PPM20.DGN

DESIGNED: TT	FED. RD DIV. No.	STATE	FEDERAL AID PROJECT No.	HIGHWAY No.
CHECKED: DM	6	TEXAS		US 281

DRAWN:	STATE DISTRICT	COUNTY	CONTROL No.	SECTION No.	JOB No.	SHEET No.
CHECKED: DM	PHARR	HIDALGO	0255	08	091	292

T:\22322o\CADD\Sheets\Roadway\281ppm20.dgn

NAME
10:46:36 AM
06/23/2003

CAUTION!
MAJOR UTILITY CROSSINGS IN THE VICINITY. REFER TO THE "UTILITIES AND DRAINAGE PLAN & PROFILE" SHEETS FOR ADDITIONAL INFORMATION.

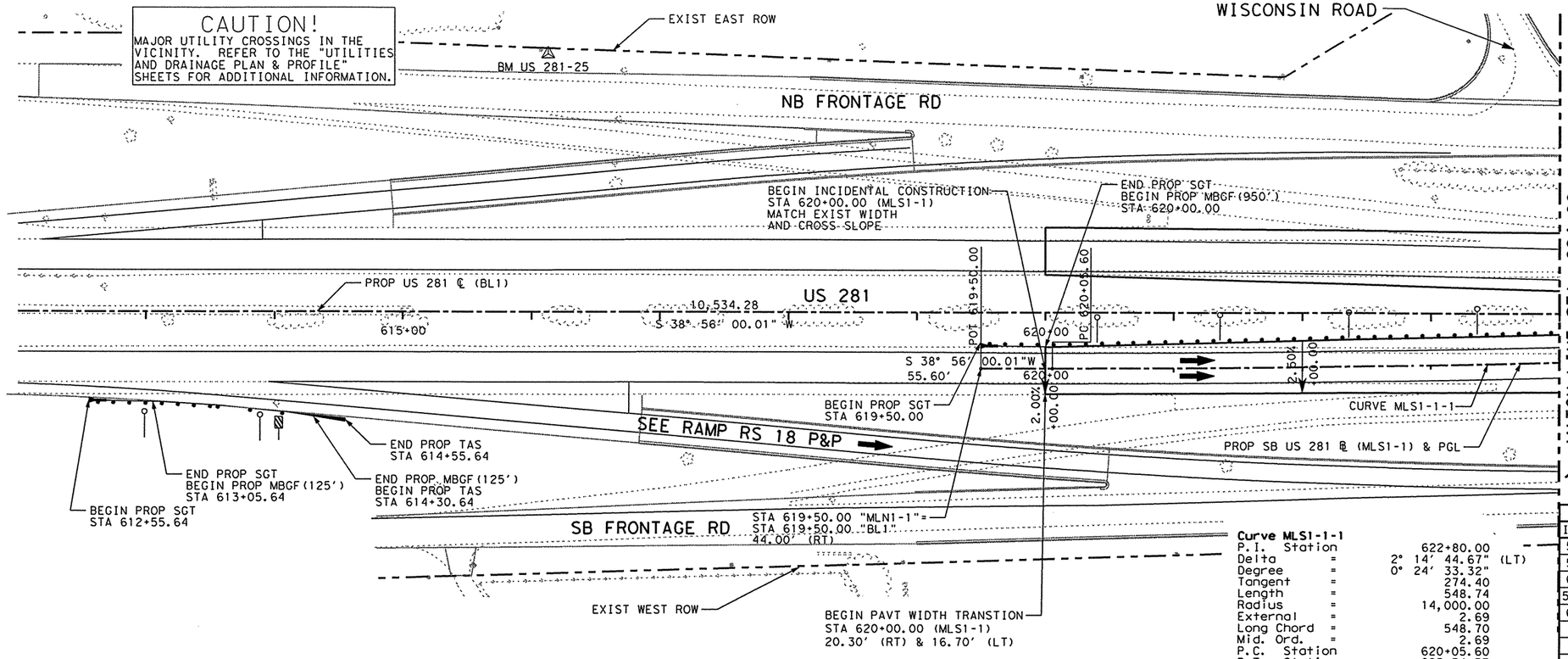

Curve MLS1-1-1

P.I. Station		622+80.00
Delta	=	2° 14' 44.67" (LT)
Degree	=	0° 24' 33.32"
Tangent	=	274.40
Length	=	548.74
Radius	=	14,000.00
External	=	2.69
Long Chord	=	548.70
Mid. Ord.	=	2.69
P.C. Station		620+05.60
P.T. Station		625+54.33

LEGEND:

MC	- MOUNTABLE CONC CURB
BC	- BARRIER CONC CURB
MCG	- MOUNTABLE CONC CURB & GUTTER
BCG	- BARRIER CONC CURB & GUTTER
RW	- RETAINING WALL
RR	- RIP RAP
SGT	- SINGLE GUARD RAIL TERMINAL
SSCB	- SINGLE SLOPE CONC BARRIER
SSTR	- SINGLE SLOPE TRAFFIC RAILING
SW	- SIDEWALK
WCR	- WHEEL CHAIR RAMP
VG	- 4' VALLEY GUTTER
MBGF	- METAL BEAM GUARD FENCE
TAS	- TERMINAL ANCHOR SECTION
⊠	- CENTER OF 10' SSCB (TY 4)
▭	- CENTER OF 70' SSCB (TY 3)
—o	- DEL ASM TY B (D-SW)
—▨	- OBJ MRK ASM TY 3 (OM-3R)

NOTE:
FOR QUANTITIES OF PROP SSCB TY 2, TY 3 & TY 4 & FLOWABLE BACKFILL SEE "NORTHBOUND MAINLANES".

△ B.M. & HORIZONTAL DATA
BM # US 281-25
ELEV = 98.54
STA = 616+12.65, 199.63' LT
3 1/4" TXDOT ALUMINUM DISK

SHEET TOTALS

ITEM	EST.	FINAL	UNIT	DESCRIPTION
540	525		LF	MTL BEAM GD FEN (12 GA)(TIM POST)
540	1		EA	TERM ANCH SECT (12 GA)
658	6		EA	DEL ASM TY B(D-SW)
5819	2		EA	SINGLE GDRAIL TERM (TY II)
658	1		EA	OBJ MRK ASM TY 3(OM-3R)

EXIST AND PROP PGL

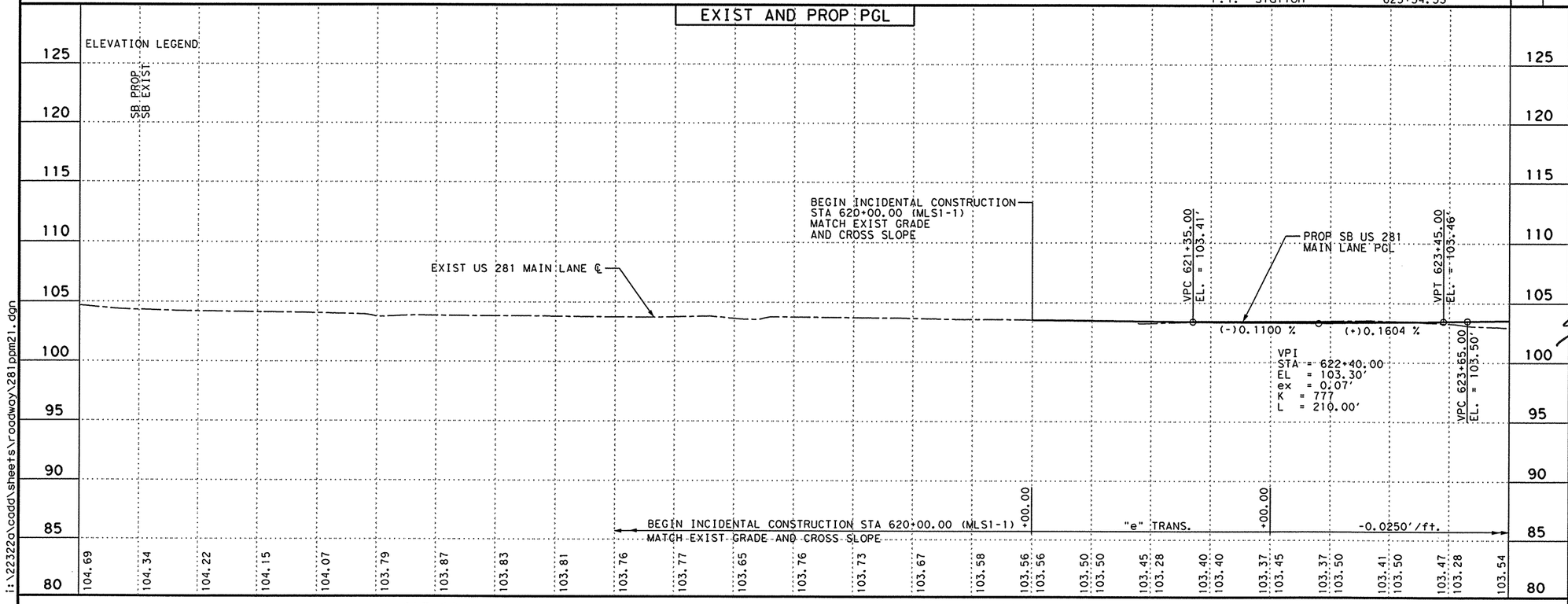

PROFILE LEGEND
PROP US 281 MAIN LANE P.G.L.
EXIST US 281 MAIN LANE NATURAL GROUN
SSD STOPPING SIGHT DISTANCE

THE SEAL APPEARING ON THIS DOCUMENT WAS AUTHORIZED BY JAIME AGUILAR, P.E. 87606 ON 06/23/2003.

THE SEAL APPEARING ON THIS DOCUMENT WAS AUTHORIZED BY PHAISARN CWATANAPHOL, P.E. 89252 ON 06/23/2003.

STATE OF TEXAS — JAIME AGUILAR — 87606 — REGISTERED PROFESSIONAL ENGINEER

STATE OF TEXAS — PHAISARN CWATANAPHOL — 89252 — REGISTERED PROFESSIONAL ENGINEER

Parsons Brinckerhoff Quade & Douglas Inc.

Texas Department of Transportation

© 2003 by TxDOT

US 281
PLAN & PROFILE
SOUTHBOUND MAINLANES

STA. 612+00 "BL1" TO
STA. 624+00 "BL1"

PLAN 1"= 100' HORIZ
PROFILE 1"= 10' VERT

SHEET 1 OF 20 | 281PPM21.DGN

DESIGNED: JA	FED. RD DIV. NO.	STATE	FEDERAL AID PROJECT No.	HIGHWAY No.
CHECKED: JP	6	TEXAS		US 281

DRAWN:	STATE DISTRICT	COUNTY	CONTROL No.	SECTION No.	JOB No.	SHEET No.
CHECKED: JDH	PHARR	HIDALGO	0255	08	091	293

i:\22322a\cadd\sheets\roadway\281ppm21.dgn

NAME
10:46:55 AM
06/23/2003

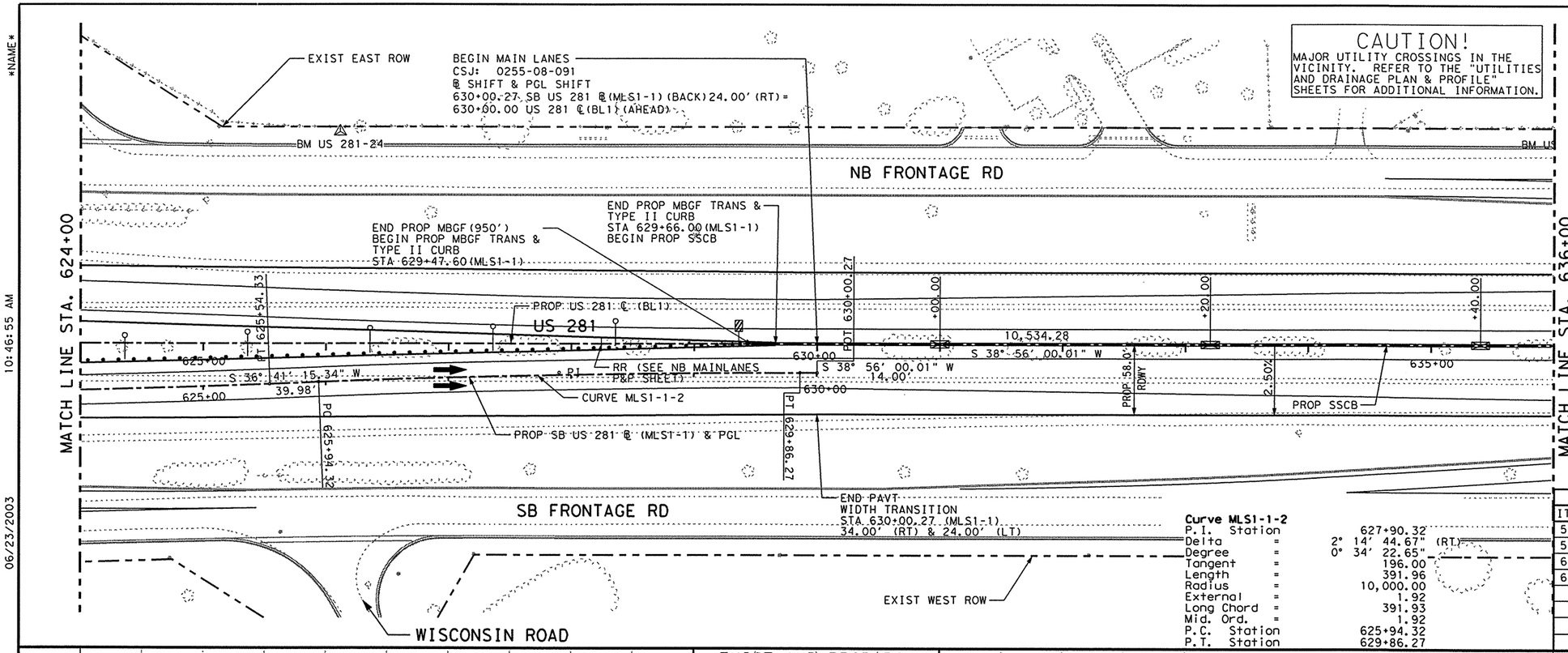

CAUTION!
MAJOR UTILITY CROSSINGS IN THE VICINITY. REFER TO THE "UTILITIES AND DRAINAGE PLAN & PROFILE" SHEETS FOR ADDITIONAL INFORMATION.

LEGEND:

MC	- MOUNTABLE CONC CURB
BC	- BARRIER CONC CURB
MCG	- MOUNTABLE CONC CURB & GUTTER
BCG	- BARRIER CONC CURB & GUTTER
RW	- RETAINING WALL
RR	- RIP RAP
SGT	- SINGLE GUARD RAIL TERMINAL
SSCB	- SINGLE SLOPE CONC BARRIER
SSTR	- SINGLE SLOPE TRAFFIC RAILING
SW	- SIDEWALK
WCR	- WHEEL CHAIR RAMP
VG	- 4' VALLEY GUTTER
MBGF	- METAL BEAM GUARD FENCE
TAS	- TERMINAL ANCHOR SECTION
⊠	- CENTER OF 10' SSCB (TY 4)
▭	- CENTER OF 70' SSCB (TY 3)
—o	- DEL ASM TY B (D-SW)
—▨	- OBJ MRK ASM TY 3 (OM-3R)

NOTE:
FOR QUANTITIES OF PROP SSCB TY 2, TY 3 & TY 4 & FLOWABLE BACKFILL SEE "NORTHBOUND MAINLANES".

Curve MLS1-1-2

P.I. Station	=	627+90.32
Delta	=	2° 14' 44.67" (RT)
Degree	=	0° 34' 22.65"
Tangent	=	196.00
Length	=	391.96
Radius	=	10,000.00
External	=	1.92
Long Chord	=	391.93
Mid. Ord.	=	1.92
P.C. Station		625+94.32
P.T. Station		629+86.27

△ B.M. & HORIZONTAL DATA
BM # US 281-24
ELEV = 98.94
STA = 626+11.32, 171.49' LT
3 ¼" TXDOT ALUMINUM DISK

SHEET TOTALS

ITEM	EST.	FINAL	UNIT	DESCRIPTION
540	550		LF	MTL BEAM GD FEN (12 GA)(TIM POST)
540	1		EA	MTL BEAM GD FEN TRANS (12 GA)
658	1		EA	OBJ MRK ASM TY 3 (OM-3R)
658	5		EA	DEL ASM TY B(D-SW)

EXIST AND PROP PGL

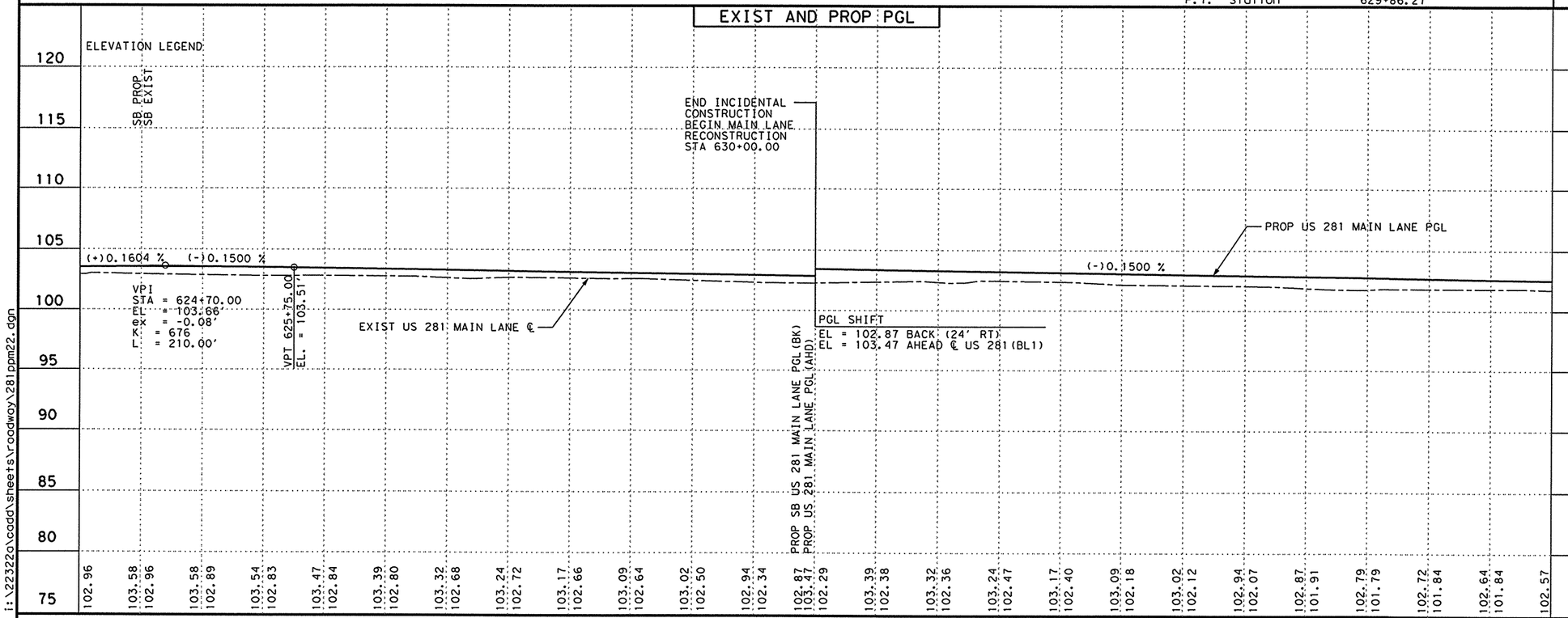

PROFILE LEGEND
PROP US 281 MAIN LANE P.G.L.
EXIST US 281 MAIN LANE NATURAL GROU
SSD STOPPING SIGHT DISTANCE

THE SEAL APPEARING ON THIS DOCUMENT WAS AUTHORIZED BY JAIME AGUILAR, P.E. 87606 ON 06/23/2003.

THE SEAL APPEARING ON THIS DOCUMENT WAS AUTHORIZED BY PHAISARN CWATANAPHOL, P.E. 89252 ON 06/23/2003.

STATE OF TEXAS
JAIME AGUILAR
87606
REGISTERED PROFESSIONAL ENGINEER

STATE OF TEXAS
PHAISARN CWATANAPHOL
89252
REGISTERED PROFESSIONAL ENGINEER

Parsons Brinckerhoff Quade & Douglas Inc.

Texas Department of Transportation

© 2003 by TxDOT

US 281
PLAN & PROFILE
SOUTHBOUND MAINLANES

STA. 624+00 "BL1" TO
STA. 636+00 "BL1"

PLAN 1"= 100' HORIZ
PROFILE 1"= 10' VERT

SHEET 2 OF 20 | 281PPM22.DGN

DESIGNED: JA	FED. RD DIV. NO.	STATE	FEDERAL AID PROJECT No.	HIGHWAY No.
CHECKED: JP	6	TEXAS		US 281

DRAWN:	STATE DISTRICT	COUNTY	CONTROL No.	SECTION No.	JOB No.	SHEET No.
CHECKED: JDH	PHARR	HIDALGO	0255	08	091	294

i:\22322o\cadd\sheets\roadway\281ppm22.dgn

NAME
10:47:09 AM
06/23/2003

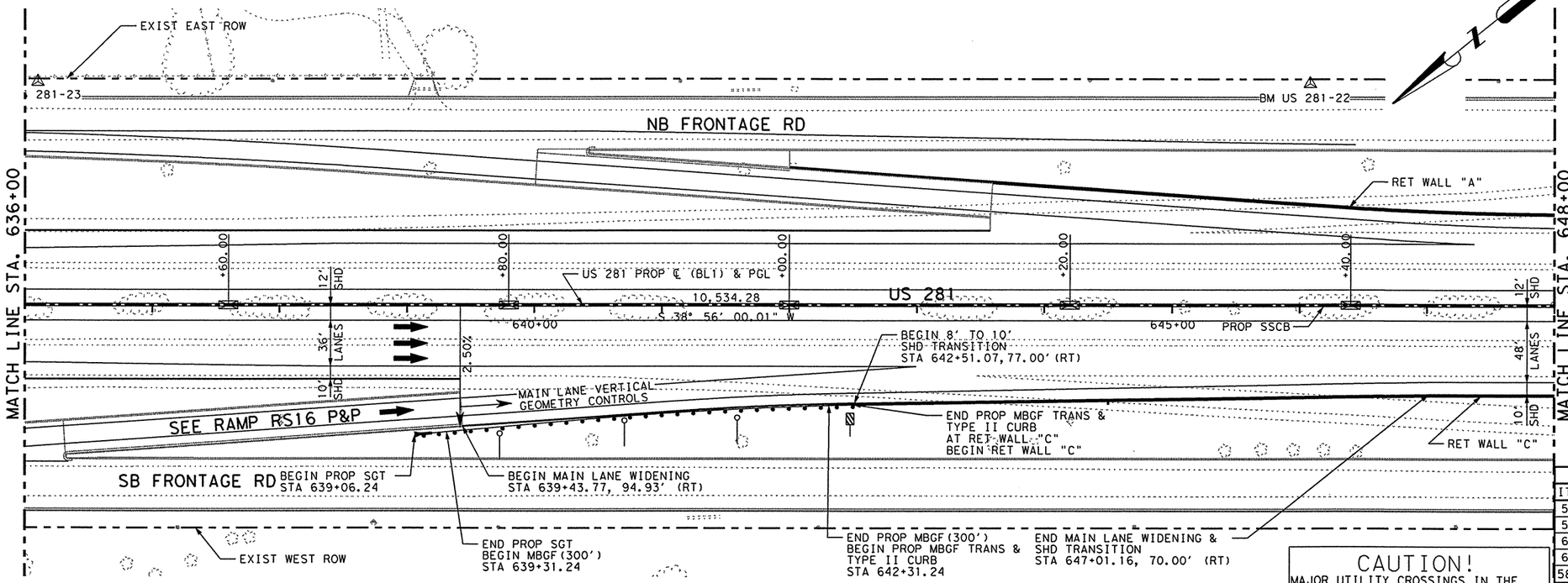

LEGEND:

MC	- MOUNTABLE CONC CURB
BC	- BARRIER CONC CURB
MCG	- MOUNTABLE CONC CURB & GUTTER
BCG	- BARRIER CONC CURB & GUTTER
RW	- RETAINING WALL
RR	- RIP RAP
SGT	- SINGLE GUARD RAIL TERMINAL
SSCB	- SINGLE SLOPE CONC BARRIER
SSTR	- SINGLE SLOPE TRAFFIC RAILING
SW	- SIDEWALK
WCR	- WHEEL CHAIR RAMP
VG	- 4' VALLEY GUTTER
MBGF	- METAL BEAM GUARD FENCE
TAS	- TERMINAL ANCHOR SECTION
⊠	- CENTER OF 10' SSCB (TY 4)
▭	- CENTER OF 70' SSCB (TY 3)
—o	- DEL ASM TY B (D-SW)
—▨	- OBJ MRK ASM TY 3 (OM-3R)

NOTE:
FOR QUANTITIES OF PROP SSCB TY 2, TY 3 & TY 4 & FLOWABLE BACKFILL SEE "NORTHBOUND MAINLANES".

△ B.M. & HORIZONTAL DATA

BM # US 281-23
ELEV = 98.73
STA = 636+10.30, 172.95' LT
3 1/4" TXDOT ALUMINUM DISK

BM # US 281-22
ELEV = 98.54
STA = 646+08.07, 171.87' LT
3 1/4" TXDOT ALUMINUM DISK

SHEET TOTALS

ITEM	EST.	FINAL	UNIT	DESCRIPTION
540	1		EA	MTL BEAM GD FEN TRANS (12 GA)
540	300		LF	MTL BEAM GD FEN (12 GA) (TIM POST)
658	3		EA	DEL ASM TY B(D-SW)
658	1		EA	OBJ MRK ASM TY 3 (OM-3R)
5819	1		EA	SINGLE GDRAIL TERM (TY II)

CAUTION!
MAJOR UTILITY CROSSINGS IN THE VICINITY. REFER TO THE "UTILITIES AND DRAINAGE PLAN & PROFILE" SHEETS FOR ADDITIONAL INFORMATION.

EXIST AND PROP PGL

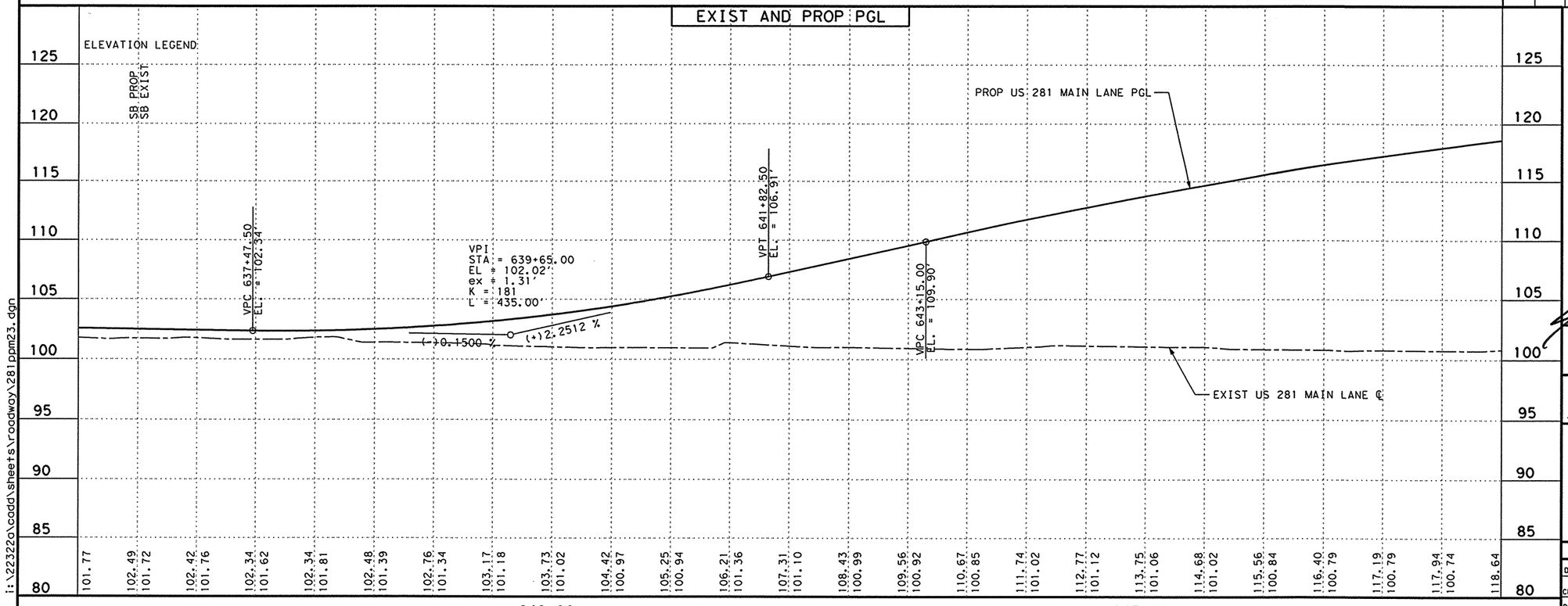

PROFILE LEGEND

———	PROP US 281 MAIN LANE P.G.L.
– – – –	EXIST US 281 MAIN LANE NATURAL GROU
SSD	STOPPING SIGHT DISTANCE

THE SEAL APPEARING ON THIS DOCUMENT WAS AUTHORIZED BY JAIME AGUILAR, P.E. 87606 ON 06/23/2003.

THE SEAL APPEARING ON THIS DOCUMENT WAS AUTHORIZED BY PHAISARN CWATANAPHOL, P.E. 89252 ON 06/23/2003.

Parsons Brinckerhoff Quade & Douglas Inc.

Texas Department of Transportation

© 2003 by TxDOT

US 281
PLAN & PROFILE
SOUTHBOUND MAINLANES

STA. 636+00 "BL1" TO
STA. 648+00 "BL1"

PLAN 1"= 100' HORIZ
PROFILE 1"= 10' VERT

SHEET 3 OF 20 | 281PPM23.DGN

DESIGNED: JA	FED. RD DIV. No.	STATE	FEDERAL AID PROJECT No.			HIGHWAY No.	
CHECKED: JP	6	TEXAS				US 281	
DRAWN:	STATE DISTRICT	COUNTY	CONTROL No.	SECTION No.	JOB No.	SHEET No.	
CHECKED: JDH	PHARR	HIDALGO	0255	08	091	295	

i:\22322a\cadd\sheets\roadway\281ppm23.dgn

NAME
10:47:09 AM
06/23/2003

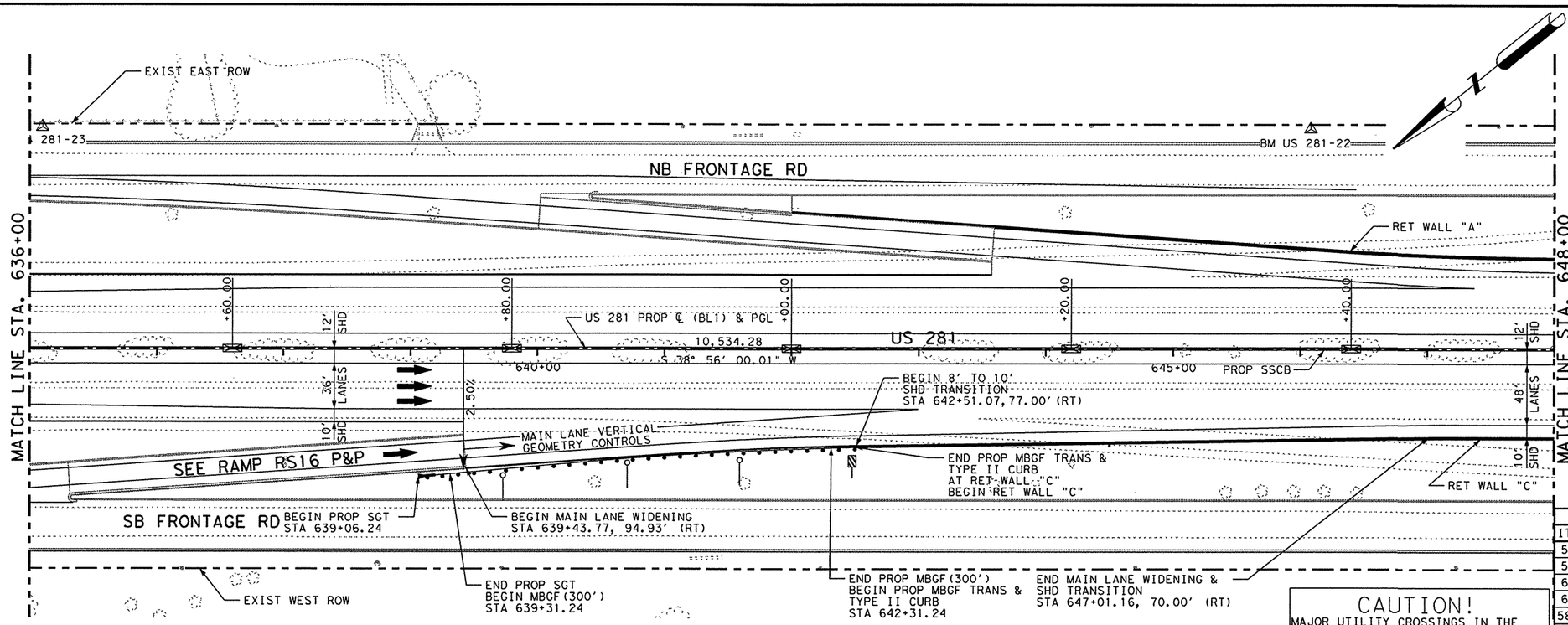

LEGEND:

MC	- MOUNTABLE CONC CURB
BC	- BARRIER CONC CURB
MCG	- MOUNTABLE CONC CURB & GUTTER
BCG	- BARRIER CONC CURB & GUTTER
RW	- RETAINING WALL
RR	- RIP RAP
SGT	- SINGLE GUARD RAIL TERMINAL
SSCB	- SINGLE SLOPE CONC BARRIER
SSTR	- SINGLE SLOPE TRAFFIC RAILING
SW	- SIDEWALK
WCR	- WHEEL CHAIR RAMP
VG	- 4' VALLEY GUTTER
MBGF	- METAL BEAM GUARD FENCE
TAS	- TERMINAL ANCHOR SECTION
⊠	- CENTER OF 10' SSCB (TY 4)
⊠	- CENTER OF 70' SSCB (TY 3)
—o	- DEL ASM TY B (D-SW)
—▨	- OBJ MRK ASM TY 3 (OM-3R)

NOTE:
FOR QUANTITIES OF PROP SSCB TY 2, TY 3 & TY 4 & FLOWABLE BACKFILL SEE "NORTHBOUND MAINLANES".

△ B.M. & HORIZONTAL DATA

BM # US 281-23
ELEV = 98.73
STA = 636+10.30, 172.95' LT
3 1/4" TXDOT ALUMINUM DISK

BM # US 281-22
ELEV = 98.54
STA = 646+08.07, 171.87' LT
3 1/4" TXDOT ALUMINUM DISK

SHEET TOTALS

ITEM	EST.	FINAL	UNIT	DESCRIPTION
540	1		EA	MTL BEAM GD FEN TRANS (12 GA)
540	300		LF	MTL BEAM GD FEN (12 GA)(TIM POST)
658	3		EA	DEL ASM TY B(D-SW)
658	1		EA	OBJ MRK ASM TY 3 (OM-3R)
5819	1		EA	SINGLE GDRAIL TERM (TY II)
529	530		LF	LONG GUTTER (VALLEY)(TY "B") (RETWALL C)

CAUTION!
MAJOR UTILITY CROSSINGS IN THE VICINITY. REFER TO THE "UTILITIES AND DRAINAGE PLAN & PROFILE" SHEETS FOR ADDITIONAL INFORMATION.

EXIST AND PROP PGL

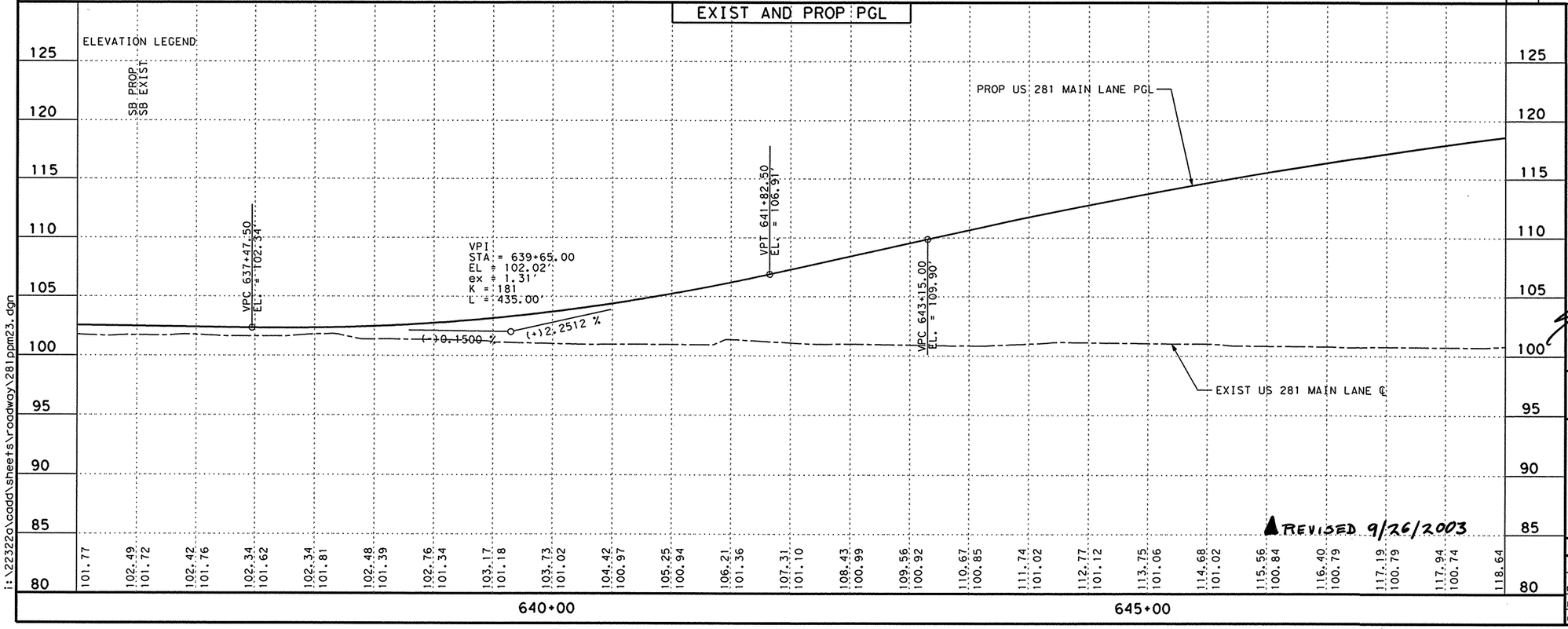

PROFILE LEGEND
PROP US 281 MAIN LANE P.G.L.
EXIST US 281 MAIN LANE NATURAL GROU
SSD STOPPING SIGHT DISTANCE

REVISED 9/26/2003

THE SEAL APPEARING ON THIS DOCUMENT WAS AUTHORIZED BY JAIME AGUILAR, P.E. 87606 ON 06/23/2003.

THE SEAL APPEARING ON THIS DOCUMENT WAS AUTHORIZED BY PHAISARN CHATANAPHOL P.E. 89252 ON 06/23/2003.

STATE OF TEXAS · JAIME AGUILAR · 87606 · REGISTERED PROFESSIONAL ENGINEER

STATE OF TEXAS · PHAISARN CHATANAPHOL · 89252 · REGISTERED PROFESSIONAL ENGINEER

Parsons Brinckerhoff Quade & Douglas Inc.

Texas Department of Transportation

© 2003 by TxDOT

US 281
PLAN & PROFILE
SOUTHBOUND MAINLANES

STA. 636+00 "BL1" TO
STA. 648+00 "BL1"

PLAN 1"= 100' HORIZ
PROFILE 1"= 10' VERT

SHEET 3 OF 20 | 281PPM23.DGN

DESIGNED: JA	FED. RD DIV. NO.	STATE	FEDERAL AID PROJECT NO.	HIGHWAY NO.
CHECKED: JP	6	TEXAS		US 281

DRAWN:	STATE DISTRICT	COUNTY	CONTROL NO.	SECTION NO.	JOB NO.	SHEET NO.
CHECKED: JDH	PHARR	HIDALGO	0255	08	091	295

i:\22322a\cadd\sheets\roadway\281ppm23.dgn

NAME
10:47:27 AM
06/23/2003

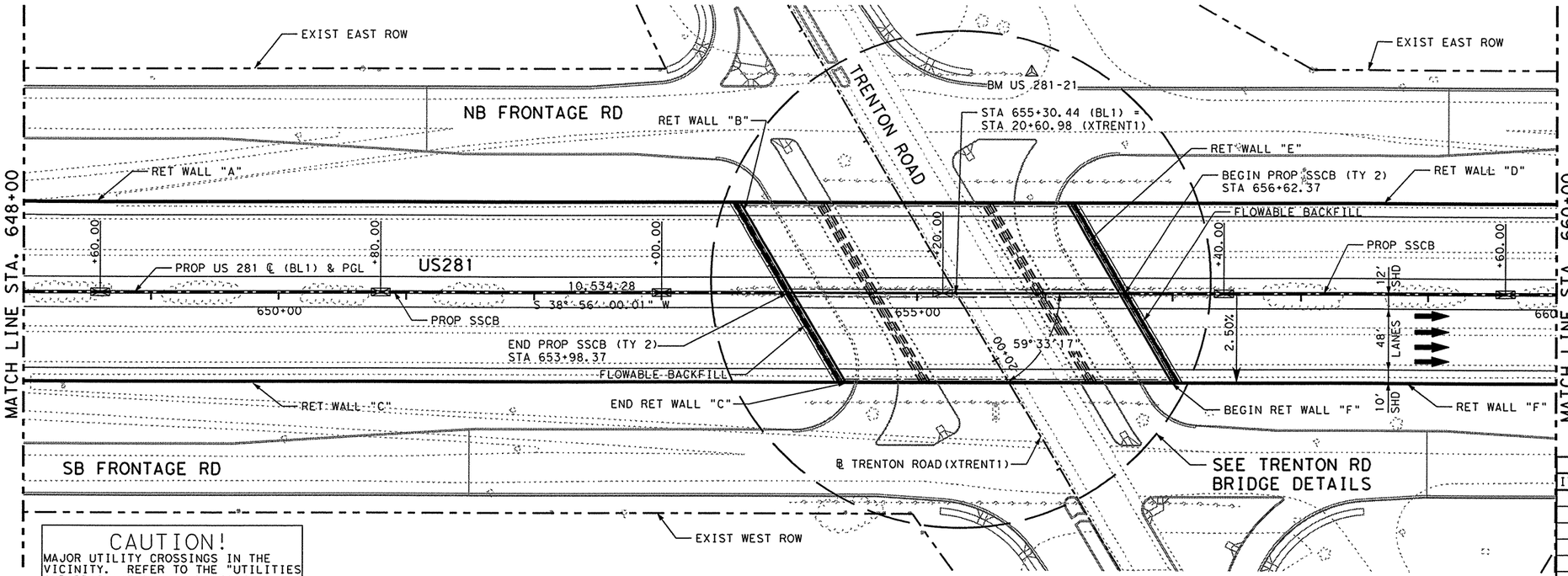

LEGEND:

MC	- MOUNTABLE CONC CURB
BC	- BARRIER CONC CURB
MCG	- MOUNTABLE CONC CURB & GUTTER
BCG	- BARRIER CONC CURB & GUTTER
RW	- RETAINING WALL
RR	- RIP RAP
SGT	- SINGLE GUARD RAIL TERMINAL
SSCB	- SINGLE SLOPE CONC BARRIER
SSTR	- SINGLE SLOPE TRAFFIC RAILING
SW	- SIDEWALK
WCR	- WHEEL CHAIR RAMP
VG	- 4' VALLEY GUTTER
MBGF	- METAL BEAM GUARD FENCE
TAS	- TERMINAL ANCHOR SECTION
⊠	- CENTER OF 10' SSCB (TY 4)
▭	- CENTER OF 70' SSCB (TY 3)
—o	- DEL ASM TY B (D-SW)
—▨	- OBJ MRK ASM TY 3 (OM-3R)

NOTE:
FOR QUANTITIES OF PROP SSCB TY 2, TY 3 & TY 4 & FLOWABLE BACKFILL SEE "NORTHBOUND MAINLANES".

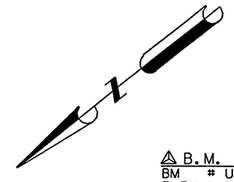

△ B.M. & HORIZONTAL DATA
BM # US 281-21
ELEV = 98.66
STA = 655+88.78, 173.20' LT
3 1/4" TXDOT ALUMINUM DISK

SHEET TOTALS

ITEM	EST.	FINAL	UNIT	DESCRIPTION
				NO PAY QUANTITIES THIS SHEET

CAUTION!
MAJOR UTILITY CROSSINGS IN THE VICINITY. REFER TO THE "UTILITIES AND DRAINAGE PLAN & PROFILE" SHEETS FOR ADDITIONAL INFORMATION.

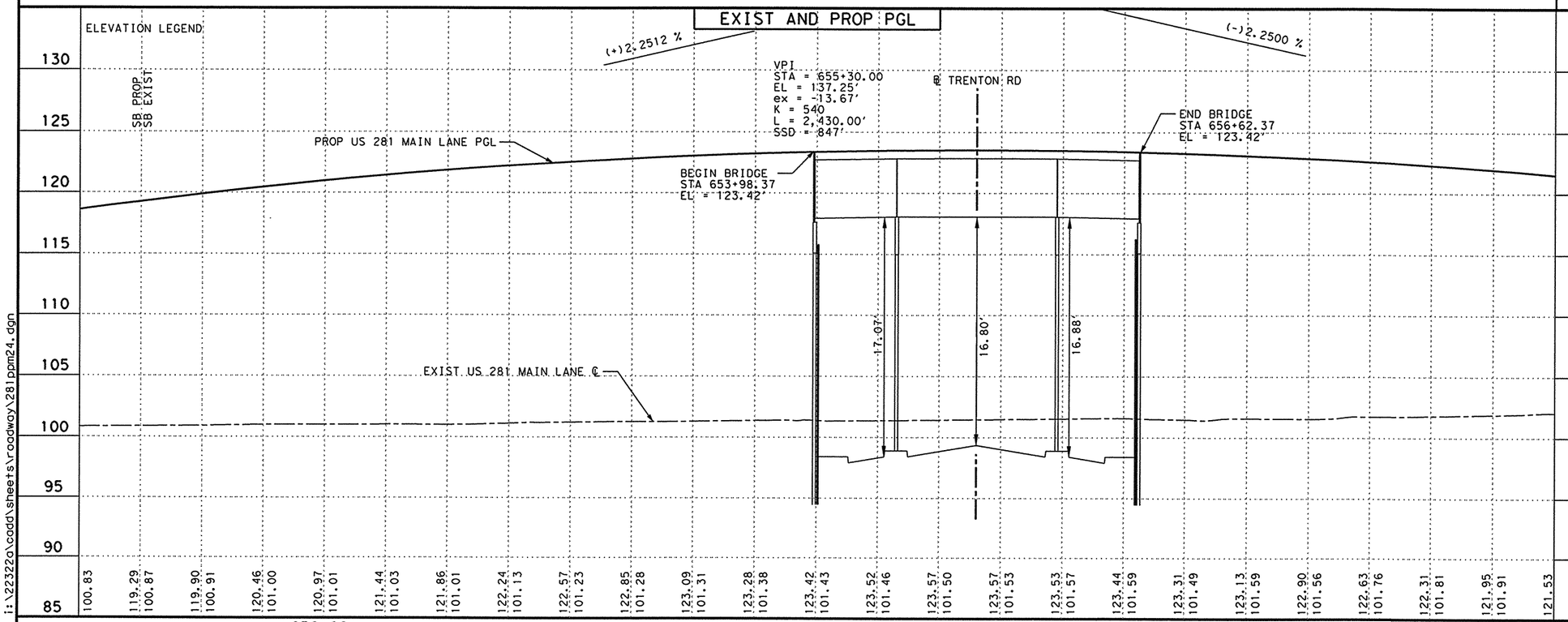

PROFILE LEGEND
PROP US 281 MAIN LANE P.G.L.
EXIST US 281 MAIN LANE NATURAL GROU
SSD STOPPING SIGHT DISTANCE

THE SEAL APPEARING ON THIS DOCUMENT WAS AUTHORIZED BY JAIME AGUILAR, P.E. 87606 ON 06/23/2003.

THE SEAL APPEARING ON THIS DOCUMENT WAS AUTHORIZED BY PHAISARN CWATANAPHOL, P.E. 89252 ON 06/23/2003.

STATE OF TEXAS · JAIME AGUILAR · 87606 · REGISTERED PROFESSIONAL ENGINEER

STATE OF TEXAS · PHAISARN CWATANAPHOL · 89252 · REGISTERED PROFESSIONAL ENGINEER

Parsons Brinckerhoff Quade & Douglas Inc.

Texas Department of Transportation

© 2003 by TxDOT

US 281
PLAN & PROFILE
SOUTHBOUND MAINLANES

STA. 648+00 "BL1" TO
STA. 660+00 "BL1"

PLAN 1"= 100' HORIZ
PROFILE 1"= 10' VERT

SHEET 4 OF 20 | 281PPM24.DGN

DESIGNED: JA	FED. RD DIV. NO.	STATE	FEDERAL AID PROJECT No.	HIGHWAY No.
CHECKED: JP	6	TEXAS		US 281

DRAWN:	STATE DISTRICT	COUNTY	CONTROL No.	SECTION No.	JOB No.	SHEET No.
CHECKED: JDH	PHARR	HIDALGO	0255	08	091	296

i:\22322a\cadd\sheets\roadway\281ppm24.dgn

NAME
10:47:27 AM
06/23/2003

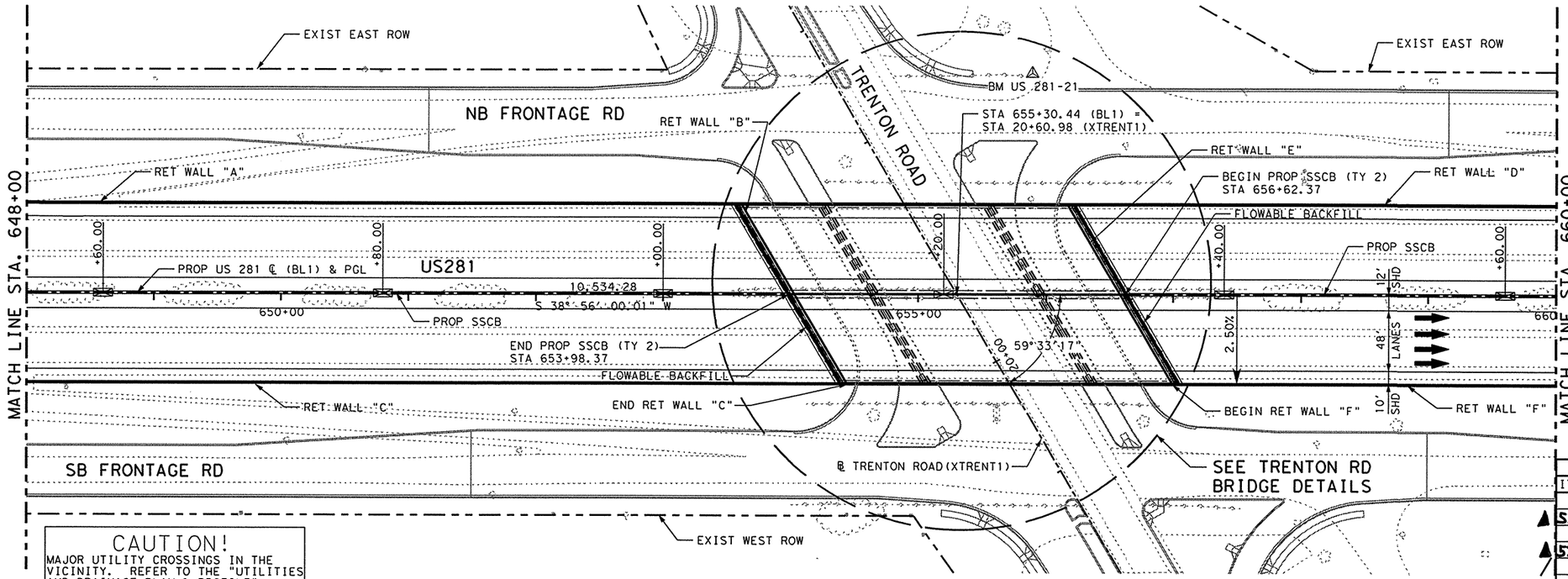

CAUTION!
MAJOR UTILITY CROSSINGS IN THE VICINITY. REFER TO THE "UTILITIES AND DRAINAGE PLAN & PROFILE" SHEETS FOR ADDITIONAL INFORMATION.

LEGEND:

MC	- MOUNTABLE CONC CURB
BC	- BARRIER CONC CURB
MCG	- MOUNTABLE CONC CURB & GUTTER
BCG	- BARRIER CONC CURB & GUTTER
RW	- RETAINING WALL
RR	- RIP RAP
SGT	- SINGLE GUARD RAIL TERMINAL
SSCB	- SINGLE SLOPE CONC BARRIER
SSTR	- SINGLE SLOPE TRAFFIC RAILING
SW	- SIDEWALK
WCR	- WHEEL CHAIR RAMP
VG	- 4' VALLEY GUTTER
MBGF	- METAL BEAM GUARD FENCE
TAS	- TERMINAL ANCHOR SECTION
⊠	- CENTER OF 10' SSCB (TY 4)
⊠	- CENTER OF 70' SSCB (TY 3)
—○	- DEL ASM TY B (D-SW)
—▨	- OBJ MRK ASM TY 3 (OM-3R)

NOTE:
FOR QUANTITIES OF PROP SSCB TY 2, TY 3 & TY 4 & FLOWABLE BACKFILL SEE "NORTHBOUND MAINLANES".

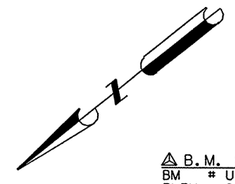

△ B.M. & HORIZONTAL DATA
BM # US 281-21
ELEV = 98.66
STA = 655+88.78, 173.20' LT
3 1/4" TXDOT ALUMINUM DISK

SHEET TOTALS

ITEM	EST.	FINAL	UNIT	DESCRIPTION
				[redacted]
▲ 529	638		LF	CONC GUTTER (VALLEY)(TY "B") (RET WALL C)
▲ 529	292		LF	CONC GUTTER (VALLEY)(TY "B") (RET WALL F)

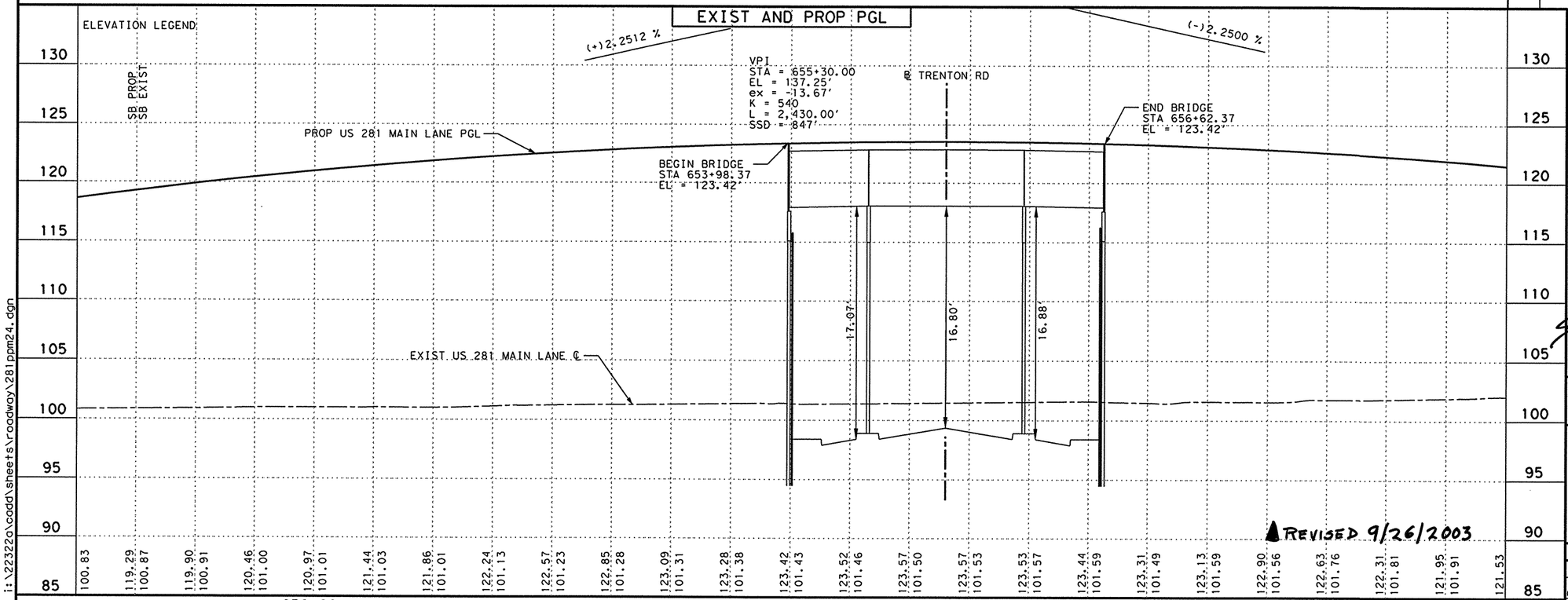

▲ REVISED 9/26/2003

PROFILE LEGEND
PROP US 281 MAIN LANE P.G.L.
EXIST US 281 MAIN LANE NATURAL GROU
SSD STOPPING SIGHT DISTANCE

THE SEAL APPEARING ON THIS DOCUMENT WAS AUTHORIZED BY JAIME AGUILAR P.E. 87606 ON 06/23/2003.

THE SEAL APPEARING ON THIS DOCUMENT WAS AUTHORIZED BY PHAISARN CWATANAPHOL P.E. 89252 ON 06/23/2003.

STATE OF TEXAS
JAIME AGUILAR
87606
REGISTERED PROFESSIONAL ENGINEER

STATE OF TEXAS
PHAISARN CWATANAPHOL
89252
REGISTERED PROFESSIONAL ENGINEER

PB Parsons Brinckerhoff Quade & Douglas Inc.

Texas Department of Transportation
© 2003 by TxDOT

US 281
PLAN & PROFILE
SOUTHBOUND MAINLANES

STA. 648+00 "BL1" TO
STA. 660+00 "BL1"

PLAN 1"= 100' HORIZ
PROFILE 1"= 10' VERT

SHEET 4 OF 20 | 281PPM24.DGN

DESIGNED: JA	FED. RD DIV. NO.	STATE	FEDERAL AID PROJECT No.			HIGHWAY No.
CHECKED: JP	6	TEXAS				US 281
DRAWN:	STATE DISTRICT	COUNTY	CONTROL No.	SECTION No.	JOB No.	SHEET No.
CHECKED: JDH	PHARR	HIDALGO	0255	08	091	296

i:\22322g\cadd\sheets\roadway\281ppm24.dgn

NAME
10:47:43 AM
06/23/2003

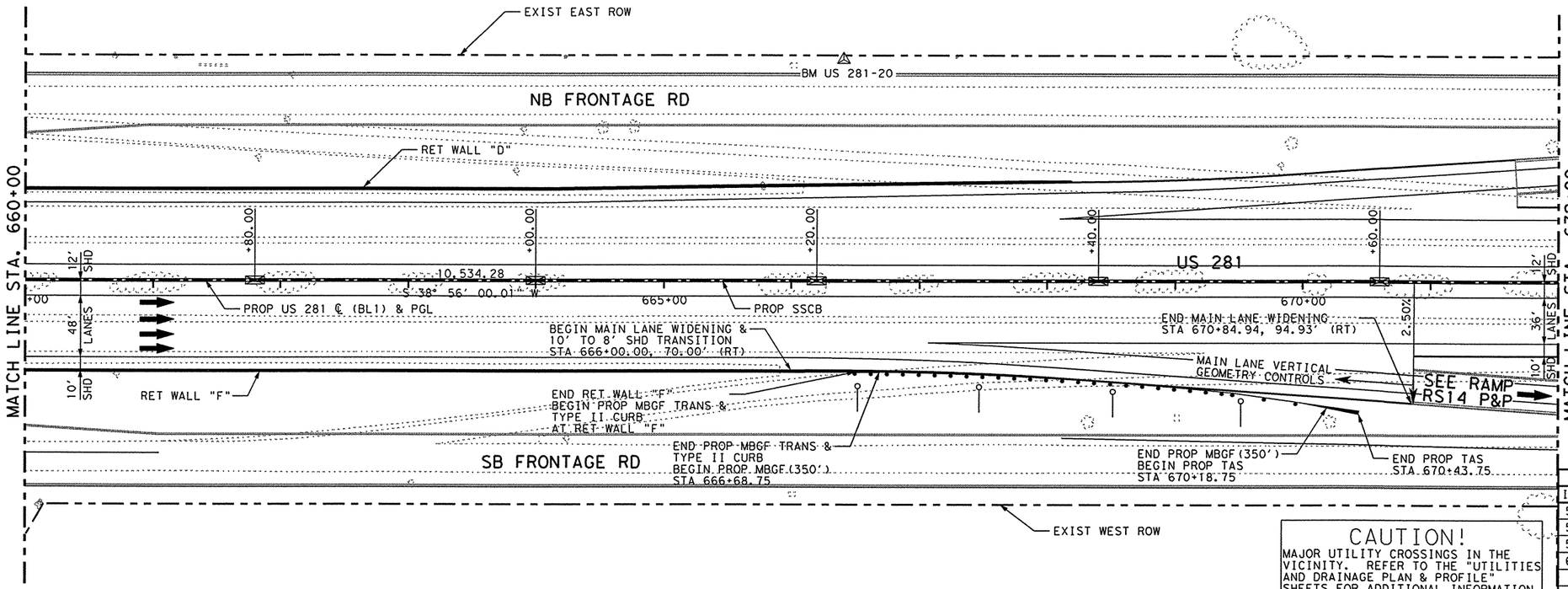

LEGEND:

MC	- MOUNTABLE CONC CURB
BC	- BARRIER CONC CURB
MCG	- MOUNTABLE CONC CURB & GUTTER
BCG	- BARRIER CONC CURB & GUTTER
RW	- RETAINING WALL
RR	- RIP RAP
SGT	- SINGLE GUARD RAIL TERMINAL
SSCB	- SINGLE SLOPE CONC BARRIER
SSTR	- SINGLE SLOPE TRAFFIC RAILING
SW	- SIDEWALK
WCR	- WHEEL CHAIR RAMP
VG	- 4' VALLEY GUTTER
MBGF	- METAL BEAM GUARD FENCE
TAS	- TERMINAL ANCHOR SECTION
⊠	- CENTER OF 10' SSCB (TY 4)
▭	- CENTER OF 70' SSCB (TY 3)
—o	- DEL ASM TY B (D-SW)
—▨	- OBJ MRK ASM TY 3 (OM-3R)

NOTE:
FOR QUANTITIES OF PROP SSCB TY 2, TY 3 & TY 4 & FLOWABLE BACKFILL SEE "NORTHBOUND MAINLANES".

CAUTION!
MAJOR UTILITY CROSSINGS IN THE VICINITY. REFER TO THE "UTILITIES AND DRAINAGE PLAN & PROFILE" SHEETS FOR ADDITIONAL INFORMATION.

△ B.M. & HORIZONTAL DATA
BM # US 281-20
ELEV = 98.51
STA = 666+40.54, 172.14' LT
3 ¼" TXDOT ALUMINUM DISK

SHEET TOTALS

ITEM	EST.	FINAL	UNIT	DESCRIPTION
540	350		LF	MTL BEAM GD FEN (12 GA)(TIM POST)
540	1		EA	MTL BEAM GD FEN TRANS (12 GA)
540	1		EA	TERM ANCH SECT (12 GA)
658	4		EA	DEL ASM TY B(D-SW)

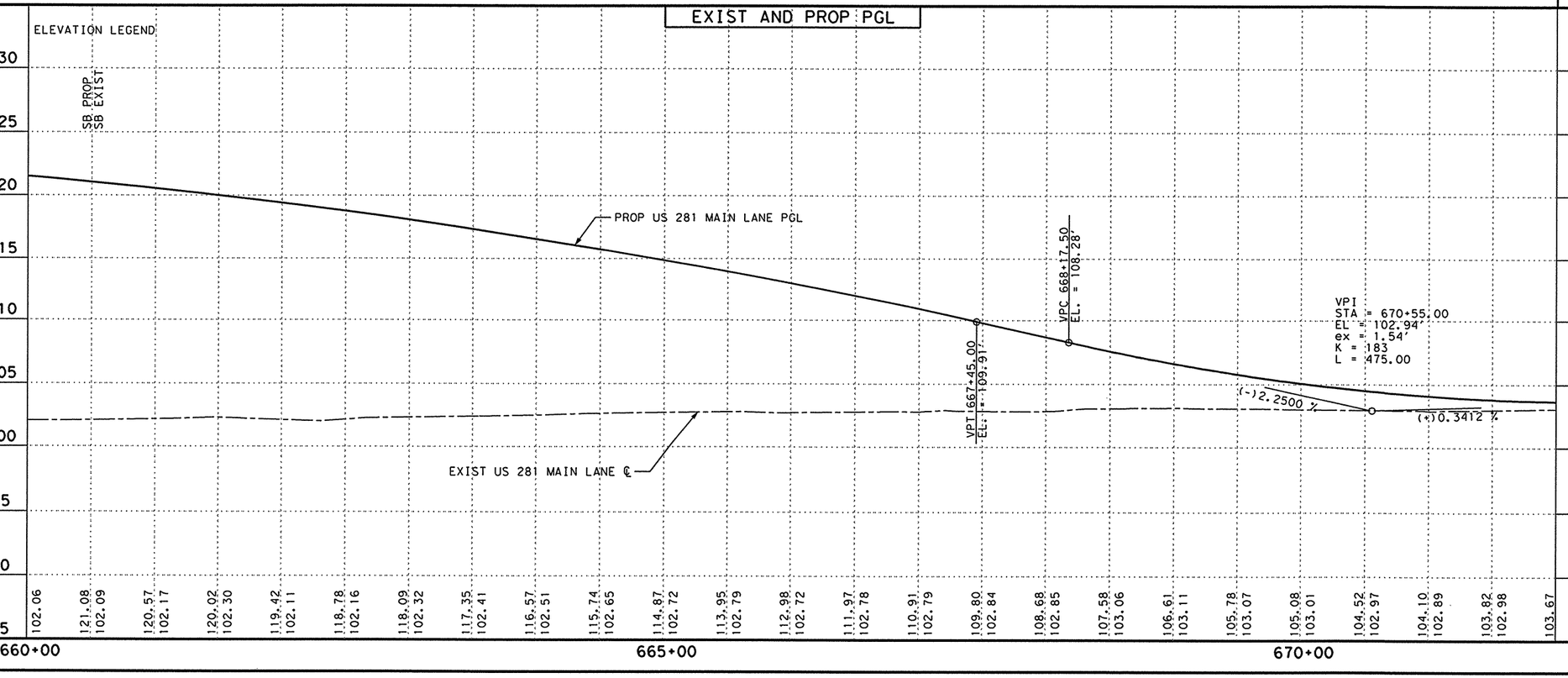

PROFILE LEGEND
PROP US 281 MAIN LANE P.G.L.
EXIST US 281 MAIN LANE NATURAL GROU
SSD STOPPING SIGHT DISTANCE

THE SEAL APPEARING ON THIS DOCUMENT WAS AUTHORIZED BY JAIME AGUILAR, P.E. 87606 ON 06/23/2003.

THE SEAL APPEARING ON THIS DOCUMENT WAS AUTHORIZED BY PHAISARN CHATANAPHOL, P.E. 89252 ON 06/23/2003.

STATE OF TEXAS · JAIME AGUILAR · 87606 · REGISTERED PROFESSIONAL ENGINEER

STATE OF TEXAS · PHAISARN CHATANAPHOL · 89252 · REGISTERED PROFESSIONAL ENGINEER

Parsons Brinckerhoff Quade & Douglas Inc.

Texas Department of Transportation

© 2003 by TxDOT

US 281
PLAN & PROFILE
SOUTHBOUND MAINLANES

STA. 660+00 "BL1" TO
STA. 672+00 "BL1"

PLAN 1"= 100' HORIZ
PROFILE 1"= 10' VERT

SHEET 5 OF 20			281PPM25.DGN				
DESIGNED: JA	FED. RD DIV. No.	STATE	FEDERAL AID PROJECT No.			HIGHWAY No.	
CHECKED: JP	6	TEXAS				US 281	
DRAWN:	STATE DISTRICT	COUNTY	CONTROL No.	SECTION No.	JOB No.	SHEET No.	
CHECKED: JDH	PHARR	HIDALGO	0255	08	091	297	

i:\22322a\cadd\sheets\roadway\281ppm25.dgn

NAME
10:47:43 AM
06/23/2003

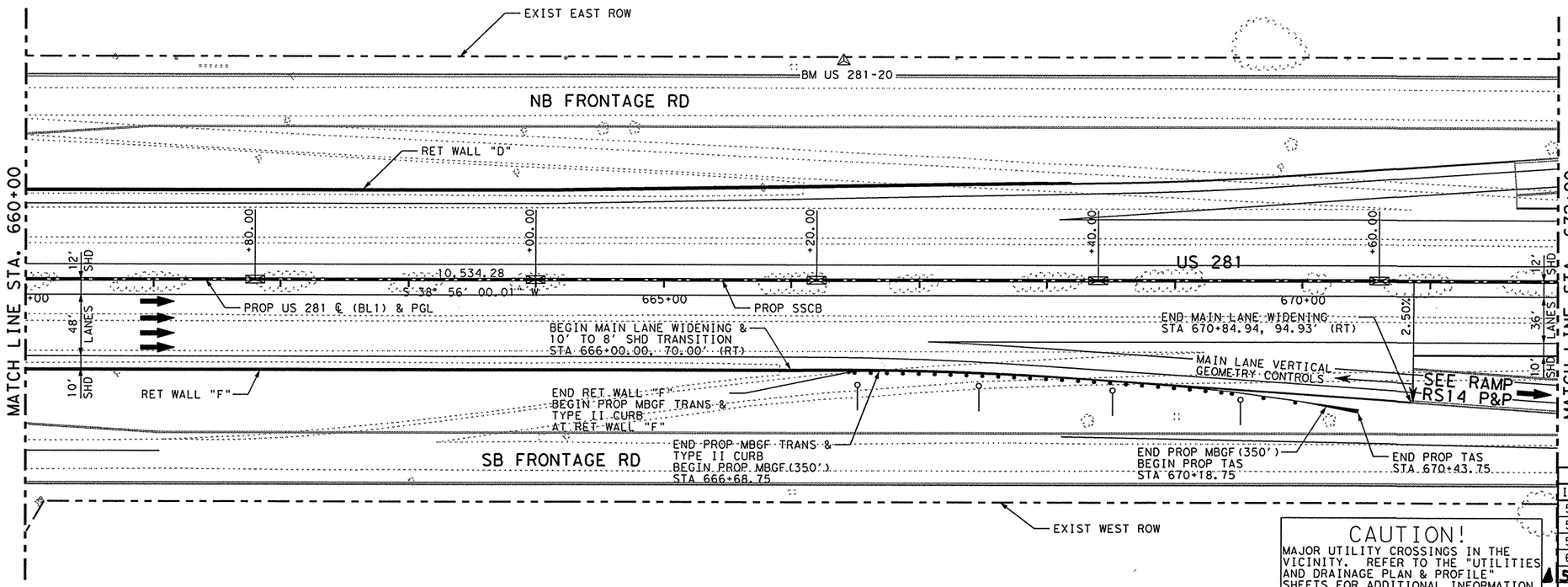

LEGEND:

- MC - MOUNTABLE CONC CURB
- BC - BARRIER CONC CURB
- MCG - MOUNTABLE CONC CURB & GUTTER
- BCG - BARRIER CONC CURB & GUTTER
- RW - RETAINING WALL
- RR - RIP RAP
- SGT - SINGLE GUARD RAIL TERMINAL
- SSCB - SINGLE SLOPE CONC BARRIER
- SSTR - SINGLE SLOPE TRAFFIC RAILING
- SW - SIDEWALK
- WCR - WHEEL CHAIR RAMP
- VG - 4' VALLEY GUTTER
- MBGF - METAL BEAM GUARD FENCE
- TAS - TERMINAL ANCHOR SECTION
- ⊠ - CENTER OF 10' SSCB (TY 4)
- ⊠ - CENTER OF 70' SSCB (TY 3)
- —o — DEL ASM TY B (D-SW)
- —▨— OBJ MRK ASM TY 3 (OM-3R)

NOTE:
FOR QUANTITIES OF PROP SSCB TY 2, TY 3 & TY 4 & FLOWABLE BACKFILL SEE "NORTHBOUND MAINLANES".

⚠ B.M. & HORIZONTAL DATA
BM # US 281-20
ELEV = 98.51
STA = 666+40.54, 172.14' LT
3 1/4" TXDOT ALUMINUM DISK

CAUTION!
MAJOR UTILITY CROSSINGS IN THE VICINITY. REFER TO THE "UTILITIES AND DRAINAGE PLAN & PROFILE" SHEETS FOR ADDITIONAL INFORMATION.

SHEET TOTALS

ITEM	EST.	FINAL	UNIT	DESCRIPTION
540	350		LF	MTL BEAM GD FEN (12 GA) (TIM POST)
540	1		EA	MTL BEAM GD FEN TRANS (12 GA)
540	1		EA	TERM ANCH SECT (12 GA)
658	4		EA	DEL ASM TY B(D-SW)
529	650		LF	CONC GUTTER (VALLEY) (TY "B") (RET WALL F)

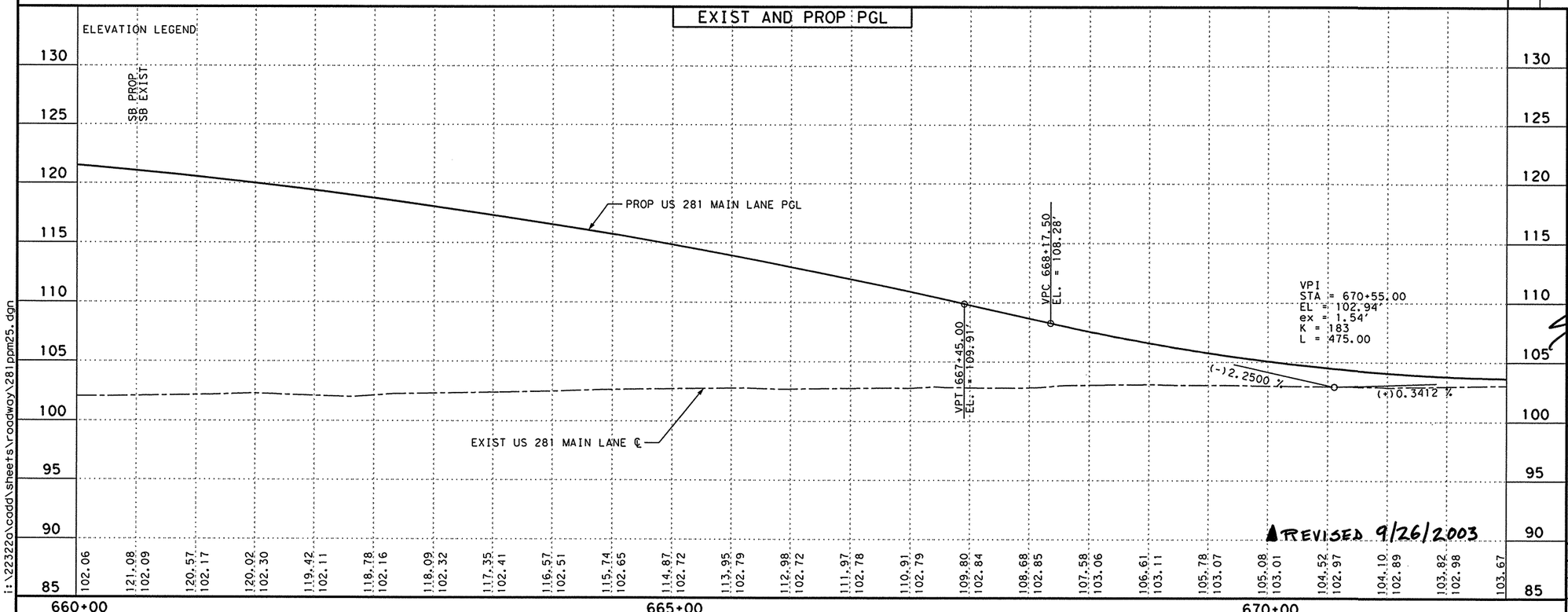

PROFILE LEGEND
- PROP US 281 MAIN LANE P.G.L.
- EXIST US 281 MAIN LANE NATURAL GROU
- SSD STOPPING SIGHT DISTANCE

THE SEAL APPEARING ON THIS DOCUMENT WAS AUTHORIZED BY JAIME AGUILAR, P.E. 87606 ON 06/23/2003.

THE SEAL APPEARING ON THIS DOCUMENT WAS AUTHORIZED BY PHAISARN CWATANAPHOL, P.E. 89252 ON 06/23/2003.

STATE OF TEXAS — JAIME AGUILAR — 87606 — REGISTERED PROFESSIONAL ENGINEER

STATE OF TEXAS — PHAISARN CWATANAPHOL — 89252 — REGISTERED PROFESSIONAL ENGINEER

Parsons Brinckerhoff Quade & Douglas Inc.

Texas Department of Transportation

© 2003 by TxDOT

US 281
PLAN & PROFILE
SOUTHBOUND MAINLANES

STA. 660+00 "BL1" TO
STA. 672+00 "BL1"

PLAN 1"= 100' HORIZ
PROFILE 1"= 10' VERT

REVISED 9/26/2003

SHEET 5 OF 20			281PPM25.DGN			
DESIGNED: JA	FED. RD DIV. No.	STATE	FEDERAL AID PROJECT No.			HIGHWAY No.
CHECKED: JP	6	TEXAS				US 281
DRAWN:	STATE DISTRICT	COUNTY	CONTROL No.	SECTION No.	JOB No.	SHEET No.
CHECKED: JDH	PHARR	HIDALGO	0255	08	091	297

i:\22322g\cadd\sheets\roadway\281ppm25.dgn

NAME
10:47:58 AM
06/23/2003

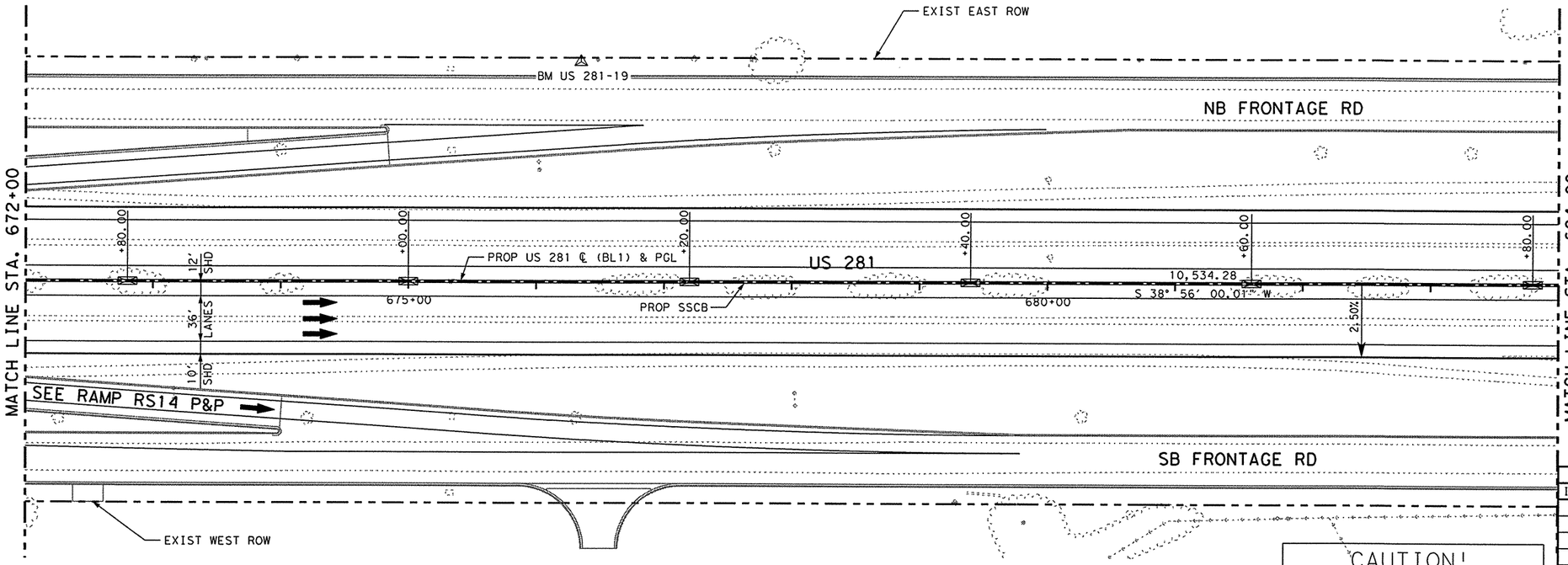

LEGEND:

- MC - MOUNTABLE CONC CURB
- BC - BARRIER CONC CURB
- MCG - MOUNTABLE CONC CURB & GUTTER
- BCG - BARRIER CONC CURB & GUTTER
- RW - RETAINING WALL
- RR - RIP RAP
- SGT - SINGLE GUARD RAIL TERMINAL
- SSCB - SINGLE SLOPE CONC BARRIER
- SSTR - SINGLE SLOPE TRAFFIC RAILING
- SW - SIDEWALK
- WCR - WHEEL CHAIR RAMP
- VG - 4' VALLEY GUTTER
- MBGF - METAL BEAM GUARD FENCE
- TAS - TERMINAL ANCHOR SECTION
- ⊠ - CENTER OF 10' SSCB (TY 4)
- ⊠ - CENTER OF 70' SSCB (TY 3)
- —o— - DEL ASM TY B (D-SW)
- —▨— - OBJ MRK ASM TY 3 (OM-3R)

NOTE:
FOR QUANTITIES OF PROP SSCB TY 2, TY 3 & TY 4 & FLOWABLE BACKFILL SEE "NORTHBOUND MAINLANES".

△ B.M. & HORIZONTAL DATA
BM # US 281-19
ELEV = 101.97
STA = 676+34.62, 172.09' LT
3 1/4" TXDOT ALUMINUM DISK

SHEET TOTALS

ITEM	EST.	FINAL	UNIT	DESCRIPTION
				NO PAY QUANTITIES THIS SHEET

CAUTION!
MAJOR UTILITY CROSSINGS IN THE VICINITY. REFER TO THE "UTILITIES AND DRAINAGE PLAN & PROFILE" SHEETS FOR ADDITIONAL INFORMATION.

EXIST AND PROP PGL

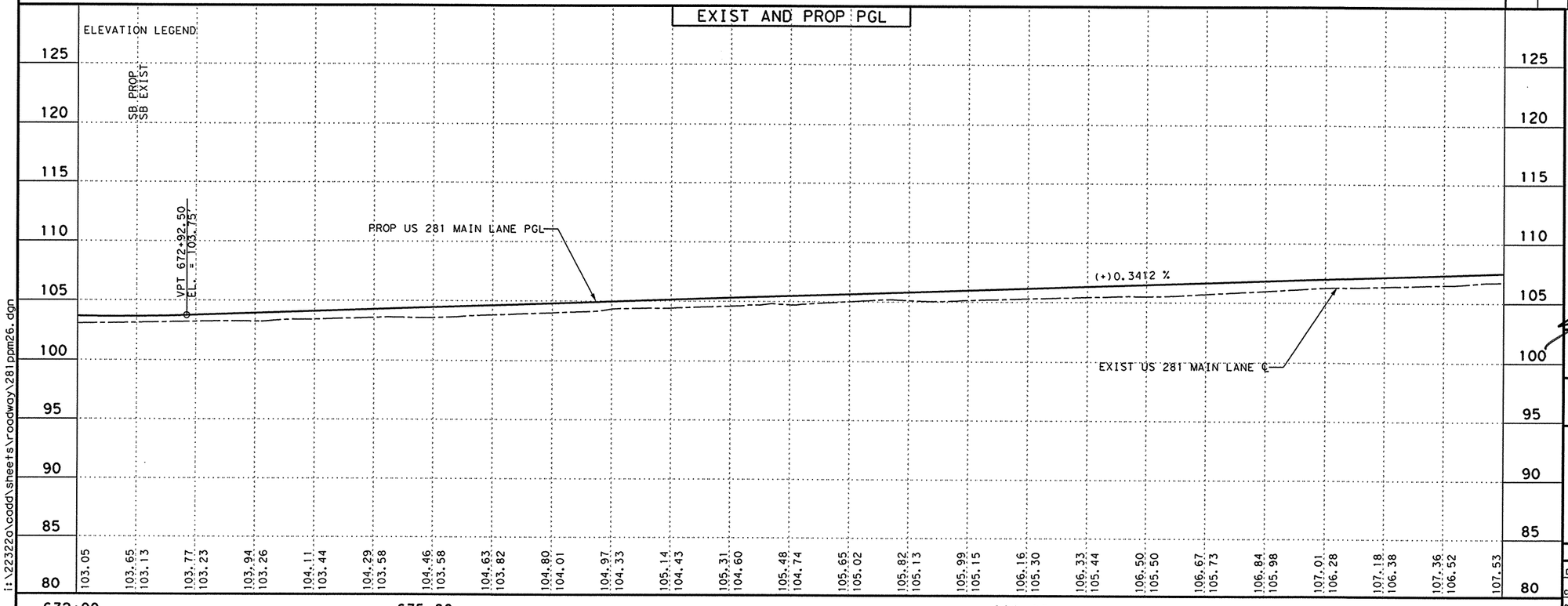

PROFILE LEGEND
——— PROP US 281 MAIN LANE P.G.L.
– – – – EXIST US 281 MAIN LANE NATURAL GROU
SSD STOPPING SIGHT DISTANCE

THE SEAL APPEARING ON THIS DOCUMENT WAS AUTHORIZED BY JAIME AGUILAR, P.E. 87606 ON 06/23/2003.

THE SEAL APPEARING ON THIS DOCUMENT WAS AUTHORIZED BY PHAISARN CWATANAPHOL, P.E. 89252 ON 06/23/2003.

STATE OF TEXAS · JAIME AGUILAR · 87606 · REGISTERED PROFESSIONAL ENGINEER

STATE OF TEXAS · PHAISARN CWATANAPHOL · 89252 · REGISTERED PROFESSIONAL ENGINEER

Parsons Brinckerhoff Quade & Douglas Inc.

Texas Department of Transportation

© 2003 by TxDOT

US 281
PLAN & PROFILE
SOUTHBOUND MAINLANES

STA. 672+00 "BL1" TO
STA. 684+00 "BL1"

PLAN 1"= 100' HORIZ
PROFILE 1"= 10' VERT

SHEET 6 OF 20 | 281PPM26.DGN

DESIGNED: JA	FED. RD DIV. No.	STATE	FEDERAL AID PROJECT No.	HIGHWAY No.
CHECKED: JP	6	TEXAS		US 281

DRAWN:	STATE DISTRICT	COUNTY	CONTROL No.	SECTION No.	JOB No.	SHEET No.
CHECKED: JDH	PHARR	HIDALGO	0255	08	091	298

i:\22322g\cadd\sheets\roadway\281ppm26.dgn

NAME

10:48:14 AM

06/23/2003

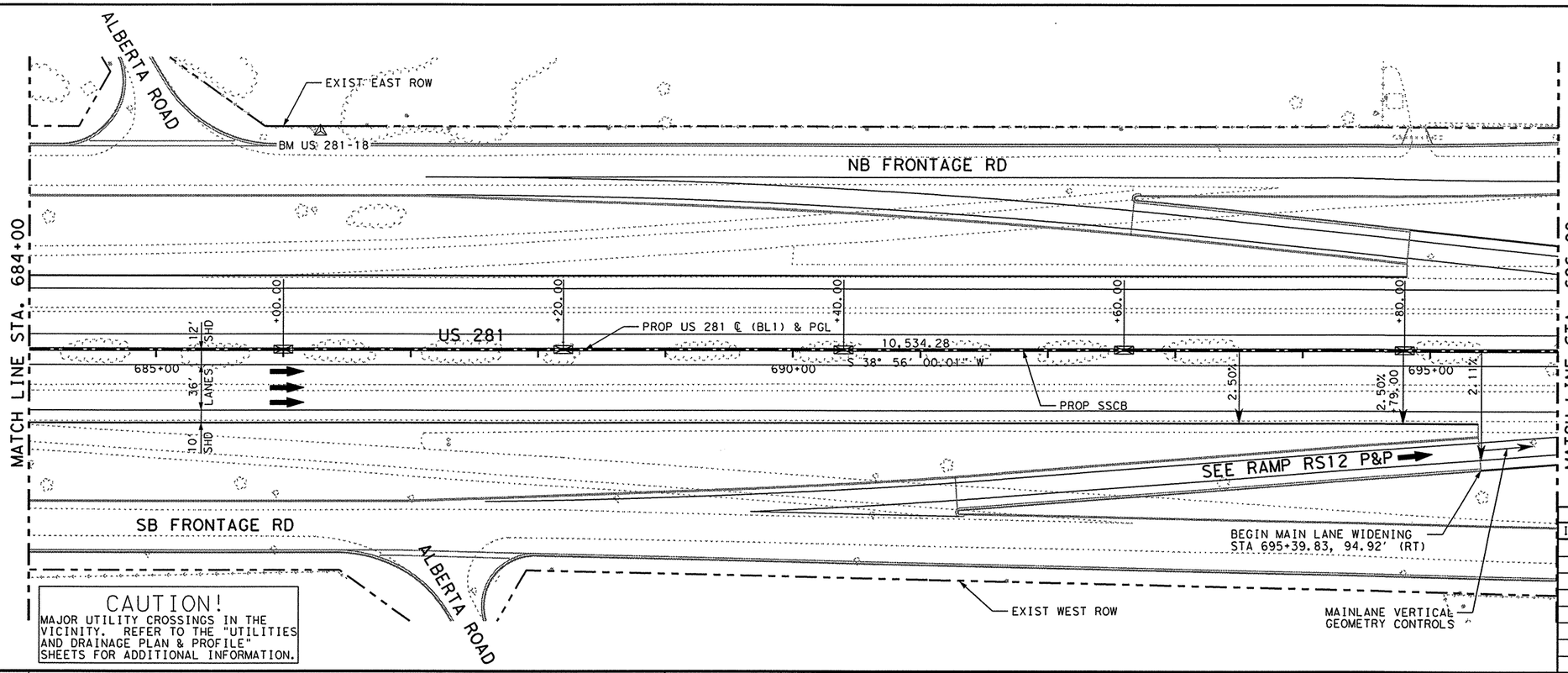

CAUTION!
MAJOR UTILITY CROSSINGS IN THE VICINITY. REFER TO THE "UTILITIES AND DRAINAGE PLAN & PROFILE" SHEETS FOR ADDITIONAL INFORMATION.

LEGEND:

MC	- MOUNTABLE CONC CURB
BC	- BARRIER CONC CURB
MCG	- MOUNTABLE CONC CURB & GUTTER
BCG	- BARRIER CONC CURB & GUTTER
RW	- RETAINING WALL
RR	- RIP RAP
SGT	- SINGLE GUARD RAIL TERMINAL
SSCB	- SINGLE SLOPE CONC BARRIER
SSTR	- SINGLE SLOPE TRAFFIC RAILING
SW	- SIDEWALK
WCR	- WHEEL CHAIR RAMP
VG	- 4' VALLEY GUTTER
MBGF	- METAL BEAM GUARD FENCE
TAS	- TERMINAL ANCHOR SECTION
⊠	- CENTER OF 10' SSCB (TY 4)
⊠	- CENTER OF 70' SSCB (TY 3)
—o	- DEL ASM TY B (D-SW)
—▨	- OBJ MRK ASM TY 3 (OM-3R)

NOTE:
FOR QUANTITIES OF PROP SSCB TY 2, TY 3 & TY 4 & FLOWABLE BACKFILL SEE "NORTHBOUND MAINLANES".

△ B.M. & HORIZONTAL DATA
BM # US 281-18
ELEV = 105.52
STA = 686+28.97, 170.87' LT
3 1/4" TXDOT ALUMINUM DISK

SHEET TOTALS

ITEM	EST.	FINAL	UNIT	DESCRIPTION
				NO PAY QUANTITIES THIS SHEET

EXIST AND PROP PGL

ELEVATION LEGEND
SB PROP
SB EXIST

PROP US 281 MAIN LANE PGL
(+)0.3412 %
EXIST US 281 MAIN LANE ℄
-0.0250'/ft.
+79.00
"e" TRANS.

685+00		690+00		695+00
106.75	107.70 / 106.82	107.87 / 107.09	108.04 / 107.26	108.21 / 107.41
108.38 / 107.43	108.55 / 107.68	108.72 / 107.79	108.89 / 107.99	109.06 / 108.22
109.23 / 108.25	109.40 / 108.41	109.57 / 108.59	109.74 / 108.67	109.91 / 108.79
110.08 / 109.08	110.26 / 109.28	110.43 / 109.50	110.60 / 109.73	110.77 / 109.98
110.94 / 109.94	111.11 / 110.00	111.28 / 109.96	111.45 / 110.34	111.62

PROFILE LEGEND
PROP US 281 MAIN LANE P.G.L.
EXIST US 281 MAIN LANE NATURAL GROU
SSD STOPPING SIGHT DISTANCE

THE SEAL APPEARING ON THIS DOCUMENT WAS AUTHORIZED BY JAIME AGUILAR, P.E. 87606 ON 06/23/2003.

THE SEAL APPEARING ON THIS DOCUMENT WAS AUTHORIZED BY PHAISARN CWATANAPHOL, P.E. 89252 ON 06/23/2003.

STATE OF TEXAS · JAIME AGUILAR · 87606 · REGISTERED PROFESSIONAL ENGINEER

STATE OF TEXAS · PHAISARN CWATANAPHOL · 89252 · REGISTERED PROFESSIONAL ENGINEER

Parsons Brinckerhoff Quade & Douglas Inc.

Texas Department of Transportation

© 2003 by TxDOT

US 281
PLAN & PROFILE
SOUTHBOUND MAINLANES

STA. 684+00 "BL1" TO
STA. 696+00 "BL1"

PLAN 1"= 100' HORIZ
PROFILE 1"= 10' VERT

SHEET 7 OF 20 | 281PPM27.DGN

DESIGNED: JA	FED. RD DIV. No.	STATE	FEDERAL AID PROJECT No.	HIGHWAY No.
CHECKED: JP	6	TEXAS		US 281

DRAWN:	STATE DISTRICT	COUNTY	CONTROL No.	SECTION No.	JOB No.	SHEET No.
CHECKED: JDH	PHARR	HIDALGO	0255	08	091	299

i:\22322a\cadd\sheets\roadway\281ppm27.dgn

NAME
10:48:31 AM
06/23/2003

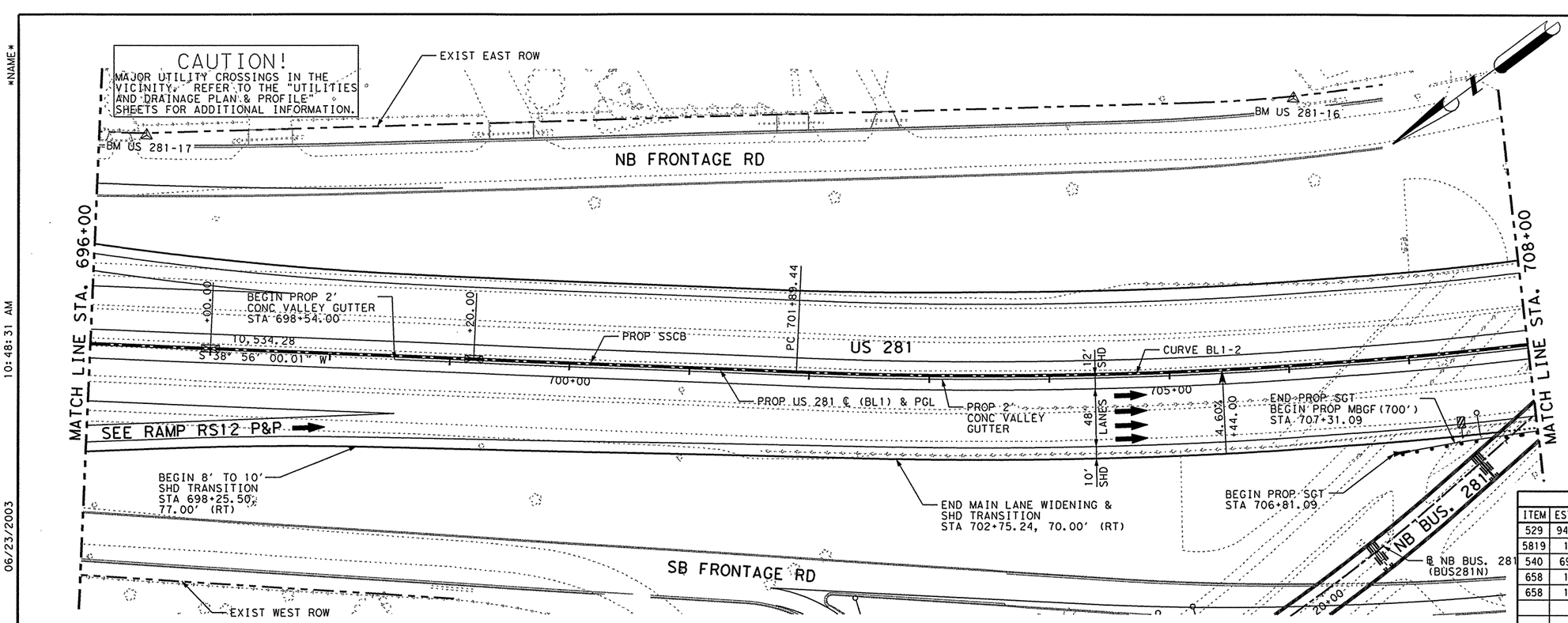

LEGEND:

MC	- MOUNTABLE CONC CURB
BC	- BARRIER CONC CURB
MCG	- MOUNTABLE CONC CURB & GUTTER
BCG	- BARRIER CONC CURB & GUTTER
RW	- RETAINING WALL
RR	- RIP RAP
SGT	- SINGLE GUARD RAIL TERMINAL
SSCB	- SINGLE SLOPE CONC BARRIER
SSTR	- SINGLE SLOPE TRAFFIC RAILING
SW	- SIDEWALK
WCR	- WHEEL CHAIR RAMP
VG	- 4' VALLEY GUTTER
MBGF	- METAL BEAM GUARD FENCE
TAS	- TERMINAL ANCHOR SECTION
⊠	- CENTER OF 10' SSCB (TY 4)
⊠	- CENTER OF 70' SSCB (TY 3)
	- DEL ASM TY B (D-SW)
	- OBJ MRK ASM TY 3 (OM-3R)

NOTE:
FOR QUANTITIES OF PROP SSCB TY 2, TY 3 & TY 4 & FLOWABLE BACKFILL SEE "NORTHBOUND MAINLANES".

△ B.M. & HORIZONTAL DATA

BM # US 281-17
ELEV = 105.58
STA = 696+39.23, 173.41' LT
3 1/4" TXDOT ALUMINUM DISK

BM # US 281-16
ELEV = 103.82
STA = 706+19.13, 220.37' LT
3 1/4" TXDOT ALUMINUM DISK

SHEET TOTALS

ITEM	EST.	FINAL	UNIT	DESCRIPTION
529	946		LF	CONC GUTTER (VALLEY) (2')
5819	1		EA	SINGLE GDRAIL TERM (TY II)
540	69		LF	MTL BEAM GD FEN (12 GA) (TIM POST)
658	1		EA	DEL ASM TY B(D-SW)
658	1		EA	OBJ MRK ASM TY 3(OM-3R)

EXIST AND PROP PGL

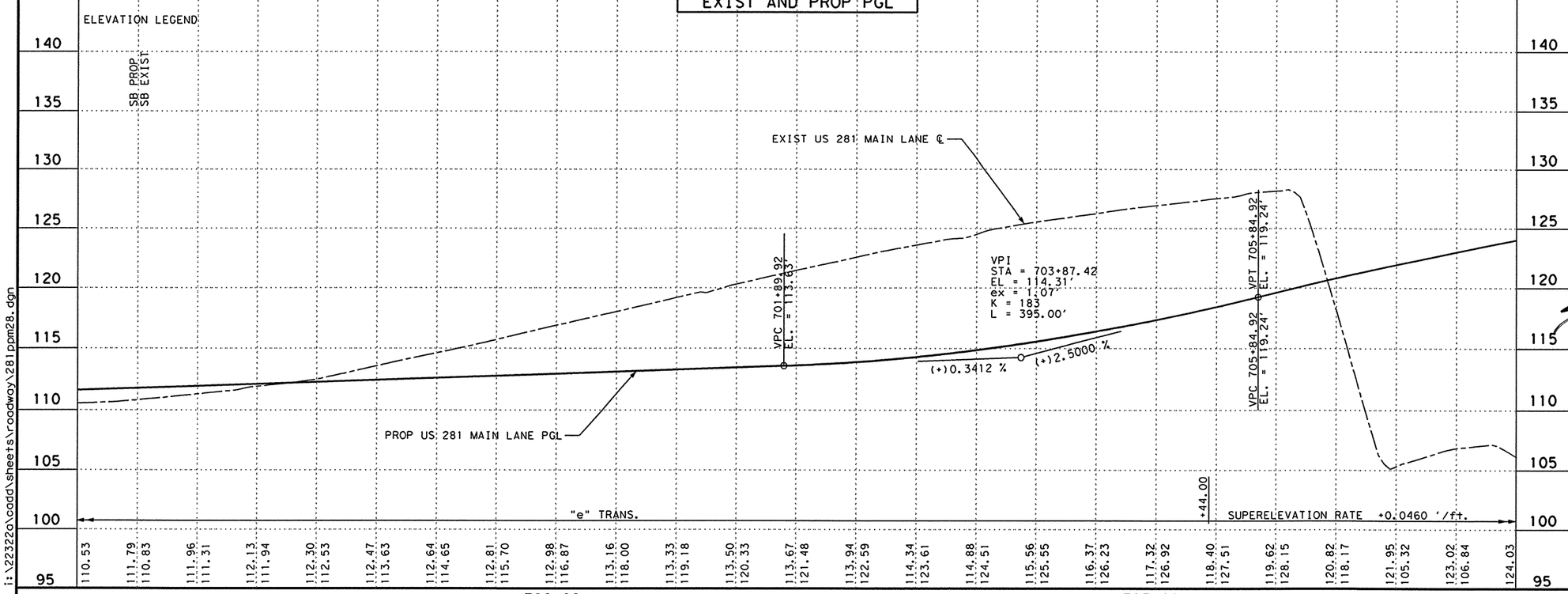

PROFILE LEGEND
——— PROP US 281 MAIN LANE P.G.L.
– – – – EXIST US 281 MAIN LANE NATURAL GROU
SSD STOPPING SIGHT DISTANCE

THE SEAL APPEARING ON THIS DOCUMENT WAS AUTHORIZED BY JAIME AGUILAR, P.E. 87606 ON 06/23/2003.

THE SEAL APPEARING ON THIS DOCUMENT WAS AUTHORIZED BY PHAISARN CWATANAPHOL, P.E. 89252 ON 06/23/2003.

STATE OF TEXAS
JAIME AGUILAR
87606
REGISTERED PROFESSIONAL ENGINEER

STATE OF TEXAS
PHAISARN CWATANAPHOL
89252
REGISTERED PROFESSIONAL ENGINEER

Parsons Brinckerhoff Quade & Douglas Inc.

Texas Department of Transportation

© 2003 by TxDOT

US 281
PLAN & PROFILE
SOUTHBOUND MAINLANES

STA. 696+00 "BL1" TO
STA. 708+00 "BL1"

PLAN 1"= 100' HORIZ
PROFILE 1"= 10' VERT

SHEET 8 OF 20 | 281PPM28.DGN

DESIGNED: JA	FED. RD DIV. No.	STATE	FEDERAL AID PROJECT No.			HIGHWAY No.
CHECKED: JP	6	TEXAS				US 281
DRAWN:	STATE DISTRICT	COUNTY	CONTROL No.	SECTION No.	JOB No.	SHEET No.
CHECKED: JDH	PHARR	HIDALGO	0255	08	091	300

i:\22322o\cadd\sheets\roadway\281ppm28.dgn

Phaisarn C.

09:17:38 AM

09/11/2003

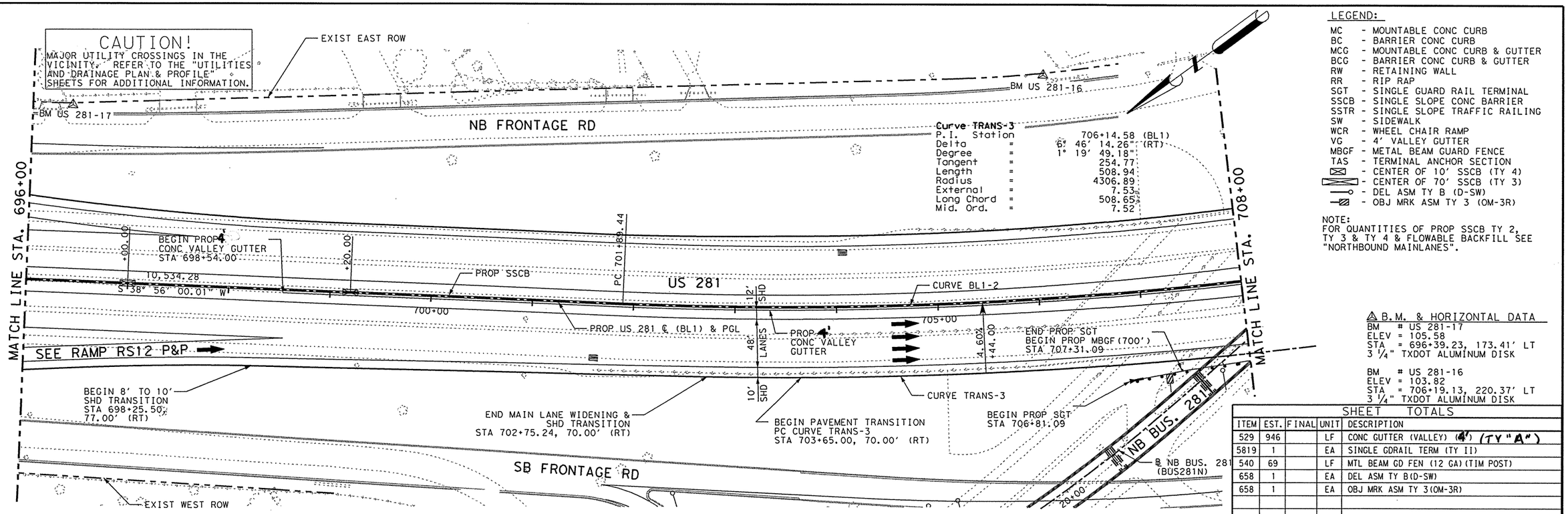

LEGEND:

- MC - MOUNTABLE CONC CURB
- BC - BARRIER CONC CURB
- MCG - MOUNTABLE CONC CURB & GUTTER
- BCG - BARRIER CONC CURB & GUTTER
- RW - RETAINING WALL
- RR - RIP RAP
- SGT - SINGLE GUARD RAIL TERMINAL
- SSCB - SINGLE SLOPE CONC BARRIER
- SSTR - SINGLE SLOPE TRAFFIC RAILING
- SW - SIDEWALK
- WCR - WHEEL CHAIR RAMP
- VG - 4' VALLEY GUTTER
- MBGF - METAL BEAM GUARD FENCE
- TAS - TERMINAL ANCHOR SECTION
- ⊠ - CENTER OF 10' SSCB (TY 4)
- ⊠ - CENTER OF 70' SSCB (TY 3)
- —o— - DEL ASM TY B (D-SW)
- —▨— - OBJ MRK ASM TY 3 (OM-3R)

NOTE:
FOR QUANTITIES OF PROP SSCB TY 2, TY 3 & TY 4 & FLOWABLE BACKFILL SEE "NORTHBOUND MAINLANES".

⚠ B.M. & HORIZONTAL DATA

BM # US 281-17
ELEV = 105.58
STA = 696+39.23, 173.41' LT
3 1/4" TXDOT ALUMINUM DISK

BM # US 281-16
ELEV = 103.82
STA = 706+19.13, 220.37' LT
3 1/4" TXDOT ALUMINUM DISK

SHEET TOTALS

ITEM	EST.	FINAL	UNIT	DESCRIPTION
529	946		LF	CONC GUTTER (VALLEY) (4') (TY "A")
5819	1		EA	SINGLE GDRAIL TERM (TY II)
540	69		LF	MTL BEAM GD FEN (12 GA) (TIM POST)
658	1		EA	DEL ASM TY B(D-SW)
658	1		EA	OBJ MRK ASM TY 3(OM-3R)

EXIST AND PROP PGL

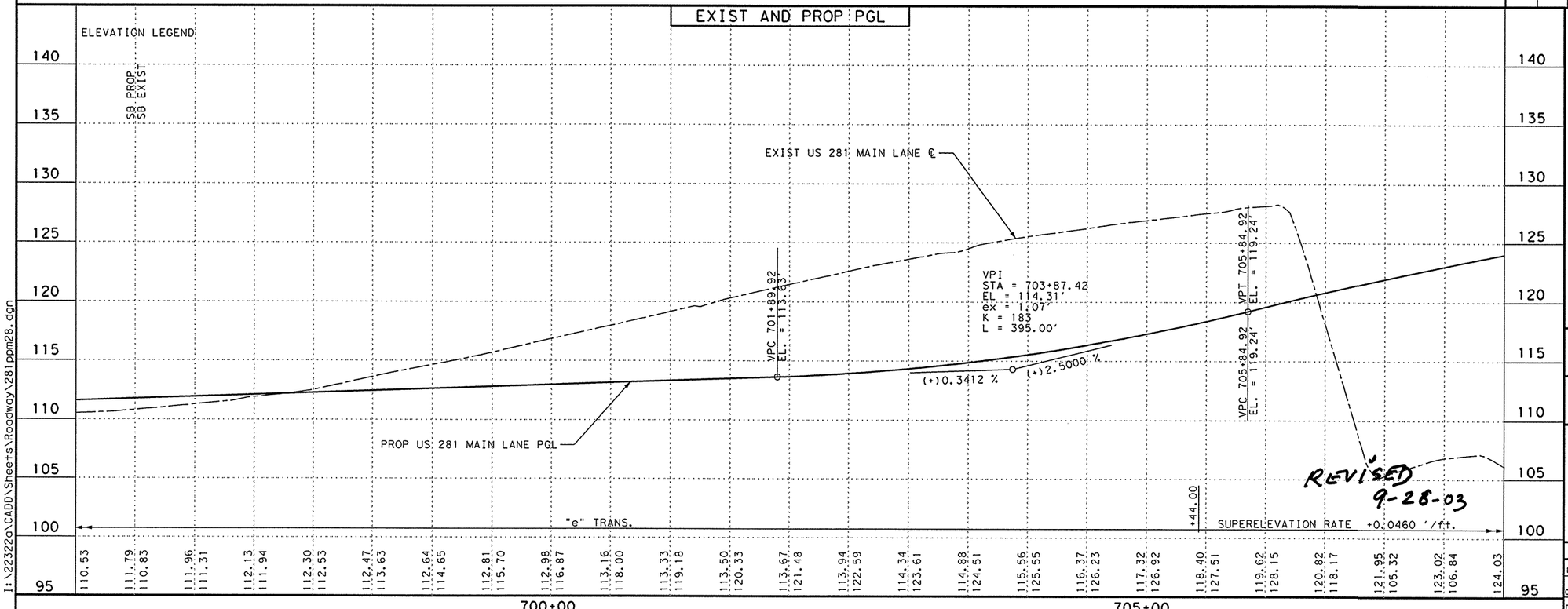

PROFILE LEGEND

- PROP US 281 MAIN LANE P.G.L.
- EXIST US 281 MAIN LANE NATURAL GROU
- SSD STOPPING SIGHT DISTANCE

THE SEAL APPEARING ON THIS DOCUMENT WAS AUTHORIZED BY JOHN M PEREZ, P.E. 66425 ON 09/11/2003.

THE SEAL APPEARING ON THIS DOCUMENT WAS AUTHORIZED BY PHAISARN CWATANAPHOL, P.E. 89252 ON 09/11/2003.

STATE OF TEXAS · JOHN M. PEREZ · 66425 · REGISTERED PROFESSIONAL ENGINEER

STATE OF TEXAS · PHAISARN CWATANAPHOL · 89252 · REGISTERED PROFESSIONAL ENGINEER

PB Parsons Brinckerhoff Quade & Douglas Inc.

Texas Department of Transportation

© 2003 by TxDOT

US 281
PLAN & PROFILE
SOUTHBOUND MAINLANES

STA. 696+00 "BL1" TO
STA. 708+00 "BL1"

PLAN 1"= 100' HORIZ
PROFILE 1"= 10' VERT

SHEET 8 OF 20 — 281PPM28.DGN

DESIGNED: TT	FED. RD DIV. NO.	STATE	FEDERAL AID PROJECT No.			HIGHWAY No.
CHECKED: DM	6	TEXAS				US 281
DRAWN:	STATE DISTRICT	COUNTY	CONTROL No.	SECTION No.	JOB No.	SHEET No.
CHECKED: DM	PHARR	HIDALGO	0255	08	091	300

I:\22322o\CADD\Sheets\Roadway\281ppm28.dgn

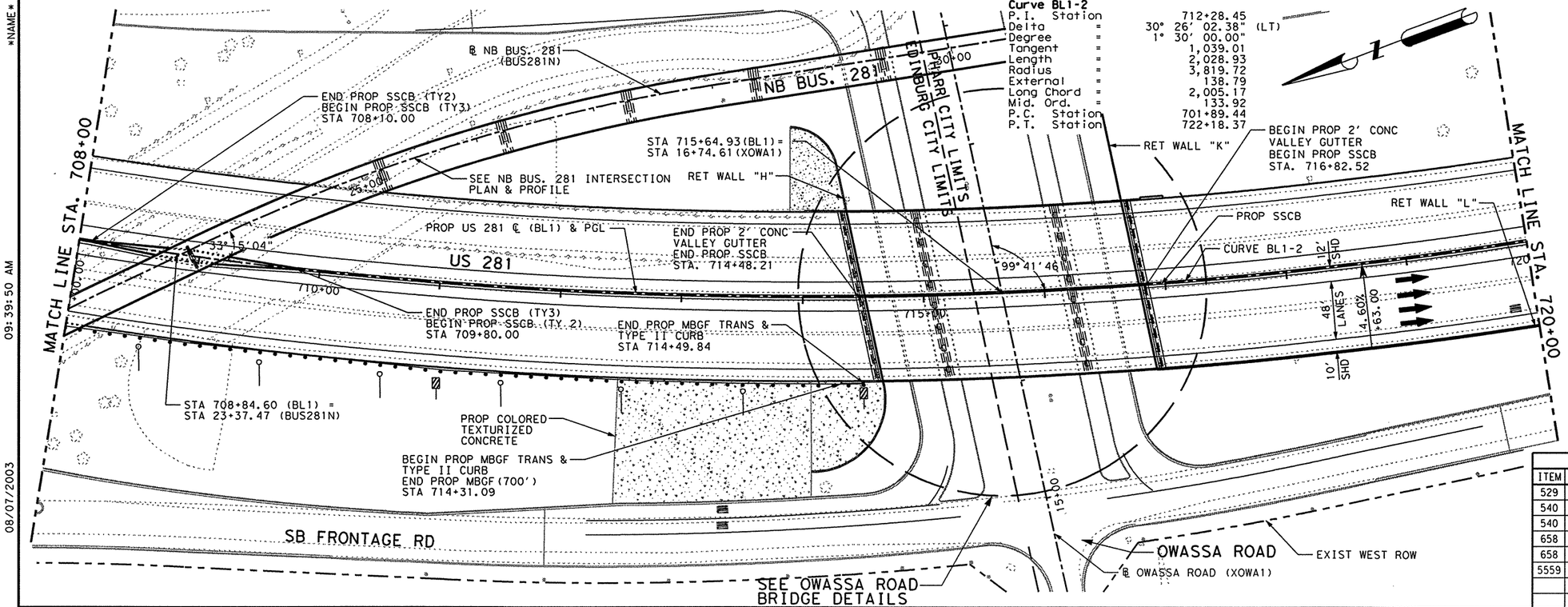

LEGEND:

MC	- MOUNTABLE CONC CURB
BC	- BARRIER CONC CURB
MCG	- MOUNTABLE CONC CURB & GUTTER
BCG	- BARRIER CONC CURB & GUTTER
RW	- RETAINING WALL
RR	- RIP RAP
SGT	- SINGLE GUARD RAIL TERMINAL
SSCB	- SINGLE SLOPE CONC BARRIER
SSTR	- SINGLE SLOPE TRAFFIC RAILING
SW	- SIDEWALK
WCR	- WHEEL CHAIR RAMP
VG	- 4' VALLEY GUTTER
MBGF	- METAL BEAM GUARD FENCE
TAS	- TERMINAL ANCHOR SECTION
⊠	- CENTER OF 10' SSCB (TY 4)
⊠	- CENTER OF 70' SSCB (TY 3)
—o	- DEL ASM TY B (D-SW)
—ø	- OBJ MRK ASM TY 3 (OM-3R)

NOTE:
FOR QUANTITIES OF PROP SSCB TY 2, TY 3 & TY 4 & FLOWABLE BACKFILL SEE "NORTHBOUND MAINLANES".

△ B.M. & HORIZONTAL DATA
BM # US 281-15
ELEV = 103.73
STA = 717+06.49, 448.89' LT
3 1/4" TXDOT ALUMINUM DISK

SHEET TOTALS

ITEM	EST.	FINAL	UNIT	DESCRIPTION
529	966		LF	CONC GUTTER (VALLEY) (2')
540	631		LF	MTL BEAM GD FEN (12 GA)(TIM POST)
540	1		EA	MTL BEAM GD FEN TRANS (12 GA)
658	6		EA	DEL ASM TY B(D-SW)
658	2		EA	OBJ MRK ASM TY 3(OM-3R)
5559	1813		SY	COLORED TEXTURIZED CONCRETE

EXIST AND PROP PGL

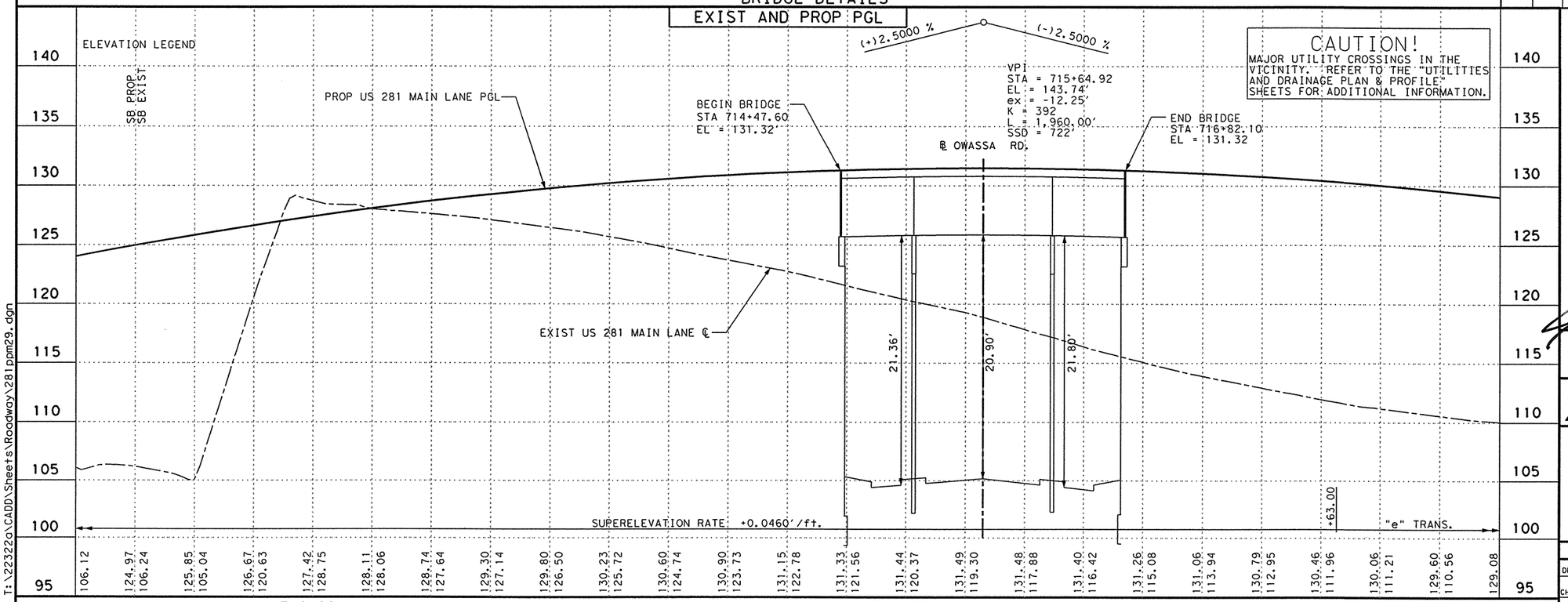

CAUTION!
MAJOR UTILITY CROSSINGS IN THE VICINITY. REFER TO THE "UTILITIES AND DRAINAGE PLAN & PROFILE" SHEETS FOR ADDITIONAL INFORMATION.

PROFILE LEGEND
——— PROP US 281 MAIN LANE P.G.L.
– – – – EXIST US 281 MAIN LANE NATURAL GROU
SSD STOPPING SIGHT DISTANCE

THE SEAL APPEARING ON THIS DOCUMENT WAS AUTHORIZED BY JAIME AGUILAR, P.E. 87606 ON 08/07/2003.

THE SEAL APPEARING ON THIS DOCUMENT WAS AUTHORIZED BY PHAISARN CHATANAPHOL, P.E. 89252 ON 08/07/2003.

STATE OF TEXAS · JAIME AGUILAR · 87606 · REGISTERED PROFESSIONAL ENGINEER

STATE OF TEXAS · PHAISARN CHATANAPHOL · 89252 · REGISTERED PROFESSIONAL ENGINEER

Parsons Brinckerhoff Quade & Douglas Inc.

Texas Department of Transportation
© 2003 by TxDOT

US 281
PLAN & PROFILE
SOUTHBOUND MAINLANES

STA. 708+00 "BL1" TO
STA. 720+00 "BL1"

PLAN 1"= 100' HORIZ
PROFILE 1"= 10' VERT

SHEET 9 OF 20 | 281PPM29.DGN

DESIGNED: TT	FED. RD DIV. No.	STATE	FEDERAL AID PROJECT No.		HIGHWAY No.	
CHECKED: DM	6	TEXAS			US 281	
DRAWN:	STATE DISTRICT	COUNTY	CONTROL No.	SECTION No.	JOB No.	SHEET No.
CHECKED: DM	PHARR	HIDALGO	0255	08	091	301

LEGEND:

MC - MOUNTABLE CONC CURB
BC - BARRIER CONC CURB
MCG - MOUNTABLE CONC CURB & GUTTER
BCG - BARRIER CONC CURB & GUTTER
RW - RETAINING WALL
RR - RIP RAP
SGT - SINGLE GUARD RAIL TERMINAL
SSCB - SINGLE SLOPE CONC BARRIER
SSTR - SINGLE SLOPE TRAFFIC RAILING
SW - SIDEWALK
WCR - WHEEL CHAIR RAMP
VG - 4' VALLEY GUTTER
MBGF - METAL BEAM GUARD FENCE
TAS - TERMINAL ANCHOR SECTION
- CENTER OF 10' SSCB (TY 4)
- CENTER OF 70' SSCB (TY 3)
- DEL ASM TY B (D-SW)
- OBJ MRK ASM TY 3 (OM-3R)

NOTE:
FOR QUANTITIES OF PROP SSCB TY 2, TY 3 & TY 4 & FLOWABLE BACKFILL SEE "NORTHBOUND MAINLANES".

* CURVES NOT TANGENT
** PAVEMENT EDGE SHALL BE CONCENTRIC TO US 281 ℄ (BL1)

△ B.M. & HORIZONTAL DATA
BM # US 281-15
ELEV = 103.73
STA = 717+06.49, 448.89' LT
3 1/4" TXDOT ALUMINUM DISK

SHEET TOTALS

ITEM	EST.	FINAL	UNIT	DESCRIPTION
529	966		LF	CONC GUTTER (VALLEY) (4') (TY "A")
540	631		LF	MTL BEAM GD FEN (12 GA)(TIM POST)
540	1		EA	MTL BEAM GD FEN TRANS (12 GA)
658	6		EA	DEL ASM TY B(D-SW)
658	2		EA	OBJ MRK ASM TY 3(OM-3R)
5559	1813		SY	COLORED TEXTURIZED CONCRETE

CAUTION!
MAJOR UTILITY CROSSINGS IN THE VICINITY. REFER TO THE "UTILITIES AND DRAINAGE PLAN & PROFILE" SHEETS FOR ADDITIONAL INFORMATION.

PROFILE LEGEND
PROP US 281 MAIN LANE P.G.L.
EXIST US 281 MAIN LANE NATURAL GROU
SSD STOPPING SIGHT DISTANCE

THE SEAL APPEARING ON THIS DOCUMENT WAS AUTHORIZED BY JOHN M PEREZ, P.E. 66425 ON 09/11/2003.

THE SEAL APPEARING ON THIS DOCUMENT WAS AUTHORIZED BY PHAISARN CWATANAPHOL, P.E. 89252 ON 09/11/2003.

STATE OF TEXAS ★ JOHN M. PEREZ 66425 REGISTERED PROFESSIONAL ENGINEER

STATE OF TEXAS ★ PHAISARN CWATANAPHOL 89252 REGISTERED PROFESSIONAL ENGINEER

Parsons Brinckerhoff Quade & Douglas Inc.

Texas Department of Transportation
© 2003 by TxDOT

US 281
PLAN & PROFILE
SOUTHBOUND MAINLANES

STA. 708+00 "BL1" TO
STA. 720+00 "BL1"

PLAN 1"= 100' HORIZ
PROFILE 1"= 10' VERT

SHEET 9 OF 20 | 281PPM29.DGN

DESIGNED: TT	FED. RD DIV. No.	STATE	FEDERAL AID PROJECT No.		HIGHWAY No.
CHECKED: DM	6	TEXAS			US 281
DRAWN:	STATE DISTRICT	COUNTY	CONTROL No.	SECTION No.	JOB No. / SHEET No.
CHECKED: DM	PHARR	HIDALGO	0255	08	091 / 301

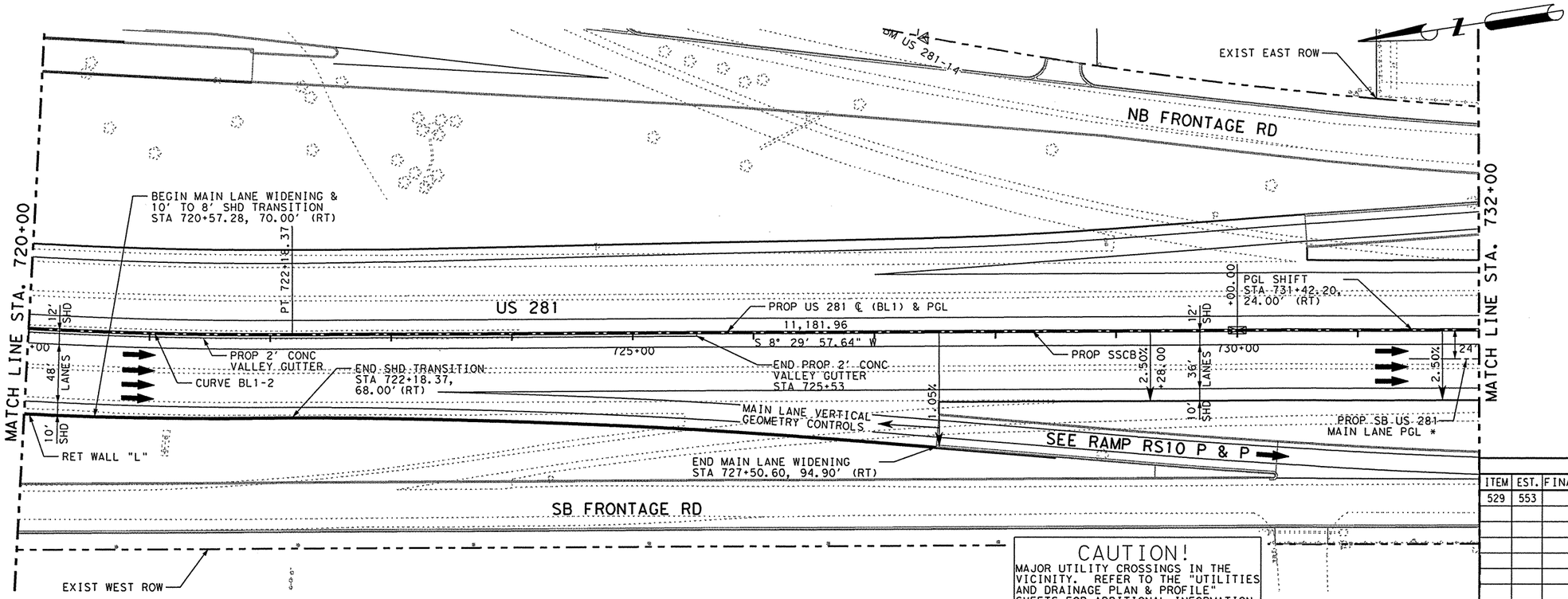

LEGEND:

MC	- MOUNTABLE CONC CURB
BC	- BARRIER CONC CURB
MCG	- MOUNTABLE CONC CURB & GUTTER
BCG	- BARRIER CONC CURB & GUTTER
RW	- RETAINING WALL
RR	- RIP RAP
SGT	- SINGLE GUARD RAIL TERMINAL
SSCB	- SINGLE SLOPE CONC BARRIER
SSTR	- SINGLE SLOPE TRAFFIC RAILING
SW	- SIDEWALK
WCR	- WHEEL CHAIR RAMP
VG	- 4' VALLEY GUTTER
MBGF	- METAL BEAM GUARD FENCE
TAS	- TERMINAL ANCHOR SECTION
	- CENTER OF 10' SSCB (TY 4)
	- CENTER OF 70' SSCB (TY 3)
	- DEL ASM TY B (D-SW)
	- OBJ MRK ASM TY 3 (OM-3R)

NOTE:
FOR QUANTITIES OF PROP SSCB TY 2, TY 3 & TY 4 & FLOWABLE BACKFILL SEE "NORTHBOUND MAINLANES".

*NOTE: PGL FOLLOWS US 281 ℄ (BL1) STATIONING

⚠ B.M. & HORIZONTAL DATA
BM # US 281-14
ELEV = 103.90
STA = 727+41.86, 241.71' LT
3 1/4" TXDOT ALUMINUM DISK

SHEET TOTALS

ITEM	EST.	FINAL	UNIT	DESCRIPTION
529	553		LF	CONC GUTTER (VALLEY) (2')

EXIST AND PROP PGL

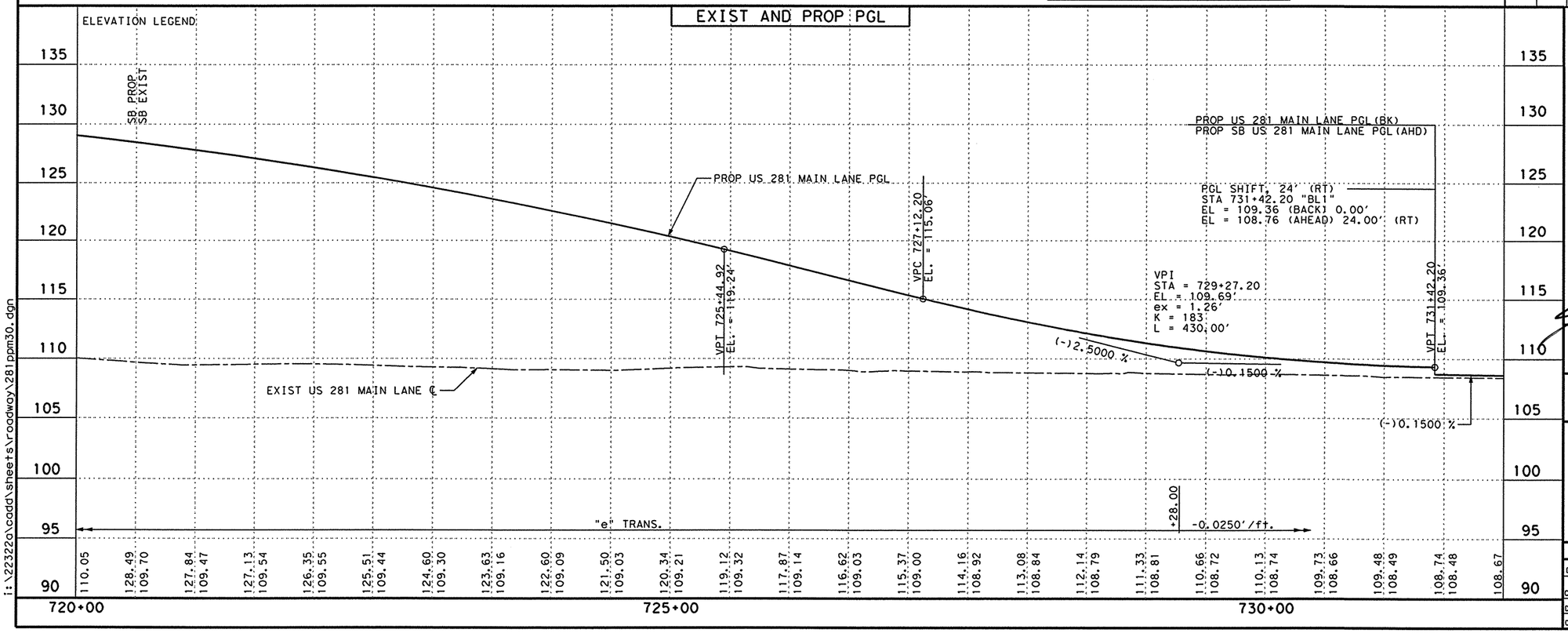

PROFILE LEGEND
PROP US 281 MAIN LANE P.G.L.
EXIST US 281 MAIN LANE NATURAL GROU
SSD STOPPING SIGHT DISTANCE

THE SEAL APPEARING ON THIS DOCUMENT WAS AUTHORIZED BY JAIME AGUILAR, P.E. 87606 ON 06/23/2003.

THE SEAL APPEARING ON THIS DOCUMENT WAS AUTHORIZED BY PHAISARN CWATANAPHOL, P.E. 89252 ON 06/23/2003.

STATE OF TEXAS · JAIME AGUILAR · 87606 · REGISTERED PROFESSIONAL ENGINEER

STATE OF TEXAS · PHAISARN CWATANAPHOL · 89252 · REGISTERED PROFESSIONAL ENGINEER

Parsons Brinckerhoff Quade & Douglas Inc.

Texas Department of Transportation

© 2003 by TxDOT

US 281
PLAN & PROFILE
SOUTHBOUND MAINLANES

STA. 720+00 "BL1" TO
STA. 732+00 "BL1"

PLAN 1"= 100' HORIZ
PROFILE 1"= 10' VERT

SHEET 10 OF 20 | 281PPM30.DGN

DESIGNED: JA	FED. RD DIV. No.	STATE	FEDERAL AID PROJECT No.	HIGHWAY No.
CHECKED: JP	6	TEXAS		US 281

DRAWN:	STATE DISTRICT	COUNTY	CONTROL No.	SECTION No.	JOB No.	SHEET No.
CHECKED: JDH	PHARR	HIDALGO	0255	08	091	302

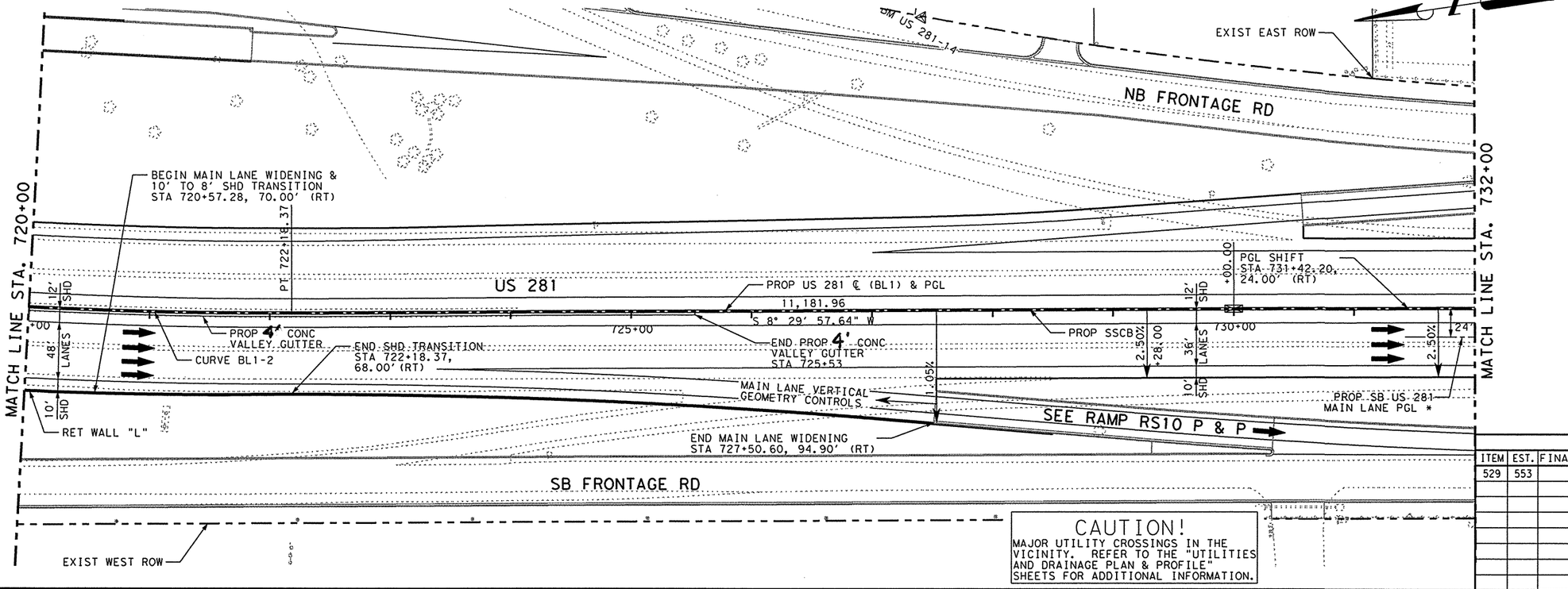

CAUTION!
MAJOR UTILITY CROSSINGS IN THE VICINITY. REFER TO THE "UTILITIES AND DRAINAGE PLAN & PROFILE" SHEETS FOR ADDITIONAL INFORMATION.

LEGEND:

MC	- MOUNTABLE CONC CURB
BC	- BARRIER CONC CURB
MCG	- MOUNTABLE CONC CURB & GUTTER
BCG	- BARRIER CONC CURB & GUTTER
RW	- RETAINING WALL
RR	- RIP RAP
SGT	- SINGLE GUARD RAIL TERMINAL
SSCB	- SINGLE SLOPE CONC BARRIER
SSTR	- SINGLE SLOPE TRAFFIC RAILING
SW	- SIDEWALK
WCR	- WHEEL CHAIR RAMP
VG	- 4' VALLEY GUTTER
MBGF	- METAL BEAM GUARD FENCE
TAS	- TERMINAL ANCHOR SECTION
⊠	- CENTER OF 10' SSCB (TY 4)
⊠	- CENTER OF 70' SSCB (TY 3)
—o	- DEL ASM TY B (D-SW)
—▨	- OBJ MRK ASM TY 3 (OM-3R)

NOTE:
FOR QUANTITIES OF PROP SSCB TY 2, TY 3 & TY 4 & FLOWABLE BACKFILL SEE "NORTHBOUND MAINLANES".

*NOTE: PGL FOLLOWS US 281 ℄ (BL1) STATIONING

△ B.M. & HORIZONTAL DATA
BM # US 281-14
ELEV = 103.90
STA = 727+41.86, 241.71' LT
3 1/4" TXDOT ALUMINUM DISK

SHEET TOTALS

ITEM	EST.	FINAL	UNIT	DESCRIPTION
529	553		LF	CONC GUTTER (VALLEY) (4') (TY "A")

EXIST AND PROP PGL

ELEVATION LEGEND

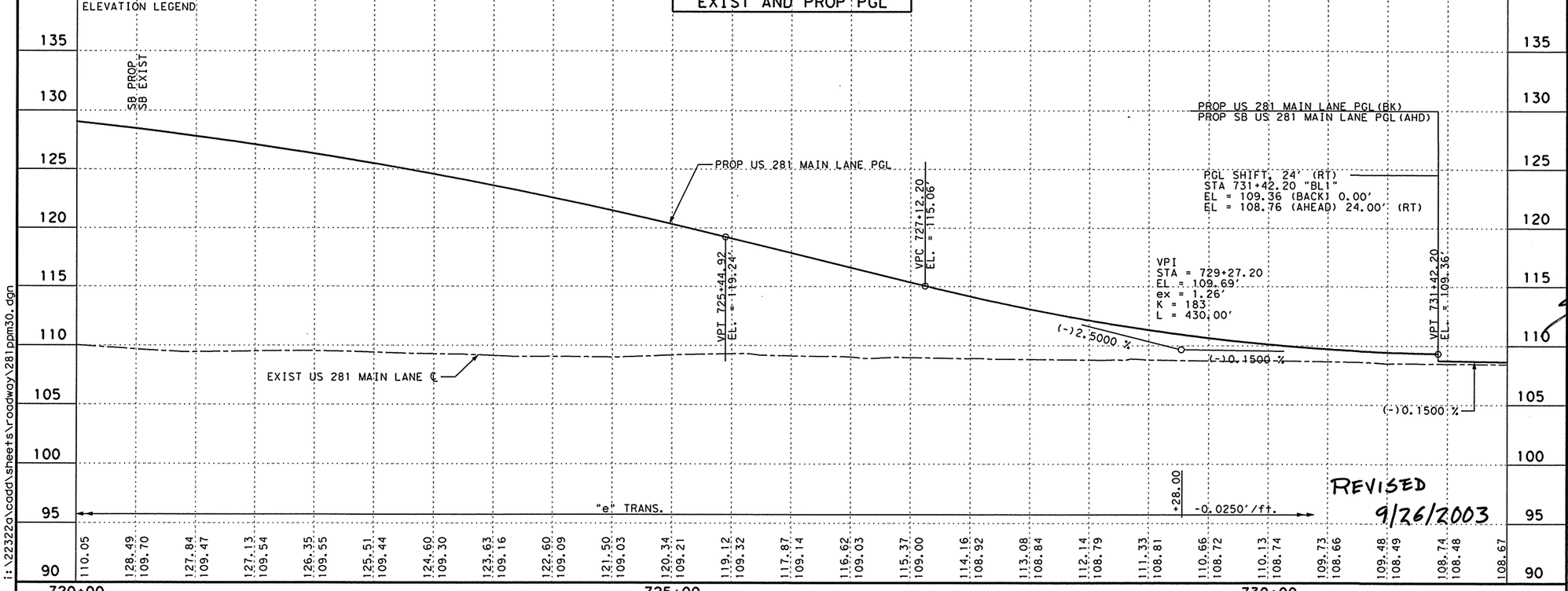

REVISED 9/26/2003

PROFILE LEGEND
PROP US 281 MAIN LANE P.G.L.
EXIST US 281 MAIN LANE NATURAL GROU
SSD STOPPING SIGHT DISTANCE

THE SEAL APPEARING ON THIS DOCUMENT WAS AUTHORIZED BY JAIME AGUILAR, P.E. 87606 ON 06/23/2003.

THE SEAL APPEARING ON THIS DOCUMENT WAS AUTHORIZED BY PHAISARN CWATANAPHOL, P.E. 89252 ON 06/23/2003.

STATE OF TEXAS · JAIME AGUILAR · 87606 · REGISTERED PROFESSIONAL ENGINEER

STATE OF TEXAS · PHAISARN CWATANAPHOL · 89252 · REGISTERED PROFESSIONAL ENGINEER

PB Parsons Brinckerhoff Quade & Douglas Inc.

Texas Department of Transportation
© 2003 by TxDOT

US 281
PLAN & PROFILE
SOUTHBOUND MAINLANES

STA. 720+00 "BL1" TO
STA. 732+00 "BL1"

PLAN 1"= 100' HORIZ
PROFILE 1"= 10' VERT

SHEET 10 OF 20 | 281PPM30.DGN

DESIGNED: JA	FED. RD DIV. No.	STATE	FEDERAL AID PROJECT No.	HIGHWAY No.
CHECKED: JP	6	TEXAS		US 281

DRAWN:	STATE DISTRICT	COUNTY	CONTROL No.	SECTION No.	JOB No.	SHEET No.
CHECKED: JDH	PHARR	HIDALGO	0255	08	091	302

i:\22322a\cadd\sheets\roadway\281ppm30.dgn

NAME
10:49:22 AM
06/23/2003

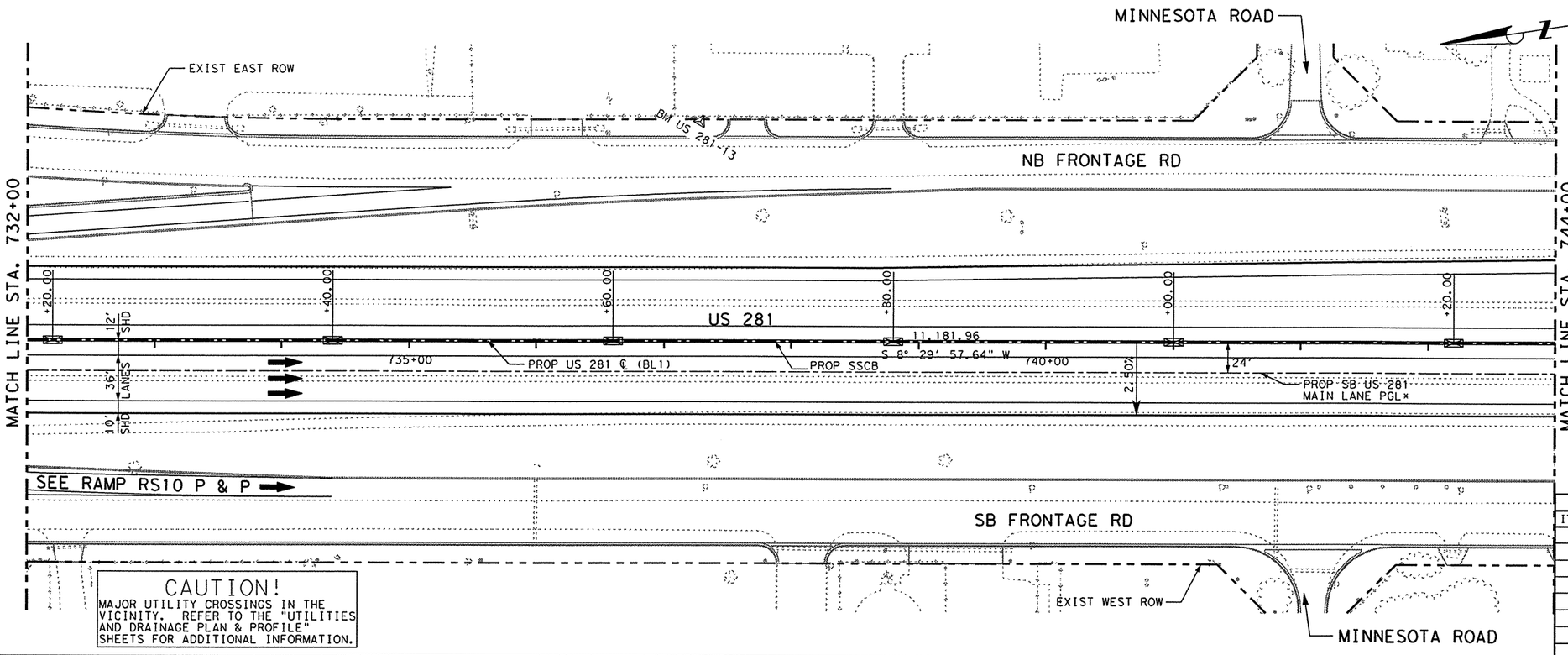

CAUTION!
MAJOR UTILITY CROSSINGS IN THE VICINITY. REFER TO THE "UTILITIES AND DRAINAGE PLAN & PROFILE" SHEETS FOR ADDITIONAL INFORMATION.

LEGEND:

MC	- MOUNTABLE CONC CURB
BC	- BARRIER CONC CURB
MCG	- MOUNTABLE CONC CURB & GUTTER
BCG	- BARRIER CONC CURB & GUTTER
RW	- RETAINING WALL
RR	- RIP RAP
SGT	- SINGLE GUARD RAIL TERMINAL
SSCB	- SINGLE SLOPE CONC BARRIER
SSTR	- SINGLE SLOPE TRAFFIC RAILING
SW	- SIDEWALK
WCR	- WHEEL CHAIR RAMP
VG	- 4' VALLEY GUTTER
MBGF	- METAL BEAM GUARD FENCE
TAS	- TERMINAL ANCHOR SECTION
⊠	- CENTER OF 10' SSCB (TY 4)
⊠	- CENTER OF 70' SSCB (TY 3)
—o	- DEL ASM TY B (D-SW)
—▨	- OBJ MRK ASM TY 3 (OM-3R)

NOTE:
FOR QUANTITIES OF PROP SSCB TY 2, TY 3 & TY 4 & FLOWABLE BACKFILL SEE "NORTHBOUND MAINLANES".

*NOTE: PGL FOLLOWS US 281 ℄ (BL1) STATIONING

⚠ B.M. & HORIZONTAL DATA
BM # US 281-13
ELEV = 104.89
STA = 737+28.11, 172.67' LT
3 1/4" TXDOT ALUMINUM DISK

SHEET TOTALS

ITEM	EST.	FINAL	UNIT	DESCRIPTION
				NO PAY QUANTITIES THIS SHEET

EXIST AND PROP PGL

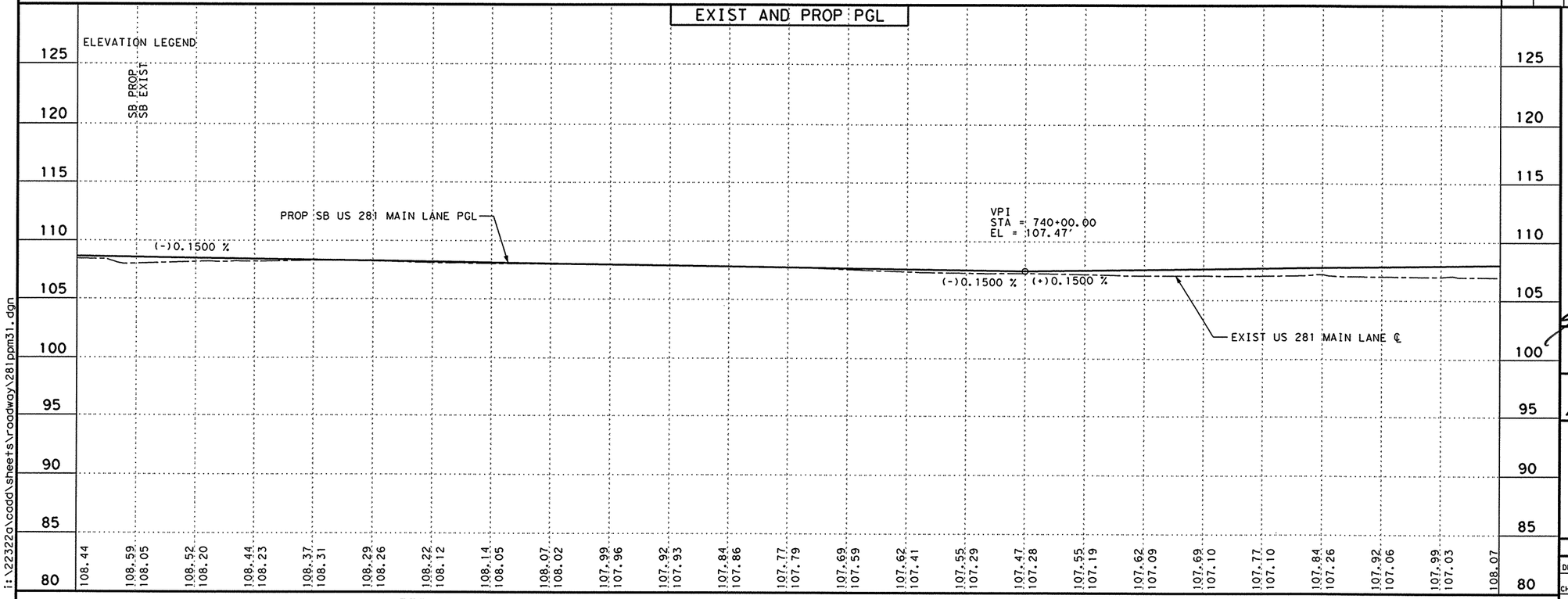

PROFILE LEGEND
PROP US 281 MAIN LANE P.G.L.
EXIST US 281 MAIN LANE NATURAL GROU
SSD STOPPING SIGHT DISTANCE

THE SEAL APPEARING ON THIS DOCUMENT WAS AUTHORIZED BY JAIME AGUILAR, P.E. 87606 ON 06/23/2003.

THE SEAL APPEARING ON THIS DOCUMENT WAS AUTHORIZED BY PHAISARN CWATANAPHOL, P.E. 89252 ON 06/23/2003.

STATE OF TEXAS · JAIME AGUILAR · 87606 · REGISTERED PROFESSIONAL ENGINEER

STATE OF TEXAS · PHAISARN CWATANAPHOL · 89252 · REGISTERED PROFESSIONAL ENGINEER

Parsons Brinckerhoff Quade & Douglas Inc.

Texas Department of Transportation
© 2003 by TxDOT

US 281
PLAN & PROFILE
SOUTHBOUND MAINLANES

STA. 732+00 "BL1" TO
STA. 744+00 "BL1"

PLAN 1"= 100' HORIZ
PROFILE 1"= 10' VERT

SHEET 11 OF 20 | 281PPM31.DGN

DESIGNED: JA	FED. RD DIV. No.	STATE	FEDERAL AID PROJECT No.			HIGHWAY No.
CHECKED: JP	6	TEXAS				US 281
DRAWN:	STATE DISTRICT	COUNTY	CONTROL No.	SECTION No.	JOB No.	SHEET No.
CHECKED: JDH	PHARR	HIDALGO	0255	08	091	303

i:\22322g\cadd\sheets\roadway\281ppm31.dgn

NAME

10:49:38 AM

06/23/2003

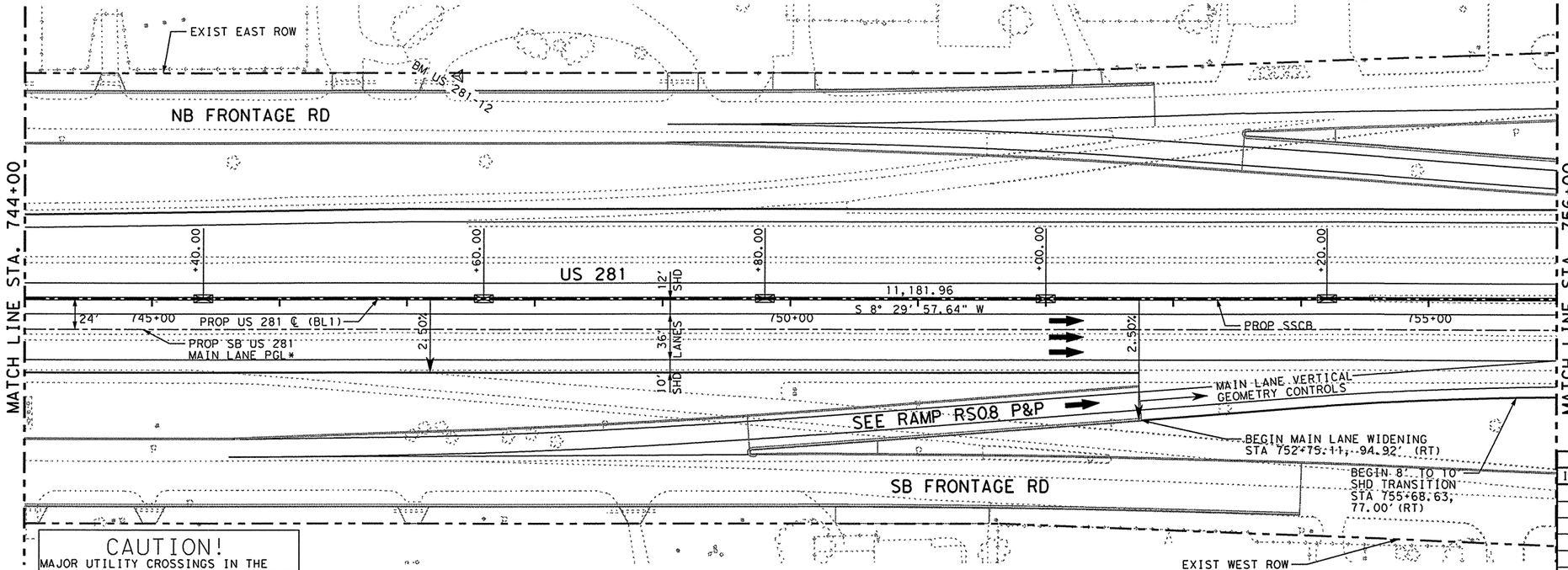

CAUTION!
MAJOR UTILITY CROSSINGS IN THE VICINITY. REFER TO THE "UTILITIES AND DRAINAGE PLAN & PROFILE" SHEETS FOR ADDITIONAL INFORMATION.

LEGEND:

MC	- MOUNTABLE CONC CURB
BC	- BARRIER CONC CURB
MCG	- MOUNTABLE CONC CURB & GUTTER
BCG	- BARRIER CONC CURB & GUTTER
RW	- RETAINING WALL
RR	- RIP RAP
SGT	- SINGLE GUARD RAIL TERMINAL
SSCB	- SINGLE SLOPE CONC BARRIER
SSTR	- SINGLE SLOPE TRAFFIC RAILING
SW	- SIDEWALK
WCR	- WHEEL CHAIR RAMP
VG	- 4' VALLEY GUTTER
MBGF	- METAL BEAM GUARD FENCE
TAS	- TERMINAL ANCHOR SECTION
⊠	- CENTER OF 10' SSCB (TY 4)
▭	- CENTER OF 70' SSCB (TY 3)
—o	- DEL ASM TY B (D-SW)
—▨	- OBJ MRK ASM TY 3 (OM-3R)

NOTE:
FOR QUANTITIES OF PROP SSCB TY 2, TY 3 & TY 4 & FLOWABLE BACKFILL SEE "NORTHBOUND MAINLANES".

*NOTE: PGL FOLLOWS US 281 ℄ (BL1) STATIONING

⚠ B.M. & HORIZONTAL DATA
BM # US 281-12
ELEV = 104.33
STA = 747+40.09, 172.11' LT
3 1/4" TXDOT ALUMINUM DISK

SHEET TOTALS

ITEM	EST.	FINAL	UNIT	DESCRIPTION
				NO PAY QUANTITIES THIS SHEET

EXIST AND PROP PGL

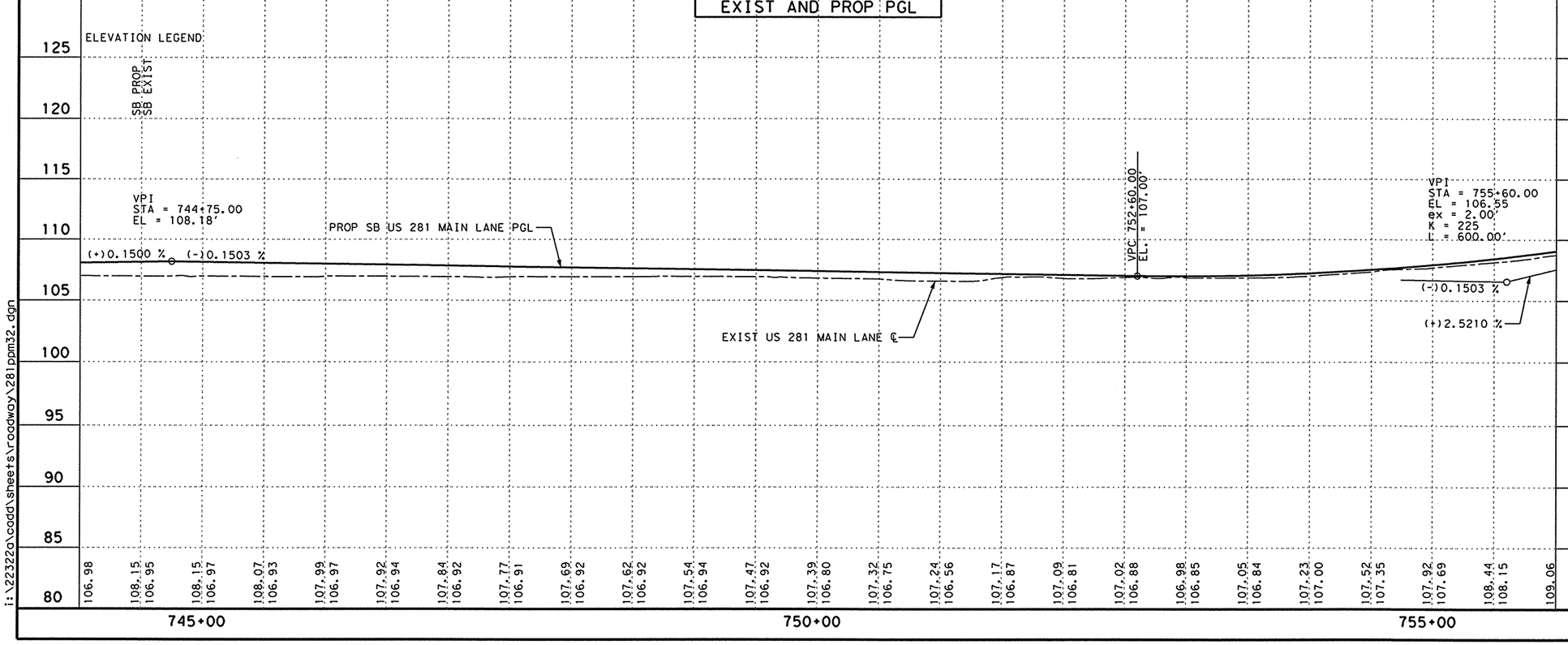

PROFILE LEGEND
——— PROP US 281 MAIN LANE P.G.L.
– – – – EXIST US 281 MAIN LANE NATURAL GROU
SSD STOPPING SIGHT DISTANCE

THE SEAL APPEARING ON THIS DOCUMENT WAS AUTHORIZED BY JAIME AGUILAR, P.E. 87606 ON 06/23/2003.

THE SEAL APPEARING ON THIS DOCUMENT WAS AUTHORIZED BY PHAISARN CWATANAPHOL, P.E. 89252 ON 06/23/2003.

STATE OF TEXAS — JAIME AGUILAR — 87606 — REGISTERED PROFESSIONAL ENGINEER

STATE OF TEXAS — PHAISARN CWATANAPHOL — 89252 — REGISTERED PROFESSIONAL ENGINEER

Parsons Brinckerhoff Quade & Douglas Inc.

Texas Department of Transportation

© 2003 by TxDOT

US 281
PLAN & PROFILE
SOUTHBOUND MAINLANES

STA. 744+00 "BL1" TO
STA. 756+00 "BL1"

PLAN 1"= 100' HORIZ
PROFILE 1"= 10' VERT

SHEET 12 OF 20			281PPM32.DGN				
DESIGNED: JA	FED. RD DIV. No.	STATE	FEDERAL AID PROJECT No.			HIGHWAY No.	
CHECKED: JP	6	TEXAS				US 281	
DRAWN:	STATE DISTRICT	COUNTY	CONTROL No.	SECTION No.	JOB No.	SHEET No.	
CHECKED: JDH	PHARR	HIDALGO	0255	08	091	304	

i:\22322a\cadd\sheets\roadway\281ppm32.dgn

NAME
10:49:57 AM
06/23/2003

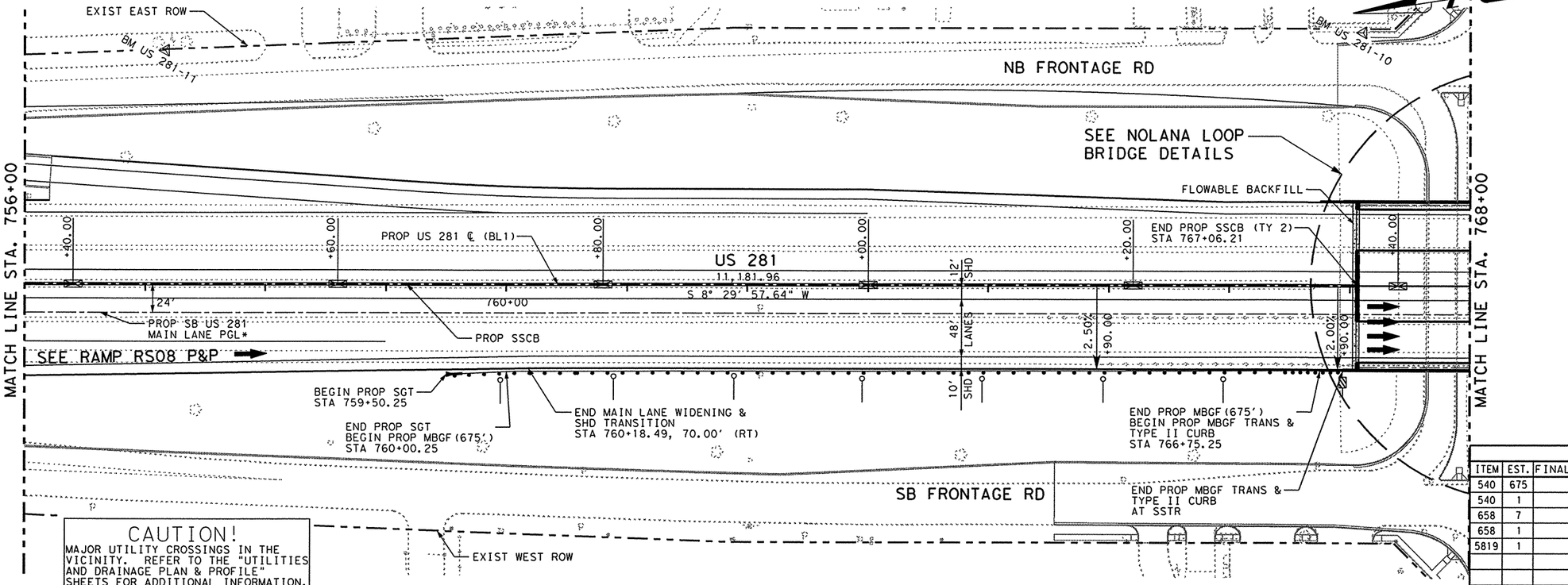

CAUTION!
MAJOR UTILITY CROSSINGS IN THE VICINITY. REFER TO THE "UTILITIES AND DRAINAGE PLAN & PROFILE" SHEETS FOR ADDITIONAL INFORMATION.

LEGEND:

MC	- MOUNTABLE CONC CURB
BC	- BARRIER CONC CURB
MCG	- MOUNTABLE CONC CURB & GUTTER
BCG	- BARRIER CONC CURB & GUTTER
RW	- RETAINING WALL
RR	- RIP RAP
SGT	- SINGLE GUARD RAIL TERMINAL
SSCB	- SINGLE SLOPE CONC BARRIER
SSTR	- SINGLE SLOPE TRAFFIC RAILING
SW	- SIDEWALK
WCR	- WHEEL CHAIR RAMP
VG	- 4' VALLEY GUTTER
MBGF	- METAL BEAM GUARD FENCE
TAS	- TERMINAL ANCHOR SECTION
⊠	- CENTER OF 10' SSCB (TY 4)
▭	- CENTER OF 70' SSCB (TY 3)
—o	- DEL ASM TY B (D-SW)
—▨	- OBJ MRK ASM TY 3 (OM-3R)

NOTE:
FOR QUANTITIES OF PROP SSCB TY 2, TY 3 & TY 4 & FLOWABLE BACKFILL SEE "NORTHBOUND MAINLANES".

*NOTE: PGL FOLLOWS US 281 ℄ (BL1) STATIONING

⚠ B.M. & HORIZONTAL DATA

BM # US 281-11
ELEV = 104.75
STA = 757+16.56, 194.71' LT
3 1/4" TXDOT ALUMINUM DISK

BM # US 281-10
ELEV = 105.56
STA = 767+10.57, 210.84' LT
3 1/4" TXDOT ALUMINUM DISK

SHEET TOTALS

ITEM	EST.	FINAL	UNIT	DESCRIPTION
540	675		LF	MTL BEAM GD FEN (12 GA) (TIM POST)
540	1		EA	MTL BEAM GD FEN TRANS (12 GA)
658	7		EA	DEL ASM TY B(D-SW)
658	1		EA	OBJ MRK ASM TY 3 (OM-3R)
5819	1		EA	SINGLE GDRAIL TERM (TY II)

EXIST AND PROP PGL

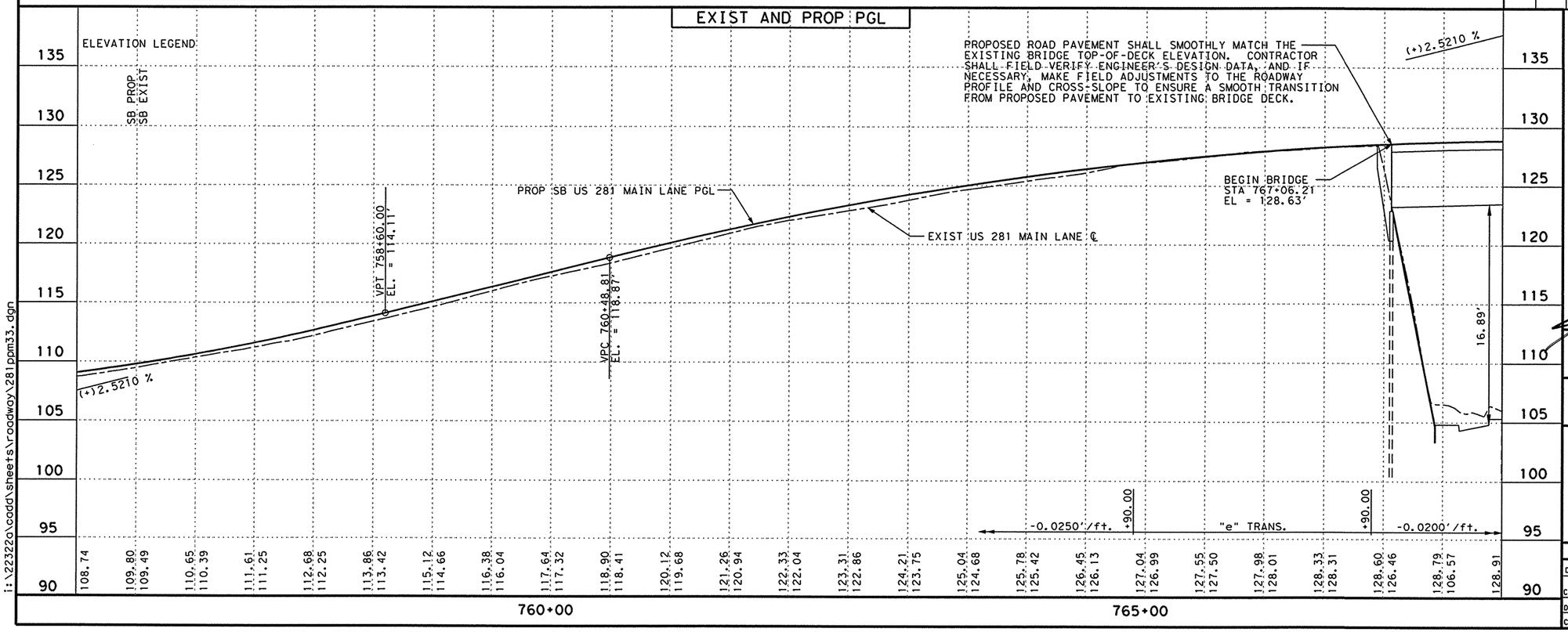

PROFILE LEGEND
——— PROP US 281 MAIN LANE P.G.L.
– – – – EXIST US 281 MAIN LANE NATURAL GROU
SSD STOPPING SIGHT DISTANCE

THE SEAL APPEARING ON THIS DOCUMENT WAS AUTHORIZED BY JAIME AGUILAR, P.E. 87606 ON 06/23/2003.

THE SEAL APPEARING ON THIS DOCUMENT WAS AUTHORIZED BY PHAISARN CHATANAPHOL, P.E. 89252 ON 06/23/2003.

STATE OF TEXAS — JAIME AGUILAR — 87606 — REGISTERED PROFESSIONAL ENGINEER

STATE OF TEXAS — PHAISARN CHATANAPHOL — 89252 — REGISTERED PROFESSIONAL ENGINEER

Parsons Brinckerhoff Quade & Douglas Inc.

Texas Department of Transportation

© 2003 by TxDOT

US 281
PLAN & PROFILE
SOUTHBOUND MAINLANES

STA. 756+00 "BL1" TO
STA. 768+00 "BL1"

PLAN 1"= 100' HORIZ
PROFILE 1"= 10' VERT

SHEET 13 OF 20 — 281PPM33.DGN

DESIGNED: JA	FED. RD DIV. No.	STATE	FEDERAL AID PROJECT No.			HIGHWAY No.
CHECKED: JP	6	TEXAS				US 281
DRAWN: XXX	STATE DISTRICT	COUNTY	CONTROL No.	SECTION No.	JOB No.	SHEET No.
CHECKED: JDH	PHARR	HIDALGO	0255	08	091	305

i:\22322g\cadd\sheets\roadway\281ppm33.dgn

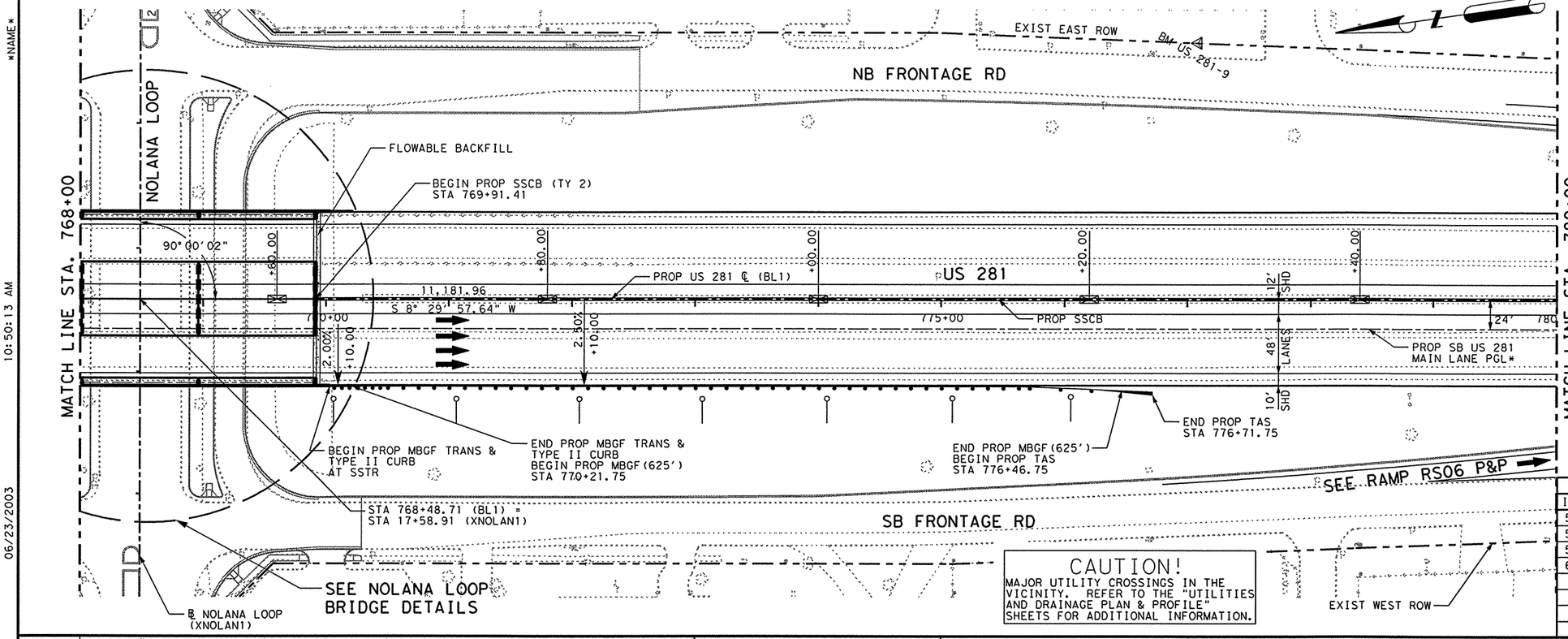

LEGEND:

MC	- MOUNTABLE CONC CURB
BC	- BARRIER CONC CURB
MCG	- MOUNTABLE CONC CURB & GUTTER
BCG	- BARRIER CONC CURB & GUTTER
RW	- RETAINING WALL
RR	- RIP RAP
SGT	- SINGLE GUARD RAIL TERMINAL
SSCB	- SINGLE SLOPE CONC BARRIER
SSTR	- SINGLE SLOPE TRAFFIC RAILING
SW	- SIDEWALK
WCR	- WHEEL CHAIR RAMP
VG	- 4' VALLEY GUTTER
MBGF	- METAL BEAM GUARD FENCE
TAS	- TERMINAL ANCHOR SECTION
	- CENTER OF 10' SSCB (TY 4)
	- CENTER OF 70' SSCB (TY 3)
	- DEL ASM TY B (D-SW)
	- OBJ MRK ASM TY 3 (OM-3R)

NOTE:
FOR QUANTITIES OF PROP SSCB TY 2, TY 3 & TY 4 & FLOWABLE BACKFILL SEE "NORTHBOUND MAINLANES".

*NOTE: PGL FOLLOWS US 281 ℄ (BL1) STATIONING

B.M. & HORIZONTAL DATA
BM # US 281-9
ELEV = 104.73
STA = 777+08.34, 205.90' LT
3 1/4" TXDOT ALUMINUM DISK

SHEET TOTALS

ITEM	EST.	FINAL	UNIT	DESCRIPTION
540	625		LF	MTL BEAM GD FEN (12 GA) (TIM POST)
540	1		EA	MTL BEAM GD FEN TRANS (12 GA)
540	1		EA	TERM ANCH SECT (12 GA)
658	7		EA	DEL ASM TY B(D-SW)

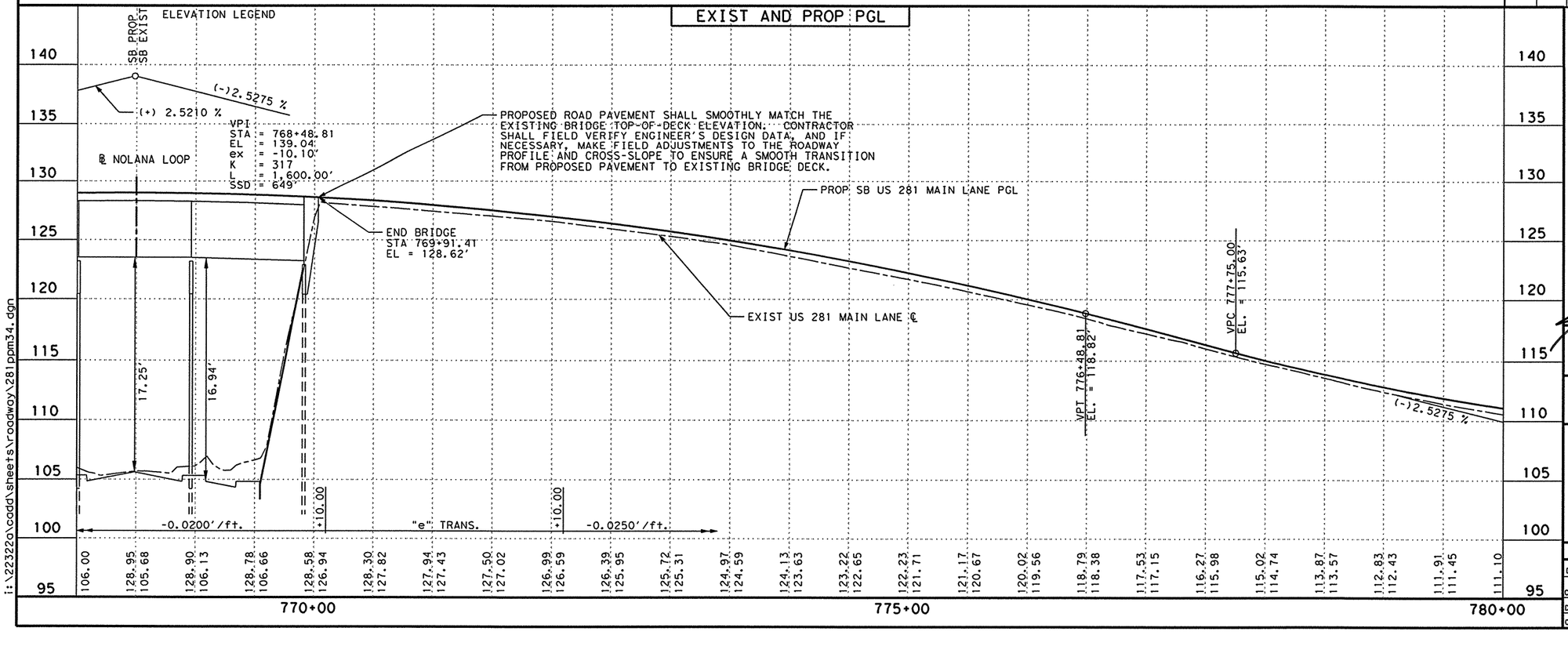

PROFILE LEGEND
PROP US 281 MAIN LANE P.G.L.
EXIST US 281 MAIN LANE NATURAL GROU
SSD STOPPING SIGHT DISTANCE

THE SEAL APPEARING ON THIS DOCUMENT WAS AUTHORIZED BY JAIME AGUILAR, P.E. 87606 ON 06/23/2003.

THE SEAL APPEARING ON THIS DOCUMENT WAS AUTHORIZED BY PHAISARN CWATANAPHOL, P.E. 89252 ON 06/23/2003.

STATE OF TEXAS
JAIME AGUILAR
87606
REGISTERED PROFESSIONAL ENGINEER

STATE OF TEXAS
PHAISARN CWATANAPHOL
89252
REGISTERED PROFESSIONAL ENGINEER

Parsons Brinckerhoff Quade & Douglas Inc.

Texas Department of Transportation

© 2003 by TxDOT

US 281
PLAN & PROFILE
SOUTHBOUND MAINLANES

STA. 768+00 "BL1" TO
STA. 780+00 "BL1"

PLAN 1"= 100' HORIZ
PROFILE 1"= 10' VERT

SHEET 14 OF 20 | 281PPM34.DGN

DESIGNED: JA	FED. RD DIV. No.	STATE	FEDERAL AID PROJECT No.	HIGHWAY No.
CHECKED: JP	6	TEXAS		US 281

DRAWN:	STATE DISTRICT	COUNTY	CONTROL No.	SECTION No.	JOB No.	SHEET No.
CHECKED: JDH	PHARR	HIDALGO	0255	08	091	306

NAME
10:50:13 AM
06/23/2003
i:\22322o\cadd\sheets\roadway\281ppm34.dgn

NAME
10:50:30 AM
06/23/2003

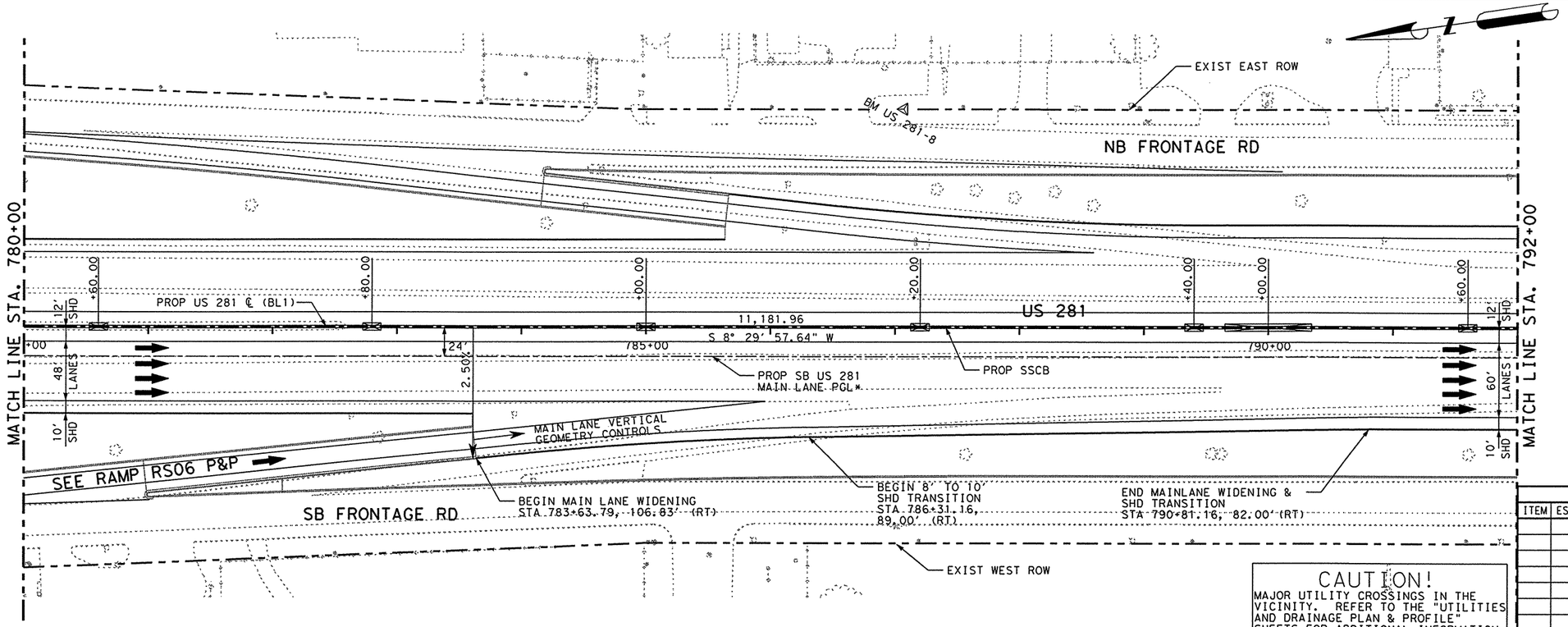

LEGEND:

MC	- MOUNTABLE CONC CURB
BC	- BARRIER CONC CURB
MCG	- MOUNTABLE CONC CURB & GUTTER
BCG	- BARRIER CONC CURB & GUTTER
RW	- RETAINING WALL
RR	- RIP RAP
SGT	- SINGLE GUARD RAIL TERMINAL
SSCB	- SINGLE SLOPE CONC BARRIER
SSTR	- SINGLE SLOPE TRAFFIC RAILING
SW	- SIDEWALK
WCR	- WHEEL CHAIR RAMP
VG	- 4' VALLEY GUTTER
MBGF	- METAL BEAM GUARD FENCE
TAS	- TERMINAL ANCHOR SECTION
	- CENTER OF 10' SSCB (TY 4)
	- CENTER OF 70' SSCB (TY 3)
	- DEL ASM TY B (D-SW)
	- OBJ MRK ASM TY 3 (OM-3R)

NOTE:
FOR QUANTITIES OF PROP SSCB TY 2, TY 3 & TY 4 & FLOWABLE BACKFILL SEE "NORTHBOUND MAINLANES".

*NOTE: PGL FOLLOWS US 281 ℄ (BL1) STATIONING

B.M. & HORIZONTAL DATA
BM # US 281-8
ELEV = 104.98
STA = 787+06.77, 175.17' LT
3 1/4" TXDOT ALUMINUM DISK

SHEET TOTALS

ITEM	EST.	FINAL	UNIT	DESCRIPTION
				NO PAY QUANTITIES THIS SHEET

CAUTION!
MAJOR UTILITY CROSSINGS IN THE VICINITY. REFER TO THE "UTILITIES AND DRAINAGE PLAN & PROFILE" SHEETS FOR ADDITIONAL INFORMATION.

EXIST AND PROP PGL

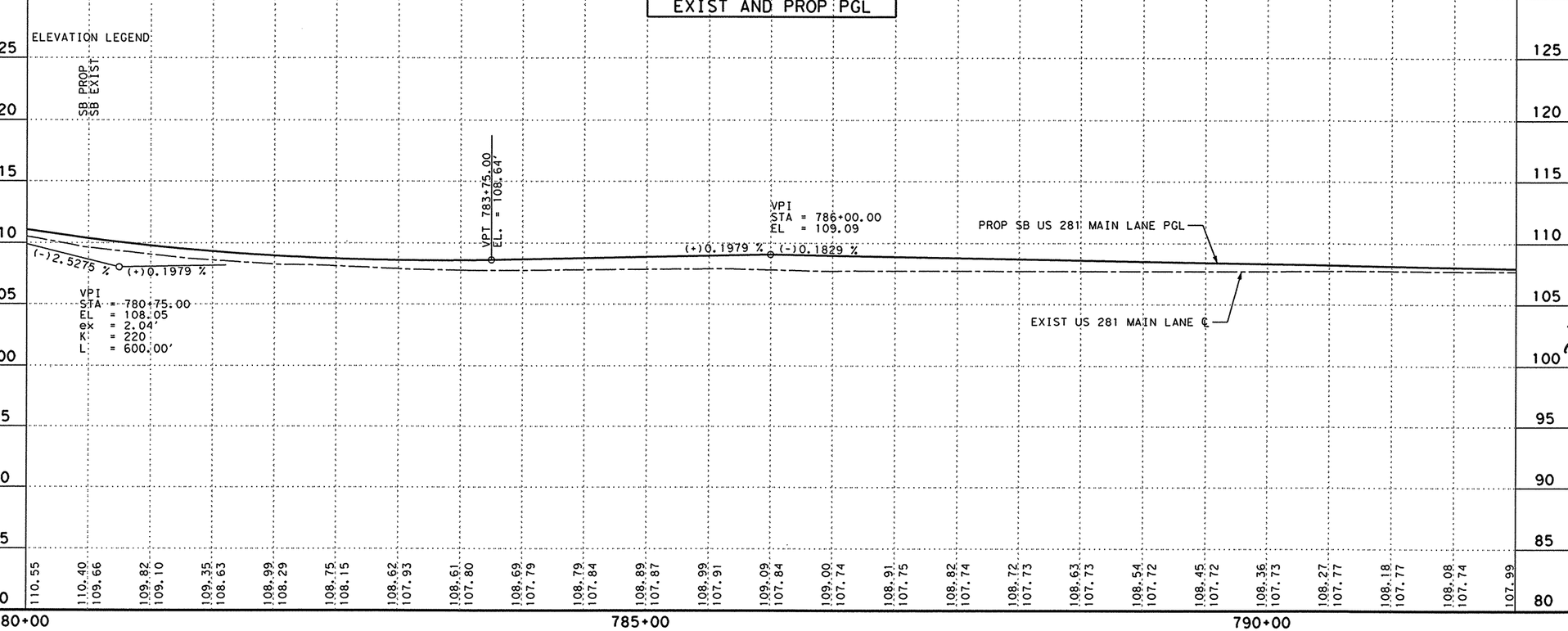

PROFILE LEGEND
PROP US 281 MAIN LANE P.G.L.
EXIST US 281 MAIN LANE NATURAL GROU
SSD STOPPING SIGHT DISTANCE

THE SEAL APPEARING ON THIS DOCUMENT WAS AUTHORIZED BY JAIME AGUILAR, P.E. 87606 ON 06/23/2003.

THE SEAL APPEARING ON THIS DOCUMENT WAS AUTHORIZED BY PHAISARN CWATANAPHOL, P.E. 89252 ON 06/23/2003.

STATE OF TEXAS
JAIME AGUILAR
87606
REGISTERED PROFESSIONAL ENGINEER

STATE OF TEXAS
PHAISARN CWATANAPHOL
89252
REGISTERED PROFESSIONAL ENGINEER

Parsons Brinckerhoff Quade & Douglas Inc.

Texas Department of Transportation
© 2003 by TxDOT

US 281
PLAN & PROFILE
SOUTHBOUND MAINLANES

STA. 780+00 "BL1" TO
STA. 792+00 "BL1"

PLAN 1"= 100' HORIZ
PROFILE 1"= 10' VERT

SHEET 15 OF 20 | 281PPM35.DGN

DESIGNED: JA	FED. RD DIV. NO.	STATE	FEDERAL AID PROJECT No.	HIGHWAY No.
CHECKED: JP	6	TEXAS		US 281

DRAWN:	STATE DISTRICT	COUNTY	CONTROL No.	SECTION No.	JOB No.	SHEET No.
CHECKED: JDH	PHARR	HIDALGO	0255	08	091	307

i:\22320\cadd\sheets\roadway\281ppm35.dgn
06/23/2003

NAME
10:50:47 AM
06/23/2003

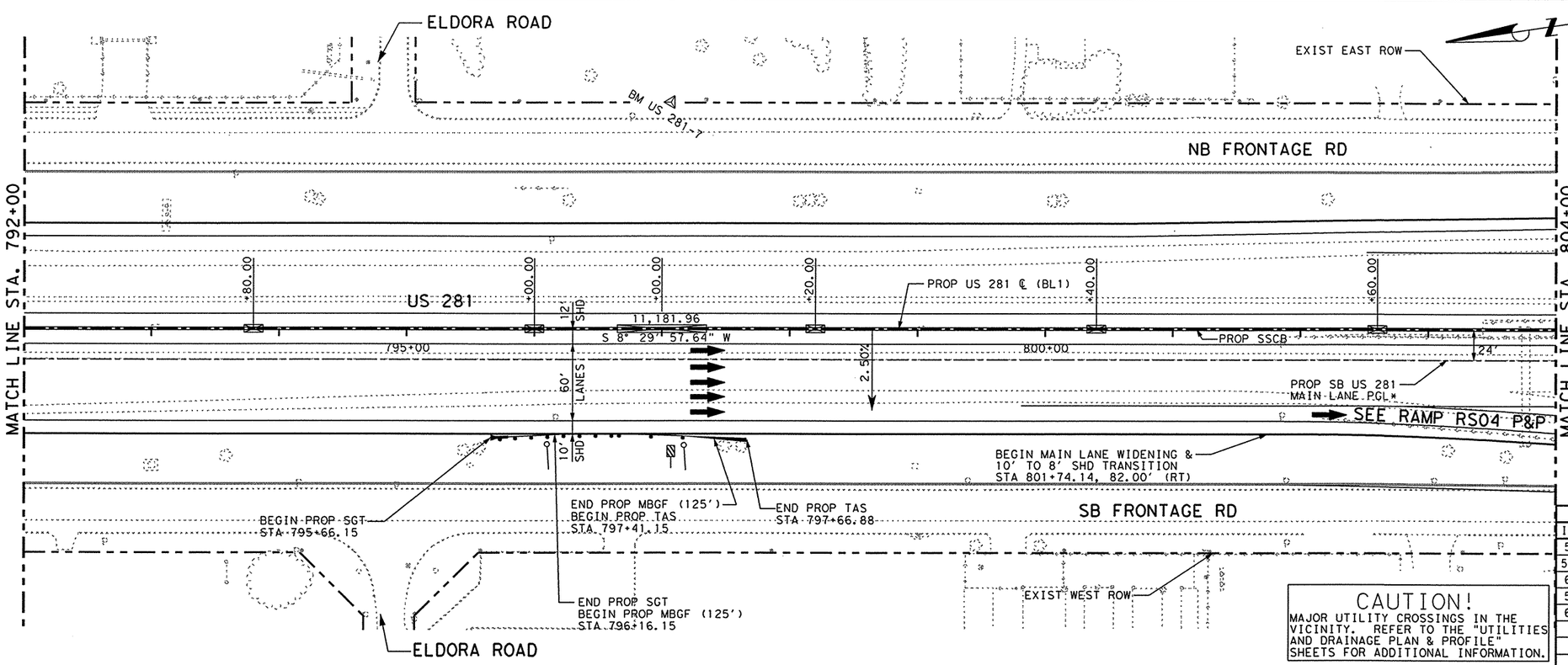

LEGEND:

MC	- MOUNTABLE CONC CURB
BC	- BARRIER CONC CURB
MCG	- MOUNTABLE CONC CURB & GUTTER
BCG	- BARRIER CONC CURB & GUTTER
RW	- RETAINING WALL
RR	- RIP RAP
SGT	- SINGLE GUARD RAIL TERMINAL
SSCB	- SINGLE SLOPE CONC BARRIER
SSTR	- SINGLE SLOPE TRAFFIC RAILING
SW	- SIDEWALK
WCR	- WHEEL CHAIR RAMP
VG	- 4' VALLEY GUTTER
MBGF	- METAL BEAM GUARD FENCE
TAS	- TERMINAL ANCHOR SECTION
⊠	- CENTER OF 10' SSCB (TY 4)
⊠⊠	- CENTER OF 70' SSCB (TY 3)
—o	- DEL ASM TY B (D-SW)
—⊘	- OBJ MRK ASM TY 3 (OM-3R)

NOTE:
FOR QUANTITIES OF PROP SSCB TY 2, TY 3 & TY 4 & FLOWABLE BACKFILL SEE "NORTHBOUND MAINLANES".

*NOTE: PGL FOLLOWS US 281 ℄ (BL1) STATIONING

△ B.M. & HORIZONTAL DATA
BM # US 281-7
ELEV = 104.99
STA = 797+06.99, 175.36' LT
3 1/4" TXDOT ALUMINUM DISK

CAUTION!
MAJOR UTILITY CROSSINGS IN THE VICINITY. REFER TO THE "UTILITIES AND DRAINAGE PLAN & PROFILE" SHEETS FOR ADDITIONAL INFORMATION.

SHEET TOTALS

ITEM	EST.	FINAL	UNIT	DESCRIPTION
540	125		LF	MTL BEAM GD FEN (12 GA) (TIM POST)
5819	1		EA	SINGLE GDRAIL TERM (TY II)
658	2		EA	DEL ASM TY B(D-SW)
540	1		EA	TERM ANCH SECT (12 GA)
658	1		EA	OBJ MRK ASM TY 3(OM-3R)

EXIST AND PROP PGL

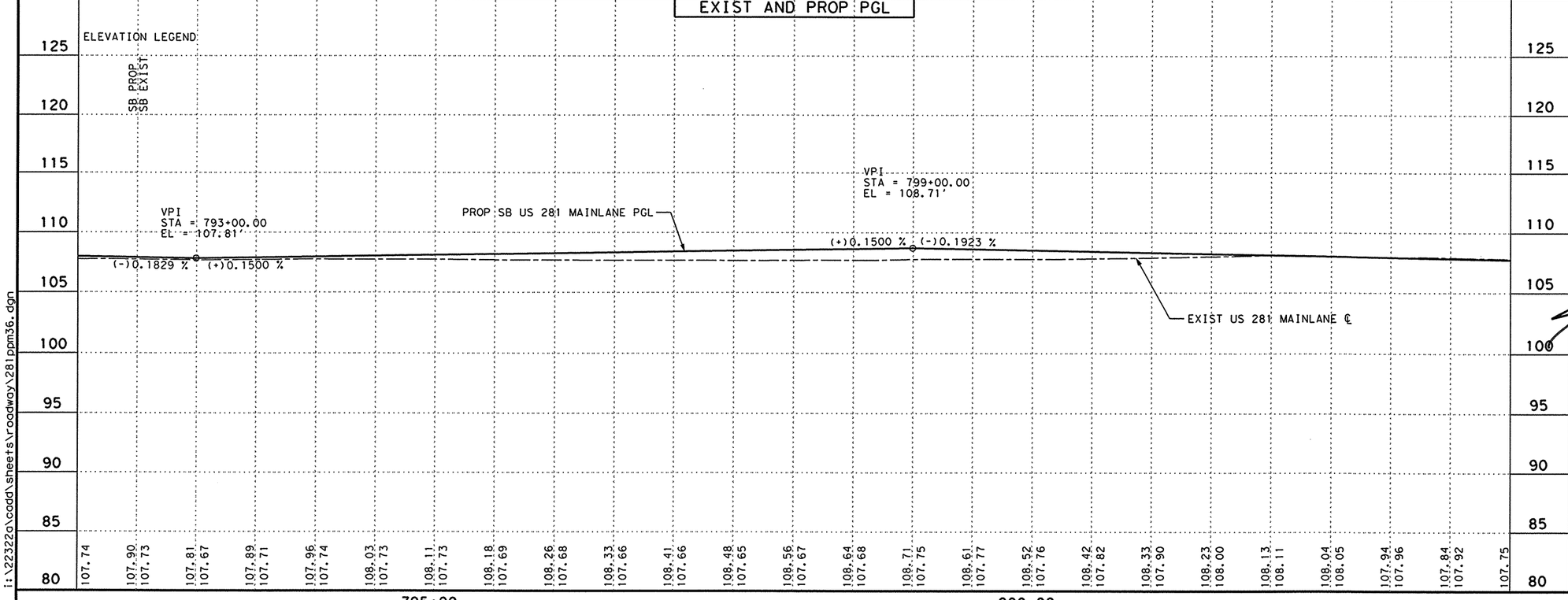

PROFILE LEGEND
——— PROP US 281 MAIN LANE P.G.L.
– – – – EXIST US 281 MAIN LANE NATURAL GROU
SSD STOPPING SIGHT DISTANCE

THE SEAL APPEARING ON THIS DOCUMENT WAS AUTHORIZED BY JAIME AGUILAR, P.E. 87606 ON 06/23/2003.

THE SEAL APPEARING ON THIS DOCUMENT WAS AUTHORIZED BY PHAISARN CWATANAPHOL, P.E. 89252 ON 06/23/2003.

STATE OF TEXAS · JAIME AGUILAR · 87606 · REGISTERED PROFESSIONAL ENGINEER

STATE OF TEXAS · PHAISARN CWATANAPHOL · 89252 · REGISTERED PROFESSIONAL ENGINEER

Parsons Brinckerhoff Quade & Douglas Inc.

Texas Department of Transportation

© 2003 by TxDOT

US 281
PLAN & PROFILE
SOUTHBOUND MAINLANES

STA. 792+00 "BL1" TO
STA. 804+00 "BL1"

PLAN 1"= 100' HORIZ
PROFILE 1"= 10' VERT

SHEET 16 OF 20			281PPM36.DGN				
DESIGNED: JA	FED. RD DIV. No.	STATE	FEDERAL AID PROJECT No.				HIGHWAY No.
CHECKED: JP	6	TEXAS					US 281
DRAWN:	STATE DISTRICT	COUNTY	CONTROL No.	SECTION No.	JOB No.	SHEET No.	
CHECKED: JDH	PHARR	HIDALGO	0255	08	091	308	

i:\22322a\cadd\sheets\roadway\281ppm36.dgn

NAME
10:51:04 AM
06/23/2003
i:\22322a\cadd\sheets\roadway\281ppm37.dgn

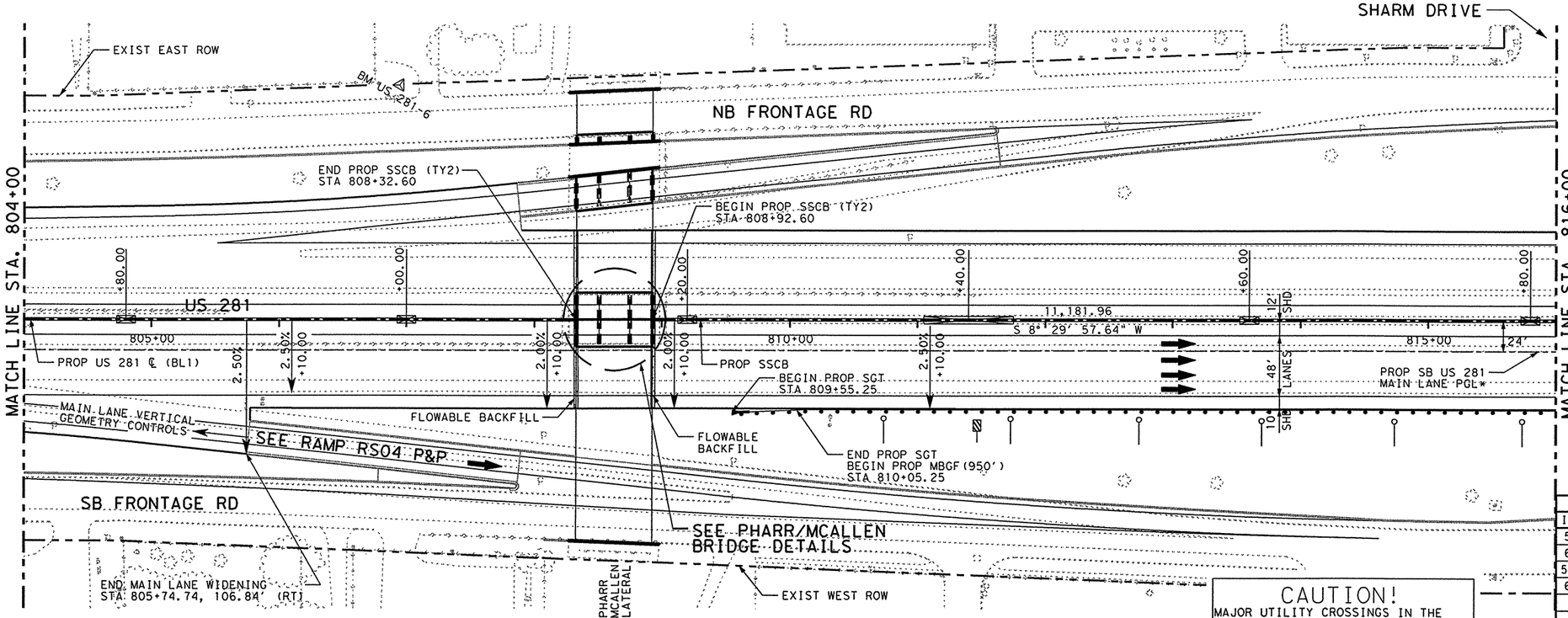

LEGEND:

MC	- MOUNTABLE CONC CURB
BC	- BARRIER CONC CURB
MCG	- MOUNTABLE CONC CURB & GUTTER
BCG	- BARRIER CONC CURB & GUTTER
RW	- RETAINING WALL
RR	- RIP RAP
SGT	- SINGLE GUARD RAIL TERMINAL
SSCB	- SINGLE SLOPE CONC BARRIER
SSTR	- SINGLE SLOPE TRAFFIC RAILING
SW	- SIDEWALK
WCR	- WHEEL CHAIR RAMP
VG	- 4' VALLEY GUTTER
MBGF	- METAL BEAM GUARD FENCE
TAS	- TERMINAL ANCHOR SECTION
⊠	- CENTER OF 10' SSCB (TY 4)
▭	- CENTER OF 70' SSCB (TY 3)
—|o	- DEL ASM TY B (D-SW)
—▨	- OBJ MRK ASM TY 3 (OM-3R)

NOTE:
FOR QUANTITIES OF PROP SSCB TY 2, TY 3 & TY 4 & FLOWABLE BACKFILL SEE "NORTHBOUND MAINLANES".

*NOTE: PGL FOLLOWS US 281 ℄ (BL1) STATIONING

△ B.M. & HORIZONTAL DATA
BM # US 281-6
ELEV = 105.29
STA = 806+94.49, 183.50' LT
3 1/4" TXDOT ALUMINUM DISK

SHEET TOTALS

ITEM	EST.	FINAL	UNIT	DESCRIPTION
540	595		LF	MTL BEAM GD FEN (12 GA) (TIM POST)
658	6		EA	DEL ASM TY B(D-SW)
5819	1		EA	SINGLE GDRAIL TERM (TY II)
658	1		EA	OBJ MRK ASM TY 3(OM-3R)

CAUTION!
MAJOR UTILITY CROSSINGS IN THE VICINITY. REFER TO THE "UTILITIES AND DRAINAGE PLAN & PROFILE" SHEETS FOR ADDITIONAL INFORMATION.

EXIST AND PROP PGL

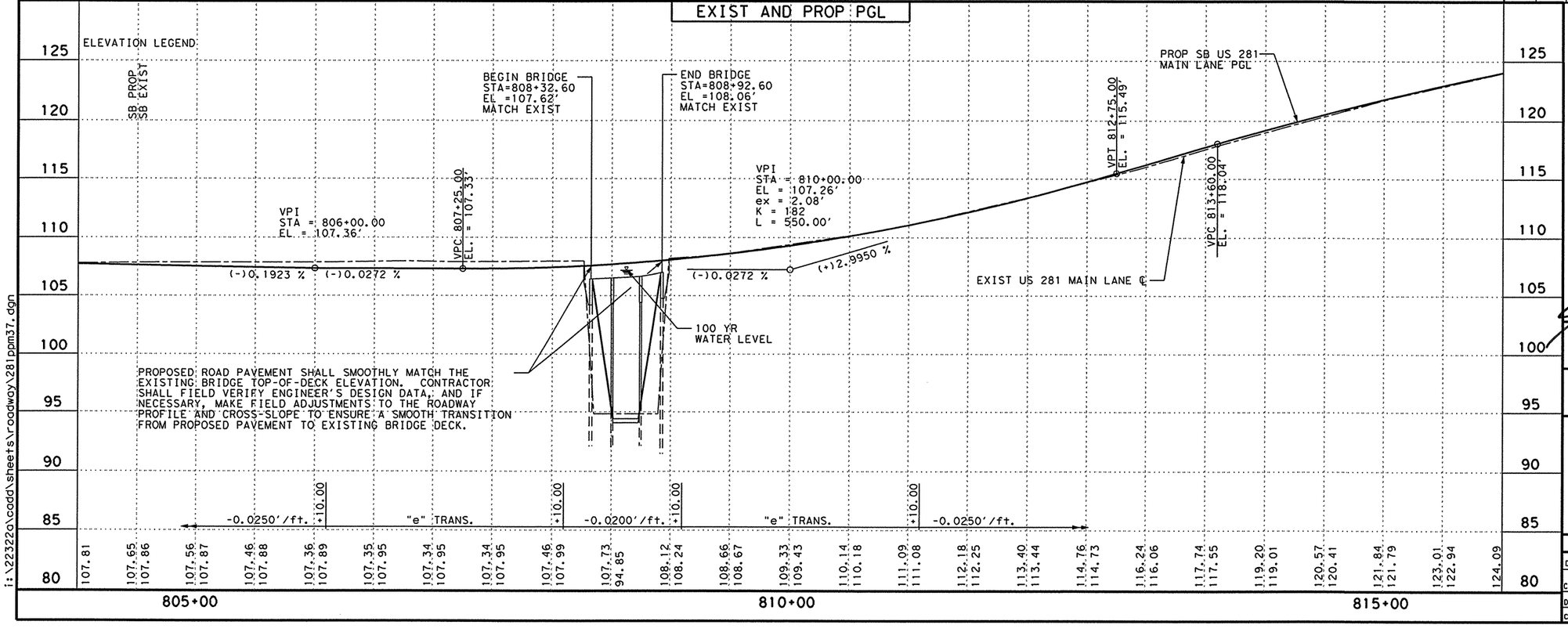

PROFILE LEGEND
——— PROP US 281 MAIN LANE P.G.L.
– – – – EXIST US 281 MAIN LANE NATURAL GROUN
SSD STOPPING SIGHT DISTANCE

THE SEAL APPEARING ON THIS DOCUMENT WAS AUTHORIZED BY JAIME AGUILAR, P.E. 87606 ON 06/23/2003.

THE SEAL APPEARING ON THIS DOCUMENT WAS AUTHORIZED BY PHAISARN CWATANAPHOL, P.E. 89252 ON 06/23/2003.

STATE OF TEXAS — JAIME AGUILAR — 87606 — REGISTERED PROFESSIONAL ENGINEER

STATE OF TEXAS — PHAISARN CWATANAPHOL — 89252 — REGISTERED PROFESSIONAL ENGINEER

Parsons Brinckerhoff Quade & Douglas Inc.

Texas Department of Transportation

© 2003 by TxDOT

US 281
PLAN & PROFILE
SOUTHBOUND MAINLANES

STA. 804+00 "BL1" TO
STA. 816+00 "BL1"

PLAN 1"= 100' HORIZ
PROFILE 1"= 10' VERT

SHEET 17 OF 20 | 281PPM37.DGN

DESIGNED: JA	FED. RD DIV. No.	STATE	FEDERAL AID PROJECT No.		HIGHWAY No.	
CHECKED: JP	6	TEXAS			US 281	
DRAWN:	STATE DISTRICT	COUNTY	CONTROL No.	SECTION No.	JOB No.	SHEET No.
CHECKED: JDH	PHARR	HIDALGO	0255	08	091	309

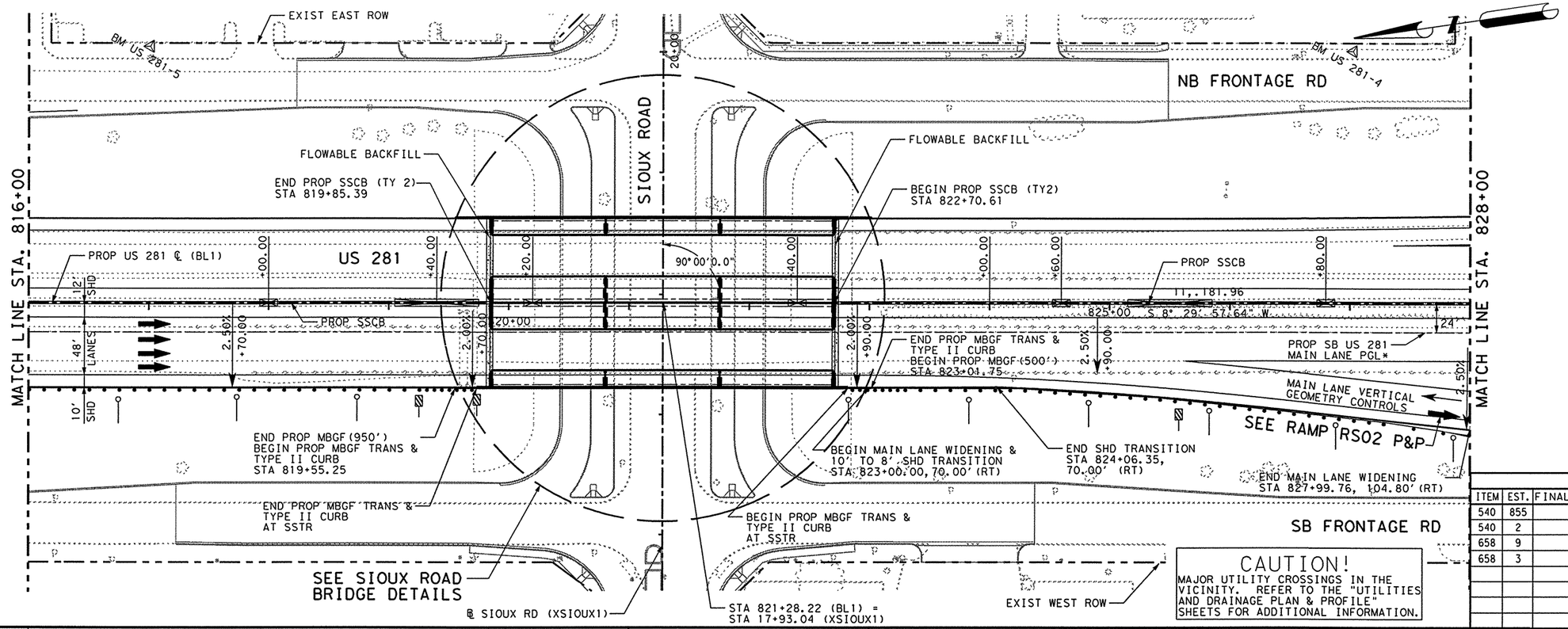

LEGEND:

- MC - MOUNTABLE CONC CURB
- BC - BARRIER CONC CURB
- MCG - MOUNTABLE CONC CURB & GUTTER
- BCG - BARRIER CONC CURB & GUTTER
- RW - RETAINING WALL
- RR - RIP RAP
- SGT - SINGLE GUARD RAIL TERMINAL
- SSCB - SINGLE SLOPE CONC BARRIER
- SSTR - SINGLE SLOPE TRAFFIC RAILING
- SW - SIDEWALK
- WCR - WHEEL CHAIR RAMP
- VG - 4' VALLEY GUTTER
- MBGF - METAL BEAM GUARD FENCE
- TAS - TERMINAL ANCHOR SECTION
- ⊠ - CENTER OF 10' SSCB (TY 4)
- ▭ - CENTER OF 70' SSCB (TY 3)
- —o - DEL ASM TY B (D-SW)
- —▨ - OBJ MRK ASM TY 3 (OM-3R)

NOTE:
FOR QUANTITIES OF PROP SSCB TY 2, TY 3 & TY 4 & FLOWABLE BACKFILL SEE "NORTHBOUND MAINLANES".

*NOTE: PGL FOLLOWS US 281 ℄ (BL1) STATIONING

△ B.M. & HORIZONTAL DATA

BM # US 281-5
ELEV = 107.46
STA = 817+01.19, 211.65' LT
3 1/4" TXDOT ALUMINUM DISK

BM # US 281-4
ELEV = 106.43
STA = 827+02.50, 207.77' LT
3 1/4" TXDOT ALUMINUM DISK

SHEET TOTALS

ITEM	EST.	FINAL	UNIT	DESCRIPTION
540	855		LF	MTL BEAM GD FEN (12 GA) (TIM POST)
540	2		EA	MTL BEAM GD FEN TRANS (12 GA)
658	9		EA	DEL ASM TY B (D-SW)
658	3		EA	OBJ MRK ASM TY 3 (OM-3R)

EXIST AND PROP PGL

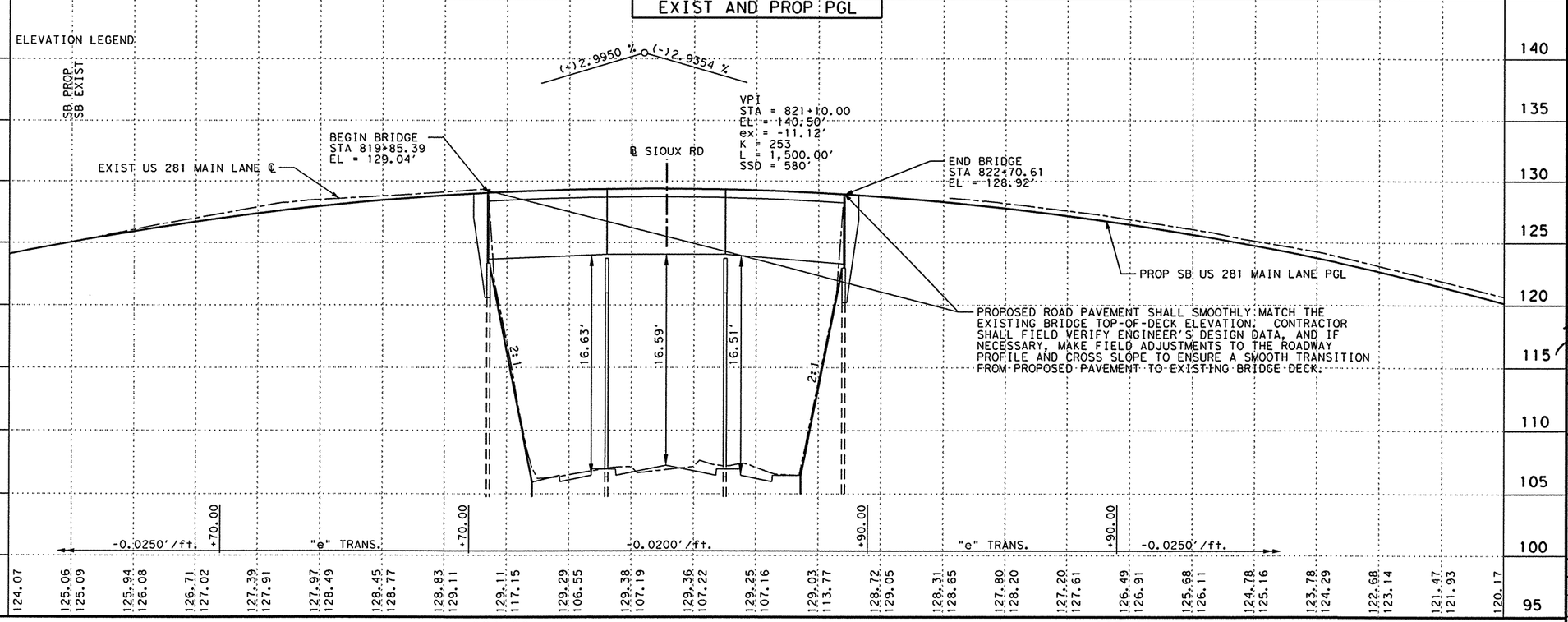

PROFILE LEGEND

- PROP US 281 MAIN LANE P.G.L.
- EXIST US 281 MAIN LANE NATURAL GROU
- SSD STOPPING SIGHT DISTANCE

THE SEAL APPEARING ON THIS DOCUMENT WAS AUTHORIZED BY JAIME AGUILAR, P.E. 87606 ON 06/23/2003.

THE SEAL APPEARING ON THIS DOCUMENT WAS AUTHORIZED BY PHAISARN CWATANAPHOL, P.E. 89252 ON 06/23/2003.

STATE OF TEXAS · JAIME AGUILAR · 87606 · REGISTERED PROFESSIONAL ENGINEER

STATE OF TEXAS · PHAISARN CWATANAPHOL · 89252 · REGISTERED PROFESSIONAL ENGINEER

Parsons Brinckerhoff Quade & Douglas Inc.

Texas Department of Transportation

© 2003 by TxDOT

US 281
PLAN & PROFILE
SOUTHBOUND MAINLANES

STA. 816+00 "BL1" TO
STA. 828+00 "BL1"

PLAN 1"= 100' HORIZ
PROFILE 1"= 10' VERT

SHEET 18 OF 20				281PPM38.DGN	
DESIGNED: JA	FED. RD DIV. No.	STATE	FEDERAL AID PROJECT No.		HIGHWAY No.
CHECKED: JP	6	TEXAS			US 281
DRAWN:	STATE DISTRICT	COUNTY	CONTROL No.	SECTION No.	JOB No.	SHEET No.
CHECKED: JDH	PHARR	HIDALGO	0255	08	091	310

i:\22322a\cadd\sheets\roadway\281ppm38.dgn
06/23/2003
10:51:24 AM
NAME

NAME
10:51:44 AM
06/23/2003

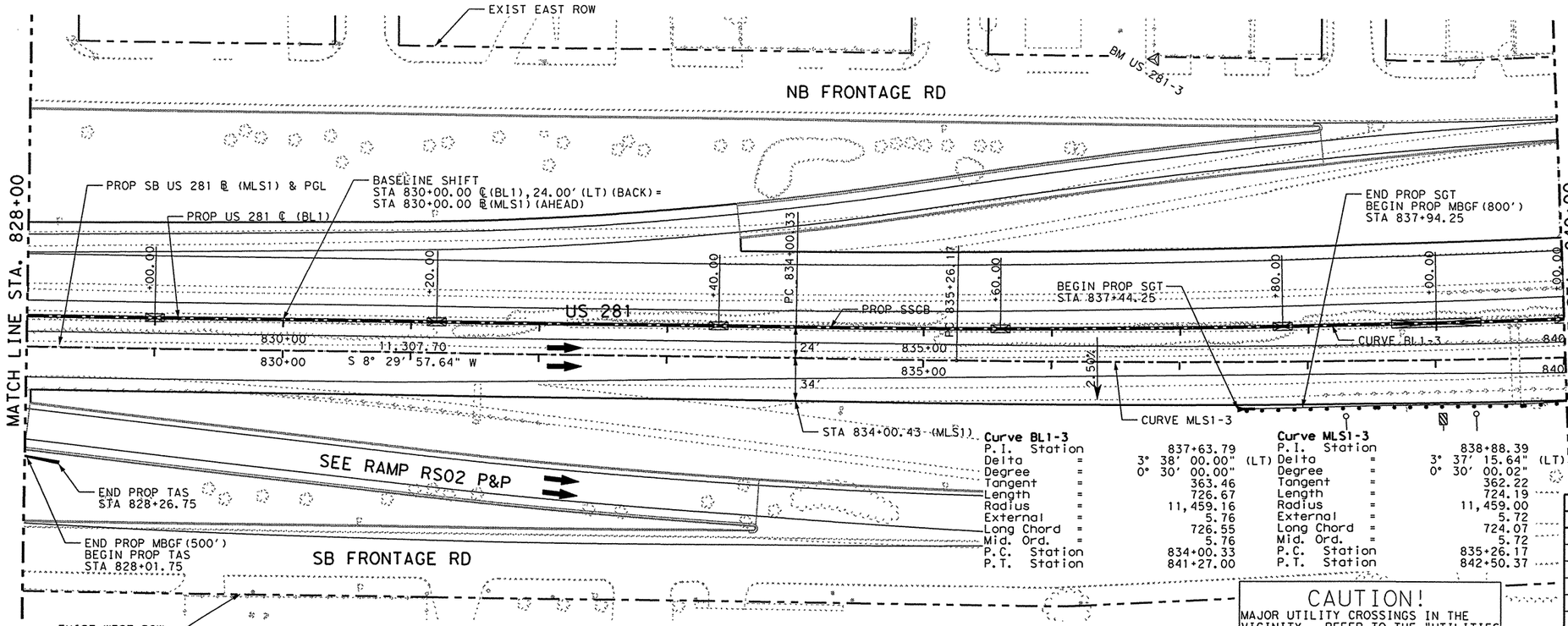

Curve BL1-3		
P.I. Station	=	837+63.79
Delta	=	3° 38' 00.00" (LT)
Degree	=	0° 30' 00.00"
Tangent	=	363.46
Length	=	726.67
Radius	=	11,459.16
External	=	5.76
Long Chord	=	726.55
Mid. Ord.	=	5.76
P.C. Station	=	834+00.33
P.T. Station	=	841+27.00

Curve MLS1-3		
P.I. Station	=	838+88.39
Delta	=	3° 37' 15.64" (LT)
Degree	=	0° 30' 00.02"
Tangent	=	362.22
Length	=	724.19
Radius	=	11,459.00
External	=	5.72
Long Chord	=	724.07
Mid. Ord.	=	5.72
P.C. Station	=	835+26.17
P.T. Station	=	842+50.37

CAUTION!
MAJOR UTILITY CROSSINGS IN THE VICINITY. REFER TO THE "UTILITIES AND DRAINAGE PLAN & PROFILE" SHEETS FOR ADDITIONAL INFORMATION.

LEGEND:

MC	- MOUNTABLE CONC CURB
BC	- BARRIER CONC CURB
MCG	- MOUNTABLE CONC CURB & GUTTER
BCG	- BARRIER CONC CURB & GUTTER
RW	- RETAINING WALL
RR	- RIP RAP
SGT	- SINGLE GUARD RAIL TERMINAL
SSCB	- SINGLE SLOPE CONC BARRIER
SSTR	- SINGLE SLOPE TRAFFIC RAILING
SW	- SIDEWALK
WCR	- WHEEL CHAIR RAMP
VG	- 4' VALLEY GUTTER
MBGF	- METAL BEAM GUARD FENCE
TAS	- TERMINAL ANCHOR SECTION
⊠	- CENTER OF 10' SSCB (TY 4)
▭	- CENTER OF 70' SSCB (TY 3)
—o	- DEL ASM TY B (D-SW)
—▨	- OBJ MRK ASM TY 3 (OM-3R)

NOTE:
FOR QUANTITIES OF PROP SSCB TY 2, TY 3 & TY 4 & FLOWABLE BACKFILL SEE "NORTHBOUND MAINLANES".

△ B.M. & HORIZONTAL DATA
BM # US 281-3
ELEV = 107.76
STA = 836+81.89, 209.01' LT
3 1/4" TXDOT ALUMINUM DISK

SHEET TOTALS

ITEM	EST.	FINAL	UNIT	DESCRIPTION
540	205		LF	MTL BEAM GD FEN (12 GA) (TIM POST)
540	1		EA	TERM ANCH SECT (12 GA)
658	2		EA	DEL ASM TY B (D-SW)
5819	1		EA	SINGLE GDRAIL TERM (TY II)
658	1		EA	OBJ MRK ASM TY 3 (OM-3R)

EXIST AND PROP PGL

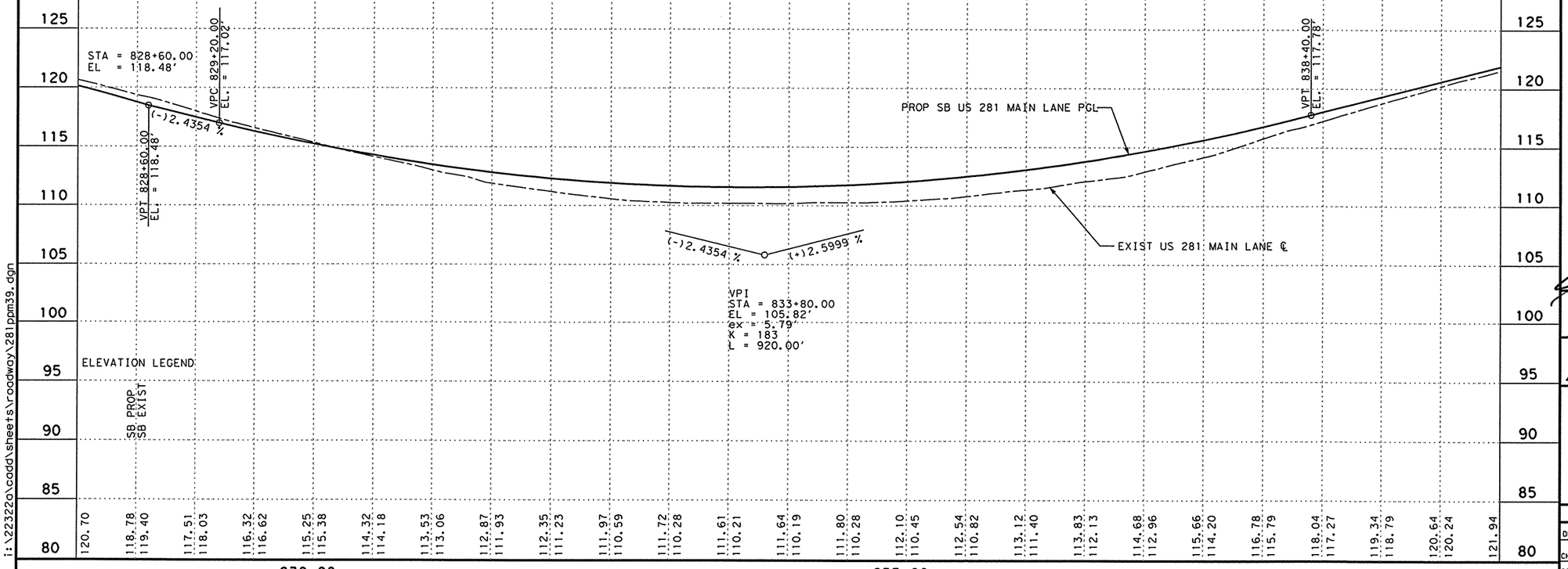

PROFILE LEGEND
——— PROP US 281 MAIN LANE P.G.L.
– – – – EXIST US 281 MAIN LANE NATURAL GROU
SSD STOPPING SIGHT DISTANCE

THE SEAL APPEARING ON THIS DOCUMENT WAS AUTHORIZED BY JAIME AGUILAR, P.E. 87606 ON 06/23/2003.

THE SEAL APPEARING ON THIS DOCUMENT WAS AUTHORIZED BY PHAISARN CWATANAPHOL, P.E. 89252 ON 06/23/2003.

STATE OF TEXAS · JAIME AGUILAR · 87606 · REGISTERED PROFESSIONAL ENGINEER

STATE OF TEXAS · PHAISARN CWATANAPHOL · 89252 · REGISTERED PROFESSIONAL ENGINEER

Parsons Brinckerhoff Quade & Douglas Inc.

Texas Department of Transportation
© 2003 by TxDOT

US 281
PLAN & PROFILE
SOUTHBOUND MAINLANES

STA. 828+00 "BL1" TO
STA. 840+00 "BL1"

PLAN 1"= 100' HORIZ
PROFILE 1"= 10' VERT

SHEET 19 OF 20			281PPM39.DGN				
DESIGNED: JA	FED. RD DIV. No.	STATE	FEDERAL AID PROJECT No.			HIGHWAY No.	
CHECKED: JP	6	TEXAS				US 281	
DRAWN:	STATE DISTRICT	COUNTY	CONTROL No.	SECTION No.	JOB No.	SHEET No.	
CHECKED: JDH	PHARR	HIDALGO	0255	08	091	311	

i:\22322a\cadd\sheets\roadway\281ppm39.dgn

NAME
10:52:03 AM
06/23/2003

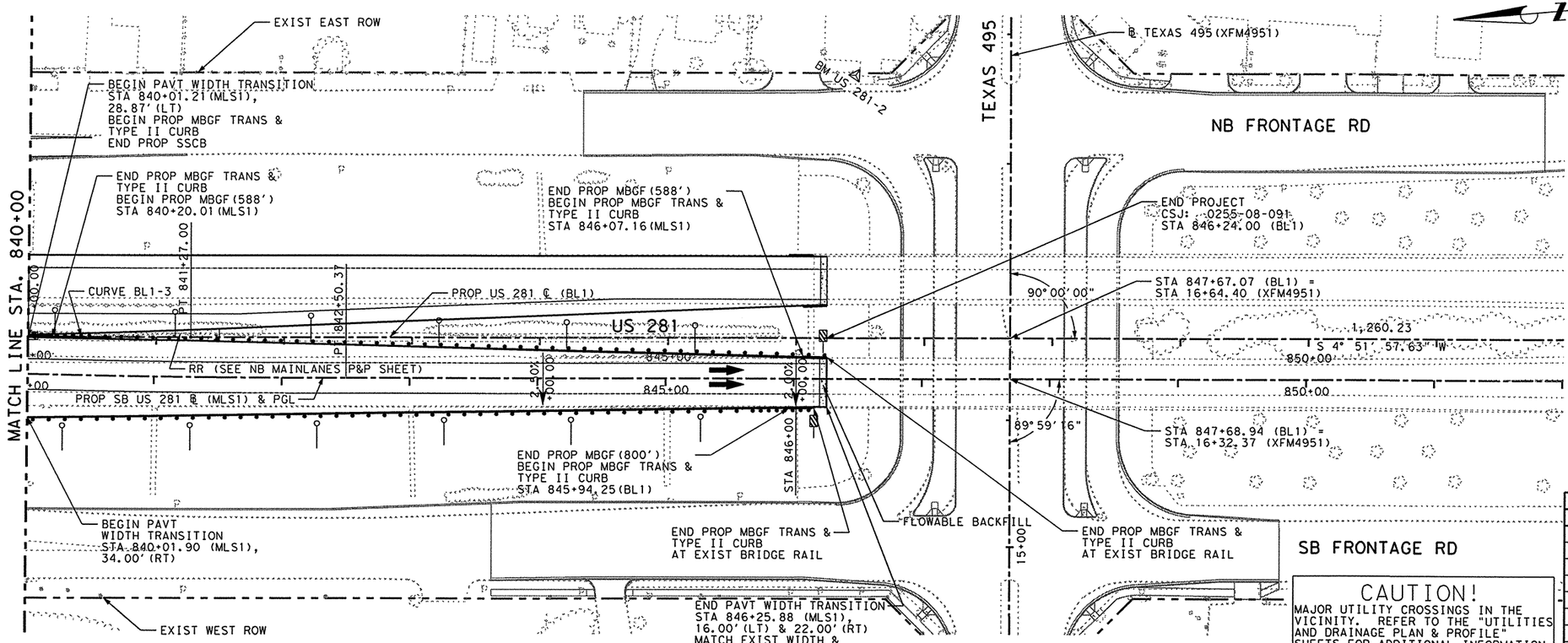

LEGEND:

MC	- MOUNTABLE CONC CURB
BC	- BARRIER CONC CURB
MCG	- MOUNTABLE CONC CURB & GUTTER
BCG	- BARRIER CONC CURB & GUTTER
RW	- RETAINING WALL
RR	- RIP RAP
SGT	- SINGLE GUARD RAIL TERMINAL
SSCB	- SINGLE SLOPE CONC BARRIER
SSTR	- SINGLE SLOPE TRAFFIC RAILING
SW	- SIDEWALK
WCR	- WHEEL CHAIR RAMP
VG	- 4' VALLEY GUTTER
MBGF	- METAL BEAM GUARD FENCE
TAS	- TERMINAL ANCHOR SECTION
⊠	- CENTER OF 10' SSCB (TY 4)
⊠	- CENTER OF 70' SSCB (TY 3)
—o	- DEL ASM TY B (D-SW)
—▨	- OBJ MRK ASM TY 3 (OM-3R)

NOTE:
FOR QUANTITIES OF PROP SSCB TY 2, TY 3 & TY 4 & FLOWABLE BACKFILL SEE "NORTHBOUND MAINLANES".

△ B.M. & HORIZONTAL DATA

BM # US 281-2
ELEV = 108.36
STA = 846+46.19, 203.37' LT
3 1/4" TXDOT ALUMINUM DISK

BM # US 281-1
ELEV = 107.13
STA = 853+00.67, 198.90' LT
3 1/4" TXDOT ALUMINUM DISK

SHEET TOTALS

ITEM	EST.	FINAL	UNIT	DESCRIPTION
540	1183		LF	MTL BEAM GD FEN (12 GA)(TIM POST)
540	3		EA	MTL BEAM GD FEN TRANS (12 GA)
658	12		EA	DEL ASM TY B(D-SW)
658	2		EA	OBJ MRK ASM TY 3 (OM-3R)
4438	25		CY	FLOWABLE BACKFILL

CAUTION!
MAJOR UTILITY CROSSINGS IN THE VICINITY. REFER TO THE "UTILITIES AND DRAINAGE PLAN & PROFILE" SHEETS FOR ADDITIONAL INFORMATION.

EXIST AND PROP PGL

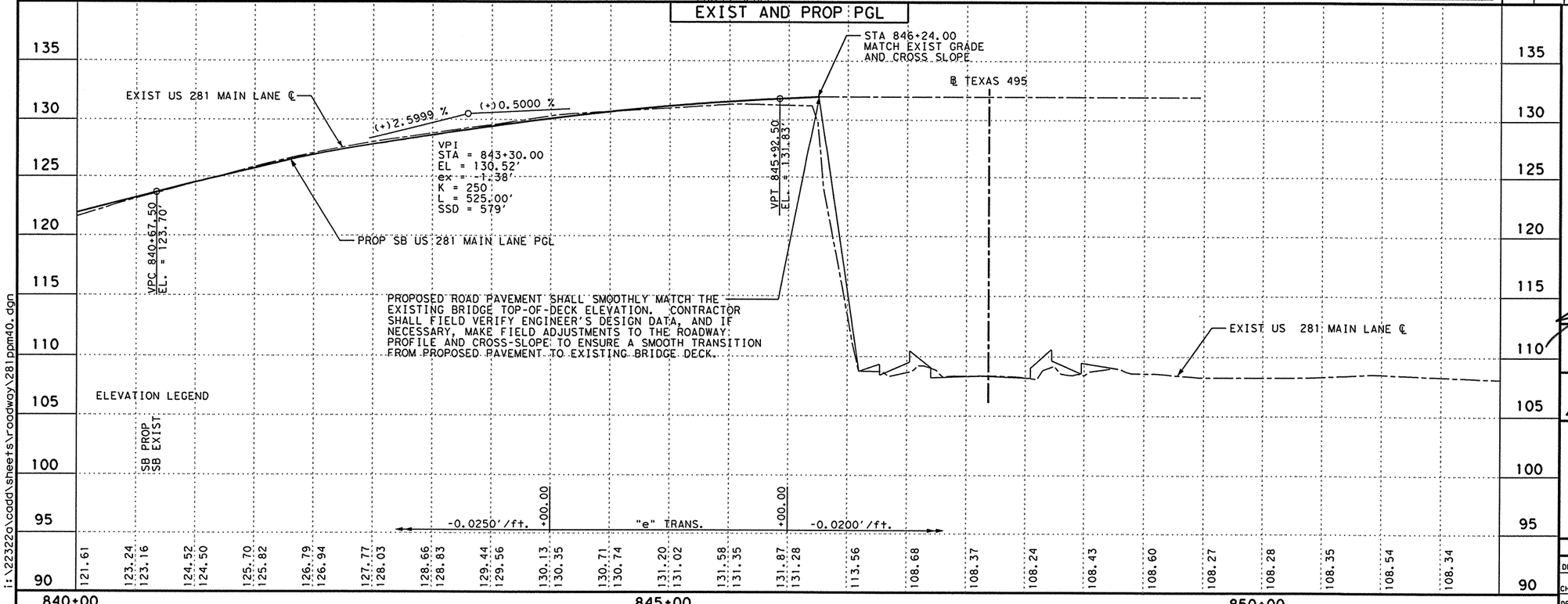

PROFILE LEGEND
PROP US 281 MAIN LANE P.G.L.
EXIST US 281 MAIN LANE NATURAL GROU
SSD STOPPING SIGHT DISTANCE

THE SEAL APPEARING ON THIS DOCUMENT WAS AUTHORIZED BY JAIME AGUILAR, P.E. 87606 ON 06/23/2003.

THE SEAL APPEARING ON THIS DOCUMENT WAS AUTHORIZED BY PHAISARN CWATANAPHOL, P.E. 89252 ON 06/23/2003.

STATE OF TEXAS · JAIME AGUILAR · 87606 · REGISTERED PROFESSIONAL ENGINEER

STATE OF TEXAS · PHAISARN CWATANAPHOL · 89252 · REGISTERED PROFESSIONAL ENGINEER

Parsons Brinckerhoff Quade & Douglas Inc.

Texas Department of Transportation

© 2003 by TxDOT

US 281
PLAN & PROFILE
SOUTHBOUND MAINLANES

STA. 840+00 "BL1" TO END

PLAN 1"= 100' HORIZ
PROFILE 1"= 10' VERT

SHEET 20 OF 20 | 281PPM40.DGN

DESIGNED: JA	FED. RD DIV. NO.	STATE	FEDERAL AID PROJECT No.			HIGHWAY No.
CHECKED: JP	6	TEXAS				US 281
DRAWN: XXX	STATE DISTRICT	COUNTY	CONTROL No.	SECTION No.	JOB No.	SHEET No.
CHECKED: JDH	PHARR	HIDALGO	0255	08	091	312

i:\22322a\cadd\sheets\roadway\281ppm40.dgn

Phaisarn C.

04:50:33 PM

06/23/2003

I:\22322a\CADD\Sheets\Roadway\281pfn01.dgn

Curve FRN1-2
P.I. Station = 50613+85.60
Delta = 2° 06′ 18.83" (RT)
Degree = 0° 30′ 00.00"
Tangent = 210.55
Length = 421.05
Radius = 11,459.16
External = 1.93
Long Chord = 421.02
Mid. Ord. = 1.93
P.C. Station = 50611+75.05
P.T. Station = 50615+96.10

Curve FRN1-3
P.I. Station = 50624+88.03
Delta = 2° 06′ 18.93" (LT)
Degree = 0° 30′ 00.00"
Tangent = 210.55
Length = 421.05
Radius = 11,459.16
External = 1.93
Long Chord = 421.03
Mid. Ord. = 1.93
P.C. Station = 50622+77.48
P.T. Station = 50626+98.54

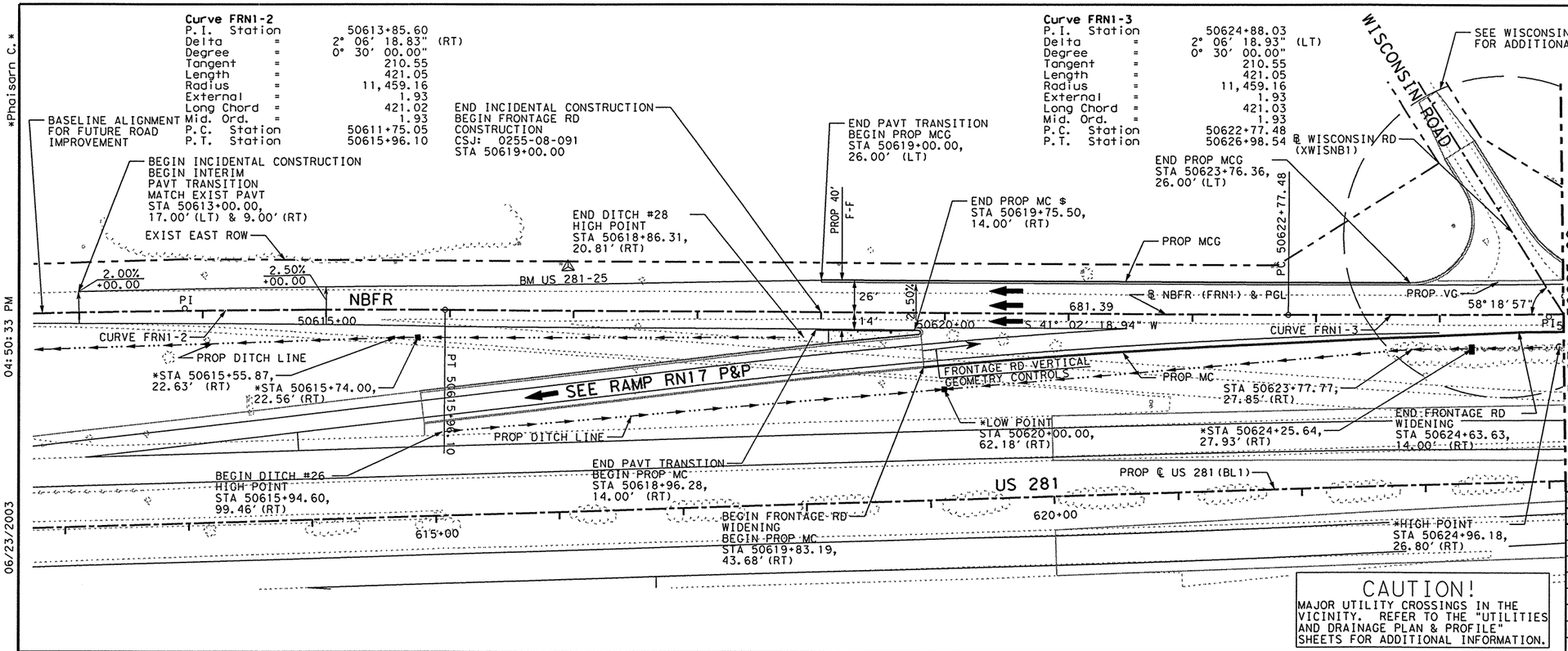

LEGEND:
MC - MOUNTABLE CONC CURB
BC - BARRIER CONC CURB
MCG - MOUNTABLE CONC CURB & GUTTER (TY-B UNLESS OTHERWISE NOTED)
BCG - BARRIER CONC CURB & GUTTER
RW - RETAINING WALL
RR - RIP RAP
SGT - SINGLE GUARD RAIL TERMINAL
SSCB - SINGLE SLOPE CONC BARRIER
SSTR - SINGLE SLOPE TRAFFIC RAILING
SW - SIDEWALK
WCR - WHEEL CHAIR RAMP
VG - 4′ VALLEY GUTTER
MBGF - METAL BEAM GUARD FENCE
TAS - TERMINAL ANCHOR SECTION
▨ - PROP DRIVEWAY
▨ - PROP CONCRETE DRIVEWAY

* SEE "DRAINAGE P&P SHEETS".
$ SEE "GORE NOSE & MISC DETAILS SHEET".

BM & HORIZONTAL DATA
BM=US 281-25
EL=98.54
STA=616+12.65, 199.63 LT
3 1/4" TXDOT ALUMINUM DISK

CAUTION!
MAJOR UTILITY CROSSINGS IN THE VICINITY. REFER TO THE "UTILITIES AND DRAINAGE PLAN & PROFILE" SHEETS FOR ADDITIONAL INFORMATION.

SHEET TOTALS

ITEM	EST.	FINAL	UNIT	DESCRIPTION
529	598		LF	CONC CURB (TY B) (MOUNTABLE)
529	477		LF	CONC CURB AND GUTTER (TY B) (MOUNTABLE)
529	124		LF	CONC GUTTER (VALLEY) (4′)

EXIST AND PROP PGL

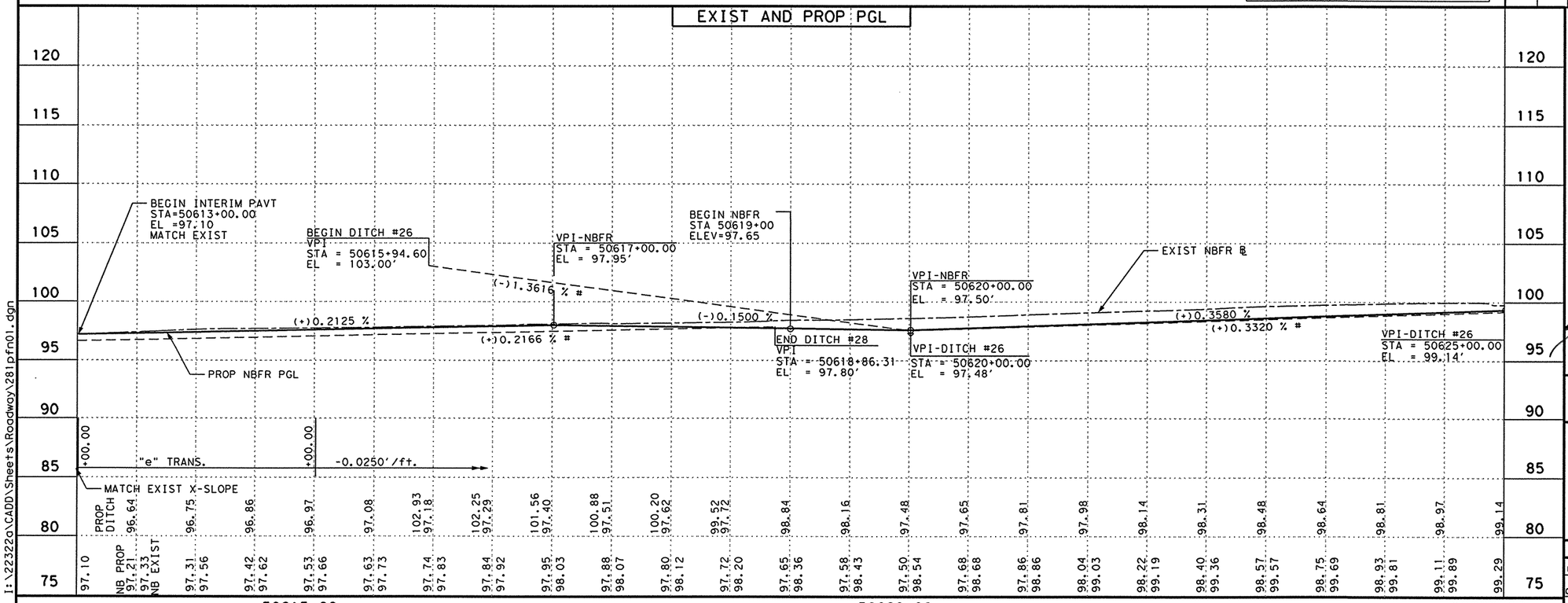

PROFILE LEGEND
PROP NORTH BOUND FRONTAGE RD P.G.L.
EXIST NORTH BOUND FRONTAGE RD B.L.
PROP NORTH BOUND FRONTAGE RD DITCH

NOTES:
1. # SLOPE MEASURED ALONG LENGTH OF DITCH.

THE SEAL APPEARING ON THIS DOCUMENT WAS AUTHORIZED BY JAIME AGUILAR, P.E. 87606 ON 06/23/2003.

THE SEAL APPEARING ON THIS DOCUMENT WAS AUTHORIZED BY PHAISARN CWATANAPHOL, P.E. 89252 ON 06/23/2003.

STATE OF TEXAS — JAIME AGUILAR — 87606 — REGISTERED PROFESSIONAL ENGINEER

STATE OF TEXAS — PHAISARN CWATANAPHOL — 89252 — REGISTERED PROFESSIONAL ENGINEER

Parsons Brinckerhoff Quade & Douglas Inc.

Texas Department of Transportation

© 2003 by TxDOT

US 281
PLAN & PROFILE
NORTHBOUND FRONTAGE ROAD

STA. 50613+00 "FRN1" TO
STA. 50625+00 "FRN1"

PLAN 1"= 100′ HORIZ
PROFILE 1"= 10′ VERT

SHEET 1 OF 20 | 281PFN01.DGN

DESIGNED: TT	FED. RD DIV. NO.	STATE	FEDERAL AID PROJECT No.				HIGHWAY No.
CHECKED: DM	6	TEXAS					US 281
DRAWN: CG	STATE DISTRICT	COUNTY	CONTROL No.	SECTION No.	JOB No.	SHEET No.	
CHECKED: DM	PHARR	HIDALGO	0255	08	091	313	

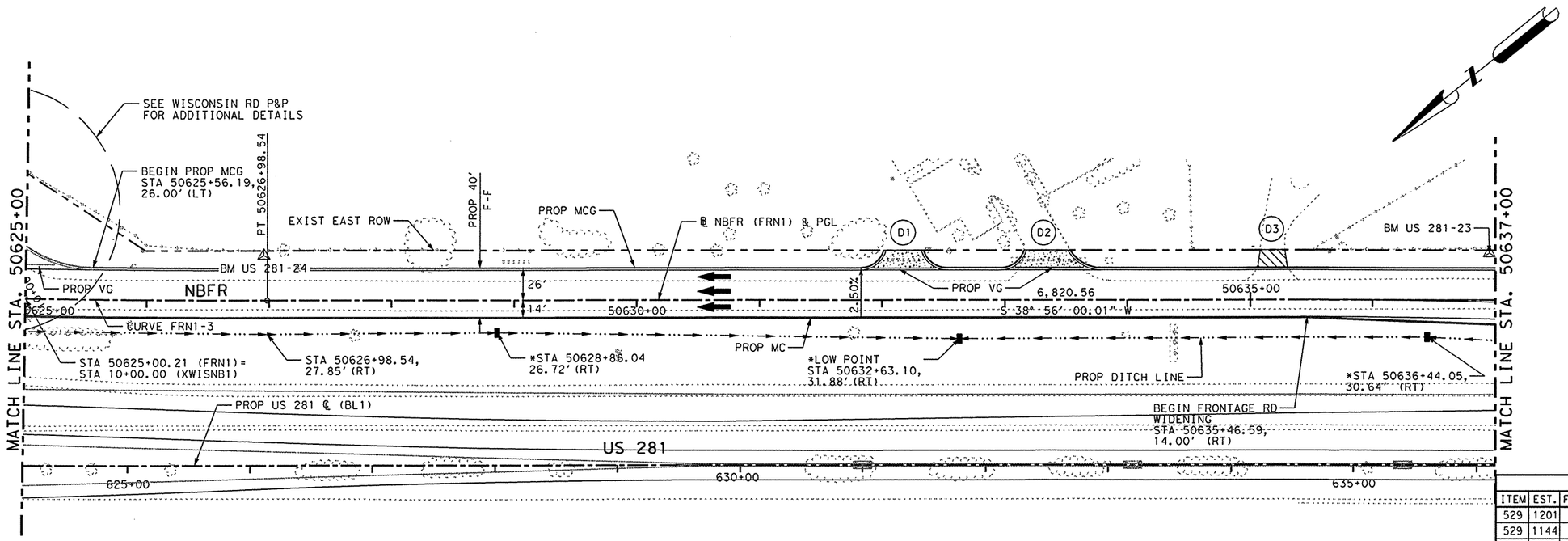

LEGEND:

MC - MOUNTABLE CONC CURB
BC - BARRIER CONC CURB
MCG - MOUNTABLE CONC CURB & GUTTER (TY-B UNLESS OTHERWISE NOTED)
BCG - BARRIER CONC CURB & GUTTER
RW - RETAINING WALL
RR - RIP RAP
SGT - SINGLE GUARD RAIL TERMINAL
SSCB - SINGLE SLOPE CONC BARRIER
SSTR - SINGLE SLOPE TRAFFIC RAILING
SW - SIDEWALK
WCR - WHEEL CHAIR RAMP
VG - 4' VALLEY GUTTER
MBGF - METAL BEAM GUARD FENCE
TAS - TERMINAL ANCHOR SECTION
- PROP DRIVEWAY
- PROP CONCRETE DRIVEWAY

FOR DRIVEWAY APRON TYPES AND SIZES, SEE "DRIVEWAY SUMMARY".

* SEE "DRAINAGE P&P SHEETS".

⚠ BM & HORIZONTAL DATA
BM=US 281-23
EL=98.73
STA=636+10.30, 172.95 LT
3 1/4" TXDOT ALUMINUM DISK

⚠ BM & HORIZONTAL DATA
BM=US 281-24
EL=98.94
STA=626+11.32, 171.49 LT
3 1/4" TXDOT ALUMINUM DISK

SHEET TOTALS

ITEM	EST.	FINAL	UNIT	DESCRIPTION
529	1201		LF	CONC CURB (TY B)(MOUNTABLE)
529	1144		LF	CONC CURB AND GUTTER(TY B)(MOUNTABLE)
530	35		SY	DRVWY (ASPH-CONC PAV) (TY PB-1)
530	128		SY	DRVWYS (CONC)(6")
529	208		LF	CONC GUTTER (VALLEY) (4')

CAUTION!
MAJOR UTILITY CROSSINGS IN THE VICINITY. REFER TO THE "UTILITIES AND DRAINAGE PLAN & PROFILE" SHEETS FOR ADDITIONAL INFORMATION.

EXIST AND PROP PGL

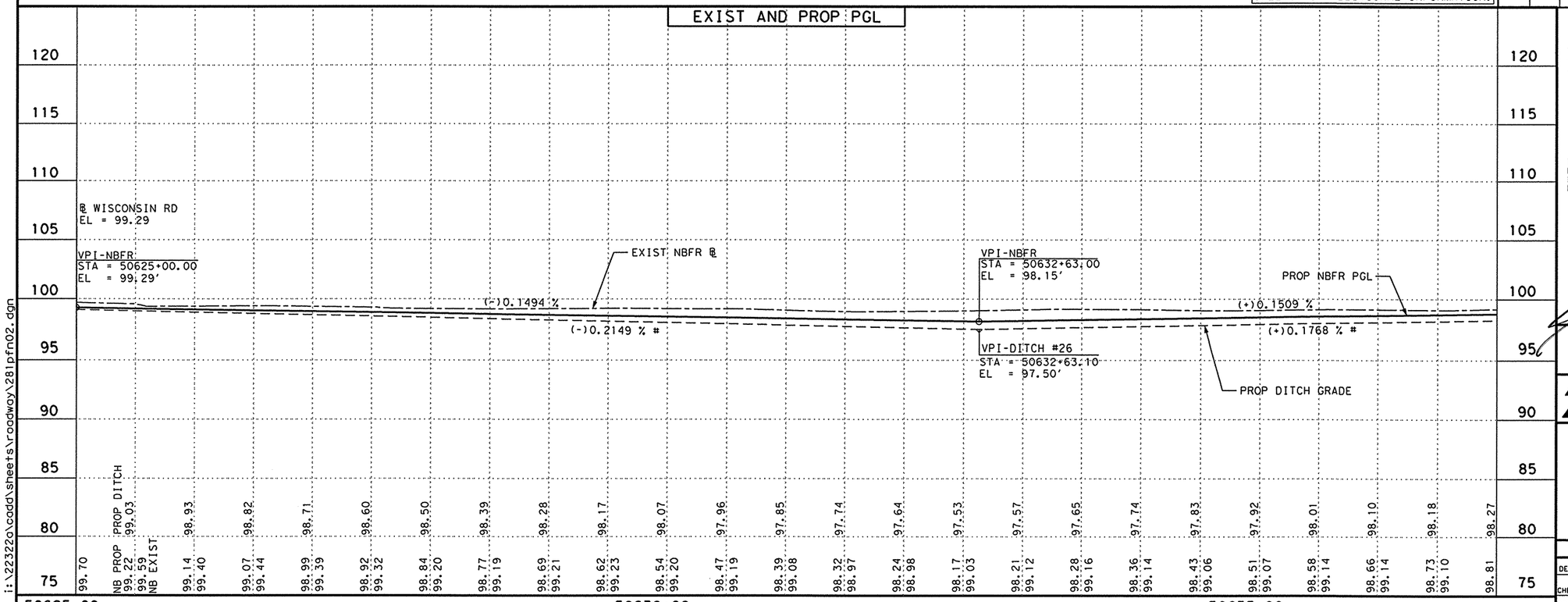

PROFILE LEGEND
PROP NORTH BOUND FRONTAGE RD P.G.L.
EXIST NORTH BOUND FRONTAGE RD B.L.
PROP NORTH BOUND FRONTAGE RD DITCH

NOTES:
1. # SLOPE MEASURED ALONG LENGTH OF DITCH.

THE SEAL APPEARING ON THIS DOCUMENT WAS AUTHORIZED BY JAIME AGUILAR, P.E. 87606 ON 06/23/2003.

THE SEAL APPEARING ON THIS DOCUMENT WAS AUTHORIZED BY PHAISARN CWATANAPHOL, P.E. 89252 ON 06/23/2003.

STATE OF TEXAS — JAIME AGUILAR — 87606 — REGISTERED PROFESSIONAL ENGINEER

STATE OF TEXAS — PHAISARN CWATANAPHOL — 89252 — REGISTERED PROFESSIONAL ENGINEER

Parsons Brinckerhoff Quade & Douglas Inc.

Texas Department of Transportation

© 2003 by TxDOT

US 281
PLAN & PROFILE
NORTHBOUND FRONTAGE ROAD

STA. 50625+00 "FRN1" TO
STA. 50637+00 "FRN1"

PLAN 1"= 100' HORIZ
PROFILE 1"= 10' VERT

SHEET 2 OF 20 | 281PFN02.DGN

DESIGNED: JA	FED. RD DIV. No.	STATE	FEDERAL AID PROJECT No.	HIGHWAY No.
CHECKED: JP	6	TEXAS		US 281

DRAWN: CG	STATE DISTRICT	COUNTY	CONTROL No.	SECTION No.	JOB No.	SHEET No.
CHECKED: JDH	PHARR	HIDALGO	0255	08	091	314

NAME 10:10:01 AM 06/23/2003
i:\22322o\cadd\sheets\roadway\281pfn02.dgn

NAME
10:10:20 AM
06/23/2003

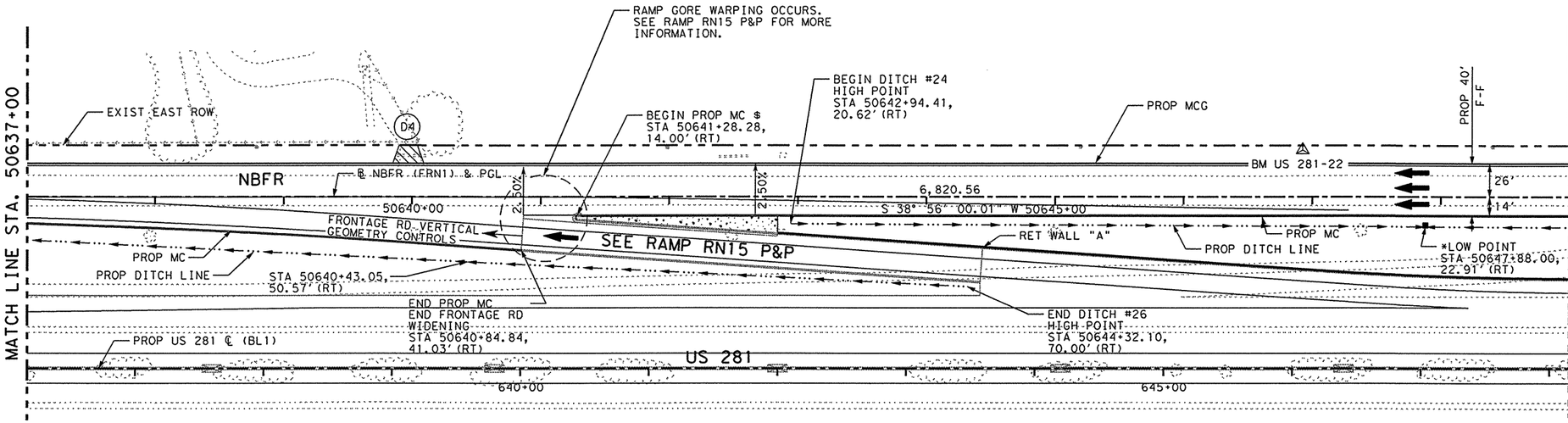

LEGEND:

MC - MOUNTABLE CONC CURB
BC - BARRIER CONC CURB
MCG - MOUNTABLE CONC CURB & GUTTER (TY-B UNLESS OTHERWISE NOTED)
BCG - BARRIER CONC CURB & GUTTER
RW - RETAINING WALL
RR - RIP RAP
SGT - SINGLE GUARD RAIL TERMINAL
SSCB - SINGLE SLOPE CONC BARRIER
SSTR - SINGLE SLOPE TRAFFIC RAILING
SW - SIDEWALK
WCR - WHEEL CHAIR RAMP
VG - 4' VALLEY GUTTER
MBGF - METAL BEAM GUARD FENCE
TAS - TERMINAL ANCHOR SECTION
▨ - PROP DRIVEWAY
⋰⋱ - PROP CONCRETE DRIVEWAY

FOR DRIVEWAY APRON TYPES AND SIZES, SEE "DRIVEWAY SUMMARY".

* SEE "DRAINAGE P&P SHEETS".
$ SEE "GORE NOSE & MISC DETAILS" SHEET

⚠BM & HORIZONTAL DATA
BM=US 281-22
EL=98.54
STA=646+08.07, 171.87 LT
3 1/4" TXDOT ALUMINUM DISK

SHEET TOTALS

ITEM	EST.	FINAL	UNIT	DESCRIPTION
529	1158		LF	CONC CURB (TY B)(MOUNTABLE)
529	1200		LF	CONC CURB AND GUTTER(TY B)(MOUNTABLE)
530	30		SY	DRVWY (ASPH-CONC PAV) (TY PB-1)

CAUTION!
MAJOR UTILITY CROSSINGS IN THE VICINITY. REFER TO THE "UTILITIES AND DRAINAGE PLAN & PROFILE" SHEETS FOR ADDITIONAL INFORMATION.

EXIST AND PROP PGL

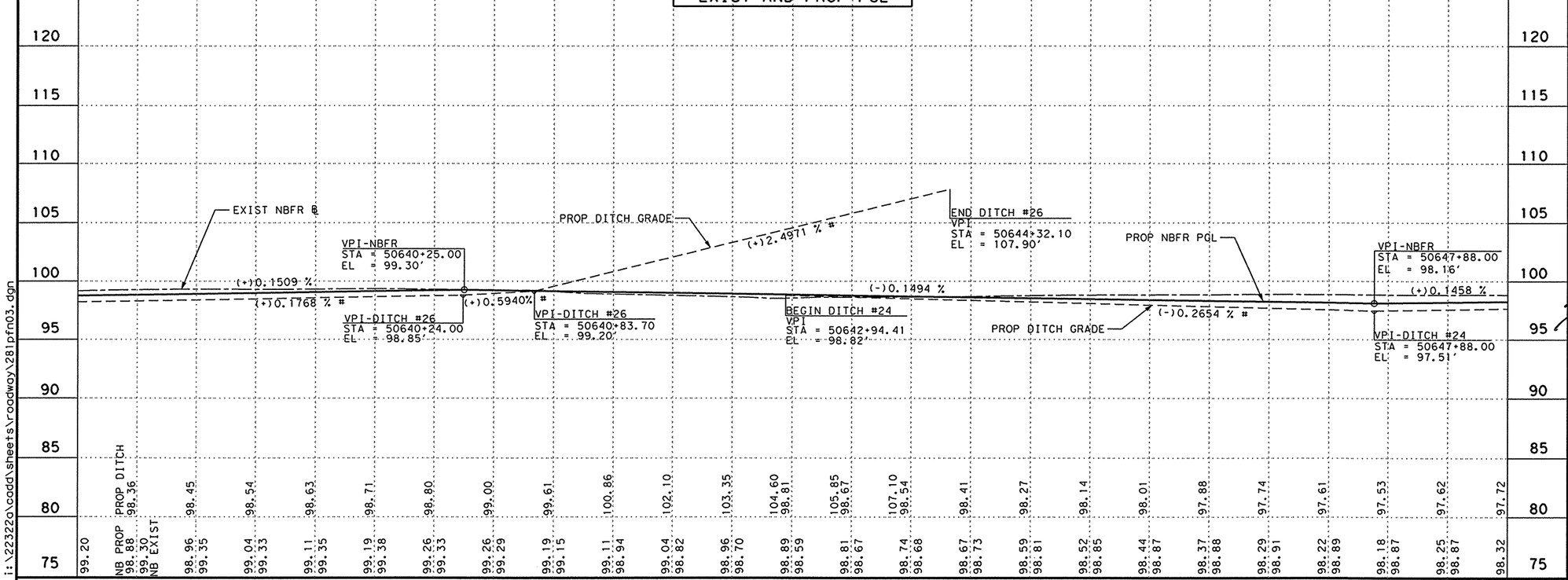

PROFILE LEGEND
——— PROP NORTH BOUND FRONTAGE RD P.G.L.
– – – – EXIST NORTH BOUND FRONTAGE RD B.L.
– – – – PROP NORTH BOUND FRONTAGE RD DITCH

NOTES:
1. # SLOPE MEASURED ALONG LENGTH OF DITCH.

THE SEAL APPEARING ON THIS DOCUMENT WAS AUTHORIZED BY JAIME AGUILAR, P.E. 87606 ON 06/23/2003.

THE SEAL APPEARING ON THIS DOCUMENT WAS AUTHORIZED BY PHAISARN CWATANAPHOL, P.E. 89252 ON 06/23/2003.

STATE OF TEXAS · JAIME AGUILAR · 87606 · REGISTERED PROFESSIONAL ENGINEER

STATE OF TEXAS · PHAISARN CWATANAPHOL · 89252 · REGISTERED PROFESSIONAL ENGINEER

Parsons Brinckerhoff Quade & Douglas Inc.

Texas Department of Transportation

© 2003 by TxDOT

US 281
PLAN & PROFILE
NORTHBOUND FRONTAGE ROAD

STA. 50637+00 "FRN1" TO
STA. 50649+00 "FRN1"

PLAN 1"= 100' HORIZ
PROFILE 1"= 10' VERT

SHEET 3 OF 20 | 281PFN03.DGN

DESIGNED: JA	FED. RD DIV. No.	STATE	FEDERAL AID PROJECT No.			HIGHWAY No.
CHECKED: JP	6	TEXAS				US 281
DRAWN: CG	STATE DISTRICT	COUNTY	CONTROL No.	SECTION No.	JOB No.	SHEET No.
CHECKED: JDH	PHARR	HIDALGO	0255	08	091	315

i:\22322a\cadd\sheets\roadway\281pfn03.dgn

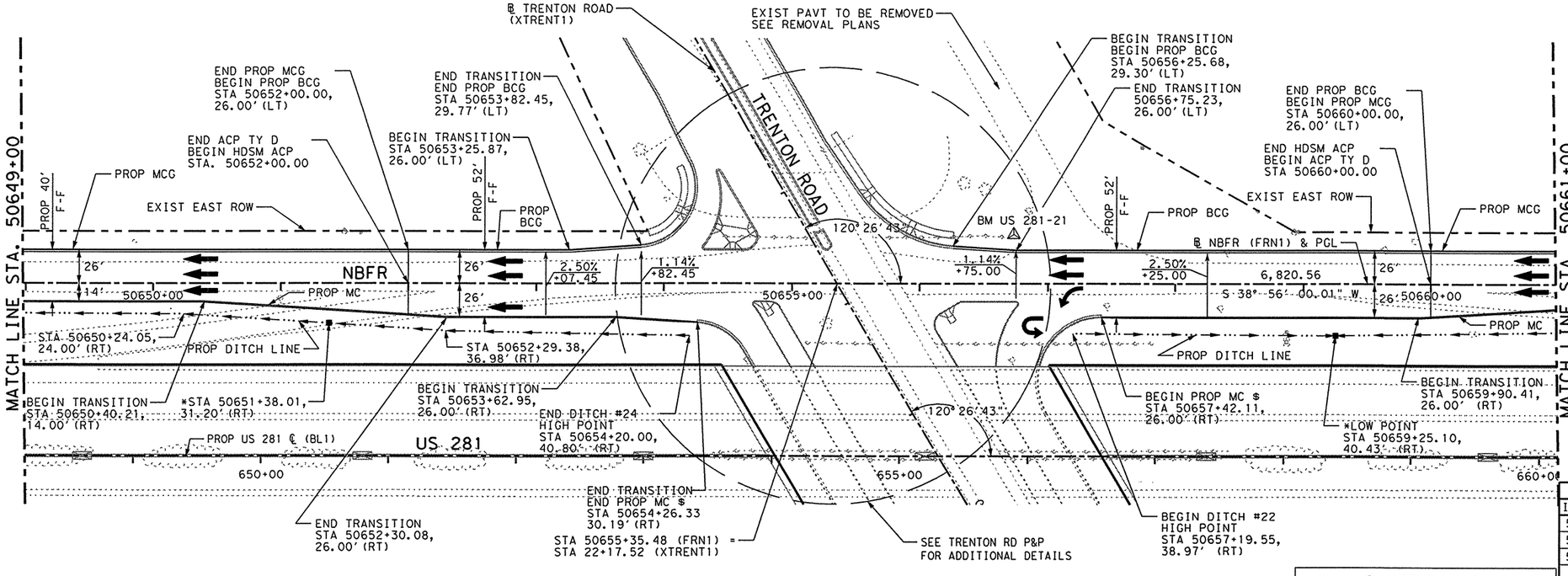

LEGEND:

- MC - MOUNTABLE CONC CURB
- BC - BARRIER CONC CURB
- MCG - MOUNTABLE CONC CURB & GUTTER (TY-B UNLESS OTHERWISE NOTED)
- BCG - BARRIER CONC CURB & GUTTER
- RW - RETAINING WALL
- RR - RIP RAP
- SGT - SINGLE GUARD RAIL TERMINAL
- SSCB - SINGLE SLOPE CONC BARRIER
- SSTR - SINGLE SLOPE TRAFFIC RAILING
- SW - SIDEWALK
- WCR - WHEEL CHAIR RAMP
- VG - 4' VALLEY GUTTER
- MBGF - METAL BEAM GUARD FENCE
- TAS - TERMINAL ANCHOR SECTION
- PROP DRIVEWAY
- PROP CONCRETE DRIVEWAY

* SEE "DRAINAGE P&P SHEETS".
$ SEE "GORE NOSE & MISC DETAILS" SHEET.

BM & HORIZONTAL DATA
BM=US 281-21
EL=98.66
STA=655+88.78, 173.20 LT
3 1/4" TXDOT ALUMINUM DISK

SHEET TOTALS

ITEM	EST.	FINAL	UNIT	DESCRIPTION
529	885		LF	CONC CURB (TY B) (MOUNTABLE)
529	400		LF	CONC CURB AND GUTTER (TY B) (MOUNTABLE)
529	557		LF	CONC CURB AND GUTTER (TY-A) (BARRIER)

CAUTION!
MAJOR UTILITY CROSSINGS IN THE VICINITY. REFER TO THE "UTILITIES AND DRAINAGE PLAN & PROFILE" SHEETS FOR ADDITIONAL INFORMATION.

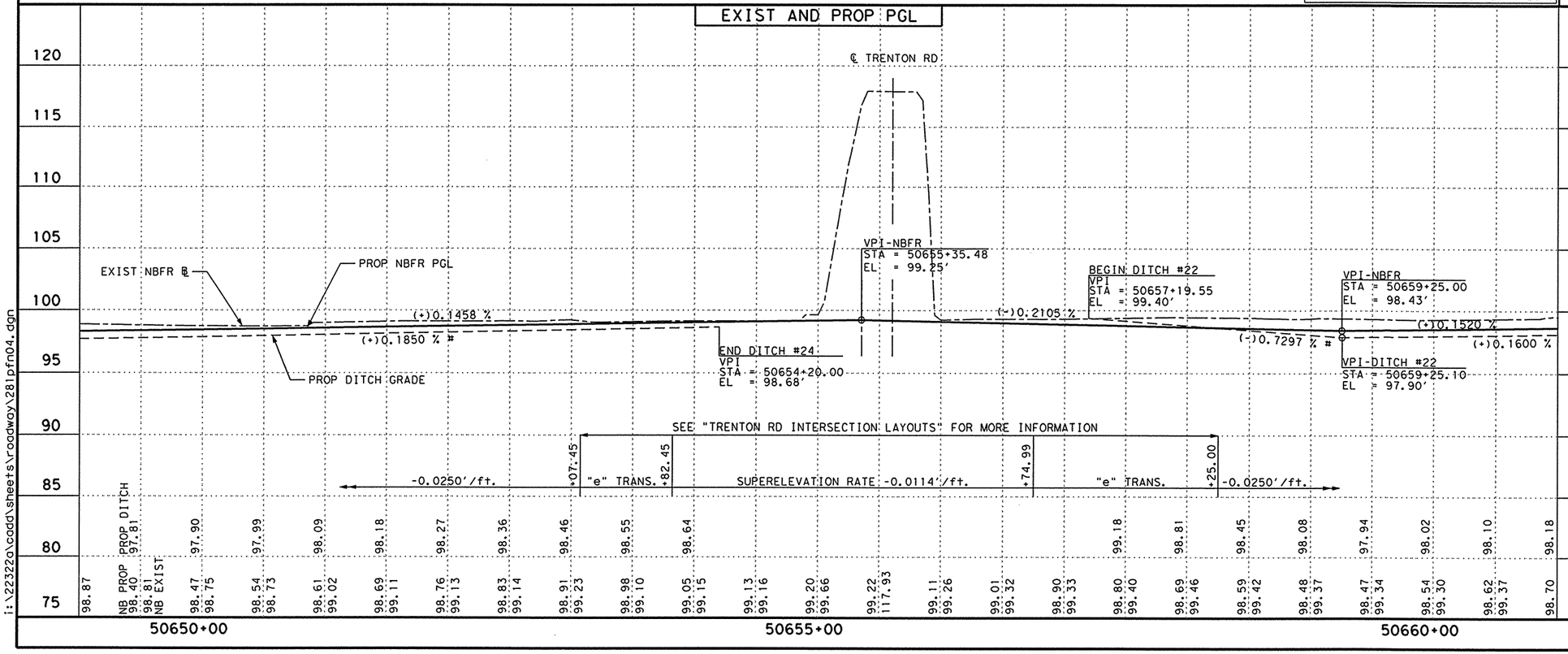

PROFILE LEGEND

- PROP NORTH BOUND FRONTAGE RD P.G.L.
- EXIST NORTH BOUND FRONTAGE RD B.L.
- PROP NORTH BOUND FRONTAGE RD DITCH

NOTES:
1. # SLOPE MEASURED ALONG LENGTH OF DITCH.

THE SEAL APPEARING ON THIS DOCUMENT WAS AUTHORIZED BY JAIME AGUILAR, P.E. 87606 ON 06/23/2003.

THE SEAL APPEARING ON THIS DOCUMENT WAS AUTHORIZED BY PHAISARN CWATANAPHOL, P.E. 89252 ON 06/23/2003.

Parsons Brinckerhoff Quade & Douglas Inc.

Texas Department of Transportation
© 2003 by TxDOT

US 281
PLAN & PROFILE
NORTHBOUND FRONTAGE ROAD

STA. 50649+00 "FRN1" TO
STA. 50661+00 "FRN1"

PLAN 1"= 100' HORIZ
PROFILE 1"= 10' VERT

SHEET 4 OF 20			281PFN04.DGN				
DESIGNED: JA	FED. RD DIV. No.	STATE	FEDERAL AID PROJECT No.			HIGHWAY No.	
CHECKED: JP	6	TEXAS				US 281	
DRAWN: CG	STATE DISTRICT	COUNTY	CONTROL No.	SECTION No.	JOB No.	SHEET No.	
CHECKED: JDH	PHARR	HIDALGO	0255	08	091	316	

NAME
10:10:34 AM
06/23/2003
i:\22322a\cadd\sheets\roadway\281pfn04.dgn

NAME
10:10:51 AM
06/23/2003

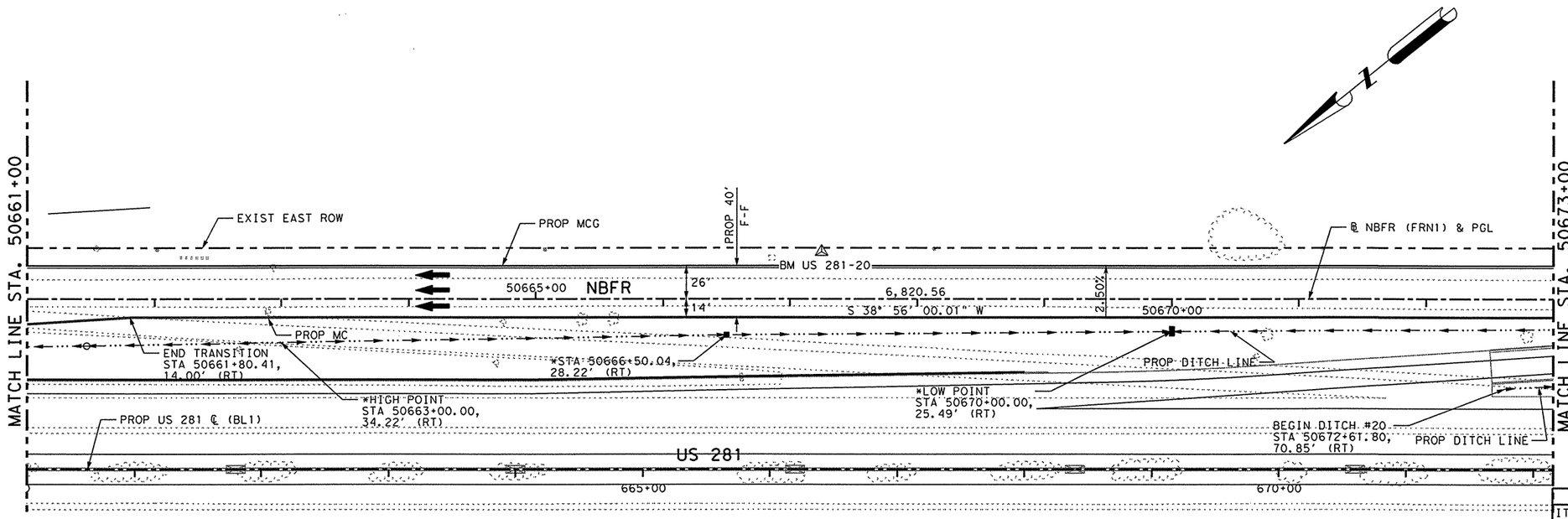

LEGEND:

MC - MOUNTABLE CONC CURB
BC - BARRIER CONC CURB
MCG - MOUNTABLE CONC CURB & GUTTER (TY-B UNLESS OTHERWISE NOTED)
BCG - BARRIER CONC CURB & GUTTER
RW - RETAINING WALL
RR - RIP RAP
SGT - SINGLE GUARD RAIL TERMINAL
SSCB - SINGLE SLOPE CONC BARRIER
SSTR - SINGLE SLOPE TRAFFIC RAILING
SW - SIDEWALK
WCR - WHEEL CHAIR RAMP
VG - 4' VALLEY GUTTER
MBGF - METAL BEAM GUARD FENCE
TAS - TERMINAL ANCHOR SECTION
▨ - PROP DRIVEWAY
⋰⋱ - PROP CONCRETE DRIVEWAY

* SEE "DRAINAGE P&P SHEETS".

BM & HORIZONTAL DATA
BM=US 281-20
EL=98.51
STA=666+40.54, 172.14 LT
3 1/4" TXDOT ALUMINUM DISK

SHEET TOTALS

ITEM	EST.	FINAL	UNIT	DESCRIPTION
529	1202		LF	CONC CURB (TY B) (MOUNTABLE)
529	1200		LF	CONC CURB AND GUTTER (TY B) (MOUNTABLE)

CAUTION!
MAJOR UTILITY CROSSINGS IN THE VICINITY. REFER TO THE "UTILITIES AND DRAINAGE PLAN & PROFILE" SHEETS FOR ADDITIONAL INFORMATION.

EXIST AND PROP PGL

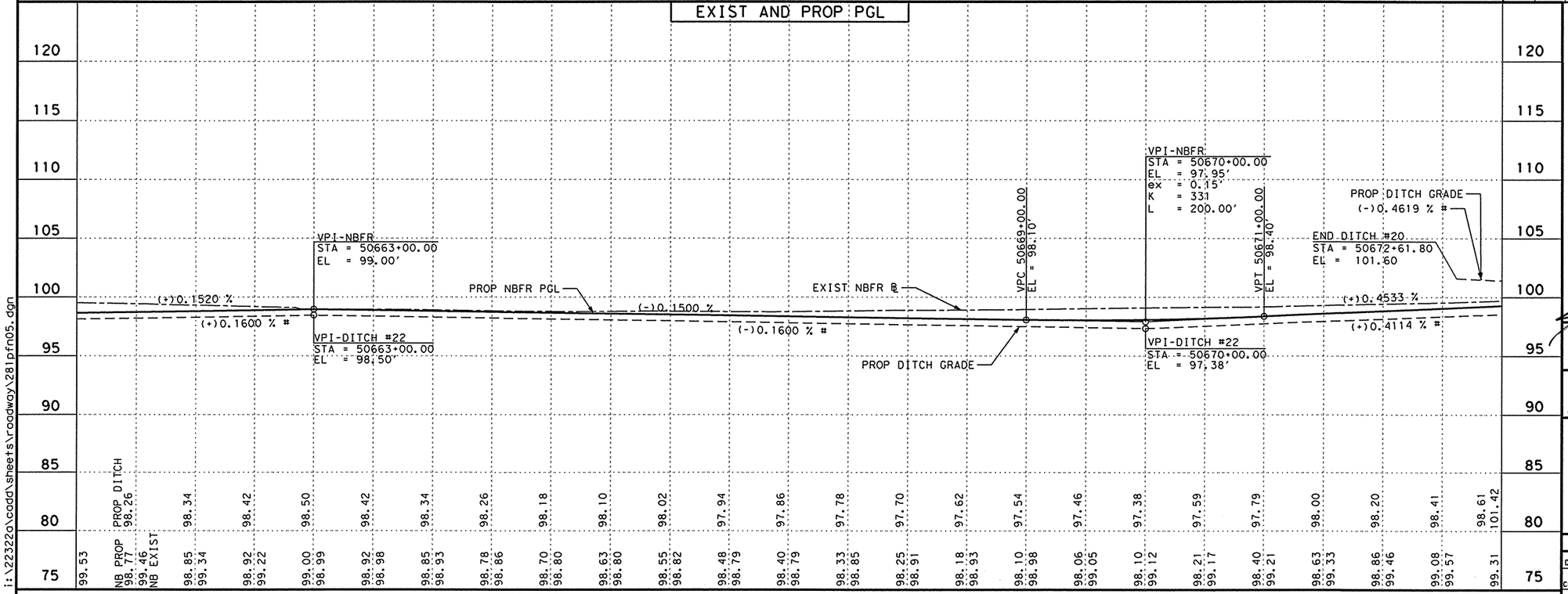

PROFILE LEGEND
——— PROP NORTH BOUND FRONTAGE RD P.G.L.
– – – EXIST NORTH BOUND FRONTAGE RD B.L.
– – – PROP NORTH BOUND FRONTAGE RD DITCH

NOTES:
1. # SLOPE MEASURED ALONG LENGTH OF DITCH.

THE SEAL APPEARING ON THIS DOCUMENT WAS AUTHORIZED BY JAIME AGUILAR, P.E. 87606 ON 06/23/2003.

THE SEAL APPEARING ON THIS DOCUMENT WAS AUTHORIZED BY PHAISARN CWATANAPHOL, P.E. 89252 ON 06/23/2003.

STATE OF TEXAS · JAIME AGUILAR · 87606 · REGISTERED PROFESSIONAL ENGINEER

STATE OF TEXAS · PHAISARN CWATANAPHOL · 89252 · REGISTERED PROFESSIONAL ENGINEER

Parsons Brinckerhoff Quade & Douglas Inc.

Texas Department of Transportation

© 2003 by TxDOT

US 281
PLAN & PROFILE
NORTHBOUND FRONTAGE ROAD

STA. 50661+00 "FRN1" TO
STA. 50673+00 "FRN1"

PLAN 1"= 100' HORIZ
PROFILE 1"= 10' VERT

SHEET 5 OF 20			281PFN05.DGN				
DESIGNED: JA	FED. RD DIV. No.	STATE	FEDERAL AID PROJECT No.		HIGHWAY No.		
CHECKED: JP	6	TEXAS			US 281		
DRAWN: CG	STATE DISTRICT	COUNTY	CONTROL No.	SECTION No.	JOB No.	SHEET No.	
CHECKED: JDH	PHARR	HIDALGO	0255	08	091	317	

i:\22322a\cadd\sheets\roadway\281pfn05.dgn

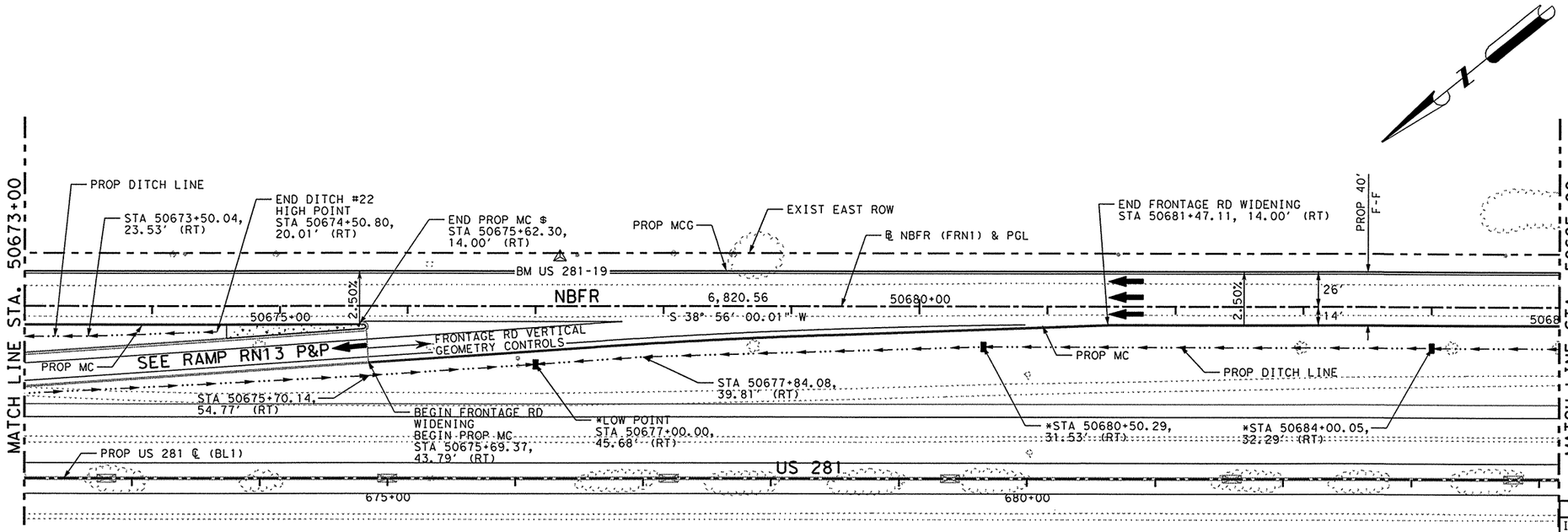

LEGEND:

MC - MOUNTABLE CONC CURB
BC - BARRIER CONC CURB
MCG - MOUNTABLE CONC CURB & GUTTER (TY-B UNLESS OTHERWISE NOTED)
BCG - BARRIER CONC CURB & GUTTER
RW - RETAINING WALL
RR - RIP RAP
SGT - SINGLE GUARD RAIL TERMINAL
SSCB - SINGLE SLOPE CONC BARRIER
SSTR - SINGLE SLOPE TRAFFIC RAILING
SW - SIDEWALK
WCR - WHEEL CHAIR RAMP
VG - 4' VALLEY GUTTER
MBGF - METAL BEAM GUARD FENCE
TAS - TERMINAL ANCHOR SECTION
▨ - PROP DRIVEWAY
⊡ - PROP CONCRETE DRIVEWAY

* SEE "DRAINAGE P&P SHEETS".
$ SEE "GORE NOSE & MISC DETAILS SHEET"

BM & HORIZONTAL DATA
BM=US 281-19
EL=101.97
STA=676+34.62, 172.09 LT
3 1/4" TXDOT ALUMINUM DISK

SHEET TOTALS

ITEM	EST.	FINAL	UNIT	DESCRIPTION
529	1194		LF	CONC CURB (TY B) (MOUNTABLE)
529	1200		LF	CONC CURB AND GUTTER (TY B) (MOUNTABLE)

CAUTION!
MAJOR UTILITY CROSSINGS IN THE VICINITY. REFER TO THE "UTILITIES AND DRAINAGE PLAN & PROFILE" SHEETS FOR ADDITIONAL INFORMATION.

EXIST AND PROP PGL

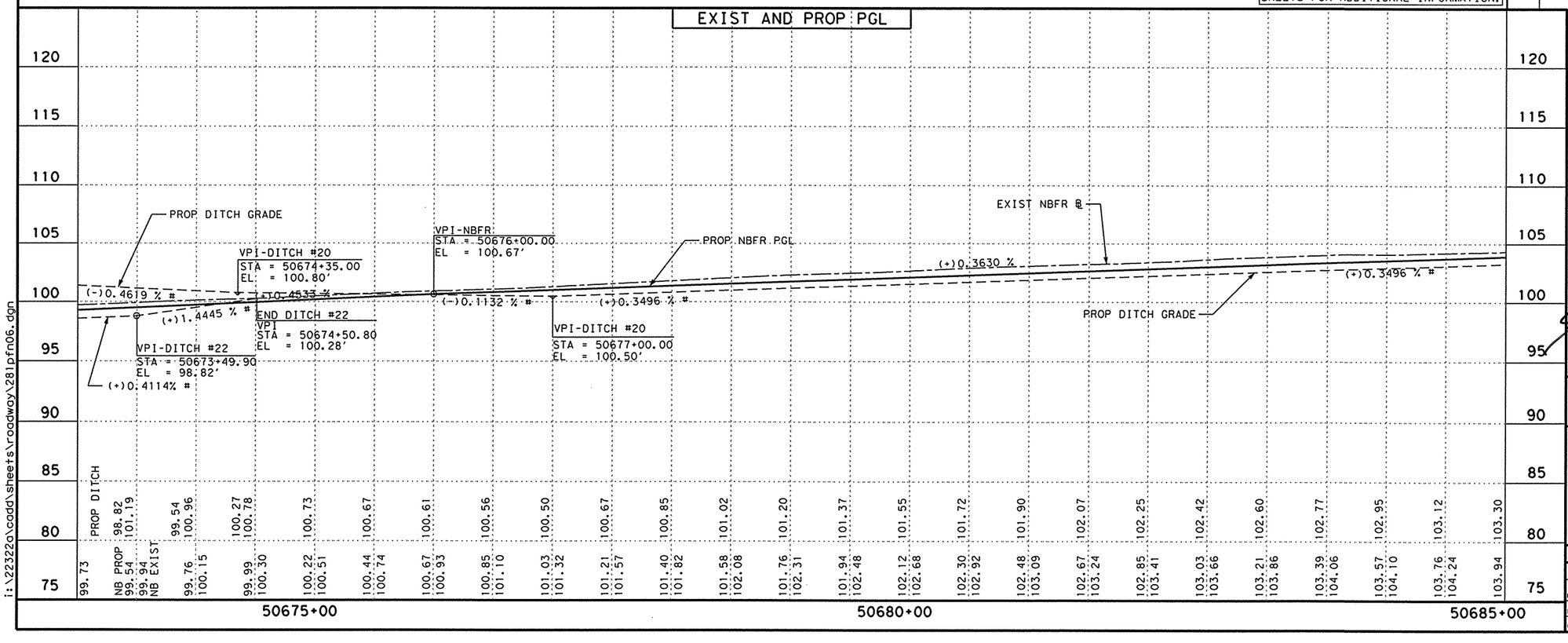

PROFILE LEGEND
——— PROP NORTH BOUND FRONTAGE RD P.G.L.
– – – – EXIST NORTH BOUND FRONTAGE RD B.L.
– – – – PROP NORTH BOUND FRONTAGE RD DITCH

NOTES:
1. # SLOPE MEASURED ALONG LENGTH OF DITCH.

THE SEAL APPEARING ON THIS DOCUMENT WAS AUTHORIZED BY JAIME AGUILAR, P.E. 87606 ON 06/23/2003.

THE SEAL APPEARING ON THIS DOCUMENT WAS AUTHORIZED BY PHAISARN CWATANAPHOL, P.E. 89252 ON 06/23/2003.

STATE OF TEXAS — JAIME AGUILAR — 87606 — REGISTERED PROFESSIONAL ENGINEER

STATE OF TEXAS — PHAISARN CWATANAPHOL — 89252 — REGISTERED PROFESSIONAL ENGINEER

Parsons Brinckerhoff Quade & Douglas Inc.

Texas Department of Transportation

© 2003 by TxDOT

US 281
PLAN & PROFILE
NORTHBOUND FRONTAGE ROAD

STA. 50673+00 "FRN1" TO
STA. 50685+00 "FRN1"

PLAN 1"= 100' HORIZ
PROFILE 1"= 10' VERT

SHEET 6 OF 20 | 281PFN06.DGN

DESIGNED: JA	FED. RD DIV. No.	STATE	FEDERAL AID PROJECT No.		HIGHWAY No.
CHECKED: JP	6	TEXAS			US 281
DRAWN: CG	STATE DISTRICT	COUNTY	CONTROL No.	SECTION No.	JOB No.	SHEET No.
CHECKED: JDH	PHARR	HIDALGO	0255	08	091	318

NAME
10:06:06 AM
06/23/2003

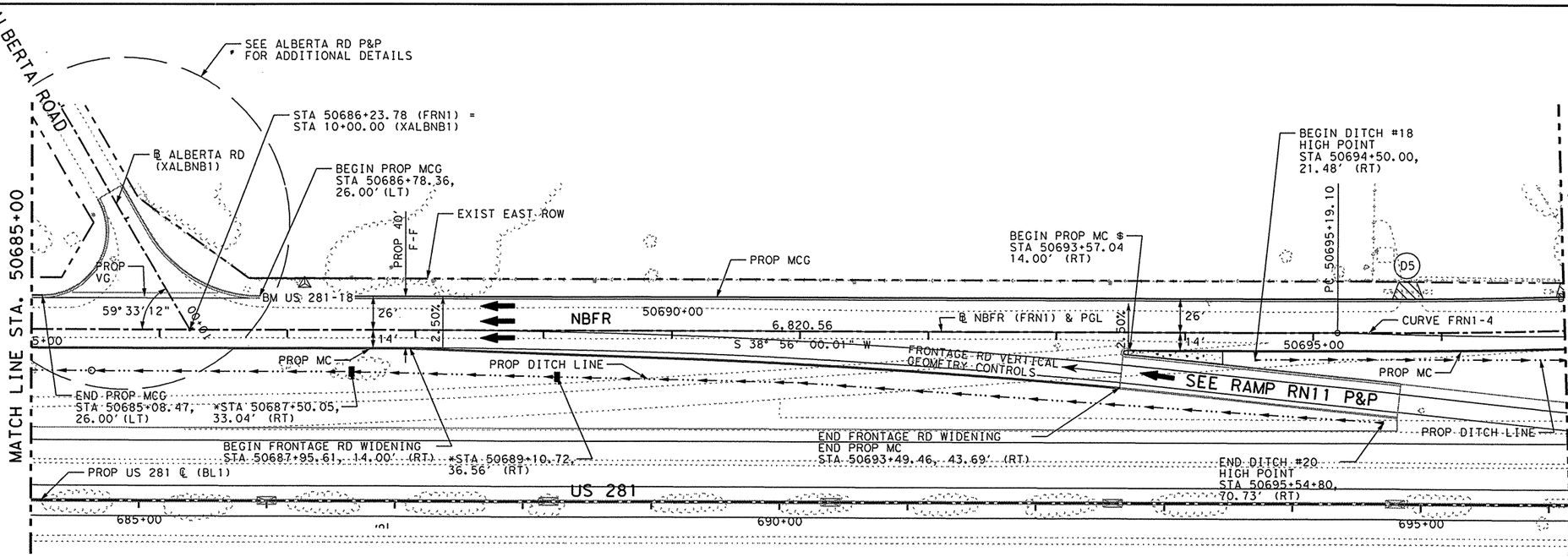

LEGEND:

MC	- MOUNTABLE CONC CURB
BC	- BARRIER CONC CURB
MCG	- MOUNTABLE CONC CURB & GUTTER (TY-B UNLESS OTHERWISE NOTED)
BCG	- BARRIER CONC CURB & GUTTER
RW	- RETAINING WALL
RR	- RIP RAP
SGT	- SINGLE GUARD RAIL TERMINAL
SSCB	- SINGLE SLOPE CONC BARRIER
SSTR	- SINGLE SLOPE TRAFFIC RAILING
SW	- SIDEWALK
WCR	- WHEEL CHAIR RAMP
VG	- 4' VALLEY GUTTER
MBGF	- METAL BEAM GUARD FENCE
TAS	- TERMINAL ANCHOR SECTION
	- PROP DRIVEWAY
	- PROP CONCRETE DRIVEWAY

FOR DRIVEWAY APRON TYPES AND SIZES, SEE "DRIVEWAY SUMMARY".

* SEE "DRAINAGE P&P SHEETS"
$ SEE "GORE NOSE & MISC DETALS SHEET".

BM & HORIZONTAL DATA
BM=US 281-18
EL=105.52
STA=686+28.97, 170.87 LT
3 1/4" TXDOT ALUMINUM DISK

SHEET TOTALS

ITEM	EST.	FINAL	UNIT	DESCRIPTION
529	1193		LF	CONC CURB (TY B) (MOUNTABLE)
529	1031		LF	CONC CURB AND GUTTER (TY B) (MOUNTABLE)
530	28		SY	DRVWY (ASPH-CONC PAV) (TY P-1)
529	170		LF	CONC GUTTER (VALLEY) (4')

CAUTION!
MAJOR UTILITY CROSSINGS IN THE VICINITY. REFER TO THE "UTILITIES AND DRAINAGE PLAN & PROFILE" SHEETS FOR ADDITIONAL INFORMATION.

EXIST AND PROP PGL

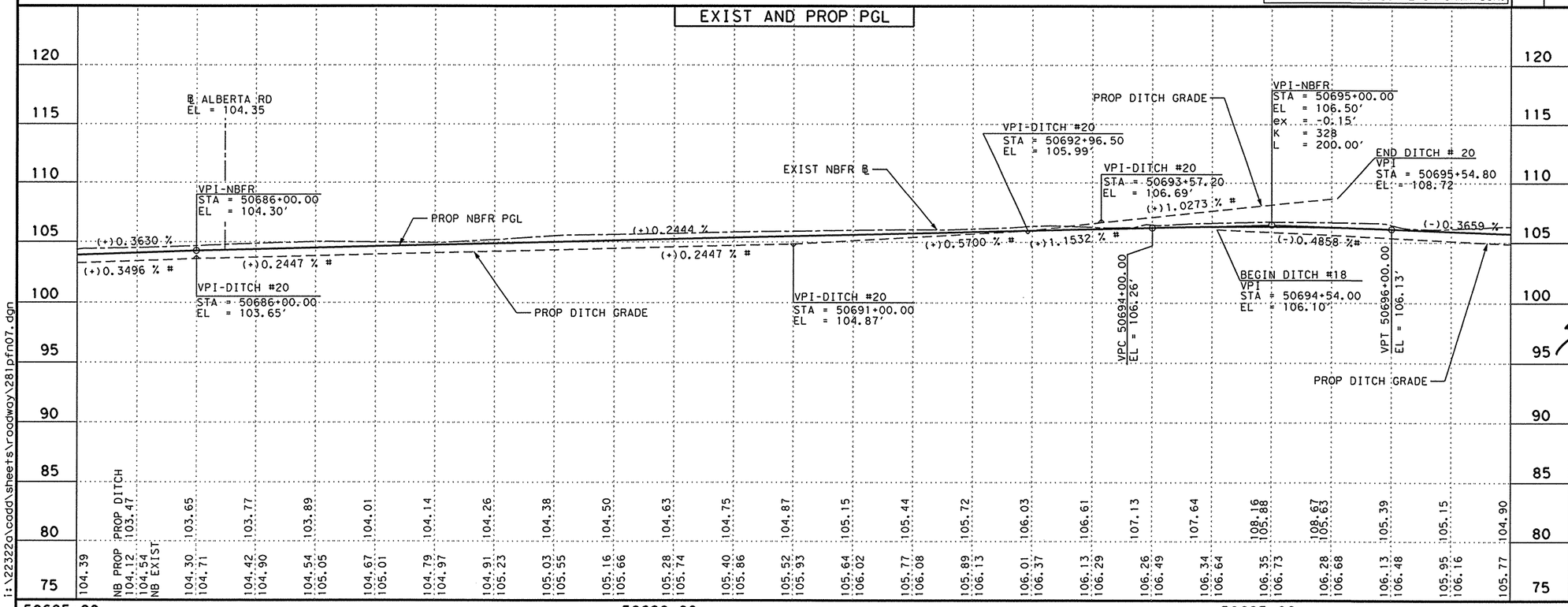

PROFILE LEGEND
PROP NORTH BOUND FRONTAGE RD P.G.L.
EXIST NORTH BOUND FRONTAGE RD B.L.
PROP NORTH BOUND FRONTAGE RD DITCH

NOTES:
1. # SLOPE MEASURED ALONG LENGTH OF DITCH.

THE SEAL APPEARING ON THIS DOCUMENT WAS AUTHORIZED BY JAIME AGUILAR, P.E. 87606 ON 06/23/2003.

THE SEAL APPEARING ON THIS DOCUMENT WAS AUTHORIZED BY PHAISARN CWATANAPHOL, P.E. 89252 ON 06/23/2003.

STATE OF TEXAS · JAIME AGUILAR · 87606 · REGISTERED PROFESSIONAL ENGINEER

STATE OF TEXAS · PHAISARN CWATANAPHOL · 89252 · REGISTERED PROFESSIONAL ENGINEER

Parsons Brinckerhoff Quade & Douglas Inc.

Texas Department of Transportation

© 2003 by TxDOT

US 281
PLAN & PROFILE
NORTHBOUND FRONTAGE ROAD

STA. 50685+00 "FRN1" TO
STA. 50697+00 "FRN1"

PLAN 1"= 100' HORIZ
PROFILE 1"= 10' VERT

SHEET 7 OF 20 | 281PFN07.DGN

DESIGNED: JA	FED. RD DIV. No.	STATE	FEDERAL AID PROJECT No.	HIGHWAY No.
CHECKED: JP	6	TEXAS		US 281

DRAWN:	STATE DISTRICT	COUNTY	CONTROL No.	SECTION No.	JOB No.	SHEET No.
CHECKED: JDH	PHARR	HIDALGO	0255	08	091	319

i:\22322a\cadd\sheets\roadway\281pfn07.dgn

NAME
10:06:24 AM
06/23/2003

Curve FRN1-4

P.I. Station	=	50697+19.05
Delta	=	3° 59' 50.33" (LT)
Degree	=	1° 00' 00.00"
Tangent	=	199.95
Length	=	399.73
Radius	=	5,729.58
External	=	3.49
Long Chord	=	399.65
Mid. Ord.	=	3.49
P.C. Station	=	50695+19.10
P.T. Station	=	50699+18.83

Curve FRN1-5

P.I. Station	=	50708+66.75
Delta	=	19° 36' 52.66" (LT)
Degree	=	3° 00' 00.00"
Tangent	=	330.14
Length	=	653.82
Radius	=	1,909.86
External	=	28.32
Long Chord	=	650.63
Mid. Ord.	=	27.91
P.C. Station	=	50705+36.60
P.T. Station	=	50711+90.43

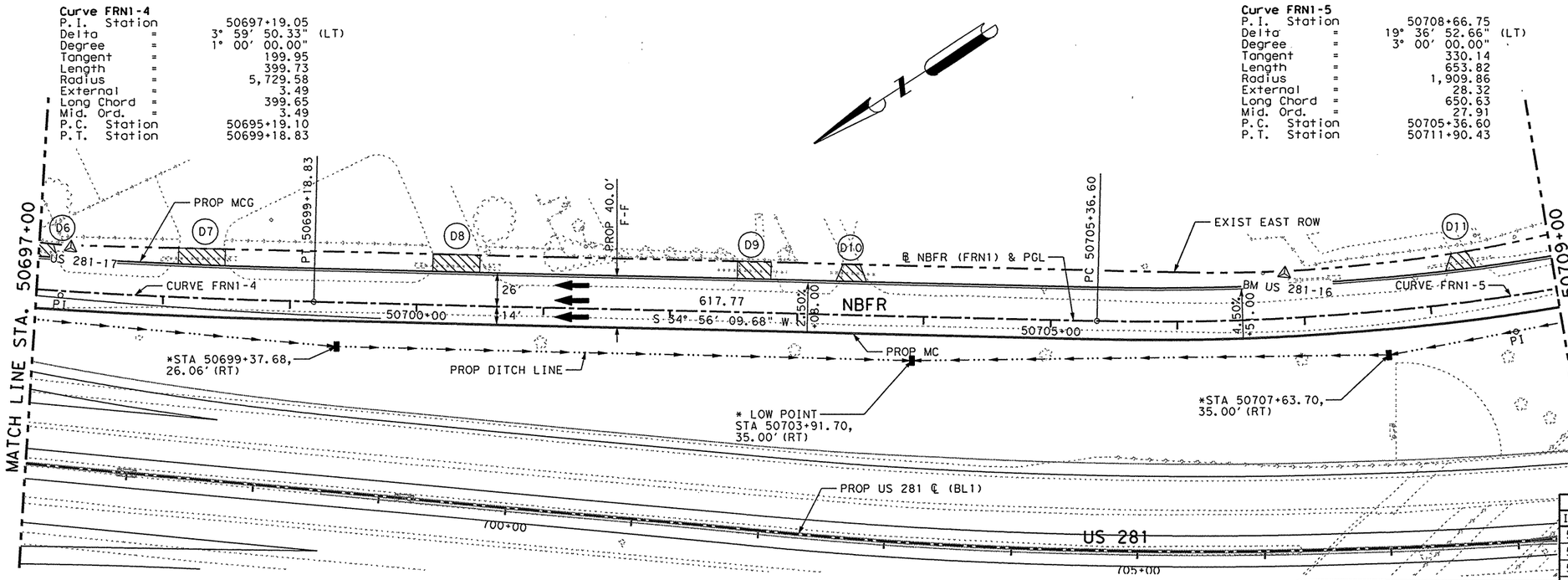

LEGEND:

MC - MOUNTABLE CONC CURB
BC - BARRIER CONC CURB
MCG - MOUNTABLE CONC CURB & GUTTER (TY-B UNLESS OTHERWISE NOTED)
BCG - BARRIER CONC CURB & GUTTER
RW - RETAINING WALL
RR - RIP RAP
SGT - SINGLE GUARD RAIL TERMINAL
SSCB - SINGLE SLOPE CONC BARRIER
SSTR - SINGLE SLOPE TRAFFIC RAILING
SW - SIDEWALK
WCR - WHEEL CHAIR RAMP
VG - 4' VALLEY GUTTER
MBGF - METAL BEAM GUARD FENCE
TAS - TERMINAL ANCHOR SECTION
▨ - PROP DRIVEWAY
⁘ - PROP CONCRETE DRIVEWAY

FOR DRIVEWAY APRON TYPES AND SIZES, SEE "DRIVEWAY SUMMARY".

* SEE "DRAINAGE P&P SHEETS".

⚠BM & HORIZONTAL DATA
BM = US 281-16
EL = 103.82
STA = 706+19.13, 220.37 LT
3 ¼" TXDOT ALUMINUM DISK

⚠BM & HORIZONTAL DATA
BM = US 281-17
EL = 105.58
STA = 696+39.23, 173.41 LT
3 ¼" TXDOT ALUMINUM DISK

CAUTION!
MAJOR UTILITY CROSSINGS IN THE VICINITY. REFER TO THE "UTILITIES AND DRAINAGE PLAN & PROFILE" SHEETS FOR ADDITIONAL INFORMATION.

SHEET TOTALS

ITEM	EST.	FINAL	UNIT	DESCRIPTION
529	1200		LF	CONC CURB (TY B)(MOUNTABLE)
529	1200		LF	CONC CURB AND GUTTER(TY B)(MOUNTABLE)
530	68		SY	DRVWY (ASPH-CONC PAV) (TY PB-1)
530	158		SY	DRVWY (ASPH-CONC PAV) (TY P-1)

EXIST AND PROP PGL

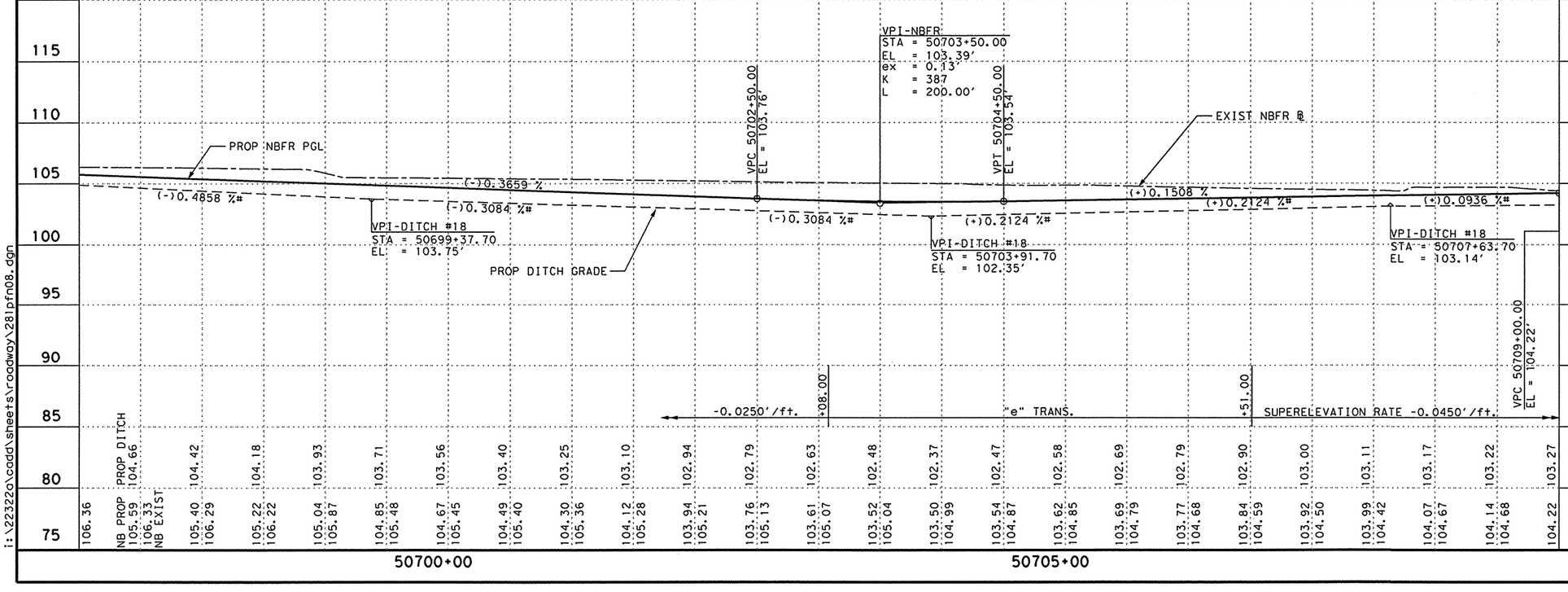

PROFILE LEGEND
——— PROP NORTH BOUND FRONTAGE RD P.G.L.
– – – – EXIST NORTH BOUND FRONTAGE RD B.L.
– – – – PROP NORTH BOUND FRONTAGE RD DITCH

NOTES:
1. # SLOPE MEASURED ALONG LENGTH OF DITCH.

THE SEAL APPEARING ON THIS DOCUMENT WAS AUTHORIZED BY JAIME AGUILAR, P.E. 87606 ON 06/23/2003.

THE SEAL APPEARING ON THIS DOCUMENT WAS AUTHORIZED BY PHAISARN CHATANAPHOL, P.E. 89252 ON 06/23/2003.

STATE OF TEXAS · JAIME AGUILAR · 87606 · REGISTERED PROFESSIONAL ENGINEER

STATE OF TEXAS · PHAISARN CHATANAPHOL · 89252 · REGISTERED PROFESSIONAL ENGINEER

Parsons Brinckerhoff Quade & Douglas Inc.

Texas Department of Transportation

© 2003 by TxDOT

US 281
PLAN & PROFILE
NORTHBOUND FRONTAGE ROAD

STA. 50697+00 "FRN1" TO
STA. 50709+00 "FRN1"

PLAN 1"= 100' HORIZ
PROFILE 1"= 10' VERT

SHEET 8 OF 20			281PFN08.DGN				
DESIGNED: JA	FED. RD DIV. No.	STATE	FEDERAL AID PROJECT No.				HIGHWAY No.
CHECKED: JP	6	TEXAS					US 281
DRAWN: CG	STATE DISTRICT	COUNTY	CONTROL No.	SECTION No.	JOB No.	SHEET No.	
CHECKED: JDH	PHARR	HIDALGO	0255	08	091	320	

i:\22322a\cadd\sheets\roadway\281pfn08.dgn
06/23/2003

NAME
10:06:43 AM
06/23/2003

CAUTION!

MAJOR UTILITY CROSSINGS IN THE VICINITY. REFER TO THE "UTILITIES AND DRAINAGE PLAN & PROFILE" SHEETS FOR ADDITIONAL INFORMATION.

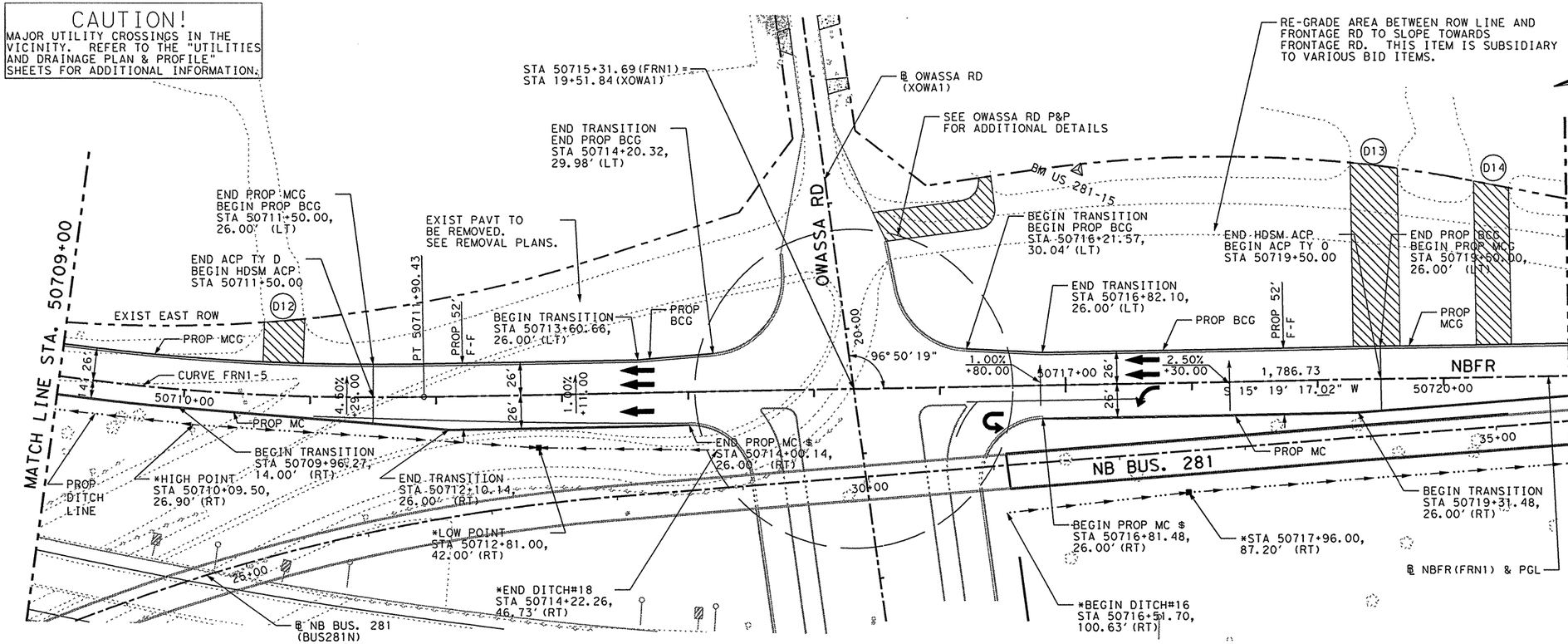

LEGEND:

- MC - MOUNTABLE CONC CURB
- BC - BARRIER CONC CURB
- MCG - MOUNTABLE CONC CURB & GUTTER (TY-B UNLESS OTHERWISE NOTED)
- BCG - BARRIER CONC CURB & GUTTER
- RW - RETAINING WALL
- RR - RIP RAP
- SGT - SINGLE GUARD RAIL TERMINAL
- SSCB - SINGLE SLOPE CONC BARRIER
- SSTR - SINGLE SLOPE TRAFFIC RAILING
- SW - SIDEWALK
- WCR - WHEEL CHAIR RAMP
- VG - 4' VALLEY GUTTER
- MBGF - METAL BEAM GUARD FENCE
- TAS - TERMINAL ANCHOR SECTION
- ▨ - PROP DRIVEWAY
- ⁘ - PROP CONCRETE DRIVEWAY

FOR DRIVEWAY APRON TYPES AND SIZES, SEE "DRIVEWAY SUMMARY".

* SEE "DRAINAGE P&P SHEETS".

$ SEE "GORE NOSE & MISC DETAILS SHEET".

⚠BM & HORIZONTAL DATA
BM=US 281-15
EL=103.73
STA=7117+06.49, 448.89 LT
3 1/4" TXDOT ALUMINUM DISK

SHEET TOTALS

ITEM	EST.	FINAL	UNIT	DESCRIPTION
529	922		LF	CONC CURB (TY B)(MOUNTABLE)
529	397		LF	CONC CURB AND GUTTER(TY B)(MOUNTABLE)
530	972		SY	DRVWY (ASPH-CONC PAV) (TY PB-1)
530	118		SY	DRVWY (ASPH-CONC PAV) (TY P-1)
529	599		LF	CONC CURB AND GUTTER(TY-A)(BARRIER)

EXIST AND PROP PGL

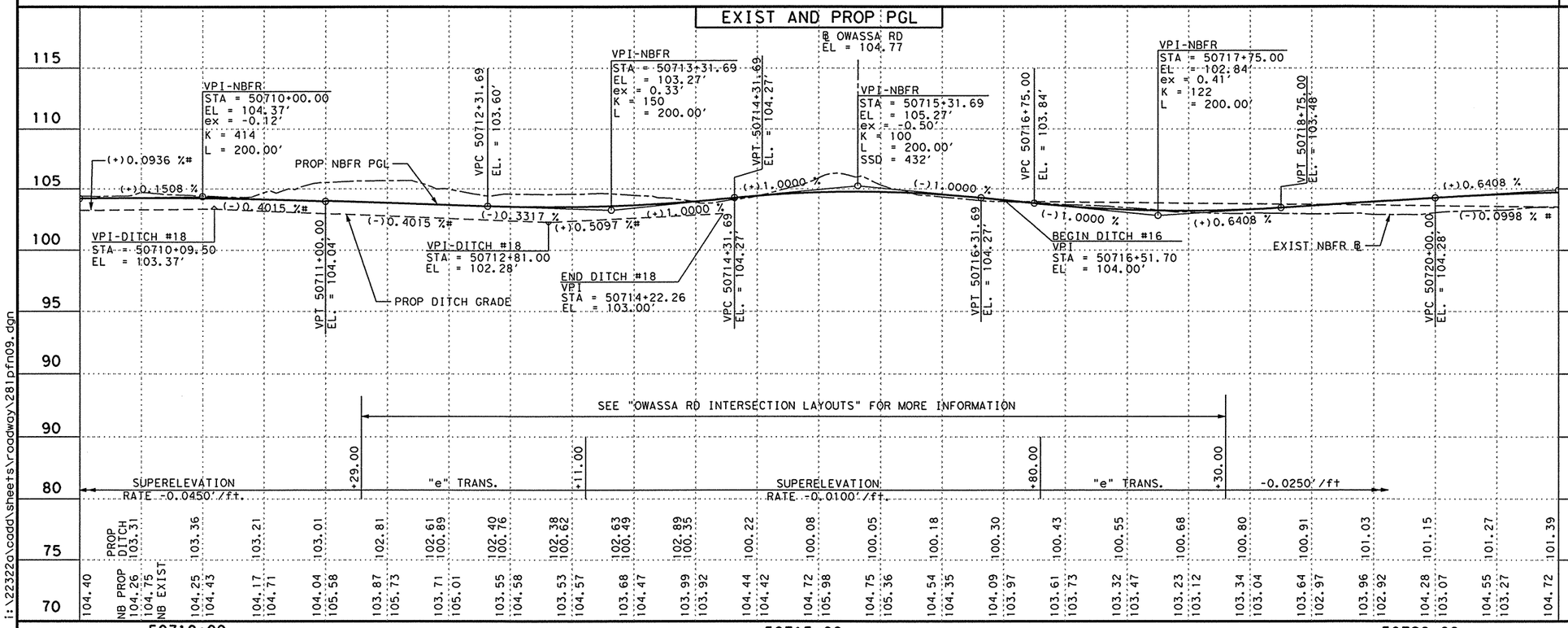

PROFILE LEGEND

- PROP NORTH BOUND FRONTAGE RD P.G.L.
- EXIST NORTH BOUND FRONTAGE RD B.L.
- PROP NORTH BOUND FRONTAGE RD DITCH

NOTES:
1. # SLOPE MEASURED ALONG LENGTH OF DITCH.

THE SEAL APPEARING ON THIS DOCUMENT WAS AUTHORIZED BY JAIME AGUILAR, P.E. 87606 ON 06/23/2003.

THE SEAL APPEARING ON THIS DOCUMENT WAS AUTHORIZED BY PHAISARN CWATANAPHOL, P.E. 89252 ON 06/23/2003.

STATE OF TEXAS · JAIME AGUILAR · 87606 · REGISTERED PROFESSIONAL ENGINEER

STATE OF TEXAS · PHAISARN CWATANAPHOL · 89252 · REGISTERED PROFESSIONAL ENGINEER

Parsons Brinckerhoff Quade & Douglas Inc.

Texas Department of Transportation

© 2003 by TxDOT

US 281
PLAN & PROFILE
NORTHBOUND FRONTAGE ROAD

STA. 50709+00 "FRN1" TO
STA. 50721+00 "FRN1"

PLAN 1"= 100' HORIZ
PROFILE 1"= 10' VERT

SHEET 9 OF 20 | 281PFN09.DGN

DESIGNED: JA	FED. RD DIV. No.	STATE	FEDERAL AID PROJECT No.	HIGHWAY No.
CHECKED: JP	6	TEXAS		US 281

DRAWN: CG	STATE DISTRICT	COUNTY	CONTROL No.	SECTION No.	JOB No.	SHEET No.
CHECKED: JDH	PHARR	HIDALGO	0255	08	091	321

i:\223220\cadd\sheets\roadway\281pfn09.dgn

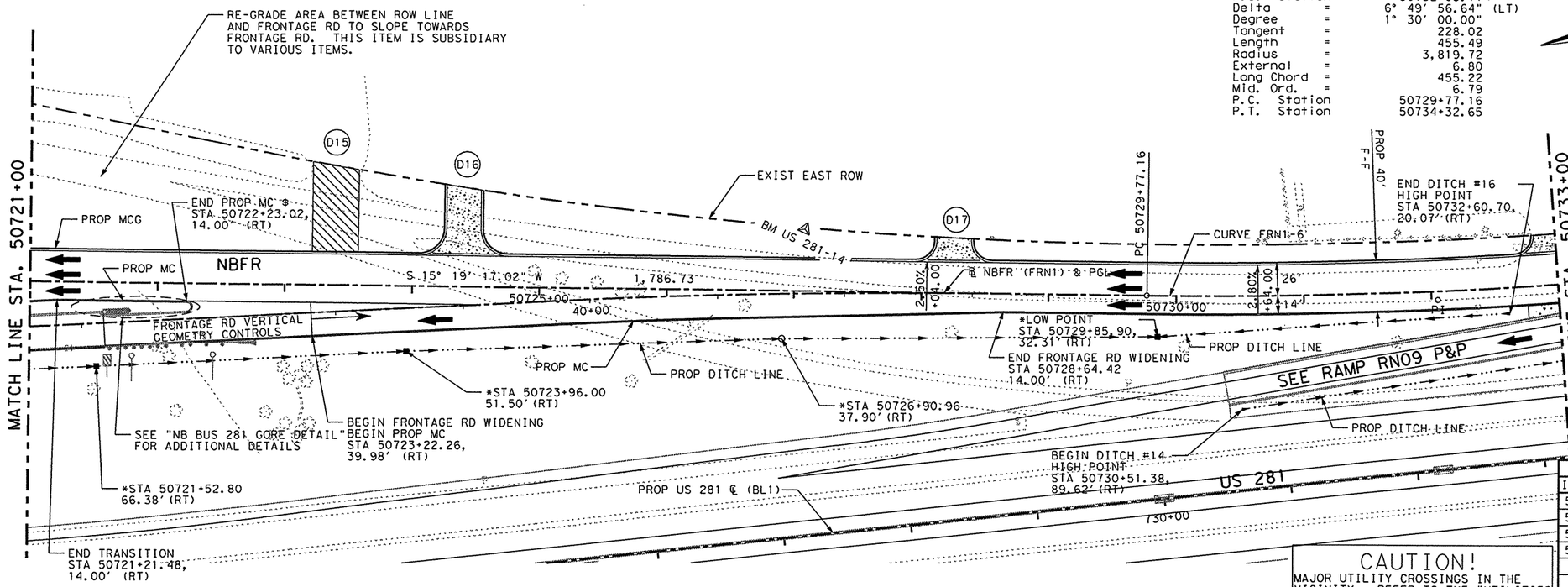

Curve FRN1-6

P.I. Station	=	50732+05.17
Delta	=	6° 49' 56.64" (LT)
Degree	=	1° 30' 00.00"
Tangent	=	228.02
Length	=	455.49
Radius	=	3,819.72
External	=	6.80
Long Chord	=	455.22
Mid. Ord.	=	6.79
P.C. Station	=	50729+77.16
P.T. Station	=	50734+32.65

LEGEND:

- MC - MOUNTABLE CONC CURB
- BC - BARRIER CONC CURB
- MCG - MOUNTABLE CONC CURB & GUTTER (TY-B UNLESS OTHERWISE NOTED)
- BCG - BARRIER CONC CURB & GUTTER
- RW - RETAINING WALL
- RR - RIP RAP
- SGT - SINGLE GUARD RAIL TERMINAL
- SSCB - SINGLE SLOPE CONC BARRIER
- SSTR - SINGLE SLOPE TRAFFIC RAILING
- SW - SIDEWALK
- WCR - WHEEL CHAIR RAMP
- VG - 4' VALLEY GUTTER
- MBGF - METAL BEAM GUARD FENCE
- TAS - TERMINAL ANCHOR SECTION
- ▨ - PROP DRIVEWAY
- ⁝⁝ - PROP CONCRETE DRIVEWAY

FOR DRIVEWAY APRON TYPES AND SIZES, SEE "DRIVEWAY SUMMARY".

* SEE "DRAINAGE P&P SHEETS".
$ SEE "GORE NOSE & MISC DETAILS SHEET".

△BM & HORIZONTAL DATA
BM=US 281-14
EL=103.90
STA=727+41.86, 241.71 LT
3 1/4" TXDOT ALUMINUM DISK

CAUTION!
MAJOR UTILITY CROSSINGS IN THE VICINITY. REFER TO THE "UTILITIES AND DRAINAGE PLAN & PROFILE" SHEETS FOR ADDITIONAL INFORMATION.

SHEET TOTALS

ITEM	EST.	FINAL	UNIT	DESCRIPTION
529	1093		LF	CONC CURB (TY B)(MOUNTABLE)
529	1200		LF	CONC CURB AND GUTTER(TY B)(MOUNTABLE)
530	272		SY	DRVWY (ASPH-CONC PAV) (TY P-1)
530	236		SY	DRVWYS (CONC)(6")

EXIST AND PROP PGL

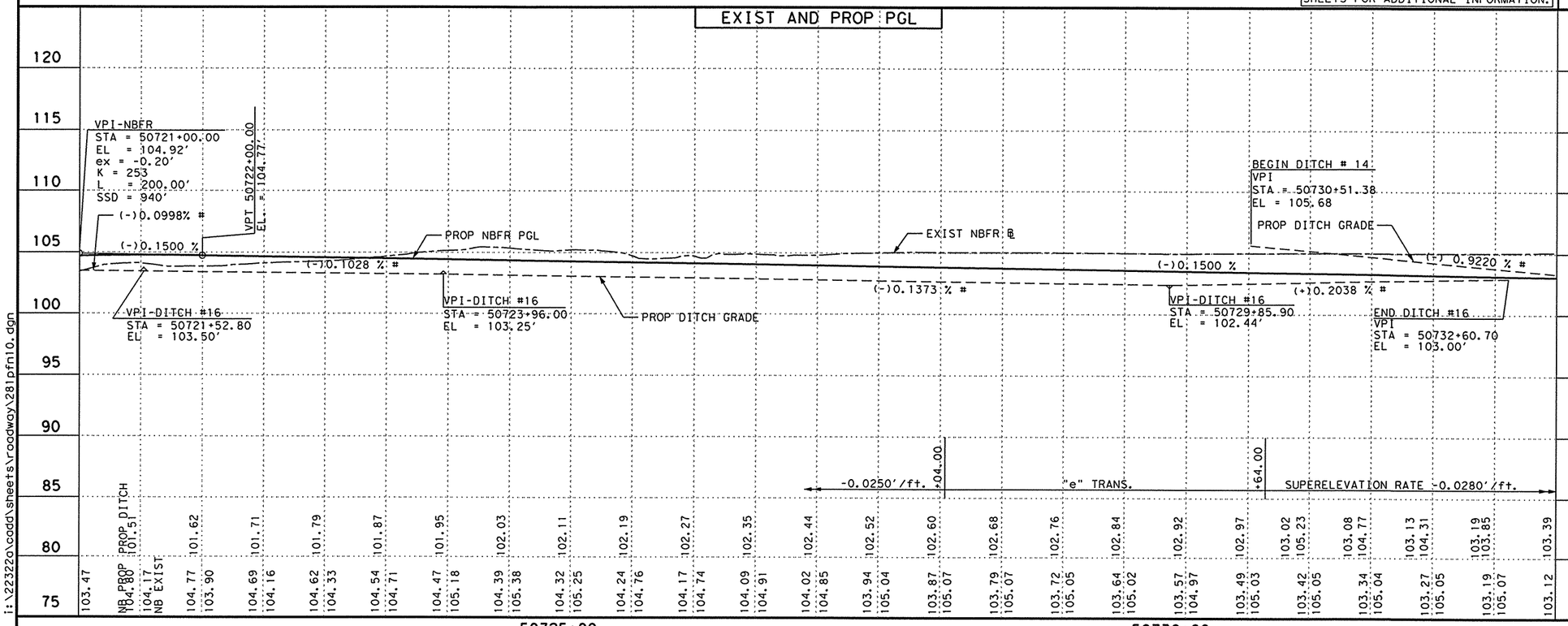

PROFILE LEGEND
- PROP NORTH BOUND FRONTAGE RD P.G.L.
- EXIST NORTH BOUND FRONTAGE RD B.L.
- PROP NORTH BOUND FRONTAGE RD DITCH

NOTES:
1. # SLOPE MEASURED ALONG LENGTH OF DITCH.

THE SEAL APPEARING ON THIS DOCUMENT WAS AUTHORIZED BY JAIME AGUILAR, P.E. 87606 ON 06/23/2003.

THE SEAL APPEARING ON THIS DOCUMENT WAS AUTHORIZED BY PHAISARN CWATANAPHOL, P.E. 89252 ON 06/23/2003.

STATE OF TEXAS — JAIME AGUILAR — 87606 — REGISTERED PROFESSIONAL ENGINEER

STATE OF TEXAS — PHAISARN CWATANAPHOL — 89252 — REGISTERED PROFESSIONAL ENGINEER

Parsons Brinckerhoff Quade & Douglas Inc.

Texas Department of Transportation

© 2003 by TxDOT

US 281
PLAN & PROFILE
NORTHBOUND FRONTAGE ROAD

STA. 50721+00 "FRN1" TO
STA. 50733+00 "FRN1"

PLAN 1"= 100' HORIZ
PROFILE 1"= 10' VERT

SHEET 10 OF 20			281PFN10.DGN				
DESIGNED: JA	FED. RD DIV. No.	STATE	FEDERAL AID PROJECT No.			HIGHWAY No.	
CHECKED: JP	6	TEXAS				US 281	
DRAWN: CG	STATE DISTRICT	COUNTY	CONTROL No.	SECTION No.	JOB No.	SHEET No.	
CHECKED: JDH	PHARR	HIDALGO	0255	08	091	322	

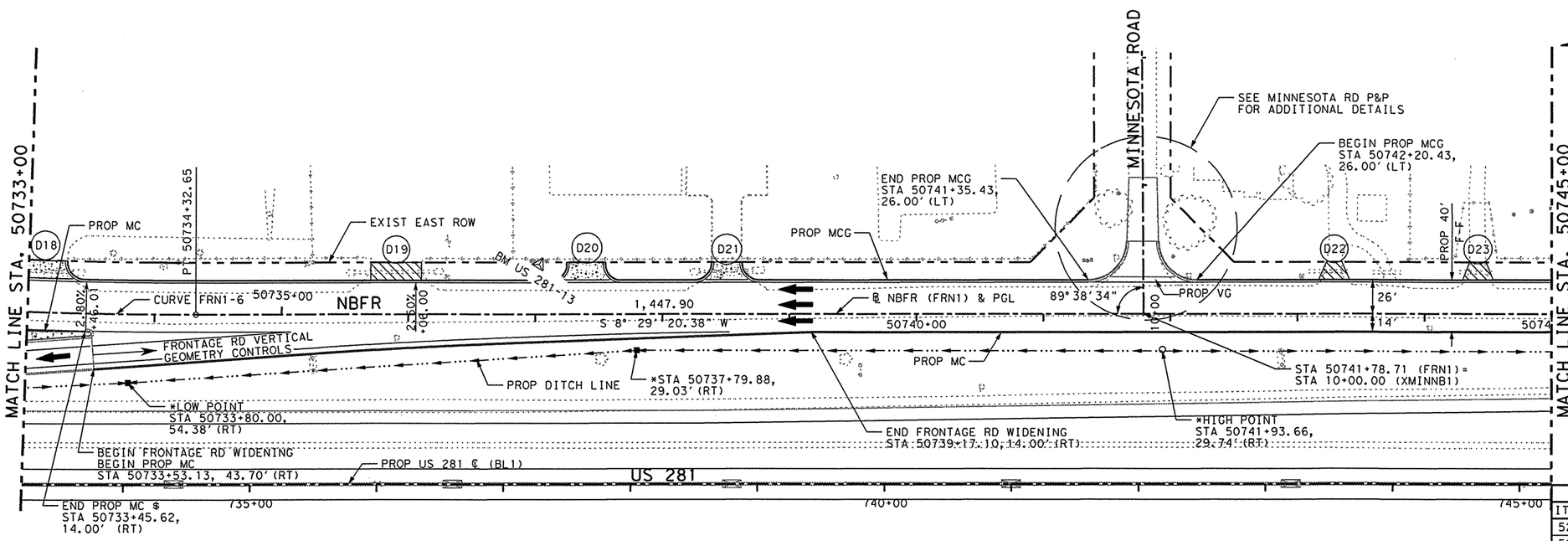

LEGEND:

MC - MOUNTABLE CONC CURB
BC - BARRIER CONC CURB
MCG - MOUNTABLE CONC CURB & GUTTER (TY-B UNLESS OTHERWISE NOTED)
BCG - BARRIER CONC CURB & GUTTER
RW - RETAINING WALL
RR - RIP RAP
SGT - SINGLE GUARD RAIL TERMINAL
SSCB - SINGLE SLOPE CONC BARRIER
SSTR - SINGLE SLOPE TRAFFIC RAILING
SW - SIDEWALK
WCR - WHEEL CHAIR RAMP
VG - 4' VALLEY GUTTER
MBGF - METAL BEAM GUARD FENCE
TAS - TERMINAL ANCHOR SECTION
▨ - PROP DRIVEWAY
⁝⁝ - PROP CONCRETE DRIVEWAY

FOR DRIVEWAY APRON TYPES AND SIZES, SEE "DRIVEWAY SUMMARY".

* SEE "DRAINAGE P&P SHEETS".
$ SEE "GORE NOSE & MISC DETAILS SHEET".

△BM & HORIZONTAL DATA
BM=US 281-13
EL=104.89
STA=737+28.11, 172.67 LT
3 ¼" TXDOT ALUMINUM DISK

SHEET TOTALS

ITEM	EST.	FINAL	UNIT	DESCRIPTION
529	1205		LF	CONC CURB (TY B)(MOUNTABLE)
529	1115		LF	CONC CURB AND GUTTER(TY B)(MOUNTABLE)
530	55		SY	DRVWY (ASPH-CONC PAV) (TY PB-1)
530	60		SY	DRVWY (ASPH-CONC PAV) (TY P-1)
529	85		LF	CONC GUTTER (VALLEY) (4')
530	158		SY	DRVWYS (CONC)(6")

CAUTION!
MAJOR UTILITY CROSSINGS IN THE VICINITY. REFER TO THE "UTILITIES AND DRAINAGE PLAN & PROFILE" SHEETS FOR ADDITIONAL INFORMATION.

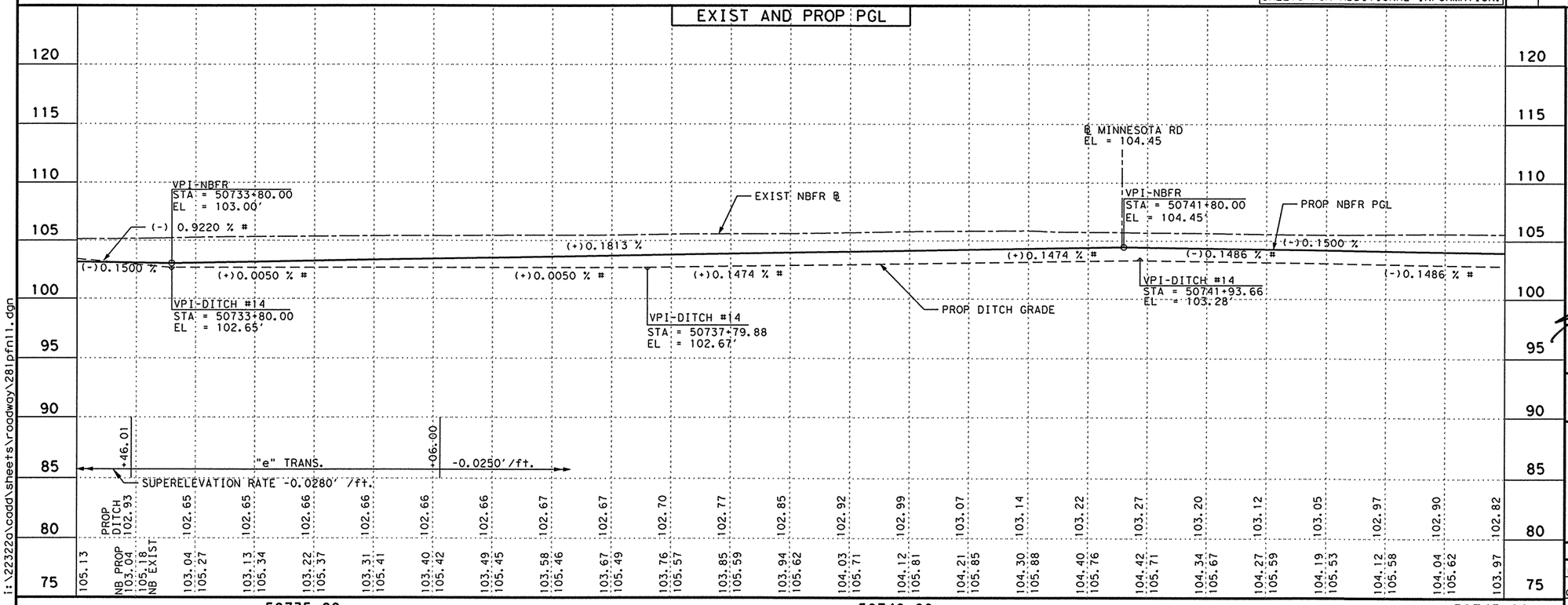

PROFILE LEGEND
PROP NORTH BOUND FRONTAGE RD P.G.L.
EXIST NORTH BOUND FRONTAGE RD B.L.
PROP NORTH BOUND FRONTAGE RD DITCH

NOTES:
1. # SLOPE MEASURED ALONG LENGTH OF DITCH.

THE SEAL APPEARING ON THIS DOCUMENT WAS AUTHORIZED BY JAIME AGUILAR, P.E. 87606 ON 06/23/2003.

THE SEAL APPEARING ON THIS DOCUMENT WAS AUTHORIZED BY PHAISARN CWATANAPHOL, P.E. 89252 ON 06/23/2003.

STATE OF TEXAS JAIME AGUILAR 87606 REGISTERED PROFESSIONAL ENGINEER

STATE OF TEXAS PHAISARN CWATANAPHOL 89252 REGISTERED PROFESSIONAL ENGINEER

Parsons Brinckerhoff Quade & Douglas Inc.

Texas Department of Transportation

© 2003 by TxDOT

US 281
PLAN & PROFILE
NORTHBOUND FRONTAGE ROAD

STA. 50733+00 "FRN" TO
STA. 50745+00 "FRN"

PLAN 1"= 100' HORIZ
PROFILE 1"= 10' VERT

SHEET 11 OF 20 | 281PFN11.DGN

DESIGNED: JA	FED. RD DIV. No.	STATE	FEDERAL AID PROJECT No.	HIGHWAY No.
CHECKED: JP	6	TEXAS		US 281

DRAWN: CG	STATE DISTRICT	COUNTY	CONTROL No.	SECTION No.	JOB No.	SHEET No.
CHECKED: JDH	PHARR	HIDALGO	0255	08	091	323

NAME
10:12:00 AM
06/23/2003

Curve FRN1-7

P.I. Station	=	50751+00.59
Delta	=	2° 12' 00.62" (LT)
Degree	=	0° 30' 00.00"
Tangent	=	220.04
Length	=	440.03
Radius	=	11,459.16
External	=	2.11
Long Chord	=	440.01
Mid. Ord.	=	2.11
P.C. Station	=	50748+80.55
P.T. Station	=	50753+20.58

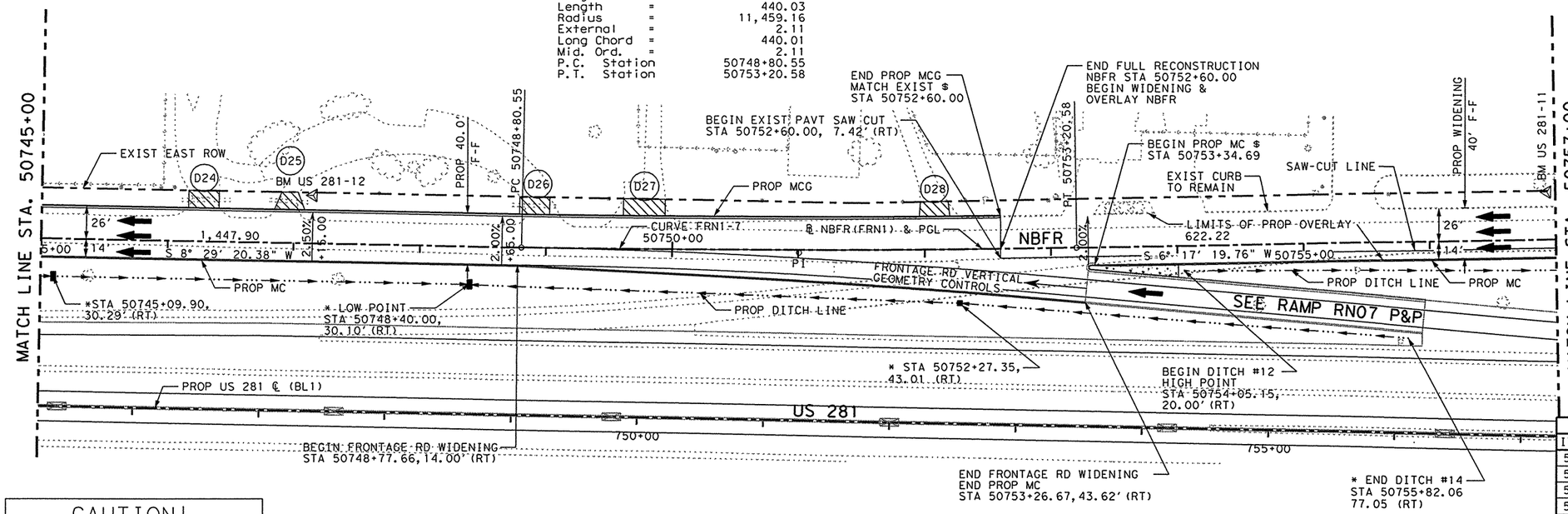

CAUTION!
MAJOR UTILITY CROSSINGS IN THE VICINITY. REFER TO THE "UTILITIES AND DRAINAGE PLAN & PROFILE" SHEETS FOR ADDITIONAL INFORMATION.

LEGEND:

- MC - MOUNTABLE CONC CURB
- BC - BARRIER CONC CURB
- MCG - MOUNTABLE CONC CURB & GUTTER (TY-B UNLESS OTHERWISE NOTED)
- BCG - BARRIER CONC CURB & GUTTER
- RW - RETAINING WALL
- RR - RIP RAP
- SGT - SINGLE GUARD RAIL TERMINAL
- SSCB - SINGLE SLOPE CONC BARRIER
- SSTR - SINGLE SLOPE TRAFFIC RAILING
- SW - SIDEWALK
- WCR - WHEEL CHAIR RAMP
- VG - 4' VALLEY GUTTER
- MBGF - METAL BEAM GUARD FENCE
- TAS - TERMINAL ANCHOR SECTION
- PROP DRIVEWAY
- PROP CONCRETE DRIVEWAY

FOR DRIVEWAY APRON TYPES AND SIZES, SEE "DRIVEWAY SUMMARY".

* SEE "DRAINAGE P&P SHEETS".

$ SEE "GORE NOSE & MISC DETAILS SHEET".

△BM & HORIZONTAL DATA
BM=US 281-11
EL=104.75
STA=757+16.56, 194.71 LT
3 1/4" TXDOT ALUMINUM DISK

△BM & HORIZONTAL DATA
BM=US 281-12
EL=104.33
STA=747+40.09, 172.11 LT
3 1/4" TXDOT ALUMINUM DISK

SHEET TOTALS

ITEM	EST.	FINAL	UNIT	DESCRIPTION
529	1195		LF	CONC CURB (TY B)(MOUNTABLE)
529	760		LF	CONC CURB AND GUTTER(TY B)(MOUNTABLE)
530	66		SY	DRVWY (ASPH-CONC PAV) (TY PB-1)
530	112		SY	DRVWY (ASPH-CONC PAV) (TY P-1)

EXIST AND PROP PGL

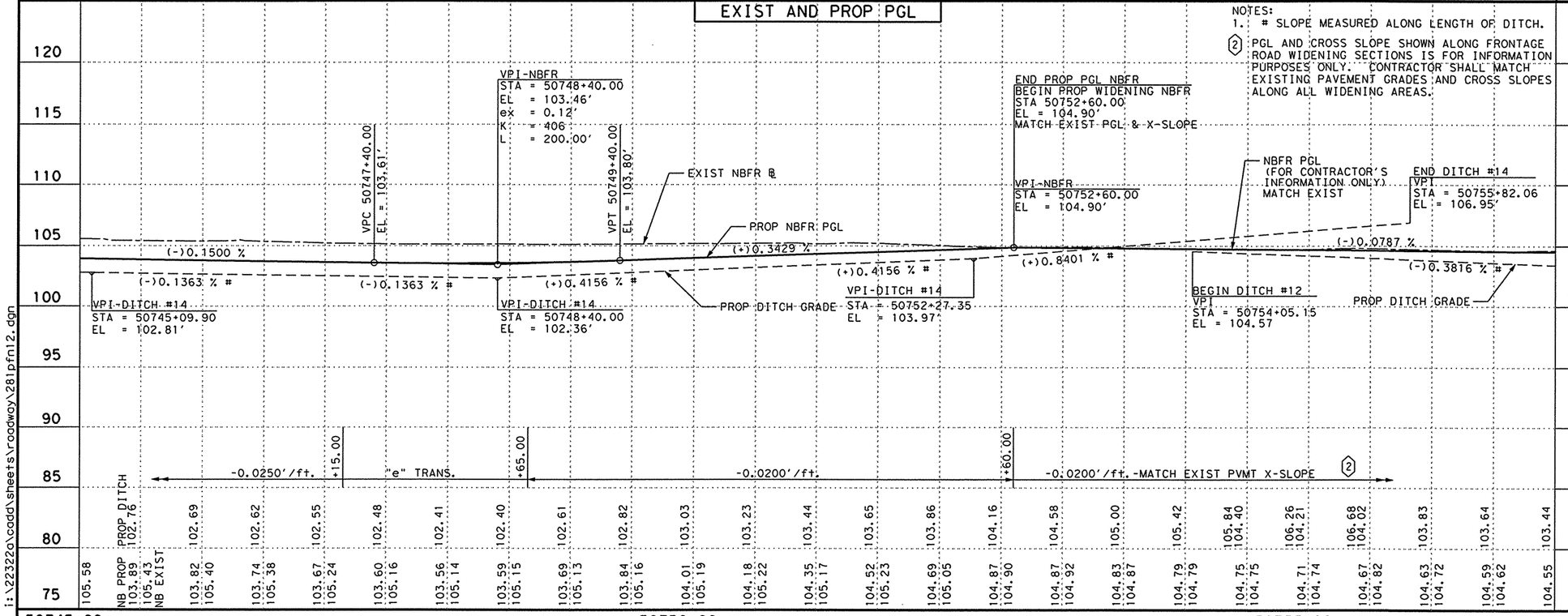

NOTES:
1. # SLOPE MEASURED ALONG LENGTH OF DITCH.
2. PGL AND CROSS SLOPE SHOWN ALONG FRONTAGE ROAD WIDENING SECTIONS IS FOR INFORMATION PURPOSES ONLY. CONTRACTOR SHALL MATCH EXISTING PAVEMENT GRADES AND CROSS SLOPES ALONG ALL WIDENING AREAS.

PROFILE LEGEND
- PROP NORTH BOUND FRONTAGE RD P.G.L.
- EXIST NORTH BOUND FRONTAGE RD B.L.
- PROP NORTH BOUND FRONTAGE RD DITCH

THE SEAL APPEARING ON THIS DOCUMENT WAS AUTHORIZED BY JAIME AGUILAR, P.E. 87606 ON 06/23/2003.

THE SEAL APPEARING ON THIS DOCUMENT WAS AUTHORIZED BY PHAISARN CWATANAPHOL, P.E. 89252 ON 06/23/2003.

STATE OF TEXAS — JAIME AGUILAR — 87606 — REGISTERED PROFESSIONAL ENGINEER

STATE OF TEXAS — PHAISARN CWATANAPHOL — 89252 — REGISTERED PROFESSIONAL ENGINEER

Parsons Brinckerhoff Quade & Douglas Inc.

Texas Department of Transportation

© 2003 by TxDOT

US 281
PLAN & PROFILE
NORTHBOUND FRONTAGE ROAD

STA. 50745+00 "FRN1" TO
STA. 50757+00 "FRN1"

PLAN 1"= 100' HORIZ
PROFILE 1"= 10' VERT

SHEET 12 OF 20			281PFN12.DGN				
DESIGNED: JA	FED. RD DIV. No.	STATE	FEDERAL AID PROJECT No.		HIGHWAY No.		
CHECKED: JP	6	TEXAS			US 281		
DRAWN: CG	STATE DISTRICT	COUNTY	CONTROL No.	SECTION No.	JOB No.	SHEET No.	
CHECKED: JDH	PHARR	HIDALGO	0255	08	091	324	

i:\22322a\cadd\sheets\roadway\281pfn12.dgn

NAME

10:12:19 AM

06/23/2003

CAUTION!
MAJOR UTILITY CROSSINGS IN THE VICINITY. REFER TO THE "UTILITIES AND DRAINAGE PLAN & PROFILE" SHEETS FOR ADDITIONAL INFORMATION.

Curve FRN1-8

P.I. Station		50761+63.49
Delta	=	2° 12' 23.77" (RT)
Degree	=	0° 30' 00.00"
Tangent	=	220.69
Length	=	441.32
Radius	=	11,459.16
External	=	2.12
Long Chord	=	441.29
Mid. Ord.	=	2.12
P.C. Station		50759+42.80
P.T. Station		50763+84.12

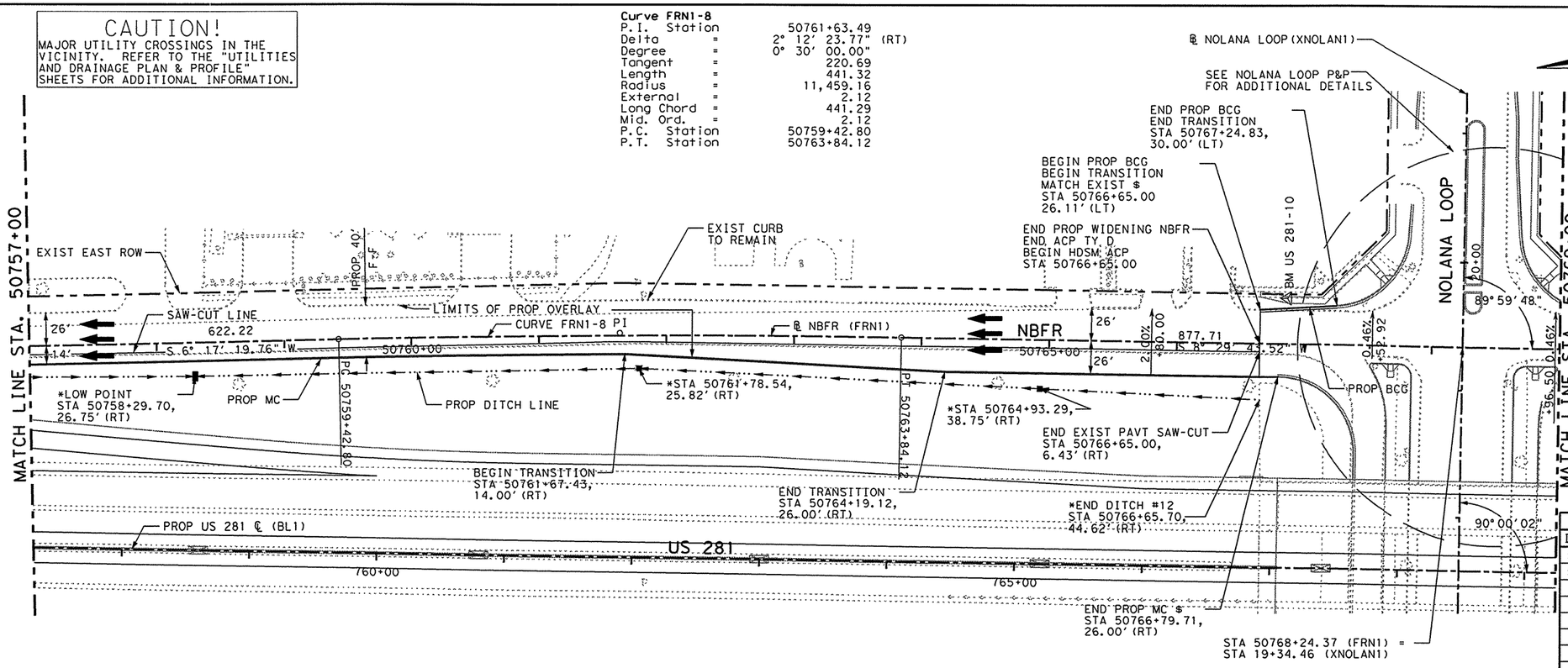

LEGEND:

- MC - MOUNTABLE CONC CURB
- BC - BARRIER CONC CURB
- MCG - MOUNTABLE CONC CURB & GUTTER (TY-B UNLESS OTHERWISE NOTED)
- BCG - BARRIER CONC CURB & GUTTER
- RW - RETAINING WALL
- RR - RIP RAP
- SGT - SINGLE GUARD RAIL TERMINAL
- SSCB - SINGLE SLOPE CONC BARRIER
- SSTR - SINGLE SLOPE TRAFFIC RAILING
- SW - SIDEWALK
- WCR - WHEEL CHAIR RAMP
- VG - 4' VALLEY GUTTER
- MBGF - METAL BEAM GUARD FENCE
- TAS - TERMINAL ANCHOR SECTION
- PROP DRIVEWAY
- PROP CONCRETE DRIVEWAY

* SEE "DRAINAGE P&P SHEETS".
$ SEE "GORE NOSE & MISC DETAILS SHEET".

BM & HORIZONTAL DATA
BM=US 281-10
EL=105.56
STA=767+10.57, 210.84 LT
3 1/4" TXDOT ALUMINUM DISK

SHEET TOTALS

ITEM	EST.	FINAL	UNIT	DESCRIPTION
529	980		LF	CONC CURB (TY B) (MOUNTABLE)
529	63		LF	CONC CURB AND GUTTER (TY-A) (BARRIER)

EXIST AND PROP PGL

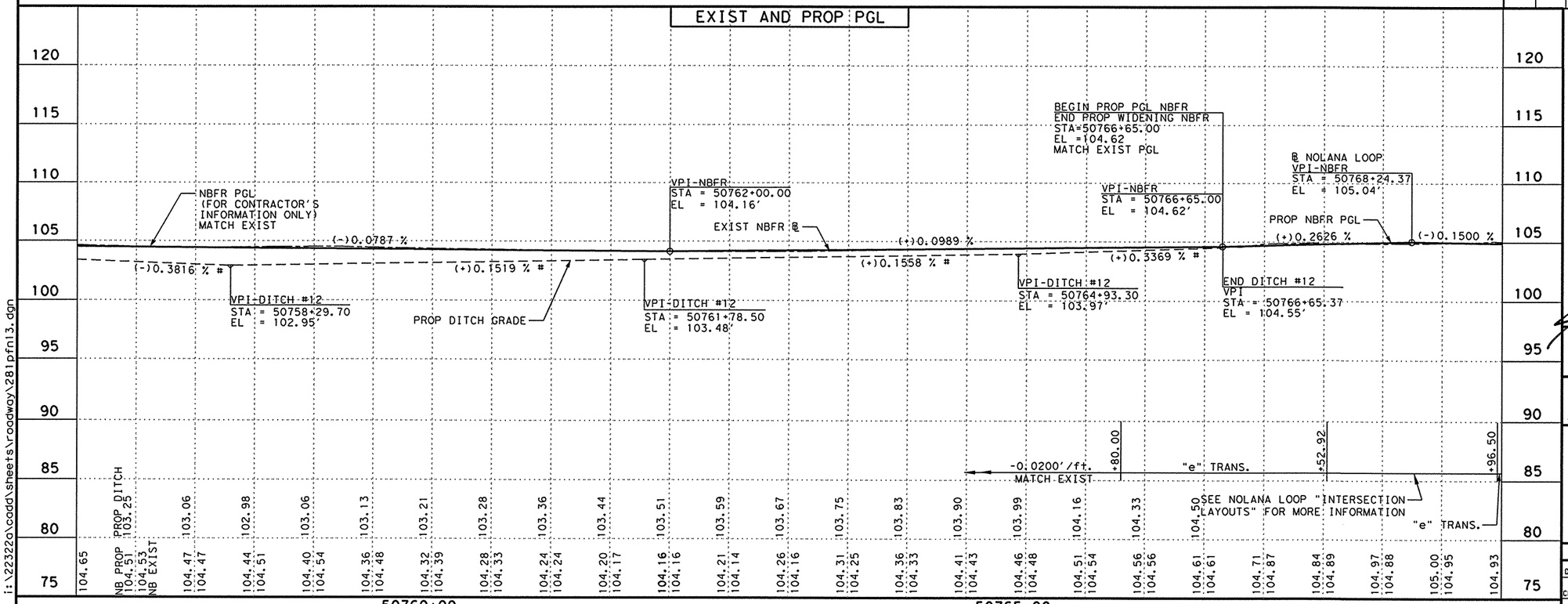

PROFILE LEGEND
- PROP NORTH BOUND FRONTAGE RD P.G.L.
- EXIST NORTH BOUND FRONTAGE RD B.L.
- PROP NORTH BOUND FRONTAGE RD DITCH

NOTES:
1. # SLOPE MEASURED ALONG LENGTH OF DITCH.

THE SEAL APPEARING ON THIS DOCUMENT WAS AUTHORIZED BY JAIME AGUILAR, P.E. 87606 ON 06/23/2003.

THE SEAL APPEARING ON THIS DOCUMENT WAS AUTHORIZED BY PHAISARN CHATANAPHOL, P.E. 89252 ON 06/23/2003.

STATE OF TEXAS — JAIME AGUILAR — 87606 — REGISTERED PROFESSIONAL ENGINEER

STATE OF TEXAS — PHAISARN CHATANAPHOL — 89252 — REGISTERED PROFESSIONAL ENGINEER

Parsons Brinckerhoff Quade & Douglas Inc.

Texas Department of Transportation

© 2003 by TxDOT

US 281
PLAN & PROFILE
NORTHBOUND FRONTAGE ROAD

STA. 50757+00 "FRN1" TO
STA. 50769+00 "FRN1"

PLAN 1"= 100' HORIZ
PROFILE 1"= 10' VERT

SHEET 13 OF 20 — 281PFN13.DGN

DESIGNED: JA	FED. RD DIV. No.	STATE	FEDERAL AID PROJECT No.	HIGHWAY No.
CHECKED: JP	6	TEXAS		US 281

DRAWN: CG	STATE DISTRICT	COUNTY	CONTROL No.	SECTION No.	JOB No.	SHEET No.
CHECKED: JDH	PHARR	HIDALGO	0255	08	091	325

i:\22322\cadd\sheets\roadway\281pfn13.dgn

NAME

10:12:37 AM

06/23/2003

i:\22322a\cadd\sheets\roadway\281pfn14.dgn

CAUTION!
MAJOR UTILITY CROSSINGS IN THE VICINITY. REFER TO THE "UTILITIES AND DRAINAGE PLAN & PROFILE" SHEETS FOR ADDITIONAL INFORMATION.

Curve FRN1-9

P.I. Station		50774+87.68
Delta	=	2° 15' 29.64" (RT)
Degree	=	0° 30' 00.00"
Tangent	=	225.85
Length	=	451.65
Radius	=	11,459.16
External	=	2.23
Long Chord	=	451.62
Mid. Ord.	=	2.23
P.C. Station		50772+61.83
P.T. Station		50777+13.48

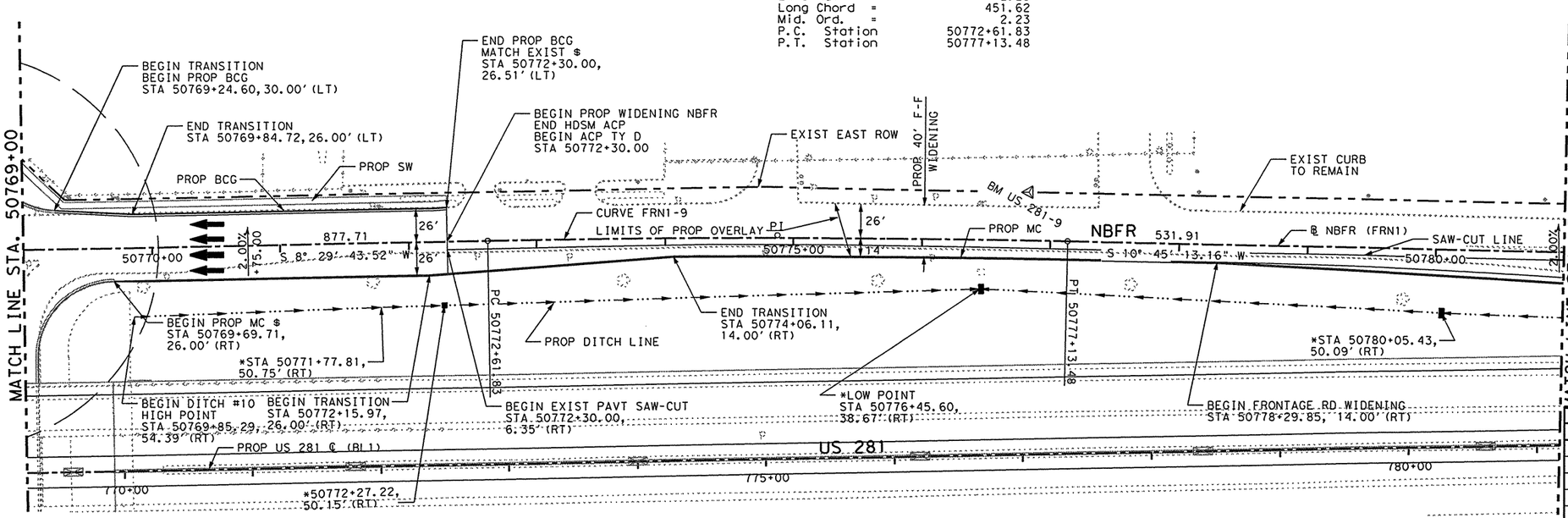

LEGEND:

- MC - MOUNTABLE CONC CURB
- BC - BARRIER CONC CURB
- MCG - MOUNTABLE CONC CURB & GUTTER (TY-B UNLESS OTHERWISE NOTED)
- BCG - BARRIER CONC CURB & GUTTER
- RW - RETAINING WALL
- RR - RIP RAP
- SGT - SINGLE GUARD RAIL TERMINAL
- SSCB - SINGLE SLOPE CONC BARRIER
- SSTR - SINGLE SLOPE TRAFFIC RAILING
- SW - SIDEWALK
- WCR - WHEEL CHAIR RAMP
- VG - 4' VALLEY GUTTER
- MBGF - METAL BEAM GUARD FENCE
- TAS - TERMINAL ANCHOR SECTION
- ▨ - PROP DRIVEWAY
- ⁘ - PROP CONCRETE DRIVEWAY

* SEE "DRAINAGE P&P SHEETS".
$ SEE "GORE NOSE & MISC DETAILS SHEET".

BM & HORIZONTAL DATA
BM=US 281-9
EL=104.73
STA=777+08.34, 205.90 LT
3 1/4" TXDOT ALUMINUM DISK

SHEET TOTALS

ITEM	EST.	FINAL	UNIT	DESCRIPTION
529	1136		LF	CONC CURB (TY B)(MOUNTABLE)
529	306		LF	CONC CURB AND GUTTER(TY-A)(BARRIER)

EXIST AND PROP PGL

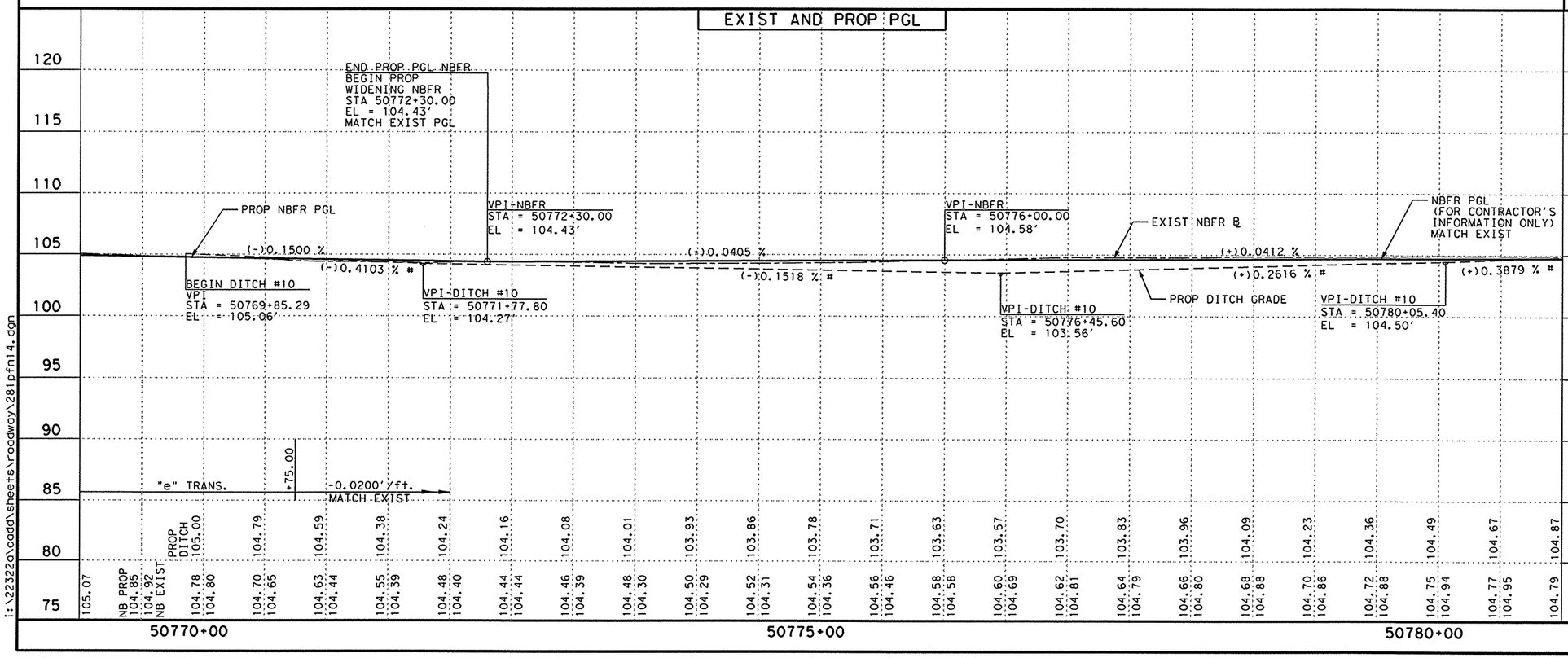

PROFILE LEGEND

- PROP NORTH BOUND FRONTAGE RD P.G.L.
- EXIST NORTH BOUND FRONTAGE RD B.L.
- PROP NORTH BOUND FRONTAGE RD DITCH

NOTES:
1. # SLOPE MEASURED ALONG LENGTH OF DITCH.

THE SEAL APPEARING ON THIS DOCUMENT WAS AUTHORIZED BY JAIME AGUILAR, P.E. 87606 ON 06/23/2003.

STATE OF TEXAS · JAIME AGUILAR · 87606 · REGISTERED PROFESSIONAL ENGINEER

THE SEAL APPEARING ON THIS DOCUMENT WAS AUTHORIZED BY PHAISARN CWATANAPHOL, P.E. 89252 ON 06/23/2003.

STATE OF TEXAS · PHAISARN CWATANAPHOL · 89252 · REGISTERED PROFESSIONAL ENGINEER

Parsons Brinckerhoff Quade & Douglas Inc.

Texas Department of Transportation

© 2003 by TxDOT

US 281
PLAN & PROFILE
NORTHBOUND FRONTAGE ROAD

STA. 50769+00 "FRN1" TO
STA. 50781+00 "FRN1"

PLAN 1"= 100' HORIZ
PROFILE 1"= 10' VERT

SHEET 14 OF 20 | 281PFN14.DGN

DESIGNED: JA	FED. RD DIV. No.	STATE	FEDERAL AID PROJECT No.	HIGHWAY No.
CHECKED: JP	6	TEXAS		US 281

DRAWN: CG	STATE DISTRICT	COUNTY	CONTROL No.	SECTION No.	JOB No.	SHEET No.
CHECKED: JDH	PHARR	HIDALGO	0255	08	091	326

NAME
10:12:55 AM
06/23/2003

Curve FRN1-10

P.I. Station	=	50784+70.23
Delta	=	2° 14' 53.36" (LT)
Degree	=	0° 30' 00.00"
Tangent	=	224.84
Length	=	449.63
Radius	=	11,459.16
External	=	2.21
Long Chord	=	449.60
Mid. Ord.	=	2.21
P.C. Station	=	50782+45.39
P.T. Station	=	50786+95.02

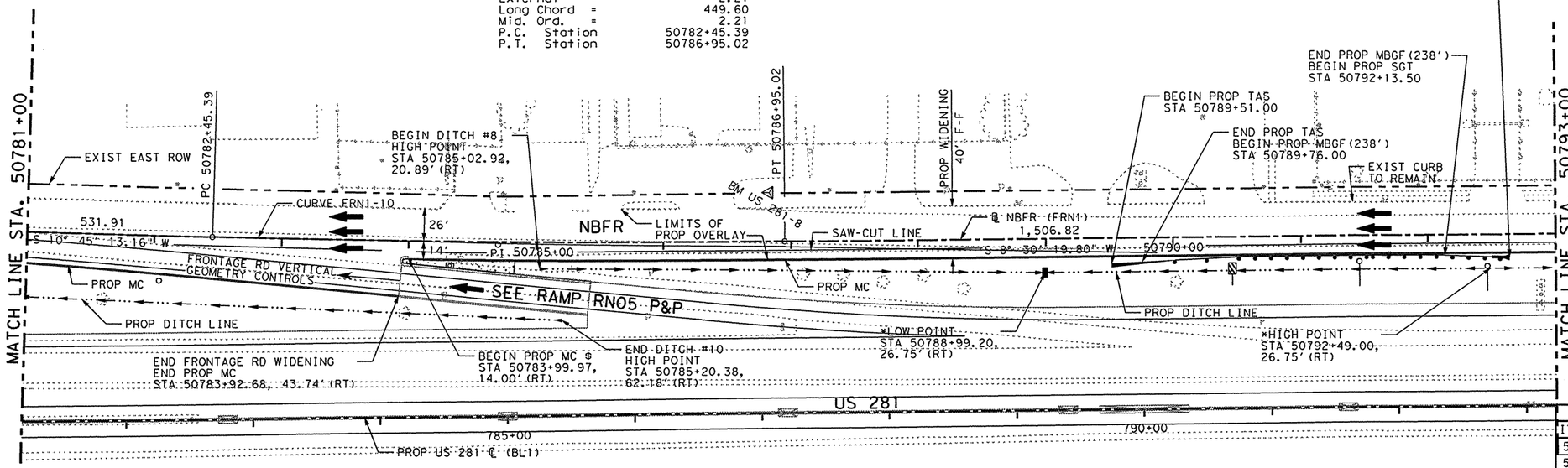

LEGEND:

- MC - MOUNTABLE CONC CURB
- BC - BARRIER CONC CURB
- MCG - MOUNTABLE CONC CURB & GUTTER (TY-B UNLESS OTHERWISE NOTED)
- BCG - BARRIER CONC CURB & GUTTER
- RW - RETAINING WALL
- RR - RIP RAP
- SGT - SINGLE GUARD RAIL TERMINAL
- SSCB - SINGLE SLOPE CONC BARRIER
- SSTR - SINGLE SLOPE TRAFFIC RAILING
- SW - SIDEWALK
- WCR - WHEEL CHAIR RAMP
- VG - 4' VALLEY GUTTER
- MBGF - METAL BEAM GUARD FENCE
- TAS - TERMINAL ANCHOR SECTION
- PROP DRIVEWAY
- PROP CONCRETE DRIVEWAY
- DEL ASM TY B (D-SW)
- OBJ MRK ASM TY 3 (OM-3R)

* SEE "DRAINAGE P&P SHEETS".
$ SEE "GORE NOSE & MISC DETAILS SHEET".

BM & HORIZONTAL DATA
BM=US 281-8
EL=104.98
STA=787+06.77, 175.17 LT
3 1/4" TXDOT ALUMINUM DISK

SHEET TOTALS

ITEM	EST.	FINAL	UNIT	DESCRIPTION
529	1195		LF	CONC CURB (TY B) (MOUNTABLE)
540	1		EA	TERM ANCHOR SECT (12GA)
540	238		LF	MTL BEAM GD FEN (12GA) (TIM POST) (BLKOUT)
5819	1		EA	SINGLE GUARDRAIL TERM (TY II)
658	2		EA	DEL ASM TY B (D-SW)
658	1		EA	OBJ MRK TY 3 (OM-3R)

EXIST AND PROP PGL

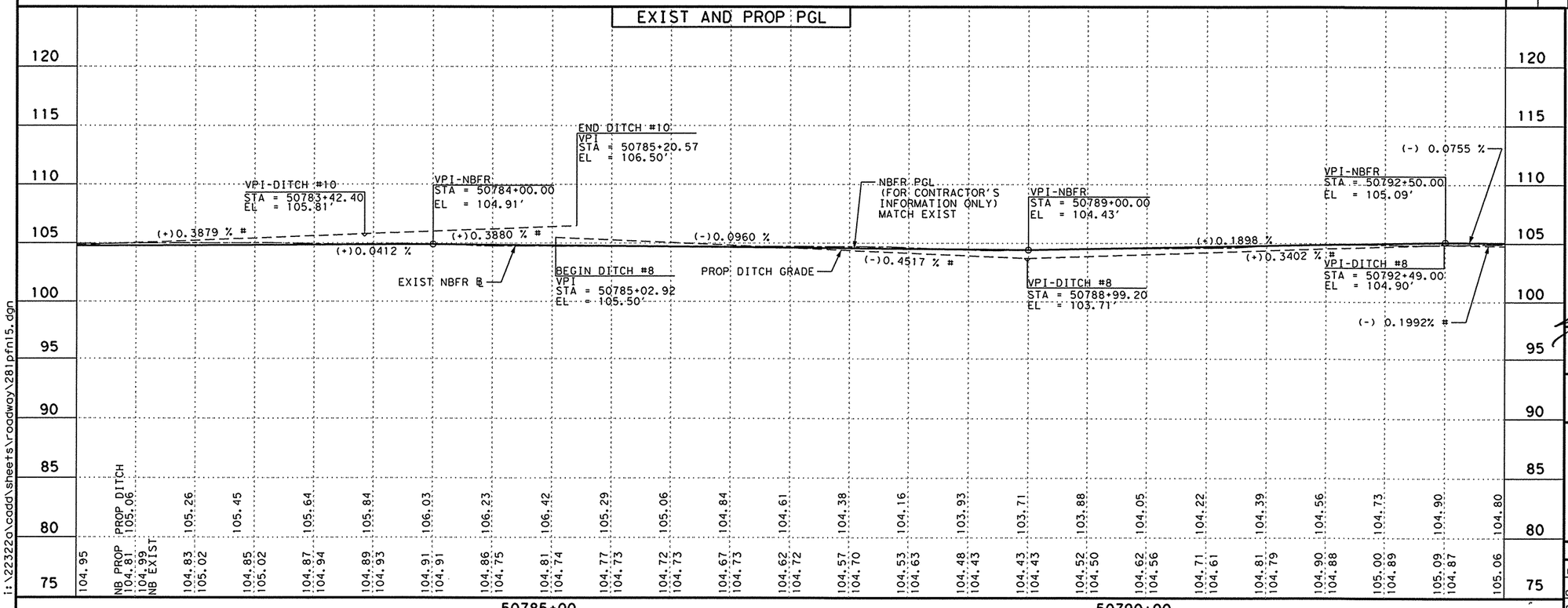

PROFILE LEGEND

- PROP NORTH BOUND FRONTAGE RD P.G.L.
- EXIST NORTH BOUND FRONTAGE RD B.L.
- PROP NORTH BOUND FRONTAGE RD DITCH

NOTES:
1. # SLOPE MEASURED ALONG LENGTH OF DITCH.

THE SEAL APPEARING ON THIS DOCUMENT WAS AUTHORIZED BY JAIME AGUILAR, P.E. 87606 ON 06/23/2003.

THE SEAL APPEARING ON THIS DOCUMENT WAS AUTHORIZED BY PHAISARN CWATANAPHOL, P.E. 89252 ON 06/23/2003.

STATE OF TEXAS — JAIME AGUILAR — 87606 — REGISTERED PROFESSIONAL ENGINEER

STATE OF TEXAS — PHAISARN CWATANAPHOL — 89252 — REGISTERED PROFESSIONAL ENGINEER

Parsons Brinckerhoff Quade & Douglas Inc.

Texas Department of Transportation
© 2003 by TxDOT

US 281
PLAN & PROFILE
NORTHBOUND FRONTAGE ROAD

STA. 50781+00 "FRN1" TO
STA. 50793+00 "FRN1"

PLAN 1"= 100' HORIZ
PROFILE 1"= 10' VERT

SHEET 15 OF 20 — 281PFN15.DGN

DESIGNED: JA	FED. RD DIV. NO.	STATE	FEDERAL AID PROJECT No.				HIGHWAY No.	
CHECKED: JP	6	TEXAS					US 281	
DRAWN: CG	STATE DISTRICT	COUNTY	CONTROL No.	SECTION No.	JOB No.	SHEET No.		
CHECKED: JDH	PHARR	HIDALGO	0255	08	091	327		

i:\22322o\cadd\sheets\roadway\281pfn15.dgn

NAME
10:13:14 AM
06/23/2003

Curve FRN1-11

P.I. Station		50804+21.65
Delta	=	2° 11' 52.04" (LT)
Degree	=	0° 30' 00.00"
Tangent	=	219.81
Length	=	439.56
Radius	=	11,459.16
External	=	2.11
Long Chord	=	439.53
Mid. Ord.	=	2.11
P.C. Station		50802+01.84
P.T. Station		50806+41.40

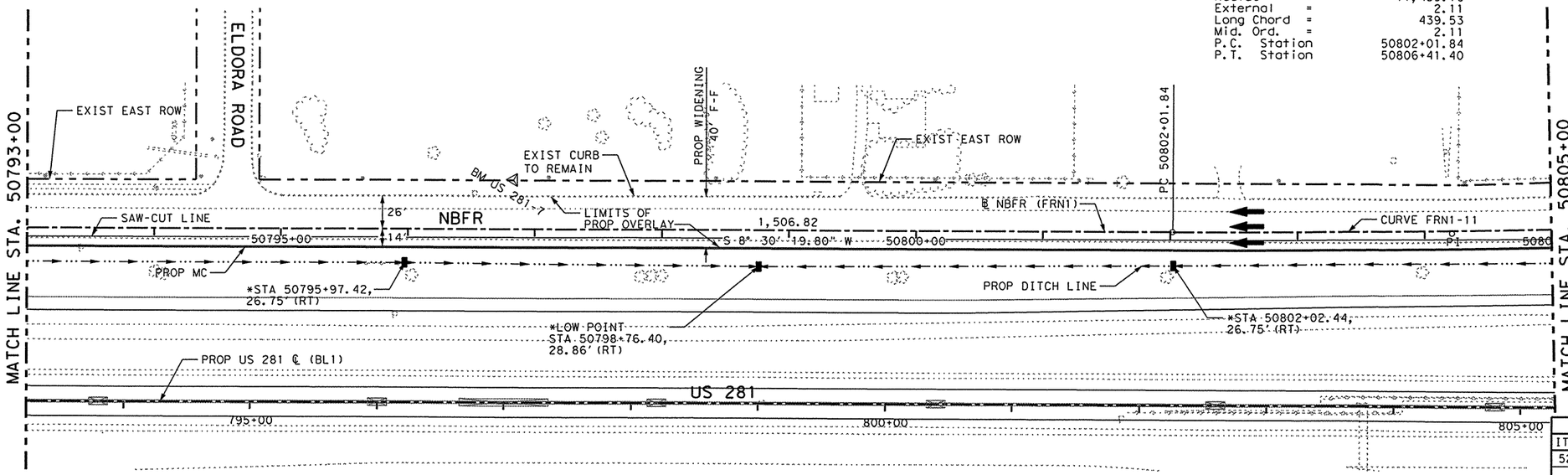

LEGEND:

- MC - MOUNTABLE CONC CURB
- BC - BARRIER CONC CURB
- MCG - MOUNTABLE CONC CURB & GUTTER (TY-B UNLESS OTHERWISE NOTED)
- BCG - BARRIER CONC CURB & GUTTER
- RW - RETAINING WALL
- RR - RIP RAP
- SGT - SINGLE GUARD RAIL TERMINAL
- SSCB - SINGLE SLOPE CONC BARRIER
- SSTR - SINGLE SLOPE TRAFFIC RAILING
- SW - SIDEWALK
- WCR - WHEEL CHAIR RAMP
- VG - 4' VALLEY GUTTER
- MBGF - METAL BEAM GUARD FENCE
- TAS - TERMINAL ANCHOR SECTION
- PROP DRIVEWAY
- PROP CONCRETE DRIVEWAY

* SEE "DRAINAGE P&P SHEETS".

⚠BM & HORIZONTAL DATA
BM=US 281-7
EL=104.99
STA=797+06.99, 175.36 LT
3 1/4" TXDOT ALUMINUM DISK

SHEET TOTALS

ITEM	EST.	FINAL	UNIT	DESCRIPTION
529	1200		LF	CONC CURB (TY B)(MOUNTABLE)

CAUTION!
MAJOR UTILITY CROSSINGS IN THE VICINITY. REFER TO THE "UTILITIES AND DRAINAGE PLAN & PROFILE" SHEETS FOR ADDITIONAL INFORMATION.

EXIST AND PROP PGL

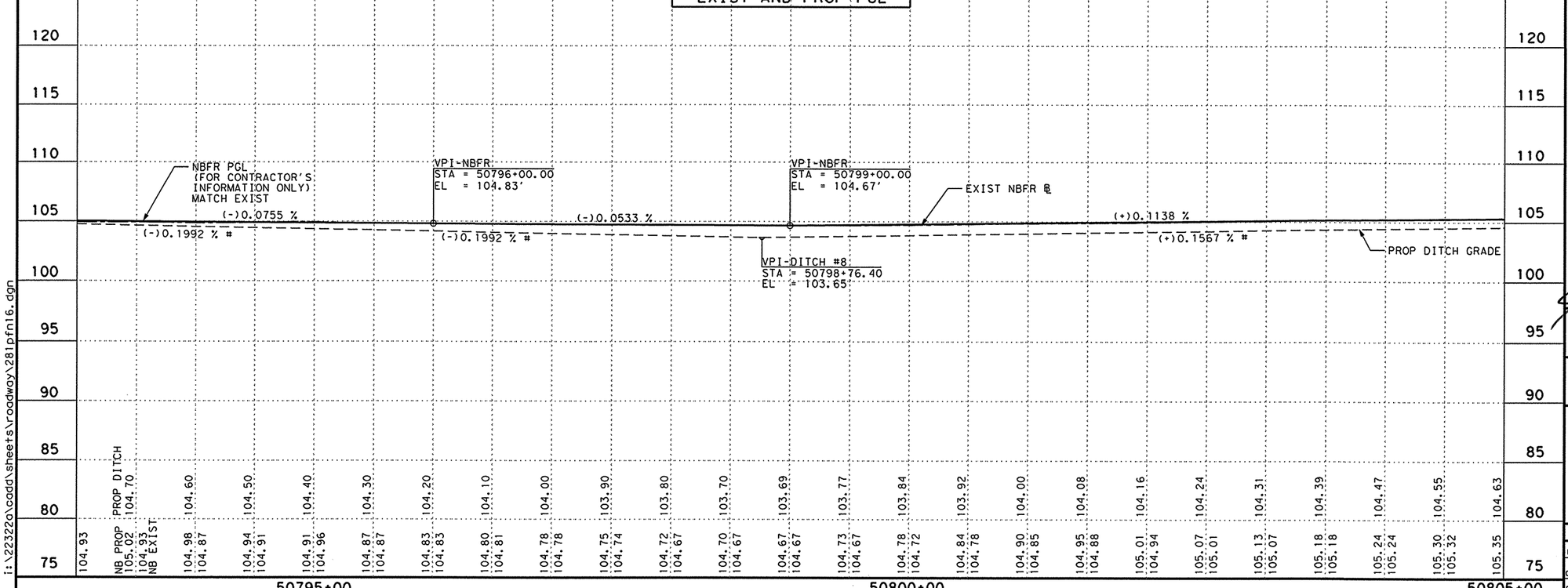

PROFILE LEGEND
- PROP NORTH BOUND FRONTAGE RD P.G.L.
- EXIST NORTH BOUND FRONTAGE RD B.L.
- PROP NORTH BOUND FRONTAGE RD DITCH

NOTES:
1. # SLOPE MEASURED ALONG LENGTH OF DITCH.

THE SEAL APPEARING ON THIS DOCUMENT WAS AUTHORIZED BY JAIME AGUILAR, P.E. 87606 ON 06/23/2003.

THE SEAL APPEARING ON THIS DOCUMENT WAS AUTHORIZED BY PHAISARN CWATANAPHOL, P.E. 89252 ON 06/23/2003.

STATE OF TEXAS — JAIME AGUILAR — 87606 — REGISTERED PROFESSIONAL ENGINEER

STATE OF TEXAS — PHAISARN CWATANAPHOL — 89252 — REGISTERED PROFESSIONAL ENGINEER

Parsons Brinckerhoff Quade & Douglas Inc.

Texas Department of Transportation

© 2003 by TxDOT

US 281
PLAN & PROFILE
NORTHBOUND FRONTAGE ROAD

STA. 50793+00 "FRN1" TO
STA. 50805+00 "FRN1"

PLAN 1"= 100' HORIZ
PROFILE 1"= 10' VERT

SHEET 16 OF 20 | 281PFN16.DGN

DESIGNED: JA	FED. RD DIV. No.	STATE	FEDERAL AID PROJECT No.		HIGHWAY No.
CHECKED: JP	6	TEXAS			US 281
DRAWN: CG	STATE DISTRICT	COUNTY	CONTROL No.	SECTION No.	JOB No.	SHEET No.
CHECKED: JDH	PHARR	HIDALGO	0255	08	091	328

i:\22322g\cadd\sheets\roadway\281pfn16.dgn

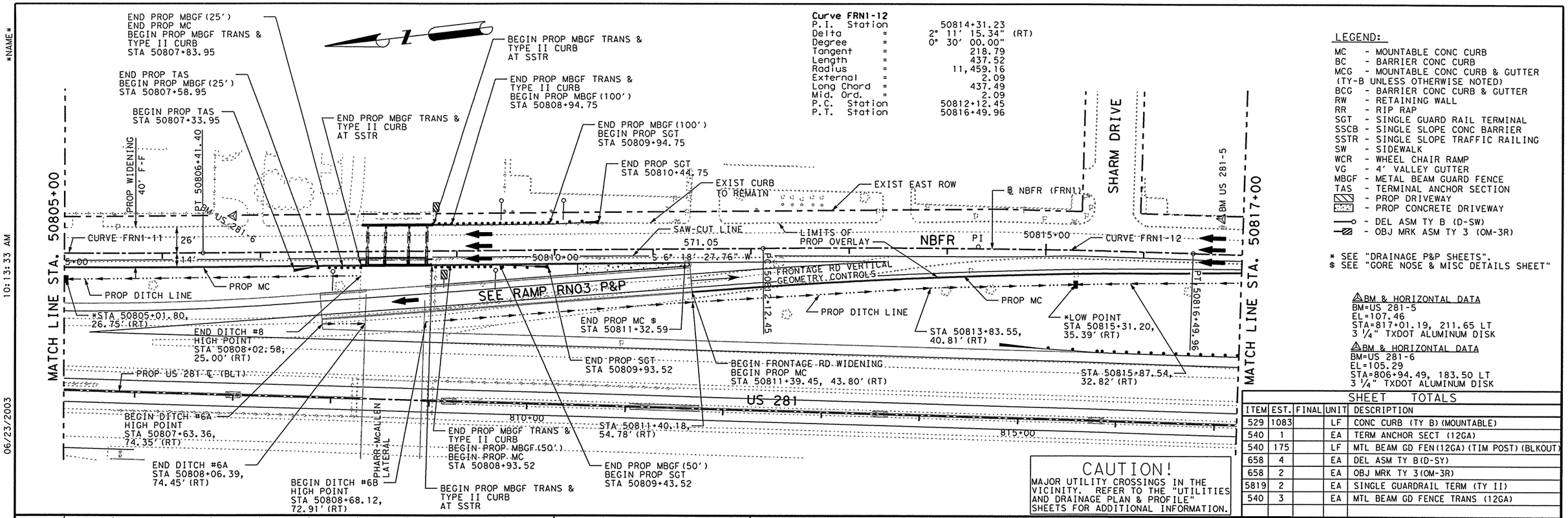

Curve FRN1-12

P.I. Station	=	50814+31.23
Delta	=	2° 11' 15.34" (RT)
Degree	=	0° 30' 00.00"
Tangent	=	218.79
Length	=	437.52
Radius	=	11,459.16
External	=	2.09
Long Chord	=	437.49
Mid. Ord.	=	2.09
P.C. Station	=	50812+12.45
P.T. Station	=	50816+49.96

LEGEND:

- MC - MOUNTABLE CONC CURB
- BC - BARRIER CONC CURB
- MCG - MOUNTABLE CONC CURB & GUTTER (TY-B UNLESS OTHERWISE NOTED)
- BCG - BARRIER CONC CURB & GUTTER
- RW - RETAINING WALL
- RR - RIP RAP
- SGT - SINGLE GUARD RAIL TERMINAL
- SSCB - SINGLE SLOPE CONC BARRIER
- SSTR - SINGLE SLOPE TRAFFIC RAILING
- SW - SIDEWALK
- WCR - WHEEL CHAIR RAMP
- VG - 4' VALLEY GUTTER
- MBGF - METAL BEAM GUARD FENCE
- TAS - TERMINAL ANCHOR SECTION
- PROP DRIVEWAY
- PROP CONCRETE DRIVEWAY
- DEL ASM TY B (D-SW)
- OBJ MRK ASM TY 3 (OM-3R)

* SEE "DRAINAGE P&P SHEETS".
$ SEE "GORE NOSE & MISC DETAILS SHEET"

△BM & HORIZONTAL DATA
BM=US 281-5
EL=107.46
STA=817+01.19, 211.65 LT
3 1/4" TXDOT ALUMINUM DISK

△BM & HORIZONTAL DATA
BM=US 281-6
EL=105.29
STA=806+94.49, 183.50 LT
3 1/4" TXDOT ALUMINUM DISK

SHEET TOTALS

ITEM	EST.	FINAL	UNIT	DESCRIPTION
529	1083		LF	CONC CURB (TY B) (MOUNTABLE)
540	1		EA	TERM ANCHOR SECT (12GA)
540	175		LF	MTL BEAM GD FEN (12GA) (TIM POST) (BLKOUT)
658	4		EA	DEL ASM TY B (D-SY)
658	2		EA	OBJ MRK TY 3 (OM-3R)
5819	2		EA	SINGLE GUARDRAIL TERM (TY II)
540	3		EA	MTL BEAM GD FENCE TRANS (12GA)

CAUTION!
MAJOR UTILITY CROSSINGS IN THE VICINITY. REFER TO THE "UTILITIES AND DRAINAGE PLAN & PROFILE" SHEETS FOR ADDITIONAL INFORMATION.

EXIST AND PROP PGL

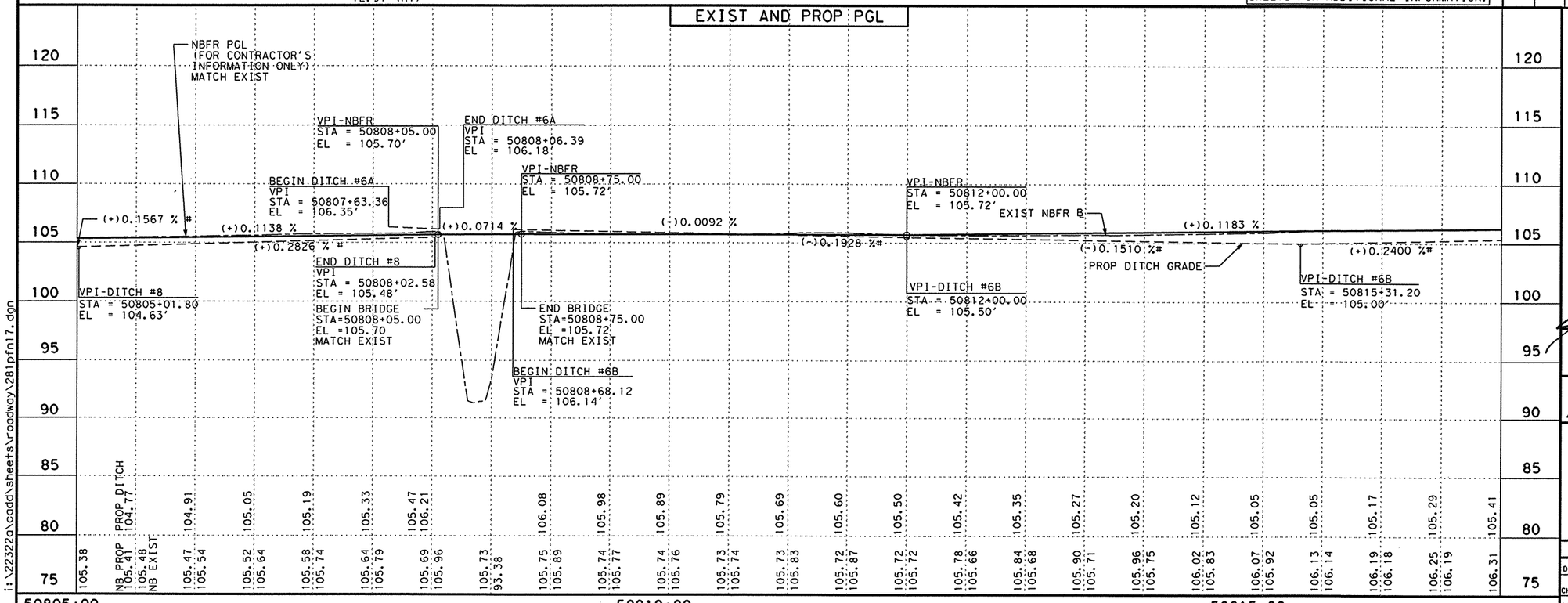

PROFILE LEGEND
- PROP NORTH BOUND FRONTAGE RD P.G.L.
- EXIST NORTH BOUND FRONTAGE RD B.L.
- PROP NORTH BOUND FRONTAGE RD DITCH

NOTES:
1. # SLOPE MEASURED ALONG LENGTH OF DITCH.

THE SEAL APPEARING ON THIS DOCUMENT WAS AUTHORIZED BY JAIME AGUILAR, P.E. 87606 ON 06/23/2003.

THE SEAL APPEARING ON THIS DOCUMENT WAS AUTHORIZED BY PHAISARN CWATANAPHOL, P.E. 89252 ON 06/23/2003.

STATE OF TEXAS — JAIME AGUILAR — 87606 — REGISTERED PROFESSIONAL ENGINEER

STATE OF TEXAS — PHAISARN CWATANAPHOL — 89252 — REGISTERED PROFESSIONAL ENGINEER

Parsons Brinckerhoff Quade & Douglas Inc.

Texas Department of Transportation

© 2003 by TxDOT

US 281
PLAN & PROFILE
NORTHBOUND FRONTAGE ROAD

STA. 50805+00 "FRN1" TO
STA. 50817+00 "FRN1"

PLAN 1"= 100' HORIZ
PROFILE 1"= 10' VERT

SHEET 17 OF 20 — 281PFN17.DGN

DESIGNED: JA	FED. RD DIV. No.	STATE	FEDERAL AID PROJECT No.	HIGHWAY No.
CHECKED: JP	6	TEXAS		US 281

DRAWN: CG	STATE DISTRICT	COUNTY	CONTROL No.	SECTION No.	JOB No.	SHEET No.
CHECKED: JDH	PHARR	HIDALGO	0255	08	091	329

NAME
10:13:33 AM
06/23/2003
i:\22322a\cadd\sheets\roadway\281pfn17.dgn

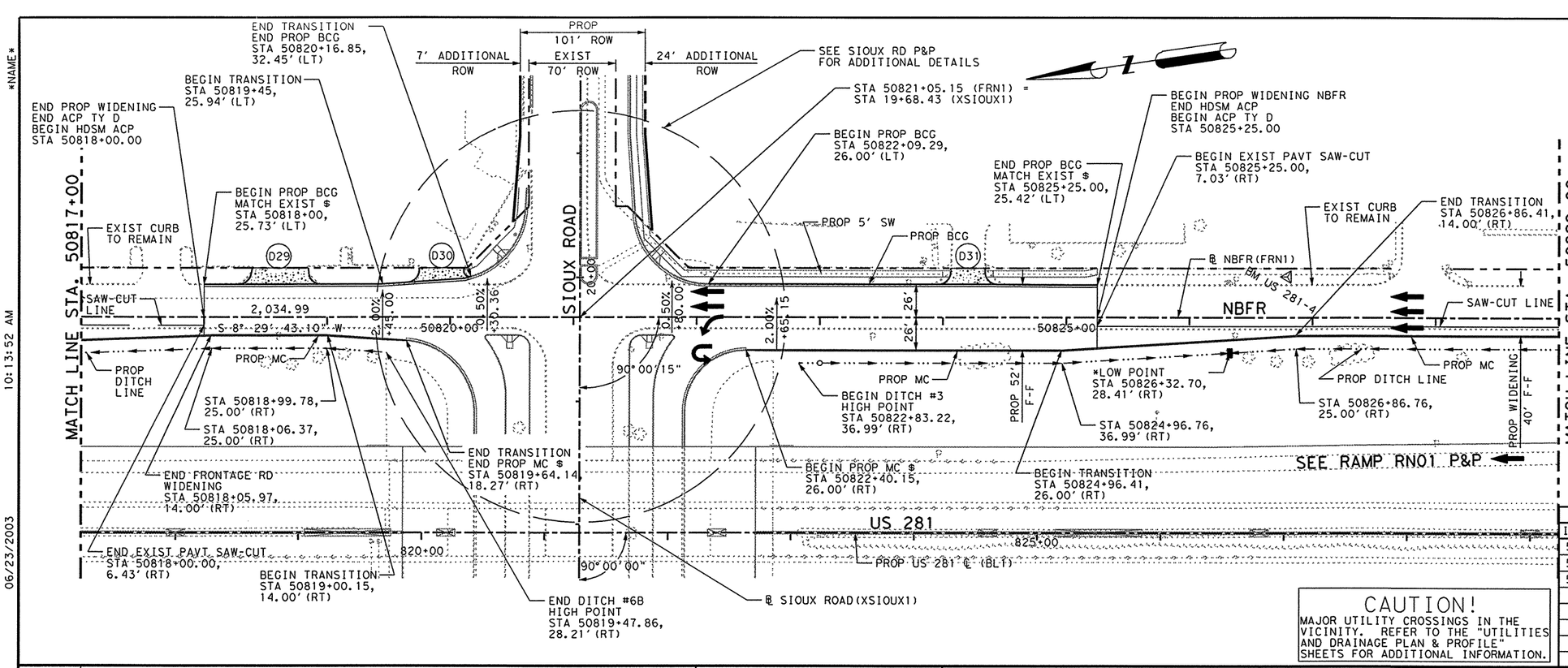

LEGEND:

- MC - MOUNTABLE CONC CURB
- BC - BARRIER CONC CURB
- MCG - MOUNTABLE CONC CURB & GUTTER (TY-B UNLESS OTHERWISE NOTED)
- BCG - BARRIER CONC CURB & GUTTER
- RW - RETAINING WALL
- RR - RIP RAP
- SGT - SINGLE GUARD RAIL TERMINAL
- SSCB - SINGLE SLOPE CONC BARRIER
- SSTR - SINGLE SLOPE TRAFFIC RAILING
- SW - SIDEWALK
- WCR - WHEEL CHAIR RAMP
- VG - 4' VALLEY GUTTER
- MBGF - METAL BEAM GUARD FENCE
- TAS - TERMINAL ANCHOR SECTION
- PROP DRIVEWAY
- PROP CONCRETE DRIVEWAY

FOR DRIVEWAY APRON TYPES AND SIZES, SEE "DRIVEWAY SUMMARY".

* SEE "DRAINAGE P&P SHEETS".

$ SEE "GORE NOSE & MISC DETAILS SHEET".

BM & HORIZONTAL DATA
BM=US 281-4
EL=106.43
STA=827+02.50, 207.77 LT
3 1/4" TXDOT ALUMINUM DISK

SHEET TOTALS

ITEM	EST.	FINAL	UNIT	DESCRIPTION
529	925		LF	CONC CURB (TY B) (MOUNTABLE)
529	534		LF	CONC CURB AND GUTTER (TY-A) (BARRIER)
530	149		SY	DRVWYS (CONC) (6")

CAUTION!
MAJOR UTILITY CROSSINGS IN THE VICINITY. REFER TO THE "UTILITIES AND DRAINAGE PLAN & PROFILE" SHEETS FOR ADDITIONAL INFORMATION.

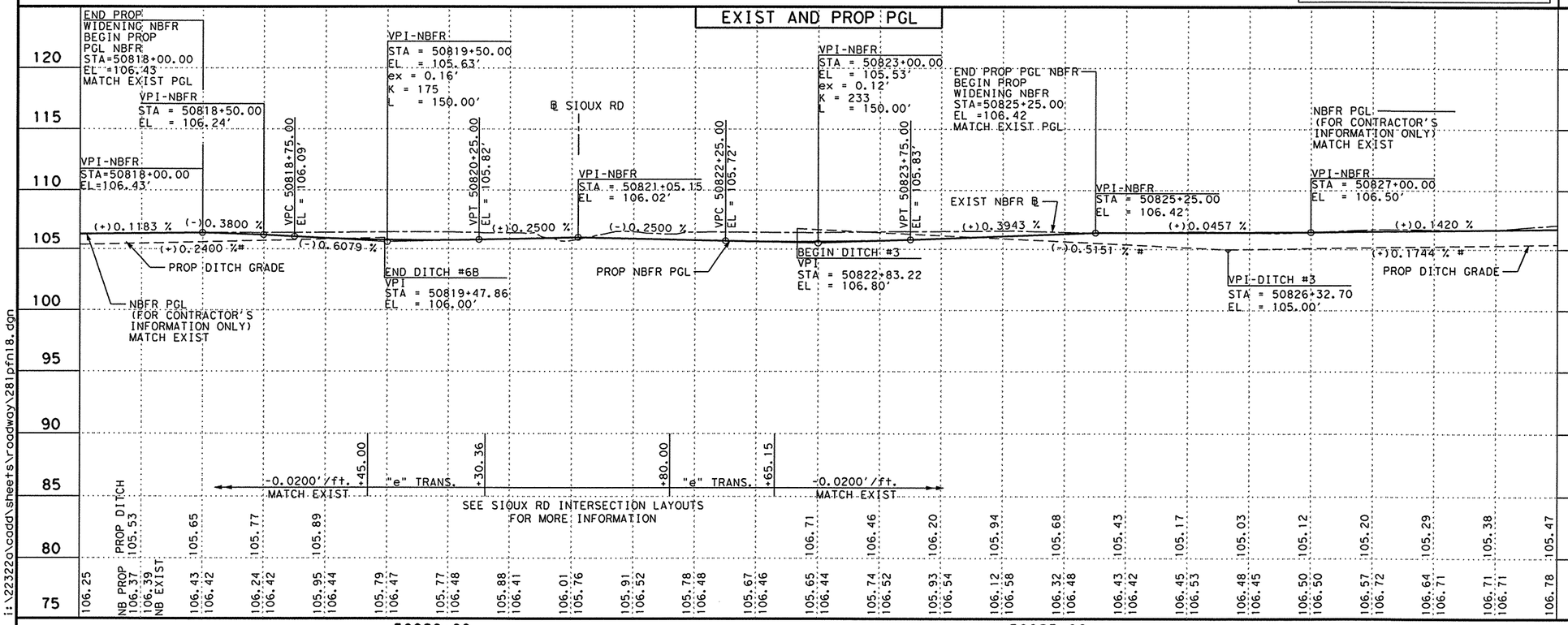

PROFILE LEGEND

- PROP NORTH BOUND FRONTAGE RD P.G.L.
- EXIST NORTH BOUND FRONTAGE RD B.L.
- PROP NORTH BOUND FRONTAGE RD DITCH

NOTES:
1. # SLOPE MEASURED ALONG LENGTH OF DITCH.

THE SEAL APPEARING ON THIS DOCUMENT WAS AUTHORIZED BY JAIME AGUILAR, P.E. 87606 ON 06/23/2003.

THE SEAL APPEARING ON THIS DOCUMENT WAS AUTHORIZED BY PHAISARN CWATANAPHOL, P.E. 89252 ON 06/23/2003.

Parsons Brinckerhoff Quade & Douglas Inc.

Texas Department of Transportation

© 2003 by TxDOT

US 281
PLAN & PROFILE
NORTHBOUND FRONTAGE ROAD

STA. 50817+00 "FRN1" TO
STA. 50829+00 "FRN1"

PLAN 1"= 100' HORIZ
PROFILE 1"= 10' VERT

SHEET 18 OF 20 | 281PFN18.DGN

DESIGNED: JA	FED. RD DIV. No.	STATE	FEDERAL AID PROJECT No.	HIGHWAY No.
CHECKED: JP	6	TEXAS		US 281

DRAWN: CG	STATE DISTRICT	COUNTY	CONTROL No.	SECTION No.	JOB No.	SHEET No.
CHECKED: JDH	PHARR	HIDALGO	0255	08	091	330

NAME

10:07:02 AM

06/23/2003

i:\22322a\cadd\sheets\roadway\281pfn19.dgn

Curve FRN1-13

P.I. Station	=	50838+64.43
Delta	=	3° 35' 18.09" (LT)
Degree	=	1° 00' 00.00"
Tangent	=	179.48
Length	=	358.84
Radius	=	5,729.58
External	=	2.81
Long Chord	=	358.78
Mid. Ord.	=	2.81
P.C. Station	=	50836+84.95
P.T. Station	=	50840+43.79

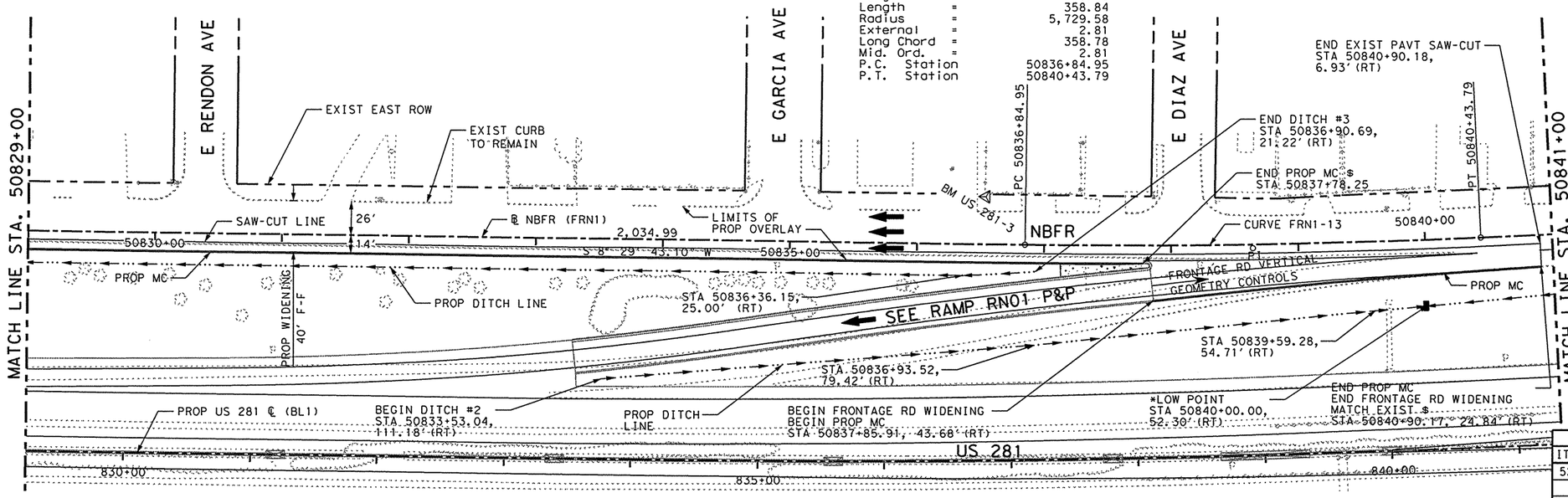

LEGEND:

- MC - MOUNTABLE CONC CURB
- BC - BARRIER CONC CURB
- MCG - MOUNTABLE CONC CURB & GUTTER (TY-B UNLESS OTHERWISE NOTED)
- BCG - BARRIER CONC CURB & GUTTER
- RW - RETAINING WALL
- RR - RIP RAP
- SGT - SINGLE GUARD RAIL TERMINAL
- SSCB - SINGLE SLOPE CONC BARRIER
- SSTR - SINGLE SLOPE TRAFFIC RAILING
- SW - SIDEWALK
- WCR - WHEEL CHAIR RAMP
- VG - 4' VALLEY GUTTER
- MBGF - METAL BEAM GUARD FENCE
- TAS - TERMINAL ANCHOR SECTION
- PROP DRIVEWAY
- PROP CONCRETE DRIVEWAY

* SEE "DRAINAGE P&P SHEETS".
$ SEE "GORE NOSE & MISC DETAILS SHEET".

BM & HORIZONTAL DATA
BM=US 281-3
EL=107.76
STA=836+81.89, 209.01 LT
3 1/4" TXDOT ALUMINUM DISK

SHEET TOTALS

ITEM	EST.	FINAL	UNIT	DESCRIPTION
529	1185		LF	CONC CURB (TY B)(MOUNTABLE)

CAUTION!
MAJOR UTILITY CROSSINGS IN THE VICINITY. REFER TO THE "UTILITIES AND DRAINAGE PLAN & PROFILE" SHEETS FOR ADDITIONAL INFORMATION.

EXIST AND PROP PGL

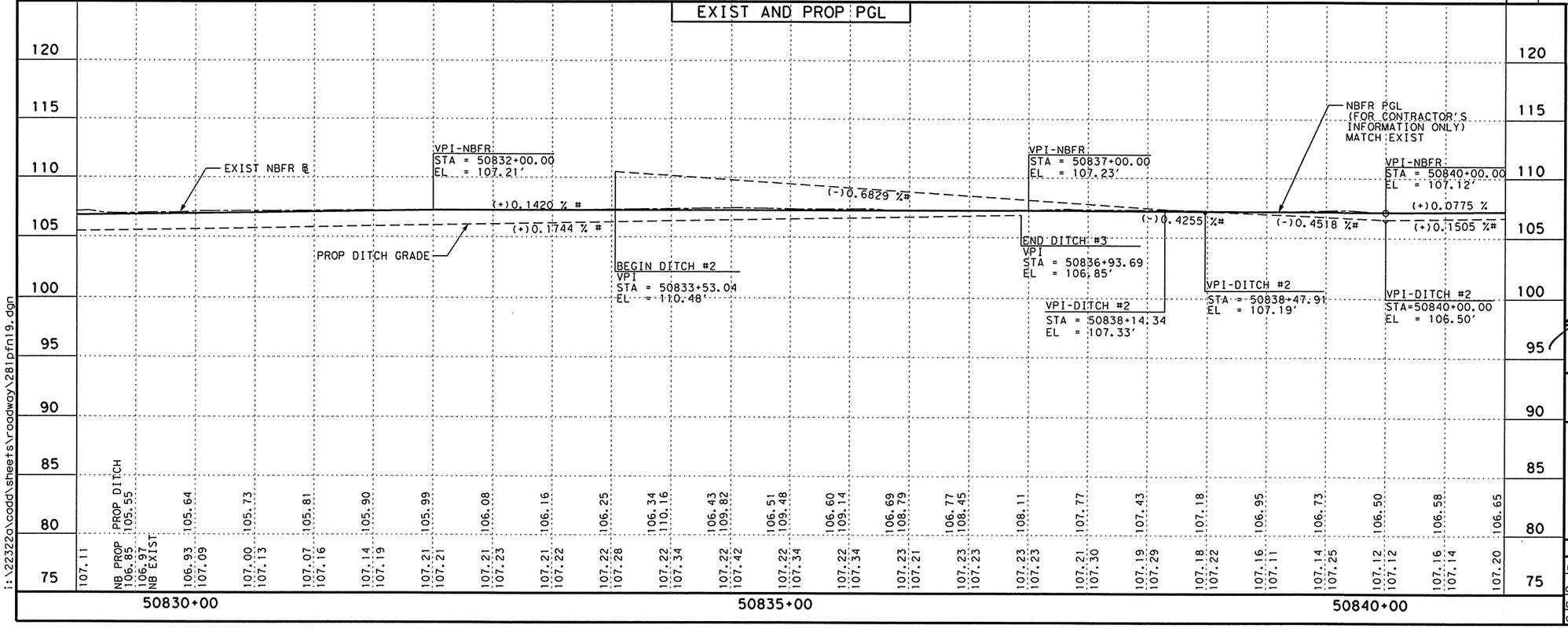

PROFILE LEGEND
- PROP NORTH BOUND FRONTAGE RD P.G.L.
- EXIST NORTH BOUND FRONTAGE RD B.L.
- PROP NORTH BOUND FRONTAGE RD DITCH

NOTES:
1. # SLOPE MEASURED ALONG LENGTH OF DITCH.

THE SEAL APPEARING ON THIS DOCUMENT WAS AUTHORIZED BY JAIME AGUILAR, P.E. 87606 ON 06/23/2003.

THE SEAL APPEARING ON THIS DOCUMENT WAS AUTHORIZED BY PHAISARN CWATANAPHOL, P.E. 89252 ON 06/23/2003.

STATE OF TEXAS — JAIME AGUILAR — 87606 — REGISTERED PROFESSIONAL ENGINEER

STATE OF TEXAS — PHAISARN CWATANAPHOL — 89252 — REGISTERED PROFESSIONAL ENGINEER

Parsons Brinckerhoff Quade & Douglas Inc.

Texas Department of Transportation

© 2003 by TxDOT

US 281
PLAN & PROFILE
NORTHBOUND FRONTAGE ROAD

STA. 50829+00 "FRN1" TO
STA. 50841+00 "FRN1"

PLAN 1"= 100' HORIZ
PROFILE 1"= 10' VERT

SHEET 19 OF 20 | 281PFN19.DGN

DESIGNED: JA	FED. RD DIV. No.	STATE	FEDERAL AID PROJECT No.		HIGHWAY No.	
CHECKED: JP	6	TEXAS			US 281	
DRAWN: CG	STATE DISTRICT	COUNTY	CONTROL No.	SECTION No.	JOB No.	SHEET No.
CHECKED: JDH	PHARR	HIDALGO	0255	08	091	331

NAME
10:07:17 AM
06/23/2003

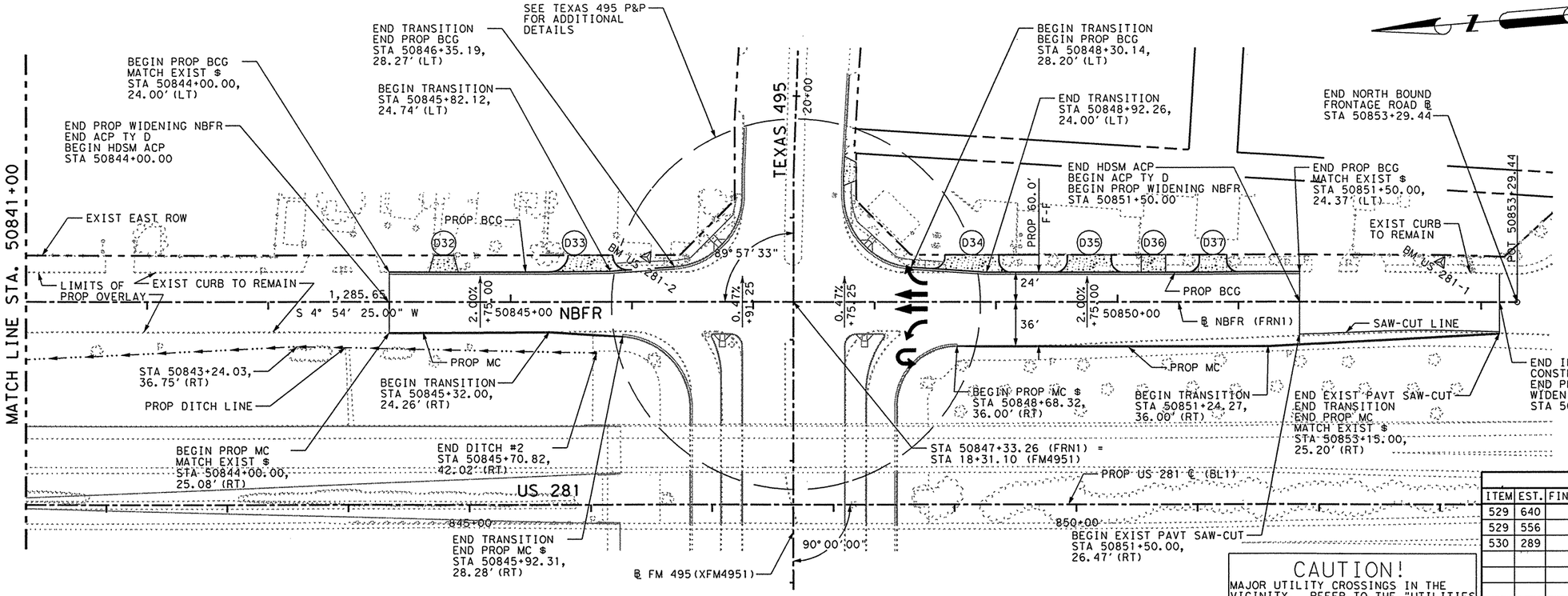

LEGEND:

- MC - MOUNTABLE CONC CURB
- BC - BARRIER CONC CURB
- MCG - MOUNTABLE CONC CURB & GUTTER (TY-B UNLESS OTHERWISE NOTED)
- BCG - BARRIER CONC CURB & GUTTER
- RW - RETAINING WALL
- RR - RIP RAP
- SGT - SINGLE GUARD RAIL TERMINAL
- SSCB - SINGLE SLOPE CONC BARRIER
- SSTR - SINGLE SLOPE TRAFFIC RAILING
- SW - SIDEWALK
- WCR - WHEEL CHAIR RAMP
- VG - 4' VALLEY GUTTER
- MBGF - METAL BEAM GUARD FENCE
- TAS - TERMINAL ANCHOR SECTION
- ▨ - PROP DRIVEWAY
- ⁘ - PROP CONCRETE DRIVEWAY

FOR DRIVEWAY APRON TYPES AND SIZES, SEE "DRIVEWAY SUMMARY".

* SEE "DRAINAGE P&P SHEETS".

$ SEE "GORE NOSE & MISC DETAILS SHEET".

CAUTION!
MAJOR UTILITY CROSSINGS IN THE VICINITY. REFER TO THE "UTILITIES AND DRAINAGE PLAN & PROFILE" SHEETS FOR ADDITIONAL INFORMATION.

BM & HORIZONTAL DATA
BM=US 281-1
EL=107.13
STA=853+00.67, 198.90 LT
3 1/4" TXDOT ALUMINUM DISK

BM & HORIZONTAL DATA
BM=US 281-2
EL=108.36
STA=846+46.19, 203.37 LT
3 1/4" TXDOT ALUMINUM DISK

SHEET TOTALS

ITEM	EST.	FINAL	UNIT	DESCRIPTION
529	640		LF	CONC CURB (TY B)(MOUNTABLE)
529	556		LF	CONC CURB AND GUTTER(TY-A)(BARRIER)
530	289		SY	DRVWYS (CONC)(6")

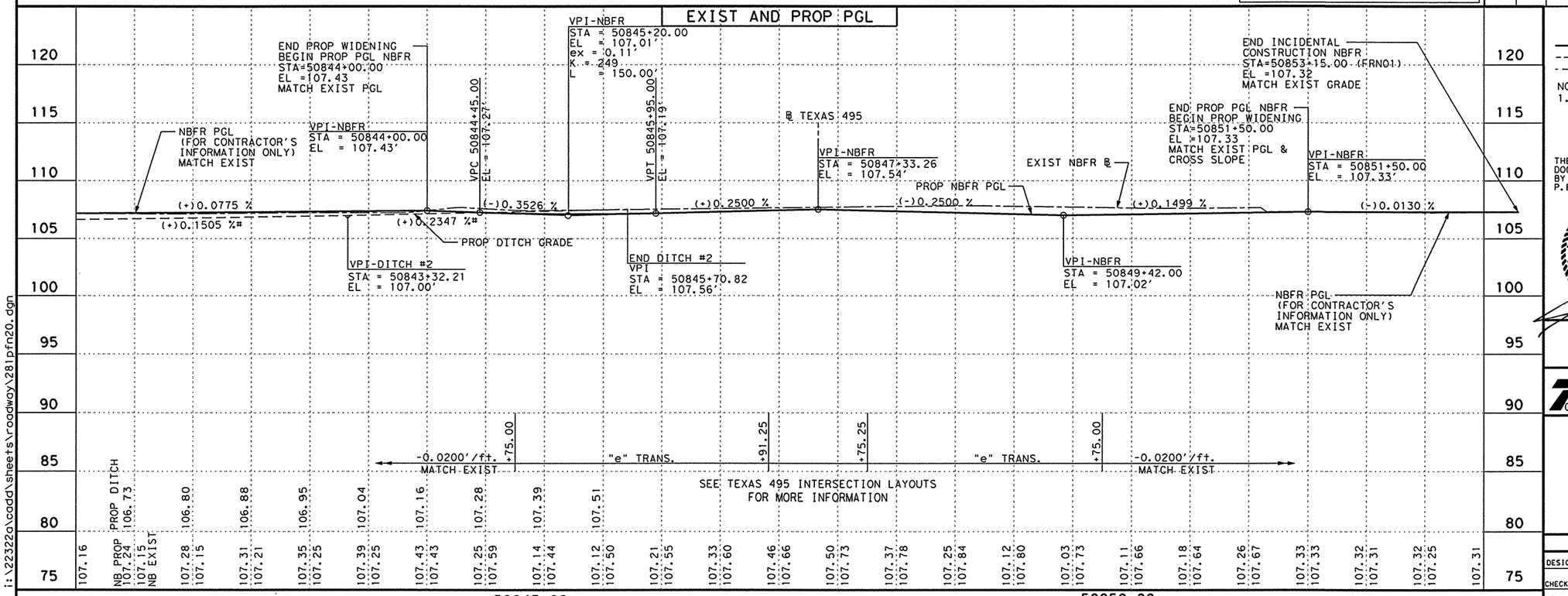

PROFILE LEGEND

- PROP NORTH BOUND FRONTAGE RD P.G.L.
- EXIST NORTH BOUND FRONTAGE RD B.L.
- PROP NORTH BOUND FRONTAGE RD DITCH

NOTES:
1. # SLOPE MEASURED ALONG LENGTH OF DITCH.

THE SEAL APPEARING ON THIS DOCUMENT WAS AUTHORIZED BY JAIME AGUILAR, P.E. 87606 ON 06/23/2003.

THE SEAL APPEARING ON THIS DOCUMENT WAS AUTHORIZED BY PHAISARN CWATANAPHOL, P.E. 89252 ON 06/23/2003.

STATE OF TEXAS — JAIME AGUILAR — 87606 — REGISTERED PROFESSIONAL ENGINEER

STATE OF TEXAS — PHAISARN CWATANAPHOL — 89252 — REGISTERED PROFESSIONAL ENGINEER

Parsons Brinckerhoff Quade & Douglas Inc.

Texas Department of Transportation

© 2003 by TxDOT

US 281
PLAN & PROFILE
NORTHBOUND FRONTAGE ROAD
STA. 50841+00 "FRN1" TO END

PLAN 1"= 100' HORIZ
PROFILE 1"= 10' VERT

SHEET 20 OF 20 — 281PFN20.DGN

DESIGNED: JA	FED. RD DIV. No.	STATE	FEDERAL AID PROJECT No.	HIGHWAY No.
CHECKED: JP	6	TEXAS		US 281

DRAWN: CG	STATE DISTRICT	COUNTY	CONTROL No.	SECTION No.	JOB No.	SHEET No.
CHECKED: JDH	PHARR	HIDALGO	0255	08	091	332

i:\22322a\cadd\sheets\roadway\281pfn20.dgn

NAME
11:31:10 AM
07/10/2003

Curve FRS1-2-1

P.I. Station	=	61612+79.22
Delta	=	1° 46' 07.89" (LT)
Degree	=	0° 30' 00.00"
Tangent	=	176.90
Length	=	353.77
Radius	=	11,459.16
External	=	1.37
Long Chord	=	353.76
Mid. Ord.	=	1.37
P.C. Station	=	61611+02.32
P.T. Station	=	61614+56.09

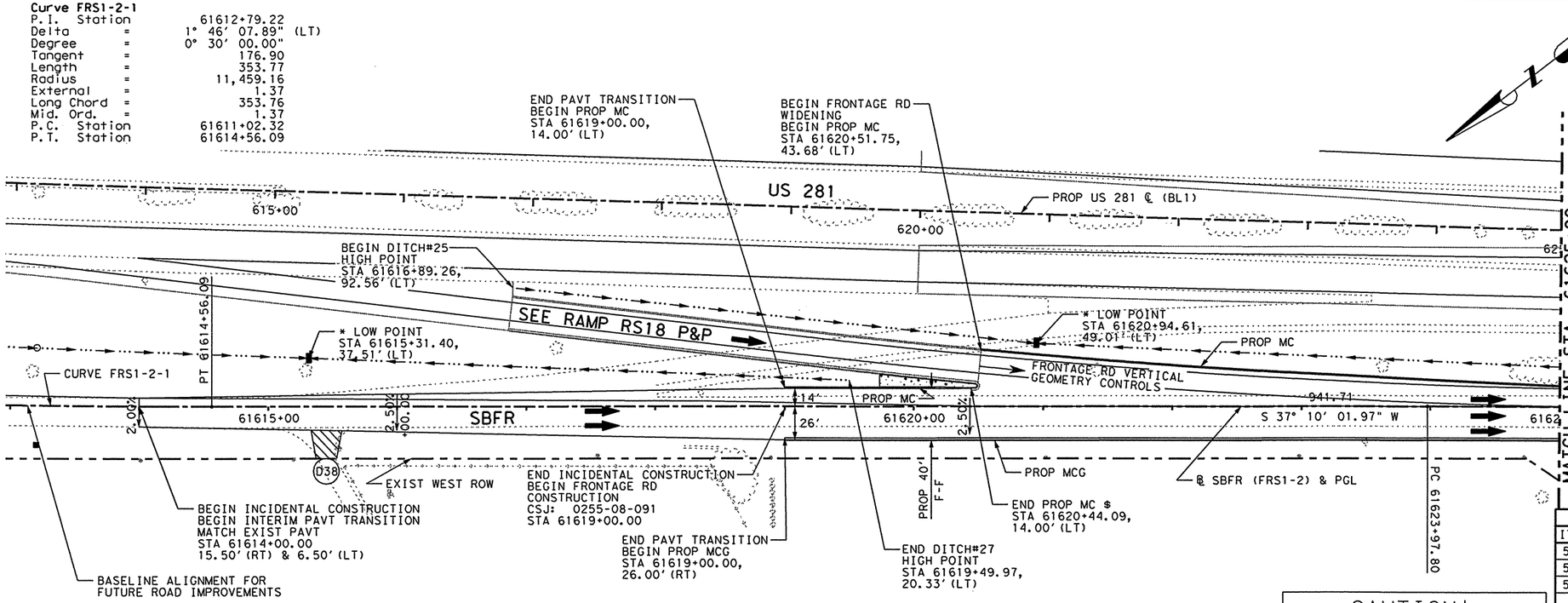

LEGEND:

- MC - MOUNTABLE CONC CURB
- BC - BARRIER CONC CURB
- MCG - MOUNTABLE CONC CURB & GUTTER (TY-B UNLESS OTHERWISE NOTED)
- BCG - BARRIER CONC CURB & GUTTER
- RW - RETAINING WALL
- RR - RIP RAP
- SGT - SINGLE GUARD RAIL TERMINAL
- SSCB - SINGLE SLOPE CONC BARRIER
- SSTR - SINGLE SLOPE TRAFFIC RAILING
- SW - SIDEWALK
- WCR - WHEEL CHAIR RAMP
- VG - 4' VALLEY GUTTER
- MBGF - METAL BEAM GUARD FENCE
- TAS - TERMINAL ANCHOR SECTION
- ▨ - PROP DRIVEWAY
- ⋰⋰ - PROP CONCRETE DRIVEWAY

FOR DRIVEWAY APRON TYPES AND SIZES, SEE "DRIVEWAY SUMMARY".

* SEE "DRAINAGE P & P SHEETS"
$ SEE "GORE NOSE & MISC DETAILS SHEET"

△ B.M. & HORIZONTAL DATA
BM # US 281-25
ELEV = 107.13
STA = 616+12.65, 199.63' LT
3 1/4" TXDOT ALUMINUM DISK

SHEET TOTALS

ITEM	EST.		UNIT	DESCRIPTION
529	594		LF	CONC CURB (TY B) (MOUNTABLE)
529	600		LF	CONC CURB AND GUTTER (TY B) (MOUNTABLE)
530	50		SY	DRVWY (ASPH-CONC PAV) (TY PB-1)

CAUTION!
MAJOR UTILITY CROSSINGS IN THE VICINITY. REFER TO THE "UTILITIES AND DRAINAGE PLAN & PROFILE" SHEETS FOR ADDITIONAL INFORMATION.

EXIST AND PROP PGL

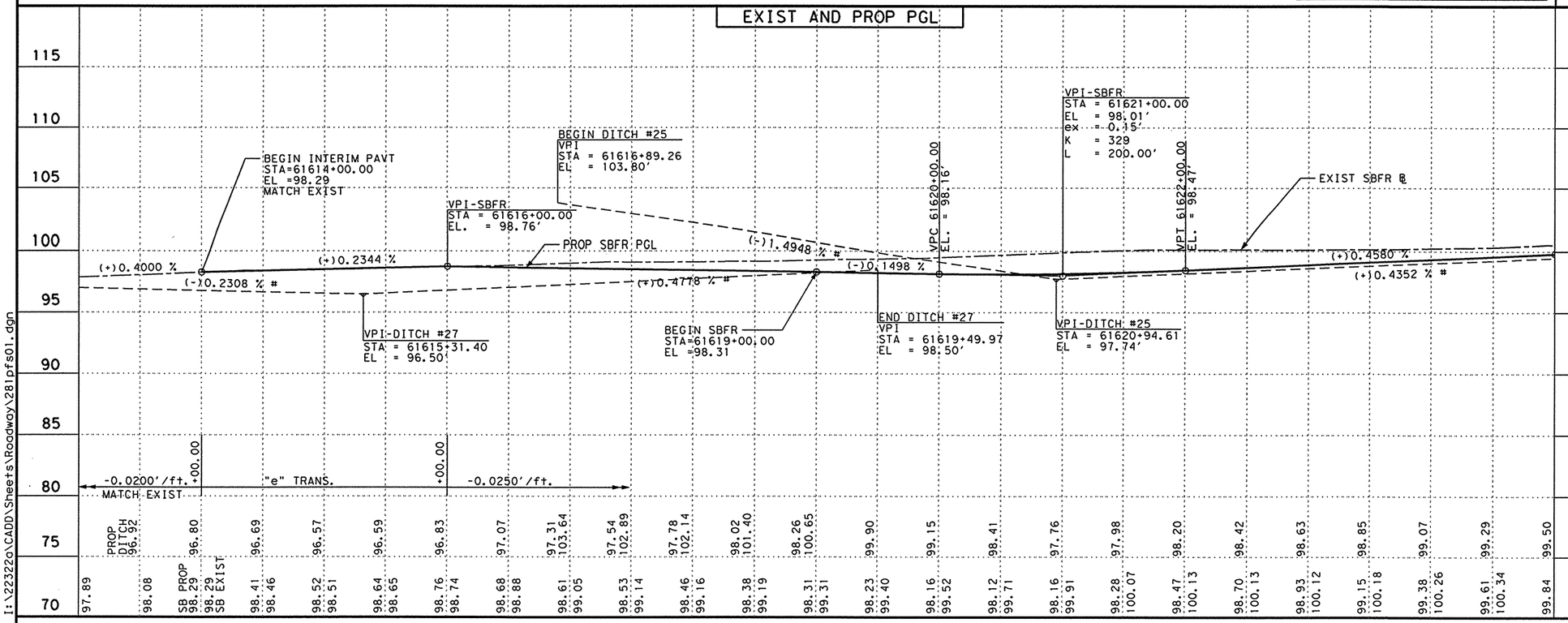

PROFILE LEGEND
- ——— PROP SOUTH BOUND FRONTAGE RD P.G.L.
- – – – – EXIST SOUTH BOUND FRONTAGE RD B.L.
- – – – – PROP SOUTH BOUND FRONTAGE RD DITCH

NOTES:
1. # SLOPE MEASURED ALONG LENGTH OF DITCH.

THE SEAL APPEARING ON THIS DOCUMENT WAS AUTHORIZED BY JAIME AGUILAR, P.E. 87606 ON 07/10/2003.

THE SEAL APPEARING ON THIS DOCUMENT WAS AUTHORIZED BY PHAISARN CWATANAPHOL, P.E. 89252 ON 07/10/2003.

STATE OF TEXAS — JAIME AGUILAR — 87606 — REGISTERED PROFESSIONAL ENGINEER

STATE OF TEXAS — PHAISARN CWATANAPHOL — 89252 — REGISTERED PROFESSIONAL ENGINEER

Parsons Brinckerhoff Quade & Douglas Inc.

Texas Department of Transportation

© 2003 by TxDOT

US 281
PLAN & PROFILE
SOUTHBOUND FRONTAGE ROAD

STA. 61613+00 "FRS1-2" TO
STA. 61625+00 "FRS1-2"

PLAN 1"= 100' HORIZ
PROFILE 1"= 10' VERT

SHEET 1 OF 22 | 281PFS01.DGN

DESIGNED: TT	FED. RD DIV. NO.	STATE	FEDERAL AID PROJECT No.	HIGHWAY No.
CHECKED: DM	6	TEXAS		US 281

DRAWN:	STATE DISTRICT	COUNTY	CONTROL No.	SECTION No.	JOB No.	SHEET No.
CHECKED: DM	PHARR	HIDALGO	0255	08	091	333

I:\22322a\CADD\Sheets\Roadway\281pfs01.dgn

NAME
11:31:32 AM
07/10/2003

Curve FRS1-2-2
P.I. Station = 61625+74.70
Delta = 1° 46' 08.04" (RT)
Degree = 0° 30' 00.00"
Tangent = 176.90
Length = 353.78
Radius = 11,459.16
External = 1.37
Long Chord = 353.77
Mid. Ord. = 1.37
P.C. Station = 61623+97.80
P.T. Station = 61627+51.58

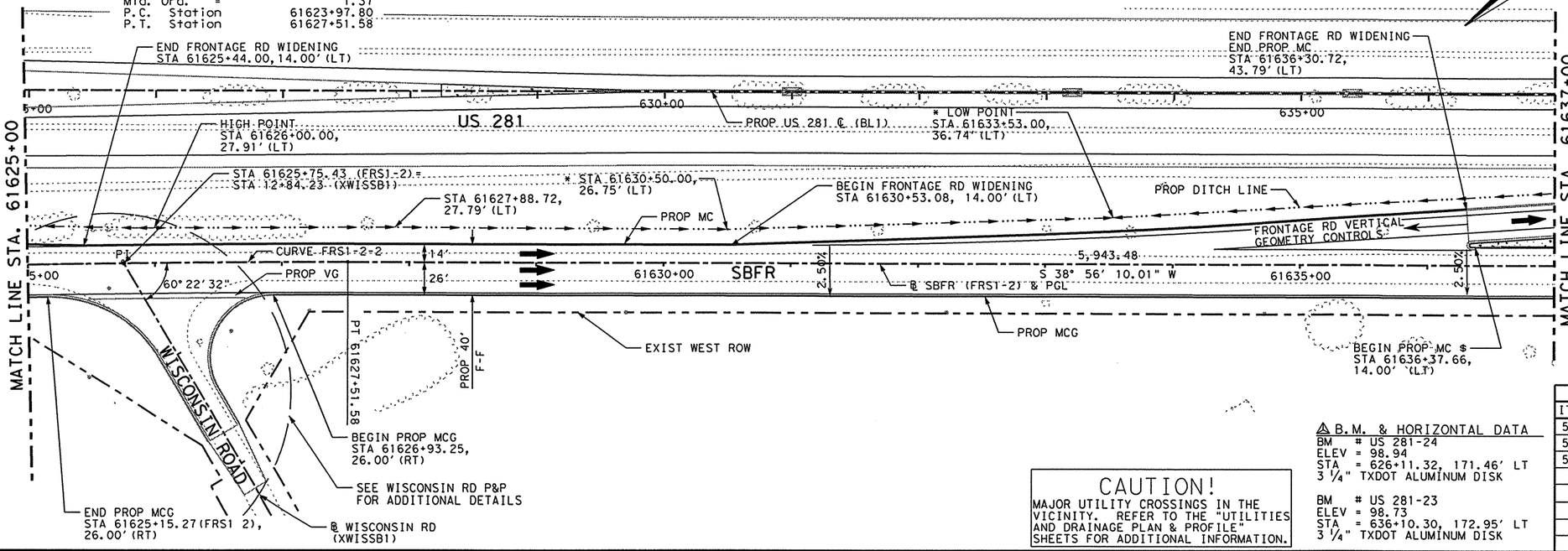

LEGEND:

MC	- MOUNTABLE CONC CURB
BC	- BARRIER CONC CURB
MCG	- MOUNTABLE CONC CURB & GUTTER (TY-B UNLESS OTHERWISE NOTED)
BCG	- BARRIER CONC CURB & GUTTER
RW	- RETAINING WALL
RR	- RIP RAP
SGT	- SINGLE GUARD RAIL TERMINAL
SSCB	- SINGLE SLOPE CONC BARRIER
SSTR	- SINGLE SLOPE TRAFFIC RAILING
SW	- SIDEWALK
WCR	- WHEEL CHAIR RAMP
VG	- 4' VALLEY GUTTER
MBGF	- METAL BEAM GUARD FENCE
TAS	- TERMINAL ANCHOR SECTION
	- PROP DRIVEWAY
	- PROP CONCRETE DRIVEWAY

* SEE "DRAINAGE P&P SHEETS".
$ SEE "GORE NOSE & MISC DETAILS SHEET".

CAUTION!
MAJOR UTILITY CROSSINGS IN THE VICINITY. REFER TO THE "UTILITIES AND DRAINAGE PLAN & PROFILE" SHEETS FOR ADDITIONAL INFORMATION.

℄ B.M. & HORIZONTAL DATA
BM # US 281-24
ELEV = 98.94
STA = 626+11.32, 171.46' LT
3 1/4" TXDOT ALUMINUM DISK

BM # US 281-23
ELEV = 98.73
STA = 636+10.30, 172.95' LT
3 1/4" TXDOT ALUMINUM DISK

SHEET TOTALS

ITEM	EST.	FINAL	UNIT	DESCRIPTION
529	1194		LF	CONC CURB (TY B) (MOUNTABLE)
529	1023		LF	CONC CURB AND GUTTER (TY B) (MOUNTABLE)
529	178		LF	CONC GUTTER (VALLEY) (4')

EXIST AND PROP PGL

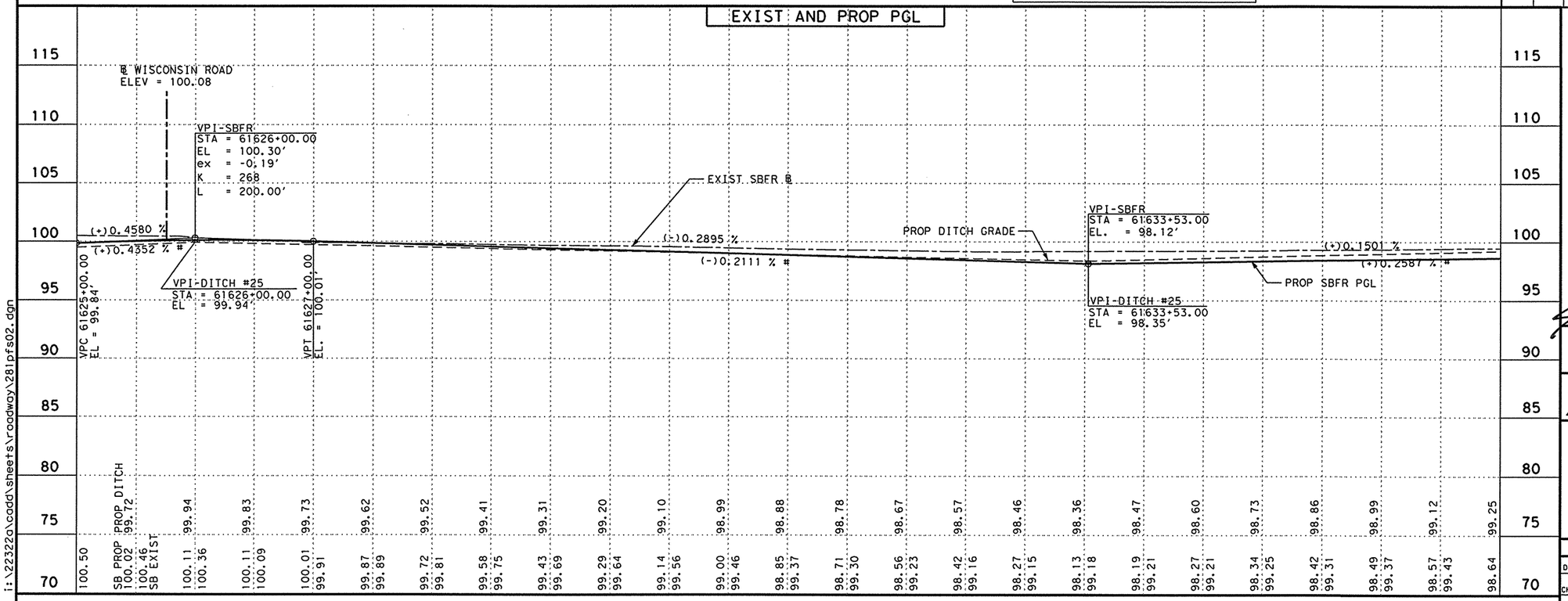

PROFILE LEGEND
PROP SOUTH BOUND FRONTAGE RD P.G.L.
EXIST SOUTH BOUND FRONTAGE RD B.L.
PROP SOUTH BOUND FRONTAGE RD DITCH

NOTES:
1. # SLOPE MEASURED ALONG LENGTH OF DITCH.

THE SEAL APPEARING ON THIS DOCUMENT WAS AUTHORIZED BY JAIME AGUILAR, P.E. 87606 ON 07/10/2003.

THE SEAL APPEARING ON THIS DOCUMENT WAS AUTHORIZED BY PHAISARN CWATANAPHOL, P.E. 89252 ON 07/10/2003.

STATE OF TEXAS — JAIME AGUILAR — 87606 — REGISTERED PROFESSIONAL ENGINEER

STATE OF TEXAS — PHAISARN CWATANAPHOL — 89252 — REGISTERED PROFESSIONAL ENGINEER

Parsons Brinckerhoff Quade & Douglas Inc.

Texas Department of Transportation

© 2003 by TxDOT

US 281
PLAN & PROFILE
SOUTHBOUND FRONTAGE ROAD

STA. 61625+00 "FRS1-2" TO
STA. 61637+00 "FRS1-2"

PLAN 1"= 100' HORIZ
PROFILE 1"= 10' VERT

SHEET 2 OF 22 | 281PFS02.DGN

DESIGNED: TT	FED. RD DIV. NO.	STATE	FEDERAL AID PROJECT No.	HIGHWAY No.
CHECKED: DM	6	TEXAS		US 281

DRAWN: CG	STATE DISTRICT	COUNTY	CONTROL No.	SECTION No.	JOB No.	SHEET No.
CHECKED: DM	PHARR	HIDALGO	0255	08	091	334

i:\22322a\cadd\sheets\roadway\281pfs02.dgn

NAME
11:31:51 AM
07/10/2003

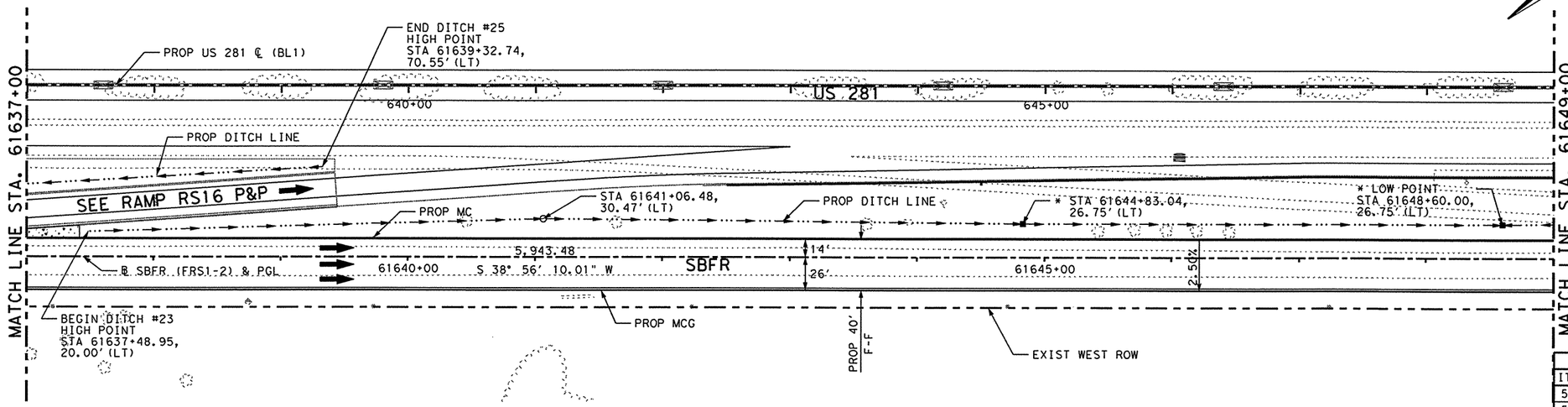

LEGEND:

- MC - MOUNTABLE CONC CURB
- BC - BARRIER CONC CURB
- MCG - MOUNTABLE CONC CURB & GUTTER (TY-B UNLESS OTHERWISE NOTED)
- BCG - BARRIER CONC CURB & GUTTER
- RW - RETAINING WALL
- RR - RIP RAP
- SGT - SINGLE GUARD RAIL TERMINAL
- SSCB - SINGLE SLOPE CONC BARRIER
- SSTR - SINGLE SLOPE TRAFFIC RAILING
- SW - SIDEWALK
- WCR - WHEEL CHAIR RAMP
- VG - 4' VALLEY GUTTER
- MBGF - METAL BEAM GUARD FENCE
- TAS - TERMINAL ANCHOR SECTION
- ▨ - PROP DRIVEWAY
- ⋰⋰ - PROP CONCRETE DRIVEWAY

* SEE "DRAINAGE P&P SHEETS".

⚠ B.M. & HORIZONTAL DATA
BM # US 281-22
ELEV = 98.54
STA = 646+08.07, 171.87' LT
3 ¼" TXDOT ALUMINUM DISK

SHEET TOTALS

ITEM	EST.	FINAL	UNIT	DESCRIPTION
529	1200		LF	CONC CURB (TY B) (MOUNTABLE)
529	1200		LF	CONC CURB AND GUTTER (TY B) (MOUNTABLE)

CAUTION!
MAJOR UTILITY CROSSINGS IN THE VICINITY. REFER TO THE "UTILITIES AND DRAINAGE PLAN & PROFILE" SHEETS FOR ADDITIONAL INFORMATION.

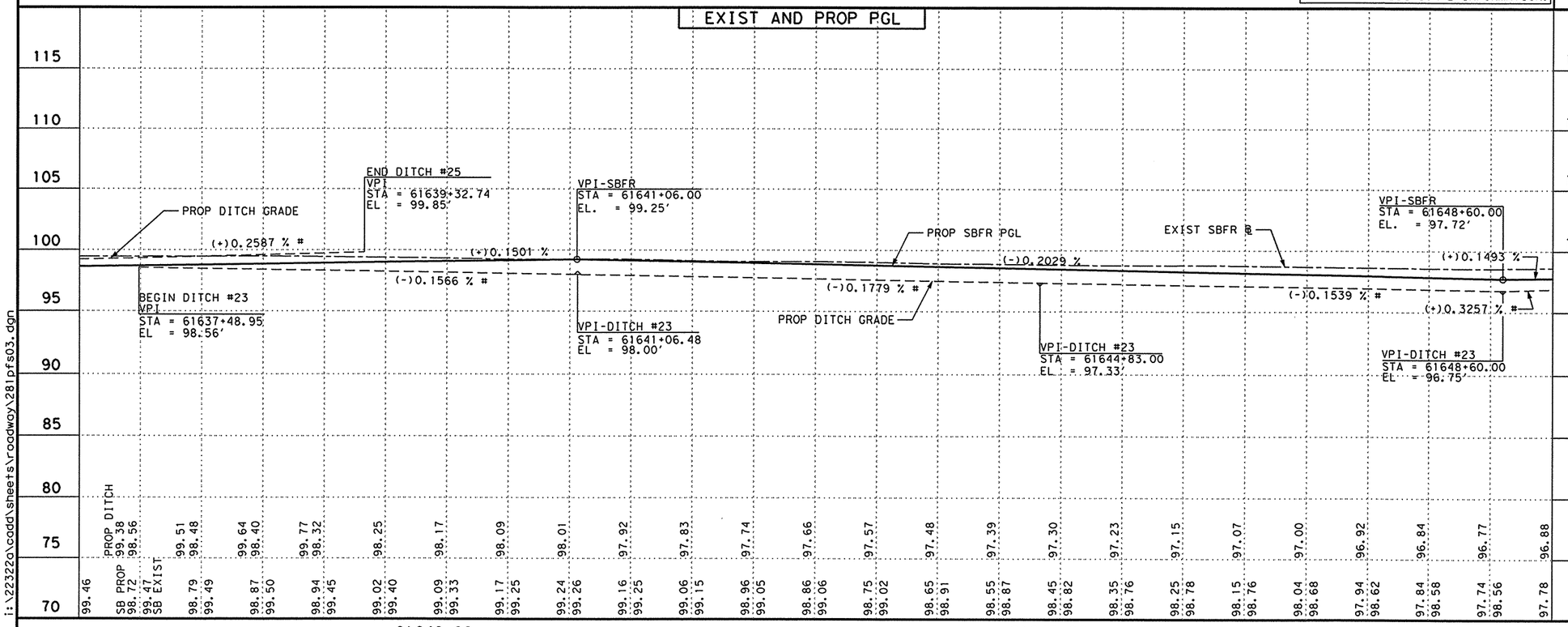

PROFILE LEGEND
- PROP SOUTH BOUND FRONTAGE RD P.G.L.
- EXIST SOUTH BOUND FRONTAGE RD B.L.
- PROP SOUTH BOUND FRONTAGE RD DITCH

NOTES:
1. # SLOPE MEASURED ALONG LENGTH OF DITCH.

THE SEAL APPEARING ON THIS DOCUMENT WAS AUTHORIZED BY JAIME AGUILAR, P.E. 87606 ON 07/10/2003.

THE SEAL APPEARING ON THIS DOCUMENT WAS AUTHORIZED BY PHAISARN CHATANAPHOL, P.E. 89252 ON 07/10/2003.

STATE OF TEXAS · JAIME AGUILAR · 87606 · REGISTERED PROFESSIONAL ENGINEER

STATE OF TEXAS · PHAISARN CHATANAPHOL · 89252 · REGISTERED PROFESSIONAL ENGINEER

Parsons Brinckerhoff Quade & Douglas Inc.

Texas Department of Transportation

© 2003 by TxDOT

US 281
PLAN & PROFILE
SOUTHBOUND FRONTAGE ROAD

STA. 61637+00 "FRS1-2" TO
STA. 61649+00 "FRS1-2"

PLAN 1"= 100' HORIZ
PROFILE 1"= 10' VERT

SHEET 3 OF 22 | 281PFS03.DGN

DESIGNED: TT	FED. RD DIV. No.	STATE	FEDERAL AID PROJECT No.		HIGHWAY No.
CHECKED: DM	6	TEXAS			US 281
DRAWN: CG	STATE DISTRICT	COUNTY	CONTROL No.	SECTION No.	JOB No.	SHEET No.
CHECKED: DM	PHARR	HIDALGO	0255	08	091	335

i:\22322a\cadd\sheets\roadway\281pfs03.dgn

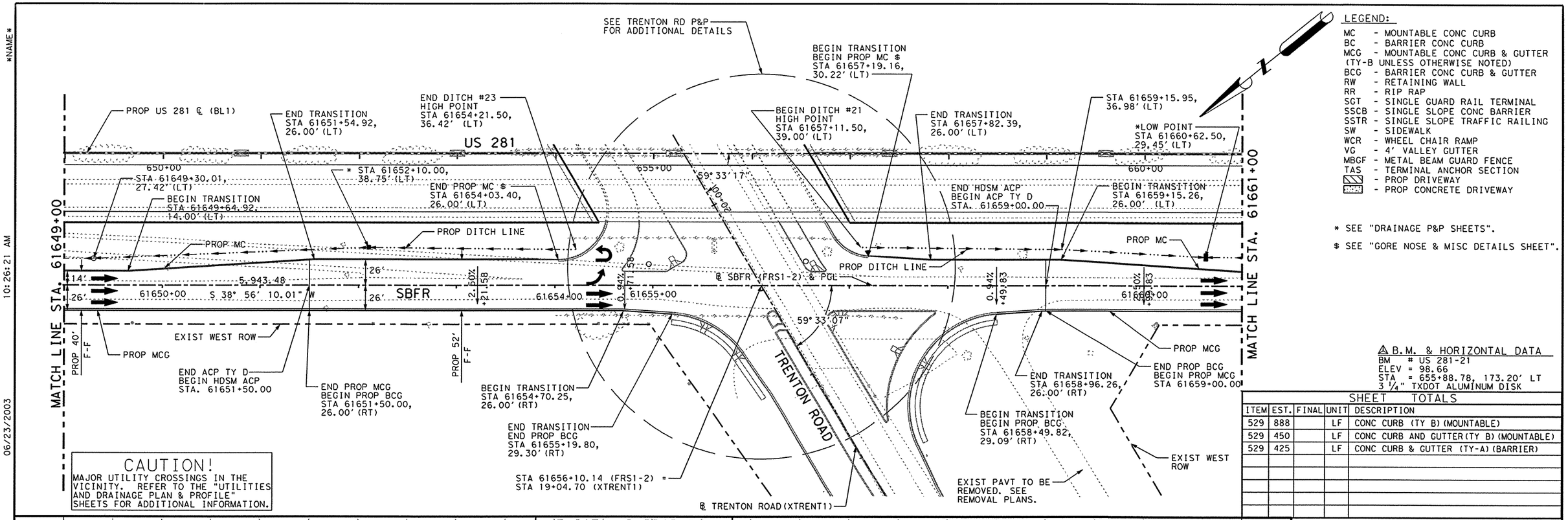

CAUTION!
MAJOR UTILITY CROSSINGS IN THE VICINITY. REFER TO THE "UTILITIES AND DRAINAGE PLAN & PROFILE" SHEETS FOR ADDITIONAL INFORMATION.

LEGEND:

MC	- MOUNTABLE CONC CURB
BC	- BARRIER CONC CURB
MCG	- MOUNTABLE CONC CURB & GUTTER (TY-B UNLESS OTHERWISE NOTED)
BCG	- BARRIER CONC CURB & GUTTER
RW	- RETAINING WALL
RR	- RIP RAP
SGT	- SINGLE GUARD RAIL TERMINAL
SSCB	- SINGLE SLOPE CONC BARRIER
SSTR	- SINGLE SLOPE TRAFFIC RAILING
SW	- SIDEWALK
WCR	- WHEEL CHAIR RAMP
VG	- 4' VALLEY GUTTER
MBGF	- METAL BEAM GUARD FENCE
TAS	- TERMINAL ANCHOR SECTION
	- PROP DRIVEWAY
	- PROP CONCRETE DRIVEWAY

* SEE "DRAINAGE P&P SHEETS".

$ SEE "GORE NOSE & MISC DETAILS SHEET".

⚠ B.M. & HORIZONTAL DATA
BM # US 281-21
ELEV = 98.66
STA = 655+88.78, 173.20' LT
3 1/4" TXDOT ALUMINUM DISK

SHEET TOTALS

ITEM	EST.	FINAL	UNIT	DESCRIPTION
529	888		LF	CONC CURB (TY B) (MOUNTABLE)
529	450		LF	CONC CURB AND GUTTER (TY B) (MOUNTABLE)
529	425		LF	CONC CURB & GUTTER (TY-A) (BARRIER)

EXIST AND PROP PGL ℄ EXIST TRENTON RD

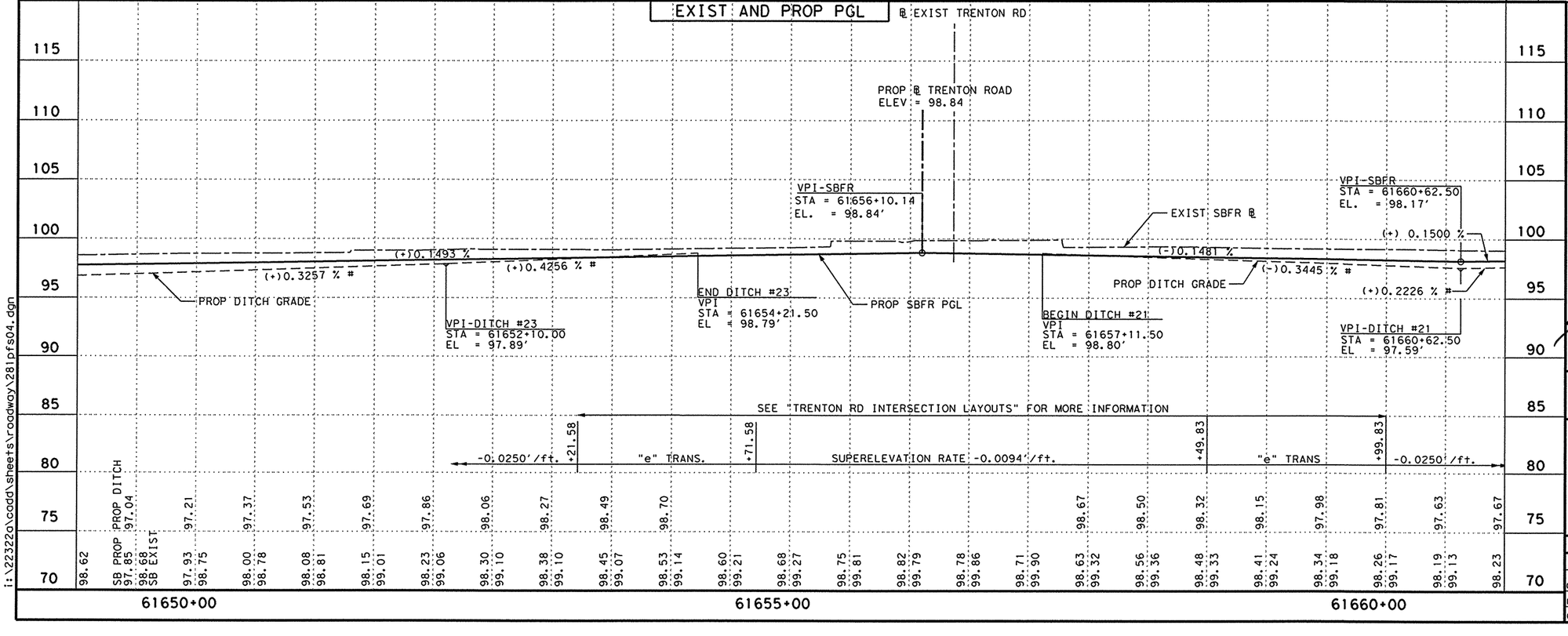

PROFILE LEGEND
——— PROP SOUTH BOUND FRONTAGE RD P.G.L.
– – – EXIST SOUTH BOUND FRONTAGE RD B.L.
– · – · – PROP SOUTH BOUND FRONTAGE RD DITCH

NOTES:
1. # SLOPE MEASURED ALONG LENGTH OF DITCH.

THE SEAL APPEARING ON THIS DOCUMENT WAS AUTHORIZED BY JAIME AGUILAR, P.E. 87606 ON 06/23/2003.

STATE OF TEXAS · JAIME AGUILAR · 87606 · REGISTERED PROFESSIONAL ENGINEER

THE SEAL APPEARING ON THIS DOCUMENT WAS AUTHORIZED BY PHAISARN CWATANAPHOL, P.E. 89252 ON 06/23/2003.

STATE OF TEXAS · PHAISARN CWATANAPHOL · 89252 · REGISTERED PROFESSIONAL ENGINEER

Parsons Brinckerhoff Quade & Douglas Inc.

Texas Department of Transportation

© 2003 by TxDOT

US 281
PLAN & PROFILE
SOUTHBOUND FRONTAGE ROAD

STA. 61649+00 "FRS1-2" TO
STA. 61661+00 "FRS1-2"

PLAN 1"= 100' HORIZ
PROFILE 1"= 10' VERT

SHEET 4 OF 22				281PFS04.DGN				
DESIGNED: JA	FED. RD DIV. No.	STATE	FEDERAL AID PROJECT No.				HIGHWAY No.	
CHECKED: JP	6	TEXAS					US 281	
DRAWN: CG	STATE DISTRICT	COUNTY	CONTROL No.	SECTION No.	JOB No.	SHEET No.		
CHECKED: JDH	PHARR	HIDALGO	0255	08	091	336		

NAME
10:26:36 AM
06/23/2003

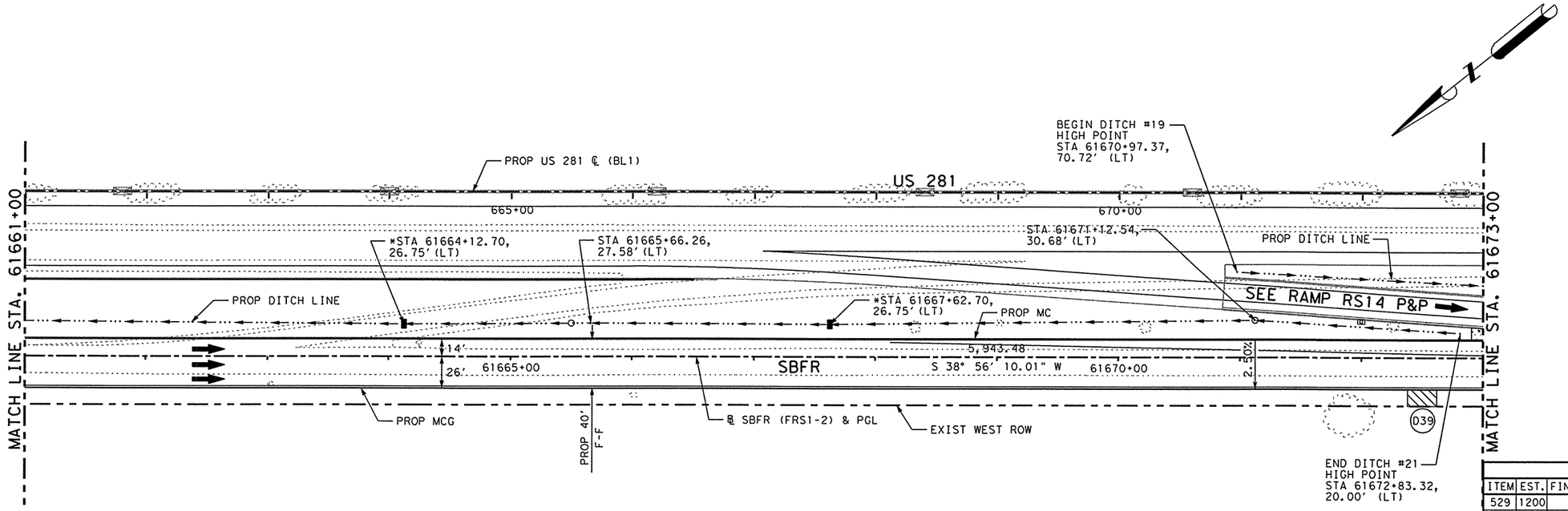

LEGEND:

MC - MOUNTABLE CONC CURB
BC - BARRIER CONC CURB
MCG - MOUNTABLE CONC CURB & GUTTER (TY-B UNLESS OTHERWISE NOTED)
BCG - BARRIER CONC CURB & GUTTER
RW - RETAINING WALL
RR - RIP RAP
SGT - SINGLE GUARD RAIL TERMINAL
SSCB - SINGLE SLOPE CONC BARRIER
SSTR - SINGLE SLOPE TRAFFIC RAILING
SW - SIDEWALK
WCR - WHEEL CHAIR RAMP
VG - 4' VALLEY GUTTER
MBGF - METAL BEAM GUARD FENCE
TAS - TERMINAL ANCHOR SECTION
- PROP DRIVEWAY
- PROP CONCRETE DRIVEWAY

* SEE "DRAINAGE P & P SHEETS"

CAUTION!
MAJOR UTILITY CROSSINGS IN THE VICINITY. REFER TO THE "UTILITIES AND DRAINAGE PLAN & PROFILE" SHEETS FOR ADDITIONAL INFORMATION.

△ B.M. & HORIZONTAL DATA
BM # US 281-20
ELEV = 98.51
STA = 666+40.54, 172.14' LT
3 1/4" TXDOT ALUMINUM DISK

SHEET TOTALS

ITEM	EST.	FINAL	UNIT	DESCRIPTION
529	1200		LF	CONC CURB (TY B) (MOUNTABLE)
529	1200		LF	CONC CURB AND GUTTER (TY B) (MOUNTABLE)
530	36		SY	DRVWY (ASPH-CONC PAV) (TY P-1)

EXIST AND PROP PGL

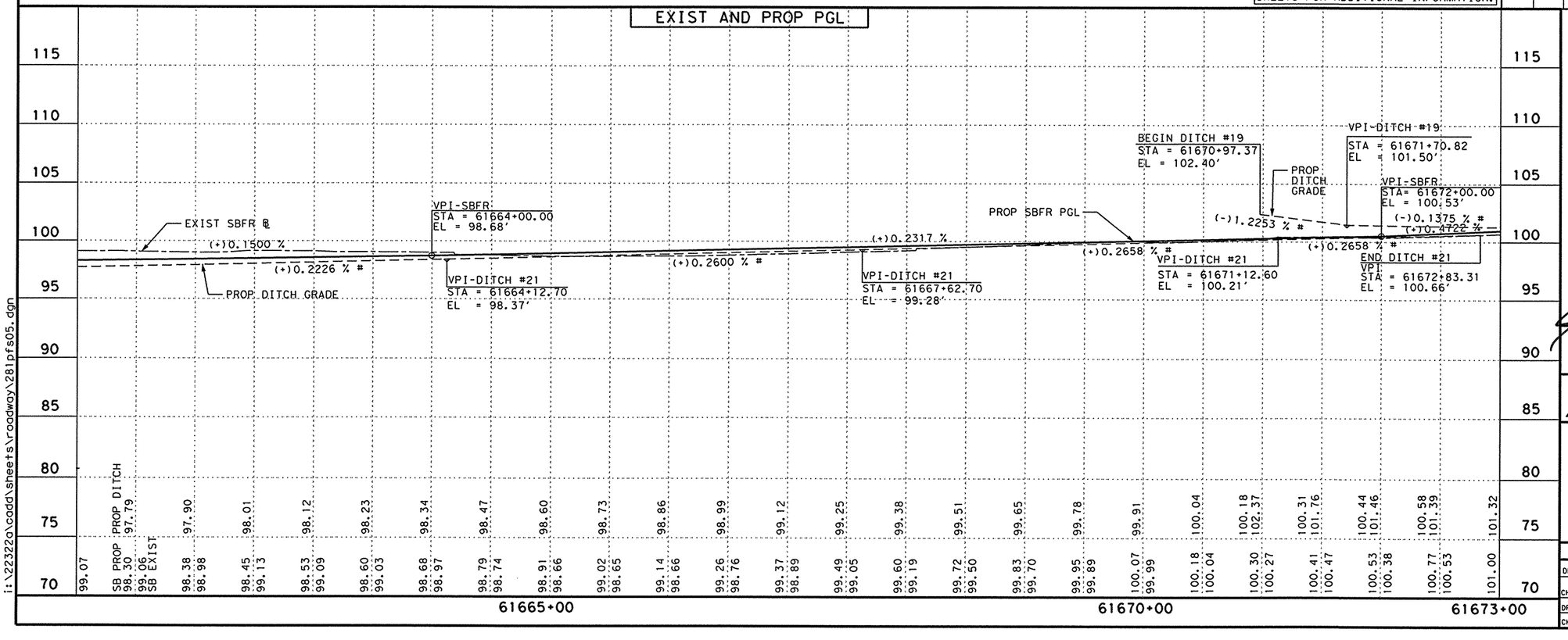

PROFILE LEGEND
PROP SOUTH BOUND FRONTAGE RD P.G.L.
EXIST SOUTH BOUND FRONTAGE RD B.L.
PROP SOUTH BOUND FRONTAGE RD DITCH

NOTES:
1. # SLOPE MEASURED ALONG LENGTH OF DITCH.

THE SEAL APPEARING ON THIS DOCUMENT WAS AUTHORIZED BY JAIME AGUILAR, P.E. 87606 ON 06/23/2003.

THE SEAL APPEARING ON THIS DOCUMENT WAS AUTHORIZED BY PHAISARN CWATANAPHOL, P.E. 89252 ON 06/23/2003.

STATE OF TEXAS
JAIME AGUILAR
87606
REGISTERED PROFESSIONAL ENGINEER

STATE OF TEXAS
PHAISARN CWATANAPHOL
89252
REGISTERED PROFESSIONAL ENGINEER

Parsons Brinckerhoff Quade & Douglas Inc.

Texas Department of Transportation

© 2003 by TxDOT

US 281
PLAN & PROFILE
SOUTHBOUND FRONTAGE ROAD

STA. 61661+00 "FRS1-2" TO
STA. 61673+00 "FRS1-2"

PLAN 1"= 100' HORIZ
PROFILE 1"= 10' VERT

SHEET 5 OF 22 | 281PFS05.DGN

DESIGNED: JA	FED. RD DIV. No.	STATE	FEDERAL AID PROJECT No.	HIGHWAY No.
CHECKED: JP	6	TEXAS		US 281

DRAWN: CG	STATE DISTRICT	COUNTY	CONTROL No.	SECTION No.	JOB No.	SHEET No.
CHECKED: JDH	PHARR	HIDALGO	0255	08	091	337

i:\22322a\cadd\sheets\roadway\281pfs05.dgn

NAME
10:26:52 AM
06/23/2003
i:\22322g\cadd\sheets\roadway\281pfs06.dgn

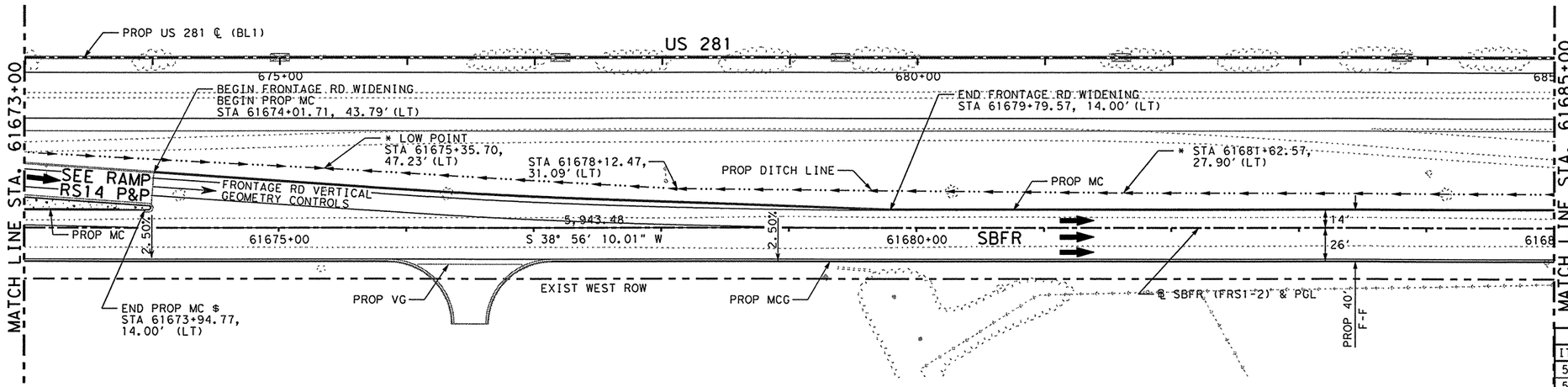

LEGEND:

- MC - MOUNTABLE CONC CURB
- BC - BARRIER CONC CURB
- MCG - MOUNTABLE CONC CURB & GUTTER (TY-B UNLESS OTHERWISE NOTED)
- BCG - BARRIER CONC CURB & GUTTER
- RW - RETAINING WALL
- RR - RIP RAP
- SGT - SINGLE GUARD RAIL TERMINAL
- SSCB - SINGLE SLOPE CONC BARRIER
- SSTR - SINGLE SLOPE TRAFFIC RAILING
- SW - SIDEWALK
- WCR - WHEEL CHAIR RAMP
- VG - 4' VALLEY GUTTER
- MBGF - METAL BEAM GUARD FENCE
- TAS - TERMINAL ANCHOR SECTION
- PROP DRIVEWAY
- PROP CONCRETE DRIVEWAY

* SEE "DRAINAGE P&P SHEETS".
$ SEE "GORE NOSE & MISC DETAILS SHEET"

△ B.M. & HORIZONTAL DATA
BM # US 281-19
ELEV = 101.97
STA = 676+34.62, 172.09' LT
3 1/4" TXDOT ALUMINUM DISK

SHEET TOTALS

ITEM	EST.	FINAL	UNIT	DESCRIPTION
529	1195		LF	CONC CURB (TY B) (MOUNTABLE)
529	1200		LF	CONC CURB AND GUTTER (TY B) (MOUNTABLE)
529	130		LF	CONC GUTTER (VALLEY) (4')

CAUTION!
MAJOR UTILITY CROSSINGS IN THE VICINITY. REFER TO THE "UTILITIES AND DRAINAGE PLAN & PROFILE" SHEETS FOR ADDITIONAL INFORMATION.

EXIST AND PROP PGL

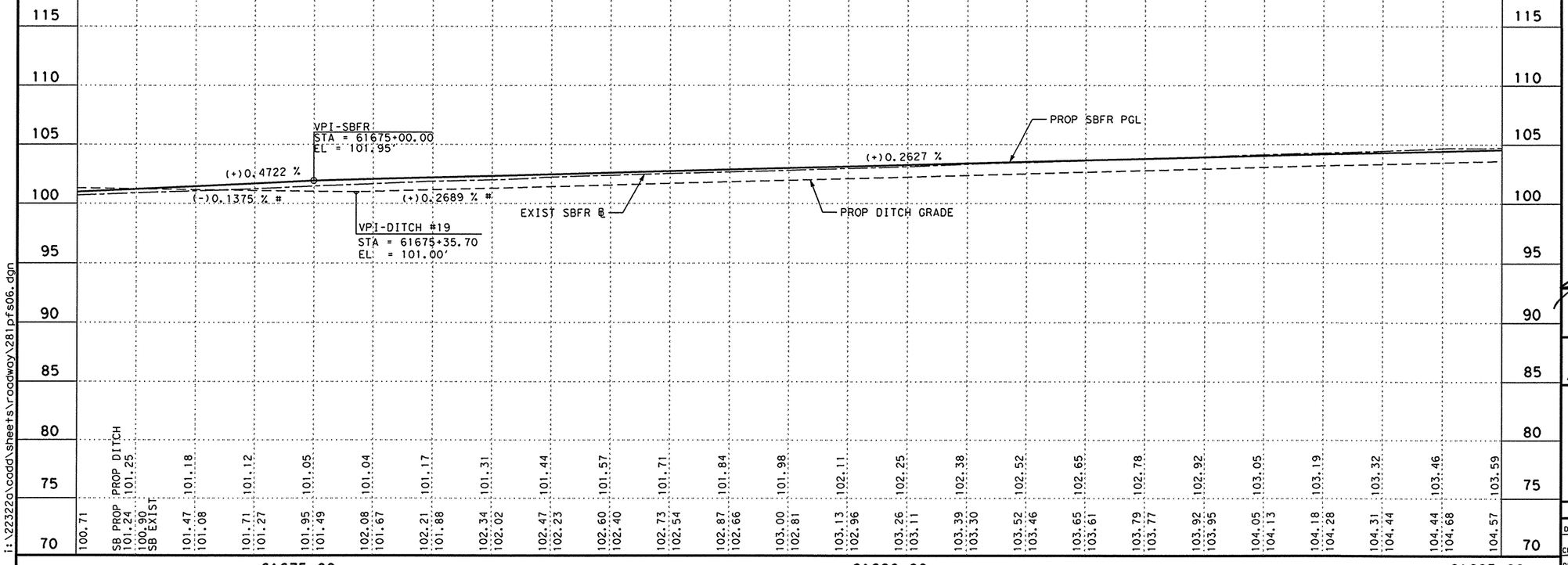

PROFILE LEGEND
- PROP SOUTH BOUND FRONTAGE RD P.G.L.
- EXIST SOUTH BOUND FRONTAGE RD B.L.
- PROP SOUTH BOUND FRONTAGE RD DITCH

NOTES:
1. # SLOPE MEASURED ALONG LENGTH OF DITCH.

THE SEAL APPEARING ON THIS DOCUMENT WAS AUTHORIZED BY JAIME AGUILAR, P.E. 87606 ON 06/23/2003.

THE SEAL APPEARING ON THIS DOCUMENT WAS AUTHORIZED BY PHAISARN CWATANAPHOL, P.E. 89252 ON 06/23/2003.

STATE OF TEXAS · JAIME AGUILAR · 87606 · REGISTERED PROFESSIONAL ENGINEER

STATE OF TEXAS · PHAISARN CWATANAPHOL · 89252 · REGISTERED PROFESSIONAL ENGINEER

Parsons Brinckerhoff Quade & Douglas Inc.

Texas Department of Transportation

© 2003 by TxDOT

US 281
PLAN & PROFILE
SOUTHBOUND FRONTAGE ROAD

STA. 61673+00 "FRS1-2" TO
STA. 61685+00 "FRS1-2"

PLAN 1"= 100' HORIZ
PROFILE 1"= 10' VERT

SHEET 6 OF 22 | 281PFS06.DGN

DESIGNED: JA	FED. RD DIV. No.	STATE	FEDERAL AID PROJECT No.			HIGHWAY No.
CHECKED: JP	6	TEXAS				US 281
DRAWN: CG	STATE DISTRICT	COUNTY	CONTROL No.	SECTION No.	JOB No.	SHEET No.
CHECKED: JDH	PHARR	HIDALGO	0255	08	091	338

NAME
10:27:07 AM
06/23/2003

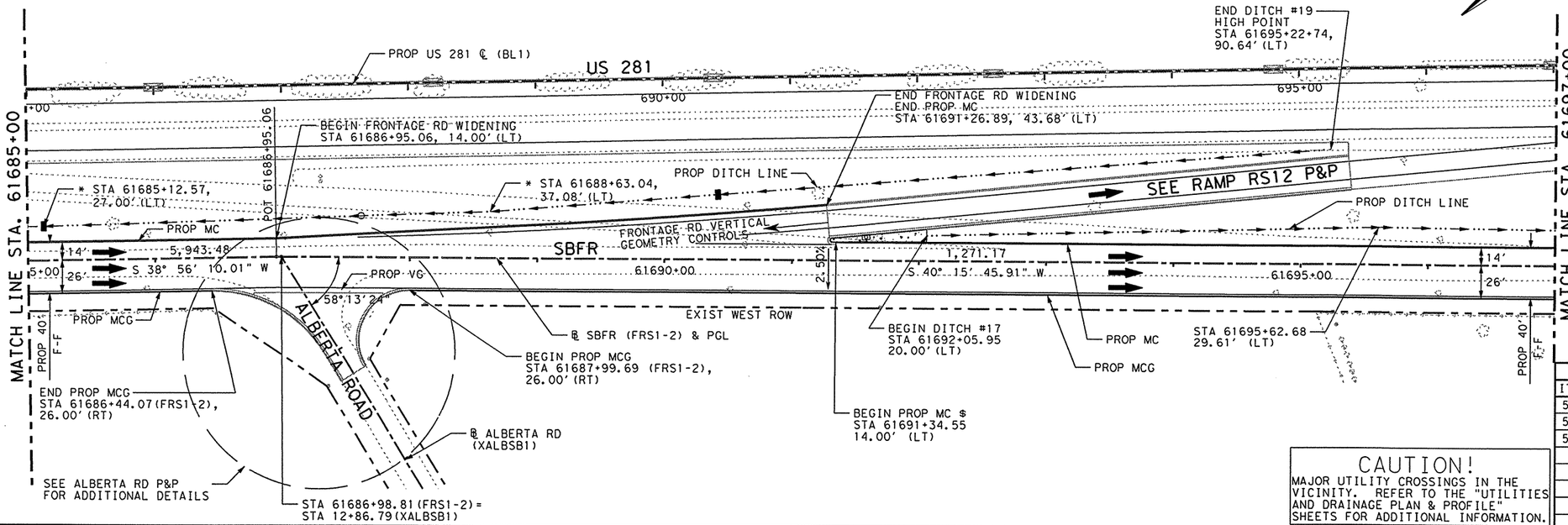

LEGEND:

- MC - MOUNTABLE CONC CURB
- BC - BARRIER CONC CURB
- MCG - MOUNTABLE CONC CURB & GUTTER (TY-B UNLESS OTHERWISE NOTED)
- BCG - BARRIER CONC CURB & GUTTER
- RW - RETAINING WALL
- RR - RIP RAP
- SGT - SINGLE GUARD RAIL TERMINAL
- SSCB - SINGLE SLOPE CONC BARRIER
- SSTR - SINGLE SLOPE TRAFFIC RAILING
- SW - SIDEWALK
- WCR - WHEEL CHAIR RAMP
- VG - 4' VALLEY GUTTER
- MBGF - METAL BEAM GUARD FENCE
- TAS - TERMINAL ANCHOR SECTION
- PROP DRIVEWAY
- PROP CONCRETE DRIVEWAY

* SEE "DRAINAGE P&P SHEETS".
$ SEE "GORE NOSE & MISC DETAILS SHEET".

⚠ B.M. & HORIZONTAL DATA

BM # US 281-18
ELEV = 105.52
STA = 686+28.97, 170.87' LT
3 1/4" TXDOT ALUMINUM DISK

BM # US 281-17
ELEV = 105.58
STA = 696+39.23, 173.41' LT
3 1/4" TXDOT ALUMINUM DISK

SHEET TOTALS

ITEM	EST.	FINAL	UNIT	DESCRIPTION
529	1196		LF	CONC CURB (TY B) (MOUNTABLE)
529	1045		LF	CONC CURB AND GUTTER (TY B) (MOUNTABLE)
529	156		LF	CONC GUTTER (VALLEY) (4')

CAUTION!
MAJOR UTILITY CROSSINGS IN THE VICINITY. REFER TO THE "UTILITIES AND DRAINAGE PLAN & PROFILE" SHEETS FOR ADDITIONAL INFORMATION.

EXIST AND PROP PGL

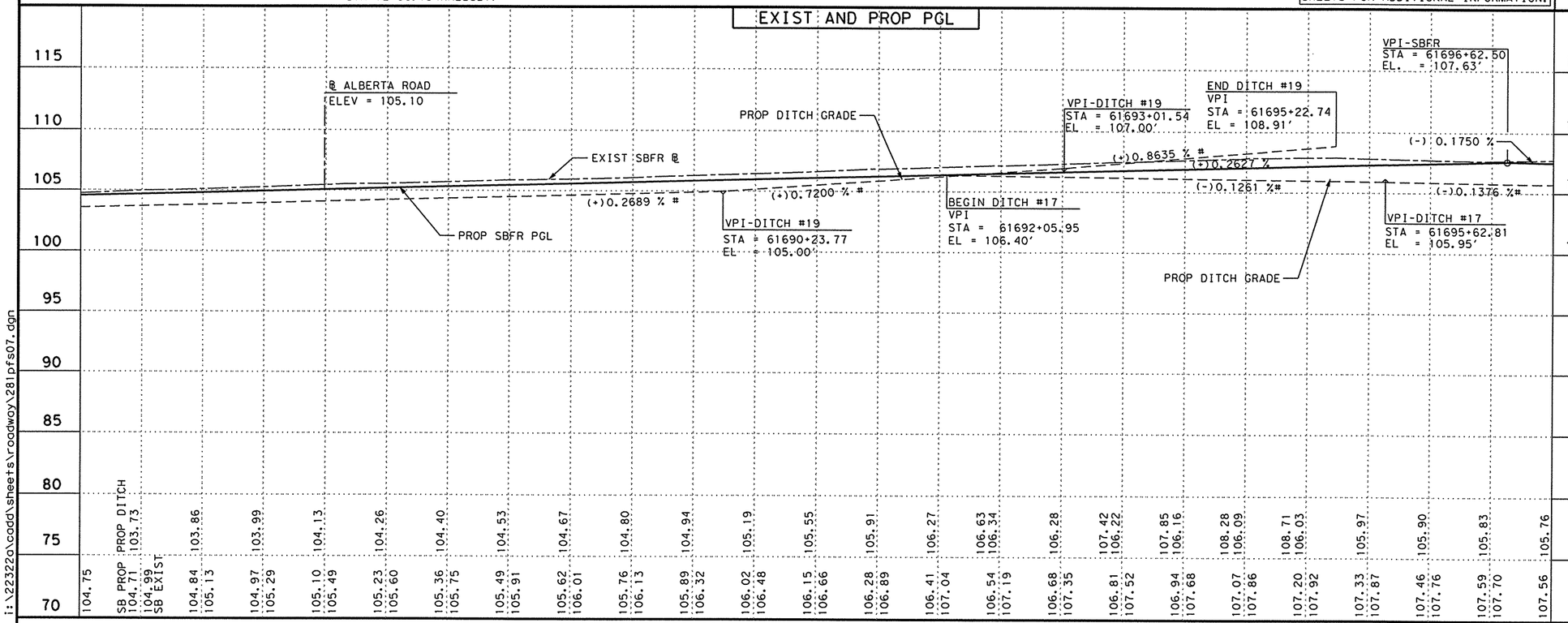

PROFILE LEGEND

- PROP SOUTH BOUND FRONTAGE RD P.G.L.
- EXIST SOUTH BOUND FRONTAGE RD B.L.
- PROP SOUTH BOUND FRONTAGE RD DITCH

NOTES:
1. # SLOPE MEASURED ALONG LENGTH OF DITCH.

THE SEAL APPEARING ON THIS DOCUMENT WAS AUTHORIZED BY JAIME AGUILAR, P.E. 87606 ON 06/23/2003.

STATE OF TEXAS
JAIME AGUILAR
87606
REGISTERED PROFESSIONAL ENGINEER

THE SEAL APPEARING ON THIS DOCUMENT WAS AUTHORIZED BY PHAISARN CWATANAPHOL, P.E. 89252 ON 06/23/2003.

STATE OF TEXAS
PHAISARN CWATANAPHOL
89252
REGISTERED PROFESSIONAL ENGINEER

PB Parsons Brinckerhoff Quade & Douglas Inc.

Texas Department of Transportation

© 2003 by TxDOT

US 281
PLAN & PROFILE
SOUTHBOUND FRONTAGE ROAD

STA. 61685+00 "FRS1-2" TO
STA. 61697+00 "FRS1-2"

PLAN 1"= 100' HORIZ
PROFILE 1"= 10' VERT

SHEET 7 OF 22 | 281PFS07.DGN

DESIGNED: JA	FED. RD DIV. No.	STATE	FEDERAL AID PROJECT No.				HIGHWAY No.
CHECKED: JP	6	TEXAS					US 281
DRAWN: CG	STATE DISTRICT	COUNTY	CONTROL No.	SECTION No.	JOB No.	SHEET No.	
CHECKED: JDH	PHARR	HIDALGO	0255	08	091	339	

i:\22322a\cadd\sheets\roadway\281pfs07.dgn

NAME
10:27:24 AM
06/23/2003

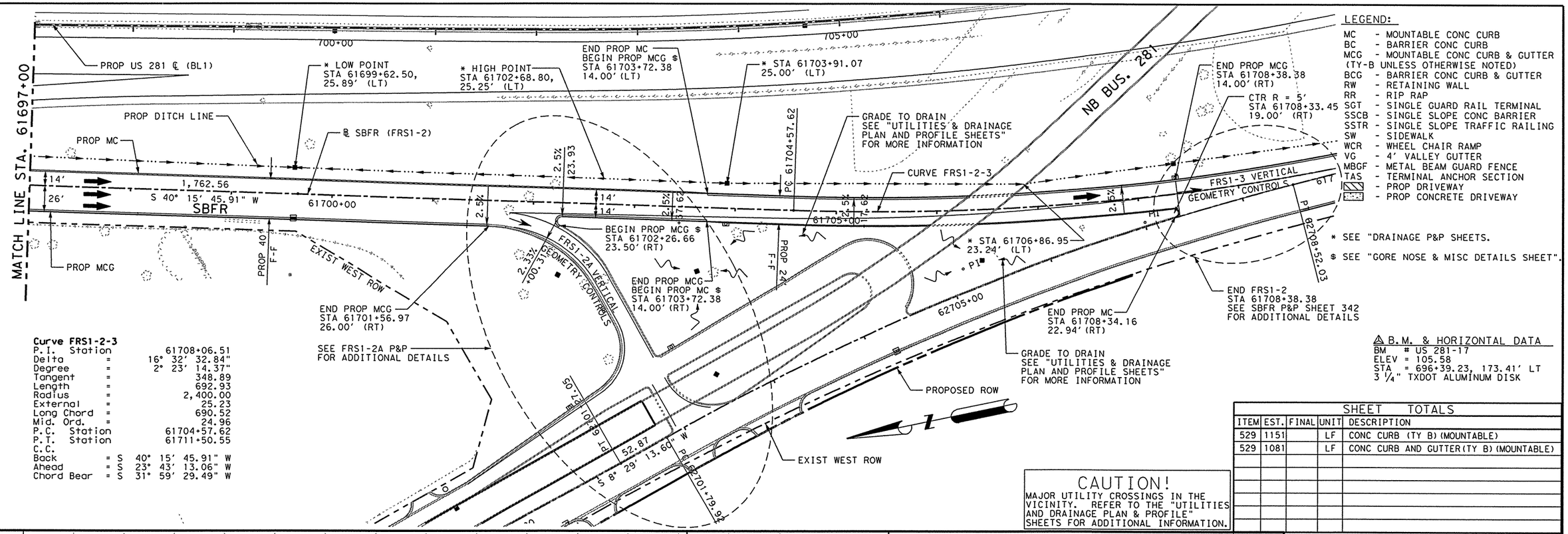

Curve FRS1-2-3

P.I. Station		61708+06.51
Delta	=	16° 32' 32.84"
Degree	=	2° 23' 14.37"
Tangent	=	348.89
Length	=	692.93
Radius	=	2,400.00
External	=	25.23
Long Chord	=	690.52
Mid. Ord.	=	24.96
P.C. Station		61704+57.62
P.T. Station		61711+50.55
C.C.		
Back	= S	40° 15' 45.91" W
Ahead	= S	23° 43' 13.06" W
Chord Bear	= S	31° 59' 29.49" W

⚠ B.M. & HORIZONTAL DATA
BM # US 281-17
ELEV = 105.58
STA = 696+39.23, 173.41' LT
3 1/4" TXDOT ALUMINUM DISK

SHEET TOTALS

ITEM	EST.	FINAL	UNIT	DESCRIPTION
529	1151		LF	CONC CURB (TY B) (MOUNTABLE)
529	1081		LF	CONC CURB AND GUTTER(TY B) (MOUNTABLE)

CAUTION!
MAJOR UTILITY CROSSINGS IN THE VICINITY. REFER TO THE "UTILITIES AND DRAINAGE PLAN & PROFILE" SHEETS FOR ADDITIONAL INFORMATION.

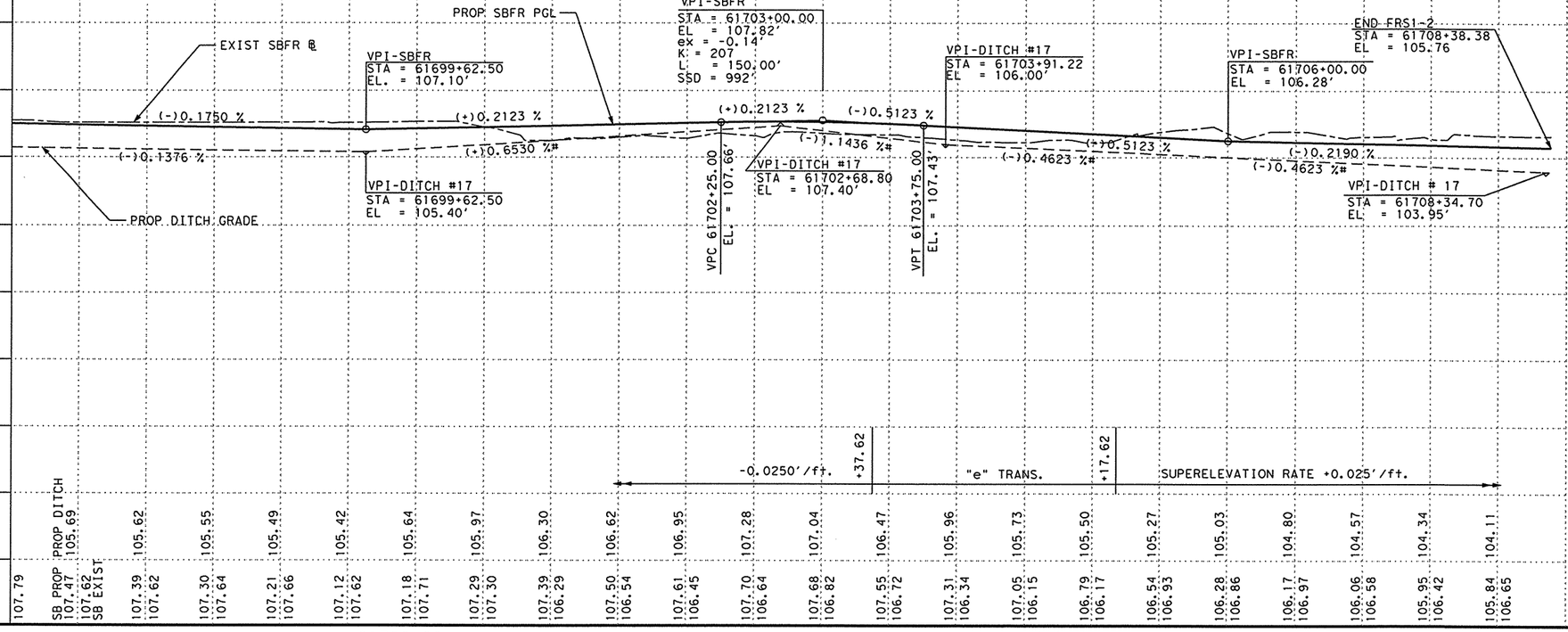

PROFILE LEGEND
PROP SOUTH BOUND FRONTAGE RD P.G.L.
EXIST SOUTH BOUND FRONTAGE RD B.L.
PROP SOUTH BOUND FRONTAGE RD DITCH

NOTES:
1. # SLOPE MEASURED ALONG LENGTH OF DITCH.

THE SEAL APPEARING ON THIS DOCUMENT WAS AUTHORIZED BY JAIME AGUILAR, P.E. 87606 ON 06/23/2003.

THE SEAL APPEARING ON THIS DOCUMENT WAS AUTHORIZED BY PHAISARN CWATANAPHOL, P.E. 89252 ON 06/23/2003.

STATE OF TEXAS JAIME AGUILAR 87606 REGISTERED PROFESSIONAL ENGINEER

STATE OF TEXAS PHAISARN CWATANAPHOL 89252 REGISTERED PROFESSIONAL ENGINEER

Parsons Brinckerhoff Quade & Douglas Inc.

Texas Department of Transportation

© 2003 by TxDOT

US 281
PLAN & PROFILE
SOUTHBOUND FRONTAGE ROAD

STA. 61697+00 "FRS1-2" TO
STA. 61708+38.38 "FRS1-2"

PLAN 1"= 100' HORIZ
PROFILE 1"= 10' VERT

SHEET 8 OF 22 | 281PFS08.DGN

DESIGNED: JA	FED. RD DIV. No.	STATE	FEDERAL AID PROJECT No.			HIGHWAY No.
CHECKED: JP	6	TEXAS				US 281
DRAWN: CG	STATE DISTRICT	COUNTY	CONTROL No.	SECTION No.	JOB No.	SHEET No.
CHECKED: JDH	PHARR	HIDALGO	0255	08	091	340

i:\22322a\cadd\sheets\roadway\281pfs08.dgn

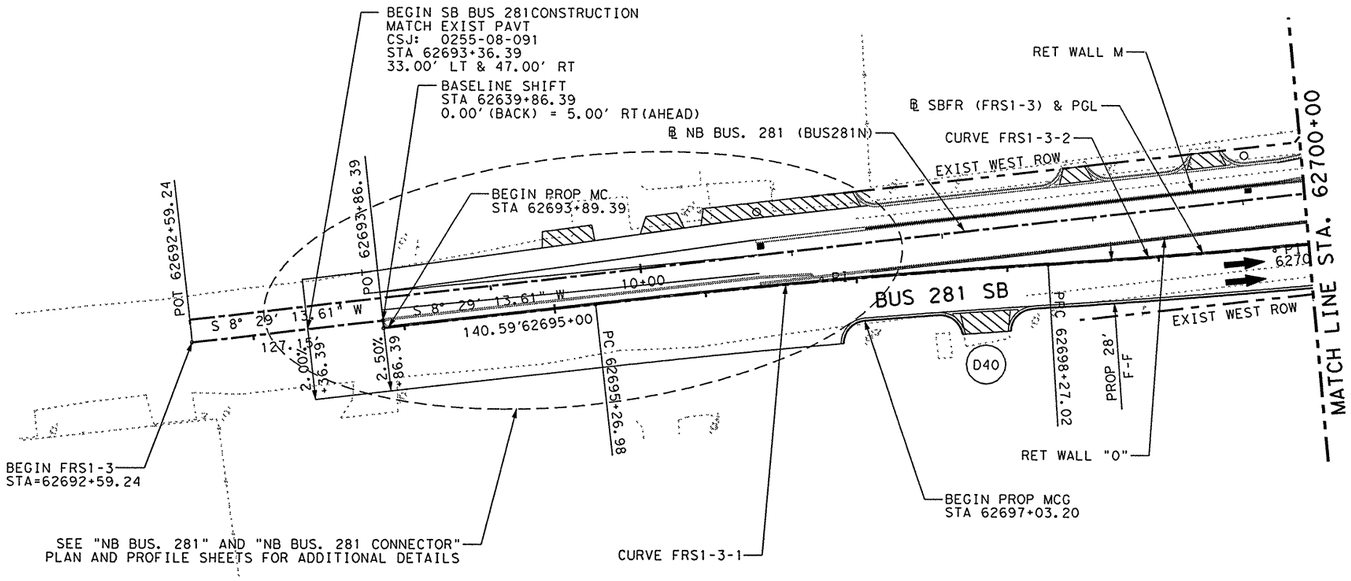

LEGEND:

MC	- MOUNTABLE CONC CURB
BC	- BARRIER CONC CURB
MCG	- MOUNTABLE CONC CURB & GUTTER (TY-B UNLESS OTHERWISE NOTED)
BCG	- BARRIER CONC CURB & GUTTER
RW	- RETAINING WALL
RR	- RIP RAP
SGT	- SINGLE GUARD RAIL TERMINAL
SSCB	- SINGLE SLOPE CONC BARRIER
SSTR	- SINGLE SLOPE TRAFFIC RAILING
SW	- SIDEWALK
WCR	- WHEEL CHAIR RAMP
VG	- 4' VALLEY GUTTER
MBGF	- METAL BEAM GUARD FENCE
TAS	- TERMINAL ANCHOR SECTION
	- PROP DRIVEWAY
	- PROP CONCRETE DRIVEWAY

FOR DRIVEWAY APRON TYPES AND SIZES, SEE "DRIVEWAY SUMMARY".

* SEE "DRAINAGE P&P SHEETS".

$ SEE "GORE NOSE & MISC DETAILS SHEET".

Curve FRS1-3-1

P.I. Station		62696+77.03
Delta	=	2° 51' 54.31"
Degree	=	0° 57' 17.75"
Tangent	=	150.05
Length	=	300.03
Radius	=	6,000.00
External	=	1.88
Long Chord	=	300.00
Mid. Ord.	=	1.88
P.C. Station		62695+26.98
P.T. Station		62698+27.01

Curve FRS1-3-2

P.I. Station		62699+77.06
Delta	=	2° 51' 54.32"
Degree	=	0° 57' 17.75"
Tangent	=	150.05
Length	=	300.03
Radius	=	6,000.00
External	=	1.88
Long Chord	=	300.00
Mid. Ord.	=	1.88
P.C. Station		62698+27.01
P.T. Station		62701+27.05

CAUTION!
MAJOR UTILITY CROSSINGS IN THE VICINITY. REFER TO THE "UTILITIES AND DRAINAGE PLAN & PROFILE" SHEETS FOR ADDITIONAL INFORMATION.

⚠ B.M. & HORIZONTAL DATA

BM # US 281-16
ELEV = 103.82
STA = 706+19.13, 220.37' LT
3 1/4" TXDOT ALUMINUM DISK

BM # US 281-17
ELEV = 105.52
STA = 696+39.23, 173.41' LT
3 1/4" TXDOT ALUMINUM DISK

SHEET TOTALS

ITEM	EST.	FINAL	UNIT	DESCRIPTION
529	611		LF	CONC CURB (TY B) (MOUNTABLE)
529	297		LF	CONC CURB AND GUTTER(TY B) (MOUNTABLE)
530	48		SY	DRVWY (ASPH-CONC PAV) (TY PB-1)

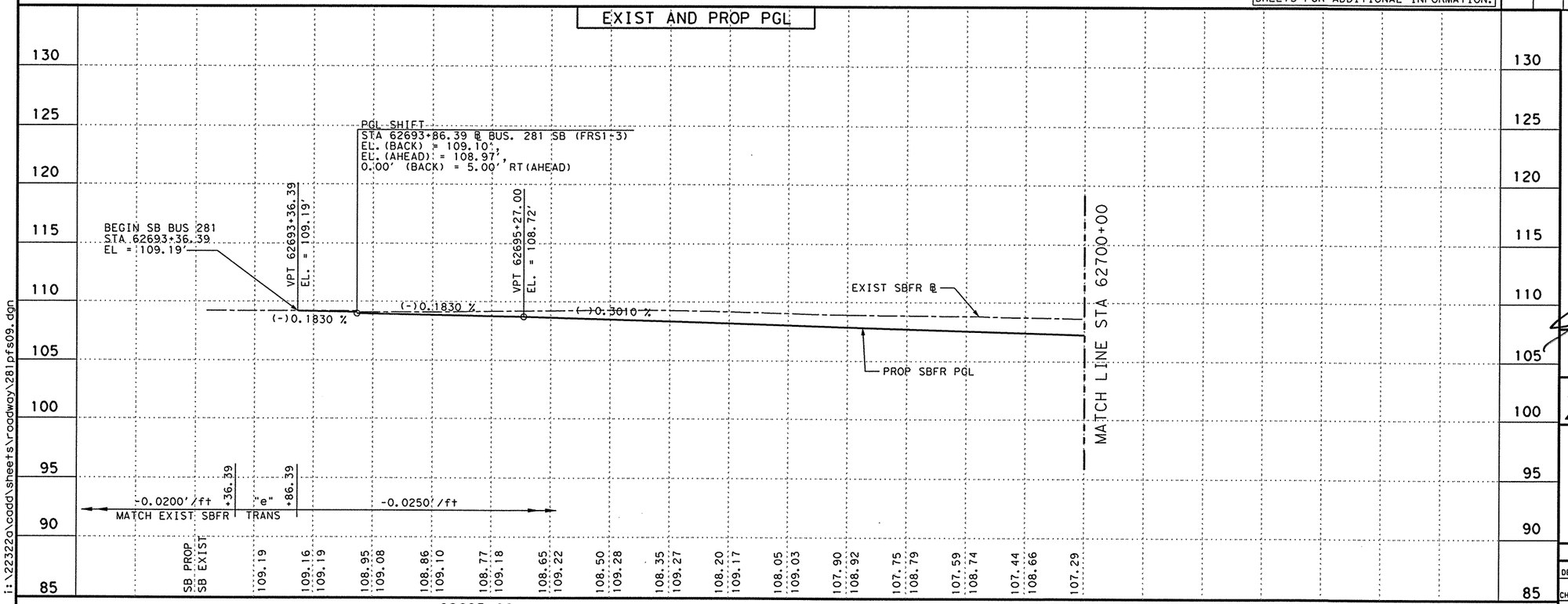

PROFILE LEGEND

- PROP SOUTH BOUND FRONTAGE RD P.G.L
- EXIST SOUTH BOUND FRONTAGE RD B.L.
- PROP SOUTH BOUND FRONTAGE RD DITCH

NOTES:
1. # SLOPE MEASURED ALONG LENGTH OF DITCH.

THE SEAL APPEARING ON THIS DOCUMENT WAS AUTHORIZED BY JAIME AGUILAR, P.E. 87606 ON 06/23/2003.

THE SEAL APPEARING ON THIS DOCUMENT WAS AUTHORIZED BY PHAISARN CWATANAPHOL, P.E. 89252 ON 06/23/2003.

STATE OF TEXAS — JAIME AGUILAR — 87606 — REGISTERED PROFESSIONAL ENGINEER

STATE OF TEXAS — PHAISARN CWATANAPHOL — 89252 — REGISTERED PROFESSIONAL ENGINEER

Parsons Brinckerhoff Quade & Douglas Inc.

Texas Department of Transportation

© 2003 by TxDOT

US 281
PLAN & PROFILE
SOUTHBOUND FRONTAGE ROAD

STA. 62692+59.24 "FRS1-3" TO
STA. 62700+00 "FRS1-3"

PLAN 1"= 100' HORIZ
PROFILE 1"= 10' VERT

SHEET 9 OF 22			281PFS09.DGN				
DESIGNED: JA	FED. RD DIV. No.	STATE	FEDERAL AID PROJECT No.			HIGHWAY No.	
CHECKED: JP	6	TEXAS				US 281	
DRAWN: CG	STATE DISTRICT	COUNTY	CONTROL No.	SECTION No.	JOB No.	SHEET No.	
CHECKED: JDH	PHARR	HIDALGO	0255	08	091	341	

i:\22322a\cadd\sheets\roadway\281pfs09.dgn

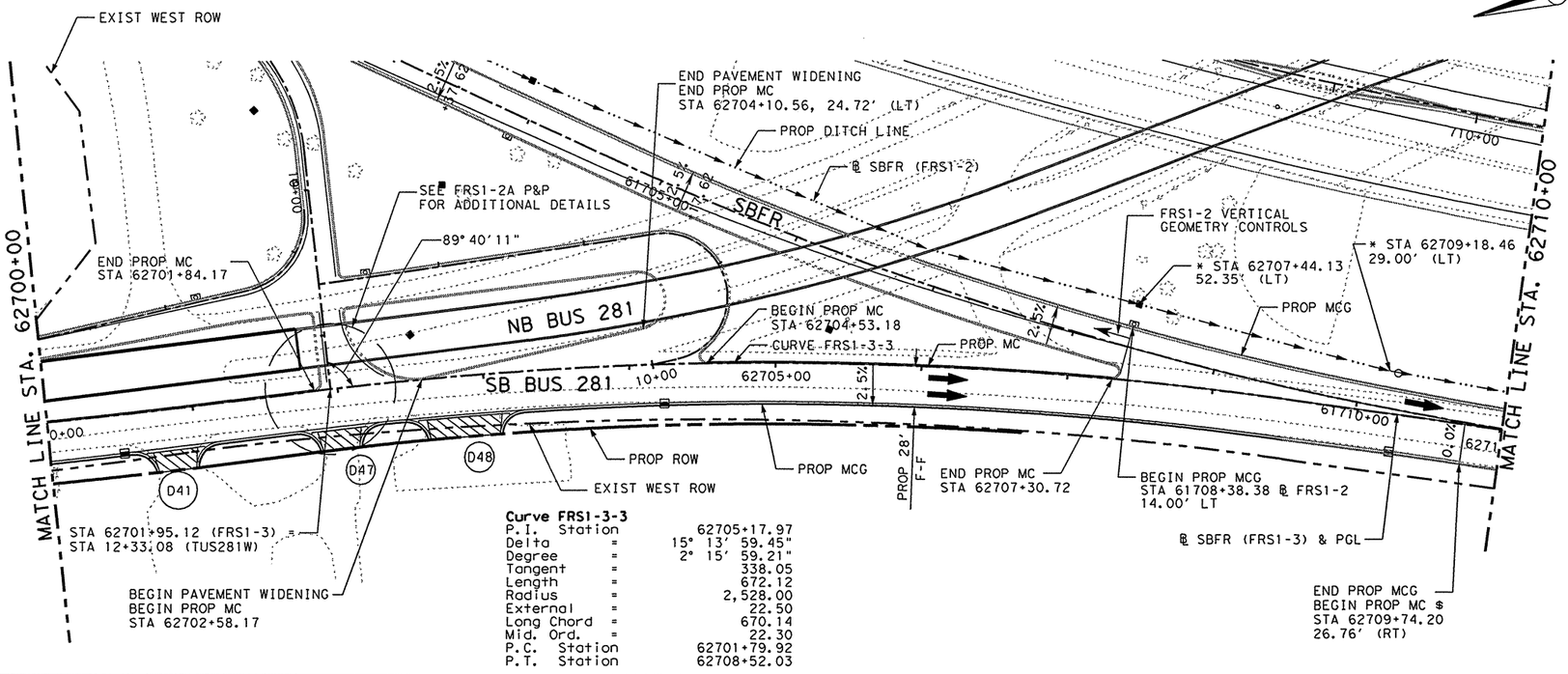

Curve FRS1-3-3

P.I. Station	=	62705+17.97
Delta	=	15° 13' 59.45"
Degree	=	2° 15' 59.21"
Tangent	=	338.05
Length	=	672.12
Radius	=	2,528.00
External	=	22.50
Long Chord	=	670.14
Mid. Ord.	=	22.30
P.C. Station	=	62701+79.92
P.T. Station	=	62708+52.03

LEGEND:

- MC - MOUNTABLE CONC CURB
- BC - BARRIER CONC CURB
- MCG - MOUNTABLE CONC CURB & GUTTER (TY-B UNLESS OTHERWISE NOTED)
- BCG - BARRIER CONC CURB & GUTTER
- RW - RETAINING WALL
- RR - RIP RAP
- SGT - SINGLE GUARD RAIL TERMINAL
- SSCB - SINGLE SLOPE CONC BARRIER
- SSTR - SINGLE SLOPE TRAFFIC RAILING
- SW - SIDEWALK
- WCR - WHEEL CHAIR RAMP
- VG - 4' VALLEY GUTTER
- MBGF - METAL BEAM GUARD FENCE
- TAS - TERMINAL ANCHOR SECTION
- PROP DRIVEWAY
- PROP CONCRETE DRIVEWAY

FOR DRIVEWAY APRON TYPES AND SIZES, SEE "DRIVEWAY SUMMARY".

* SEE "DRAINAGE P&P SHEETS".

$ SEE "GORE NOSE & MISC DETAILS SHEET".

⚠ B.M. & HORIZONTAL DATA
BM # US 281-16
ELEV = 103.82
STA = 706+19.13, 220.37' LT
3 1/4" TXDOT ALUMINUM DISK

SHEET TOTALS

ITEM	EST.	FINAL	UNIT	DESCRIPTION
529	617		LF	CONC CURB (TY B) (MOUNTABLE)
529	1265		LF	CONC CURB AND GUTTER (TY B) (MOUNTABLE)
530	83		SY	DRVWY (ASPH-CONC PAV) (TY PB-1)
530	76		SY	DRVWY (ASPH-CONC PAV) (TY P-1)

EXIST AND PROP PGL

CAUTION!
MAJOR UTILITY CROSSINGS IN THE VICINITY. REFER TO THE "UTILITIES AND DRAINAGE PLAN & PROFILE" SHEETS FOR ADDITIONAL INFORMATION.

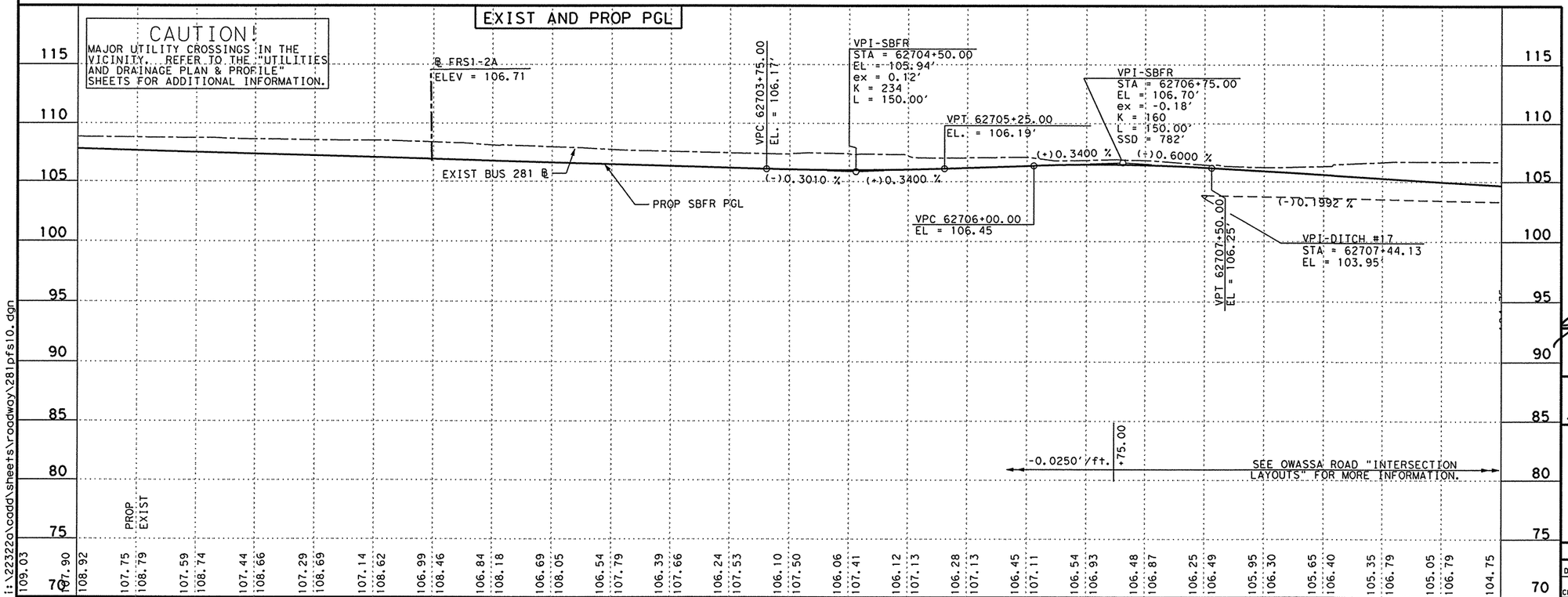

PROFILE LEGEND
- PROP SOUTH BOUND FRONTAGE RD P.G.L
- EXIST SOUTH BOUND FRONTAGE RD B.L.
- PROP SOUTH BOUND FRONTAGE RD DITCH

NOTES:
1. # SLOPE MEASURED ALONG LENGTH OF DITCH.

THE SEAL APPEARING ON THIS DOCUMENT WAS AUTHORIZED BY JAIME AGUILAR, P.E. 87606 ON 06/23/2003.

THE SEAL APPEARING ON THIS DOCUMENT WAS AUTHORIZED BY PHAISARN CWATANAPHOL, P.E. 89252 ON 06/23/2003.

STATE OF TEXAS · JAIME AGUILAR · 87606 · REGISTERED PROFESSIONAL ENGINEER

STATE OF TEXAS · PHAISARN CWATANAPHOL · 89252 · REGISTERED PROFESSIONAL ENGINEER

Parsons Brinckerhoff Quade & Douglas Inc.

Texas Department of Transportation

© 2003 by TxDOT

US 281
PLAN & PROFILE
SOUTHBOUND FRONTAGE ROAD

STA. 62700+00 "FRS1-3" TO
STA. 62710+00 "FRS1-3"

PLAN 1"= 100' HORIZ
PROFILE 1"= 10' VERT

SHEET 10 OF 22 | 281PFS10.DGN

DESIGNED: JA	FED. RD DIV. No.	STATE	FEDERAL AID PROJECT No.	HIGHWAY No.
CHECKED: JP	6	TEXAS		US 281

DRAWN:	STATE DISTRICT	COUNTY	CONTROL No.	SECTION No.	JOB No.	SHEET No.
CHECKED: JDH	PHARR	HIDALGO	0255	08	091	342

NAME 10:28:02 AM 06/23/2003

i:\22322a\coddl\sheets\roadway\281pfs10.dgn

NAME
10:28:21 AM
06/23/2003

Curve FRS1-3-4

P.I. Station		62714+32.08
Delta	=	15° 13' 29.09"
Degree	=	2° 00' 00.00"
Tangent	=	382.87
Length	=	761.24
Radius	=	2,864.79
External	=	25.47
Long Chord	=	759.00
Mid. Ord.	=	25.25
P.C. Station		62710+49.20
P.T. Station		62718+10.44

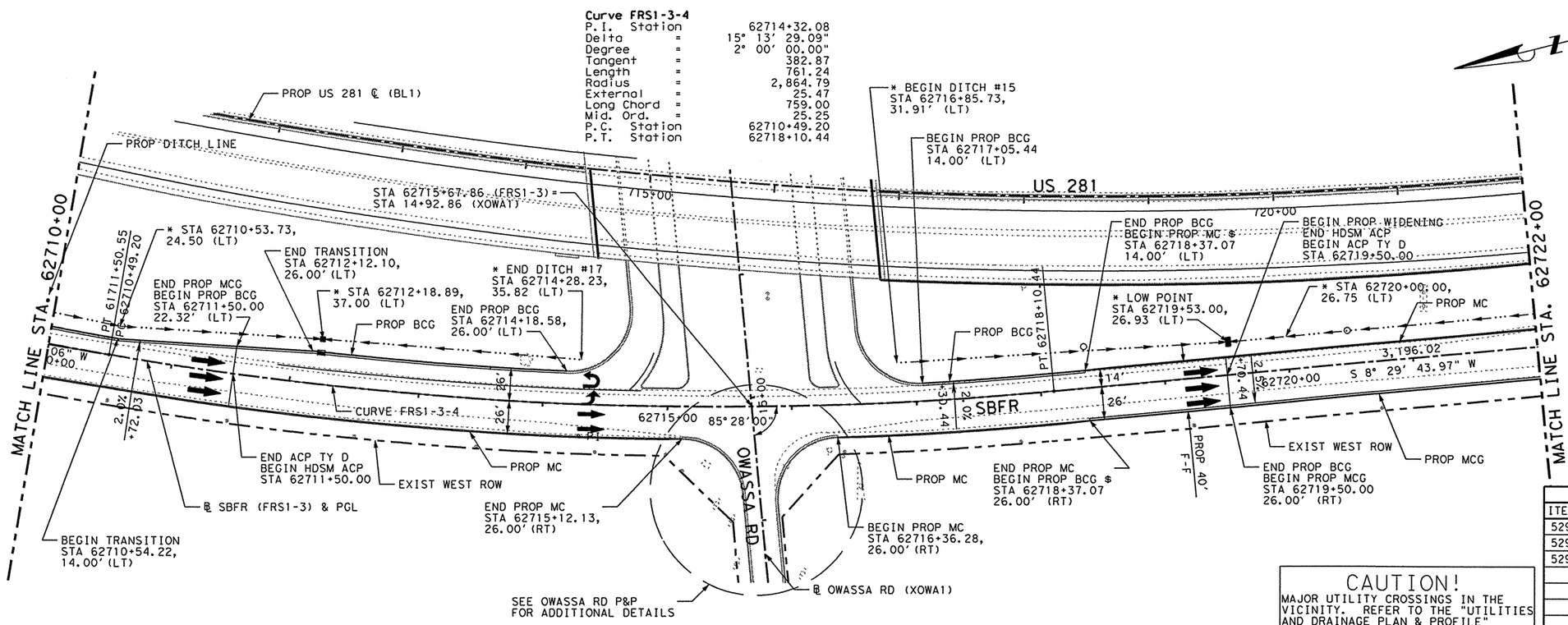

LEGEND:

MC	- MOUNTABLE CONC CURB
BC	- BARRIER CONC CURB
MCG	- MOUNTABLE CONC CURB & GUTTER (TY-B UNLESS OTHERWISE NOTED)
BCG	- BARRIER CONC CURB & GUTTER
RW	- RETAINING WALL
RR	- RIP RAP
SGT	- SINGLE GUARD RAIL TERMINAL
SSCB	- SINGLE SLOPE CONC BARRIER
SSTR	- SINGLE SLOPE TRAFFIC RAILING
SW	- SIDEWALK
WCR	- WHEEL CHAIR RAMP
VG	- 4' VALLEY GUTTER
MBGF	- METAL BEAM GUARD FENCE
TAS	- TERMINAL ANCHOR SECTION
	- PROP DRIVEWAY
	- PROP CONCRETE DRIVEWAY

* SEE "DRAINAGE P&P SHEETS".

$ SEE "GORE NOSE & MISC DETAILS SHEET".

⚠ B.M. & HORIZONTAL DATA
BM # US 281-15
ELEV = 103.73
STA = 717+06.49, 448.89' LT
3 1/4" TXDOT ALUMINUM DISK

SHEET TOTALS

ITEM	EST.	FINAL	UNIT	DESCRIPTION
529	1076		LF	CONC CURB (TY B) (MOUNTABLE)
529	400		LF	CONC CURB AND GUTTER (TY B) (MOUNTABLE)
529	513		LF	CONC CURB & GUTTER (TY-A) (BARRIER)

CAUTION!
MAJOR UTILITY CROSSINGS IN THE VICINITY. REFER TO THE "UTILITIES AND DRAINAGE PLAN & PROFILE" SHEETS FOR ADDITIONAL INFORMATION.

EXIST AND PROP PGL

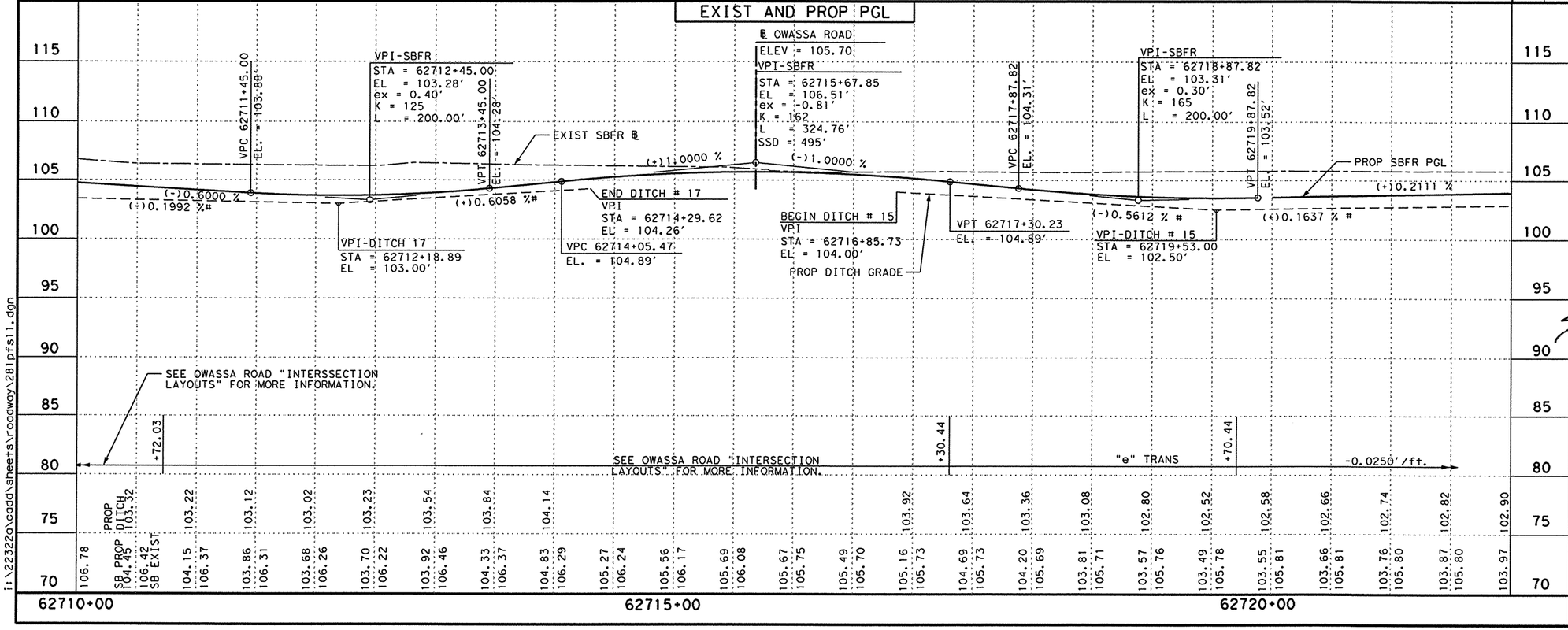

PROFILE LEGEND
PROP SOUTH BOUND FRONTAGE RD P.G.L.
EXIST SOUTH BOUND FRONTAGE RD B.L.
PROP SOUTH BOUND FRONTAGE RD DITCH

NOTES:
1. # SLOPE MEASURED ALONG LENGTH OF DITCH.

THE SEAL APPEARING ON THIS DOCUMENT WAS AUTHORIZED BY JAIME AGUILAR, P.E. 87606 ON 06/23/2003.

THE SEAL APPEARING ON THIS DOCUMENT WAS AUTHORIZED BY PHAISARN CWATANAPHOL, P.E. 89252 ON 06/23/2003.

STATE OF TEXAS — JAIME AGUILAR — 87606 — REGISTERED PROFESSIONAL ENGINEER

STATE OF TEXAS — PHAISARN CWATANAPHOL — 89252 — REGISTERED PROFESSIONAL ENGINEER

Parsons Brinckerhoff Quade & Douglas Inc.

Texas Department of Transportation

© 2003 by TxDOT

US 281
PLAN & PROFILE
SOUTHBOUND FRONTAGE ROAD

STA. 62710+00 "FRS1-3" TO
STA. 62722+00 "FRS1-3"

PLAN 1"= 100' HORIZ
PROFILE 1"= 10' VERT

SHEET 11 OF 22				281PFS11.DGN				
DESIGNED: JA	FED. RD DIV. No.	STATE	FEDERAL AID PROJECT No.				HIGHWAY No.	
CHECKED: JP	6	TEXAS					US 281	
DRAWN: CG	STATE DISTRICT	COUNTY	CONTROL No.	SECTION No.	JOB No.	SHEET No.		
CHECKED: JDH	PHARR	HIDALGO	0255	08	091	343		

i:\22322a\cadd\sheets\roadway\281pfs11.dgn

NAME
10:28:37 AM
06/23/2003

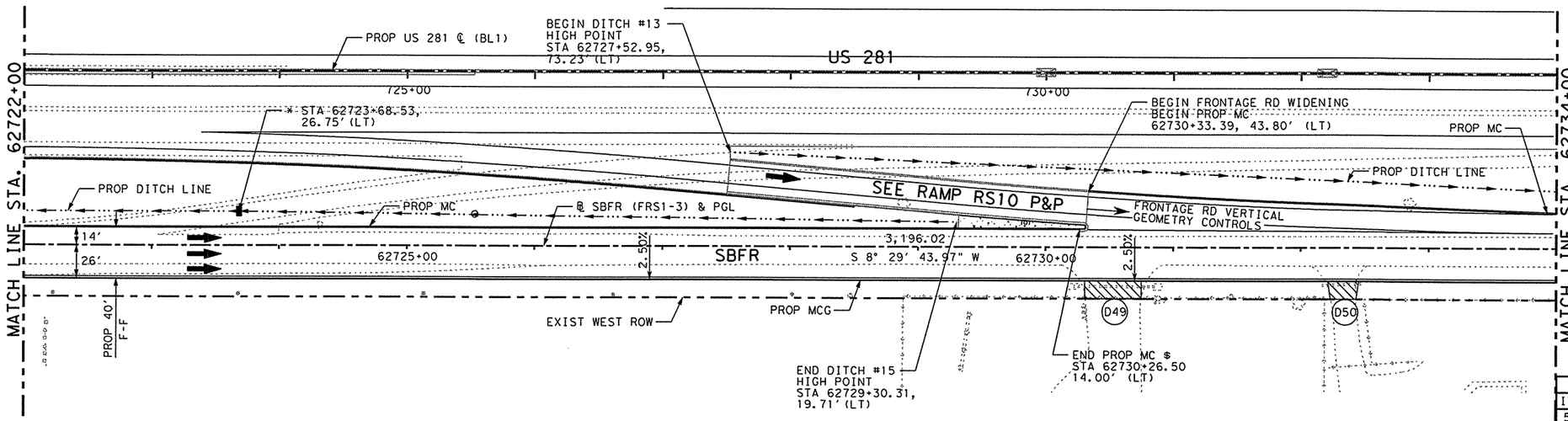

LEGEND:

MC	- MOUNTABLE CONC CURB
BC	- BARRIER CONC CURB
MCG	- MOUNTABLE CONC CURB & GUTTER (TY-B UNLESS OTHERWISE NOTED)
BCG	- BARRIER CONC CURB & GUTTER
RW	- RETAINING WALL
RR	- RIP RAP
SGT	- SINGLE GUARD RAIL TERMINAL
SSCB	- SINGLE SLOPE CONC BARRIER
SSTR	- SINGLE SLOPE TRAFFIC RAILING
SW	- SIDEWALK
WCR	- WHEEL CHAIR RAMP
VG	- 4' VALLEY GUTTER
MBGF	- METAL BEAM GUARD FENCE
TAS	- TERMINAL ANCHOR SECTION
	- PROP DRIVEWAY
	- PROP CONCRETE DRIVEWAY

FOR DRIVEWAY APRON TYPES AND SIZES, SEE "DRIVEWAY SUMMARY".

* SEE "DRAINAGE P&P SHEETS".
$ SEE "GORE NOSE & MISC DETAILS SHEET".

△ B.M. & HORIZONTAL DATA
BM # US 281-14
ELEV = 103.90
STA = 727+41.86, 241.71' LT
3 1/4" TXDOT ALUMINUM DISK

SHEET TOTALS

ITEM	EST.	FINAL	UNIT	DESCRIPTION
529	1197		LF	CONC CURB (TY B) (MOUNTABLE)
529	1200		LF	CONC CURB AND GUTTER (TY B) (MOUNTABLE)
530	33		SY	DRVWY (ASPH-CONC PAV) (TY PB-1)
530	67		SY	DRVWY (ASPH-CONC PAV) (TY P-1)

CAUTION!
MAJOR UTILITY CROSSINGS IN THE VICINITY. REFER TO THE "UTILITIES AND DRAINAGE PLAN & PROFILE" SHEETS FOR ADDITIONAL INFORMATION.

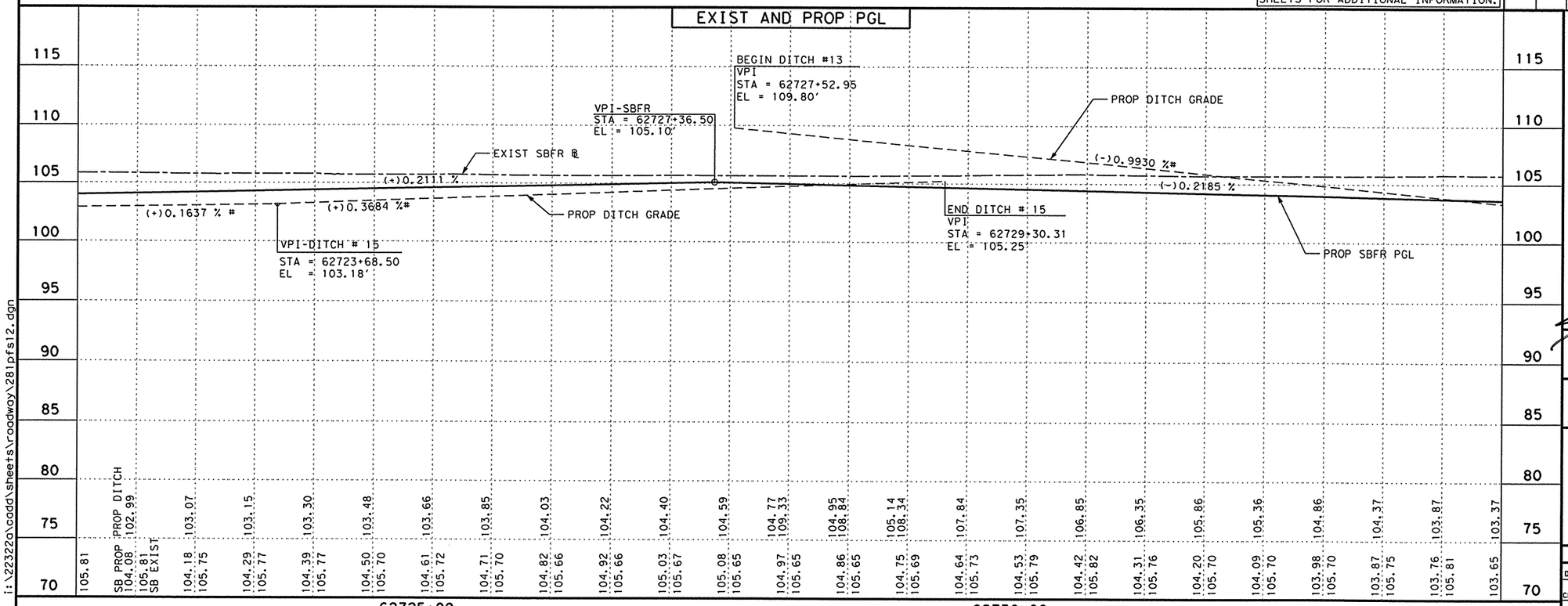

PROFILE LEGEND
PROP SOUTH BOUND FRONTAGE RD P.G.L.
EXIST SOUTH BOUND FRONTAGE RD B.L.
PROP SOUTH BOUND FRONTAGE RD DITCH

NOTES:
1. # SLOPE MEASURED ALONG LENGTH OF DITCH.

THE SEAL APPEARING ON THIS DOCUMENT WAS AUTHORIZED BY JAIME AGUILAR, P.E. 87606 ON 06/23/2003.

THE SEAL APPEARING ON THIS DOCUMENT WAS AUTHORIZED BY PHAISARN CWATANAPHOL, P.E. 89252 ON 06/23/2003.

STATE OF TEXAS
JAIME AGUILAR
87606
REGISTERED
PROFESSIONAL ENGINEER

STATE OF TEXAS
PHAISARN CWATANAPHOL
89252
REGISTERED
PROFESSIONAL ENGINEER

Parsons Brinckerhoff Quade & Douglas Inc.

Texas Department of Transportation

© 2003 by TxDOT

US 281
PLAN & PROFILE
SOUTHBOUND FRONTAGE ROAD

STA. 62722+00 "FRS1-3" TO
STA. 62734+00 "FRS1-3"

PLAN 1"= 100' HORIZ
PROFILE 1"= 10' VERT

SHEET 12 OF 22 | 281PFS12.DGN

DESIGNED: JA	FED. RD DIV. No.	STATE	FEDERAL AID PROJECT No.		HIGHWAY No.
CHECKED: JP	6	TEXAS			US 281
DRAWN: CG	STATE DISTRICT	COUNTY	CONTROL No.	SECTION No.	JOB No.	SHEET No.
CHECKED: JDH	PHARR	HIDALGO	0255	08	091	344

i:\22322\cadd\sheets\roadway\281pfs12.dgn

NAME
10:28:54 AM
06/23/2003

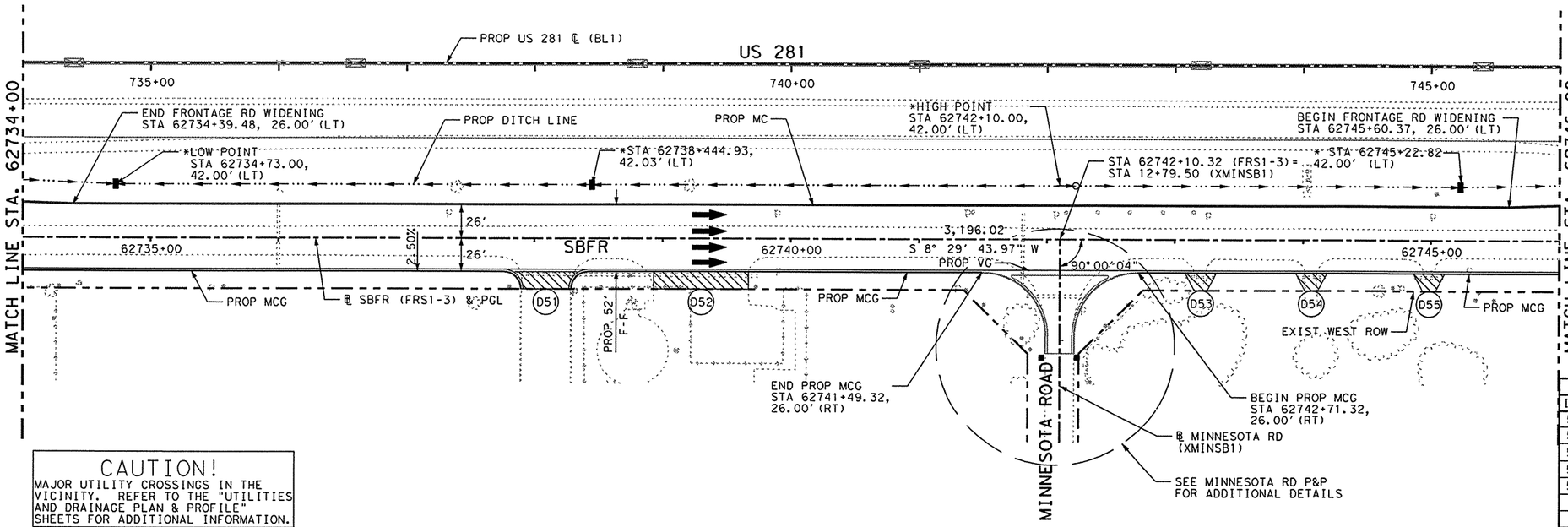

CAUTION!
MAJOR UTILITY CROSSINGS IN THE VICINITY. REFER TO THE "UTILITIES AND DRAINAGE PLAN & PROFILE" SHEETS FOR ADDITIONAL INFORMATION.

LEGEND:

- MC - MOUNTABLE CONC CURB
- BC - BARRIER CONC CURB
- MCG - MOUNTABLE CONC CURB & GUTTER (TY-B UNLESS OTHERWISE NOTED)
- BCG - BARRIER CONC CURB & GUTTER
- RW - RETAINING WALL
- RR - RIP RAP
- SGT - SINGLE GUARD RAIL TERMINAL
- SSCB - SINGLE SLOPE CONC BARRIER
- SSTR - SINGLE SLOPE TRAFFIC RAILING
- SW - SIDEWALK
- WCR - WHEEL CHAIR RAMP
- VG - 4' VALLEY GUTTER
- MBGF - METAL BEAM GUARD FENCE
- TAS - TERMINAL ANCHOR SECTION
- ▨ - PROP DRIVEWAY
- ▩ - PROP CONCRETE DRIVEWAY

FOR DRIVEWAY APRON TYPES AND SIZES, SEE "DRIVEWAY SUMMARY".

* SEE "DRAINAGE P&P SHEETS".

⚠ B.M. & HORIZONTAL DATA
BM # US 281-13
ELEV = 104.89
STA = 737+28.11, 172.67' LT
3 1/4" TXDOT ALUMINUM DISK

SHEET TOTALS

ITEM	EST.	FINAL	UNIT	DESCRIPTION
529	1201		LF	CONC CURB (TY B) (MOUNTABLE)
529	1078		LF	CONC CURB AND GUTTER (TY B) (MOUNTABLE)
530	188		SY	DRVWY (ASPH-CONC PAV) (TY PB-1)
530	61		SY	DRVWY (ASPH-CONC PAV) (TY P-1)
529	122		LF	CONC GUTTER (VALLEY) (4')

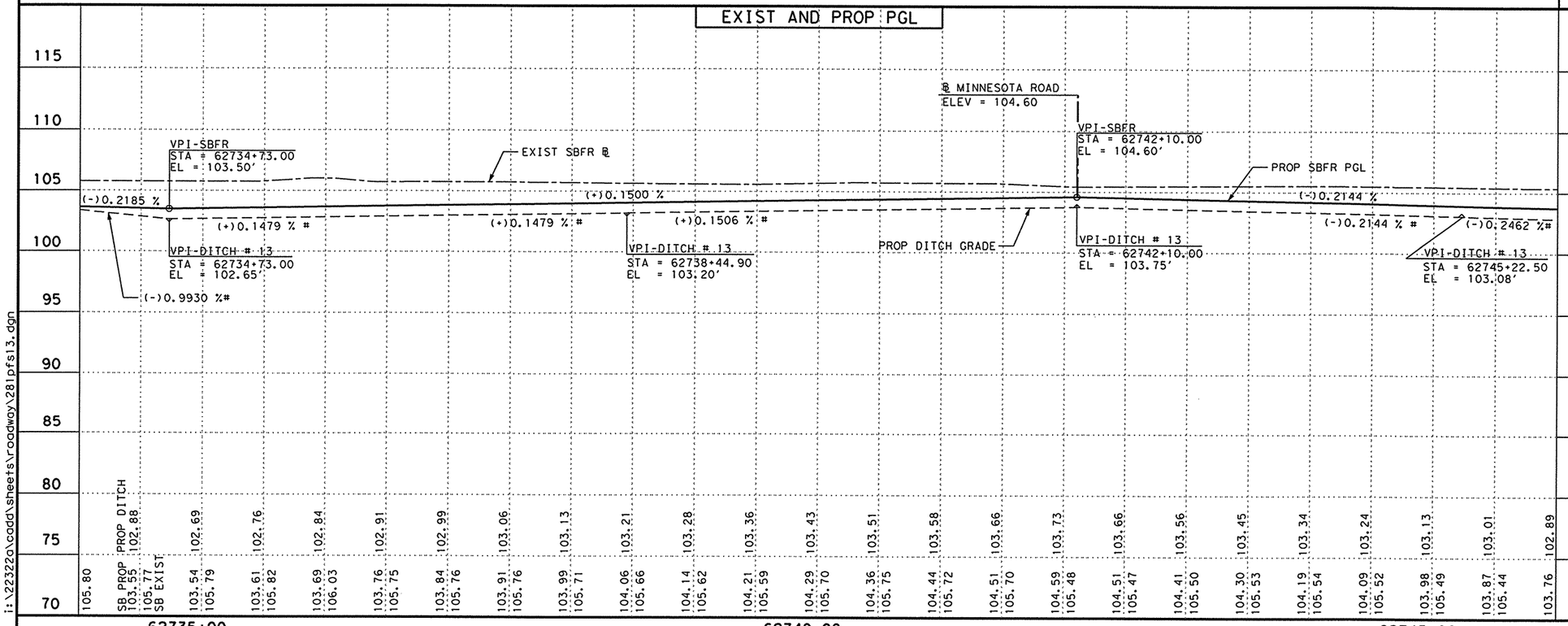

PROFILE LEGEND
- PROP SOUTH BOUND FRONTAGE RD P.G.L.
- EXIST SOUTH BOUND FRONTAGE RD B.L.
- PROP SOUTH BOUND FRONTAGE RD DITCH

NOTES:
1. # SLOPE MEASURED ALONG LENGTH OF DITCH.

THE SEAL APPEARING ON THIS DOCUMENT WAS AUTHORIZED BY JAIME AGUILAR, P.E. 87606 ON 06/23/2003.

STATE OF TEXAS
JAIME AGUILAR
87606
REGISTERED PROFESSIONAL ENGINEER

THE SEAL APPEARING ON THIS DOCUMENT WAS AUTHORIZED BY PHAISARN CWATANAPHOL, P.E. 89252 ON 06/23/2003.

STATE OF TEXAS
PHAISARN CWATANAPHOL
89252
REGISTERED PROFESSIONAL ENGINEER

Parsons Brinckerhoff Quade & Douglas Inc.

Texas Department of Transportation

© 2003 by TxDOT

US 281
PLAN & PROFILE
SOUTHBOUND FRONTAGE ROAD

STA. 62734+00 "FRS1-3" TO
STA. 62746+00 "FRS1-3"

PLAN 1"= 100' HORIZ
PROFILE 1"= 10' VERT

SHEET 13 OF 22 | 281PFS13.DGN

DESIGNED: JA	FED. RD DIV. No.	STATE	FEDERAL AID PROJECT No.			HIGHWAY No.
CHECKED: JP	6	TEXAS				US 281
DRAWN: CG	STATE DISTRICT	COUNTY	CONTROL No.	SECTION No.	JOB No.	SHEET No.
CHECKED: JDH	PHARR	HIDALGO	0255	08	091	345

i:\22322\cadd\sheets\roadway\281pfs13.dgn

Phaisarn C.
04:48:47 PM
06/23/2003
I:\22322e\CADD\Sheets\Roadway\281pfs14.dgn

Curve FRS1-3-5	
P.I. Station	62752+30.41
Delta =	2° 14' 21.14"
Degree =	0° 30' 00.00"
Tangent =	223.95
Length =	447.84
Radius =	11,459.16
External =	2.19
Long Chord =	447.81
Mid. Ord. =	2.19
P.C. Station	62750+06.46
P.T. Station	62754+54.30

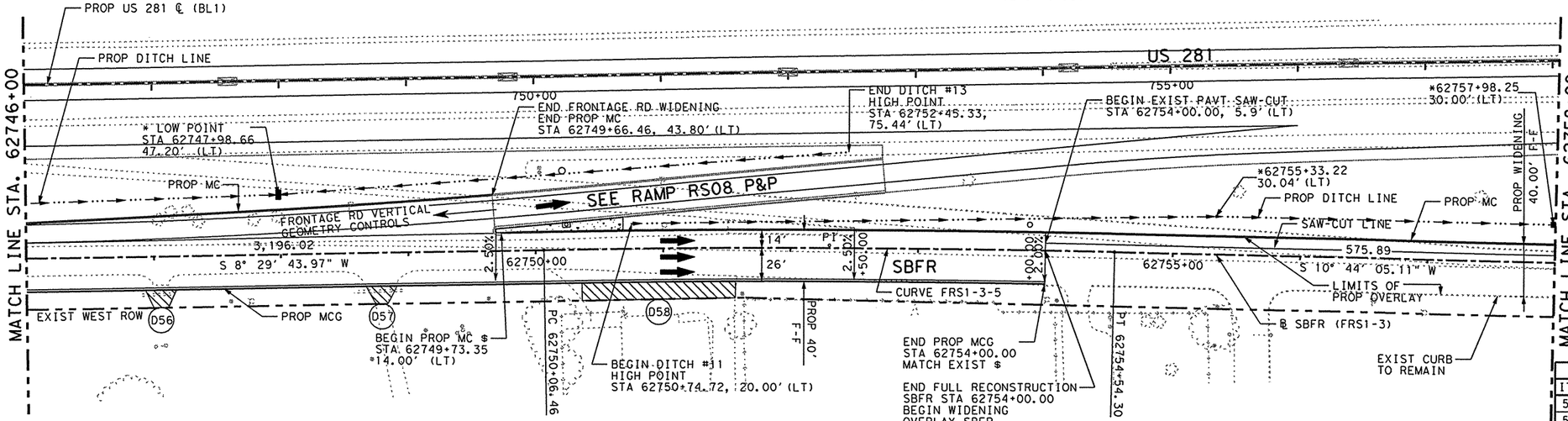

LEGEND:

- MC - MOUNTABLE CONC CURB
- BC - BARRIER CONC CURB
- MCG - MOUNTABLE CONC CURB & GUTTER (TY-B UNLESS OTHERWISE NOTED)
- BCG - BARRIER CONC CURB & GUTTER
- RW - RETAINING WALL
- RR - RIP RAP
- SGT - SINGLE GUARD RAIL TERMINAL
- SSCB - SINGLE SLOPE CONC BARRIER
- SSTR - SINGLE SLOPE TRAFFIC RAILING
- SW - SIDEWALK
- WCR - WHEEL CHAIR RAMP
- VG - 4' VALLEY GUTTER
- MBGF - METAL BEAM GUARD FENCE
- TAS - TERMINAL ANCHOR SECTION
- ▨ - PROP DRIVEWAY
- ▭ - PROP CONCRETE DRIVEWAY

FOR DRIVEWAY APRON TYPES AND SIZES, SEE "DRIVEWAY SUMMARY".

* SEE "DRAINAGE P&P SHEETS".

$ SEE "MISCELLANEOUS ROADWAY DETAILS".

⚠ B.M. & HORIZONTAL DATA

BM # US 281-12
ELEV = 104.33
STA = 747+40.09, 172.11' LT
3 ¼" TXDOT ALUMINUM DISK

BM # US 281-11
ELEV = 104.75
STA = 757+16.56, 194.71' LT
3 ¼" TXDOT ALUMINUM DISK

SHEET TOTALS

ITEM	EST.	FINAL	UNIT	DESCRIPTION
529	1194		LF	CONC CURB (TY B) (MOUNTABLE)
529	800		LF	CONC CURB AND GUTTER (TY B) (MOUNTABLE)
530	52		SY	DRVWY (ASPH-CONC PAV) (TY PB-1)
530	176		SY	DRVWY (ASPH-CONC PAV) (TY P-1)

CAUTION!
MAJOR UTILITY CROSSINGS IN THE VICINITY. REFER TO THE "UTILITIES AND DRAINAGE PLAN & PROFILE" SHEETS FOR ADDITIONAL INFORMATION.

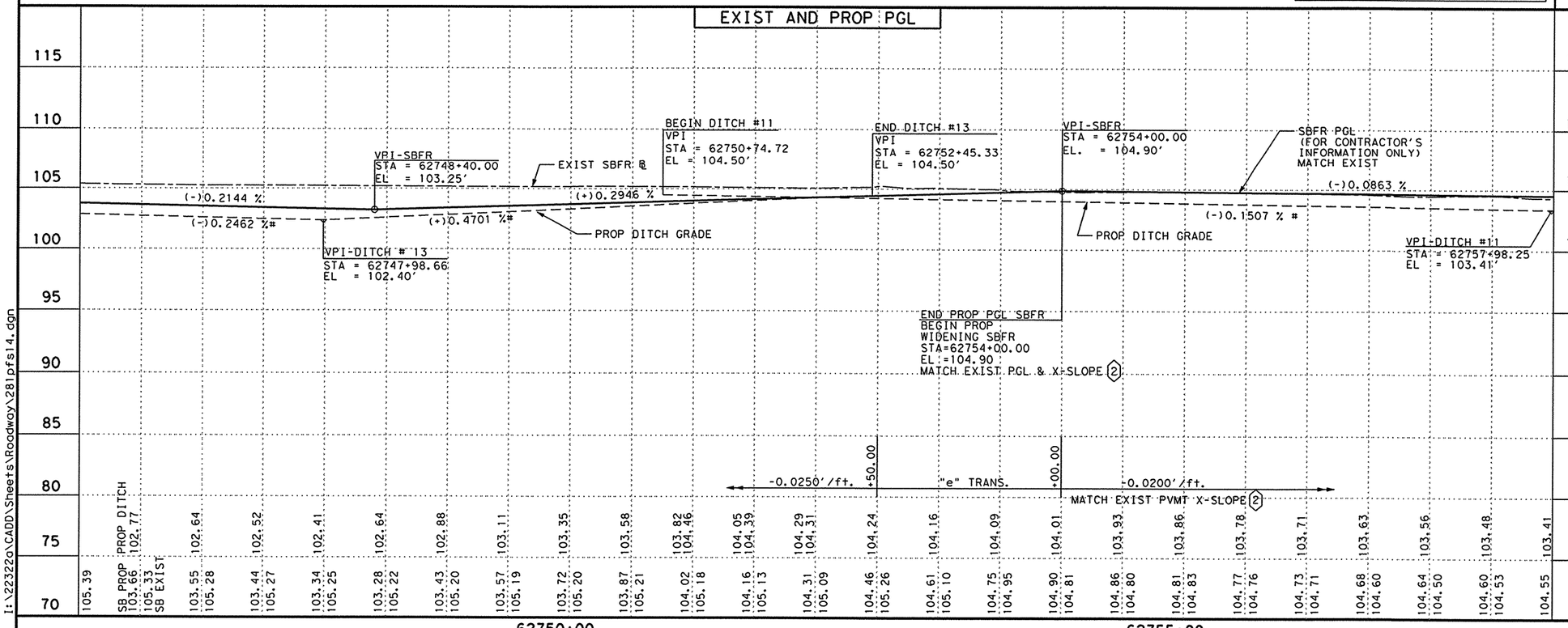

PROFILE LEGEND

- PROP SOUTH BOUND FRONTAGE RD P.G.L.
- EXIST SOUTH BOUND FRONTAGE RD B.L.
- PROP SOUTH BOUND FRONTAGE RD DITCH

NOTES:
1. # SLOPE MEASURED ALONG LENGTH OF DITCH.
2. PGL AND CROSS SLOPE SHOWN ALONG FRONTAGE ROAD WIDENING SECTIONS IS FOR INFORMATION PURPOSES ONLY. CONTRACTOR SHALL MATCH EXISTING PAVEMENT GRADES AND CROSS SLOPES ALONG ALL WIDENING AREAS.

THE SEAL APPEARING ON THIS DOCUMENT WAS AUTHORIZED BY JAIME AGUILAR, P.E. 87606 ON 06/23/2003.

THE SEAL APPEARING ON THIS DOCUMENT WAS AUTHORIZED BY PHAISARN CWATANAPHOL P.E. 89252 ON 06/23/2003.

STATE OF TEXAS · JAIME AGUILAR · 87606 · REGISTERED PROFESSIONAL ENGINEER

STATE OF TEXAS · PHAISARN CWATANAPHOL · 89252 · REGISTERED PROFESSIONAL ENGINEER

Parsons Brinckerhoff Quade & Douglas Inc.

Texas Department of Transportation

© 2003 by TxDOT

US 281
PLAN & PROFILE
SOUTHBOUND FRONTAGE ROAD

STA. 62746+00 "FRS1-3" TO
STA. 62758+00 "FRS1-3"

PLAN 1"= 100' HORIZ
PROFILE 1"= 10' VERT

SHEET 14 OF 22 — 281PFS14.DGN

DESIGNED: TT	FED. RD DIV. NO.	STATE	FEDERAL AID PROJECT No.			HIGHWAY No.
CHECKED: DM	6	TEXAS				US 281
DRAWN: CG	STATE DISTRICT	COUNTY	CONTROL No.	SECTION No.	JOB No.	SHEET No.
CHECKED: DM	PHARR	HIDALGO	0255	08	091	346

NAME
10:29:29 AM
06/23/2003

CAUTION!
MAJOR UTILITY CROSSINGS IN THE VICINITY. REFER TO THE "UTILITIES AND DRAINAGE PLAN & PROFILE" SHEETS FOR ADDITIONAL INFORMATION.

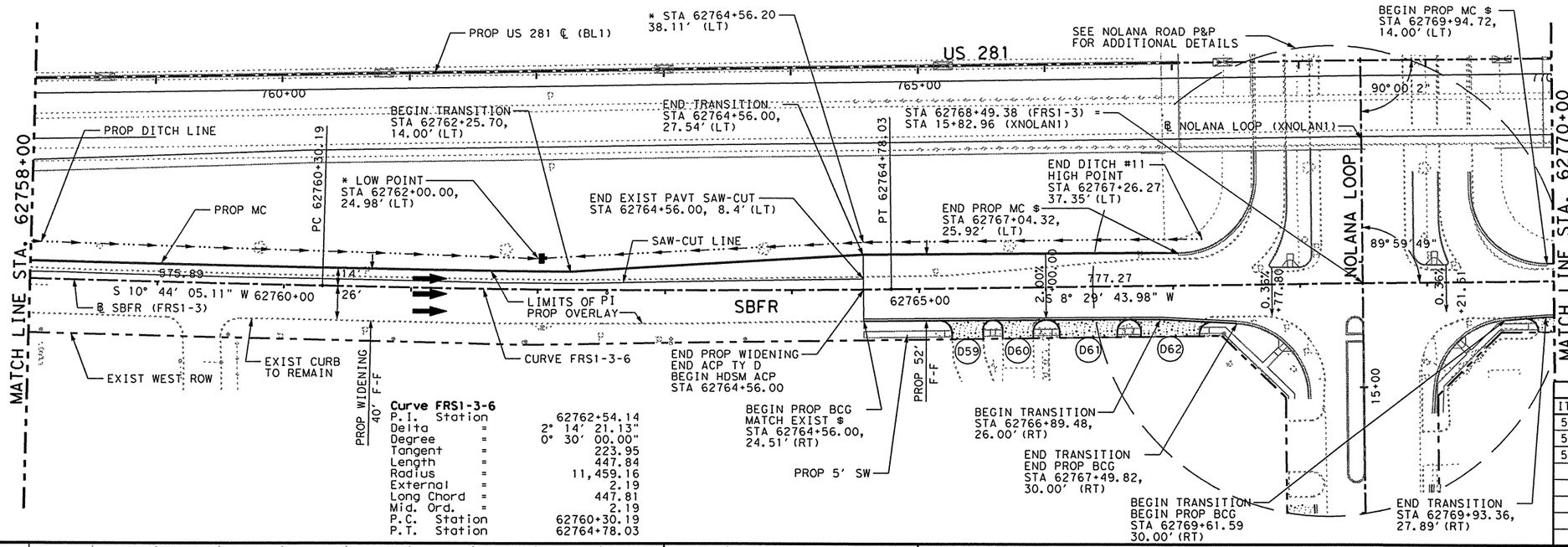

Curve FRS1-3-6

P.I. Station	=	62762+54.14
Delta	=	2° 14' 21.13"
Degree	=	0° 30' 00.00"
Tangent	=	223.95
Length	=	447.84
Radius	=	11,459.16
External	=	2.19
Long Chord	=	447.81
Mid. Ord.	=	2.19
P.C. Station	=	62760+30.19
P.T. Station	=	62764+78.03

LEGEND:

- MC - MOUNTABLE CONC CURB
- BC - BARRIER CONC CURB
- MCG - MOUNTABLE CONC CURB & GUTTER (TY-B UNLESS OTHERWISE NOTED)
- BCG - BARRIER CONC CURB & GUTTER
- RW - RETAINING WALL
- RR - RIP RAP
- SGT - SINGLE GUARD RAIL TERMINAL
- SSCB - SINGLE SLOPE CONC BARRIER
- SSTR - SINGLE SLOPE TRAFFIC RAILING
- SW - SIDEWALK
- WCR - WHEEL CHAIR RAMP
- VG - 4' VALLEY GUTTER
- MBGF - METAL BEAM GUARD FENCE
- TAS - TERMINAL ANCHOR SECTION
- PROP DRIVEWAY
- PROP CONCRETE DRIVEWAY

FOR DRIVEWAY APRON TYPES AND SIZES, SEE "DRIVEWAY SUMMARY".

* SEE "DRAINAGE P&P SHEETS".

$ SEE "GORE NOSE & MISC DETAILS SHEET".

B.M. & HORIZONTAL DATA
BM # US 281-10
ELEV = 105.56
STA = 767+10.57, 210.84' LT
3 1/4" TXDOT ALUMINUM DISK

SHEET TOTALS

ITEM	EST.	FINAL	UNIT	DESCRIPTION
529	910		LF	CONC CURB (TY B) (MOUNTABLE)
529	344		LF	CONC CURB & GUTTER (TY-A) (BARRIER)
530	224		SY	DRVWYS (CONC) (6")

EXIST AND PROP PGL

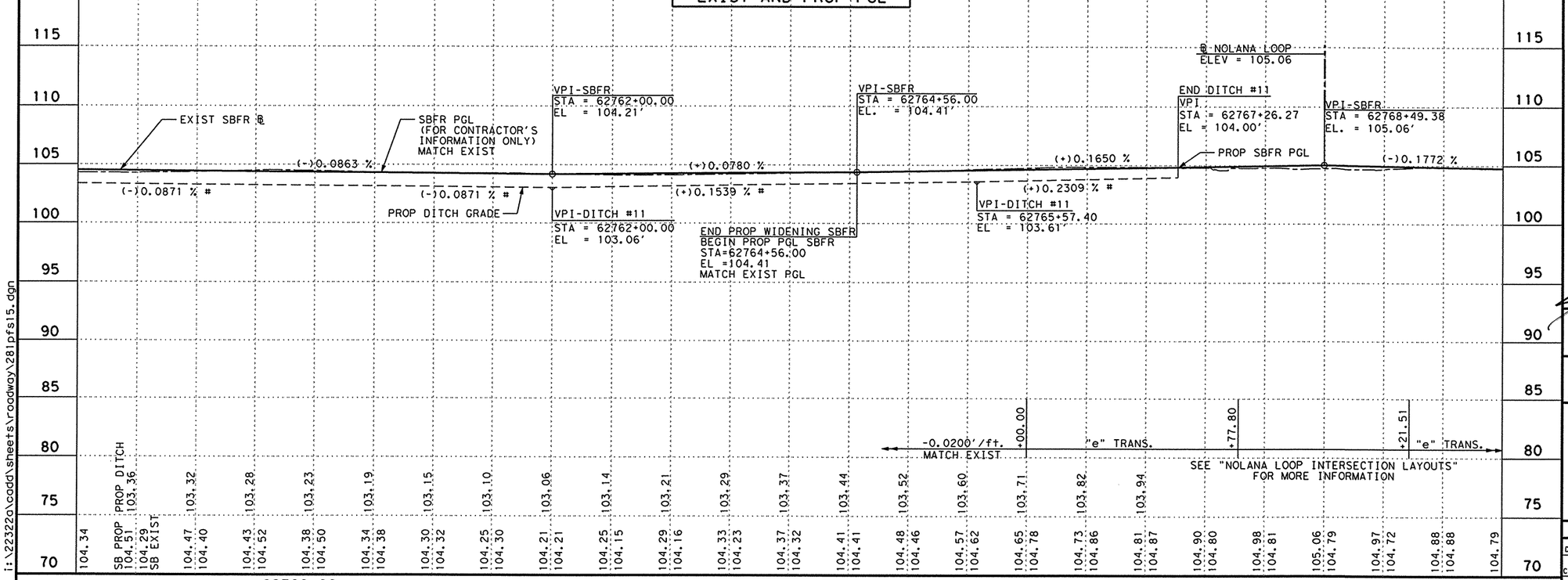

PROFILE LEGEND
- PROP SOUTH BOUND FRONTAGE RD P.G.L.
- EXIST SOUTH BOUND FRONTAGE RD B.L.
- PROP SOUTH BOUND FRONTAGE RD DITCH

NOTES:
1. # SLOPE MEASURED ALONG LENGTH OF DITCH.

THE SEAL APPEARING ON THIS DOCUMENT WAS AUTHORIZED BY JAIME AGUILAR, P.E. 87606 ON 06/23/2003.

THE SEAL APPEARING ON THIS DOCUMENT WAS AUTHORIZED BY PHAISARN CHATANAPHOL, P.E. 89252 ON 06/23/2003.

STATE OF TEXAS — JAIME AGUILAR — 87606 — REGISTERED PROFESSIONAL ENGINEER

STATE OF TEXAS — PHAISARN CHATANAPHOL — 89252 — REGISTERED PROFESSIONAL ENGINEER

Parsons Brinckerhoff Quade & Douglas Inc.

Texas Department of Transportation

© 2003 by TxDOT

US 281
PLAN & PROFILE
SOUTHBOUND FRONTAGE ROAD

STA. 62758+00 "FRS1-3" TO
STA. 62770+00 "FRS1-3"

PLAN 1"= 100' HORIZ
PROFILE 1"= 10' VERT

SHEET 15 OF 22 | 281PFS15.DGN

DESIGNED: JA	FED. RD DIV. NO.	STATE	FEDERAL AID PROJECT No.	HIGHWAY No.
CHECKED: JP	6	TEXAS		US 281

DRAWN: CG	STATE DISTRICT	COUNTY	CONTROL No.	SECTION No.	JOB No.	SHEET No.
CHECKED: JDH	PHARR	HIDALGO	0255	08	091	347

i:\22322a\cadd\sheets\roadway\281pfs15.dgn

NAME

10:29:47 AM

06/23/2003

i:\22322e\cadd\sheets\roadway\281pfs16.dgn

CAUTION!
MAJOR UTILITY CROSSINGS IN THE VICINITY. REFER TO THE "UTILITIES AND DRAINAGE PLAN & PROFILE" SHEETS FOR ADDITIONAL INFORMATION.

Curve FRS1-3-7

P.I. Station		62774+62.02
Delta	=	2° 04' 01.20"
Degree	=	0° 30' 00.00"
Tangent	=	206.72
Length	=	413.40
Radius	=	11,459.16
External	=	1.86
Long Chord	=	413.38
Mid. Ord.	=	1.86
P.C. Station		62772+55.30
P.T. Station		62776+68.70

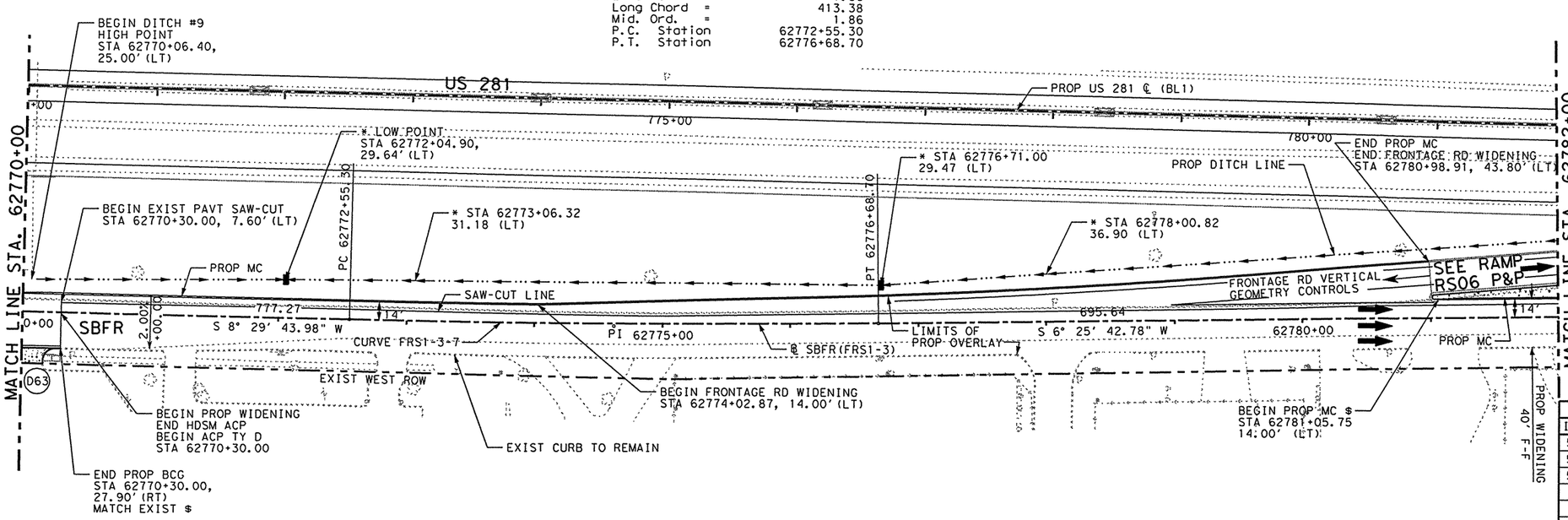

LEGEND:

- MC - MOUNTABLE CONC CURB
- BC - BARRIER CONC CURB
- MCG - MOUNTABLE CONC CURB & GUTTER (TY-B UNLESS OTHERWISE NOTED)
- BCG - BARRIER CONC CURB & GUTTER
- RW - RETAINING WALL
- RR - RIP RAP
- SGT - SINGLE GUARD RAIL TERMINAL
- SSCB - SINGLE SLOPE CONC BARRIER
- SSTR - SINGLE SLOPE TRAFFIC RAILING
- SW - SIDEWALK
- WCR - WHEEL CHAIR RAMP
- VG - 4' VALLEY GUTTER
- MBGF - METAL BEAM GUARD FENCE
- TAS - TERMINAL ANCHOR SECTION
- ▨ - PROP DRIVEWAY
- ⁘ - PROP CONCRETE DRIVEWAY

FOR DRIVEWAY APRON TYPES AND SIZES, SEE "DRIVEWAY SUMMARY".

* SEE "DRAINAGE P&P SHEETS".

$ SEE "GORE NOSE & MISC DETAILS SHEET".

⚠ B.M. & HORIZONTAL DATA
BM # US 281-9
ELEV = 104.73
STA = 777+08.34, 205.90' LT
3 1/4" TXDOT ALUMINUM DISK

SHEET TOTALS

ITEM	EST.	FINAL	UNIT	DESCRIPTION
529	1200		LF	CONC CURB (TY B) (MOUNTABLE)
530	42		SY	DRVWYS (CONC) (6")
529	30		LF	CONC CURB & GUTTER (TY-A) (BARRIER)

EXIST AND PROP PGL

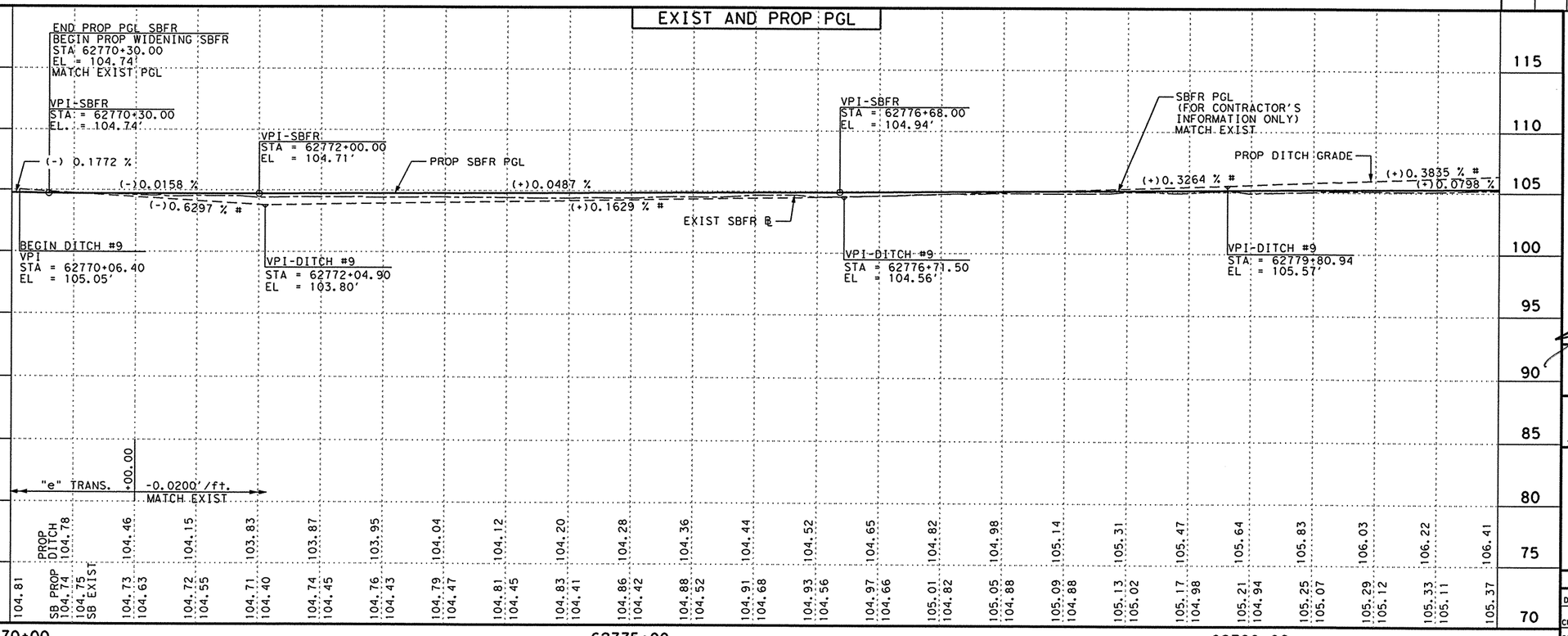

PROFILE LEGEND
- PROP SOUTH BOUND FRONTAGE RD P.G.L.
- EXIST SOUTH BOUND FRONTAGE RD B.L.
- PROP SOUTH BOUND FRONTAGE RD DITCH

NOTES:
1. # SLOPE MEASURED ALONG LENGTH OF DITCH.

THE SEAL APPEARING ON THIS DOCUMENT WAS AUTHORIZED BY JAIME AGUILAR P.E. 87606 ON 06/23/2003.

THE SEAL APPEARING ON THIS DOCUMENT WAS AUTHORIZED BY PHAISARN CWATANAPHOL P.E. 89252 ON 06/23/2003.

STATE OF TEXAS · JAIME AGUILAR · 87606 · REGISTERED PROFESSIONAL ENGINEER

STATE OF TEXAS · PHAISARN CWATANAPHOL · 89252 · REGISTERED PROFESSIONAL ENGINEER

Parsons Brinckerhoff Quade & Douglas Inc.

Texas Department of Transportation

© 2003 by TxDOT

US 281
PLAN & PROFILE
SOUTHBOUND FRONTAGE ROAD

STA. 62770+00 "FRS1-3" TO
STA. 62782+00 "FRS1-3"

PLAN 1"= 100' HORIZ
PROFILE 1"= 10' VERT

SHEET 16 OF 22 | 281PFS16.DGN

DESIGNED: JA	FED. RD DIV. No.	STATE	FEDERAL AID PROJECT No.			HIGHWAY No.	
CHECKED: JP	6	TEXAS				US 281	
DRAWN: CG	STATE DISTRICT	COUNTY	CONTROL No.	SECTION No.	JOB No.	SHEET No.	
CHECKED: JDH	PHARR	HIDALGO	0255	08	091	348	

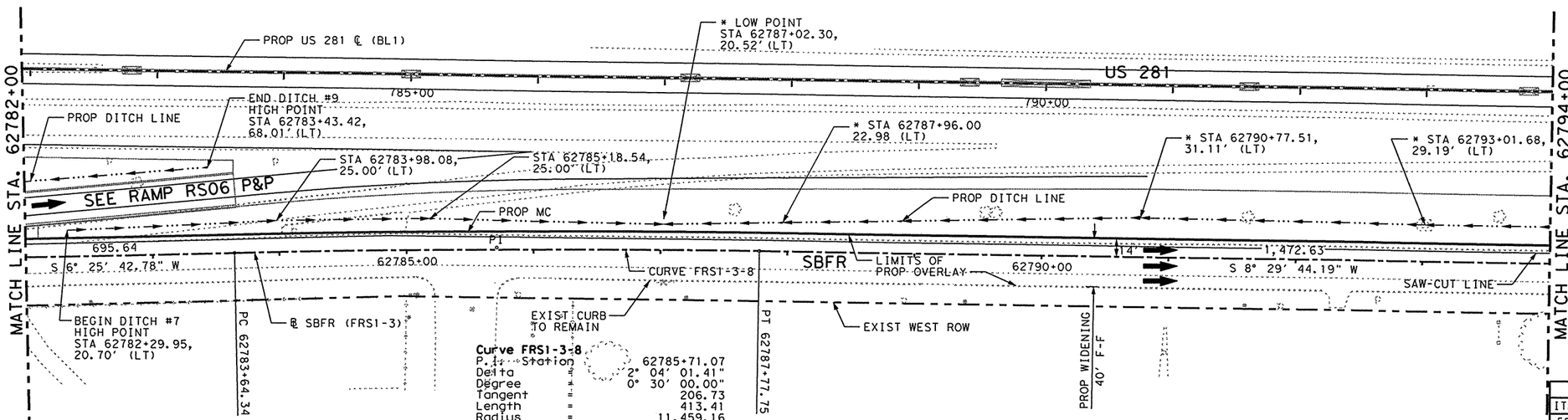

LEGEND:

- MC - MOUNTABLE CONC CURB
- BC - BARRIER CONC CURB
- MCG - MOUNTABLE CONC CURB & GUTTER (TY-B UNLESS OTHERWISE NOTED)
- BCG - BARRIER CONC CURB & GUTTER
- RW - RETAINING WALL
- RR - RIP RAP
- SGT - SINGLE GUARD RAIL TERMINAL
- SSCB - SINGLE SLOPE CONC BARRIER
- SSTR - SINGLE SLOPE TRAFFIC RAILING
- SW - SIDEWALK
- WCR - WHEEL CHAIR RAMP
- VG - 4' VALLEY GUTTER
- MBGF - METAL BEAM GUARD FENCE
- TAS - TERMINAL ANCHOR SECTION
- ▨ - PROP DRIVEWAY
- ⋰⋰ - PROP CONCRETE DRIVEWAY

* SEE "DRAINAGE P&P SHEETS".

⚠ B.M. & HORIZONTAL DATA
BM # US 281-8
ELEV = 104.98
STA = 787+06.77, 175.17' LT
3 1/4" TXDOT ALUMINUM DISK

SHEET TOTALS

ITEM	EST.	FINAL	UNIT	DESCRIPTION
529	1200		LF	CONC CURB (TY B)(MOUNTABLE)

CAUTION!
MAJOR UTILITY CROSSINGS IN THE VICINITY. REFER TO THE "UTILITIES AND DRAINAGE PLAN & PROFILE" SHEETS FOR ADDITIONAL INFORMATION.

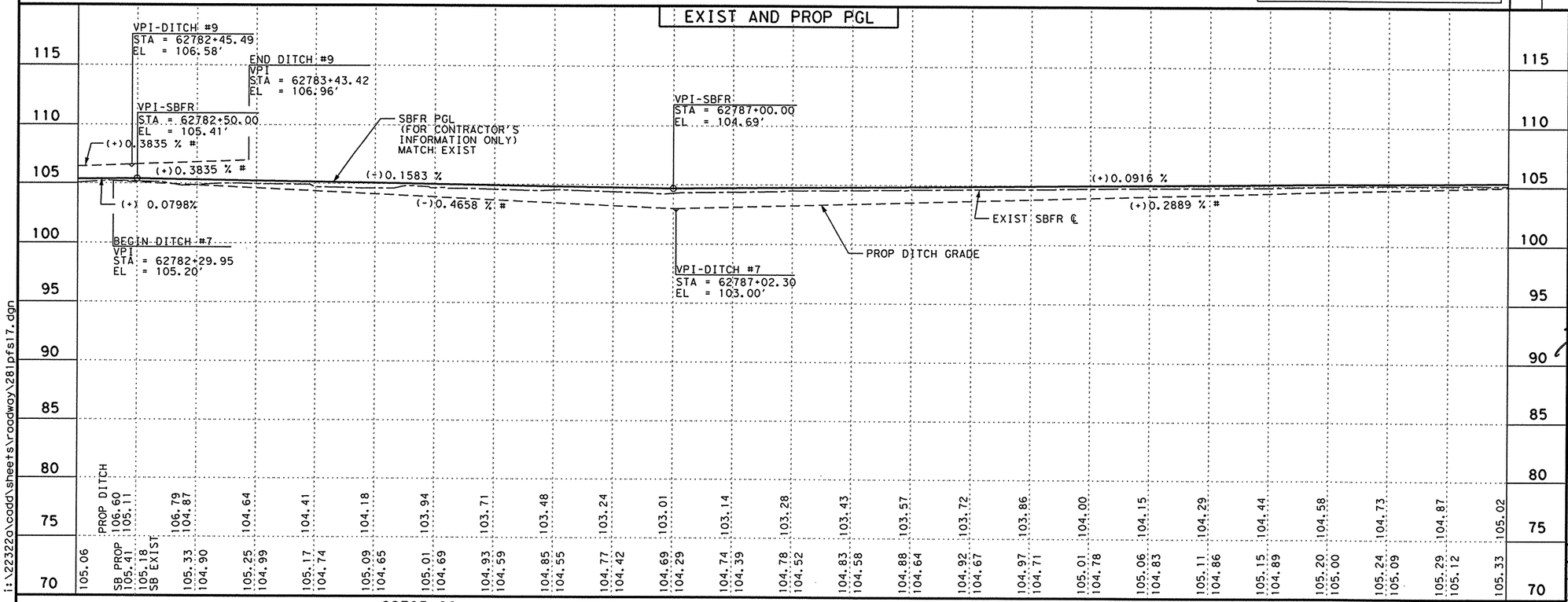

PROFILE LEGEND
- PROP SOUTH BOUND FRONTAGE RD P.G.L.
- EXIST SOUTH BOUND FRONTAGE RD B.L.
- PROP SOUTH BOUND FRONTAGE RD DITCH

NOTES:
1. # SLOPE MEASURED ALONG LENGTH OF DITCH.

THE SEAL APPEARING ON THIS DOCUMENT WAS AUTHORIZED BY JAIME AGUILAR, P.E. 87606 ON 06/23/2003.

THE SEAL APPEARING ON THIS DOCUMENT WAS AUTHORIZED BY PHAISARN CWATANAPHOL, P.E. 89252 ON 06/23/2003.

STATE OF TEXAS · JAIME AGUILAR · 87606 · REGISTERED PROFESSIONAL ENGINEER

STATE OF TEXAS · PHAISARN CWATANAPHOL · 89252 · REGISTERED PROFESSIONAL ENGINEER

Parsons Brinckerhoff Quade & Douglas Inc.

Texas Department of Transportation

© 2003 by TxDOT

US 281
PLAN & PROFILE
SOUTHBOUND FRONTAGE ROAD

STA. 62782+00 "FRS1-3" TO
STA. 62794+00 "FRS1-3"

PLAN 1"= 100' HORIZ
PROFILE 1"= 10' VERT

SHEET 17 OF 22 | 281PFS17.DGN

DESIGNED: JA	FED. RD DIV. No.	STATE	FEDERAL AID PROJECT No.				HIGHWAY No.
CHECKED: JP	6	TEXAS					US 281
DRAWN: CG	STATE DISTRICT	COUNTY	CONTROL No.	SECTION No.	JOB No.	SHEET No.	
CHECKED: JDH	PHARR	HIDALGO	0255	08	091	349	

i:\22322g\cadd\sheets\roadway\281pfs17.dgn

NAME
10:30:23 AM
06/23/2003

CAUTION!
MAJOR UTILITY CROSSINGS IN THE VICINITY. REFER TO THE "UTILITIES AND DRAINAGE PLAN & PROFILE" SHEETS FOR ADDITIONAL INFORMATION.

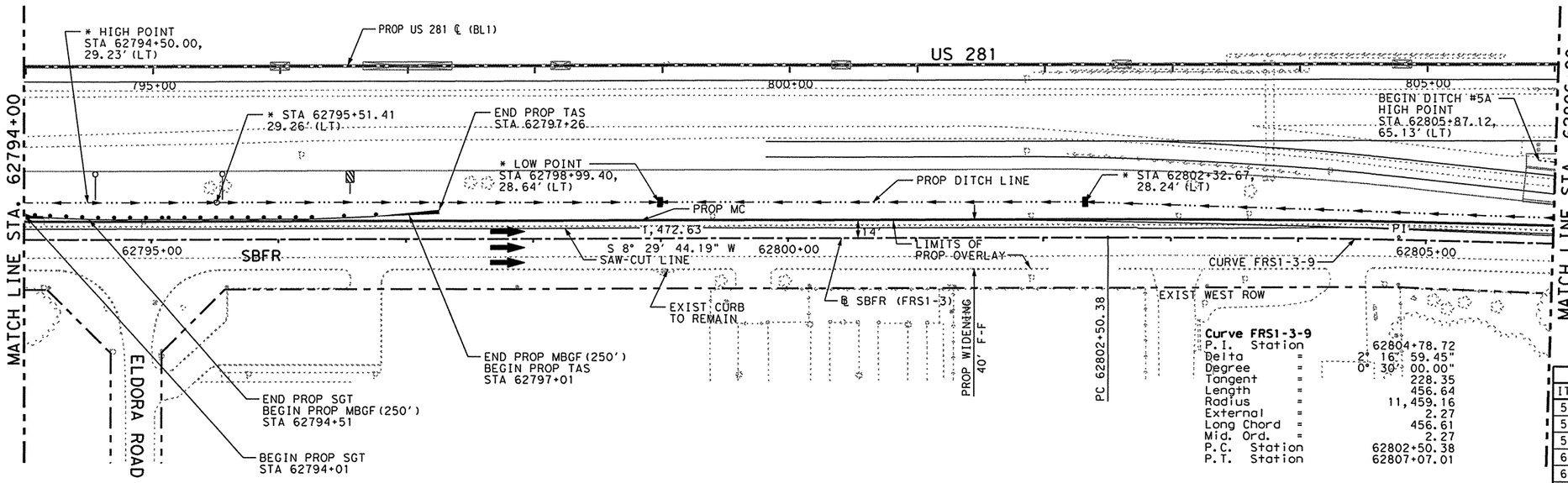

Curve FRS1-3-9

P.I. Station	=	62804+78.72
Delta	=	2° 16' 59.45"
Degree	=	0° 30' 00.00"
Tangent	=	228.35
Length	=	456.64
Radius	=	11,459.16
External	=	2.27
Long Chord	=	456.61
Mid. Ord.	=	2.27
P.C. Station		62802+50.38
P.T. Station		62807+07.01

LEGEND:

- MC - MOUNTABLE CONC CURB
- BC - BARRIER CONC CURB
- MCG - MOUNTABLE CONC CURB & GUTTER (TY-B UNLESS OTHERWISE NOTED)
- BCG - BARRIER CONC CURB & GUTTER
- RW - RETAINING WALL
- RR - RIP RAP
- SGT - SINGLE GUARD RAIL TERMINAL
- SSCB - SINGLE SLOPE CONC BARRIER
- SSTR - SINGLE SLOPE TRAFFIC RAILING
- SW - SIDEWALK
- WCR - WHEEL CHAIR RAMP
- VG - 4' VALLEY GUTTER
- MBGF - METAL BEAM GUARD FENCE
- TAS - TERMINAL ANCHOR SECTION
- PROP DRIVEWAY
- PROP CONCRETE DRIVEWAY
- DEL ASM TY B (D-SW)
- OBJ MRK ASM TY 3 (OM-3R)

* SEE "DRAINAGE P&P SHEETS".

B.M. & HORIZONTAL DATA
BM # US 281-7
ELEV = 104.99
STA = 797+06.99, 175.36' LT
3 1/4" TXDOT ALUMINUM DISK

SHEET TOTALS

ITEM	EST.	FINAL	UNIT	DESCRIPTION
529	1200		LF	CONC CURB (TY B) (MOUNTABLE)
540	1		EA	TERM ANCHOR SECT (12GA)
540	250		LF	MTL BEAM GD FEN(12GA)(TIM POST)(BLKOUT)
658	1		EA	OBJ MRK ASM TY3 (OM-3R)
658	2		EA	DEL ASM TYB (D-SW)
5819	1		EA	SINGLE GDRAIL TERM (TY II)

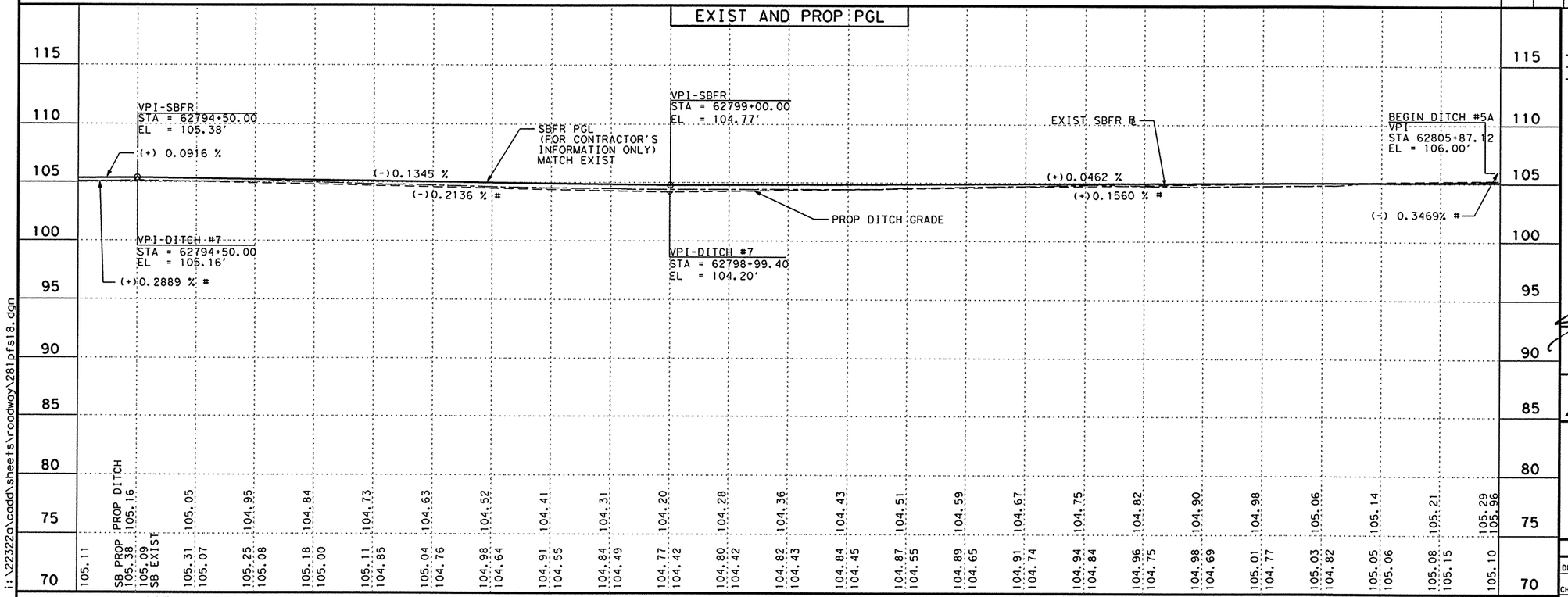

PROFILE LEGEND
- PROP SOUTH BOUND FRONTAGE RD P.G.L.
- EXIST SOUTH BOUND FRONTAGE RD B.L.
- PROP SOUTH BOUND FRONTAGE RD DITCH

NOTES:
1. # SLOPE MEASURED ALONG LENGTH OF DITCH.

THE SEAL APPEARING ON THIS DOCUMENT WAS AUTHORIZED BY JAIME AGUILAR, P.E. 87606 ON 06/23/2003.

THE SEAL APPEARING ON THIS DOCUMENT WAS AUTHORIZED BY PHAISARN CWATANAPHOL, P.E. 89252 ON 06/23/2003.

STATE OF TEXAS · JAIME AGUILAR · 87606 · REGISTERED PROFESSIONAL ENGINEER

STATE OF TEXAS · PHAISARN CWATANAPHOL · 89252 · REGISTERED PROFESSIONAL ENGINEER

Parsons Brinckerhoff Quade & Douglas Inc.

Texas Department of Transportation

© 2003 by TxDOT

US 281
PLAN & PROFILE
SOUTHBOUND FRONTAGE ROAD

STA. 62794+00 "FRS1-3" TO
STA. 62806+00 "FRS1-3"

PLAN 1"= 100' HORIZ
PROFILE 1"= 10' VERT

SHEET 18 OF 22 | 281PFS18.DGN

DESIGNED: JA	FED. RD DIV. No.	STATE	FEDERAL AID PROJECT No.	HIGHWAY No.
CHECKED: JP	6	TEXAS		US 281

DRAWN: CG	STATE DISTRICT	COUNTY	CONTROL No.	SECTION No.	JOB No.	SHEET No.
CHECKED: JDH	PHARR	HIDALGO	0255	08	091	350

i:\22322a\cadd\sheets\roadway\281pfs18.dgn

NAME
10:30:44 AM
06/23/2003
i:\22322a\cadd\sheets\roadway\281pfs19.dgn

CAUTION!

MAJOR UTILITY CROSSINGS IN THE VICINITY. REFER TO THE "UTILITIES AND DRAINAGE PLAN & PROFILE" SHEETS FOR ADDITIONAL INFORMATION.

Curve FRS1-3-10		
P.I. Station		62814+82.68
Delta	=	2° 16' 59.49"
Degree	=	0° 30' 00.00"
Tangent	=	228.35
Length	=	456.64
Radius	=	11,459.16
External	=	2.27
Long Chord	=	456.61
Mid. Ord.	=	2.27
P.C. Station		62812+54.33
P.T. Station		62817+10.97

LEGEND:

- MC - MOUNTABLE CONC CURB
- BC - BARRIER CONC CURB
- MCG - MOUNTABLE CONC CURB & GUTTER (TY-B UNLESS OTHERWISE NOTED)
- BCG - BARRIER CONC CURB & GUTTER
- RW - RETAINING WALL
- RR - RIP RAP
- SGT - SINGLE GUARD RAIL TERMINAL
- SSCB - SINGLE SLOPE CONC BARRIER
- SSTR - SINGLE SLOPE TRAFFIC RAILING
- SW - SIDEWALK
- WCR - WHEEL CHAIR RAMP
- VG - 4' VALLEY GUTTER
- MBGF - METAL BEAM GUARD FENCE
- TAS - TERMINAL ANCHOR SECTION
- PROP DRIVEWAY
- PROP CONCRETE DRIVEWAY

* SEE "DRAINAGE P&P SHEETS".

$ SEE "GORE NOSE & MISC DETAILS SHEET".

BM & HORIZONTAL DATA

BM # US 281-6
ELEV = 105.29
STA = 806+94.49, 183.50' LT
3 1/4" TXDOT ALUMINUM DISK

BM # US 281-5
ELEV = 107.46
STA = 817+01.19, 211.65' LT
3 1/4" TXDOT ALUMINUM DISK

SHEET TOTALS

ITEM	EST.	FINAL	UNIT	DESCRIPTION
529	1153		LF	CONC CURB (TY B)(MOUNTABLE)
529	76		LF	CONC CURB & GUTTER (TY-A)(BARRIER)
540	1		EA	MTL BEAM GD FENCE TRANS (12GA)
540	38		LF	MTL BEAM GD FEN(12GA)(TIM POST)(BLKOUT)
658	1		EA	OBJ MRK ASM TY3 (OM-3R)
658	1		EA	DEL ASM TYB (D-SW)
5819	1		EA	SINGLE GDRAIL TERM (TY II)

PROFILE LEGEND

- PROP SOUTH BOUND FRONTAGE RD P.G.L.
- EXIST SOUTH BOUND FRONTAGE RD B.L.
- PROP SOUTH BOUND FRONTAGE RD DITCH

NOTES:

1. \# SLOPE MEASURED ALONG LENGTH OF DITCH.

THE SEAL APPEARING ON THIS DOCUMENT WAS AUTHORIZED BY JAIME AGUILAR, P.E. 87606 ON 06/23/2003.

THE SEAL APPEARING ON THIS DOCUMENT WAS AUTHORIZED BY PHAISARN CWATANAPHOL, P.E. 89252 ON 06/23/2003.

STATE OF TEXAS
JAIME AGUILAR
87606
REGISTERED PROFESSIONAL ENGINEER

STATE OF TEXAS
PHAISARN CWATANAPHOL
89252
REGISTERED PROFESSIONAL ENGINEER

Parsons Brinckerhoff Quade & Douglas Inc.

Texas Department of Transportation

© 2003 by TxDOT

US 281
PLAN & PROFILE
SOUTHBOUND FRONTAGE ROAD

STA. 62806+00 "FRS1-3" TO
STA. 62818+00 "FRS1-3"

PLAN 1"= 100' HORIZ
PROFILE 1"= 10' VERT

SHEET 19 OF 22 | 281PFS19.DGN

DESIGNED: JA	FED. RD DIV. No.	STATE	FEDERAL AID PROJECT No.		HIGHWAY No.
CHECKED: JP	6	TEXAS			US 281
DRAWN: CG	STATE DISTRICT	COUNTY	CONTROL No.	SECTION No.	JOB No. / SHEET No.
CHECKED: JDH	PHARR	HIDALGO	0255	08	091 / 351

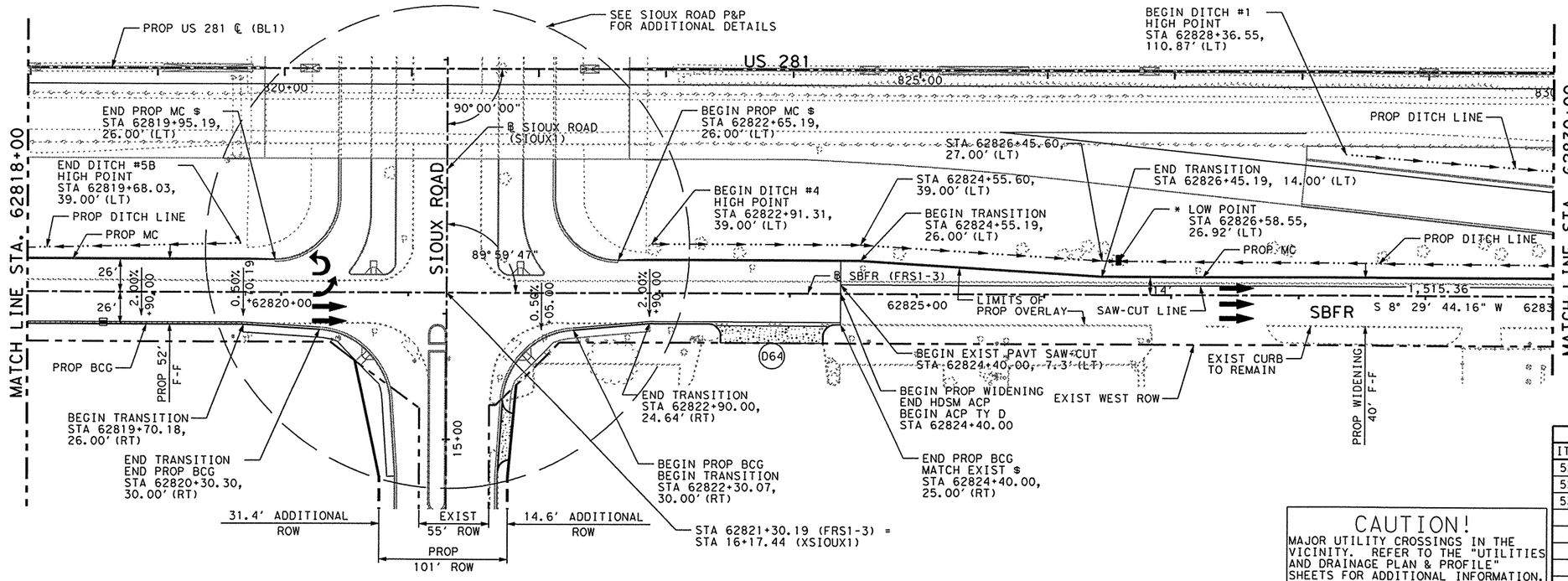

LEGEND:

- MC - MOUNTABLE CONC CURB
- BC - BARRIER CONC CURB
- MCG - MOUNTABLE CONC CURB & GUTTER (TY-B UNLESS OTHERWISE NOTED)
- BCG - BARRIER CONC CURB & GUTTER
- RW - RETAINING WALL
- RR - RIP RAP
- SGT - SINGLE GUARD RAIL TERMINAL
- SSCB - SINGLE SLOPE CONC BARRIER
- SSTR - SINGLE SLOPE TRAFFIC RAILING
- SW - SIDEWALK
- WCR - WHEEL CHAIR RAMP
- VG - 4' VALLEY GUTTER
- MBGF - METAL BEAM GUARD FENCE
- TAS - TERMINAL ANCHOR SECTION
- PROP DRIVEWAY
- PROP CONCRETE DRIVEWAY

* SEE "DRAINAGE P&P SHEETS".

$ SEE "GORE NOSE & MISC DETAILS SHEET".

△ B.M. & HORIZONTAL DATA
BM # US 281-4
ELEV = 106.43
STA = 827+02.50, 207.77' LT
3 1/4" TXDOT ALUMINUM DISK

SHEET TOTALS

ITEM	EST.	FINAL	UNIT	DESCRIPTION
529	909		LF	CONC CURB (TY B) (MOUNTABLE)
529	451		LF	CONC CURB & GUTTER (TY-A) (BARRIER)
530	124		SY	DRVWYS (CONC) (6")

CAUTION!
MAJOR UTILITY CROSSINGS IN THE VICINITY. REFER TO THE "UTILITIES AND DRAINAGE PLAN & PROFILE" SHEETS FOR ADDITIONAL INFORMATION.

EXIST AND PROP PGL

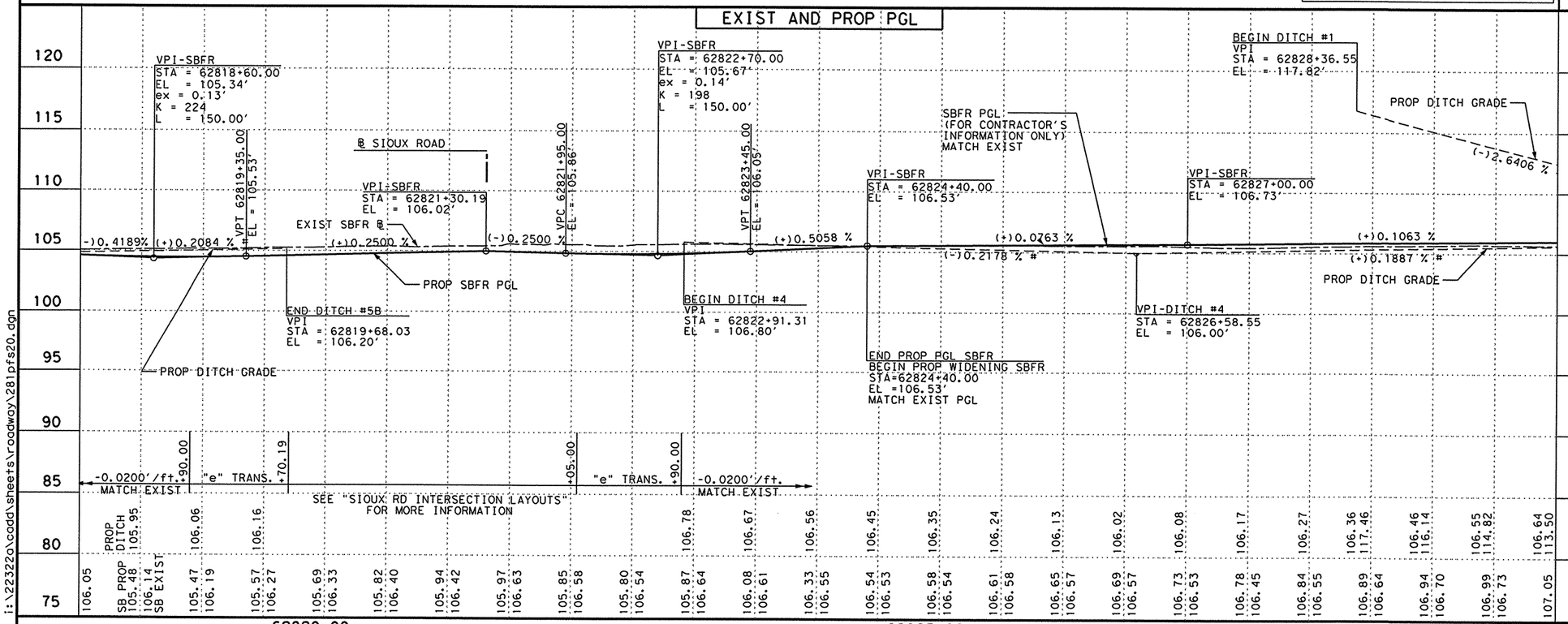

PROFILE LEGEND
- PROP SOUTH BOUND FRONTAGE RD P.G.L.
- EXIST SOUTH BOUND FRONTAGE RD B.L.
- PROP SOUTH BOUND FRONTAGE RD DITCH

NOTES:
1. # SLOPE MEASURED ALONG LENGTH OF DITCH.

THE SEAL APPEARING ON THIS DOCUMENT WAS AUTHORIZED BY JAIME AGUILAR, P.E. 87606 ON 06/23/2003.

THE SEAL APPEARING ON THIS DOCUMENT WAS AUTHORIZED BY PHAISARN CWATANAPHOL, P.E. 89252 ON 06/23/2003.

STATE OF TEXAS · JAIME AGUILAR · 87606 · REGISTERED PROFESSIONAL ENGINEER

STATE OF TEXAS · PHAISARN CWATANAPHOL · 89252 · REGISTERED PROFESSIONAL ENGINEER

PB Parsons Brinckerhoff Quade & Douglas Inc.

Texas Department of Transportation
© 2003 by TxDOT

US 281
PLAN & PROFILE
SOUTHBOUND FRONTAGE ROAD

STA. 62818+00 "FRS1-3" TO
STA. 62830+00 "FRS1-3"

PLAN 1"= 100' HORIZ
PROFILE 1"= 10' VERT

SHEET 20 OF 22 | 281PFS20.DGN

DESIGNED: JA	FED. RD DIV. No.	STATE	FEDERAL AID PROJECT No.				HIGHWAY No.	
CHECKED: JP	6	TEXAS					US 281	
DRAWN: CG	STATE DISTRICT	COUNTY	CONTROL No.	SECTION No.	JOB No.	SHEET No.		
CHECKED: JDH	PHARR	HIDALGO	0255	08	091	352		

NAME
10:31:20 AM
06/23/2003
I:\22322\cadd\sheets\roadway\281pfs21.dgn

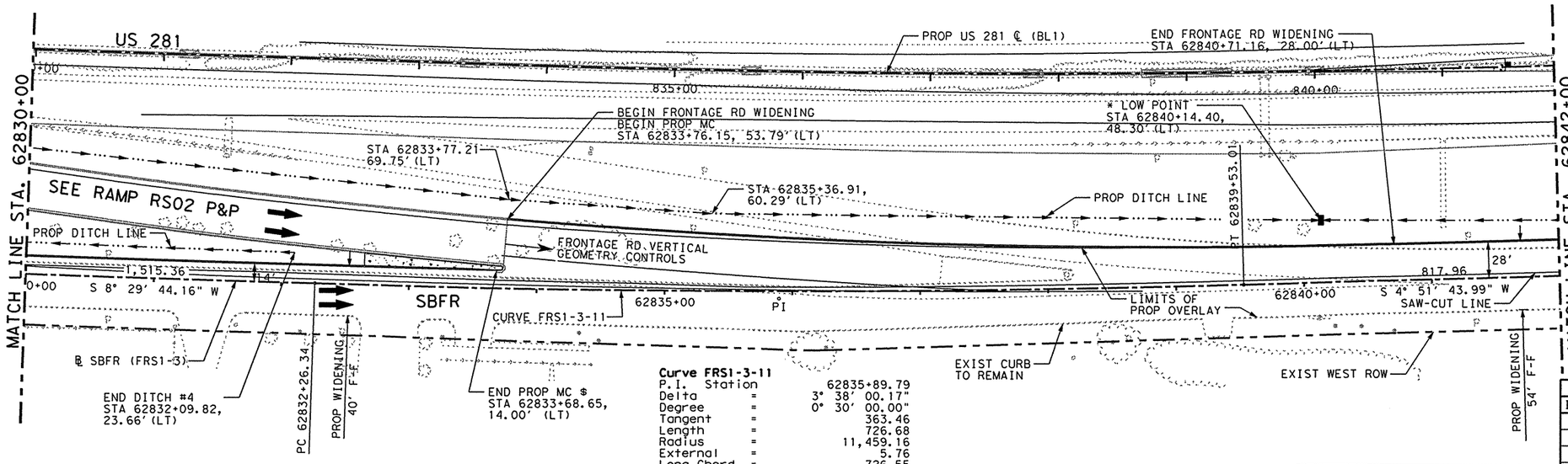

Curve FRS1-3-11

P.I. Station	=	62835+89.79
Delta	=	3° 38' 00.17"
Degree	=	0° 30' 00.00"
Tangent	=	363.46
Length	=	726.68
Radius	=	11,459.16
External	=	5.76
Long Chord	=	726.55
Mid. Ord.	=	5.76
P.C. Station	=	62832+26.33
P.T. Station	=	62839+53.01

CAUTION!
MAJOR UTILITY CROSSINGS IN THE VICINITY. REFER TO THE "UTILITIES AND DRAINAGE PLAN & PROFILE" SHEETS FOR ADDITIONAL INFORMATION.

LEGEND:
MC - MOUNTABLE CONC CURB
BC - BARRIER CONC CURB
MCG - MOUNTABLE CONC CURB & GUTTER (TY-B UNLESS OTHERWISE NOTED)
BCG - BARRIER CONC CURB & GUTTER
RW - RETAINING WALL
RR - RIP RAP
SGT - SINGLE GUARD RAIL TERMINAL
SSCB - SINGLE SLOPE CONC BARRIER
SSTR - SINGLE SLOPE TRAFFIC RAILING
SW - SIDEWALK
WCR - WHEEL CHAIR RAMP
VG - 4' VALLEY GUTTER
MBGF - METAL BEAM GUARD FENCE
TAS - TERMINAL ANCHOR SECTION
▨ - PROP DRIVEWAY
⊡ - PROP CONCRETE DRIVEWAY

* SEE "DRAINAGE P&P SHEETS".
$ "SEE GORE NOSE & MISC DETALS SHEET".

⚠ B.M. & HORIZONTAL DATA
BM # US 281-3
ELEV = 107.76
STA = 836+81.89, 209.01' LT
3 1/4" TXDOT ALUMINUM DISK

SHEET TOTALS

ITEM	EST.	FINAL	UNIT	DESCRIPTION
529	1199		LF	CONC CURB (TY B) (MOUNTABLE)

EXIST AND PROP PGL

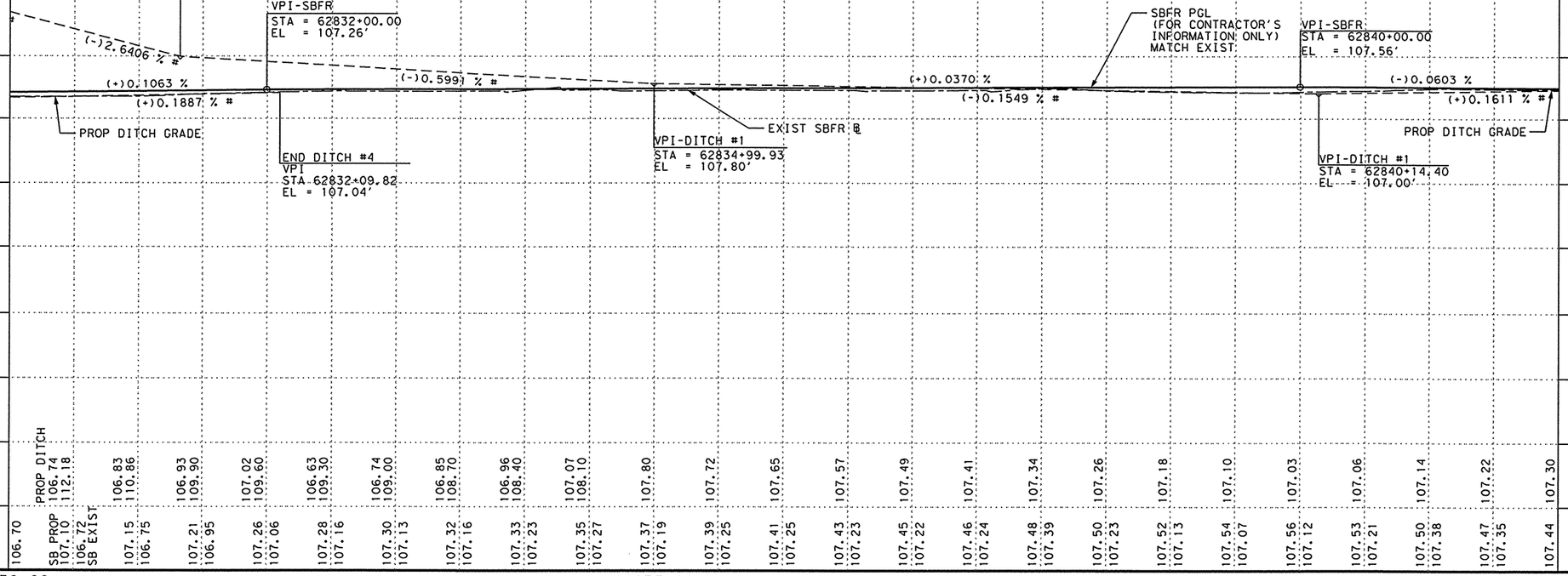

PROFILE LEGEND
——— PROP SOUTH BOUND FRONTAGE RD P.G.L.
– – – – EXIST SOUTH BOUND FRONTAGE RD B.L.
– - – - PROP SOUTH BOUND FRONTAGE RD DITCH

NOTES:
1. # SLOPE MEASURED ALONG LENGTH OF DITCH.

THE SEAL APPEARING ON THIS DOCUMENT WAS AUTHORIZED BY JAIME AGUILAR, P.E. 87606 ON 06/23/2003.
THE SEAL APPEARING ON THIS DOCUMENT WAS AUTHORIZED BY PHAISARN CWATANAPHOL, P.E. 89252 ON 06/23/2003.

STATE OF TEXAS · JAIME AGUILAR · 87606 · REGISTERED PROFESSIONAL ENGINEER
STATE OF TEXAS · PHAISARN CWATANAPHOL · 89252 · REGISTERED PROFESSIONAL ENGINEER

Parsons Brinckerhoff Quade & Douglas Inc.

Texas Department of Transportation
© 2003 by TxDOT

US 281
PLAN & PROFILE
SOUTHBOUND FRONTAGE ROAD
STA. 62830+00 "FRS1-3" TO
STA. 62842+00 "FRS1-3"
PLAN 1"= 100' HORIZ
PROFILE 1"= 10' VERT

SHEET 21 OF 22 | 281PFS21.DGN

DESIGNED: JA	FED. RD DIV. No.	STATE	FEDERAL AID PROJECT No.	HIGHWAY No.
CHECKED: JP	6	TEXAS		US 281

DRAWN:	STATE DISTRICT	COUNTY	CONTROL No.	SECTION No.	JOB No.	SHEET No.
CHECKED: JDH	PHARR	HIDALGO	0255	08	091	353

Phaisarn C.
04:47:14 PM
06/23/2003
I:\22322a\CADD\Sheets\Roadway\281pfs22.dgn

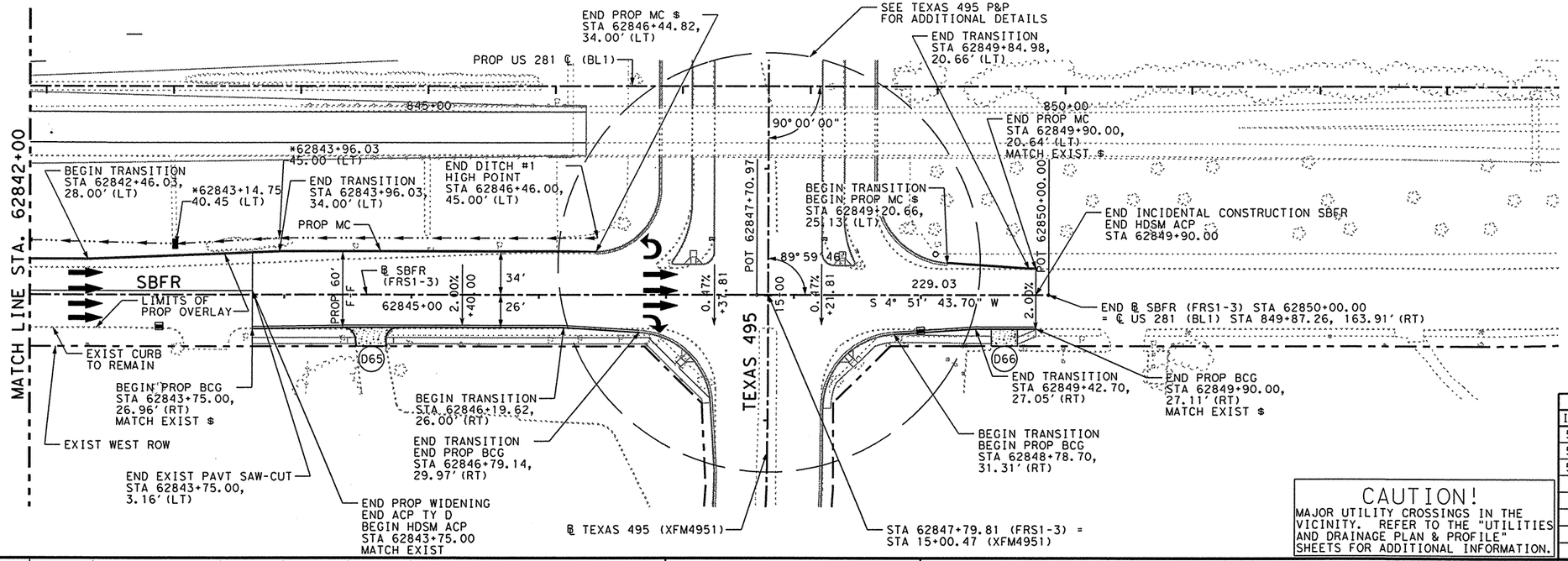

LEGEND:

MC - MOUNTABLE CONC CURB
BC - BARRIER CONC CURB
MCG - MOUNTABLE CONC CURB & GUTTER (TY-B UNLESS OTHERWISE NOTED)
BCG - BARRIER CONC CURB & GUTTER
RW - RETAINING WALL
RR - RIP RAP
SGT - SINGLE GUARD RAIL TERMINAL
SSCB - SINGLE SLOPE CONC BARRIER
SSTR - SINGLE SLOPE TRAFFIC RAILING
SW - SIDEWALK
WCR - WHEEL CHAIR RAMP
VG - 4' VALLEY GUTTER
MBGF - METAL BEAM GUARD FENCE
TAS - TERMINAL ANCHOR SECTION
▨ - PROP DRIVEWAY
⁘ - PROP CONCRETE DRIVEWAY

FOR DRIVEWAY APRON TYPES AND SIZES, SEE "DRIVEWAY SUMMARY".

* SEE "DRAINAGE P&P SHEETS".

$ SEE "GORE NOSE & MISC DETAILS SHEET".

⚠ B.M. & HORIZONTAL DATA

BM # US 281-2
ELEV = 108.36
STA = 846+46.19, 203.37' LT
3 ¼" TXDOT ALUMINUM DISK

BM # US 281-1
ELEV = 107.13
STA = 853+00.67, 198.90' LT
3 ¼" TXDOT ALUMINUM DISK

SHEET TOTALS

ITEM	EST.	FINAL	UNIT	DESCRIPTION
529	515		LF	CONC CURB (TY B) (MOUNTABLE)
529	416		LF	CONC CURB & GUTTER (TY-A) (BARRIER)
530	74		SY	DRVWYS (CONC) (6")

CAUTION!
MAJOR UTILITY CROSSINGS IN THE VICINITY. REFER TO THE "UTILITIES AND DRAINAGE PLAN & PROFILE" SHEETS FOR ADDITIONAL INFORMATION.

EXIST AND PROP PGL

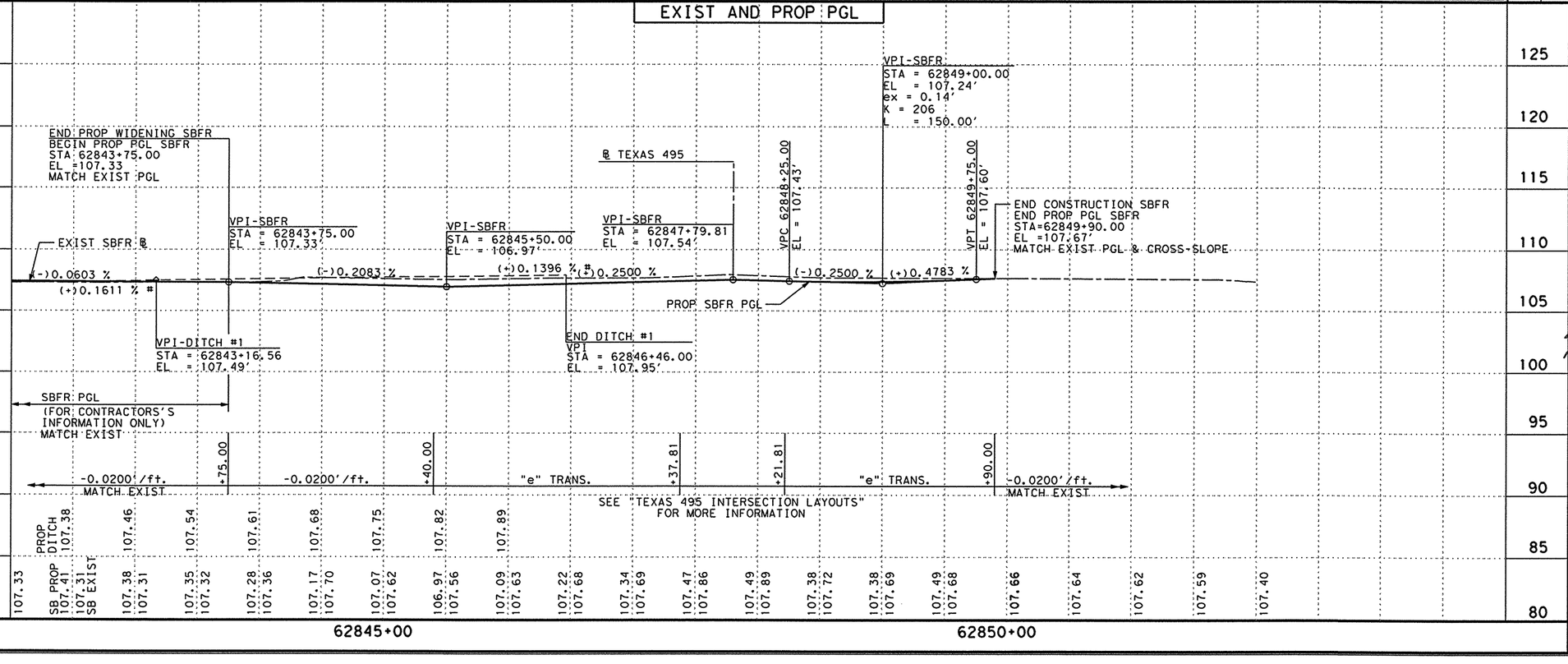

PROFILE LEGEND
PROP SOUTH BOUND FRONTAGE RD P.G.L.
EXIST SOUTH BOUND FRONTAGE RD B.L.
PROP SOUTH BOUND FRONTAGE RD DITCH

NOTES:
1. # SLOPE MEASURED ALONG LENGTH OF DITCH.

THE SEAL APPEARING ON THIS DOCUMENT WAS AUTHORIZED BY JAIME AGUILAR, P.E. 87606 ON 06/23/2003.

THE SEAL APPEARING ON THIS DOCUMENT WAS AUTHORIZED BY PHAISARN CWATANAPHOL, P.E. 89252 ON 06/23/2003.

STATE OF TEXAS · JAIME AGUILAR · 87606 · REGISTERED PROFESSIONAL ENGINEER

STATE OF TEXAS · PHAISARN CWATANAPHOL · 89252 · REGISTERED PROFESSIONAL ENGINEER

Parsons Brinckerhoff Quade & Douglas Inc.

Texas Department of Transportation

© 2003 by TxDOT

US 281
PLAN & PROFILE
SOUTHBOUND FRONTAGE ROAD

STA. 62842+00 "FRS1-3" TO
STA. 62854+00 "FRS1-3"

PLAN 1"= 100' HORIZ
PROFILE 1"= 10' VERT

SHEET 22 OF 22 — 281PFS22.DGN

DESIGNED: TT	FED. RD DIV. No.	STATE	FEDERAL AID PROJECT No.	HIGHWAY No.
CHECKED: DM	6	TEXAS		US 281

DRAWN:	STATE DISTRICT	COUNTY	CONTROL No.	SECTION No.	JOB No.	SHEET No.
CHECKED: DM	PHARR	HIDALGO	0255	08	091	354

NAME
01:02:35 PM
06/23/2003
I:\22322a\CADD\Sheets\Roadway\Ramps\281rpn01.dgn

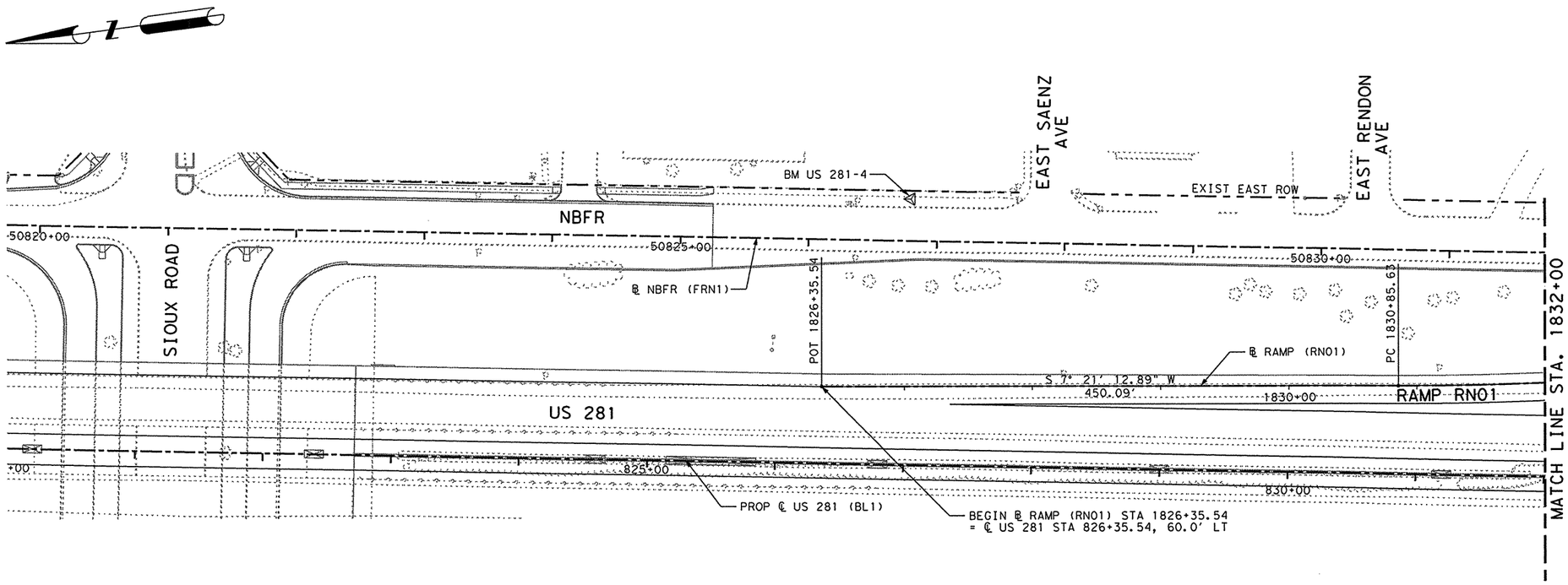

LEGEND:

- MC - MOUNTABLE CONC CURB
- BC - BARRIER CONC CURB
- MCG - MOUNTABLE CONC CURB & GUTTER
- BCG - BARRIER CONC CURB & GUTTER
- RW - RETAINING WALL
- RR - PROP CONC RIPRAP
- SGT - SINGLE GUARD RAIL TERMINAL
- MBGF - METAL BEAM GUARD FENCE
- NBFR - NORTHBOUND FRONTAGE ROAD
- SBFR - SOUTHBOUND FRONTAGE ROAD
- NBML - NORTHBOUND MAINLANES
- SBML - SOUTHBOUND MAINLANES
- PROP DITCH
- DEL ASM TY B (D-SW)
- OBJ MRK ASM TY 3 (OM-3R)

▲ RAMP "RN01" PROFILE SHALL MATCH THE MAINLANES PROFILE PROJECTED AT THE DESIGN CROSS SLOPE AND ADJUSTED FOR GORE CROSS SLOPE TRANSITION AS SHOWN ON GORE NOSE DETAIL SHEET.

⚠ B.M. & HORIZONTAL DATA
BM # US 281-4
ELEV = 106.43
STA = 827+02.50, 207.77' LT
3 1/4" TXDOT ALUMINUM DISK

SHEET TOTALS

ITEM	EST.	FINAL	UNIT	DESCRIPTION
				NO PAY QUANTITIES THIS SHEET

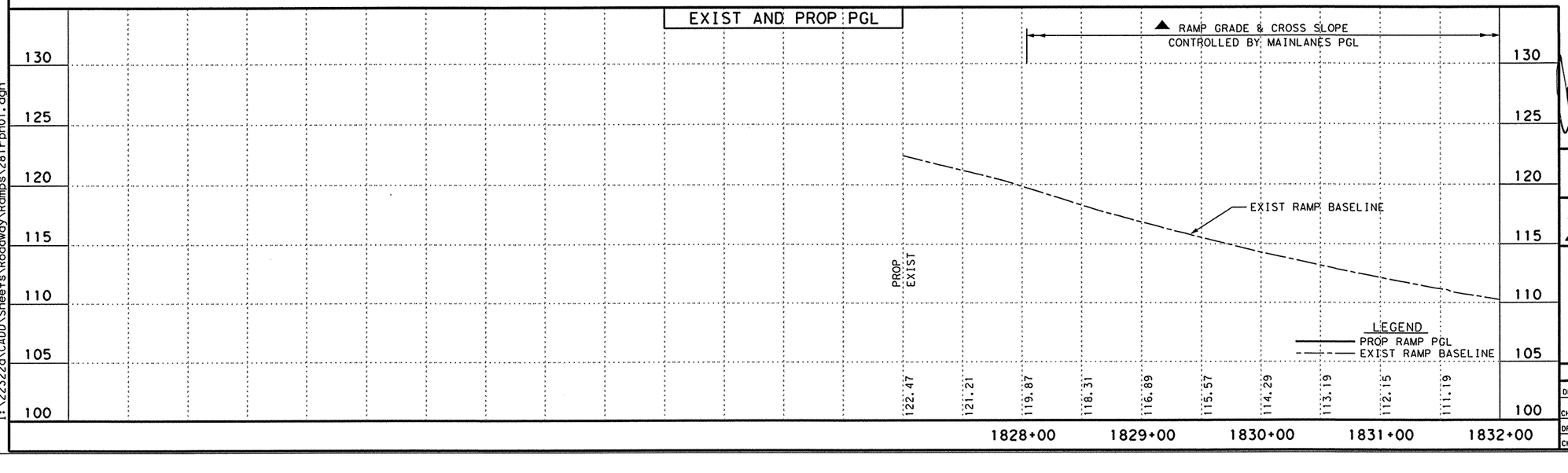

THE SEAL APPEARING ON THIS DOCUMENT WAS AUTHORIZED BY JAIME AGUILAR, P.E. 87606 ON 06/23/2003.

THE SEAL APPEARING ON THIS DOCUMENT WAS AUTHORIZED BY PHAISARN CWATANAPHOL, P.E. 89252 ON 06/23/2003.

STATE OF TEXAS · JAIME AGUILAR · 87606 · REGISTERED PROFESSIONAL ENGINEER

STATE OF TEXAS · PHAISARN CWATANAPHOL · 89252 · REGISTERED PROFESSIONAL ENGINEER

Parsons Brinckerhoff Quade & Douglas Inc.

Texas Department of Transportation

© 2003 by TxDOT

US 281
RAMP "RN01"
PLAN & PROFILE
ENTRANCE RAMP

PLAN 1"= 100' HORIZ
PROFILE 1"= 10' VERT

SHEET 1 OF 2 | 281RPN01.DGN

DESIGNED: JA	FED. RD DIV. No.	STATE	FEDERAL AID PROJECT No.	HIGHWAY No.
CHECKED: JP	6	TEXAS		US 281

DRAWN:	STATE DISTRICT	COUNTY	CONTROL No.	SECTION No.	JOB No.	SHEET No.
CHECKED: JDH	PHARR	HIDALGO	0255	08	091	355

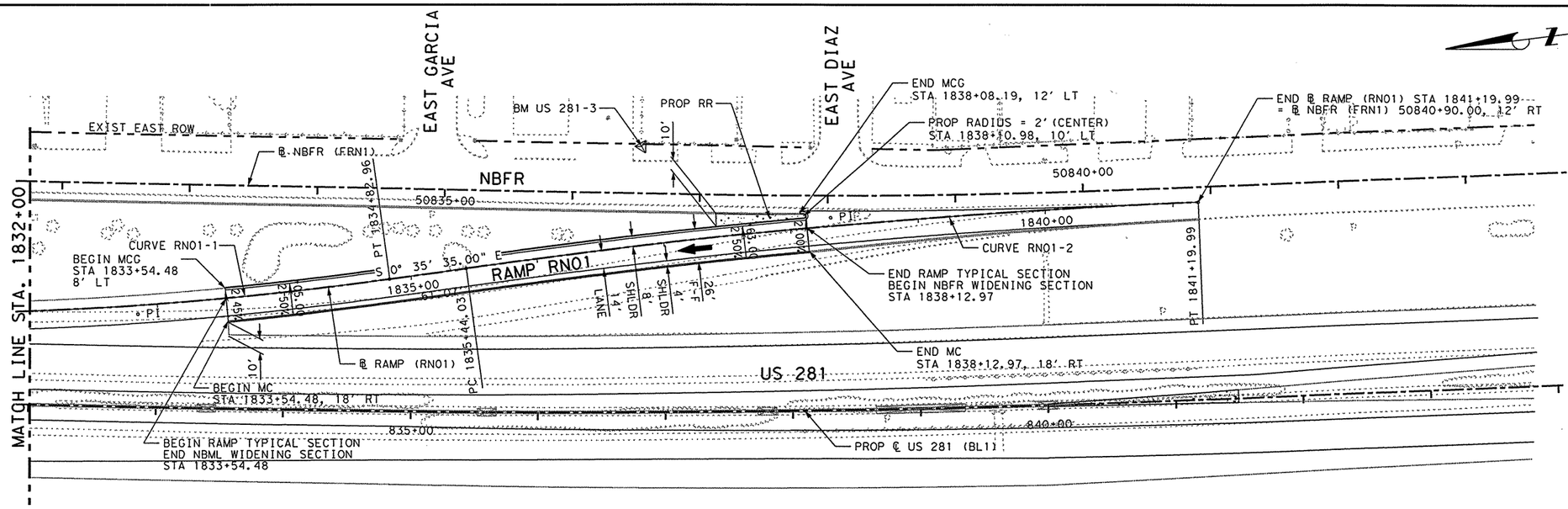

LEGEND:

- MC - MOUNTABLE CONC CURB
- BC - BARRIER CONC CURB
- MCG - MOUNTABLE CONC CURB & GUTTER
- BCG - BARRIER CONC CURB & GUTTER
- RW - RETAINING WALL
- RR - PROP CONC RIPRAP
- SGT - SINGLE GUARD RAIL TERMINAL
- MBGF - METAL BEAM GUARD FENCE
- NBFR - NORTHBOUND FRONTAGE ROAD
- SBFR - SOUTHBOUND FRONTAGE ROAD
- NBML - NORTHBOUND MAINLANES
- SBML - SOUTHBOUND MAINLANES
- PROP DITCH
- DEL ASM TY B (D-SW)
- OBJ MRK ASM TY 3 (OM-3R)

▲ RAMP "RN01" PROFILE SHALL MATCH THE MAINLANES PROFILE PROJECTED AT THE DESIGN CROSS SLOPE AND ADJUSTED FOR GORE CROSS SLOPE TRANSITION AS SHOWN ON GORE NOSE DETAIL SHEET.

⋇ RAMP "RN01" SHALL MATCH THE EXISTING NORTHBOUND FRONTAGE ROAD PROFILE AND CROSS SLOPE AND ADJUSTED FOR GORE CROSS SLOPE TRANSITION AS SHOWN ON GORE NOSE DETAIL SHEET.

⚠ B.M. & HORIZONTAL DATA
BM # US 281-3
ELEV = 107.76
STA = 836+81.89, 209.01' LT
3 ¼" TXDOT ALUMINUM DISK

Curve RN01-1

P.I. Station		1832+84.61
Delta	=	7° 56' 47.89" (LT)
Degree	=	2° 00' 00.00"
Tangent	=	198.98
Length	=	397.33
Radius	=	2,864.79
External	=	6.90
Long Chord	=	397.01
Mid. Ord.	=	6.89
P.C. Station		1830+85.63
P.T. Station		1834+82.96

Curve RN01-2

P.I. Station		1838+32.23
Delta	=	5° 30' 00.00" (RT)
Degree	=	0° 57' 17.75"
Tangent	=	288.20
Length	=	575.96
Radius	=	6,000.00
External	=	6.92
Long Chord	=	575.74
Mid. Ord.	=	6.91
P.C. Station		1835+44.03
P.T. Station		1841+19.99

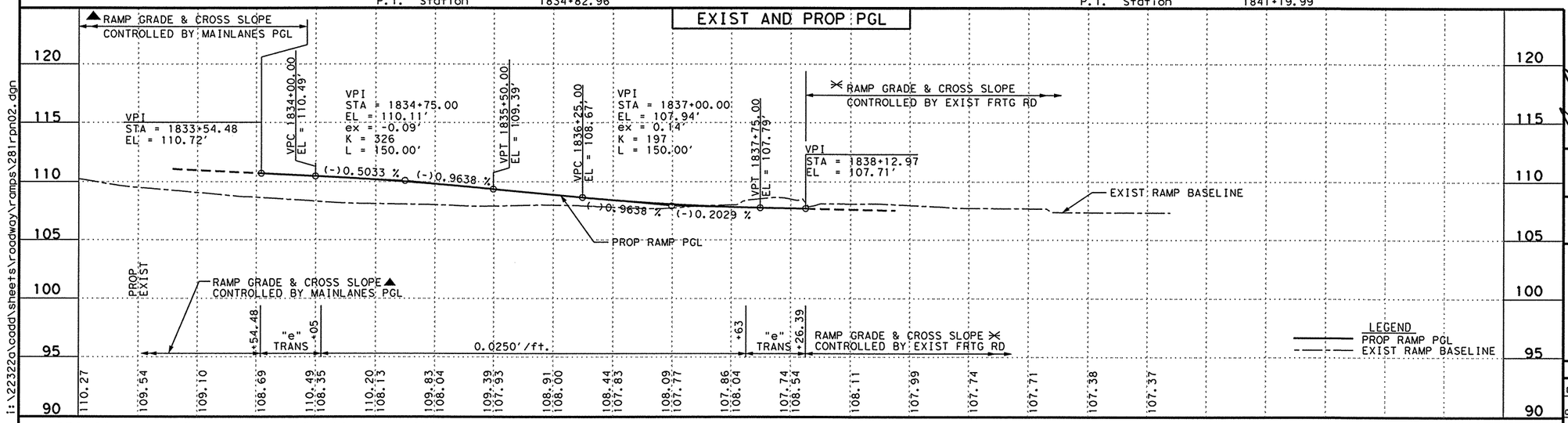

SHEET TOTALS				
ITEM	EST.		UNIT	DESCRIPTION
432	6		CY	RIPRAP (CONC) (CL B) (4 IN)
529	459		LF	CONC CURB (TY A) (MOUNTABLE)
529	466		LF	CONC C & G (TY A) (MOUNTABLE)

THE SEAL APPEARING ON THIS DOCUMENT WAS AUTHORIZED BY JAIME AGUILAR, P.E. 87606 ON 06/23/2003.

THE SEAL APPEARING ON THIS DOCUMENT WAS AUTHORIZED BY PHAISARN CWATANAPHOL, P.E. 89252 ON 06/23/2003.

STATE OF TEXAS · JAIME AGUILAR · 87606 · REGISTERED PROFESSIONAL ENGINEER

STATE OF TEXAS · PHAISARN CWATANAPHOL · 89252 · REGISTERED PROFESSIONAL ENGINEER

Parsons Brinckerhoff Quade & Douglas Inc.

Texas Department of Transportation

© 2003 by TxDOT

US 281
RAMP "RN01"
PLAN & PROFILE
ENTRANCE RAMP

PLAN 1"= 100' HORIZ
PROFILE 1"= 10' VERT

SHEET 2 OF 2 | 281RPN02.DGN

DESIGNED: JA	FED. RD DIV. No.	STATE	FEDERAL AID PROJECT No.	HIGHWAY No.
CHECKED: JP	6	TEXAS		US 281

DRAWN:	STATE DISTRICT	COUNTY	CONTROL No.	SECTION No.	JOB No.	SHEET No.
CHECKED: JDH	PHARR	HIDALGO	0255	08	091	356

NAME
01:02:54 PM
06/23/2003
i:\22322o\cadd\sheets\roadway\ramps\281rpn02.dgn

NAME

01:03:13 PM

06/23/2003

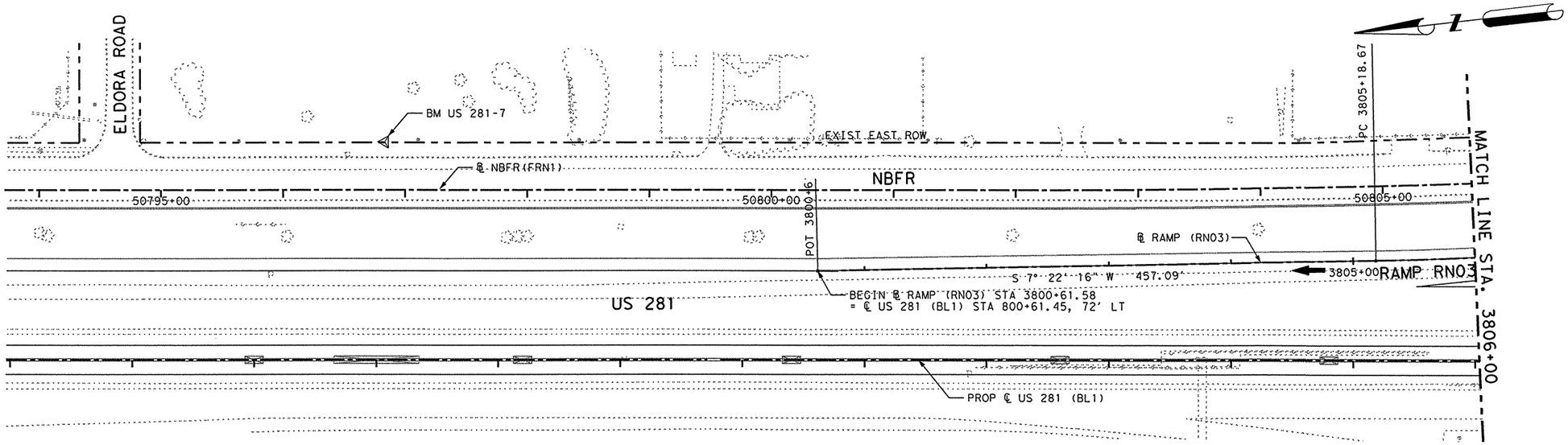

LEGEND:

- MC - MOUNTABLE CONC CURB
- BC - BARRIER CONC CURB
- MCG - MOUNTABLE CONC CURB & GUTTER
- BCG - BARRIER CONC CURB & GUTTER
- RW - RETAINING WALL
- RR - PROP CONC RIPRAP
- SGT - SINGLE GUARD RAIL TERMINAL
- MBGF - METAL BEAM GUARD FENCE
- NBFR - NORTHBOUND FRONTAGE ROAD
- SBFR - SOUTHBOUND FRONTAGE ROAD
- NBML - NORTHBOUND MAINLANES
- SBML - SOUTHBOUND MAINLANES
- PROP DITCH
- DEL ASM TY B (D-SW)
- OBJ MRK ASM TY 3 (OM-3R)

▲ RAMP "RN03" PROFILE SHALL MATCH THE MAINLANES PROFILE PROJECTED AT THE DESIGN CROSS SLOPE AND ADJUSTED FOR GORE CROSS SLOPE TRANSITION AS SHOWN ON GORE NOSE DETAIL SHEET.

⚠ B.M. & HORIZONTAL DATA
BM # US 281-7
ELEV = 104.99
STA = 797+06.99, 175.36' LT
3 1/4" TXDOT ALUMINUM DISK

SHEET TOTALS

ITEM	EST.	FINAL	UNIT	DESCRIPTION
				NO PAY QUANTITIES THIS SHEET

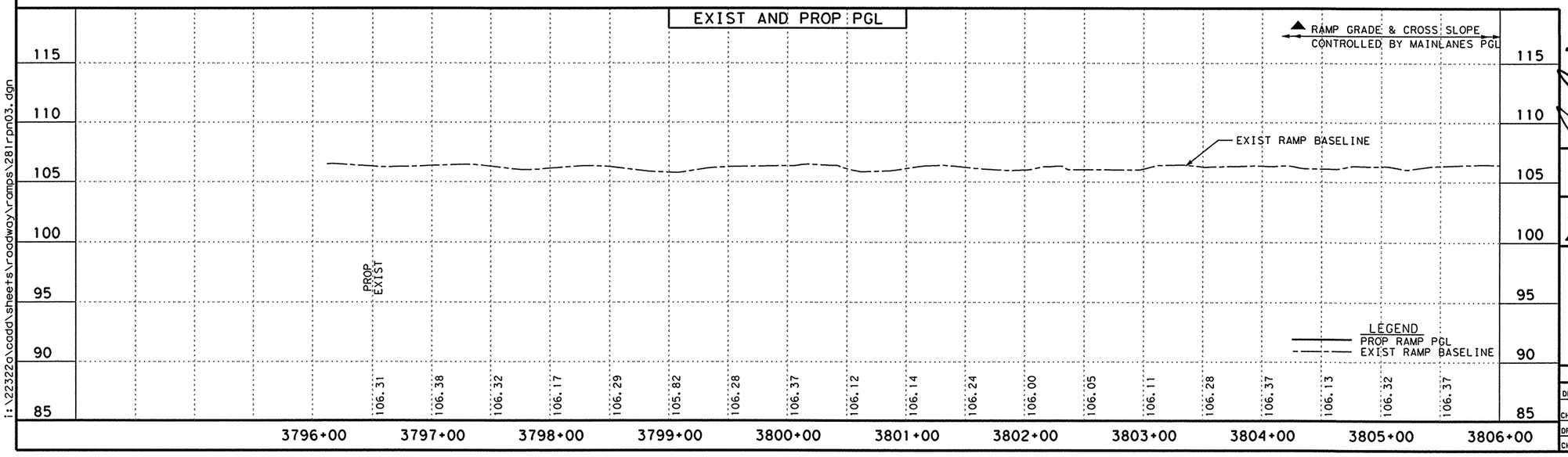

THE SEAL APPEARING ON THIS DOCUMENT WAS AUTHORIZED BY JAIME AGUILAR, P.E. 87606 ON 06/23/2003.

STATE OF TEXAS · JAIME AGUILAR · 87606 · REGISTERED PROFESSIONAL ENGINEER

THE SEAL APPEARING ON THIS DOCUMENT WAS AUTHORIZED BY PHAISARN CWATANAPHOL, P.E. 89252 ON 06/23/2003.

STATE OF TEXAS · PHAISARN CWATANAPHOL · 89252 · REGISTERED PROFESSIONAL ENGINEER

Parsons Brinckerhoff Quade & Douglas Inc.

Texas Department of Transportation

© 2003 by TxDOT

US 281
RAMP "RN03"
PLAN & PROFILE
ENTRANCE RAMP

PLAN 1"= 100' HORIZ
PROFILE 1"= 10' VERT

SHEET 1 OF 2 | 281RPN03.DGN

DESIGNED: JA	FED. RD DIV. No.	STATE	FEDERAL AID PROJECT No.				HIGHWAY No.
CHECKED: JP	6	TEXAS					US 281
DRAWN:	STATE DISTRICT	COUNTY	CONTROL No.	SECTION No.	JOB No.	SHEET No.	
CHECKED: JDH	PHARR	HIDALGO	0255	08	091	357	

i:\22322a\cadd\sheets\roadway\ramps\281rpn03.dgn

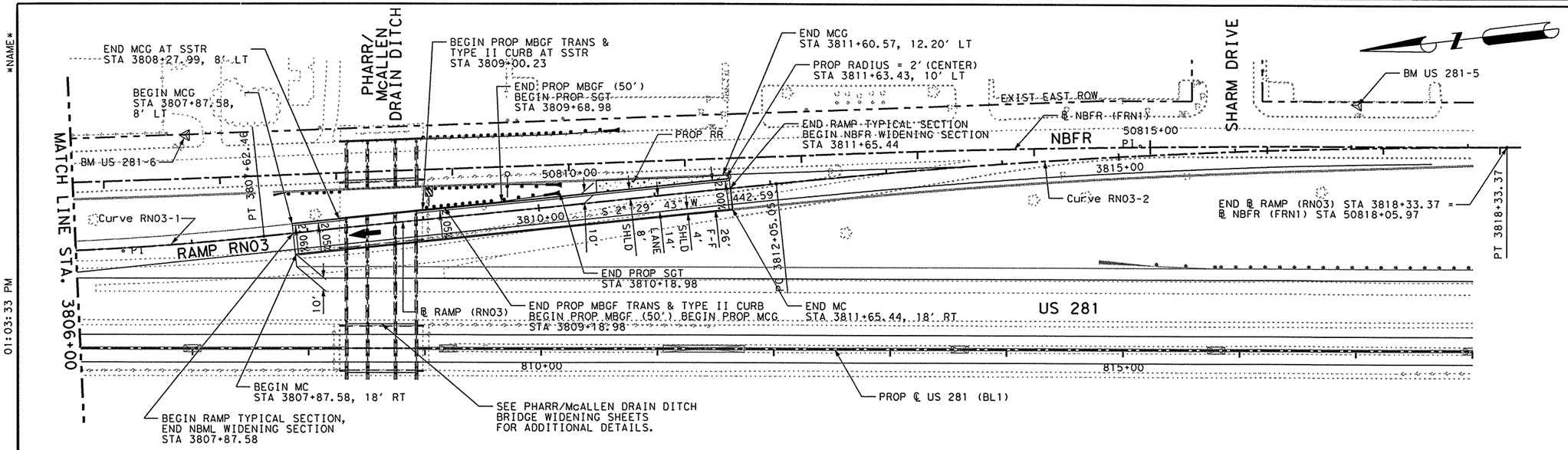

LEGEND:

- MC - MOUNTABLE CONC CURB
- BC - BARRIER CONC CURB
- MCG - MOUNTABLE CONC CURB & GUTTER
- BCG - BARRIER CONC CURB & GUTTER
- RW - RETAINING WALL
- RR - PROP CONC RIPRAP
- SGT - SINGLE GUARD RAIL TERMINAL
- MBGF - METAL BEAM GUARD FENCE
- NBFR - NORTHBOUND FRONTAGE ROAD
- SBFR - SOUTHBOUND FRONTAGE ROAD
- NBML - NORTHBOUND MAINLANES
- SBML - SOUTHBOUND MAINLANES
- PROP DITCH
- DEL ASM TY B (D-SW)
- OBJ MRK ASM TY 3 (OM-3R)

▲ RAMP "RN03" PROFILE SHALL MATCH THE MAINLANES PROFILE PROJECTED AT THE DESIGN CROSS SLOPE AND ADJUSTED FOR GORE CROSS SLOPE TRANSITION AS SHOWN ON GORE NOSE DETAIL SHEET.

⋇ RAMP "RN03" SHALL MATCH THE EXISTING NORTHBOUND FRONTAGE ROAD PROFILE AND CROSS SLOPE AND ADJUSTED FOR GORE CROSS SLOPE TRANSITION AS SHOWN ON GORE NOSE DETAIL SHEET.

△ B.M. & HORIZONTAL DATA

BM # US 281-6
ELEV = 105.29
STA = 806+94.49, 183.50' LT
3 1/4" TXDOT ALUMINUM DISK

BM # US 281-5
ELEV = 107.46
STA = 817+01.19, 211.65' LT
3 1/4" TXDOT ALUMINUM DISK

Curve RN03-1

P.I. Station		3806+40.64
Delta	=	4° 52' 32.96"
Degree	=	2° 00' 00.00"
Tangent	=	121.97
Length	=	243.79
Radius	=	2,864.79
External	=	2.60
Long Chord	=	243.72
Mid. Ord.	=	2.59
P.C. Station		3805+18.67
P.T. Station		3807+62.46
C.C.		
Back	= S	7° 22' 16.05" W
Ahead	= S	2° 29' 43.10" W
Chord Bear	= S	4° 55' 59.58" W

Curve RN03-2

P.I. Station		3815+19.50
Delta	=	6° 00' 00.00"
Degree	=	0° 57' 17.75"
Tangent	=	314.45
Length	=	628.32
Radius	=	6,000.00
External	=	8.23
Long Chord	=	628.03
Mid. Ord.	=	8.22
P.C. Station		3812+05.05
P.T. Station		3818+33.37
C.C.		
Back	= S	2° 29' 43.10" W
Ahead	= S	8° 29' 43.10" W
Chord Bear	= S	5° 29' 43.10" W

SHEET TOTALS

ITEM	EST.		UNIT	DESCRIPTION
432	9		CY	RIPRAP (CONC) (CL B) (4 IN)
529	378		LF	CONC CURB (TY A) (MOUNTABLE)
529	313		LF	CONC C & G (TY A) (MOUNTABLE)
540	50		LF	MTL BM GD FEN (BLK OUT) (12 GA) (TIM POST)
540	1		EA	MTL BM GD FEN (12 GA) (TRANS)
540	1		EA	SINGLE GUARDRAIL TERM (TY II)
5469	1		EA	DEL ASM TY B(D-SW)
658	1		EA	OBJ MRK TY 3(OM-3R)

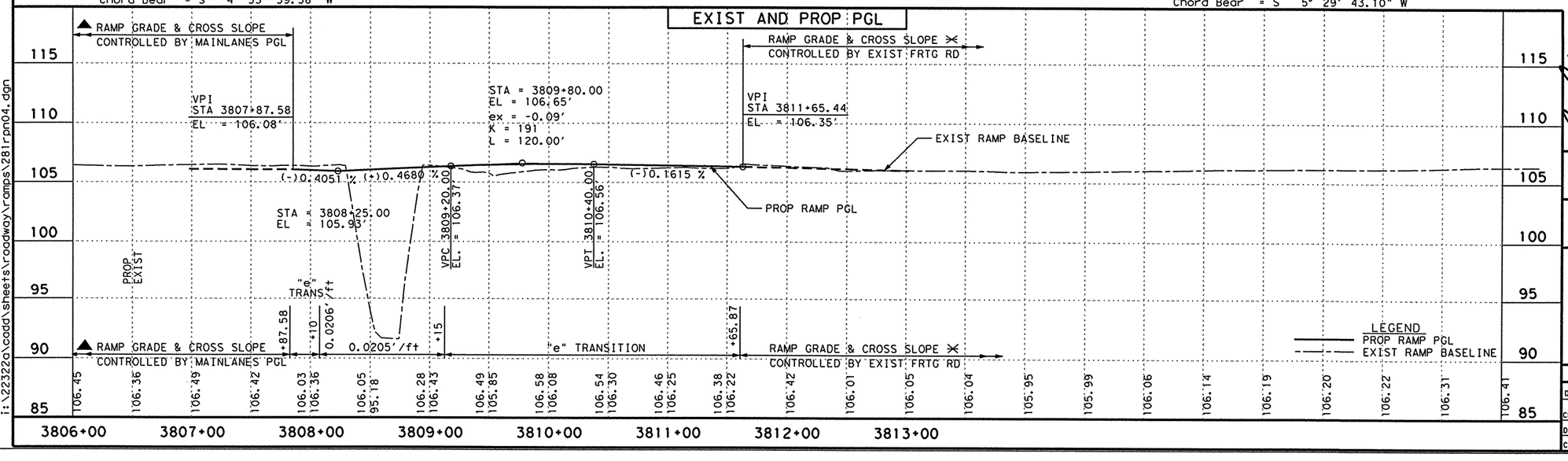

THE SEAL APPEARING ON THIS DOCUMENT WAS AUTHORIZED BY JAIME AGUILAR, P.E. 87606 ON 06/23/2003.

THE SEAL APPEARING ON THIS DOCUMENT WAS AUTHORIZED BY PHAISARN CWATANAPHOL, P.E. 89252 ON 06/23/2003.

STATE OF TEXAS · JAIME AGUILAR · 87606 · REGISTERED PROFESSIONAL ENGINEER

STATE OF TEXAS · PHAISARN CWATANAPHOL · 89252 · REGISTERED PROFESSIONAL ENGINEER

Parsons Brinckerhoff Quade & Douglas Inc.

Texas Department of Transportation

© 2003 by TxDOT

US 281
RAMP "RN03"
PLAN & PROFILE
ENTRANCE RAMP

PLAN 1"= 100' HORIZ
PROFILE 1"= 10' VERT

SHEET 2 OF 2 — 281RPN04.DGN

DESIGNED: JA	FED. RD DIV. No.	STATE	FEDERAL AID PROJECT No.	HIGHWAY No.
CHECKED: JP	6	TEXAS		US 281

DRAWN:	STATE DISTRICT	COUNTY	CONTROL No.	SECTION No.	JOB No.	SHEET No.
CHECKED: JDH	PHARR	HIDALGO	0255	08	091	358

i:\22322a\cadd\sheets\roadway\ramps\281rpn04.dgn

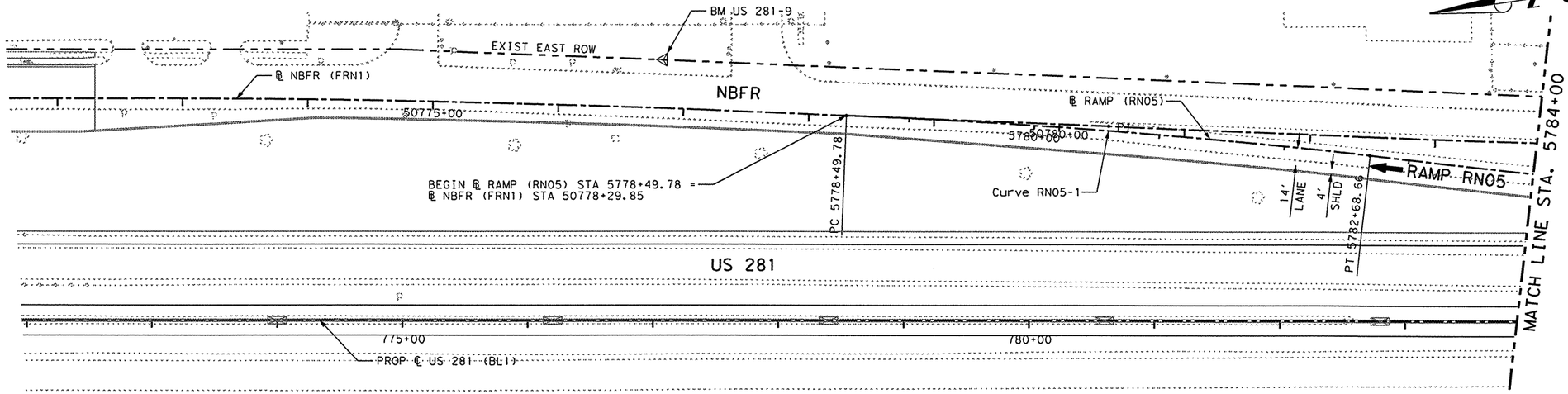

LEGEND:

- MC - MOUNTABLE CONC CURB
- BC - BARRIER CONC CURB
- MCG - MOUNTABLE CONC CURB & GUTTER
- BCG - BARRIER CONC CURB & GUTTER
- RW - RETAINING WALL
- RR - PROP CONC RIPRAP
- SGT - SINGLE GUARD RAIL TERMINAL
- MBGF - METAL BEAM GUARD FENCE
- NBFR - NORTHBOUND FRONTAGE ROAD
- SBFR - SOUTHBOUND FRONTAGE ROAD
- NBML - NORTHBOUND MAINLANES
- SBML - SOUTHBOUND MAINLANES
- PROP DITCH
- DEL ASM TY B (D-SW)
- OBJ MRK ASM TY 3 (OM-3R)

✳ RAMP "RN05" SHALL MATCH THE EXISTING NORTHBOUND FRONTAGE ROAD PROFILE AND CROSS SLOPE AND ADJUSTED FOR GORE CROSS SLOPE TRANSITION AS SHOWN ON GORE NOSE DETAIL SHEET.

△ B.M. & HORIZONTAL DATA
BM # US 281-9
ELEV = 104.73
STA = 777+08.34, 205.90' LT
3 1/4" TXDOT ALUMINUM DISK

SHEET TOTALS

ITEM	EST.		UNIT	DESCRIPTION
				NO PAY QUANTITIES THIS SHEET

Curve RN05-1

P.I. Station	5780+59.30
Delta =	4° 00' 00.00" (RT)
Degree =	0° 57' 17.75"
Tangent =	209.52
Length =	418.88
Radius =	6,000.00
External =	3.66
Long Chord =	418.79
Mid. Ord. =	3.66
P.C. Station	5778+49.78
P.T. Station	5782+68.66

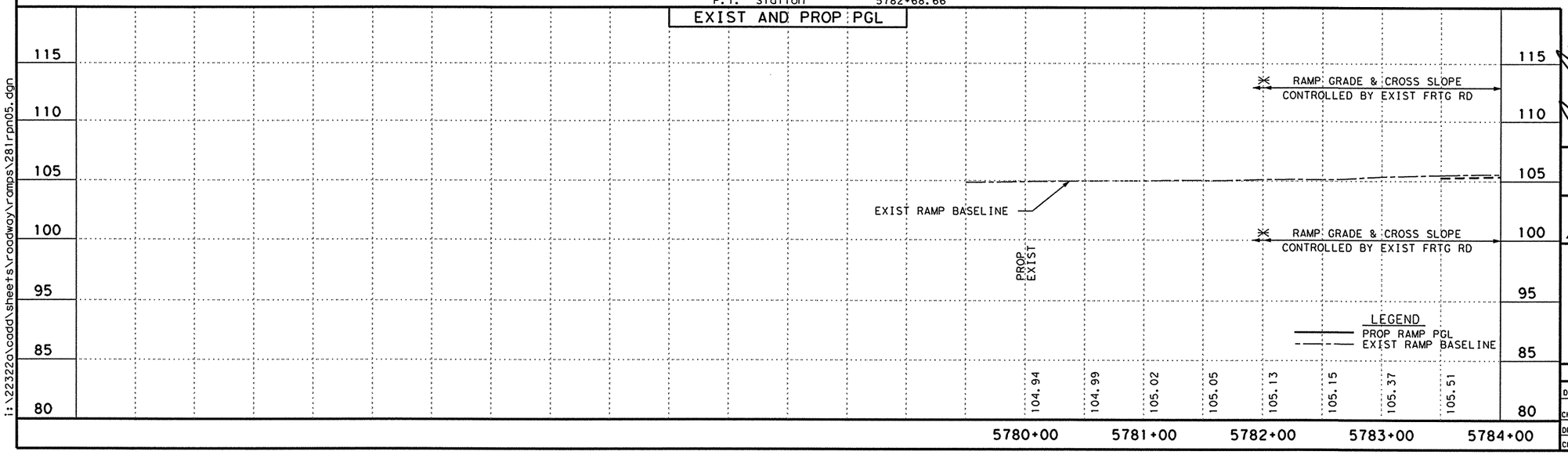

THE SEAL APPEARING ON THIS DOCUMENT WAS AUTHORIZED BY JAIME AGUILAR, P.E. 87606 ON 06/23/2003.

THE SEAL APPEARING ON THIS DOCUMENT WAS AUTHORIZED BY PHAISARN CWATANAPHOL, P.E. 89252 ON 06/23/2003.

STATE OF TEXAS JAIME AGUILAR 87606 REGISTERED PROFESSIONAL ENGINEER

STATE OF TEXAS PHAISARN CWATANAPHOL 89252 REGISTERED PROFESSIONAL ENGINEER

Parsons Brinckerhoff Quade & Douglas Inc.

Texas Department of Transportation

© 2003 by TxDOT

US 281
RAMP "RN05"
PLAN & PROFILE
EXIT RAMP

PLAN 1"= 100' HORIZ
PROFILE 1"= 10' VERT

SHEET 1 OF 2 | 281RPN05.DGN

DESIGNED: JA	FED. RD DIV. No.	STATE	FEDERAL AID PROJECT No.	HIGHWAY No.
CHECKED: JP	6	TEXAS		US 281

DRAWN:	STATE DISTRICT	COUNTY	CONTROL No.	SECTION No.	JOB No.	SHEET No.
CHECKED: JDH	PHARR	HIDALGO	0255	08	091	359

NAME
01:03:57 PM
06/23/2003
i:\22322a\cadd\sheets\roadway\ramps\281rpn05.dgn

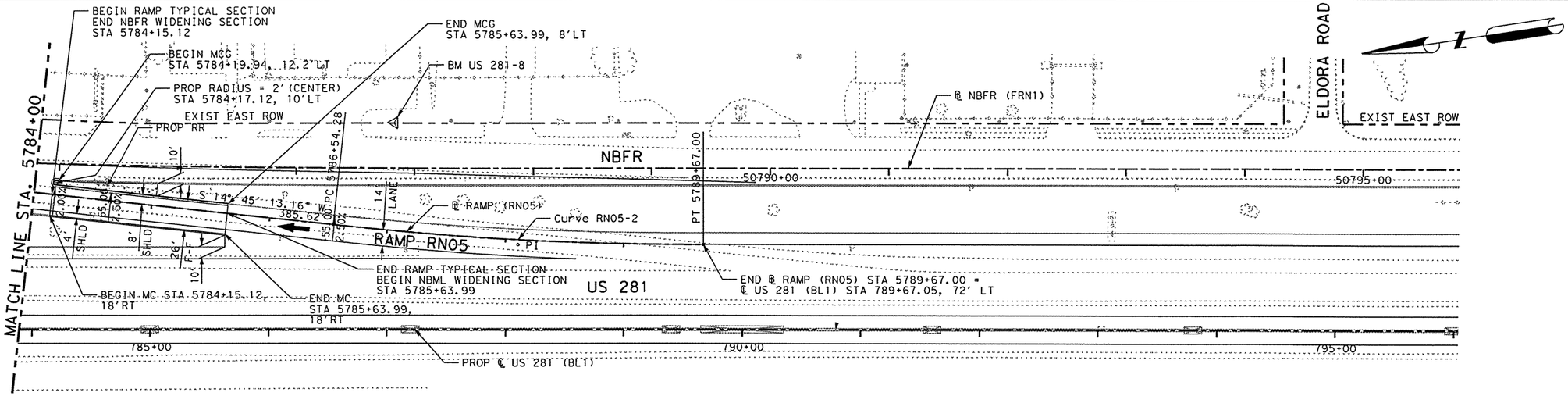

LEGEND:

- MC - MOUNTABLE CONC CURB
- BC - BARRIER CONC CURB
- MCG - MOUNTABLE CONC CURB & GUTTER
- BCG - BARRIER CONC CURB & GUTTER
- RW - RETAINING WALL
- RR - PROP CONC RIPRAP
- SGT - SINGLE GUARD RAIL TERMINAL
- MBGF - METAL BEAM GUARD FENCE
- NBFR - NORTHBOUND FRONTAGE ROAD
- SBFR - SOUTHBOUND FRONTAGE ROAD
- NBML - NORTHBOUND MAINLANES
- SBML - SOUTHBOUND MAINLANES
- PROP DITCH
- DEL ASM TY B (D-SW)
- OBJ MRK ASM TY 3 (OM-3R)

⋇ RAMP "RN05" SHALL MATCH THE EXISTING NORTHBOUND FRONTAGE ROAD PROFILE AND CROSS SLOPE AND ADJUSTED FOR GORE CROSS SLOPE TRANSITION AS SHOWN ON GORE NOSE DETAIL SHEET.

▲ RAMP "RN05" PROFILE SHALL MATCH THE MAINLANES PROFILE PROJECTED AT THE DESIGN CROSS SLOPE AND ADJUSTED FOR GORE CROSS SLOPE TRANSITION AS SHOWN ON GORE NOSE DETAIL SHEET.

△ B.M. & HORIZONTAL DATA
BM # US 281-8
ELEV = 104.98
STA = 787+06.77, 175.17' LT
3 ¼" TXDOT ALUMINUM DISK

Curve RN05-2

P.I. Station		5788+10.79
Delta	=	6° 15' 15.52" (LT)
Degree	=	2° 00' 00.00"
Tangent	=	156.51
Length	=	312.72
Radius	=	2,864.79
External	=	4.27
Long Chord	=	312.56
Mid. Ord.	=	4.27
P.C. Station		5786+54.28
P.T. Station		5789+67.00

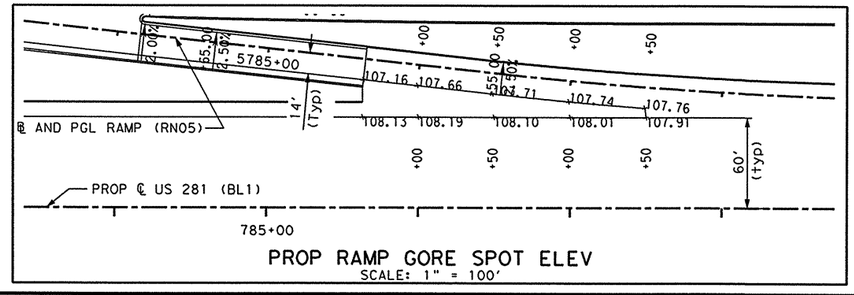

PROP RAMP GORE SPOT ELEV
SCALE: 1" = 100'

SHEET TOTALS				
ITEM	EST.		UNIT	DESCRIPTION
432	7		CY	RIPRAP (CONC) (CL B) (4 IN)
529	149		LF	CONC CURB (TY A) (MOUNTABLE)
529	156		LF	CONC C & G (TY A) (MOUNTABLE)

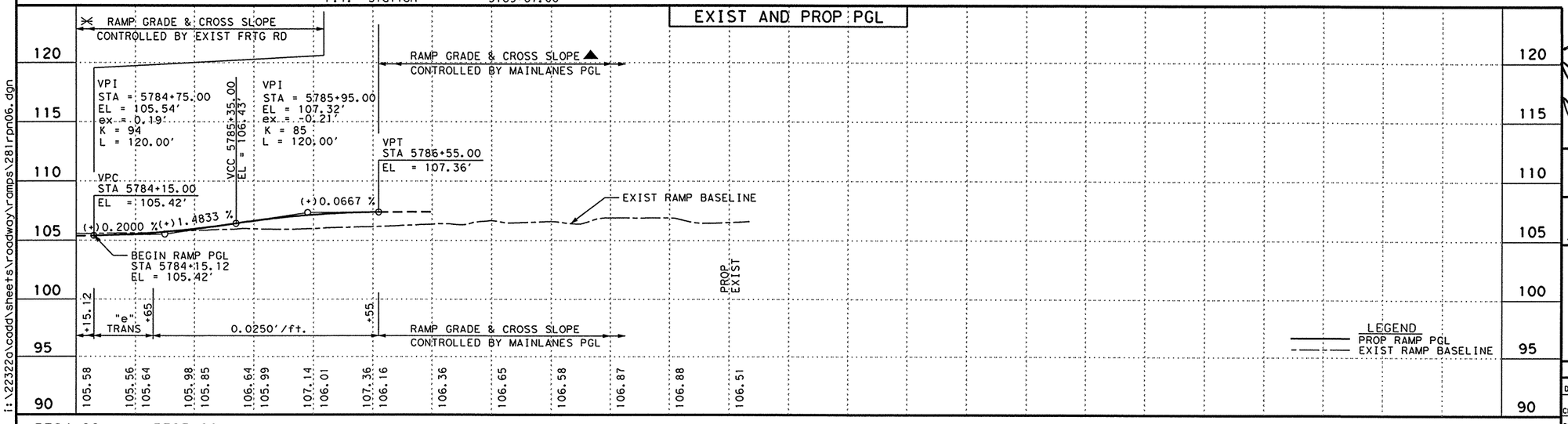

THE SEAL APPEARING ON THIS DOCUMENT WAS AUTHORIZED BY JAIME AGUILAR, P.E. 87606 ON 06/23/2003.

THE SEAL APPEARING ON THIS DOCUMENT WAS AUTHORIZED BY PHAISARN CWATANAPHOL, P.E. 89252 ON 06/23/2003.

STATE OF TEXAS — JAIME AGUILAR — 87606 — REGISTERED PROFESSIONAL ENGINEER

STATE OF TEXAS — PHAISARN CWATANAPHOL — 89252 — REGISTERED PROFESSIONAL ENGINEER

Parsons Brinckerhoff Quade & Douglas Inc.

Texas Department of Transportation

© 2003 by TxDOT

US 281
RAMP "RN05"
PLAN & PROFILE
EXIT RAMP

PLAN 1"= 100' HORIZ
PROFILE 1"= 10' VERT

SHEET 2 OF 2 — 281RPN06.DGN

DESIGNED: JA	FED. RD DIV. No.	STATE	FEDERAL AID PROJECT No.	HIGHWAY No.
CHECKED: JP	6	TEXAS		US 281

DRAWN:	STATE DISTRICT	COUNTY	CONTROL No.	SECTION No.	JOB No.	SHEET No.
CHECKED: JDH	PHARR	HIDALGO	0255	08	091	360

NAME
01:04:16 PM
06/23/2003
i:\223220\cadd\sheets\roadway\ramps\281rpn06.dgn

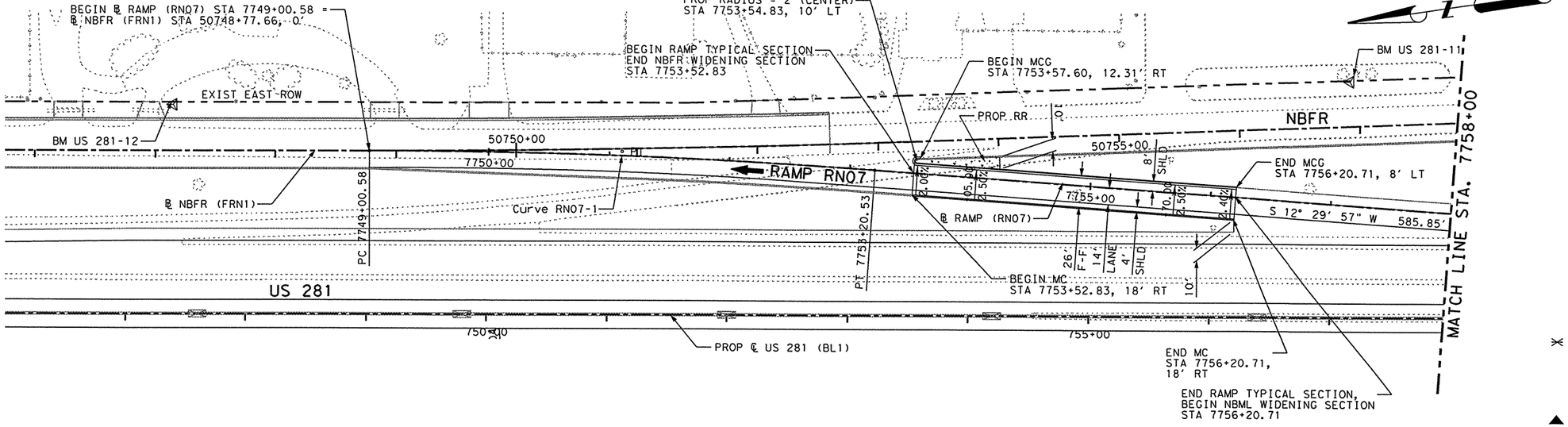

LEGEND:

- MC - MOUNTABLE CONC CURB
- BC - BARRIER CONC CURB
- MCG - MOUNTABLE CONC CURB & GUTTER
- BCG - BARRIER CONC CURB & GUTTER
- RW - RETAINING WALL
- RR - PROP CONC RIPRAP
- SGT - SINGLE GUARD RAIL TERMINAL
- MBGF - METAL BEAM GUARD FENCE
- NBFR - NORTHBOUND FRONTAGE ROAD
- SBFR - SOUTHBOUND FRONTAGE ROAD
- NBML - NORTHBOUND MAINLANES
- SBML - SOUTHBOUND MAINLANES
- PROP DITCH
- DEL ASM TY B (D-SW)
- OBJ MRK ASM TY 3 (OM-3R)

⋇ RAMP "RN07" PROFILE SHALL MATCH THE NORTHBOUND FRONTAGE ROAD PROFILE PROJECTED AT THE DESIGN CROSS SLOPE AND ADJUSTED FOR GORE CROSS SLOPE TRANSITION AS SHOWN ON GORE NOSE DETAIL SHEET.

▲ RAMP "RN07" PROFILE SHALL MATCH THE MAINLANES PROFILE PROJECTED AT THE DESIGN CROSS SLOPE AND ADJUSTED FOR GORE CROSS SLOPE TRANSITION AS SHOWN ON GORE NOSE DETAIL SHEET.

△ B.M. & HORIZONTAL DATA

BM # US 281-12
ELEV = 104.33
STA = 747+40.09, 172.11' LT
3 1/4" TXDOT ALUMINUM DISK

BM # US 281-11
ELEV = 104.75
STA = 757+16.56, 194.71' LT
3 1/4" TXDOT ALUMINUM DISK

SHEET TOTALS

ITEM	EST.		UNIT	DESCRIPTION
432	6		CY	RIPRAP (CONC) (CL B) (4 IN)
529	268		LF	CONC CURB (TY A) (MOUNTABLE)
529	275		LF	CONC C & G (TY A) (MOUNTABLE)

Curve RN07-1

P.I. Station	=	7751+10.64
Delta	=	4° 00' 36.99" (RT)
Degree	=	0° 57' 17.75"
Tangent	=	210.06
Length	=	419.95
Radius	=	6,000.00
External	=	3.68
Long Chord	=	419.87
Mid. Ord.	=	3.67
P.C. Station	=	7749+00.58
P.T. Station	=	7753+20.53

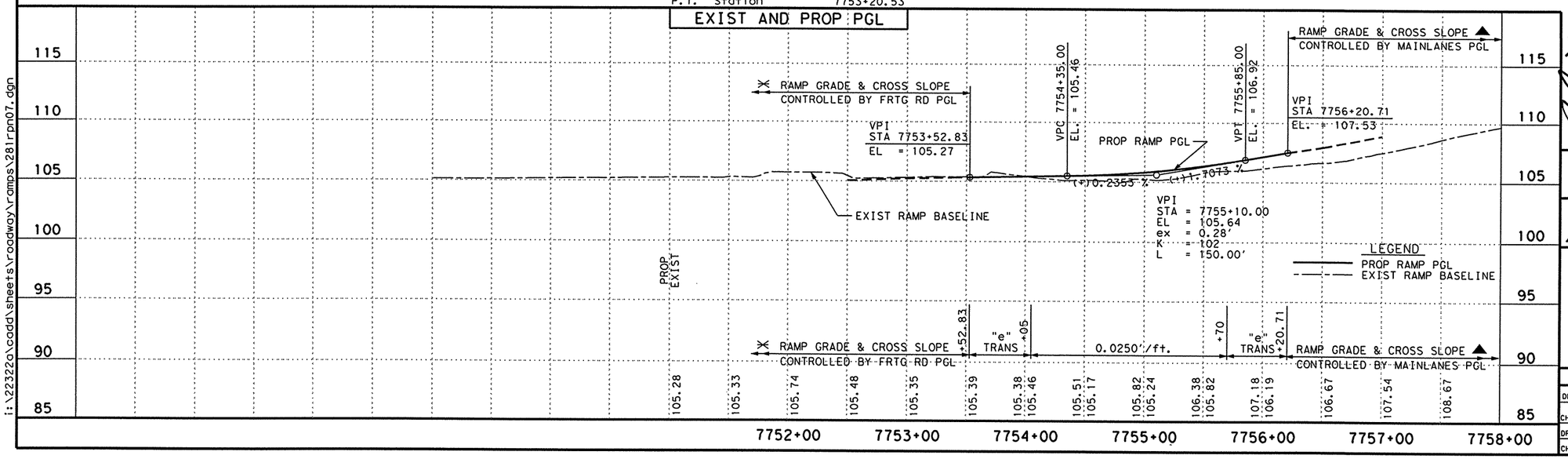

THE SEAL APPEARING ON THIS DOCUMENT WAS AUTHORIZED BY JAIME AGUILAR, P.E. 87606 ON 06/23/2003.

THE SEAL APPEARING ON THIS DOCUMENT WAS AUTHORIZED BY PHAISARN CWATANAPHOL, P.E. 89252 ON 06/23/2003.

STATE OF TEXAS — JAIME AGUILAR — 87606 — REGISTERED PROFESSIONAL ENGINEER

STATE OF TEXAS — PHAISARN CWATANAPHOL — 89252 — REGISTERED PROFESSIONAL ENGINEER

Parsons Brinckerhoff Quade & Douglas Inc.

Texas Department of Transportation

© 2003 by TxDOT

US 281
RAMP "RN07"
PLAN & PROFILE
EXIT RAMP

PLAN 1"= 100' HORIZ
PROFILE 1"= 10' VERT

SHEET 1 OF 2 — 281RPN07.DGN

DESIGNED: JA	FED. RD DIV. No.	STATE	FEDERAL AID PROJECT No.			HIGHWAY No.
CHECKED: JP	6	TEXAS				US 281
DRAWN:	STATE DISTRICT	COUNTY	CONTROL No.	SECTION No.	JOB No.	SHEET No.
CHECKED: JDH	PHARR	HIDALGO	0255	08	091	361

NAME
01:04:35 PM
06/23/2003
i:\22322g\cadd\sheets\roadway\ramps\281rpn07.dgn

NAME
01:04:54 PM
06/23/2003

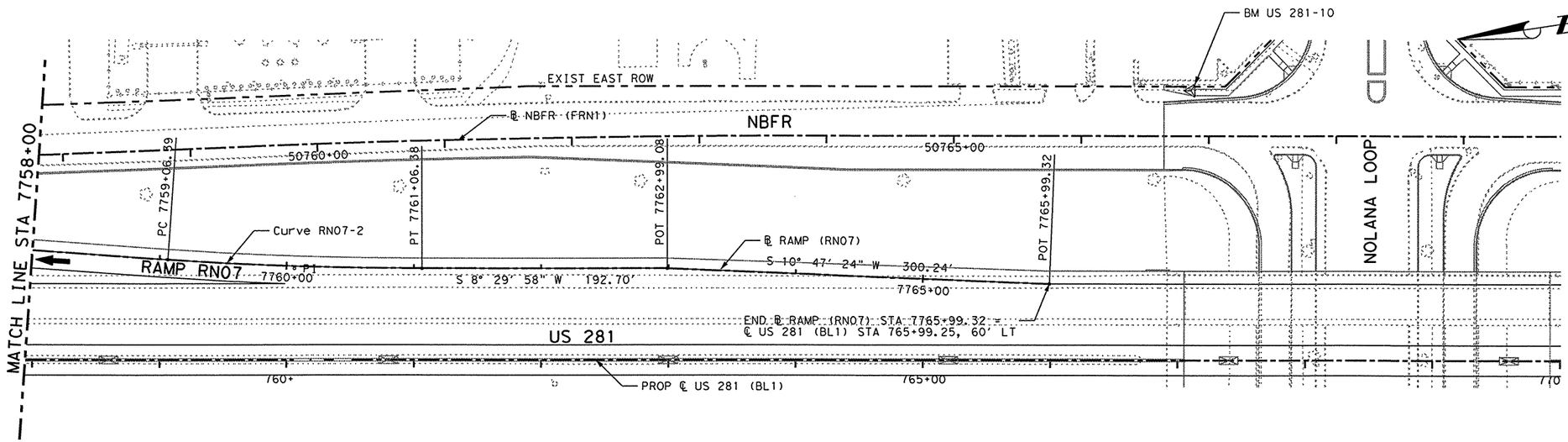

LEGEND:

MC	- MOUNTABLE CONC CURB
BC	- BARRIER CONC CURB
MCG	- MOUNTABLE CONC CURB & GUTTER
BCG	- BARRIER CONC CURB & GUTTER
RW	- RETAINING WALL
RR	- PROP CONC RIPRAP
SGT	- SINGLE GUARD RAIL TERMINAL
MBGF	- METAL BEAM GUARD FENCE
NBFR	- NORTHBOUND FRONTAGE ROAD
SBFR	- SOUTHBOUND FRONTAGE ROAD
NBML	- NORTHBOUND MAINLANES
SBML	- SOUTHBOUND MAINLANES
····»	- PROP DITCH
—o	- DEL ASM TY B (D-SW)
—▨	- OBJ MRK ASM TY 3 (OM-3R)

▲ RAMP "RN07" PROFILE SHALL MATCH THE MAINLANES PROFILE PROJECTED AT THE DESIGN CROSS SLOPE AND ADJUSTED FOR GORE CROSS SLOPE TRANSITION AS SHOWN ON GORE NOSE DETAIL SHEET.

△ B.M. & HORIZONTAL DATA
BM # US 281-10
ELEV = 105.56
STA = 767+10.57, 210.84' LT
3 1/4" TXDOT ALUMINUM DISK

Curve RN07-2

P.I. Station		7760+06.42
Delta	=	3° 59' 59.50" (LT)
Degree	=	2° 00' 00.00"
Tangent	=	100.04
Length	=	199.99
Radius	=	2,864.79
External	=	1.75
Long Chord	=	199.95
Mid. Ord.	=	1.75
P.C. Station		7759+06.39
P.T. Station		7761+06.38

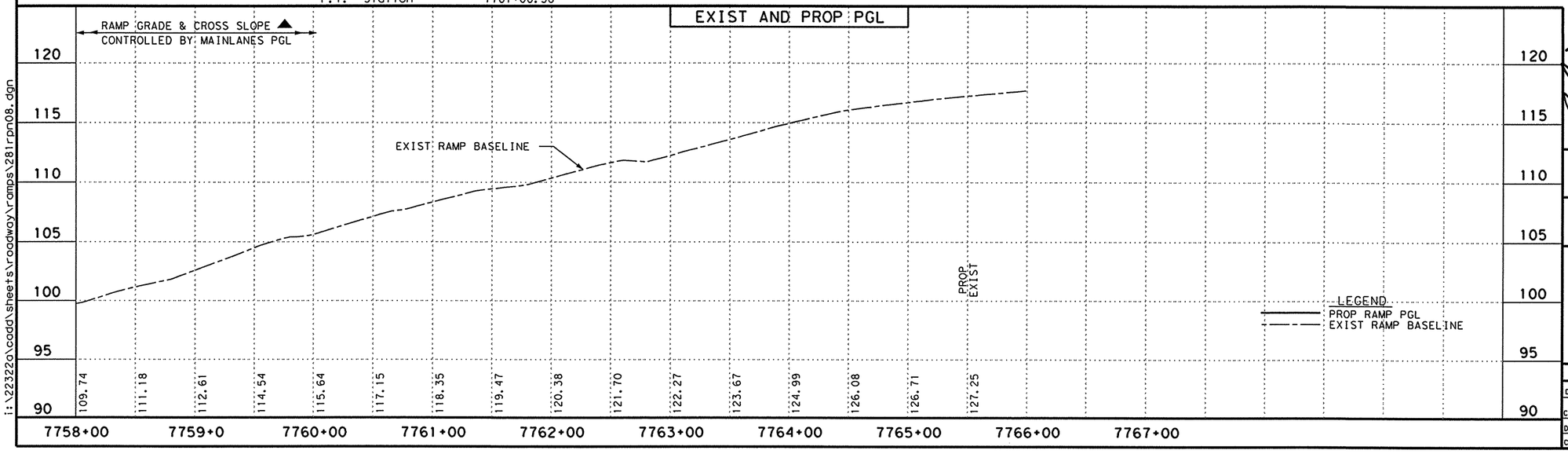

SHEET TOTALS				
ITEM	EST.	FINAL	UNIT	DESCRIPTION
				NO PAY QUANTITIES THIS SHEET

THE SEAL APPEARING ON THIS DOCUMENT WAS AUTHORIZED BY JAIME AGUILAR, P.E. 87606 ON 06/23/2003.

THE SEAL APPEARING ON THIS DOCUMENT WAS AUTHORIZED BY PHAISARN CWATANAPHOL, P.E. 89252 ON 06/23/2003.

STATE OF TEXAS · JAIME AGUILAR · 87606 · REGISTERED PROFESSIONAL ENGINEER

STATE OF TEXAS · PHAISARN CWATANAPHOL · 89252 · REGISTERED PROFESSIONAL ENGINEER

Parsons Brinckerhoff Quade & Douglas Inc.

Texas Department of Transportation

© 2003 by TxDOT

US 281
RAMP "RN07"
PLAN & PROFILE
EXIT RAMP

PLAN 1"= 100' HORIZ
PROFILE 1"= 10' VERT

SHEET 2 OF 2 | 281RPN08.DGN

DESIGNED: JA	FED. RD DIV. No.	STATE	FEDERAL AID PROJECT No.		HIGHWAY No.	
CHECKED: JP	6	TEXAS			US 281	
DRAWN:	STATE DISTRICT	COUNTY	CONTROL No.	SECTION No.	JOB No.	SHEET No.
CHECKED: JDH	PHARR	HIDALGO	0255	08	091	362

i:\22322o\cadd\sheets\roadway\ramps\281rpn08.dgn

NAME
01:05:12 PM
06/23/2003

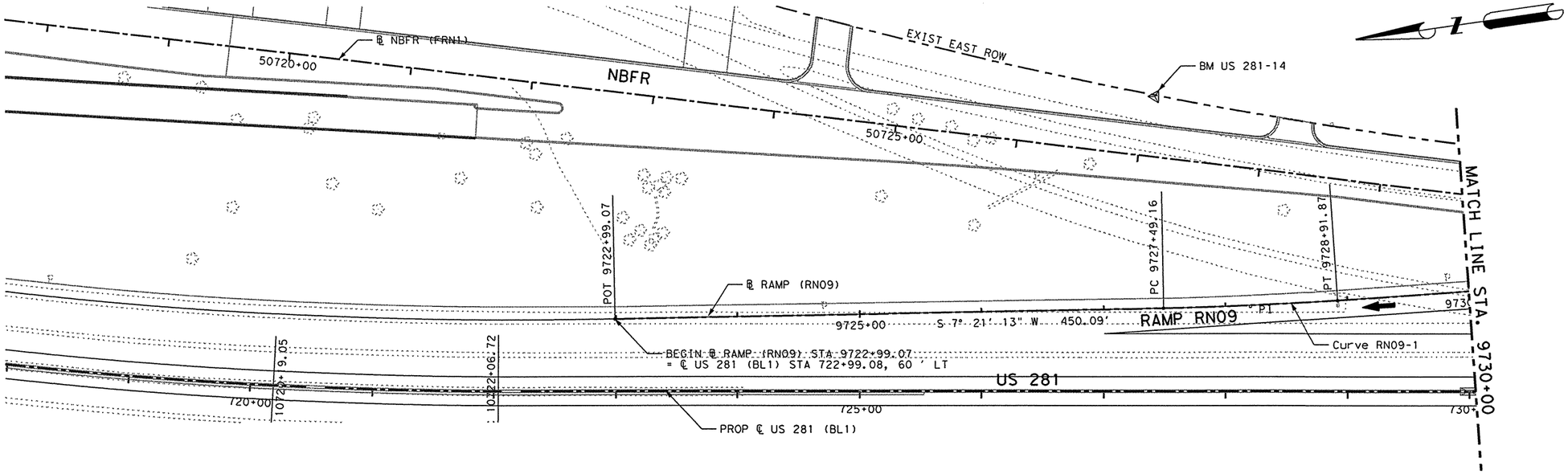

LEGEND:

- MC - MOUNTABLE CONC CURB
- BC - BARRIER CONC CURB
- MCG - MOUNTABLE CONC CURB & GUTTER
- BCG - BARRIER CONC CURB & GUTTER
- RW - RETAINING WALL
- RR - PROP CONC RIPRAP
- SGT - SINGLE GUARD RAIL TERMINAL
- MBGF - METAL BEAM GUARD FENCE
- NBFR - NORTHBOUND FRONTAGE ROAD
- SBFR - SOUTHBOUND FRONTAGE ROAD
- NBML - NORTHBOUND MAINLANES
- SBML - SOUTHBOUND MAINLANES
- ..... - PROP DITCH
- —o— - DEL ASM TY B (D-SW)
- —▨— - OBJ MRK ASM TY 3 (OM-3R)

▲ RAMP "RN09" PROFILE SHALL MATCH THE MAINLANES PROFILE PROJECTED AT THE DESIGN CROSS SLOPE AND ADJUSTED FOR GORE CROSS SLOPE TRANSITION AS SHOWN ON GORE NOSE DETAIL SHEET.

△ B.M. & HORIZONTAL DATA
BM # US 281-14
ELEV = 103.90
STA = 727+41.86, 241.71' LT
3 1/4" TXDOT ALUMINUM DISK

SHEET TOTALS				
ITEM	EST.	FINAL	UNIT	DESCRIPTION
				NO PAY QUANTITIES THIS SHEET

Curve RN09-1

P.I. Station		9728+20.53
Delta	=	2° 51' 15.26" (LT)
Degree	=	2° 00' 00.00"
Tangent	=	71.37
Length	=	142.71
Radius	=	2,864.79
External	=	0.89
Long Chord	=	142.70
Mid. Ord.	=	0.89
P.C. Station		9727+49.16
P.T. Station		9728+91.87

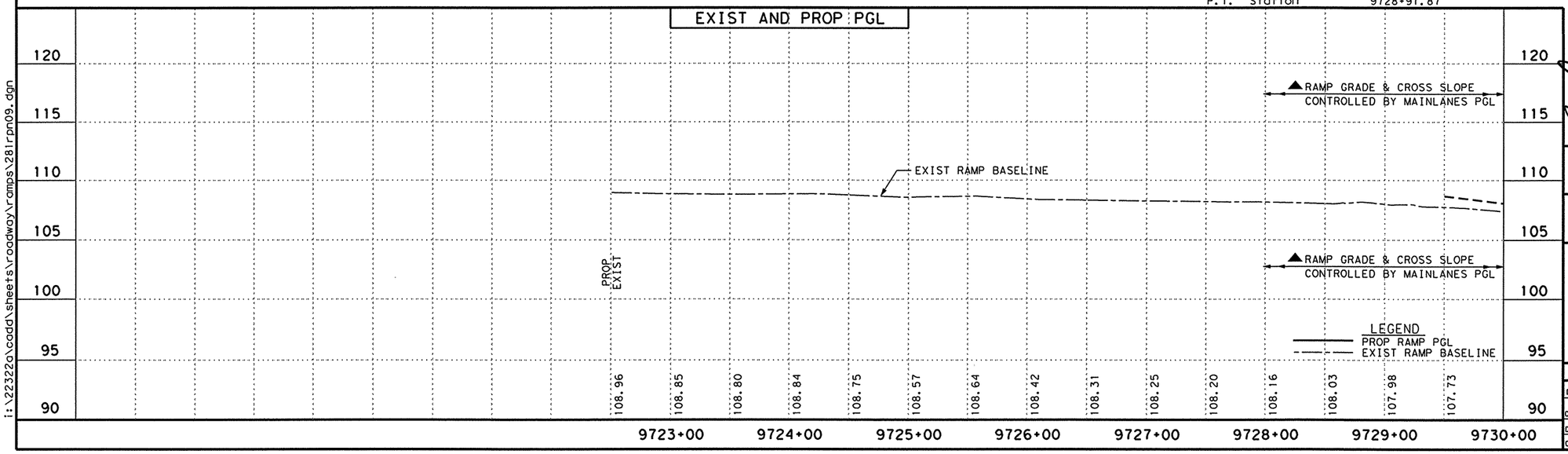

THE SEAL APPEARING ON THIS DOCUMENT WAS AUTHORIZED BY JAIME AGUILAR, P.E. 87606 ON 06/23/2003.

STATE OF TEXAS
JAIME AGUILAR
87606
REGISTERED PROFESSIONAL ENGINEER

THE SEAL APPEARING ON THIS DOCUMENT WAS AUTHORIZED BY PHAISARN CWATANAPHOL, P.E. 89252 ON 06/23/2003.

STATE OF TEXAS
PHAISARN CWATANAPHOL
89252
REGISTERED PROFESSIONAL ENGINEER

Parsons Brinckerhoff Quade & Douglas Inc.

Texas Department of Transportation

© 2003 by TxDOT

US 281
RAMP "RN09"
PLAN & PROFILE
ENTRANCE RAMP

PLAN 1"= 100' HORIZ
PROFILE 1"= 10' VERT

SHEET 1 OF 2 | 281RPN09.DGN

DESIGNED: JA	FED. RD DIV. No.	STATE	FEDERAL AID PROJECT No.			HIGHWAY No.	
CHECKED: JP	6	TEXAS				US 281	
DRAWN:	STATE DISTRICT	COUNTY	CONTROL No.	SECTION No.	JOB No.	SHEET No.	
CHECKED: JDH	PHARR	HIDALGO	0255	08	091	363	

i:\22322a\cadd\sheets\roadway\ramps\281rpn09.dgn

NAME
01:05:31 PM
06/23/2003

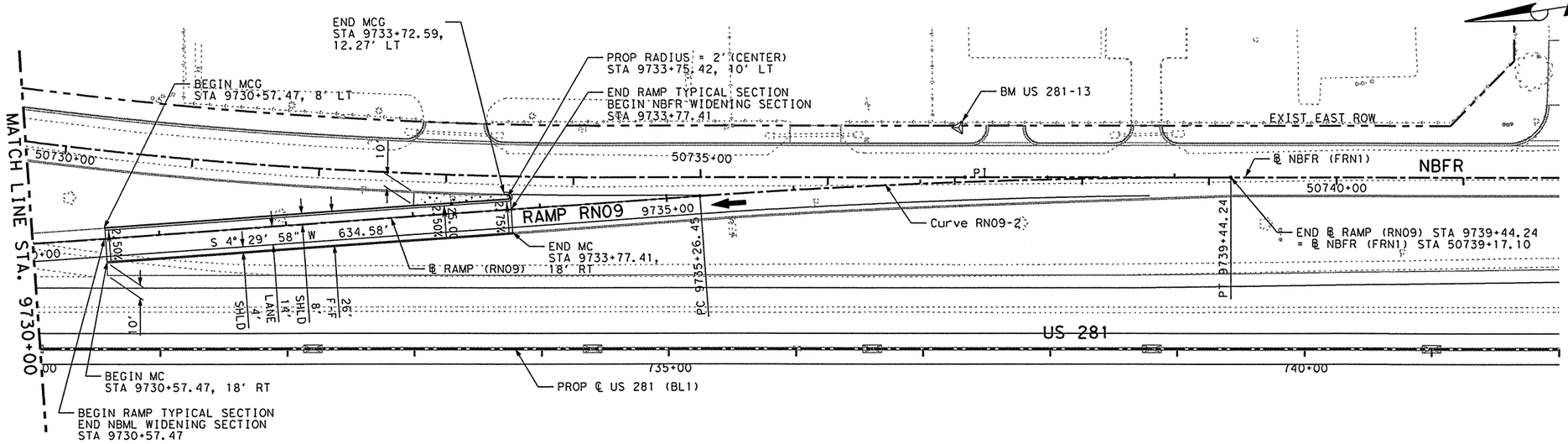

LEGEND:

- MC - MOUNTABLE CONC CURB
- BC - BARRIER CONC CURB
- MCG - MOUNTABLE CONC CURB & GUTTER
- BCG - BARRIER CONC CURB & GUTTER
- RW - RETAINING WALL
- RR - PROP CONC RIPRAP
- SGT - SINGLE GUARD RAIL TERMINAL
- MBGF - METAL BEAM GUARD FENCE
- NBFR - NORTHBOUND FRONTAGE ROAD
- SBFR - SOUTHBOUND FRONTAGE ROAD
- NBML - NORTHBOUND MAINLANES
- SBML - SOUTHBOUND MAINLANES
- PROP DITCH
- DEL ASM TY B (D-SW)
- OBJ MRK ASM TY 3 (OM-3R)

▲ RAMP "RN09" PROFILE SHALL MATCH THE MAINLANES PROFILE PROJECTED AT THE DESIGN CROSS SLOPE AND ADJUSTED FOR GORE CROSS SLOPE TRANSITION AS SHOWN ON GORE NOSE DETAIL SHEET.

⋇ RAMP "RN09" PROFILE SHALL MATCH THE NORTHBOUND FRONTAGE ROAD PROFILE PROJECTED AT THE DESIGN CROSS SLOPE AND ADJUSTED FOR GORE CROSS SLOPE TRANSITION AS SHOWN ON GORE NOSE DETAIL SHEET.

△ B.M. & HORIZONTAL DATA
BM # US 281-13
ELEV = 104.89
STA = 737+28.11, 172.67' LT
3 1/4" TXDOT ALUMINUM DISK

Curve RN09-2

P.I. Station	=	9737+35.43
Delta	=	3° 59' 22.73" (RT)
Degree	=	0° 57' 17.75"
Tangent	=	208.98
Length	=	417.79
Radius	=	6,000.00
External	=	3.64
Long Chord	=	417.71
Mid. Ord.	=	3.64
P.C. Station	=	9735+26.45
P.T. Station	=	9739+44.24

SHEET TOTALS

ITEM	EST.		UNIT	DESCRIPTION
432	6		CY	RIPRAP (CONC) (CL B) (4 IN)
529	320		LF	CONC CURB (TY A) (MOUNTABLE)
529	327		LF	CONC C & G (TY A) (MOUNTABLE)

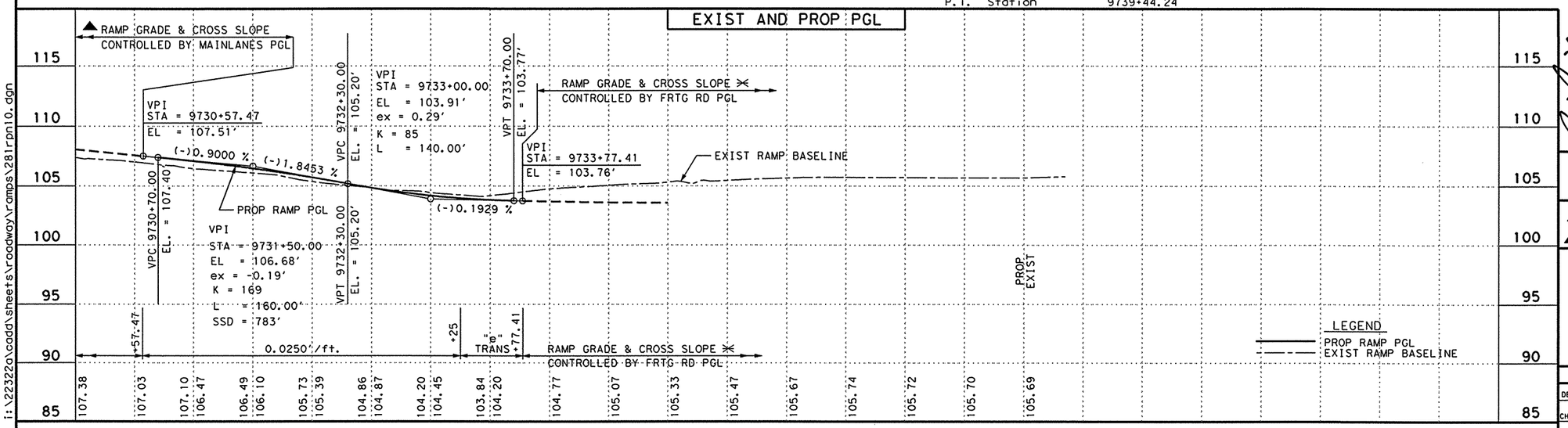

THE SEAL APPEARING ON THIS DOCUMENT WAS AUTHORIZED BY JAIME AGUILAR, P.E. 87606 ON 06/23/2003.

THE SEAL APPEARING ON THIS DOCUMENT WAS AUTHORIZED BY PHAISARN CWATANAPHOL, P.E. 89252 ON 06/23/2003.

STATE OF TEXAS · JAIME AGUILAR · 87606 · REGISTERED PROFESSIONAL ENGINEER

STATE OF TEXAS · PHAISARN CWATANAPHOL · 89252 · REGISTERED PROFESSIONAL ENGINEER

Parsons Brinckerhoff Quade & Douglas Inc.

Texas Department of Transportation

© 2003 by TxDOT

US 281
RAMP "RN09"
PLAN & PROFILE
ENTRANCE RAMP

PLAN 1"= 100' HORIZ
PROFILE 1"= 10' VERT

SHEET 2 OF 2 | 281RPN10.DGN

DESIGNED: JA	FED. RD DIV. No.	STATE	FEDERAL AID PROJECT No.	HIGHWAY No.
CHECKED: JP	6	TEXAS		US 281

DRAWN:	STATE DISTRICT	COUNTY	CONTROL No.	SECTION No.	JOB No.	SHEET No.
CHECKED: JDH	PHARR	HIDALGO	0255	08	091	364

i:\22322a\cadd\sheets\roadway\ramps\281rpn10.dgn

NAME
01:05:51 PM
06/23/2003

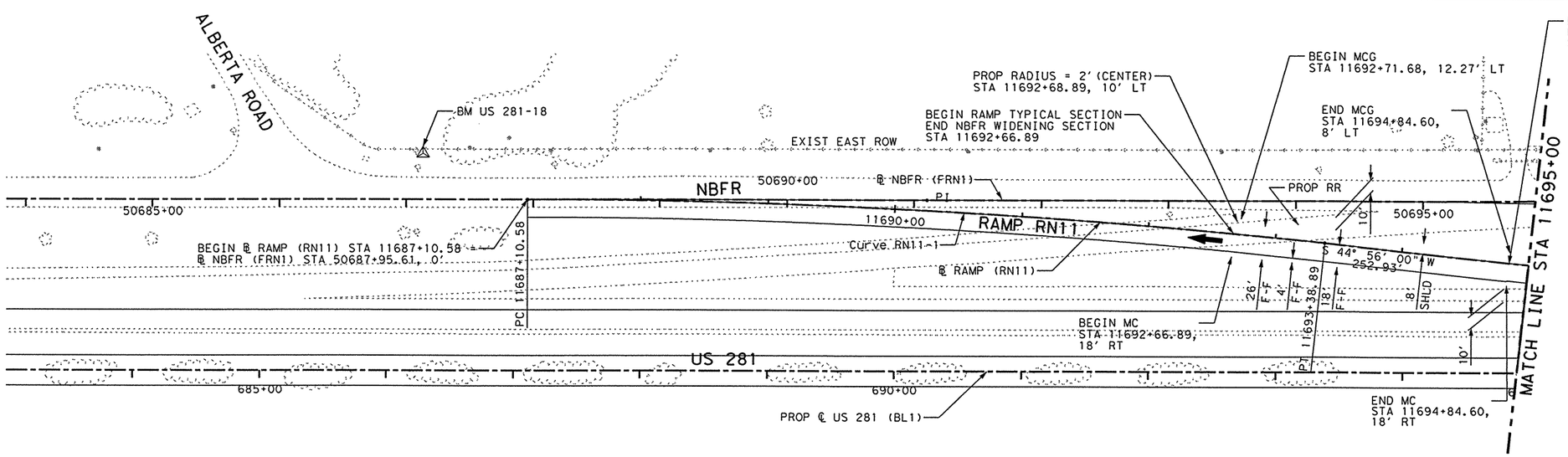

LEGEND:

MC	- MOUNTABLE CONC CURB
BC	- BARRIER CONC CURB
MCG	- MOUNTABLE CONC CURB & GUTTER
BCG	- BARRIER CONC CURB & GUTTER
RW	- RETAINING WALL
RR	- PROP CONC RIPRAP
SGT	- SINGLE GUARD RAIL TERMINAL
MBGF	- METAL BEAM GUARD FENCE
NBFR	- NORTHBOUND FRONTAGE ROAD
SBFR	- SOUTHBOUND FRONTAGE ROAD
NBML	- NORTHBOUND MAINLANES
SBML	- SOUTHBOUND MAINLANES
···→	- PROP DITCH
—o	- DEL ASM TY B (D-SW)
—▨	- OBJ MRK ASM TY 3 (OM-3R)

⋊ RAMP "RN11" PROFILE SHALL MATCH THE NORTHBOUND FRONTAGE ROAD PROFILE PROJECTED AT THE DESIGN CROSS SLOPE AND ADJUSTED FOR GORE CROSS SLOPE TRANSITION AS SHOWN ON GORE NOSE DETAIL SHEET.

▲ RAMP "RN11" PROFILE SHALL MATCH THE MAINLANES PROFILE PROJECTED AT THE DESIGN CROSS SLOPE AND ADJUSTED FOR GORE CROSS SLOPE TRANSITION AS SHOWN ON GORE NOSE DETAIL SHEET.

△ B.M. & HORIZONTAL DATA
BM # US 281-18
ELEV = 105.52
STA = 686+28.97, 170.87' LT
3 1/4" TXDOT ALUMINUM DISK

Curve RN11-1

P.I. Station	=	11690+25.02
Delta	=	5° 59' 59.88" (RT)
Degree	=	0° 57' 17.75"
Tangent	=	314.44
Length	=	628.31
Radius	=	6,000.00
External	=	8.23
Long Chord	=	628.03
Mid. Ord.	=	8.22
P.C. Station	=	11687+10.58
P.T. Station	=	11693+38.89

SHEET TOTALS

ITEM	EST.		UNIT	DESCRIPTION
432	6		CY	RIPRAP (CONC) (CL B) (4 IN)
529	218		LF	CONC CURB (TY A) (MOUNTABLE)
529	225		LF	CONC C & G (TY A) (MOUNTABLE)

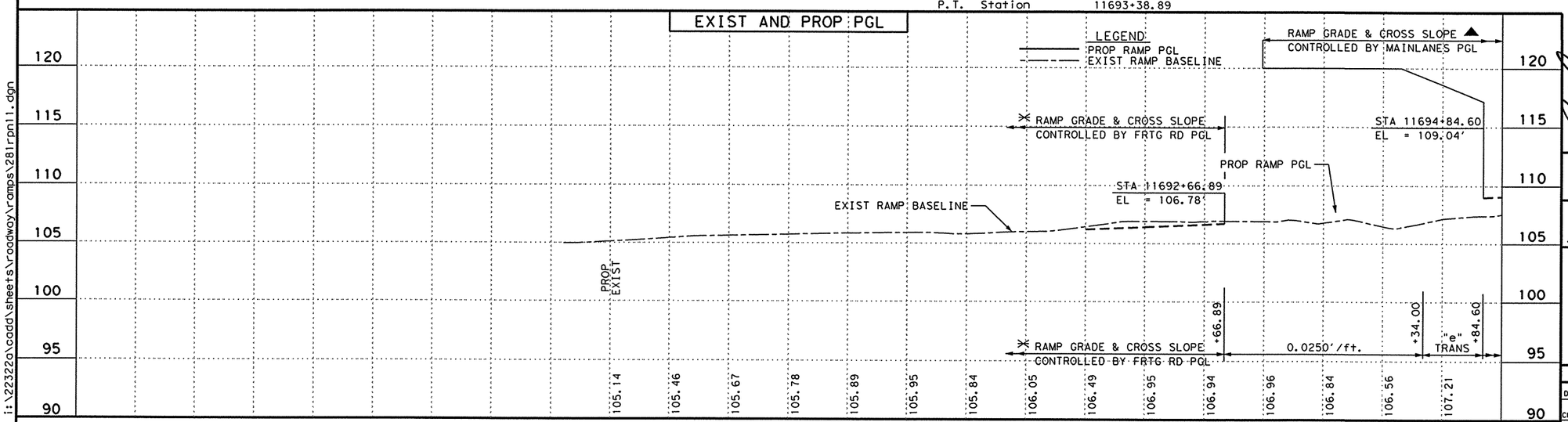

THE SEAL APPEARING ON THIS DOCUMENT WAS AUTHORIZED BY JAIME AGUILAR, P.E. 87606 ON 06/23/2003.

STATE OF TEXAS
JAIME AGUILAR
87606
REGISTERED PROFESSIONAL ENGINEER

THE SEAL APPEARING ON THIS DOCUMENT WAS AUTHORIZED BY PHAISARN CWATANAPHOL, P.E. 89252 ON 06/23/2003.

STATE OF TEXAS
PHAISARN CWATANAPHOL
89252
REGISTERED PROFESSIONAL ENGINEER

Parsons Brinckerhoff Quade & Douglas Inc.

Texas Department of Transportation

© 2003 by TxDOT

US 281
RAMP "RN11"
PLAN & PROFILE
EXIT RAMP

PLAN 1"= 100' HORIZ
PROFILE 1"= 10' VERT

SHEET 1 OF 2 | 281RPN11.DGN

DESIGNED: JA	FED. RD DIV. No.	STATE	FEDERAL AID PROJECT No.	HIGHWAY No.
CHECKED: JP	6	TEXAS		US 281

DRAWN:	STATE DISTRICT	COUNTY	CONTROL No.	SECTION No.	JOB No.	SHEET No.
CHECKED: JDH	PHARR	HIDALGO	0255	08	091	365

i:\22322a\cadd\sheets\roadway\ramps\281rpn11.dgn

NAME
01:06:10 PM
06/23/2003

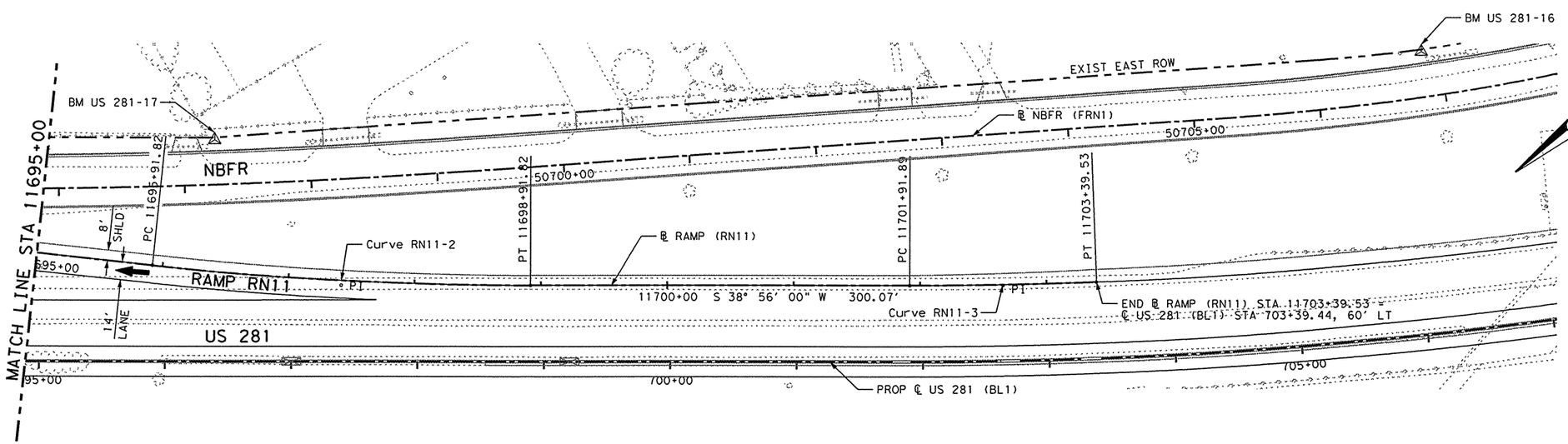

LEGEND:

MC	- MOUNTABLE CONC CURB
BC	- BARRIER CONC CURB
MCG	- MOUNTABLE CONC CURB & GUTTER
BCG	- BARRIER CONC CURB & GUTTER
RW	- RETAINING WALL
RR	- PROP CONC RIPRAP
SGT	- SINGLE GUARD RAIL TERMINAL
MBGF	- METAL BEAM GUARD FENCE
NBFR	- NORTHBOUND FRONTAGE ROAD
SBFR	- SOUTHBOUND FRONTAGE ROAD
NBML	- NORTHBOUND MAINLANES
SBML	- SOUTHBOUND MAINLANES
····→	- PROP DITCH
—o	- DEL ASM TY B (D-SW)
—▨	- OBJ MRK ASM TY 3 (OM-3R)

▲ RAMP "RN11" PROFILE SHALL MATCH THE MAINLANES PROFILE PROJECTED AT THE DESIGN CROSS SLOPE AND ADJUSTED FOR GORE CROSS SLOPE TRANSITION AS SHOWN ON GORE NOSE DETAIL SHEET.

⚠ B.M. & HORIZONTAL DATA

BM # US 281-17
ELEV = 105.58
STA = 696+39.23, 173.41' LT
3 1/4" TXDOT ALUMINUM DISK

BM # US 281-16
ELEV = 103.82
STA = 706+19.13, 220.37' LT
3 1/4" TXDOT ALUMINUM DISK

SHEET TOTALS				
ITEM	EST.	FINAL	UNIT	DESCRIPTION
				NO PAY QUANTITIES THIS SHEET

Curve RN11-2

P.I. Station	=	11697+41.96
Delta	=	5° 59' 59.87" (LT)
Degree	=	2° 00' 00.00"
Tangent	=	150.14
Length	=	300.00
Radius	=	2,864.79
External	=	3.93
Long Chord	=	299.86
Mid. Ord.	=	3.93
P.C. Station	=	11695+91.82
P.T. Station	=	11698+91.82

Curve RN11-3

P.I. Station	=	11702+65.72
Delta	=	2° 15' 00.09" (LT)
Degree	=	1° 31' 26.17"
Tangent	=	73.83
Length	=	147.65
Radius	=	3,759.72
External	=	0.72
Long Chord	=	147.64
Mid. Ord.	=	0.72
P.C. Station	=	11701+91.89
P.T. Station	=	11703+39.53

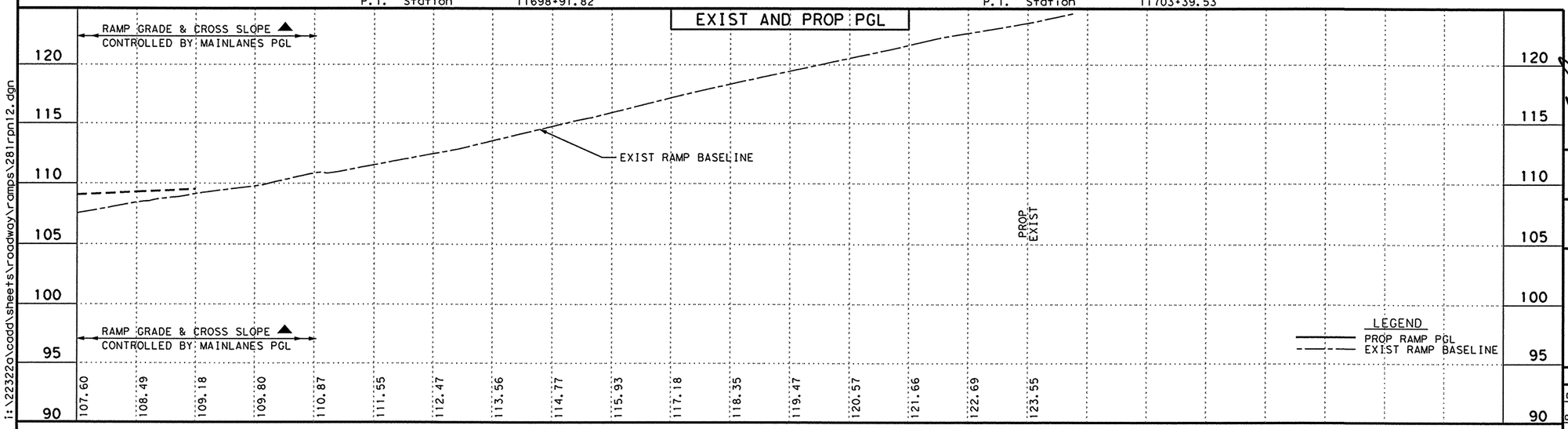

THE SEAL APPEARING ON THIS DOCUMENT WAS AUTHORIZED BY JAIME AGUILAR, P.E. 87606 ON 06/23/2003.

STATE OF TEXAS — JAIME AGUILAR — 87606 — REGISTERED PROFESSIONAL ENGINEER

THE SEAL APPEARING ON THIS DOCUMENT WAS AUTHORIZED BY PHAISARN CWATANAPHOL, P.E. 89252 ON 06/23/2003.

STATE OF TEXAS — PHAISARN CWATANAPHOL — 89252 — REGISTERED PROFESSIONAL ENGINEER

Parsons Brinckerhoff Quade & Douglas Inc.

Texas Department of Transportation

© 2003 by TxDOT

US 281
RAMP "RN11"
PLAN & PROFILE
EXIT RAMP

PLAN 1"= 100' HORIZ
PROFILE 1"= 10' VERT

SHEET 2 OF 2 — 281RPN12.DGN

DESIGNED: JA	FED. RD DIV. No.	STATE	FEDERAL AID PROJECT No.	HIGHWAY No.
CHECKED: JP	6	TEXAS		US 281

DRAWN:	STATE DISTRICT	COUNTY	CONTROL No.	SECTION No.	JOB No.	SHEET No.
CHECKED: JDH	PHARR	HIDALGO	0255	08	091	366

i:\22322o\cadd\sheets\roadway\ramps\281rpn12.dgn

NAME
01:06:28 PM
06/23/2003
i:\22322g\cadd\sheets\roadway\ramps\281rpn13.dgn

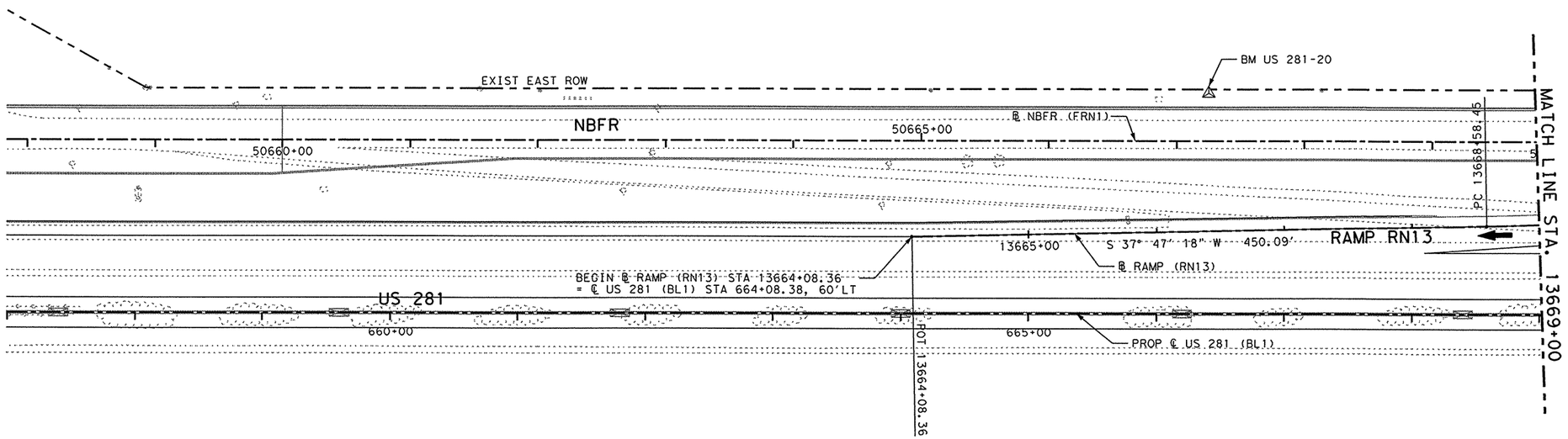

LEGEND:

MC	- MOUNTABLE CONC CURB
BC	- BARRIER CONC CURB
MCG	- MOUNTABLE CONC CURB & GUTTER
BCG	- BARRIER CONC CURB & GUTTER
RW	- RETAINING WALL
RR	- PROP CONC RIPRAP
SGT	- SINGLE GUARD RAIL TERMINAL
MBGF	- METAL BEAM GUARD FENCE
NBFR	- NORTHBOUND FRONTAGE ROAD
SBFR	- SOUTHBOUND FRONTAGE ROAD
NBML	- NORTHBOUND MAINLANES
SBML	- SOUTHBOUND MAINLANES
···→	- PROP DITCH
—o	- DEL ASM TY B (D-SW)
—▨	- OBJ MRK ASM TY 3 (OM-3R)

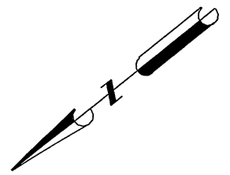

▲ RAMP "RN13" PROFILE SHALL MATCH THE MAINLANES PROFILE PROJECTED AT THE DESIGN CROSS SLOPE AND ADJUSTED FOR GORE CROSS SLOPE TRANSITION AS SHOWN ON GORE NOSE DETAIL SHEET.

△ B.M. & HORIZONTAL DATA
BM # US 281-20
ELEV = 98.51
STA = 666+40.54, 172.14' LT
3 1/4" TXDOT ALUMINUM DISK

SHEET TOTALS

ITEM	EST.	FINAL	UNIT	DESCRIPTION
				NO PAY QUANTITIES THIS SHEET

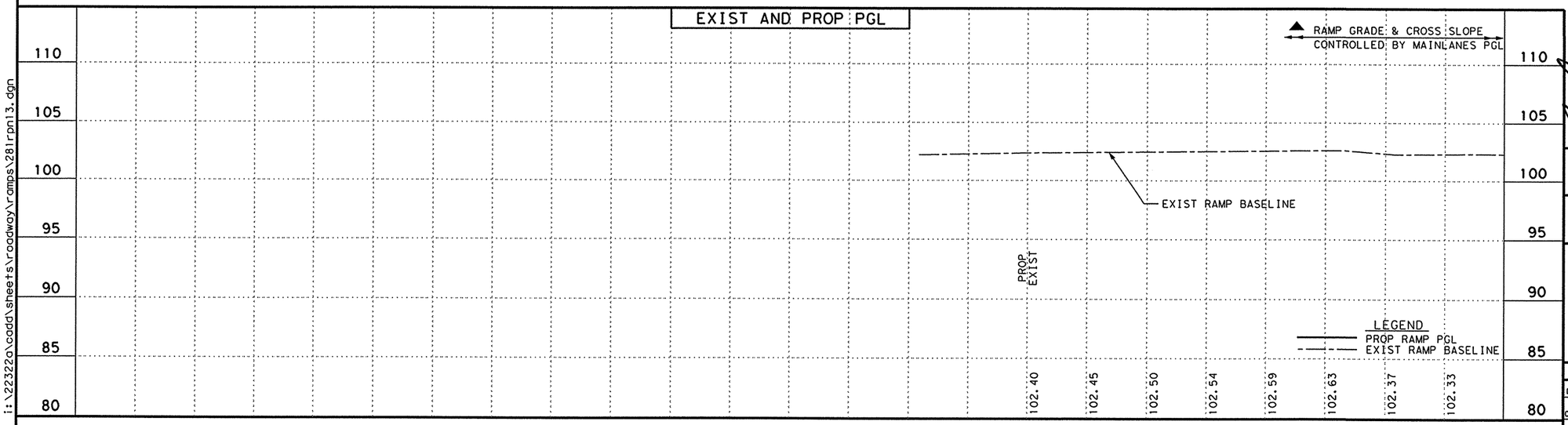

THE SEAL APPEARING ON THIS DOCUMENT WAS AUTHORIZED BY JAIME AGUILAR, P.E. 87606 ON 06/23/2003.

STATE OF TEXAS · JAIME AGUILAR · 87606 · REGISTERED PROFESSIONAL ENGINEER

THE SEAL APPEARING ON THIS DOCUMENT WAS AUTHORIZED BY PHAISARN CWATANAPHOL, P.E. 89252 ON 06/23/2003.

STATE OF TEXAS · PHAISARN CWATANAPHOL · 89252 · REGISTERED PROFESSIONAL ENGINEER

Parsons Brinckerhoff Quade & Douglas Inc.

Texas Department of Transportation

© 2003 by TxDOT

US 281
RAMP "RN13"
PLAN & PROFILE
ENTRANCE RAMP

PLAN 1"= 100' HORIZ
PROFILE 1"= 10' VERT

SHEET 1 OF 2 | 281RPN13.DGN

DESIGNED: JA	FED. RD DIV. No.	STATE	FEDERAL AID PROJECT No.	HIGHWAY No.
CHECKED: JP	6	TEXAS		US 281

DRAWN:	STATE DISTRICT	COUNTY	CONTROL No.	SECTION No.	JOB No.	SHEET No.
CHECKED: JDH	PHARR	HIDALGO	0255	08	091	367

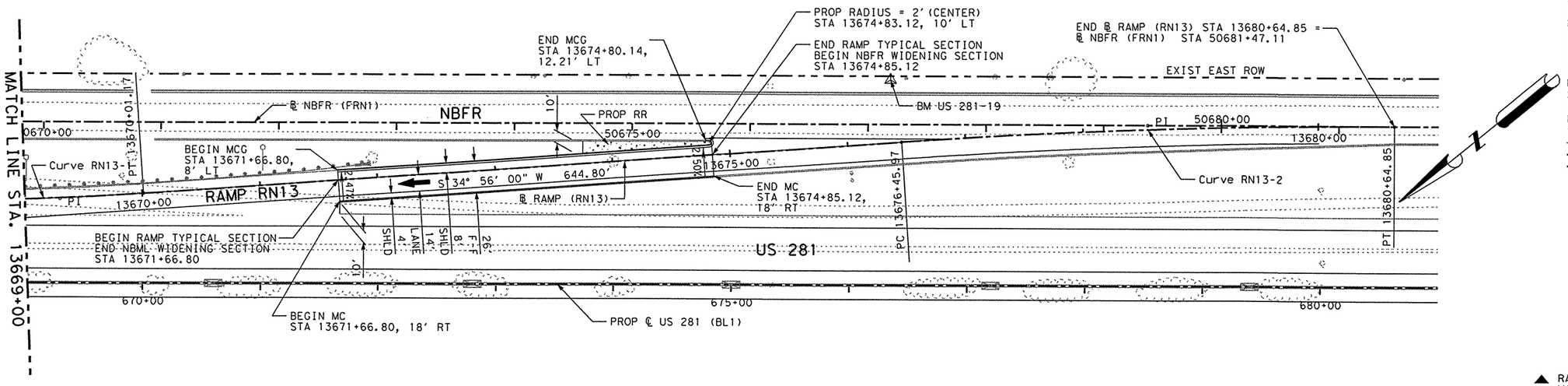

LEGEND:

MC	- MOUNTABLE CONC CURB
BC	- BARRIER CONC CURB
MCG	- MOUNTABLE CONC CURB & GUTTER
BCG	- BARRIER CONC CURB & GUTTER
RW	- RETAINING WALL
RR	- PROP CONC RIPRAP
SGT	- SINGLE GUARD RAIL TERMINAL
MBGF	- METAL BEAM GUARD FENCE
NBFR	- NORTHBOUND FRONTAGE ROAD
SBFR	- SOUTHBOUND FRONTAGE ROAD
NBML	- NORTHBOUND MAINLANES
SBML	- SOUTHBOUND MAINLANES
···→	- PROP DITCH
—o—	- DEL ASM TY B (D-SW)
—▨—	- OBJ MRK ASM TY 3 (OM-3R)

▲ RAMP "RN13" PROFILE SHALL MATCH THE MAINLANES PROFILE PROJECTED AT THE DESIGN CROSS SLOPE AND ADJUSTED FOR GORE CROSS SLOPE TRANSITION AS SHOWN ON GORE NOSE DETAIL SHEET.

⋊ RAMP "RN13" PROFILE SHALL MATCH THE NORTHBOUND FRONTAGE ROAD PROFILE PROJECTED AT THE DESIGN CROSS SLOPE AND ADJUSTED FOR GORE CROSS SLOPE TRANSITION AS SHOWN ON GORE NOSE DETAIL SHEET.

△ B.M. & HORIZONTAL DATA
BM # US 281-19
ELEV = 101.97
STA = 676+34.62, 172.09' LT
3 1/4" TXDOT ALUMINUM DISK

Curve RN13-1

P.I. Station	13669+29.82
Delta =	2° 51' 15.73" (LT)
Degree =	2° 00' 00.00"
Tangent =	71.37
Length =	142.72
Radius =	2,864.79
External =	0.89
Long Chord =	142.70
Mid. Ord. =	0.89
P.C. Station	13668+58.45
P.T. Station	13670+01.17

Curve RN13-2

P.I. Station	13678+55.50
Delta =	3° 59' 59.99" (RT)
Degree =	0° 57' 17.75"
Tangent =	209.52
Length =	418.88
Radius =	6,000.00
External =	3.66
Long Chord =	418.79
Mid. Ord. =	3.66
P.C. Station	13676+45.97
P.T. Station	13680+64.85

SHEET TOTALS

ITEM	EST.		UNIT	DESCRIPTION
432	9		CY	RIPRAP (CONC) (CL B) (4 IN)
529	319		LF	CONC CURB (TY A) (MOUNTABLE)
529	326		LF	CONC C & G (TY A) (MOUNTABLE)

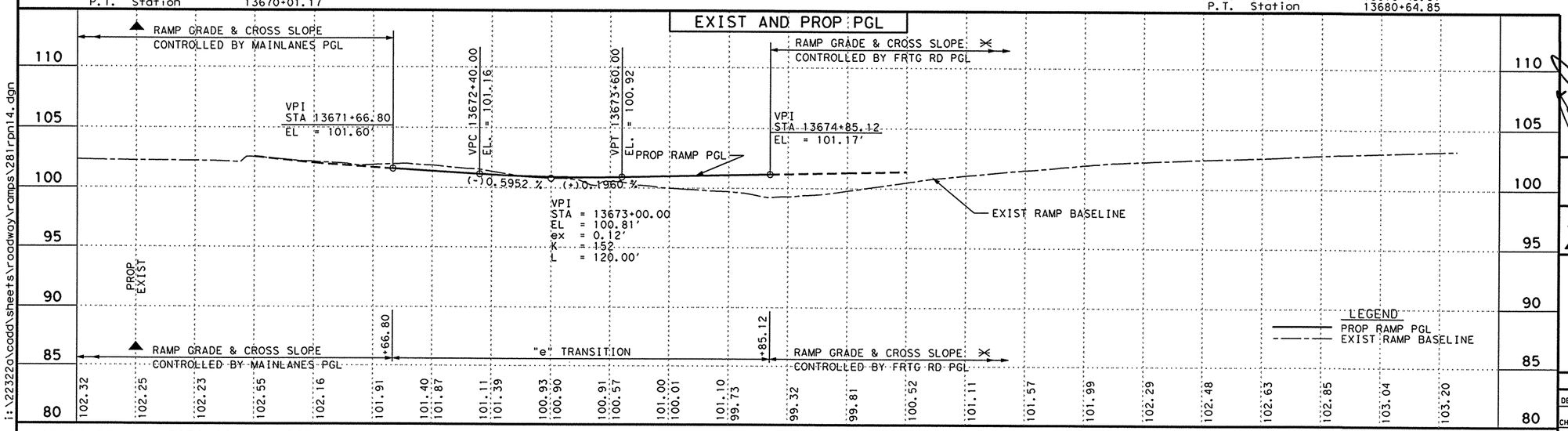

THE SEAL APPEARING ON THIS DOCUMENT WAS AUTHORIZED BY JAIME AGUILAR, P.E. 87606 ON 06/23/2003.

THE SEAL APPEARING ON THIS DOCUMENT WAS AUTHORIZED BY PHAISARN CWATANAPHOL, P.E. 89252 ON 06/23/2003.

STATE OF TEXAS — JAIME AGUILAR — 87606 — REGISTERED PROFESSIONAL ENGINEER

STATE OF TEXAS — PHAISARN CWATANAPHOL — 89252 — REGISTERED PROFESSIONAL ENGINEER

Parsons Brinckerhoff Quade & Douglas Inc.

Texas Department of Transportation

© 2003 by TxDOT

US 281
RAMP "RN13"
PLAN & PROFILE
ENTRANCE RAMP

PLAN 1"= 100' HORIZ
PROFILE 1"= 10' VERT

SHEET 2 OF 2 — 281RPN14.DGN

DESIGNED: JA	FED. RD DIV. No.	STATE	FEDERAL AID PROJECT No.	HIGHWAY No.
CHECKED: JP	6	TEXAS		US 281

DRAWN:	STATE DISTRICT	COUNTY	CONTROL No.	SECTION No.	JOB No.	SHEET No.
CHECKED: JDH	PHARR	HIDALGO	0255	08	091	368

NAME 01:06:47 PM 06/23/2003

i:\22322g\cadd\sheets\roadway\ramps\281rpn14.dgn

NAME
01:07:09 PM
06/23/2003

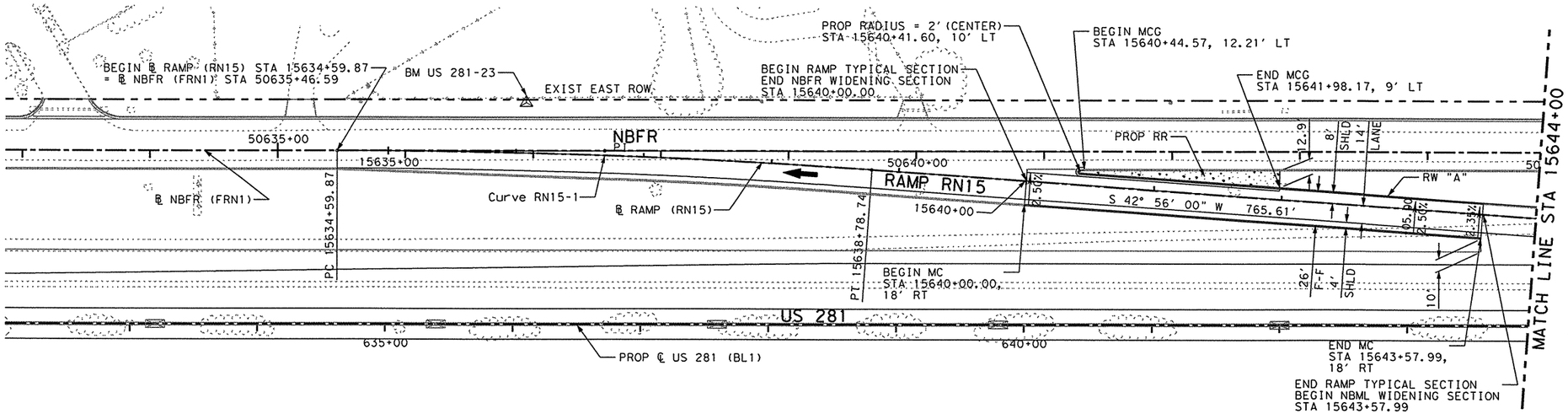

LEGEND:

- MC - MOUNTABLE CONC CURB
- BC - BARRIER CONC CURB
- MCG - MOUNTABLE CONC CURB & GUTTER
- BCG - BARRIER CONC CURB & GUTTER
- RW - RETAINING WALL
- RR - PROP CONC RIPRAP
- SGT - SINGLE GUARD RAIL TERMINAL
- MBGF - METAL BEAM GUARD FENCE
- NBFR - NORTHBOUND FRONTAGE ROAD
- SBFR - SOUTHBOUND FRONTAGE ROAD
- NBML - NORTHBOUND MAINLANES
- SBML - SOUTHBOUND MAINLANES
- PROP DITCH
- DEL ASM TY B (D-SW)
- OBJ MRK ASM TY 3 (OM-3R)

⋊ RAMP "RN15" PROFILE SHALL MATCH THE NORTHBOUND FRONTAGE ROAD PROFILE PROJECTED AT THE DESIGN CROSS SLOPE AND ADJUSTED FOR GORE CROSS SLOPE TRANSITION AS SHOWN ON GORE NOSE DETAIL SHEET.

▲ RAMP "RN15" PROFILE SHALL MATCH THE MAINLANES PROFILE PROJECTED AT THE DESIGN CROSS SLOPE AND ADJUSTED FOR GORE CROSS SLOPE TRANSITION AS SHOWN ON GORE NOSE DETAIL SHEET.

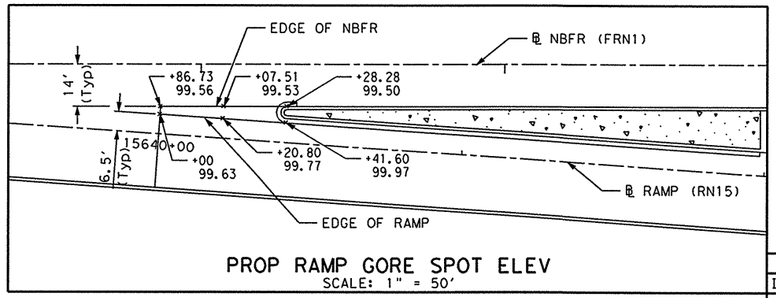

PROP RAMP GORE SPOT ELEV
SCALE: 1" = 50'

△ B.M. & HORIZONTAL DATA
BM # US 281-23
ELEV = 98.73
STA = 636+10.30, 172.95' LT
3 1/4" TXDOT ALUMINUM DISK

SHEET TOTALS

ITEM	EST.		UNIT	DESCRIPTION
432	15		CY	RIPRAP (CONC) (CL B) (4 IN)
529	358		LF	CONC CURB (TY A) (MOUNTABLE)
529	166		LF	CONC C & G (TY A) (MOUNTABLE)

Curve RN15-1

P.I. Station		15636+69.39
Delta	=	3° 59' 59.88" (RT)
Degree	=	0° 57' 17.75"
Tangent	=	209.52
Length	=	418.88
Radius	=	6,000.00
External	=	3.66
Long Chord	=	418.79
Mid. Ord.	=	3.65
P.C. Station		15634+59.87
P.T. Station		15638+78.74

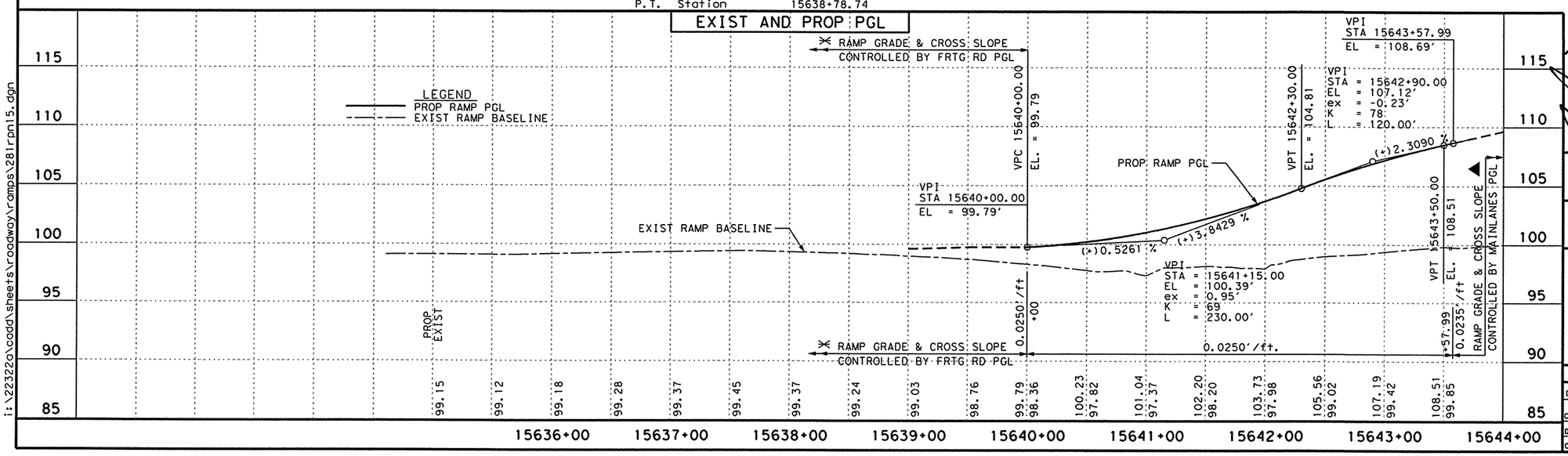

THE SEAL APPEARING ON THIS DOCUMENT WAS AUTHORIZED BY JAIME AGUILAR, P.E. 87606 ON 06/23/2003.

THE SEAL APPEARING ON THIS DOCUMENT WAS AUTHORIZED BY PHAISARN CWATANAPHOL, P.E. 89252 ON 06/23/2003.

STATE OF TEXAS — JAIME AGUILAR — 87606 — REGISTERED PROFESSIONAL ENGINEER

STATE OF TEXAS — PHAISARN CWATANAPHOL — 89252 — REGISTERED PROFESSIONAL ENGINEER

Parsons Brinckerhoff Quade & Douglas Inc.

Texas Department of Transportation

© 2003 by TxDOT

US 281
RAMP "RN15"
PLAN & PROFILE
EXIT RAMP

PLAN 1"= 100' HORIZ
PROFILE 1"= 10' VERT

SHEET 1 OF 2 — 281RPN15.DGN

DESIGNED: JA	FED. RD DIV. No.	STATE	FEDERAL AID PROJECT No.	HIGHWAY No.
CHECKED: JP	6	TEXAS		US 281

DRAWN:	STATE DISTRICT	COUNTY	CONTROL No.	SECTION No.	JOB No.	SHEET No.
CHECKED: JDH	PHARR	HIDALGO	0255	08	091	369

i:\22322o\coddi\sheets\roadway\ramps\281rpn15.dgn

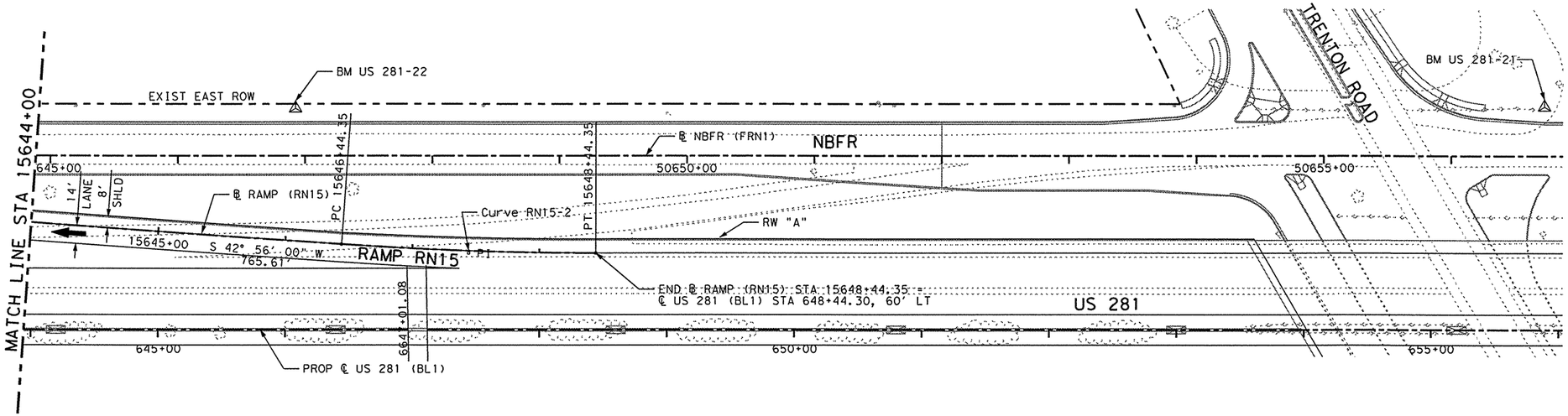

LEGEND:

- MC - MOUNTABLE CONC CURB
- BC - BARRIER CONC CURB
- MCG - MOUNTABLE CONC CURB & GUTTER
- BCG - BARRIER CONC CURB & GUTTER
- RW - RETAINING WALL
- RR - PROP CONC RIPRAP
- SGT - SINGLE GUARD RAIL TERMINAL
- MBGF - METAL BEAM GUARD FENCE
- NBFR - NORTHBOUND FRONTAGE ROAD
- SBFR - SOUTHBOUND FRONTAGE ROAD
- NBML - NORTHBOUND MAINLANES
- SBML - SOUTHBOUND MAINLANES
- PROP DITCH
- DEL ASM TY B (D-SW)
- OBJ MRK ASM TY 3 (OM-3R)

▲ RAMP "RN15" PROFILE SHALL MATCH THE MAINLANES PROFILE PROJECTED AT THE DESIGN CROSS SLOPE AND ADJUSTED FOR GORE CROSS SLOPE TRANSITION AS SHOWN ON GORE NOSE DETAIL SHEET.

△ B.M. & HORIZONTAL DATA

BM # US 281-22
ELEV = 98.54
STA = 646+08.07, 171.87' LT
3 1/4" TXDOT ALUMINUM DISK

BM # US 281-21
ELEV = 98.66
STA = 655+88.78, 173.20' LT
3 1/4" TXDOT ALUMINUM DISK

SHEET TOTALS

ITEM	EST.	FINAL	UNIT	DESCRIPTION
				NO PAY QUANTITIES THIS SHEET

Curve RN15-2

P.I. Station	=	15647+44.39
Delta	=	3° 59' 59.64" (LT)
Degree	=	2° 00' 00.00"
Tangent	=	100.04
Length	=	200.00
Radius	=	2,864.79
External	=	1.75
Long Chord	=	199.95
Mid. Ord.	=	1.75
P.C. Station	=	15646+44.35
P.T. Station	=	15648+44.35

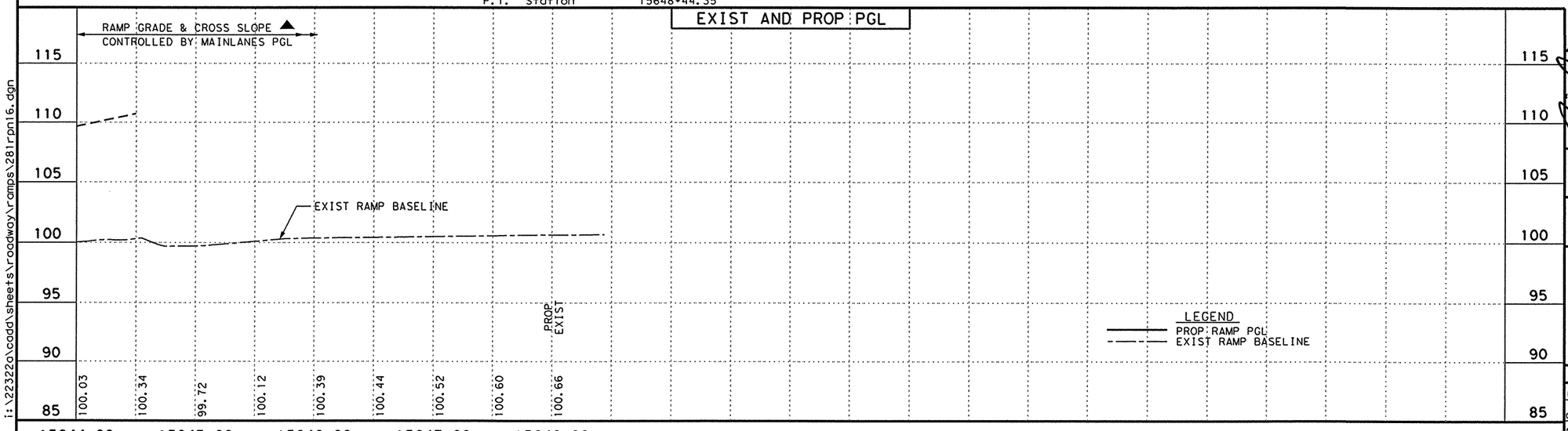

THE SEAL APPEARING ON THIS DOCUMENT WAS AUTHORIZED BY JAIME AGUILAR, P.E. 87606 ON 06/23/2003.

THE SEAL APPEARING ON THIS DOCUMENT WAS AUTHORIZED BY PHAISARN CWATANAPHOL, P.E. 89252 ON 06/23/2003.

STATE OF TEXAS — JAIME AGUILAR — 87606 — REGISTERED PROFESSIONAL ENGINEER

STATE OF TEXAS — PHAISARN CWATANAPHOL — 89252 — REGISTERED PROFESSIONAL ENGINEER

Parsons Brinckerhoff Quade & Douglas Inc.

Texas Department of Transportation

© 2003 by TxDOT

US 281
RAMP "RN15"
PLAN & PROFILE
EXIT RAMP

PLAN 1"= 100' HORIZ
PROFILE 1"= 10' VERT

SHEET 2 OF 2 — 281RPN16.DGN

DESIGNED: JA	FED. RD DIV. No.	STATE	FEDERAL AID PROJECT No.	HIGHWAY No.
CHECKED: JP	6	TEXAS		US 281

DRAWN:	STATE DISTRICT	COUNTY	CONTROL No.	SECTION No.	JOB No.	SHEET No.
CHECKED: JDH	PHARR	HIDALGO	0255	08	091	370

NAME
01:23:23 PM
06/23/2003
i:\22322o\cadd\sheets\roadway\ramps\281rpn16.dgn

NAME
01:07:29 PM
06/23/2003

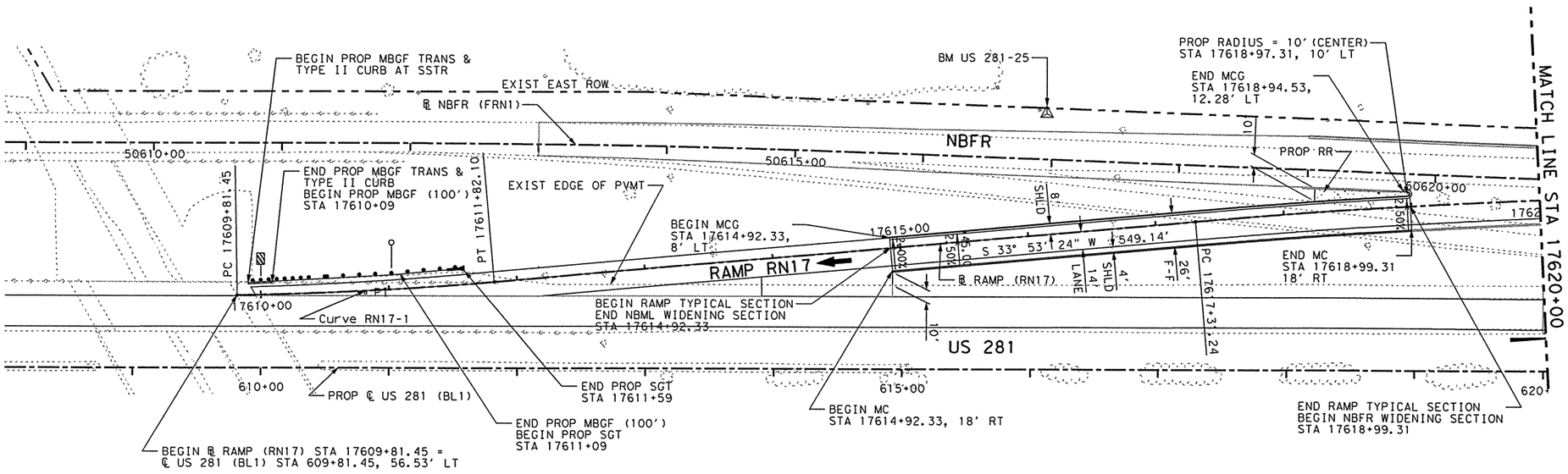

LEGEND:

MC	- MOUNTABLE CONC CURB
BC	- BARRIER CONC CURB
MCG	- MOUNTABLE CONC CURB & GUTTER
BCG	- BARRIER CONC CURB & GUTTER
RW	- RETAINING WALL
RR	- PROP CONC RIPRAP
SGT	- SINGLE GUARD RAIL TERMINAL
MBGF	- METAL BEAM GUARD FENCE
NBFR	- NORTHBOUND FRONTAGE ROAD
SBFR	- SOUTHBOUND FRONTAGE ROAD
NBML	- NORTHBOUND MAINLANES
SBML	- SOUTHBOUND MAINLANES
····→	- PROP DITCH
—o	- DEL ASM TY B (D-SW)
—▨	- OBJ MRK ASM TY 3 (OM-3R)

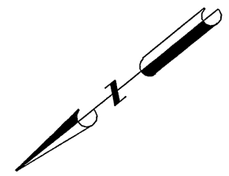

▲ RAMP "RN17" SHALL MATCH THE EXISTING NORTHBOUND MAINLANES PROFILE AND CROSS SLOPE AND ADJUSTED FOR GORE CROSS SLOPE TRANSITION AS SHOWN ON GORE NOSE DETAIL SHEET.

⋉ RAMP "RN17" PROFILE SHALL MATCH THE NORTHBOUND FRONTAGE ROAD PROFILE PROJECTED AT THE DESIGN CROSS SLOPE AND ADJUSTED FOR GORE CROSS SLOPE TRANSITION AS SHOWN ON GORE NOSE DETAIL SHEET.

△ B.M. & HORIZONTAL DATA
BM # US 281-25
ELEV = 98.54
STA = 616+12.65, 199.63' LT
3 ¼" TXDOT ALUMINUM DISK

Curve RN17-1

P.I. Station	=	17610+81.82
Delta	=	4° 00' 45.63" (LT)
Degree	=	1° 59' 59.47"
Tangent	=	100.37
Length	=	200.65
Radius	=	2,865.00
External	=	1.76
Long Chord	=	200.61
Mid. Ord.	=	1.76
P.C. Station	=	17609+81.45
P.T. Station	=	17611+82.10

SHEET TOTALS

ITEM	EST.		UNIT	DESCRIPTION
432	6		CY	RIPRAP (CONC) (CL B) (4 IN)
529	407		LF	CONC CURB (TY A) (MOUNTABLE)
529	414		LF	CONC C & G (TY A) (MOUNTABLE)
540	100		LF	MTL BM GD FEN (BLK OUT) (12 GA) (TIM POST)
540	1		EA	MTL BM GD FEN (12 GA) (TRANS)
540	1		EA	SINGLE GUARDRAIL TERM (TY II)
5469	1		EA	DEL ASM TY B (D-SW)
658	1		EA	OBJ MRK TY 3 (OM-3R)

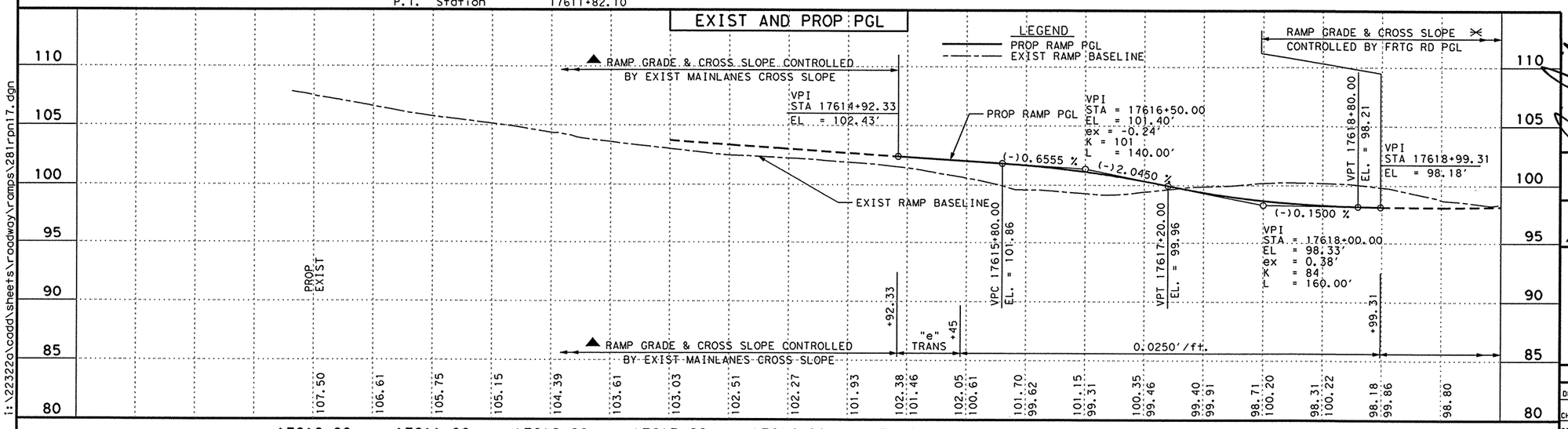

THE SEAL APPEARING ON THIS DOCUMENT WAS AUTHORIZED BY JAIME AGUILAR, P.E. 87606 ON 06/23/2003.

THE SEAL APPEARING ON THIS DOCUMENT WAS AUTHORIZED BY PHAISARN CWATANAPHOL, P.E. 89252 ON 06/23/2003.

STATE OF TEXAS — JAIME AGUILAR — 87606 — REGISTERED PROFESSIONAL ENGINEER

STATE OF TEXAS — PHAISARN CWATANAPHOL — 89252 — REGISTERED PROFESSIONAL ENGINEER

Parsons Brinckerhoff Quade & Douglas Inc.

Texas Department of Transportation

© 2003 by TxDOT

US 281
RAMP "RN17"
PLAN & PROFILE
ENTRANCE RAMP

PLAN 1"= 100' HORIZ
PROFILE 1"= 10' VERT

SHEET 1 OF 2 — 281RPN17.DGN

DESIGNED: JA	FED. RD DIV. No.	STATE	FEDERAL AID PROJECT No.	HIGHWAY No.
CHECKED: JP	6	TEXAS		US 281

DRAWN:	STATE DISTRICT	COUNTY	CONTROL No.	SECTION No.	JOB No.	SHEET No.
CHECKED: JDH	PHARR	HIDALGO	0255	08	091	371

i:\22322o\cadd\sheets\roadway\ramps\281rpn17.dgn

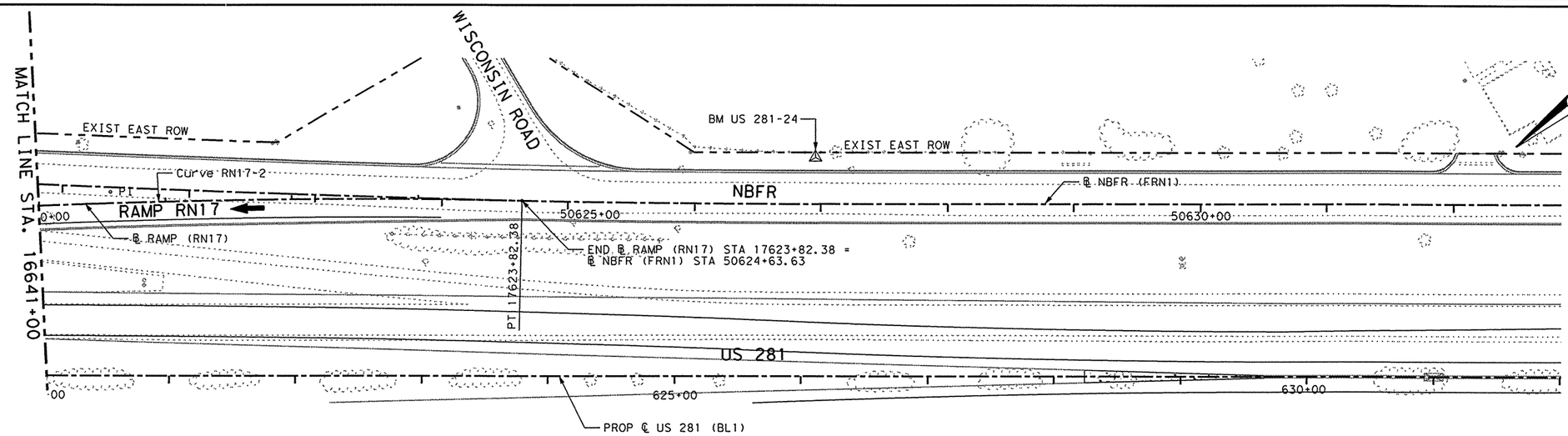

LEGEND:

- MC - MOUNTABLE CONC CURB
- BC - BARRIER CONC CURB
- MCG - MOUNTABLE CONC CURB & GUTTER
- BCG - BARRIER CONC CURB & GUTTER
- RW - RETAINING WALL
- RR - PROP CONC RIPRAP
- SGT - SINGLE GUARD RAIL TERMINAL
- MBGF - METAL BEAM GUARD FENCE
- NBFR - NORTHBOUND FRONTAGE ROAD
- SBFR - SOUTHBOUND FRONTAGE ROAD
- NBML - NORTHBOUND MAINLANES
- SBML - SOUTHBOUND MAINLANES
- PROP DITCH
- DEL ASM TY B (D-SW)
- OBJ MRK ASM TY 3 (OM-3R)

✂ RAMP "RN17" PROFILE SHALL MATCH THE NORTHBOUND FRONTAGE ROAD PROFILE PROJECTED AT THE DESIGN CROSS SLOPE AND ADJUSTED FOR GORE CROSS SLOPE TRANSITION AS SHOWN ON GORE NOSE DETAIL SHEET.

△ B.M. & HORIZONTAL DATA
BM # US 281-24
ELEV = 98.94
STA = 626+11.32, 171.49' LT
3 1/4" TXDOT ALUMINUM DISK

Curve RN17-2

P.I. Station	17620+57.13
Delta =	6° 13' 04.51" (RT)
Degree =	0° 57' 17.75"
Tangent =	325.89
Length =	651.14
Radius =	6,000.00
External =	8.84
Long Chord =	650.82
Mid. Ord. =	8.83
P.C. Station	17617+31.24
P.T. Station	17623+82.38

SHEET TOTALS

ITEM	EST.	FINAL	UNIT	DESCRIPTION
				NO PAY QUANTITIES THIS SHEET

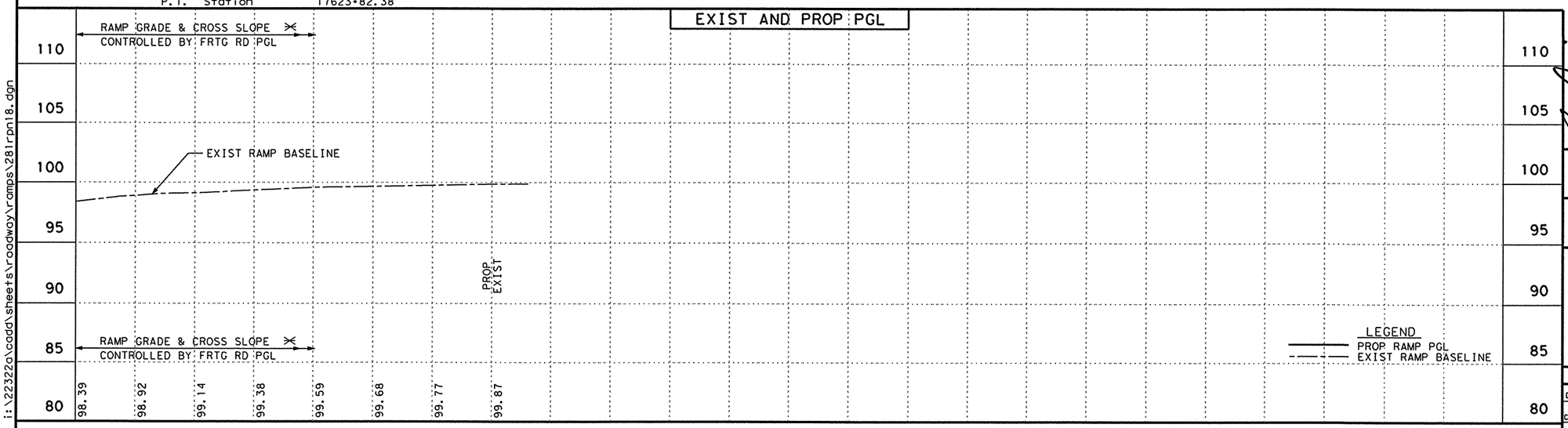

THE SEAL APPEARING ON THIS DOCUMENT WAS AUTHORIZED BY JAIME AGUILAR, P.E. 87606 ON 06/23/2003.

THE SEAL APPEARING ON THIS DOCUMENT WAS AUTHORIZED BY PHAISARN CWATANAPHOL, P.E. 89252 ON 06/23/2003.

STATE OF TEXAS
JAIME AGUILAR
87606
REGISTERED PROFESSIONAL ENGINEER

STATE OF TEXAS
PHAISARN CWATANAPHOL
89252
REGISTERED PROFESSIONAL ENGINEER

Parsons Brinckerhoff Quade & Douglas Inc.

Texas Department of Transportation

© 2003 by TxDOT

US 281
RAMP "RN17"
PLAN & PROFILE
ENTRANCE RAMP

PLAN 1"= 100' HORIZ
PROFILE 1"= 10' VERT

SHEET 2 OF 2 | 281RPN18.DGN

DESIGNED: JA	FED. RD DIV. No.	STATE	FEDERAL AID PROJECT No.	HIGHWAY No.
CHECKED: JP	6	TEXAS		US 281

DRAWN:	STATE DISTRICT	COUNTY	CONTROL No.	SECTION No.	JOB No.	SHEET No.
CHECKED: JDH	PHARR	HIDALGO	0255	08	091	372

NAME
01:07:48 PM
06/23/2003
i:\22322a\cadd\sheets\roadway\ramps\281rpn18.dgn

NAME
01:23:59 PM
06/23/2003

Curve RS02-1

P.I. Station		2824+50.14
Delta	=	6° 00′ 00.54" (RT)
Degree	=	2° 00′ 00.00"
Tangent	=	150.14
Length	=	300.01
Radius	=	2,864.79
External	=	3.93
Long Chord	=	299.87
Mid. Ord.	=	3.93
P.C. Station		2823+00.00
P.T. Station		2826+00.01

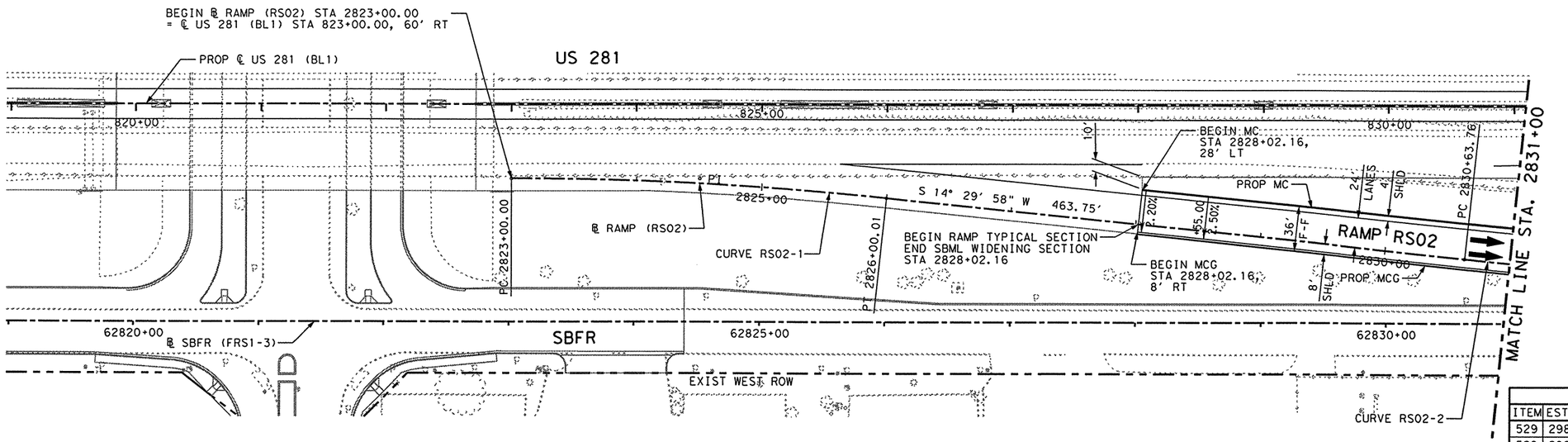

LEGEND:

- MC - MOUNTABLE CONC CURB
- BC - BARRIER CONC CURB
- MCG - MOUNTABLE CONC CURB & GUTTER
- BCG - BARRIER CONC CURB & GUTTER
- RW - RETAINING WALL
- RR - PROP CONC RIPRAP
- SGT - SINGLE GUARD RAIL TERMINAL
- MBGF - METAL BEAM GUARD FENCE
- NBFR - NORTHBOUND FRONTAGE ROAD
- SBFR - SOUTHBOUND FRONTAGE ROAD
- NBML - NORTHBOUND MAINLANES
- SBML - SOUTHBOUND MAINLANES
- ···→ - PROP DITCH
- —o — DEL ASM TY B (D-SW)
- —▨— OBJ MRK ASM TY 3 (OM-3R)

▲ RAMP "RS02" PROFILE SHALL MATCH THE MAINLANES PROFILE PROJECTED AT THE DESIGN CROSS SLOPE AND ADJUSTED FOR GORE CROSS SLOPE TRANSITION AS SHOWN ON GORE NOSE DETAIL SHEET.

△ B.M. & HORIZONTAL DATA
BM # US 281-4
ELEV = 106.43
STA = 827+02.50, 207.77′ LT
3 1/4" TXDOT ALUMINUM DISK

SHEET TOTALS

ITEM	EST.		UNIT	DESCRIPTION
529	298		LF	CONC CURB (TY A) (MOUNTABLE)
529	298		LF	CONC C & G (TY A) (MOUNTABLE)

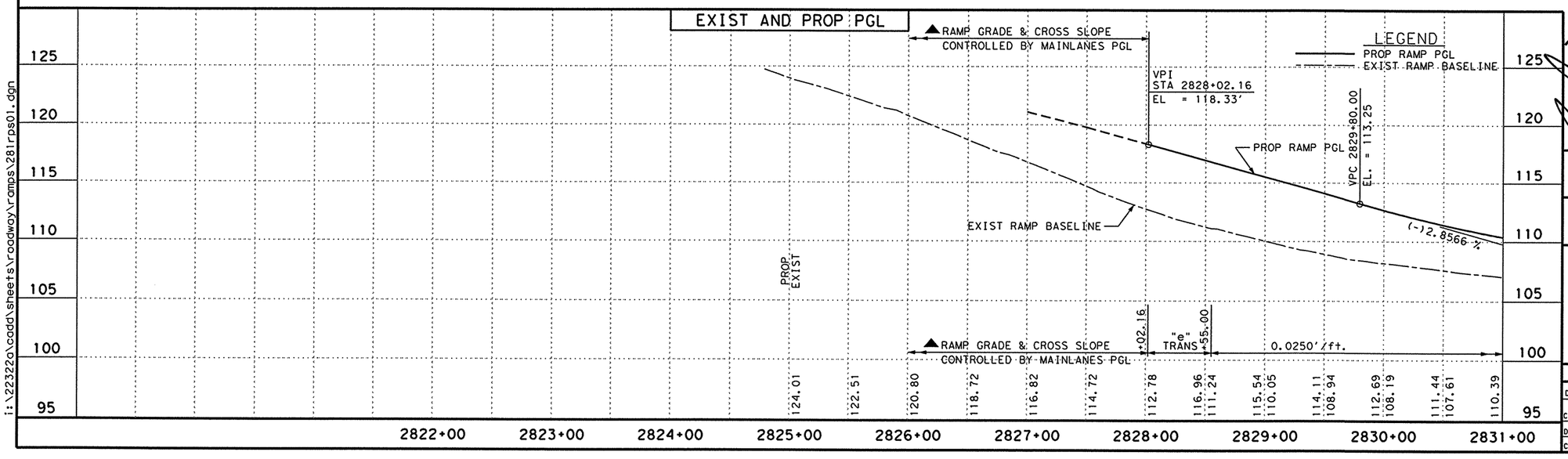

THE SEAL APPEARING ON THIS DOCUMENT WAS AUTHORIZED BY JAIME AGUILAR, P.E. 87606 ON 06/23/2003.

THE SEAL APPEARING ON THIS DOCUMENT WAS AUTHORIZED BY PHAISARN CWATANAPHOL, P.E. 89252 ON 06/23/2003.

STATE OF TEXAS · JAIME AGUILAR · 87606 · REGISTERED PROFESSIONAL ENGINEER

STATE OF TEXAS · PHAISARN CWATANAPHOL · 89252 · REGISTERED PROFESSIONAL ENGINEER

Parsons Brinckerhoff Quade & Douglas Inc.

Texas Department of Transportation

© 2003 by TxDOT

US 281
RAMP "RS02"
PLAN & PROFILE
EXIT RAMP

PLAN 1"= 100′ HORIZ
PROFILE 1"= 10′ VERT

SHEET 1 OF 2 | 281RPS01.DGN

DESIGNED: JA	FED. RD DIV. No.	STATE	FEDERAL AID PROJECT No.	HIGHWAY No.
CHECKED: JP	6	TEXAS		US 281

DRAWN:	STATE DISTRICT	COUNTY	CONTROL No.	SECTION No.	JOB No.	SHEET No.
CHECKED: JDH	PHARR	HIDALGO	0255	08	091	373

i:\22322a\cadd\sheets\roadway\ramps\281rps01.dgn

NAME
01:24:18 PM
06/23/2003

Curve RS02-2

P.I. Station		2835+69.55
Delta	=	9° 38' 13.70" (LT)
Degree	=	0° 57' 17.75"
Tangent	=	505.79
Length	=	1,009.20
Radius	=	6,000.00
External	=	21.28
Long Chord	=	1,008.01
Mid. Ord.	=	21.21
P.C. Station		2830+63.76
P.T. Station		2840+72.96

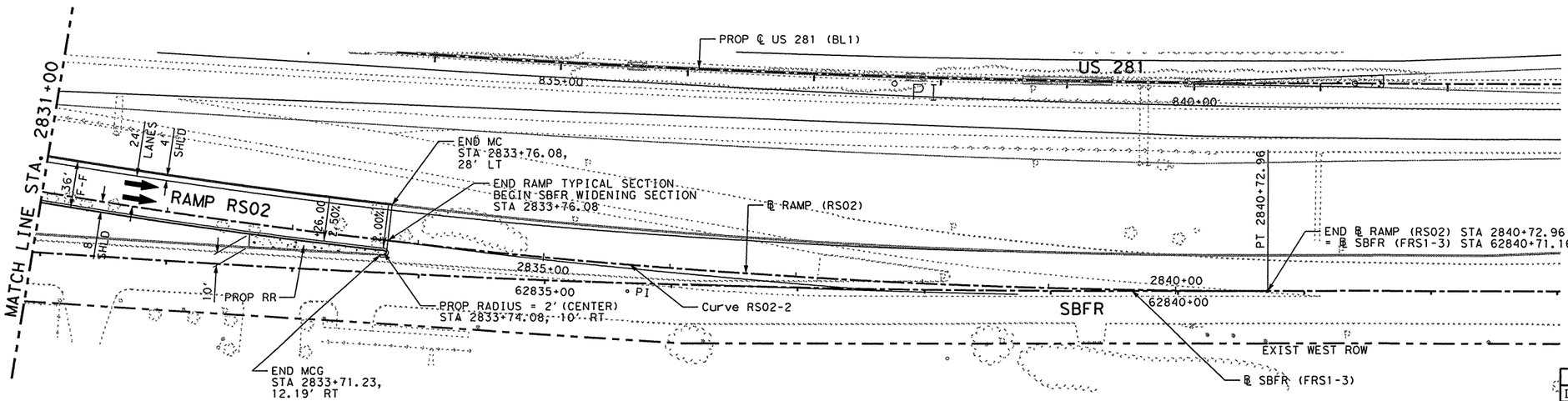

LEGEND:

- MC - MOUNTABLE CONC CURB
- BC - BARRIER CONC CURB
- MCG - MOUNTABLE CONC CURB & GUTTER
- BCG - BARRIER CONC CURB & GUTTER
- RW - RETAINING WALL
- RR - PROP CONC RIPRAP
- SGT - SINGLE GUARD RAIL TERMINAL
- MBGF - METAL BEAM GUARD FENCE
- NBFR - NORTHBOUND FRONTAGE ROAD
- SBFR - SOUTHBOUND FRONTAGE ROAD
- NBML - NORTHBOUND MAINLANES
- SBML - SOUTHBOUND MAINLANES
- ⋯→ - PROP DITCH
- —○ - DEL ASM TY B (D-SW)
- —▨ - OBJ MRK ASM TY 3 (OM-3R)

⋇ RAMP "RS02" SHALL MATCH THE SOUTHBOUND FRONTAGE ROAD PROFILE AND CROSS SLOPE AND ADJUSTED FOR GORE CROSS SLOPE TRANSITION AS SHOWN ON GORE NOSE DETAIL SHEET.

△ B.M. & HORIZONTAL DATA
BM # US 281-3
ELEV = 107.76
STA = 836+81.89, 209.01' LT
3 1/4" TXDOT ALUMINUM DISK

SHEET TOTALS

ITEM	EST.		UNIT	DESCRIPTION
432	9		CY	RIPRAP (CONC) (CL B) (4 IN)
529	277		LF	CONC CURB (TY A) (MOUNTABLE)
529	284		LF	CONC C & G (TY A) (MOUNTABLE)

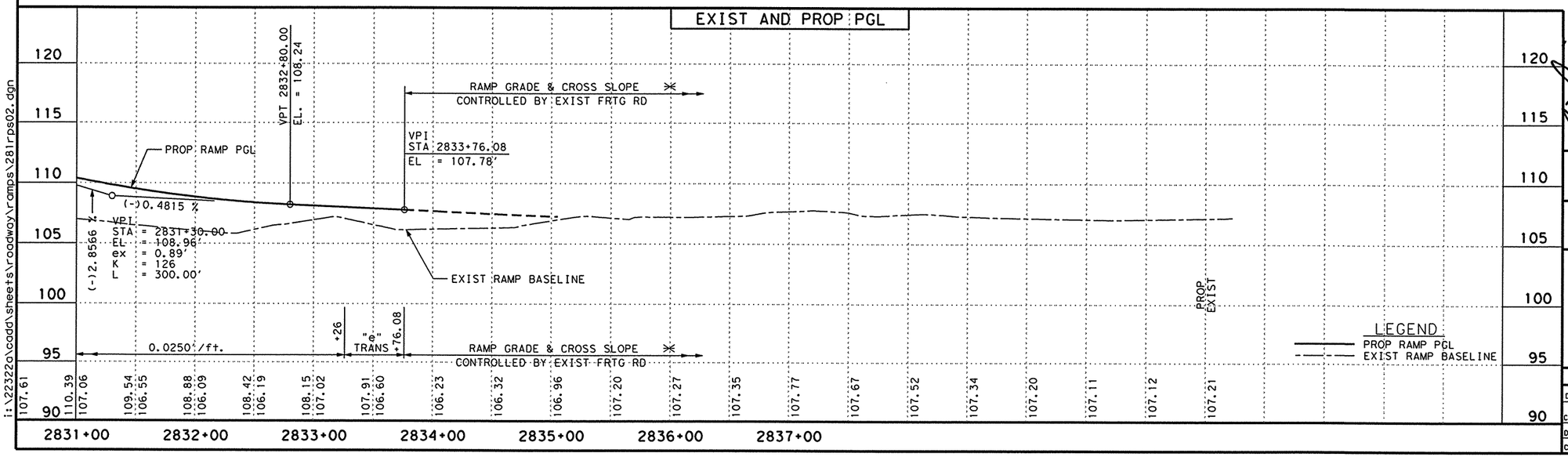

THE SEAL APPEARING ON THIS DOCUMENT WAS AUTHORIZED BY JAIME AGUILAR, P.E. 87606 ON 06/23/2003.

STATE OF TEXAS · JAIME AGUILAR · 87606 · REGISTERED PROFESSIONAL ENGINEER

THE SEAL APPEARING ON THIS DOCUMENT WAS AUTHORIZED BY PHAISARN CWATANAPHOL, P.E. 89252 ON 06/23/2003.

STATE OF TEXAS · PHAISARN CWATANAPHOL · 89252 · REGISTERED PROFESSIONAL ENGINEER

Parsons Brinckerhoff
Quade & Douglas Inc.

Texas Department of Transportation

© 2003 by TxDOT

US 281
RAMP "RS02"
PLAN & PROFILE
EXIT RAMP

PLAN 1"= 100' HORIZ
PROFILE 1"= 10' VERT

SHEET 2 OF 2 | 281RPS02.DGN

DESIGNED: JA	FED. RD DIV. No.	STATE	FEDERAL AID PROJECT No.	HIGHWAY No.
CHECKED: JP	6	TEXAS		US 281

DRAWN:	STATE DISTRICT	COUNTY	CONTROL No.	SECTION No.	JOB No.	SHEET No.
CHECKED: JDH	PHARR	HIDALGO	0255	08	091	374

i:\22322o\cadd\sheets\roadway\ramps\281rps02.dgn

NAME
01:24:36 PM
06/23/2003

Curve RS04-1

P.I. Station		4803+31.52
Delta	=	6° 16′ 46.01" (RT)
Degree	=	2° 00′ 00.00"
Tangent	=	157.14
Length	=	313.97
Radius	=	2,864.79
External	=	4.31
Long Chord	=	313.82
Mid. Ord.	=	4.30
P.C. Station		4801+74.38
P.T. Station		4804+88.35

LEGEND:

- MC - MOUNTABLE CONC CURB
- BC - BARRIER CONC CURB
- MCG - MOUNTABLE CONC CURB & GUTTER
- BCG - BARRIER CONC CURB & GUTTER
- RW - RETAINING WALL
- RR - PROP CONC RIPRAP
- SGT - SINGLE GUARD RAIL TERMINAL
- MBGF - METAL BEAM GUARD FENCE
- NBFR - NORTHBOUND FRONTAGE ROAD
- SBFR - SOUTHBOUND FRONTAGE ROAD
- NBML - NORTHBOUND MAINLANES
- SBML - SOUTHBOUND MAINLANES
- PROP DITCH
- DEL ASM TY B (D-SW)
- OBJ MRK ASM TY 3 (OM-3R)

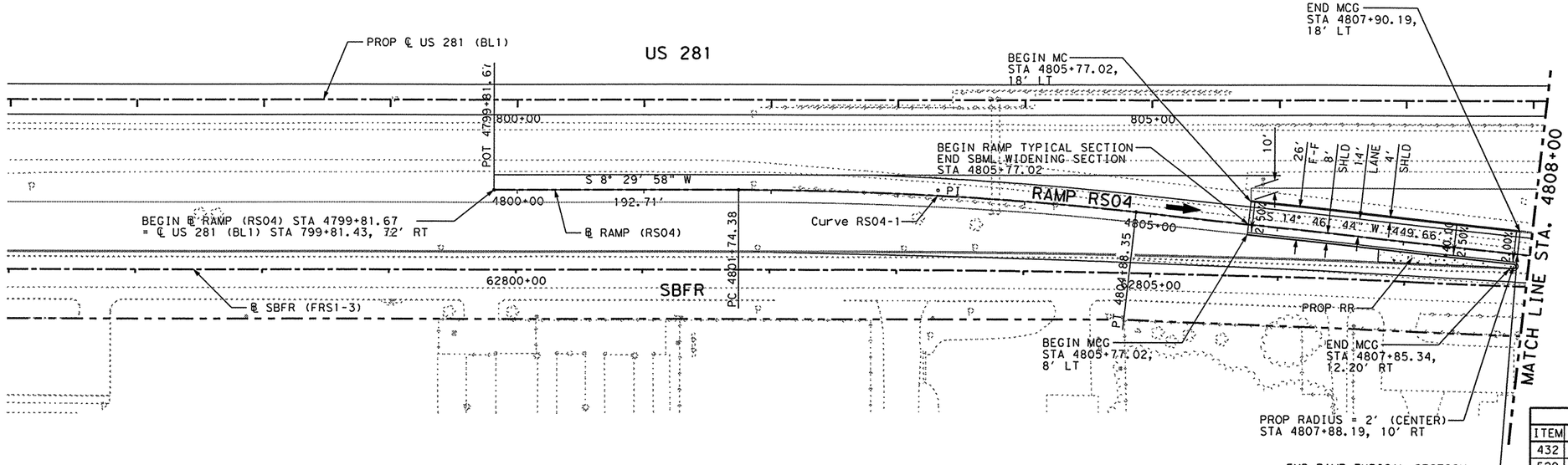

▲ RAMP "RS04" PROFILE SHALL MATCH THE MAINLANES PROFILE PROJECTED AT THE DESIGN CROSS SLOPE AND ADJUSTED FOR GORE CROSS SLOPE TRANSITION AS SHOWN ON GORE NOSE DETAIL SHEET.

△ B.M. & HORIZONTAL DATA

BM # US 281-7
ELEV = 104.99
STA = 797+06.99, 175.36′ LT
3 ¼" TXDOT ALUMINUM DISK

BM # US 281-6
ELEV = 105.29
STA = 806+94.49, 183.50′ LT
3 ¼" TXDOT ALUMINUM DISK

SHEET TOTALS

ITEM	EST.		UNIT	DESCRIPTION
432	9		CY	RIPRAP (CONC) (CL B) (4 IN)
529	214		LF	CONC CURB (TY A) (MOUNTABLE)
529	221		LF	CONC C & G (TY A) (MOUNTABLE)

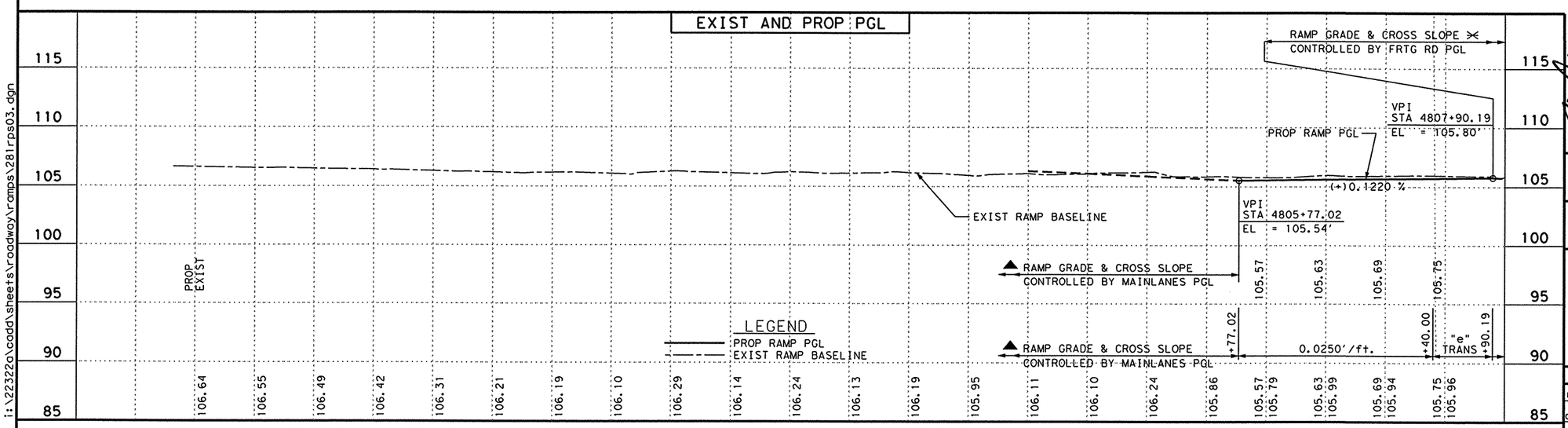

THE SEAL APPEARING ON THIS DOCUMENT WAS AUTHORIZED BY JAIME AGUILAR, P.E. 87606 ON 06/23/2003.

THE SEAL APPEARING ON THIS DOCUMENT WAS AUTHORIZED BY PHAISARN CWATANAPHOL, P.E. 89252 ON 06/23/2003.

STATE OF TEXAS — JAIME AGUILAR — 87606 — REGISTERED PROFESSIONAL ENGINEER

STATE OF TEXAS — PHAISARN CWATANAPHOL — 89252 — REGISTERED PROFESSIONAL ENGINEER

Parsons Brinckerhoff Quade & Douglas Inc.

Texas Department of Transportation

© 2003 by TxDOT

US 281
RAMP "RS04"
PLAN & PROFILE
EXIT RAMP

PLAN 1"= 100′ HORIZ
PROFILE 1"= 10′ VERT

SHEET 1 OF 2 — 281RPS03.DGN

DESIGNED: JA	FED. RD DIV. NO.	STATE	FEDERAL AID PROJECT No.	HIGHWAY No.
CHECKED: JP	6	TEXAS		US 281

DRAWN:	STATE DISTRICT	COUNTY	CONTROL No.	SECTION No.	JOB No.	SHEET No.
CHECKED: JDH	PHARR	HIDALGO	0255	08	091	375

i:\22322a\cadd\sheets\roadway\ramps\281rps03.dgn

NAME
01:24:54 PM
06/23/2003

Curve RS04-2

P.I. Station		4812+02.37
Delta	=	5° 02' 44.49" (LT)
Degree	=	0° 57' 17.75"
Tangent	=	264.36
Length	=	528.38
Radius	=	6,000.00
External	=	5.82
Long Chord	=	528.21
Mid. Ord.	=	5.82
P.C. Station		4809+38.01
P.T. Station		4814+66.39

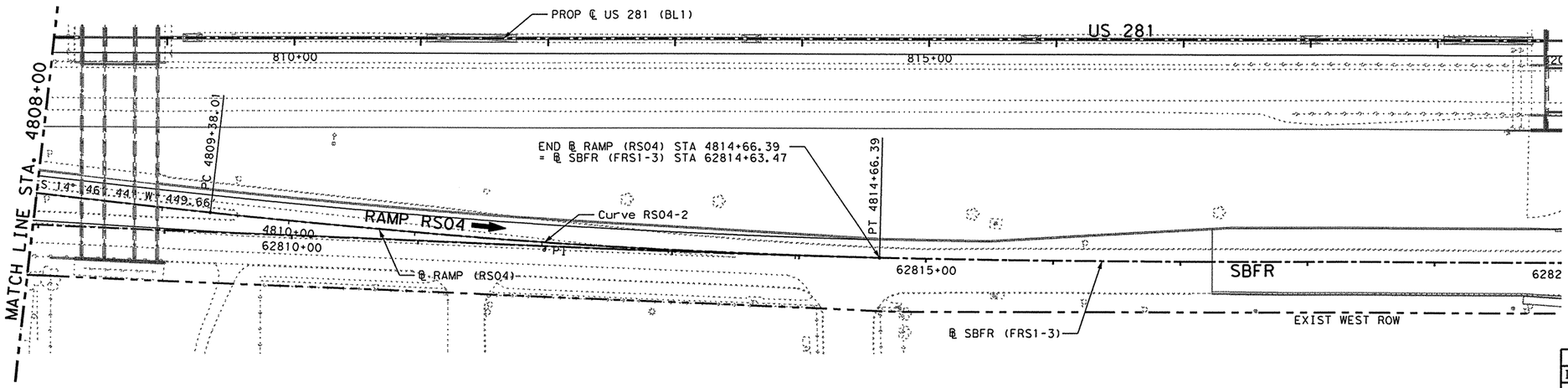

LEGEND:

MC	- MOUNTABLE CONC CURB
BC	- BARRIER CONC CURB
MCG	- MOUNTABLE CONC CURB & GUTTER
BCG	- BARRIER CONC CURB & GUTTER
RW	- RETAINING WALL
RR	- PROP CONC RIPRAP
SGT	- SINGLE GUARD RAIL TERMINAL
MBGF	- METAL BEAM GUARD FENCE
NBFR	- NORTHBOUND FRONTAGE ROAD
SBFR	- SOUTHBOUND FRONTAGE ROAD
NBML	- NORTHBOUND MAINLANES
SBML	- SOUTHBOUND MAINLANES
····→	- PROP DITCH
—o	- DEL ASM TY B (D-SW)
—▨	- OBJ MRK ASM TY 3 (OM-3R)

⋇ RAMP "RS04" SHALL MATCH THE EXISTING SOUTHBOUND FRONTAGE ROAD PROFILE AND CROSS SLOPE AND ADJUSTED FOR GORE CROSS SLOPE TRANSITION AS SHOWN ON GORE NOSE DETAIL SHEET.

△ B.M. & HORIZONTAL DATA
BM # US 281-5
ELEV = 107.46
STA = 817+01.19, 211.65' LT
3 1/4" TXDOT ALUMINUM DISK

SHEET TOTALS

ITEM	EST.		UNIT	DESCRIPTION
				NO PAY QUANTITIES THIS SHEET

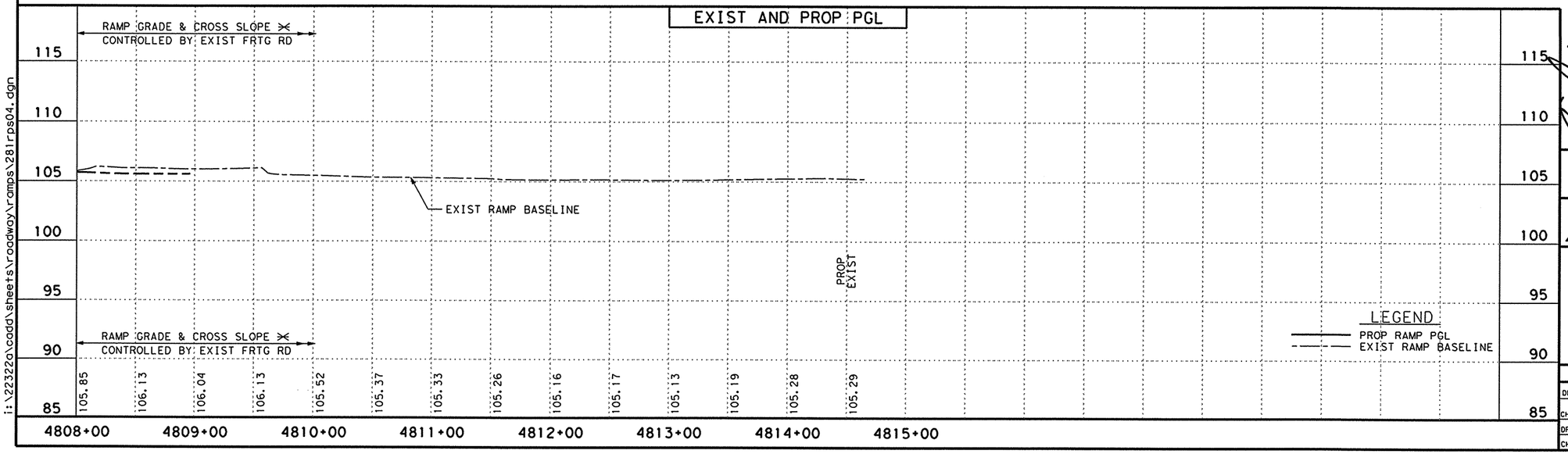

THE SEAL APPEARING ON THIS DOCUMENT WAS AUTHORIZED BY JAIME AGUILAR, P.E. 87606 ON 06/23/2003.

THE SEAL APPEARING ON THIS DOCUMENT WAS AUTHORIZED BY PHAISARN CWATANAPHOL, P.E. 89252 ON 06/23/2003.

STATE OF TEXAS · JAIME AGUILAR · 87606 · REGISTERED PROFESSIONAL ENGINEER

STATE OF TEXAS · PHAISARN CWATANAPHOL · 89252 · REGISTERED PROFESSIONAL ENGINEER

Parsons Brinckerhoff Quade & Douglas Inc.

Texas Department of Transportation

© 2003 by TxDOT

US 281
RAMP "RS04"
PLAN & PROFILE
EXIT RAMP

PLAN 1"= 100' HORIZ
PROFILE 1"= 10' VERT

SHEET 2 OF 2 | 281RPS04.DGN

DESIGNED: JA	FED. RD DIV. No.	STATE	FEDERAL AID PROJECT No.	HIGHWAY No.
CHECKED: JP	6	TEXAS		US 281

DRAWN:	STATE DISTRICT	COUNTY	CONTROL No.	SECTION No.	JOB No.	SHEET No.
CHECKED: JDH	PHARR	HIDALGO	0255	08	091	376

i:\22322a\cadd\sheets\roadway\ramps\281rps04.dgn

NAME
01:25:13 PM
06/23/2003

Curve RS06-1

P.I. Station		6776+77.20
Delta	=	5° 19′ 45.36" (LT)
Degree	=	0° 57′ 17.75"
Tangent	=	279.24
Length	=	558.08
Radius	=	6,000.00
External	=	6.49
Long Chord	=	557.88
Mid. Ord.	=	6.49
P.C. Station		6773+97.96
P.T. Station		6779+56.04

Curve RS06-2

P.I. Station		6785+07.86
Delta	=	4° 55′ 30.57" (RT)
Degree	=	2° 00′ 00.00"
Tangent	=	123.20
Length	=	246.26
Radius	=	2,864.79
External	=	2.65
Long Chord	=	246.18
Mid. Ord.	=	2.65
P.C. Station		6783+84.65
P.T. Station		6786+30.91

LEGEND:

- MC - MOUNTABLE CONC CURB
- BC - BARRIER CONC CURB
- MCG - MOUNTABLE CONC CURB & GUTTER
- BCG - BARRIER CONC CURB & GUTTER
- RW - RETAINING WALL
- RR - PROP CONC RIPRAP
- SGT - SINGLE GUARD RAIL TERMINAL
- MBGF - METAL BEAM GUARD FENCE
- NBFR - NORTHBOUND FRONTAGE ROAD
- SBFR - SOUTHBOUND FRONTAGE ROAD
- NBML - NORTHBOUND MAINLANES
- SBML - SOUTHBOUND MAINLANES
- PROP DITCH
- DEL ASM TY B (D-SW)
- OBJ MRK ASM TY 3 (OM-3R)

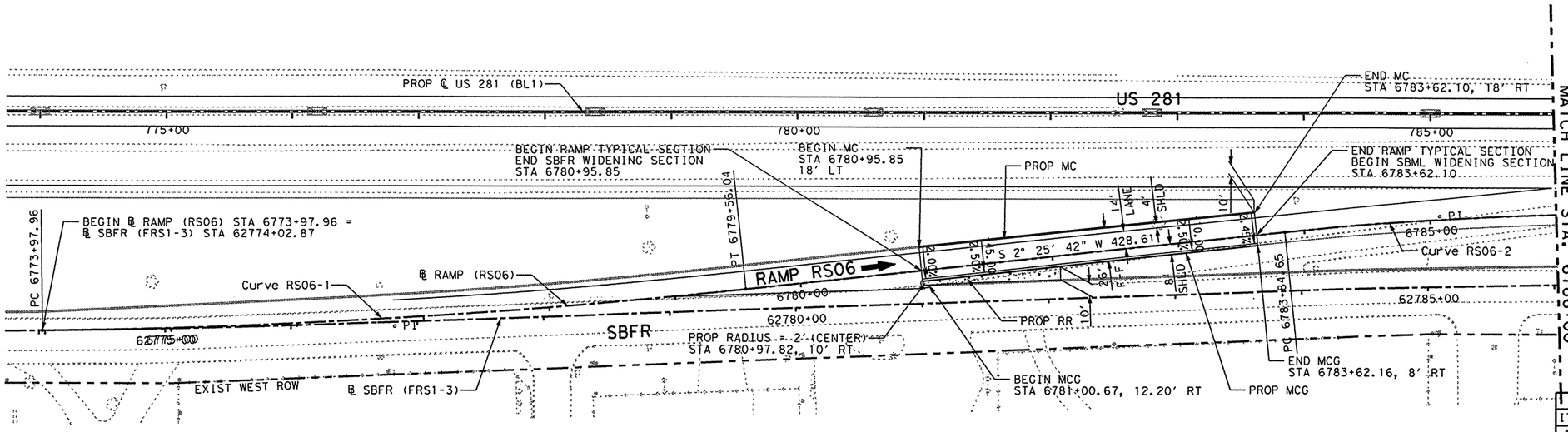

✕ RAMP "RS06" SHALL MATCH THE EXISTING SOUTHBOUND FRONTAGE ROAD PROFILE AND CROSS SLOPE AND ADJUSTED FOR GORE CROSS SLOPE TRANSITION AS SHOWN ON GORE NOSE DETAIL SHEET.

▲ RAMP "RS06" PROFILE SHALL MATCH THE MAINLANES PROFILE PROJECTED AT THE DESIGN CROSS SLOPE AND ADJUSTED FOR GORE CROSS SLOPE TRANSITION AS SHOWN ON GORE NOSE DETAIL SHEET.

△ B.M. & HORIZONTAL DATA
BM # US 281-9
ELEV = 104.73
STA = 777+08.34, 205.90′ LT
3 1/4" TXDOT ALUMINUM DISK

SHEET TOTALS

ITEM	EST.		UNIT	DESCRIPTION
432	9		CY	RIPRAP (CONC) (CL B) (4 IN)
529	267		LF	CONC CURB (TY A) (MOUNTABLE)
529	274		LF	CONC C & G (TY A) (MOUNTABLE)

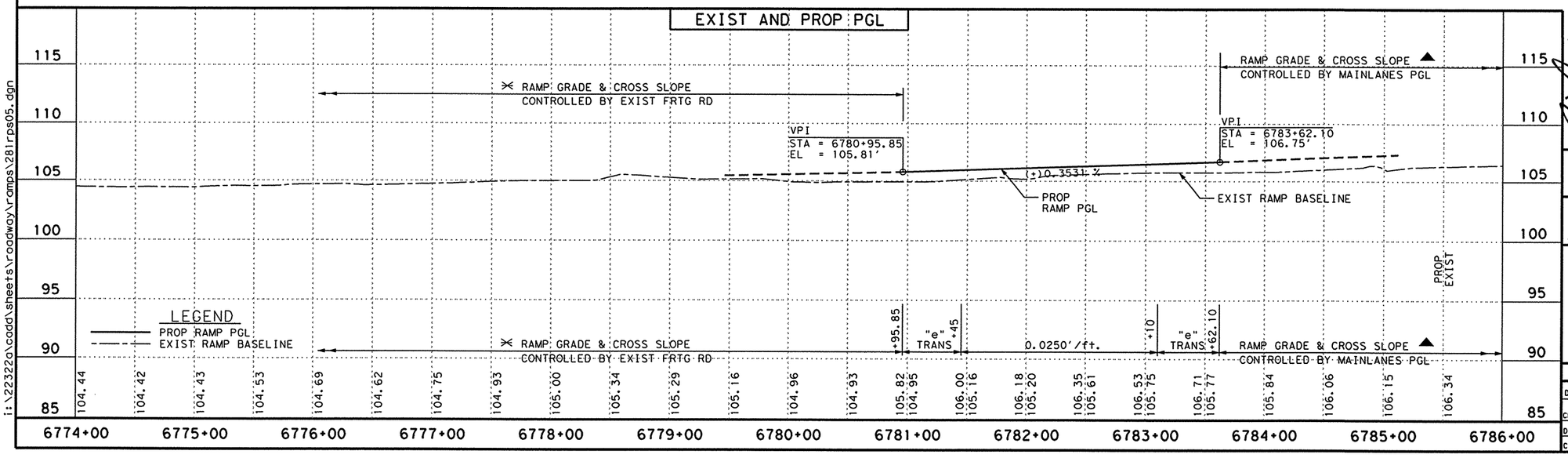

THE SEAL APPEARING ON THIS DOCUMENT WAS AUTHORIZED BY JAIME AGUILAR, P.E. 87606 ON 06/23/2003.

THE SEAL APPEARING ON THIS DOCUMENT WAS AUTHORIZED BY PHAISARN CWATANAPHOL, P.E. 89252 ON 06/23/2003.

STATE OF TEXAS · JAIME AGUILAR · 87606 · REGISTERED PROFESSIONAL ENGINEER

STATE OF TEXAS · PHAISARN CWATANAPHOL · 89252 · REGISTERED PROFESSIONAL ENGINEER

Parsons Brinckerhoff Quade & Douglas Inc.

Texas Department of Transportation

© 2003 by TxDOT

US 281
RAMP "RS06"
PLAN & PROFILE
ENTRANCE RAMP

PLAN 1"= 100′ HORIZ
PROFILE 1"= 10′ VERT

SHEET 1 OF 2 | 281RPS05.DGN

DESIGNED: JA	FED. RD DIV. No.	STATE	FEDERAL AID PROJECT No.		HIGHWAY No.	
CHECKED: JP	6	TEXAS			US 281	
DRAWN:	STATE DISTRICT	COUNTY	CONTROL No.	SECTION No.	JOB No.	SHEET No.
CHECKED: JDH	PHARR	HIDALGO	0255	08	091	377

i:\22322d\cadd\sheets\roadway\ramps\281rps05.dgn

NAME
01:25:29 PM
06/23/2003
i:\22322c\cadd\sheets\roadway\ramps\281rps06.dgn

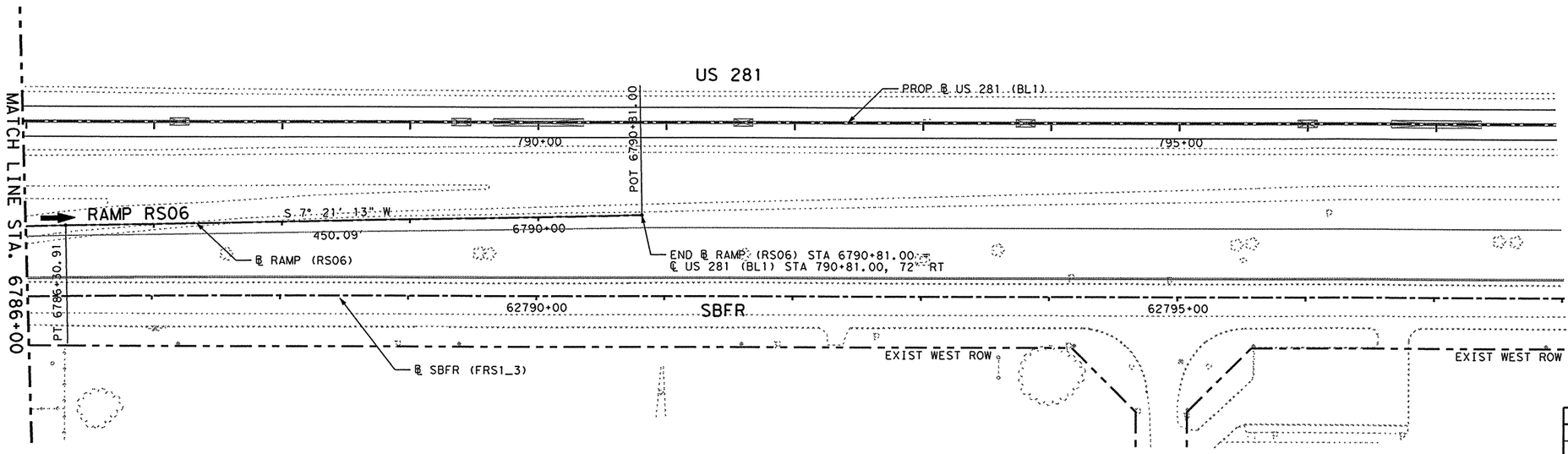

LEGEND:

- MC - MOUNTABLE CONC CURB
- BC - BARRIER CONC CURB
- MCG - MOUNTABLE CONC CURB & GUTTER
- BCG - BARRIER CONC CURB & GUTTER
- RW - RETAINING WALL
- RR - PROP CONC RIPRAP
- SGT - SINGLE GUARD RAIL TERMINAL
- MBGF - METAL BEAM GUARD FENCE
- NBFR - NORTHBOUND FRONTAGE ROAD
- SBFR - SOUTHBOUND FRONTAGE ROAD
- NBML - NORTHBOUND MAINLANES
- SBML - SOUTHBOUND MAINLANES
- PROP DITCH
- DEL ASM TY B (D-SW)
- OBJ MRK ASM TY 3 (OM-3R)

▲ RAMP "RS06" PROFILE SHALL MATCH THE MAINLANES PROFILE PROJECTED AT THE DESIGN CROSS SLOPE AND ADJUSTED FOR GORE CROSS SLOPE TRANSITION AS SHOWN ON GORE NOSE DETAIL SHEET.

△ B.M. & HORIZONTAL DATA
BM # US 281-8
ELEV = 104.98
STA = 787+06.77, 175.17' LT
3 1/4" TXDOT ALUMINUM DISK

SHEET TOTALS

ITEM	EST.	FINAL	UNIT	DESCRIPTION
				NO PAY QUANTITIES THIS SHEET

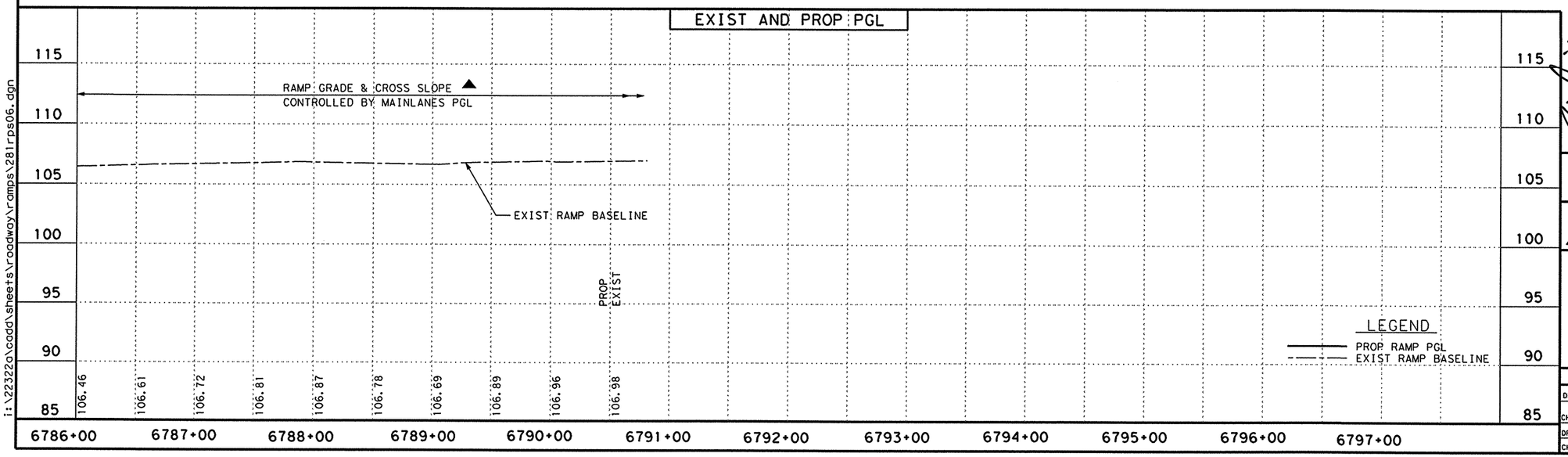

THE SEAL APPEARING ON THIS DOCUMENT WAS AUTHORIZED BY JAIME AGUILAR, P.E. 87606 ON 06/23/2003.

THE SEAL APPEARING ON THIS DOCUMENT WAS AUTHORIZED BY PHAISARN CWATANAPHOL, P.E. 89252 ON 06/23/2003.

STATE OF TEXAS · JAIME AGUILAR · 87606 · REGISTERED PROFESSIONAL ENGINEER

STATE OF TEXAS · PHAISARN CWATANAPHOL · 89252 · REGISTERED PROFESSIONAL ENGINEER

Parsons Brinckerhoff Quade & Douglas Inc.

Texas Department of Transportation

© 2003 by TxDOT

US 281
RAMP "RS06"
PLAN & PROFILE
ENTRANCE RAMP

PLAN 1"= 100' HORIZ
PROFILE 1"= 10' VERT

SHEET 2 OF 2 | 281RPS06.DGN

DESIGNED: JA	FED. RD DIV. No.	STATE	FEDERAL AID PROJECT No.	HIGHWAY No.
CHECKED: JP	6	TEXAS		US 281

DRAWN:	STATE DISTRICT	COUNTY	CONTROL No.	SECTION No.	JOB No.	SHEET No.
CHECKED: JDH	PHARR	HIDALGO	0255	08	091	378

NAME
01:25:47 PM
06/23/2003
i:\22322o\cadd\sheets\roadway\ramps\281rps07.dgn

Curve RS08-1

P.I. Station		8747+87.92
Delta	=	4° 22' 41.36" (LT)
Degree	=	0° 57' 17.75"
Tangent	=	229.35
Length	=	458.48
Radius	=	6,000.00
External	=	4.38
Long Chord	=	458.37
Mid. Ord.	=	4.38
P.C. Station		8745+58.56
P.T. Station		8750+17.04

LEGEND:

- MC - MOUNTABLE CONC CURB
- BC - BARRIER CONC CURB
- MCG - MOUNTABLE CONC CURB & GUTTER
- BCG - BARRIER CONC CURB & GUTTER
- RW - RETAINING WALL
- RR - PROP CONC RIPRAP
- SGT - SINGLE GUARD RAIL TERMINAL
- MBGF - METAL BEAM GUARD FENCE
- NBFR - NORTHBOUND FRONTAGE ROAD
- SBFR - SOUTHBOUND FRONTAGE ROAD
- NBML - NORTHBOUND MAINLANES
- SBML - SOUTHBOUND MAINLANES
- PROP DITCH
- DEL ASM TY B (D-SW)
- OBJ MRK ASM TY 3 (OM-3R)

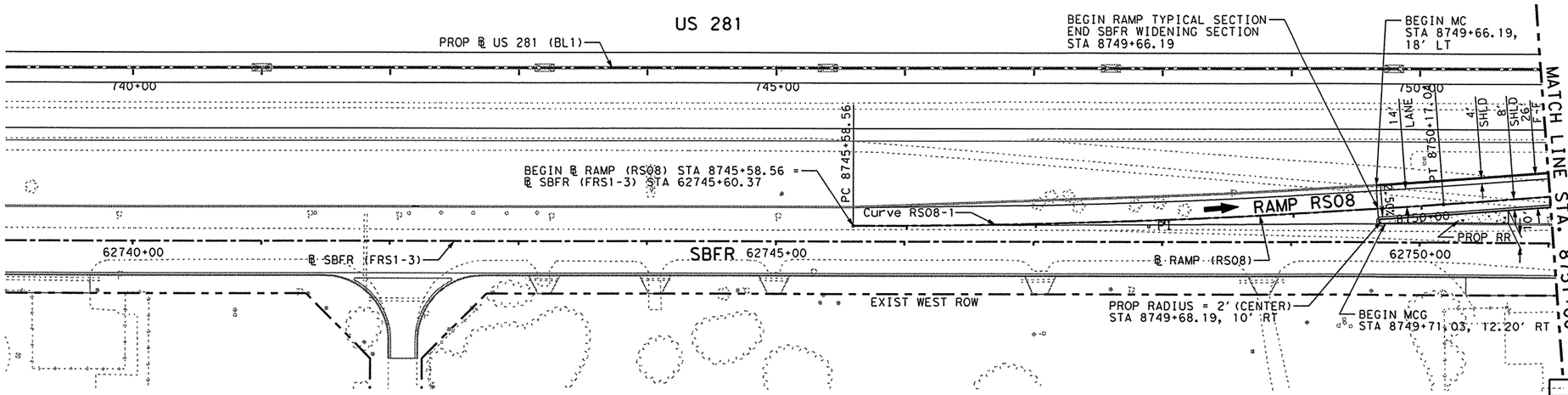

⚹ RAMP "RS08" PROFILE SHALL MATCH THE SOUTHBOUND FRONTAGE ROAD PROFILE PROJECTED AT THE DESIGN CROSS SLOPE AND ADJUSTED FOR GORE CROSS SLOPE TRANSITION AS SHOWN ON GORE NOSE DETAIL SHEET.

⚠ B.M. & HORIZONTAL DATA
BM # US 281-12
ELEV = 104.33
STA = 747+40.09, 172.11' LT
3 1/4" TXDOT ALUMINUM DISK

SHEET TOTALS

ITEM	EST.		UNIT	DESCRIPTION
432	8		CY	RIPRAP (CONC) (CL B) (4 IN)
529	134		LF	CONC CURB (TY A) (MOUNTABLE)
529	141		LF	CONC C & G (TY A) (MOUNTABLE)

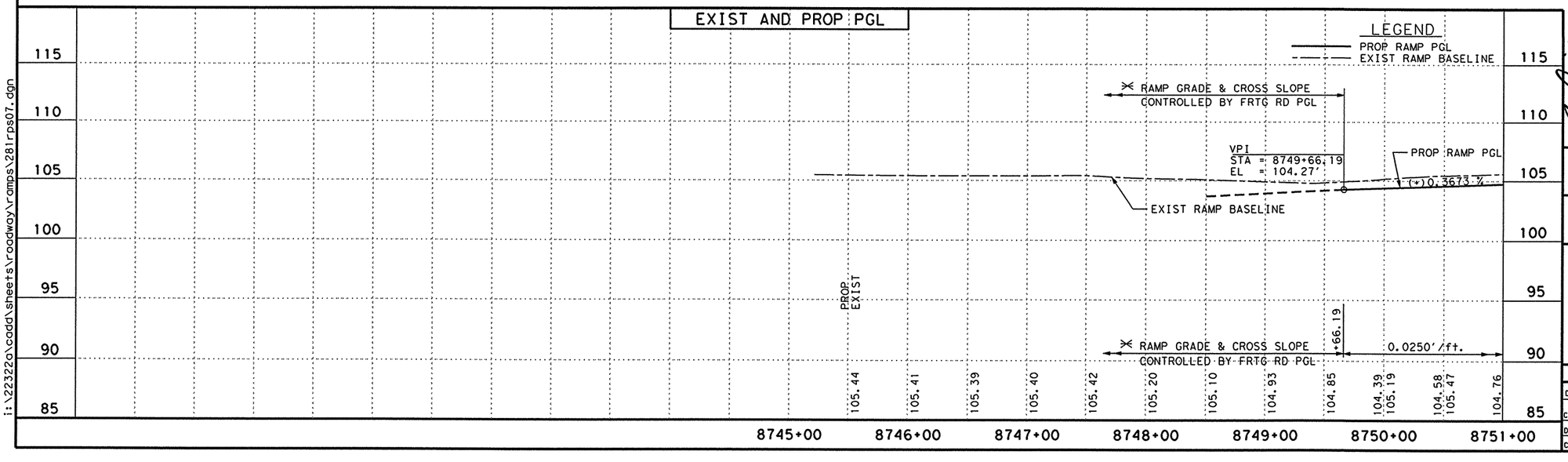

THE SEAL APPEARING ON THIS DOCUMENT WAS AUTHORIZED BY JAIME AGUILAR, P.E. 87606 ON 06/23/2003.

THE SEAL APPEARING ON THIS DOCUMENT WAS AUTHORIZED BY PHAISARN CWATANAPHOL, P.E. 89252 ON 06/23/2003.

Parsons Brinckerhoff Quade & Douglas Inc.

Texas Department of Transportation

© 2003 by TxDOT

US 281
RAMP "RS08"
PLAN & PROFILE
ENTRANCE RAMP

PLAN 1"= 100' HORIZ
PROFILE 1"= 10' VERT

SHEET 1 OF 2 | 281RPS07.DGN

DESIGNED: JA	FED. RD DIV. No.	STATE	FEDERAL AID PROJECT No.	HIGHWAY No.
CHECKED: JP	6	TEXAS		US 281

DRAWN:	STATE DISTRICT	COUNTY	CONTROL No.	SECTION No.	JOB No.	SHEET No.
CHECKED: JDH	PHARR	HIDALGO	0255	08	091	379

NAME

01:26:05 PM

06/23/2003

Curve RS08-2

P.I. Station		8754+87.58
Delta	=	3° 14' 10.61" (RT)
Degree	=	2° 00' 00.00"
Tangent	=	80.93
Length	=	161.81
Radius	=	2,864.79
External	=	1.14
Long Chord	=	161.79
Mid. Ord.	=	1.14
P.C. Station		8754+06.65
P.T. Station		8755+68.46

LEGEND:

- MC - MOUNTABLE CONC CURB
- BC - BARRIER CONC CURB
- MCG - MOUNTABLE CONC CURB & GUTTER
- BCG - BARRIER CONC CURB & GUTTER
- RW - RETAINING WALL
- RR - PROP CONC RIPRAP
- SGT - SINGLE GUARD RAIL TERMINAL
- MBGF - METAL BEAM GUARD FENCE
- NBFR - NORTHBOUND FRONTAGE ROAD
- SBFR - SOUTHBOUND FRONTAGE ROAD
- NBML - NORTHBOUND MAINLANES
- SBML - SOUTHBOUND MAINLANES
- PROP DITCH
- DEL ASM TY B (D-SW)
- OBJ MRK ASM TY 3 (OM-3R)

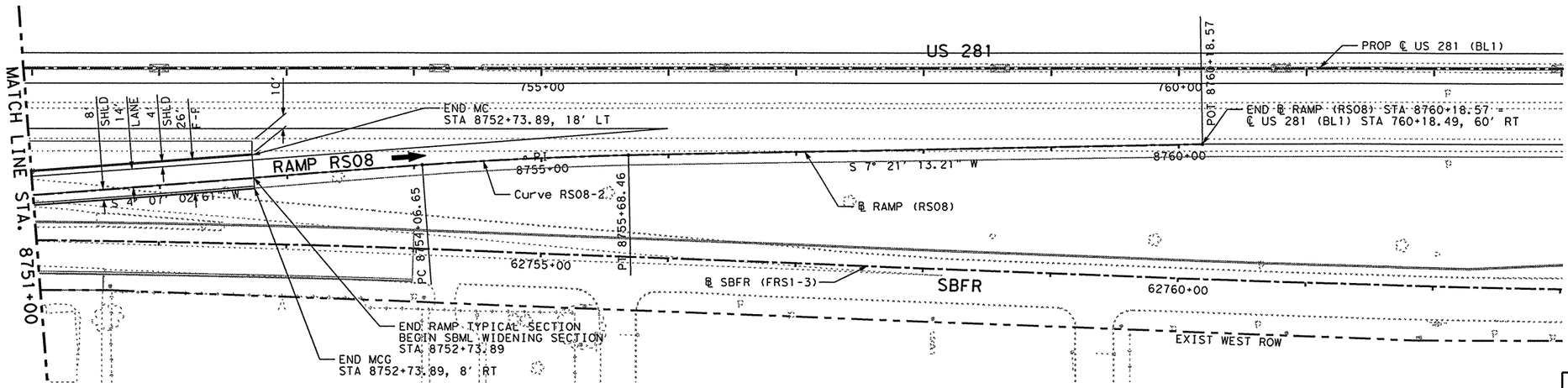

▲ RAMP "RS08" PROFILE SHALL MATCH THE MAINLANES PROFILE PROJECTED AT THE DESIGN CROSS SLOPE AND ADJUSTED FOR GORE CROSS SLOPE TRANSITION AS SHOWN ON GORE NOSE DETAIL SHEET.

△ B.M. & HORIZONTAL DATA
BM # US 281-11
ELEV = 104.75
STA = 757+16.56, 194.71' LT
3 ¼" TXDOT ALUMINUM DISK

SHEET TOTALS

ITEM	EST.		UNIT	DESCRIPTION
529	174		LF	CONC CURB (TY A) (MOUNTABLE)
529	174		LF	CONC C & G (TY A) (MOUNTABLE)

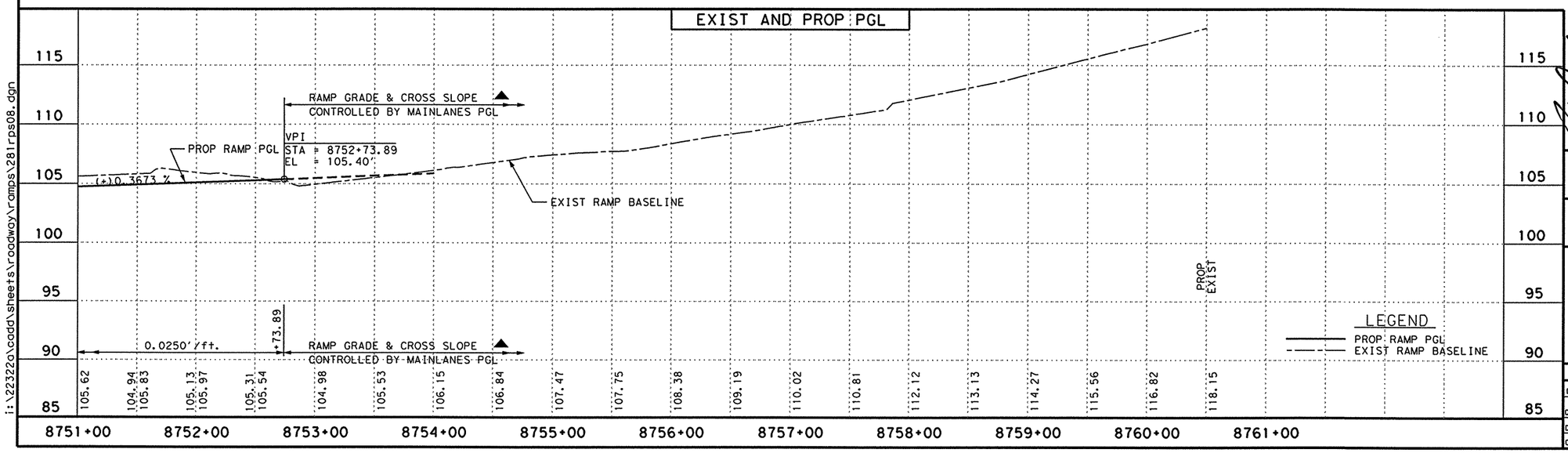

THE SEAL APPEARING ON THIS DOCUMENT WAS AUTHORIZED BY JAIME AGUILAR, P.E. 87606 ON 06/23/2003.

THE SEAL APPEARING ON THIS DOCUMENT WAS AUTHORIZED BY PHAISARN CWATANAPHOL, P.E. 89252 ON 06/23/2003.

STATE OF TEXAS · JAIME AGUILAR · 87606 · REGISTERED PROFESSIONAL ENGINEER

STATE OF TEXAS · PHAISARN CWATANAPHOL · 89252 · REGISTERED PROFESSIONAL ENGINEER

Parsons Brinckerhoff Quade & Douglas Inc.

Texas Department of Transportation

© 2003 by TxDOT

US 281
RAMP "RS08"
PLAN & PROFILE
ENTRANCE RAMP

PLAN 1"= 100' HORIZ
PROFILE 1"= 10' VERT

SHEET 2 OF 2 | 281RPS08.DGN

DESIGNED: JA	FED. RD DIV. No.	STATE	FEDERAL AID PROJECT No.	HIGHWAY No.
CHECKED: JP	6	TEXAS		US 281

DRAWN:	STATE DISTRICT	COUNTY	CONTROL No.	SECTION No.	JOB No.	SHEET No.
CHECKED: JDH	PHARR	HIDALGO	0255	08	091	380

i:\22322o\cadd\sheets\roadway\ramps\281rps08.dgn

NAME
01:26:23 PM
06/23/2003

Curve RS10-1

P.I. Station	=	10721+12.90
Delta	=	2° 46' 17.41" (LT)
Degree	=	1° 28' 36.49"
Tangent	=	93.85
Length	=	187.67
Radius	=	3,879.72
External	=	1.14
Long Chord	=	187.65
Mid. Ord.	=	1.13
P.C. Station		10720+19.05
P.T. Station		10722+06.72

Curve RS10-2

P.I. Station	=	10724+57.23
Delta	=	4° 46' 54.08" (RT)
Degree	=	0° 57' 17.75"
Tangent	=	250.51
Length	=	500.74
Radius	=	6,000.00
External	=	5.23
Long Chord	=	500.59
Mid. Ord.	=	5.22
P.C. Station		10722+06.72
P.T. Station		10727+07.46

LEGEND:

- MC - MOUNTABLE CONC CURB
- BC - BARRIER CONC CURB
- MCG - MOUNTABLE CONC CURB & GUTTER
- BCG - BARRIER CONC CURB & GUTTER
- RW - RETAINING WALL
- RR - PROP CONC RIPRAP
- SGT - SINGLE GUARD RAIL TERMINAL
- MBGF - METAL BEAM GUARD FENCE
- NBFR - NORTHBOUND FRONTAGE ROAD
- SBFR - SOUTHBOUND FRONTAGE ROAD
- NBML - NORTHBOUND MAINLANES
- SBML - SOUTHBOUND MAINLANES
- PROP DITCH
- DEL ASM TY B (D-SW)
- OBJ MRK ASM TY 3 (OM-3R)

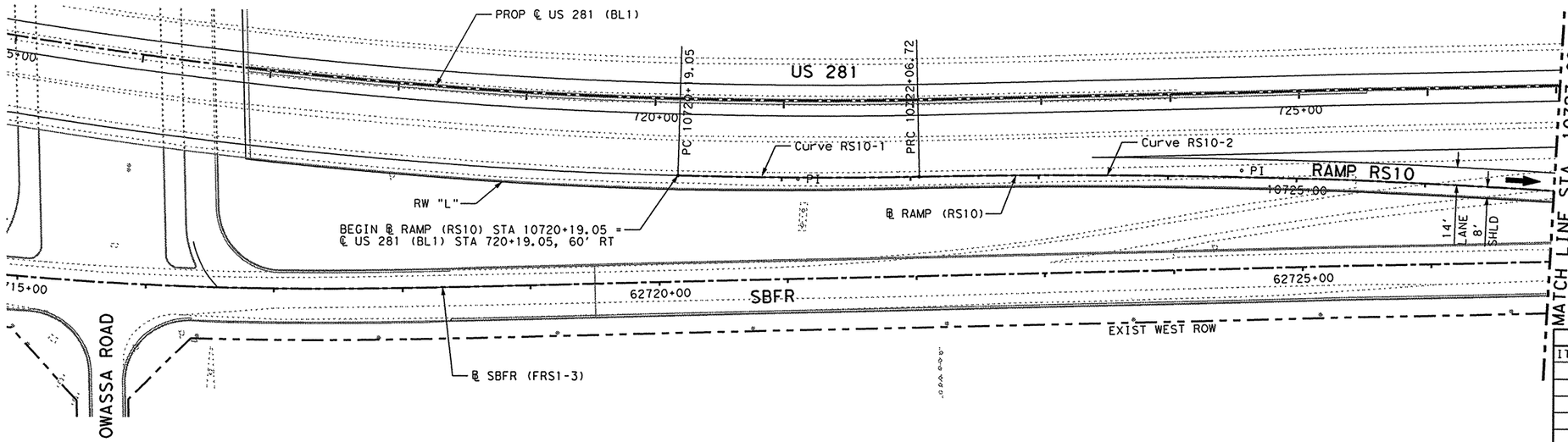

▲ RAMP "RS10" PROFILE SHALL MATCH THE MAINLANES PROFILE PROJECTED AT THE DESIGN CROSS SLOPE AND ADJUSTED FOR GORE CROSS SLOPE TRANSITION AS SHOWN ON GORE NOSE DETAIL SHEET.

⚠ B.M. & HORIZONTAL DATA
BM # US 281-14
ELEV = 103.90
STA = 727+41.86, 241.71' LT
3 1/4" TXDOT ALUMINUM DISK

SHEET TOTALS

ITEM	EST.	FINAL	UNIT	DESCRIPTION
				NO PAY QUANTITIES THIS SHEET

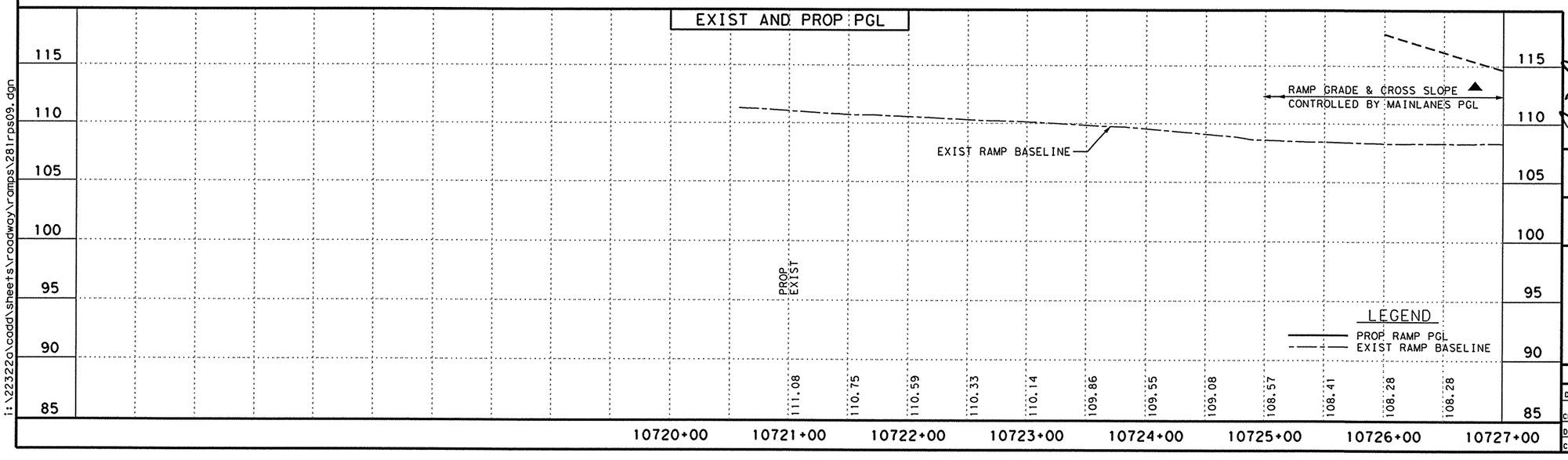

THE SEAL APPEARING ON THIS DOCUMENT WAS AUTHORIZED BY JAIME AGUILAR, P.E. 87606 ON 06/23/2003.

THE SEAL APPEARING ON THIS DOCUMENT WAS AUTHORIZED BY PHAISARN CWATANAPHOL, P.E. 89252 ON 06/23/2003.

STATE OF TEXAS · JAIME AGUILAR · 87606 · REGISTERED PROFESSIONAL ENGINEER

STATE OF TEXAS · PHAISARN CWATANAPHOL · 89252 · REGISTERED PROFESSIONAL ENGINEER

Parsons Brinckerhoff
Quade & Douglas Inc.

Texas Department of Transportation

© 2003 by TxDOT

US 281
RAMP "RS10"
PLAN & PROFILE
EXIT RAMP

PLAN 1"= 100' HORIZ
PROFILE 1"= 10' VERT

SHEET 1 OF 2 | 281RPS09.DGN

DESIGNED: JA	FED. RD DIV. NO.	STATE	FEDERAL AID PROJECT No.	HIGHWAY No.
CHECKED: JP	6	TEXAS		US 281

DRAWN:	STATE DISTRICT	COUNTY	CONTROL No.	SECTION No.	JOB No.	SHEET No.
CHECKED: JDH	PHARR	HIDALGO	0255	08	091	381

i:\22322a\cadd\sheets\roadway\ramps\281rps09.dgn

NAME
01:26:41 PM
06/23/2003

Curve RS10-3

P.I. Station		10731+82.92
Delta	=	5° 00′ 13.67" (LT)
Degree	=	0° 57′ 17.75"
Tangent	=	262.16
Length	=	524.00
Radius	=	6,000.00
External	=	5.72
Long Chord	=	523.83
Mid. Ord.	=	5.72
P.C. Station		10729+20.75
P.T. Station		10734+44.75

LEGEND:

- MC - MOUNTABLE CONC CURB
- BC - BARRIER CONC CURB
- MCG - MOUNTABLE CONC CURB & GUTTER
- BCG - BARRIER CONC CURB & GUTTER
- RW - RETAINING WALL
- RR - PROP CONC RIPRAP
- SGT - SINGLE GUARD RAIL TERMINAL
- MBGF - METAL BEAM GUARD FENCE
- NBFR - NORTHBOUND FRONTAGE ROAD
- SBFR - SOUTHBOUND FRONTAGE ROAD
- NBML - NORTHBOUND MAINLANES
- SBML - SOUTHBOUND MAINLANES
- PROP DITCH
- DEL ASM TY B (D-SW)
- OBJ MRK ASM TY 3 (OM-3R)

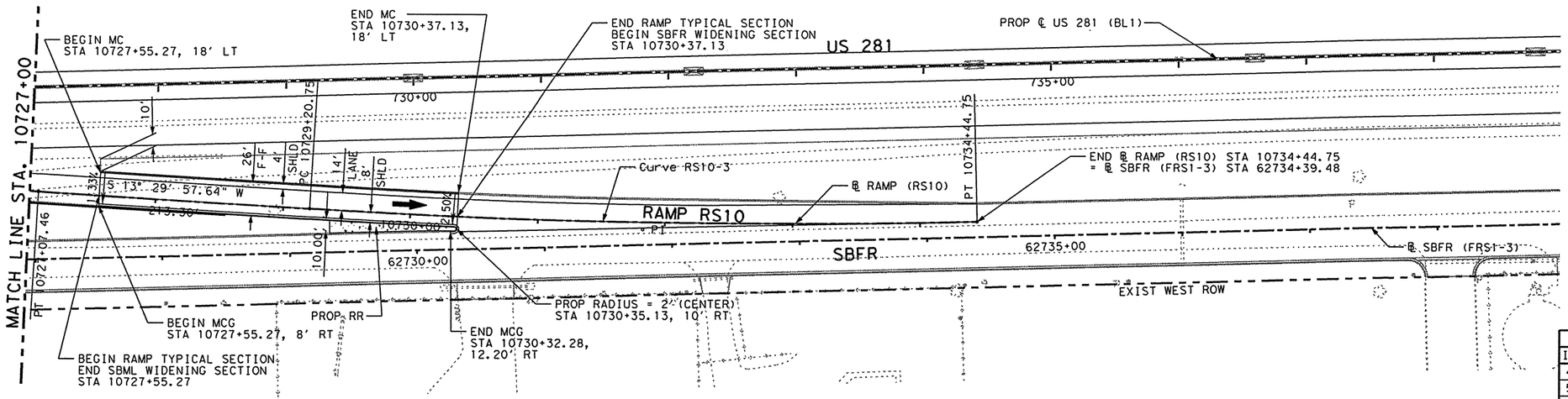

▲ RAMP "RS10" PROFILE SHALL MATCH THE MAINLANES PROFILE PROJECTED AT THE DESIGN CROSS SLOPE AND ADJUSTED FOR GORE CROSS SLOPE TRANSITION AS SHOWN ON GORE NOSE DETAIL SHEET.

⋇ RAMP "RS10" PROFILE SHALL MATCH THE SOUTHBOUND FRONTAGE ROAD PROFILE PROJECTED AT THE DESIGN CROSS SLOPE AND ADJUSTED FOR GORE CROSS SLOPE TRANSITION AS SHOWN ON GORE NOSE DETAIL SHEET.

⚠ B.M. & HORIZONTAL DATA
BM # US 281-13
ELEV = 104.89
STA = 737+28.11, 172.67′ LT
3 1/4" TXDOT ALUMINUM DISK

SHEET TOTALS

ITEM	EST.		UNIT	DESCRIPTION
432	8		CY	RIPRAP (CONC) (CL B) (4 IN)
529	282		LF	CONC CURB (TY A) (MOUNTABLE)
529	290		LF	CONC C & G (TY A) (MOUNTABLE)

EXIST AND PROP PGL

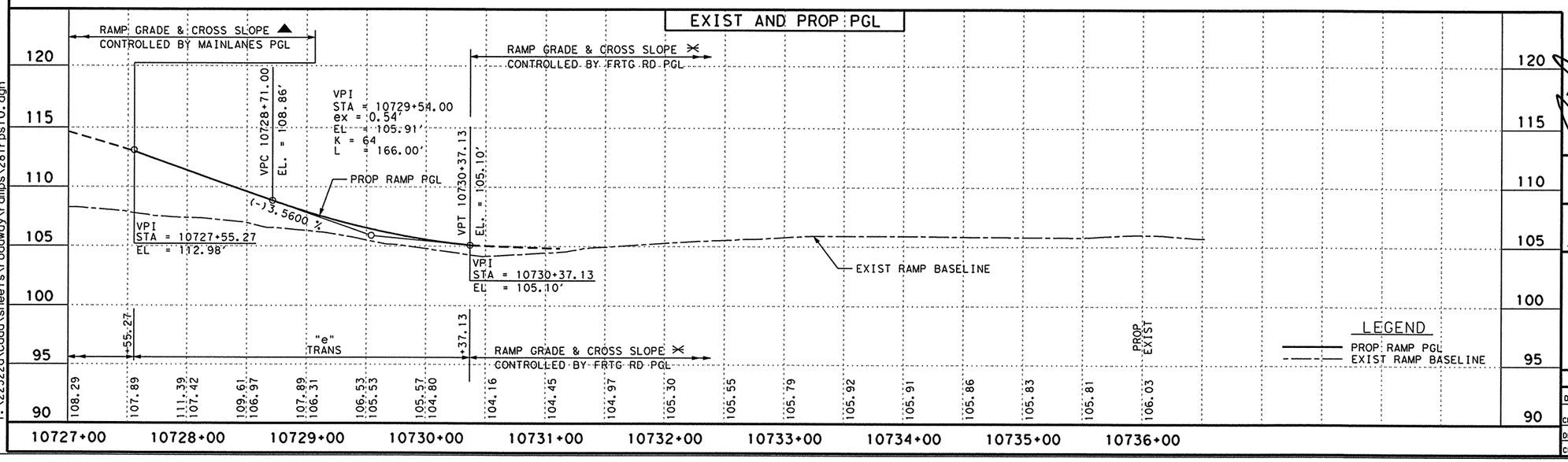

LEGEND
PROP RAMP PGL
EXIST RAMP BASELINE

THE SEAL APPEARING ON THIS DOCUMENT WAS AUTHORIZED BY JAIME AGUILAR, P.E. 87606 ON 06/23/2003.

THE SEAL APPEARING ON THIS DOCUMENT WAS AUTHORIZED BY PHAISARN CWATANAPHOL, P.E. 89252 ON 06/23/2003.

STATE OF TEXAS · JAIME AGUILAR · 87606 · REGISTERED PROFESSIONAL ENGINEER

STATE OF TEXAS · PHAISARN CWATANAPHOL · 89252 · REGISTERED PROFESSIONAL ENGINEER

Parsons Brinckerhoff Quade & Douglas Inc.

Texas Department of Transportation

© 2003 by TxDOT

US 281
RAMP "RS10"
PLAN & PROFILE
EXIT RAMP

PLAN 1"= 100′ HORIZ
PROFILE 1"= 10′ VERT

SHEET 2 OF 2 | 281RPS10.DGN

DESIGNED: JA	FED. RD DIV. No.	STATE	FEDERAL AID PROJECT No.			HIGHWAY No.
CHECKED: JP	6	TEXAS				US 281
DRAWN:	STATE DISTRICT	COUNTY	CONTROL No.	SECTION No.	JOB No.	SHEET No.
CHECKED: JDH	PHARR	HIDALGO	0255	08	091	382

i:\22322o\cadd\sheets\roadway\ramps\281rps10.dgn

NAME
01:26:59 PM
06/23/2003

Curve RS12-1	Curve RS12-1
P.I. Station	12689+25.75
Delta =	4° 30' 06.46" (LT)
Degree =	0° 57' 17.75"
Tangent =	235.83
Length =	471.43
Radius =	6,000.00
External =	4.63
Long Chord =	471.31
Mid. Ord. =	4.63
P.C. Station	12686+89.92
P.T. Station	12691+61.35

LEGEND:

- MC - MOUNTABLE CONC CURB
- BC - BARRIER CONC CURB
- MCG - MOUNTABLE CONC CURB & GUTTER
- BCG - BARRIER CONC CURB & GUTTER
- RW - RETAINING WALL
- RR - PROP CONC RIPRAP
- SGT - SINGLE GUARD RAIL TERMINAL
- MBGF - METAL BEAM GUARD FENCE
- NBFR - NORTHBOUND FRONTAGE ROAD
- SBFR - SOUTHBOUND FRONTAGE ROAD
- NBML - NORTHBOUND MAINLANES
- SBML - SOUTHBOUND MAINLANES
- ···→ - PROP DITCH
- —o - DEL ASM TY B (D-SW)
- —▨ - OBJ MRK ASM TY 3 (OM-3R)

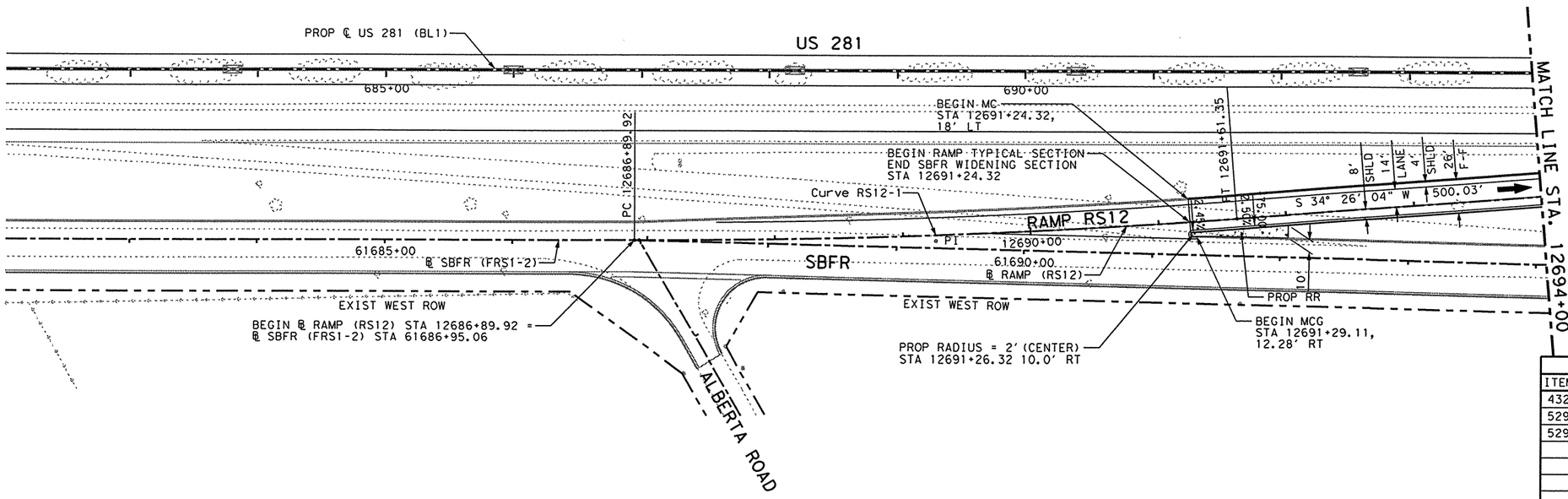

⚹ RAMP "RS12" PROFILE SHALL MATCH THE SOUTHBOUND FRONTAGE ROAD PROFILE PROJECTED AT THE DESIGN CROSS SLOPE AND ADJUSTED FOR GORE CROSS SLOPE TRANSITION AS SHOWN ON GORE NOSE DETAIL SHEET.

⚠ B.M. & HORIZONTAL DATA
BM # US 281-18
ELEV = 105.52
STA = 686+28.97, 170.87' LT
3 1/4" TXDOT ALUMINUM DISK

SHEET TOTALS

ITEM	EST.		UNIT	DESCRIPTION
432	6		CY	RIPRAP (CONC) (CL B) (4 IN)
529	276		LF	CONC CURB (TY A) (MOUNTABLE)
529	283		LF	CONC C & G (TY A) (MOUNTABLE)

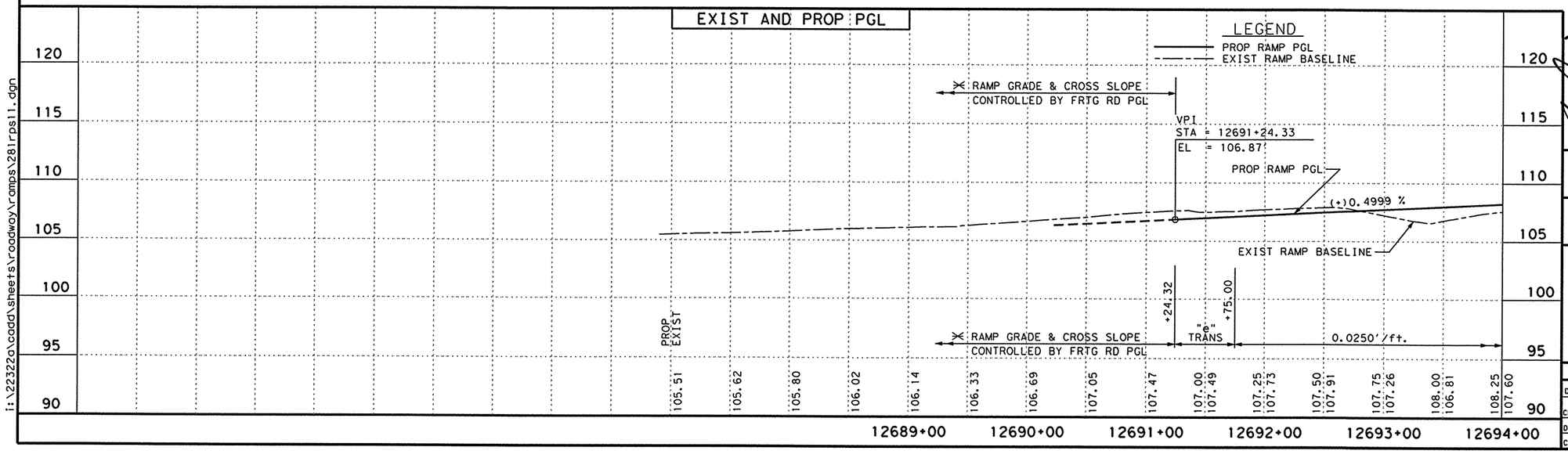

THE SEAL APPEARING ON THIS DOCUMENT WAS AUTHORIZED BY JAIME AGUILAR, P.E. 87606 ON 06/23/2003.

THE SEAL APPEARING ON THIS DOCUMENT WAS AUTHORIZED BY PHAISARN CWATANAPHOL, P.E. 89252 ON 06/23/2003.

STATE OF TEXAS · JAIME AGUILAR · 87606 · REGISTERED PROFESSIONAL ENGINEER

STATE OF TEXAS · PHAISARN CWATANAPHOL · 89252 · REGISTERED PROFESSIONAL ENGINEER

Parsons Brinckerhoff Quade & Douglas Inc.

Texas Department of Transportation

© 2003 by TxDOT

US 281
RAMP "RS12"
PLAN & PROFILE
ENTRANCE RAMP

PLAN 1"= 100' HORIZ
PROFILE 1"= 10' VERT

SHEET 1 OF 2 — 281RPS11.DGN

DESIGNED: JA	FED. RD DIV. No.	STATE	FEDERAL AID PROJECT No.			HIGHWAY No.	
CHECKED: JP	6	TEXAS				US 281	
DRAWN:	STATE DISTRICT	COUNTY	CONTROL No.	SECTION No.	JOB No.	SHEET No.	
CHECKED: JDH	PHARR	HIDALGO	0255	08	091	383	

i:\22322o\cadd\sheets\roadway\ramps\281rps11.dgn

NAME

01:27:19 PM

06/23/2003

Curve RS12-2

P.I. Station		12697+42.20
Delta	=	3° 13' 56.12" (RT)
Degree	=	2° 00' 00.00"
Tangent	=	80.83
Length	=	161.61
Radius	=	2,864.79
External	=	1.14
Long Chord	=	161.59
Mid. Ord.	=	1.14
P.C. Station		12696+61.37
P.T. Station		12698+22.99

LEGEND:

- MC - MOUNTABLE CONC CURB
- BC - BARRIER CONC CURB
- MCG - MOUNTABLE CONC CURB & GUTTER
- BCG - BARRIER CONC CURB & GUTTER
- RW - RETAINING WALL
- RR - PROP CONC RIPRAP
- SGT - SINGLE GUARD RAIL TERMINAL
- MBGF - METAL BEAM GUARD FENCE
- NBFR - NORTHBOUND FRONTAGE ROAD
- SBFR - SOUTHBOUND FRONTAGE ROAD
- NBML - NORTHBOUND MAINLANES
- SBML - SOUTHBOUND MAINLANES
- PROP DITCH
- DEL ASM TY B (D-SW)
- OBJ MRK ASM TY 3 (OM-3R)

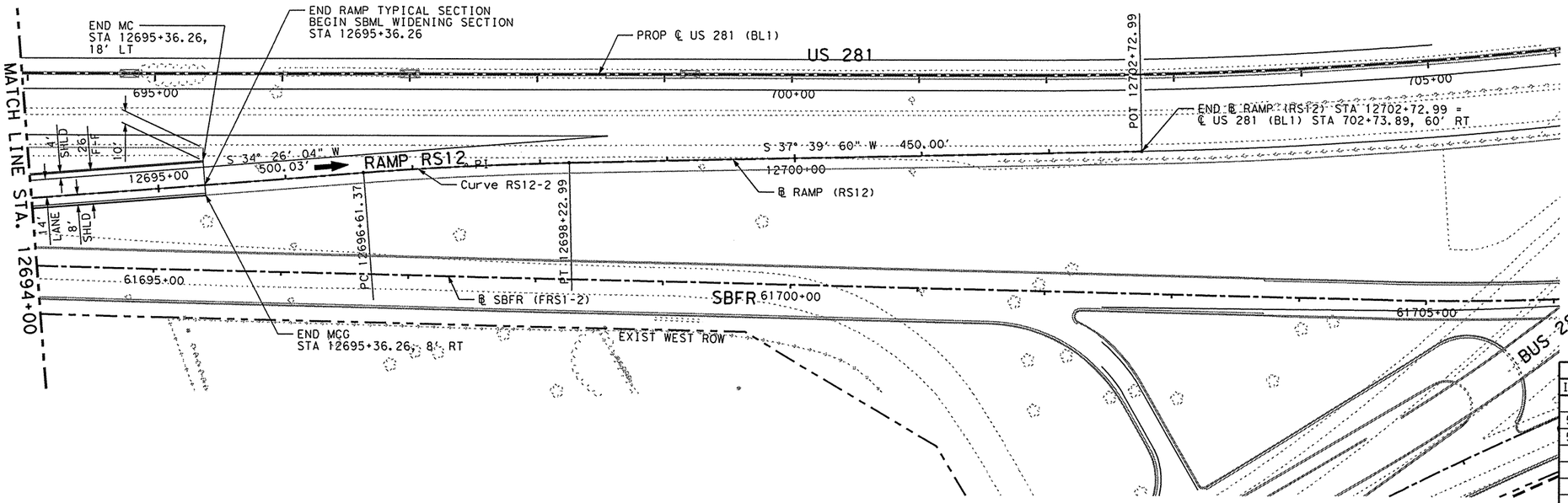

▲ RAMP "RS12" PROFILE SHALL MATCH THE MAINLANES PROFILE PROJECTED AT THE DESIGN CROSS SLOPE AND ADJUSTED FOR GORE CROSS SLOPE TRANSITION AS SHOWN ON GORE NOSE DETAIL SHEET.

⚠ B.M. & HORIZONTAL DATA

BM # US 281-17
ELEV = 105.58
STA = 696+39.23, 173.41' LT
3 1/4" TXDOT ALUMINUM DISK

BM # US 281-16
ELEV = 103.82
STA = 706+19.13, 220.37' LT
3 1/4" TXDOT ALUMINUM DISK

SHEET TOTALS

ITEM	EST.		UNIT	DESCRIPTION
529	137		LF	CONC CURB (TY A) (MOUNTABLE)
529	137		LF	CONC C & G (TY A) (MOUNTABLE)

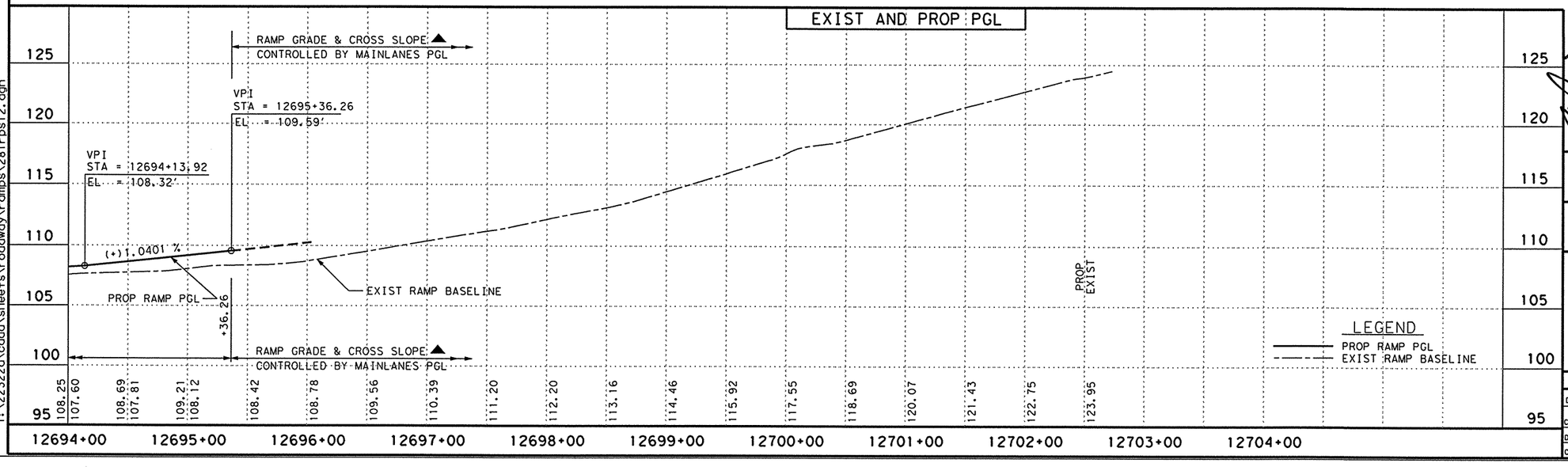

THE SEAL APPEARING ON THIS DOCUMENT WAS AUTHORIZED BY JAIME AGUILAR, P.E. 87606 ON 06/23/2003.

THE SEAL APPEARING ON THIS DOCUMENT WAS AUTHORIZED BY PHAISARN CWATANAPHOL, P.E. 89252 ON 06/23/2003.

STATE OF TEXAS — JAIME AGUILAR — 87606 — REGISTERED PROFESSIONAL ENGINEER

STATE OF TEXAS — PHAISARN CWATANAPHOL — 89252 — REGISTERED PROFESSIONAL ENGINEER

Parsons Brinckerhoff Quade & Douglas Inc.

Texas Department of Transportation

© 2003 by TxDOT

US 281
RAMP "RS12"
PLAN & PROFILE
ENTRANCE RAMP

PLAN 1"= 100' HORIZ
PROFILE 1"= 10' VERT

SHEET 2 OF 2 — 281RPS12.DGN

DESIGNED: JA	FED. RD DIV. No.	STATE	FEDERAL AID PROJECT No.	HIGHWAY No.
CHECKED: JP	6	TEXAS		US 281

DRAWN:	STATE DISTRICT	COUNTY	CONTROL No.	SECTION No.	JOB No.	SHEET No.
CHECKED: JDH	PHARR	HIDALGO	0255	08	091	384

i:\22322a\cadd\sheets\roadway\ramps\281rps12.dgn

NAME

01:27:37 PM

06/23/2003

Curve RS14-1

P.I. Station		14667+00.04
Delta	=	3° 59′ 59.88" (RT)
Degree	=	2° 00′ 00.00"
Tangent	=	100.04
Length	=	200.00
Radius	=	2,864.79
External	=	1.75
Long Chord	=	199.96
Mid. Ord.	=	1.75
P.C. Station		14666+00.00
P.T. Station		14668+00.00

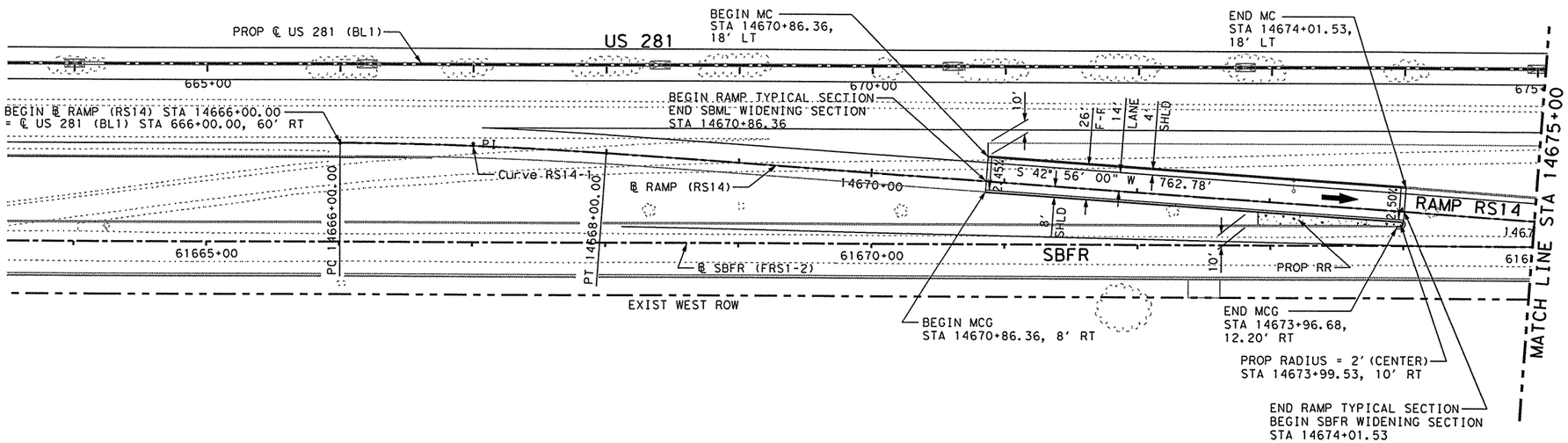

LEGEND:

- MC - MOUNTABLE CONC CURB
- BC - BARRIER CONC CURB
- MCG - MOUNTABLE CONC CURB & GUTTER
- BCG - BARRIER CONC CURB & GUTTER
- RW - RETAINING WALL
- RR - PROP CONC RIPRAP
- SGT - SINGLE GUARD RAIL TERMINAL
- MBGF - METAL BEAM GUARD FENCE
- NBFR - NORTHBOUND FRONTAGE ROAD
- SBFR - SOUTHBOUND FRONTAGE ROAD
- NBML - NORTHBOUND MAINLANES
- SBML - SOUTHBOUND MAINLANES
- PROP DITCH
- DEL ASM TY B (D-SW)
- OBJ MRK ASM TY 3 (OM-3R)

▲ RAMP "RS14" PROFILE SHALL MATCH THE MAINLANES PROFILE PROJECTED AT THE DESIGN CROSS SLOPE AND ADJUSTED FOR GORE CROSS SLOPE TRANSITION AS SHOWN ON GORE NOSE DETAIL SHEET.

⋇ RAMP "RS14" PROFILE SHALL MATCH THE SOUTHBOUND FRONTAGE ROAD PROFILE PROJECTED AT THE DESIGN CROSS SLOPE AND ADJUSTED FOR GORE CROSS SLOPE TRANSITION AS SHOWN ON GORE NOSE DETAIL SHEET.

△ B.M. & HORIZONTAL DATA
BM # US 281-20
ELEV = 98.51
STA = 666+40.54, 172.14′ LT
3 1/4" TXDOT ALUMINUM DISK

SHEET TOTALS				
ITEM	EST.		UNIT	DESCRIPTION
432	9		CY	RIPRAP (CONC) (CL B) (4 IN)
529	316		LF	CONC CURB (TY A) (MOUNTABLE)
529	323		LF	CONC C & G (TY A) (MOUNTABLE)

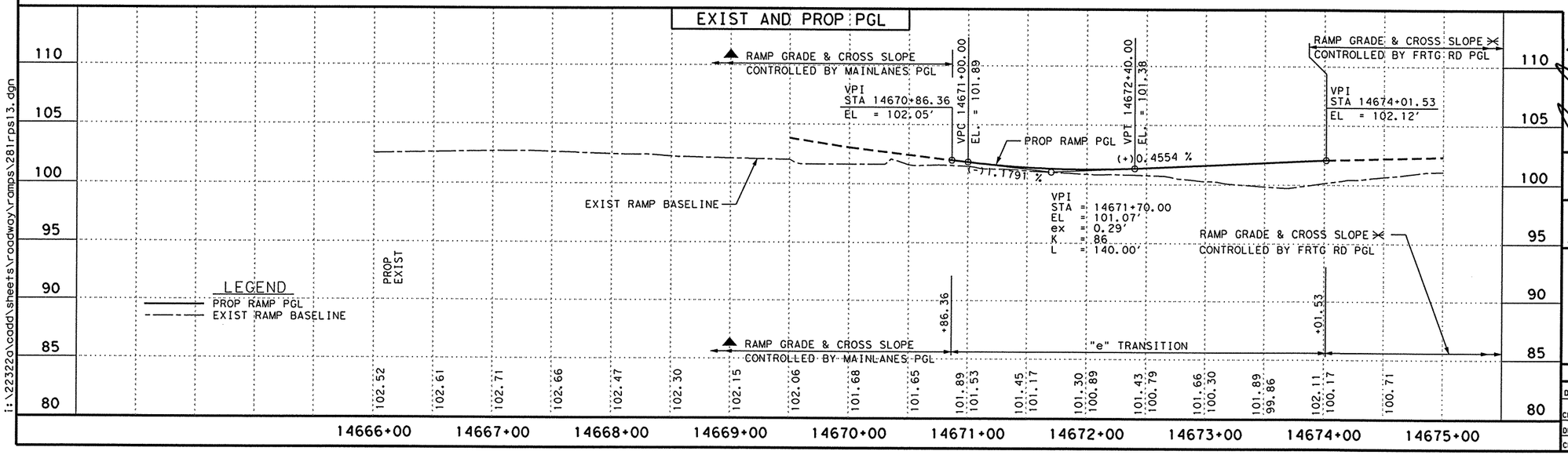

THE SEAL APPEARING ON THIS DOCUMENT WAS AUTHORIZED BY JAIME AGUILAR, P.E. 87606 ON 06/23/2003.

THE SEAL APPEARING ON THIS DOCUMENT WAS AUTHORIZED BY PHAISARN CHATANAPHOL, P.E. 89252 ON 06/23/2003.

STATE OF TEXAS — JAIME AGUILAR — 87606 — REGISTERED PROFESSIONAL ENGINEER

STATE OF TEXAS — PHAISARN CHATANAPHOL — 89252 — REGISTERED PROFESSIONAL ENGINEER

Parsons Brinckerhoff Quade & Douglas Inc.

Texas Department of Transportation

© 2003 by TxDOT

US 281
RAMP "RS14"
PLAN & PROFILE
EXIT RAMP

PLAN 1"= 100′ HORIZ
PROFILE 1"= 10′ VERT

SHEET 1 OF 2 | 281RPS13.DGN

DESIGNED: JA	FED. RD DIV. No.	STATE	FEDERAL AID PROJECT No.	HIGHWAY No.
CHECKED: JP	6	TEXAS		US 281

DRAWN:	STATE DISTRICT	COUNTY	CONTROL No.	SECTION No.	JOB No.	SHEET No.
CHECKED: JDH	PHARR	HIDALGO	0255	08	091	385

i:\22322o\cadd\sheets\roadway\ramps\281rps13.dgn

NAME
01:27:56 PM
06/23/2003

Curve RS14-2

P.I. Station		14677+72.16
Delta	=	3° 59′ 50.13" (LT)
Degree	=	0° 57′ 17.75"
Tangent	=	209.38
Length	=	418.59
Radius	=	6,000.00
External	=	3.65
Long Chord	=	418.51
Mid. Ord.	=	3.65
P.C. Station		14675+62.78
P.T. Station		14679+81.37

LEGEND:

- MC - MOUNTABLE CONC CURB
- BC - BARRIER CONC CURB
- MCG - MOUNTABLE CONC CURB & GUTTER
- BCG - BARRIER CONC CURB & GUTTER
- RW - RETAINING WALL
- RR - PROP CONC RIPRAP
- SGT - SINGLE GUARD RAIL TERMINAL
- MBGF - METAL BEAM GUARD FENCE
- NBFR - NORTHBOUND FRONTAGE ROAD
- SBFR - SOUTHBOUND FRONTAGE ROAD
- NBML - NORTHBOUND MAINLANES
- SBML - SOUTHBOUND MAINLANES
- PROP DITCH
- DEL ASM TY B (D-SW)
- OBJ MRK ASM TY 3 (OM-3R)

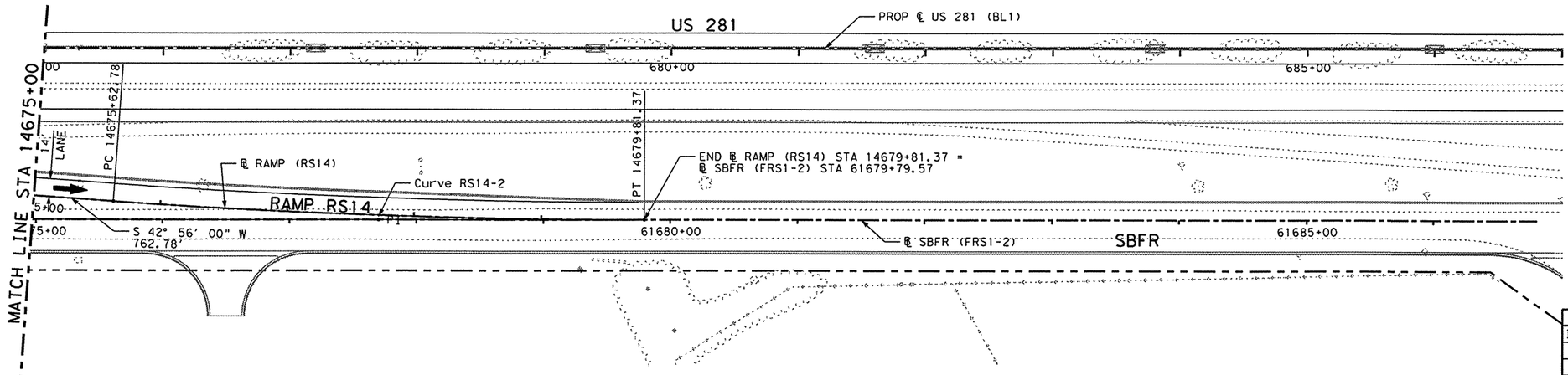

⚒ RAMP "RS14" PROFILE SHALL MATCH THE SOUTHBOUND FRONTAGE ROAD PROFILE PROJECTED AT THE DESIGN CROSS SLOPE AND ADJUSTED FOR GORE CROSS SLOPE TRANSITION AS SHOWN ON GORE NOSE DETAIL SHEET.

⚠ B.M. & HORIZONTAL DATA

BM # US 281-19
ELEV = 101.97
STA = 676+34.62, 172.09′ LT
3 1/4" TXDOT ALUMINUM DISK

BM # US 281-18
ELEV = 105.52
STA = 686+28.97, 170.87′ LT
3 1/4" TXDOT ALUMINUM DISK

SHEET TOTALS

ITEM	EST.	FINAL	UNIT	DESCRIPTION
				NO PAY QUANTITIES THIS SHEET

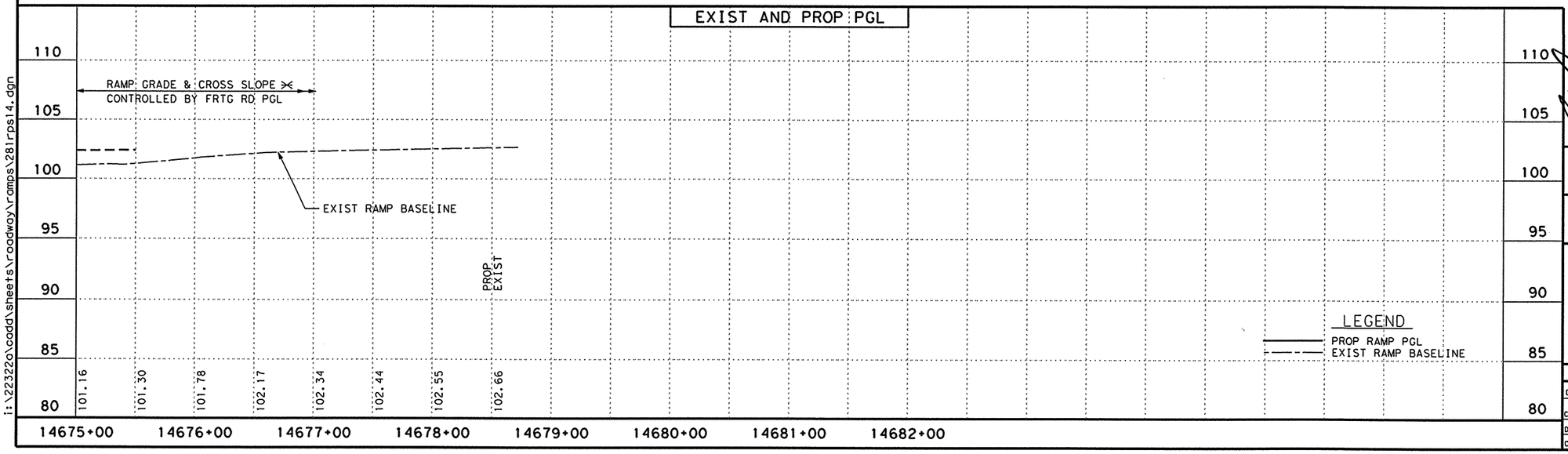

THE SEAL APPEARING ON THIS DOCUMENT WAS AUTHORIZED BY JAIME AGUILAR, P.E. 87606 ON 06/23/2003.

THE SEAL APPEARING ON THIS DOCUMENT WAS AUTHORIZED BY PHAISARN CHATANAPHOL, P.E. 89252 ON 06/23/2003.

STATE OF TEXAS · JAIME AGUILAR · 87606 · REGISTERED PROFESSIONAL ENGINEER

STATE OF TEXAS · PHAISARN CHATANAPHOL · 89252 · REGISTERED PROFESSIONAL ENGINEER

Parsons Brinckerhoff Quade & Douglas Inc.

Texas Department of Transportation

© 2003 by TxDOT

US 281
RAMP "RS14"
PLAN & PROFILE
EXIT RAMP

PLAN 1"= 100′ HORIZ
PROFILE 1"= 10′ VERT

SHEET 2 OF 2 | 281RPS14.DGN

DESIGNED: JA	FED. RD DIV. No.	STATE	FEDERAL AID PROJECT No.				HIGHWAY No.
CHECKED: JP	6	TEXAS					US 281
DRAWN:	STATE DISTRICT	COUNTY	CONTROL No.	SECTION No.	JOB No.	SHEET No.	
CHECKED: JDH	PHARR	HIDALGO	0255	08	091	386	

i:\22322g\cadd\sheets\roadway\ramps\281rps14.dgn

NAME
01:28:12 PM
06/23/2003

Curve RS16-1

P.I. Station		16632+60.13
Delta	=	4° 00' 09.95" (LT)
Degree	=	0° 57' 17.75"
Tangent	=	209.67
Length	=	419.17
Radius	=	6,000.00
External	=	3.66
Long Chord	=	419.08
Mid. Ord.	=	3.66
P.C. Station		16630+50.46
P.T. Station		16634+69.63

LEGEND:

- MC - MOUNTABLE CONC CURB
- BC - BARRIER CONC CURB
- MCG - MOUNTABLE CONC CURB & GUTTER
- BCG - BARRIER CONC CURB & GUTTER
- RW - RETAINING WALL
- RR - PROP CONC RIPRAP
- SGT - SINGLE GUARD RAIL TERMINAL
- MBGF - METAL BEAM GUARD FENCE
- NBFR - NORTHBOUND FRONTAGE ROAD
- SBFR - SOUTHBOUND FRONTAGE ROAD
- NBML - NORTHBOUND MAINLANES
- SBML - SOUTHBOUND MAINLANES
- PROP DITCH
- DEL ASM TY B (D-SW)
- OBJ MRK ASM TY 3 (OM-3R)

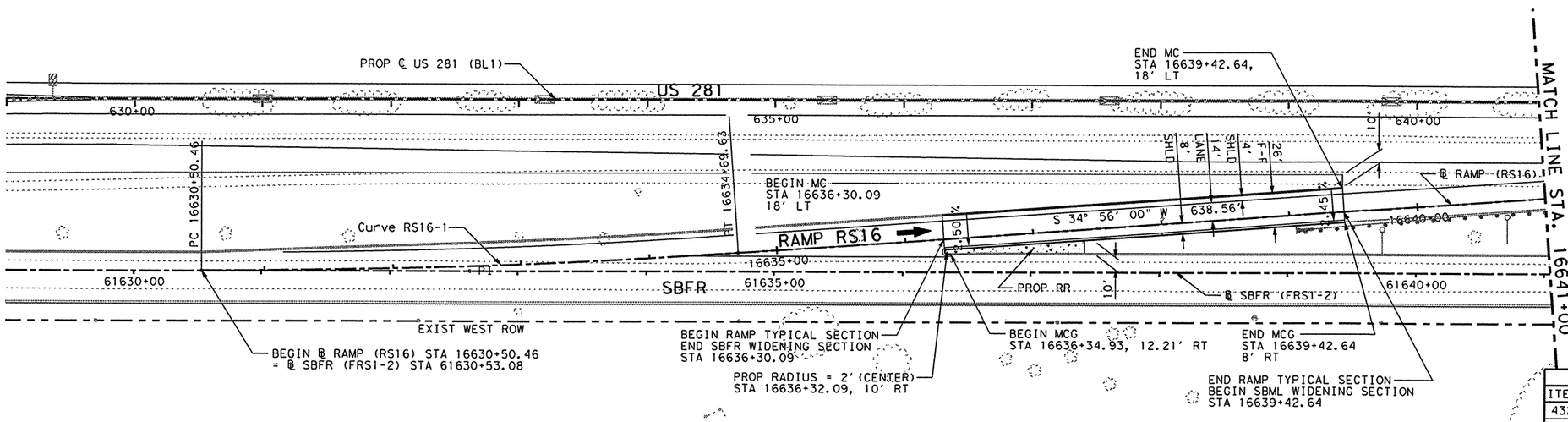

✳ RAMP "RS16" PROFILE SHALL MATCH THE SOUTHBOUND FRONTAGE ROAD PROFILE PROJECTED AT THE DESIGN CROSS SLOPE AND ADJUSTED FOR GORE CROSS SLOPE TRANSITION AS SHOWN ON GORE NOSE DETAIL SHEET.

▲ RAMP "RS16" PROFILE SHALL MATCH THE MAINLANES PROFILE PROJECTED AT THE DESIGN CROSS SLOPE AND ADJUSTED FOR GORE CROSS SLOPE TRANSITION AS SHOWN ON GORE NOSE DETAIL SHEET.

△ B.M. & HORIZONTAL DATA
BM # US 281-23
ELEV = 98.73
STA = 636+10.30, 172.95' LT
3 1/4" TXDOT ALUMINUM DISK

SHEET TOTALS

ITEM	EST.		UNIT	DESCRIPTION
432	9		CY	RIPRAP (CONC) (CL B) (4 IN)
529	313		LF	CONC CURB (TY A) (MOUNTABLE)
529	320		LF	CONC C & G (TY A) (MOUNTABLE)

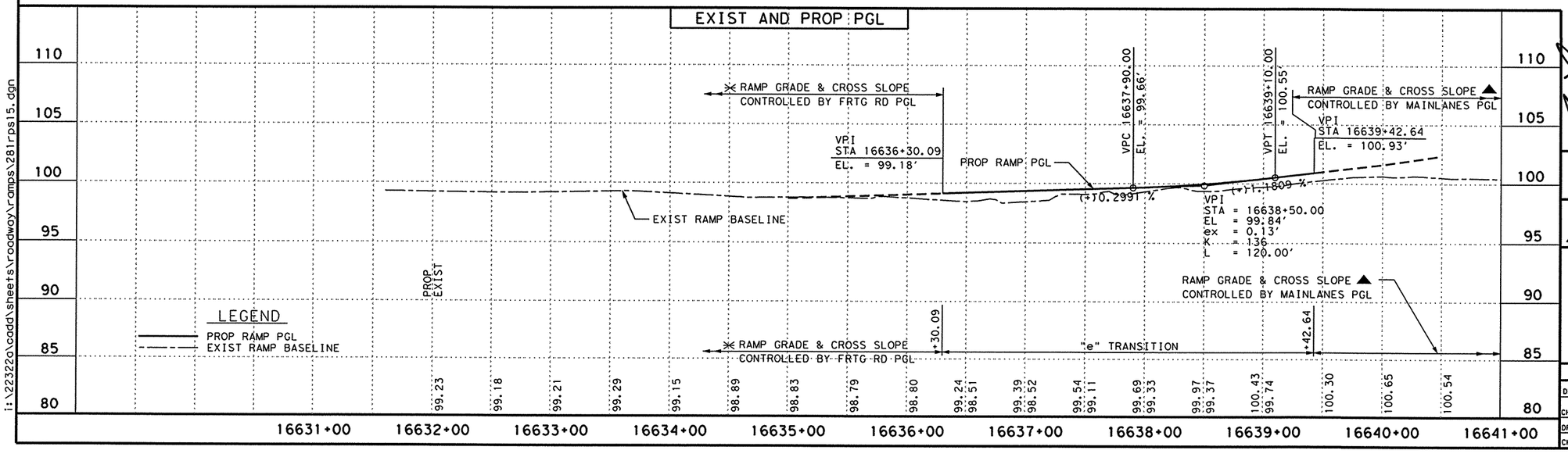

THE SEAL APPEARING ON THIS DOCUMENT WAS AUTHORIZED BY JAIME AGUILAR, P.E. 87606 ON 06/23/2003.

THE SEAL APPEARING ON THIS DOCUMENT WAS AUTHORIZED BY PHAISARN CHATANAPHOL, P.E. 89252 ON 06/23/2003.

STATE OF TEXAS · JAIME AGUILAR · 87606 · REGISTERED PROFESSIONAL ENGINEER

STATE OF TEXAS · PHAISARN CHATANAPHOL · 89252 · REGISTERED PROFESSIONAL ENGINEER

Parsons Brinckerhoff Quade & Douglas Inc.

Texas Department of Transportation

© 2003 by TxDOT

US 281
RAMP "RS16"
PLAN & PROFILE
ENTRANCE RAMP

PLAN 1"= 100' HORIZ
PROFILE 1"= 10' VERT

SHEET 1 OF 2 — 281RPS15.DGN

DESIGNED: JA	FED. RD DIV. No.	STATE	FEDERAL AID PROJECT No.	HIGHWAY No.
CHECKED: JP	6	TEXAS		US 281

DRAWN:	STATE DISTRICT	COUNTY	CONTROL No.	SECTION No.	JOB No.	SHEET No.
CHECKED: JDH	PHARR	HIDALGO	0255	08	091	387

i:\22322e\cadd\sheets\roadway\ramps\281rps15.dgn

NAME
01:28:30 PM
06/23/2003

Curve RS16-2

P.I. Station		16641+79.56
Delta	=	2° 51' 15.40" (RT)
Degree	=	2° 00' 00.00"
Tangent	=	71.37
Length	=	142.71
Radius	=	2,864.79
External	=	0.89
Long Chord	=	142.70
Mid. Ord.	=	0.89
P.C. Station		16641+08.19
P.T. Station		16642+50.90

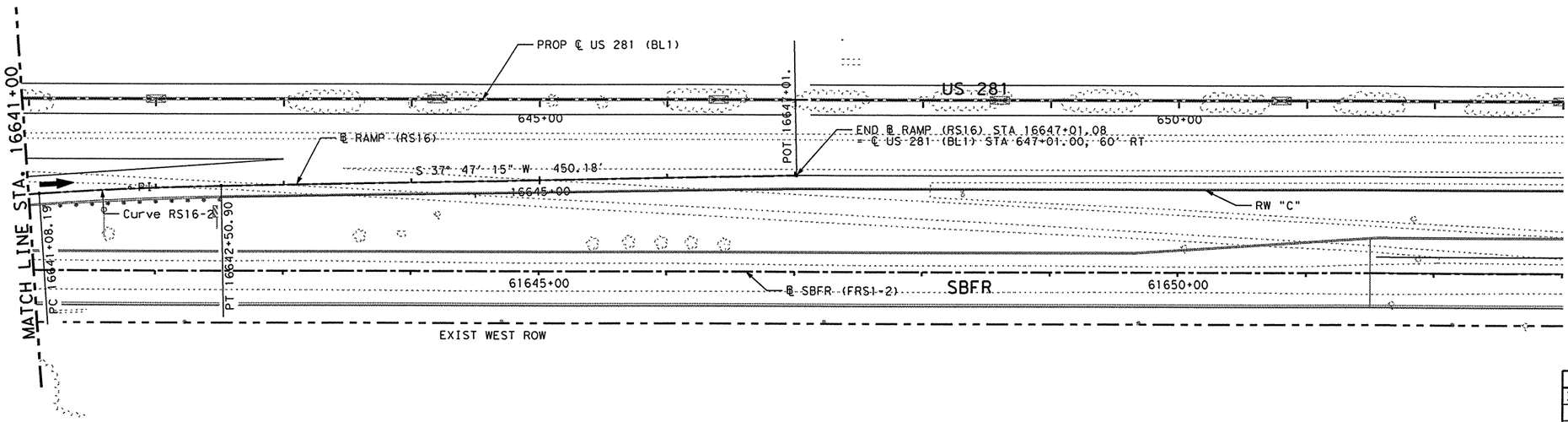

LEGEND:

MC	- MOUNTABLE CONC CURB
BC	- BARRIER CONC CURB
MCG	- MOUNTABLE CONC CURB & GUTTER
BCG	- BARRIER CONC CURB & GUTTER
RW	- RETAINING WALL
RR	- PROP CONC RIPRAP
SGT	- SINGLE GUARD RAIL TERMINAL
MBGF	- METAL BEAM GUARD FENCE
NBFR	- NORTHBOUND FRONTAGE ROAD
SBFR	- SOUTHBOUND FRONTAGE ROAD
NBML	- NORTHBOUND MAINLANES
SBML	- SOUTHBOUND MAINLANES
···→···	- PROP DITCH
—o—	- DEL ASM TY B (D-SW)
—▨—	- OBJ MRK ASM TY 3 (OM-3R)

▲ RAMP "RS16" PROFILE SHALL MATCH THE MAINLANES PROFILE PROJECTED AT THE DESIGN CROSS SLOPE AND ADJUSTED FOR GORE CROSS SLOPE TRANSITION AS SHOWN ON GORE NOSE DETAIL SHEET.

△ B.M. & HORIZONTAL DATA
BM # US 281-22
ELEV = 98.54
STA = 646+08.07, 171.87' LT
3 1/4" TXDOT ALUMINUM DISK

SHEET TOTALS

ITEM	EST.	FINAL	UNIT	DESCRIPTION
				NO PAY QUANTITIES THIS SHEET

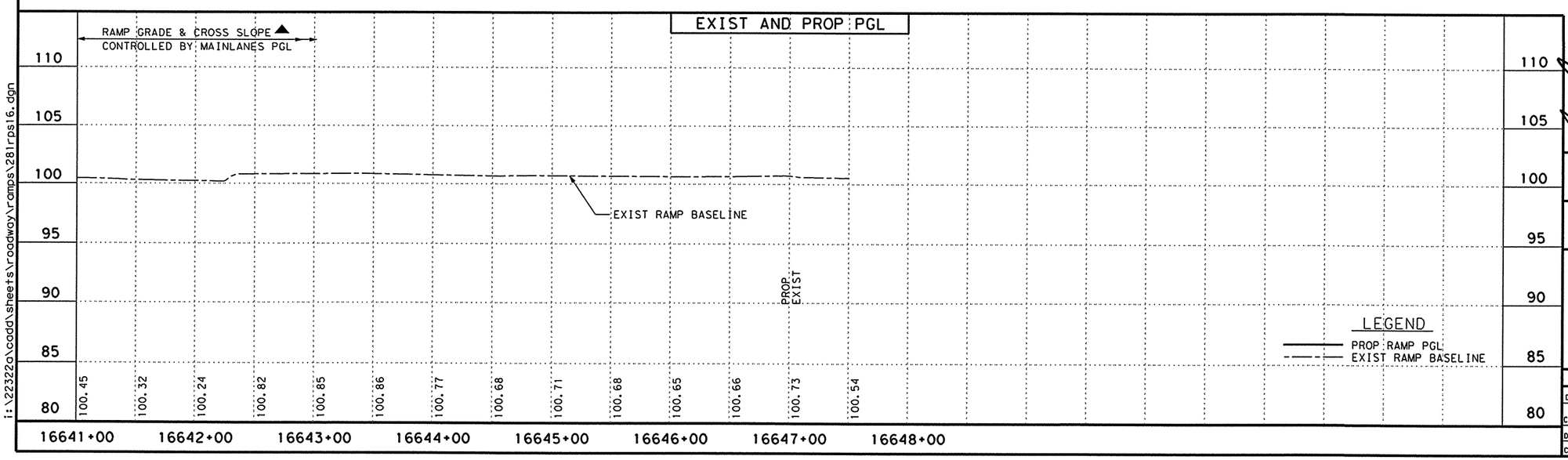

THE SEAL APPEARING ON THIS DOCUMENT WAS AUTHORIZED BY JAIME AGUILAR, P.E. 87606 ON 06/23/2003.

THE SEAL APPEARING ON THIS DOCUMENT WAS AUTHORIZED BY PHAISARN CWATANAPHOL, P.E. 89252 ON 06/23/2003.

STATE OF TEXAS
JAIME AGUILAR
87606
REGISTERED PROFESSIONAL ENGINEER

STATE OF TEXAS
PHAISARN CWATANAPHOL
89252
REGISTERED PROFESSIONAL ENGINEER

Parsons Brinckerhoff Quade & Douglas Inc.

Texas Department of Transportation

© 2003 by TxDOT

US 281
RAMP "RS16"
PLAN & PROFILE
ENTRANCE RAMP

PLAN 1"= 100' HORIZ
PROFILE 1"= 10' VERT

SHEET 2 OF 2 | 281RPS16.DGN

DESIGNED: JA	FED. RD DIV. No.	STATE	FEDERAL AID PROJECT No.	HIGHWAY No.
CHECKED: JP	6	TEXAS		US 281

DRAWN:	STATE DISTRICT	COUNTY	CONTROL No.	SECTION No.	JOB No.	SHEET No.
CHECKED: JDH	PHARR	HIDALGO	0255	08	091	388

i:\22322a\coddi\sheets\roadway\ramps\281rps16.dgn

NAME
01:28:48 PM
06/23/2003

Curve RS18-1

P.I. Station		18612+43.31
Delta	=	4° 40′ 42.00" (RT)
Degree	=	2° 00′ 00.00"
Tangent	=	117.02
Length	=	233.92
Radius	=	2,864.79
External	=	2.39
Long Chord	=	233.85
Mid. Ord.	=	2.39
P.C. Station		18611+26.29
P.T. Station		18613+60.21

LEGEND:

- MC - MOUNTABLE CONC CURB
- BC - BARRIER CONC CURB
- MCG - MOUNTABLE CONC CURB & GUTTER
- BCG - BARRIER CONC CURB & GUTTER
- RW - RETAINING WALL
- RR - PROP CONC RIPRAP
- SGT - SINGLE GUARD RAIL TERMINAL
- MBGF - METAL BEAM GUARD FENCE
- NBFR - NORTHBOUND FRONTAGE ROAD
- SBFR - SOUTHBOUND FRONTAGE ROAD
- NBML - NORTHBOUND MAINLANES
- SBML - SOUTHBOUND MAINLANES
- PROP DITCH
- DEL ASM TY B (D-SW)
- OBJ MRK ASM TY 3 (OM-3R)

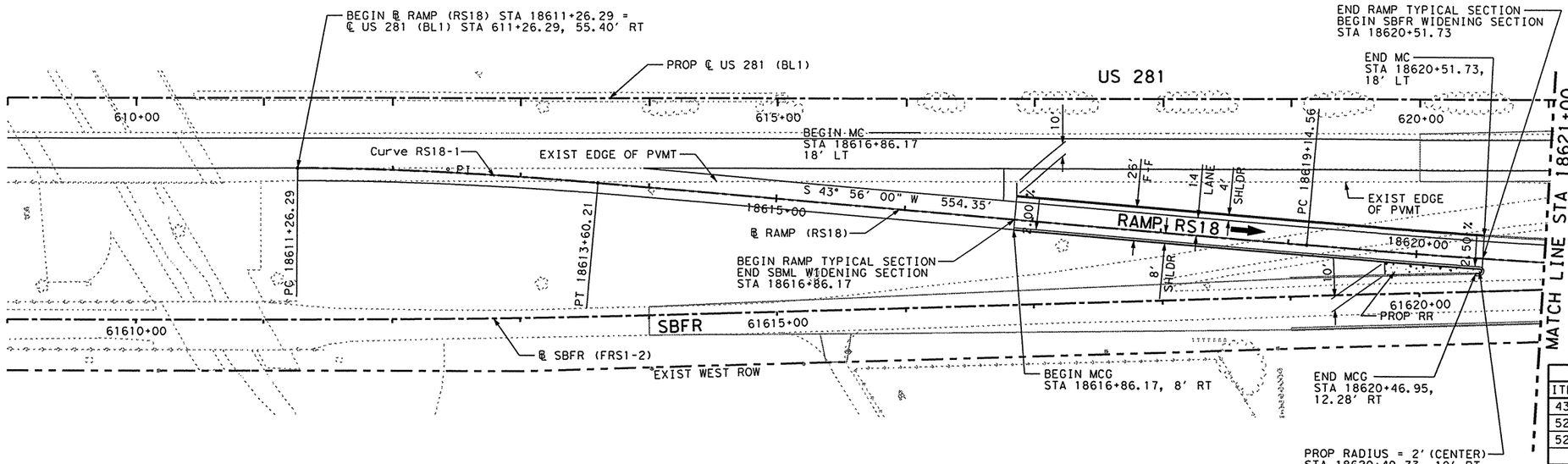

▲ RAMP "RS18" SHALL MATCH THE EXISTING SOUTHBOUND MAINLANES PROFILE AND CROSS SLOPE AND ADJUSTED FOR GORE CROSS SLOPE TRANSITION AS SHOWN ON GORE NOSE DETAIL SHEET.

⋇ RAMP "RS18" PROFILE SHALL MATCH THE SOUTHBOUND FRONTAGE ROAD PROFILE PROJECTED AT THE DESIGN CROSS SLOPE AND ADJUSTED FOR GORE CROSS SLOPE TRANSITION AS SHOWN ON GORE NOSE DETAIL SHEET.

⚠ B.M. & HORIZONTAL DATA
BM # US 281-25
ELEV = 98.54
STA = 616+12.65, 199.63′ LT
3 1/4" TXDOT ALUMINUM DISK

SHEET TOTALS

ITEM	EST.		UNIT	DESCRIPTION
432	6		CY	RIPRAP (CONC) (CL B) (4 IN)
529	366		LF	CONC CURB (TY A) (MOUNTABLE)
529	373		LF	CONC C & G (TY A) (MOUNTABLE)

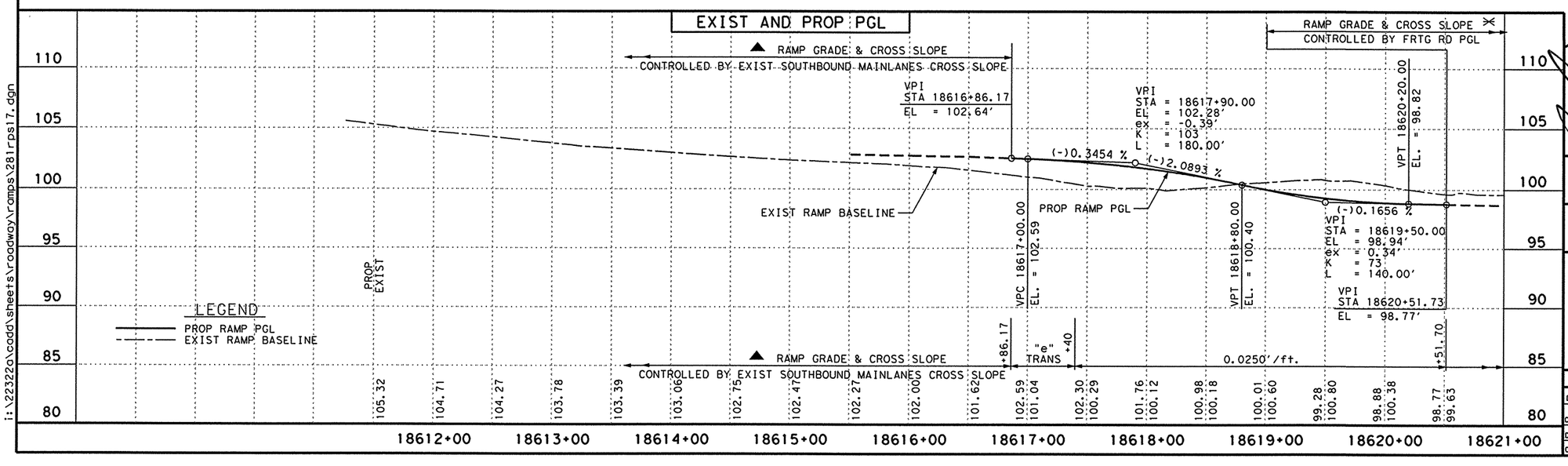

THE SEAL APPEARING ON THIS DOCUMENT WAS AUTHORIZED BY JAIME AGUILAR, P.E. 87606 ON 06/23/2003.

THE SEAL APPEARING ON THIS DOCUMENT WAS AUTHORIZED BY PHAISARN CWATANAPHOL, P.E. 89252 ON 06/23/2003.

STATE OF TEXAS — JAIME AGUILAR — 87606 — REGISTERED PROFESSIONAL ENGINEER

STATE OF TEXAS — PHAISARN CWATANAPHOL — 89252 — REGISTERED PROFESSIONAL ENGINEER

Parsons Brinckerhoff Quade & Douglas Inc.

Texas Department of Transportation

© 2003 by TxDOT

US 281
RAMP "RS18"
PLAN & PROFILE
EXIT RAMP

PLAN 1"= 100′ HORIZ
PROFILE 1"= 10′ VERT

SHEET 1 OF 2 — 281RPS17.DGN

DESIGNED: JA	FED. RD DIV. No.	STATE	FEDERAL AID PROJECT No.			HIGHWAY No.
CHECKED: JP	6	TEXAS				US 281
DRAWN:	STATE DISTRICT	COUNTY	CONTROL No.	SECTION No.	JOB No.	SHEET No.
CHECKED: JDH	PHARR	HIDALGO	0255	08	091	389

i:\22322o\cadd\sheets\roadway\ramps\281rps17.dgn

NAME
01:29:05 PM
06/23/2003

Curve RS18-2

P.I. Station		18622+30.85
Delta	=	6° 02′ 06.53" (LT)
Degree	=	0° 57′ 17.75"
Tangent	=	316.29
Length	=	632.00
Radius	=	6,000.00
External	=	8.33
Long Chord	=	631.71
Mid. Ord.	=	8.32
P.C. Station		18619+14.56
P.T. Station		18625+46.56

LEGEND:

- MC - MOUNTABLE CONC CURB
- BC - BARRIER CONC CURB
- MCG - MOUNTABLE CONC CURB & GUTTER
- BCG - BARRIER CONC CURB & GUTTER
- RW - RETAINING WALL
- RR - PROP CONC RIPRAP
- SGT - SINGLE GUARD RAIL TERMINAL
- MBGF - METAL BEAM GUARD FENCE
- NBFR - NORTHBOUND FRONTAGE ROAD
- SBFR - SOUTHBOUND FRONTAGE ROAD
- NBML - NORTHBOUND MAINLANES
- SBML - SOUTHBOUND MAINLANES
- PROP DITCH
- DEL ASM TY B (D-SW)
- OBJ MRK ASM TY 3 (OM-3R)

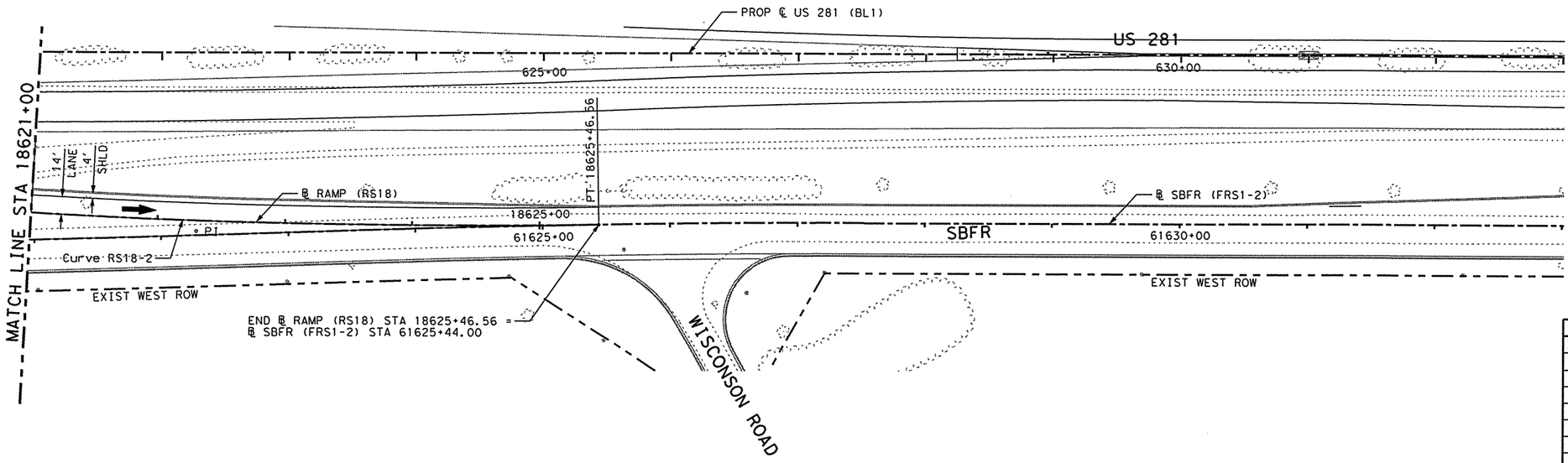

⋇ RAMP "RS18" PROFILE SHALL MATCH THE SOUTHBOUND FRONTAGE ROAD PROFILE PROJECTED AT THE DESIGN CROSS SLOPE AND ADJUSTED FOR GORE CROSS SLOPE TRANSITION AS SHOWN ON GORE NOSE DETAIL SHEET.

△ B.M. & HORIZONTAL DATA
BM # US 281-24
ELEV = 98.94
STA = 626+11.32, 171.49′ LT
3 1/4" TXDOT ALUMINUM DISK

SHEET TOTALS

ITEM	EST.	FINAL	UNIT	DESCRIPTION
				NO PAY QUANTITIES THIS SHEET

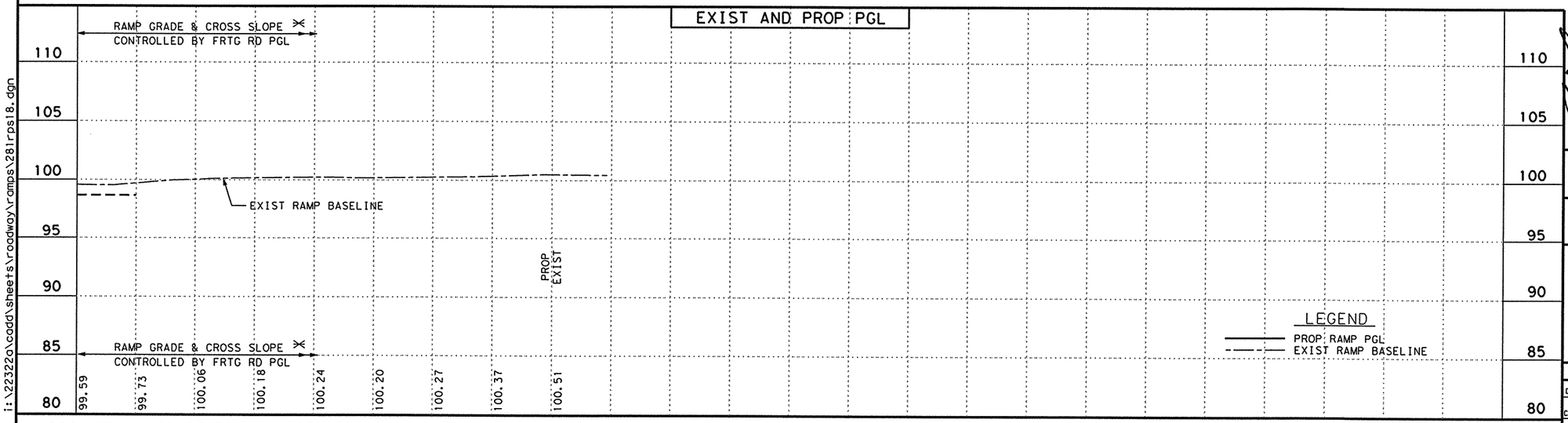

THE SEAL APPEARING ON THIS DOCUMENT WAS AUTHORIZED BY JAIME AGUILAR, P.E. 87606 ON 06/23/2003.

THE SEAL APPEARING ON THIS DOCUMENT WAS AUTHORIZED BY PHAISARN CWATANAPHOL, P.E. 89252 ON 06/23/2003.

STATE OF TEXAS · JAIME AGUILAR · 87606 · REGISTERED PROFESSIONAL ENGINEER

STATE OF TEXAS · PHAISARN CWATANAPHOL · 89252 · REGISTERED PROFESSIONAL ENGINEER

Parsons Brinckerhoff Quade & Douglas Inc.

Texas Department of Transportation

© 2003 by TxDOT

US 281
RAMP "RS18"
PLAN & PROFILE
EXIT RAMP

PLAN 1"= 100′ HORIZ
PROFILE 1"= 10′ VERT

SHEET 2 OF 2 | 281RPS18.DGN

DESIGNED: JA	FED. RD DIV. NO.	STATE	FEDERAL AID PROJECT No.				HIGHWAY No.
CHECKED: JP	6	TEXAS					US 281
DRAWN:	STATE DISTRICT	COUNTY	CONTROL No.	SECTION No.	JOB No.	SHEET No.	
CHECKED: JDH	PHARR	HIDALGO	0255	08	091	390	

i:\22322o\cadd\sheets\roadway\ramps\281rps18.dgn

NAME
10:14:55 AM
06/26/2003
I:\22320\CADD\Sheets\Roadway\SIDE STREET\281sspo1.dgn

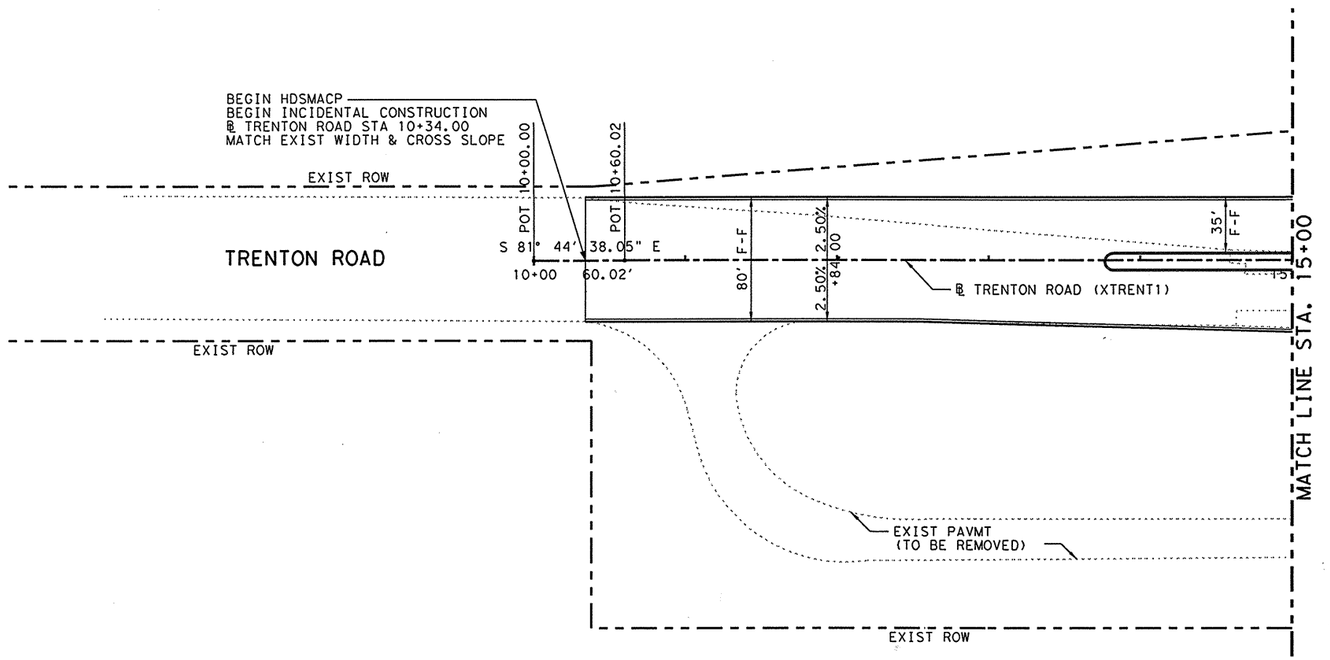

LEGEND:

MC	- MOUNTABLE CONC CURB
BC	- BARRIER CONC CURB
MCG	- MOUNTABLE CONC CURB & GUTTER
BCG	- BARRIER CONC CURB & GUTTER
RW	- RETAINING WALL
RR	- RIP RAP
SGT	- SINGLE GUARD RAIL TERMINAL
SW	- SIDEWALK
WCR	- WHEEL CHAIR RAMP
VG	- 4' VALLEY GUTTER
MBGF	- METAL BEAM GUARD FENCE
	- PROP DRIVEWAY
	- PROP CONC DRIVEWAY
1	- WHEELCHAIR RAMP(TY 1)
4	- WHEELCHAIR RAMP(TY 4)

△ B.M. & HORIZONTAL DATA
BM # US 281-21
ELEV = 98.66
STA = 655+88.78, 173.20' LT
3 1/4" TXDOT ALUMINUM DISK

SHEET TOTALS

ITEM	EST.	FINAL	UNIT	DESCRIPTION
				NO PAY QUANTITIES THIS SHEET

EXIST AND PROP PGL

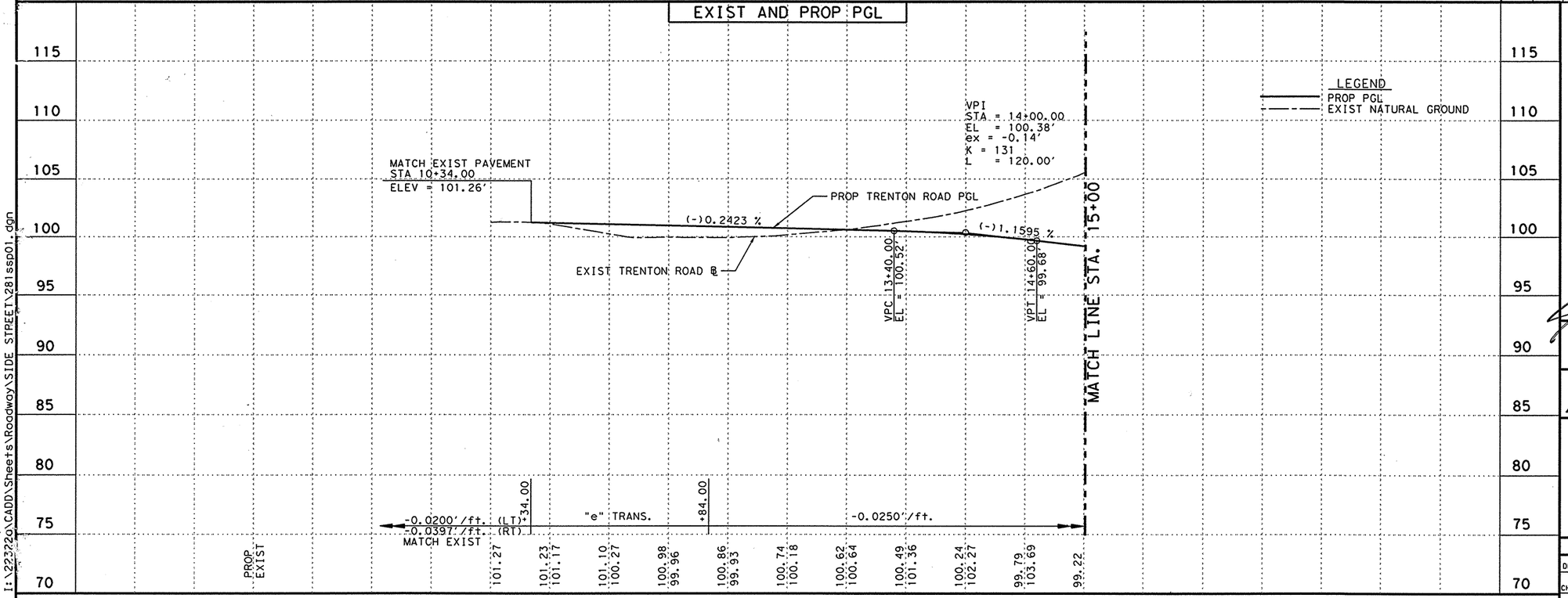

LEGEND
PROP PGL
EXIST NATURAL GROUND

THE SEAL APPEARING ON THIS DOCUMENT WAS AUTHORIZED BY JAIME AGUILAR, P.E. 87606 ON 06/26/2003.

THE SEAL APPEARING ON THIS DOCUMENT WAS AUTHORIZED BY PHAISARN CWATANAPHOL, P.E. 89252 ON 06/26/2003.

STATE OF TEXAS
JAIME AGUILAR
87606
REGISTERED
PROFESSIONAL ENGINEER

STATE OF TEXAS
PHAISARN CWATANAPHOL
89252
REGISTERED
PROFESSIONAL ENGINEER

PB Parsons Brinckerhoff Quade & Douglas Inc.

Texas Department of Transportation
© 2003 by TxDOT

US 281
PLAN & PROFILE
TRENTON ROAD INTERSECTION

STA. 10+00 "XTRENT1" TO
STA. 15+00 "XTRENT1"

PLAN 1"= 100' HORIZ
PROFILE 1"= 10' VERT

SHEET 1 OF 3 | 281SSP01.DGN

DESIGNED: TT	FED. RD DIV. No.	STATE	FEDERAL AID PROJECT No.			HIGHWAY No.	
CHECKED: DM	6	TEXAS				US 281	
DRAWN:	STATE DISTRICT	COUNTY	CONTROL No.	SECTION No.	JOB No.	SHEET No.	
CHECKED: DM	PHARR	HIDALGO	0255	08	091	391	

NAME
10:15:17 AM
06/26/2003

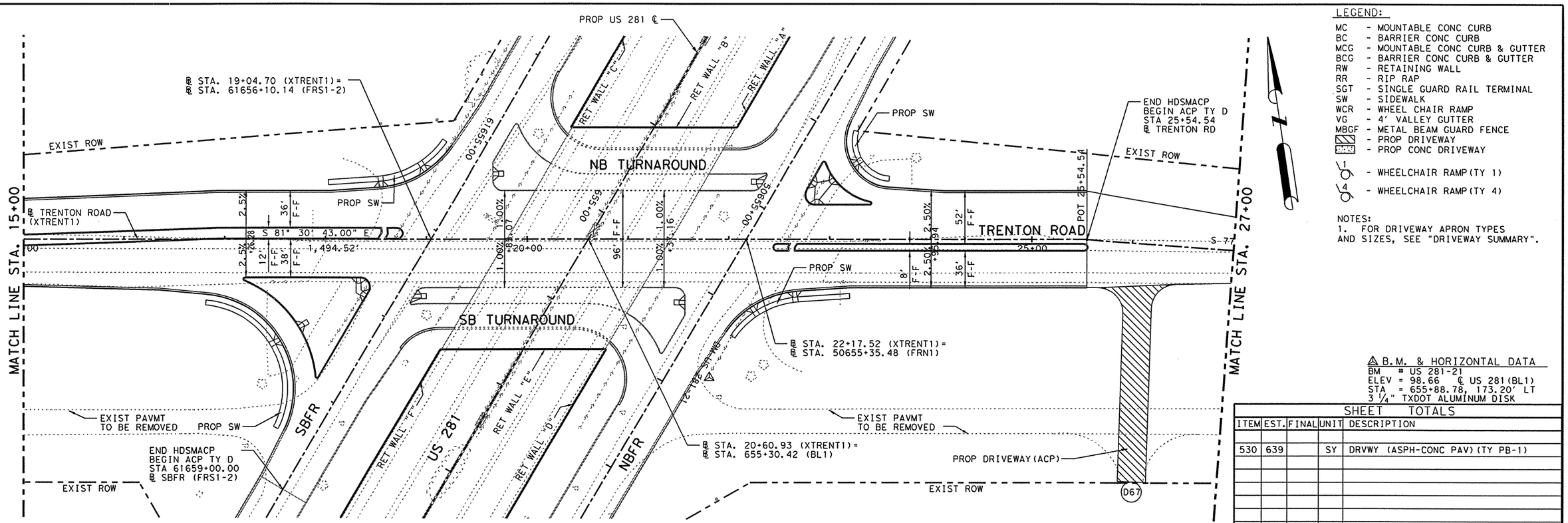

△ B.M. & HORIZONTAL DATA
BM # US 281-21
ELEV = 98.66 ℄ US 281 (BL1)
STA = 655+88.78, 173.20' LT
3 1/4" TXDOT ALUMINUM DISK

SHEET TOTALS

ITEM	EST.	FINAL	UNIT	DESCRIPTION
530	639		SY	DRVWY (ASPH-CONC PAV) (TY PB-1)

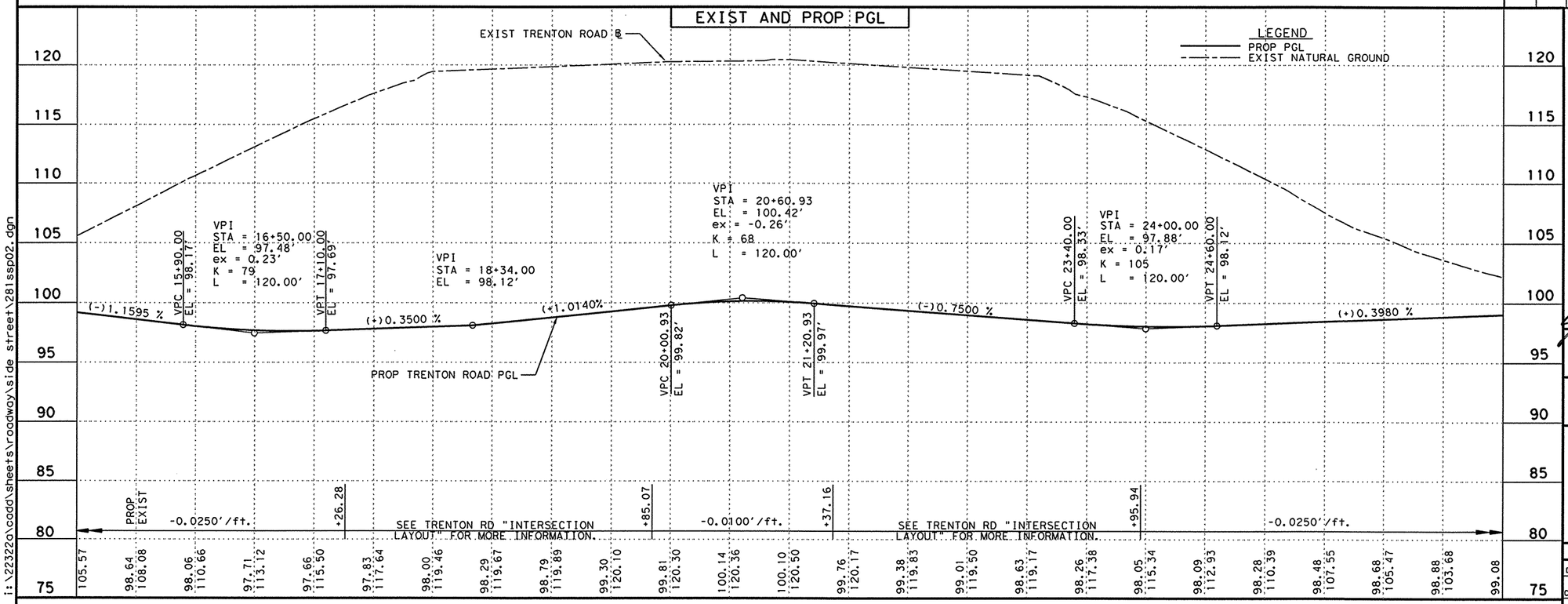

THE SEAL APPEARING ON THIS DOCUMENT WAS AUTHORIZED BY JAIME AGUILAR, P.E. 87606 ON 06/26/2003.

STATE OF TEXAS · JAIME AGUILAR · 87606 · REGISTERED PROFESSIONAL ENGINEER

THE SEAL APPEARING ON THIS DOCUMENT WAS AUTHORIZED BY PHAISARN CWATANAPHOL, P.E. 89252 ON 06/26/2003.

STATE OF TEXAS · PHAISARN CWATANAPHOL · 89252 · REGISTERED PROFESSIONAL ENGINEER

Parsons Brinckerhoff Quade & Douglas Inc.

Texas Department of Transportation

© 2003 by TxDOT

US 281
PLAN & PROFILE
TRENTON ROAD INTERSECTION

STA. 15+00 "XTRENT1" TO
STA. 27+00 "XTRENT1"

PLAN 1"= 100' HORIZ
PROFILE 1"= 10' VERT

SHEET 2 OF 3 | 281SSP02.DGN

DESIGNED: TT	FED. RD DIV. No.	STATE	FEDERAL AID PROJECT No.	HIGHWAY No.
CHECKED: DM	6	TEXAS		US 281

DRAWN:	STATE DISTRICT	COUNTY	CONTROL No.	SECTION No.	JOB No.	SHEET No.
CHECKED: DM	PHARR	HIDALGO	0255	08	091	392

i:\22320\coddi\sheets\roadway\side street\281ssp02.dgn

NAME
10:15:36 AM
06/26/2003

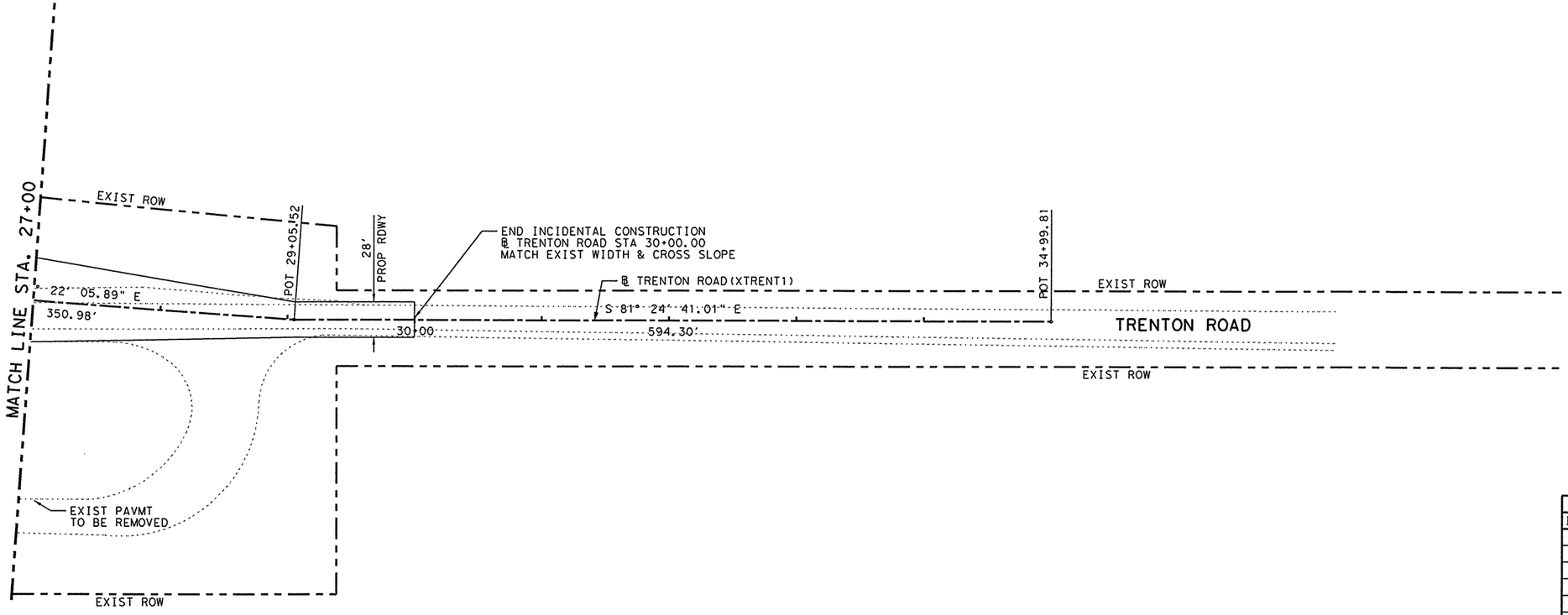

LEGEND:

MC	- MOUNTABLE CONC CURB
BC	- BARRIER CONC CURB
MCG	- MOUNTABLE CONC CURB & GUTTER
BCG	- BARRIER CONC CURB & GUTTER
RW	- RETAINING WALL
RR	- RIP RAP
SGT	- SINGLE GUARD RAIL TERMINAL
SW	- SIDEWALK
WCR	- WHEEL CHAIR RAMP
VG	- 4' VALLEY GUTTER
MBGF	- METAL BEAM GUARD FENCE
	- PROP DRIVEWAY
	- PROP CONC DRIVEWAY
1	- WHEELCHAIR RAMP(TY 1)
4	- WHEELCHAIR RAMP(TY 4)

⚠ B.M. & HORIZONTAL DATA
BM # US 281-21
ELEV = 98.66
STA = 655+88.78, 173.20' LT
3 1/4" TXDOT ALUMINUM DISK

SHEET TOTALS

ITEM	EST.	FINAL	UNIT	DESCRIPTION
				NO PAY QUANTITIES THIS SHEET

EXIST AND PROP PGL

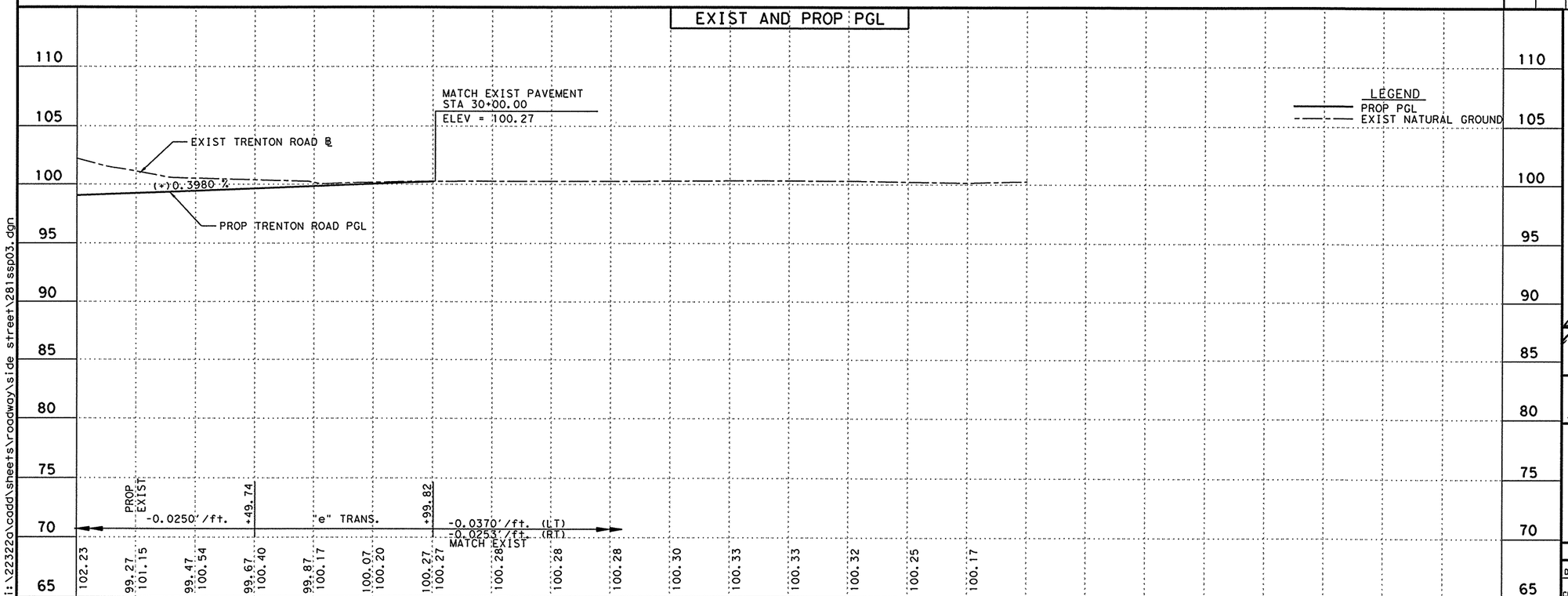

THE SEAL APPEARING ON THIS DOCUMENT WAS AUTHORIZED BY JAIME AGUILAR, P.E. 87606 ON 06/26/2003.

THE SEAL APPEARING ON THIS DOCUMENT WAS AUTHORIZED BY PHAISARN CWATANAPHOL, P.E. 89252 ON 06/26/2003.

STATE OF TEXAS
JAIME AGUILAR
87606
REGISTERED
PROFESSIONAL ENGINEER

STATE OF TEXAS
PHAISARN CWATANAPHOL
89252
REGISTERED
PROFESSIONAL ENGINEER

Parsons Brinckerhoff
Quade & Douglas Inc.

Texas Department of Transportation
© 2003 by TxDOT

US 281
PLAN & PROFILE
TRENTON ROAD INTERSECTION
STA. 27+00 "XTRENT1"
TO END

PLAN 1"= 100' HORIZ
PROFILE 1"= 10' VERT

SHEET 3 OF 3 | 281SSP03.DGN

DESIGNED: TT	FED. RD DIV. No.	STATE	FEDERAL AID PROJECT No.	HIGHWAY No.
CHECKED: DM	6	TEXAS		US 281

DRAWN:	STATE DISTRICT	COUNTY	CONTROL No.	SECTION No.	JOB No.	SHEET No.
CHECKED: DM	PHARR	HIDALGO	0255	08	091	393

i:\22322a\cadd\sheets\roadway\side street\281ssp03.dgn

NAME

10:22:48 AM

06/26/2003

Curve TTRENTN-1

P.I. Station		15+28.78
Delta	=	120° 26' 52.85" (LT)
Degree	=	111° 15' 14.19"
Tangent	=	90.01
Length	=	108.26
Radius	=	51.50
External	=	52.20
Long Chord	=	89.40
Mid. Ord.	=	25.92
P.C. Station		14+38.77
P.T. Station		15+47.03

Curve TTRENTN-2

P.I. Station		17+06.25
Delta	=	55° 46' 16.13" (LT)
Degree	=	123° 13' 00.23"
Tangent	=	24.61
Length	=	45.26
Radius	=	46.50
External	=	6.11
Long Chord	=	43.50
Mid. Ord.	=	5.40
P.C. Station		16+81.65
P.T. Station		17+26.91

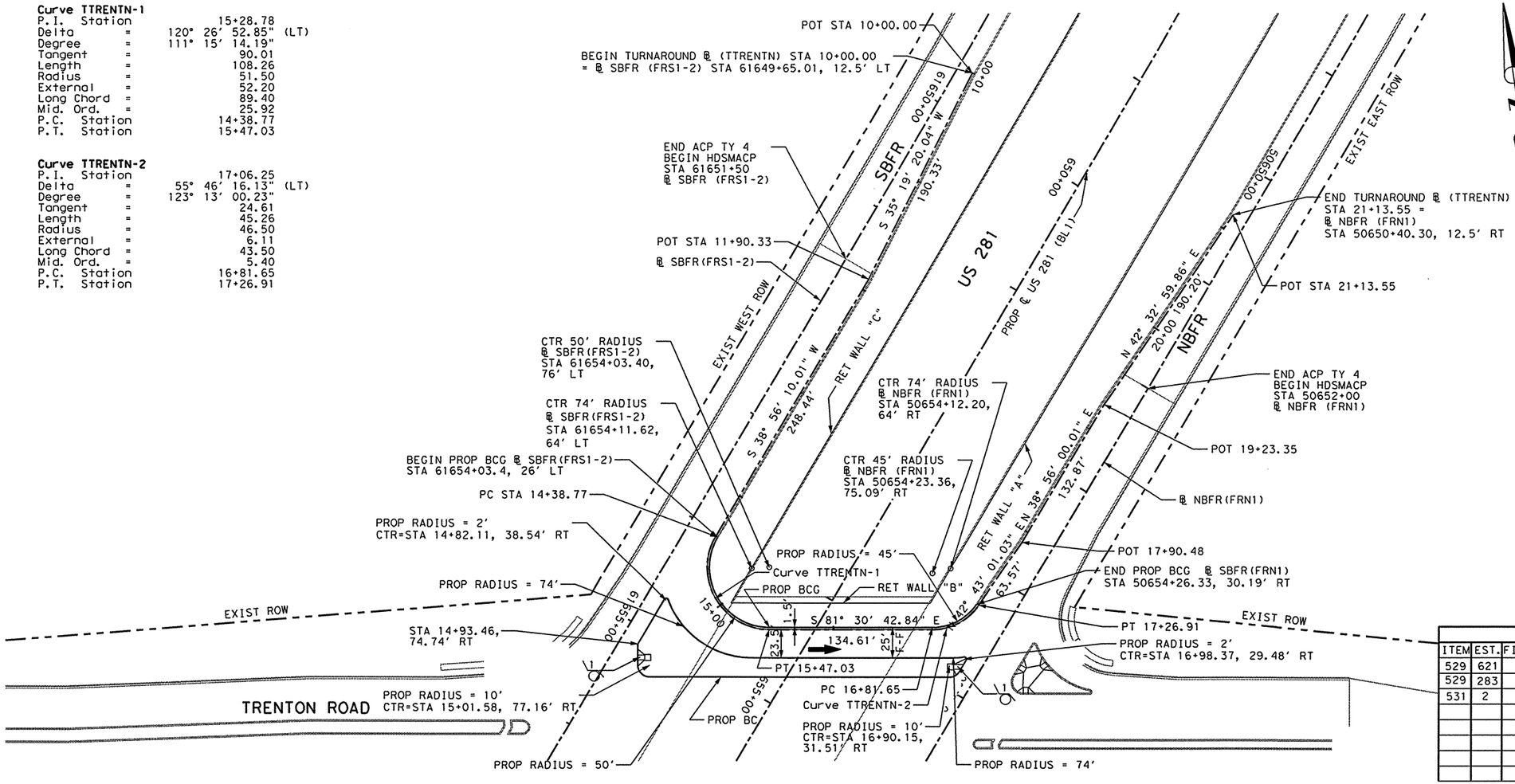

LEGEND:

- MC - MOUNTABLE CONC. CURB
- BC - BARRIER CONC. CURB
- MCG - MOUNTABLE CONC. CURB & GUTTER
- BCG - BARRIER CONC. CURB & GUTTER
- RW - RETAINING WALL
- RR - RIP RAP
- SGT - SINGLE GUARD RAIL TERMINAL
- SSCB - SINGLE SLOPE CONC. BARRIER
- SSTR - SINGLE SLOPE TRAFFIC RAILING
- SW - SIDEWALK
- WCR - WHEEL CHAIR RAMP
- VG - 4' VALLEY GUTTER
- MBGF - METAL BEAM GUARD FENCE
- ⊠ - CENTER OF 10' SSCB (TY.4)
- 1 - WHEELCHAIR RAMP (TY.1)
- 4 - WHEELCHAIR RAMP (TY.4)

⚠ B.M. & HORIZONTAL DATA

BM # US 281-21
ELEV = 98.66
STA = 655+88.78, 173.20' LT
3/4" TXDOT ALUMINUM DISK

SHEET TOTALS

ITEM	EST.	FINAL	UNIT	DESCRIPTION
529	621		LF	CONC CURB (TY A) (BARRIER)
529	283		LF	CONC C & G (TY A) (BARRIER)
531	2		EA	CONC SIDEWALK (WHEELCHAIR RAMP)

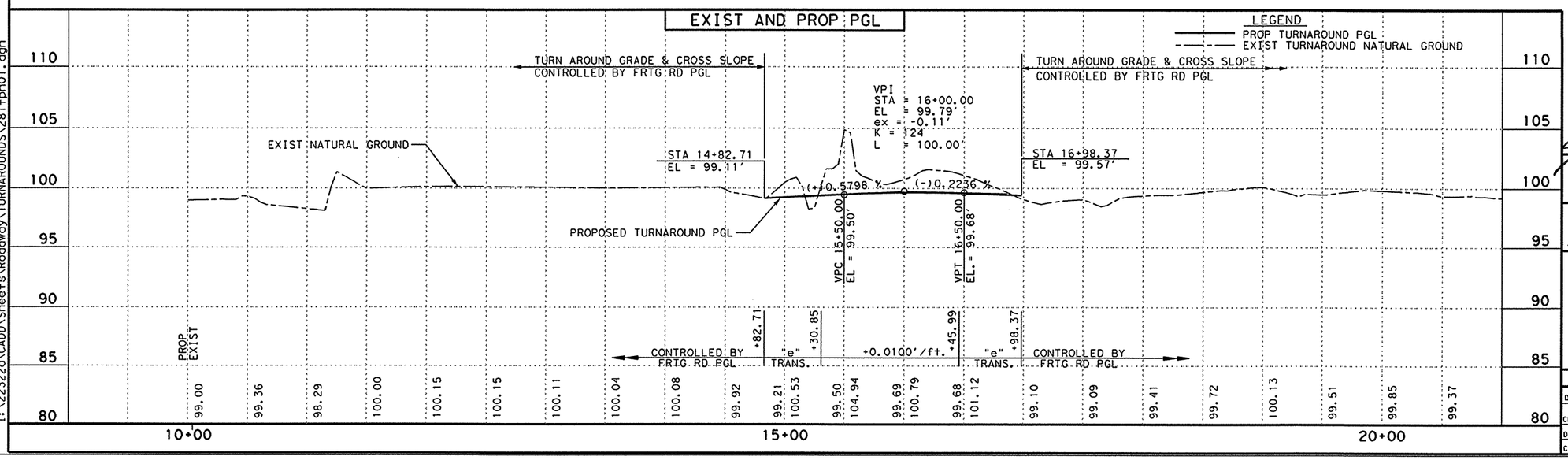

THE SEAL APPEARING ON THIS DOCUMENT WAS AUTHORIZED BY JAIME AGUILAR, P.E. 87606 ON 06/26/2003.

THE SEAL APPEARING ON THIS DOCUMENT WAS AUTHORIZED BY PHAISARN CHATANAPHOL, P.E. 89252 ON 06/26/2003.

STATE OF TEXAS — JAIME AGUILAR — 87606 — REGISTERED PROFESSIONAL ENGINEER

STATE OF TEXAS — PHAISARN CHATANAPHOL — 89252 — REGISTERED PROFESSIONAL ENGINEER

PB Parsons Brinckerhoff Quade & Douglas Inc.

Texas Department of Transportation

© 2003 by TxDOT

US 281
PLAN & PROFILE
NORTHBOUND TURN AROUND @ TRENTON ROAD

PLAN 1"= 100' HORIZ
PROFILE 1"= 10' VERT

SHEET 1 OF 1			281TPN01.DGN				
DESIGNED: JA	FED. RD DIV. No.	STATE	FEDERAL AID PROJECT No.			HIGHWAY No.	
CHECKED: JP	6	TEXAS				US 281	
DRAWN:	STATE DISTRICT	COUNTY	CONTROL No.	SECTION No.	JOB No.	SHEET No.	
CHECKED: JDH	PHARR	HIDALGO	0255	08	091	394	

I:\22322a\CADD\Sheets\Roadway\TURNAROUNDS\281tpn01.dgn

NAME
10:23:06 AM
06/26/2003

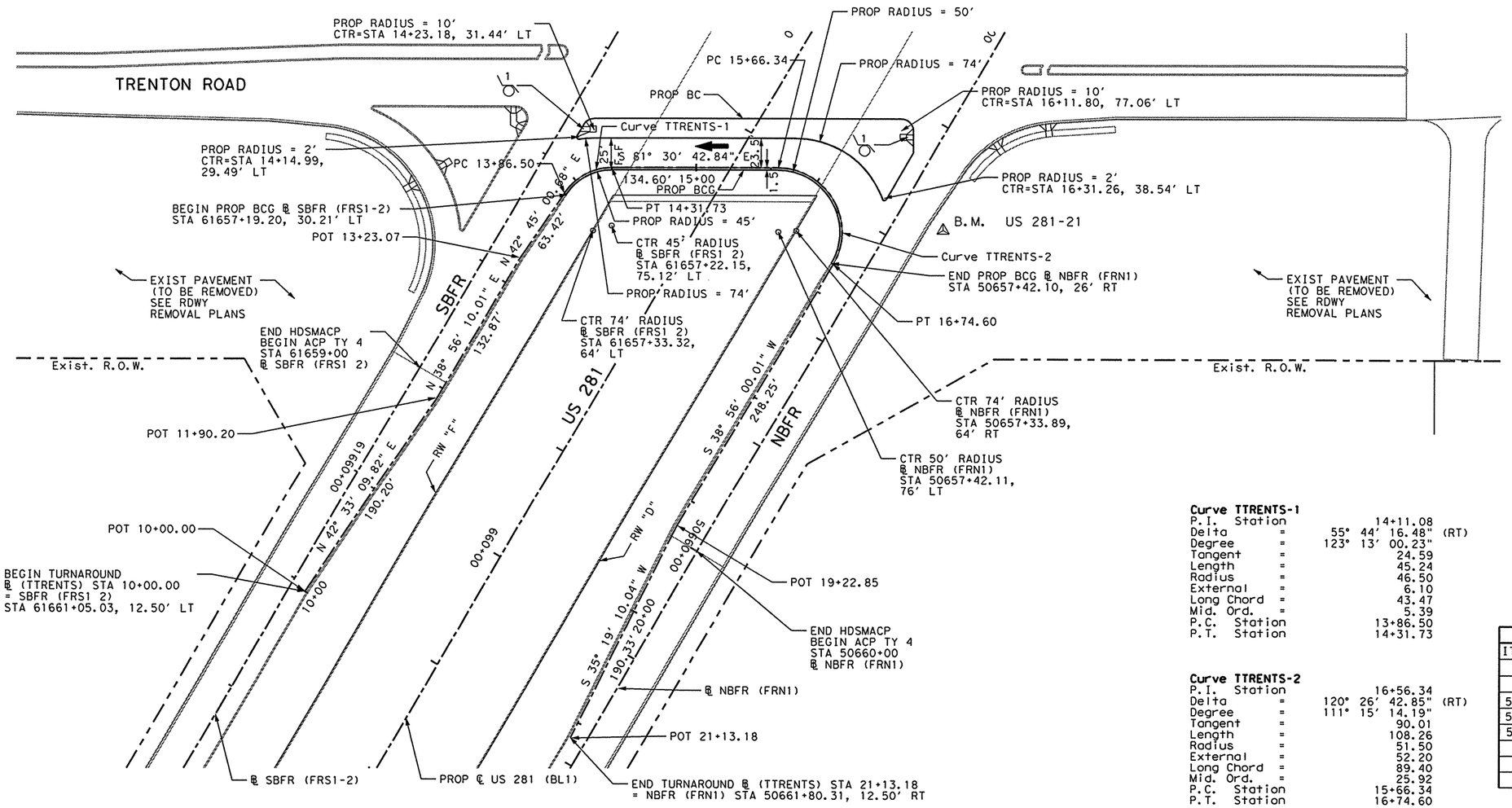

LEGEND:

- MC - MOUNTABLE CONC. CURB
- BC - BARRIER CONC. CURB
- MCG - MOUNTABLE CONC. CURB & GUTTER
- BCG - BARRIER CONC. CURB & GUTTER
- RW - RETAINING WALL
- RR - RIP RAP
- SGT - SINGLE GUARD RAIL TERMINAL
- SSCB - SINGLE SLOPE CONC. BARRIER
- SSTR - SINGLE SLOPE TRAFFIC RAILING
- SW - SIDEWALK
- WCR - WHEEL CHAIR RAMP
- VG - 4' VALLEY GUTTER
- MBGF - METAL BEAM GUARD FENCE
- ⊠ - CENTER OF 10' SSCB (TY.4)
- 1 - WHEELCHAIR RAMP (TY.1)
- 4 - WHEELCHAIR RAMP (TY.4)

Curve TTRENTS-1

P.I. Station		14+11.08
Delta	=	55° 44' 16.48" (RT)
Degree	=	123° 13' 00.23"
Tangent	=	24.59
Length	=	45.24
Radius	=	46.50
External	=	6.10
Long Chord	=	43.47
Mid. Ord.	=	5.39
P.C. Station		13+86.50
P.T. Station		14+31.73

Curve TTRENTS-2

P.I. Station		16+56.34
Delta	=	120° 26' 42.85" (RT)
Degree	=	111° 15' 14.19"
Tangent	=	90.01
Length	=	108.26
Radius	=	51.50
External	=	52.20
Long Chord	=	89.40
Mid. Ord.	=	25.92
P.C. Station		15+66.34
P.T. Station		16+74.60

B.M. & HORIZONTAL DATA
B.M. # US 281-21
ELEV. = 98.66
STA. = 655+88.78, 173.20 LT
3 1/4" TXDOT ALUMINUM DISK

SHEET TOTALS

ITEM	EST.	FINAL	UNIT	DESCRIPTION
529	621		LF	CONC CURB (TY A) (BARRIER)
529	283		LF	CONC C & G (TY A) (BARRIER)
531	2		EA	CONC SIDEWALK (WHEELCHAIR RAMP)

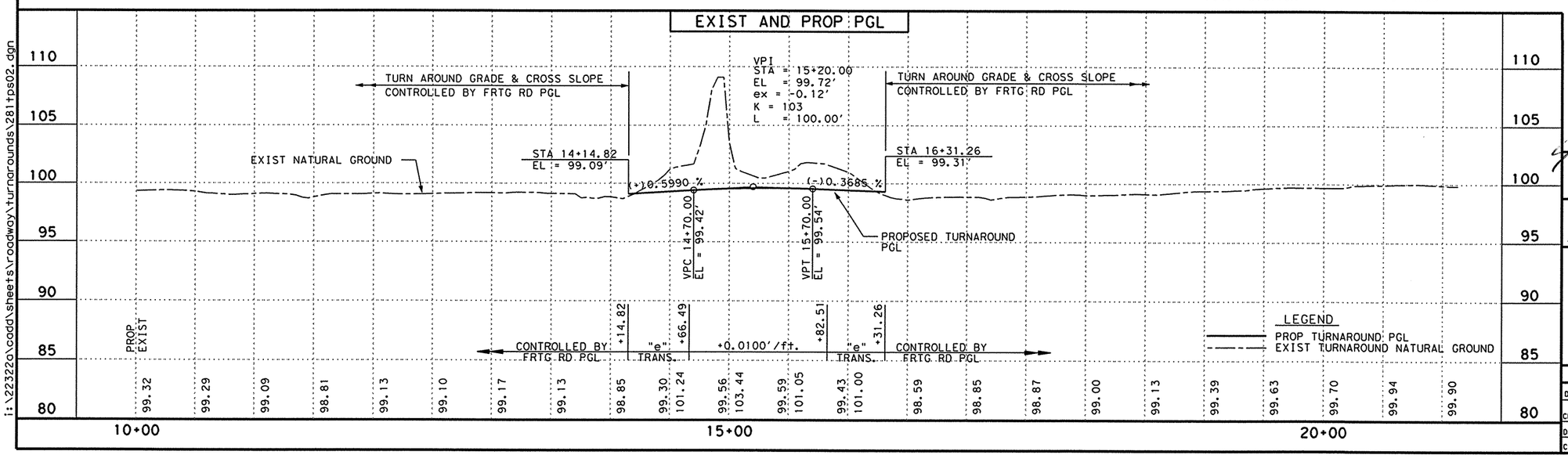

THE SEAL APPEARING ON THIS DOCUMENT WAS AUTHORIZED BY JAIME AGUILAR, P.E. 87606 ON 06/26/2003.

THE SEAL APPEARING ON THIS DOCUMENT WAS AUTHORIZED BY PHAISARN CWATANAPHOL, P.E. 89252 ON 06/26/2003.

STATE OF TEXAS · JAIME AGUILAR · 87606 · REGISTERED PROFESSIONAL ENGINEER

STATE OF TEXAS · PHAISARN CWATANAPHOL · 89252 · REGISTERED PROFESSIONAL ENGINEER

Parsons Brinckerhoff
Quade & Douglas Inc.

Texas Department of Transportation

© 2003 by TxDOT

US 281
PLAN & PROFILE
SOUTHBOUND TURNAROUND @ TRENTON ROAD

PLAN 1"= 100' HORIZ
PROFILE 1"= 10' VERT

SHEET 1 OF 1			281TPS02.DGN			
DESIGNED: JA	FED. RD DIV. NO.	STATE	FEDERAL AID PROJECT No.			HIGHWAY No.
CHECKED: JP	6	TEXAS				US 281
DRAWN:	STATE DISTRICT	COUNTY	CONTROL No.	SECTION No.	JOB No.	SHEET No.
CHECKED: JDH	PHARR	HIDALGO	0255	08	091	395

i:\22322o\cadd\sheets\roadway\turnarounds\281tps02.dgn

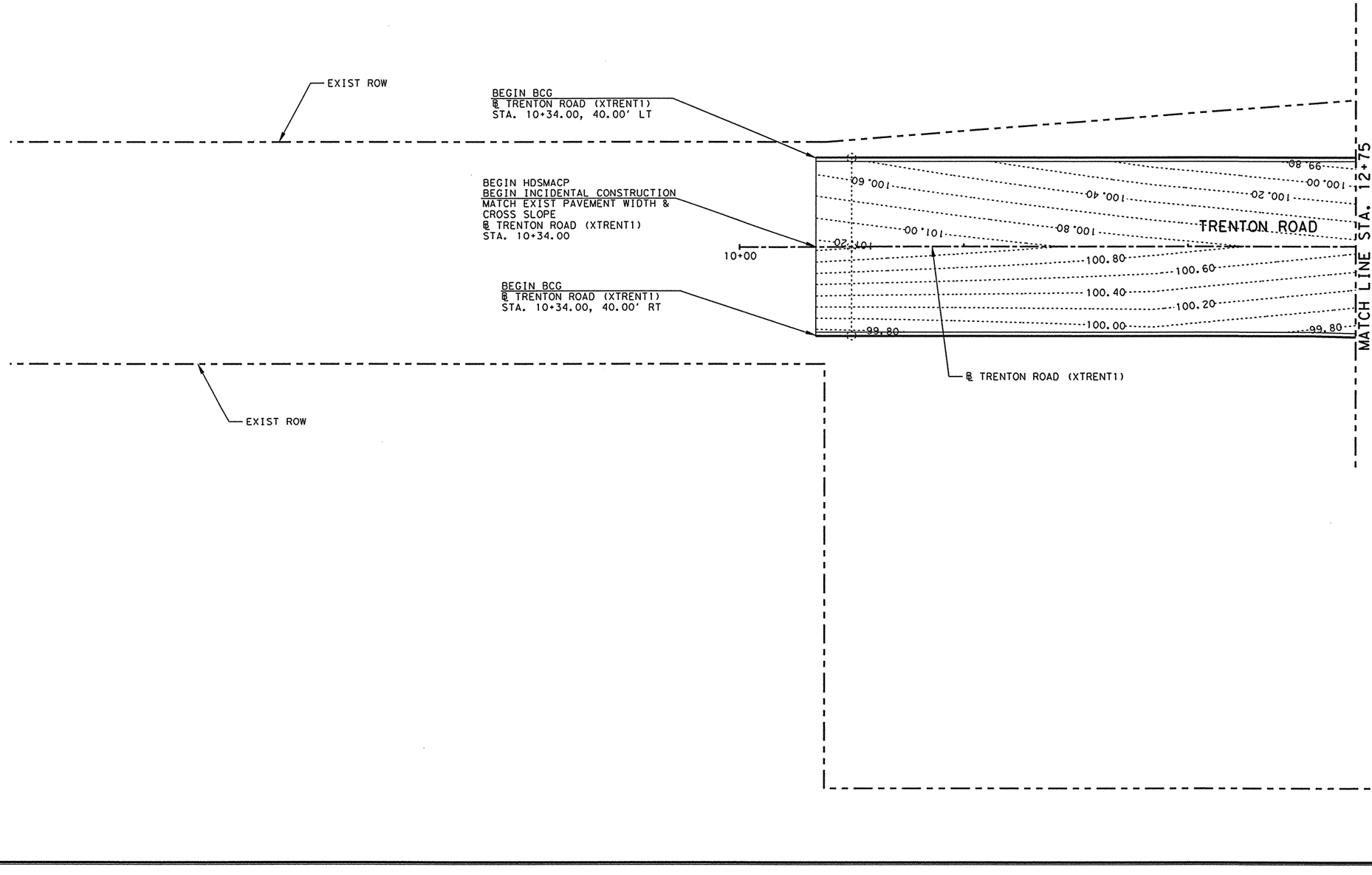

NOTES:

1. RADIUS MEASUREMENTS ARE TO THE FACE OF THE CURB. IF THERE IS NO CURB, MEASUREMENTS ARE TO THE EDGE OF PAVEMENT.

♿# - WHEELCHAIR RAMP (TY #)
SEE ROADWAY STANDARD "PEDESTRIAN FACILITIES" SHEETS 1 THROUGH 3 FOR MORE DETAILS.

SHEET TOTALS

ITEM	EST.	FINAL	UNIT	DESCRIPTION
529	482		LF	CONC C & G (TY A) (BARRIER)

THE SEAL APPEARING ON THIS DOCUMENT WAS AUTHORIZED BY JAIME AGUILAR, P.E. 87606 ON 06/26/2003.

THE SEAL APPEARING ON THIS DOCUMENT WAS AUTHORIZED BY PHAISARN CWATANAPHOL, P.E. 89252 ON 06/26/2003.

STATE OF TEXAS · JAIME AGUILAR · 87606 · REGISTERED PROFESSIONAL ENGINEER

STATE OF TEXAS · PHAISARN CWATANAPHOL · 89252 · REGISTERED PROFESSIONAL ENGINEER

Parsons Brinckerhoff Quade & Douglas Inc.

Texas Department of Transportation

© 2003 by TxDOT

INTERSECTION LAYOUTS
US 281
TRENTON ROAD
STA. 10+00 "XTRENT1" TO
STA. 12+75 "XTRENT1"

PLAN 1"= 50' HORIZ

SHEET 1 OF 5				281OFFSET01.DGN			
DESIGNED: PAF	FED. RD DIV. No.	STATE	FEDERAL AID PROJECT No.				HIGHWAY No.
CHECKED: JP	6	TEXAS					US 281
DRAWN: KTD	STATE DISTRICT	COUNTY	CONTROL No.	SECTION No.	JOB No.	SHEET No.	
CHECKED: AGM	PHARR	HIDALGO	0255	08	091	396	

NAME
10:28:37 AM
06/26/2003
i:\22322g\cadd\sheets\roadway\details\281offset02.dgn

① R = 10.00' ℄ TRENTON ROAD (XTRENT1)
STA. 18+34.74, 47.88' RT
② R = 2.00' ℄ TRENTON ROAD (XTRENT1)
STA. 17+20.01, 39.87' RT
③ R = 2.00' ℄ TRENTON ROAD (XTRENT1)
STA. 17+91.61, 137.13' RT
④ R = 6.00' ℄ TRENTON ROAD (XTRENT1)
STA. 13+82.18, 0.88' RT

N

NOTES:

1. RADIUS MEASUREMENTS ARE TO THE FACE OF THE CURB. IF THERE IS NO CURB, MEASUREMENTS ARE TO THE EDGE OF PAVEMENT.

- WHEELCHAIR RAMP (TY #)
SEE ROADWAY STANDARD "PEDESTRIAN FACILITIES" SHEETS 1 THROUGH 3 FOR MORE DETAILS.

SHEET TOTALS

ITEM	EST.	FINAL	UNIT	DESCRIPTION
529	1167		LF	CONC C & G (TY A) (BARRIER)
531	117		SY	CONC SIDEWALK (4")
531	3		EA	CONC SIDEWALK (WHEELCHAIR RAMP)
529	1324		LF	CONC CURB (TYA) (BARRIER)

MATCH LINE STA. 12+75

TRENTON ROAD

EXIST ROW

℄ TRENTON ROAD (XTRENT1)

PROP BCG

BEGIN TRANSITION
℄ TRENTON ROAD (XTRENT1)
STA. 14+91.54, 40.62' LT

BEGIN TRANSITION
℄ TRENTON ROAD (XTRENT1)
STA. 14+91.53, 5.12' LT

END TRANSITION
℄ TRENTON ROAD (XTRENT1)
STA. 16+91.54, 48.12' LT

END TRANSITION
℄ TRENTON ROAD (XTRENT1)
STA. 16+91.54, 12.12' LT

BEGIN CONC SIDEWALK
℄ TRENTON ROAD (XTRENT1)
STA. 18+03.07, 54.11' LT

BEGIN TRANSITION
℄ TRENTON ROAD (XTRENT1)
STA. 18+03.47, 48.12' LT

5' CONC SIDEWALK
1.50% MAX CROSS SLOPE

PROP BC

36' F-F

12' F-F

38' F-F

1,494.52

MATCH LINE STA. 18+50

EXIST ROW

PROP BCG

BEGIN TRANSITION
℄ TRENTON ROAD (XTRENT1)
STA. 14+91.53, 6.88' RT

END TRANSITION
℄ TRENTON ROAD (XTRENT1)
STA. 16+91.54, 0.12' LT

BEGIN TRANSITION
℄ TRENTON ROAD (XTRENT1)
STA. 16+35.82, 50.35' RT

END TRANSITION
℄ TRENTON ROAD (XTRENT1)
STA. 16+82.15, 54.72' RT

BEGIN CONC SIDEWALK
℄ TRENTON ROAD (XTRENT1)
STA. 16+81.59, 60.69' RT

5' CONC SIDEWALK
1.50% MAX CROSS SLOPE

R = 95.00'
℄ TRENTON ROAD (XTRENT1)
STA. 16+73.23, 149.30' RT

R = 117.00'
℄ TRENTON ROAD (XTRENT1)
STA. 16+73.23, 149.30' RT

END CONC SIDEWALK
℄ TRENTON ROAD (XTRENT1)
STA. 17+52.79, 189.20' RT

END BCG
℄ TRENTON ROAD (XTRENT1)
STA. 17+58.15, 191.89' RT

END HDSMACP
BEGIN ACP TY 4
℄ SBFR (FRS1 2)
STA. 61659+00.00

℄ SBFR (FRS1-2)

SBFR

PROP BC

EXIST ROW

THE SEAL APPEARING ON THIS DOCUMENT WAS AUTHORIZED BY JAIME AGUILAR, P.E. 87606 ON 06/26/2003.

STATE OF TEXAS
JAIME AGUILAR
87606
REGISTERED PROFESSIONAL ENGINEER

THE SEAL APPEARING ON THIS DOCUMENT WAS AUTHORIZED BY PHAISARN CWATANAPHOL, P.E. 89252 ON 06/26/2003.

STATE OF TEXAS
PHAISARN CWATANAPHOL
89252
REGISTERED PROFESSIONAL ENGINEER

PB Parsons Brinckerhoff Quade & Douglas Inc.

Texas Department of Transportation

© 2003 by TxDOT

INTERSECTION LAYOUTS
US 281
TRENTON ROAD
STA. 12+75 "XTRENT1" TO
STA. 18+50 "XTRENT1"

PLAN 1"= 50' HORIZ

SHEET 2 OF 5				281OFFSET02.DGN			
DESIGNED: PAF	FED. RD DIV. No.	STATE	FEDERAL AID PROJECT No.				HIGHWAY No.
CHECKED: JP	6	TEXAS					US 281
DRAWN: KTD	STATE DISTRICT	COUNTY	CONTROL No.	SECTION No.	JOB No.	SHEET No.	
CHECKED: AGM	PHARR	HIDALGO	0255	08	091	397	

NAME
10:28:47 AM
06/26/2003
i:\22320\caddd\sheets\roadway\details\281offset03.dgn

① R = 5.00' ℄ TRENTON ROAD (XTRENT1)
STA. 18+71.18, 6.12' LT

② W = 5.00' ℄ TRENTON ROAD (XTRENT1)
STA. 18+58.47, 12.12' LT

③ W = 5.00' ℄ TRENTON ROAD (XTRENT1)
STA. 18+59.00, 6.12' LT

④ W = 5.00' ℄ TRENTON ROAD (XTRENT1)
STA. 18+55.47, 0.12' LT

⑤ R = 10.00' ℄ TRENTON ROAD (XTRENT1)
STA. 22+85.21, 44.12' LT

⑥ R = 2.00' ℄ TRENTON ROAD (XTRENT1)
STA. 22+94.18, 75.16' LT

⑦ R = 2.00' ℄ TRENTON ROAD (XTRENT1)
STA. 23+39.45, 36.12' LT

⑧ R = 4.00' ℄ TRENTON ROAD (XTRENT1)
STA. 22+47.69, 7.88' RT

⑨ W = 5.00' ℄ TRENTON ROAD (XTRENT1)
STA. 22+62.19, 7.88' RT

⑩ W = 5.00' ℄ TRENTON ROAD (XTRENT1)
STA. 22+64.50, 3.94' RT

⑪ W = 5.00' ℄ TRENTON ROAD (XTRENT1)
STA. 22+62.45, 11.88' RT

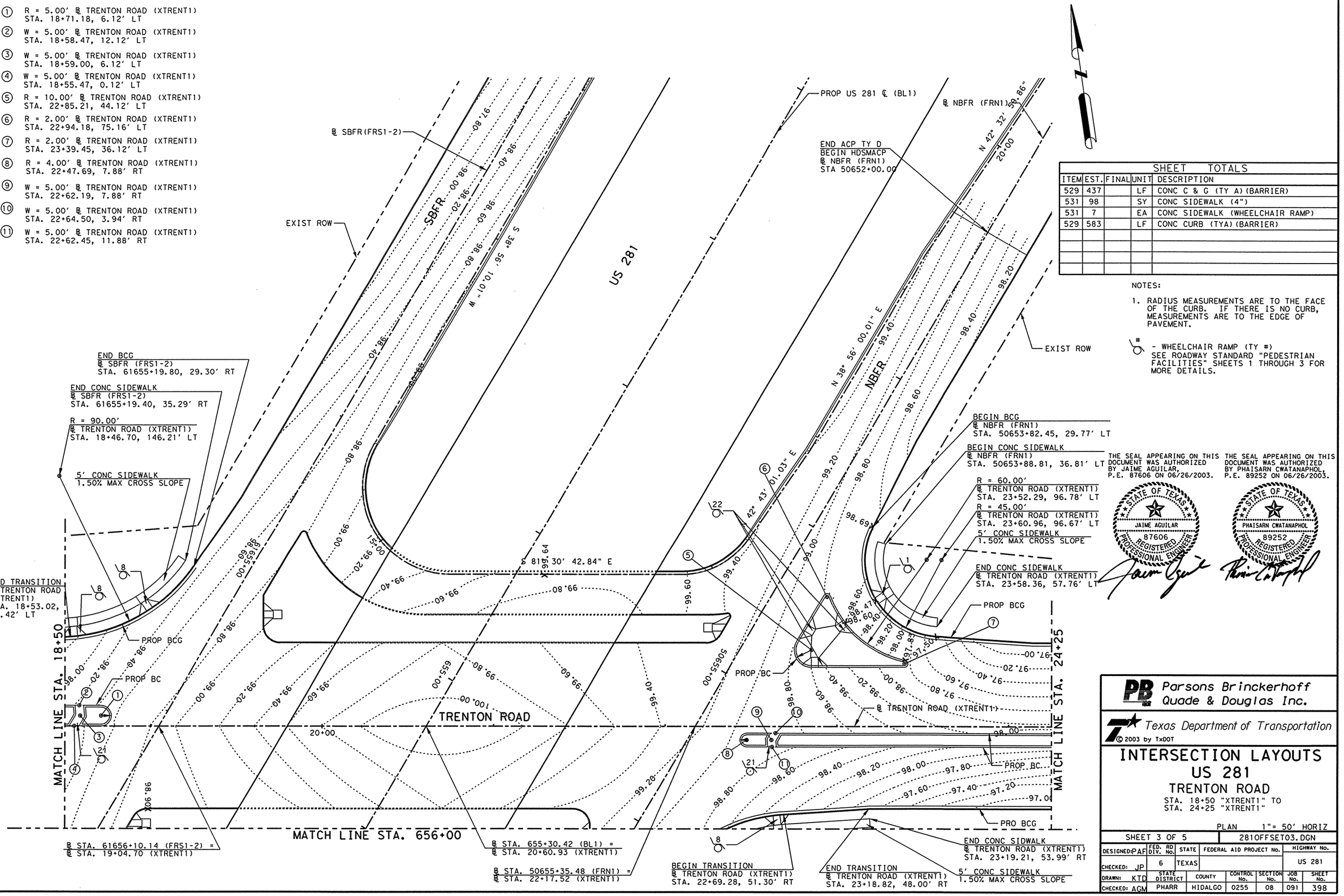

SHEET TOTALS

ITEM	EST.	FINAL	UNIT	DESCRIPTION
529	437		LF	CONC C & G (TY A)(BARRIER)
531	98		SY	CONC SIDEWALK (4")
531	7		EA	CONC SIDEWALK (WHEELCHAIR RAMP)
529	583		LF	CONC CURB (TYA)(BARRIER)

NOTES:

1. RADIUS MEASUREMENTS ARE TO THE FACE OF THE CURB. IF THERE IS NO CURB, MEASUREMENTS ARE TO THE EDGE OF PAVEMENT.

⑧ - WHEELCHAIR RAMP (TY #)
SEE ROADWAY STANDARD "PEDESTRIAN FACILITIES" SHEETS 1 THROUGH 3 FOR MORE DETAILS.

THE SEAL APPEARING ON THIS DOCUMENT WAS AUTHORIZED BY JAIME AGUILAR, P.E. 87606 ON 06/26/2003.

STATE OF TEXAS
JAIME AGUILAR
87606
REGISTERED PROFESSIONAL ENGINEER

THE SEAL APPEARING ON THIS DOCUMENT WAS AUTHORIZED BY PHAISARN CWATANAPHOL, P.E. 89252 ON 06/26/2003.

STATE OF TEXAS
PHAISARN CWATANAPHOL
89252
REGISTERED PROFESSIONAL ENGINEER

Parsons Brinckerhoff Quade & Douglas Inc.

Texas Department of Transportation

© 2003 by TxDOT

INTERSECTION LAYOUTS
US 281
TRENTON ROAD
STA. 18+50 "XTRENT1" TO
STA. 24+25 "XTRENT1"

PLAN 1"= 50' HORIZ

SHEET 3 OF 5 | 281OFFSET03.DGN

DESIGNED: PAF	FED. RD DIV. NO.	STATE	FEDERAL AID PROJECT NO.			HIGHWAY NO.	
CHECKED: JP	6	TEXAS				US 281	
DRAWN: KTD	STATE DISTRICT	COUNTY	CONTROL No.	SECTION No.	JOB No.	SHEET No.	
CHECKED: AGM	PHARR	HIDALGO	0255	08	091	398	

NAME
06/26/2003 10:28:59 AM
i:\22322g\cadd\sheets\roadway\details\281offset04.dgn

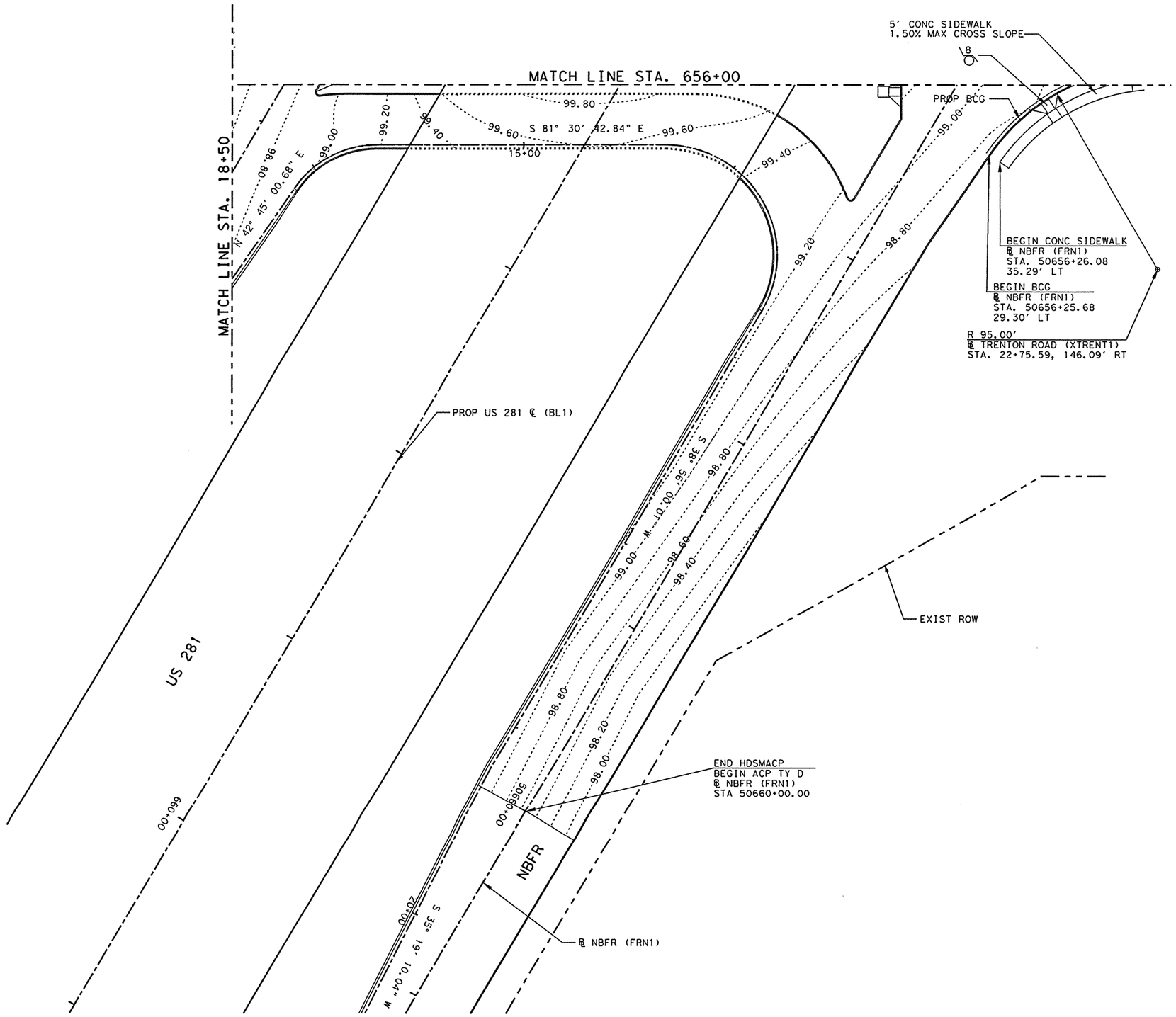

NOTES:

1. RADIUS MEASUREMENTS ARE TO THE FACE OF THE CURB. IF THERE IS NO CURB, MEASUREMENTS ARE TO THE EDGE OF PAVEMENT.

(#) - WHEELCHAIR RAMP (TY #)
SEE ROADWAY STANDARD "PEDESTRIAN FACILITIES" SHEETS 1 THROUGH 3 FOR MORE DETAILS.

SHEET TOTALS				
ITEM	EST.	FINAL	UNIT	DESCRIPTION
529	51		LF	CONC C & G (TY A)(BARRIER)
531	36		SY	CONC SIDEWALK (4")
531	1		EA	CONC SIDEWALK (WHEELCHAIR RAMP)

THE SEAL APPEARING ON THIS DOCUMENT WAS AUTHORIZED BY JAIME AGUILAR, P.E. 87606 ON 06/26/2003.

STATE OF TEXAS
JAIME AGUILAR
87606
REGISTERED PROFESSIONAL ENGINEER

THE SEAL APPEARING ON THIS DOCUMENT WAS AUTHORIZED BY PHAISARN CWATANAPHOL, P.E. 89252 ON 06/26/2003.

STATE OF TEXAS
PHAISARN CWATANAPHOL
89252
REGISTERED PROFESSIONAL ENGINEER

Parsons Brinckerhoff Quade & Douglas Inc.

Texas Department of Transportation

© 2003 by TxDOT

INTERSECTION LAYOUTS
US 281
TRENTON ROAD
STA. 656+00 "BL1" TO
STA. 661+00 "BL1"

PLAN 1"= 50' HORIZ

SHEET 4 OF 5 | 281OFFSET04.DGN

DESIGNED: PAF	FED. RD DIV. No.	STATE	FEDERAL AID PROJECT No.			HIGHWAY No.
CHECKED: JP	6	TEXAS				US 281
DRAWN: KTD	STATE DISTRICT	COUNTY	CONTROL No.	SECTION No.	JOB No.	SHEET No.
CHECKED: AGM	PHARR	HIDALGO	0255	08	091	399

NAME
10:29:08 AM
06/26/2003
i:\22322o\cadd\sheets\roadway\details\281offset05.dgn

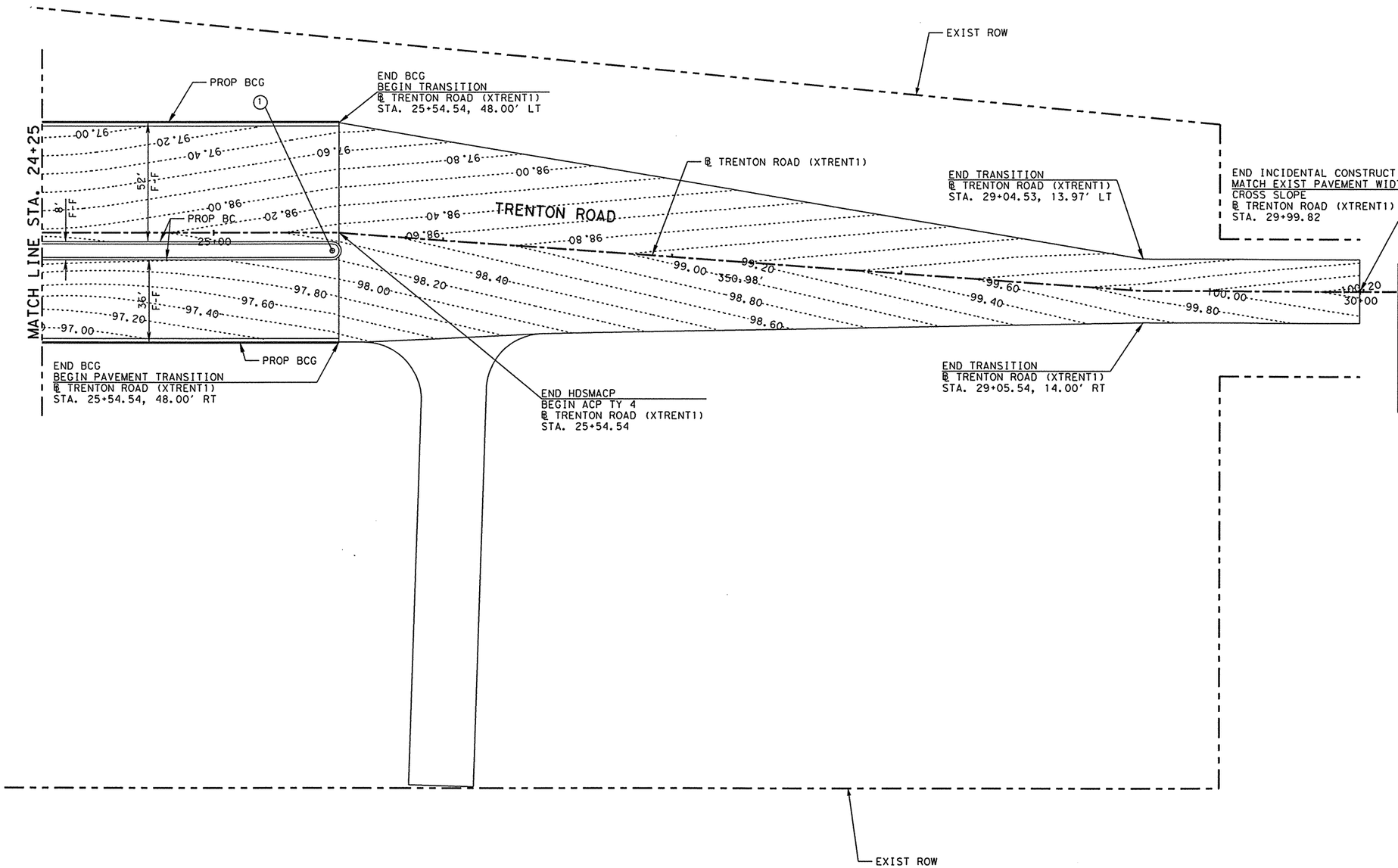

NOTES:

1. RADIUS MEASUREMENTS ARE TO THE FACE OF THE CURB. IF THERE IS NO CURB, MEASUREMENTS ARE TO THE EDGE OF PAVEMENT.

- WHEELCHAIR RAMP (TY #)
SEE ROADWAY STANDARD "PEDESTRIAN FACILITIES" SHEETS 1 THROUGH 3 FOR MORE DETAILS.

SHEET TOTALS

ITEM	EST.	FINAL	UNIT	DESCRIPTION
529	259		LF	CONC C & G (TY A) (BARRIER)
529	265		LF	CONC CURB (TYA) (BARRIER)

THE SEAL APPEARING ON THIS DOCUMENT WAS AUTHORIZED BY JAIME AGUILAR, P.E. 87606 ON 06/26/2003.

STATE OF TEXAS
JAIME AGUILAR
87606
REGISTERED PROFESSIONAL ENGINEER

THE SEAL APPEARING ON THIS DOCUMENT WAS AUTHORIZED BY PHAISARN CWATANAPHOL, P.E. 89252 ON 06/26/2003.

STATE OF TEXAS
PHAISARN CWATANAPHOL
89252
REGISTERED PROFESSIONAL ENGINEER

Parsons Brinckerhoff Quade & Douglas Inc.

Texas Department of Transportation

© 2003 by TxDOT

INTERSECTION LAYOUTS
US 281
TRENTON ROAD
STA. 24+25 "XTRENT1" TO
STA. 30+00 "XTRENT1"

PLAN 1"= 50' HORIZ

SHEET 5 OF 5 | 281OFFSET05.DGN

DESIGNED: PAF	FED. RD DIV. No.	STATE	FEDERAL AID PROJECT No.			HIGHWAY No.	
CHECKED: JP	6	TEXAS				US 281	
DRAWN: KTD	STATE DISTRICT	COUNTY	CONTROL No.	SECTION No.	JOB No.	SHEET No.	
CHECKED: AGM	PHARR	HIDALGO	0255	08	091	400	

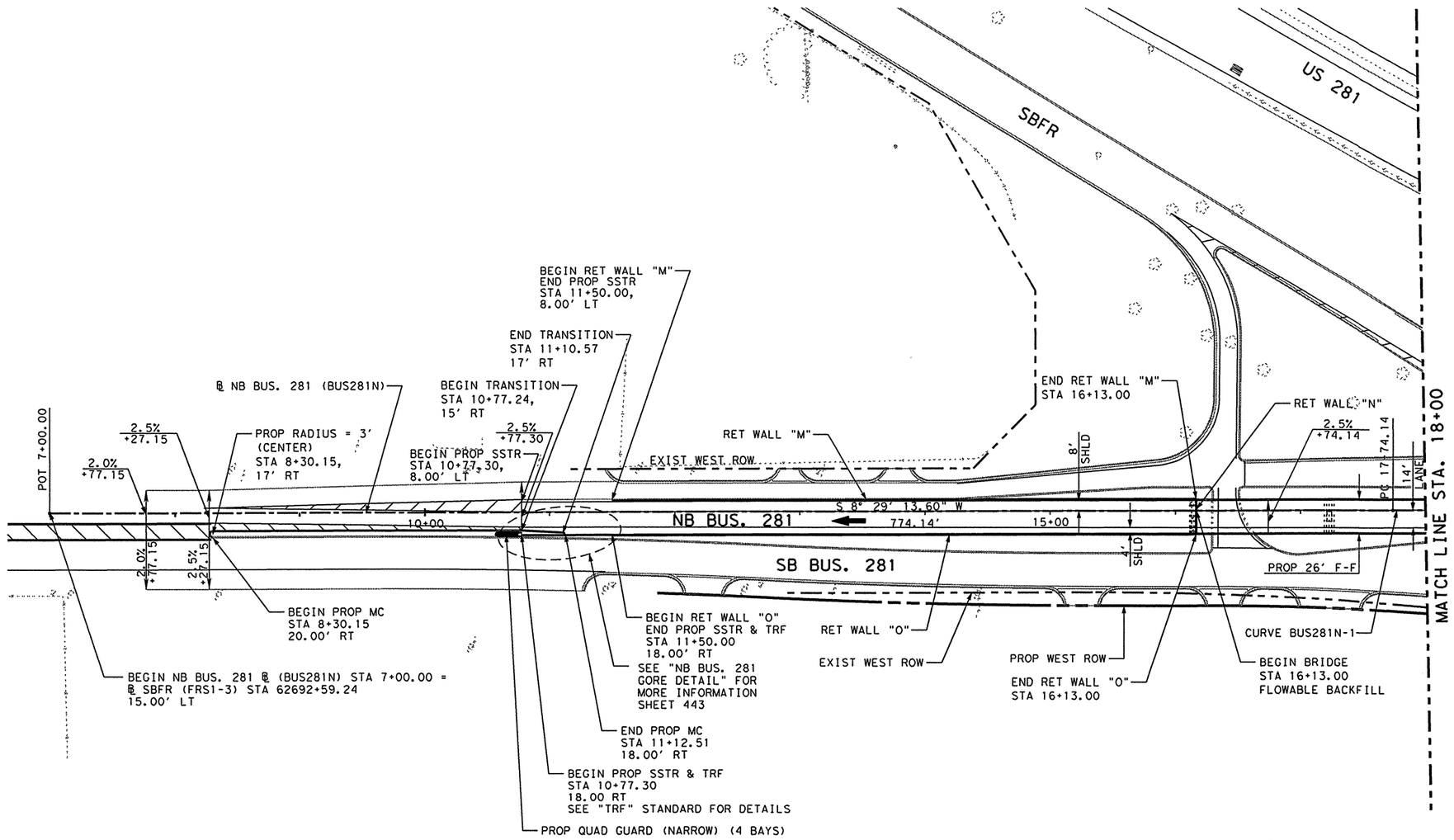

LEGEND:

MC	-	MOUNTABLE CONC CURB
BC	-	BARRIER CONC CURB
MCG	-	MOUNTABLE CONC CURB & GUTTER
BCG	-	BARRIER CONC CURB & GUTTER
RW	-	RETAINING WALL
RR	-	PROP CONC RIPRAP
SGT	-	SINGLE GUARD RAIL TERMINAL
MBGF	-	METAL BEAM GUARD FENCE
NBFR	-	NORTHBOUND FRONTAGE ROAD
SBFR	-	SOUTHBOUND FRONTAGE ROAD
NBML	-	NORTHBOUND MAINLANES
SBML	-	SOUTHBOUND MAINLANES
····→	-	PROP DITCH
—o	-	DEL ASM TY B (D-SW)
—▨	-	OBJ MRK ASM TY 3 (OM-3R)
TRF	-	TRAFFIC RAILING FOUNDATION

△ B.M. & HORIZONTAL DATA
BM # US 281-16
ELEV = 103.82
STA = 706+19.13, 220.37' LT
3 1/4" TXDOT ALUMINUM DISK

CAUTION!
MAJOR UTILITY CROSSINGS IN THE VICINITY. REFER TO THE "UTILITIES AND DRAINAGE PLAN & PROFILE" SHEETS FOR ADDITIONAL INFORMATION.

SHEET TOTALS

ITEM	EST.	FINAL	UNIT	DESCRIPTION
420	11		CY	CL C CONC (FOOTING)
420	4		CY	CL S CONC (MISC)
450	146		LF	RAIL (TY SSTR)
529	293		LF	CONC C & G (TY B) (MOUNTABLE)
5453	1		EA	QUADGUARD SYSTEM (2FT) (TY A) (4 BAY)
4438	17		CY	FLOWABLE BACKFILL

THE SEAL APPEARING ON THIS DOCUMENT WAS AUTHORIZED BY JAIME AGUILAR, P.E. 87606 ON 06/26/2003.

THE SEAL APPEARING ON THIS DOCUMENT WAS AUTHORIZED BY PHAISARN CWATANAPHOL, P.E. 89252 ON 06/26/2003.

STATE OF TEXAS · JAIME AGUILAR · 87606 · REGISTERED PROFESSIONAL ENGINEER

STATE OF TEXAS · PHAISARN CWATANAPHOL · 89252 · REGISTERED PROFESSIONAL ENGINEER

Parsons Brinckerhoff Quade & Douglas Inc.

Texas Department of Transportation

© 2003 by TxDOT

US 281
PLAN & PROFILE
NB BUS. 281 - DC

STA. 6+00 "BUS281N" TO
STA. 18+00 "BUS281N"
PLAN 1"= 100' HORIZ
PROFILE 1"= 10' VERT

SHEET 1 OF 6				281PBUS281N01.DGN				
DESIGNED: JA	FED. RD DIV. No.	STATE	FEDERAL AID PROJECT No.				HIGHWAY No.	
CHECKED: JP	6	TEXAS					US 281	
DRAWN: CG	STATE DISTRICT	COUNTY	CONTROL No.	SECTION No.	JOB No.	SHEET No.		
CHECKED: JDH	PHARR	HIDALGO	0255	08	091	401		

I:\22322a\CADD\Sheets\Roadway\SIDE STREET\281PBUS281N01.dgn
06/26/2003 10:41:54 AM *NAME*

NAME
10:41:54 AM
06/26/2003
I:\22322on\CADD\Sheets\Roadway\SIDE STREET\281PBUS281N01.dgn

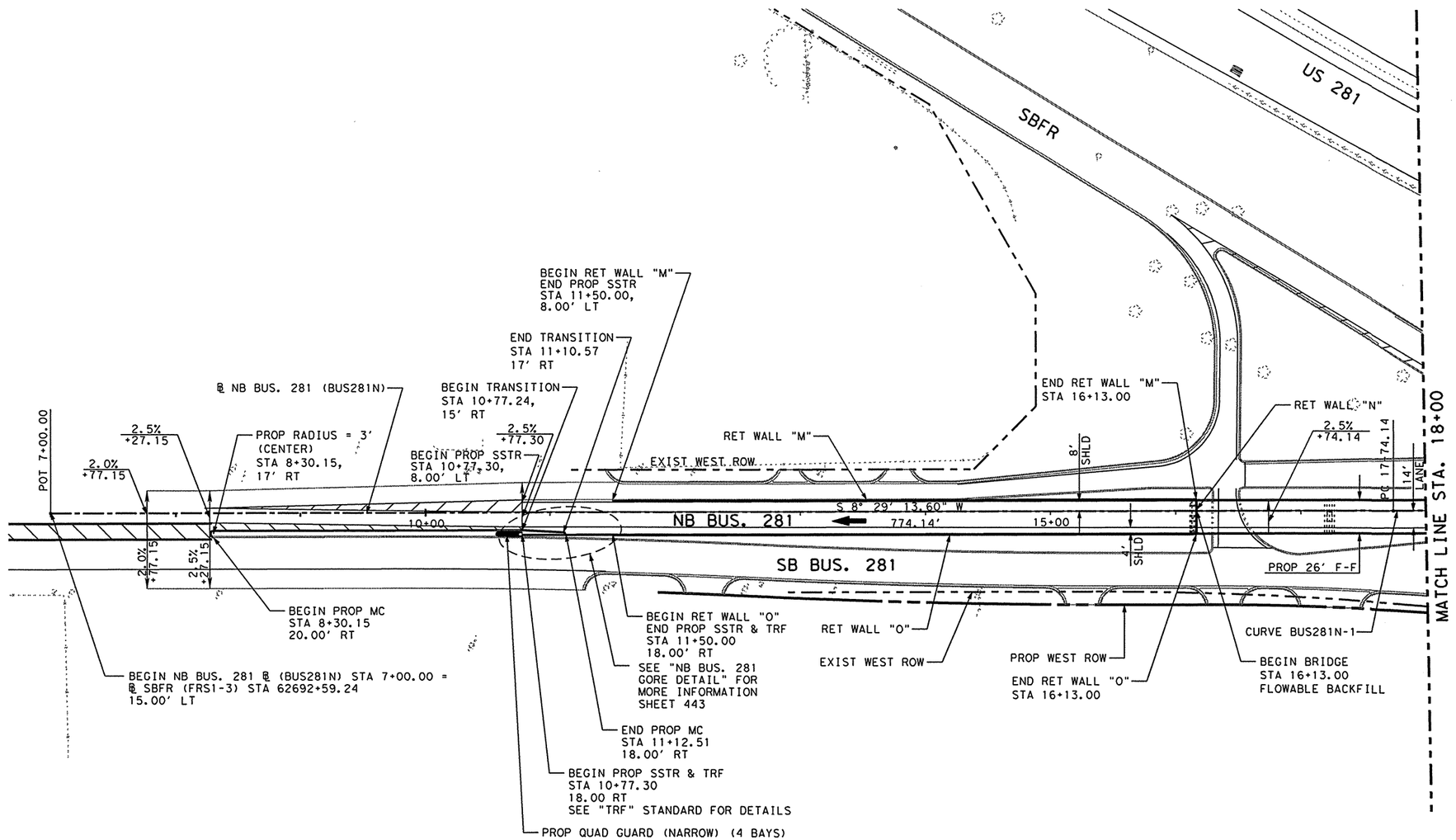

LEGEND:

MC	- MOUNTABLE CONC CURB
BC	- BARRIER CONC CURB
MCG	- MOUNTABLE CONC CURB & GUTTER
BCG	- BARRIER CONC CURB & GUTTER
RW	- RETAINING WALL
RR	- PROP CONC RIPRAP
SGT	- SINGLE GUARD RAIL TERMINAL
MBGF	- METAL BEAM GUARD FENCE
NBFR	- NORTHBOUND FRONTAGE ROAD
SBFR	- SOUTHBOUND FRONTAGE ROAD
NBML	- NORTHBOUND MAINLANES
SBML	- SOUTHBOUND MAINLANES
····→	- PROP DITCH
—o	- DEL ASM TY B (D-SW)
—⊠	- OBJ MRK ASM TY 3 (OM-3R)
TRF	- TRAFFIC RAILING FOUNDATION

△B.M. & HORIZONTAL DATA
BM # US 281-16
ELEV = 103.82
STA = 706+19.13, 220.37' LT
3 1/4" TXDOT ALUMINUM DISK

THE SEAL APPEARING ON THIS DOCUMENT WAS AUTHORIZED BY JAIME AGUILAR, P.E. 87606 ON 06/26/2003.

THE SEAL APPEARING ON THIS DOCUMENT WAS AUTHORIZED BY PHAISARN CWATANAPHOL, P.E. 89252 ON 06/26/2003.

STATE OF TEXAS
JAIME AGUILAR
87606
REGISTERED PROFESSIONAL ENGINEER

STATE OF TEXAS
PHAISARN CWATANAPHOL
89252
REGISTERED PROFESSIONAL ENGINEER

Parsons Brinckerhoff Quade & Douglas Inc.

Texas Department of Transportation
© 2003 by TxDOT

US 281
PLAN & PROFILE
NB BUS. 281 - DC

STA. 6+00 "BUS281N" TO
STA. 18+00 "BUS281N"
PLAN 1"= 100' HORIZ
PROFILE 1"= 10' VERT

SHEET 1 OF 6 | 281PBUS281N01.DGN

DESIGNED: JA	FED. RD DIV. No.	STATE	FEDERAL AID PROJECT No.		HIGHWAY No.
CHECKED: JP	6	TEXAS			US 281
DRAWN: CG	STATE DISTRICT	COUNTY	CONTROL No.	SECTION No.	JOB No.	SHEET No.
CHECKED: JDH	PHARR	HIDALGO	0255	08	091	401

SHEET TOTALS

ITEM	EST.	FINAL	UNIT	DESCRIPTION
420	11		CY	CL C CONC (FOOTING)
420	4		CY	CL S CONC (MISC)
450	146		LF	RAIL (TY SSTR)
529	293		LF	CONC C & G (TY B) (MOUNTABLE)
5453	1		EA	QUADGUARD SYSTEM (2FT) (TY A) (4 BAY)
4438	17		CY	FLOWABLE BACKFILL
529	463		LF	CONC GUTTER (VALLEY) (TY "B") (RET WALL P)

CAUTION!
MAJOR UTILITY CROSSINGS IN THE VICINITY. REFER TO THE "UTILITIES AND DRAINAGE PLAN & PROFILE" SHEETS FOR ADDITIONAL INFORMATION.

△REVISED 9/26/2003

NAME

10:42:51 AM

06/26/2003

I:\22322a\CADD\Sheets\Roadway\SIDE STREET\281PBUS281N02.dgn

EXIST AND PROP PGL

LEGEND
PROP RAMP PGL
EXIST RAMP BASELINE

SEE NB BUS. 281 BRIDGE DETAILS

PROP NB BUS. 281 PGL

NB BUS. 281 GRADE & CORSS-SLOPE ▲
CONTROLLED BY PROP SB FRTG RD

BEGIN CONSTRUCTION NB BUS. 281
BEGIN PROP PGL NB BUS. 281
STA 8+27.15
EL = 108.72'

VPC 8+27.15
EL. = 108.72'

VPC 9+52.71
EL. = 108.16'

STA = 11+64.71
EL = 107.21'
ex = 2.84'
K = 79
L = 424.00'

VPT 13+76.71
EL. = 117.63'

BEGIN BRIDGE
STA 16+13.00
ELEV = 129.25

17.0'

EXIST NB BUS 281 BASELINE

℄ SBFR
CONNECTOR

(-)0.4500 %

(-)0.4500 %

(+)4.9167 %

-0.0250'/ft.

+74.14

"e" TRANS.

PROP	EXIST
	108.99
	108.95
	108.95
108.62	
108.93	
108.40	
108.93	
108.17	
108.95	
108.09	
108.99	
108.32	
109.07	
108.87	
109.05	
109.74	
109.00	
110.92	
108.92	
112.42	
108.79	
114.23	
108.77	
116.36	
108.74	
118.77	
108.65	
121.23	
108.76	
123.69	
108.53	
126.15	
108.38	
128.61	
108.10	
131.07	
107.97	
133.52	
107.79	
135.98	
107.78	
138.44	

10+00 15+00

▲ NB BUS. 281 "BUS281N" SHALL MATCH THE SB FRTG RD PROFILE & CORSS-SLOPE

THE SEAL APPEARING ON THIS DOCUMENT WAS AUTHORIZED BY JAIME AGUILAR, P.E. 87606 ON 06/26/2003.

STATE OF TEXAS
JAIME AGUILAR
87606
REGISTERED PROFESSIONAL ENGINEER

THE SEAL APPEARING ON THIS DOCUMENT WAS AUTHORIZED BY PHAISARN CWATANAPHOL, P.E. 89252 ON 06/26/2003.

STATE OF TEXAS
PHAISARN CWATANAPHOL
89252
REGISTERED PROFESSIONAL ENGINEER

Parsons Brinckerhoff Quade & Douglas Inc.

Texas Department of Transportation

© 2002 by TxDOT

US 281
PROFILE
NB BUS. 281 - DC

STA. 6+00 "BUS281N" TO
STA. 18+00 "BUS281N"

PLAN 1"= 100' HORIZ
PROFILE 1"= 10' VERT

SHEET 2 OF 6				281PBUS281N02.DGN				
DESIGNED: JA	FED. RD DIV. NO.	STATE	FEDERAL AID PROJECT No.				HIGHWAY No.	
	6	TEXAS					US 281	
CHECKED: JP	STATE DISTRICT	COUNTY	CONTROL No.	SECTION No.	JOB No.	SHEET No.		
DRAWN: CG	PHARR	HIDALGO	0255	08	091	402		
CHECKED: JA								

NAME
10:43:47 AM
06/26/2003
I:\22322a\CADD\Sheets\Roadway\SIDE STREET\281PBUS281N03.dgn

LEGEND:

MC - MOUNTABLE CONC CURB
BC - BARRIER CONC CURB
MCG - MOUNTABLE CONC CURB & GUTTER
BCG - BARRIER CONC CURB & GUTTER
RW - RETAINING WALL
RR - PROP CONC RIPRAP
SGT - SINGLE GUARD RAIL TERMINAL
MBGF - METAL BEAM GUARD FENCE
NBFR - NORTHBOUND FRONTAGE ROAD
SBFR - SOUTHBOUND FRONTAGE ROAD
NBML - NORTHBOUND MAINLANES
SBML - SOUTHBOUND MAINLANES
PROP DITCH
DEL ASM TY B (D-SW)
OBJ MRK ASM TY 3 (OM-3R)

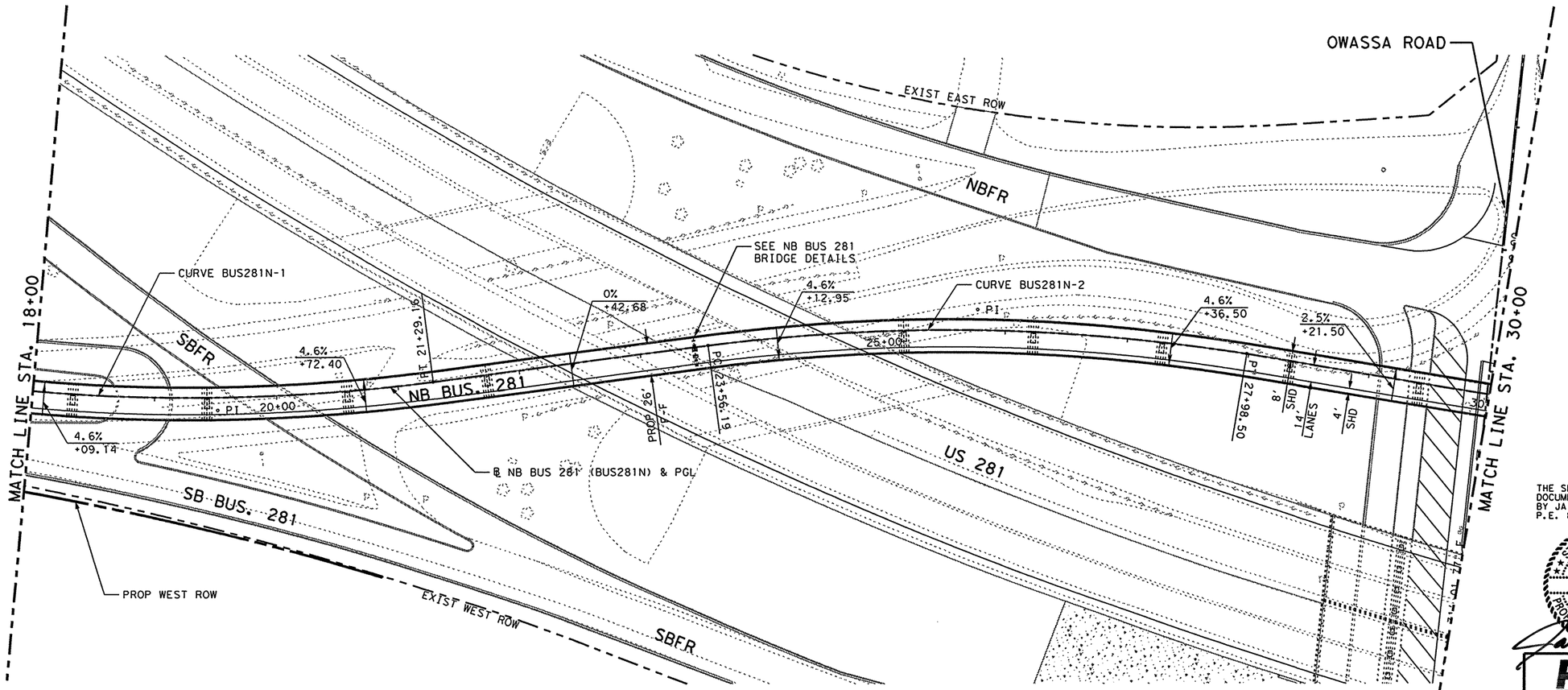

Curve BUS281N-1

P.I. Station		19+52.48
Delta	=	13° 33′ 38.25"
Degree	=	3° 49′ 10.99"
Tangent	=	178.34
Length	=	355.02
Radius	=	1,500.00
External	=	10.56
Long Chord	=	354.19
Mid. Ord.	=	10.49
P.C. Station		17+74.14
P.T. Station		21+29.16

Curve BUS281N-2

P.I. Station		25+78.96
Delta	=	16° 53′ 41.67"
Degree	=	3° 49′ 10.99"
Tangent	=	222.77
Length	=	442.31
Radius	=	1,500.00
External	=	16.45
Long Chord	=	440.71
Mid. Ord.	=	16.27
P.C. Station		23+56.19
P.T. Station		27+98.50

⚠ B.M. & HORIZONTAL DATA
BM # US 281-16
ELEV = 103.82
STA = 706+19.13, 220.37′ LT
3 1/4" TXDOT ALUMINUM DISK

THE SEAL APPEARING ON THIS DOCUMENT WAS AUTHORIZED BY JAIME AGUILAR, P.E. 87606 ON 06/26/2003.

THE SEAL APPEARING ON THIS DOCUMENT WAS AUTHORIZED BY PHAISARN CWATANAPHOL, P.E. 89252 ON 06/26/2003.

STATE OF TEXAS — JAIME AGUILAR — 87606 — REGISTERED PROFESSIONAL ENGINEER

STATE OF TEXAS — PHAISARN CWATANAPHOL — 89252 — REGISTERED PROFESSIONAL ENGINEER

CAUTION!
MAJOR UTILITY CROSSINGS IN THE VICINITY. REFER TO THE "UTILITIES AND DRAINAGE PLAN & PROFILE" SHEETS FOR ADDITIONAL INFORMATION.

SHEET TOTALS

ITEM	EST.	FINAL	UNIT	DESCRIPTION
				NO PAY QUANTITIES THIS SHEET

Parsons Brinckerhoff Quade & Douglas Inc.

Texas Department of Transportation

© 2003 by TxDOT

US 281
PLAN & PROFILE
NB BUS. 281 - DC

STA. 18+00 "BUS281N" TO
STA. 30+00 "BUS281N"

PLAN 1"= 100′ HORIZ
PROFILE 1"= 10′ VERT

SHEET 3 OF 6 | 281PBUS281N03.DGN

DESIGNED: JA	FED. RD DIV. No.	STATE	FEDERAL AID PROJECT No.			HIGHWAY No.
CHECKED: JP	6	TEXAS				US 281
DRAWN: CBH	STATE DISTRICT	COUNTY	CONTROL No.	SECTION No.	JOB No.	SHEET No.
CHECKED: JDH	PHARR	HIDALGO	0255	08	091	403

NAME
10:44:43 AM
06/26/2003
I:\22322a\CADD\Sheets\Roadway\SIDE STREET\281PBUS281N04.dgn

THE SEAL APPEARING ON THIS DOCUMENT WAS AUTHORIZED BY JAIME AGUILAR, P.E. 87606 ON 06/26/2003.

THE SEAL APPEARING ON THIS DOCUMENT WAS AUTHORIZED BY PHAISARN CWATANAPHOL, P.E. 89252 ON 06/26/2003.

STATE OF TEXAS — JAIME AGUILAR — 87606 — REGISTERED PROFESSIONAL ENGINEER

STATE OF TEXAS — PHAISARN CWATANAPHOL — 89252 — REGISTERED PROFESSIONAL ENGINEER

Parsons Brinckerhoff Quade & Douglas Inc.

Texas Department of Transportation

© 2002 by TxDOT

US 281
PROFILE
NB BUS. 281 - DC
STA. 18+00 "BUS281N" TO
STA. 30+00 "BUS281N"

SHEET 4 OF 6	281PBUS281N04.DGN

DESIGNED: JA	FED. RD DIV. No.	STATE	FEDERAL AID PROJECT No.		HIGHWAY No.	
CHECKED: JP	6	TEXAS			US 281	
DRAWN: CG	STATE DISTRICT	COUNTY	CONTROL No.	SECTION No.	JOB No.	SHEET No.
CHECKED: JA	PHARR	HIDALGO	0255	08	091	404

NAME
10:45:44 AM
06/26/2003

Curve BUS281N-3

P.I. Station		41+41.37
Delta	=	3° 30′ 00.00"
Degree	=	0° 57′ 17.75"
Tangent	=	183.32
Length	=	366.52
Radius	=	6,000.00
External	=	2.80
Long Chord	=	366.46
Mid. Ord.	=	2.80
P.C. Station		39+58.06
P.T. Station		43+24.58

LEGEND:

MC	- MOUNTABLE CONC CURB
BC	- BARRIER CONC CURB
MCG	- MOUNTABLE CONC CURB & GUTTER
BCG	- BARRIER CONC CURB & GUTTER
RW	- RETAINING WALL
RR	- PROP CONC RIPRAP
SGT	- SINGLE GUARD RAIL TERMINAL
MBGF	- METAL BEAM GUARD FENCE
NBFR	- NORTHBOUND FRONTAGE ROAD
SBFR	- SOUTHBOUND FRONTAGE ROAD
NBML	- NORTHBOUND MAINLANES
SBML	- SOUTHBOUND MAINLANES
····→	- PROP DITCH
—o	- DEL ASM TY B (D-SW)
—▨	- OBJ MRK ASM TY 3 (OM-3R)
TRF	- TRAFFIC RAILING FOUNDATION

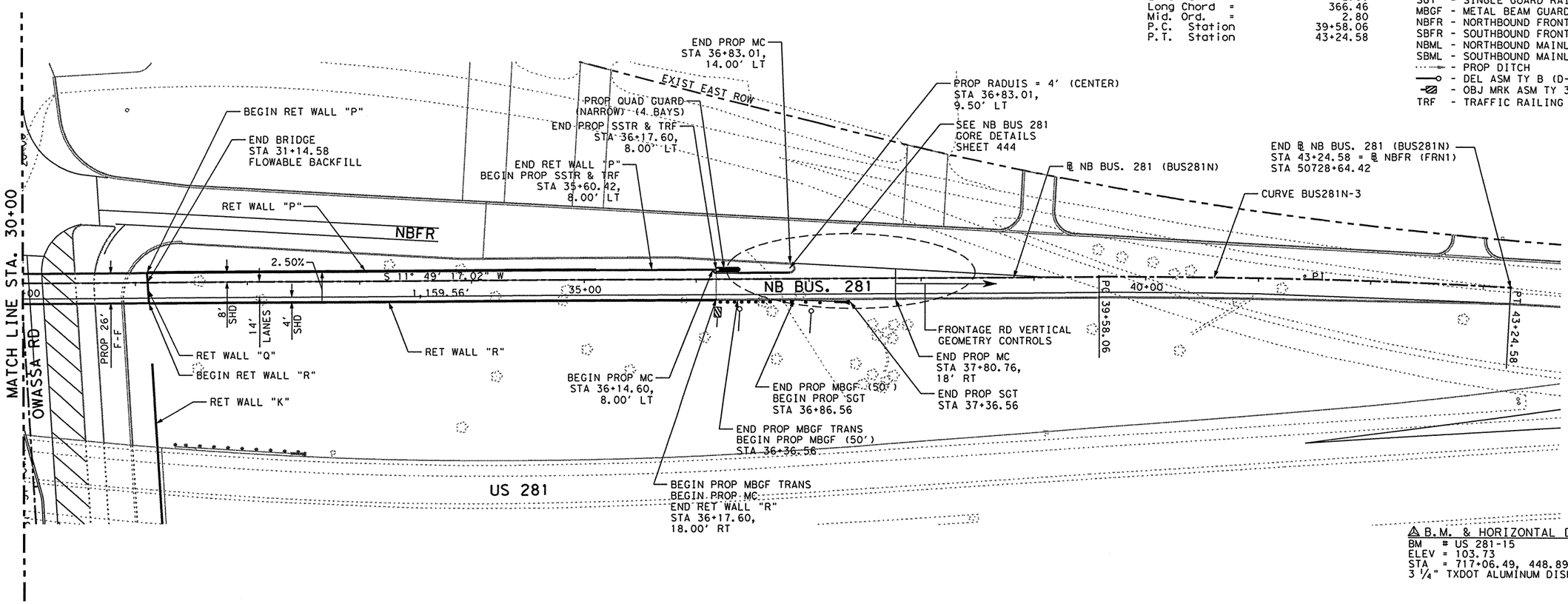

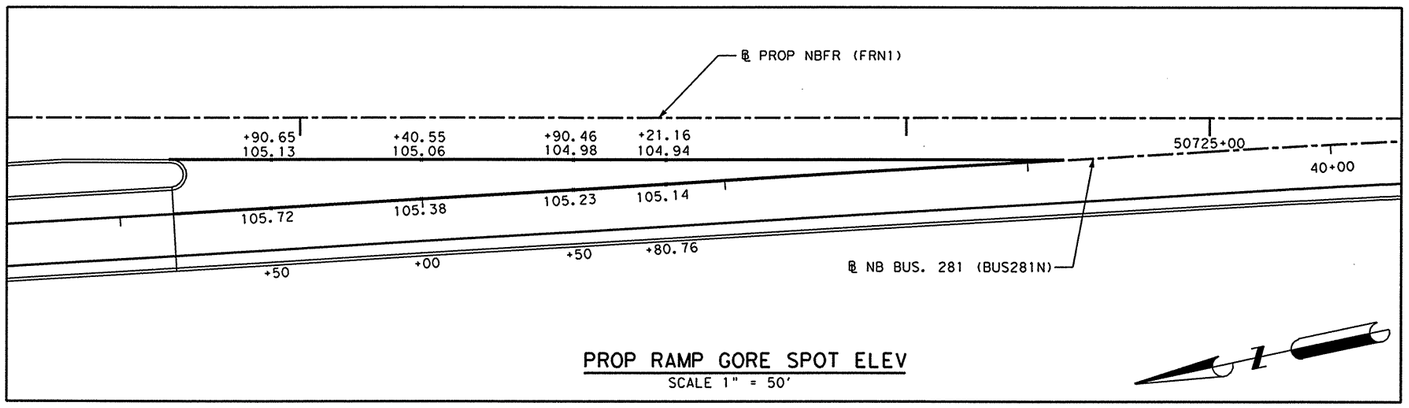

PROP RAMP GORE SPOT ELEV
SCALE 1" = 50′

⚠ B.M. & HORIZONTAL DATA
BM # US 281-15
ELEV = 103.73
STA = 717+06.49, 448.89′ LT
3 1/4" TXDOT ALUMINUM DISK

CAUTION!
MAJOR UTILITY CROSSINGS IN THE VICINITY. REFER TO THE "UTILITIES AND DRAINAGE PLAN & PROFILE" SHEETS FOR ADDITIONAL INFORMATION.

SHEET TOTALS

ITEM	EST.	FINAL	UNIT	DESCRIPTION
420	4		CY	CL S CONC (MISC)
529	248		LF	CONC CURB (TYB) (MOUNTABLE)
540	50		LF	MTL BEAM GD FEN (12 GA) (TIM POST) (BLK OUT)
540	1		EA	MTL BEAM GD FEN TRANS (12 GA)
658	2		EA	DEL ASM TY B(D-SW)
658	1		EA	OBJ MRK TY 3(OM-3R)
5453	1		EA	QUADGUARD SYSTEM (2FT) (TY A) (4 BAY)
5819	1		EA	SINGLE GDRAIL TERM (TY II)
4438	17		CY	FLOWABLE BACKFILL
450	58		LF	RAIL (TY SSTR)
420	9		CY	CL C CONC (FOOTING)

THE SEAL APPEARING ON THIS DOCUMENT WAS AUTHORIZED BY JAIME AGUILAR, P.E. 87606 ON 06/26/2003.

STATE OF TEXAS
JAIME AGUILAR
87606
REGISTERED PROFESSIONAL ENGINEER

THE SEAL APPEARING ON THIS DOCUMENT WAS AUTHORIZED BY PHAISARN CWATANAPHOL, P.E. 89252 ON 06/26/2003.

STATE OF TEXAS
PHAISARN CWATANAPHOL
89252
REGISTERED PROFESSIONAL ENGINEER

Parsons Brinckerhoff Quade & Douglas Inc.

Texas Department of Transportation

© 2003 by TxDOT

US 281
PLAN
NB BUS. 281 - DC

STA. 30+00 "BUS281N" TO
STA. 43+24.58 "BUS281N"
PLAN 1"= 100′ HORIZ
PROFILE 1"= 10′ VERT

SHEET 5 OF 6 | 281PBUS281N05.DGN

DESIGNED: JA	FED. RD DIV. NO.	STATE	FEDERAL AID PROJECT NO.	HIGHWAY NO.
CHECKED: JP	6	TEXAS		US 281

DRAWN: CG	STATE DISTRICT	COUNTY	CONTROL No.	SECTION No.	JOB No.	SHEET No.
CHECKED: JDH	PHARR	HIDALGO	0255	08	091	405

I:\22322o\CADD\Sheets\Roadway\SIDE STREET\281PBUS281N05.dgn

NAME
10:45:44 AM
06/26/2003
I:\22322on\CADD\Sheets\Roadway\SIDE STREET\281PBUS281N05.dgn

Curve BUS281N-3

P.I. Station		41+41.37
Delta	=	3° 30' 00.00"
Degree	=	0° 57' 17.75"
Tangent	=	183.32
Length	=	366.52
Radius	=	6,000.00
External	=	2.80
Long Chord	=	366.46
Mid. Ord.	=	2.80
P.C. Station		39+58.06
P.T. Station		43+24.58

LEGEND:

- MC - MOUNTABLE CONC CURB
- BC - BARRIER CONC CURB
- MCG - MOUNTABLE CONC CURB & GUTTER
- BCG - BARRIER CONC CURB & GUTTER
- RW - RETAINING WALL
- RR - PROP CONC RIPRAP
- SGT - SINGLE GUARD RAIL TERMINAL
- MBGF - METAL BEAM GUARD FENCE
- NBFR - NORTHBOUND FRONTAGE ROAD
- SBFR - SOUTHBOUND FRONTAGE ROAD
- NBML - NORTHBOUND MAINLANES
- SBML - SOUTHBOUND MAINLANES
- PROP DITCH
- DEL ASM TY B (D-SW)
- OBJ MRK ASM TY 3 (OM-3R)
- TRF - TRAFFIC RAILING FOUNDATION

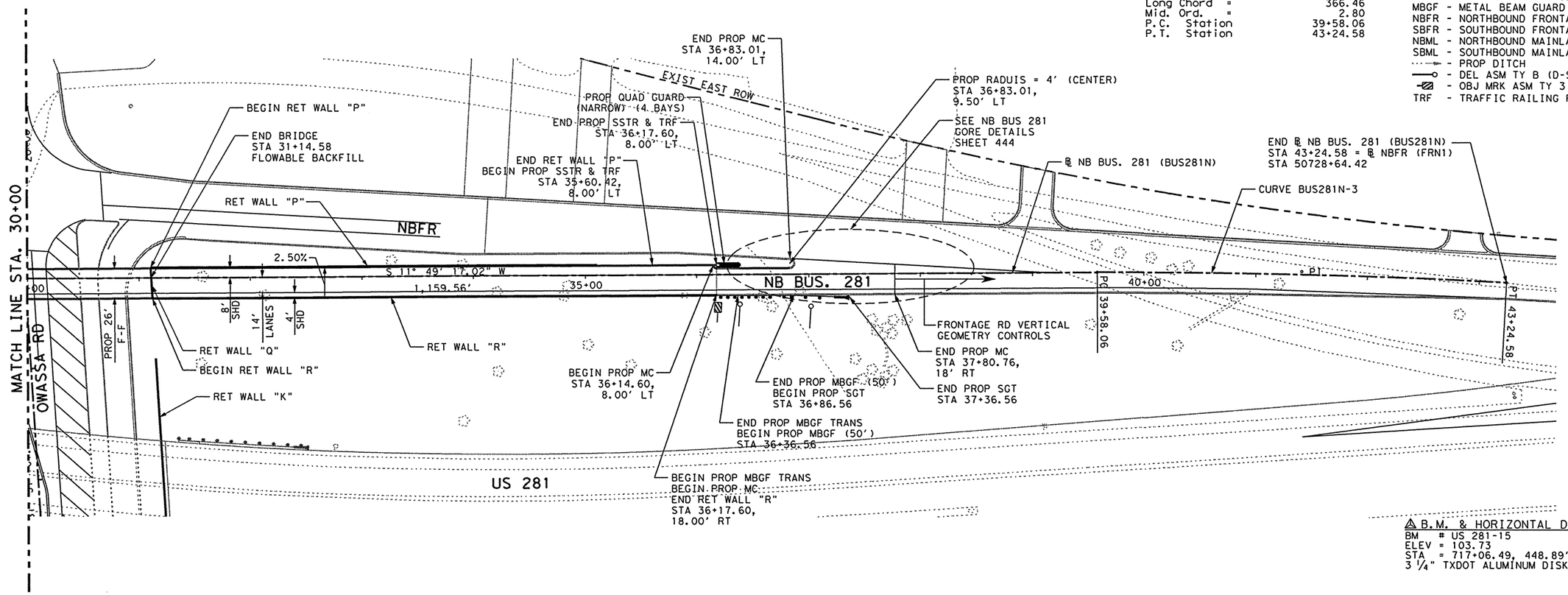

⚠ B.M. & HORIZONTAL DATA
BM # US 281-15
ELEV = 103.73
STA = 717+06.49, 448.89' LT
3 1/4" TXDOT ALUMINUM DISK

THE SEAL APPEARING ON THIS DOCUMENT WAS AUTHORIZED BY JAIME AGUILAR, P.E. 87606 ON 06/26/2003.

THE SEAL APPEARING ON THIS DOCUMENT WAS AUTHORIZED BY PHAISARN CHWATANAPHOL, P.E. 89252 ON 06/26/2003.

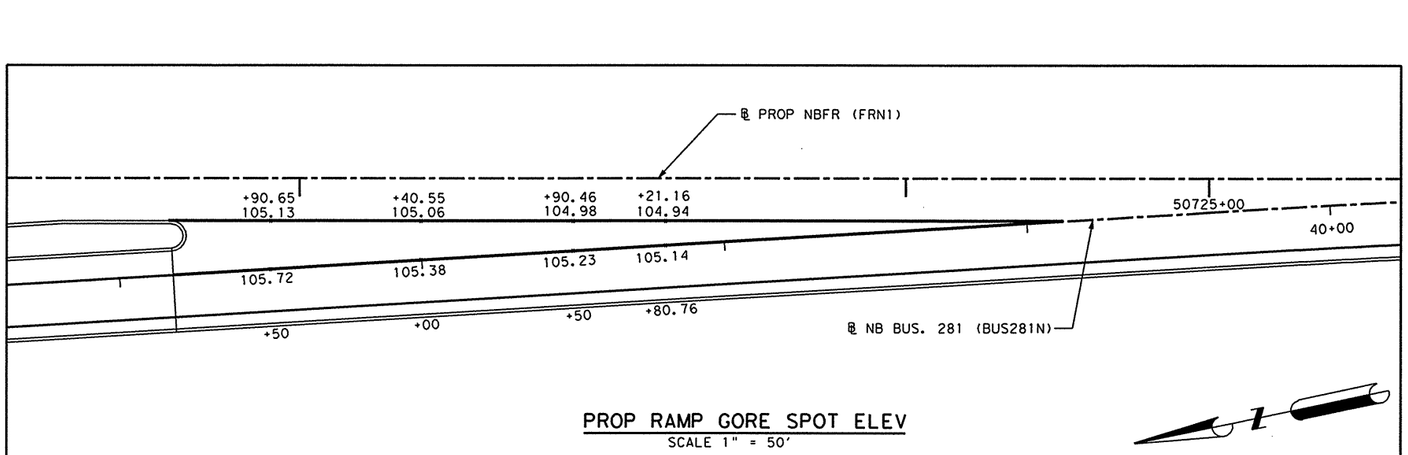

PROP RAMP GORE SPOT ELEV
SCALE 1" = 50'

CAUTION!
MAJOR UTILITY CROSSINGS IN THE VICINITY. REFER TO THE "UTILITIES AND DRAINAGE PLAN & PROFILE" SHEETS FOR ADDITIONAL INFORMATION.

SHEET TOTALS

ITEM	EST.	FINAL	UNIT	DESCRIPTION
420	4		CY	CL S CONC (MISC)
529	248		LF	CONC CURB (TYB) (MOUNTABLE)
540	50		LF	MTL BEAM GD FEN (12 GA) (TIM POST) (BLK OUT)
540	1		EA	MTL BEAM GD FEN TRANS (12 GA)
658	2		EA	DEL ASM TY B (D-SW)
658	1		EA	OBJ MRK TY 3 (OM-3R)
5453	1		EA	QUADGUARD SYSTEM (2FT) (TY A) (4 BAY)
5819	1		EA	SINGLE GDRAIL TERM (TY II)
4438	17		CY	FLOWABLE BACKFILL
450	58		LF	RAIL (TY SSTR)
420	9		CY	CL C CONC (FOOTING)

Parsons Brinckerhoff Quade & Douglas Inc.

Texas Department of Transportation

© 2003 by TxDOT

US 281
PLAN
NB BUS. 281 - DC

STA. 30+00 "BUS281N" TO
STA. 43+24.58 "BUS281N"
PLAN 1"= 100' HORIZ
PROFILE 1"= 10' VERT

SHEET 5 OF 6 | 281PBUS281N05.DGN

DESIGNED: JA	FED. RD DIV. NO.	STATE	FEDERAL AID PROJECT NO.	HIGHWAY NO.
CHECKED: JP	6	TEXAS		US 281

DRAWN: CG	STATE DISTRICT	COUNTY	CONTROL NO.	SECTION NO.	JOB NO.	SHEET NO.
CHECKED: JDH	PHARR	HIDALGO	0255	08	091	405

▲REVISED 9/26/2003

ITEM	EST	FINAL	UNIT	DESCRIPTION
529	507		LF	CONC GUTTER (VALLEY) (TY "B") (RET WALL P)

NAME

10:46:31 AM

06/26/2003

I:\22322o\CADD\Sheets\Roadway\SIDE STREET\281PBUS281N06.dgn

EXIST AND PROP PGL

LEGEND
PROP RAMP PGL
EXIST RAMP BASELINE

190 185 180 175 170 165 160 155 150 145 140 135 130 125 120 115 110 105 100 95

PROP
EXIST

SEE NB BUS. 281 BRIDGE DETAILS

END BRIDGE
STA 31+14.58
ELEV = 125.95'

PROP NB BUS. 281 PGL

VPC 33+40.00
EL. = 114.87'

17.0'

@ OWASSA RD
SB TURNAROUND

STA = 35+25.00
EL = 105.78'
ex = 2.16'
K = 79
L = 370.00'

(-)4.9134 %

(-)0.2358 %

VPT 37+10.00
EL. = 105.35'

END CONSTRUCTION NB BUS. 281
END PROP PGL NB BUS. 281
STA 37+80.76
EL = 105.14'

NB BUS. 281 GRADE & CROSS SLOPE ><
CONTROLLED BY PROP NB FRTG RD

EXIST NB BUS. 281 BASELINE

102.97 129.12 103.35 126.67 103.03 124.21 103.06 121.75 103.04 119.30 102.84 116.84 102.83 114.39 102.56 112.15 102.63 110.23 102.60 108.63 102.74 107.34 103.07 106.37 103.03 105.72 103.49 105.38 103.88 105.23 104.04 104.28 104.80 105.48 105.52 105.53 104.33 104.76 104.75

35+00 40+00

>< NB BUS. 281 "BUS281N" SHALL MATCH THE NORTHBOUND FRONTAGE ROAD PROFILE AND CROSS SLOPE

THE SEAL APPEARING ON THIS DOCUMENT WAS AUTHORIZED BY JAIME AGUILAR, P.E. 87606 ON 06/26/2003.

STATE OF TEXAS
JAIME AGUILAR
87606
REGISTERED
PROFESSIONAL ENGINEER

THE SEAL APPEARING ON THIS DOCUMENT WAS AUTHORIZED BY PHAISARN CWATANAPHOL, P.E. 89252 ON 06/26/2003.

STATE OF TEXAS
PHAISARN CWATANAPHOL
89252
REGISTERED
PROFESSIONAL ENGINEER

Parsons Brinckerhoff Quade & Douglas Inc.

Texas Department of Transportation

© 2002 by TxDOT

US 281
PROFILE
NB BUS. 281 - DC

STA. 30+00 "BUS281N" TO
STA. 42+00+00 "BUS281N"
PLAN 1"= 100' HORIZ
PROFILE 1"= 10' VERT

SHEET 6 OF 6 | 281PBUS281N06.DGN

DESIGNED: JA	FED. RD DIV. NO.	STATE	FEDERAL AID PROJECT No.			HIGHWAY No.
CHECKED: JP	6	TEXAS				US 281
DRAWN: CG	STATE DISTRICT	COUNTY	CONTROL No.	SECTION No.	JOB No.	SHEET No.
CHECKED: JA	PHARR	HIDALGO	0255	08	091	406

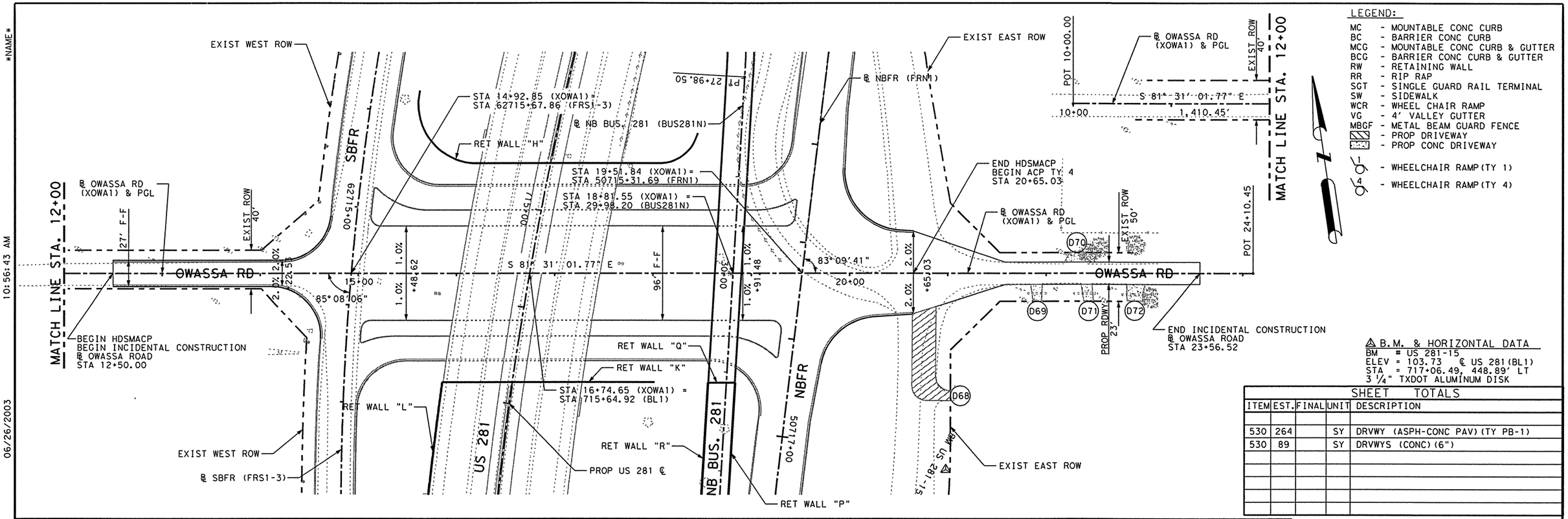

△ B.M. & HORIZONTAL DATA
BM # US 281-15
ELEV = 103.73 ℄ US 281(BL1)
STA = 717+06.49, 448.89' LT
3 1/4" TXDOT ALUMINUM DISK

SHEET TOTALS

ITEM	EST.	FINAL	UNIT	DESCRIPTION
530	264		SY	DRVWY (ASPH-CONC PAV)(TY PB-1)
530	89		SY	DRVWYS (CONC)(6")

EXIST AND PROP PGL

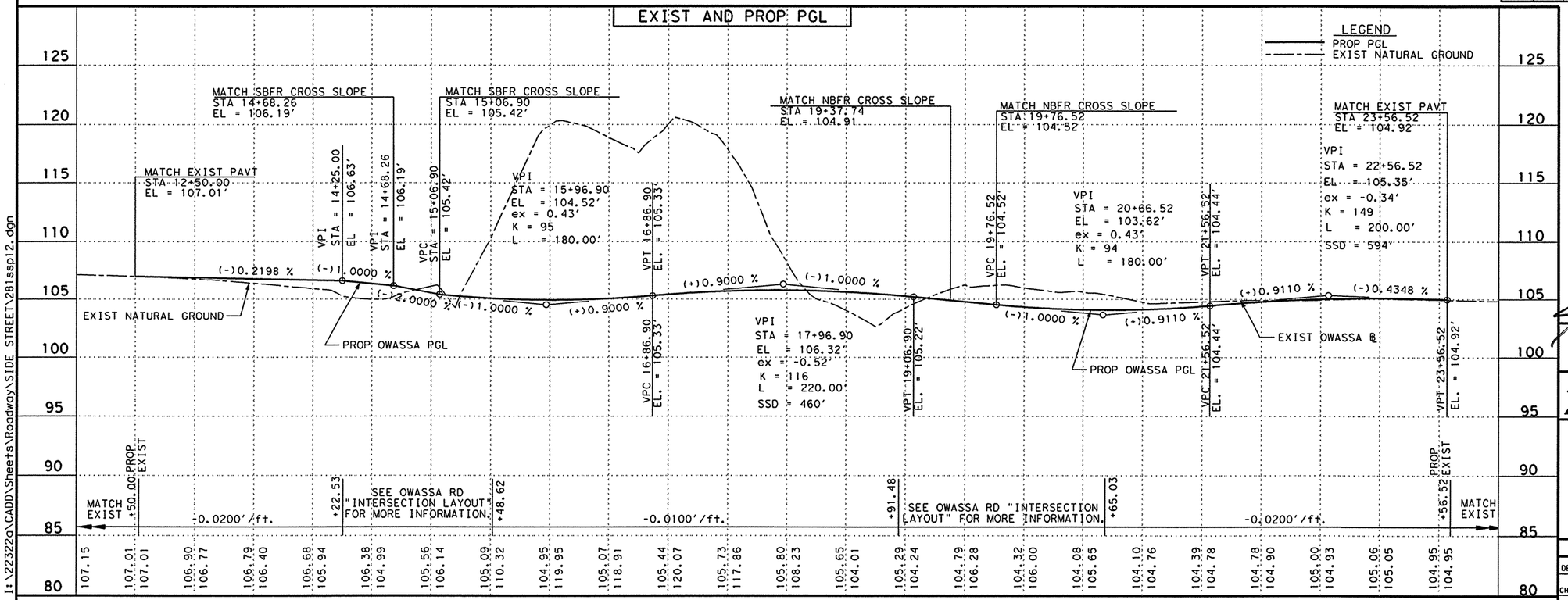

THE SEAL APPEARING ON THIS DOCUMENT WAS AUTHORIZED BY JAIME AGUILAR, P.E. 87606 ON 06/26/2003.

THE SEAL APPEARING ON THIS DOCUMENT WAS AUTHORIZED BY PHAISARN CWATANAPHOL, P.E. 89252 ON 06/26/2003.

Parsons Brinckerhoff Quade & Douglas Inc.

Texas Department of Transportation

© 2003 by TxDOT

US 281
PLAN & PROFILE
OWASSA RD INTERSECTION

PLAN 1"= 100' HORIZ
PROFILE 1"= 10' VERT

SHEET 1 OF 1 | 281SSP12.DGN

DESIGNED: TT	FED. RD DIV. NO.	STATE	FEDERAL AID PROJECT No.	HIGHWAY No.
CHECKED: DM	6	TEXAS		US 281

DRAWN:	STATE DISTRICT	COUNTY	CONTROL No.	SECTION No.	JOB No.	SHEET No.
CHECKED: DM	PHARR	HIDALGO	0255	08	091	407

I:\22322g\CADD\Sheets\Roadway\SIDE STREET\281ssp12.dgn

NAME
11:01:13 AM
06/26/2003
I:\22322a\CADD\Sheets\Roadway\TURNAROUNDS\281tpn13.dgn

Curve TOWAN-1

P.I. Station	11+10.51
Delta =	4° 03′ 11.67" (LT)
Degree =	2° 01′ 02.11"
Tangent =	100.51
Length =	200.93
Radius =	2,840.29
External =	1.78
Long Chord =	200.89
Mid. Ord. =	1.78
P.C. Station	10+10.00
P.T. Station	12+10.93

Curve TOWAN-2

P.I. Station	12+68.30
Delta =	97° 50′ 59.61" (LT)
Degree =	114° 35′ 29.61"
Tangent =	57.37
Length =	85.39
Radius =	50.00
External =	26.10
Long Chord =	75.38
Mid. Ord. =	17.15
P.C. Station	12+10.93
P.T. Station	12+96.32

Curve TOWAN-3

P.I. Station	16+50.87
Delta =	83° 09′ 41.21" (LT)
Degree =	111° 15′ 14.19"
Tangent =	45.69
Length =	74.75
Radius =	51.50
External =	17.35
Long Chord =	68.36
Mid. Ord. =	12.98
P.C. Station	16+05.18
P.T. Station	16+79.93

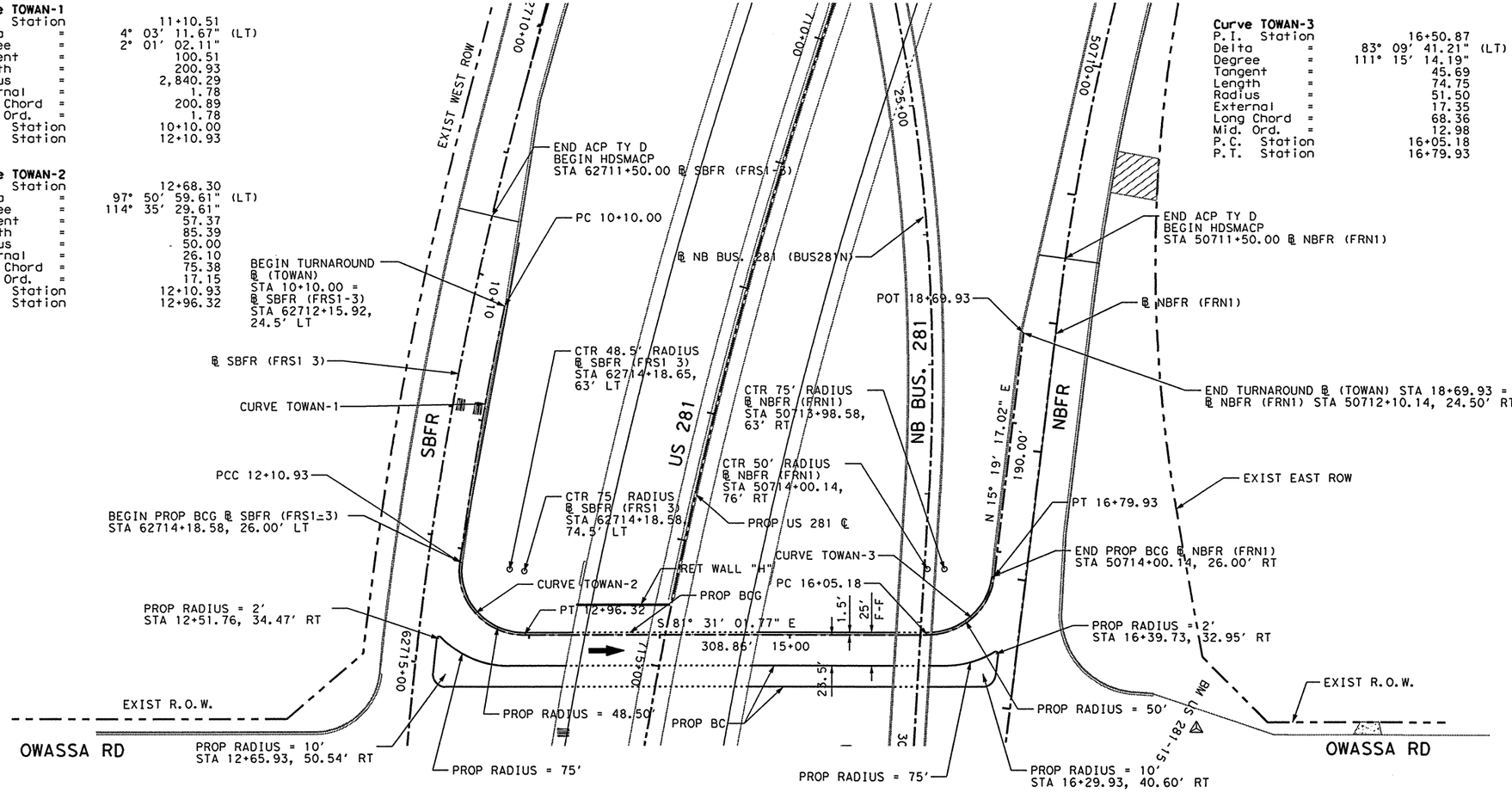

LEGEND:

- MC - MOUNTABLE CONC CURB
- BC - BARRIER CONC CURB
- MCG - MOUNTABLE CONC CURB & GUTTER
- BCG - BARRIER CONC CURB & GUTTER
- RW - RETAINING WALL
- RR - RIP RAP
- SGT - SINGLE GUARD RAIL TERMINAL
- SW - SIDEWALK
- WCR - WHEEL CHAIR RAMP
- VG - 4′ VALLEY GUTTER
- MBGF - METAL BEAM GUARD FENCE
- PROP DRIVEWAY
- PROP CONC DRIVEWAY
- 1 - WHEELCHAIR RAMP(TY 1)
- 4 - WHEELCHAIR RAMP(TY 4)

⚠ B.M. & HORIZONTAL DATA
BM # US 281-15
ELEV = 103.73 ℄ US 281(BL1)
STA = 717+06.49, 448.89′ LT
3 1/4" TXDOT ALUMINUM DISK

SHEET TOTALS

ITEM	EST.	FINAL	UNIT	DESCRIPTION
529	927		LF	CONC CURB (TY A)(BARRIER)
529	460		LF	CONC C & G (TY A)(BARRIER)

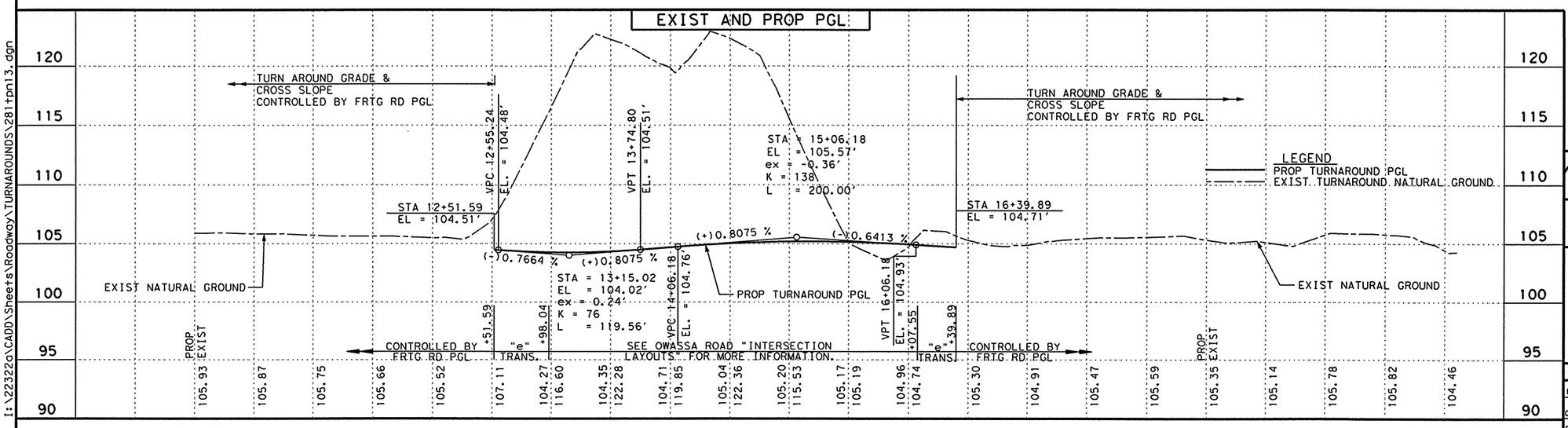

THE SEAL APPEARING ON THIS DOCUMENT WAS AUTHORIZED BY JAIME AGUILAR, P.E. 87606 ON 06/26/2003.

THE SEAL APPEARING ON THIS DOCUMENT WAS AUTHORIZED BY PHAISARN CWATANAPHOL, P.E. 89252 ON 06/26/2003.

STATE OF TEXAS · JAIME AGUILAR · 87606 · REGISTERED PROFESSIONAL ENGINEER

STATE OF TEXAS · PHAISARN CWATANAPHOL · 89252 · REGISTERED PROFESSIONAL ENGINEER

Parsons Brinckerhoff Quade & Douglas Inc.

Texas Department of Transportation

© 2003 by TxDOT

US 281
PLAN & PROFILE
NORTHBOUND TURNAROUND @ OWASSA ROAD

PLAN 1"= 100′ HORIZ
PROFILE 1"= 10′ VERT

SHEET 1 OF 1				281TPN13.DGN	
DESIGNED: JA	FED. RD DIV. NO.	STATE	FEDERAL AID PROJECT No.		HIGHWAY No.
CHECKED: JP	6	TEXAS			US 281
DRAWN:	STATE DISTRICT	COUNTY	CONTROL No.	SECTION No.	JOB No.	SHEET No.
CHECKED: JDH	PHARR	HIDALGO	0255	08	091	408

NAME
11:02:09 AM
06/26/2003

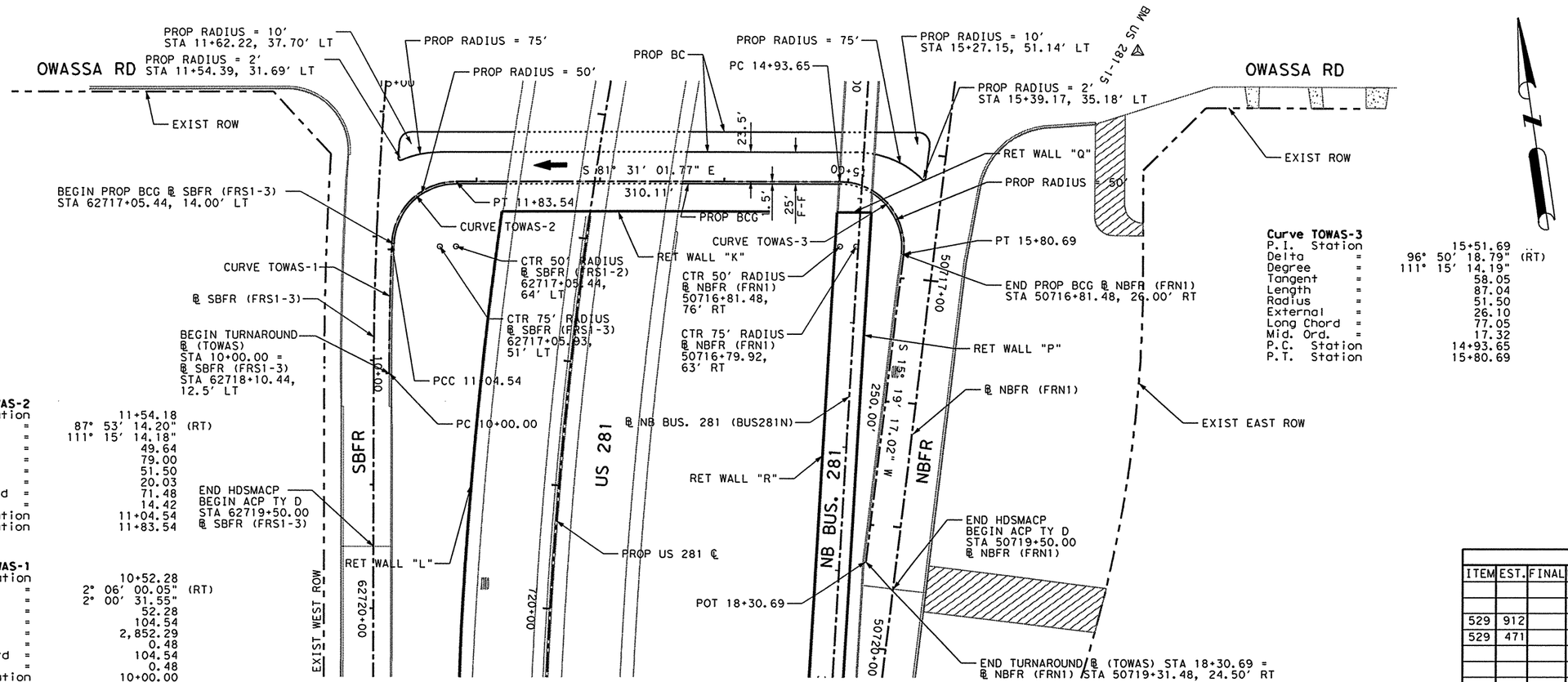

Curve TOWAS-2

P.I.	Station	11+54.18
Delta	=	87° 53' 14.20" (RT)
Degree	=	111° 15' 14.18"
Tangent	=	49.64
Length	=	79.00
Radius	=	51.50
External	=	20.03
Long Chord	=	71.48
Mid. Ord.	=	14.42
P.C.	Station	11+04.54
P.T.	Station	11+83.54

Curve TOWAS-1

P.I.	Station	10+52.28
Delta	=	2° 06' 00.05" (RT)
Degree	=	2° 00' 31.55"
Tangent	=	52.28
Length	=	104.54
Radius	=	2,852.29
External	=	0.48
Long Chord	=	104.54
Mid. Ord.	=	0.48
P.C.	Station	10+00.00
P.T.	Station	11+04.54

Curve TOWAS-3

P.I.	Station	15+51.69
Delta	=	96° 50' 18.79" (RT)
Degree	=	111° 15' 14.19"
Tangent	=	58.05
Length	=	87.04
Radius	=	51.50
External	=	26.10
Long Chord	=	77.05
Mid. Ord.	=	17.32
P.C.	Station	14+93.65
P.T.	Station	15+80.69

LEGEND:

- MC - MOUNTABLE CONC CURB
- BC - BARRIER CONC CURB
- MCG - MOUNTABLE CONC CURB & GUTTER
- BCG - BARRIER CONC CURB & GUTTER
- RW - RETAINING WALL
- RR - RIP RAP
- SGT - SINGLE GUARD RAIL TERMINAL
- SW - SIDEWALK
- WCR - WHEEL CHAIR RAMP
- VG - 4' VALLEY GUTTER
- MBGF - METAL BEAM GUARD FENCE
- PROP DRIVEWAY
- PROP CONC DRIVEWAY
- 1 - WHEELCHAIR RAMP (TY 1)
- 4 - WHEELCHAIR RAMP (TY 4)

△ B.M. & HORIZONTAL DATA
BM # US 281-15
ELEV = 103.73 ℄ US 281 (BL1)
STA = 717+06.49, 448.89' LT
3 1/4" TXDOT ALUMINUM DISK

SHEET TOTALS

ITEM	EST.	FINAL	UNIT	DESCRIPTION
529	912		LF	CONC CURB (TY A) (BARRIER)
529	471		LF	CONC C & G (TY A) (BARRIER)

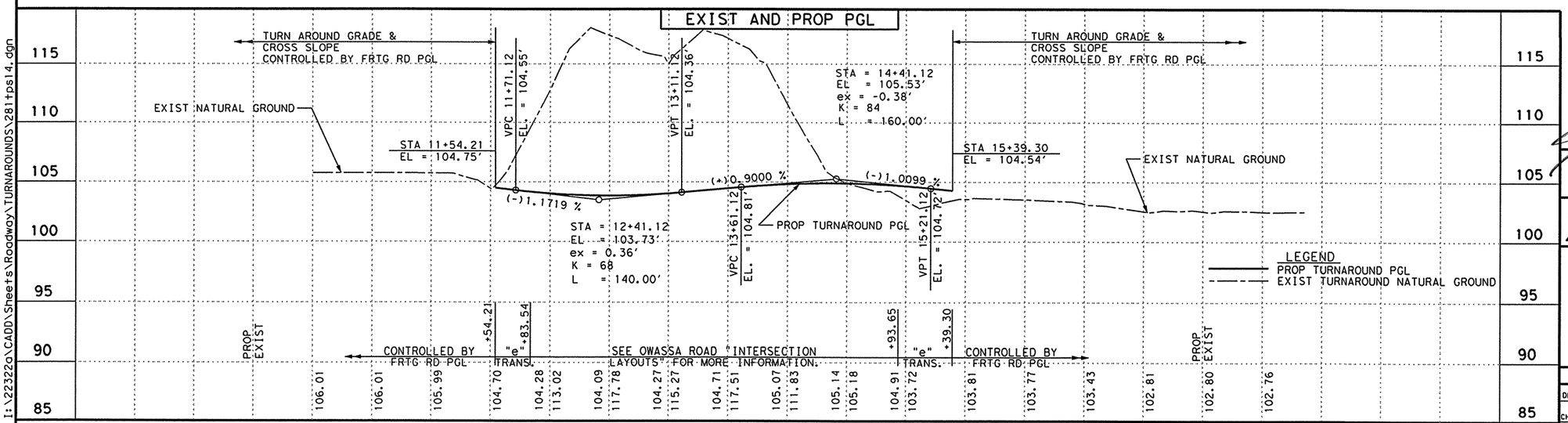

I:\22322e\CADD\Sheets\Roadway\TURNAROUNDS\281tps14.dgn

THE SEAL APPEARING ON THIS DOCUMENT WAS AUTHORIZED BY JAIME AGUILAR, P.E. 87606 ON 06/26/2003.

STATE OF TEXAS
JAIME AGUILAR
87606
REGISTERED PROFESSIONAL ENGINEER

THE SEAL APPEARING ON THIS DOCUMENT WAS AUTHORIZED BY PHAISARN CWATANAPHOL, P.E. 89252 ON 06/26/2003.

STATE OF TEXAS
PHAISARN CWATANAPHOL
89252
REGISTERED PROFESSIONAL ENGINEER

PB Parsons Brinckerhoff Quade & Douglas Inc.

Texas Department of Transportation

© 2003 by TxDOT

US 281
PLAN & PROFILE
SOUTHBOUND TURNAROUND @ OWASSA ROAD

PLAN 1"= 100' HORIZ
PROFILE 1"= 10' VERT

SHEET 1 OF 1				281TPS14.DGN	
DESIGNED: JA	FED. RD DIV. No.	STATE	FEDERAL AID PROJECT No.		HIGHWAY No.
CHECKED: JP	6	TEXAS			US 281
DRAWN:	STATE DISTRICT	COUNTY	CONTROL No.	SECTION No.	JOB No.	SHEET No.
CHECKED: JDH	PHARR	HIDALGO	0255	08	091	409

NAME
10:30:35 AM
06/26/2003
i:\22322a\cadd\sheets\roadway\details\281offset16.dgn

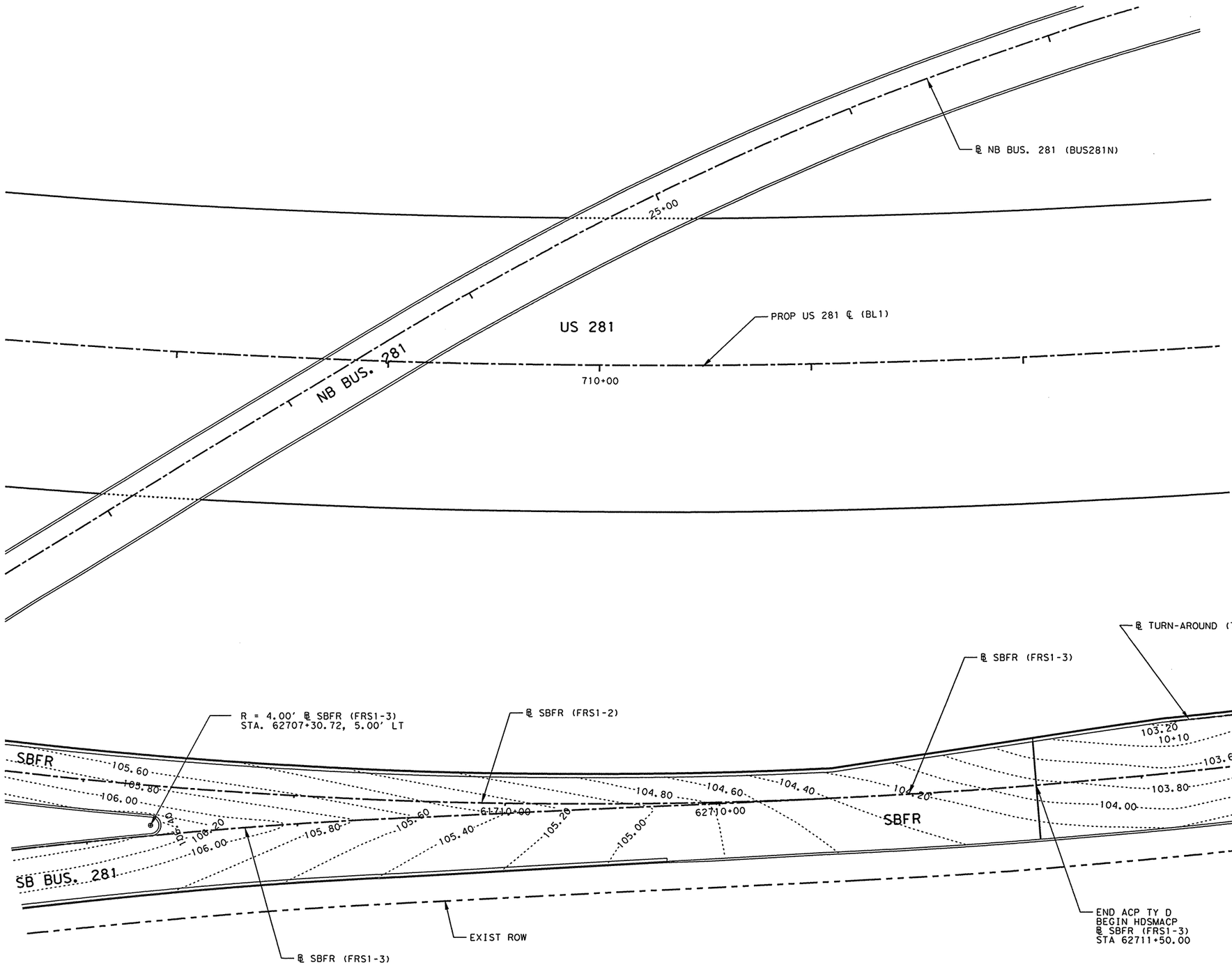

THE SEAL APPEARING ON THIS DOCUMENT WAS AUTHORIZED BY JAIME AGUILAR, P.E. 87606 ON 06/26/2003.

THE SEAL APPEARING ON THIS DOCUMENT WAS AUTHORIZED BY PHAISARN CWATANAPHOL, P.E. 89252 ON 06/26/2003.

STATE OF TEXAS
JAIME AGUILAR
87606
REGISTERED PROFESSIONAL ENGINEER

STATE OF TEXAS
PHAISARN CWATANAPHOL
89252
REGISTERED PROFESSIONAL ENGINEER

Parsons Brinckerhoff Quade & Douglas Inc.

Texas Department of Transportation

© 2003 by TxDOT

INTERSECTION LAYOUT
US 281
OWASSAS ROAD

STA. 62706+75.00 "FR1-3" TO
STA. 62712+50.00 "FR1-3"

PLAN 1"= 50' HORIZ

SHEET 1 OF 4 | 281OFFSET16.DGN

DESIGNED: PAF	FED. RD DIV. No.	STATE	FEDERAL AID PROJECT No.				HIGHWAY No.
CHECKED: JP	6	TEXAS					US 281
DRAWN: KTD	STATE DISTRICT	COUNTY	CONTROL No.	SECTION No.	JOB No.	SHEET No.	
CHECKED: AGM	PHARR	HIDALGO	0255	08	091	410	

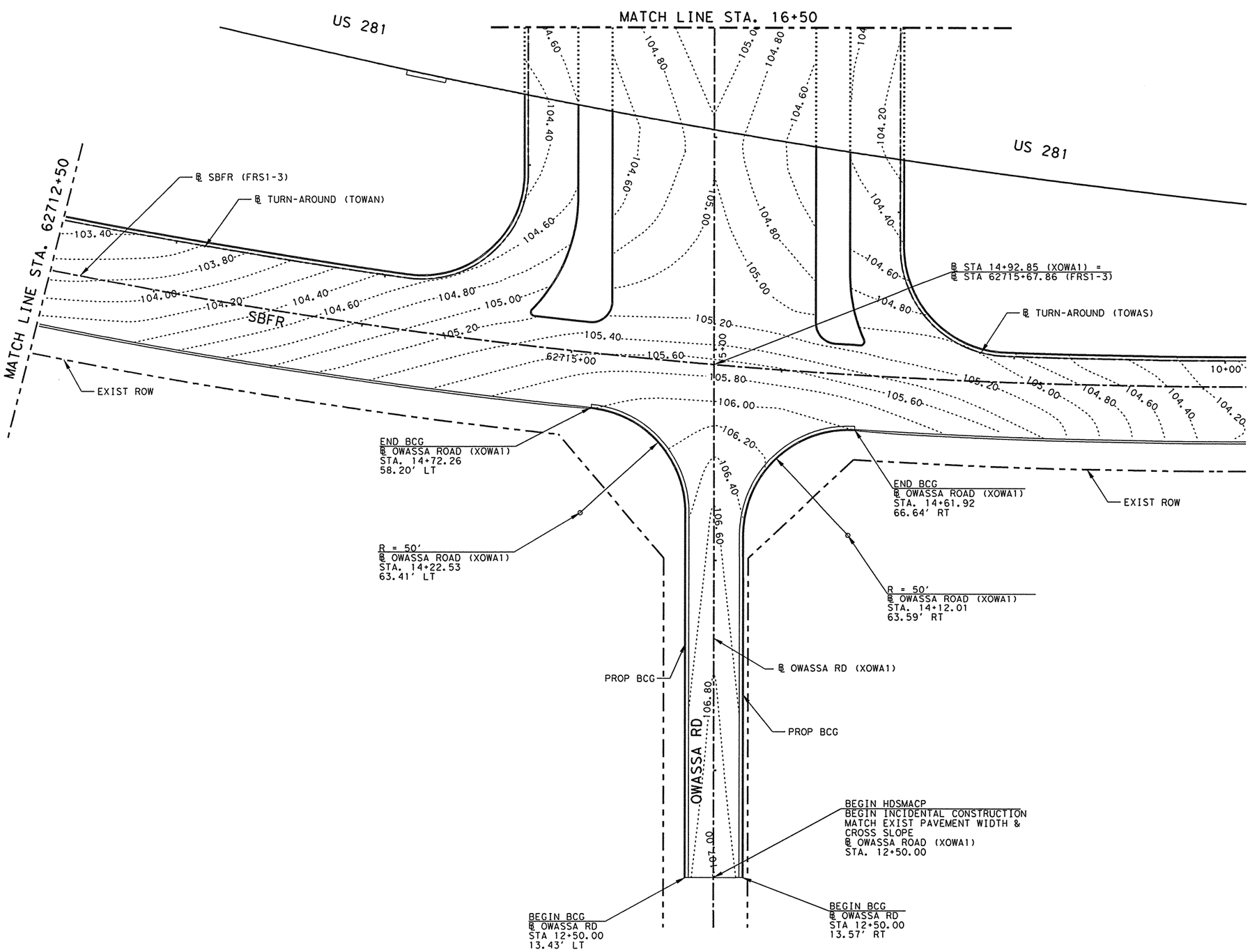

NOTES:

1. RADIUS MEASUREMENTS ARE TO THE FACE OF THE CURB. IF THERE IS NO CURB, MEASUREMENTS ARE TO THE EDGE OF PAVEMENT.

SHEET TOTALS

ITEM	EST.	FINAL	UNIT	DESCRIPTION
529	489		LF	CONC C & G (TY A)(BARRIER)

THE SEAL APPEARING ON THIS DOCUMENT WAS AUTHORIZED BY JAIME AGUILAR, P.E. 87606 ON 06/26/2003.

THE SEAL APPEARING ON THIS DOCUMENT WAS AUTHORIZED BY PHAISARN CWATANAPHOL, P.E. 89252 ON 06/26/2003.

STATE OF TEXAS
JAIME AGUILAR
87606
REGISTERED PROFESSIONAL ENGINEER

STATE OF TEXAS
PHAISARN CWATANAPHOL
89252
REGISTERED PROFESSIONAL ENGINEER

Parsons Brinckerhoff Quade & Douglas Inc.

Texas Department of Transportation

© 2003 by TxDOT

INTERSECTION LAYOUTS
US 281
OWASSA ROAD

STA. 12+50 "XOWA1" TO
STA. 16+50 "XOWA1"

PLAN 1"= 50' HORIZ

SHEET 2 OF 4			2810FFSET19.DGN				
DESIGNED: PAF	FED. RD DIV. No.	STATE	FEDERAL AID PROJECT No.				HIGHWAY No.
CHECKED: JP	6	TEXAS					US 281
DRAWN: KTD	STATE DISTRICT	COUNTY	CONTROL No.	SECTION No.	JOB No.	SHEET No.	
CHECKED: AGM	PHARR	HIDALGO	0255	08	091	411	

NAME
10:30:43 AM
06/26/2003
i:\22322a\cadd\sheets\roadway\details\2810ffset19.dgn

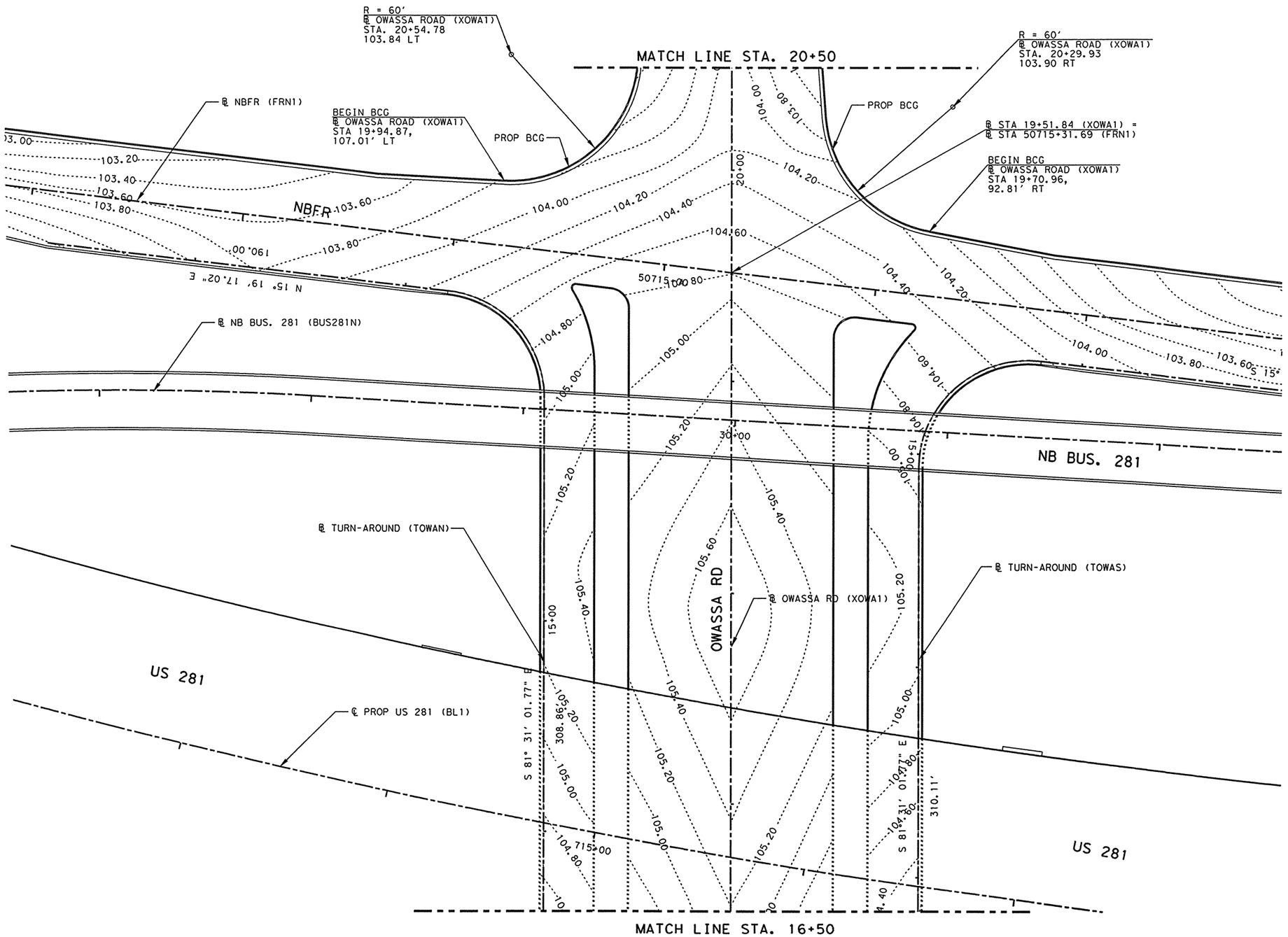

NOTES:

1. RADIUS MEASUREMENTS ARE TO THE FACE OF THE CURB. IF THERE IS NO CURB, MEASUREMENTS ARE TO THE EDGE OF PAVEMENT.

SHEET TOTALS				
ITEM	EST.	FINAL	UNIT	DESCRIPTION
529	193		LF	CONC C & G (TY A) (BARRIER)

THE SEAL APPEARING ON THIS DOCUMENT WAS AUTHORIZED BY JAIME AGUILAR, P.E. 87606 ON 06/26/2003.

THE SEAL APPEARING ON THIS DOCUMENT WAS AUTHORIZED BY PHAISARN CWATANAPHOL, P.E. 89252 ON 06/26/2003.

STATE OF TEXAS
JAIME AGUILAR
87606
REGISTERED PROFESSIONAL ENGINEER

STATE OF TEXAS
PHAISARN CWATANAPHOL
89252
REGISTERED PROFESSIONAL ENGINEER

Parsons Brinckerhoff Quade & Douglas Inc.

Texas Department of Transportation

© 2003 by TxDOT

INTERSECTION LAYOUTS
US 281
OWASSA ROAD
STA. 16+50 "XOWA1" TO
STA. 20+50 "XOWA1"

PLAN 1"= 50' HORIZ

SHEET 3 OF 4 | 281OFFSET20.DGN

DESIGNED: PAF	FED. RD DIV. No.	STATE	FEDERAL AID PROJECT No.			HIGHWAY No.	
CHECKED: JP	6	TEXAS				US 281	
DRAWN: KTD	STATE DISTRICT	COUNTY	CONTROL No.	SECTION No.	JOB No.	SHEET No.	
CHECKED: AGM	PHARR	HIDALGO	0255	08	091	412	

NAME
10:31:01 AM
06/26/2003
i:\22322o\cadd\sheets\roadway\details\281offset21.dgn

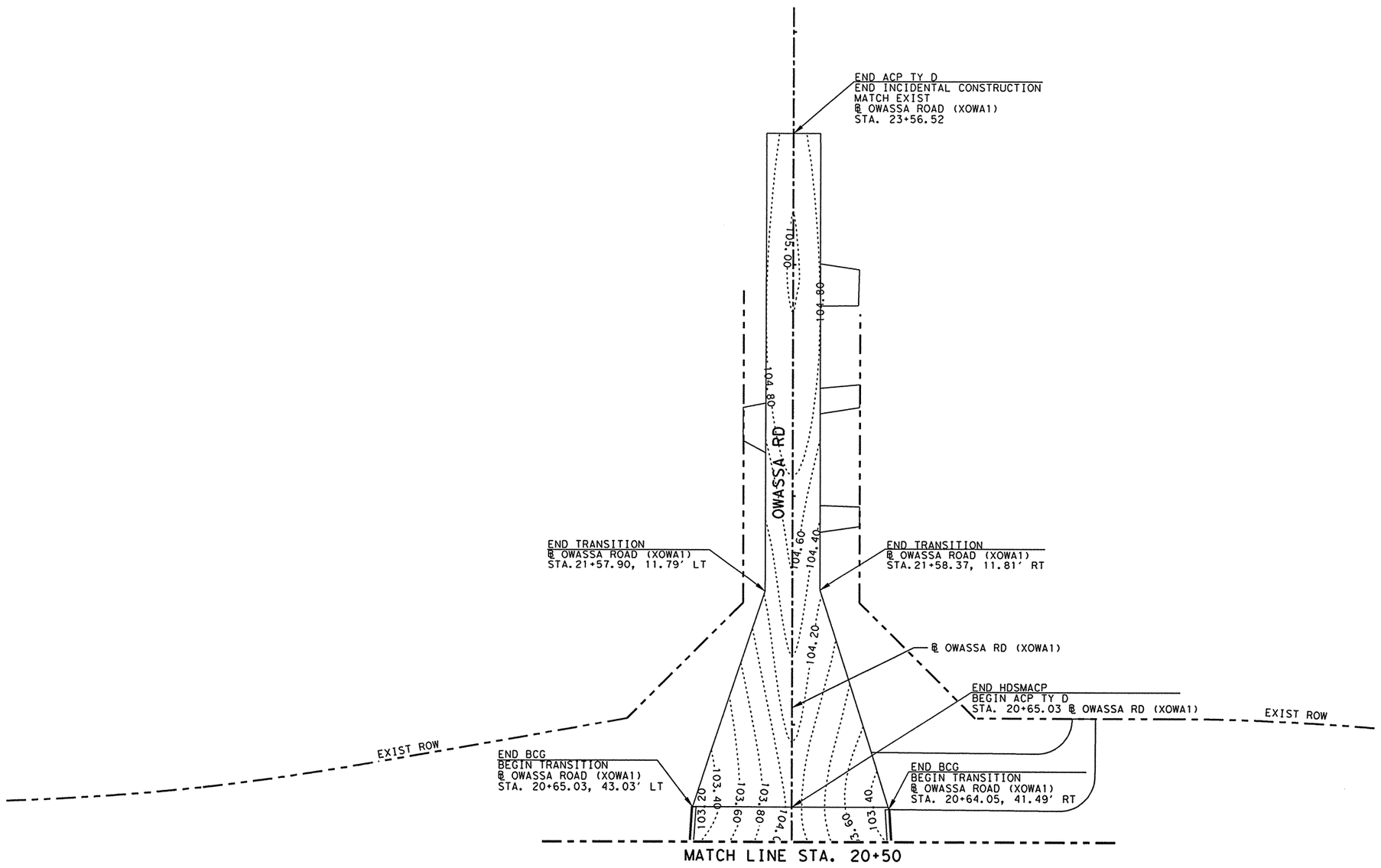

NOTES:

1. RADIUS MEASUREMENTS ARE TO THE FACE OF THE CURB. IF THERE IS NO CURB, MEASUREMENTS ARE TO THE EDGE OF PAVEMENT.

SHEET TOTALS

ITEM	EST.	FINAL	UNIT	DESCRIPTION
529	27		LF	CONC C & G (TY A)(BARRIER)

THE SEAL APPEARING ON THIS DOCUMENT WAS AUTHORIZED BY JAIME AGUILAR, P.E. 87606 ON 06/26/2003.

THE SEAL APPEARING ON THIS DOCUMENT WAS AUTHORIZED BY PHAISARN CWATANAPHOL, P.E. 89252 ON 06/26/2003.

STATE OF TEXAS
JAIME AGUILAR
87606
REGISTERED PROFESSIONAL ENGINEER

STATE OF TEXAS
PHAISARN CWATANAPHOL
89252
REGISTERED PROFESSIONAL ENGINEER

Parsons Brinckerhoff Quade & Douglas Inc.

Texas Department of Transportation

© 2003 by TxDOT

INTERSECTION LAYOUTS
US 281
OWASSA ROAD

STA. 20+50 "XOWA1" TO
STA. 23+56 "XOWA1"

PLAN 1"= 50' HORIZ

SHEET 4 OF 4 | 281OFFSET21.DGN

DESIGNED: PAF	FED. RD DIV. NO.	STATE	FEDERAL AID PROJECT No.		HIGHWAY No.	
CHECKED: JP	6	TEXAS			US 281	
DRAWN: KTD	STATE DISTRICT	COUNTY	CONTROL No.	SECTION No.	JOB No.	SHEET No.
CHECKED: AGM	PHARR	HIDALGO	0255	08	091	413

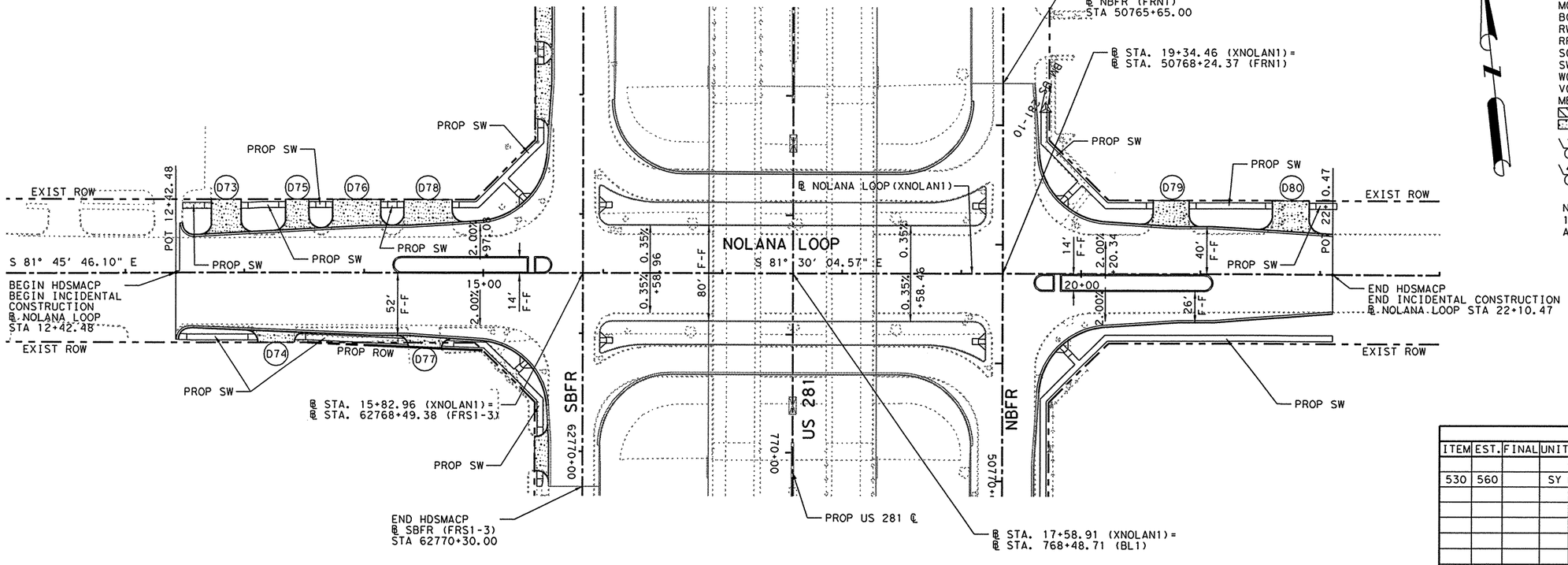

LEGEND:

MC	- MOUNTABLE CONC CURB
BC	- BARRIER CONC CURB
MCG	- MOUNTABLE CONC CURB & GUTTER
BCG	- BARRIER CONC CURB & GUTTER
RW	- RETAINING WALL
RR	- RIP RAP
SGT	- SINGLE GUARD RAIL TERMINAL
SW	- SIDEWALK
WCR	- WHEEL CHAIR RAMP
VG	- 4' VALLEY GUTTER
MBGF	- METAL BEAM GUARD FENCE
	- PROP DRIVEWAY
	- PROP CONC DRIVEWAY
1	- WHEELCHAIR RAMP (TY 1)
4	- WHEELCHAIR RAMP (TY 4)

NOTES:
1. FOR DRIVEWAY APRON TYPES AND SIZES, SEE "DRIVEWAY SUMMARY".

⚠ B.M. & HORIZONTAL DATA
BM # US 281-10
ELEV = 105.56
STA = 767+10.57, 210.84' LT
3 1/4" TXDOT ALUMINUM DISK

SHEET TOTALS

ITEM	EST.	FINAL	UNIT	DESCRIPTION
530	560		SY	DRVWYS (CONC) (6")

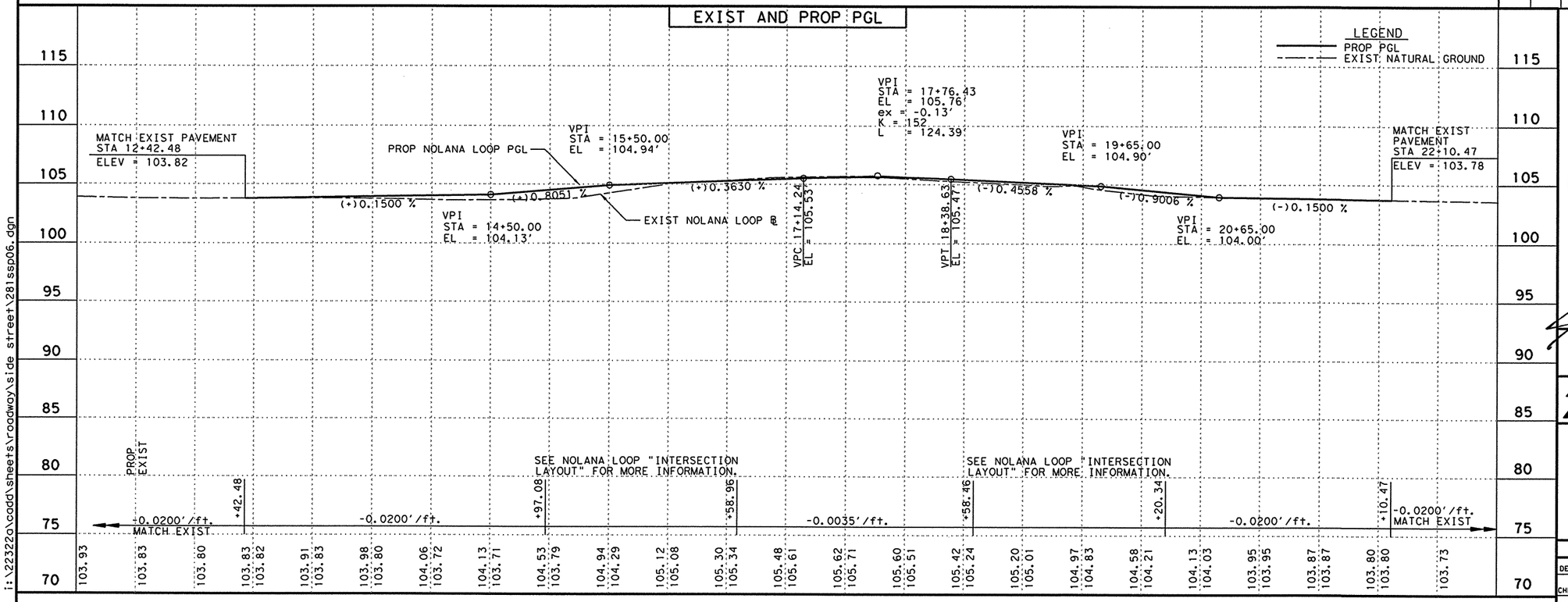

THE SEAL APPEARING ON THIS DOCUMENT WAS AUTHORIZED BY JAIME AGUILAR, P.E. 87606 ON 06/26/2003.

THE SEAL APPEARING ON THIS DOCUMENT WAS AUTHORIZED BY PHAISARN CWATANAPHOL, P.E. 89252 ON 06/26/2003.

STATE OF TEXAS · JAIME AGUILAR · 87606 · REGISTERED PROFESSIONAL ENGINEER

STATE OF TEXAS · PHAISARN CWATANAPHOL · 89252 · REGISTERED PROFESSIONAL ENGINEER

Parsons Brinckerhoff Quade & Douglas Inc.

Texas Department of Transportation

© 2003 by TxDOT

US 281
PLAN & PROFILE
NOLANA LOOP INTERSECTION

PLAN 1"= 100' HORIZ
PROFILE 1"= 10' VERT

SHEET 1 OF 1				281SSP06.DGN			
DESIGNED: TT	FED. RD DIV. No.	STATE	FEDERAL AID PROJECT No.			HIGHWAY No.	
CHECKED: DM	6	TEXAS				US 281	
DRAWN:	STATE DISTRICT	COUNTY	CONTROL No.	SECTION No.	JOB No.	SHEET No.	
CHECKED: DM	PHARR	HIDALGO	0255	08	091	414	

NAME
10:15:55 AM
06/26/2003
i:\22322o\cadd\sheets\roadway\side street\281ssp06.dgn

NAME
10:24:01 AM
06/26/2003
i:\22322a\cadd\sheets\roadway\turnarounds\281tpn09.dgn

Curve TNOLANN-1

P.I. Station		15+40.50
Delta	=	90° 29' 37.97" (LT)
Degree	=	93° 09' 49.93"
Tangent	=	62.03
Length	=	97.13
Radius	=	61.50
External	=	25.85
Long Chord	=	87.35
Mid. Ord.	=	18.20
P.C. Station		14+78.47
P.T. Station		15+75.60

Curve TNOLANN-2

P.I. Station		18+16.56
Delta	=	90° 00' 13.68" (LT)
Degree	=	93° 09' 49.93"
Tangent	=	61.50
Length	=	96.61
Radius	=	61.50
External	=	25.48
Long Chord	=	86.98
Mid. Ord.	=	18.01
P.C. Station		17+55.06
P.T. Station		18+51.67

LEGEND:

- MC - MOUNTABLE CONC CURB
- BC - BARRIER CONC CURB
- MCG - MOUNTABLE CONC CURB & GUTTER
- BCG - BARRIER CONC CURB & GUTTER
- RW - RETAINING WALL
- RR - RIP RAP
- SGT - SINGLE GUARD RAIL TERMINAL
- SW - SIDEWALK
- WCR - WHEEL CHAIR RAMP
- VG - 4' VALLEY GUTTER
- MBGF - METAL BEAM GUARD FENCE
- (hatched) - PROP DRIVEWAY
- (stippled) - PROP CONC DRIVEWAY
- (1) - WHEELCHAIR RAMP (TY 1)
- (4) - WHEELCHAIR RAMP (TY 4)

B.M. & HORIZONTAL DATA

BM # US 281-10
ELEV = 105.56
STA = 767+10.57, 210.84' LT
3 1/4" TXDOT ALUMINUM DISK

SHEET TOTALS

ITEM	EST.	FINAL	UNIT	DESCRIPTION
529	710		LF	CONC CURB (TY A) (BARRIER)
529	368		LF	CONC C & G (TY A) (BARRIER)
531	2		EA	CONC SIDEWALK (WHEELCHAIR RAMP)

THE SEAL APPEARING ON THIS DOCUMENT WAS AUTHORIZED BY JAIME AGUILAR, P.E. 87606 ON 06/26/2003.

THE SEAL APPEARING ON THIS DOCUMENT WAS AUTHORIZED BY PHAISARN CWATANAPHOL, P.E. 89252 ON 06/26/2003.

STATE OF TEXAS — JAIME AGUILAR — 87606 — REGISTERED PROFESSIONAL ENGINEER

STATE OF TEXAS — PHAISARN CWATANAPHOL — 89252 — REGISTERED PROFESSIONAL ENGINEER

Parsons Brinckerhoff Quade & Douglas Inc.

Texas Department of Transportation

© 2003 by TxDOT

US 281
PLAN & PROFILE
NORTHBOUND TURNAROUND @ NOLANA LOOP

PLAN 1" = 100' HORIZ
PROFILE 1" = 10' VERT

SHEET 1 OF 1 — 281TPN09.DGN

DESIGNED: JA	FED. RD DIV. No.	STATE	FEDERAL AID PROJECT No.		HIGHWAY No.
CHECKED: JP	6	TEXAS			US 281
DRAWN:	STATE DISTRICT	COUNTY	CONTROL No.	SECTION No.	JOB No. / SHEET No.
CHECKED: JDH	PHARR	HIDALGO	0255	08	091 / 415

NAME
10:24:18 AM
06/26/2003
i:\22322g\cadd\sheets\roadway\turnarounds\281tps10.dgn

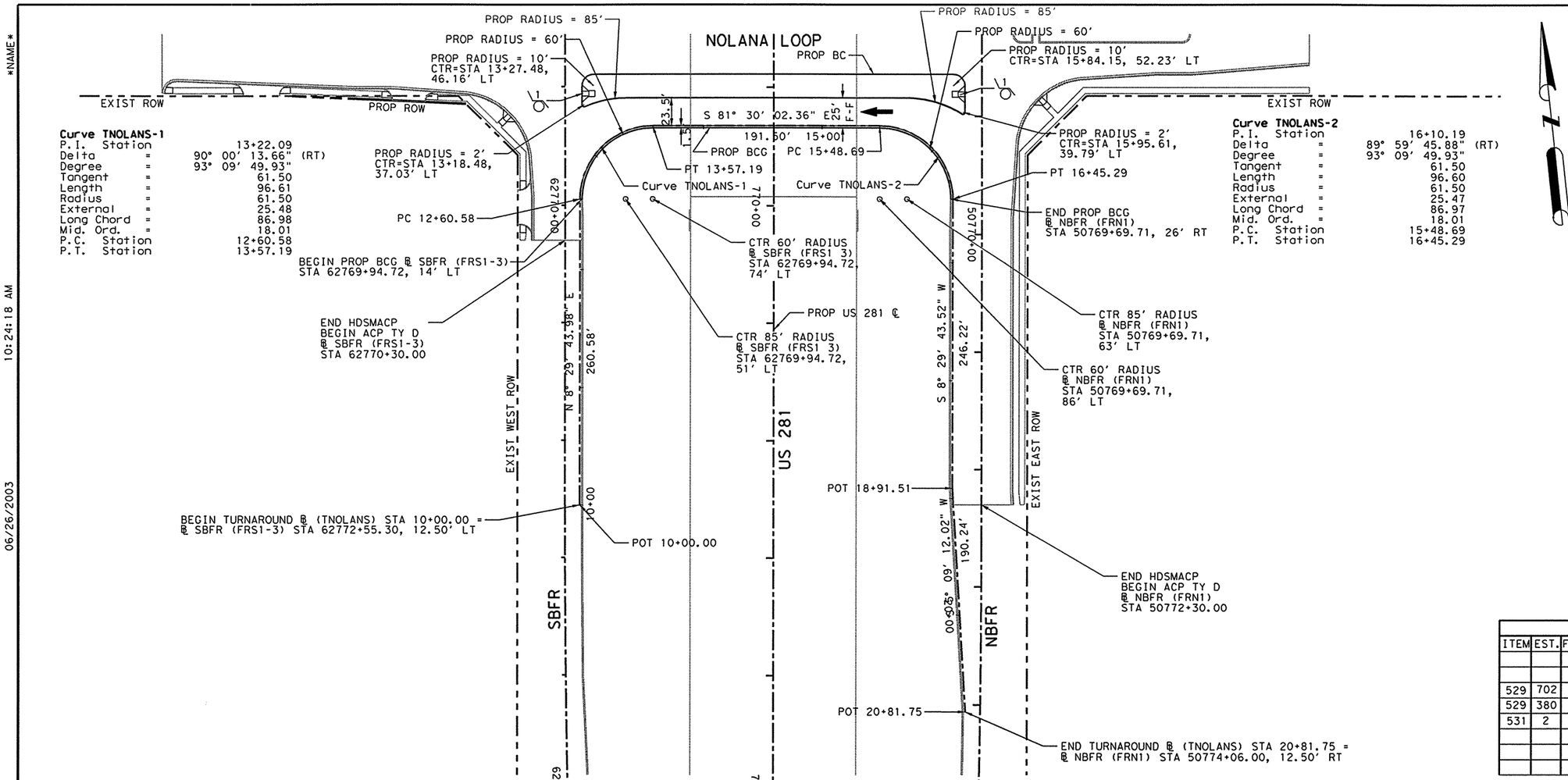

Curve TNOLANS-1

P.I. Station	=	13+22.09
Delta	=	90° 00' 13.66" (RT)
Degree	=	93° 09' 49.93"
Tangent	=	61.50
Length	=	96.61
Radius	=	61.50
External	=	25.48
Long Chord	=	86.98
Mid. Ord.	=	18.01
P.C. Station	=	12+60.58
P.T. Station	=	13+57.19

Curve TNOLANS-2

P.I. Station	=	16+10.19
Delta	=	89° 59' 45.88" (RT)
Degree	=	93° 09' 49.93"
Tangent	=	61.50
Length	=	96.60
Radius	=	61.50
External	=	25.47
Long Chord	=	86.97
Mid. Ord.	=	18.01
P.C. Station	=	15+48.69
P.T. Station	=	16+45.29

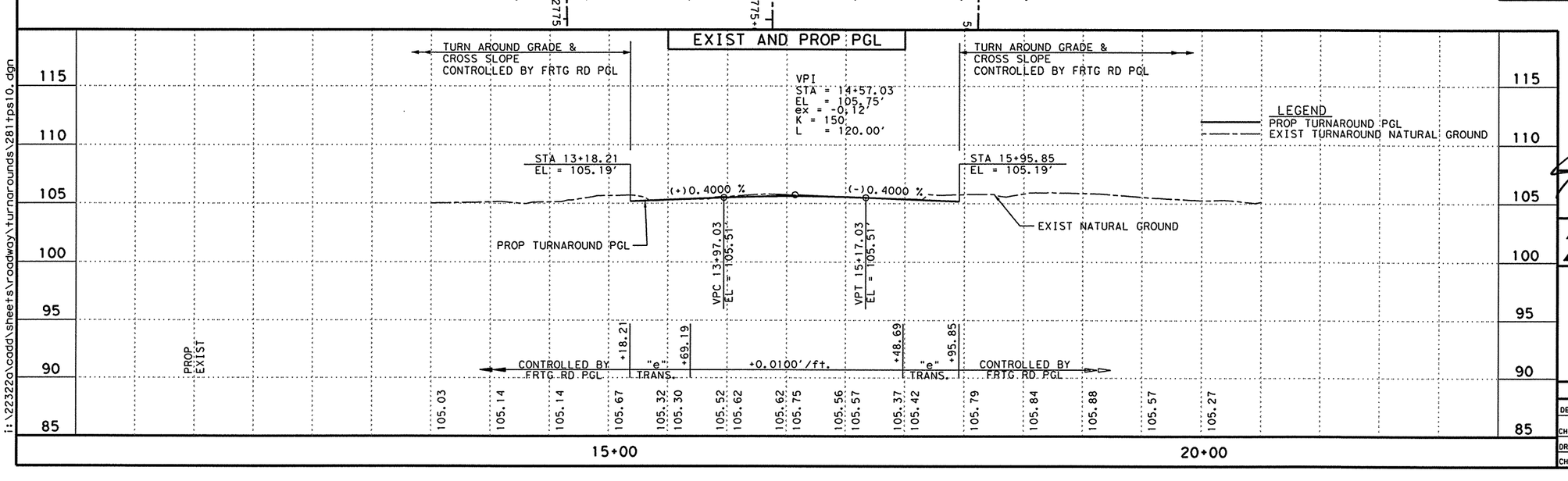

△ B.M. & HORIZONTAL DATA
BM # US 281-10
ELEV = 105.56
STA = 767+10.57, 210.84' LT
3 1/4" TXDOT ALUMINUM DISK

SHEET TOTALS

ITEM	EST.	FINAL	UNIT	DESCRIPTION
529	702		LF	CONC CURB (TY A) (BARRIER)
529	380		LF	CONC C & G (TY A) (BARRIER)
531	2		EA	CONC SIDEWALK (WHEELCHAIR RAMP)

THE SEAL APPEARING ON THIS DOCUMENT WAS AUTHORIZED BY JAIME AGUILAR, P.E. 87606 ON 06/26/2003.

THE SEAL APPEARING ON THIS DOCUMENT WAS AUTHORIZED BY PHAISARN CWATANAPHOL, P.E. 89252 ON 06/26/2003.

STATE OF TEXAS — JAIME AGUILAR — 87606 — REGISTERED PROFESSIONAL ENGINEER

STATE OF TEXAS — PHAISARN CWATANAPHOL — 89252 — REGISTERED PROFESSIONAL ENGINEER

Parsons Brinckerhoff Quade & Douglas Inc.

Texas Department of Transportation

© 2003 by TxDOT

US 281
PLAN & PROFILE
SOUTHBOUND TURNAROUND @ NOLANA LOOP

PLAN 1"= 100' HORIZ
PROFILE 1"= 10' VERT

SHEET 1 OF 1				281TPS10.DGN	
DESIGNED: JA	FED. RD DIV. No.	STATE	FEDERAL AID PROJECT No.		HIGHWAY No.
CHECKED: JP	6	TEXAS			US 281
DRAWN:	STATE DISTRICT	COUNTY	CONTROL No.	SECTION No.	JOB No.	SHEET No.
CHECKED: JDH	PHARR	HIDALGO	0255	08	091	416

NAME
10:29:18 AM
06/26/2003

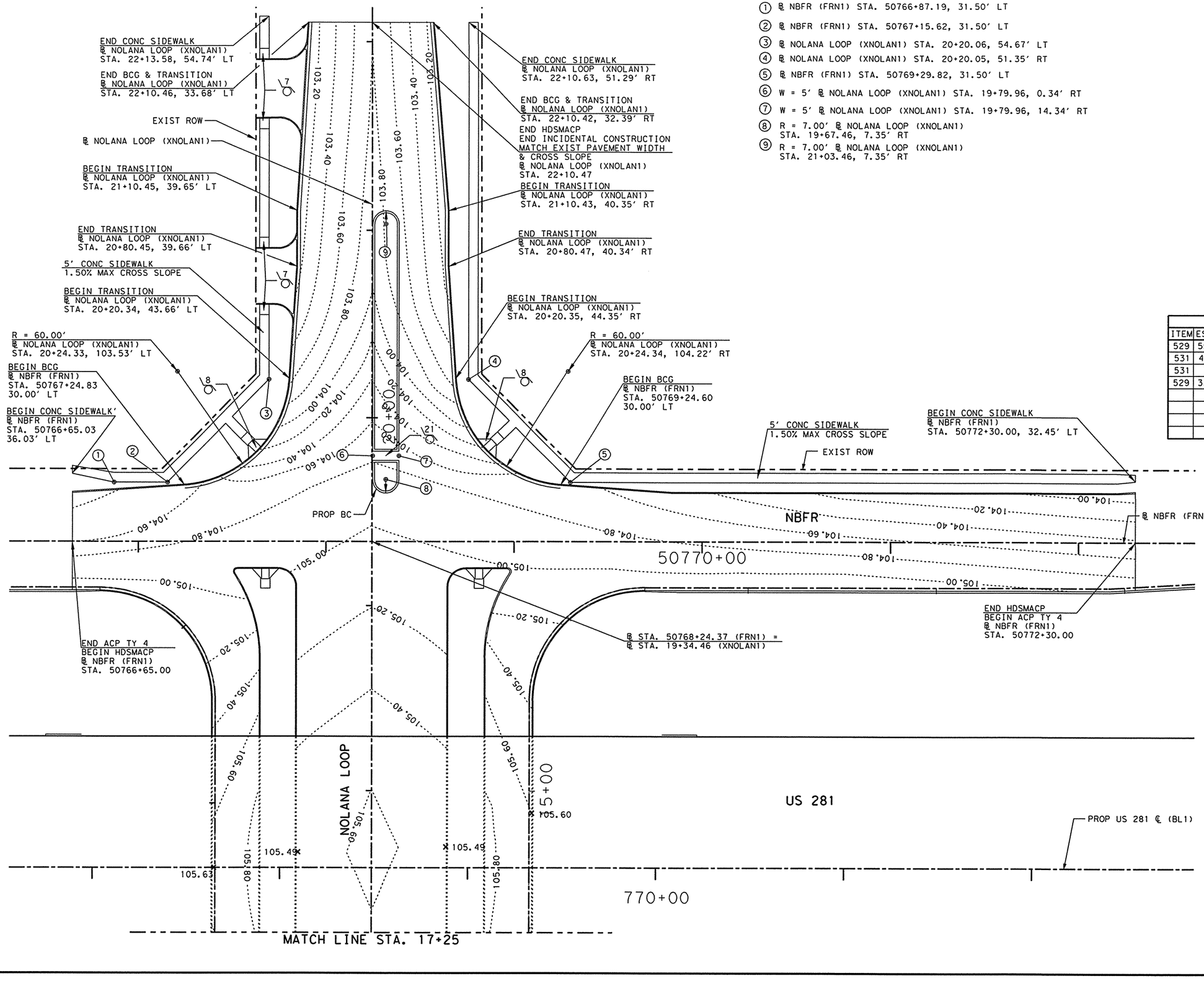

① ℄ NBFR (FRN1) STA. 50766+87.19, 31.50' LT

② ℄ NBFR (FRN1) STA. 50767+15.62, 31.50' LT

③ ℄ NOLANA LOOP (XNOLAN1) STA. 20+20.06, 54.67' LT

④ ℄ NOLANA LOOP (XNOLAN1) STA. 20+20.05, 51.35' RT

⑤ ℄ NBFR (FRN1) STA. 50769+29.82, 31.50' LT

⑥ W = 5' ℄ NOLANA LOOP (XNOLAN1) STA. 19+79.96, 0.34' RT

⑦ W = 5' ℄ NOLANA LOOP (XNOLAN1) STA. 19+79.96, 14.34' RT

⑧ R = 7.00' ℄ NOLANA LOOP (XNOLAN1)
STA. 19+67.46, 7.35' RT

⑨ R = 7.00' ℄ NOLANA LOOP (XNOLAN1)
STA. 21+03.46, 7.35' RT

NOTES:

1. RADIUS MEASUREMENTS ARE TO THE FACE OF THE CURB. IF THERE IS NO CURB, MEASUREMENTS ARE TO THE EDGE OF PAVEMENT.

\# - WHEELCHAIR RAMP (TY #)
SEE ROADWAY STANDARD "PEDESTRIAN FACILITIES" SHEETS 1 THROUGH 3 FOR MORE DETAILS.

SHEET TOTALS

ITEM	EST.	FINAL	UNIT	DESCRIPTION
529	553		LF	CONC C & G (TY A)(BARRIER)
531	451		SY	CONC SIDEWALK (4")
531	7		EA	CONC SIDEWALK (WHEELCHAIR RAMP)
529	334		LF	CONC CURB (TYA)(BARRIER)

THE SEAL APPEARING ON THIS DOCUMENT WAS AUTHORIZED BY JAIME AGUILAR, P.E. 87606 ON 06/26/2003.

THE SEAL APPEARING ON THIS DOCUMENT WAS AUTHORIZED BY PHAISARN CWATANAPHOL, P.E. 89252 ON 06/26/2003.

STATE OF TEXAS
JAIME AGUILAR
87606
REGISTERED PROFESSIONAL ENGINEER

STATE OF TEXAS
PHAISARN CWATANAPHOL
89252
REGISTERED PROFESSIONAL ENGINEER

Parsons Brinckerhoff Quade & Douglas Inc.

Texas Department of Transportation

© 2003 by TxDOT

INTERSECTION LAYOUTS
US 281
NOLANA LOOP

STA. 18+25.00 "XNOLAN1" TO
STA. 22+18.65 "XNOLAN1"

PLAN 1"= 50' HORIZ

SHEET 1 OF 2				281OFFSET07.DGN			
DESIGNED: PAF	FED. RD DIV. NO.	STATE	FEDERAL AID PROJECT No.			HIGHWAY No.	
CHECKED: JP	6	TEXAS				US 281	
DRAWN: KTD	STATE DISTRICT	COUNTY	CONTROL No.	SECTION No.	JOB No.	SHEET No.	
CHECKED: AGM	PHARR	HIDALGO	0255	08	091	417	

i:\22322o\cadd\sheets\roadway\details\281offset07.dgn

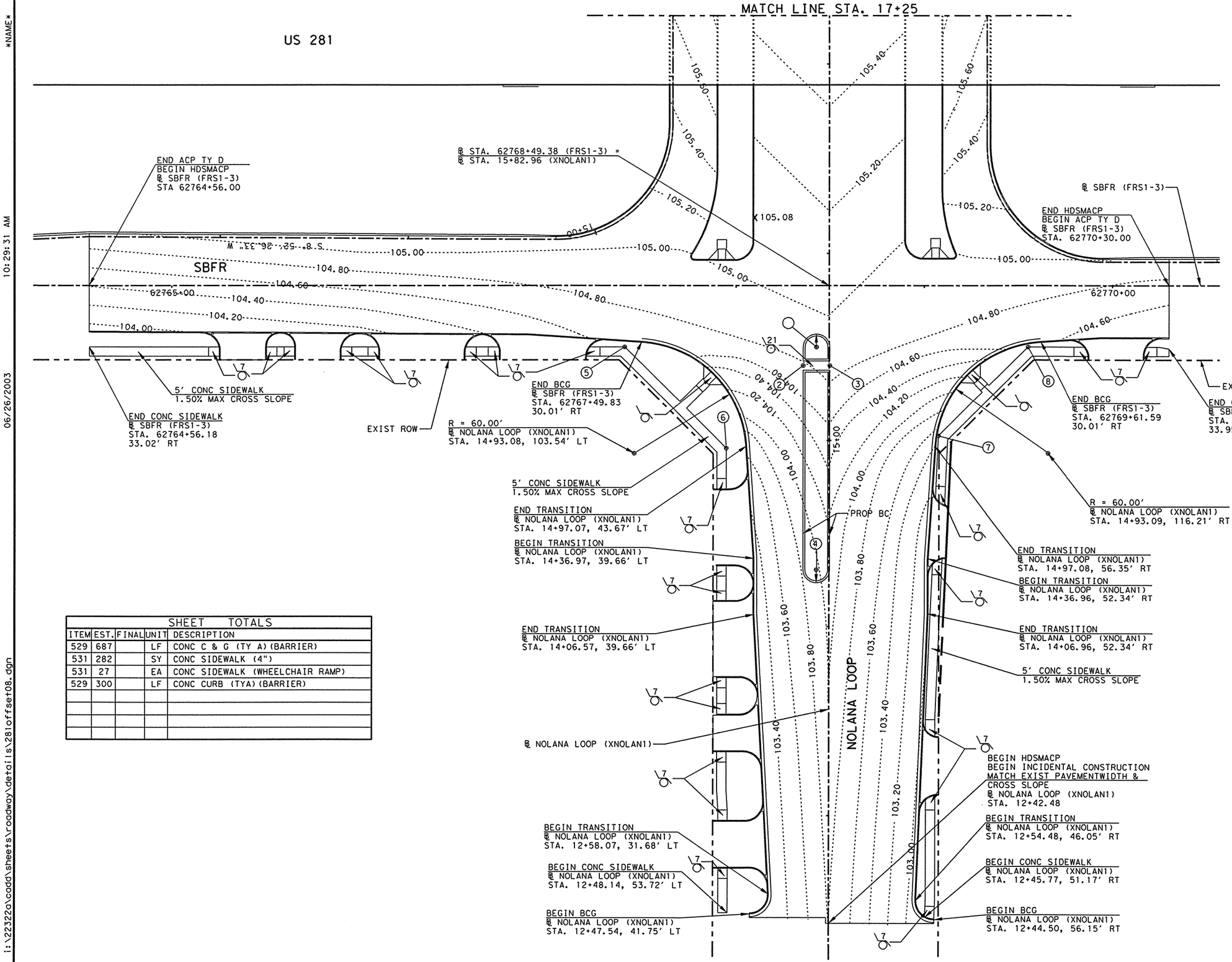

① R = 7.00' ℄ NOLANA LOOP (XNOLAN1)
STA. 15+49.96, 6.66' LT

② W = 5.00' ℄ NOLANA LOOP (XNOLAN1)
STA. 15+39.96, 13.66' LT

③ W = 5.00' ℄ NOLANA LOOP (XNOLAN1)
STA. 15+39.96, 0.34' RT

④ R = 7.00' ℄ NOLANA LOOP (XNOLAN1)
STA. 14+30.97, 6.66' LT

⑤ ℄ SBFR (FRS1-3)
STA. 62767+40.75, 33.00' RT

⑥ ℄ NOLANA LOOP (XNOLAN1)
STA. 14+95.86, 54.50' LT

⑦ ℄ NOLANA LOOP (XNOLAN1)
STA. 15+02.51, 58.14' RT

⑧ ℄ SBFR (FRS1-3)
STA. 62769+54.95, 33.00' RT

NOTES:

1. RADIUS MEASUREMENTS ARE TO THE FACE OF THE CURB. IF THERE IS NO CURB, MEASUREMENTS ARE TO THE EDGE OF PAVEMENT.

\# - WHEELCHAIR RAMP (TY #)
SEE ROADWAY STANDARD "PEDESTRIAN FACILITIES" SHEETS 1 THROUGH 3 FOR MORE DETAILS.

SHEET TOTALS				
ITEM	EST.	FINAL	UNIT	DESCRIPTION
529	687		LF	CONC C & G (TY A)(BARRIER)
531	282		SY	CONC SIDEWALK (4")
531	27		EA	CONC SIDEWALK (WHEELCHAIR RAMP)
529	300		LF	CONC CURB (TYA)(BARRIER)

THE SEAL APPEARING ON THIS DOCUMENT WAS AUTHORIZED BY JAIME AGUILAR, P.E. 87606 ON 06/26/2003.

STATE OF TEXAS
JAIME AGUILAR
87606
REGISTERED PROFESSIONAL ENGINEER

THE SEAL APPEARING ON THIS DOCUMENT WAS AUTHORIZED BY PHAISARN CWATANAPHOL, P.E. 89252 ON 06/26/2003.

STATE OF TEXAS
PHAISARN CWATANAPHOL
89252
REGISTERED PROFESSIONAL ENGINEER

Parsons Brinckerhoff
Quade & Douglas Inc.

Texas Department of Transportation

© 2003 by TxDOT

INTERSECTION LAYOUTS
US 281
NOLANA LOOP

STA. 18+25.00 "XNOLAN1" TO
STA. 12+22.87 "XNOLAN1"

PLAN 1"= 50' HORIZ

SHEET 2 OF 2 | 281OFFSET08.DGN

DESIGNED: PAF	FED. RD DIV. No.	STATE	FEDERAL AID PROJECT No.			HIGHWAY No.	
CHECKED: JP	6	TEXAS				US 281	
DRAWN: KTD	STATE DISTRICT	COUNTY	CONTROL No.	SECTION No.	JOB No.	SHEET No.	
CHECKED: AGM	PHARR	HIDALGO	0255	08	091	418	

NAME
10:29:31 AM
06/26/2003
I:\22322a\cadd\sheets\roadway\details\281offset08.dgn

NAME
10:16:15 AM
06/26/2003

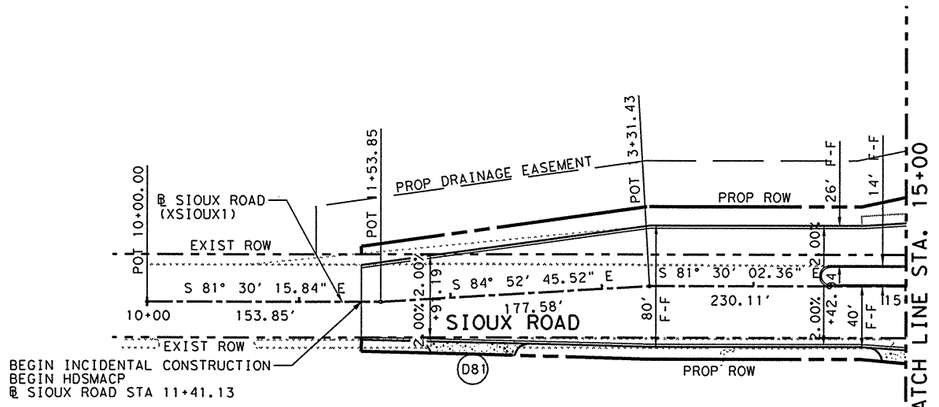

LEGEND:

MC - MOUNTABLE CONC CURB
BC - BARRIER CONC CURB
MCG - MOUNTABLE CONC CURB & GUTTER
BCG - BARRIER CONC CURB & GUTTER
RW - RETAINING WALL
RR - RIP RAP
SGT - SINGLE GUARD RAIL TERMINAL
SW - SIDEWALK
WCR - WHEEL CHAIR RAMP
VG - 4' VALLEY GUTTER
MBGF - METAL BEAM GUARD FENCE
- PROP DRIVEWAY
- PROP CONC DRIVEWAY
1 - WHEELCHAIR RAMP (TY 1)
4 - WHEELCHAIR RAMP (TY 4)

NOTES:
1. FOR DRIVEWAY APRON TYPES AND SIZES, SEE "DRIVEWAY SUMMARY".

△ B.M. & HORIZONTAL DATA
BM # US 281-5
ELEV = 107.46
STA = 817+01.19, 211.65' LT
3 1/4" TXDOT ALUMINUM DISK

SHEET TOTALS

ITEM	EST.	FINAL	UNIT	DESCRIPTION
530	50		SY	DRVWYS (CONC) (6")

EXIST AND PROP PGL

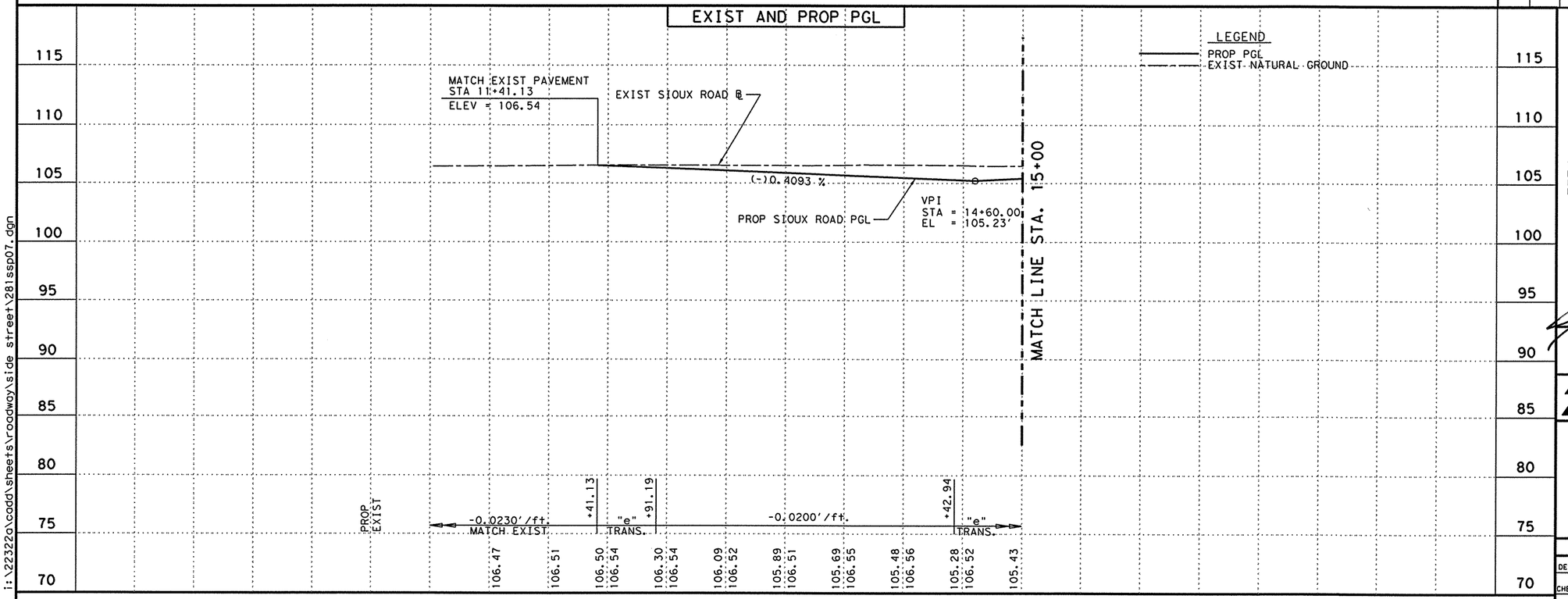

THE SEAL APPEARING ON THIS DOCUMENT WAS AUTHORIZED BY JAIME AGUILAR, P.E. 87606 ON 06/26/2003.

THE SEAL APPEARING ON THIS DOCUMENT WAS AUTHORIZED BY PHAISARN CWATANAPHOL, P.E. 89252 ON 06/26/2003.

STATE OF TEXAS
JAIME AGUILAR
87606
REGISTERED PROFESSIONAL ENGINEER

STATE OF TEXAS
PHAISARN CWATANAPHOL
89252
REGISTERED PROFESSIONAL ENGINEER

Parsons Brinckerhoff Quade & Douglas Inc.

Texas Department of Transportation

© 2003 by TxDOT

US 281
PLAN & PROFILE
SIOUX ROAD INTERSECTION

STA. 10+00 "XSIOUX1" TO
STA. 15+00 "XSIOUX1"

PLAN 1"= 100' HORIZ
PROFILE 1"= 10' VERT

SHEET 1 OF 2 | 281SSP07.DGN

DESIGNED: TT	FED. RD DIV. No.	STATE	FEDERAL AID PROJECT No.	HIGHWAY No.
CHECKED: DM	6	TEXAS		US 281

DRAWN:	STATE DISTRICT	COUNTY	CONTROL No.	SECTION No.	JOB No.	SHEET No.
CHECKED: DM	PHARR	HIDALGO	0255	08	091	419

i:\22322g\cadd\sheets\roadway\side street\281ssp07.dgn

NAME
10:16:35 AM
06/26/2003

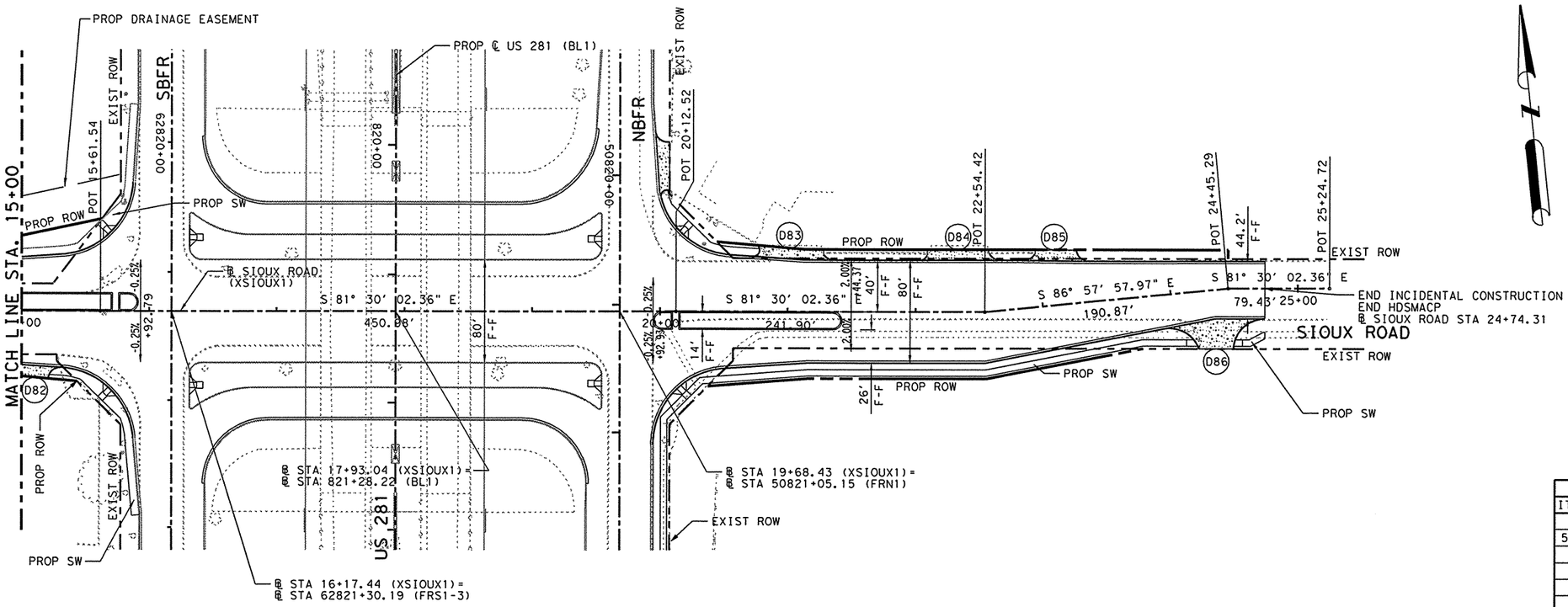

LEGEND:

MC	- MOUNTABLE CONC CURB
BC	- BARRIER CONC CURB
MCG	- MOUNTABLE CONC CURB & GUTTER
BCG	- BARRIER CONC CURB & GUTTER
RW	- RETAINING WALL
RR	- RIP RAP
SGT	- SINGLE GUARD RAIL TERMINAL
SW	- SIDEWALK
WCR	- WHEEL CHAIR RAMP
VG	- 4' VALLEY GUTTER
MBGF	- METAL BEAM GUARD FENCE
	- PROP DRIVEWAY
	- PROP CONC DRIVEWAY
1	- WHEELCHAIR RAMP(TY 1)
4	- WHEELCHAIR RAMP(TY 4)

NOTES:
1. FOR DRIVEWAY APRON TYPES AND SIZES, SEE "DRIVEWAY SUMMARY".

△ B.M. & HORIZONTAL DATA
BM # US 281-5
ELEV = 107.46
STA = 817+01.19, 211.65' LT
3 1/4" TXDOT ALUMINUM DISK

SHEET TOTALS

ITEM	EST.	FINAL	UNIT	DESCRIPTION
530	297		SY	DRVWYS (CONC)(6")

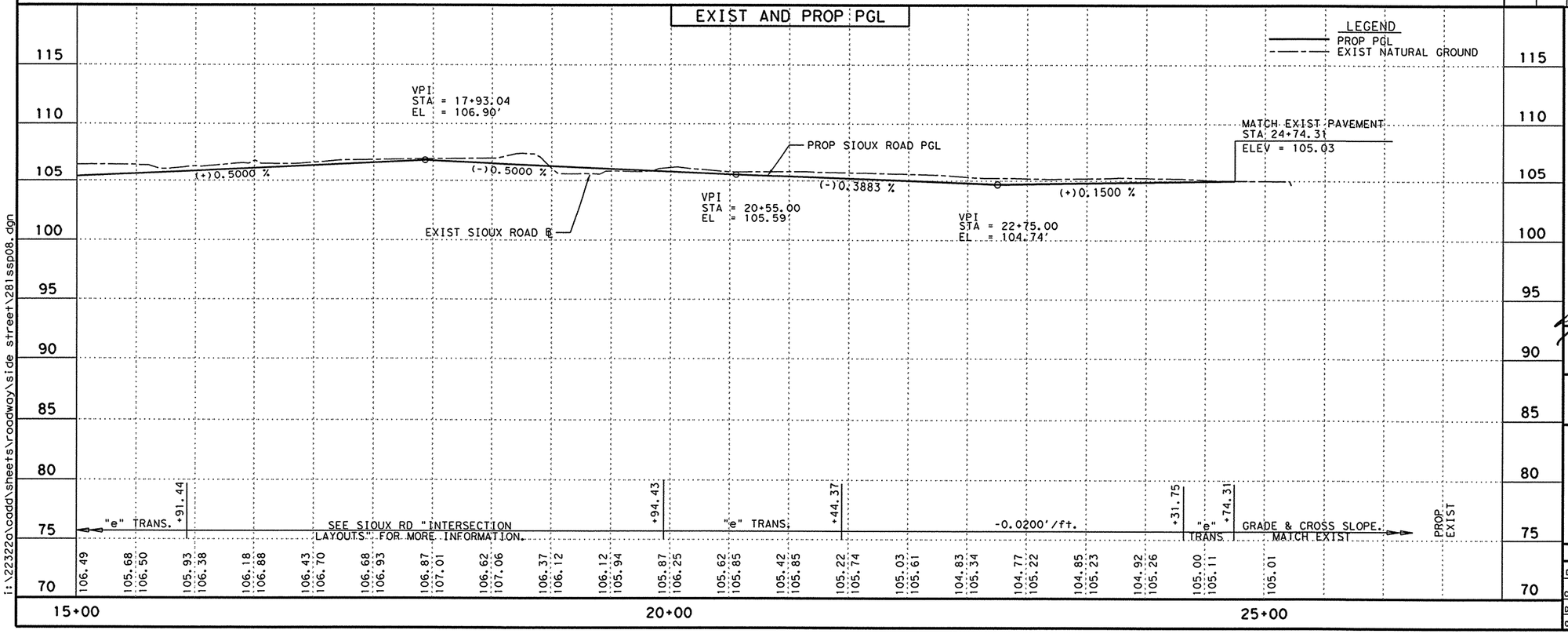

THE SEAL APPEARING ON THIS DOCUMENT WAS AUTHORIZED BY JAIME AGUILAR, P.E. 87606 ON 06/26/2003.

THE SEAL APPEARING ON THIS DOCUMENT WAS AUTHORIZED BY PHAISARN CWATANAPHOL, P.E. 89252 ON 06/26/2003.

STATE OF TEXAS — JAIME AGUILAR — 87606 — REGISTERED PROFESSIONAL ENGINEER

STATE OF TEXAS — PHAISARN CWATANAPHOL — 89252 — REGISTERED PROFESSIONAL ENGINEER

Parsons Brinckerhoff Quade & Douglas Inc.

Texas Department of Transportation

© 2003 by TxDOT

US 281
PLAN & PROFILE
SIOUX ROAD INTERSECTION
STA. 15+00 "XSIOUX1"
TO END

PLAN 1"= 100' HORIZ
PROFILE 1"= 10' VERT

SHEET 2 OF 2 — 281SSP08.DGN

DESIGNED: TT	FED. RD DIV. No.	STATE	FEDERAL AID PROJECT No.			HIGHWAY No.
CHECKED: DM	6	TEXAS				US 281
DRAWN:	STATE DISTRICT	COUNTY	CONTROL No.	SECTION No.	JOB No.	SHEET No.
CHECKED: DM	PHARR	HIDALGO	0255	08	091	420

i:\2322d\cadd\sheets\roadway\side street\281ssp08.dgn

NAME
10:23:25 AM
06/26/2003

BEGIN TURNAROUND ℄ (TSIOUXN) STA 10+00.00
= ℄ SBFR (FRS1 3) STA 62815+49.30, 12.5' LT

POT 10+00.00

10+00

S 5° 13' 15.98" W
189.97'

℄ SBFR (FRS1-3)

END ACP TY D
BEGIN HDSMACP
℄ SBFR (FRS1 3)
STA 62817+25.00

EXIST R.O.W.

SBFR

POT 11+89.97

US 281

S 8° 29' 44.16" W
256.05'

CTR 50' RADIUS
℄ SBFR (FRS1-3)
STA 62819+95.19,
64' RT

CTR 50' RADIUS
℄ SBFR (FRS1-3)
STA 62819+95.19,
76' RT

BEGIN PROP BCG ℄ SBFR (FRS1-3)
STA 62819+95.19, 26' LT

PROP RADIUS = 2'
STA 14+86.56,
33.5' RT

PC 14+46.03
Curve
TSIOUXN-1

PROP BCG
S 81° 30' 02.36" E

PT 15+26.92

196.87'

Curve TSIOUXN-2
PC 17+23.78

15+00

PROP R.O.W.

PROP BC

PROP BC

PROP RADIUS = 50'

PROP RADIUS = 75'

PROP RADIUS = 10'
STA 14+98.65,
48.14' RT

23.5'

PROP ℄ US 281 (BL1)

SHARM DRIVE

18+00

℄ NBFR (FRN1)

B.M. # US 281-5

POT 19+74.77

NBFR

END TURNAROUND ℄ (TSIOUXN) STA 19+74.77 =
℄ NBFR (FRN1) STA 50818+05.91, 12.50' RT

END ACP TY D
BEGIN HDSMACP
℄ NBFR (FRN1)
STA 50818+00.00

N 8° 29' 43.69" E
94.29'

EXIST R.O.W.

CTR 60' RADIUS
℄ NBFR (FRN1)
STA 50819+60.15,
78.13' RT

CTR 75' RADIUS
℄ NBFR (FRN1)
STA 50819+70.15,
64' RT

POT 18+80.48

N 12° 19' 33.77" E
64.18'

END PROP BCG ℄ NBFR (FRN1)
STA 50819+64.1, 18.27' RT

PT 18+16.30

PROP RADIUS = 2'
STA 17+68.34, 32.25' RT

PROP R.O.W.

PROP RADIUS = 10'
STA 17+55.64, 47.84' RT

PROP RADIUS = 75'

PROP RADIUS = 60'

SIOUX ROAD

Curve TSIOUXN-1

P.I. Station	=	14+97.52
Delta	=	89° 59' 46.52" (LT)
Degree	=	111° 15' 14.19"
Tangent	=	51.50
Length	=	80.89
Radius	=	51.50
External	=	21.33
Long Chord	=	72.83
Mid. Ord.	=	15.08
P.C. Station	=	14+46.03
P.T. Station	=	15+26.92

Curve TSIOUXN-2

P.I. Station	=	17+81.32
Delta	=	86° 11' 23.87" (LT)
Degree	=	93° 09' 49.93"
Tangent	=	57.54
Length	=	92.51
Radius	=	61.50
External	=	22.72
Long Chord	=	84.03
Mid. Ord.	=	16.59
P.C. Station	=	17+23.78
P.T. Station	=	18+16.30

LEGEND:

MC	- MOUNTABLE CONC. CURB
BC	- BARRIER CONC. CURB
MCG	- MOUNTABLE CONC. CURB & GUTTER
BCG	- BARRIER CONC. CURB & GUTTER
RW	- RETAINING WALL
RR	- RIP RAP
SGT	- SINGLE GUARD RAIL TERMINAL
SSCB	- SINGLE SLOPE CONC. BARRIER
SSTR	- SINGLE SLOPE TRAFFIC RAILING
SW	- SIDEWALK
WCR	- WHEEL CHAIR RAMP
VG	- 4' VALLEY GUTTER
MBGF	- METAL BEAM GUARD FENCE
⊠	- CENTER OF 10' SSCB (TY.4)
1	- WHEELCHAIR RAMP (TY.1)
4	- WHEELCHAIR RAMP (TY.4)

B.M. & HORIZONTAL DATA

B.M. # US 281-5
ELEV. = 107.46
STA. = 817+01.19, 211.65 LT.
3 1/4" TXDOT ALUMINUM DISK

SHEET TOTALS

ITEM	EST.	FINAL	UNIT	DESCRIPTION
529	717		LF	CONC CURB (TY A) (BARRIER)
529	366		LF	CONC C & G (TY A) (BARRIER)
531	2		EA	CONC SIDEWALK (WHEELCHAIR RAMP)

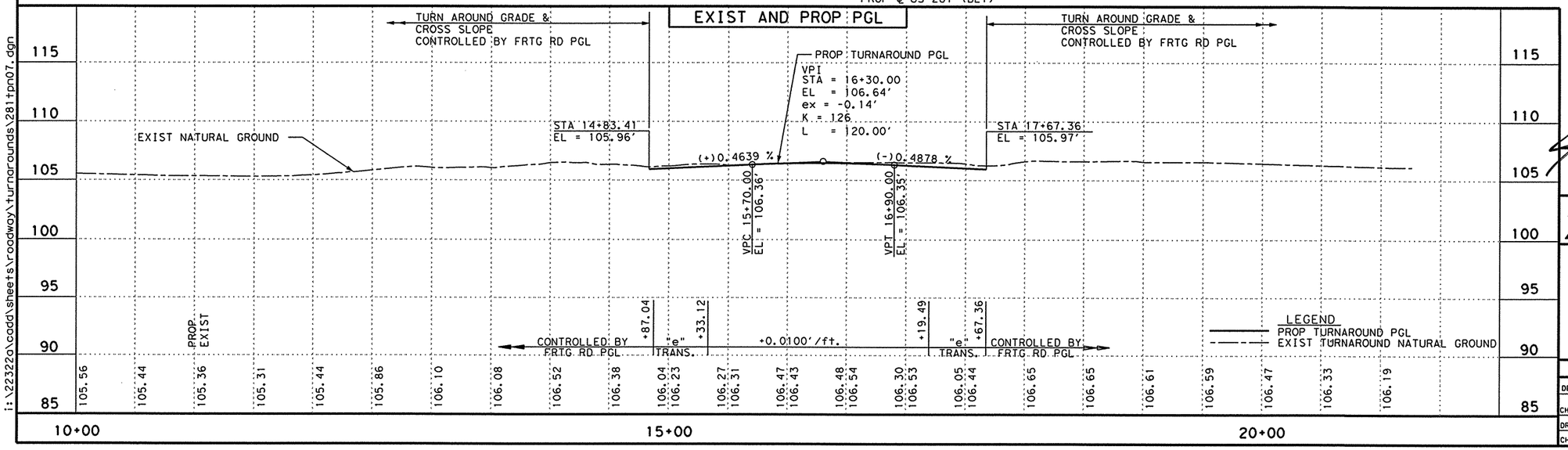

THE SEAL APPEARING ON THIS DOCUMENT WAS AUTHORIZED BY JAIME AGUILAR, P.E. 87606 ON 06/26/2003.

THE SEAL APPEARING ON THIS DOCUMENT WAS AUTHORIZED BY PHAISARN CHATANAPHOL, P.E. 89252 ON 06/26/2003.

STATE OF TEXAS
JAIME AGUILAR
87606
REGISTERED PROFESSIONAL ENGINEER

STATE OF TEXAS
PHAISARN CHATANAPHOL
89252
REGISTERED PROFESSIONAL ENGINEER

PB Parsons Brinckerhoff Quade & Douglas Inc.

Texas Department of Transportation

© 2003 by TxDOT

US 281
PLAN & PROFILE
NORTHBOUND TURNAROUND @ SIOUX ROAD

PLAN 1"= 100' HORIZ
PROFILE 1"= 10' VERT

SHEET 1 OF 1 | 281TPN07.DGN

DESIGNED: JA	FED. RD DIV. No.	STATE	FEDERAL AID PROJECT No.			HIGHWAY No.
CHECKED: JP	6	TEXAS				US 281
DRAWN:	STATE DISTRICT	COUNTY	CONTROL No.	SECTION No.	JOB No.	SHEET No.
CHECKED: JDH	PHARR	HIDALGO	0255	08	091	421

i:\22322a\cadd\sheets\roadway\turnarounds\281tpn07.dgn

NAME
10:23:43 AM
06/26/2003
i:\22322o\cadd\sheets\roadway\turnarounds\281tps08.dgn

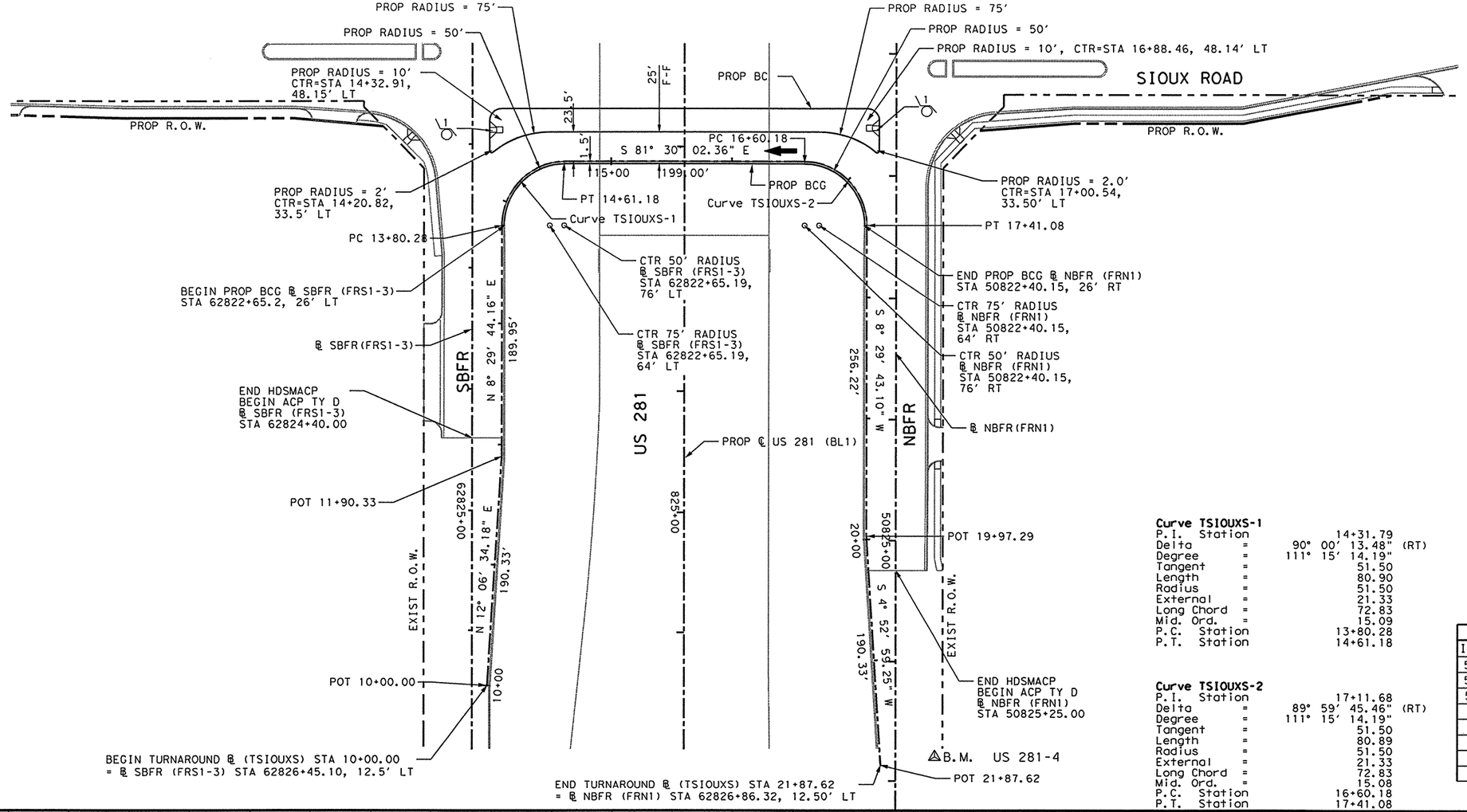

LEGEND:

- MC - MOUNTABLE CONC. CURB
- BC - BARRIER CONC. CURB
- MCG - MOUNTABLE CONC. CURB & GUTTER
- BCG - BARRIER CONC. CURB & GUTTER
- RW - RETAINING WALL
- RR - RIP RAP
- SGT - SINGLE GUARD RAIL TERMINAL
- SSCB - SINGLE SLOPE CONC. BARRIER
- SSTR - SINGLE SLOPE TRAFFIC RAILING
- SW - SIDEWALK
- WCR - WHEEL CHAIR RAMP
- VG - 4' VALLEY GUTTER
- MBGF - METAL BEAM GUARD FENCE
- ⊠ - CENTER OF 10' SSCB (TY.4)
- 1/0 - WHEELCHAIR RAMP (TY.1)
- 4/0 - WHEELCHAIR RAMP (TY.4)

Curve TSIOUXS-1

P.I. Station	=	14+31.79
Delta	=	90° 00' 13.48" (RT)
Degree	=	111° 15' 14.19"
Tangent	=	51.50
Length	=	80.90
Radius	=	51.50
External	=	21.33
Long Chord	=	72.83
Mid. Ord.	=	15.09
P.C. Station		13+80.28
P.T. Station		14+61.18

Curve TSIOUXS-2

P.I. Station	=	17+11.68
Delta	=	89° 59' 45.46" (RT)
Degree	=	111° 15' 14.19"
Tangent	=	51.50
Length	=	80.89
Radius	=	51.50
External	=	21.33
Long Chord	=	72.83
Mid. Ord.	=	15.08
P.C. Station		16+60.18
P.T. Station		17+41.08

△B.M. & HORIZONTAL DATA
B.M. # US 281-4
ELEV. = 106.43
STA. = 827+02.50, 207.77 LT.
3 1/4" TXDOT ALUMINUM DISK

SHEET TOTALS

ITEM	EST.	FINAL	UNIT	DESCRIPTION
529	717		LF	CONC CURB (TY A) (BARRIER)
529	356		LF	CONC C & G (TY A) (BARRIER)
531	2		EA	CONC SIDEWALK (WHEELCHAIR RAMP)

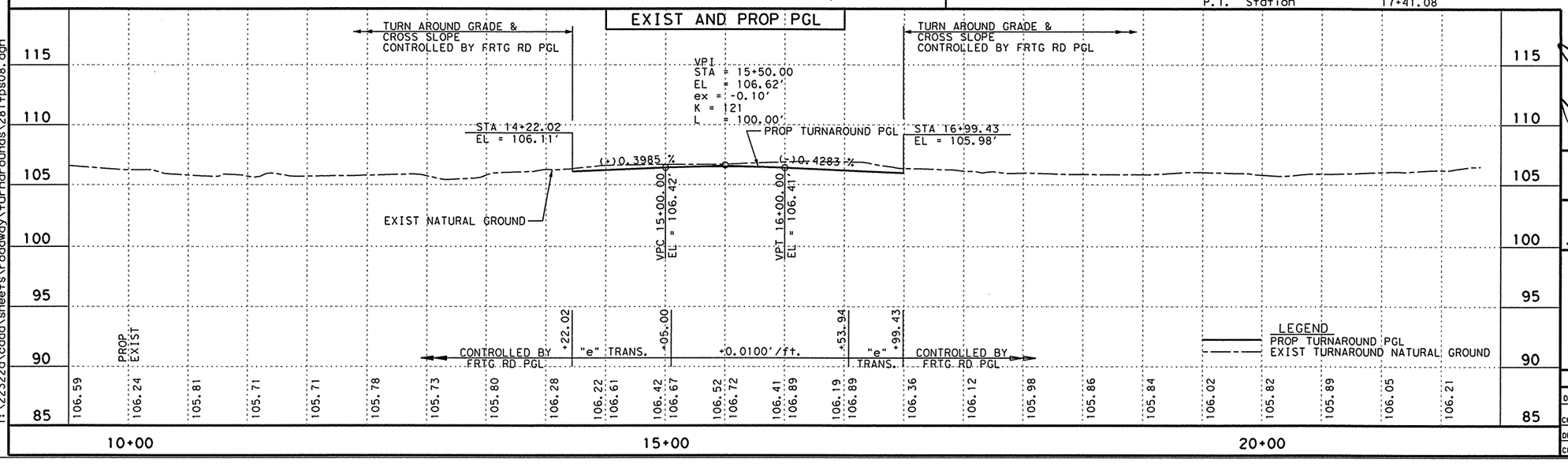

THE SEAL APPEARING ON THIS DOCUMENT WAS AUTHORIZED BY JAIME AGUILAR, P.E. 87606 ON 06/26/2003.

THE SEAL APPEARING ON THIS DOCUMENT WAS AUTHORIZED BY PHAISARN CWATANAPHOL, P.E. 89252 ON 06/26/2003.

STATE OF TEXAS — JAIME AGUILAR — 87606 — REGISTERED PROFESSIONAL ENGINEER

STATE OF TEXAS — PHAISARN CWATANAPHOL — 89252 — REGISTERED PROFESSIONAL ENGINEER

Parsons Brinckerhoff Quade & Douglas Inc.

Texas Department of Transportation

© 2003 by TxDOT

US 281
PLAN & PROFILE
SOUTHBOUND TURNAROUND @ SIOUX ROAD

PLAN 1"= 100' HORIZ
PROFILE 1"= 10' VERT

SHEET 1 OF 1 — 281TPS08.DGN

DESIGNED: JA	FED. RD DIV. No.	STATE	FEDERAL AID PROJECT No.	HIGHWAY No.
CHECKED: JP	6	TEXAS		US 281

DRAWN:	STATE DISTRICT	COUNTY	CONTROL No.	SECTION No.	JOB No.	SHEET No.
CHECKED: JDH	PHARR	HIDALGO	0255	08	091	422

NAME
10:30:08 AM
06/26/2003
i:\22322o\cadd\sheets\roadway\details\281offset12.dgn

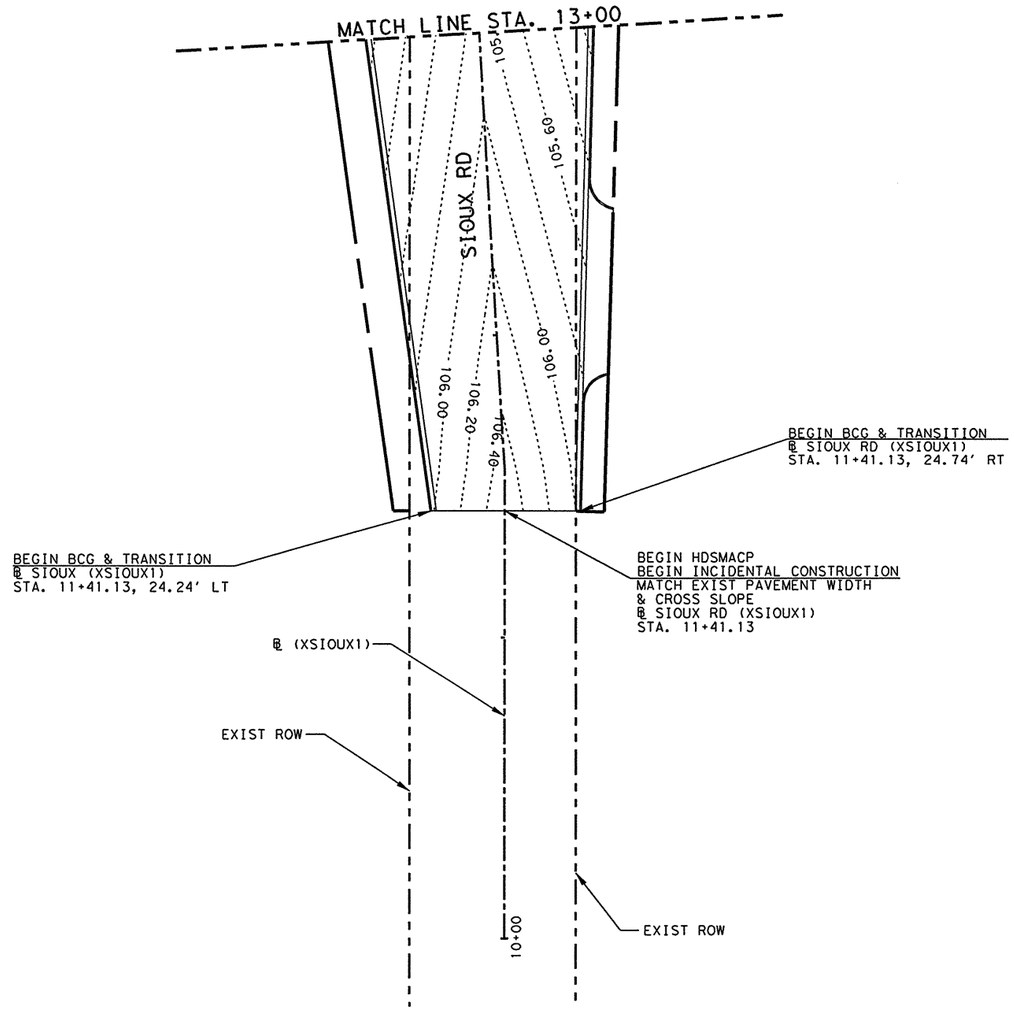

NOTES:

1. RADIUS MEASUREMENTS ARE TO THE FACE OF THE CURB. IF THERE IS NO CURB, MEASUREMENTS ARE TO THE EDGE OF PAVEMENT.

♿# - WHEELCHAIR RAMP (TY #)
SEE ROADWAY STANDARD "PEDESTRIAN FACILITIES" SHEETS 1 THROUGH 3 FOR MORE DETAILS.

SHEET TOTALS

ITEM	EST.	FINAL	UNIT	DESCRIPTION
529	319		LF	CONC C & G (TY A)(BARRIER)

THE SEAL APPEARING ON THIS DOCUMENT WAS AUTHORIZED BY JAIME AGUILAR, P.E. 87606 ON 06/26/2003.

THE SEAL APPEARING ON THIS DOCUMENT WAS AUTHORIZED BY PHAISARN CWATANAPHOL, P.E. 89252 ON 06/26/2003.

STATE OF TEXAS
JAIME AGUILAR
87606
REGISTERED PROFESSIONAL ENGINEER

STATE OF TEXAS
PHAISARN CWATANAPHOL
89252
REGISTERED PROFESSIONAL ENGINEER

Parsons Brinckerhoff Quade & Douglas Inc.

Texas Department of Transportation

© 2003 by TxDOT

INTERSECTION LAYOUTS
US 281
SIOUX ROAD

STA. 13+00 "XSIOUX1" TO
STA. 10+00 "XSIOUX1"

PLAN 1"= 50' HORIZ

SHEET 1 OF 4 | 281OFFSET12.DGN

DESIGNED: PAF	FED. RD DIV. NO.	STATE	FEDERAL AID PROJECT No.			HIGHWAY No.	
CHECKED: JP	6	TEXAS				US 281	
DRAWN: KTD	STATE DISTRICT	COUNTY		CONTROL No.	SECTION No.	JOB No.	SHEET No.
CHECKED: AGM	PHARR	HIDALGO		0255	08	091	423

NAME
10:29:58 AM
06/26/2003

NOTES:

1. RADIUS MEASUREMENTS ARE TO THE FACE OF THE CURB. IF THERE IS NO CURB, MEASUREMENTS ARE TO THE EDGE OF PAVEMENT.

- WHEELCHAIR RAMP (TY #)
SEE ROADWAY STANDARD "PEDESTRIAN FACILITIES" SHEETS 1 THROUGH 3 FOR MORE DETAILS.

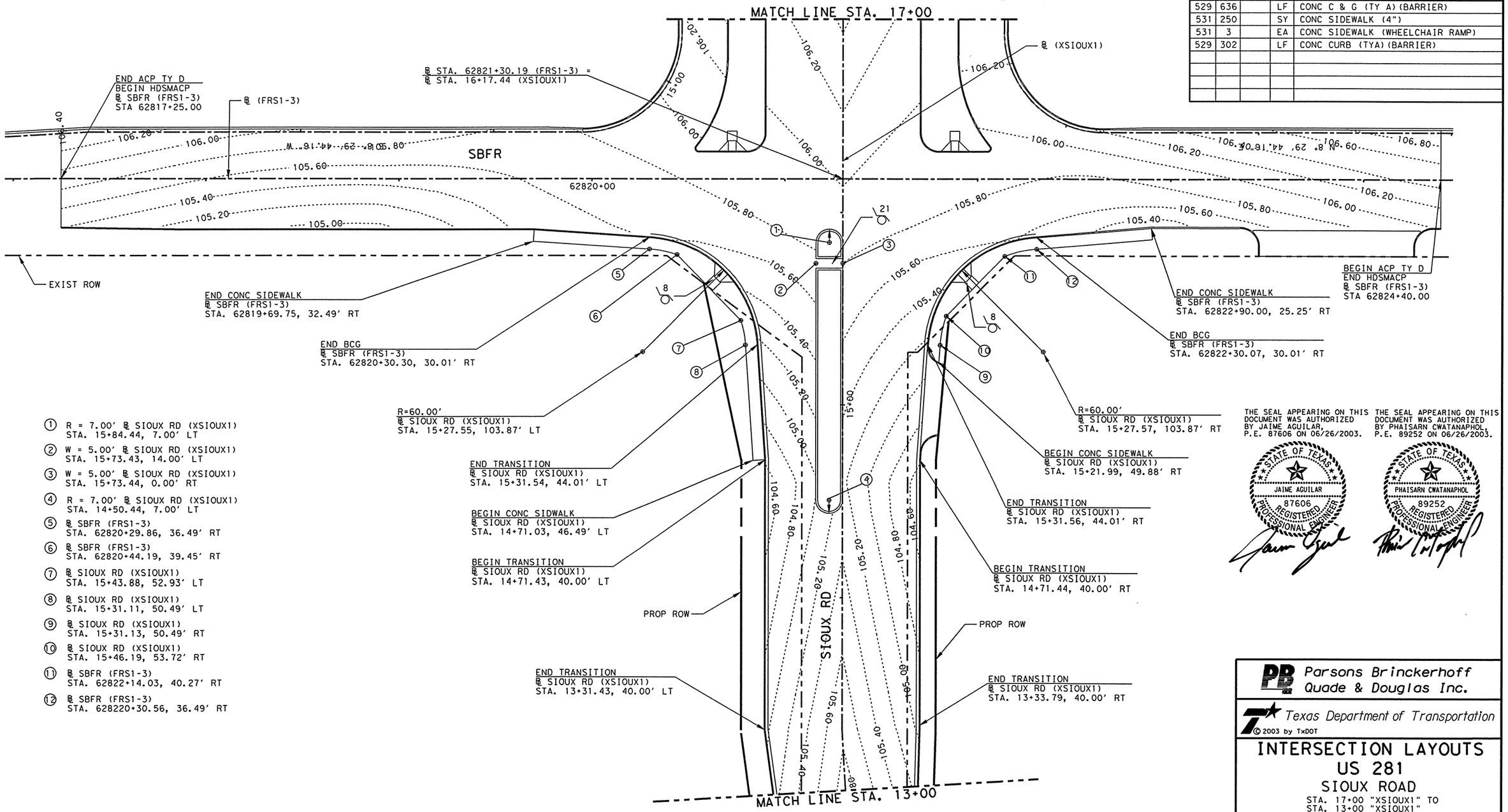

SHEET TOTALS				
ITEM	EST.	FINAL	UNIT	DESCRIPTION
529	636		LF	CONC C & G (TY A)(BARRIER)
531	250		SY	CONC SIDEWALK (4")
531	3		EA	CONC SIDEWALK (WHEELCHAIR RAMP)
529	302		LF	CONC CURB (TYA)(BARRIER)

① R = 7.00' ℄ SIOUX RD (XSIOUX1)
STA. 15+84.44, 7.00' LT

② W = 5.00' ℄ SIOUX RD (XSIOUX1)
STA. 15+73.43, 14.00' LT

③ W = 5.00' ℄ SIOUX RD (XSIOUX1)
STA. 15+73.44, 0.00' RT

④ R = 7.00' ℄ SIOUX RD (XSIOUX1)
STA. 14+50.44, 7.00' LT

⑤ ℄ SBFR (FRS1-3)
STA. 62820+29.86, 36.49' RT

⑥ ℄ SBFR (FRS1-3)
STA. 62820+44.19, 39.45' RT

⑦ ℄ SIOUX RD (XSIOUX1)
STA. 15+43.88, 52.93' LT

⑧ ℄ SIOUX RD (XSIOUX1)
STA. 15+31.11, 50.49' LT

⑨ ℄ SIOUX RD (XSIOUX1)
STA. 15+31.13, 50.49' RT

⑩ ℄ SIOUX RD (XSIOUX1)
STA. 15+46.19, 53.72' RT

⑪ ℄ SBFR (FRS1-3)
STA. 62822+14.03, 40.27' RT

⑫ ℄ SBFR (FRS1-3)
STA. 628220+30.56, 36.49' RT

THE SEAL APPEARING ON THIS DOCUMENT WAS AUTHORIZED BY JAIME AGUILAR, P.E. 87606 ON 06/26/2003.

THE SEAL APPEARING ON THIS DOCUMENT WAS AUTHORIZED BY PHAISARN CHATANAPHOL, P.E. 89252 ON 06/26/2003.

Parsons Brinckerhoff Quade & Douglas Inc.

Texas Department of Transportation

© 2003 by TxDOT

INTERSECTION LAYOUTS
US 281
SIOUX ROAD
STA. 17+00 "XSIOUX1" TO
STA. 13+00 "XSIOUX1"

PLAN 1"= 50' HORIZ

SHEET 2 OF 4						281OFFSET11.DGN	
DESIGNED: PAF	FED. RD DIV. NO.	STATE	FEDERAL AID PROJECT NO.			HIGHWAY NO.	
CHECKED: JP	6	TEXAS				US 281	
DRAWN: KTD	STATE DISTRICT	COUNTY	CONTROL NO.	SECTION NO.	JOB NO.	SHEET NO.	
CHECKED: AGM	PHARR	HIDALGO	0255	08	091	424	

i:\22322a\cadd\sheets\roadway\details\281offset11.dgn

NAME
10:29:49 AM
06/26/2003

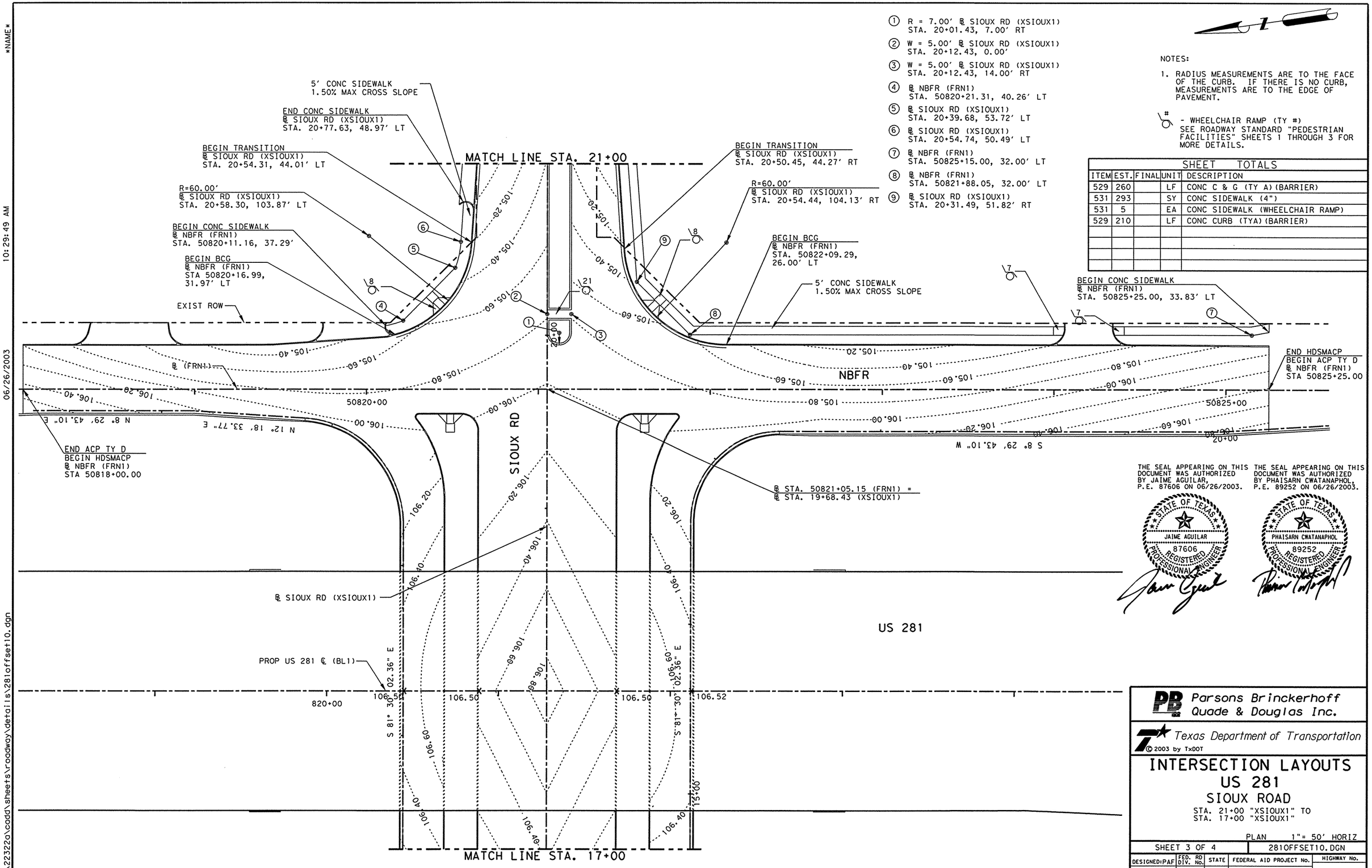

① R = 7.00' ℄ SIOUX RD (XSIOUX1)
STA. 20+01.43, 7.00' RT

② W = 5.00' ℄ SIOUX RD (XSIOUX1)
STA. 20+12.43, 0.00'

③ W = 5.00' ℄ SIOUX RD (XSIOUX1)
STA. 20+12.43, 14.00' RT

④ ℄ NBFR (FRN1)
STA. 50820+21.31, 40.26' LT

⑤ ℄ SIOUX RD (XSIOUX1)
STA. 20+39.68, 53.72' LT

⑥ ℄ SIOUX RD (XSIOUX1)
STA. 20+54.74, 50.49' LT

⑦ ℄ NBFR (FRN1)
STA. 50825+15.00, 32.00' LT

⑧ ℄ NBFR (FRN1)
STA. 50821+88.05, 32.00' LT

⑨ ℄ SIOUX RD (XSIOUX1)
STA. 20+31.49, 51.82' RT

NOTES:

1. RADIUS MEASUREMENTS ARE TO THE FACE OF THE CURB. IF THERE IS NO CURB, MEASUREMENTS ARE TO THE EDGE OF PAVEMENT.

- WHEELCHAIR RAMP (TY #)
SEE ROADWAY STANDARD "PEDESTRIAN FACILITIES" SHEETS 1 THROUGH 3 FOR MORE DETAILS.

SHEET TOTALS

ITEM	EST.	FINAL	UNIT	DESCRIPTION
529	260		LF	CONC C & G (TY A)(BARRIER)
531	293		SY	CONC SIDEWALK (4")
531	5		EA	CONC SIDEWALK (WHEELCHAIR RAMP)
529	210		LF	CONC CURB (TYA)(BARRIER)

THE SEAL APPEARING ON THIS DOCUMENT WAS AUTHORIZED BY JAIME AGUILAR, P.E. 87606 ON 06/26/2003.

THE SEAL APPEARING ON THIS DOCUMENT WAS AUTHORIZED BY PHAISARN CWATANAPHOL, P.E. 89252 ON 06/26/2003.

STATE OF TEXAS
JAIME AGUILAR
87606
REGISTERED PROFESSIONAL ENGINEER

STATE OF TEXAS
PHAISARN CWATANAPHOL
89252
REGISTERED PROFESSIONAL ENGINEER

Parsons Brinckerhoff Quade & Douglas Inc.

Texas Department of Transportation

© 2003 by TxDOT

INTERSECTION LAYOUTS
US 281
SIOUX ROAD

STA. 21+00 "XSIOUX1" TO
STA. 17+00 "XSIOUX1"

PLAN 1"= 50' HORIZ

SHEET 3 OF 4 | 281OFFSET10.DGN

DESIGNED: PAF	FED. RD DIV. NO.	STATE	FEDERAL AID PROJECT NO.			HIGHWAY No.
CHECKED: JP	6	TEXAS				US 281
DRAWN: KTD	STATE DISTRICT	COUNTY	CONTROL No.	SECTION No.	JOB No.	SHEET No.
CHECKED: AGM	PHARR	HIDALGO	0255	08	091	425

i:\22322o\cadd\sheets\roadway\details\281offset10.dgn

NAME
10:29:41 AM
06/26/2003
i:\22322g\cadd\sheets\roadway\details\281offset09.dgn

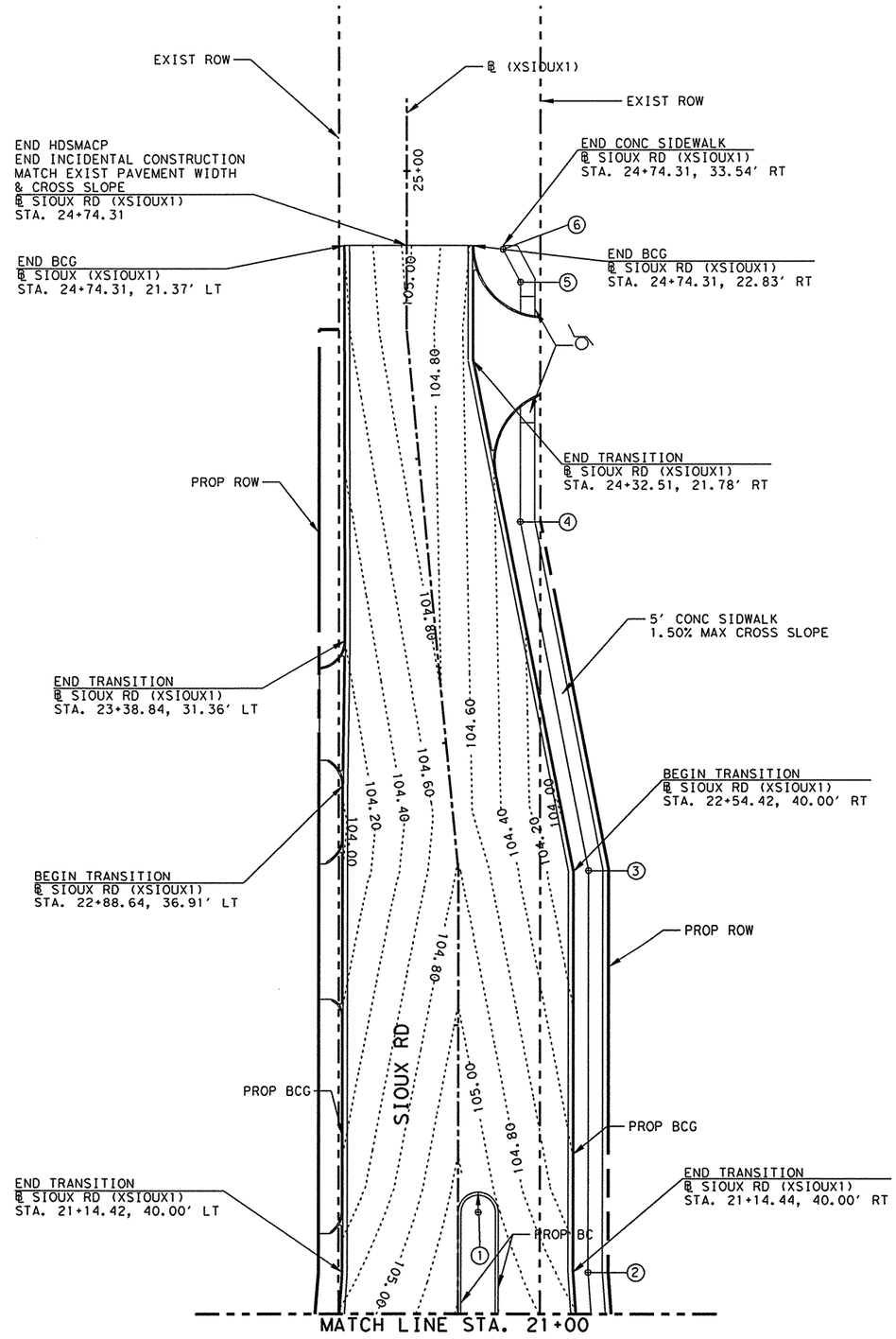

① R = 7.00' ℄ SIOUX RD (XSIOUX1)
STA. 21+35.43, 7.00' RT

② ℄ SIOUX RD (XSIOUX1)
STA. 21+14.59, 45.50' RT

③ ℄ SIOUX RD (XSIOUX1)
STA. 22+54.42, 45.50' RT

④ ℄ SIOUX RD (XSIOUX1)
STA. 23+74.57, 33.05' RT

⑤ ℄ SIOUX RD (XSIOUX1)
STA. 24+61.74, 39.60' RT

⑥ ℄ SIOUX RD (XSIOUX1)
STA. 24+73.05, 33.54' RT

NOTES:

1. RADIUS MEASUREMENTS ARE TO THE FACE OF THE CURB. IF THERE IS NO CURB, MEASUREMENTS ARE TO THE EDGE OF PAVEMENT.

- WHEELCHAIR RAMP (TY #)
SEE ROADWAY STANDARD "PEDESTRIAN FACILITIES" SHEETS 1 THROUGH 3 FOR MORE DETAILS.

SHEET TOTALS

ITEM	EST.	FINAL	UNIT	DESCRIPTION
529	750		LF	CONC C & G (TY A) (BARRIER)
531	185		SY	CONC SIDEWALK (4")
531	2		EA	CONC SIDEWALK (WHEELCHAIR RAMP)
529	93		LF	CONC CURB (TYA) (BARRIER)

THE SEAL APPEARING ON THIS DOCUMENT WAS AUTHORIZED BY JAIME AGUILAR, P.E. 87606 ON 06/26/2003.

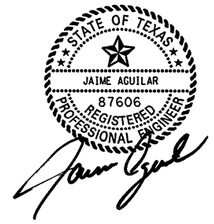

THE SEAL APPEARING ON THIS DOCUMENT WAS AUTHORIZED BY PHAISARN CWATANAPHOL, P.E. 89252 ON 06/26/2003.

Parsons Brinckerhoff Quade & Douglas Inc.

Texas Department of Transportation

© 2003 by TxDOT

INTERSECTION LAYOUTS
US 281
SIOUX ROAD

STA. 25+00 "XSIOUX1" TO
STA. 21+00 "XSIOUX1"

PLAN 1"= 50' HORIZ

SHEET 4 OF 4 | 281OFFSET09.DGN

DESIGNED: PAF	FED. RD DIV. NO.	STATE	FEDERAL AID PROJECT No.			HIGHWAY No.	
CHECKED: JP	6	TEXAS				US 281	
DRAWN: KTD	STATE DISTRICT	COUNTY	CONTROL No.	SECTION No.	JOB No.	SHEET No.	
CHECKED: AGM	PHARR	HIDALGO	0255	08	091	426	

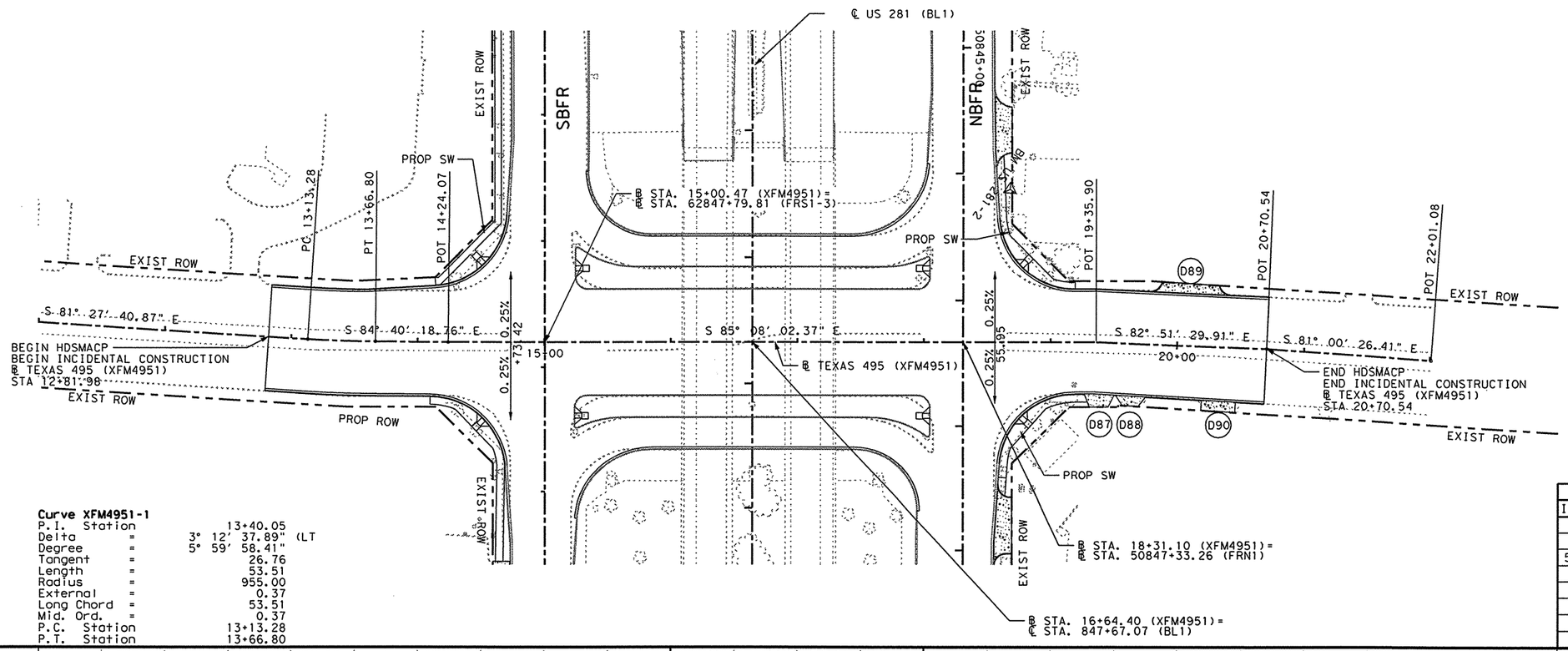

Curve XFM4951-1

P.I. Station		13+40.05
Delta	=	3° 12' 37.89" (LT
Degree	=	5° 59' 58.41"
Tangent	=	26.76
Length	=	53.51
Radius	=	955.00
External	=	0.37
Long Chord	=	53.51
Mid. Ord.	=	0.37
P.C. Station		13+13.28
P.T. Station		13+66.80

LEGEND:

- MC - MOUNTABLE CONC CURB
- BC - BARRIER CONC CURB
- MCG - MOUNTABLE CONC CURB & GUTTER
- BCG - BARRIER CONC CURB & GUTTER
- RW - RETAINING WALL
- RR - RIP RAP
- SGT - SINGLE GUARD RAIL TERMINAL
- SW - SIDEWALK
- WCR - WHEEL CHAIR RAMP
- VG - 4' VALLEY GUTTER
- MBGF - METAL BEAM GUARD FENCE
- PROP DRIVEWAY
- PROP CONC DRIVEWAY
- 1 - WHEELCHAIR RAMP(TY 1)
- 4 - WHEELCHAIR RAMP(TY 4)

NOTES:
1. FOR DRIVEWAY APRON TYPES AND SIZES, SEE "DRIVEWAY SUMMARY".

B.M. & HORIZONTAL DATA
BM # US 281-2
ELEV = 108.36
STA = 846+46.19, 203.37' LT
3 1/4" TXDOT ALUMINUM DISK

SHEET TOTALS

ITEM	EST.	FINAL	UNIT	DESCRIPTION
530	108		SY	DRVWYS (CONC)(6")

EXIST AND PROP PGL

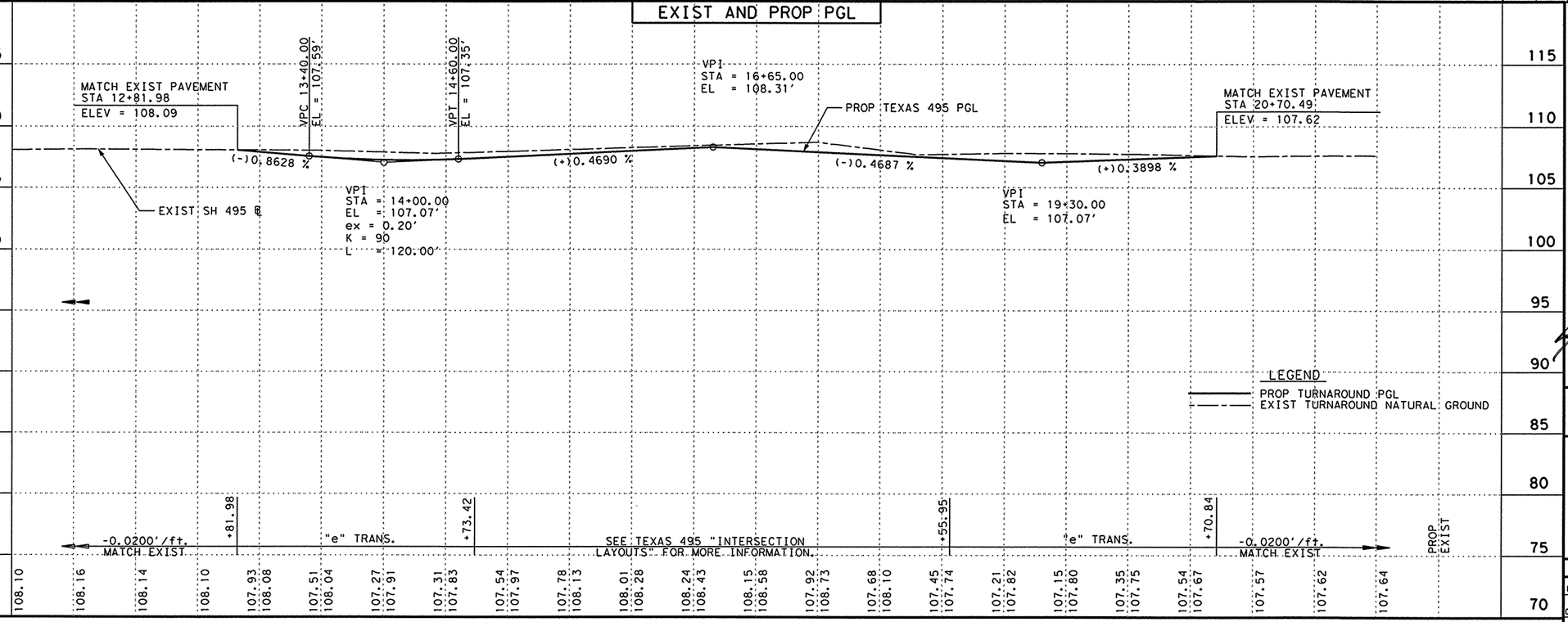

LEGEND
PROP TURNAROUND PGL
EXIST TURNAROUND NATURAL GROUND

THE SEAL APPEARING ON THIS DOCUMENT WAS AUTHORIZED BY JAIME AGUILAR, P.E. 87606 ON 06/26/2003.

THE SEAL APPEARING ON THIS DOCUMENT WAS AUTHORIZED BY PHAISARN CWATANAPHOL, P.E. 89252 ON 06/26/2003.

STATE OF TEXAS — JAIME AGUILAR — 87606 — REGISTERED PROFESSIONAL ENGINEER

STATE OF TEXAS — PHAISARN CWATANAPHOL — 89252 — REGISTERED PROFESSIONAL ENGINEER

PB Parsons Brinckerhoff Quade & Douglas Inc.

Texas Department of Transportation

© 2003 by TxDOT

US 281
PLAN & PROFILE
TEXAS 495 INTERSECTION

PLAN 1"= 100' HORIZ
PROFILE 1"= 10' VERT

SHEET 1 OF 1				281SSP09.DGN			
DESIGNED: TT	FED. RD DIV. No.	STATE	FEDERAL AID PROJECT No.		HIGHWAY No.		
CHECKED: DM	6	TEXAS			US 281		
DRAWN:	STATE DISTRICT	COUNTY	CONTROL No.	SECTION No.	JOB No.	SHEET No.	
CHECKED: DM	PHARR	HIDALGO	0255	08	091	427	

NAME
10:17:00 AM
06/26/2003
i:\2232a\cadd\sheets\roadway\side street\281ssp09.dgn

NAME
10:24:35 AM
06/26/2003

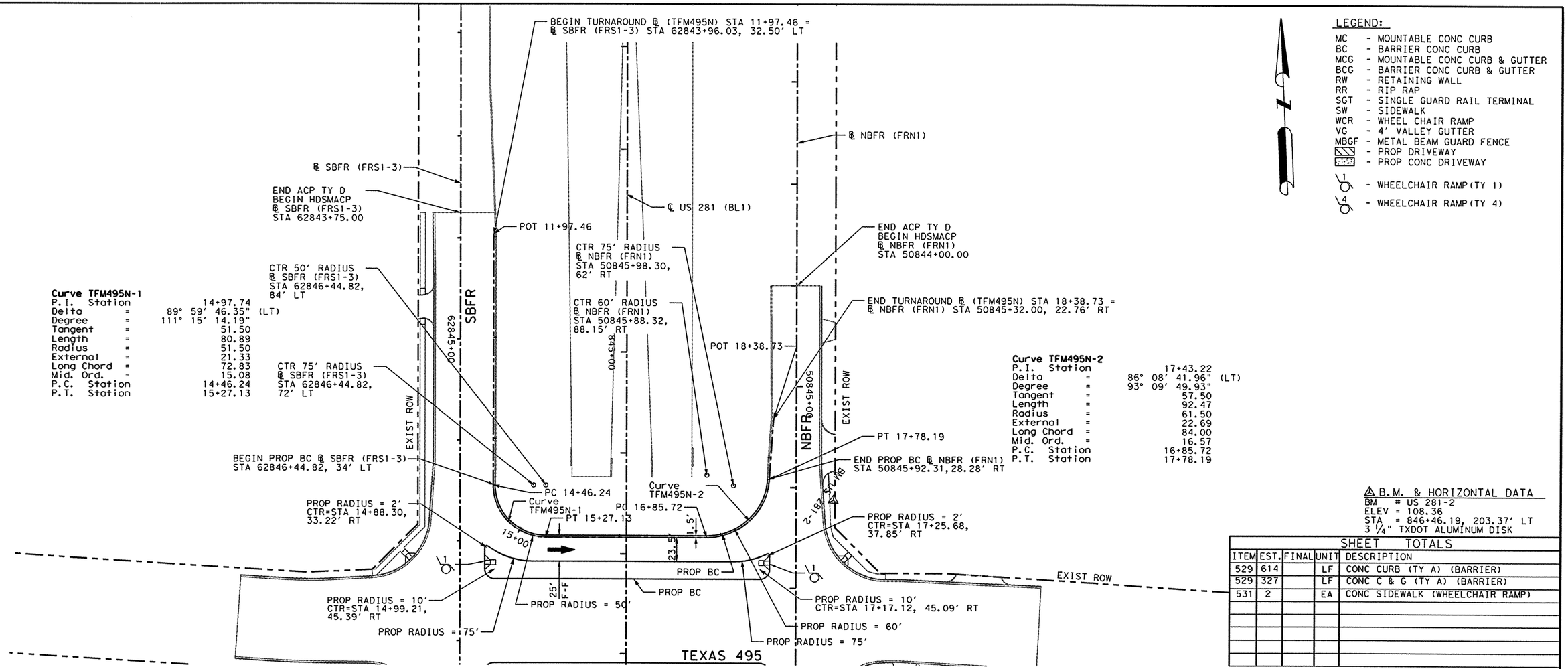

LEGEND:

- MC - MOUNTABLE CONC CURB
- BC - BARRIER CONC CURB
- MCG - MOUNTABLE CONC CURB & GUTTER
- BCG - BARRIER CONC CURB & GUTTER
- RW - RETAINING WALL
- RR - RIP RAP
- SGT - SINGLE GUARD RAIL TERMINAL
- SW - SIDEWALK
- WCR - WHEEL CHAIR RAMP
- VG - 4' VALLEY GUTTER
- MBGF - METAL BEAM GUARD FENCE
- PROP DRIVEWAY
- PROP CONC DRIVEWAY
- 1/6 - WHEELCHAIR RAMP(TY 1)
- 4/6 - WHEELCHAIR RAMP(TY 4)

⚠ B.M. & HORIZONTAL DATA
BM # US 281-2
ELEV = 108.36
STA = 846+46.19, 203.37' LT
3 1/4" TXDOT ALUMINUM DISK

SHEET TOTALS

ITEM	EST.	FINAL	UNIT	DESCRIPTION
529	614		LF	CONC CURB (TY A) (BARRIER)
529	327		LF	CONC C & G (TY A) (BARRIER)
531	2		EA	CONC SIDEWALK (WHEELCHAIR RAMP)

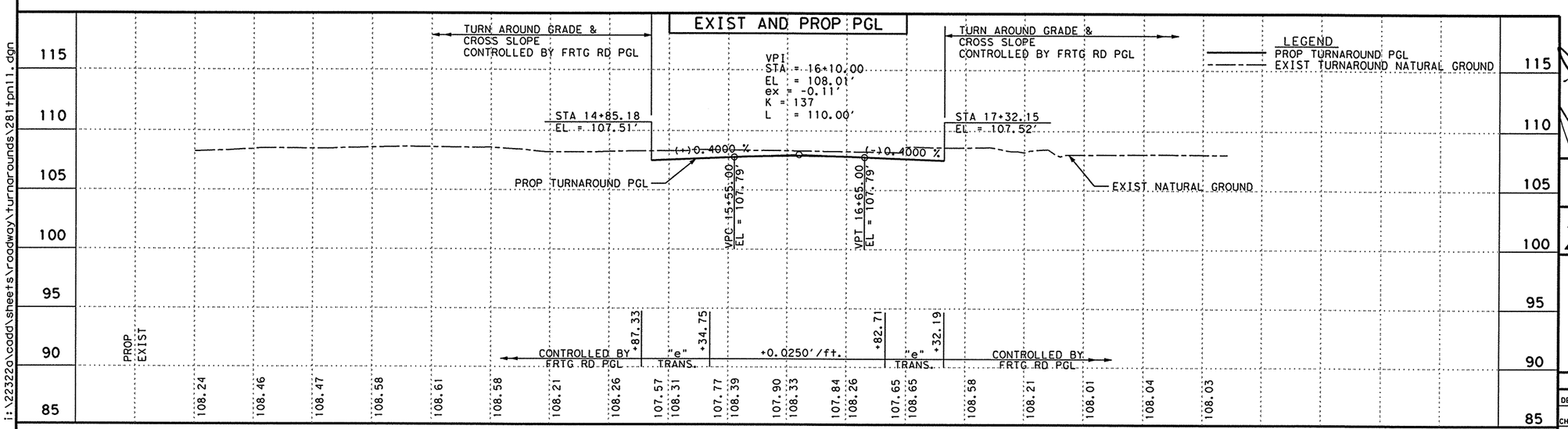

THE SEAL APPEARING ON THIS DOCUMENT WAS AUTHORIZED BY JAIME AGUILAR, P.E. 87606 ON 06/26/2003.

THE SEAL APPEARING ON THIS DOCUMENT WAS AUTHORIZED BY PHAISARN CWATANAPHOL, P.E. 89252 ON 06/26/2003.

STATE OF TEXAS — JAIME AGUILAR — 87606 — REGISTERED PROFESSIONAL ENGINEER

STATE OF TEXAS — PHAISARN CWATANAPHOL — 89252 — REGISTERED PROFESSIONAL ENGINEER

Parsons Brinckerhoff Quade & Douglas Inc.

Texas Department of Transportation

© 2003 by TxDOT

US 281
PLAN & PROFILE
NORTHBOUND TURNAROUND @ TEXAS 495

PLAN 1"= 100' HORIZ
PROFILE 1"= 10' VERT

SHEET 1 OF 1				281TPN11.DGN	
DESIGNED: JA	FED. RD DIV. No.	STATE	FEDERAL AID PROJECT No.		HIGHWAY No.
CHECKED: JP	6	TEXAS			US 281
DRAWN:	STATE DISTRICT	COUNTY	CONTROL No.	SECTION No.	JOB No.	SHEET No.
CHECKED: JDH	PHARR	HIDALGO	0255	08	091	428

i:\223220\cadd\sheets\roadway\turnarounds\281tpn11.dgn

NAME
10:24:50 AM
06/26/2003

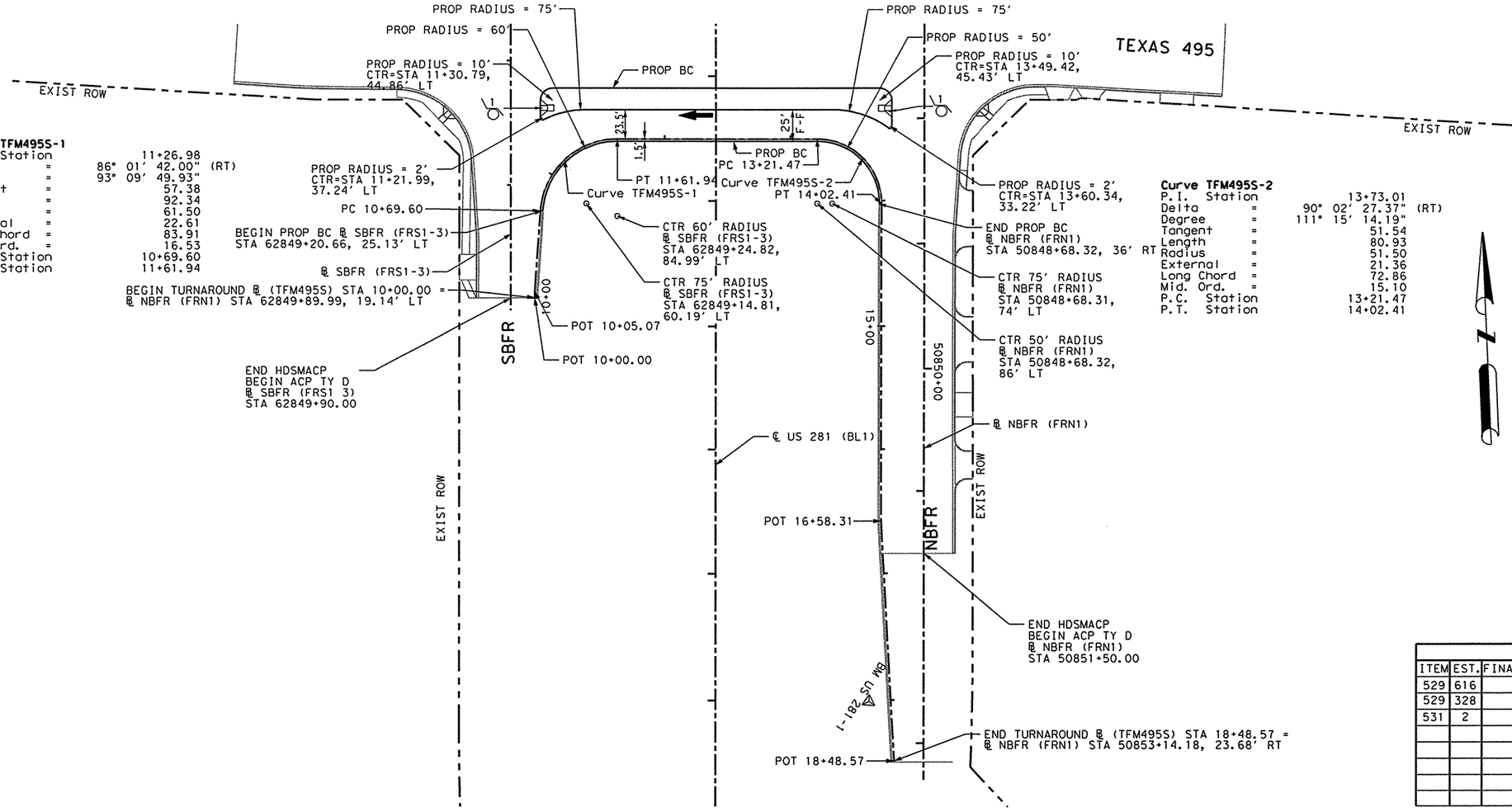

Curve TFM495S-1

P.I. Station		11+26.98
Delta	=	86° 01' 42.00" (RT)
Degree	=	93° 09' 49.93"
Tangent	=	57.38
Length	=	92.34
Radius	=	61.50
External	=	22.61
Long Chord	=	83.91
Mid. Ord.	=	16.53
P.C. Station		10+69.60
P.T. Station		11+61.94

Curve TFM495S-2

P.I. Station		13+73.01
Delta	=	90° 02' 27.37" (RT)
Degree	=	111° 15' 14.19"
Tangent	=	51.54
Length	=	80.93
Radius	=	51.50
External	=	21.36
Long Chord	=	72.86
Mid. Ord.	=	15.10
P.C. Station		13+21.47
P.T. Station		14+02.41

LEGEND:

- MC - MOUNTABLE CONC CURB
- BC - BARRIER CONC CURB
- MCG - MOUNTABLE CONC CURB & GUTTER
- BCG - BARRIER CONC CURB & GUTTER
- RW - RETAINING WALL
- RR - RIP RAP
- SGT - SINGLE GUARD RAIL TERMINAL
- SW - SIDEWALK
- WCR - WHEEL CHAIR RAMP
- VG - 4' VALLEY GUTTER
- MBGF - METAL BEAM GUARD FENCE
- PROP DRIVEWAY
- PROP CONC DRIVEWAY
- 1 - WHEELCHAIR RAMP(TY 1)
- 4 - WHEELCHAIR RAMP(TY 4)

B.M. & HORIZONTAL DATA
BM # US 281-1
ELEV = 107.13
STA = 853+00.67, 198.90' LT
3 1/4" TXDOT ALUMINUM DISK

SHEET TOTALS

ITEM	EST.	FINAL	UNIT	DESCRIPTION
529	616		LF	CONC CURB (TY A)(BARRIER)
529	328		LF	CONC C & G (TY A)(BARRIER)
531	2		EA	CONC SIDEWALK (WHELCHAIR RAMP)

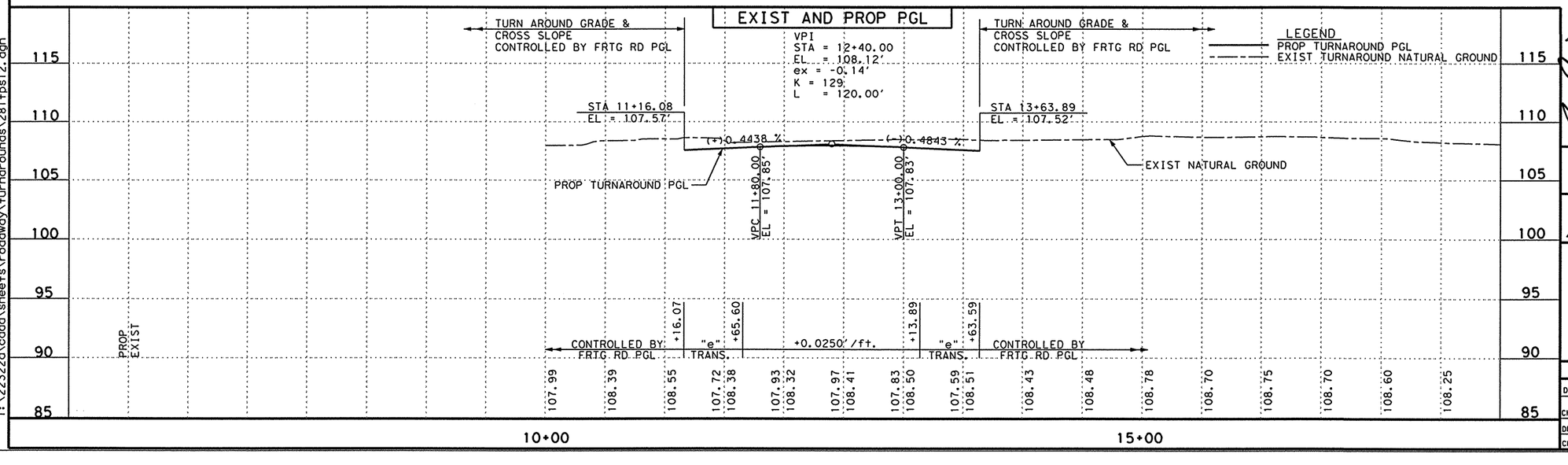

THE SEAL APPEARING ON THIS DOCUMENT WAS AUTHORIZED BY JAIME AGUILAR, P.E. 87606 ON 06/26/2003.
THE SEAL APPEARING ON THIS DOCUMENT WAS AUTHORIZED BY PHAISARN CWATANAPHOL, P.E. 89252 ON 06/26/2003.
STATE OF TEXAS JAIME AGUILAR 87606 REGISTERED PROFESSIONAL ENGINEER
STATE OF TEXAS PHAISARN CWATANAPHOL 89252 REGISTERED PROFESSIONAL ENGINEER
Parsons Brinckerhoff Quade & Douglas Inc.
Texas Department of Transportation
© 2003 by TxDOT

US 281
PLAN & PROFILE
SOUTHBOUND TURNAROUND @ TEXAS 495

PLAN 1"= 100' HORIZ
PROFILE 1"= 10' VERT

SHEET 1 OF 1 — 281TPS12.DGN

DESIGNED: JA	FED. RD DIV. No.	STATE	FEDERAL AID PROJECT No.	HIGHWAY No.
CHECKED: JP	6	TEXAS		US 281

DRAWN:	STATE DISTRICT	COUNTY	CONTROL No.	SECTION No.	JOB No.	SHEET No.
CHECKED: JDH	PHARR	HIDALGO	0255	08	091	429

i:\22322a\cadd\sheets\roadway\turnarounds\281tps12.dgn

NAME
10:30:15 AM
06/26/2003

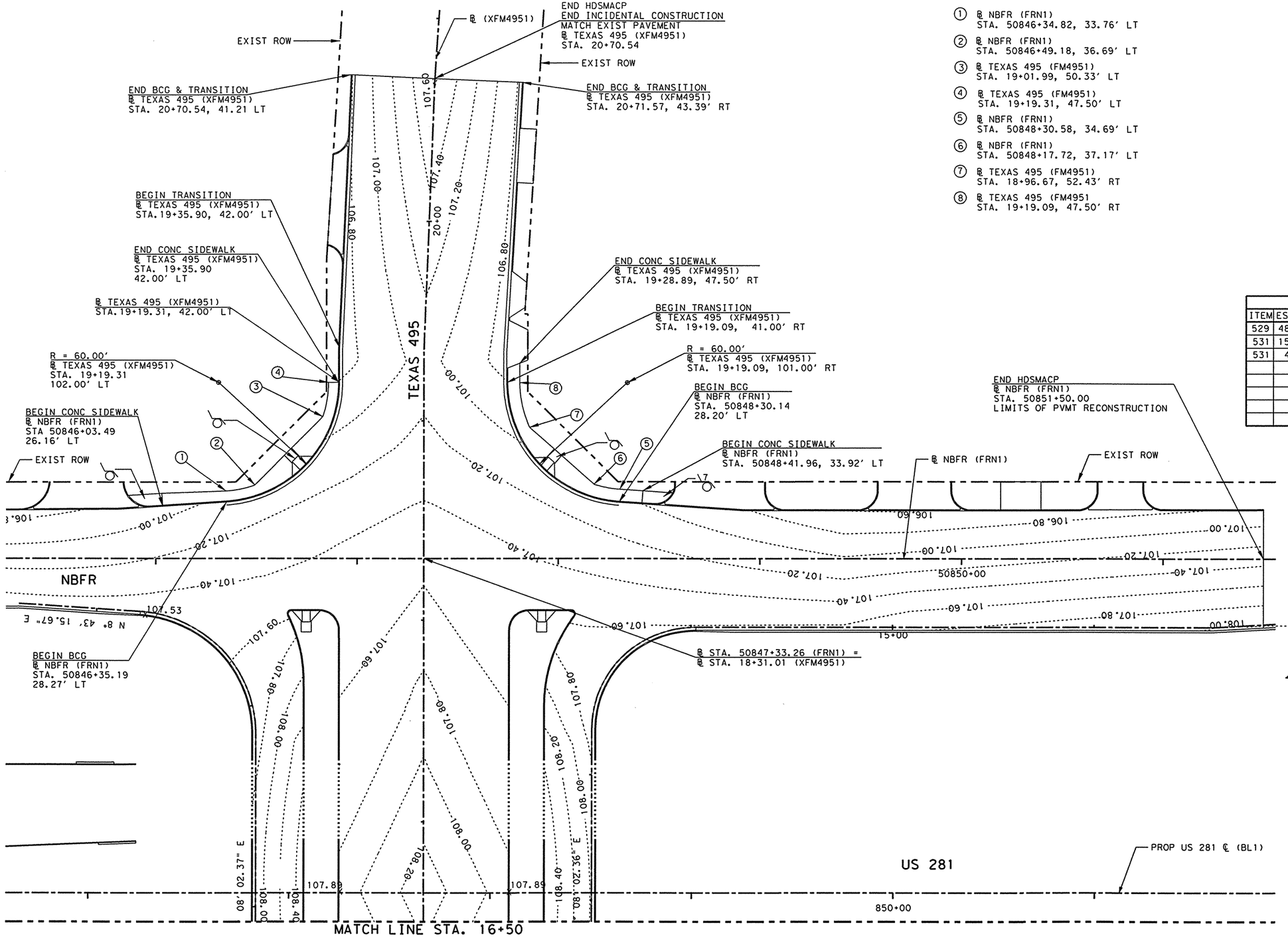

① ℄ NBFR (FRN1)
STA. 50846+34.82, 33.76' LT

② ℄ NBFR (FRN1)
STA. 50846+49.18, 36.69' LT

③ ℄ TEXAS 495 (FM4951)
STA. 19+01.99, 50.33' LT

④ ℄ TEXAS 495 (FM4951)
STA. 19+19.31, 47.50' LT

⑤ ℄ NBFR (FRN1)
STA. 50848+30.58, 34.69' LT

⑥ ℄ NBFR (FRN1)
STA. 50848+17.72, 37.17' LT

⑦ ℄ TEXAS 495 (FM4951)
STA. 18+96.67, 52.43' RT

⑧ ℄ TEXAS 495 (FM4951
STA. 19+19.09, 47.50' RT

NOTES:

1. RADIUS MEASUREMENTS ARE TO THE FACE OF THE CURB. IF THERE IS NO CURB, MEASUREMENTS ARE TO THE EDGE OF PAVEMENT.

#
- WHEELCHAIR RAMP (TY #)
SEE ROADWAY STANDARD "PEDESTRIAN FACILITIES" SHEETS 1 THROUGH 3 FOR MORE DETAILS.

SHEET TOTALS

ITEM	EST.	FINAL	UNIT	DESCRIPTION
529	483		LF	CONC C & G (TY A)(BARRIER)
531	155		SY	CONC SIDEWALK (4")
531	4		EA	CONC SIDEWALK (WHEELCHAIR RAMP)

THE SEAL APPEARING ON THIS DOCUMENT WAS AUTHORIZED BY JAIME AGUILAR, P.E. 87606 ON 06/26/2003.

THE SEAL APPEARING ON THIS DOCUMENT WAS AUTHORIZED BY PHAISARN CWATANAPHOL, P.E. 89252 ON 06/26/2003.

STATE OF TEXAS
JAIME AGUILAR
87606
REGISTERED PROFESSIONAL ENGINEER

STATE OF TEXAS
PHAISARN CWATANAPHOL
89252
REGISTERED PROFESSIONAL ENGINEER

Parsons Brinckerhoff Quade & Douglas Inc.

Texas Department of Transportation

© 2003 by TxDOT

INTERSECTION LAYOUTS
US 281
TEXAS 495
STA. 21+00 "XFM4951" TO
STA. 16+50 "XFM4951"

SHEET 1 OF 2 | 281OFFSET13.DGN

DESIGNED: PAF	FED. RD DIV. NO.	STATE	FEDERAL AID PROJECT No.			HIGHWAY No.
CHECKED: JP	6	TEXAS				US 281
DRAWN: KTD	STATE DISTRICT	COUNTY	CONTROL No.	SECTION No.	JOB No.	SHEET No.
CHECKED: AGM	PHARR	HIDALGO	0255	08	091	430

i:\22322a\cadd\sheets\roadway\details\281offset13.dgn

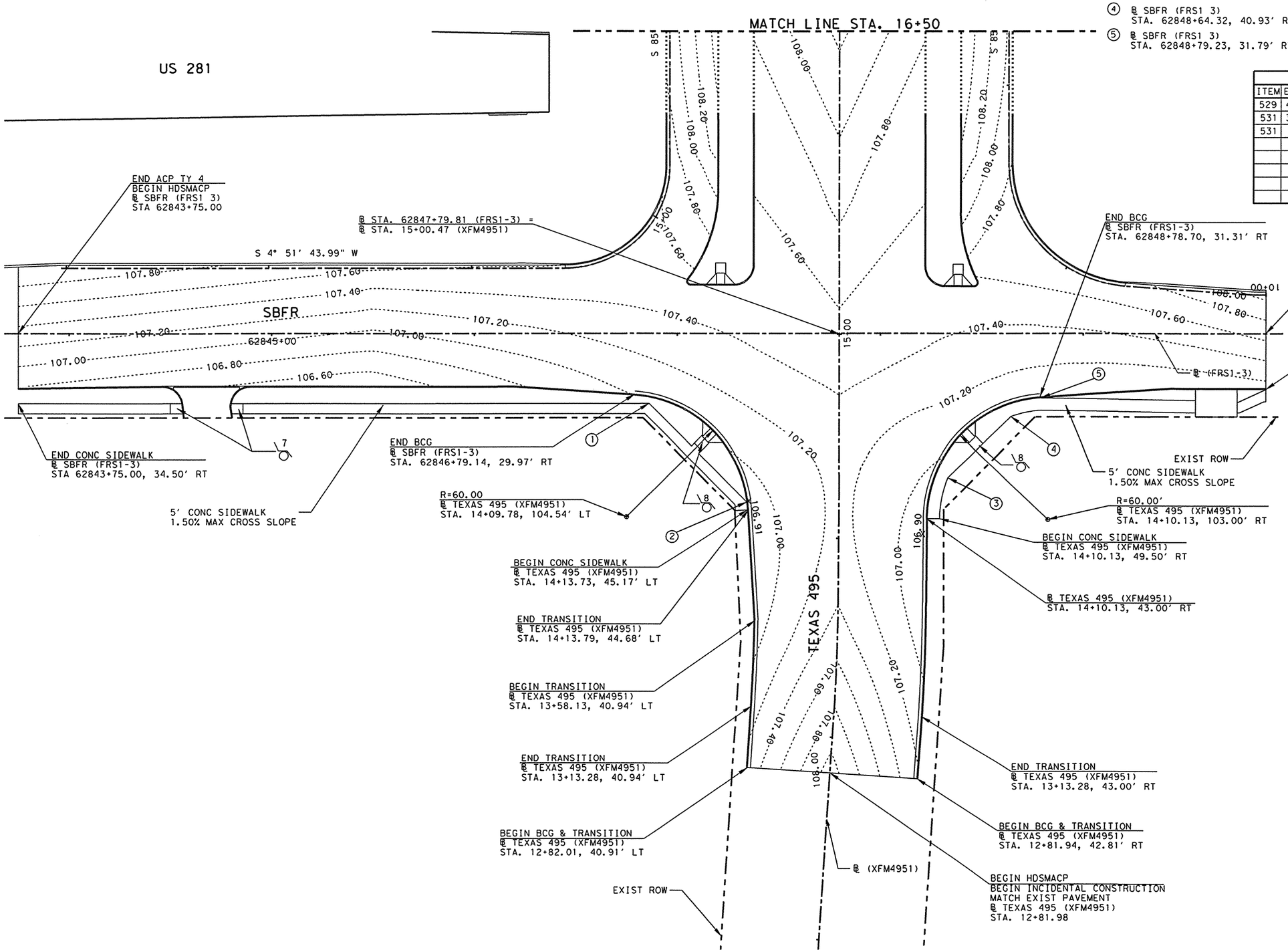

① ℄ SBFR (FRS1 3)
STA. 62846+86.16, 34.50' RT

② ℄ TEXAS 495 (XFM4951)
STA. 14+17.56, 45.55' LT

③ ℄ TEXAS 495 (XFM4951)
STA. 14+29.82, 53.47' RT

④ ℄ SBFR (FRS1 3)
STA. 62848+64.32, 40.93' RT

⑤ ℄ SBFR (FRS1 3)
STA. 62848+79.23, 31.79' RT

NOTES:

1. RADIUS MEASUREMENTS ARE TO THE FACE OF THE CURB. IF THERE IS NO CURB, MEASUREMENTS ARE TO THE EDGE OF PAVEMENT.

\# - WHEELCHAIR RAMP (TY #)
SEE ROADWAY STANDARD "PEDESTRIAN FACILITIES" SHEETS 1 THROUGH 3 FOR MORE DETAILS.

SHEET TOTALS

ITEM	EST.	FINAL	UNIT	DESCRIPTION
529	437		LF	CONC C & G (TY A)(BARRIER)
531	314		SY	CONC SIDEWALK (4")
531	4		EA	CONC SIDEWALK (WHEELCHAIR RAMP)

THE SEAL APPEARING ON THIS DOCUMENT WAS AUTHORIZED BY JAIME AGUILAR, P.E. 87606 ON 06/26/2003.

THE SEAL APPEARING ON THIS DOCUMENT WAS AUTHORIZED BY PHAISARN CWATANAPHOL, P.E. 89252 ON 06/26/2003.

STATE OF TEXAS
JAIME AGUILAR
87606
REGISTERED PROFESSIONAL ENGINEER

STATE OF TEXAS
PHAISARN CWATANAPHOL
89252
REGISTERED PROFESSIONAL ENGINEER

Parsons Brinckerhoff Quade & Douglas Inc.

Texas Department of Transportation

© 2003 by TxDOT

INTERSECTION LAYOUTS
US 281
TEXAS 495

STA. 16+50 "XFM4951" TO
STA. 12+00 "XFM4951"

SHEET 2 OF 2 | 281OFFSET14.DGN

DESIGNED: PAF	FED. RD DIV. No.	STATE	FEDERAL AID PROJECT No.	HIGHWAY No.
CHECKED: JP	6	TEXAS		US 281

DRAWN: KTD	STATE DISTRICT	COUNTY	CONTROL No.	SECTION No.	JOB No.	SHEET No.
CHECKED: AGM	PHARR	HIDALGO	0255	08	091	431

NAME
10:30:25 AM
06/26/2003
i:\22322a\cadd\sheets\roadway\details\281offset14.dgn

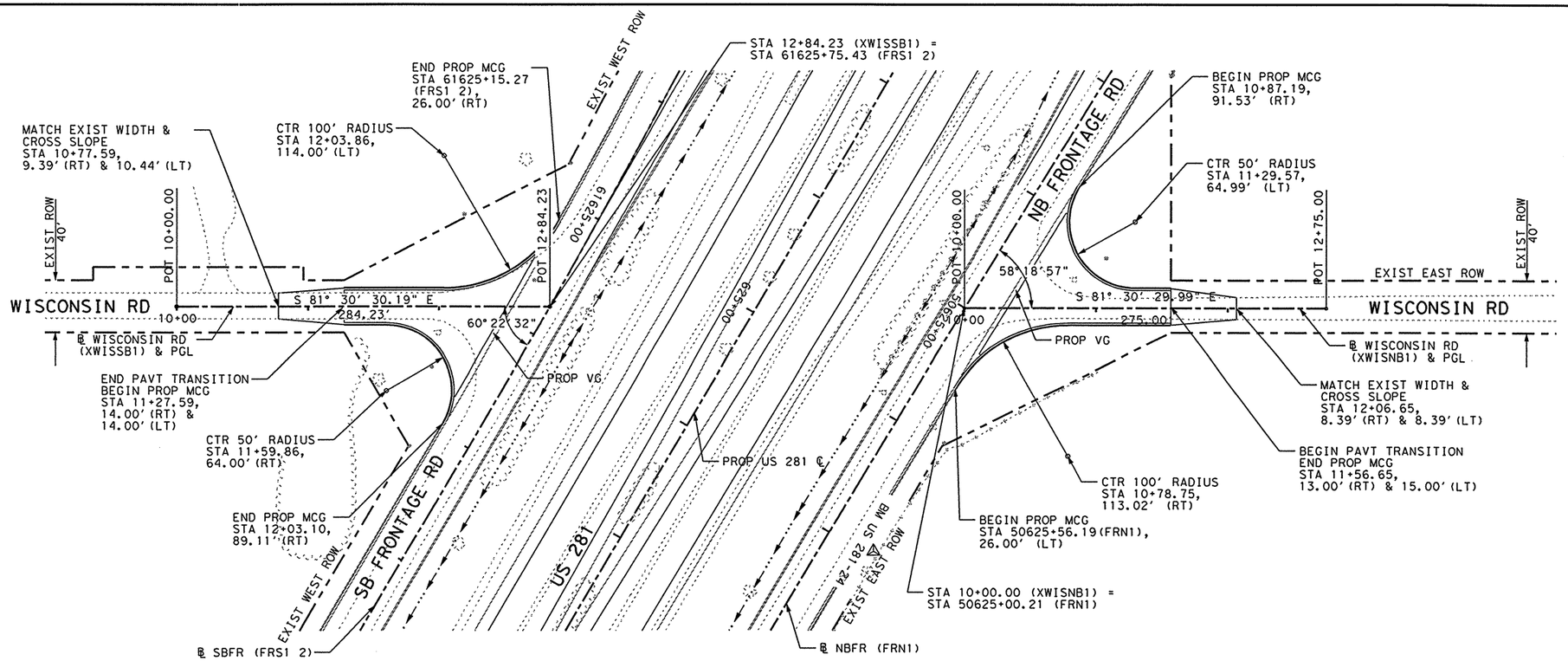

LEGEND:

MC	- MOUNTABLE CONC CURB
BC	- BARRIER CONC CURB
MCG	- MOUNTABLE CONC CURB & GUTTER
BCG	- BARRIER CONC CURB & GUTTER
RW	- RETAINING WALL
RR	- RIP RAP
SGT	- SINGLE GUARD RAIL TERMINAL
SW	- SIDEWALK
WCR	- WHEEL CHAIR RAMP
VG	- 4' VALLEY GUTTER
MBGF	- METAL BEAM GUARD FENCE
	- PROP DRIVEWAY
	- PROP CONC DRIVEWAY
1	- WHEELCHAIR RAMP (TY 1)
4	- WHEELCHAIR RAMP (TY 4)

△ B.M. & HORIZONTAL DATA
BM # US 281-24
ELEV = 98.94 ℄ US 281 (BL1)
STA = 626+11.23, 171.49' LT
3 1/4" TXDOT ALUMINUM DISK

SHEET TOTALS

ITEM	EST.	FINAL	UNIT	DESCRIPTION
529	633		LF	CONC C & G (TY B) (MOUNTABLE)
530	1385		SY	TURNOUTS (ASPH-CONC PAV) (TY PRB-1)

EXIST AND PROP PGL

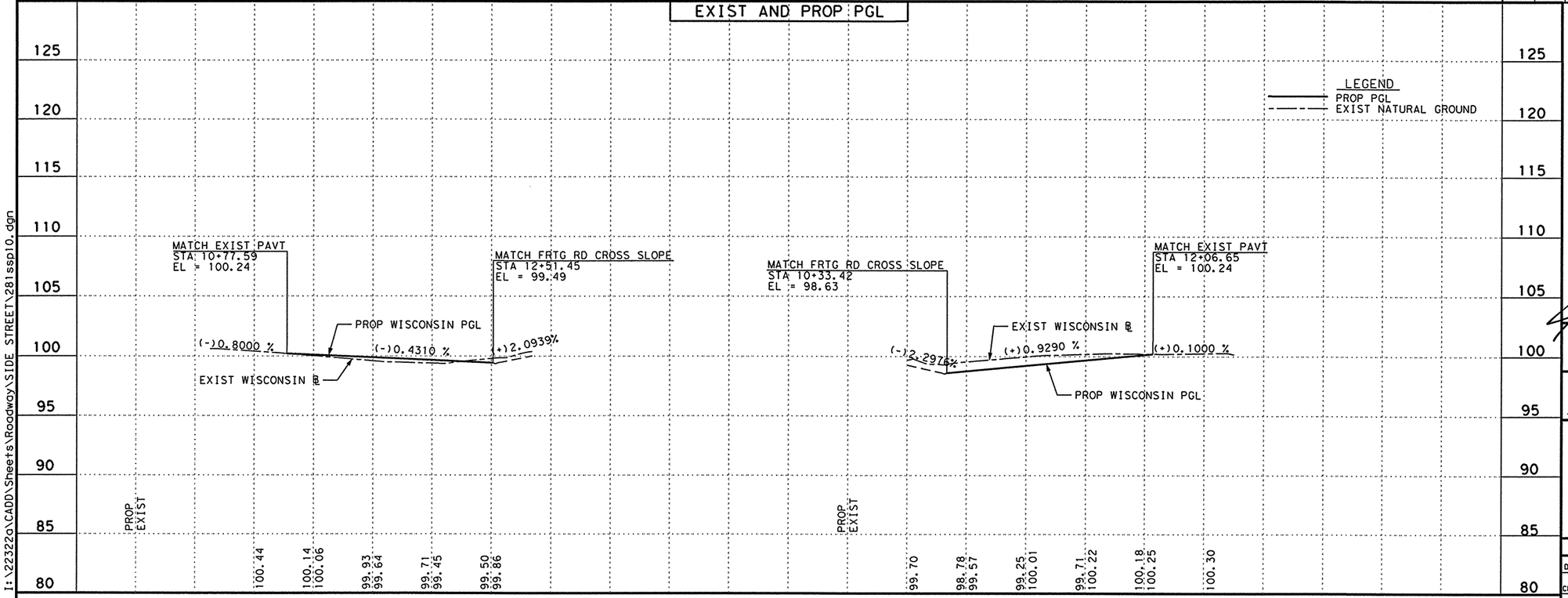

THE SEAL APPEARING ON THIS DOCUMENT WAS AUTHORIZED BY JAIME AGUILAR, P.E. 87606 ON 06/26/2003.

THE SEAL APPEARING ON THIS DOCUMENT WAS AUTHORIZED BY PHAISARN CWATANAPHOL, P.E. 89252 ON 06/26/2003.

STATE OF TEXAS · JAIME AGUILAR · 87606 · REGISTERED PROFESSIONAL ENGINEER

STATE OF TEXAS · PHAISARN CWATANAPHOL · 89252 · REGISTERED PROFESSIONAL ENGINEER

Parsons Brinckerhoff
Quade & Douglas Inc.

Texas Department of Transportation

© 2003 by TxDOT

US 281
PLAN & PROFILE
WISCONSIN RD INTERSECTION

PLAN 1" = 100' HORIZ
PROFILE 1" = 10' VERT

SHEET 1 OF 1 | 281SSP10.DGN

DESIGNED: TT	FED. RD DIV. No.	STATE	FEDERAL AID PROJECT No.		HIGHWAY No.	
CHECKED: DM	6	TEXAS			US 281	
DRAWN:	STATE DISTRICT	COUNTY	CONTROL No.	SECTION No.	JOB No.	SHEET No.
CHECKED: DM	PHARR	HIDALGO	0255	08	091	432

I:\22322a\CADD\Sheets\Roadway\SIDE STREET\281ssp10.dgn

NAME
11:48:33 AM
06/26/2003

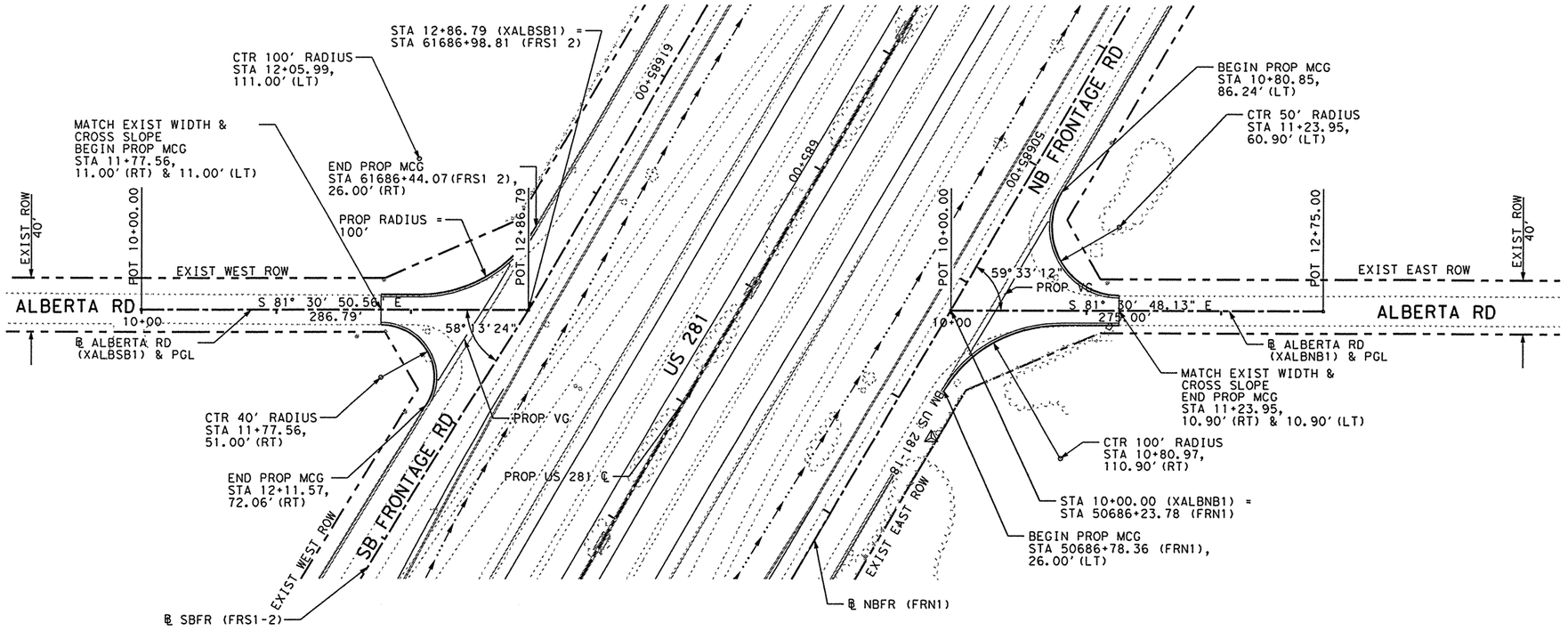

LEGEND:

MC	- MOUNTABLE CONC CURB
BC	- BARRIER CONC CURB
MCG	- MOUNTABLE CONC CURB & GUTTER
BCG	- BARRIER CONC CURB & GUTTER
RW	- RETAINING WALL
RR	- RIP RAP
SGT	- SINGLE GUARD RAIL TERMINAL
SW	- SIDEWALK
WCR	- WHEEL CHAIR RAMP
VG	- 4' VALLEY GUTTER
MBGF	- METAL BEAM GUARD FENCE
	- PROP DRIVEWAY
	- PROP CONC DRIVEWAY
1	- WHEELCHAIR RAMP(TY 1)
4	- WHEELCHAIR RAMP(TY 4)

⚠ B.M. & HORIZONTAL DATA
BM # US 281-18
ELEV = 105.52 ℄ US 281(BL1)
STA = 686+28.97, 170.87' LT
3 ¼" TXDOT ALUMINUM DISK

SHEET TOTALS

ITEM	EST.	FINAL	UNIT	DESCRIPTION
529	468		LF	CONC C & G (TY B)(MOUNTABLE)
530	717		SY	TURNOUTS(ASPH-CONC PAV)(TY PRB-1)

EXIST AND PROP PGL

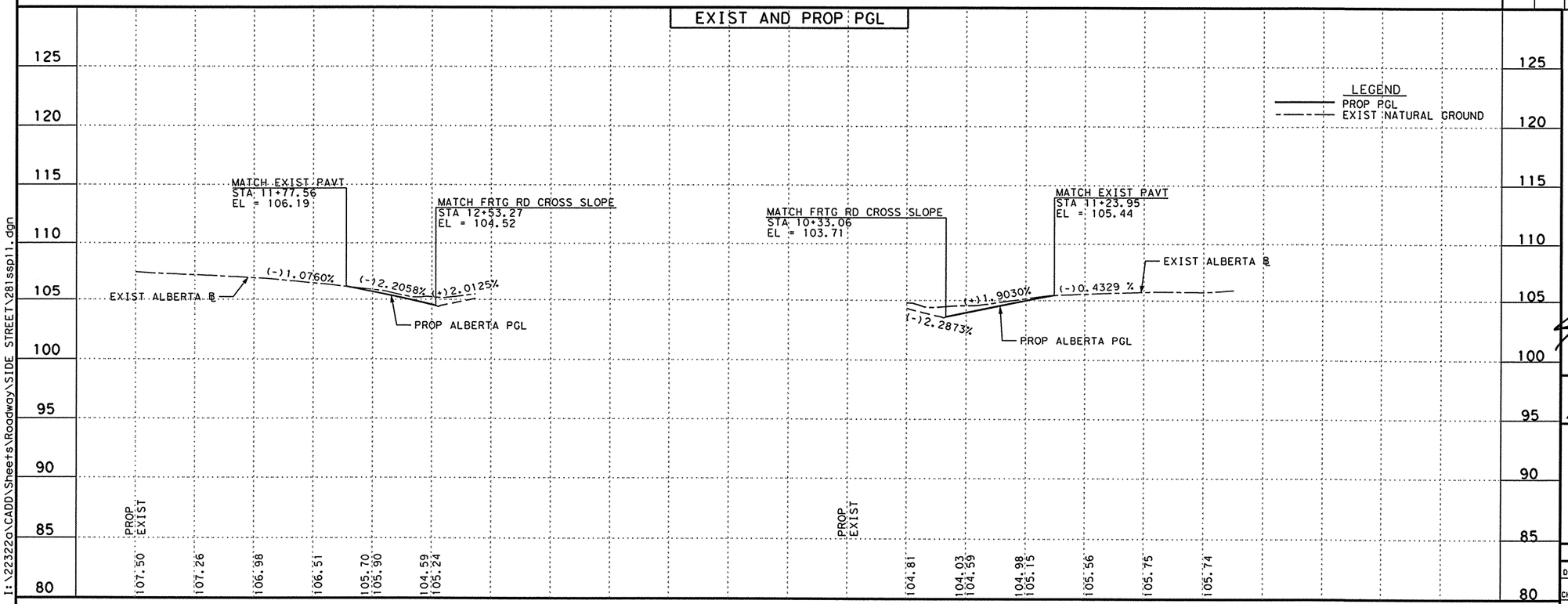

THE SEAL APPEARING ON THIS DOCUMENT WAS AUTHORIZED BY JAIME AGUILAR, P.E. 87606 ON 06/26/2003.

THE SEAL APPEARING ON THIS DOCUMENT WAS AUTHORIZED BY PHAISARN CHATANAPHOL, P.E. 89252 ON 06/26/2003.

Parsons Brinckerhoff Quade & Douglas Inc.

Texas Department of Transportation

© 2003 by TxDOT

US 281
PLAN & PROFILE
ALBERTA RD INTERSECTION

PLAN 1"= 100' HORIZ
PROFILE 1"= 10' VERT

SHEET 1 OF 1 | 281SSP11.DGN

DESIGNED: TT	FED. RD DIV. No.	STATE	FEDERAL AID PROJECT No.		HIGHWAY No.
CHECKED: DM	6	TEXAS			US 281
DRAWN:	STATE DISTRICT	COUNTY	CONTROL No.	SECTION No.	JOB No.	SHEET No.
CHECKED: DM	PHARR	HIDALGO	0255	08	091	433

I:\22322a\CADD\Sheets\Roadway\SIDE STREET\281ssp11.dgn

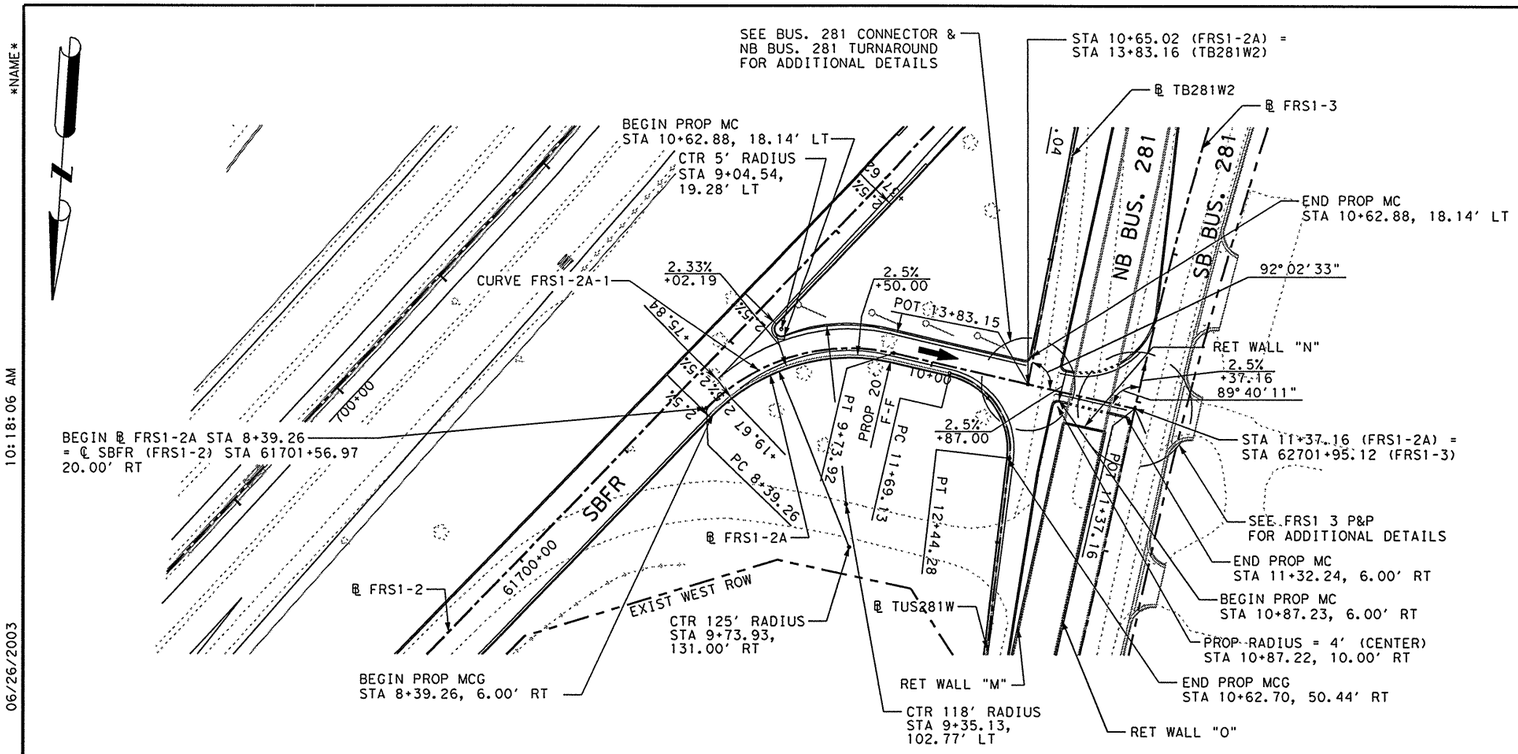

LEGEND:

MC	- MOUNTABLE CONC CURB
BC	- BARRIER CONC CURB
MCG	- MOUNTABLE CONC CURB & GUTTER (TY-B UNLESS OTHERWISE NOTED)
BCG	- BARRIER CONC CURB & GUTTER
RW	- RETAINING WALL
RR	- RIP RAP
SGT	- SINGLE GUARD RAIL TERMINAL
SSCB	- SINGLE SLOPE CONC BARRIER
SSTR	- SINGLE SLOPE TRAFFIC RAILING
SW	- SIDEWALK
WCR	- WHEEL CHAIR RAMP
VG	- 4' VALLEY GUTTER
MBGF	- METAL BEAM GUARD FENCE
TAS	- TERMINAL ANCHOR SECTION
	- PROP DRIVEWAY
	- PROP CONCRETE DRIVEWAY

Curve FRS1-2A-1

P.I. Station		9+13.22
Delta	=	58° 53' 57.49"
Degree	=	43° 44' 14.05"
Tangent	=	73.96
Length	=	134.67
Radius	=	131.00
External	=	19.44
Long Chord	=	128.81
Mid. Ord.	=	16.93
P.C. Station		8+39.26
P.T. Station		9+73.92

▲ FRS1-2A PROFILE SHALL MATCH THE SBFR PROFILE PROJECTED AT THE DESIGN CROSS SLOPE AND ADJUSTED FOR GORE CROSS SLOPE TRANSITION AS SHOWN ON GORE NOSE DETAIL SHEET.

△ B.M. & HORIZONTAL DATA
BM # US 281-16
ELEV = 103.82
STA = 706+19.13, 220.37' LT
3 ¼" TXDOT ALUMINUM DISK

CAUTION!
MAJOR UTILITY CROSSINGS IN THE VICINITY. REFER TO THE "UTILITIES AND DRAINAGE PLAN & PROFILE" SHEETS FOR ADDITIONAL INFORMATION.

SHEET TOTALS

ITEM	EST.	FINAL	UNIT	DESCRIPTION
529	214		LF	CONC CURB (TYB) (MOUNTABLE)
529	241		LF	CONC C & G (TY B) (MOUNTABLE)
658	4		EA	DEL ASM TY B(D-SW)

EXIST AND PROP PGL

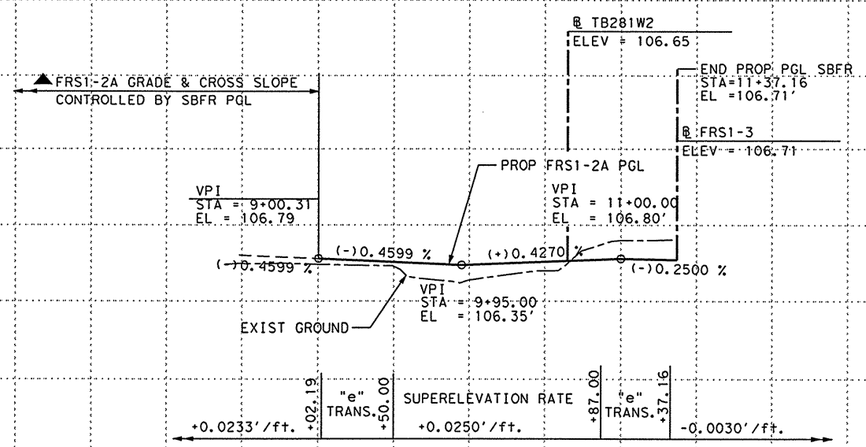

LEGEND
PROP PGL
EXIST NATURAL GROUND

THE SEAL APPEARING ON THIS DOCUMENT WAS AUTHORIZED BY JAIME AGUILAR, P.E. 87606 ON 06/26/2003.

THE SEAL APPEARING ON THIS DOCUMENT WAS AUTHORIZED BY PHAISARN CWATANAPHOL, P.E. 89252 ON 06/26/2003.

STATE OF TEXAS · JAIME AGUILAR · 87606 · REGISTERED PROFESSIONAL ENGINEER

STATE OF TEXAS · PHAISARN CWATANAPHOL · 89252 · REGISTERED PROFESSIONAL ENGINEER

Parsons Brinckerhoff Quade & Douglas Inc.

Texas Department of Transportation

© 2003 by TxDOT

US 281
PLAN & PROFILE
SBFR CONNECTOR

STA. 8+48.13 "FRS1-2A" TO
STA. 11+37.16 "FRS1-2A"

PLAN 1"= 100' HORIZ
PROFILE 1"= 10' VERT

SHEET 1 OF 1 | 281SSP14.DGN

DESIGNED: TT	FED. RD DIV. No.	STATE	FEDERAL AID PROJECT No.	HIGHWAY No.
CHECKED: DM	6	TEXAS		US 281

DRAWN:	STATE DISTRICT	COUNTY	CONTROL No.	SECTION No.	JOB No.	SHEET No.
CHECKED: DM	PHARR	HIDALGO	0255	08	091	434

NAME
10:18:06 AM
06/26/2003
i:\22322\cadd\sheets\roadway\side street\281ssp14.dgn

NAME
10:18:31 AM
06/26/2003

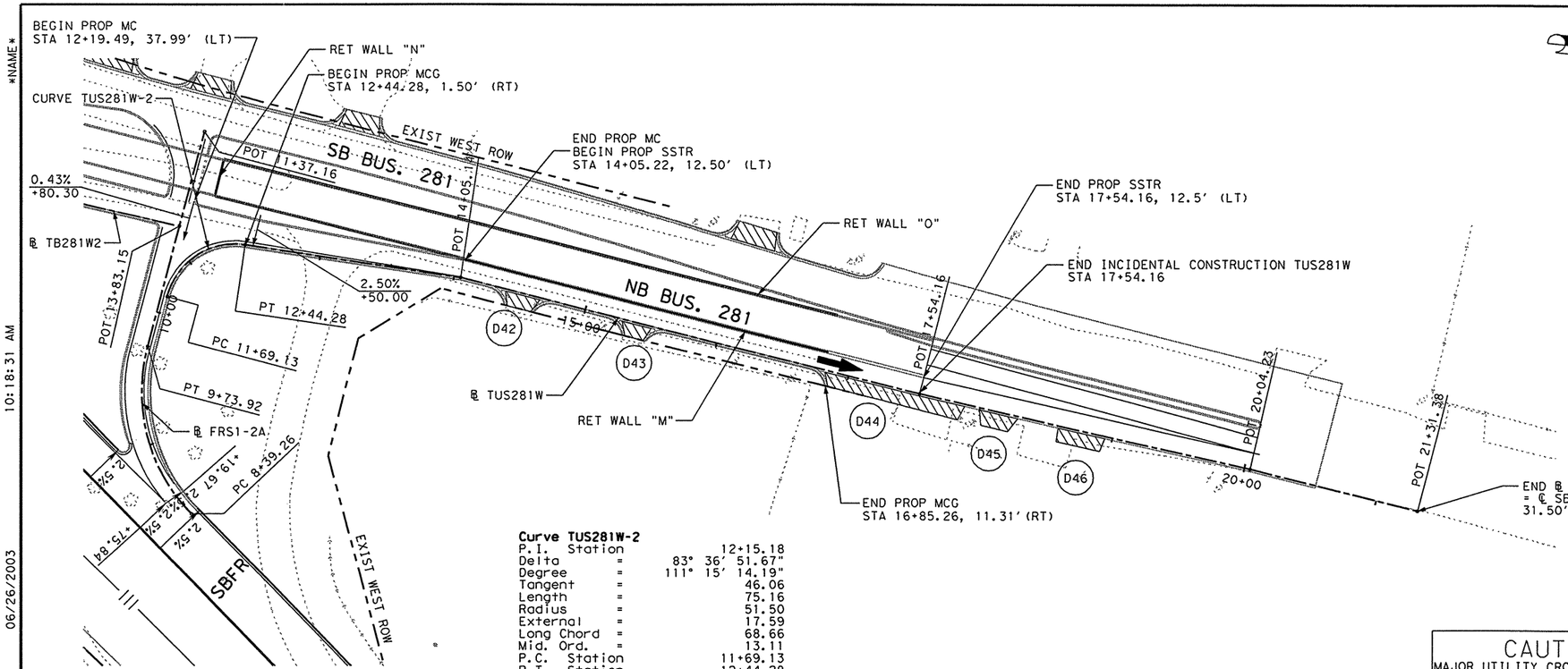

Curve TUS281W-2

P.I.	Station	12+15.18
Delta	=	83° 36' 51.67"
Degree	=	111° 15' 14.19"
Tangent	=	46.06
Length	=	75.16
Radius	=	51.50
External	=	17.59
Long Chord	=	68.66
Mid. Ord.	=	13.11
P.C.	Station	11+69.13
P.T.	Station	12+44.28

LEGEND:

- MC - MOUNTABLE CONC CURB
- BC - BARRIER CONC CURB
- MCG - MOUNTABLE CONC CURB & GUTTER (TY-B UNLESS OTHERWISE NOTED)
- BCG - BARRIER CONC CURB & GUTTER
- RW - RETAINING WALL
- RR - RIP RAP
- SGT - SINGLE GUARD RAIL TERMINAL
- SSCB - SINGLE SLOPE CONC BARRIER
- SSTR - SINGLE SLOPE TRAFFIC RAILING
- SW - SIDEWALK
- WCR - WHEEL CHAIR RAMP
- VG - 4' VALLEY GUTTER
- MBGF - METAL BEAM GUARD FENCE
- TAS - TERMINAL ANCHOR SECTION
- PROP DRIVEWAY
- PROP CONCRETE DRIVEWAY

FOR DRIVEWAY APRON TYPES AND SIZES, SEE "DRIVEWAY SUMMARY".

⚠ B.M. & HORIZONTAL DATA
BM # US 281-16
ELEV = 103.82
STA = 706+19.13, 220.37' LT
3 1/4" TXDOT ALUMINUM DISK

SHEET TOTALS

ITEM	EST.	FINAL	UNIT	DESCRIPTION
529	207		LF	CONC CURB (TYB) (MOUNTABLE)
529	495		LF	CONC C & G (TY B) (MOUNTABLE)
530	229		SY	DRVWY (ASPH-CONC PAV) (TY PB-1)
450	349		LF	RAIL (TY SSTR)
420	52		CY	CL C CONC (FOOTING)

CAUTION!
MAJOR UTILITY CROSSINGS IN THE VICINITY. REFER TO THE "UTILITIES AND DRAINAGE PLAN & PROFILE" SHEETS FOR ADDITIONAL INFORMATION.

EXIST AND PROP PGL

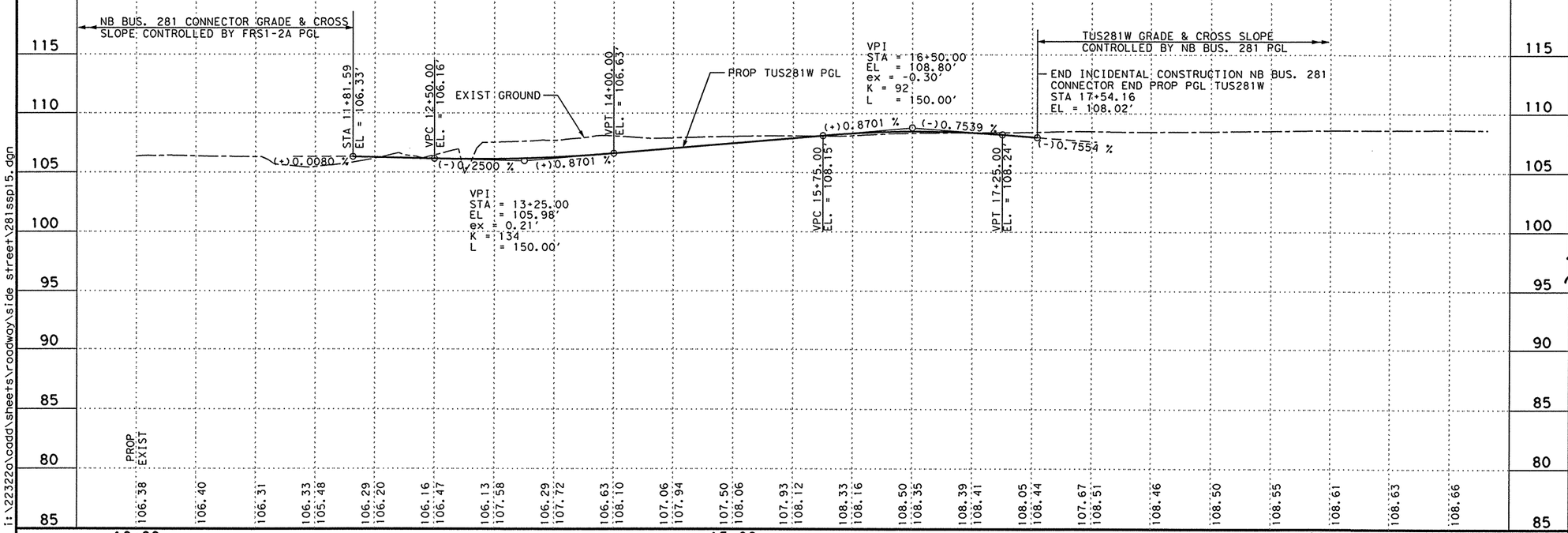

THE SEAL APPEARING ON THIS DOCUMENT WAS AUTHORIZED BY JAIME AGUILAR, P.E. 87606 ON 06/26/2003.

THE SEAL APPEARING ON THIS DOCUMENT WAS AUTHORIZED BY PHAISARN CWATANAPHOL, P.E. 89252 ON 06/26/2003.

STATE OF TEXAS — JAIME AGUILAR — 87606 — REGISTERED PROFESSIONAL ENGINEER

STATE OF TEXAS — PHAISARN CWATANAPHOL — 89252 — REGISTERED PROFESSIONAL ENGINEER

Parsons Brinckerhoff Quade & Douglas Inc.

Texas Department of Transportation

© 2003 by TxDOT

US 281
PLAN & PROFILE
NB BUS. 281 CONNECTOR

STA. 10+00 "TUS281W" TO
STA. 21+31.38 "TUS281W"

PLAN 1"= 100' HORIZ
PROFILE 1"= 10' VERT

SHEET 1 OF 1			281SSP15.DGN					
DESIGNED: TT	FED. RD DIV. NO.	STATE	FEDERAL AID PROJECT No.				HIGHWAY No.	
CHECKED: DM	6	TEXAS					US 281	
DRAWN:	STATE DISTRICT	COUNTY	CONTROL No.	SECTION No.	JOB No.	SHEET No.		
CHECKED: DM	PHARR	HIDALGO	0255	08	091	435		

i:\22322a\cadd\sheets\roadway\side street\281ssp15.dgn

NAME
11:55:40 AM
06/26/2003

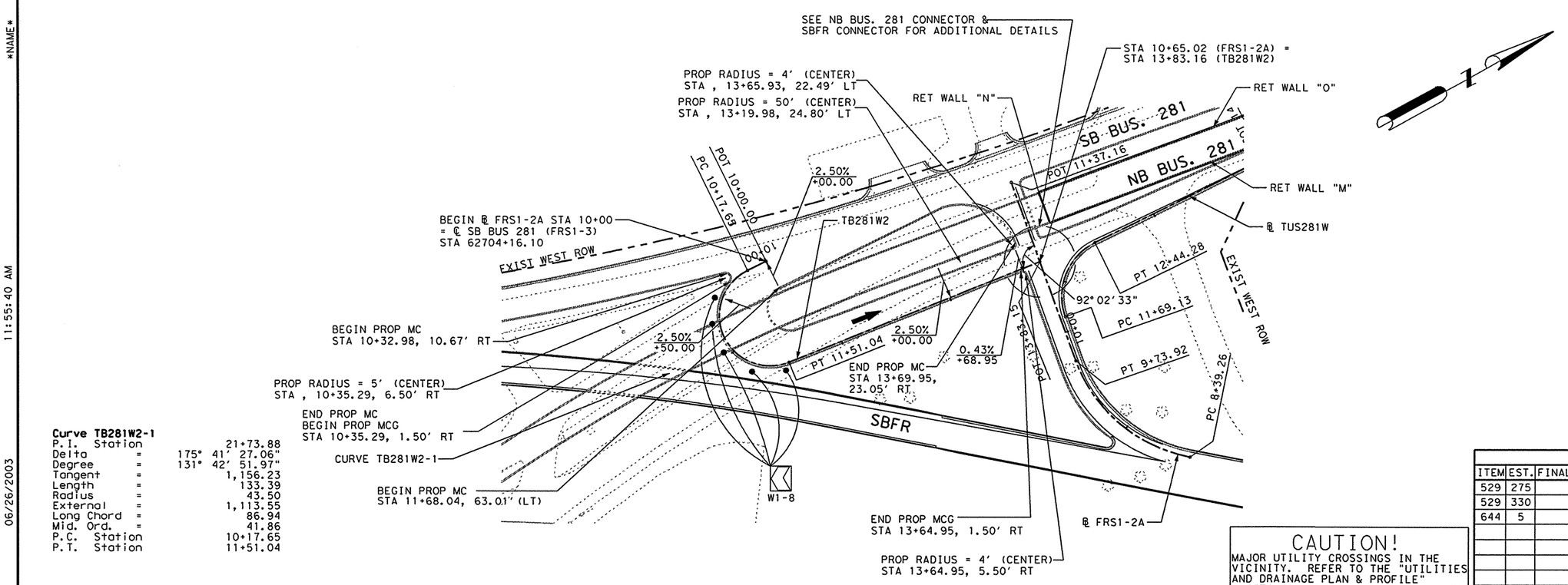

Curve TB281W2-1

P.I. Station	=	21+73.88
Delta	=	175° 41' 27.06"
Degree	=	131° 42' 51.97"
Tangent	=	1,156.23
Length	=	133.39
Radius	=	43.50
External	=	1,113.55
Long Chord	=	86.94
Mid. Ord.	=	41.86
P.C. Station	=	10+17.65
P.T. Station	=	11+51.04

LEGEND:

- MC - MOUNTABLE CONC CURB
- BC - BARRIER CONC CURB
- MCG - MOUNTABLE CONC CURB & GUTTER (TY-B UNLESS OTHERWISE NOTED)
- BCG - BARRIER CONC CURB & GUTTER
- RW - RETAINING WALL
- RR - RIP RAP
- SGT - SINGLE GUARD RAIL TERMINAL
- SSCB - SINGLE SLOPE CONC BARRIER
- SSTR - SINGLE SLOPE TRAFFIC RAILING
- SW - SIDEWALK
- WCR - WHEEL CHAIR RAMP
- VG - 4' VALLEY GUTTER
- MBGF - METAL BEAM GUARD FENCE
- TAS - TERMINAL ANCHOR SECTION
- ▨ - PROP DRIVEWAY
- ⁘ - PROP CONCRETE DRIVEWAY

⚠ B.M. & HORIZONTAL DATA
BM # US 281-16
ELEV = 103.82
STA = 706+19.13, 220.37' LT
3 1/4" TXDOT ALUMINUM DISK

SHEET TOTALS

ITEM	EST.	FINAL	UNIT	DESCRIPTION
529	275		LF	CONC CURB (TYB) (MOUNTABLE)
529	330		LF	CONC C & G (TY B) (MOUNTABLE)
644	5		EA	SM RD SGN ASSM TY 10BWG(1) SA(P)

CAUTION!
MAJOR UTILITY CROSSINGS IN THE VICINITY. REFER TO THE "UTILITIES AND DRAINAGE PLAN & PROFILE" SHEETS FOR ADDITIONAL INFORMATION.

EXIST AND PROP PGL

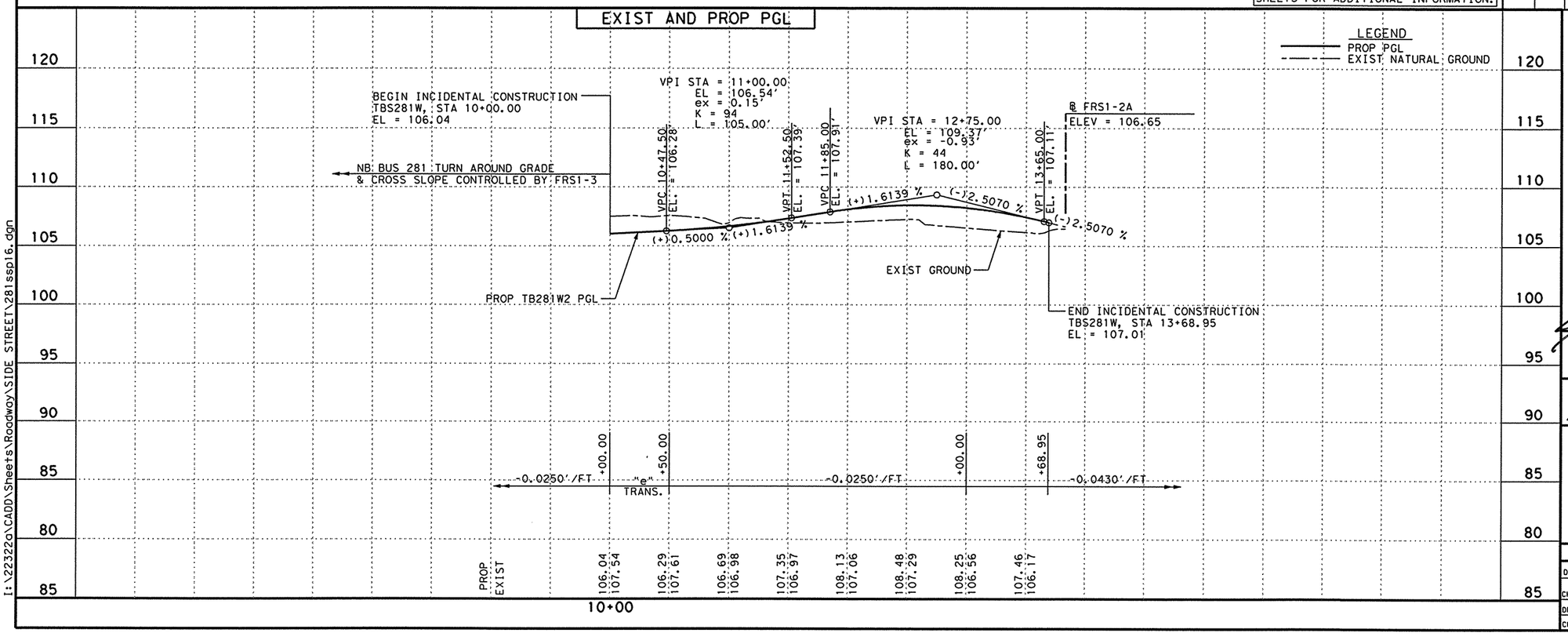

THE SEAL APPEARING ON THIS DOCUMENT WAS AUTHORIZED BY JAIME AGUILAR, P.E. 87606 ON 06/26/2003.

STATE OF TEXAS · JAIME AGUILAR · 87606 · REGISTERED PROFESSIONAL ENGINEER

THE SEAL APPEARING ON THIS DOCUMENT WAS AUTHORIZED BY PHAISARN CWATANAPHOL, P.E. 89252 ON 06/26/2003.

STATE OF TEXAS · PHAISARN CWATANAPHOL · 89252 · REGISTERED PROFESSIONAL ENGINEER

Parsons Brinckerhoff Quade & Douglas Inc.

Texas Department of Transportation

© 2003 by TxDOT

US 281
PLAN & PROFILE
NB BUS. 281 TURN AROUND
STA. 10+00 "TB281W2" TO
STA. 13+83.16 "TB281W2"

PLAN 1"= 100' HORIZ
PROFILE 1"= 10' VERT

SHEET 1 OF 1 — 281SSP16.DGN

DESIGNED: TT	FED. RD DIV. NO.	STATE	FEDERAL AID PROJECT No.	HIGHWAY No.
CHECKED: DM	6	TEXAS		US 281

DRAWN:	STATE DISTRICT	COUNTY	CONTROL No.	SECTION No.	JOB No.	SHEET No.
CHECKED: DM	PHARR	HIDALGO	0255	08	091	436

I:\22322a\CADD\Sheets\Roadway\SIDE STREET\281ssp16.dgn

NAME
11:13:55 AM
06/26/2003
I:\223220\CADD\Sheets\Roadway\SIDE STREET\281ssp13.dgn

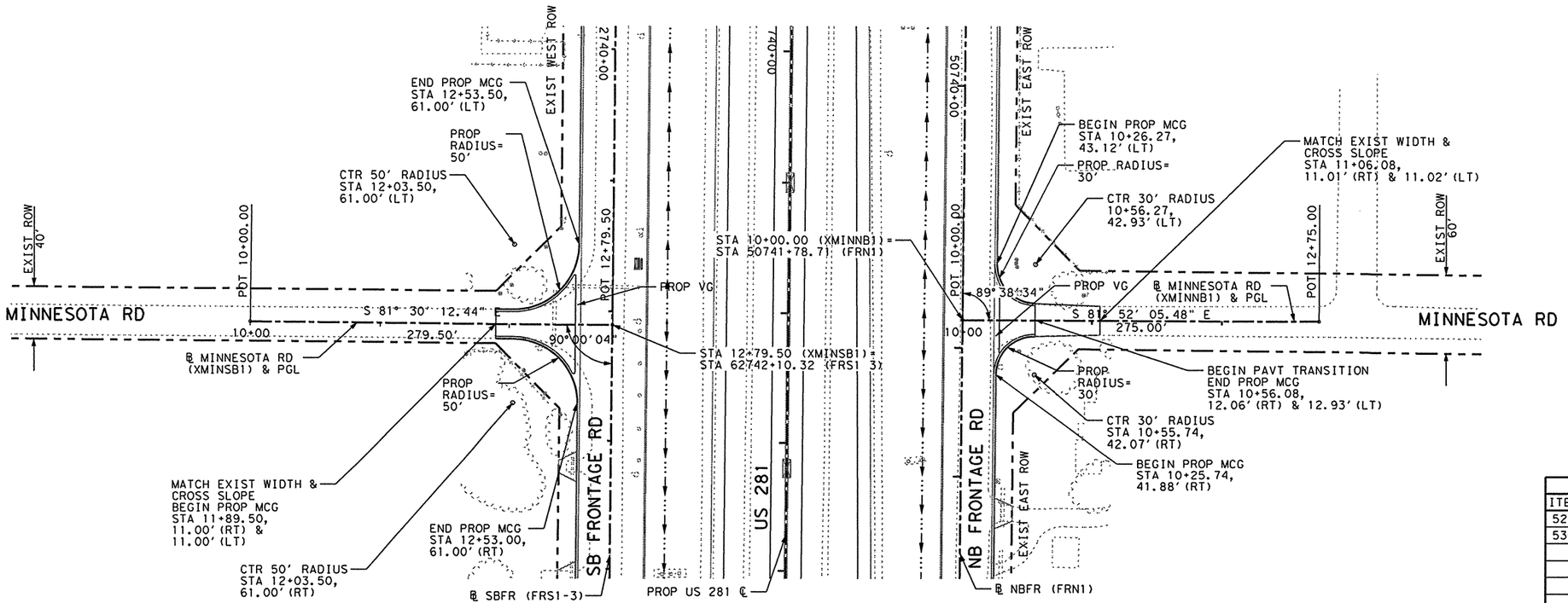

LEGEND:

- MC - MOUNTABLE CONC CURB
- BC - BARRIER CONC CURB
- MCG - MOUNTABLE CONC CURB & GUTTER
- BCG - BARRIER CONC CURB & GUTTER
- RW - RETAINING WALL
- RR - RIP RAP
- SGT - SINGLE GUARD RAIL TERMINAL
- SW - SIDEWALK
- WCR - WHEEL CHAIR RAMP
- VG - 4' VALLEY GUTTER
- MBGF - METAL BEAM GUARD FENCE
- PROP DRIVEWAY
- PROP CONC DRIVEWAY
- 1/6 - WHEELCHAIR RAMP(TY 1)
- 1/4 - WHEELCHAIR RAMP(TY 4)

△ B.M. & HORIZONTAL DATA
BM # US 281-13
ELEV = 104.89 ℄ US 281(BL1)
STA = 737+28.11, 172.67' LT
3 1/4" TXDOT ALUMINUM DISK

SHEET TOTALS

ITEM	EST.	FINAL	UNIT	DESCRIPTION
529	279		LF	CONC C & G (TY B) (MOUNTABLE)
530	448		SY	TURNOUTS (ASPH-CONC PAV) (TY PRB-1)

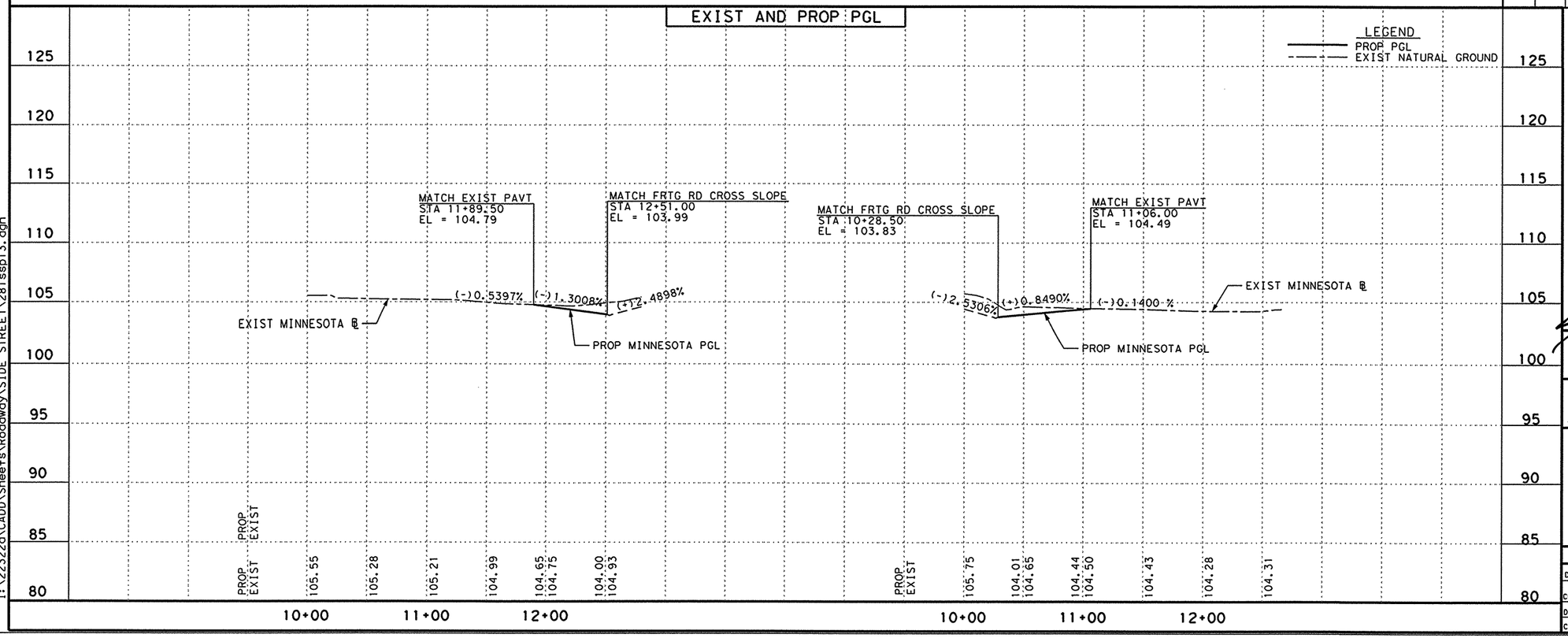

THE SEAL APPEARING ON THIS DOCUMENT WAS AUTHORIZED BY JAIME AGUILAR, P.E. 87606 ON 06/26/2003.

THE SEAL APPEARING ON THIS DOCUMENT WAS AUTHORIZED BY PHAISARN CWATANAPHOL, P.E. 89252 ON 06/26/2003.

STATE OF TEXAS — JAIME AGUILAR — 87606 — REGISTERED PROFESSIONAL ENGINEER

STATE OF TEXAS — PHAISARN CWATANAPHOL — 89252 — REGISTERED PROFESSIONAL ENGINEER

PB Parsons Brinckerhoff Quade & Douglas Inc.

Texas Department of Transportation

© 2003 by TxDOT

US 281
PLAN & PROFILE
MINNESOTA RD INTERSECTION

PLAN 1"= 100' HORIZ
PROFILE 1"= 10' VERT

SHEET 1 OF 1 — 281SSP13.DGN

DESIGNED: TT	FED. RD DIV. No.	STATE	FEDERAL AID PROJECT No.	HIGHWAY No.
CHECKED: DM	6	TEXAS		US 281

DRAWN:	STATE DISTRICT	COUNTY	CONTROL No.	SECTION No.	JOB No.	SHEET No.
CHECKED: DM	PHARR	HIDALGO	0255	08	091	437

DRIVEWAY NO.	STATION (NORTHBOUND FRONTAGE RD)	AVERAGE DRVWY LENGTH (FT)	EXIST. DRVWY WIDTH (FT)	PROP. WIDTH @ ROW LINE (FT)	PROP. WIDTH @ EDGE OF PVMT (FT)	ACP DRVWY AREA P-1 (SY)	ACP DRVWY AREA PB-1 (SY)	4" CONC DRVWYS (SY)	6" CONC DRVWYS (SY)	PROP RAD. (FT)	PROP 18" R.C. PIP CL III LT	ITEM 496 18" SET (TY II) (6:1) EA	ITEM 496 REMOVE OLD STR PIPE (18") (FT)	ITEM 496 REMOVE OLD STR PIPE (24") (FT)	ITEM 472 REMOVE & RELAY 18" PIPE LF	* REMOVE OLD STR SMALL EA	ITEM 104 REMOVE CONC DRVWY SY
1	50632+18	14.0	31.6	31.6	48.0				59.2	20.0			26.8				
2	50633+34	14.0	33.8	33.8	55.8				67.9	20.0,30.0			52.5			2	137.8
3	50635+18	13.9	20.2	20.2	24.0		34.1										
4	50639+97	13.9	14.3	14.3	24.0		29.6						24.0				
5	50695+74	13.3	13.6	13.6	24.0	27.9							29.5			2	
6	50697+02	10.7	17.0	17.0	24.0	24.4							29.5			2	
7	50698+29	12.8	36.5	36.5	36.5	51.9							53.9			2	
8	50700+30	13.5	36.9	36.9	36.9	55.3							58.8			2	
9	50702+65	13.5	26.5	26.5	36.5		39.8						54.8				
10	50703+43	13.5	13.3	13.3	24.0		28.0						35.4				
11	50708+27	13.2	11.9	11.9	24.0	26.2							41.0				
12	50710+77	33.5	32.0	32.0	32.0	118.0				14.0							
13	50719+47	138.0	37.2	37.4	37.4		570.1										
14	50720+40	125.5	27.8	27.8	27.8		387.4										
15	50723+40	67.9	36.0	36.0	36.0	271.4											
16	50724+40	52.6	30.0	30.0	70.0				174.2	20.0							
17	50728+25	17.6	30.0	30.0	60.0				61.4	15.0							
18	50733+06	13.8	51.1	51.1	51.1				75.6	14.0			61.0			2	151.2
19	50735+90	13.5	40.0	40.0	40.0	60.0							64.7			2	
20	50734+40	14.0	30.0	30.0	54.0				52.9								
21	50738+51	13.5	20.3	20.3	33.0				37.1	14.0			45.1			2	90.4
22	50743.29	13.5	12.0	12.0	24.0		27.0						31.4				
23	50744+42	13.5	13.0	13.0	24.0		27.7						25.9				
24	50746+28	13.5	24.0	24.0	24.0		36.0						40.4				
25	50746+96	13.5	13.0	13.0	24.0	27.7							32.8				
26	50748+90	13.5	24.0	24.0	24.0	36.0							37.4				
27	50749+78	13.5	33.0	33.0	33.0	48.0											
28	50752+08	12.2	21.8	21.8	24.0		29.1										
29	50818+62	11.6	45.6	45.6	55.6				68.3	10.0							
30	50819+93	9.2	36.4	36.4	41.4				39.2	10.0,5.0							
31	50824+20	12.5	27.3	27.3	36.8				41.6	10.0							60.2
32	50844+45	14.0	16.4	16.4	24.0				30.4								
33	50845+66	13.2	36.2	36.2	52.5				62.3	15.0,13.0							
34	50848+80	13.2	44.1	44.1	54.5				68.1	10.0							
35	50849+77	14.0	35.9	35.9	45.4				59.8	10.0							58.2
36	50850+30	14.1	20.1	20.1	20.1				31.5								
37	50850+79	14.0	22.2	22.2	31.7				39.2	10.0							
	(SOUTHBOUND FRONTAGE RD)																
38	61615+45	20.0	16.0	16.0	24.0		49.2										
39	61672+50	13.5	24.0	24.0	24.0	36.0											
40	62697+84	13.9	28.8	32.5	74.4		59.9										
41	62700+85	13.4	28.5	25.1	30.4		41.3										
42	62699+36	11.5	19.8	22.4	51.0		46.9										
43	62698+48	11.5	17.6	18.4	47.0		41.8										
44	62696+53	10.1		98.9	110.9		122.0										
45	62695+76	10.8		28.8	20.5		29.4										
46	62695+14	10.2		20.5	35.1		38.4										
47	62702+00	13.7	27.0	27.0	27.0		41.1										
48	62702+89	13.7	56.3	56.3	56.3	86.1											
49	62730+53	13.5	44.0	44.0	44.0	66.2							63.6			2	
50	62732+33	13.5	20.0	20.0	24.0		33.0						32.5				
51	62738+09	13.5	35.7	35.7	56.8	60.4				14.0			95.8				
52	62739+30	13.5	73.9	73.9	73.9		110.9						95.8				
53	62743+20	13.5	8.6	10.0	24.0		25.5						25.0				
54	62744+06	13.5	9.3	10.0	24.0		25.5						23.9				
55	62744+99	13.5	9.0	10.0	24.0		25.5						24.6				
56	62747+05	13.5	11.4	11.4	24.0		26.6						25.2				
57	62748+79	13.5	9.7	10.0	24.0		25.3						37.7				
58	62750+96	13.5	123.0	123.0	123.0	175.3											
59	62765+38	14.5	21.0	21.0	31.8				41.6	10.0,7.5							55.7
60	62765+78	14.3	23.7	23.7	31.4				40.3	7.5,10.0							49.0
61	62766+33	13.9	44.7	44.7	54.1				72.6	10.0							94.4
62	62766+97	13.0	45.5	45.5	55.5				69.0	10.0							96.2
63	62770+02	11.6	25.9	25.9	39.0				41.2	10.0							
64	62823+86	15.8	74.0	80.0	100.0				123.4	10.0							
65	62844+69	15.0	23.4	23.4	43.5				42.7	10.0							
66	62849+66	13.4	20.5	20.5	20.5				30.6								
	US 281 TOTAL:					1170.8	1951.1	0.0	1370.8	191	0	0	1142.2	0	0	18	793.1

*SUBSIDIARY TO ITEM 496 "REMOVE OLD STRUCTURE PIPE".

NOTES:
LOCATIONS LISTED ON THE TABLE ARE APPROXIMATE.
EXACT LOCATIONS, DIMENSIONS AND TYPE TO BE ESTABLISHED DURING CONSTRUCTION BY THE ENGINEER AS REQUIRED.
ALL STATIONING BASED ON PROPOSED ALIGNMENT.

THE PROPOSED FLOW LINE FOR ALL DRIVEWAY SIDEDRAINS SHALL BE 6" BELOW PROPOSED DITCH GRADELINE.

Parsons Brinckerhoff Quade & Douglas Inc.

Texas Department of Transportation

© 2003 by TxDOT

US 281 DRIVEWAY SUMMARY (FRONTAGE RDS)

SHEET 1 OF 1				281DRVWYS01.DGN	
DESIGNED: JA	FED. RD DIV. No.	STATE	FEDERAL AID PROJECT No.		HIGHWAY No.
CHECKED: JP	6	TEXAS			US 281
DRAWN:	STATE DISTRICT	COUNTY	CONTROL No.	SECTION No.	JOB No.	SHEET No.
CHECKED: JDH	PHARR	HIDALGO	0255	08	091	438

NAME
04:12:56 PM
06/24/2003
i:\22322a\cadd\sheets\summary\281drvwys01.dgn

DRIVEWAY NO.	STATION	AVERAGE DRVWY LENGTH	EXIST. DRVWY WIDTH	PROP. WIDTH @ ROW LINE	PROP. WIDTH @ EDGE OF PVMT	ACP DRVWY AREA P-1	ACP DRVWY AREA PB-1	4" CONC DRVWYS	6" CONC DRVWYS	PROP RAD.	PROP 18" R.C. PIP CL III	ITEM 496 18" SET (TY II) (6:1)	ITEM 496 REMOVE OLD STR PIPE (18")	ITEM 496 REMOVE OLD STR PIPE (24")	ITEM 472 REMOVE & RELAY 18" PIPE	REMOVE OLD STR SMALL	ITEM 104 REMOVE CONC DRVWY
	TRENTON RD	(FT)	(FT)	(FT)	(FT)	(SY)	(SY)	(SY)	(SY)	(FT)	LT	EA	(FT)	(FT)	LF	EA	SY
67	10+36 (RT)	195.5	28.0	28.0	76.3		638.9			25.0							
	TRENTON RD TOTAL:					0.0	638.9	0.0	0.0	25.0	0.0	0.0	0.0	0.0	0.0	0.0	0.0
	OWASSA RD																
68	20+76 (RT)	92.7	10.0	10.0	25.3		263.9										
69	21+90 (RT)	16.9	10.2	8.7	39.8				19.2								
70	22+30 (LT)	9.7	17.8	49.6	90.0				19.2								
71	22+41 (RT)	16.9	10.4	34.3	64.1				19.5								
72	22+91 (RT)	16.5	17.0	50.4	93.1				31.0								
	OWASSA TOTAL:					0.0	263.9	0.0	88.9	0.0	0.0	0.0	0.0	0.0	0.0	0.0	0.0
	NOLANA																
73	12+85 (LT)	27.8	21.5	21.5	29.0				79.4	10.0							95.3
74	13+26 (RT)	9.1	27.1	27.1	33.8				33.5	10.0							
75	13+44 (LT)	22.5	36.7	36.7	44.3				55.8	10.0							75.1
76	13+94 (LT)	22.5	36.7	36.7	44.3				100.8	10.0							148.4
77	14+51 (RT)	9.0	24.0	24.0	32.0				31.3	10.0							
78	14+53 (LT)	20.2	37.0	37.0	45.0				94.1	10.0							142.4
79	20+75 (LT)	21.2	26.7	26.7	34.9				73.6	10.0							109.4
80	21+75 (LT)	25.4	27.6	27.6	37.4				91.4	12.0							
	NOLANA TOTAL:					0.0	0.0	0.0	559.9	82.0	0.0	0.0	0.0	0.0	0.0	0.0	570.6
	SIOUX ROAD																
81	12+13 (RT)	8.4	54.5	55.8	64.0				50.4	10.0							52.8
82	15+03 (RT)	9.3	36.0	36.0	45.5				38.4	10.0							34.4
83	21+02 (LT)	8.2	38.9	48.1	50.0				46.6	5.0 /10.0							57.7
84	22+33 (LT)	8.0	45.0	45.0	49.4				44.5	10.0							70.6
85	23+13 (LT)	8.4	27.3	29.0	35.0				31.5								
86	24+34 (RT)	23.3	25.9	27.5	62.9				97.6	25.0							95.9
	SIOUX RD TOTAL:					0.0	0.0	0.0	309.0	55.0	0.0	0.0	0.0	0.0	0.0	0.0	311.4
	TEXAS 495																
87	19+35 (RT)	10.3	15.0	15.0	24.0				22.3								
88	19+65 (RT)	8.0	12.7	12.7	24.0				16.1								
89	20+09 (LT)	7.5	44.8	44.8	53.6				40.6	10.0							
90	20+35 (RT)	8.3	26.7	26.7	26.7				24.7								37
	TEXAS 495 TOTAL:					0.0	0.0	0.0	103.7	10.0	0.0	0.0	0.0	0.0	0.0	0.0	37.0
	PROJECT GRAND TOTAL:					0.0	2273.6	191.0	1061.5	172.0	1142.2	0.0	0.0	18.0	793.1	0.0	919.0

*SUBSIDIARY TO ITEM 496 "REMOVE OLD STRUCTURE PIPE".

NOTES:
LOCATIONS LISTED ON THE TABLE ARE APPROXIMATE.
EXACT LOCATIONS, DIMENSIONS AND TYPE TO BE ESTABLISHED DURING CONSTRUCTION BY THE ENGINEER AS REQUIRED.
ALL STATIONING BASED ON PROPOSED ALIGNMENT.

THE PROPOSED FLOW LINE FOR ALL DRIVEWAY SIDEDRAINS SHALL BE 6" BELOW PROPOSED DITCH GRADELINE.

Parsons Brinckerhoff Quade & Douglas Inc.

Texas Department of Transportation

© 2003 by TxDOT

US 281
DRIVEWAY SUMMARY (INTERSECTING STREETS)

SHEET 1 OF 1				281DRVWYS02.DGN	
DESIGNED: JA	FED. RD DIV. No.	STATE	FEDERAL AID PROJECT No.		HIGHWAY No.
CHECKED: JP	6	TEXAS			US 281
DRAWN:	STATE DISTRICT	COUNTY	CONTROL No.	SECTION No.	JOB No.	SHEET No.
CHECKED: JDH	PHARR	HIDALGO	0255	08	091	439

NAME
04:12:59 PM
06/24/2003
i:\22322a\cadd\sheets\summary\281drvwys02.dgn

STATION	DESCRIPTION	EXIST. WIDTH	PROP WIDTH	PROP RAD.	6" CONC	TY PRB-1	ITEM 496 REMOVE OLD STR PIPE (18")	ITEM 496 REMOVE OLD STR PIPE (24")	* REMOVE OLD STR SMALL	PROP RCP (18")	PROP RCP (24")
US 281		(FT)	(FT)	(FT)	(SY)	(SY)	(FT)	(FT)	EA	(FT)	(FT)
(NORTHBOUND FRONTAGE ROAD)											
50625+00.21 (LT)	WISCONSIN RD	16.8	28.0	50'/100'		694.3					
50686+23.78 (LT)	ALBERTA RD.	21.8	21.8	50'/100'		403.1					
50741+78.71 (LT)	MINNESOTA RD	22.0	25.0	30'/30'		226.3					
(SOUTHBOUND FRONTAGE ROAD)											
61625+75.43 (RT)	WISCONSIN RD	19.8	28.0	100'/50'		690.4					
61676+50.00 (RT)	CONQUEST BLVD.	28.0	28.0	50'/50'		224.0					
61686+98.81 (RT)	ALBERTA RD.	22.0	22.0	100'/40'		314.2					
62742+10.32 (RT)	MINNESOTA RD	22.0	22.0	50'/50'		221.9		47.5			
PROJECT GRAND TOTAL:						2774.2	0.0	47.5	0.0	0.0	0.0

*SUBSIDIARY TO ITEM 496 "REMOVE OLD STRUCTURE PIPE".

NOTES:
AVERAGE DIMENSIONS SHOWN ON TURNOUTS ARE FOR ESTIMATING PURPOSES ONLY.

LOCATIONS LISTED ON THE TABLE ARE APPROXIMATE.
EXACT LOCATIONS, DIMENSIONS AND TYPE TO BE ESTABLISHED DURING CONSTRUCTION BY THE ENGINEER AS REQUIRED.
ALL STATIONING BASED ON PROPOSED ALIGNMENT.

THE PROPOSED FLOW LINE FOR ALL DRIVEWAY SIDEDRAINS SHALL BE 6" BELOW PROPOSED DITCH GRADELINE.

Parsons Brinckerhoff Quade & Douglas Inc.

Texas Department of Transportation

© 2003 by TxDOT

US 281

TURNOUT SUMMARY

SHEET 1 OF 1				281TURNOUTSS01.DGN			
DESIGNED: JA	FED. RD DIV. NO.	STATE	FEDERAL AID PROJECT No.			HIGHWAY No.	
CHECKED: JP	6	TEXAS				US 281	
DRAWN:	STATE DISTRICT	COUNTY	CONTROL No.	SECTION No.	JOB No.	SHEET No.	
CHECKED: JDH	PHARR	HIDALGO	0255	08	091	440	

NAME
04:13:01 PM
06/24/2003
i:\22322a\cadd\sheets\summary\281turnoutss01.dgn

NAME
04:17:48 PM
06/24/2003
I:\22322a\CADD\Sheets\Roadway\Details\281PVDT1.DGN

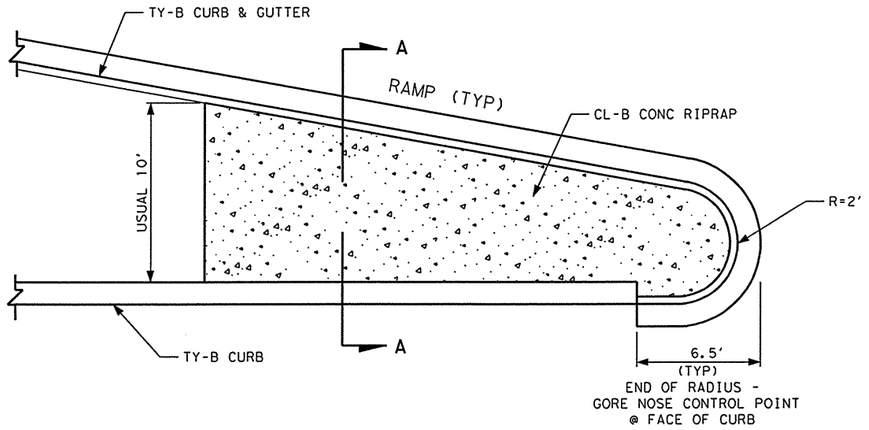

FRONTAGE ROAD
GORE NOSE DETAIL-ALL RAMPS
NTS

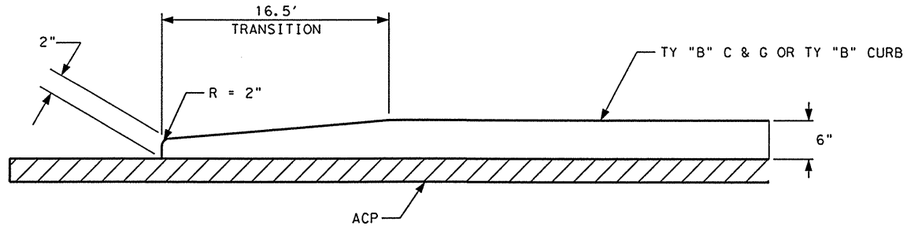

CURB TRANSITION OR
CURB & GUTTER TRANSITION DETAIL
NTS

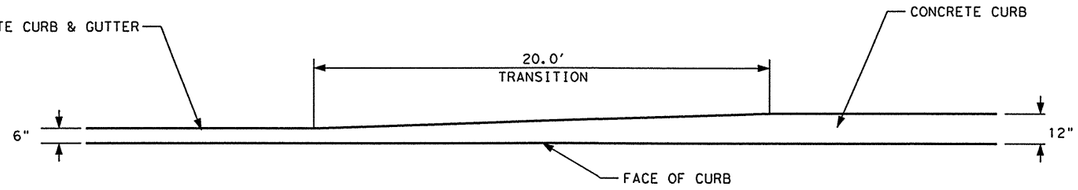

CURB TO CURB TRANSITION DETAIL
PAYMENT FOR CURB TO CURB TRANSITIONS SHALL BE CONSIDERED SUBSIDIARY TO CURB AND CURB AND GUTTER PAY ITEMS.

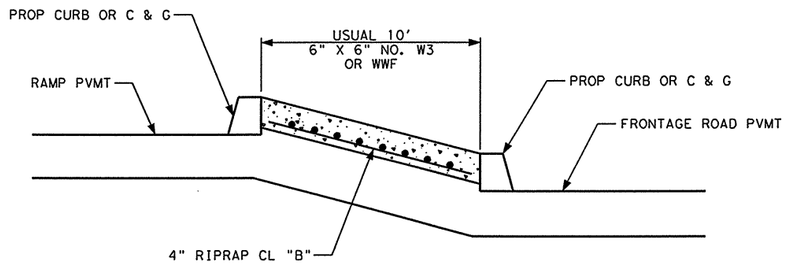

SECTION A-A
NTS

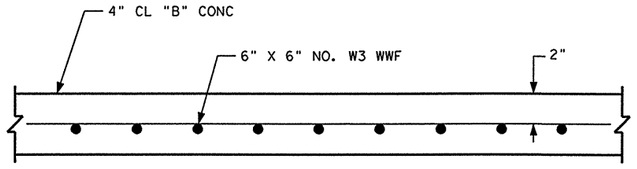

RIPRAP DETAIL
NTS

'THE SEAL APPEARING ON THIS DOCUMENT WAS AUTHORIZED BY JAIME AGUILAR, P.E. 87606 ON 06/24/2003.

THE SEAL APPEARING ON THIS DOCUMENT WAS AUTHORIZED BY PHAISARN CWATANAPHOL, P.E. 89252 ON 06/24/2003.

STATE OF TEXAS
JAIME AGUILAR
87606
REGISTERED
PROFESSIONAL ENGINEER

STATE OF TEXAS
PHAISARN CWATANAPHOL
89252
REGISTERED
PROFESSIONAL ENGINEER

Parsons Brinckerhoff
Quade & Douglas Inc.

Texas Department of Transportation

© 2003 by TxDOT

US 281
GORE NOSE & MISC DETAILS

SCALE: NTS

SHEET 1 OF 1					281PVDT1.DGN			
DESIGNED: TT	FED. RD DIV. NO.	STATE	FEDERAL AID PROJECT No.				HIGHWAY No.	
CHECKED: DM	6	TEXAS					US 281	
DRAWN: RLJ	STATE DISTRICT	COUNTY	CONTROL No.	SECTION No.	JOB No.	SHEET No.		
CHECKED: DM	PHARR	HIDALGO	0255	08	091	441		

NAME
04:42:28 PM
06/24/2003
I:\22322a\CADD\Sheets\Roadway\Details\Miscdet02a.dgn

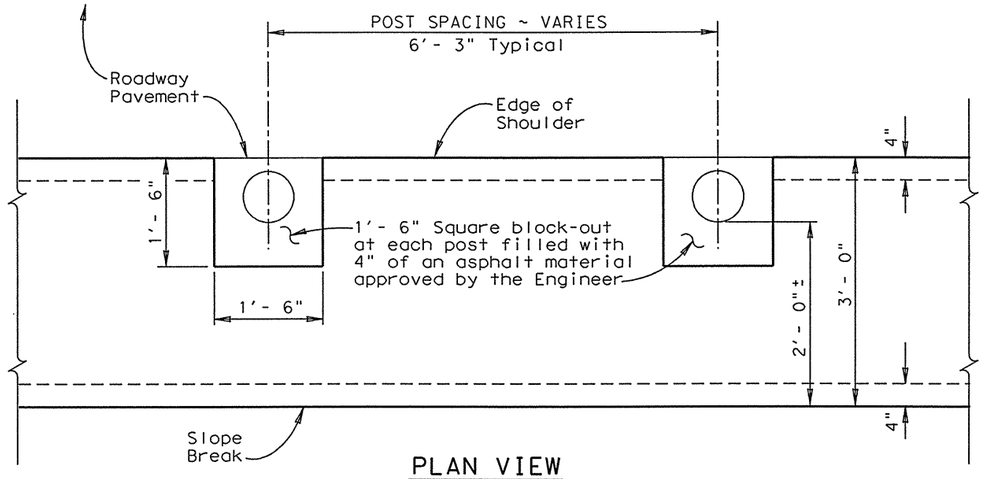

PLAN VIEW

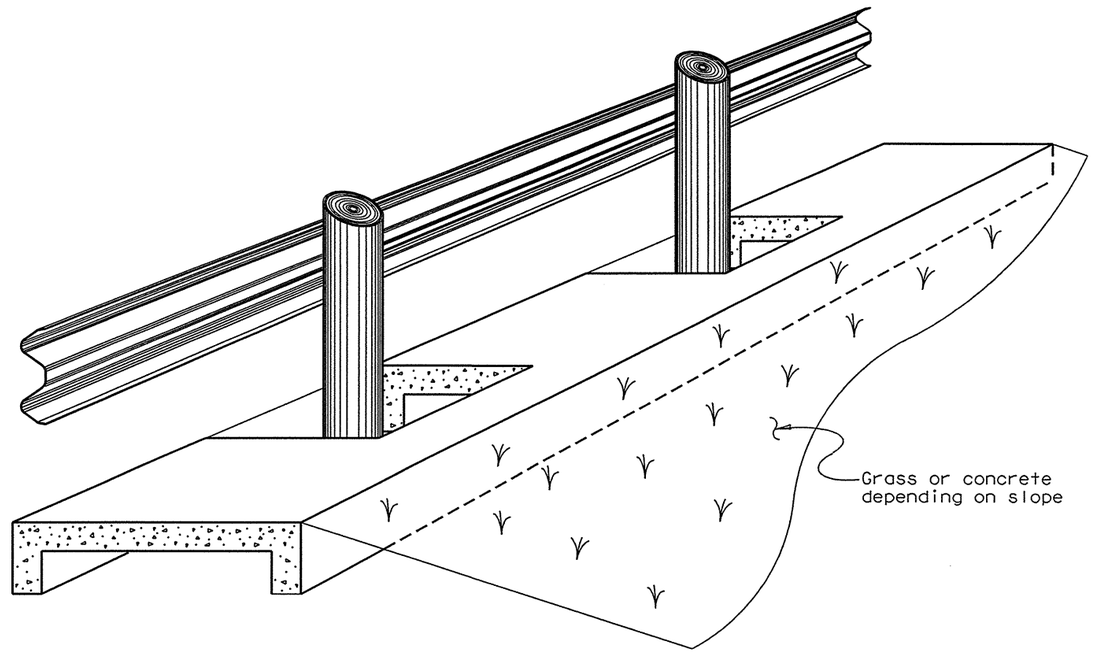

3D CUT SECTION

Concrete apron estimated at 0.05 CY per LF.

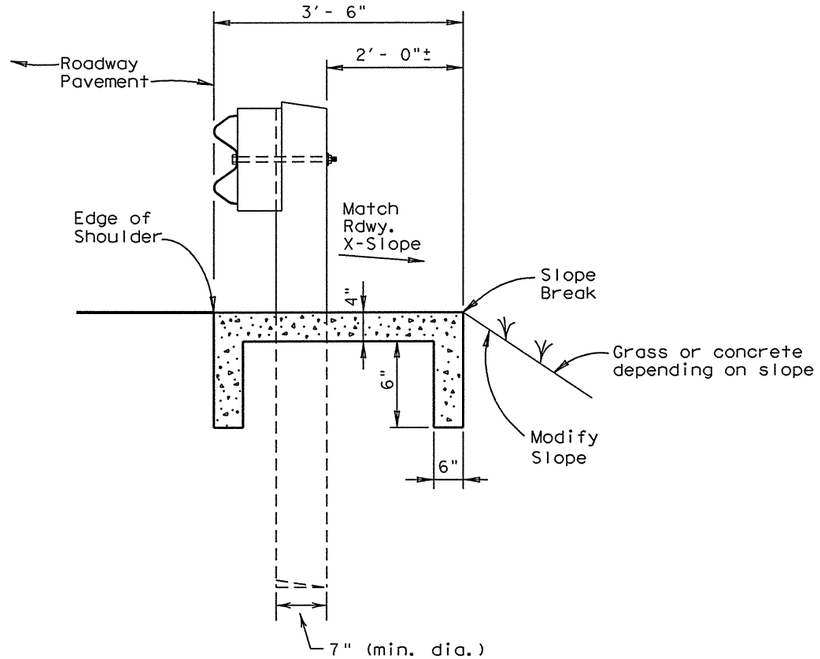

SECTION SHOWING CONCRETE APRON
WOOD POST (MBGF)

NOTES:

1. FOR MBGF THAT IS NOT NEXT TO THE ROADWAY PAVEMENT PLACE THE 3'- 0" WIDE CONCRETE APRON WITH THE POSTS CENTERED BETWEEN THE TOE FOOTINGS.
2. AT THE END OF MBGF RUNS, WHERE RAIL FLARES AWAY FROM ROADWAY EDGE AT A 25:1 TAPER, WIDEN THE 3'- 0" CONCRETE APRON TO MAINTAIN 2'- 0" +/- OF CONCRETE BEHIND THE POSTS.

THE SEAL APPEARING ON THIS DOCUMENT WAS AUTHORIZED BY JAIME AGUILAR, P.E. 87606 ON 06/24/2003.

STATE OF TEXAS
JAIME AGUILAR
87606
REGISTERED PROFESSIONAL ENGINEER

THE SEAL APPEARING ON THIS DOCUMENT WAS AUTHORIZED BY PHAISARN CWATANAPHOL, P.E. 89252 ON 06/24/2003.

STATE OF TEXAS
PHAISARN CWATANAPHOL
89252
REGISTERED PROFESSIONAL ENGINEER

Parsons Brinckerhoff Quade & Douglas Inc.

Texas Department of Transportation

© 2003 by TxDOT

US 281
MISCELLANEOUS ROADWAY DETAILS

NOT TO SCALE

SHEET 1 OF 1 | MISCDET02a.DGN

DESIGNED: TT	FED. RD DIV. No.	STATE	FEDERAL AID PROJECT No.			HIGHWAY No.
CHECKED: DM	6	TEXAS				US 281
DRAWN:	STATE DISTRICT	COUNTY	CONTROL No.	SECTION No.	JOB No.	SHEET No.
CHECKED: DM	PHARR	HIDALGO	0255	08	091	442

NAME
04:20:04 PM
06/24/2003
I:\22322a\CADD\Sheets\Roadway\Details\BUS281GOREDT.dgn

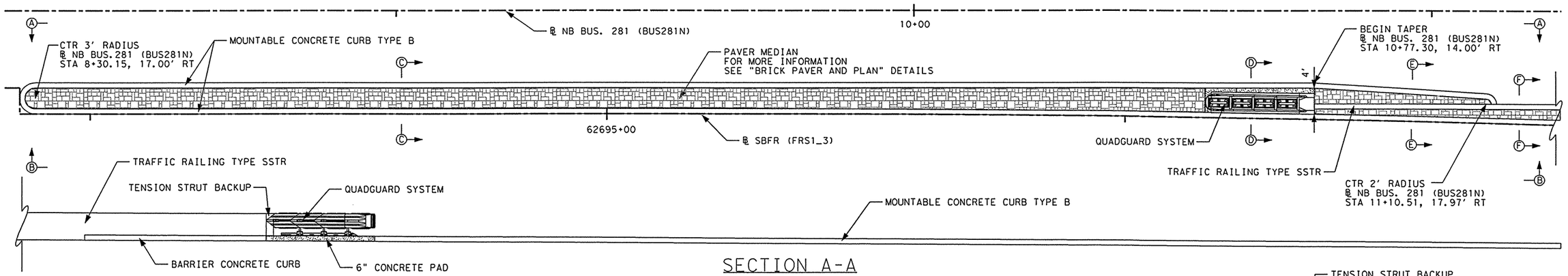

SECTION A-A

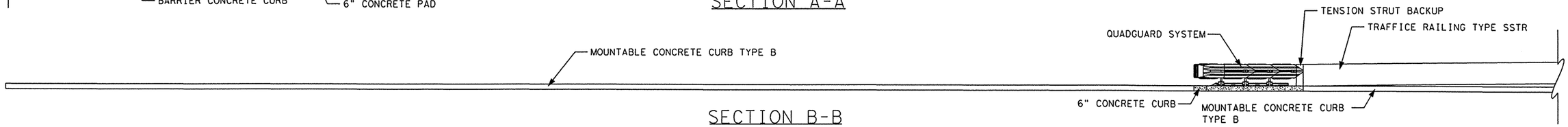

SECTION B-B

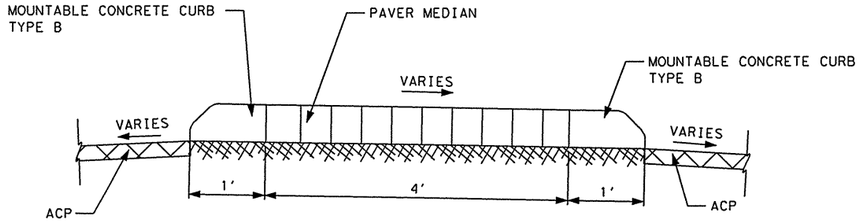

SECTION C-C

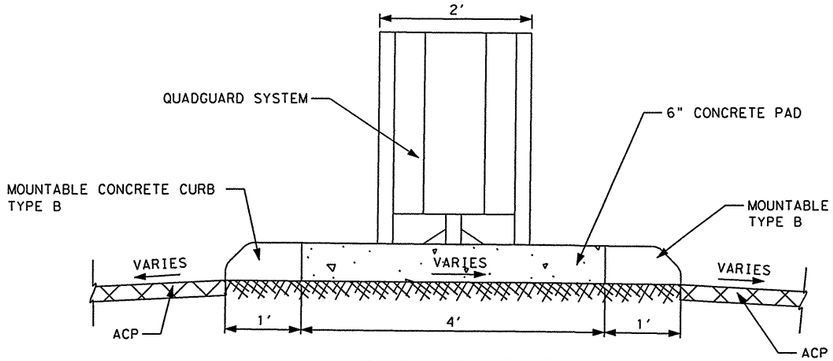

SECTION D-D

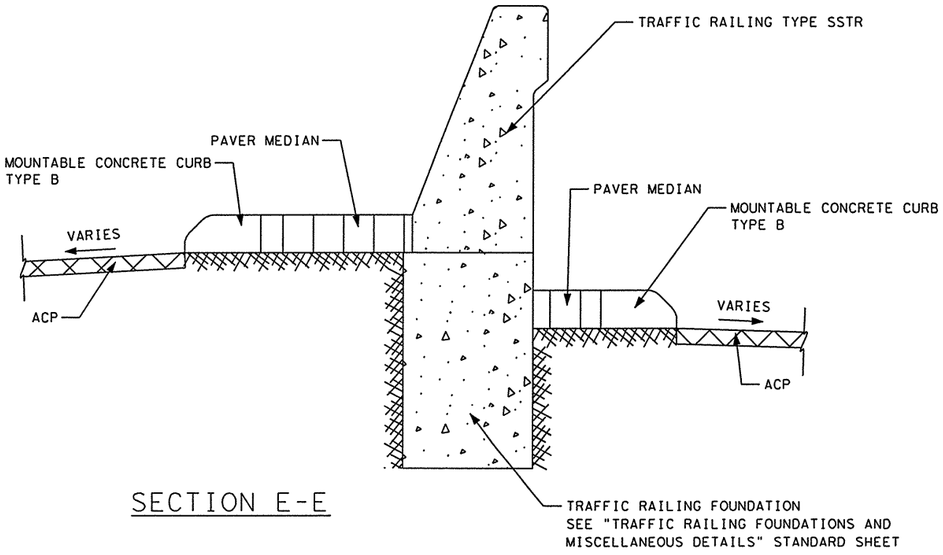

SECTION E-E

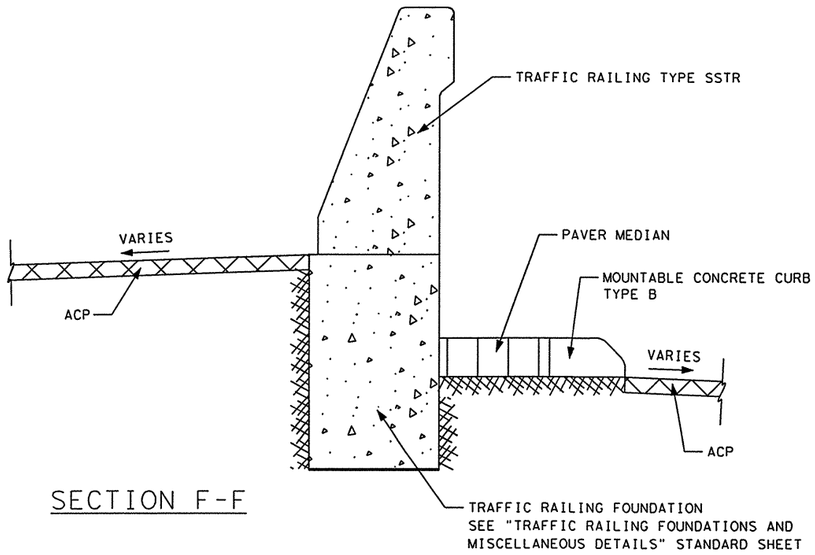

SECTION F-F

THE SEAL APPEARING ON THIS DOCUMENT WAS AUTHORIZED BY JAIME AGUILAR, P.E. 87606 ON 06/24/2003.

THE SEAL APPEARING ON THIS DOCUMENT WAS AUTHORIZED BY PHAISARN CWATANAPHOL, P.E. 89252 ON 06/24/2003.

STATE OF TEXAS
JAIME AGUILAR
87606
REGISTERED
PROFESSIONAL ENGINEER

STATE OF TEXAS
PHAISARN CWATANAPHOL
89252
REGISTERED
PROFESSIONAL ENGINEER

Parsons Brinckerhoff Quade & Douglas Inc.

Texas Department of Transportation

© 2003 by TxDOT

BUSINESS 281 GORE DETAIL

SCALE: NTS

SHEET 1 OF 2						BUS281GOREDT.DGN	
DESIGNED:	FED. RD DIV. No.	STATE	FEDERAL AID PROJECT No.			HIGHWAY No.	
CHECKED:	6	TEXAS				US 281	
DRAWN:	STATE DISTRICT	COUNTY	CONTROL No.	SECTION No.	JOB No.	SHEET No.	
CHECKED:	PHARR	HIDALGO	0255	08	091	443	

NAME
04:24:51 PM
06/24/2003
I:\22322a\CADD\Sheets\Roadway\Details\BUS281GOREDT2.dgn

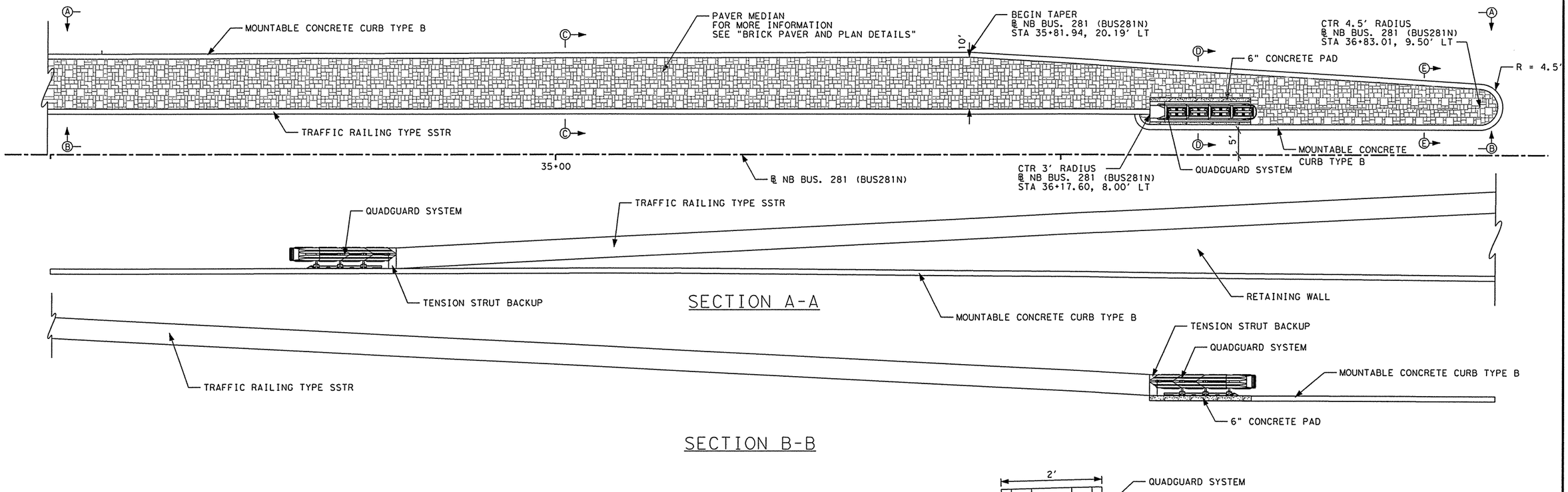

SECTION A-A

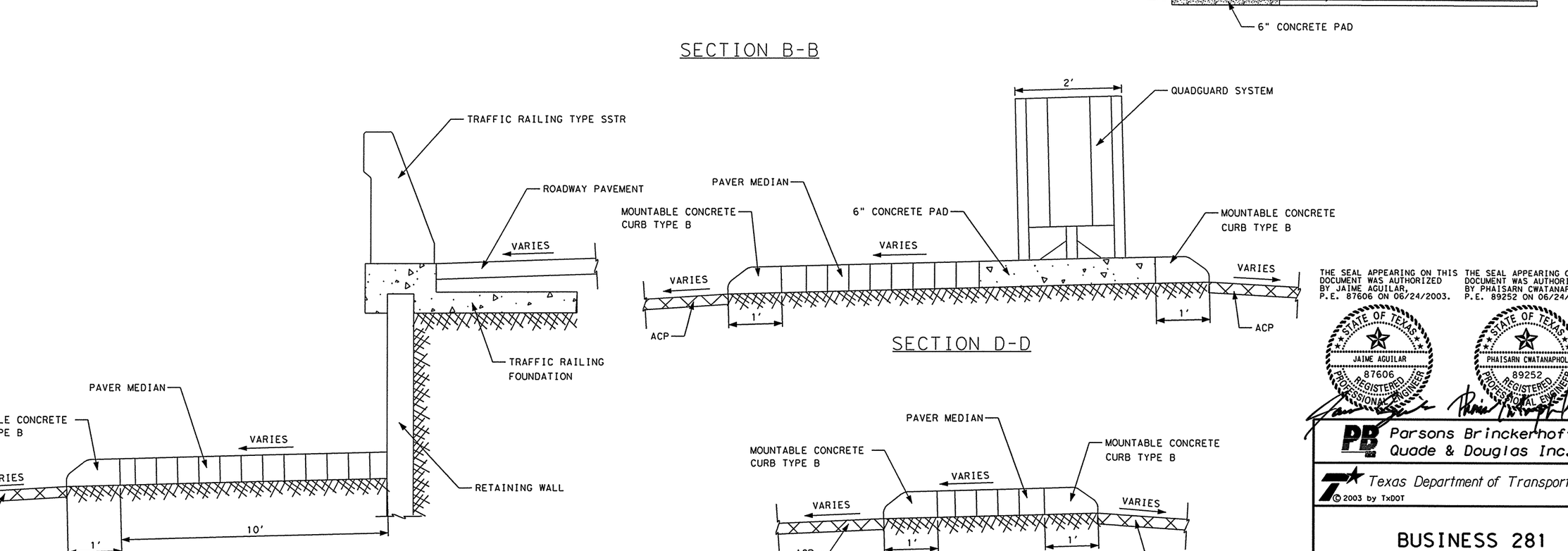

SECTION B-B

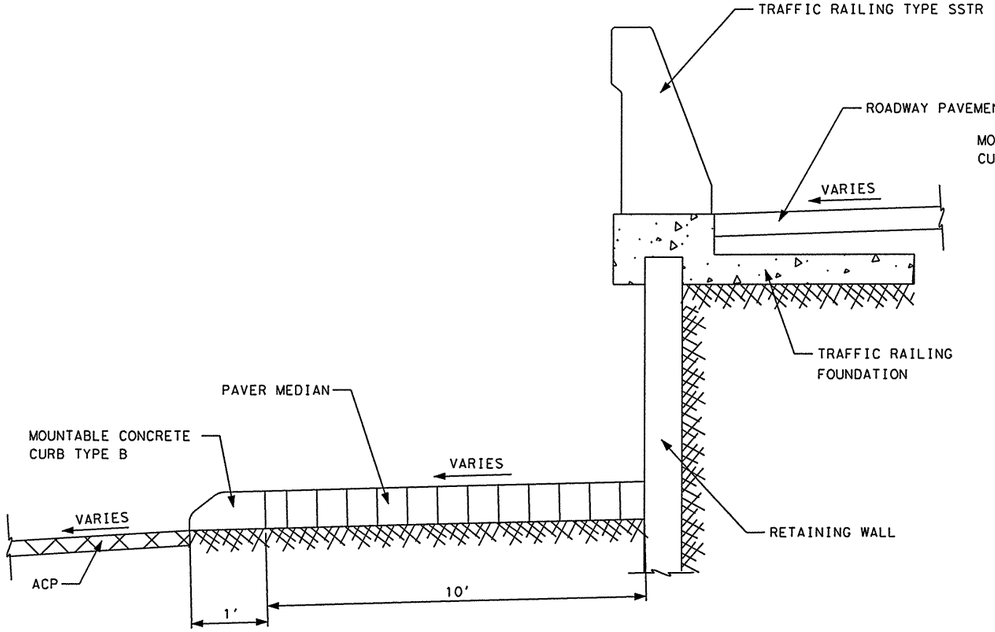

SECTION C-C

SECTION D-D

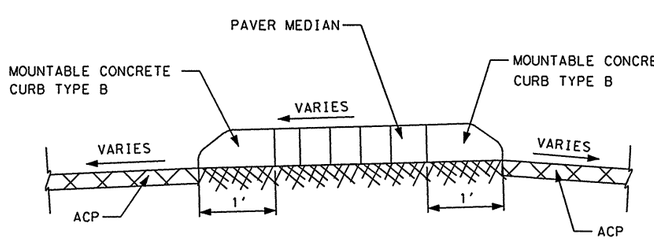

SECTION E-E

THE SEAL APPEARING ON THIS DOCUMENT WAS AUTHORIZED BY JAIME AGUILAR, P.E. 87606 ON 06/24/2003.

THE SEAL APPEARING ON THIS DOCUMENT WAS AUTHORIZED BY PHAISARN CHATANAPHOL, P.E. 89252 ON 06/24/2003.

STATE OF TEXAS
JAIME AGUILAR
87606
REGISTERED
PROFESSIONAL ENGINEER

STATE OF TEXAS
PHAISARN CHATANAPHOL
89252
REGISTERED
PROFESSIONAL ENGINEER

Parsons Brinckerhoff Quade & Douglas Inc.

Texas Department of Transportation

© 2003 by TxDOT

BUSINESS 281 GORE DETAIL

SCALE: NTS

SHEET 2 OF 2				BUS281GOREDT2.DGN			
DESIGNED:	FED. RD DIV. No.	STATE	FEDERAL AID PROJECT No.			HIGHWAY No.	
CHECKED:	6	TEXAS				US 281	
DRAWN:	STATE DISTRICT	COUNTY	CONTROL No.	SECTION No.	JOB No.	SHEET No.	
CHECKED:	PHARR	HIDALGO	0255	08	091	444	

$NAME$
04:35:40 PM
09/29/2003
i:\Projects\22322a\CADD\Sheets\Drainage\gutterdetail.dgn

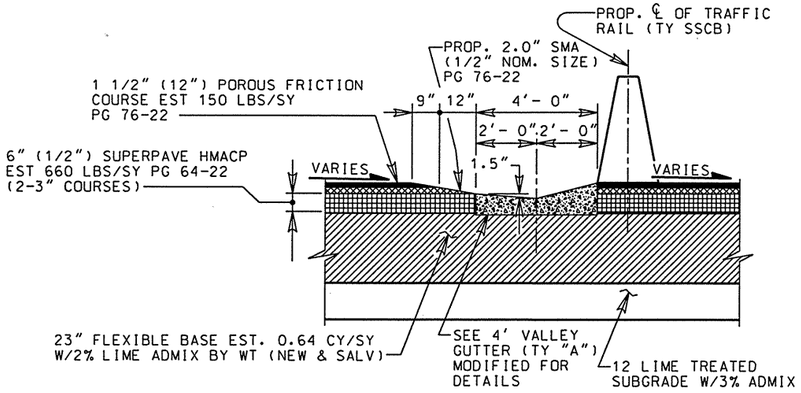

VALLEY GUTTER DETAIL AT MEDIAN

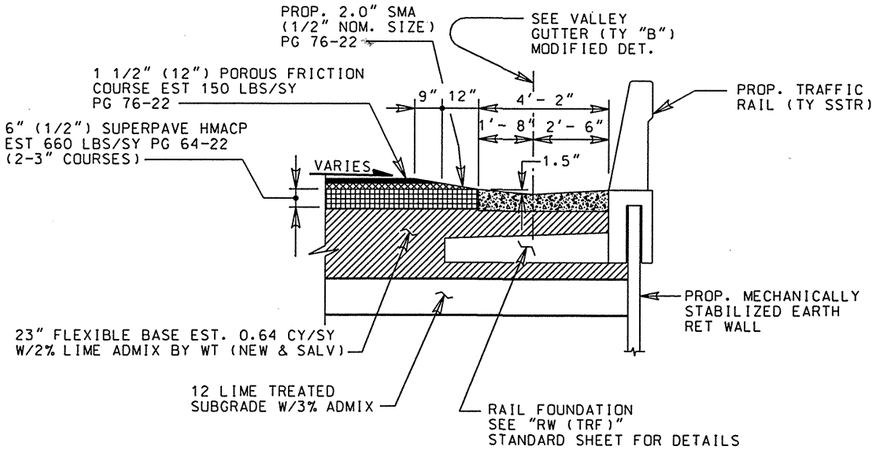

VALLEY GUTTER DETAIL AT RETAINING WALL

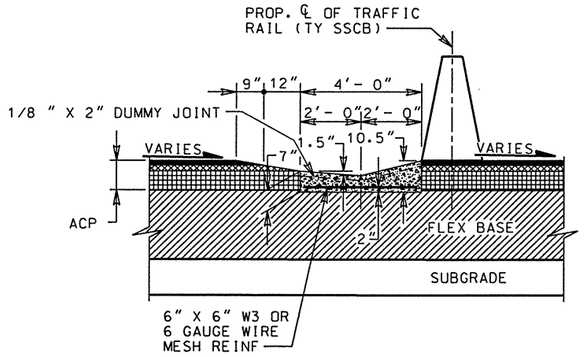

4' CONC. VALLEY GUTTER (TY"A") (MOD.)

(TO BE USED WHERE REQUIRED TO CARRY DRAINAGE WATER ACROSS SIDE STREETS)

SUMMARY OF 4.0' VALLEY GUTTER

LOCATION/STATION	ALIGN.	ITEM 529 4' CONC. VALLEY GUTTER TYPE "A" (LF)	ITEM 529 4'-2" CONC. VALLEY GUTTER TYPE "B" (LF)
STA. 642+00 TO STA. 653+54 (LT)	BL1		1154
STA. 642+50 TO STA. 654+38 (RT)	BL1		1188
STA. 656+25 TO STA. 668+00 (LT)	BL1		1175
STA. 657+08 TO STA. 666+50 (RT)	BL1		942
STA. 698+54 TO STA. 714+48 (CL)	BL1	1594	
STA. 716+83 TO STA. 725+53 (CL)	BL1	870	
STA. 11+50 TO STA. 16+13 (LT)	BUS281N		463
STA. 31+10 TO STA. 36+17 (LT.)	BUS281N		507
NORTHBOUND FRONTAGE RD		587	
SOUTHBOUND FRONTAGE RD		587	
TOTAL:		3638	5429

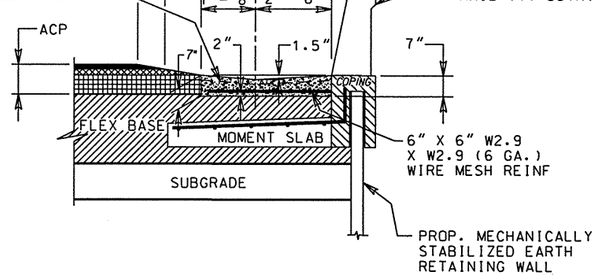

CONC. GUTTER TY"B" (MOD.)

⚠1 REVISED 9-26-03

STATE OF TEXAS
ALLEN R. CROZIER
81450
REGISTERED PROFESSIONAL ENGINEER
9/29/03

Parsons Brinckerhoff Quade & Douglas Inc.

Texas Department of Transportation

© 2003 by TxDOT

4' VALLEY GUTTER DETAILS

SCALE: N.T.S.

DESIGNED:	FED. RD DIV. No.	STATE	FEDERAL AID PROJECT No.		HIGHWAY No.	
CHECKED: JRP	6	TEXAS				US 281
DRAWN:	STATE DISTRICT	COUNTY	CONTROL No.	SECTION No.	JOB No.	SHEET No.
CHECKED: ARC	21	HIDALGO	0255	08	091	444A

PRIVATE AND COMMERCIAL DRIVES WITH CURB & GUTTER

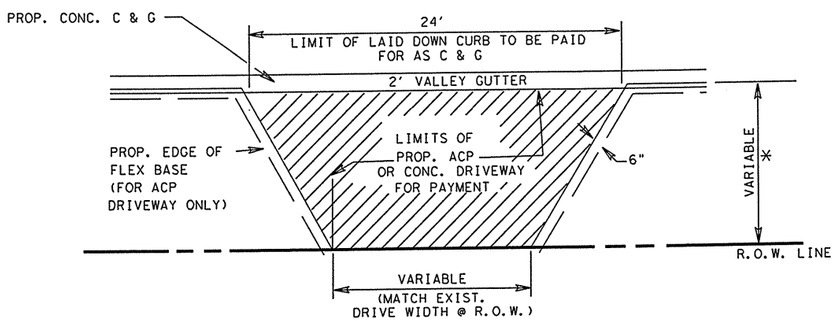

PLAN OF PRIVATE AND COMMERCIAL DRIVES
(W/DRIVEWAY WIDTH LESS THAN 24')

* SEE P&P SHEETS

⊛ SEE NOTE BELOW

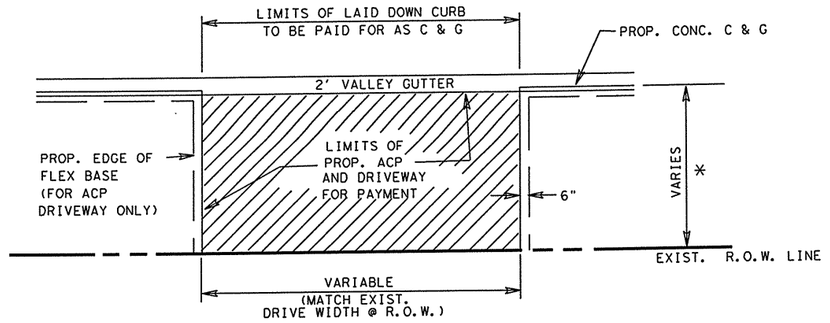

PLAN OF PRIVATE AND COMMERCIAL DRIVES
(W/DRIVEWAY WIDTH EQUAL TO OR GREATER THAN 24' @ R.O.W. LINE)

PRIVATE AND COMMERCIAL DRIVES WITHOUT CURB & GUTTER

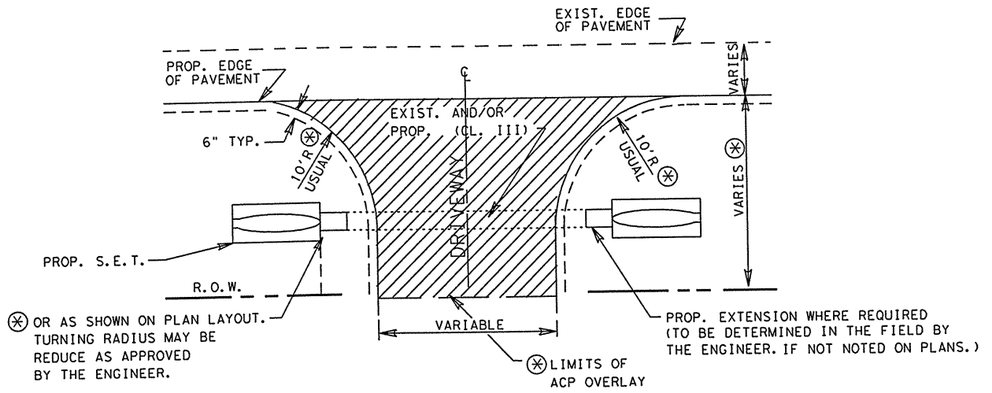

PLAN OF PRIVATE AND COMMERCIAL DRIVES
*W/DRIVEWAY WIDTH LESS THAN 24')

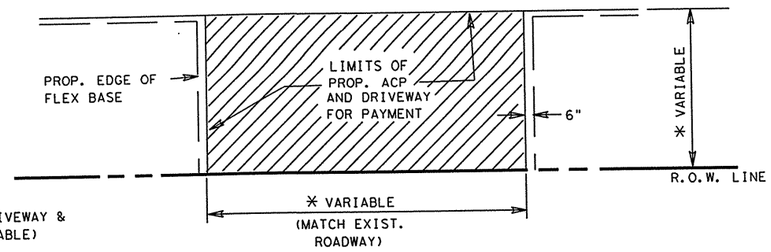

* FOR DETAILS SEE DRIVEWAY & TURNOUT DETAILS (TABLE)

PLAN OF PRIVATE AND COMMERCIAL DRIVES
(W/DRIVEWAY WIDTH EQUAL TO OR GREATER THAN 24' @ R.O.W. LINE)

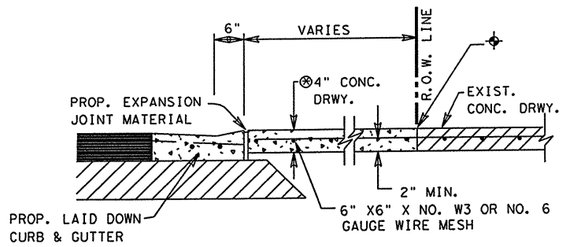

TYPICAL CONCRETE DRIVEWAY SECTION

⊕ CONC. SHALL BE SAW CUT TO THE LIMITS OF REMOVAL WHERE APPLICABLE.

⊛ 6" FOR COMMERCIAL DRIVES

PRIVATE AND COMMERCIAL DRIVES WITH CURB & GUTTER

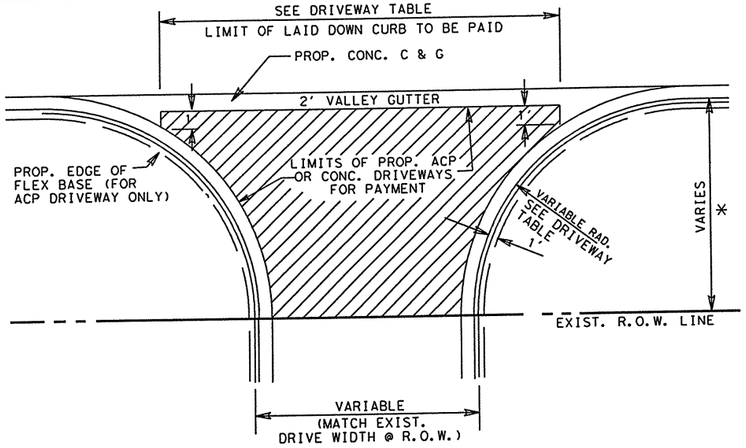

PLAN OF PRIVATE AND COMMERCIAL DRIVES
SEE P&P SHEETS FOR LOCATIONS OF DRIVES

⊛ NOTE:

DRIVEWAY TYPES

TY PRB-1
EXIST. PAVED CALICHE AND /OR GRAVEL DRIVEWAYS TO BE SCARIFED AND RECONSTRUCTED WITH 3" NEW AND/OR SALVAGE FLEX. BASE TO MATCH THE PROPOSED WIDENED SECTION. THEN PRIMED AND SURFACED WITH 114#/SY ACP (TY "D")

TY PB-1
EXIST. UNPAVED PRIVATE OR COMMERCIAL DRIVEWAYS TO BE CONSTRUCTED AS SHOWN WITH 4" NEW AND/OR SALVAGE FLEX. BASE, PRIMED AND SURFACED WITH 114#/SY ACP.

TY P1
EXIST. PAVED DRIVEWAYS TO BE PAVED WITH 114#/SY ACP TY "D".

© TxDOT 2003

PHARR DISTRICT STANDARD

TEXAS DEPARTMENT OF TRANSPORTATION

DRIVEWAY DETAILS

REV. 4/02

DRIVEWAY.DGN

DIST. NO. / DIV. NO.	PROJECT NO.	FILE NO.	SHEET NO.
6			445

STATE	STATE DIST. NO.	COUNTY	CONT.	SECT.	JOB	HIGHWAY NO.
TEXAS	PHARR	HIDALGO	0255	08	091	US 281

N. T. S.

AD-76-0

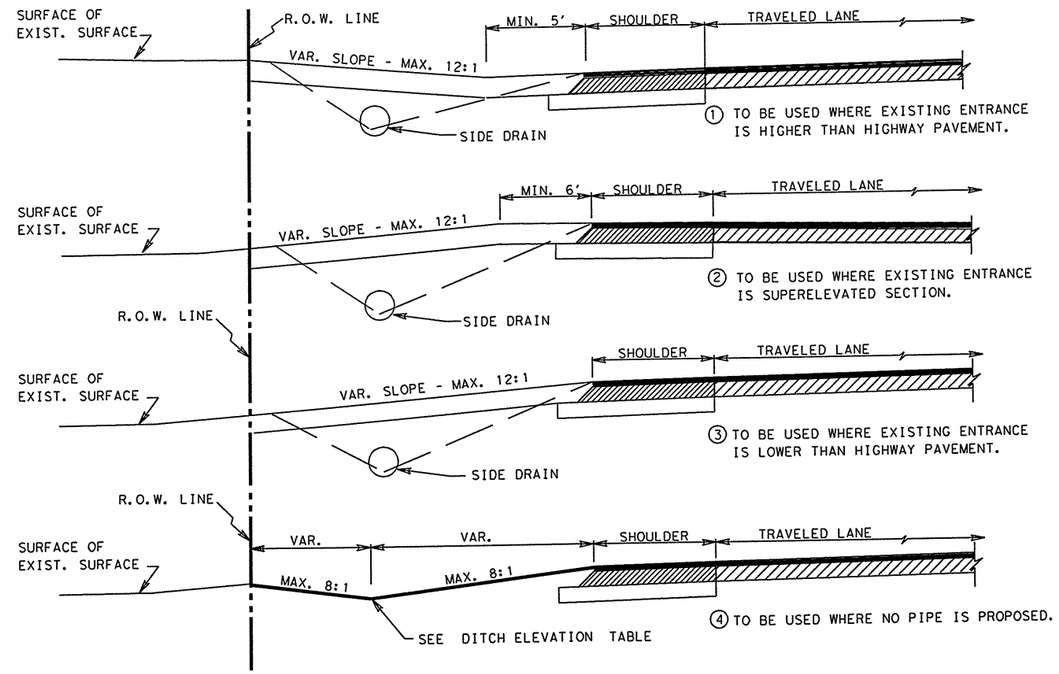

NOTES:

ALL ENTRANCES CONSTRUCTED ON THIS PROJECT ARE SUBJECT TO CONCURRENCE WITH EXISTING GOVERNING REGULATIONS AS SET OUT BY THE STATE HIGHWAY COMMISSION.

BASE AND SURFACING MAY BE EXTENDED BEYOND R.O.W. LINE AS REQUIRED TO MEET EXISTING GRADE IN A SATIFACTORY MANNER.

ALL FLEXIBLE BASE USED FOR PRIVATE DRIVES & COMMERCIAL DRIVES WILL NOT REQUIRE LIME TREATMENT.

EXACT LOCATIONS, DIMENSIONS, AND TYPE TO BE ESTABLISHED DURING CONSTRUCTION BY THE ENGINEER.

PROP. WIDTH OF DRIVEWAYS AND TURNOUTS TO MATCH EXISTING WIDTH AT R.O.W. LINE.

114 #/SY ACP (COMPACTED) IS EQUAL TO 1 IN. DEPTH
171 #/SY ACP (COMPACTED) IS EQUAL TO 1½IN. DEPTH.

SIDE DRAINS TO BE INSTALLED WHERE ROADWAY DITCH DRAINAGE IS NECESSARY AS INDICATED ON PLANS AND/OR AS DIRECTED BY THE ENGINEER.

AVERAGE DIMENSIONS SHOWN ON TABLE OF DRIVEWAYS AND TURNOUTS ARE FOR ESTIMAING PURPOSES ONLY.

TYPICAL ENTRANCE PROFILE FOR DRIVEWAYS W/OUT C&G

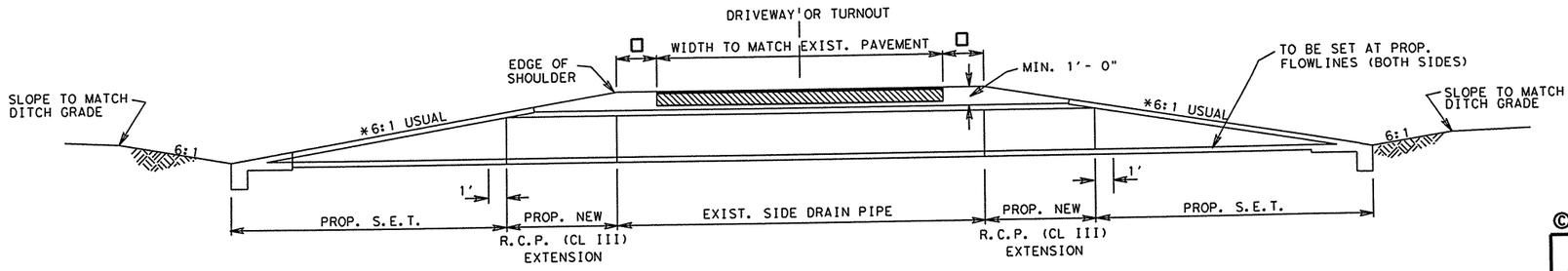

□ - 1' MIN. ON DRIVEWAYS
2' MIN. ON TURNOUTS

* - 6:1 SLOPE USUAL
UNLESS OTHERWISE NOTED ON PLANS

© TxDOT 2003

PHARR DISTRICT STANDARD

TEXAS DEPARTMENT OF TRANSPORTATION

DRIVEWAYS & TURNOUTS PROFILE DETAILS

REV. 4/02

D&T.DGN

FED.RD. DIV.NO.	STATE AID PROJECT NO.	FILE NO.	SHEET NO.
6			446

STATE	STATE DIST.NO.	COUNTY	CONT.	SECT.	JOB	HIGHWAY NO.
TEXAS	PHARR	HIDALGO	0255	08	091	US 281

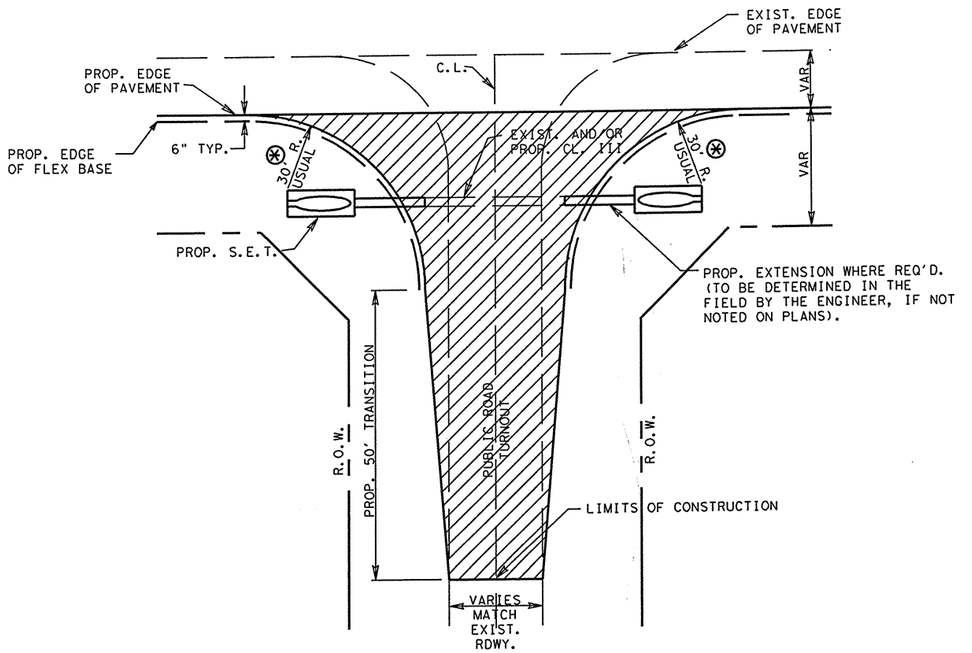

TYPICAL DETAIL

(WHEN EXIST. ROADWAY WIDTH LESS THAN 24'.)

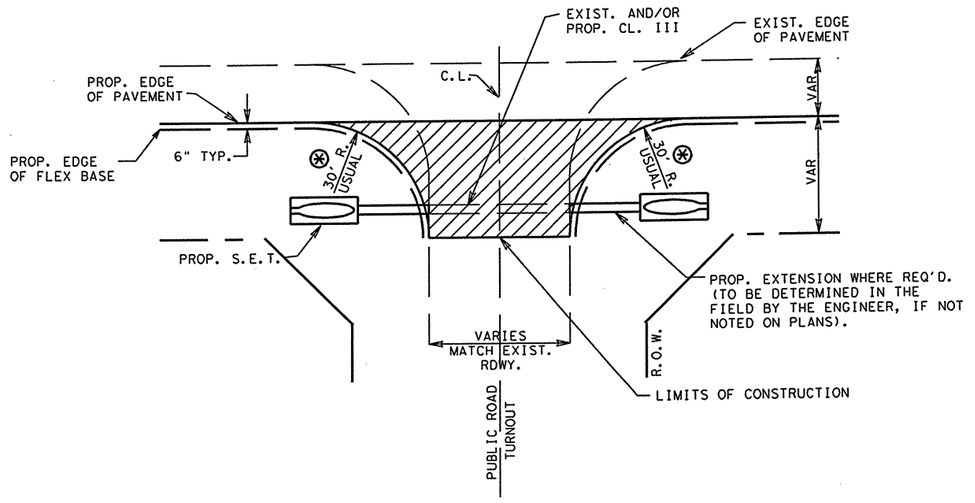

TYPICAL DETAIL

(WHEN EXIST. ROADWAY WIDTH EQUAL TO OR GREATER THAN 24'.)

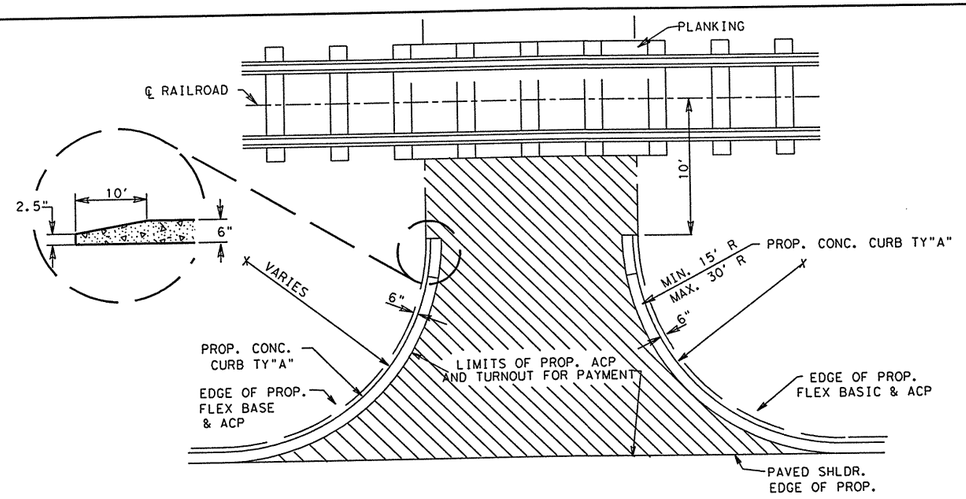

PLAN OF PUBLIC TURNOUT ADJACENT TO R.R. CROSSING

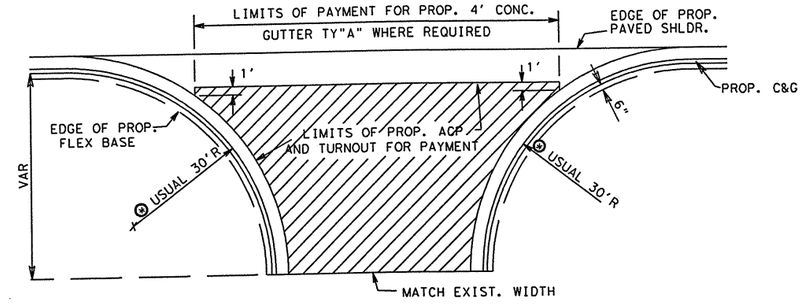

PLAN OF PUBLIC TURNOUT

TY P

EXIST. PAVED TURNOUTS TO BE SURFACED W/171#/SY ACP.

TY PRB1

EXIST. PAVED, CALICHE AND/OR GRAVEL TURNOUTS TO BE SCARIFIED AND RECONTRUCTED WITH 4" NEW FLEX. BASE W/1% LIME TO MATCH THE PROPOSED WIDENED SECTION, THEN PRIMED AND SURFACED WITH 171#/SY ACP

TY PBS1

EXIST. UNPAVED PUBLIC TURNOUTS TO BE CONSTRUCTED AS SHOWN WITH 12" LIME TREAT. SUBGRADE, 8" FLEX. BASE 1% LIME, THEN PRIMED AND SURFACED WITH 171#/SY ACP.

TY PBS2

EXIST. TURNOUT TO BE CONSTRUCTED SAME AS ROADWAY.

GENERAL NOTES:

AVERAGE DIMENSIONS SHOWN ON TABLE OF TURNOUTS ARE FOR ESTIMATING PURPOSES ONLY.

LOCATIONS LISTED ON THE TABLE ARE APPROXIMATE, EXACT LOCATIONS, DIMENSIONS, AND TYPE TO BE ESTABLISHED DURING CONSTRUCTION BY THE ENGINEER AS REQUIRED.

⊛ SEE DRIVEWAY & TURNOUT TABLE TURNING RADIUS MAY BE REDUCED AS APPROVED BY THE ENGINEER.

© TxDOT 2003

PHARR DISTRICT STANDARD

TEXAS DEPARTMENT OF TRANSPORTATION

TURNOUT DETAILS

REV. 4/02

TURNOUT.DGN

FED. RD. DIV. NO.	STATE AID PROJECT NO.		FILE NO.			SHEET NO.
6						447
STATE	STATE DIST. NO.	COUNTY	CONT.	SECT.	JOB	HIGHWAY NO.
TEXAS	PHARR	HIDALGO	0255	08	091	US 281

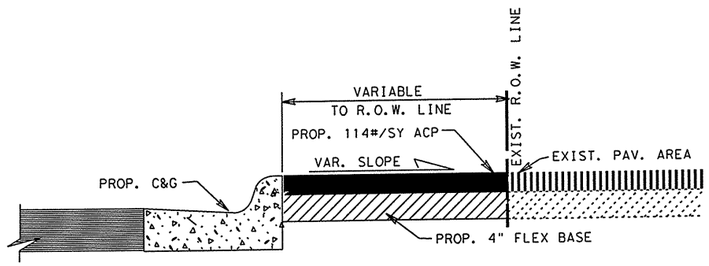

RECONNECTING EXIST. PAVED AREAS

RECONNECTING AREAS

STATION LIMITS		LENGTH (FT.)	WIDTH (FT.)	AREAS (SY) ASPH. +	AREAS (SY) ⊕ CONC.
BEG.	END				
TOTAL:					

\+ TO BE PAID FOR AS DRIVEWAY TY PBI

⊕ TO BE PAID FOR AS CONCRETE DRIVEWAY

⊕ NOTE: CONC. SHALL BE SAW CUT TO THE LIMITS OF REMOVAL WHERE APPLICABLE.

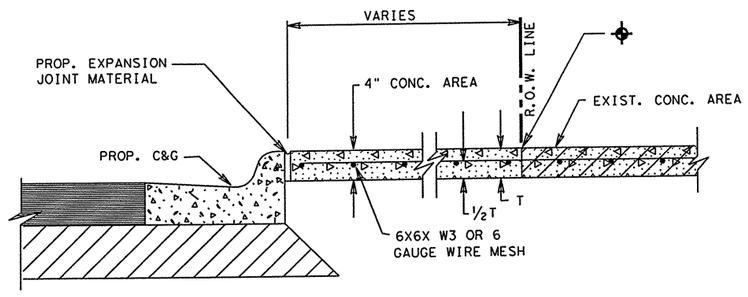

RECONNECTING EXIST. CONCRETE AREAS

© TxDOT 2003

PHARR DISTRICT STANDARD

TEXAS DEPARTMENT OF TRANSPORTATION

PAVEMENT RECONNECT AREAS DETAILS

REV. 4/02

PAVEMENT.DGN

FED.RD. DIV.NO.	FEDERAL AID PROJECT NO.		FILE NO.			SHEET NO.
6						448
STATE	STATE DIST.NO.	COUNTY	CONT.	SECT.	JOB	HIGHWAY NO.
TEXAS	PHARR	HIDALGO	0255	08	091	US 281

$NAME$

$TIME$

6/24/2003

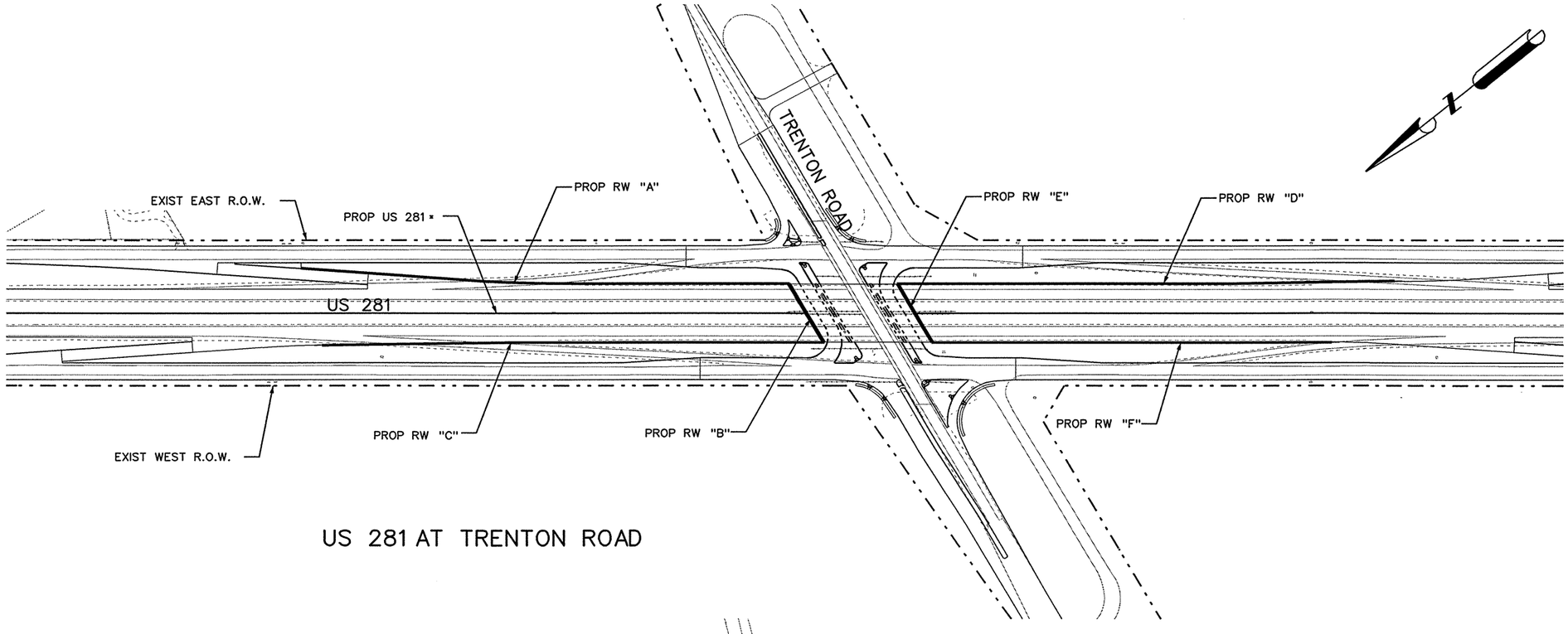

US 281 AT TRENTON ROAD

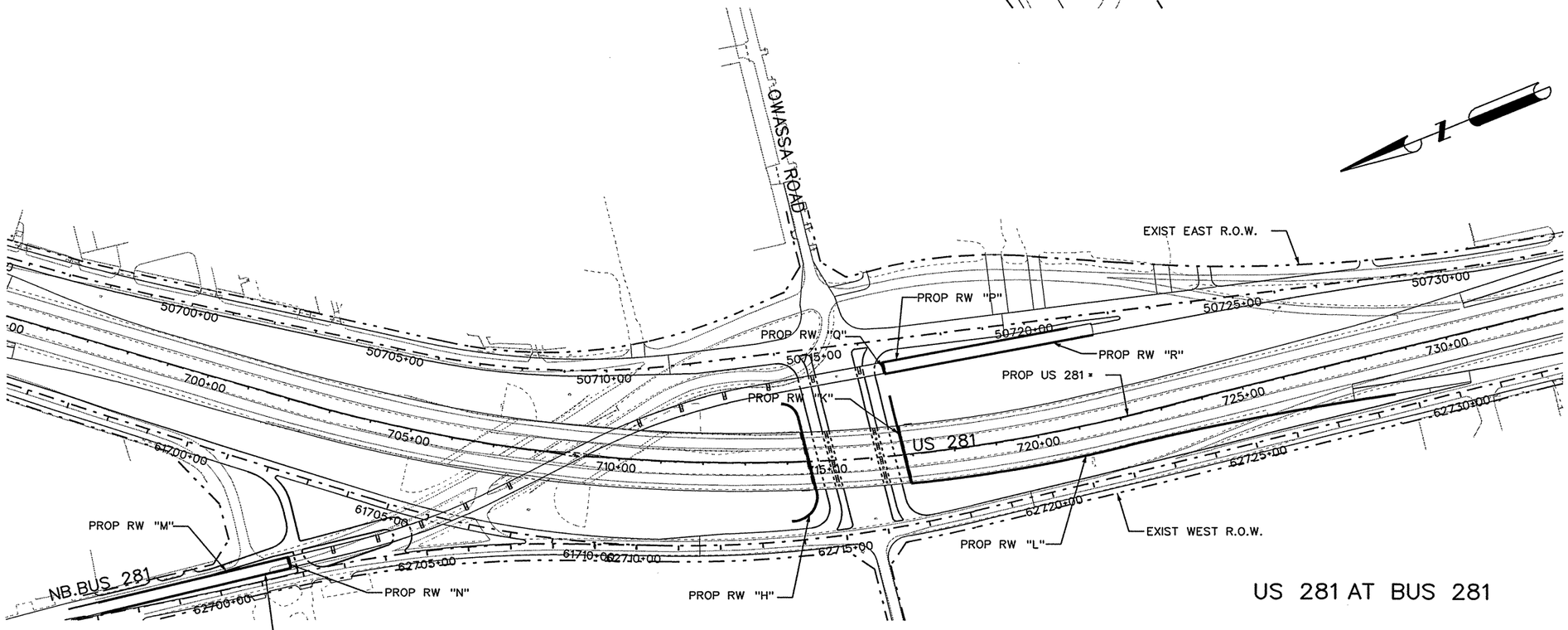

US 281 AT BUS 281

NOTE:
RETAINING WALLS " G", "I" AND "J" NOT USED.

THE SEAL APPEARING ON THIS DOCUMENT WAS AUTHORIZED BY DEEPAK MANGLORKAR, P.E. 89613 ON 6/23/2003.

STATE OF TEXAS
DEEPAK MANGLORKAR
89613
PROFESSIONAL ENGINEER

Parsons Brinckerhoff Quade & Douglas Inc.

Texas Department of Transportation

© 2003 by TxDOT

US 281 RETAINING WALL LOCATION LAYOUT

PLAN 1"=300' HORIZ

SHEET 1 OF 1			281RWL01.DGN				
DESIGNED: PAF	FED. RD DIV. No.	STATE	FEDERAL AID PROJECT No.				HIGHWAY No.
CHECKED: JP	6	TEXAS					US 281
DRAWN: UH	STATE DISTRICT	COUNTY	CONTROL No.	SECTION No.	JOB No.	SHEET No.	
CHECKED: JDH	PHARR	HIDALGO	0255	08	091	449	

$FILE$

$NAME$

$TIME$

8/19/2003

Curve RWTA-1

Delta	=	3^ 04' 49.77" (LT)
Degree	=	1^ 32' 44.18"
Tangent	=	99.68
Length	=	199.31
Radius	=	3,707.01
External	=	1.34
Long Chord	=	199.28
Mid. Ord.	=	1.34
P.C. Station		13+70.98
P.T. Station		15+70.29

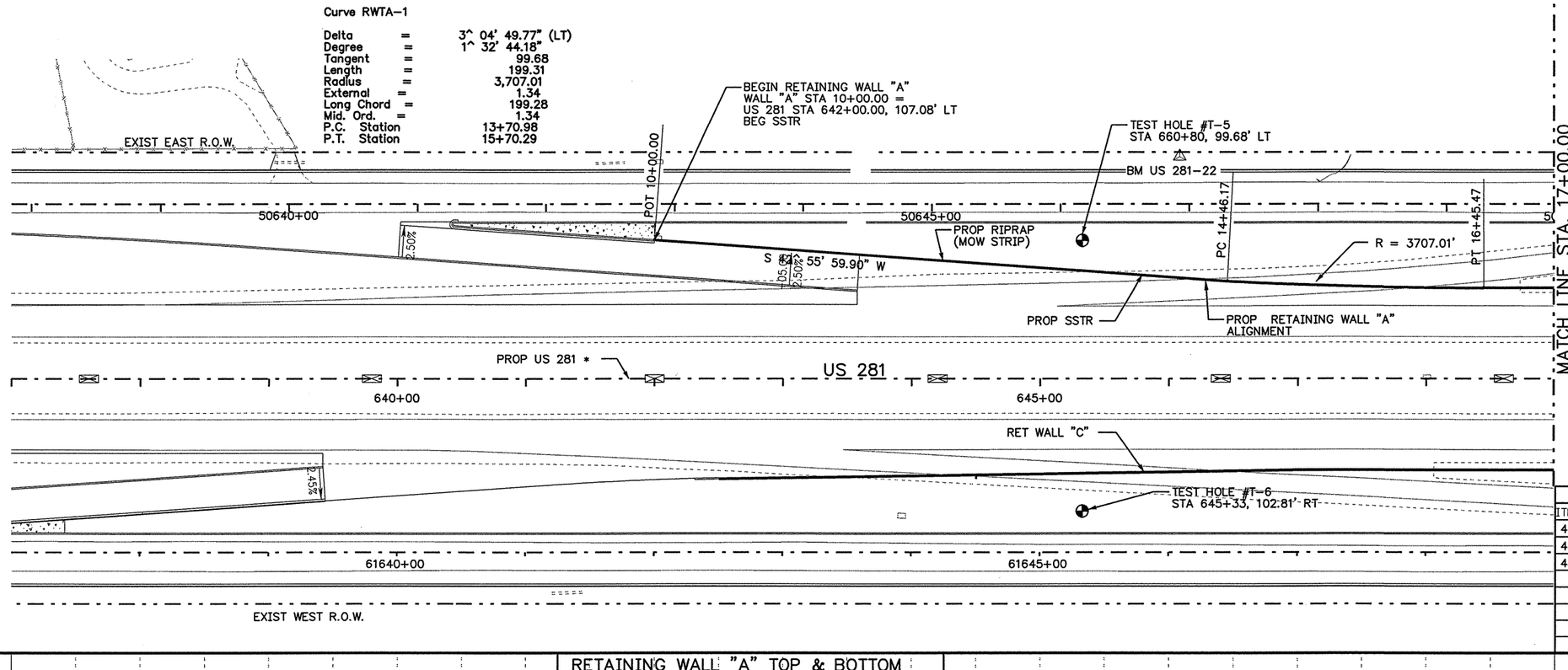

GENERAL NOTES:

FOR RIPRAP DETAILS, TYPICAL SECTIONS AND DRAINAGE DETAILS REFER TO RETAINING WALL TYPICAL SECTION AND DETAILS SHEET.

ALL RETAINING WALL PANELS SHALL HAVE ASHLAR STONE FINISH WITH COLOR (VIA CONCRETE ADMIXTURE) AS SHOWN ON "FORM LINER ARCHITECTURAL DETAILS". PANELS SHALL NOT BE PAINTED.

◕ FOR TEST HOLE LOCATIONS AND LOG, REFER TO TEST HOLE DATA SHEETS.

FOUNDATION SOILS FOR THE RETAINING WALLS SHALL BE PROOF ROLLED IN ACCORDANCE WITH SPECIFICATION ITEM 423

EMBANKMENT BACKFILL UNDER ITEM 423 SHALL BE TYPE "A" MATERIAL.

DURING CONSTRUCTION OF RETAINING WALLS CONTRACTOR SHALL TAKE ADEQUATE PRECAUTIONS TO PROTECT EMBANKMENT BACKFILL AND EXCAVATION AREAS WITH TEMPORARY SHORING OR OTHER METHODS APPROVED BY THE ENGINEER.

△B.M. & HORIZONTAL DATA
B.M. # US 281-22
ELEV = 98.54
STA = 646+08.07, 171.87' LT
3 1/4 " TXDOT ALUMINUM DISK

SHEET TOTALS

ITEM	EST.	FINAL	UNIT	DESCRIPTION
423	7,168		SF	RETAINING WALL (MSE)
432	26.00		CY	RIP RAP CL. B CONCRETE
450	700.00		LF	SINGLE SLOPE TRAFFIC RAILING

RETAINING WALL "A" TOP & BOTTOM BACK FACE

NOTE:
a) SOIL AREA ALONG THE RETAINING WALL AND BELOW THE LEVELING PAD AND BACKFILL SHALL BE REPLACED WITH SELECT FILL APPROVED BY THE ENGINEER. THE SOIL AREA SHALL BE 5 ' DEEP AND 23 WIDE. THE HORIZONTAL WIDTH OF THE AREA SHALL BE FROM 5 FEET BEYOND THE LEVELING PAD TO THE EDGE OF THE BACKFILL BEHIND THE RETAINING WALLS. THE ESTIMATED QUANTITY FOR THIS ITEM IS 4982 CY. PAYMENT FOR THIS ITEM SHALL BE SUBSIDIARY TO PAY ITEM 423. REFER TO DETAIL "A" ON SHEET 468.
ANY SOILS THAT ARE FOUND TO BE UNSUITABLE SHALL BE REMOVED AND REPLACED, ADDITIONAL GEOTECHNICAL TESTING SHALL BE DONE AND APPROVED BY ENGINEER PRIOR TO BEGINING CONSTRUCTION.
b) CONTRACTOR SHALL ENSURE PROPER DRAINAGE AT ALL AREAS AROUND THE RETAINING WALLS.

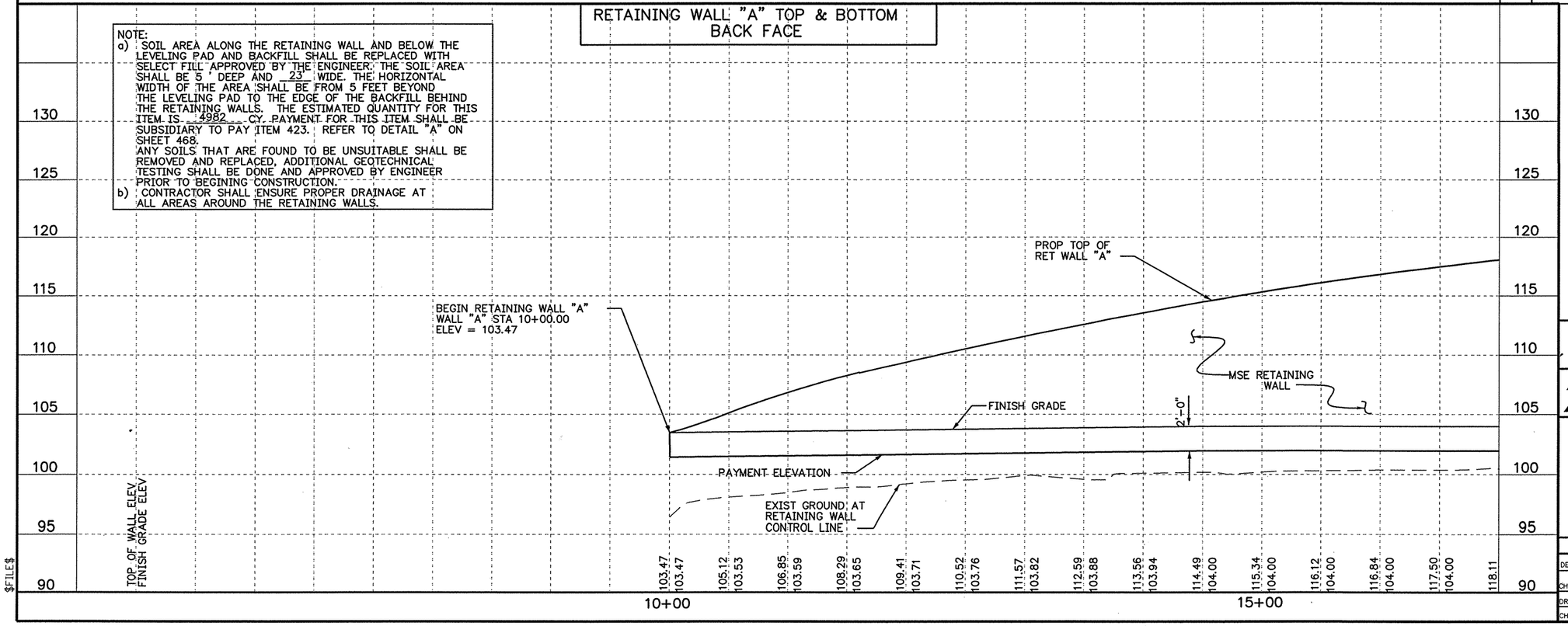

LEGEND
- TOP OF WALL ELEV
- FINISHED GRADE ELEV
- EXIST NAT GROUND ELEV

THE SEAL APPEARING ON THIS DOCUMENT WAS AUTHORIZED BY DEEPAK MANGLORKAR, P.E. 89613 ON 8/19/2003.

STATE OF TEXAS
DEEPAK MANGLORKAR
89613
LICENSED
PROFESSIONAL ENGINEER

Parsons Brinckerhoff
Quade & Douglas Inc.

Texas Department of Transportation

© 2003 by TxDOT

US 281
RETAINING WALL "A"
PLAN & PROFILE

PLAN 1"= 100' HORIZ
PROFILE 1"= 10' VERT

SHEET 1 OF 2 | 281RPP01.DGN

DESIGNED: JA	FED. RD DIV. No.	STATE	FEDERAL AID PROJECT No.		HIGHWAY No.
CHECKED: JP	6	TEXAS			US 281
DRAWN:	STATE DISTRICT	COUNTY	CONTROL No.	SECTION No.	JOB No.	SHEET No.
CHECKED: JDH	PHARR	HIDALGO	0255	08	091	450

$FILE$

$NAME$
$TIME$
9/4/2003

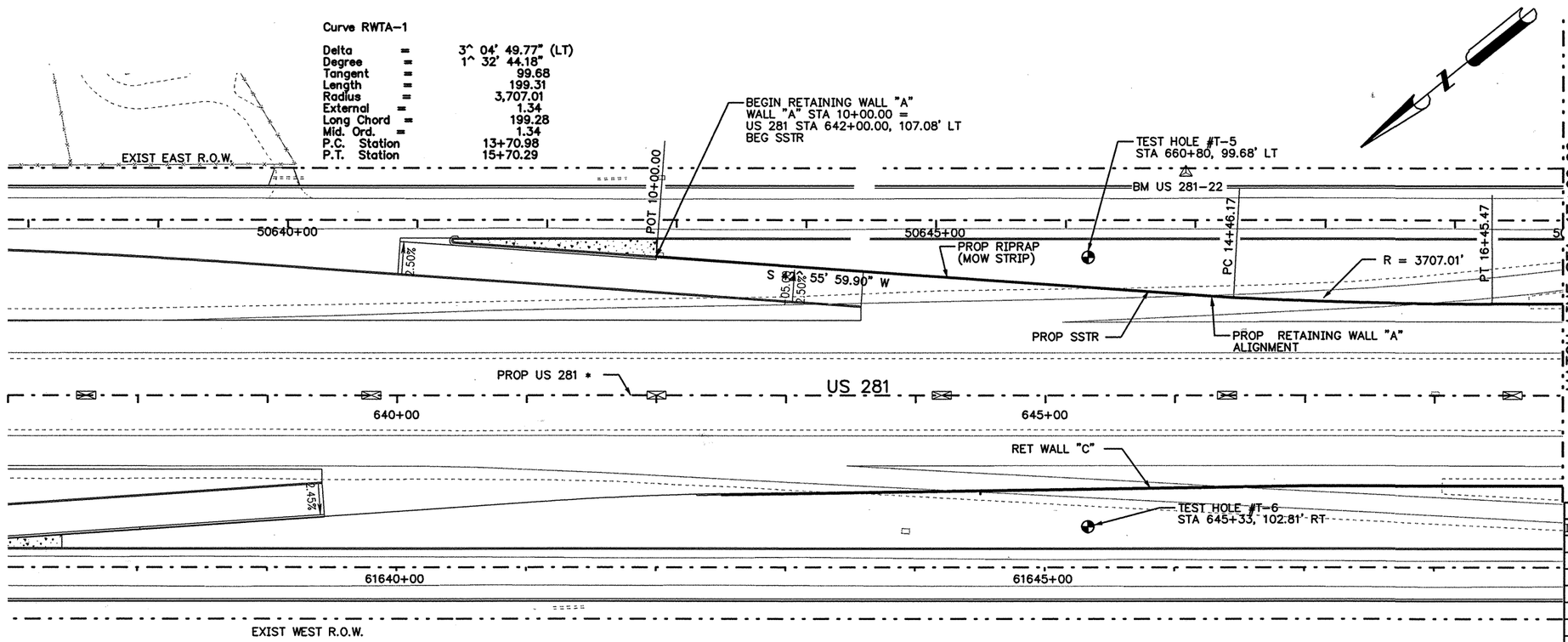

GENERAL NOTES:

FOR RIPRAP DETAILS, TYPICAL SECTIONS AND DRAINAGE DETAILS REFER TO RETAINING WALL TYPICAL SECTION AND DETAILS SHEET.

ALL RETAINING WALL PANELS SHALL HAVE ASHLAR STONE FINISH WITH COLOR (VIA CONCRETE ADMIXTURE) AS SHOWN ON "FORM LINER ARCHITECTURAL DETAILS". PANELS SHALL NOT BE PAINTED.

⊕ FOR TEST HOLE LOCATIONS AND LOG, REFER TO TEST HOLE DATA SHEETS.

SELECT BACKFILL UNDER ITEM 423 SHALL BE TYPE "A" MATERIAL.

TYPE "A" EMBANKMENT MATERIAL SHALL CONFORM TO THE FOLLOWING IN ACCORDANCE WITH TXDOT STANDARD SPECIFICATION ITEM 132 "EMBANKMENT", SECTION 132.2:
- LIQUID LIMIT SHALL NOT EXCEED 45
- PLASTICITY INDEX SHALL NOT EXCEED 15
- BAR LINEAR SHRINKAGE SHALL NOT BE LESS THAN 2

DURING CONSTRUCTION OF RETAINING WALLS CONTRACTOR SHALL TAKE ADEQUATE PRECAUTIONS TO PROTECT EMBANKMENT BACKFILL AND EXCAVATION AREAS WITH TEMPORARY SHORING OR OTHER METHODS APPROVED BY THE ENGINEER.

△B.M. & HORIZONTAL DATA
B.M. # US 281-22
ELEV = 98.54
STA = 646+08.07, 171.87' LT
3 1/4 " TXDOT ALUMINUM DISK

SHEET TOTALS

ITEM	EST.	FINAL	UNIT	DESCRIPTION
423	7,168		SF	RETAINING WALL (MSE)
432	26.00		CY	RIP RAP CL. B CONCRETE
450	700.00		LF	SINGLE SLOPE TRAFFIC RAILING

NOTE:
a) FOUNDATION SOILS FOR THE RETAINING WALLS SHALL BE PROOF ROLLED IN ACCORDANCE WITH SPECIFICATION ITEM 423
ANY SOILS THAT ARE FOUND TO BE UNSUITABLE SHALL BE REMOVED AND REPLACED, ADDITIONAL GEOTECHNICAL TESTING SHALL BE DONE AND APPROVED BY ENGINEER PRIOR TO BEGINING CONSTRUCTION.
b) CONTRACTOR SHALL ENSURE PROPER DRAINAGE AT ALL AREAS AROUND THE RETAINING WALLS.

RETAINING WALL "A" TOP & BOTTOM BACK FACE

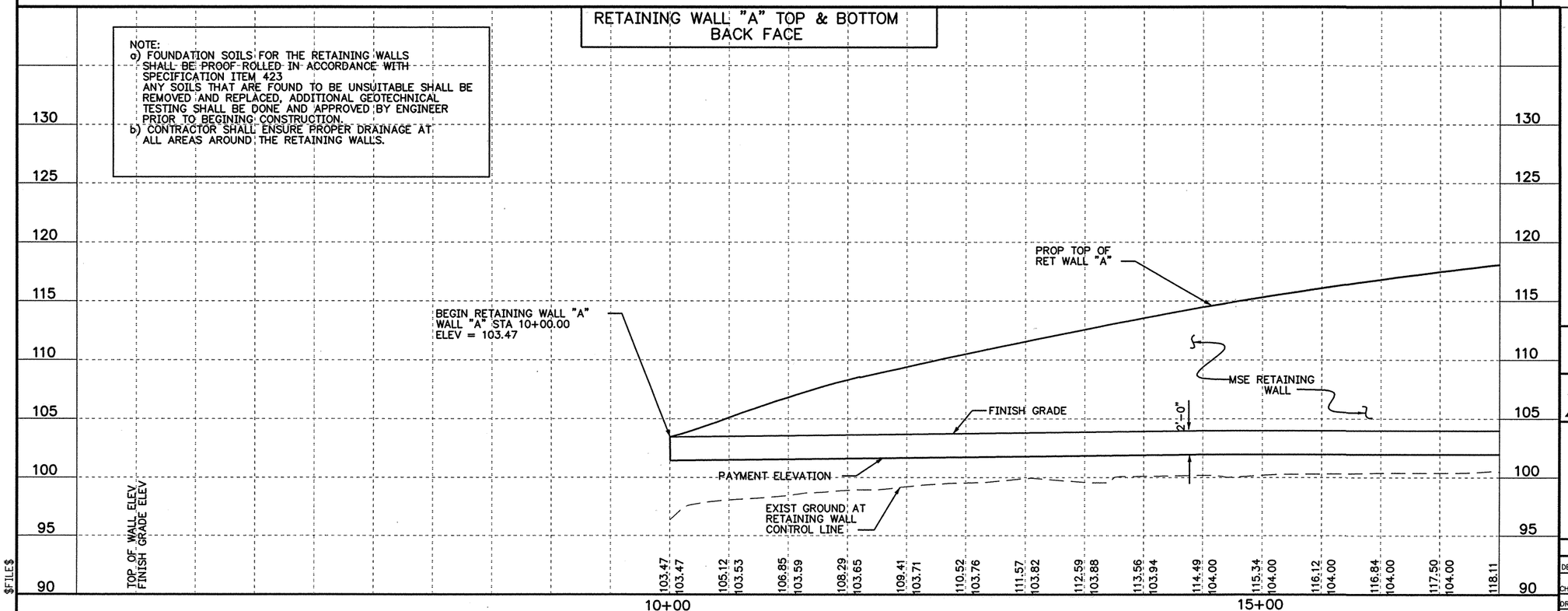

LEGEND
- TOP OF WALL ELEV
- FINISHED GRADE ELEV
- EXIST NAT GROUND ELEV

REVISED 9-26-03

THE SEAL APPEARING ON THIS DOCUMENT WAS AUTHORIZED BY DEEPAK MANGLORKAR, P.E. 89613 ON 9/4/2003.

STATE OF TEXAS · DEEPAK MANGLORKAR · 89613 · REGISTERED PROFESSIONAL ENGINEER

DMangl

Parsons Brinckerhoff
Quade & Douglas Inc.

Texas Department of Transportation
© 2003 by TxDOT

US 281
RETAINING WALL "A"
PLAN & PROFILE

PLAN 1"= 100' HORIZ
PROFILE 1"= 10' VERT

SHEET 1 OF 2 — 281RPP01.DGN

DESIGNED: JA	FED. RD DIV. No.	STATE	FEDERAL AID PROJECT No.		HIGHWAY No.
CHECKED: JP	6	TEXAS			US 281
DRAWN:	STATE DISTRICT	COUNTY	CONTROL No.	SECTION No.	JOB No.	SHEET No.
CHECKED: JDH	PHARR	HIDALGO	0255	08	091	450

$FILE$

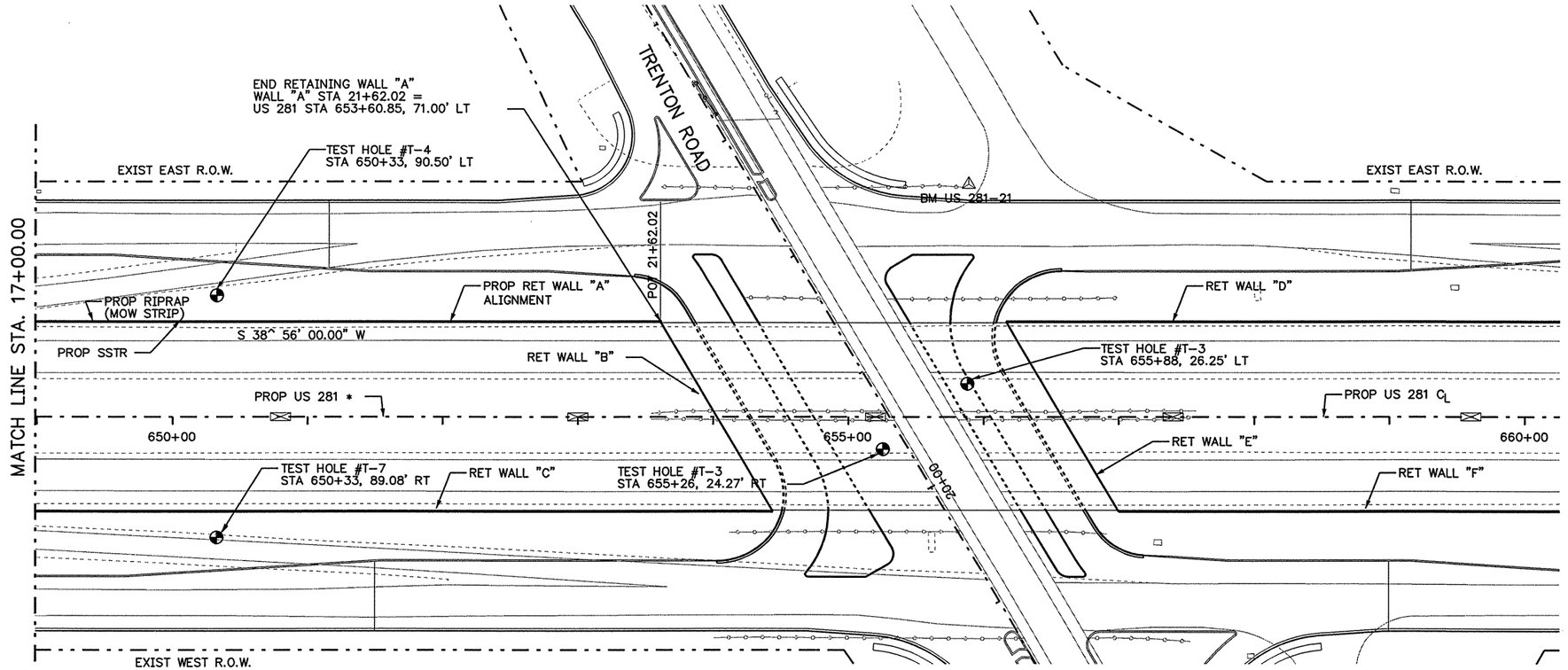

GENERAL NOTES:

FOR RIPRAP DETAILS, TYPICAL SECTIONS AND DRAINAGE DETAILS REFER TO RETAINING WALL TYPICAL SECTION AND DETAILS SHEET.

ALL RETAINING WALL PANELS SHALL HAVE ASHLAR STONE FINISH WITH COLOR (VIA CONCRETE ADMIXTURE) AS SHOWN ON "FORM LINER ARCHITECTURAL DETAILS". PANELS SHALL NOT BE PAINTED.

⊕ FOR TEST HOLE LOCATIONS AND LOG, REFER TO TEST HOLE DATA SHEETS.

FOUNDATION SOILS FOR THE RETAINING WALLS SHALL BE PROOF ROLLED IN ACCORDANCE WITH SPECIFICATION ITEM 423

EMBANKMENT BACKFILL UNDER ITEM 423 SHALL BE TYPE "A" MATERIAL.

DURING CONSTRUCTION OF RETAINING WALLS CONTRACTOR SHALL TAKE ADEQUATE PRECAUTIONS TO PROTECT EMBANKMENT BACKFILL AND EXCAVATION AREAS WITH TEMPORARY SHORING OR OTHER METHODS APPROVED BY THE ENGINEER.

△B.M. & HORIZONTAL DATA
B.M. # US 281-21
ELEV. = 98.66
STA. = 655+88.78, 173.20' LT
3 ⅛" TXDOT ALUMINUM DISK

SHEET TOTALS

ITEM	EST.	FINAL	UNIT	DESCRIPTION
423	8,895		SF	RETAINING WALL (MSE)
432	17.00		CY	RIP RAP CL.B CONCRETE
450	459.01		LF	SINGLE SLOPE TRAFFIC RAILING

RETAINING WALL "A" TOP & BOTTOM BACK FACE

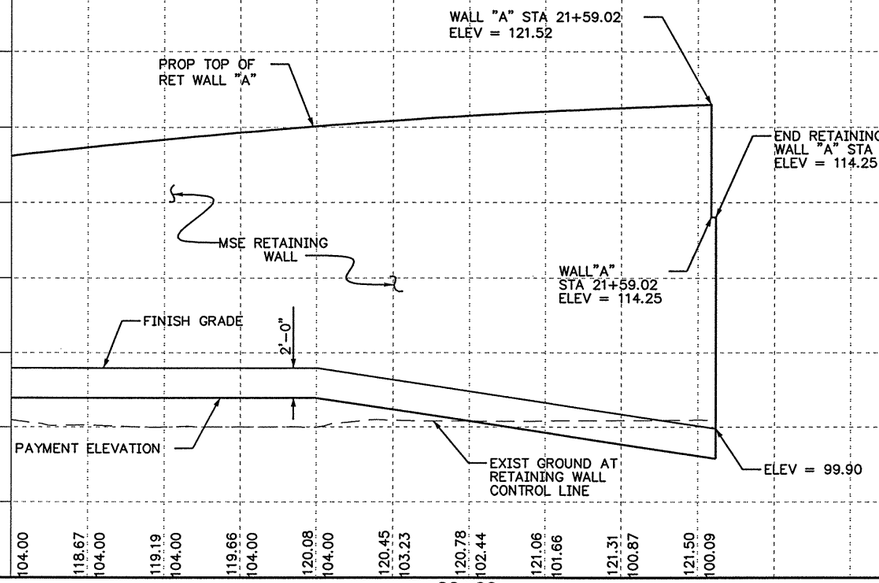

NOTE:
a) SOIL AREA ALONG THE RETAINING WALL AND BELOW THE LEVELING PAD AND BACKFILL SHALL BE REPLACED WITH SELECT FILL APPROVED BY THE ENGINEER. THE SOIL AREA SHALL BE 5 ' DEEP AND 23' WIDE. THE HORIZONTAL WIDTH OF THE AREA SHALL BE FROM 5 FEET BEYOND THE LEVELING PAD TO THE EDGE OF THE BACKFILL BEHIND THE RETAINING WALLS. THE ESTIMATED QUANTITY FOR THIS ITEM IS 4982 CY. PAYMENT FOR THIS ITEM SHALL BE SUBSIDIARY TO PAY ITEM 423. REFER TO DETAIL "A" ON SHEET 468.
ANY SOILS THAT ARE FOUND TO BE UNSUITABLE SHALL BE REMOVED AND REPLACED. ADDITIONAL GEOTECHNICAL TESTING SHALL BE DONE AND APPROVED BY ENGINEER PRIOR TO BEGINING CONSTRUCTION.
b) CONTRACTOR SHALL ENSURE PROPER DRAINAGE AT ALL AREAS AROUND THE RETAINING WALLS.

LEGEND
——— TOP OF WALL ELEV
——— FINISHED GRADE ELEV
– – – – EXIST NAT GROUND ELEV

THE SEAL APPEARING ON THIS DOCUMENT WAS AUTHORIZED BY DEEPAK MANGLORKAR, P.E. 89613 ON 8/19/2003.

STATE OF TEXAS · DEEPAK MANGLORKAR · 89613 · PROFESSIONAL ENGINEER

Parsons Brinckerhoff
Quade & Douglas Inc.

Texas Department of Transportation
© 2003 by TxDOT

US 281
RETAINING WALL "A"
PLAN & PROFILE

PLAN 1"= 100' HORIZ
PROFILE 1"= 10' VERT

SHEET 2 OF 2 — 281RPP02.DGN

DESIGNED: JA	FED. RD DIV. No.	STATE	FEDERAL AID PROJECT No.			HIGHWAY No.
CHECKED: JP	6	TEXAS				US 281
DRAWN:	STATE DISTRICT	COUNTY	CONTROL No.	SECTION No.	JOB No.	SHEET No.
CHECKED: JDH	PHARR	HIDALGO	0255	08	091	451

$NAME$ $TIME$ 8/19/2003 $FILE$

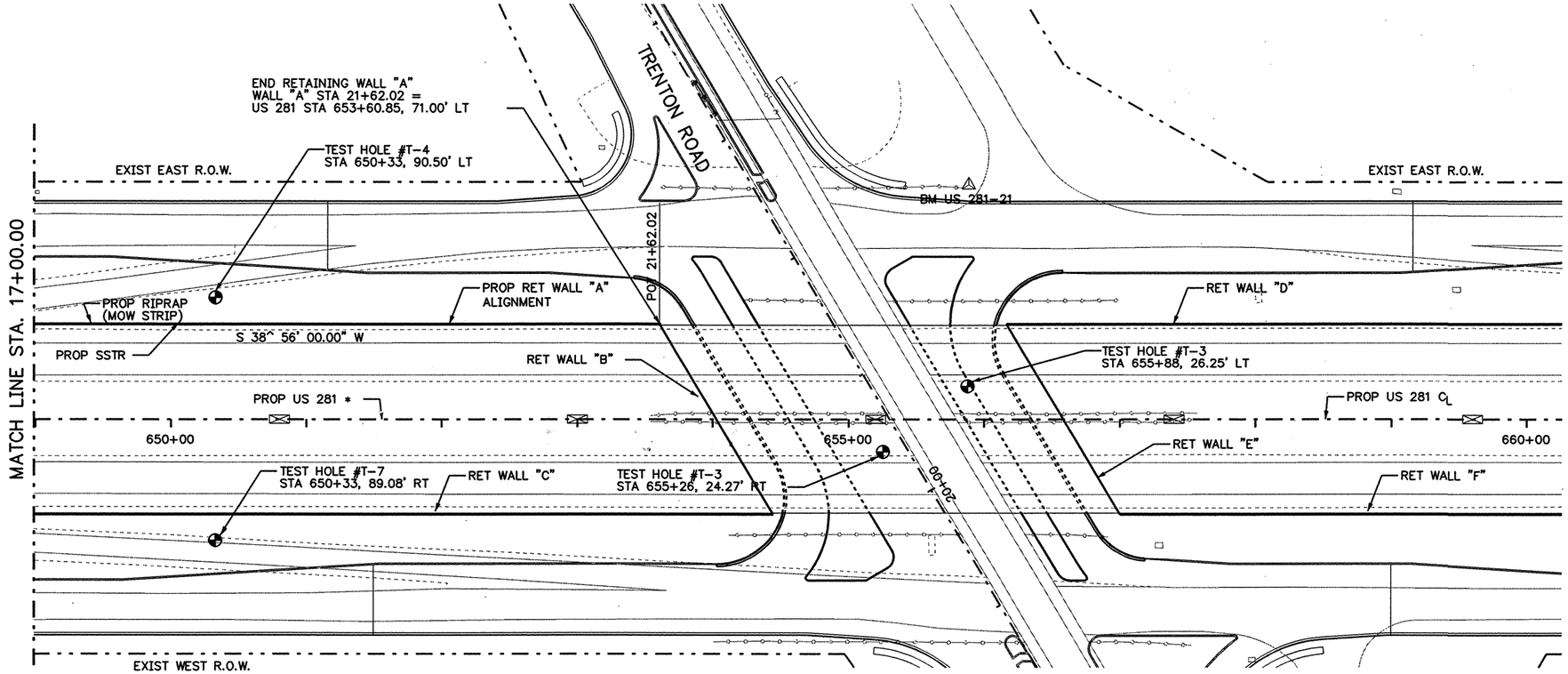

GENERAL NOTES:

FOR RIPRAP DETAILS, TYPICAL SECTIONS AND DRAINAGE DETAILS REFER TO RETAINING WALL TYPICAL SECTION AND DETAILS SHEET.

ALL RETAINING WALL PANELS SHALL HAVE ASHLAR STONE FINISH WITH COLOR (VIA CONCRETE ADMIXTURE) AS SHOWN ON "FORM LINER ARCHITECTURAL DETAILS". PANELS SHALL NOT BE PAINTED.

FOR TEST HOLE LOCATIONS AND LOG, REFER TO TEST HOLE DATA SHEETS.

SELECT BACKFILL UNDER ITEM 423 SHALL BE TYPE "A" MATERIAL.

TYPE "A" EMBANKMENT MATERIAL SHALL CONFORM TO THE FOLLOWING IN ACCORDANCE WITH TXDOT STANDARD SPECIFICATION ITEM 132 "EMBANKMENT", SECTION 132.2:
- LIQUID LIMIT SHALL NOT EXCEED 45
- PLASTICITY INDEX SHALL NOT EXCEED 15
- BAR LINEAR SHRINKAGE SHALL NOT BE LESS THAN 2

DURING CONSTRUCTION OF RETAINING WALLS CONTRACTOR SHALL TAKE ADEQUATE PRECAUTIONS TO PROTECT EMBANKMENT BACKFILL AND EXCAVATION AREAS WITH TEMPORARY SHORING OR OTHER METHODS APPROVED BY THE ENGINEER.

N

△B.M. & HORIZONTAL DATA
B.M. # US 281-21
ELEV. = 98.66
STA = 655+88.78, 173.20' LT
3 ¼" TXDOT ALUMINUM DISK

SHEET TOTALS

ITEM	EST.	FINAL	UNIT	DESCRIPTION
423	8,895		SF	RETAINING WALL (MSE)
432	17.00		CY	RIP RAP CL.B CONCRETE
450	459.01		LF	SINGLE SLOPE TRAFFIC RAILING

RETAINING WALL "A" TOP & BOTTOM BACK FACE

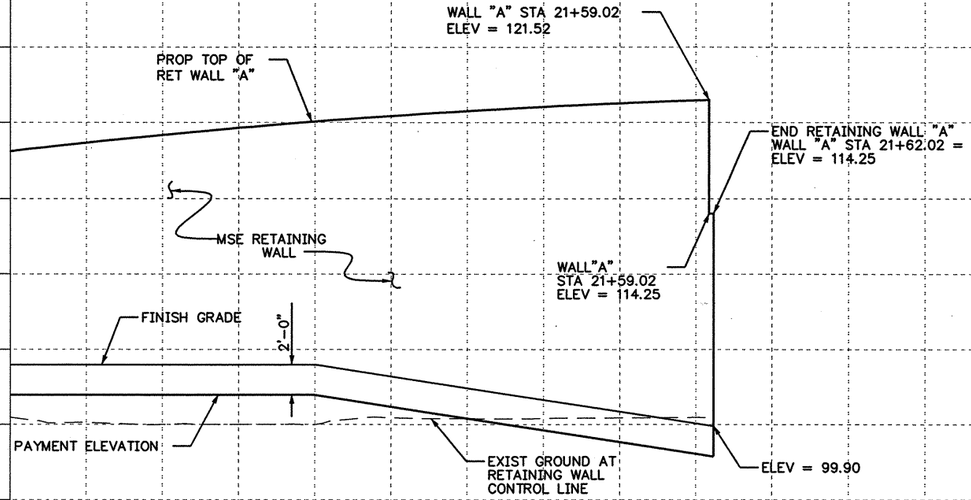

NOTE:
a) FOUNDATION SOILS FOR THE RETAINING WALLS SHALL BE PROOF ROLLED IN ACCORDANCE WITH SPECIFICATION ITEM 423. ANY SOILS THAT ARE FOUND TO BE UNSUITABLE SHALL BE REMOVED AND REPLACED, ADDITIONAL GEOTECHNICAL TESTING SHALL BE DONE AND APPROVED BY ENGINEER PRIOR TO BEGINING CONSTRUCTION.
b) CONTRACTOR SHALL ENSURE PROPER DRAINAGE AT ALL AREAS AROUND THE RETAINING WALLS.

LEGEND
- TOP OF WALL ELEV
- FINISHED GRADE ELEV
- EXIST NAT GROUND ELEV

REVISED 9-26-03

THE SEAL APPEARING ON THIS DOCUMENT WAS AUTHORIZED BY DEEPAK MANGLORKAR, P.E. 89613 ON 9/4/2003 .

STATE OF TEXAS
DEEPAK MANGLORKAR
89613
REGISTERED PROFESSIONAL ENGINEER

DMangl

PB Parsons Brinckerhoff Quade & Douglas Inc.

Texas Department of Transportation
© 2003 by TxDOT

US 281
RETAINING WALL "A"
PLAN & PROFILE

PLAN 1"= 100' HORIZ
PROFILE 1"= 10' VERT

SHEET 2 OF 2				281RPP02.DGN				
DESIGNED: JA	FED. RD DIV. No.	STATE	FEDERAL AID PROJECT No.				HIGHWAY No.	
CHECKED: JP	6	TEXAS					US 281	
DRAWN:	STATE DISTRICT	COUNTY	CONTROL No.	SECTION No.	JOB No.	SHEET No.		
CHECKED: JDH	PHARR	HIDALGO	0255	08	091	451		

$NAME$ $TIME$ 9/4/2003 $FILE$

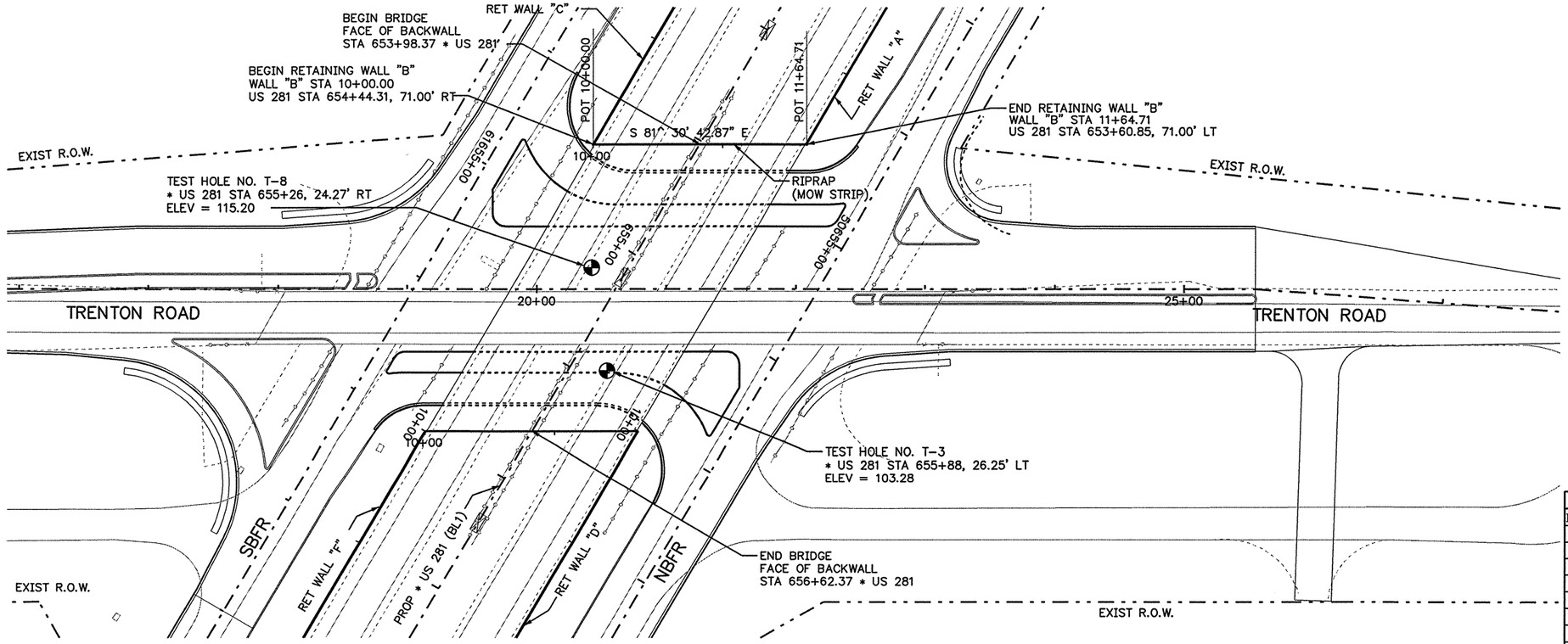

GENERAL NOTES:

FOR RIPRAP DETAILS, TYPICAL SECTIONS AND DRAINAGE DETAILS REFER TO RETAINING WALL TYPICAL SECTION AND DETAILS SHEET.

ALL RETAINING WALL PANELS SHALL HAVE ASHLAR STONE FINISH WITH COLOR (VIA CONCRETE ADMIXTURE) AS SHOWN ON "FORM LINER ARCHITECTURAL DETAILS". PANELS SHALL NOT BE PAINTED.

FOR TEST HOLE LOCATIONS AND LOG, REFER TO TEST HOLE DATA SHEETS.

FOUNDATION SOILS FOR THE RETAINING WALLS SHALL BE PROOF ROLLED IN ACCORDANCE WITH SPECIFICATION ITEM 423

EMBANKMENT BACKFILL UNDER ITEM 423 SHALL BE TYPE "A" MATERIAL.

DURING CONSTRUCTION OF RETAINING WALLS CONTRACTOR SHALL TAKE ADEQUATE PRECAUTIONS TO PROTECT EMBANKMENT BACKFILL AND EXCAVATION AREAS WITH TEMPORARY SHORING OR OTHER METHODS APPROVED BY THE ENGINEER.

N

△B.M. & HORIZONTAL DATA
B.M. # US 281-21
ELEV. = 98.66
STA. = 655+88.78, 173.20' LT
3 -" TXDOT ALUMINUM DISK

SHEET TOTALS

ITEM	EST.	FINAL	UNIT	DESCRIPTION
423	2,864		SF	RETAINING WALL (MSE)
432	6.10		CY	RIP RAP CL.B CONCRETE

NOTE:
a) SOIL AREA ALONG THE RETAINING WALL AND BELOW THE LEVELING PAD AND BACKFILL SHALL BE REPLACED WITH SELECT FILL APPROVED BY THE ENGINEER. THE SOIL AREA SHALL BE 5 ' DEEP AND 19' WIDE. THE HORIZONTAL WIDTH OF THE AREA SHALL BE FROM 5 FEET BEYOND THE LEVELING PAD TO THE EDGE OF THE BACKFILL BEHIND THE RETAINING WALLS. THE ESTIMATED QUANTITY FOR THIS ITEM IS 583 CY. PAYMENT FOR THIS ITEM SHALL BE SUBSIDIARY TO PAY ITEM 423. REFER TO DETAIL "A" ON SHEET 468.
ANY SOILS THAT ARE FOUND TO BE UNSUITABLE SHALL BE REMOVED AND REPLACED, ADDITIONAL GEOTECHNICAL TESTING SHALL BE DONE AND APPROVED BY ENGINEER PRIOR TO BEGINING CONSTRUCTION.
b) CONTRACTOR SHALL ENSURE PROPER DRAINAGE AT ALL AREAS AROUND THE RETAINING WALLS.

RETAINING WALL "B" TOP & BOTTOM FRONT FACE

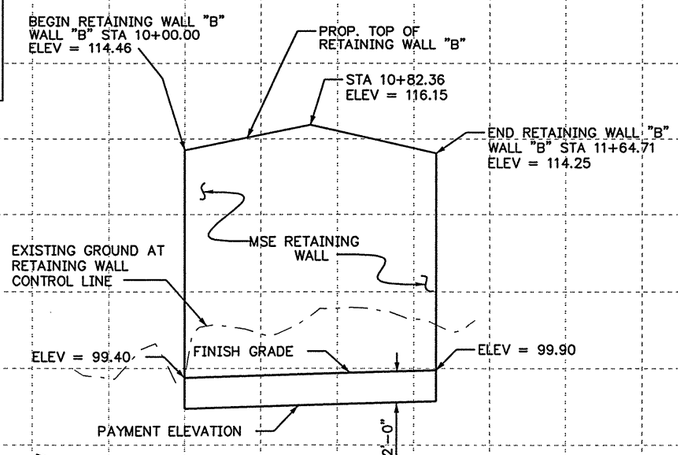

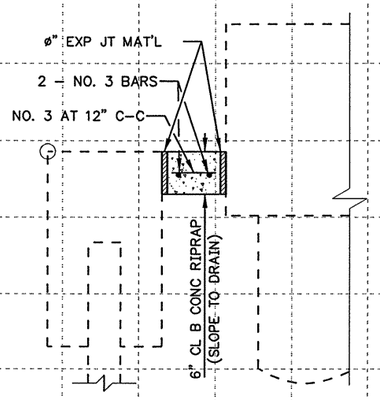

RIPRAP DETAIL TOP OF WALL
N.T.S.

℄ ASSUMED WIDTH OF COPING FOR LOCATION OF WALL. CONTRACTOR SHALL ADJUST LOCATION OF WALL BASED ON THE ACTUAL COPING WIDTH. (SUBSIDIARY TO ITEM 423)

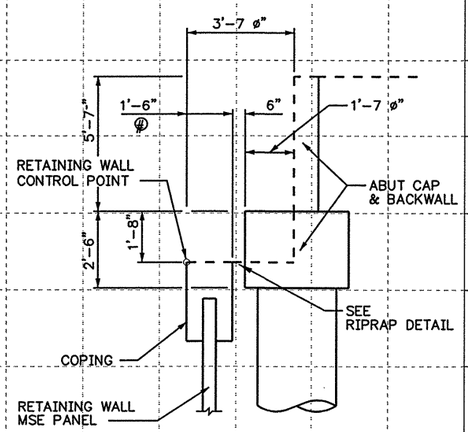

RETAINING WALL (MSE)
TYPICAL SECTION AT ABUTMENT

LEGEND
TOP OF WALL ELEV
FINISHED GRADE ELEV
EXIST NAT GROUND ELEV

THE SEAL APPEARING ON THIS DOCUMENT WAS AUTHORIZED BY DEEPAK MANGLORKAR, P.E. 89613 ON 8/19/2003.

STATE OF TEXAS
DEEPAK MANGLORKAR
89613
LICENSED PROFESSIONAL ENGINEER

Parsons Brinckerhoff
Quade & Douglas Inc.

Texas Department of Transportation
© 2003 by TxDOT

US 281
RETAINING WALL "B"
PLAN & PROFILE

PLAN 1"= 100' HORIZ
PROFILE 1"= 10' VERT

SHEET 1 OF 1 | 281RPP03.DGN

DESIGNED: JA	FED. RD DIV. No.	STATE	FEDERAL AID PROJECT No.		HIGHWAY No.	
CHECKED: JP	6	TEXAS			US 281	
DRAWN:	STATE DISTRICT	COUNTY	CONTROL No.	SECTION No.	JOB No.	SHEET No.
CHECKED: JDH	PHARR	HIDALGO	0255	08	091	452

$NAME$ $TIME$ 8/19/2003 $FILE$

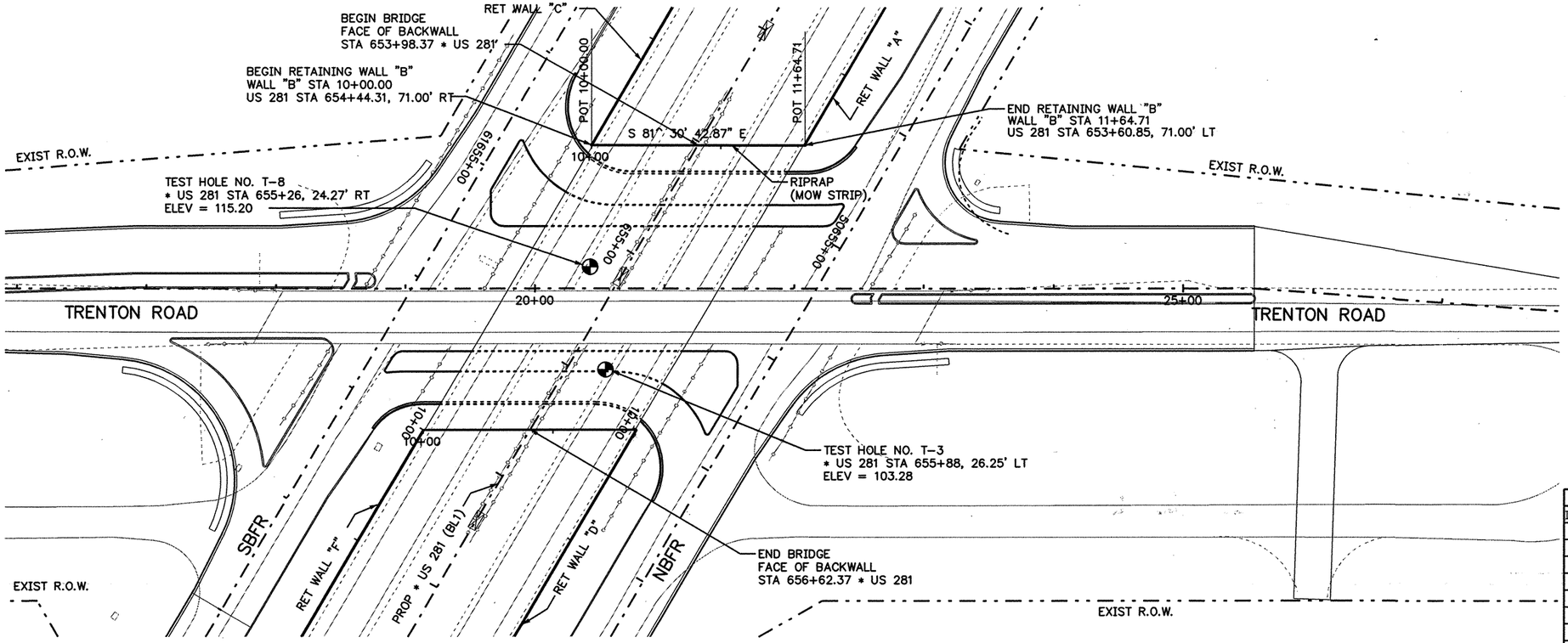

GENERAL NOTES:

FOR RIPRAP DETAILS, TYPICAL SECTIONS AND DRAINAGE DETAILS REFER TO RETAINING WALL TYPICAL SECTION AND DETAILS SHEET.

ALL RETAINING WALL PANELS SHALL HAVE ASHLAR STONE FINISH WITH COLOR (VIA CONCRETE ADMIXTURE) AS SHOWN ON "FORM LINER ARCHITECTURAL DETAILS". PANELS SHALL NOT BE PAINTED.

⊕ FOR TEST HOLE LOCATIONS AND LOG, REFER TO TEST HOLE DATA SHEETS.

SELECT BACKFILL UNDER ITEM 423 SHALL BE TYPE "A" MATERIAL.

TYPE "A" EMBANKMENT MATERIAL SHALL CONFORM TO THE FOLLOWING IN ACCORDANCE WITH TXDOT STANDARD SPECIFICATION ITEM 132 "EMBANKMENT", SECTION 132.2:
- LIQUID LIMIT SHALL NOT EXCEED 45
- PLASTICITY INDEX SHALL NOT EXCEED 15
- BAR LINEAR SHRINKAGE SHALL NOT BE LESS THAN 2

DURING CONSTRUCTION OF RETAINING WALLS CONTRACTOR SHALL TAKE ADEQUATE PRECAUTIONS TO PROTECT EMBANKMENT BACKFILL AND EXCAVATION AREAS WITH TEMPORARY SHORING OR OTHER METHODS APPROVED BY THE ENGINEER.

N

△B.M. & HORIZONTAL DATA
B.M. # US 281-21
ELEV. = 98.66
STA. = 655+88.78, 173.20' LT
3 -" TXDOT ALUMINUM DISK

SHEET TOTALS

ITEM	EST.	FINAL	UNIT	DESCRIPTION
423	2,864		SF	RETAINING WALL (MSE)
432	6.10		CY	RIP RAP CL.B CONCRETE

NOTE:
a) FOUNDATION SOILS FOR THE RETAINING WALLS SHALL BE PROOF ROLLED IN ACCORDANCE WITH SPECIFICATION ITEM 423. ANY SOILS THAT ARE FOUND TO BE UNSUITABLE SHALL BE REMOVED AND REPLACED. ADDITIONAL GEOTECHNICAL TESTING SHALL BE DONE AND APPROVED BY ENGINEER PRIOR TO BEGINING CONSTRUCTION.
b) CONTRACTOR SHALL ENSURE PROPER DRAINAGE AT ALL AREAS AROUND THE RETAINING WALLS.

RETAINING WALL "B" TOP & BOTTOM FRONT FACE

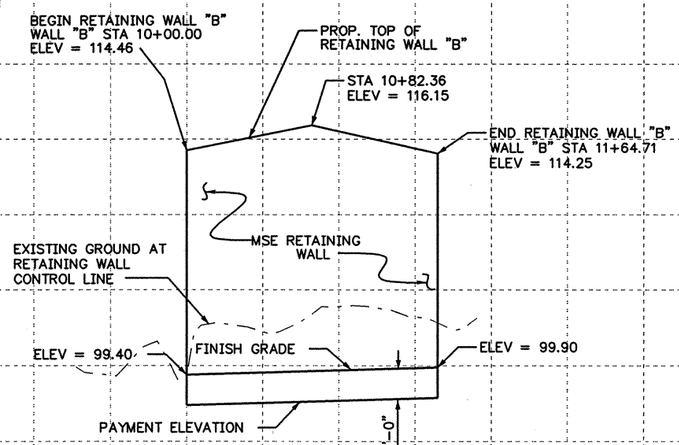

TOP OF WALL ELEV	114.46	115.49	115.74	114.59
FINISH GRADE ELEV	99.40	99.55	99.70	99.86

10+00 11+00 12+00

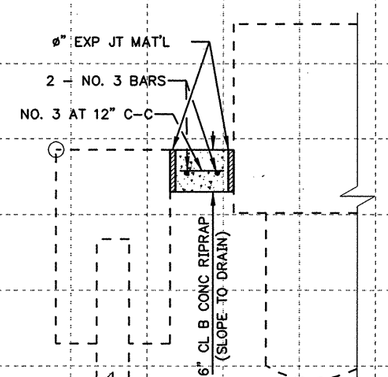

RIPRAP DETAIL TOP OF WALL
N.T.S.

⊕ ASSUMED WIDTH OF COPING FOR LOCATION OF WALL. CONTRACTOR SHALL ADJUST LOCATION OF WALL BASED ON THE ACTUAL COPING WIDTH. (SUBSIDIARY TO ITEM 423)

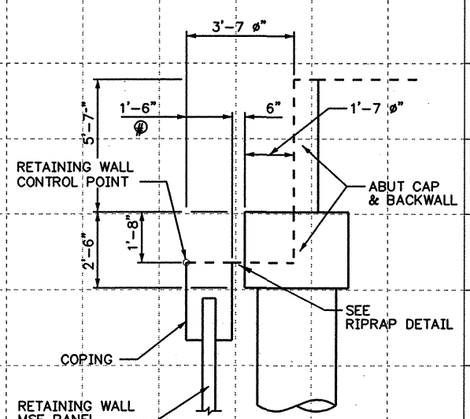

RETAINING WALL (MSE)
TYPICAL SECTION AT ABUTMENT

LEGEND
- TOP OF WALL ELEV
- FINISHED GRADE ELEV
- EXIST NAT GROUND ELEV

REVISED 9-26-03

THE SEAL APPEARING ON THIS DOCUMENT WAS AUTHORIZED BY DEEPAK MANGLORKAR, P.E. 89613 ON 9/4/2003 .

STATE OF TEXAS · DEEPAK MANGLORKAR · 89613 · REGISTERED PROFESSIONAL ENGINEER

D. Manglorkar

Parsons Brinckerhoff
Quade & Douglas Inc.

Texas Department of Transportation
© 2003 by TxDOT

US 281
RETAINING WALL "B"
PLAN & PROFILE

PLAN 1"= 100' HORIZ
PROFILE 1"= 10' VERT

SHEET 1 OF 1 | 281RPP03.DGN

DESIGNED: JA	FED. RD DIV. No.	STATE	FEDERAL AID PROJECT No.	HIGHWAY No.
CHECKED: JP	6	TEXAS		US 281

DRAWN:	STATE DISTRICT	COUNTY	CONTROL No.	SECTION No.	JOB No.	SHEET No.
CHECKED: JDH	PHARR	HIDALGO	0255	08	091	452

$NAME$ $TIME$ 9/4/2003 $FILE$

$NAME$

$TIME$

8/19/2003

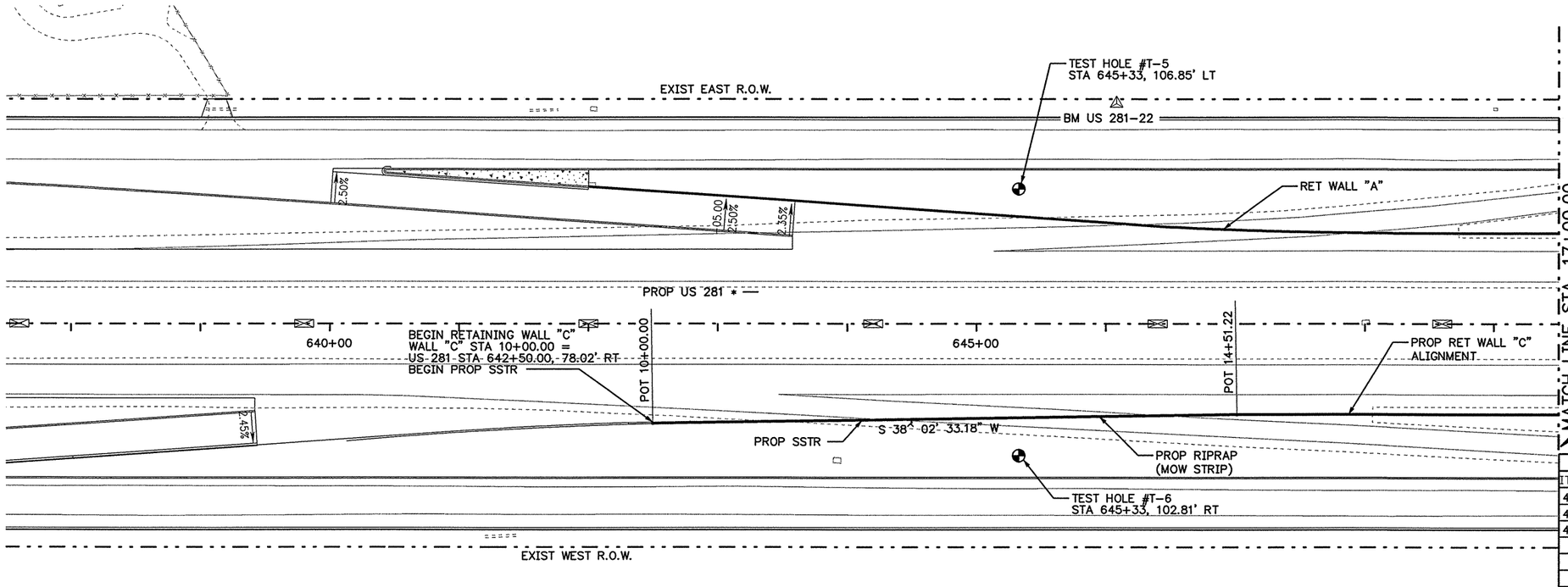

GENERAL NOTES:

FOR RIPRAP DETAILS, TYPICAL SECTIONS AND DRAINAGE DETAILS REFER TO RETAINING WALL TYPICAL SECTION AND DETAILS SHEET.

ALL RETAINING WALL PANELS SHALL HAVE ASHLAR STONE FINISH WITH COLOR (VIA CONCRETE ADMIXTURE) AS SHOWN ON "FORM LINER ARCHITECTURAL DETAILS". PANELS SHALL NOT BE PAINTED.

FOR TEST HOLE LOCATIONS AND LOG, REFER TO TEST HOLE DATA SHEETS.

FOUNDATION SOILS FOR THE RETAINING WALLS SHALL BE PROOF ROLLED IN ACCORDANCE WITH SPECIFICATION ITEM 423

EMBANKMENT BACKFILL UNDER ITEM 423 SHALL BE TYPE "A" MATERIAL.

DURING CONSTRUCTION OF RETAINING WALLS CONTRACTOR SHALL TAKE ADEQUATE PRECAUTIONS TO PROTECT EMBANKMENT BACKFILL AND EXCAVATION AREAS WITH TEMPORARY SHORING OR OTHER METHODS APPROVED BY THE ENGINEER.

△B.M. & HORIZONTAL DATA

B.M. # US 281-22
ELEV = 98.54
STA = 646+08.07, 171.87' LT
3 1/4 " TXDOT ALUMINUM DISK

SHEET TOTALS

ITEM	EST.	FINAL	UNIT	DESCRIPTION
423	8,642		SF	RETAINING WALL (MSE)
432	26.00		CY	RIP RAP CL.B CONCRETE
450	700.00		LF	SINGLE SLOPE TRAFFIC RAILING

RETAINING WALL "C" TOP & BOTTOM FRONT FACE

NOTE:
a) SOIL AREA ALONG THE RETAINING WALL AND BELOW THE LEVELING PAD AND BACKFILL SHALL BE REPLACED WITH SELECT FILL APPROVED BY THE ENGINEER. THE SOIL AREA SHALL BE 5 ' DEEP AND 23' WIDE. THE HORIZONTAL WIDTH OF THE AREA SHALL BE FROM 5 FEET BEYOND THE LEVELING PAD TO THE EDGE OF THE BACKFILL BEHIND THE RETAINING WALLS. THE ESTIMATED QUANTITY FOR THIS ITEM IS 5094 CY. PAYMENT FOR THIS ITEM SHALL BE SUBSIDIARY TO PAY ITEM 423. REFER TO DETAIL "A" ON SHEET 468.
ANY SOILS THAT ARE FOUND TO BE UNSUITABLE SHALL BE REMOVED AND REPLACED, ADDITIONAL GEOTECHNICAL TESTING SHALL BE DONE AND APPROVED BY ENGINEER PRIOR TO BEGINING CONSTRUCTION.
b) CONTRACTOR SHALL ENSURE PROPER DRAINAGE AT ALL AREAS AROUND THE RETAINING WALLS.

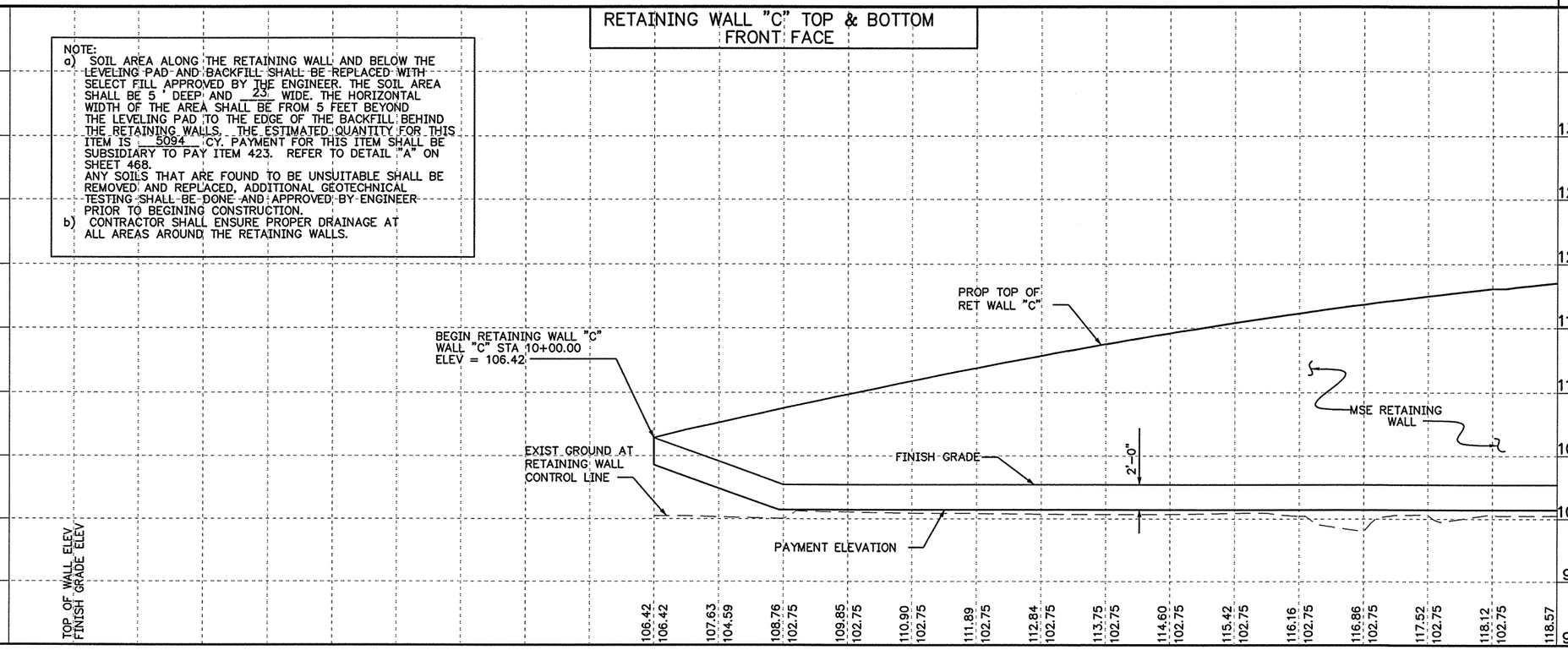

LEGEND

——— TOP OF WALL ELEV
——— FINISHED GRADE ELEV
- - - - EXIST NAT GROUND ELEV

THE SEAL APPEARING ON THIS DOCUMENT WAS AUTHORIZED BY DEEPAK MANGLORKAR, P.E. 89613 ON 8/19/2003.

STATE OF TEXAS
DEEPAK MANGLORKAR
89613
LICENSED PROFESSIONAL ENGINEER

Parsons Brinckerhoff Quade & Douglas Inc.

Texas Department of Transportation

© 2003 by TxDOT

US 281
RETAINING WALL "C"
PLAN & PROFILE

PLAN 1"= 100' HORIZ
PROFILE 1"= 10' VERT

SHEET 1 OF 2 | 281RPP04.DGN

DESIGNED: JA	FED. RD DIV. No.	STATE	FEDERAL AID PROJECT No.	HIGHWAY No.
CHECKED: JP	6	TEXAS		US 281

DRAWN:	STATE DISTRICT	COUNTY	CONTROL No.	SECTION No.	JOB No.	SHEET No.
CHECKED: JDH	PHARR	HIDALGO	0255	08	091	453

$FILE$

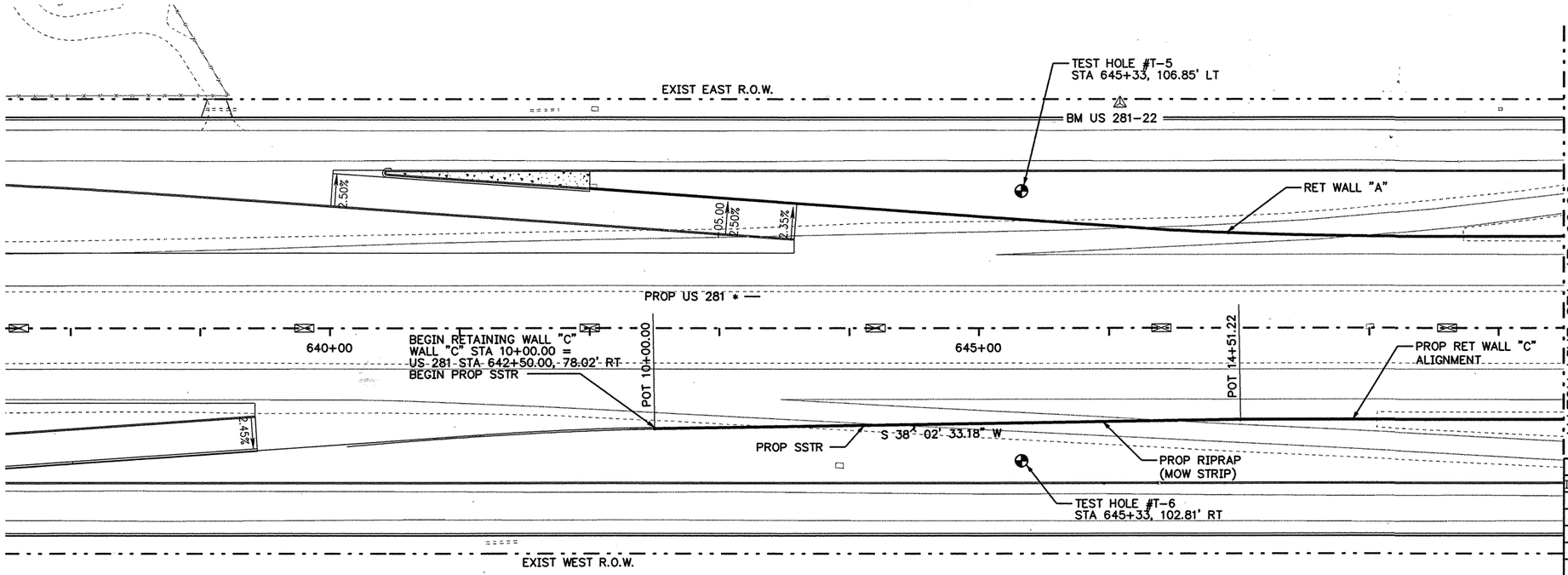

GENERAL NOTES:

FOR RIPRAP DETAILS, TYPICAL SECTIONS AND DRAINAGE DETAILS REFER TO RETAINING WALL TYPICAL SECTION AND DETAILS SHEET.

ALL RETAINING WALL PANELS SHALL HAVE ASHLAR STONE FINISH WITH COLOR (VIA CONCRETE ADMIXTURE) AS SHOWN ON "FORM LINER ARCHITECTURAL DETAILS". PANELS SHALL NOT BE PAINTED.

FOR TEST HOLE LOCATIONS AND LOG, REFER TO TEST HOLE DATA SHEETS.

SELECT BACKFILL UNDER ITEM 423 SHALL BE TYPE "A" MATERIAL.

TYPE "A" EMBANKMENT MATERIAL SHALL CONFORM TO THE FOLLOWING IN ACCORDANCE WITH TXDOT STANDARD SPECIFICATION ITEM 132 "EMBANKMENT", SECTION 132.2:
- LIQUID LIMIT SHALL NOT EXCEED 45
- PLASTICITY INDEX SHALL NOT EXCEED 15
- BAR LINEAR SHRINKAGE SHALL NOT BE LESS THAN 2

DURING CONSTRUCTION OF RETAINING WALLS CONTRACTOR SHALL TAKE ADEQUATE PRECAUTIONS TO PROTECT EMBANKMENT BACKFILL AND EXCAVATION AREAS WITH TEMPORARY SHORING OR OTHER METHODS APPROVED BY THE ENGINEER.

B.M. & HORIZONTAL DATA

B.M. # US 281-22
ELEV = 98.54
STA = 646+08.07, 171.87' LT
3 1/4 " TXDOT ALUMINUM DISK

SHEET TOTALS

ITEM	EST.	FINAL	UNIT	DESCRIPTION
423	8,642		SF	RETAINING WALL (MSE)
432	26.00		CY	RIP RAP CL.B CONCRETE
450	700.00		LF	SINGLE SLOPE TRAFFIC RAILING

RETAINING WALL "C" TOP & BOTTOM FRONT FACE

NOTE:
a) FOUNDATION SOILS FOR THE RETAINING WALLS SHALL BE PROOF ROLLED IN ACCORDANCE WITH SPECIFICATION ITEM 423. ANY SOILS THAT ARE FOUND TO BE UNSUITABLE SHALL BE REMOVED AND REPLACED. ADDITIONAL GEOTECHNICAL TESTING SHALL BE DONE AND APPROVED BY ENGINEER PRIOR TO BEGINNING CONSTRUCTION.
b) CONTRACTOR SHALL ENSURE PROPER DRAINAGE AT ALL AREAS AROUND THE RETAINING WALLS.

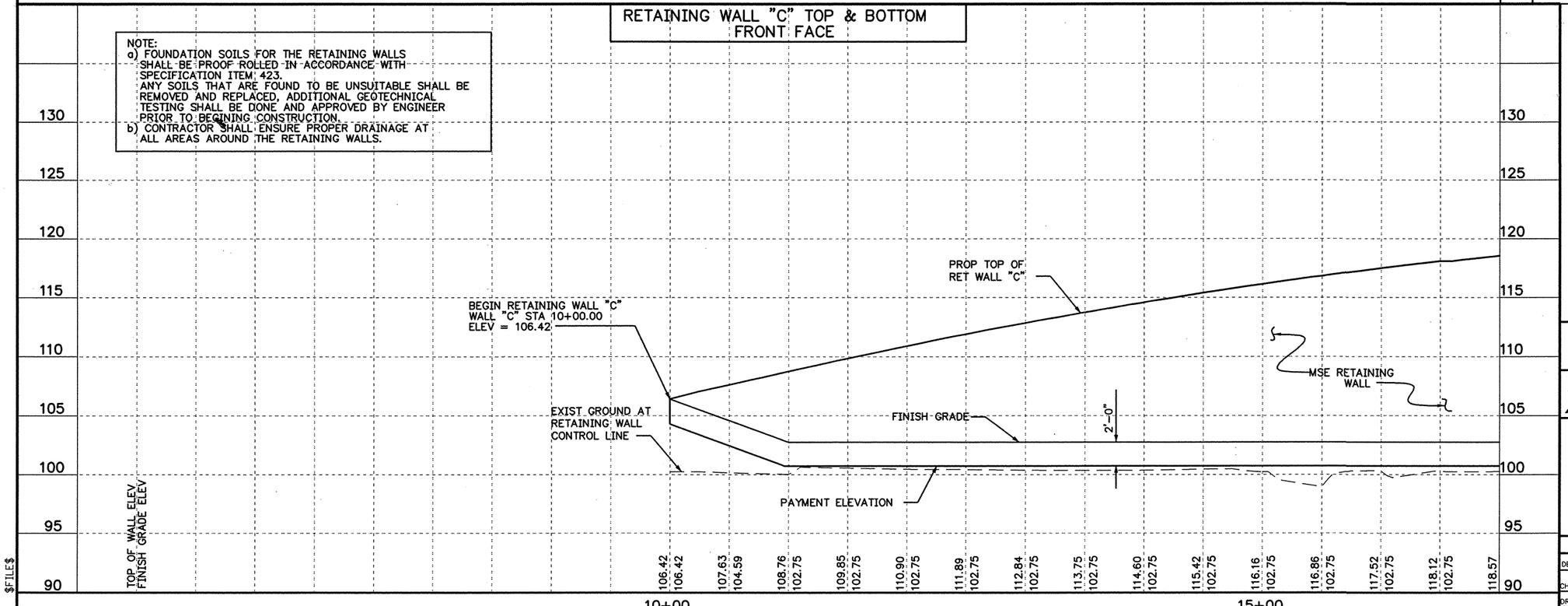

LEGEND
- TOP OF WALL ELEV
- FINISHED GRADE ELEV
- EXIST NAT GROUND ELEV

REVISED 9-26-03

THE SEAL APPEARING ON THIS DOCUMENT WAS AUTHORIZED BY DEEPAK MANGLORKAR, P.E. 89613 ON 9/4/2003 .

STATE OF TEXAS
DEEPAK MANGLORKAR
89613
REGISTERED PROFESSIONAL ENGINEER

Parsons Brinckerhoff Quade & Douglas Inc.

Texas Department of Transportation

© 2003 by TxDOT

US 281
RETAINING WALL "C"
PLAN & PROFILE

PLAN 1"= 100' HORIZ
PROFILE 1"= 10' VERT

SHEET 1 OF 2 | 281RPP04.DGN

DESIGNED: JA	FED. RD DIV. No.	STATE	FEDERAL AID PROJECT No.	HIGHWAY No.
CHECKED: JP	6	TEXAS		US 281

DRAWN:	STATE DISTRICT	COUNTY	CONTROL No.	SECTION No.	JOB No.	SHEET No.
CHECKED: JDH	PHARR	HIDALGO	0255	08	091	453

$NAME$
$TIME$
8/19/2003

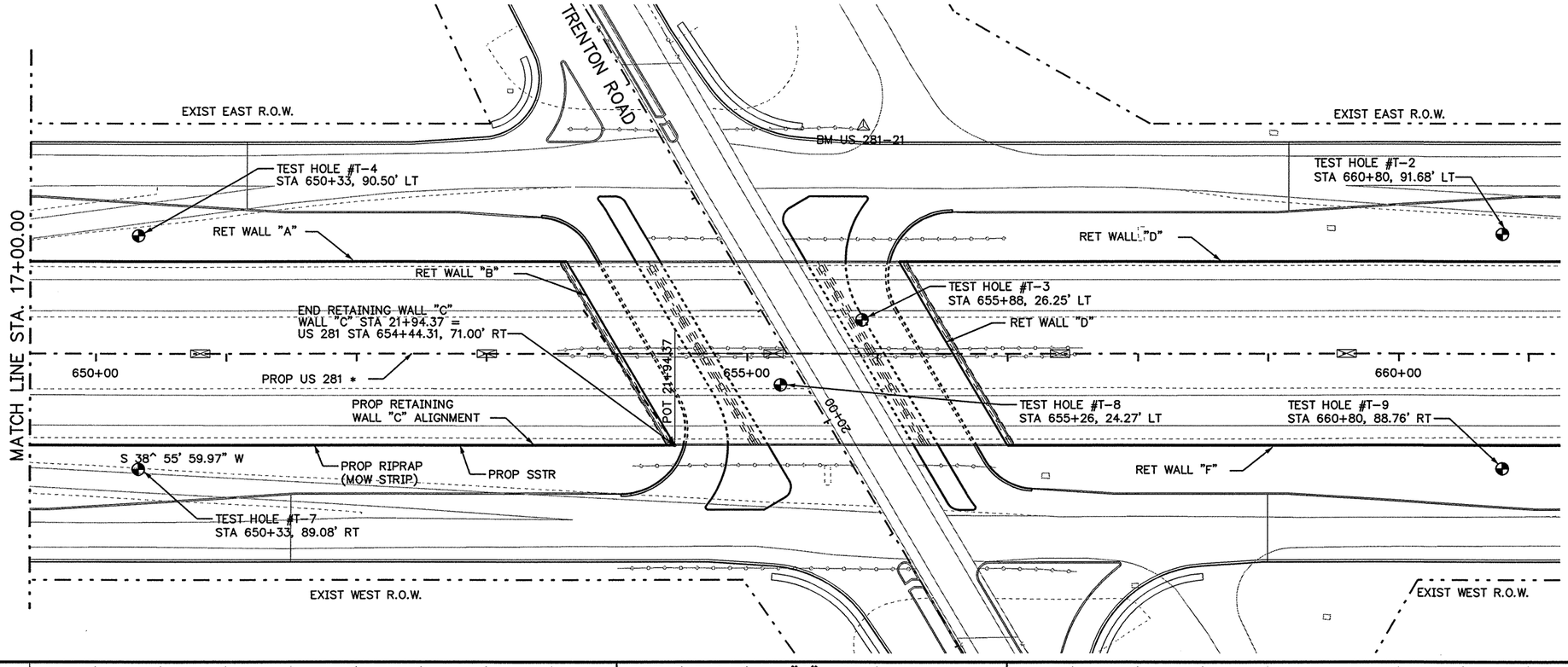

GENERAL NOTES:

FOR RIPRAP DETAILS, TYPICAL SECTIONS AND DRAINAGE DETAILS REFER TO RETAINING WALL TYPICAL SECTION AND DETAILS SHEET.

ALL RETAINING WALL PANELS SHALL HAVE ASHLAR STONE FINISH WITH COLOR (VIA CONCRETE ADMIXTURE) AS SHOWN ON "FORM LINER ARCHITECTURAL DETAILS". PANELS SHALL NOT BE PAINTED.

⊕ FOR TEST HOLE LOCATIONS AND LOG, REFER TO TEST HOLE DATA SHEETS.

FOUNDATION SOILS FOR THE RETAINING WALLS SHALL BE PROOF ROLLED IN ACCORDANCE WITH SPECIFICATION ITEM 423

EMBANKMENT BACKFILL UNDER ITEM 423 SHALL BE TYPE "A" MATERIAL.

DURING CONSTRUCTION OF RETAINING WALLS CONTRACTOR SHALL TAKE ADEQUATE PRECAUTIONS TO PROTECT EMBANKMENT BACKFILL AND EXCAVATION AREAS WITH TEMPORARY SHORING OR OTHER METHODS APPROVED BY THE ENGINEER.

△B.M. & HORIZONTAL DATA

B.M. # US 281-21
ELEV. = 98.66
STA. = 655+88.78, 173.20' LT
3 -" TXDOT ALUMINUM DISK

SHEET TOTALS

ITEM	EST.	FINAL	UNIT	DESCRIPTION
423	10,370		SF	RETAINING WALL (MSE)
432	18.40		CY	RIP RAP CL.B CONCRETE
450	494.37		LF	SINGLE SLOPE TRAFFIC RAILING

RETAINING WALL "C" TOP & BOTTOM FRONT FACE

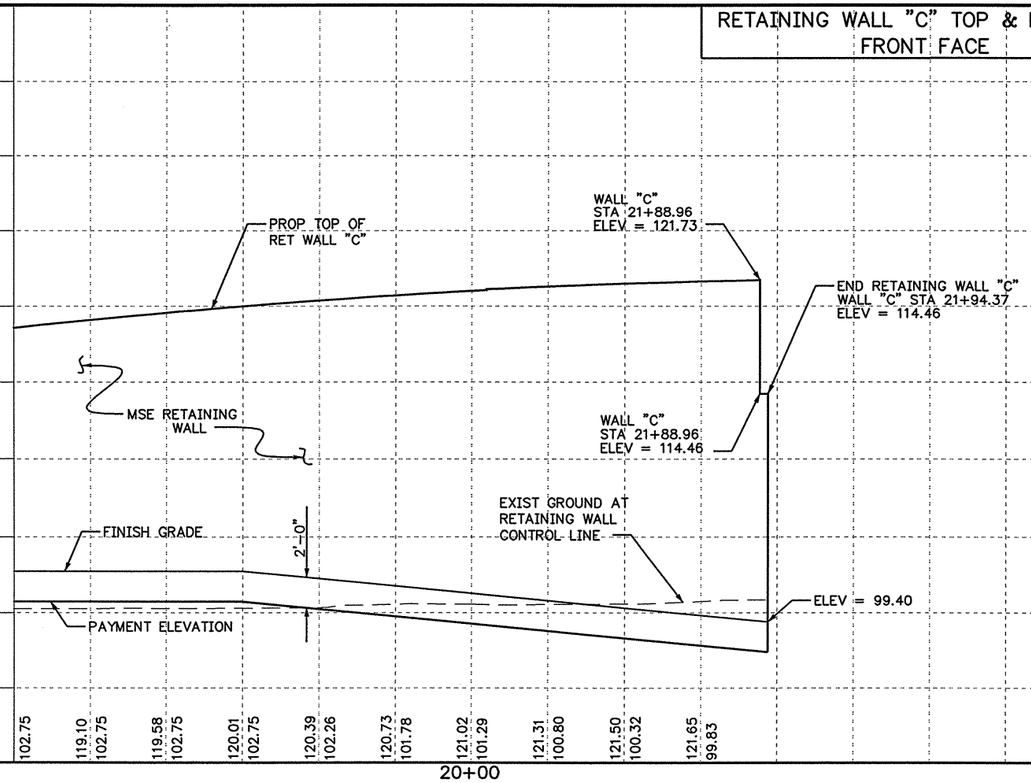

NOTE:
a) SOIL AREA ALONG THE RETAINING WALL AND BELOW THE LEVELING PAD AND BACKFILL SHALL BE REPLACED WITH SELECT FILL APPROVED BY THE ENGINEER. THE SOIL AREA SHALL BE 5 ' DEEP AND 23 ' WIDE. THE HORIZONTAL WIDTH OF THE AREA SHALL BE FROM 5 FEET BEYOND THE LEVELING PAD TO THE EDGE OF THE BACKFILL BEHIND THE RETAINING WALLS. THE ESTIMATED QUANTITY FOR THIS ITEM IS 5094 CY. PAYMENT FOR THIS ITEM SHALL BE SUBSIDIARY TO PAY ITEM 423. REFER TO DETAIL "A" ON SHEET 468.
ANY SOILS THAT ARE FOUND TO BE UNSUITABLE SHALL BE REMOVED AND REPLACED, ADDITIONAL GEOTECHNICAL TESTING SHALL BE DONE AND APPROVED BY ENGINEER PRIOR TO BEGINING CONSTRUCTION.
b) CONTRACTOR SHALL ENSURE PROPER DRAINAGE AT ALL AREAS AROUND THE RETAINING WALLS.

LEGEND
- TOP OF WALL ELEV
- FINISHED GRADE ELEV
- EXIST NAT GROUND ELEV

THE SEAL APPEARING ON THIS DOCUMENT WAS AUTHORIZED BY DEEPAK MANGLORKAR, P.E. 89613 ON 8/19/2003.

STATE OF TEXAS
DEEPAK MANGLORKAR
89613
REGISTERED PROFESSIONAL ENGINEER

PB Parsons Brinckerhoff
Quade & Douglas Inc.

Texas Department of Transportation

© 2003 by TxDOT

US 281
RETAINING WALL "C"
PLAN & PROFILE

PLAN 1"= 100' HORIZ
PROFILE 1"= 10' VERT

SHEET 2 OF 2 | 281RPP05.DGN

DESIGNED: JA	FED. RD DIV. No.	STATE	FEDERAL AID PROJECT No.	HIGHWAY No.
CHECKED: JP	6	TEXAS		US 281

DRAWN:	STATE DISTRICT	COUNTY	CONTROL No.	SECTION No.	JOB No.	SHEET No.
CHECKED: JDH	PHARR	HIDALGO	0255	08	091	454

$FILE$

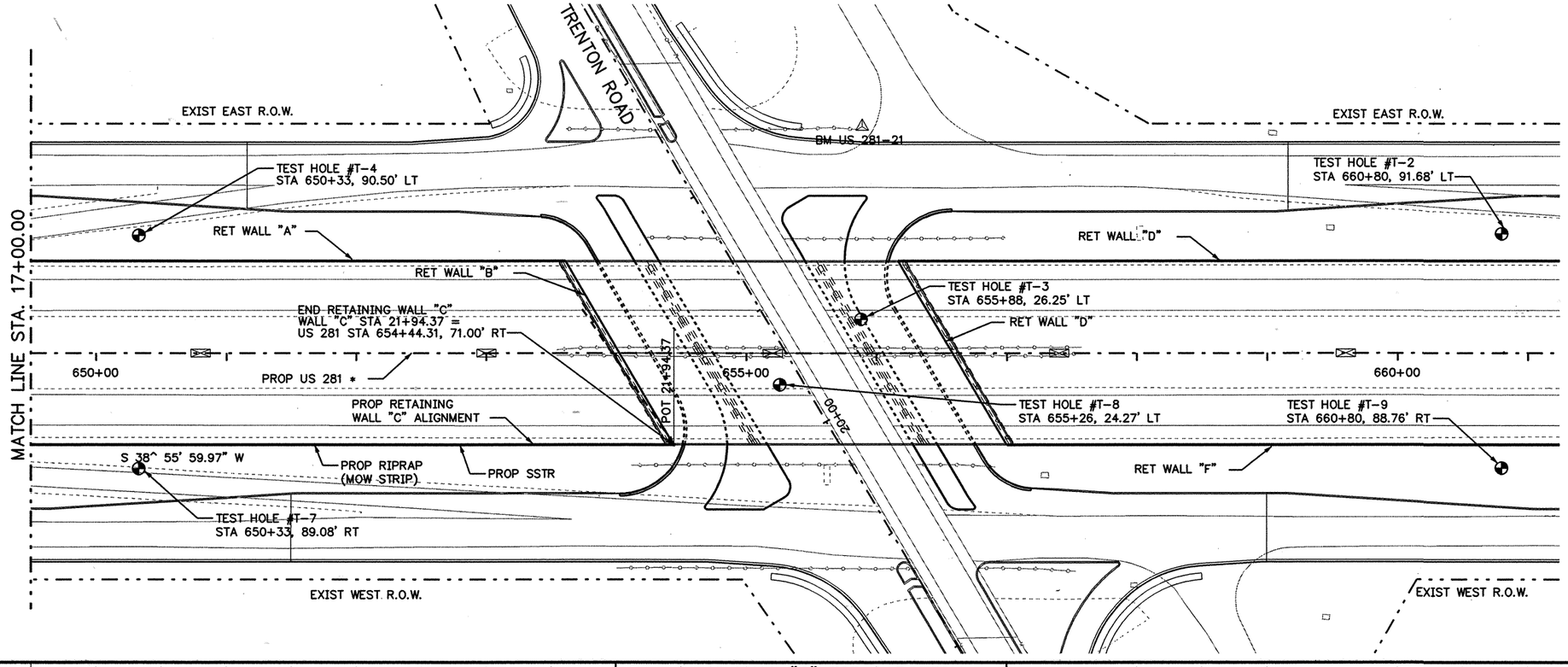

GENERAL NOTES:

FOR RIPRAP DETAILS, TYPICAL SECTIONS AND DRAINAGE DETAILS REFER TO RETAINING WALL TYPICAL SECTION AND DETAILS SHEET.

ALL RETAINING WALL PANELS SHALL HAVE ASHLAR STONE FINISH WITH COLOR (VIA CONCRETE ADMIXTURE) AS SHOWN ON "FORM LINER ARCHITECTURAL DETAILS". PANELS SHALL NOT BE PAINTED.

⊕ FOR TEST HOLE LOCATIONS AND LOG, REFER TO TEST HOLE DATA SHEETS.

SELECT BACKFILL UNDER ITEM 423 SHALL BE TYPE "A" MATERIAL.

TYPE "A" EMBANKMENT MATERIAL SHALL CONFORM TO THE FOLLOWING IN ACCORDANCE WITH TXDOT STANDARD SPECIFICATION ITEM 132 "EMBANKMENT", SECTION 132.2:
- LIQUID LIMIT SHALL NOT EXCEED 45
- PLASTICITY INDEX SHALL NOT EXCEED 15
- BAR LINEAR SHRINKAGE SHALL NOT BE LESS THAN 2

DURING CONSTRUCTION OF RETAINING WALLS CONTRACTOR SHALL TAKE ADEQUATE PRECAUTIONS TO PROTECT EMBANKMENT BACKFILL AND EXCAVATION AREAS WITH TEMPORARY SHORING OR OTHER METHODS APPROVED BY THE ENGINEER.

N

△B.M. & HORIZONTAL DATA

B.M. # US 281-21
ELEV. = 98.66
STA. = 655+88.78, 173.20' LT
3 -" TXDOT ALUMINUM DISK

SHEET TOTALS

ITEM	EST.	FINAL	UNIT	DESCRIPTION
423	10,370		SF	RETAINING WALL (MSE)
432	18.40		CY	RIP RAP CL.B CONCRETE
450	494.37		LF	SINGLE SLOPE TRAFFIC RAILING

RETAINING WALL "C" TOP & BOTTOM FRONT FACE

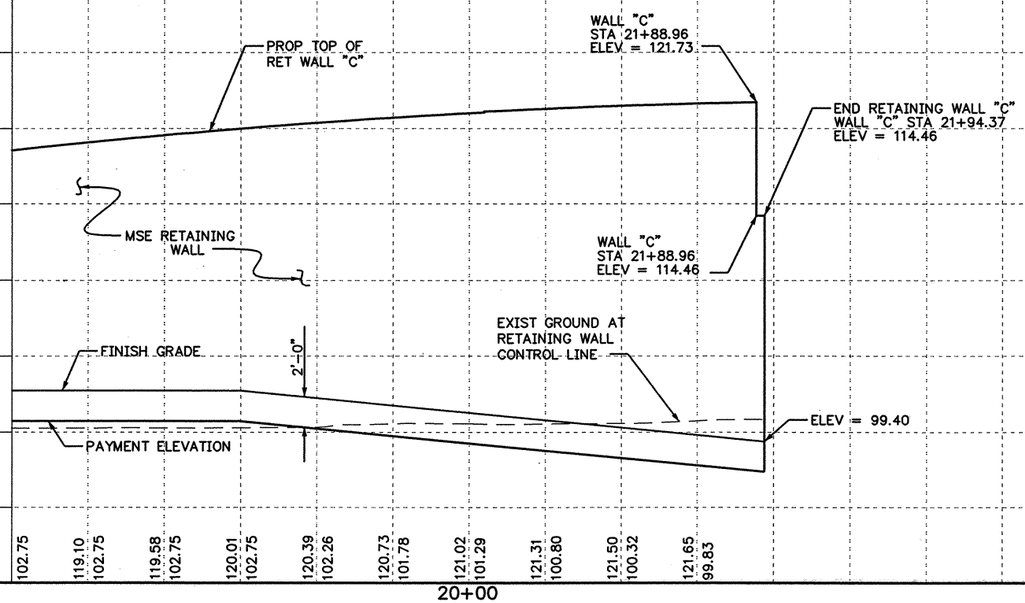

NOTE:
a) FOUNDATION SOILS FOR THE RETAINING WALLS SHALL BE PROOF ROLLED IN ACCORDANCE WITH SPECIFICATION ITEM 423. ANY SOILS THAT ARE FOUND TO BE UNSUITABLE SHALL BE REMOVED AND REPLACED. ADDITIONAL GEOTECHNICAL TESTING SHALL BE DONE AND APPROVED BY ENGINEER PRIOR TO BEGINING CONSTRUCTION.
b) CONTRACTOR SHALL ENSURE PROPER DRAINAGE AT ALL AREAS AROUND THE RETAINING WALLS.

LEGEND
- TOP OF WALL ELEV
- FINISHED GRADE ELEV
- EXIST NAT GROUND ELEV

REVISED 9-26-03

THE SEAL APPEARING ON THIS DOCUMENT WAS AUTHORIZED BY DEEPAK MANGLORKAR, P.E. 89613 ON 9/4/2003.

STATE OF TEXAS
DEEPAK MANGLORKAR
89613
REGISTERED PROFESSIONAL ENGINEER

D. Manglorkar

Parsons Brinckerhoff
Quade & Douglas Inc.

Texas Department of Transportation

© 2003 by TxDOT

US 281
RETAINING WALL "C"
PLAN & PROFILE

PLAN 1"= 100' HORIZ
PROFILE 1"= 10' VERT

SHEET 2 OF 2 — 281RPP05.DGN

DESIGNED: JA	FED. RD DIV. No.	STATE	FEDERAL AID PROJECT No.	HIGHWAY No.
CHECKED: JP	6	TEXAS		US 281

DRAWN:	STATE DISTRICT	COUNTY	CONTROL No.	SECTION No.	JOB No.	SHEET No.
CHECKED: JDH	PHARR	HIDALGO	0255	08	091	454

$NAME$ $TIME$ 9/4/2003 $FILE$

$NAME$

$TIME$

8/19/2003

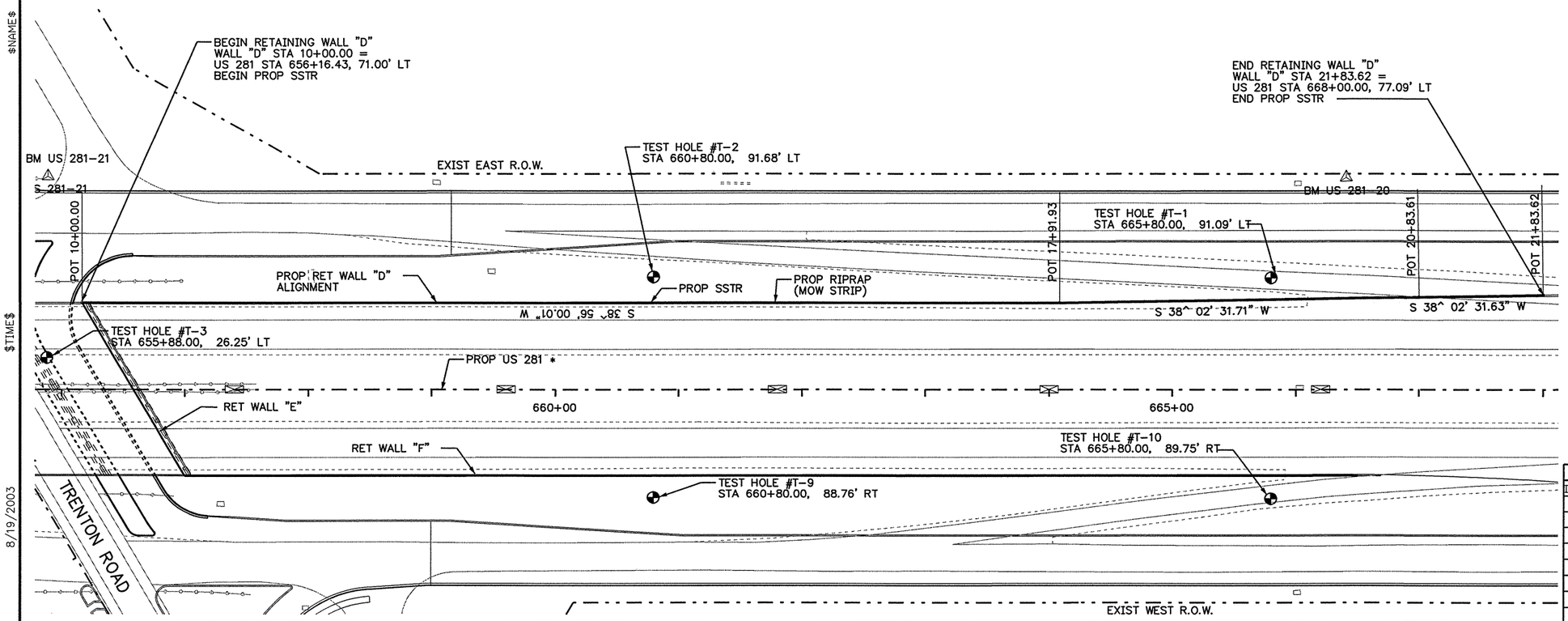

GENERAL NOTES:

FOR RIPRAP DETAILS, TYPICAL SECTIONS AND DRAINAGE DETAILS REFER TO RETAINING WALL TYPICAL SECTION AND DETAILS SHEET.

ALL RETAINING WALL PANELS SHALL HAVE ASHLAR STONE FINISH WITH COLOR (VIA CONCRETE ADMIXTURE) AS SHOWN ON "FORM LINER ARCHITECTURAL DETAILS". PANELS SHALL NOT BE PAINTED.

FOR TEST HOLE LOCATIONS AND LOG, REFER TO TEST HOLE DATA SHEETS.

FOUNDATION SOILS FOR THE RETAINING WALLS SHALL BE PROOF ROLLED IN ACCORDANCE WITH SPECIFICATION ITEM 423

EMBANKMENT BACKFILL UNDER ITEM 423 SHALL BE TYPE "A" MATERIAL.

DURING CONSTRUCTION OF RETAINING WALLS CONTRACTOR SHALL TAKE ADEQUATE PRECAUTIONS TO PROTECT EMBANKMENT BACKFILL AND EXCAVATION AREAS WITH TEMPORARY SHORING OR OTHER METHODS APPROVED BY THE ENGINEER.

△B.M. & HORIZONTAL DATA
B.M. # US 281-21
ELEV = 98.66
STA = 655+88.78, 173.20' LT
3 1/4 " TXDOT ALUMINUM DISK

SHEET TOTALS

ITEM	EST.	FINAL	UNIT	DESCRIPTION
423	18,890		SF	RETAINING WALL (MSE)
432	43.90		CY	RIP RAP CL.B CONCRETE
450	1183.62		LF	SINGLE SLOPE TRAFFIC RAILING

RETAINING WALL "D" TOP & BOTTOM BACK FACE

NOTE:
a) SOIL AREA ALONG THE RETAINING WALL AND BELOW THE LEVELING PAD AND BACKFILL SHALL BE REPLACED WITH SELECT FILL APPROVED BY THE ENGINEER. THE SOIL AREA SHALL BE 5 ' DEEP AND 23 WIDE. THE HORIZONTAL WIDTH OF THE AREA SHALL BE FROM 5 FEET BEYOND THE LEVELING PAD TO THE EDGE OF THE BACKFILL BEHIND THE RETAINING WALLS. THE ESTIMATED QUANTITY FOR THIS ITEM IS 5004 CY. PAYMENT FOR THIS ITEM SHALL BE SUBSIDIARY TO PAY ITEM 423. REFER TO DETAIL "A" ON SHEET 468.
ANY SOILS THAT ARE FOUND TO BE UNSUITABLE SHALL BE REMOVED AND REPLACED, ADDITIONAL GEOTECHNICAL TESTING SHALL BE DONE AND APPROVED BY ENGINEER PRIOR TO BEGINING CONSTRUCTION.
b) CONTRACTOR SHALL ENSURE PROPER DRAINAGE AT ALL AREAS AROUND THE RETAINING WALLS.

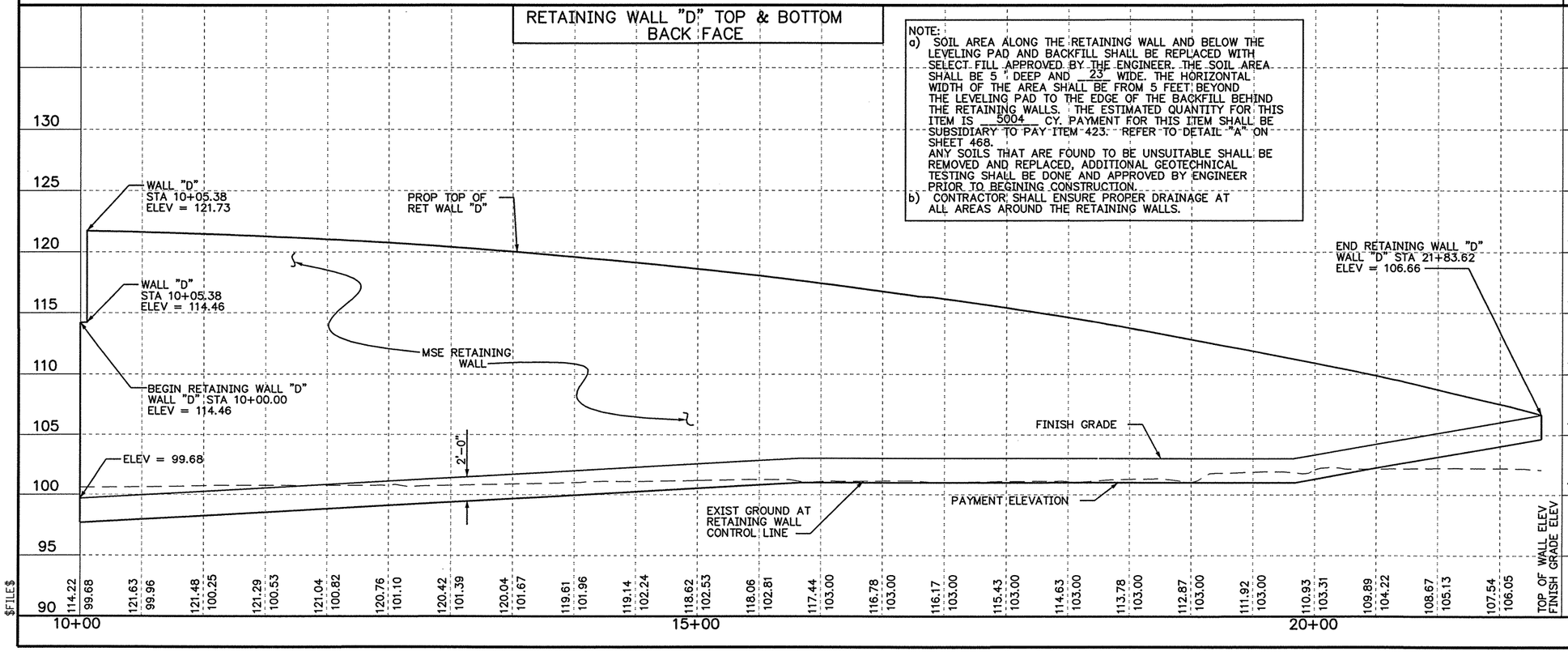

LEGEND
TOP OF WALL ELEV
FINISHED GRADE ELEV
EXIST NAT GROUND ELEV

THE SEAL APPEARING ON THIS DOCUMENT WAS AUTHORIZED BY DEEPAK MANGLORKAR, P.E. 89613 ON 8/19/2003.

STATE OF TEXAS
DEEPAK MANGLORKAR
89613
LICENSED
PROFESSIONAL ENGINEER

D. Manglorkar

Parsons Brinckerhoff
Quade & Douglas Inc.

Texas Department of Transportation

© 2003 by TxDOT

US 281
RETAINING WALL "D"
PLAN & PROFILE

PLAN 1"= 100' HORIZ
PROFILE 1"= 10' VERT

SHEET 1 OF 1 | 281RPP06.DGN

DESIGNED: JA	FED. RD DIV. No.	STATE	FEDERAL AID PROJECT No.		HIGHWAY No.	
CHECKED: JP	6	TEXAS			US 281	
DRAWN:	STATE DISTRICT	COUNTY	CONTROL No.	SECTION No.	JOB No.	SHEET No.
CHECKED: JDH	PHARR	HIDALGO	0255	08	091	455

$FILE$

$NAME$

$TIME$

9/4/2003

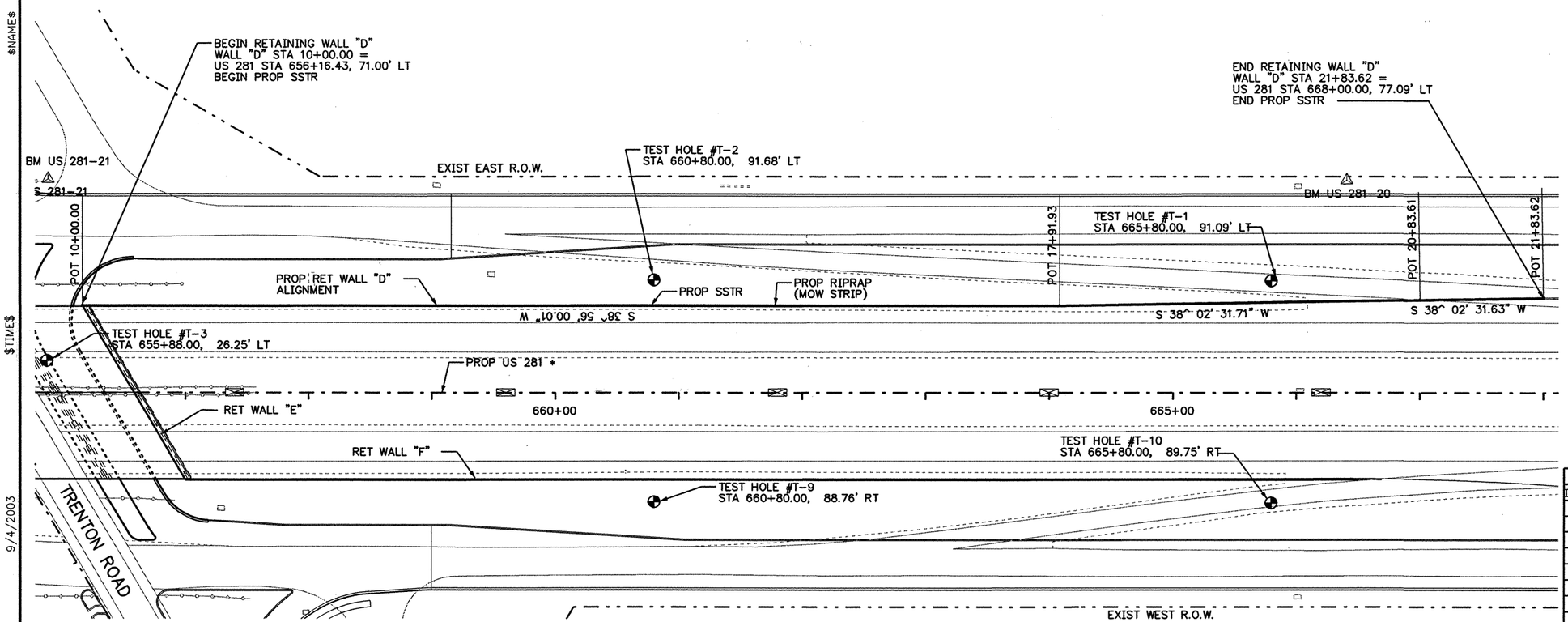

GENERAL NOTES:

FOR RIPRAP DETAILS, TYPICAL SECTIONS AND DRAINAGE DETAILS REFER TO RETAINING WALL TYPICAL SECTION AND DETAILS SHEET.

ALL RETAINING WALL PANELS SHALL HAVE ASHLAR STONE FINISH WITH COLOR (VIA CONCRETE ADMIXTURE) AS SHOWN ON "FORM LINER ARCHITECTURAL DETAILS". PANELS SHALL NOT BE PAINTED.

⊕ FOR TEST HOLE LOCATIONS AND LOG, REFER TO TEST HOLE DATA SHEETS.

SELECT BACKFILL UNDER ITEM 423 SHALL BE TYPE "A" MATERIAL.

TYPE "A" EMBANKMENT MATERIAL SHALL CONFORM TO THE FOLLOWING IN ACCORDANCE WITH TXDOT STANDARD SPECIFICATION ITEM 132 "EMBANKMENT", SECTION 132.2:
- LIQUID LIMIT SHALL NOT EXCEED 45
- PLASTICITY INDEX SHALL NOT EXCEED 15
- BAR LINEAR SHRINKAGE SHALL NOT BE LESS THAN 2

DURING CONSTRUCTION OF RETAINING WALLS CONTRACTOR SHALL TAKE ADEQUATE PRECAUTIONS TO PROTECT EMBANKMENT BACKFILL AND EXCAVATION AREAS WITH TEMPORARY SHORING OR OTHER METHODS APPROVED BY THE ENGINEER.

△B.M. & HORIZONTAL DATA
B.M. # US 281-21
ELEV = 98.66
STA = 655+88.78, 173.20' LT
3 1/4 " TXDOT ALUMINUM DISK

SHEET TOTALS

ITEM	EST.	FINAL	UNIT	DESCRIPTION
423	18,890		SF	RETAINING WALL (MSE)
432	43.90		CY	RIP RAP CL.B CONCRETE
450	1183.62		LF	SINGLE SLOPE TRAFFIC RAILING

RETAINING WALL "D" TOP & BOTTOM BACK FACE

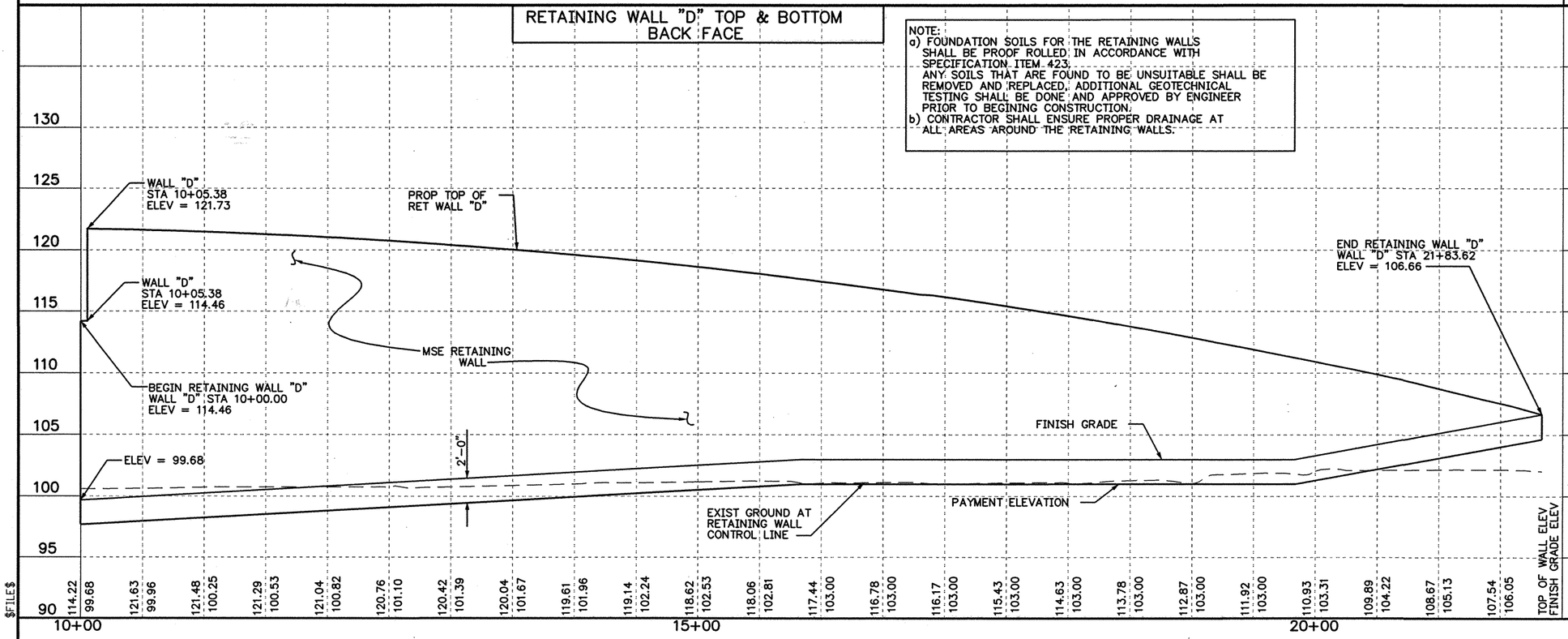

NOTE:
a) FOUNDATION SOILS FOR THE RETAINING WALLS SHALL BE PROOF ROLLED IN ACCORDANCE WITH SPECIFICATION ITEM 423. ANY SOILS THAT ARE FOUND TO BE UNSUITABLE SHALL BE REMOVED AND REPLACED. ADDITIONAL GEOTECHNICAL TESTING SHALL BE DONE AND APPROVED BY ENGINEER PRIOR TO BEGINING CONSTRUCTION.
b) CONTRACTOR SHALL ENSURE PROPER DRAINAGE AT ALL AREAS AROUND THE RETAINING WALLS.

LEGEND
- TOP OF WALL ELEV
- FINISHED GRADE ELEV
- EXIST NAT GROUND ELEV

REVISED 9-26-03

THE SEAL APPEARING ON THIS DOCUMENT WAS AUTHORIZED BY DEEPAK MANGLORKAR, P.E. 89613 ON 9/4/2003.

STATE OF TEXAS
DEEPAK MANGLORKAR
89613
REGISTERED
PROFESSIONAL ENGINEER

D. Manglorkar

Parsons Brinckerhoff
Quade & Douglas Inc.

Texas Department of Transportation

© 2003 by TxDOT

US 281
RETAINING WALL "D"
PLAN & PROFILE

PLAN 1"= 100' HORIZ
PROFILE 1"= 10' VERT

SHEET 1 OF 1 — 281RPP06.DGN

DESIGNED: JA	FED. RD DIV. No.	STATE	FEDERAL AID PROJECT No.			HIGHWAY No.	
CHECKED: JP	6	TEXAS				US 281	
DRAWN:	STATE DISTRICT	COUNTY	CONTROL No.	SECTION No.	JOB No.	SHEET No.	
CHECKED: JDH	PHARR	HIDALGO	0255	08	091	455	

$FILE$

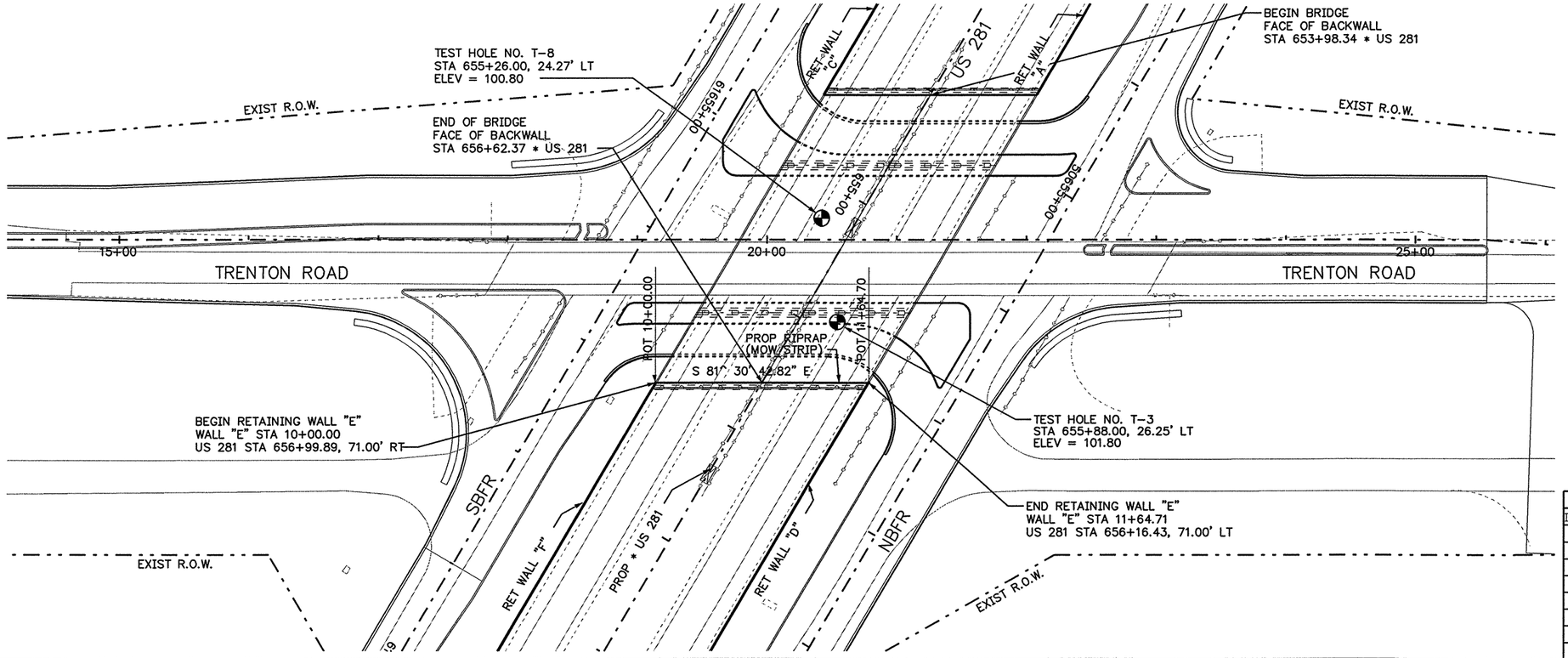

GENERAL NOTES:

FOR RIPRAP DETAILS, TYPICAL SECTIONS AND DRAINAGE DETAILS REFER TO RETAINING WALL TYPICAL SECTION AND DETAILS SHEET.

ALL RETAINING WALL PANELS SHALL HAVE ASHLAR STONE FINISH WITH COLOR (VIA CONCRETE ADMIXTURE) AS SHOWN ON "FORM LINER ARCHITECTURAL DETAILS". PANELS SHALL NOT BE PAINTED.

FOR TEST HOLE LOCATIONS AND LOG, REFER TO TEST HOLE DATA SHEETS.

FOUNDATION SOILS FOR THE RETAINING WALLS SHALL BE PROOF ROLLED IN ACCORDANCE WITH SPECIFICATION ITEM 423

EMBANKMENT BACKFILL UNDER ITEM 423 SHALL BE TYPE "A" MATERIAL.

DURING CONSTRUCTION OF RETAINING WALLS CONTRACTOR SHALL TAKE ADEQUATE PRECAUTIONS TO PROTECT EMBANKMENT BACKFILL AND EXCAVATION AREAS WITH TEMPORARY SHORING OR OTHER METHODS APPROVED BY THE ENGINEER.

N

⚠B.M. & HORIZONTAL DATA
B.M. # US 281-21
ELEV = 98.66
STA. = 655+88.78, 173.20' LT
3 ⌀" TXDOT ALUMINUM DISK

SHEET TOTALS

ITEM	EST.	FINAL	UNIT	DESCRIPTION
423	2,870		SF	RETAINING WALL (MSE)
432	6.10		CY	RIP RAP CL.B CONCRETE

NOTE:
a) SOIL AREA ALONG THE RETAINING WALL AND BELOW THE LEVELING PAD AND BACKFILL SHALL BE REPLACED WITH SELECT FILL APPROVED BY THE ENGINEER. THE SOIL AREA SHALL BE 5 ' DEEP AND 19' WIDE. THE HORIZONTAL WIDTH OF THE AREA SHALL BE FROM 5 FEET BEYOND THE LEVELING PAD TO THE EDGE OF THE BACKFILL BEHIND THE RETAINING WALLS. THE ESTIMATED QUANTITY FOR THIS ITEM IS 577 CY. PAYMENT FOR THIS ITEM SHALL BE SUBSIDIARY TO PAY ITEM 423. REFER TO DETAIL "A" ON SHEET 468.
ANY SOILS THAT ARE FOUND TO BE UNSUITABLE SHALL BE REMOVED AND REPLACED, ADDITIONAL GEOTECHNICAL TESTING SHALL BE DONE AND APPROVED BY ENGINEER PRIOR TO BEGINING CONSTRUCTION.
b) CONTRACTOR SHALL ENSURE PROPER DRAINAGE AT ALL AREAS AROUND THE RETAINING WALLS.

RETAINING WALL "E" TOP & BOTTOM BACK FACE

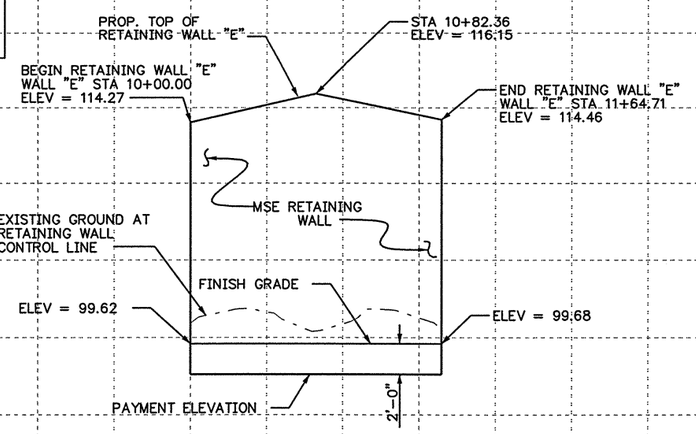

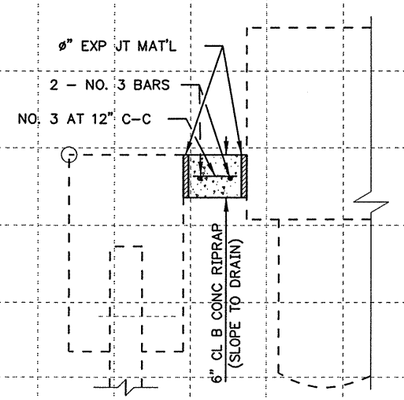

RIPRAP DETAIL TOP OF WALL
N.T.S.

ⓟ ASSUMED WIDTH OF COPING FOR LOCATION OF WALL. CONTRACTOR SHALL ADJUST LOCATION OF WALL BASED ON THE ACTUAL COPING WIDTH. (SUBSIDIARY TO ITEM 423)

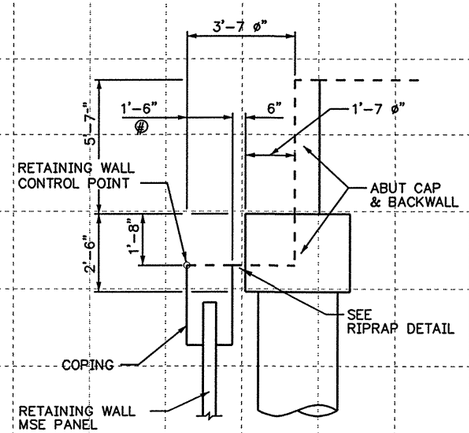

RETAINING WALL (MSE)
TYPICAL SECTION AT ABUTMENT

LEGEND
TOP OF WALL ELEV
FINISHED GRADE ELEV
EXIST NAT GROUND ELEV

THE SEAL APPEARING ON THIS DOCUMENT WAS AUTHORIZED BY DEEPAK MANGLORKAR, P.E. 89613 ON 8/19/2003.

STATE OF TEXAS
DEEPAK MANGLORKAR
89613
REGISTERED
PROFESSIONAL ENGINEER

Parsons Brinckerhoff
Quade & Douglas Inc.

Texas Department of Transportation
© 2003 by TxDOT

US 281
RETAINING WALL "E"
PLAN & PROFILE

PLAN 1"= 100' HORIZ
PROFILE 1"= 10' VERT

SHEET 1 OF 1 | 281RPP08.DGN

DESIGNED: JA	FED. RD DIV. No.	STATE	FEDERAL AID PROJECT No.	HIGHWAY No.
CHECKED: JP	6	TEXAS		US 281

DRAWN:	STATE DISTRICT	COUNTY	CONTROL No.	SECTION No.	JOB No.	SHEET No.
CHECKED: JDH	PHARR	HIDALGO	0255	08	091	456

$NAME$

$TIME$

9/4/2003

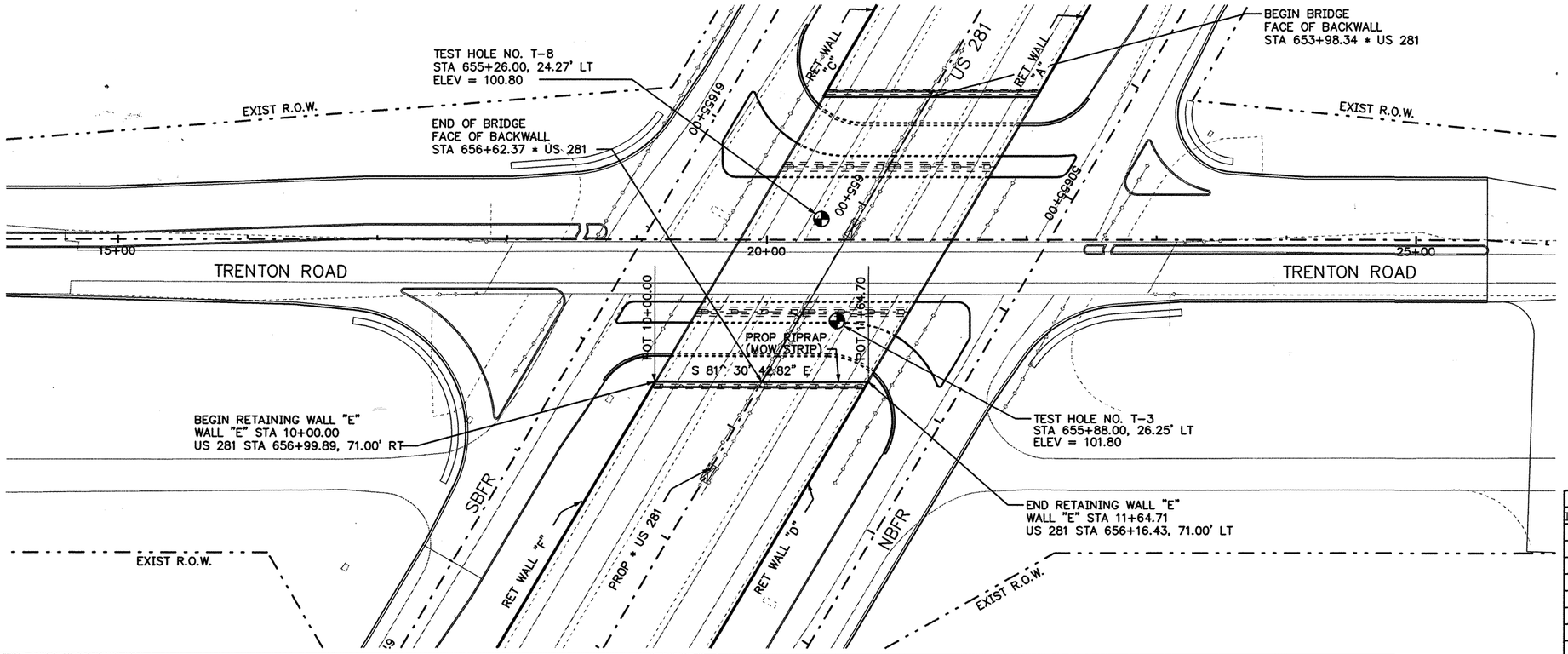

GENERAL NOTES:

FOR RIPRAP DETAILS, TYPICAL SECTIONS AND DRAINAGE DETAILS REFER TO RETAINING WALL TYPICAL SECTION AND DETAILS SHEET.

ALL RETAINING WALL PANELS SHALL HAVE ASHLAR STONE FINISH WITH COLOR (VIA CONCRETE ADMIXTURE) AS SHOWN ON "FORM LINER ARCHITECTURAL DETAILS". PANELS SHALL NOT BE PAINTED.

FOR TEST HOLE LOCATIONS AND LOG, REFER TO TEST HOLE DATA SHEETS.

SELECT BACKFILL UNDER ITEM 423 SHALL BE TYPE "A" MATERIAL.

TYPE "A" EMBANKMENT MATERIAL SHALL CONFORM TO THE FOLLOWING IN ACCORDANCE WITH TXDOT STANDARD SPECIFICATION ITEM 132 "EMBANKMENT", SECTION 132.2:
- LIQUID LIMIT SHALL NOT EXCEED 45
- PLASTICITY INDEX SHALL NOT EXCEED 15
- BAR LINEAR SHRINKAGE SHALL NOT BE LESS THAN 2

DURING CONSTRUCTION OF RETAINING WALLS CONTRACTOR SHALL TAKE ADEQUATE PRECAUTIONS TO PROTECT EMBANKMENT BACKFILL AND EXCAVATION AREAS WITH TEMPORARY SHORING OR OTHER METHODS APPROVED BY THE ENGINEER.

△B.M. & HORIZONTAL DATA

B.M. # US 281-21
ELEV = 98.66
STA = 655+88.78, 173.20' LT
3 -" TXDOT ALUMINUM DISK

SHEET TOTALS

ITEM	EST.	FINAL	UNIT	DESCRIPTION
423	2,870		SF	RETAINING WALL (MSE)
432	6.10		CY	RIP RAP CL.B CONCRETE

NOTE:
a) FOUNDATION SOILS FOR THE RETAINING WALLS SHALL BE PROOF ROLLED IN ACCORDANCE WITH SPECIFICATION ITEM 423. ANY SOILS THAT ARE FOUND TO BE UNSUITABLE SHALL BE REMOVED AND REPLACED. ADDITIONAL GEOTECHNICAL TESTING SHALL BE DONE AND APPROVED BY ENGINEER PRIOR TO BEGINING CONSTRUCTION.
b) CONTRACTOR SHALL ENSURE PROPER DRAINAGE AT ALL AREAS AROUND THE RETAINING WALLS.

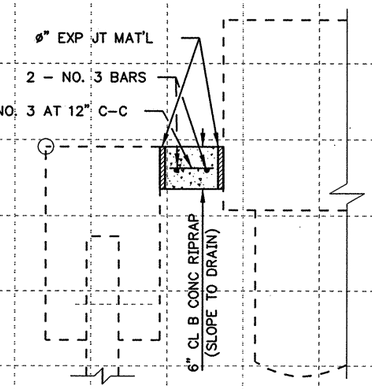

RIPRAP DETAIL TOP OF WALL
N.T.S.

RETAINING WALL "E" TOP & BOTTOM BACK FACE

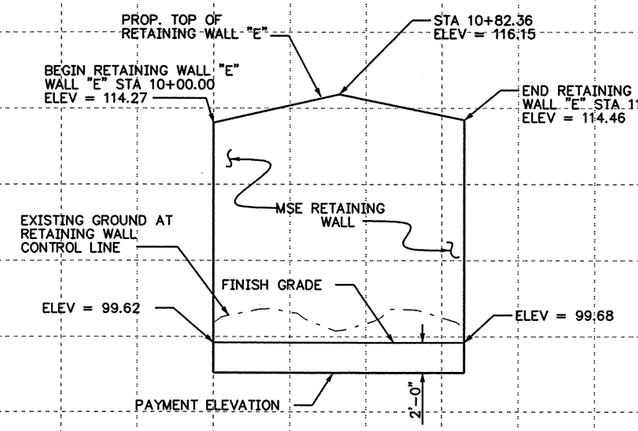

Ⓟ ASSUMED WIDTH OF COPING FOR LOCATION OF WALL. CONTRACTOR SHALL ADJUST LOCATION OF WALL BASED ON THE ACTUAL COPING WIDTH. (SUBSIDIARY TO ITEM 423)

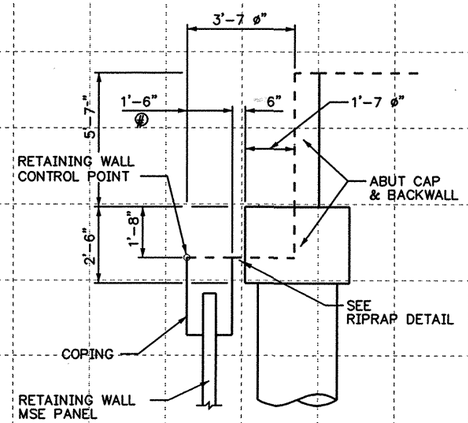

RETAINING WALL (MSE)
TYPICAL SECTION AT ABUTMENT

LEGEND
- TOP OF WALL ELEV
- FINISHED GRADE ELEV
- EXIST NAT GROUND ELEV

REVISED 9-26-03

THE SEAL APPEARING ON THIS DOCUMENT WAS AUTHORIZED BY DEEPAK MANGLORKAR, P.E. 89613 ON 9/4/2003 .

STATE OF TEXAS
DEEPAK MANGLORKAR
89613
REGISTERED PROFESSIONAL ENGINEER

D. Manglorkar

Parsons Brinckerhoff Quade & Douglas Inc.

Texas Department of Transportation

© 2003 by TxDOT

US 281
RETAINING WALL "E"
PLAN & PROFILE

PLAN 1"= 100' HORIZ
PROFILE 1"= 10' VERT

SHEET 1 OF 1 — 281RPP08.DGN

DESIGNED: JA	FED. RD DIV. No.	STATE	FEDERAL AID PROJECT No.		HIGHWAY No.
CHECKED: JP	6	TEXAS			US 281
DRAWN:	STATE DISTRICT	COUNTY	CONTROL No.	SECTION No.	JOB No.	SHEET No.
CHECKED: JDH	PHARR	HIDALGO	0255	08	091	456

$FILE$

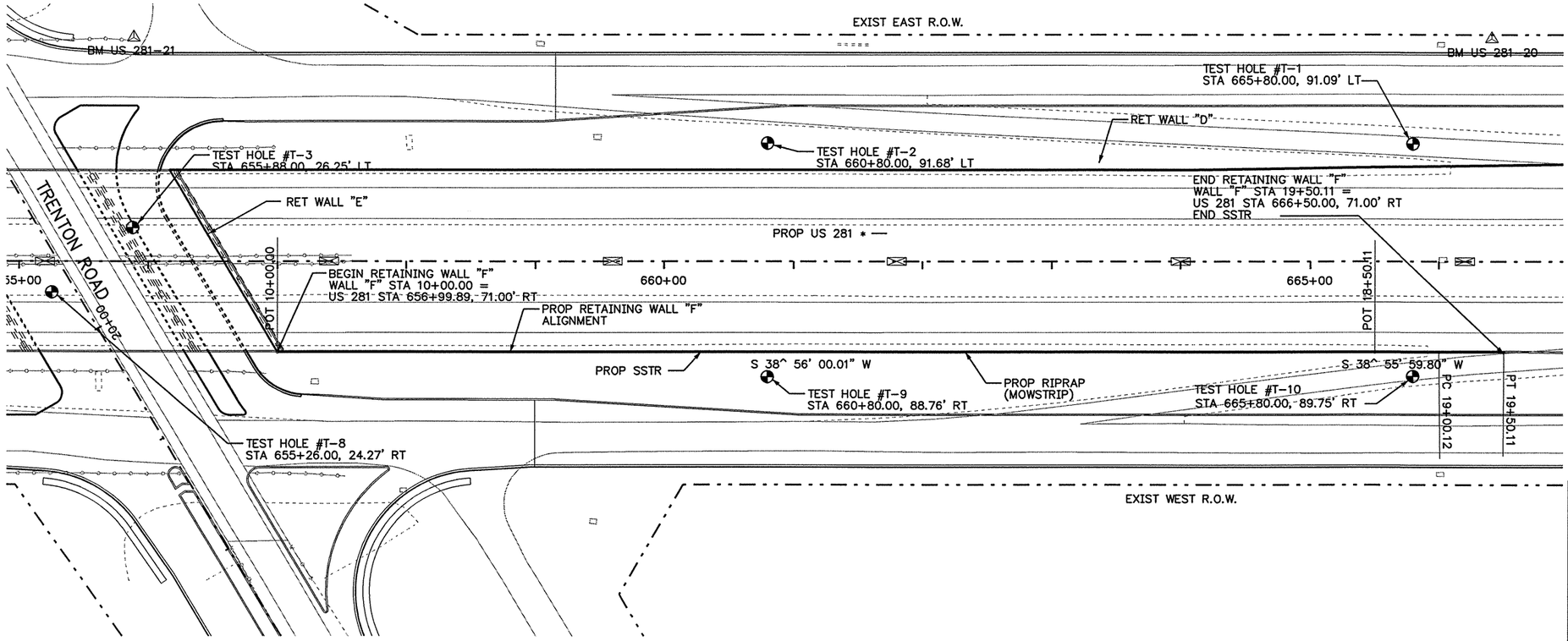

GENERAL NOTES:

FOR RIPRAP DETAILS, TYPICAL SECTIONS AND DRAINAGE DETAILS REFER TO RETAINING WALL TYPICAL SECTION AND DETAILS SHEET.

ALL RETAINING WALL PANELS SHALL HAVE ASHLAR STONE FINISH WITH COLOR (VIA CONCRETE ADMIXTURE) AS SHOWN ON "FORM LINER ARCHITECTURAL DETAILS". PANELS SHALL NOT BE PAINTED.

FOR TEST HOLE LOCATIONS AND LOG, REFER TO TEST HOLE DATA SHEETS.

FOUNDATION SOILS FOR THE RETAINING WALLS SHALL BE PROOF ROLLED IN ACCORDANCE WITH SPECIFICATION ITEM 423

EMBANKMENT BACKFILL UNDER ITEM 423 SHALL BE TYPE "A" MATERIAL.

DURING CONSTRUCTION OF RETAINING WALLS CONTRACTOR SHALL TAKE ADEQUATE PRECAUTIONS TO PROTECT EMBANKMENT BACKFILL AND EXCAVATION AREAS WITH TEMPORARY SHORING OR OTHER METHODS APPROVED BY THE ENGINEER.

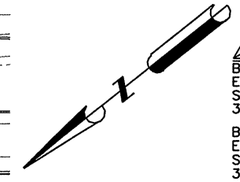

B.M. & HORIZONTAL DATA

B.M. # US 281-21
ELEV = 98.66
STA = 655+88.78, 173.20' LT
3 -" TXDOT ALUMINUM DISK

B.M. # US 281-20
ELEV = 98.51
STA = 666+40.54, 172.14' LT
3 -" TXDOT ALUMINUM DISK

SHEET TOTALS

ITEM	EST.	FINAL	UNIT	DESCRIPTION
423	14,492		SF	RETAINING WALL (MSE)
432	35.20		CY	RIPRAP CL.B CONCRETE
450	950.11		LF	SINGLE SLOPE TRAFFIC RAILING

RETAINING WALL "F" TOP & BOTTOM FRONT FACE

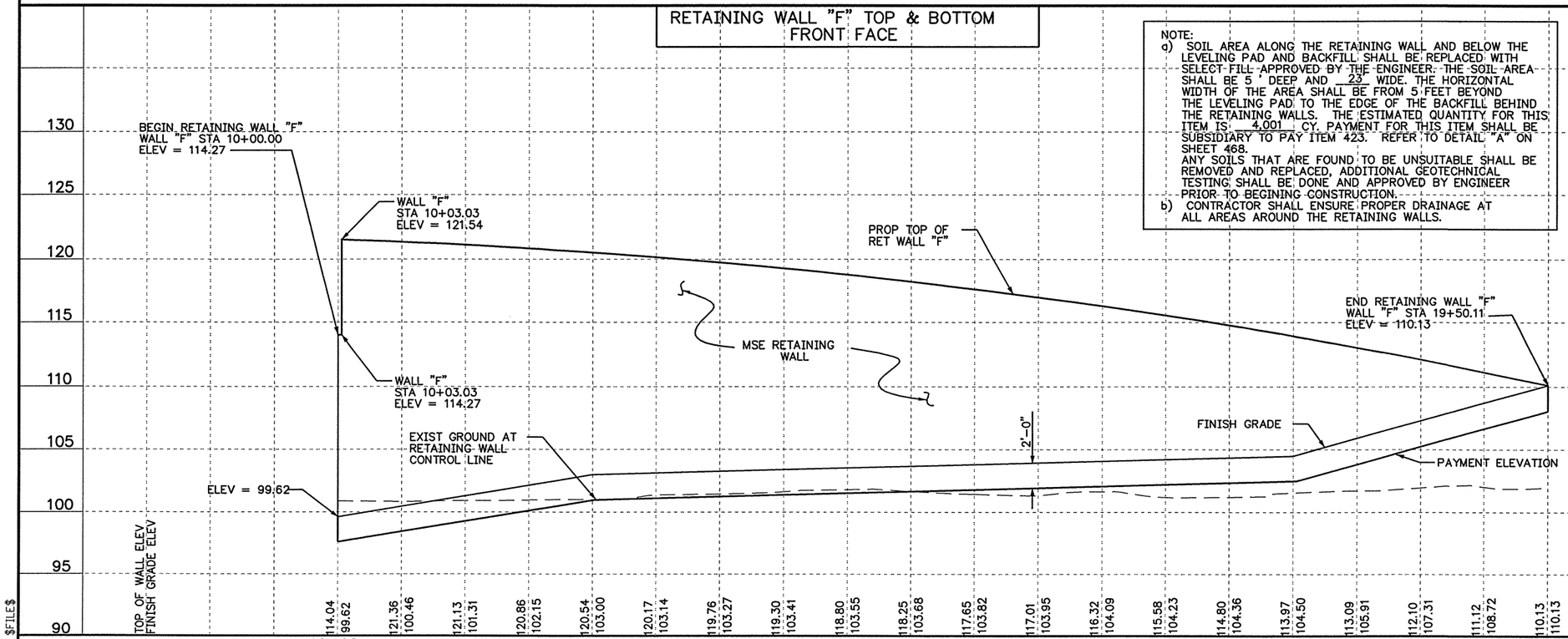

NOTE:
a) SOIL AREA ALONG THE RETAINING WALL AND BELOW THE LEVELING PAD AND BACKFILL SHALL BE REPLACED WITH SELECT FILL APPROVED BY THE ENGINEER. THE SOIL AREA SHALL BE 5 ' DEEP AND 23 WIDE. THE HORIZONTAL WIDTH OF THE AREA SHALL BE FROM 5 FEET BEYOND THE LEVELING PAD TO THE EDGE OF THE BACKFILL BEHIND THE RETAINING WALLS. THE ESTIMATED QUANTITY FOR THIS ITEM IS: 4,001 CY. PAYMENT FOR THIS ITEM SHALL BE SUBSIDIARY TO PAY ITEM 423. REFER TO DETAIL "A" ON SHEET 468.
ANY SOILS THAT ARE FOUND TO BE UNSUITABLE SHALL BE REMOVED AND REPLACED, ADDITIONAL GEOTECHNICAL TESTING SHALL BE DONE AND APPROVED BY ENGINEER PRIOR TO BEGINING CONSTRUCTION.
b) CONTRACTOR SHALL ENSURE PROPER DRAINAGE AT ALL AREAS AROUND THE RETAINING WALLS.

LEGEND
- TOP OF WALL ELEV
- FINISHED GRADE ELEV
- EXIST NAT GROUND ELEV

THE SEAL APPEARING ON THIS DOCUMENT WAS AUTHORIZED BY DEEPAK MANGLORKAR, P.E. 89613 ON 8/19/2003.

STATE OF TEXAS
DEEPAK MANGLORKAR
89613
LICENSED PROFESSIONAL ENGINEER

Parsons Brinckerhoff
Quade & Douglas Inc.

Texas Department of Transportation
© 2003 by TxDOT

US 281
RETAINING WALL "F"
PLAN & PROFILE

PLAN 1"= 100' HORIZ
PROFILE 1"= 10' VERT

SHEET 1 OF 1 — 281RPP09.DGN

DESIGNED: JA	FED. RD DIV. No.	STATE	FEDERAL AID PROJECT No.	HIGHWAY No.
CHECKED: JP	6	TEXAS		US 281

DRAWN:	STATE DISTRICT	COUNTY	CONTROL No.	SECTION No.	JOB No.	SHEET No.
CHECKED: JDH	PHARR	HIDALGO	0255	08	091	457

$NAME$ $TIME$ 8/19/2003 $FILE$

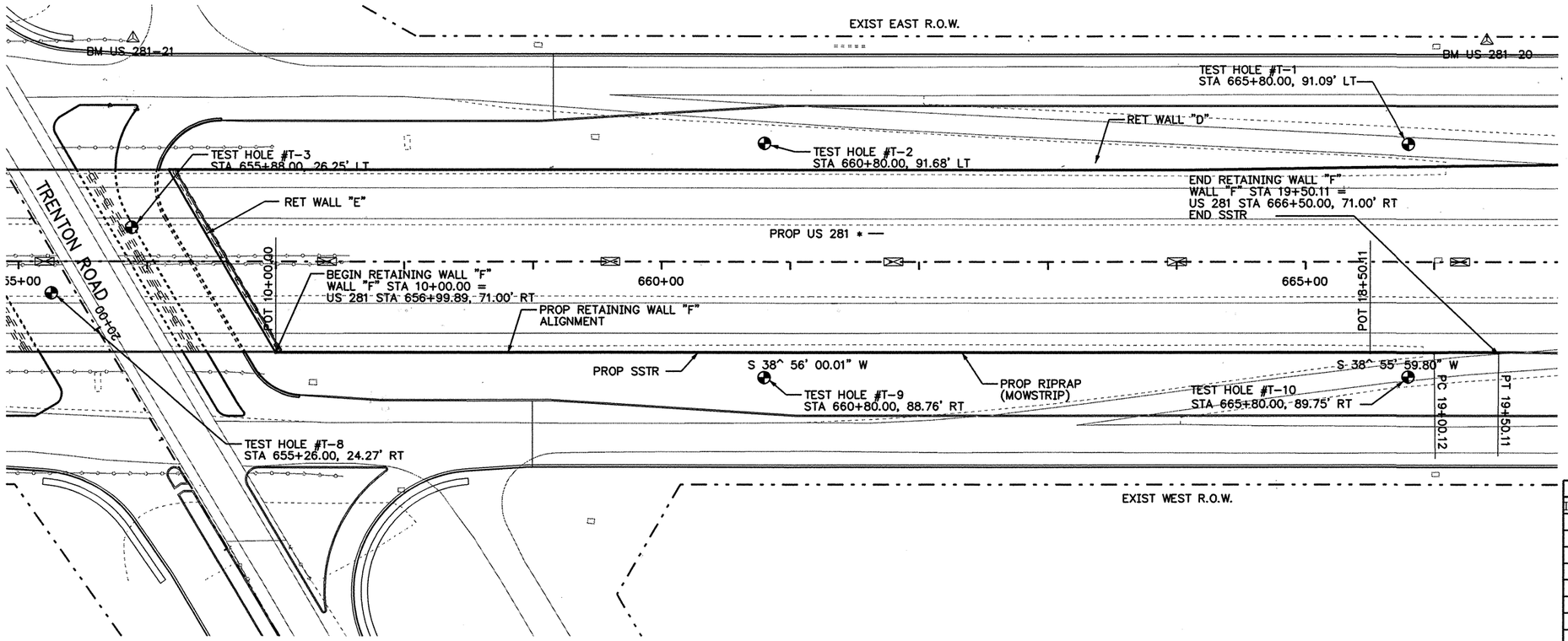

GENERAL NOTES:

FOR RIPRAP DETAILS, TYPICAL SECTIONS AND DRAINAGE DETAILS REFER TO RETAINING WALL TYPICAL SECTION AND DETAILS SHEET.

ALL RETAINING WALL PANELS SHALL HAVE ASHLAR STONE FINISH WITH COLOR (VIA CONCRETE ADMIXTURE) AS SHOWN ON "FORM LINER ARCHITECTURAL DETAILS". PANELS SHALL NOT BE PAINTED.

FOR TEST HOLE LOCATIONS AND LOG, REFER TO TEST HOLE DATA SHEETS.

SELECT BACKFILL UNDER ITEM 423 SHALL BE TYPE "A" MATERIAL.

TYPE "A" EMBANKMENT MATERIAL SHALL CONFORM TO THE FOLLOWING IN ACCORDANCE WITH TXDOT STANDARD SPECIFICATION ITEM 132 "EMBANKMENT", SECTION 132.2:
- LIQUID LIMIT SHALL NOT EXCEED 45
- PLASTICITY INDEX SHALL NOT EXCEED 15
- BAR LINEAR SHRINKAGE SHALL NOT BE LESS THAN 2

DURING CONSTRUCTION OF RETAINING WALLS CONTRACTOR SHALL TAKE ADEQUATE PRECAUTIONS TO PROTECT EMBANKMENT BACKFILL AND EXCAVATION AREAS WITH TEMPORARY SHORING OR OTHER METHODS APPROVED BY THE ENGINEER.

B.M. & HORIZONTAL DATA

B.M. # US 281-21
ELEV = 98.66
STA = 655+88.78, 173.20' LT
3 -" TXDOT ALUMINUM DISK
B.M. # US 281-20
ELEV = 98.51
STA = 666+40.54, 172.14' LT
3 -" TXDOT ALUMINUM DISK

SHEET TOTALS

ITEM	EST.	FINAL	UNIT	DESCRIPTION
423	14,492		SF	RETAINING WALL (MSE)
432	35.20		CY	RIPRAP CL.B CONCRETE
450	950.11		LF	SINGLE SLOPE TRAFFIC RAILING

RETAINING WALL "F" TOP & BOTTOM FRONT FACE

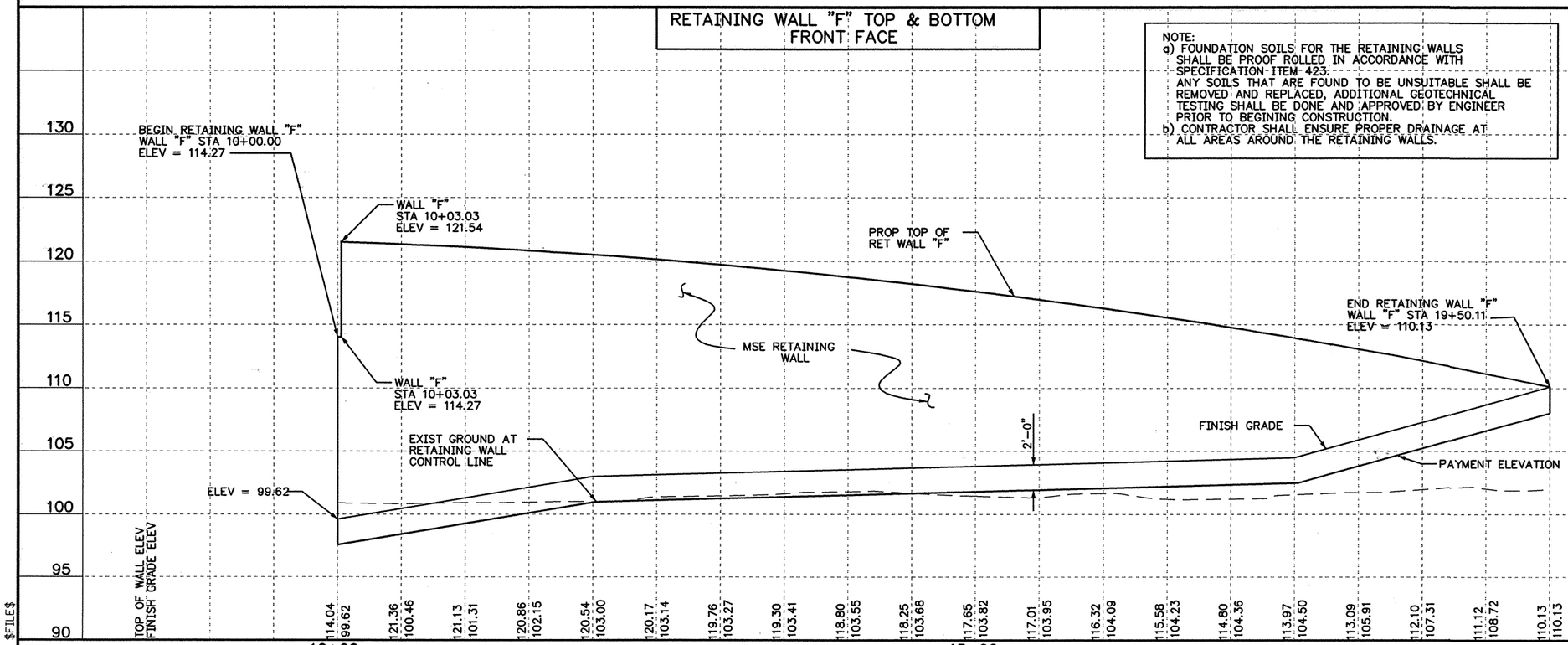

NOTE:
a) FOUNDATION SOILS FOR THE RETAINING WALLS SHALL BE PROOF ROLLED IN ACCORDANCE WITH SPECIFICATION ITEM 423.
ANY SOILS THAT ARE FOUND TO BE UNSUITABLE SHALL BE REMOVED AND REPLACED, ADDITIONAL GEOTECHNICAL TESTING SHALL BE DONE AND APPROVED BY ENGINEER PRIOR TO BEGINING CONSTRUCTION.
b) CONTRACTOR SHALL ENSURE PROPER DRAINAGE AT ALL AREAS AROUND THE RETAINING WALLS.

LEGEND
- TOP OF WALL ELEV
- FINISHED GRADE ELEV
- EXIST NAT GROUND ELEV

REVISED 9-26-03

THE SEAL APPEARING ON THIS DOCUMENT WAS AUTHORIZED BY DEEPAK MANGLORKAR, P.E. 89613 ON 9/4/2003

STATE OF TEXAS
DEEPAK MANGLORKAR
89613
REGISTERED PROFESSIONAL ENGINEER

Parsons Brinckerhoff
Quade & Douglas Inc.

Texas Department of Transportation

© 2003 by TxDOT

US 281
RETAINING WALL "F"
PLAN & PROFILE

PLAN 1"= 100' HORIZ
PROFILE 1"= 10' VERT

SHEET 1 OF 1				281RPP09.DGN			
DESIGNED: JA	FED. RD DIV. No.	STATE	FEDERAL AID PROJECT No.			HIGHWAY No.	
CHECKED: JP	6	TEXAS				US 281	
DRAWN:	STATE DISTRICT	COUNTY	CONTROL No.	SECTION No.	JOB No.	SHEET No.	
CHECKED: JDH	PHARR	HIDALGO	0255	08	091	457	

$NAME$
$TIME$
9/4/2003
$FILE$

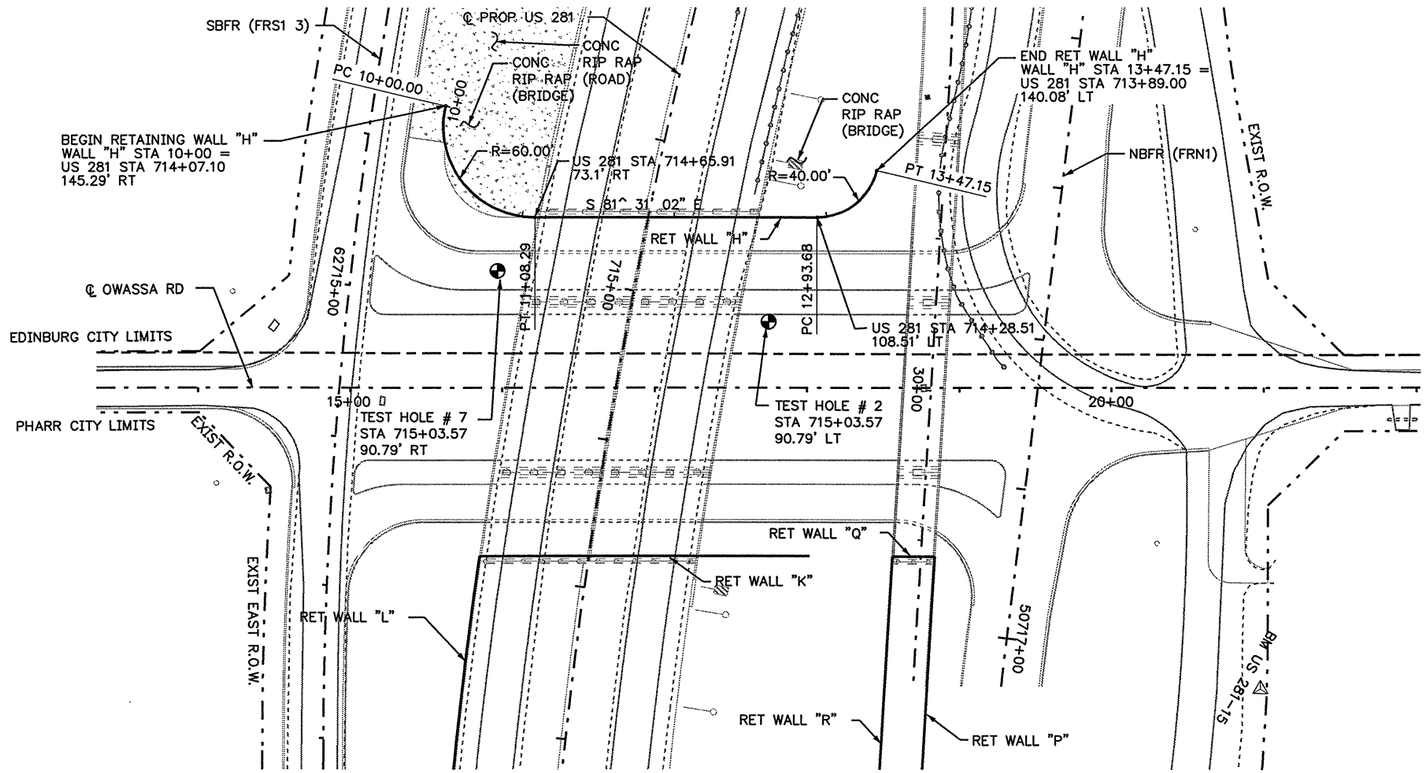

GENERAL NOTES:

FOR RIPRAP DETAILS, TYPICAL SECTIONS AND DRAINAGE DETAILS REFER TO RETAINING WALL TYPICAL SECTION AND DETAILS SHEET.

ALL RETAINING WALL PANELS SHALL HAVE ASHLAR STONE FINISH WITH COLOR (VIA CONCRETE ADMIXTURE) AS SHOWN ON "FORM LINER ARCHITECTURAL DETAILS". PANELS SHALL NOT BE PAINTED.

⊕ FOR TEST HOLE LOCATIONS AND LOG, REFER TO TEST HOLE DATA SHEETS.

FOUNDATION SOILS FOR THE RETAINING WALLS SHALL BE PROOF ROLLED IN ACCORDANCE WITH SPECIFICATION ITEM 423

EMBANKMENT BACKFILL UNDER ITEM 423 SHALL BE TYPE "A" MATERIAL.

DURING CONSTRUCTION OF RETAINING WALLS CONTRACTOR SHALL TAKE ADEQUATE PRECAUTIONS TO PROTECT EMBANKMENT BACKFILL AND EXCAVATION AREAS WITH TEMPORARY SHORING OR OTHER METHODS APPROVED BY THE ENGINEER.

SHEET TOTALS

ITEM	EST.	FINAL	UNIT	DESCRIPTION
423	5,625		SF	RETAINING WALL (MSE)

NOTE:
a) SOIL AREA ALONG THE RETAINING WALL AND BELOW THE LEVELING PAD AND BACKFILL SHALL BE REPLACED WITH SELECT FILL APPROVED BY THE ENGINEER. THE SOIL AREA SHALL BE 5 ' DEEP AND 23 WIDE. THE HORIZONTAL WIDTH OF THE AREA SHALL BE FROM 5 FEET BEYOND THE LEVELING PAD TO THE EDGE OF THE BACKFILL BEHIND THE RETAINING WALLS. THE ESTIMATED QUANTITY FOR THIS ITEM IS 1,497 CY. PAYMENT FOR THIS ITEM SHALL BE SUBSIDIARY TO PAY ITEM 423. REFER TO DETAIL "A" ON SHEET 468.
ANY SOILS THAT ARE FOUND TO BE UNSUITABLE SHALL BE REMOVED AND REPLACED. ADDITIONAL GEOTECHNICAL TESTING SHALL BE DONE AND APPROVED BY ENGINEER PRIOR TO BEGINING CONSTRUCTION.
b) CONTRACTOR SHALL ENSURE PROPER DRAINAGE AT ALL AREAS AROUND THE RETAINING WALLS.
c) EXCAVATION AREAS 20' BEHIND THE RETAINING WALL SHALL BE PROTECTED BY TEMPORARY SHORING. THE TEMPORARY SHORING IS ESTIMATED AT 6,246 SF. PAYMENT FOR THIS ITEM SHALL BE SUBSIDIARY TO PAY ITEM 423.
d) AREAS EXCAVATED 20' BEHIND THE RETAINING WALL SHALL BE BACKFILLED WITH TYPE A BACKFILL OR SELECT MATERIAL APPROVED BY THE ENGINEER. THE ESTIMATED QUANTITY FOR THIS BACKFILL IS 4,667 CY. PAYMENT FOR THIS ITEM SHALL BE SUBSIDIARY TO PAY ITEM 423.

RETAINING WALL "H" TOP & BOTTOM FRONT FACE

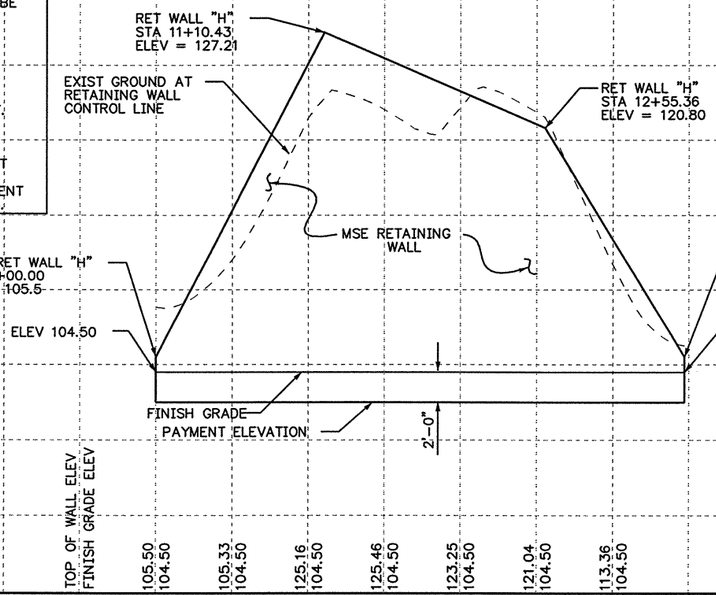

⊕ ASSUMED WIDTH OF COPING FOR LOCATION OF WALL. CONTRACTOR SHALL ADJUST LOCATION OF WALL BASED ON THE ACTUAL COPING WIDTH. (SUBSIDIARY TO ITEM 423)

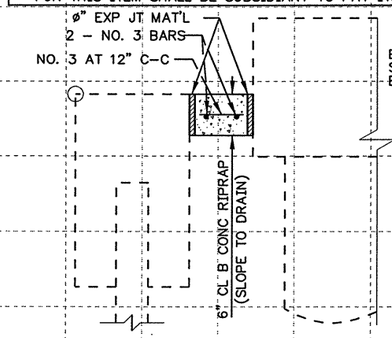

RIPRAP DETAIL TOP OF WALL
N.T.S.

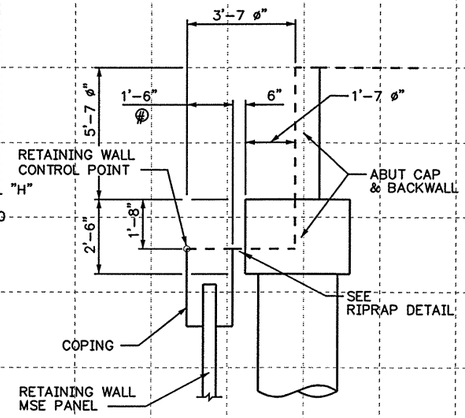

RETAINING WALL (MSE)
TYPICAL SECTION AT ABUTMENT

LEGEND
- TOP OF WALL ELEV
- FINISHED GRADE ELEV
- EXIST NAT GROUND ELEV

THE SEAL APPEARING ON THIS DOCUMENT WAS AUTHORIZED BY DEEPAK MANGLORKAR, P.E. 89613 ON 8/19/2003.

STATE OF TEXAS · DEEPAK MANGLORKAR · 89613 · REGISTERED PROFESSIONAL ENGINEER

Parsons Brinckerhoff Quade & Douglas Inc.

Texas Department of Transportation

© 2003 by TxDOT

US 281
RETAINING WALL "H"
PLAN & PROFILE

PLAN 1"= 100' HORIZ
PROFILE 1"= 10' VERT

SHEET 1 OF 1 | 281RPP12.DGN

DESIGNED: JA	FED. RD DIV. No.	STATE	FEDERAL AID PROJECT No.			HIGHWAY No.
CHECKED: JP	6	TEXAS				US 281
DRAWN:	STATE DISTRICT	COUNTY	CONTROL No.	SECTION No.	JOB No.	SHEET No.
CHECKED: JDH	PHARR	HIDALGO	0255	08	091	458

$NAME$ $TIME$ 8/19/2003 $FILE$

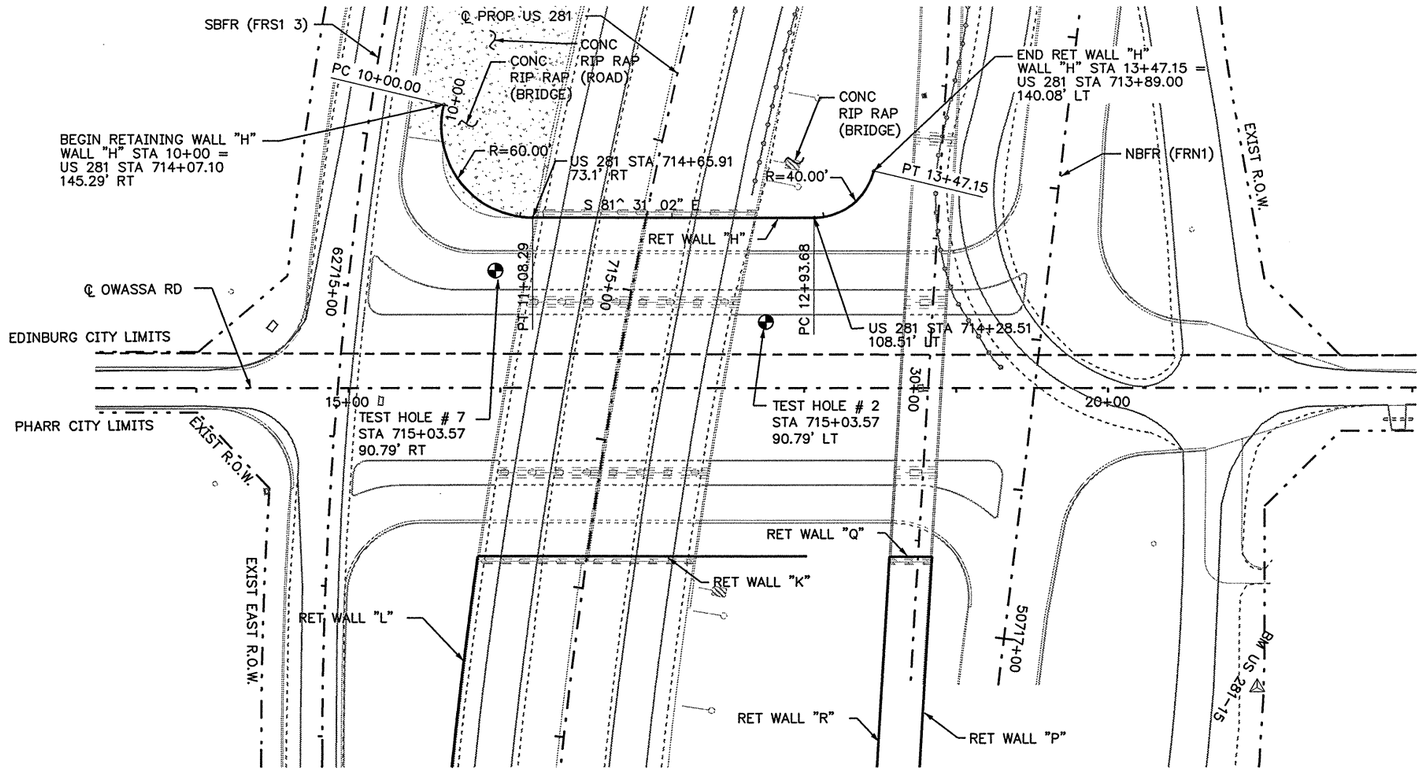

GENERAL NOTES:

FOR RIPRAP DETAILS, TYPICAL SECTIONS AND DRAINAGE DETAILS REFER TO RETAINING WALL TYPICAL SECTION AND DETAILS SHEET.

ALL RETAINING WALL PANELS SHALL HAVE ASHLAR STONE FINISH WITH COLOR (VIA CONCRETE ADMIXTURE) AS SHOWN ON "FORM LINER ARCHITECTURAL DETAILS". PANELS SHALL NOT BE PAINTED.

⊕ FOR TEST HOLE LOCATIONS AND LOG, REFER TO TEST HOLE DATA SHEETS.

EMBANKMENT BACKFILL UNDER ITEM 423 SHALL BE TYPE "A" MATERIAL.

TYPE "A" EMBANKMENT MATERIAL SHALL CONFORM TO THE FOLLOWING IN ACCORDANCE WITH TXDOT STANDARD SPECIFICATION ITEM 132 "EMBANKMENT", SECTION 132.2:
- LIQUID LIMIT SHALL NOT EXCEED 45
- PLASTICITY INDEX SHALL NOT EXCEED 15
- BAR LINEAR SHRINKAGE SHALL NOT BE LESS THAN 2

DURING CONSTRUCTION OF RETAINING WALLS CONTRACTOR SHALL TAKE ADEQUATE PRECAUTIONS TO PROTECT EMBANKMENT BACKFILL AND EXCAVATION AREAS WITH TEMPORARY SHORING OR OTHER METHODS APPROVED BY THE ENGINEER.

SHEET TOTALS

ITEM	EST.	FINAL	UNIT	DESCRIPTION
423	5,625		SF	RETAINING WALL (MSE)
403	3,200		SF	TEMPORARY SPECIAL SHORING

NOTE:
a) FOUNDATION SOILS FOR THE RETAINING WALLS SHALL BE PROOF ROLLED IN ACCORDANCE WITH SPECIFICATION ITEM 423. ANY SOILS THAT ARE FOUND TO BE UNSUITABLE SHALL BE REMOVED AND REPLACED, ADDITIONAL GEOTECHNICAL TESTING SHALL BE DONE AND APPROVED BY ENGINEER PRIOR TO BEGINING CONSTRUCTION.
b) CONTRACTOR SHALL ENSURE PROPER DRAINAGE AT ALL AREAS AROUND THE RETAINING WALLS.
c) TEMPORARY SPECIAL SHORING SHALL BE LOCATED ONE FOOT BEYOND THE MSE WALL REINFORCEMENT STRAP LIMITS WHEN EXCAVATION HEIGHT EXCEEDS FIVE FEET. THE TEMPORARY SPECIAL SHORING IS 3,200 SF. FOR THIS WALL. REFER TO DETAIL ON SHEET 468. PAYMENT FOR THIS ITEM SHALL CONFORM TO ITEM 403.

RETAINING WALL "H" TOP & BOTTOM FRONT FACE

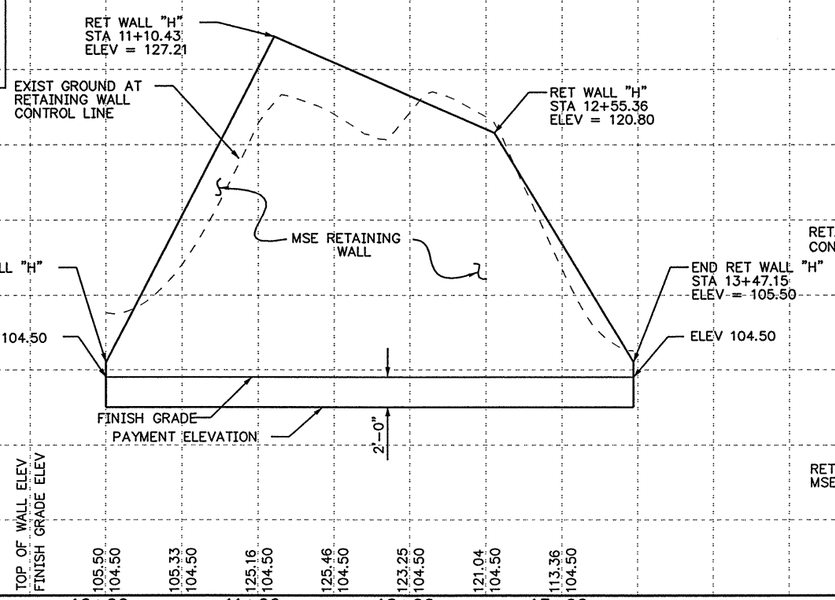

⊕ ASSUMED WIDTH OF COPING FOR LOCATION OF WALL. CONTRACTOR SHALL ADJUST LOCATION OF WALL BASED ON THE ACTUAL COPING WIDTH. (SUBSIDIARY TO ITEM 423)

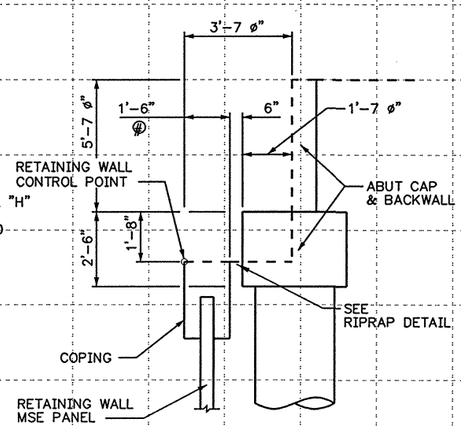

RETAINING WALL (MSE) TYPICAL SECTION AT ABUTMENT

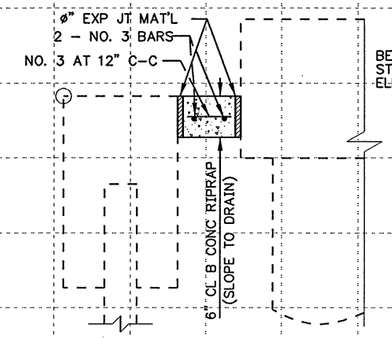

RIPRAP DETAIL TOP OF WALL
N.T.S.

LEGEND
- TOP OF WALL ELEV
- FINISHED GRADE ELEV
- EXIST NAT GROUND ELEV

REVISED 9-26-03

THE SEAL APPEARING ON THIS DOCUMENT WAS AUTHORIZED BY DEEPAK MANGLORKAR, P.E. 89613 ON 9/24/2003.

STATE OF TEXAS · DEEPAK MANGLORKAR · 89613 · REGISTERED PROFESSIONAL ENGINEER

D.Manglorkar

Parsons Brinckerhoff Quade & Douglas Inc.

Texas Department of Transportation

©2003 by TxDOT

US 281
RETAINING WALL "H"
PLAN & PROFILE

PLAN 1"= 100' HORIZ
PROFILE 1"= 10' VERT

SHEET 1 OF 1			281RPP12.DGN				
DESIGNED: JA	FED. RD DIV. No.	STATE	FEDERAL AID PROJECT No.			HIGHWAY No.	
CHECKED: JP	6	TEXAS				US 281	
DRAWN:	STATE DISTRICT	COUNTY	CONTROL No.	SECTION No.	JOB No.	SHEET No.	
CHECKED: JDH	PHARR	HIDALGO	0255	08	091	458	

$NAME$ $TIME$ 9/24/2003 $FILE$

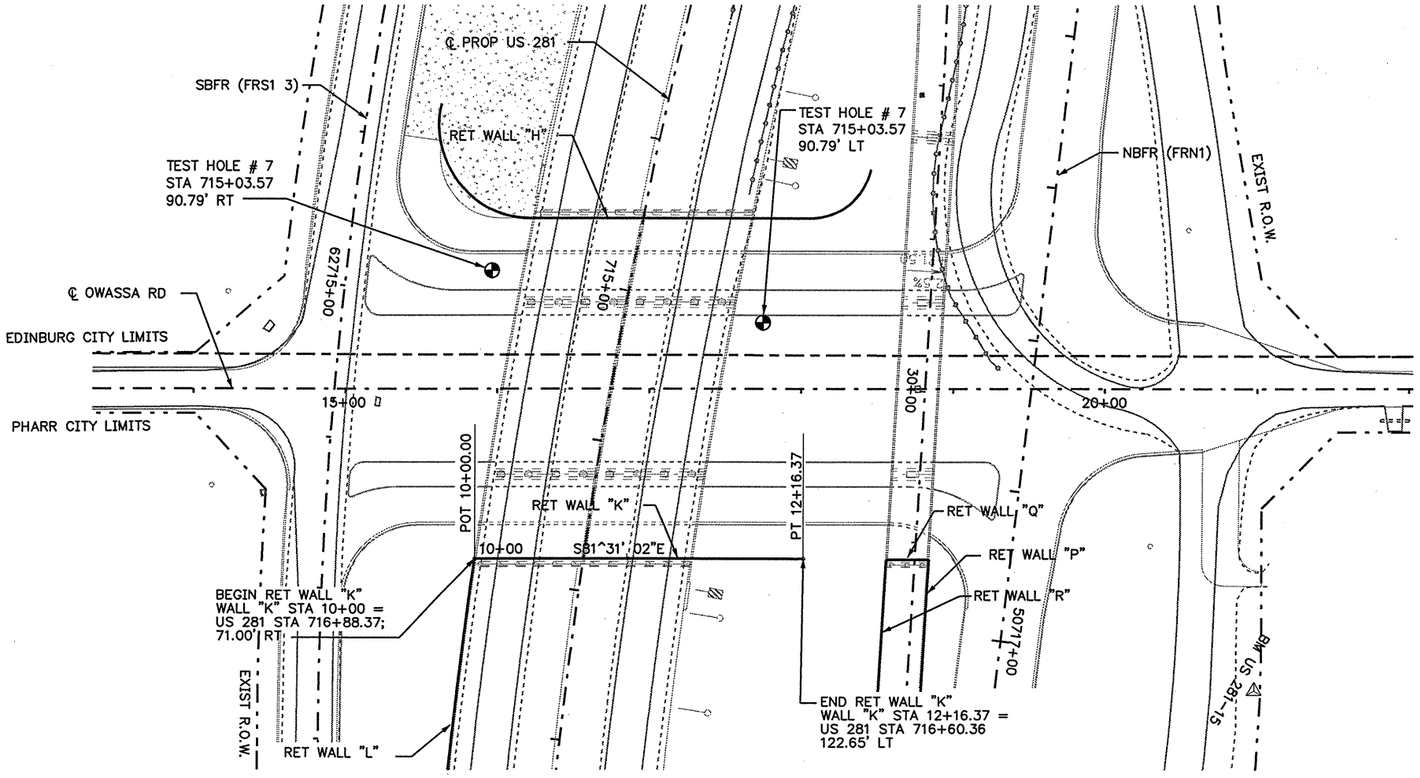

GENERAL NOTES:

FOR RIPRAP DETAILS, TYPICAL SECTIONS AND DRAINAGE DETAILS REFER TO RETAINING WALL TYPICAL SECTION AND DETAILS SHEET.

ALL RETAINING WALL PANELS SHALL HAVE ASHLAR STONE FINISH WITH COLOR (VIA CONCRETE ADMIXTURE) AS SHOWN ON "FORM LINER ARCHITECTURAL DETAILS". PANELS SHALL NOT BE PAINTED.

⊕ FOR TEST HOLE LOCATIONS AND LOG, REFER TO TEST HOLE DATA SHEETS.

FOUNDATION SOILS FOR THE RETAINING WALLS SHALL BE PROOF ROLLED IN ACCORDANCE WITH SPECIFICATION ITEM 423

EMBANKMENT BACKFILL UNDER ITEM 423 SHALL BE TYPE "A" MATERIAL.

DURING CONSTRUCTION OF RETAINING WALLS CONTRACTOR SHALL TAKE ADEQUATE PRECAUTIONS TO PROTECT EMBANKMENT BACKFILL AND EXCAVATION AREAS WITH TEMPORARY SHORING OR OTHER METHODS APPROVED BY THE ENGINEER.

SHEET TOTALS

ITEM	EST.	FINAL	UNIT	DESCRIPTION
423	3,785		SF	RETAINING WALL (MSE)

NOTE:
a) SOIL AREA ALONG THE RETAINING WALL AND BELOW THE LEVELING PAD AND BACKFILL SHALL BE REPLACED WITH SELECT FILL APPROVED BY THE ENGINEER. THE SOIL AREA SHALL BE 5 ' DEEP AND 23' WIDE. THE HORIZONTAL WIDTH OF THE AREA SHALL BE FROM 5 FEET BEYOND THE LEVELING PAD TO THE EDGE OF THE BACKFILL BEHIND THE RETAINING WALLS. THE ESTIMATED QUANTITY FOR THIS ITEM IS 920 CY. PAYMENT FOR THIS ITEM SHALL BE SUBSIDIARY TO PAY ITEM 423. REFER TO DETAIL "A" ON SHEET 468.
ANY SOILS THAT ARE FOUND TO BE UNSUITABLE SHALL BE REMOVED AND REPLACED. ADDITIONAL GEOTECHNICAL TESTING SHALL BE DONE AND APPROVED BY ENGINEER PRIOR TO BEGINING CONSTRUCTION.
b) CONTRACTOR SHALL ENSURE PROPER DRAINAGE AT ALL AREAS AROUND THE RETAINING WALLS.
c) EXCAVATION AREAS 20' BEHIND THE RETAINING WALL SHALL BE PROTECTED BY TEMPORARY SHORING. THE TEMPORARY SHORING IS ESTIMATED AT 2,376 SF. PAYMENT FOR THIS ITEM SHALL BE SUBSIDIARY TO PAY ITEM 423.
d) AREAS EXCAVATED 20' BEHIND THE RETAINING WALL SHALL BE BACKFILLED WITH TYPE A BACKFILL OR SELECT MATERIAL APPROVED BY THE ENGINEER. THE ESTIMATED QUANTITY FOR THIS BACKFILL IS 1,760 CY. PAYMENT FOR THIS ITEM SHALL BE SUBSIDIARY TO PAY ITEM 423.

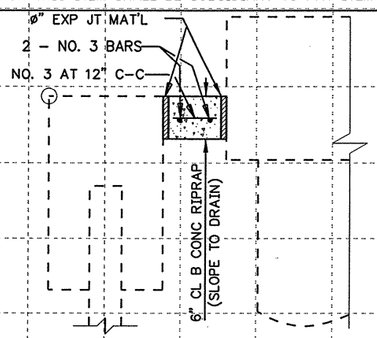

RIPRAP DETAIL TOP OF WALL
N.T.S.

RETAINING WALL "K" TOP & BOTTOM BACK FACE

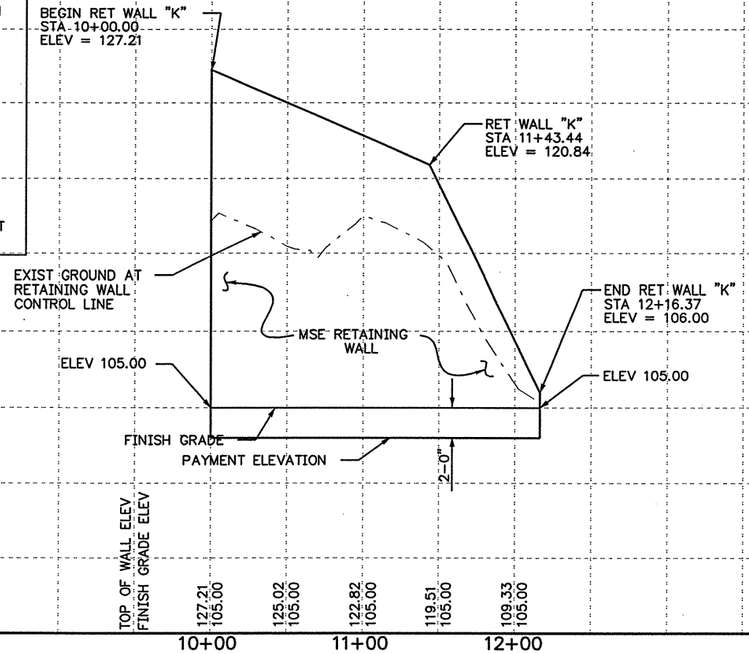

⊕ ASSUMED WIDTH OF COPING FOR LOCATION OF WALL. CONTRACTOR SHALL ADJUST LOCATION OF WALL BASED ON THE ACTUAL COPING WIDTH. (SUBSIDIARY TO ITEM 423)

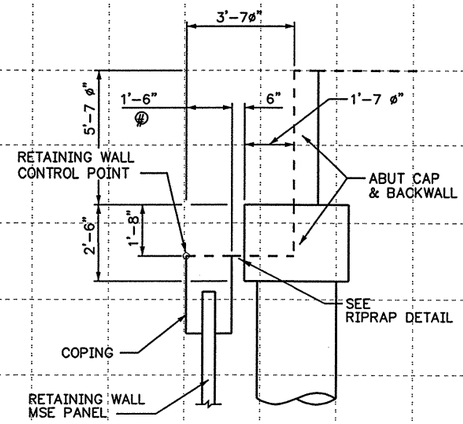

RETAINING WALL (MSE)
TYPICAL SECTION AT ABUTMENT

LEGEND
- TOP OF WALL ELEV
- FINISHED GRADE ELEV
- EXIST NAT GROUND ELEV

THE SEAL APPEARING ON THIS DOCUMENT WAS AUTHORIZED BY DEEPAK MANGLORKAR, P.E. 89613 ON 8/19/2003.

STATE OF TEXAS · DEEPAK MANGLORKAR · 89613 · LICENSED PROFESSIONAL ENGINEER

D. Manglorkar

Parsons Brinckerhoff
Quade & Douglas Inc.

Texas Department of Transportation
© 2003 by TxDOT

US 281
RETAINING WALL "K"
PLAN & PROFILE

PLAN 1"= 100' HORIZ
PROFILE 1"= 10' VERT

SHEET 1 OF 1 — 281RPP15.DGN

DESIGNED: JA	FED. RD DIV. No.	STATE	FEDERAL AID PROJECT No.			HIGHWAY No.
CHECKED: JP	6	TEXAS				US 281
DRAWN:	STATE DISTRICT	COUNTY	CONTROL No.	SECTION No.	JOB No.	SHEET No.
CHECKED: JDH	PHARR	HIDALGO	0255	08	091	459

$NAME$ $TIME$ 8/19/2003 $FILE$

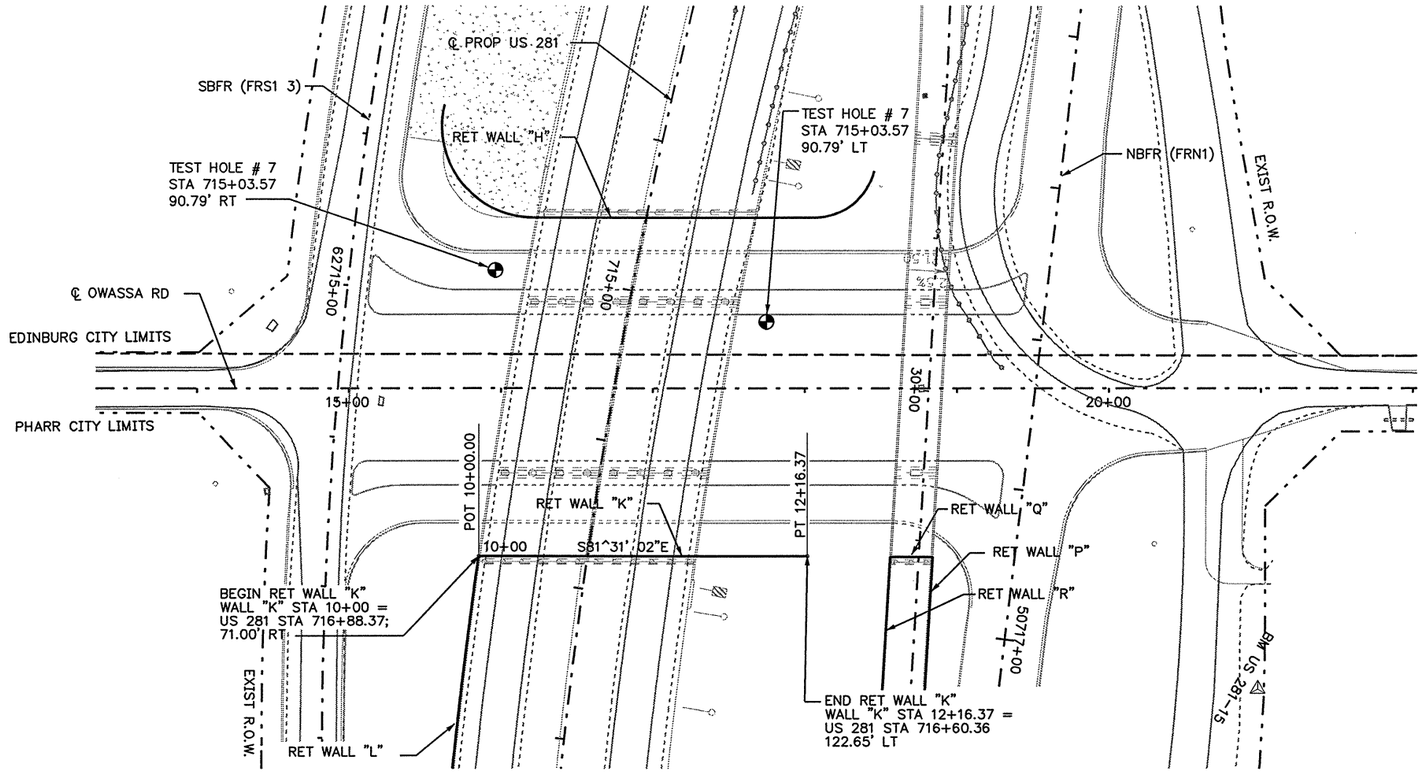

GENERAL NOTES:

FOR RIPRAP DETAILS, TYPICAL SECTIONS AND DRAINAGE DETAILS REFER TO RETAINING WALL TYPICAL SECTION AND DETAILS SHEET.

ALL RETAINING WALL PANELS SHALL HAVE ASHLAR STONE FINISH WITH COLOR (VIA CONCRETE ADMIXTURE) AS SHOWN ON "FORM LINER ARCHITECTURAL DETAILS". PANELS SHALL NOT BE PAINTED.

℄ FOR TEST HOLE LOCATIONS AND LOG, REFER TO TEST HOLE DATA SHEETS.

EMBANKMENT BACKFILL UNDER ITEM 423 SHALL BE TYPE "A" MATERIAL.

TYPE "A" EMBANKMENT MATERIAL SHALL CONFORM TO THE FOLLOWING IN ACCORDANCE WITH TXDOT STANDARD SPECIFICATION ITEM 132 "EMBANKMENT", SECTION 132.2:
- LIQUID LIMIT SHALL NOT EXCEED 45
- PLASTICITY INDEX SHALL NOT EXCEED 15
- BAR LINEAR SHRINKAGE SHALL NOT BE LESS THAN 2

DURING CONSTRUCTION OF RETAINING WALLS CONTRACTOR SHALL TAKE ADEQUATE PRECAUTIONS TO PROTECT EMBANKMENT BACKFILL AND EXCAVATION AREAS WITH TEMPORARY SHORING OR OTHER METHODS APPROVED BY THE ENGINEER.

SHEET TOTALS

ITEM	EST.	FINAL	UNIT	DESCRIPTION
423	3,785		SF	RETAINING WALL (MSE)
403	2,300		SF	TEMPORARY SPECIAL SHORING

NOTE:
a) FOUNDATION SOILS FOR THE RETAINING WALLS SHALL BE PROOF ROLLED IN ACCORDANCE WITH SPECIFICATION ITEM 423. ANY SOILS THAT ARE FOUND TO BE UNSUITABLE SHALL BE REMOVED AND REPLACED. ADDITIONAL GEOTECHNICAL TESTING SHALL BE DONE AND APPROVED BY ENGINEER PRIOR TO BEGINING CONSTRUCTION.
b) CONTRACTOR SHALL ENSURE PROPER DRAINAGE AT ALL AREAS AROUND THE RETAINING WALLS.
c) TEMPORARY SPECIAL SHORING SHALL BE LOCATED ONE FOOT BEYOND THE MSE WALL REINFORCEMENT STRAP LIMITS WHEN EXCAVATION HEIGHT EXCEEDS FIVE FEET. THE TEMPORARY SPECIAL SHORING IS 2,300 SF. FOR THIS WALL. REFER TO DETAIL ON SHEET 468. PAYMENT FOR THIS ITEM SHALL CONFORM TO ITEM 403.

RETAINING WALL "K" TOP & BOTTOM BACK FACE

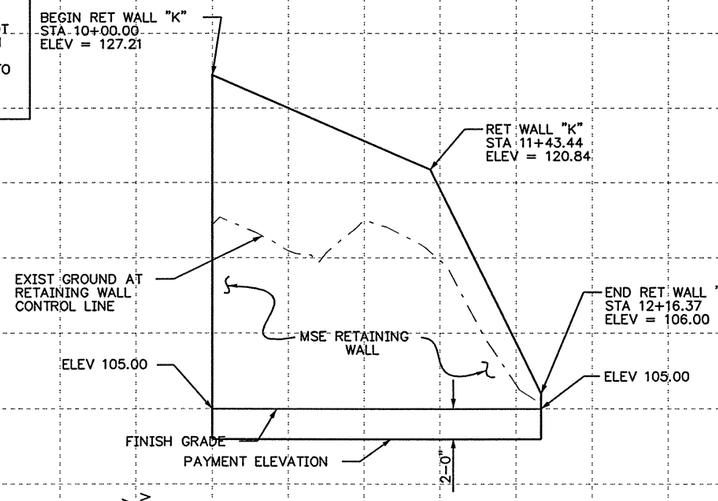

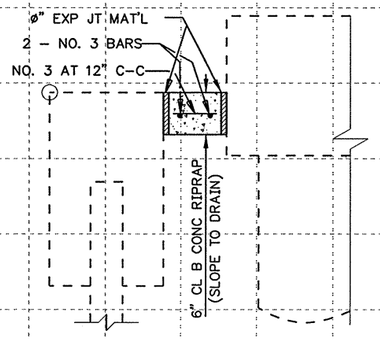

RIPRAP DETAIL TOP OF WALL
N.T.S.

℄ ASSUMED WIDTH OF COPING FOR LOCATION OF WALL. CONTRACTOR SHALL ADJUST LOCATION OF WALL BASED ON THE ACTUAL COPING WIDTH. (SUBSIDIARY TO ITEM 423)

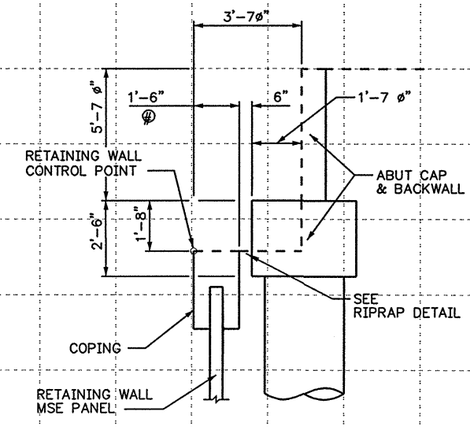

RETAINING WALL (MSE)
TYPICAL SECTION AT ABUTMENT

LEGEND
- TOP OF WALL ELEV
- FINISHED GRADE ELEV
- EXIST NAT GROUND ELEV

REVISED
9-26-03

THE SEAL APPEARING ON THIS DOCUMENT WAS AUTHORIZED BY DEEPAK MANGLORKAR, P.E. 89613 ON 9/24/2003.

STATE OF TEXAS
DEEPAK MANGLORKAR
89613
REGISTERED
PROFESSIONAL ENGINEER

D. Manglorkar

Parsons Brinckerhoff Quade & Douglas Inc.

Texas Department of Transportation

© 2003 by TxDOT

US 281
RETAINING WALL "K"
PLAN & PROFILE

PLAN 1"= 100' HORIZ
PROFILE 1"= 10' VERT

SHEET 1 OF 1 — 281RPP15.DGN

DESIGNED: JA	FED. RD DIV. No.	STATE	FEDERAL AID PROJECT No.				HIGHWAY No.
CHECKED: JP	6	TEXAS					US 281
DRAWN:	STATE DISTRICT	COUNTY	CONTROL No.	SECTION No.	JOB No.	SHEET No.	
CHECKED: JDH	PHARR	HIDALGO	0255	08	091	459	

$NAME$
$TIME$
9/24/2003
$FILE$

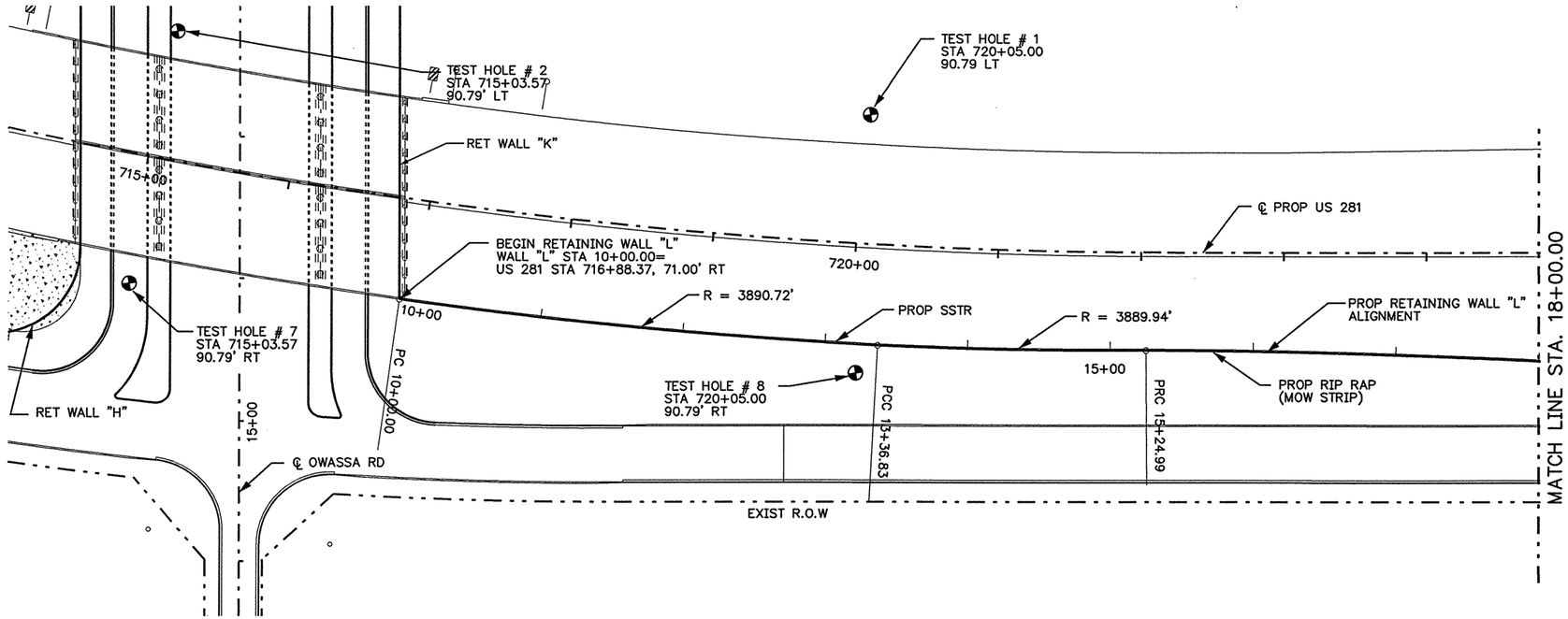

GENERAL NOTES:

FOR RIPRAP DETAILS, TYPICAL SECTIONS AND DRAINAGE DETAILS REFER TO RETAINING WALL TYPICAL SECTION AND DETAILS SHEET.

ALL RETAINING WALL PANELS SHALL HAVE ASHLAR STONE FINISH WITH COLOR (VIA CONCRETE ADMIXTURE) AS SHOWN ON "FORM LINER ARCHITECTURAL DETAILS". PANELS SHALL NOT BE PAINTED.

FOR TEST HOLE LOCATIONS AND LOG, REFER TO TEST HOLE DATA SHEETS.

FOUNDATION SOILS FOR THE RETAINING WALLS SHALL BE PROOF ROLLED IN ACCORDANCE WITH SPECIFICATION ITEM 423

EMBANKMENT BACKFILL UNDER ITEM 423 SHALL BE TYPE "A" MATERIAL.

DURING CONSTRUCTION OF RETAINING WALLS CONTRACTOR SHALL TAKE ADEQUATE PRECAUTIONS TO PROTECT EMBANKMENT BACKFILL AND EXCAVATION AREAS WITH TEMPORARY SHORING OR OTHER METHODS APPROVED BY THE ENGINEER.

SHEET TOTALS

ITEM	EST.	FINAL	UNIT	DESCRIPTION
423	16,854		SF	RETAINING WALL (MSE)
432	29.6		CY	RIPRAP CL. B CONCRETE
450	795.33		LF	SINGLE SLOPE TRAFFIC RAILING

RETAINING WALL "L" TOP & BOTTOM FRONT FACE

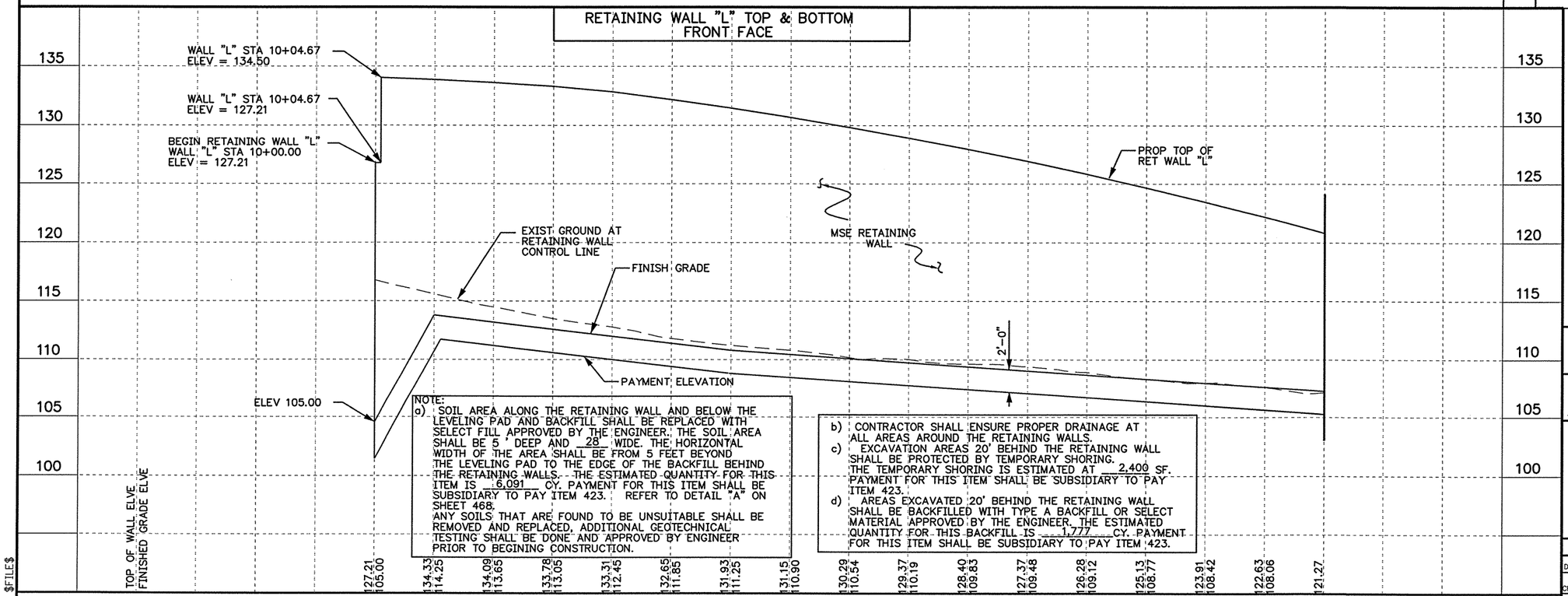

NOTE:
a) SOIL AREA ALONG THE RETAINING WALL AND BELOW THE LEVELING PAD AND BACKFILL SHALL BE REPLACED WITH SELECT FILL APPROVED BY THE ENGINEER. THE SOIL AREA SHALL BE 5 ' DEEP AND 28 WIDE. THE HORIZONTAL WIDTH OF THE AREA SHALL BE FROM 5 FEET BEYOND THE LEVELING PAD TO THE EDGE OF THE BACKFILL BEHIND THE RETAINING WALLS. THE ESTIMATED QUANTITY FOR THIS ITEM IS 6,091 CY. PAYMENT FOR THIS ITEM SHALL BE SUBSIDIARY TO PAY ITEM 423. REFER TO DETAIL "A" ON SHEET 468.
ANY SOILS THAT ARE FOUND TO BE UNSUITABLE SHALL BE REMOVED AND REPLACED, ADDITIONAL GEOTECHNICAL TESTING SHALL BE DONE AND APPROVED BY ENGINEER PRIOR TO BEGINING CONSTRUCTION.

b) CONTRACTOR SHALL ENSURE PROPER DRAINAGE AT ALL AREAS AROUND THE RETAINING WALLS.
c) EXCAVATION AREAS 20' BEHIND THE RETAINING WALL SHALL BE PROTECTED BY TEMPORARY SHORING. THE TEMPORARY SHORING IS ESTIMATED AT 2,400 SF. PAYMENT FOR THIS ITEM SHALL BE SUBSIDIARY TO PAY ITEM 423.
d) AREAS EXCAVATED 20' BEHIND THE RETAINING WALL SHALL BE BACKFILLED WITH TYPE A BACKFILL OR SELECT MATERIAL APPROVED BY THE ENGINEER. THE ESTIMATED QUANTITY FOR THIS BACKFILL IS 1,777 CY. PAYMENT FOR THIS ITEM SHALL BE SUBSIDIARY TO PAY ITEM 423.

LEGEND
- TOP OF WALL ELEV
- FINISHED GRADE ELEV
- EXIST NAT GROUND ELEV

THE SEAL APPEARING ON THIS DOCUMENT WAS AUTHORIZED BY DEEPAK MANGLORKAR, P.E. 89613 ON 6/23/2003.

STATE OF TEXAS
DEEPAK MANGLORKAR
89613
LICENSED PROFESSIONAL ENGINEER

Parsons Brinckerhoff
Quade & Douglas Inc.

Texas Department of Transportation

© 2002 by TxDOT

US 281
RETAINING WALL "L"
PLAN & PROFILE

PLAN 1"= 100' HORIZ
PROFILE 1"= 10' VERT

SHEET 1 OF 2 | 281RPP16.DGN

DESIGNED: JA	FED. RD DIV. No.	STATE	FEDERAL AID PROJECT No.			HIGHWAY No.
CHECKED: JP	6	TEXAS	XXXXXXXX			US 281
DRAWN: UH	STATE DISTRICT	COUNTY	CONTROL No.	SECTION No.	JOB No.	SHEET No.
CHECKED: JDH	PHARR	HIDALGO	0255	08	091	460

$NAME$ $TIME$ 8/19/2003 $FILE$

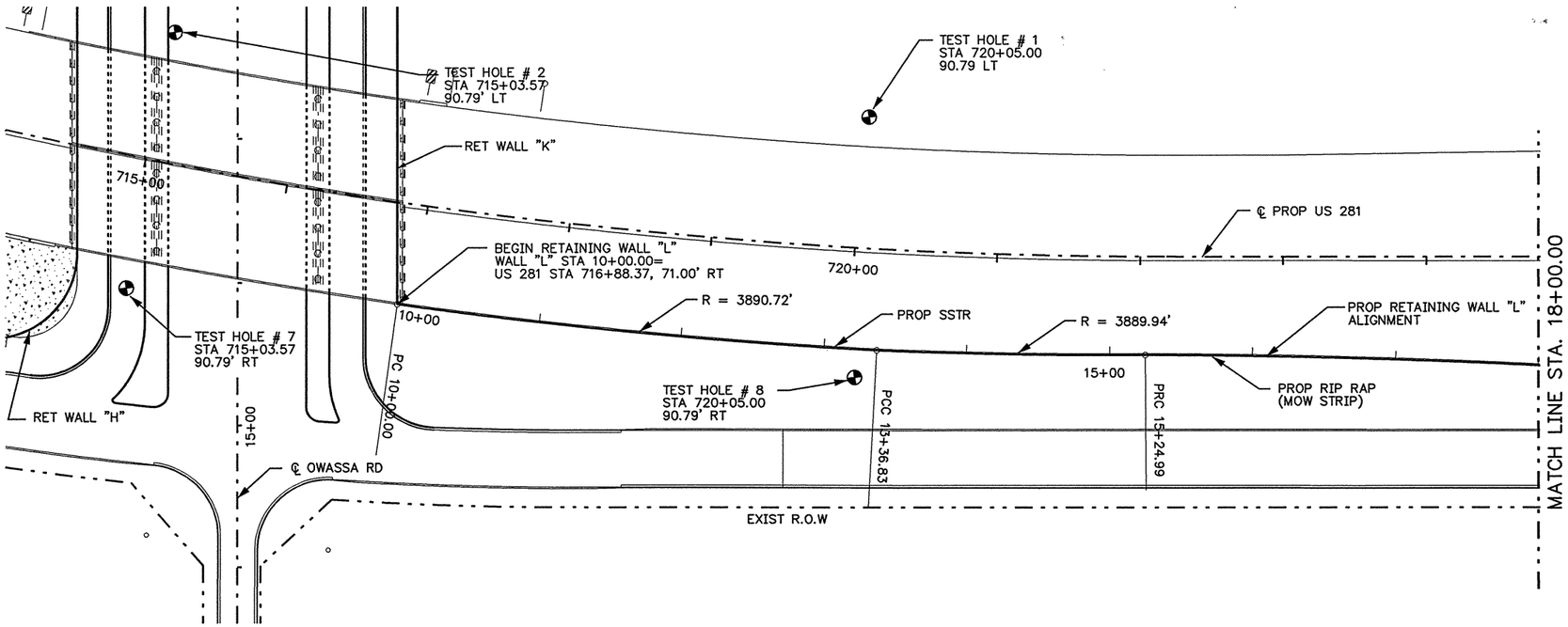

GENERAL NOTES:

FOR RIPRAP DETAILS, TYPICAL SECTIONS AND DRAINAGE DETAILS REFER TO RETAINING WALL TYPICAL SECTION AND DETAILS SHEET.

ALL RETAINING WALL PANELS SHALL HAVE ASHLAR STONE FINISH WITH COLOR (VIA CONCRETE ADMIXTURE) AS SHOWN ON "FORM LINER ARCHITECTURAL DETAILS". PANELS SHALL NOT BE PAINTED.

FOR TEST HOLE LOCATIONS AND LOG, REFER TO TEST HOLE DATA SHEETS.

EMBANKMENT BACKFILL UNDER ITEM 423 SHALL BE TYPE "A" MATERIAL.

TYPE "A" EMBANKMENT MATERIAL SHALL CONFORM TO THE FOLLOWING IN ACCORDANCE WITH TXDOT STANDARD SPECIFICATION ITEM 132 "EMBANKMENT", SECTION 132.2:
- LIQUID LIMIT SHALL NOT EXCEED 45
- PLASTICITY INDEX SHALL NOT EXCEED 15
- BAR LINEAR SHRINKAGE SHALL NOT BE LESS THAN 2

DURING CONSTRUCTION OF RETAINING WALLS CONTRACTOR SHALL TAKE ADEQUATE PRECAUTIONS TO PROTECT EMBANKMENT BACKFILL AND EXCAVATION AREAS WITH TEMPORARY SHORING OR OTHER METHODS APPROVED BY THE ENGINEER.

SHEET TOTALS

ITEM	EST.	FINAL	UNIT	DESCRIPTION
423	16,854		SF	RETAINING WALL (MSE)
432	29.6		CY	RIPRAP CL. B CONCRETE
450	795.33		LF	SINGLE SLOPE TRAFFIC RAILING
403	1,405		SF	TEMPORARY SPECIAL SHORING

RETAINING WALL "L" TOP & BOTTOM FRONT FACE

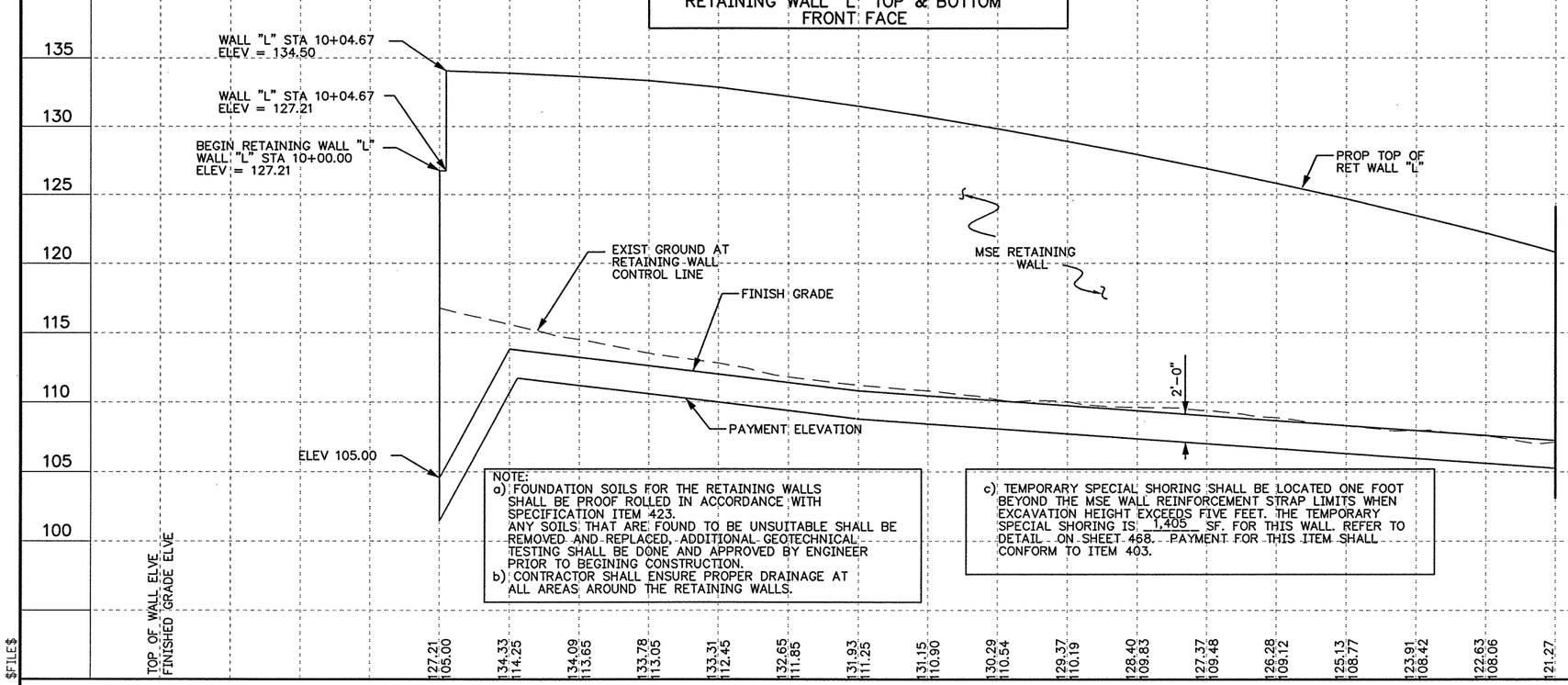

NOTE:
a) FOUNDATION SOILS FOR THE RETAINING WALLS SHALL BE PROOF ROLLED IN ACCORDANCE WITH SPECIFICATION ITEM 423. ANY SOILS THAT ARE FOUND TO BE UNSUITABLE SHALL BE REMOVED AND REPLACED. ADDITIONAL GEOTECHNICAL TESTING SHALL BE DONE AND APPROVED BY ENGINEER PRIOR TO BEGINING CONSTRUCTION.
b) CONTRACTOR SHALL ENSURE PROPER DRAINAGE AT ALL AREAS AROUND THE RETAINING WALLS.

c) TEMPORARY SPECIAL SHORING SHALL BE LOCATED ONE FOOT BEYOND THE MSE WALL REINFORCEMENT STRAP LIMITS WHEN EXCAVATION HEIGHT EXCEEDS FIVE FEET. THE TEMPORARY SPECIAL SHORING IS: 1,405 SF. FOR THIS WALL. REFER TO DETAIL ON SHEET 468. PAYMENT FOR THIS ITEM SHALL CONFORM TO ITEM 403.

REVISED
9-26-03

LEGEND
- TOP OF WALL ELEV
- FINISHED GRADE ELEV
- EXIST NAT GROUND ELEV

THE SEAL APPEARING ON THIS DOCUMENT WAS AUTHORIZED BY DEEPAK MANGLORKAR, P.E. 89613 ON 6/23/2003.

STATE OF TEXAS
DEEPAK MANGLORKAR
89613
REGISTERED
PROFESSIONAL ENGINEER

DMangl 9/24/03

PB Parsons Brinckerhoff Quade & Douglas Inc.

Texas Department of Transportation
© 2002 by TxDOT

US 281
RETAINING WALL "L"
PLAN & PROFILE

PLAN 1"= 100' HORIZ
PROFILE 1"= 10' VERT

SHEET 1 OF 2 | 281RPP16.DGN

DESIGNED: JA	FED. RD DIV. No.	STATE	FEDERAL AID PROJECT No.		HIGHWAY No.
CHECKED: JP	6	TEXAS	XXXXXXXX		US 281
DRAWN: UH	STATE DISTRICT	COUNTY	CONTROL No.	SECTION No.	JOB No.	SHEET No.
CHECKED: JDH	PHARR	HIDALGO	0255	08	091	460

$NAME$
$TIME$
9/24/2003
$FILE$

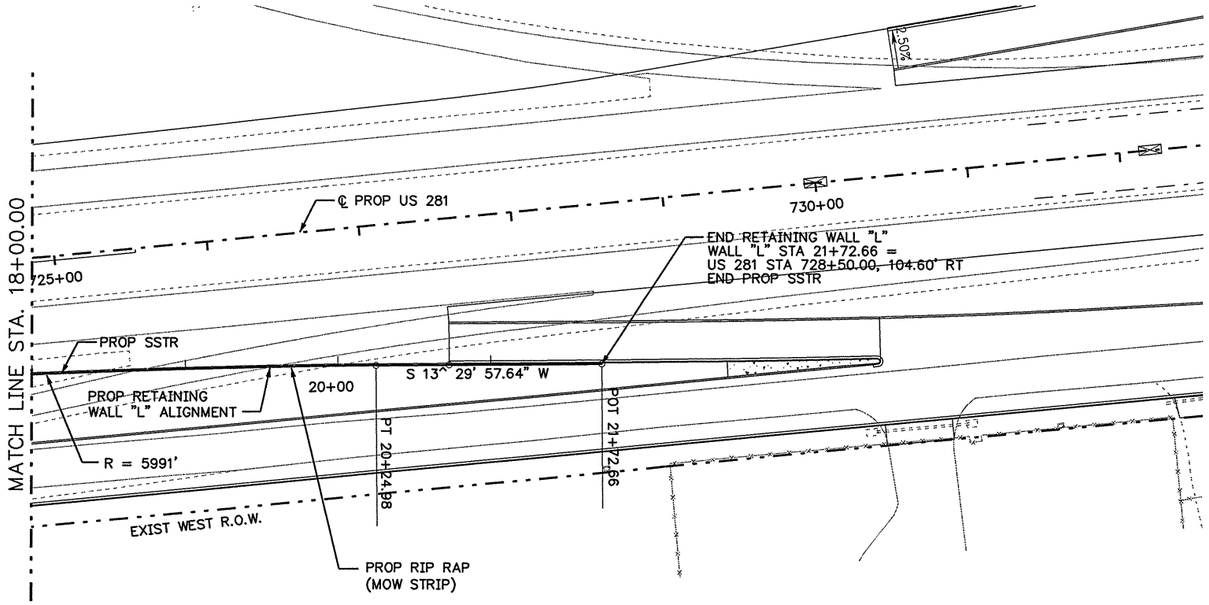

GENERAL NOTES:

FOR RIPRAP DETAILS, TYPICAL SECTIONS AND DRAINAGE DETAILS REFER TO RETAINING WALL TYPICAL SECTION AND DETAILS SHEET.

ALL RETAINING WALL PANELS SHALL HAVE ASHLAR STONE FINISH WITH COLOR (VIA CONCRETE ADMIXTURE) AS SHOWN ON "FORM LINER ARCHITECTURAL DETAILS". PANELS SHALL NOT BE PAINTED.

FOR TEST HOLE LOCATIONS AND LOG, REFER TO TEST HOLE DATA SHEETS.

FOUNDATION SOILS FOR THE RETAINING WALLS SHALL BE PROOF ROLLED IN ACCORDANCE WITH SPECIFICATION ITEM 423

EMBANKMENT BACKFILL UNDER ITEM 423 SHALL BE TYPE "A" MATERIAL.

DURING CONSTRUCTION OF RETAINING WALLS CONTRACTOR SHALL TAKE ADEQUATE PRECAUTIONS TO PROTECT EMBANKMENT BACKFILL AND EXCAVATION AREAS WITH TEMPORARY SHORING OR OTHER METHODS APPROVED BY THE ENGINEER.

SHEET TOTALS

ITEM	EST.	FINAL	UNIT	DESCRIPTION
423	3,903		SF	RETAINING WALL (MSE)
432	13.8		CY	RIPRAP CL. B CONCRETE
450	372.66		LF	SINGLE SLOPE TRAFFIC RAILING

RETAINING WALL "L" TOP & BOTTOM FRONT FACE

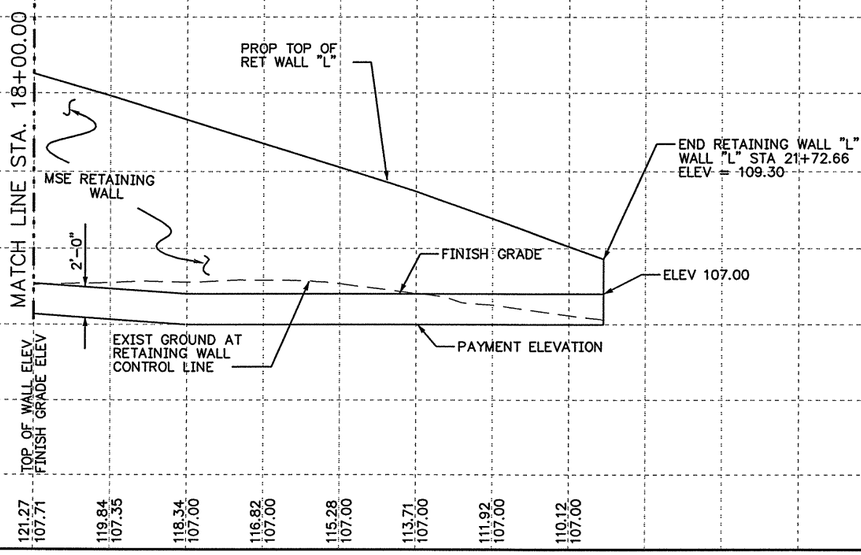

NOTE:
a) SOIL AREA ALONG THE RETAINING WALL AND BELOW THE LEVELING PAD AND BACKFILL SHALL BE REPLACED WITH SELECT FILL APPROVED BY THE ENGINEER. THE SOIL AREA SHALL BE 5 ' DEEP AND 28' WIDE. THE HORIZONTAL WIDTH OF THE AREA SHALL BE FROM 5 FEET BEYOND THE LEVELING PAD TO THE EDGE OF THE BACKFILL BEHIND THE RETAINING WALLS. THE ESTIMATED QUANTITY FOR THIS ITEM IS 6,091 CY. PAYMENT FOR THIS ITEM SHALL BE SUBSIDIARY TO PAY ITEM 423. REFER TO DETAIL "A" ON SHEET 468.
ANY SOILS THAT ARE FOUND TO BE UNSUITABLE SHALL BE REMOVED AND REPLACED. ADDITIONAL GEOTECHNICAL TESTING SHALL BE DONE AND APPROVED BY ENGINEER PRIOR TO BEGINING CONSTRUCTION.
b) CONTRACTOR SHALL ENSURE PROPER DRAINAGE AT ALL AREAS AROUND THE RETAINING WALLS.

LEGEND
- TOP OF WALL ELEV
- FINISHED GRADE ELEV
- EXIST NAT GROUND ELEV

THE SEAL APPEARING ON THIS DOCUMENT WAS AUTHORIZED BY DEEPAK MANGLORKAR, P.E. 89613 ON 8/19/2003.

STATE OF TEXAS
DEEPAK MANGLORKAR
89613
LICENSED PROFESSIONAL ENGINEER

Parsons Brinckerhoff
Quade & Douglas Inc.

Texas Department of Transportation
© 2003 by TxDOT

US 281
RETAINING WALL "L"
PLAN & PROFILE

PLAN 1"= 100' HORIZ
PROFILE 1"= 10' VERT

SHEET 2 OF 2 — 281RPP17.DGN

DESIGNED: JA	FED. RD DIV. No.	STATE	FEDERAL AID PROJECT No.		HIGHWAY No.
CHECKED: JP	6	TEXAS			US 281
DRAWN:	STATE DISTRICT	COUNTY	CONTROL No.	SECTION No.	JOB No.	SHEET No.
CHECKED: JDH	PHARR	HIDALGO	0255	08	091	461

$NAME$ $TIME$ 8/19/2003 $FILE$

$NAME$

$TIME$

9/4/2003

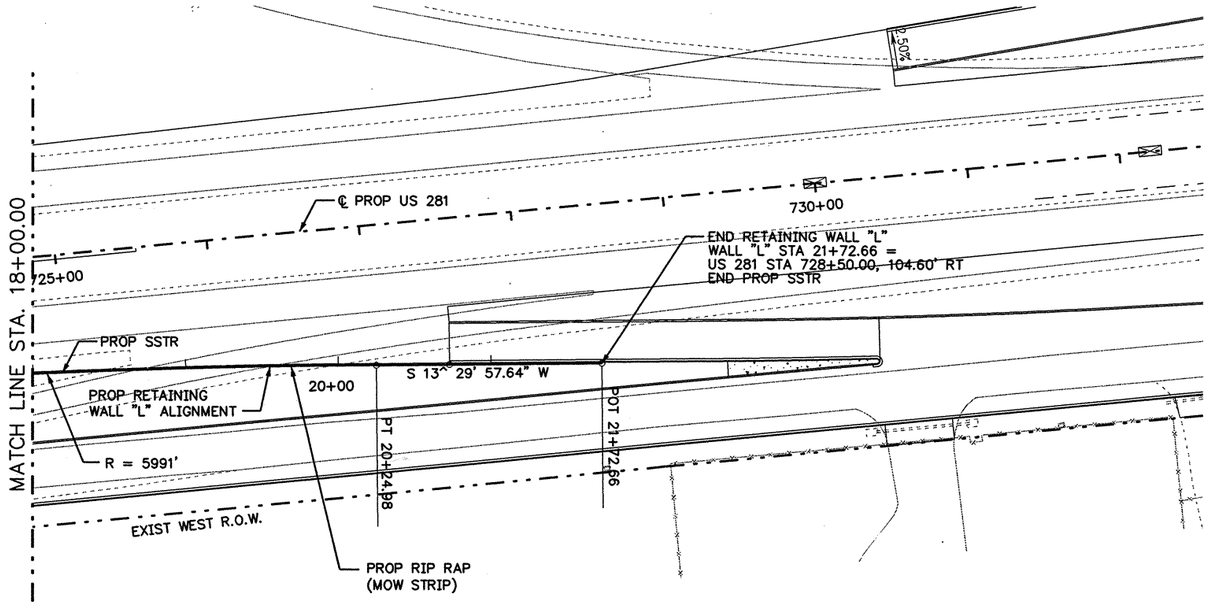

GENERAL NOTES:

FOR RIPRAP DETAILS, TYPICAL SECTIONS AND DRAINAGE DETAILS REFER TO RETAINING WALL TYPICAL SECTION AND DETAILS SHEET.

ALL RETAINING WALL PANELS SHALL HAVE ASHLAR STONE FINISH WITH COLOR (VIA CONCRETE ADMIXTURE) AS SHOWN ON "FORM LINER ARCHITECTURAL DETAILS". PANELS SHALL NOT BE PAINTED.

FOR TEST HOLE LOCATIONS AND LOG, REFER TO TEST HOLE DATA SHEETS.

SELECT BACKFILL UNDER ITEM 423 SHALL BE TYPE "A" MATERIAL.

TYPE "A" EMBANKMENT MATERIAL SHALL CONFORM TO THE FOLLOWING IN ACCORDANCE WITH TXDOT STANDARD SPECIFICATION ITEM 132 "EMBANKMENT", SECTION 132.2:
- LIQUID LIMIT SHALL NOT EXCEED 45
- PLASTICITY INDEX SHALL NOT EXCEED 15
- BAR LINEAR SHRINKAGE SHALL NOT BE LESS THAN 2

DURING CONSTRUCTION OF RETAINING WALLS CONTRACTOR SHALL TAKE ADEQUATE PRECAUTIONS TO PROTECT EMBANKMENT BACKFILL AND EXCAVATION AREAS WITH TEMPORARY SHORING OR OTHER METHODS APPROVED BY THE ENGINEER.

SHEET TOTALS

ITEM	EST.	FINAL	UNIT	DESCRIPTION
423	3,903		SF	RETAINING WALL (MSE)
432	13.8		CY	RIPRAP CL. B CONCRETE
450	372.66		LF	SINGLE SLOPE TRAFFIC RAILING

RETAINING WALL "L" TOP & BOTTOM FRONT FACE

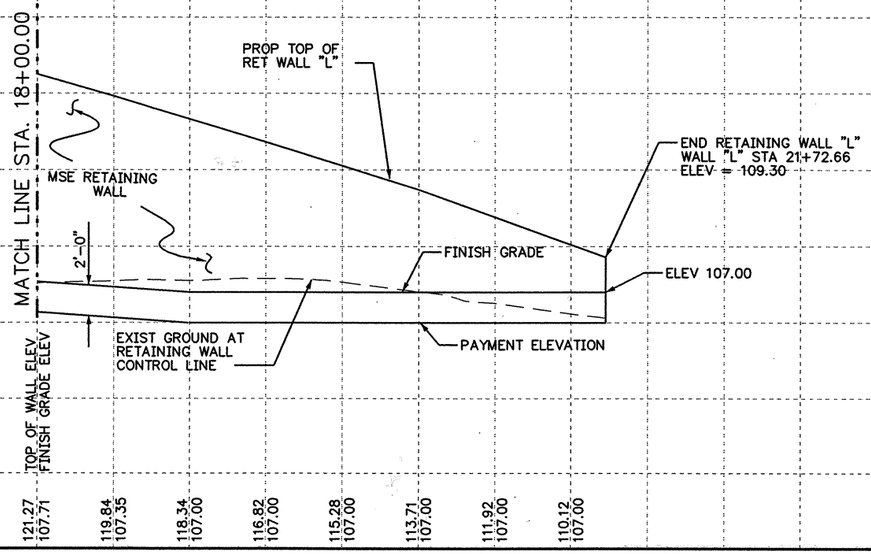

NOTE:
a) FOUNDATION SOILS FOR THE RETAINING WALLS SHALL BE PROOF ROLLED IN ACCORDANCE WITH SPECIFICATION ITEM 423.
ANY SOILS THAT ARE FOUND TO BE UNSUITABLE SHALL BE REMOVED AND REPLACED, ADDITIONAL GEOTECHNICAL TESTING SHALL BE DONE AND APPROVED BY ENGINEER PRIOR TO BEGINING CONSTRUCTION.
b) CONTRACTOR SHALL ENSURE PROPER DRAINAGE AT ALL AREAS AROUND THE RETAINING WALLS.

REVISED
9-26-03

LEGEND
- TOP OF WALL ELEV
- FINISHED GRADE ELEV
- EXIST NAT GROUND ELEV

THE SEAL APPEARING ON THIS DOCUMENT WAS AUTHORIZED BY DEEPAK MANGLORKAR, P.E. 89613 ON 9/4/2003 .

STATE OF TEXAS
DEEPAK MANGLORKAR
89613
REGISTERED
PROFESSIONAL ENGINEER

D. Manglorkar

Parsons Brinckerhoff
Quade & Douglas Inc.

Texas Department of Transportation

© 2003 by TxDOT

US 281
RETAINING WALL "L"
PLAN & PROFILE

PLAN 1"= 100' HORIZ
PROFILE 1"= 10' VERT

SHEET 2 OF 2 — 281RPP17.DGN

DESIGNED: JA	FED. RD DIV. No.	STATE	FEDERAL AID PROJECT No.		HIGHWAY No.
CHECKED: JP	6	TEXAS			US 281
DRAWN:	STATE DISTRICT	COUNTY	CONTROL No.	SECTION No.	JOB No.	SHEET No.
CHECKED: JDH	PHARR	HIDALGO	0255	08	091	461

$FILE$

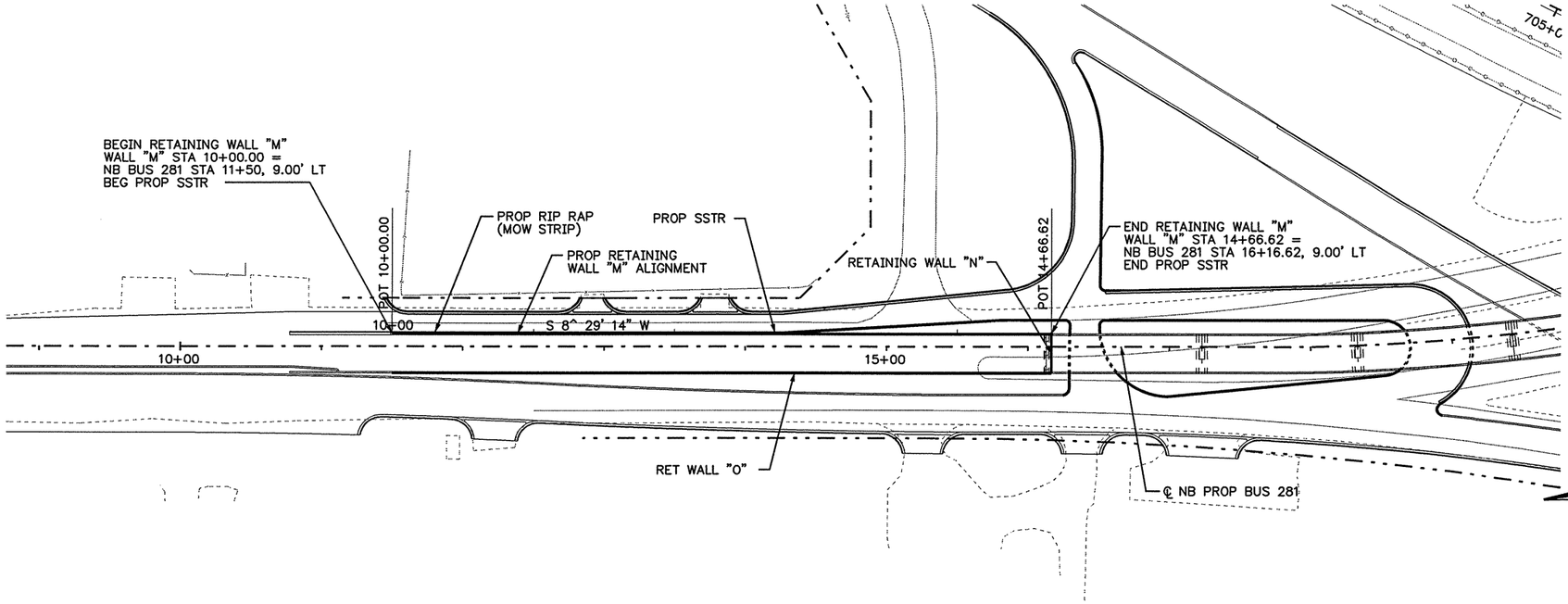

GENERAL NOTES:

FOR RIPRAP DETAILS, TYPICAL SECTIONS AND DRAINAGE DETAILS REFER TO RETAINING WALL TYPICAL SECTION AND DETAILS SHEET.

ALL RETAINING WALL PANELS SHALL HAVE ASHLAR STONE FINISH WITH COLOR (VIA CONCRETE ADMIXTURE) AS SHOWN ON "FORM LINER ARCHITECTURAL DETAILS". PANELS SHALL NOT BE PAINTED.

FOR TEST HOLE LOCATIONS AND LOG, REFER TO TEST HOLE DATA SHEETS.

FOUNDATION SOILS FOR THE RETAINING WALLS SHALL BE PROOF ROLLED IN ACCORDANCE WITH SPECIFICATION ITEM 423

EMBANKMENT BACKFILL UNDER ITEM 423 SHALL BE TYPE "A" MATERIAL.

DURING CONSTRUCTION OF RETAINING WALLS CONTRACTOR SHALL TAKE ADEQUATE PRECAUTIONS TO PROTECT EMBANKMENT BACKFILL AND EXCAVATION AREAS WITH TEMPORARY SHORING OR OTHER METHODS APPROVED BY THE ENGINEER.

SHEET TOTALS

ITEM	EST.	FINAL	UNIT	DESCRIPTION
423	5,730		SF	RETAINING WALL (MSE)
432	7.0		CY	RIP RAP CL. B CONCRETE
450	462.00		LF	SINGLE SLOPE TRAFFIC RAILING

RETAINING WALL "M" TOP & BOTTOM BACK FACE

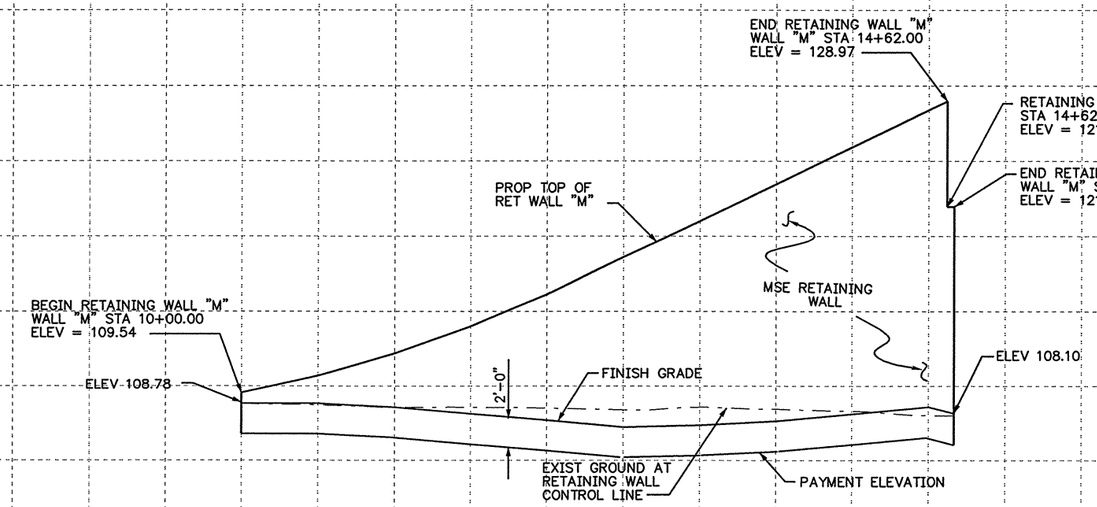

NOTE:
a) SOIL AREA ALONG THE RETAINING WALL AND BELOW THE LEVELING PAD AND BACKFILL SHALL BE REPLACED WITH SELECT FILL APPROVED BY THE ENGINEER. THE SOIL AREA SHALL BE 5 ' DEEP AND 20 WIDE. THE HORIZONTAL WIDTH OF THE AREA SHALL BE FROM 5 FEET BEYOND THE LEVELING PAD TO THE EDGE OF THE BACKFILL BEHIND THE RETAINING WALLS. THE ESTIMATED QUANTITY FOR THIS ITEM IS 1,728 CY. PAYMENT FOR THIS ITEM SHALL BE SUBSIDIARY TO PAY ITEM 423. REFER TO DETAIL "A" ON SHEET 468. ANY SOILS THAT ARE FOUND TO BE UNSUITABLE SHALL BE REMOVED AND REPLACED. ADDITIONAL GEOTECHNICAL TESTING SHALL BE DONE AND APPROVED BY ENGINEER PRIOR TO BEGINNING CONSTRUCTION.
b) CONTRACTOR SHALL ENSURE PROPER DRAINAGE AT ALL AREAS AROUND THE RETAINING WALLS.

TOP OF WALL ELEV / FINISH GRADE ELEV	10+00	11+00	12+00	13+00	14+00
	109.54 / 108.78	110.72 / 108.78	112.22 / 108.52	114.03 / 108.08	116.16 / 107.65
	118.58 / 107.21	121.03 / 107.34	123.49 / 107.60	125.95 / 108.05	128.41 / 108.53

LEGEND
- TOP OF WALL ELEV
- FINISHED GRADE ELEV
- EXIST NAT GROUND ELEV

THE SEAL APPEARING ON THIS DOCUMENT WAS AUTHORIZED BY DEEPAK MANGLORKAR, P.E. 89613 ON 8/19/2003.

STATE OF TEXAS
DEEPAK MANGLORKAR
89613
LICENSED
PROFESSIONAL ENGINEER

Parsons Brinckerhoff
Quade & Douglas Inc.

Texas Department of Transportation

© 2003 by TxDOT

US 281
RETAINING WALL "M"
PLAN & PROFILE

PLAN 1"= 100' HORIZ
PROFILE 1"= 10' VERT

SHEET 1 OF 1							281RPP18.DGN
DESIGNED: JA	FED. RD DIV. No.	STATE	FEDERAL AID PROJECT No.				HIGHWAY No.
CHECKED: JP	6	TEXAS					US 281
DRAWN:	STATE DISTRICT	COUNTY	CONTROL No.	SECTION No.	JOB No.	SHEET No.	
CHECKED: JDH	PHARR	HIDALGO	0255	08	091	462	

$NAME$ $TIME$ 8/19/2003 $FILE$

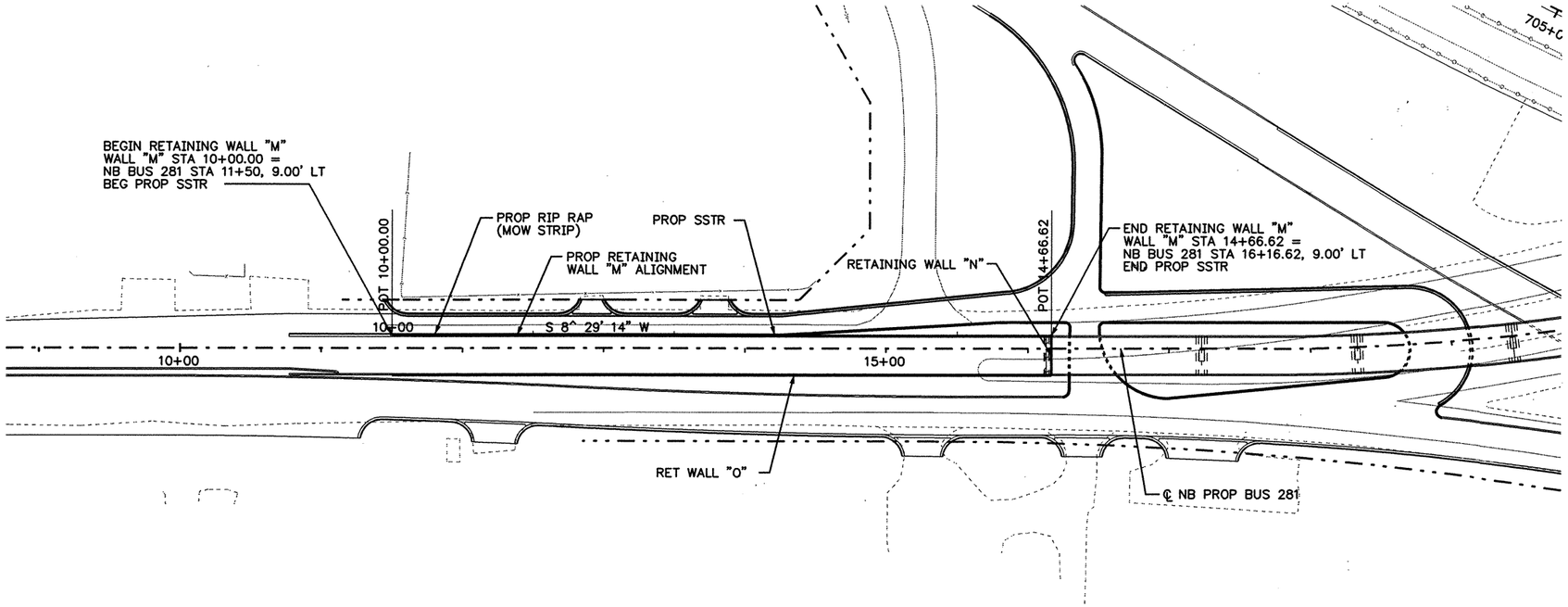

GENERAL NOTES:

FOR RIPRAP DETAILS, TYPICAL SECTIONS AND DRAINAGE DETAILS REFER TO RETAINING WALL TYPICAL SECTION AND DETAILS SHEET.

ALL RETAINING WALL PANELS SHALL HAVE ASHLAR STONE FINISH WITH COLOR (VIA CONCRETE ADMIXTURE) AS SHOWN ON "FORM LINER ARCHITECTURAL DETAILS". PANELS SHALL NOT BE PAINTED.

FOR TEST HOLE LOCATIONS AND LOG, REFER TO TEST HOLE DATA SHEETS.

SELECT BACKFILL UNDER ITEM 423 SHALL BE TYPE "A" MATERIAL.

TYPE "A" EMBANKMENT MATERIAL SHALL CONFORM TO THE FOLLOWING IN ACCORDANCE WITH TXDOT STANDARD SPECIFICATION ITEM 132 "EMBANKMENT", SECTION 132.2:
- LIQUID LIMIT SHALL NOT EXCEED 45
- PLASTICITY INDEX SHALL NOT EXCEED 15
- BAR LINEAR SHRINKAGE SHALL NOT BE LESS THAN 2

DURING CONSTRUCTION OF RETAINING WALLS CONTRACTOR SHALL TAKE ADEQUATE PRECAUTIONS TO PROTECT EMBANKMENT BACKFILL AND EXCAVATION AREAS WITH TEMPORARY SHORING OR OTHER METHODS APPROVED BY THE ENGINEER.

SHEET TOTALS

ITEM	EST.	FINAL	UNIT	DESCRIPTION
423	5,730		SF	RETAINING WALL (MSE)
432	7.0		CY	RIP RAP CL. B CONCRETE
450	462.00		LF	SINGLE SLOPE TRAFFIC RAILING

RETAINING WALL "M" TOP & BOTTOM BACK FACE

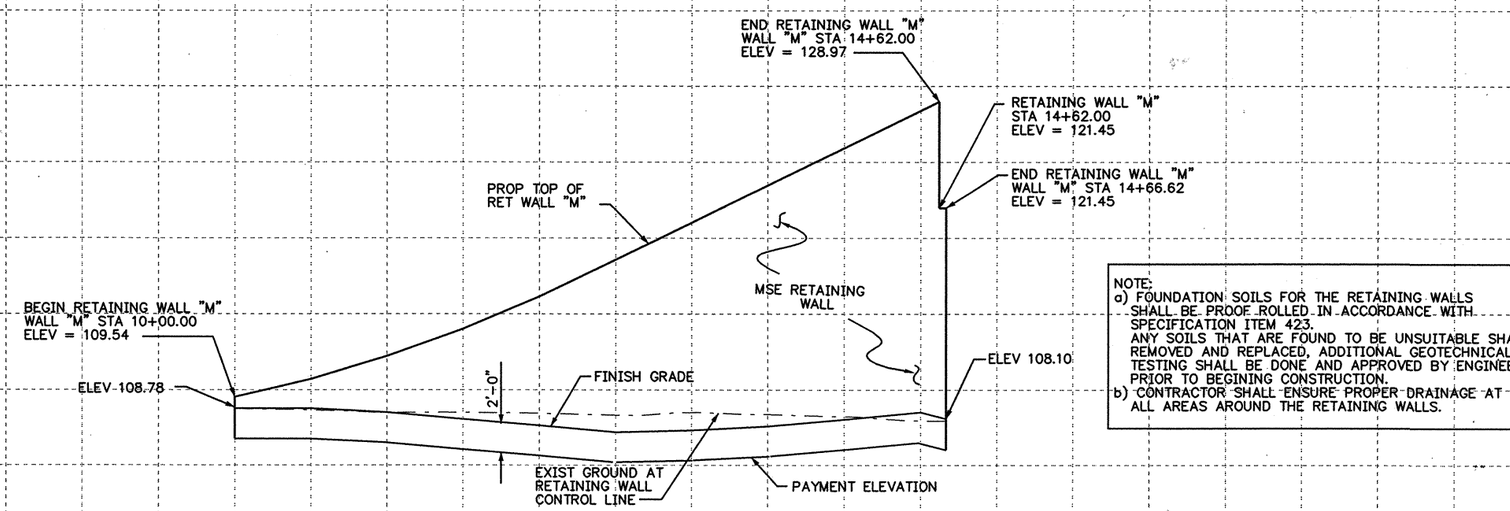

NOTE:
a) FOUNDATION SOILS FOR THE RETAINING WALLS SHALL BE PROOF ROLLED IN ACCORDANCE WITH SPECIFICATION ITEM 423. ANY SOILS THAT ARE FOUND TO BE UNSUITABLE SHALL BE REMOVED AND REPLACED, ADDITIONAL GEOTECHNICAL TESTING SHALL BE DONE AND APPROVED BY ENGINEER PRIOR TO BEGINING CONSTRUCTION.
b) CONTRACTOR SHALL ENSURE PROPER DRAINAGE AT ALL AREAS AROUND THE RETAINING WALLS.

REVISED
9-26-03

LEGEND
- TOP OF WALL ELEV
- FINISHED GRADE ELEV
- EXIST NAT GROUND ELEV

THE SEAL APPEARING ON THIS DOCUMENT WAS AUTHORIZED BY DEEPAK MANGLORKAR, P.E. 89613 ON 9/4/2003.

STATE OF TEXAS
DEEPAK MANGLORKAR
89613
REGISTERED PROFESSIONAL ENGINEER

D. Manglorkar

Parsons Brinckerhoff Quade & Douglas Inc.

Texas Department of Transportation

© 2003 by TxDOT

US 281
RETAINING WALL "M"
PLAN & PROFILE

PLAN 1"= 100' HORIZ
PROFILE 1"= 10' VERT

SHEET 1 OF 1 | 281RPP18.DGN

DESIGNED: JA	FED. RD DIV. No.	STATE	FEDERAL AID PROJECT No.	HIGHWAY No.
CHECKED: JP	6	TEXAS		US 281

DRAWN:	STATE DISTRICT	COUNTY	CONTROL No.	SECTION No.	JOB No.	SHEET No.
CHECKED: JDH	PHARR	HIDALGO	0255	08	091	462

$NAME$ $TIME$ 9/4/2003 $FILE$

$NAME$

$TIME$

8/19/2003

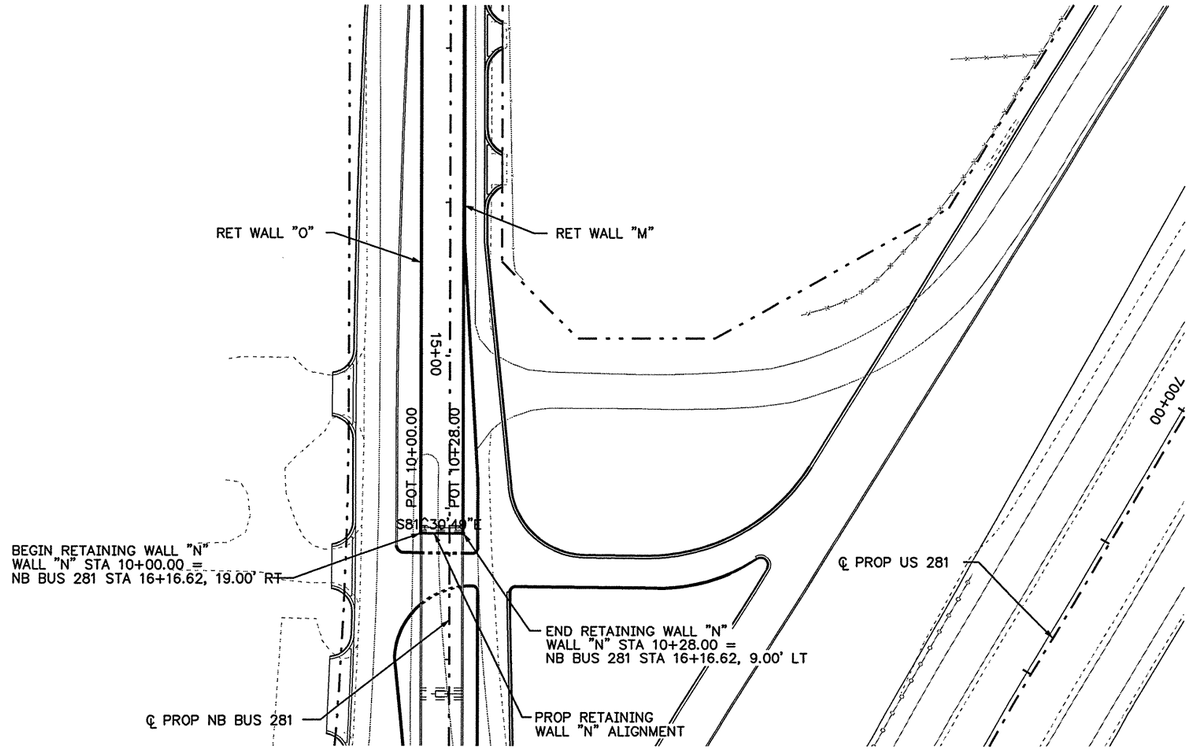

GENERAL NOTES:

FOR RIPRAP DETAILS, TYPICAL SECTIONS AND DRAINAGE DETAILS REFER TO RETAINING WALL TYPICAL SECTION AND DETAILS SHEET.

ALL RETAINING WALL PANELS SHALL HAVE ASHLAR STONE FINISH WITH COLOR (VIA CONCRETE ADMIXTURE) AS SHOWN ON "FORM LINER ARCHITECTURAL DETAILS". PANELS SHALL NOT BE PAINTED.

FOR TEST HOLE LOCATIONS AND LOG, REFER TO TEST HOLE DATA SHEETS.

FOUNDATION SOILS FOR THE RETAINING WALLS SHALL BE PROOF ROLLED IN ACCORDANCE WITH SPECIFICATION ITEM 423

EMBANKMENT BACKFILL UNDER ITEM 423 SHALL BE TYPE "A" MATERIAL.

DURING CONSTRUCTION OF RETAINING WALLS CONTRACTOR SHALL TAKE ADEQUATE PRECAUTIONS TO PROTECT EMBANKMENT BACKFILL AND EXCAVATION AREAS WITH TEMPORARY SHORING OR OTHER METHODS APPROVED BY THE ENGINEER.

SHEET TOTALS

ITEM	EST.	FINAL	UNIT	DESCRIPTION
423	445		SF	RETAINING WALL (MSE)

NOTE:
a) SOIL AREA ALONG THE RETAINING WALL AND BELOW THE LEVELING PAD AND BACKFILL SHALL BE REPLACED WITH SELECT FILL APPROVED BY THE ENGINEER. THE SOIL AREA SHALL BE 5 ' DEEP AND 17' WIDE. THE HORIZONTAL WIDTH OF THE AREA SHALL BE FROM 5 FEET BEYOND THE LEVELING PAD TO THE EDGE OF THE BACKFILL BEHIND THE RETAINING WALLS. THE ESTIMATED QUANTITY FOR THIS ITEM IS 89 CY. PAYMENT FOR THIS ITEM SHALL BE SUBSIDIARY TO PAY ITEM 423. REFER TO DETAIL "A" ON SHEET 468.
ANY SOILS THAT ARE FOUND TO BE UNSUITABLE SHALL BE REMOVED AND REPLACED, ADDITIONAL GEOTECHNICAL TESTING SHALL BE DONE AND APPROVED BY ENGINEER PRIOR TO BEGINING CONSTRUCTION.
b) CONTRACTOR SHALL ENSURE PROPER DRAINAGE AT ALL AREAS AROUND THE RETAINING WALLS.

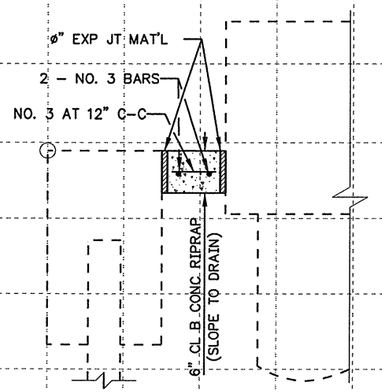

RIPRAP DETAIL TOP OF WALL
N.T.S.

RETAINING WALL "N" TOP & BOTTOM FRONT FACE

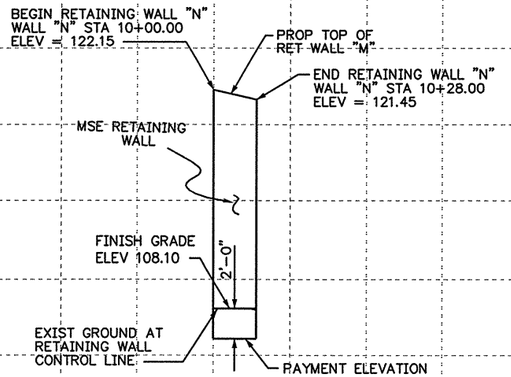

TOP OF WALL ELEV
FINISH GRADE ELEV
122.15
108.10
121.45
108.10

℗ ASSUMED WIDTH OF COPING FOR LOCATION OF WALL. CONTRACTOR SHALL ADJUST LOCATION OF WALL BASED ON THE ACTUAL COPING WIDTH. (SUBSIDIARY TO ITEM 423)

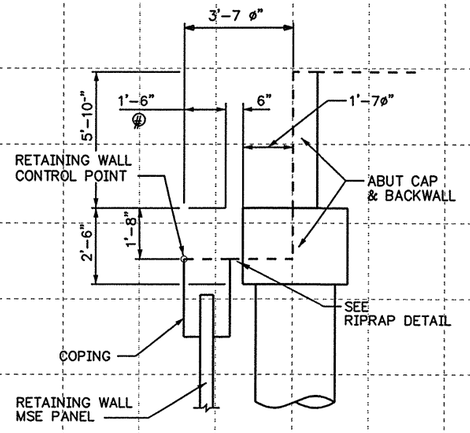

RETAINING WALL (MSE)
TYPICAL SECTION AT ABUTMENT

130 125 120 115 110 105 100 95

10+00

LEGEND
TOP OF WALL ELEV
FINISHED GRADE ELEV
EXIST NAT GROUND ELEV

THE SEAL APPEARING ON THIS DOCUMENT WAS AUTHORIZED BY DEEPAK MANGLORKAR, P.E. 89613 ON 8/19/2003.

STATE OF TEXAS
DEEPAK MANGLORKAR
89613
LICENSED
PROFESSIONAL ENGINEER

Parsons Brinckerhoff
Quade & Douglas Inc.

Texas Department of Transportation
© 2003 by TxDOT

US 281
RETAINING WALL "N"
PLAN & PROFILE

PLAN 1"= 100' HORIZ
PROFILE 1"= 10' VERT

SHEET 1 OF 1 | 281RPP19.DGN

DESIGNED: JA	FED. RD DIV. No.	STATE	FEDERAL AID PROJECT No.	HIGHWAY No.
CHECKED: JP	6	TEXAS		US 281

DRAWN:	STATE DISTRICT	COUNTY	CONTROL No.	SECTION No.	JOB No.	SHEET No.
CHECKED: JDH	PHARR	HIDALGO	0255	08	091	463

$FILE$

$NAME$

$TIME$

9/4/2003

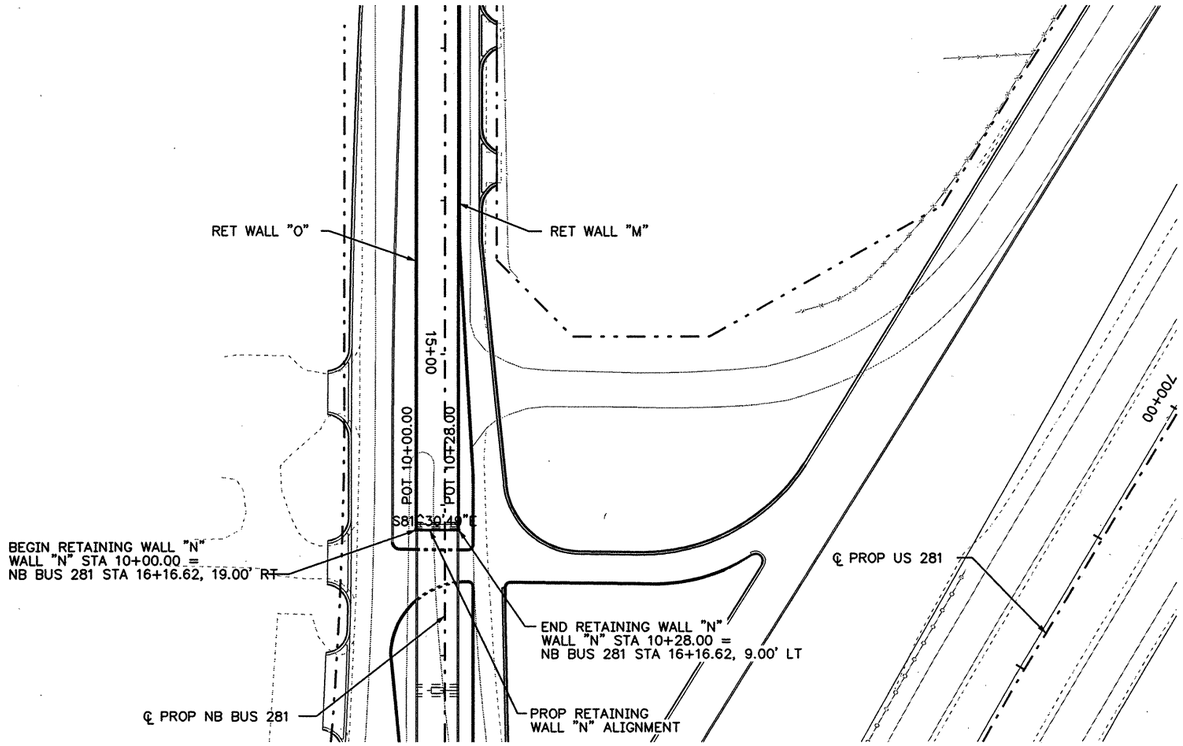

GENERAL NOTES:

FOR RIPRAP DETAILS, TYPICAL SECTIONS AND DRAINAGE DETAILS REFER TO RETAINING WALL TYPICAL SECTION AND DETAILS SHEET.

ALL RETAINING WALL PANELS SHALL HAVE ASHLAR STONE FINISH WITH COLOR (VIA CONCRETE ADMIXTURE) AS SHOWN ON "FORM LINER ARCHITECTURAL DETAILS". PANELS SHALL NOT BE PAINTED.

⊗ FOR TEST HOLE LOCATIONS AND LOG, REFER TO TEST HOLE DATA SHEETS.

SELECT BACKFILL UNDER ITEM 423 SHALL BE TYPE "A" MATERIAL.

TYPE "A" EMBANKMENT MATERIAL SHALL CONFORM TO THE FOLLOWING IN ACCORDANCE WITH TXDOT STANDARD SPECIFICATION ITEM 132 "EMBANKMENT", SECTION 132.2:
- LIQUID LIMIT SHALL NOT EXCEED 45
- PLASTICITY INDEX SHALL NOT EXCEED 15
- BAR LINEAR SHRINKAGE SHALL NOT BE LESS THAN 2

DURING CONSTRUCTION OF RETAINING WALLS CONTRACTOR SHALL TAKE ADEQUATE PRECAUTIONS TO PROTECT EMBANKMENT BACKFILL AND EXCAVATION AREAS WITH TEMPORARY SHORING OR OTHER METHODS APPROVED BY THE ENGINEER.

SHEET TOTALS

ITEM	EST.	FINAL	UNIT	DESCRIPTION
423	445		SF	RETAINING WALL (MSE)

NOTE:
a) FOUNDATION SOILS FOR THE RETAINING WALLS SHALL BE PROOF ROLLED IN ACCORDANCE WITH SPECIFICATION ITEM 423. ANY SOILS THAT ARE FOUND TO BE UNSUITABLE SHALL BE REMOVED AND REPLACED, ADDITIONAL GEOTECHNICAL TESTING SHALL BE DONE AND APPROVED BY ENGINEER PRIOR TO BEGINING CONSTRUCTION.
b) CONTRACTOR SHALL ENSURE PROPER DRAINAGE AT ALL AREAS AROUND THE RETAINING WALLS.

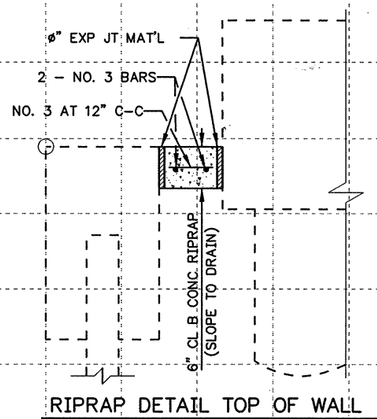

RIPRAP DETAIL TOP OF WALL
N.T.S.

RETAINING WALL "N" TOP & BOTTOM FRONT FACE

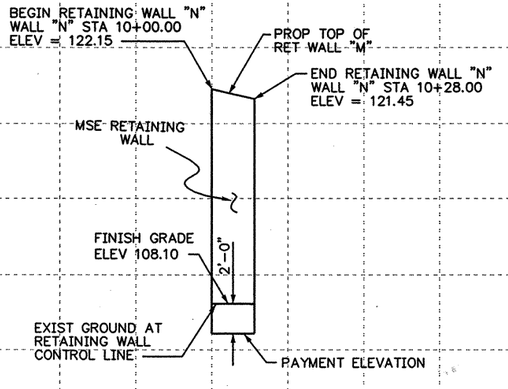

TOP OF WALL ELEV
FINISH GRADE ELEV
122.15
108.10
121.45
108.10

℗ ASSUMED WIDTH OF COPING FOR LOCATION OF WALL. CONTRACTOR SHALL ADJUST LOCATION OF WALL BASED ON THE ACTUAL COPING WIDTH. (SUBSIDIARY TO ITEM 423)

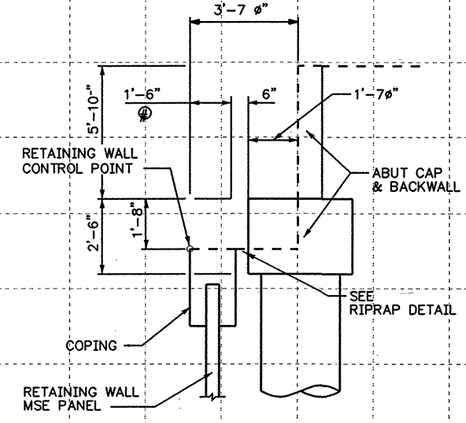

RETAINING WALL (MSE)
TYPICAL SECTION AT ABUTMENT

10+00

REVISED 9-26-03

LEGEND
- TOP OF WALL ELEV
- FINISHED GRADE ELEV
- EXIST NAT GROUND ELEV

THE SEAL APPEARING ON THIS DOCUMENT WAS AUTHORIZED BY DEEPAK MANGLORKAR, P.E. 89613 ON 9/4/2003 .

STATE OF TEXAS
DEEPAK MANGLORKAR
89613
REGISTERED
PROFESSIONAL ENGINEER

Parsons Brinckerhoff
Quade & Douglas Inc.

Texas Department of Transportation

© 2003 by TxDOT

US 281
RETAINING WALL "N"
PLAN & PROFILE

PLAN 1"= 100' HORIZ
PROFILE 1"= 10' VERT

SHEET 1 OF 1 | 281RPP19.DGN

DESIGNED: JA	FED. RD DIV. No.	STATE	FEDERAL AID PROJECT No.	HIGHWAY No.
CHECKED: JP	6	TEXAS		US 281

DRAWN:	STATE DISTRICT	COUNTY	CONTROL No.	SECTION No.	JOB No.	SHEET No.
CHECKED: JDH	PHARR	HIDALGO	0255	08	091	463

$FILE$

$NAME$

$TIME$

8/19/2003

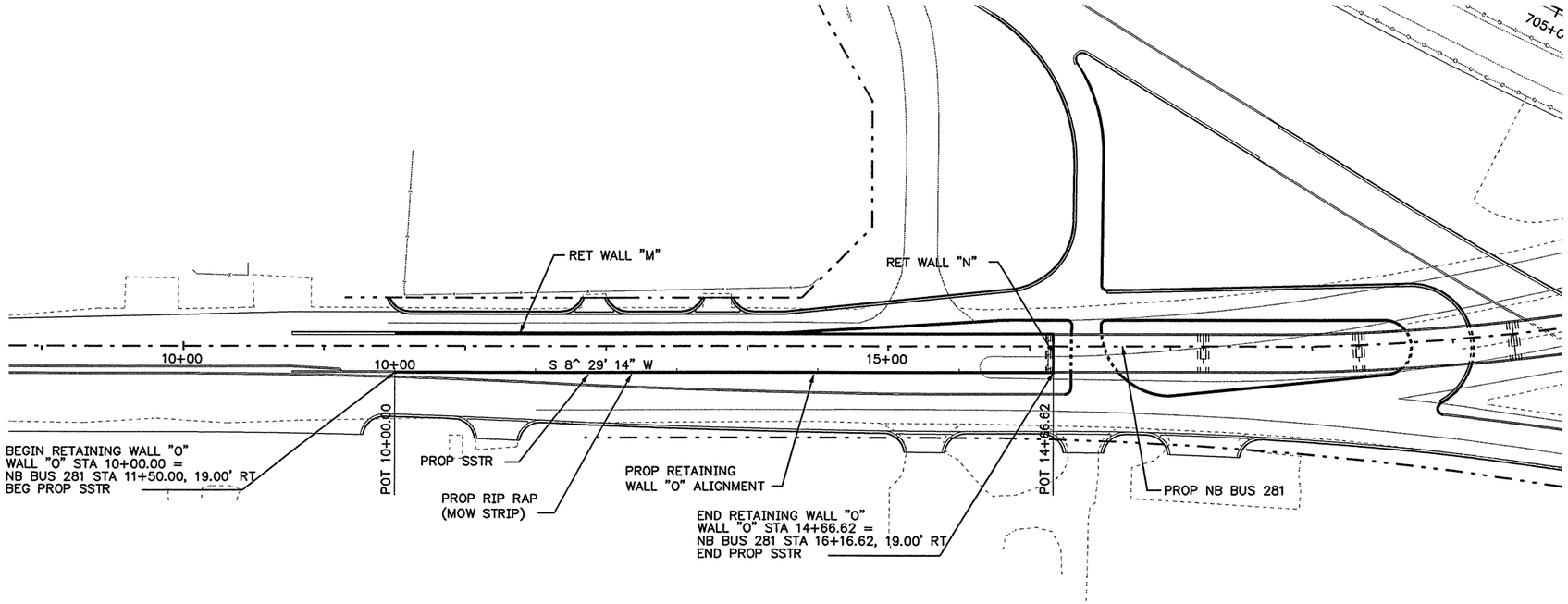

GENERAL NOTES:

FOR RIPRAP DETAILS, TYPICAL SECTIONS AND DRAINAGE DETAILS REFER TO RETAINING WALL TYPICAL SECTION AND DETAILS SHEET.

ALL RETAINING WALL PANELS SHALL HAVE ASHLAR STONE FINISH WITH COLOR (VIA CONCRETE ADMIXTURE) AS SHOWN ON "FORM LINER ARCHITECTURAL DETAILS". PANELS SHALL NOT BE PAINTED.

⊗ FOR TEST HOLE LOCATIONS AND LOG, REFER TO TEST HOLE DATA SHEETS.

FOUNDATION SOILS FOR THE RETAINING WALLS SHALL BE PROOF ROLLED IN ACCORDANCE WITH SPECIFICATION ITEM 423

EMBANKMENT BACKFILL UNDER ITEM 423 SHALL BE TYPE "A" MATERIAL.

DURING CONSTRUCTION OF RETAINING WALLS CONTRACTOR SHALL TAKE ADEQUATE PRECAUTIONS TO PROTECT EMBANKMENT BACKFILL AND EXCAVATION AREAS WITH TEMPORARY SHORING OR OTHER METHODS APPROVED BY THE ENGINEER.

SHEET TOTALS

ITEM	EST.	FINAL	UNIT	DESCRIPTION
423	5,219		SF	RETAINING WALL (MSE)
432	51.8		CY	RIP RAP CL. B CONCRETE
450	462.00		LF	SINGLE SLOPE TRAFFIC RAILING

RETAINING WALL "O" TOP & BOTTOM FRONT FACE

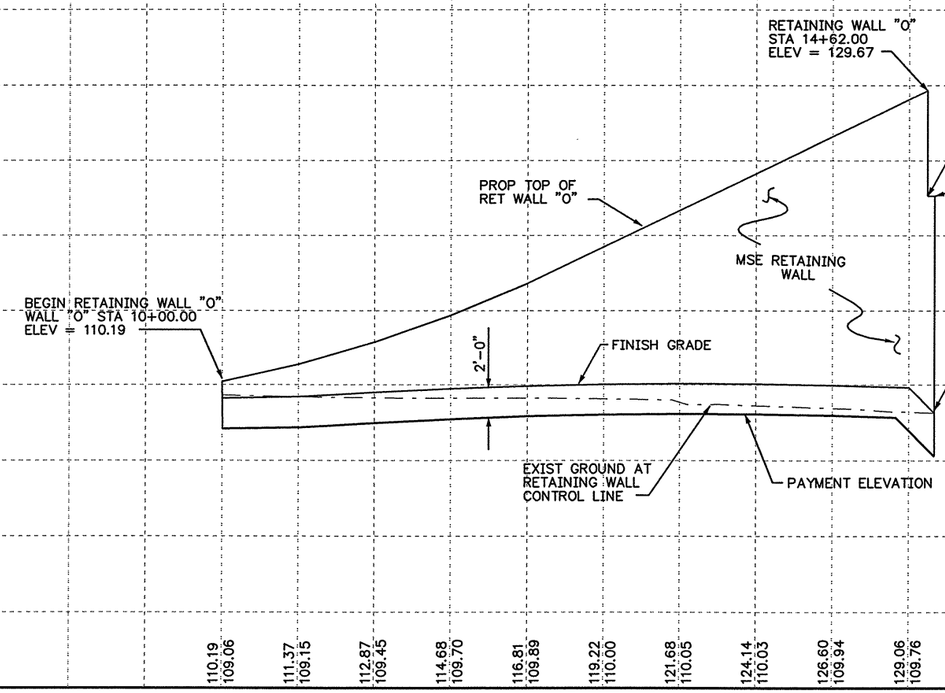

NOTE:
a) SOIL AREA ALONG THE RETAINING WALL AND BELOW THE LEVELING PAD AND BACKFILL SHALL BE REPLACED WITH SELECT FILL APPROVED BY THE ENGINEER. THE SOIL AREA SHALL BE 5 ' DEEP AND 20 ' WIDE. THE HORIZONTAL WIDTH OF THE AREA SHALL BE FROM 5 FEET BEYOND THE LEVELING PAD TO THE EDGE OF THE BACKFILL BEHIND THE RETAINING WALLS. THE ESTIMATED QUANTITY FOR THIS ITEM IS 1,728 CY. PAYMENT FOR THIS ITEM SHALL BE SUBSIDIARY TO PAY ITEM 423. REFER TO DETAIL "A" ON SHEET 468.
ANY SOILS THAT ARE FOUND TO BE UNSUITABLE SHALL BE REMOVED AND REPLACED, ADDITIONAL GEOTECHNICAL TESTING SHALL BE DONE AND APPROVED BY ENGINEER PRIOR TO BEGINING CONSTRUCTION.
b) CONTRACTOR SHALL ENSURE PROPER DRAINAGE AT ALL AREAS AROUND THE RETAINING WALLS.

	130	125	120	115	110	105	100	95
TOP OF WALL ELEV					110.19	111.37	112.87	114.68
FINISH GRADE ELEV					109.06	109.15	109.45	109.70

10+00	11+00	12+00	13+00	14+00
116.81	119.22	121.68	124.14	126.60	129.06
109.89	110.00	110.05	110.03	109.94	109.76

LEGEND
- TOP OF WALL ELEV
- FINISHED GRADE ELEV
- EXIST NAT GROUND ELEV

THE SEAL APPEARING ON THIS DOCUMENT WAS AUTHORIZED BY DEEPAK MANGLORKAR, P.E. 89613 ON 8/19/2003.

STATE OF TEXAS
DEEPAK MANGLORKAR
89613
LICENSED PROFESSIONAL ENGINEER
D. Manglorkar

Parsons Brinckerhoff
Quade & Douglas Inc.

Texas Department of Transportation

© 2003 by TxDOT

US 281
RETAINING WALL "O"
PLAN & PROFILE

PLAN 1"= 100' HORIZ
PROFILE 1"= 10' VERT

SHEET 1 OF 1 | 281RPP20.DGN

DESIGNED: JA	FED. RD DIV. No.	STATE	FEDERAL AID PROJECT No.		HIGHWAY No.
CHECKED: JP	6	TEXAS			US 281
DRAWN:	STATE DISTRICT	COUNTY	CONTROL No.	SECTION No.	JOB No.	SHEET No.
CHECKED: JDH	PHARR	HIDALGO	0255	08	091	464

$FILE$

$NAME$

$TIME$

9/4/2003

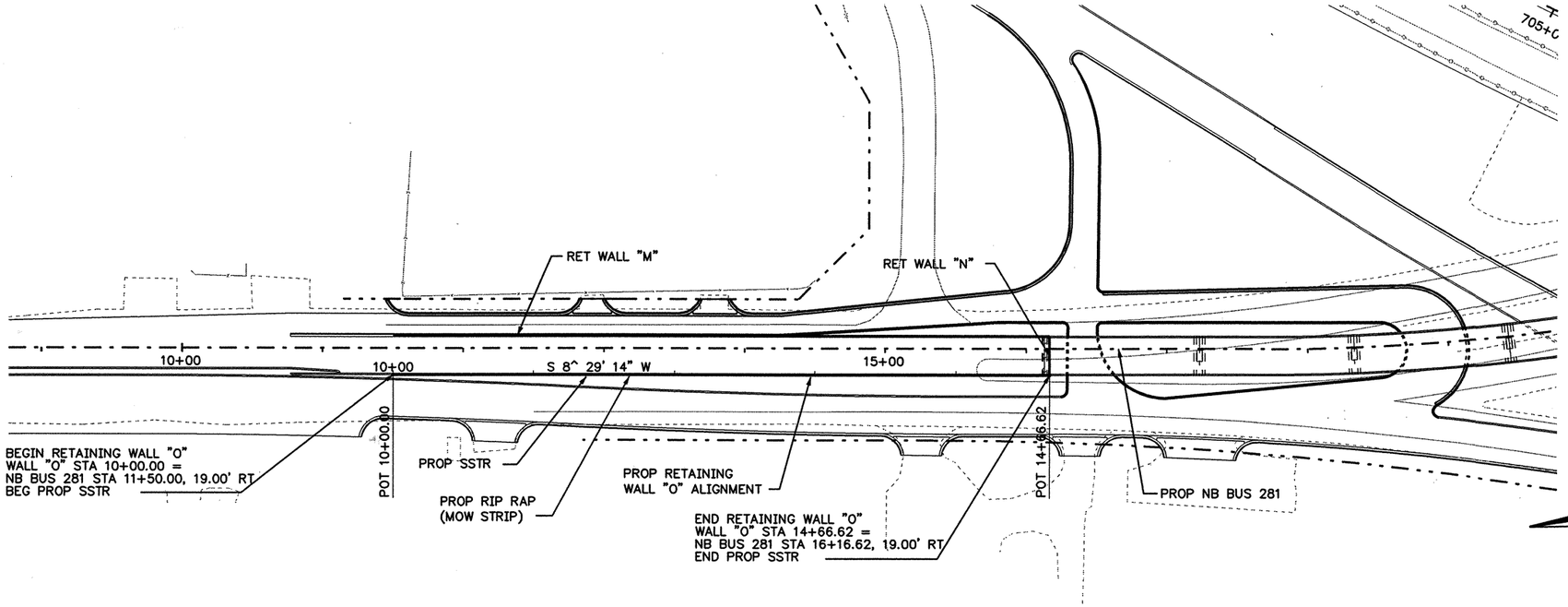

GENERAL NOTES:

FOR RIPRAP DETAILS, TYPICAL SECTIONS AND DRAINAGE DETAILS REFER TO RETAINING WALL TYPICAL SECTION AND DETAILS SHEET.

ALL RETAINING WALL PANELS SHALL HAVE ASHLAR STONE FINISH WITH COLOR (VIA CONCRETE ADMIXTURE) AS SHOWN ON "FORM LINER ARCHITECTURAL DETAILS". PANELS SHALL NOT BE PAINTED.

FOR TEST HOLE LOCATIONS AND LOG, REFER TO TEST HOLE DATA SHEETS.

SELECT BACKFILL UNDER ITEM 423 SHALL BE TYPE "A" MATERIAL.

TYPE "A" EMBANKMENT MATERIAL SHALL CONFORM TO THE FOLLOWING IN ACCORDANCE WITH TXDOT STANDARD SPECIFICATION ITEM 132 "EMBANKMENT", SECTION 132.2:
- LIQUID LIMIT SHALL NOT EXCEED 45
- PLASTICITY INDEX SHALL NOT EXCEED 15
- BAR LINEAR SHRINKAGE SHALL NOT BE LESS THAN 2

DURING CONSTRUCTION OF RETAINING WALLS CONTRACTOR SHALL TAKE ADEQUATE PRECAUTIONS TO PROTECT EMBANKMENT BACKFILL AND EXCAVATION AREAS WITH TEMPORARY SHORING OR OTHER METHODS APPROVED BY THE ENGINEER.

SHEET TOTALS

ITEM	EST.	FINAL	UNIT	DESCRIPTION
423	5,219		SF	RETAINING WALL (MSE)
432	51.8		CY	RIP RAP CL. B CONCRETE
450	462.00		LF	SINGLE SLOPE TRAFFIC RAILING

RETAINING WALL "O" TOP & BOTTOM FRONT FACE

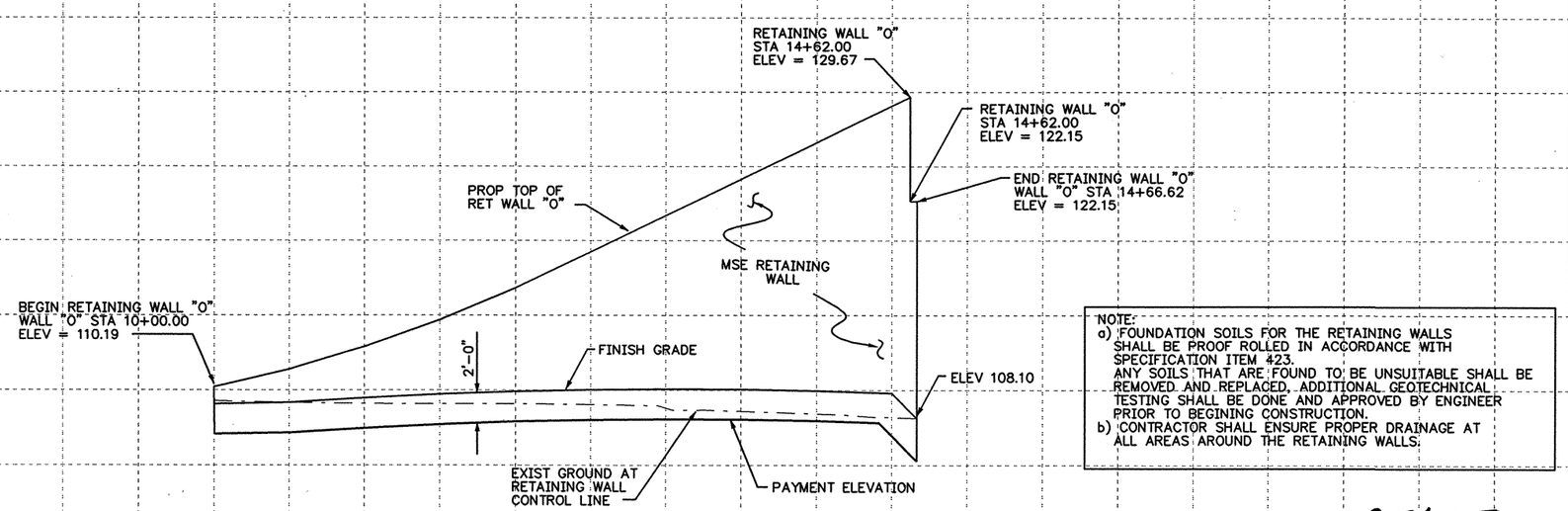

NOTE:
a) FOUNDATION SOILS FOR THE RETAINING WALLS SHALL BE PROOF ROLLED IN ACCORDANCE WITH SPECIFICATION ITEM 423. ANY SOILS THAT ARE FOUND TO BE UNSUITABLE SHALL BE REMOVED AND REPLACED. ADDITIONAL GEOTECHNICAL TESTING SHALL BE DONE AND APPROVED BY ENGINEER PRIOR TO BEGINING CONSTRUCTION.
b) CONTRACTOR SHALL ENSURE PROPER DRAINAGE AT ALL AREAS AROUND THE RETAINING WALLS.

REVISED
9-26-03

	10+00	11+00	12+00	13+00	14+00
TOP OF WALL ELEV	110.19	111.37	112.87	114.68	116.81	119.22	121.68	124.14	126.60	129.06
FINISH GRADE ELEV	109.06	109.15	109.45	109.70	109.89	110.00	110.05	110.03	109.94	109.76

LEGEND
- TOP OF WALL ELEV
- FINISHED GRADE ELEV
- EXIST NAT GROUND ELEV

THE SEAL APPEARING ON THIS DOCUMENT WAS AUTHORIZED BY DEEPAK MANGLORKAR, P.E. 89613 ON 9/4/2003 .

STATE OF TEXAS
DEEPAK MANGLORKAR
89613
REGISTERED
PROFESSIONAL ENGINEER

D. Manglorkar

Parsons Brinckerhoff
Quade & Douglas Inc.

Texas Department of Transportation

© 2003 by TxDOT

US 281
RETAINING WALL "O"
PLAN & PROFILE

PLAN 1"= 100' HORIZ
PROFILE 1"= 10' VERT

SHEET 1 OF 1 — 281RPP20.DGN

DESIGNED: JA	FED. RD DIV. No.	STATE	FEDERAL AID PROJECT No.		HIGHWAY No.
CHECKED: JP	6	TEXAS			US 281

DRAWN:	STATE DISTRICT	COUNTY	CONTROL No.	SECTION No.	JOB No.	SHEET No.
CHECKED: JDH	PHARR	HIDALGO	0255	08	091	464

$FILE$

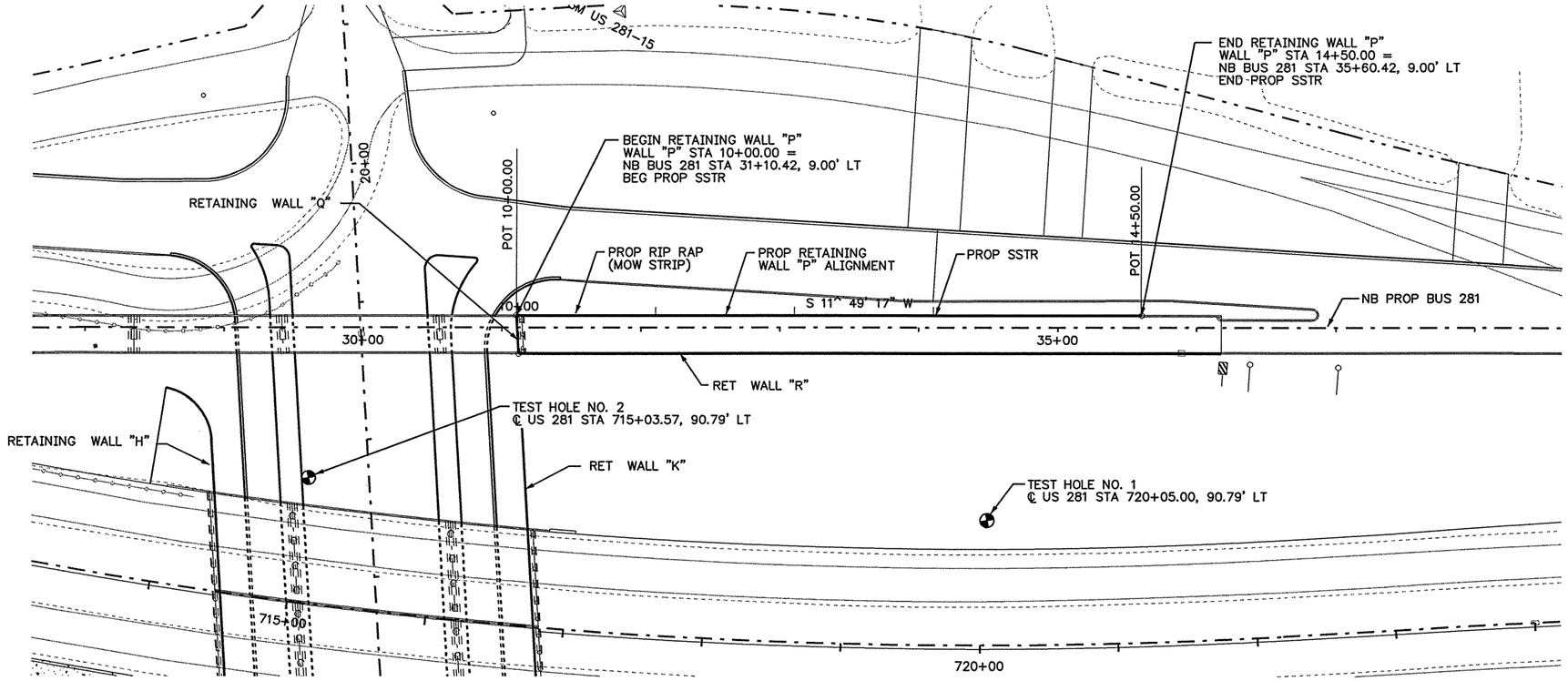

GENERAL NOTES:

FOR RIPRAP DETAILS, TYPICAL SECTIONS AND DRAINAGE DETAILS REFER TO RETAINING WALL TYPICAL SECTION AND DETAILS SHEET.

ALL RETAINING WALL PANELS SHALL HAVE ASHLAR STONE FINISH WITH COLOR (VIA CONCRETE ADMIXTURE) AS SHOWN ON "FORM LINER ARCHITECTURAL DETAILS". PANELS SHALL NOT BE PAINTED.

⊠ FOR TEST HOLE LOCATIONS AND LOG, REFER TO TEST HOLE DATA SHEETS.

FOUNDATION SOILS FOR THE RETAINING WALLS SHALL BE PROOF ROLLED IN ACCORDANCE WITH SPECIFICATION ITEM 423

EMBANKMENT BACKFILL UNDER ITEM 423 SHALL BE TYPE "A" MATERIAL.

DURING CONSTRUCTION OF RETAINING WALLS CONTRACTOR SHALL TAKE ADEQUATE PRECAUTIONS TO PROTECT EMBANKMENT BACKFILL AND EXCAVATION AREAS WITH TEMPORARY SHORING OR OTHER METHODS APPROVED BY THE ENGINEER.

SHEET TOTALS

ITEM	EST.	FINAL	UNIT	DESCRIPTION
423	4,720		SF	RETAINING WALL (MSE)
432	50		CY	RIP RAP CL. B CONCRETE
450	445.37		LF	SINGLE SLOPE TRAFFIC RAILING

RETAINING WALL "P" TOP & BOTTOM BACK FACE

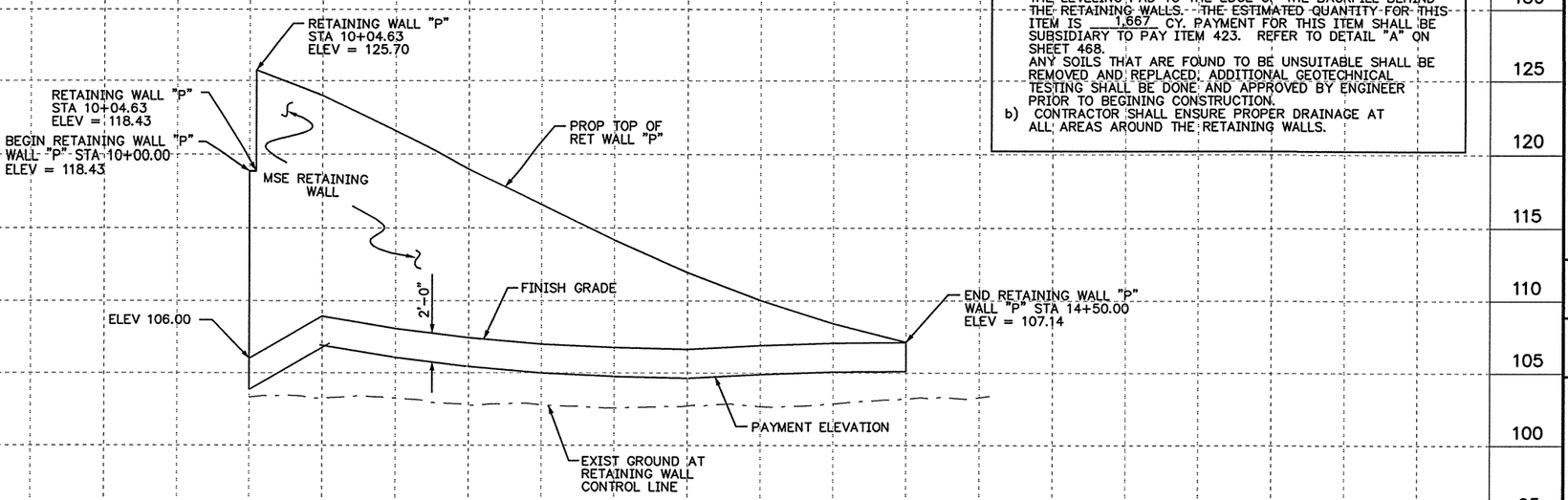

NOTE:
a) SOIL AREA ALONG THE RETAINING WALL AND BELOW THE LEVELING PAD AND BACKFILL SHALL BE REPLACED WITH SELECT FILL APPROVED BY THE ENGINEER. THE SOIL AREA SHALL BE 5 ' DEEP AND 20 WIDE. THE HORIZONTAL WIDTH OF THE AREA SHALL BE FROM 5 FEET BEYOND THE LEVELING PAD TO THE EDGE OF THE BACKFILL BEHIND THE RETAINING WALLS. THE ESTIMATED QUANTITY FOR THIS ITEM IS 1,667 CY. PAYMENT FOR THIS ITEM SHALL BE SUBSIDIARY TO PAY ITEM 423. REFER TO DETAIL "A" ON SHEET 468.
ANY SOILS THAT ARE FOUND TO BE UNSUITABLE SHALL BE REMOVED AND REPLACED. ADDITIONAL GEOTECHNICAL TESTING SHALL BE DONE AND APPROVED BY ENGINEER PRIOR TO BEGINING CONSTRUCTION.
b) CONTRACTOR SHALL ENSURE PROPER DRAINAGE AT ALL AREAS AROUND THE RETAINING WALLS.

TOP OF WALL ELEV FINISH GRADE ELEV	10+00	11+00	12+00	13+00	14+00	15+00
	119.85 106.00	124.01 108.93	121.55 108.08	119.10 107.44	116.64 107.00	114.19 106.76	111.95 106.65	110.03 106.91	108.43 107.08	107.14 107.12

LEGEND
- TOP OF WALL ELEV
- FINISHED GRADE ELEV
- EXIST NAT GROUND ELEV

THE SEAL APPEARING ON THIS DOCUMENT WAS AUTHORIZED BY DEEPAK MANGLORKAR, P.E. 89613 ON 8/19/2003.

STATE OF TEXAS · DEEPAK MANGLORKAR · 89613 · LICENSED PROFESSIONAL ENGINEER

Parsons Brinckerhoff Quade & Douglas Inc.

Texas Department of Transportation

© 2003 by TxDOT

US 281
RETAINING WALL "P"
PLAN & PROFILE

PLAN 1"= 100' HORIZ
PROFILE 1"= 10' VERT

SHEET 1 OF 1			281RPP21.DGN			
DESIGNED: JA	FED. RD DIV. No.	STATE	FEDERAL AID PROJECT No.			HIGHWAY No.
CHECKED: JP	6	TEXAS				US 281
DRAWN:	STATE DISTRICT	COUNTY	CONTROL No.	SECTION No.	JOB No.	SHEET No.
CHECKED: JDH	PHARR	HIDALGO	0255	08	091	465

$NAME$ $TIME$ 8/19/2003 $FILE$

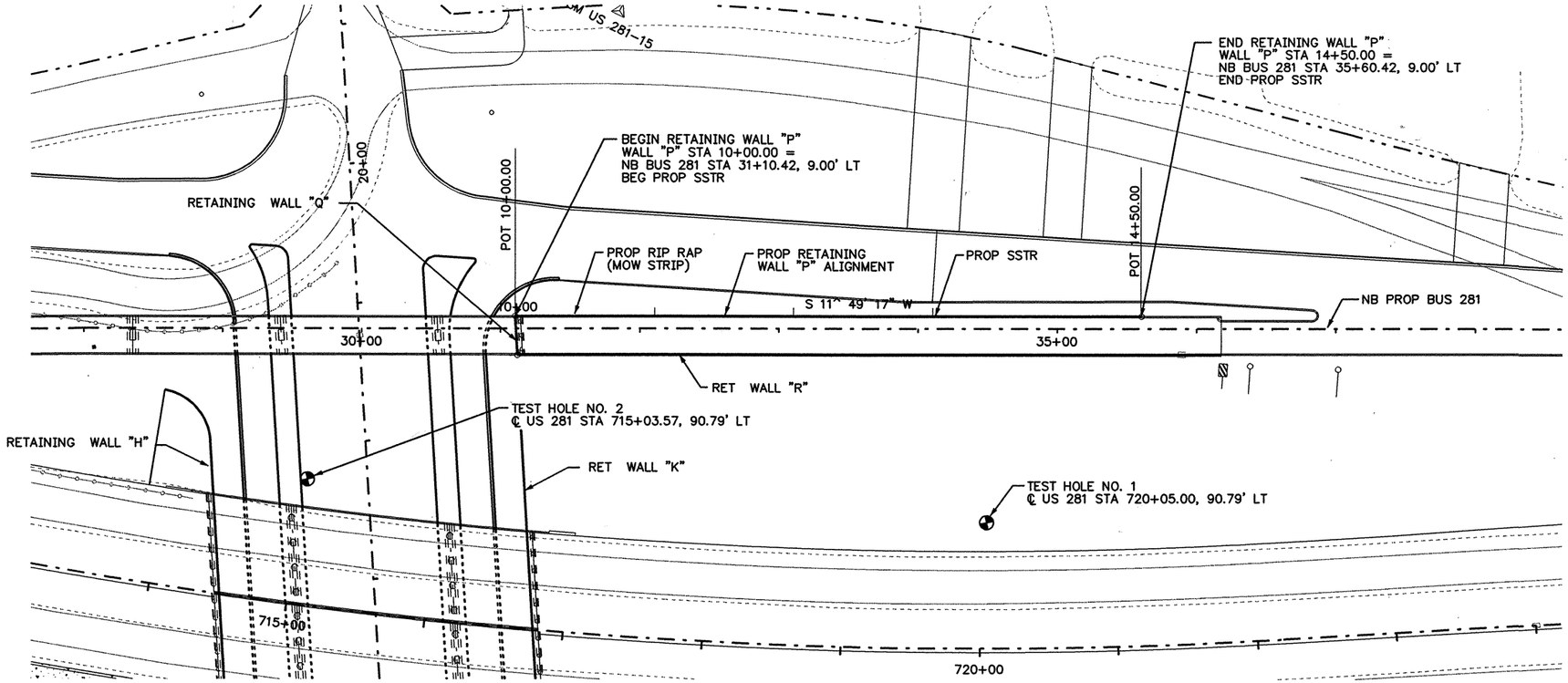

GENERAL NOTES:

FOR RIPRAP DETAILS, TYPICAL SECTIONS AND DRAINAGE DETAILS REFER TO RETAINING WALL TYPICAL SECTION AND DETAILS SHEET.

ALL RETAINING WALL PANELS SHALL HAVE ASHLAR STONE FINISH WITH COLOR (VIA CONCRETE ADMIXTURE) AS SHOWN ON "FORM LINER ARCHITECTURAL DETAILS". PANELS SHALL NOT BE PAINTED.

FOR TEST HOLE LOCATIONS AND LOG, REFER TO TEST HOLE DATA SHEETS.

SELECT BACKFILL UNDER ITEM 423 SHALL BE TYPE "A" MATERIAL.

TYPE "A" EMBANKMENT MATERIAL SHALL CONFORM TO THE FOLLOWING IN ACCORDANCE WITH TXDOT STANDARD SPECIFICATION ITEM 132 "EMBANKMENT", SECTION 132.2:
LIQUID LIMIT SHALL NOT EXCEED 45
PLASTICITY INDEX SHALL NOT EXCEED 15
BAR LINEAR SHRINKAGE SHALL NOT BE LESS THAN 2

DURING CONSTRUCTION OF RETAINING WALLS CONTRACTOR SHALL TAKE ADEQUATE PRECAUTIONS TO PROTECT EMBANKMENT BACKFILL AND EXCAVATION AREAS WITH TEMPORARY SHORING OR OTHER METHODS APPROVED BY THE ENGINEER.

SHEET TOTALS

ITEM	EST.	FINAL	UNIT	DESCRIPTION
423	4,720		SF	RETAINING WALL (MSE)
432	50		CY	RIP RAP CL. B CONCRETE
450	445.37		LF	SINGLE SLOPE TRAFFIC RAILING

RETAINING WALL "P" TOP & BOTTOM BACK FACE

NOTE:
a) FOUNDATION SOILS FOR THE RETAINING WALLS SHALL BE PROOF ROLLED IN ACCORDANCE WITH SPECIFICATION ITEM 423.
ANY SOILS THAT ARE FOUND TO BE UNSUITABLE SHALL BE REMOVED AND REPLACED, ADDITIONAL GEOTECHNICAL TESTING SHALL BE DONE AND APPROVED BY ENGINEER PRIOR TO BEGINING CONSTRUCTION.
b) CONTRACTOR SHALL ENSURE PROPER DRAINAGE AT ALL AREAS AROUND THE RETAINING WALLS.

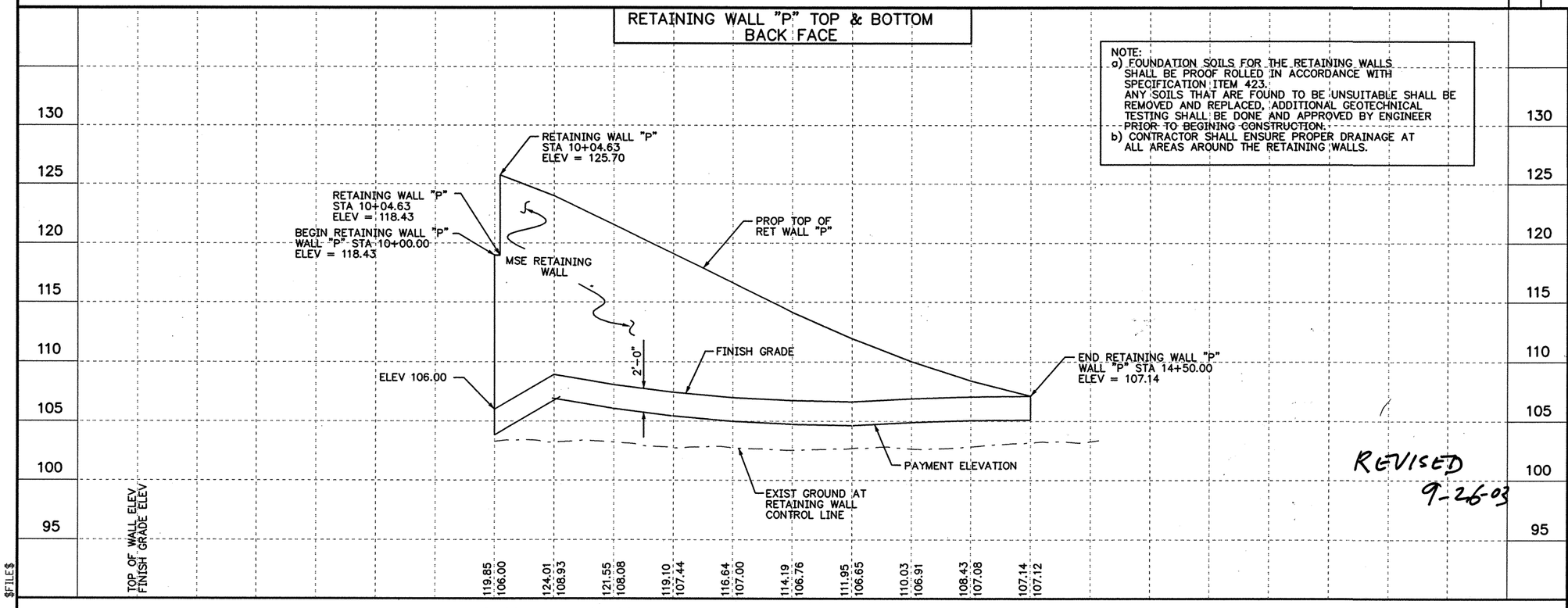

REVISED 9-26-03

LEGEND
TOP OF WALL ELEV
FINISHED GRADE ELEV
EXIST NAT GROUND ELEV

THE SEAL APPEARING ON THIS DOCUMENT WAS AUTHORIZED BY DEEPAK MANGLORKAR, P.E. 89613 ON 9/4/2003 .

STATE OF TEXAS
DEEPAK MANGLORKAR
89613
REGISTERED PROFESSIONAL ENGINEER

D. Manglorkar

Parsons Brinckerhoff Quade & Douglas Inc.

Texas Department of Transportation
© 2003 by TxDOT

US 281
RETAINING WALL "P"
PLAN & PROFILE

PLAN 1"= 100' HORIZ
PROFILE 1"= 10' VERT

SHEET 1 OF 1 | 281RPP21.DGN

DESIGNED: JA	FED. RD DIV. No.	STATE	FEDERAL AID PROJECT No.	HIGHWAY No.
CHECKED: JP	6	TEXAS		US 281

DRAWN:	STATE DISTRICT	COUNTY	CONTROL No.	SECTION No.	JOB No.	SHEET No.
CHECKED: JDH	PHARR	HIDALGO	0255	08	091	465

$NAME$ $TIME$ 9/4/2003 $FILE$

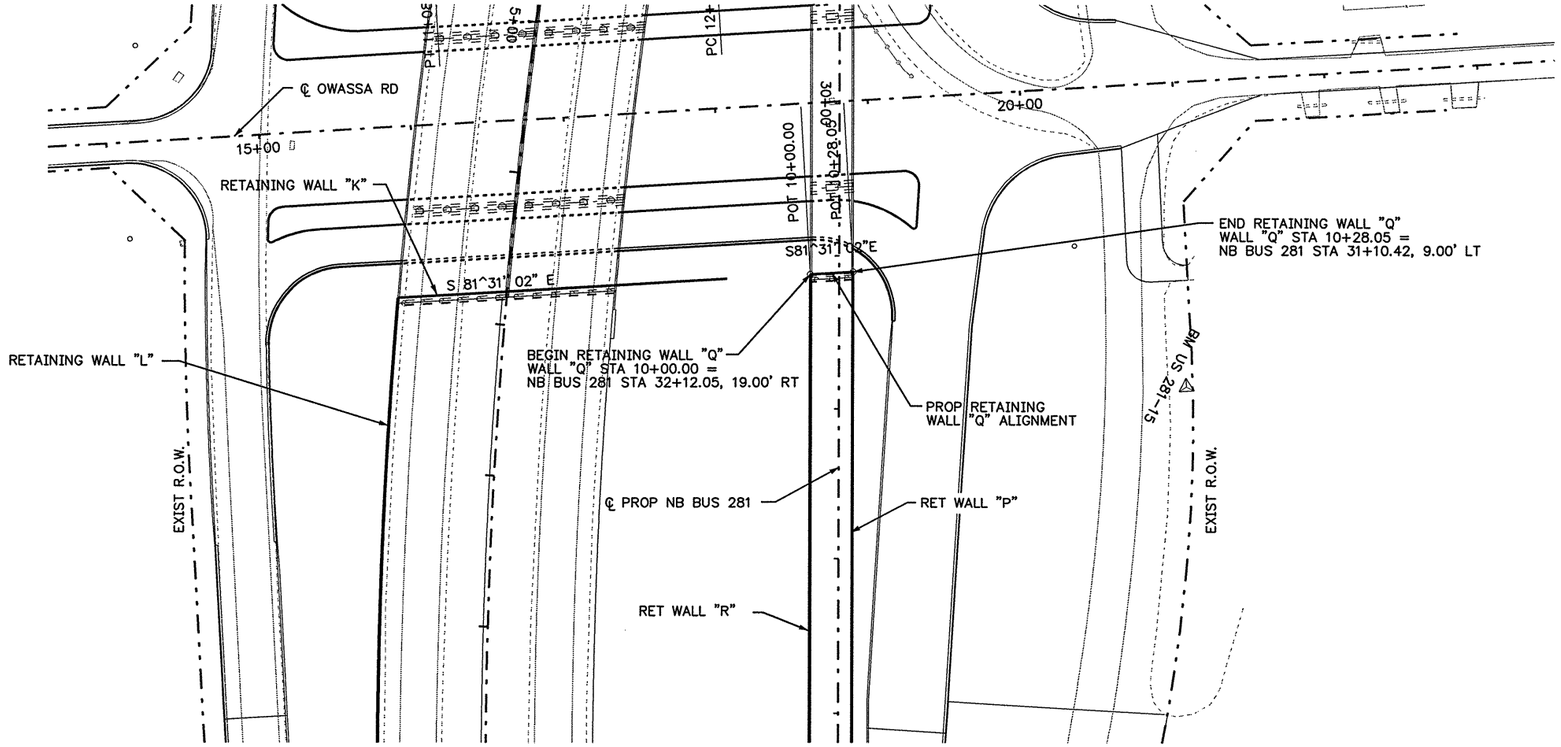

GENERAL NOTES:

FOR RIPRAP DETAILS, TYPICAL SECTIONS AND DRAINAGE DETAILS REFER TO RETAINING WALL TYPICAL SECTION AND DETAILS SHEET.

ALL RETAINING WALL PANELS SHALL HAVE ASHLAR STONE FINISH WITH COLOR (VIA CONCRETE ADMIXTURE) AS SHOWN ON "FORM LINER ARCHITECTURAL DETAILS". PANELS SHALL NOT BE PAINTED.

⊗ FOR TEST HOLE LOCATIONS AND LOG, REFER TO TEST HOLE DATA SHEETS.

FOUNDATION SOILS FOR THE RETAINING WALLS SHALL BE PROOF ROLLED IN ACCORDANCE WITH SPECIFICATION ITEM 423

EMBANKMENT BACKFILL UNDER ITEM 423 SHALL BE TYPE "A" MATERIAL.

DURING CONSTRUCTION OF RETAINING WALLS CONTRACTOR SHALL TAKE ADEQUATE PRECAUTIONS TO PROTECT EMBANKMENT BACKFILL AND EXCAVATION AREAS WITH TEMPORARY SHORING OR OTHER METHODS APPROVED BY THE ENGINEER.

SHEET TOTALS

ITEM	EST.	FINAL	UNIT	DESCRIPTION
423	420		SF	RETAINING WALL (MSE)

NOTE:
a) SOIL AREA ALONG THE RETAINING WALL AND BELOW THE LEVELING PAD AND BACKFILL SHALL BE REPLACED WITH SELECT FILL APPROVED BY THE ENGINEER. THE SOIL AREA SHALL BE 5' DEEP AND 16.5 WIDE. THE HORIZONTAL WIDTH OF THE AREA SHALL BE FROM 5 FEET BEYOND THE LEVELING PAD TO THE EDGE OF THE BACKFILL BEHIND THE RETAINING WALLS. THE ESTIMATED QUANTITY FOR THIS ITEM IS 89 CY. PAYMENT FOR THIS ITEM SHALL BE SUBSIDIARY TO PAY ITEM 423. REFER TO DETAIL "A" ON SHEET 468.
ANY SOILS THAT ARE FOUND TO BE UNSUITABLE SHALL BE REMOVED AND REPLACED, ADDITIONAL GEOTECHNICAL TESTING SHALL BE DONE AND APPROVED BY ENGINEER PRIOR TO BEGINING CONSTRUCTION.
b) CONTRACTOR SHALL ENSURE PROPER DRAINAGE AT ALL AREAS AROUND THE RETAINING WALLS.

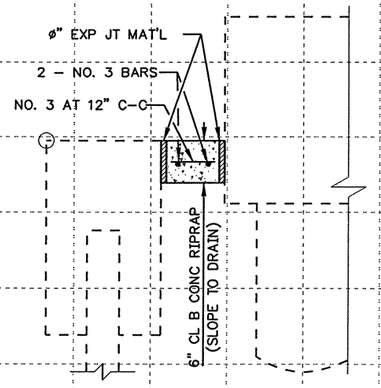

RIPRAP DETAIL TOP OF WALL
N.T.S.

RETAINING WALL "Q" TOP & BOTTOM BACK FACE

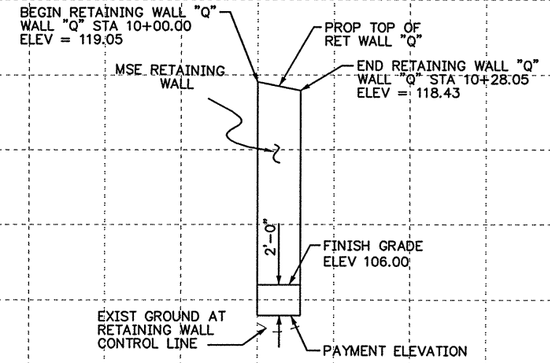

10+00

⊗ ASSUMED WIDTH OF COPING FOR LOCATION OF WALL. CONTRACTOR SHALL ADJUST LOCATION OF WALL BASED ON THE ACTUAL COPING WIDTH. (SUBSIDIARY TO ITEM 423)

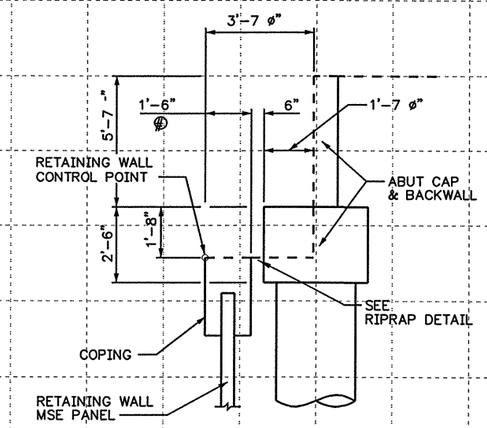

RETAINING WALL (MSE)
TYPICAL SECTION AT ABUTMENT

LEGEND
TOP OF WALL ELEV
FINISHED GRADE ELEV
EXIST NAT GROUND ELEV

THE SEAL APPEARING ON THIS DOCUMENT WAS AUTHORIZED BY DEEPAK MANGLORKAR, P.E. 89613 ON 8/19/2003.

STATE OF TEXAS · DEEPAK MANGLORKAR · 89613 · LICENSED PROFESSIONAL ENGINEER

Parsons Brinckerhoff Quade & Douglas Inc.

Texas Department of Transportation

© 2003 by TxDOT

NB BUS. 281 RETAINING WALL "Q" PLAN & PROFILE

PLAN 1"= 100' HORIZ
PROFILE 1"= 10' VERT

SHEET 1 OF 1 | 281RPP22.DGN

DESIGNED: JA	FED. RD DIV. No.	STATE	FEDERAL AID PROJECT No.	HIGHWAY No.
CHECKED: JP	6	TEXAS		US 281

DRAWN:	STATE DISTRICT	COUNTY	CONTROL No.	SECTION No.	JOB No.	SHEET No.
CHECKED: JDH	PHARR	HIDALGO	0255	08	091	466

$NAME$ $TIME$ 8/19/2003 $FILE$

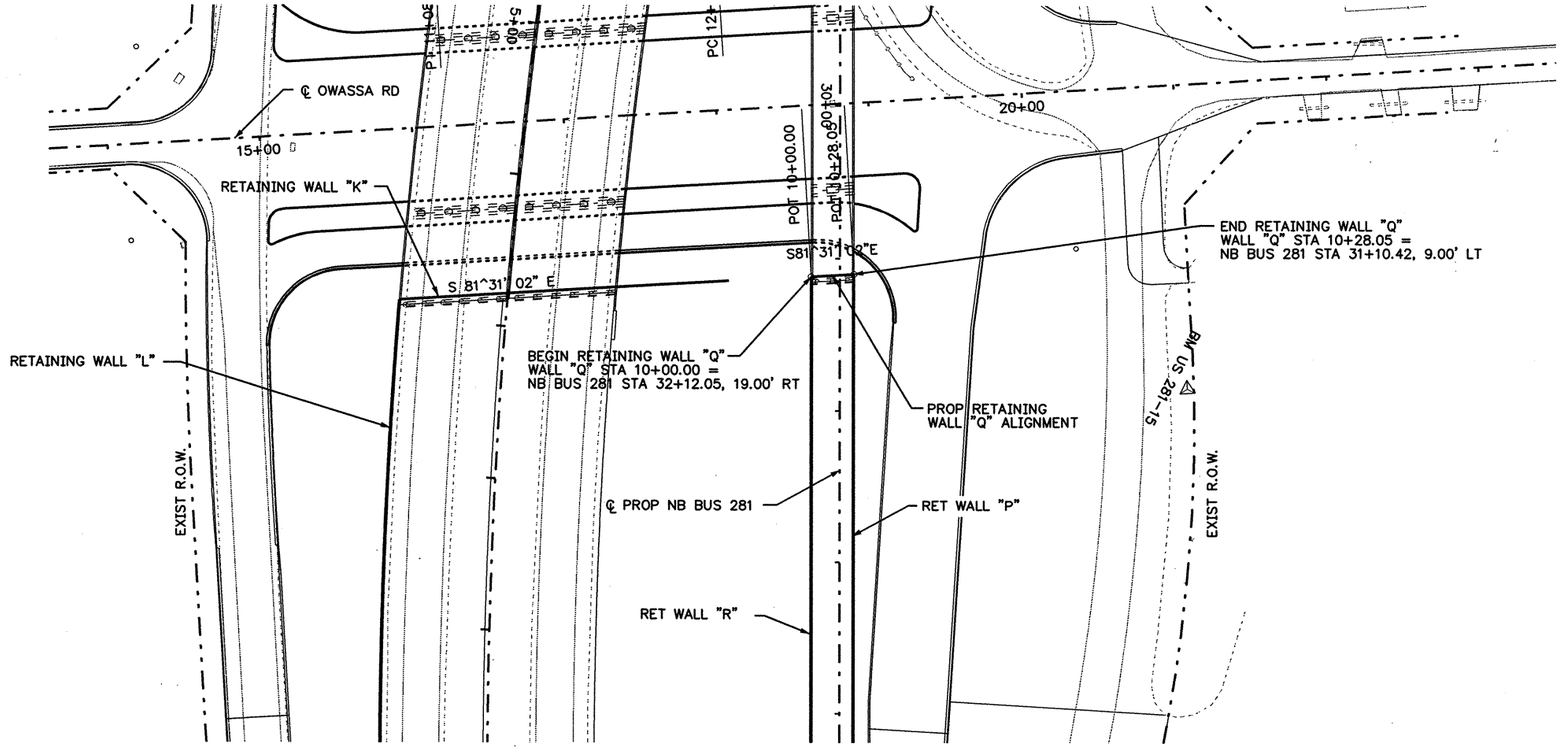

GENERAL NOTES:

FOR RIPRAP DETAILS, TYPICAL SECTIONS AND DRAINAGE DETAILS REFER TO RETAINING WALL TYPICAL SECTION AND DETAILS SHEET.

ALL RETAINING WALL PANELS SHALL HAVE ASHLAR STONE FINISH WITH COLOR (VIA CONCRETE ADMIXTURE) AS SHOWN ON "FORM LINER ARCHITECTURAL DETAILS". PANELS SHALL NOT BE PAINTED.

⊗ FOR TEST HOLE LOCATIONS AND LOG, REFER TO TEST HOLE DATA SHEETS.

SELECT BACKFILL UNDER ITEM 423 SHALL BE TYPE "A" MATERIAL.

TYPE "A" EMBANKMENT MATERIAL SHALL CONFORM TO THE FOLLOWING IN ACCORDANCE WITH TXDOT STANDARD SPECIFICATION ITEM 132 "EMBANKMENT", SECTION 132.2:
- LIQUID LIMIT SHALL NOT EXCEED 45
- PLASTICITY INDEX SHALL NOT EXCEED 15
- BAR LINEAR SHRINKAGE SHALL NOT BE LESS THAN 2

DURING CONSTRUCTION OF RETAINING WALLS CONTRACTOR SHALL TAKE ADEQUATE PRECAUTIONS TO PROTECT EMBANKMENT BACKFILL AND EXCAVATION AREAS WITH TEMPORARY SHORING OR OTHER METHODS APPROVED BY THE ENGINEER.

SHEET TOTALS

ITEM	EST.	FINAL	UNIT	DESCRIPTION
423	420		SF	RETAINING WALL (MSE)

NOTE:
a) FOUNDATION SOILS FOR THE RETAINING WALLS SHALL BE PROOF ROLLED IN ACCORDANCE WITH SPECIFICATION ITEM 423.
ANY SOILS THAT ARE FOUND TO BE UNSUITABLE SHALL BE REMOVED AND REPLACED, ADDITIONAL GEOTECHNICAL TESTING SHALL BE DONE AND APPROVED BY ENGINEER PRIOR TO BEGINING CONSTRUCTION.
b) CONTRACTOR SHALL ENSURE PROPER DRAINAGE AT ALL AREAS AROUND THE RETAINING WALLS.

RETAINING WALL "Q" TOP & BOTTOM BACK FACE

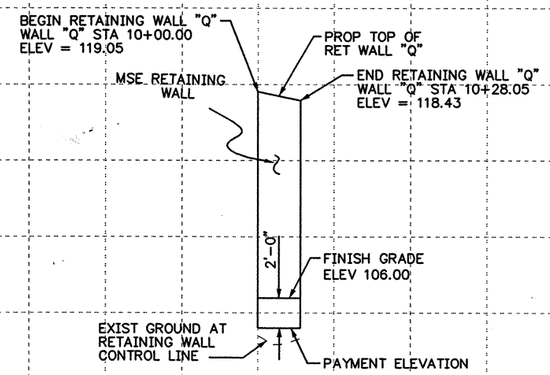

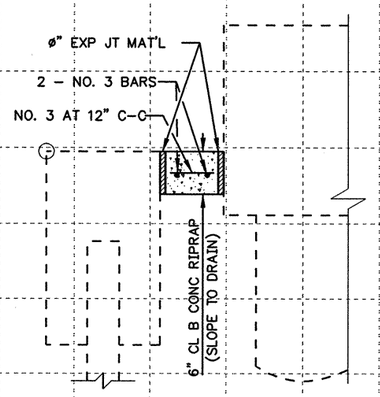

RIPRAP DETAIL TOP OF WALL
N.T.S.

℄ ASSUMED WIDTH OF COPING FOR LOCATION OF WALL. CONTRACTOR SHALL ADJUST LOCATION OF WALL BASED ON THE ACTUAL COPING WIDTH. (SUBSIDIARY TO ITEM 423)

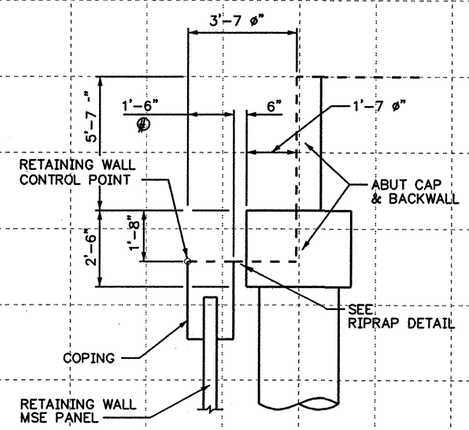

RETAINING WALL (MSE)
TYPICAL SECTION AT ABUTMENT

REVISED 9-26-03

LEGEND
- TOP OF WALL ELEV
- FINISHED GRADE ELEV
- EXIST NAT GROUND ELEV

THE SEAL APPEARING ON THIS DOCUMENT WAS AUTHORIZED BY DEEPAK MANGLORKAR, P.E. 89613 ON 9/4/2003 .

STATE OF TEXAS · DEEPAK MANGLORKAR · 89613 · LICENSED PROFESSIONAL ENGINEER

D. Manglorkar

Parsons Brinckerhoff Quade & Douglas Inc.

Texas Department of Transportation

© 2003 by TxDOT

NB BUS. 281 RETAINING WALL "Q" PLAN & PROFILE

PLAN 1"= 100' HORIZ
PROFILE 1"= 10' VERT

SHEET 1 OF 1 — 281RPP22.DGN

DESIGNED: JA	FED. RD DIV. No.	STATE	FEDERAL AID PROJECT No.	HIGHWAY No.
CHECKED: JP	6	TEXAS		US 281

DRAWN:	STATE DISTRICT	COUNTY	CONTROL No.	SECTION No.	JOB No.	SHEET No.
CHECKED: JDH	PHARR	HIDALGO	0255	08	091	466

$NAME$ $TIME$ 9/4/2003 $FILE$

10+00

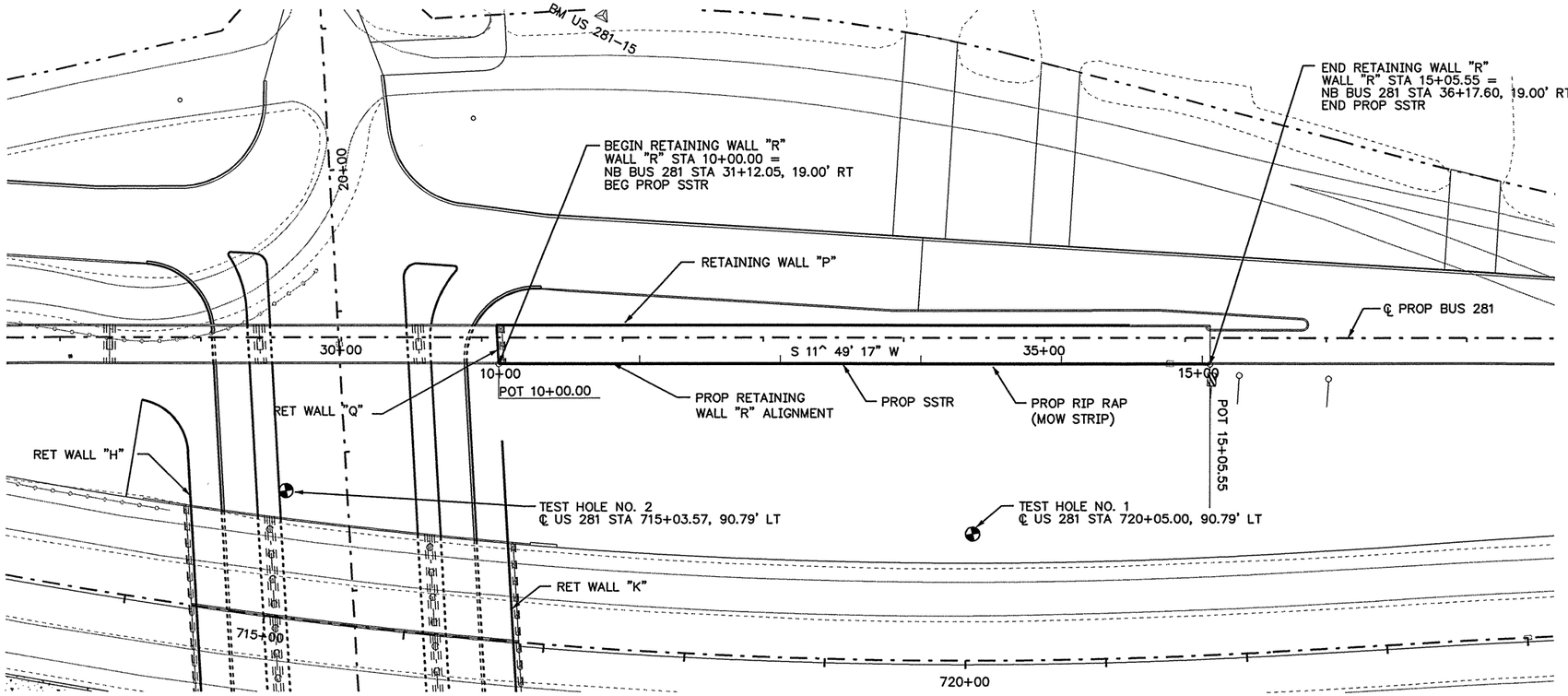

GENERAL NOTES:

FOR RIPRAP DETAILS, TYPICAL SECTIONS AND DRAINAGE DETAILS REFER TO RETAINING WALL TYPICAL SECTION AND DETAILS SHEET.

ALL RETAINING WALL PANELS SHALL HAVE ASHLAR STONE FINISH WITH COLOR (VIA CONCRETE ADMIXTURE) AS SHOWN ON "FORM LINER ARCHITECTURAL DETAILS". PANELS SHALL NOT BE PAINTED.

FOR TEST HOLE LOCATIONS AND LOG, REFER TO TEST HOLE DATA SHEETS.

FOUNDATION SOILS FOR THE RETAINING WALLS SHALL BE PROOF ROLLED IN ACCORDANCE WITH SPECIFICATION ITEM 423

EMBANKMENT BACKFILL UNDER ITEM 423 SHALL BE TYPE "A" MATERIAL.

DURING CONSTRUCTION OF RETAINING WALLS CONTRACTOR SHALL TAKE ADEQUATE PRECAUTIONS TO PROTECT EMBANKMENT BACKFILL AND EXCAVATION AREAS WITH TEMPORARY SHORING OR OTHER METHODS APPROVED BY THE ENGINEER.

SHEET TOTALS

ITEM	EST.	FINAL	UNIT	DESCRIPTION
423	5,659		SF	RETAINING WALL (MSE)
432	56.2		CY	RIP RAP CL. B CONCRETE
450	500.92		LF	SINGLE SLOPE TRAFFIC RAILING

RETAINING WALL "R" TOP & BOTTOM FRONT FACE

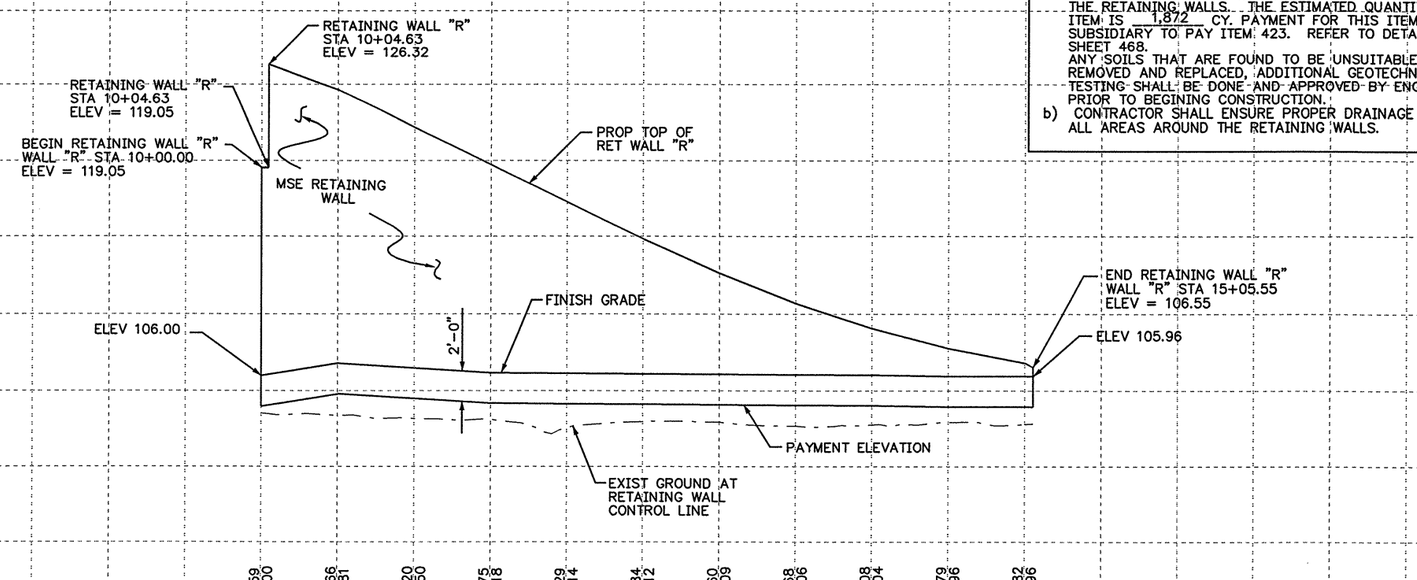

NOTE:
a) SOIL AREA ALONG THE RETAINING WALL AND BELOW THE LEVELING PAD AND BACKFILL SHALL BE REPLACED WITH SELECT FILL APPROVED BY THE ENGINEER. THE SOIL AREA SHALL BE 5 ' DEEP AND 20' WIDE. THE HORIZONTAL WIDTH OF THE AREA SHALL BE FROM 5 FEET BEYOND THE LEVELING PAD TO THE EDGE OF THE BACKFILL BEHIND THE RETAINING WALLS. THE ESTIMATED QUANTITY FOR THIS ITEM IS 1,872 CY. PAYMENT FOR THIS ITEM SHALL BE SUBSIDIARY TO PAY ITEM 423. REFER TO DETAIL "A" ON SHEET 468.
ANY SOILS THAT ARE FOUND TO BE UNSUITABLE SHALL BE REMOVED AND REPLACED, ADDITIONAL GEOTECHNICAL TESTING SHALL BE DONE AND APPROVED BY ENGINEER PRIOR TO BEGINING CONSTRUCTION.
b) CONTRACTOR SHALL ENSURE PROPER DRAINAGE AT ALL AREAS AROUND THE RETAINING WALLS.

LEGEND
- TOP OF WALL ELEV
- FINISHED GRADE ELEV
- EXIST NAT GROUND ELEV

THE SEAL APPEARING ON THIS DOCUMENT WAS AUTHORIZED BY DEEPAK MANGLORKAR, P.E. 89613 ON 8/19/2003.

STATE OF TEXAS
DEEPAK MANGLORKAR
89613
REGISTERED
PROFESSIONAL ENGINEER

Parsons Brinckerhoff
Quade & Douglas Inc.

Texas Department of Transportation
© 2003 by TxDOT

BUS 281
RETAINING WALL "R"
PLAN & PROFILE

PLAN 1"= 100' HORIZ
PROFILE 1"= 10' VERT

SHEET 1 OF 1 | 281RPP23.DGN

DESIGNED: JA	FED. RD DIV. No.	STATE	FEDERAL AID PROJECT No.			HIGHWAY No.
CHECKED: JP	6	TEXAS				US 281
DRAWN:	STATE DISTRICT	COUNTY	CONTROL No.	SECTION No.	JOB No.	SHEET No.
CHECKED: JDH	PHARR	HIDALGO	0255	08	091	467

$NAME$ $TIME$ 8/19/2003 $FILE$

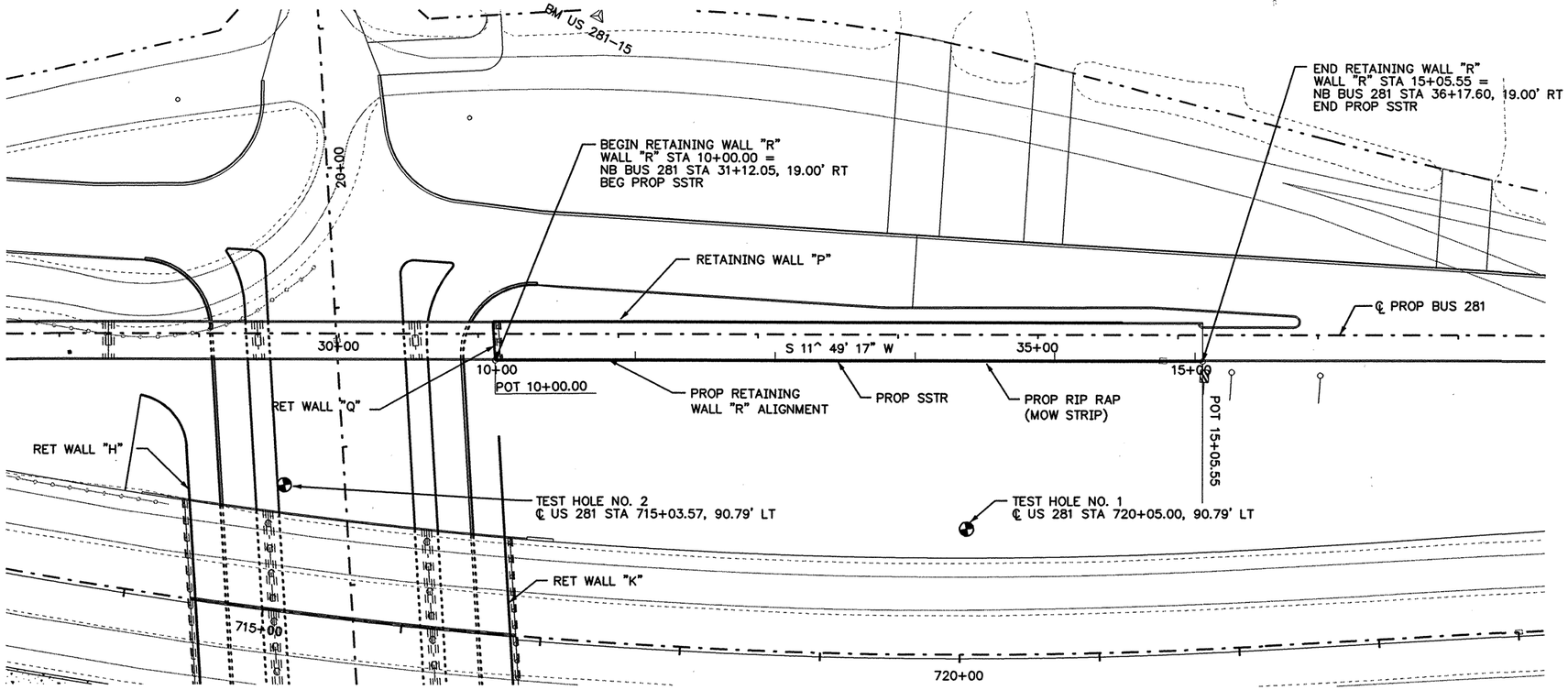

GENERAL NOTES:

FOR RIPRAP DETAILS, TYPICAL SECTIONS AND DRAINAGE DETAILS REFER TO RETAINING WALL TYPICAL SECTION AND DETAILS SHEET.

ALL RETAINING WALL PANELS SHALL HAVE ASHLAR STONE FINISH WITH COLOR (VIA CONCRETE ADMIXTURE) AS SHOWN ON "FORM LINER ARCHITECTURAL DETAILS". PANELS SHALL NOT BE PAINTED.

FOR TEST HOLE LOCATIONS AND LOG, REFER TO TEST HOLE DATA SHEETS.

SELECT BACKFILL UNDER ITEM 423 SHALL BE TYPE "A" MATERIAL.

TYPE "A" EMBANKMENT MATERIAL SHALL CONFORM TO THE FOLLOWING IN ACCORDANCE WITH TXDOT STANDARD SPECIFICATION ITEM 132 "EMBANKMENT", SECTION 132.2:
- LIQUID LIMIT SHALL NOT EXCEED 45
- PLASTICITY INDEX SHALL NOT EXCEED 15
- BAR LINEAR SHRINKAGE SHALL NOT BE LESS THAN 2

DURING CONSTRUCTION OF RETAINING WALLS CONTRACTOR SHALL TAKE ADEQUATE PRECAUTIONS TO PROTECT EMBANKMENT BACKFILL AND EXCAVATION AREAS WITH TEMPORARY SHORING OR OTHER METHODS APPROVED BY THE ENGINEER.

SHEET TOTALS

ITEM	EST.	FINAL	UNIT	DESCRIPTION
423	5,659		SF	RETAINING WALL (MSE)
432	56.2		CY	RIP RAP CL. B CONCRETE
450	500.92		LF	SINGLE SLOPE TRAFFIC RAILING

RETAINING WALL "R" TOP & BOTTOM FRONT FACE

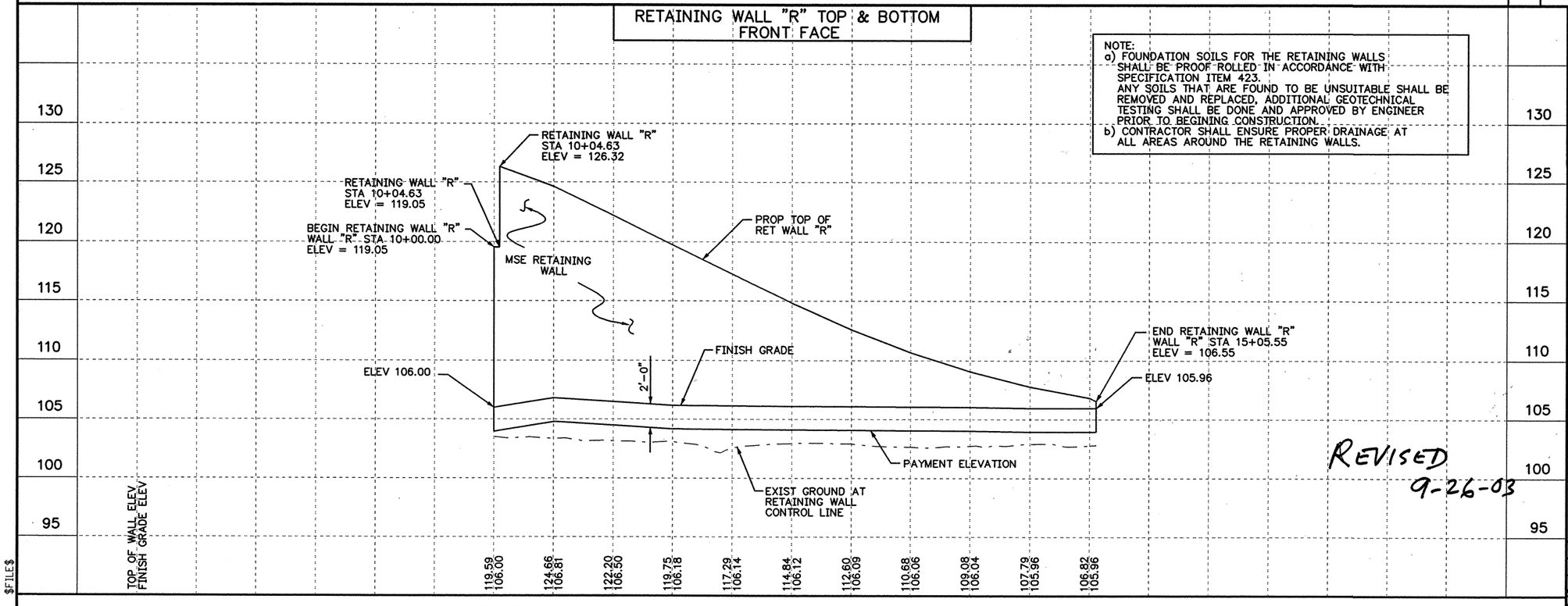

NOTE:
a) FOUNDATION SOILS FOR THE RETAINING WALLS SHALL BE PROOF ROLLED IN ACCORDANCE WITH SPECIFICATION ITEM 423.
ANY SOILS THAT ARE FOUND TO BE UNSUITABLE SHALL BE REMOVED AND REPLACED, ADDITIONAL GEOTECHNICAL TESTING SHALL BE DONE AND APPROVED BY ENGINEER PRIOR TO BEGINING CONSTRUCTION.
b) CONTRACTOR SHALL ENSURE PROPER DRAINAGE AT ALL AREAS AROUND THE RETAINING WALLS.

REVISED 9-26-03

LEGEND
- TOP OF WALL ELEV
- FINISHED GRADE ELEV
- EXIST NAT GROUND ELEV

THE SEAL APPEARING ON THIS DOCUMENT WAS AUTHORIZED BY DEEPAK MANGLORKAR, P.E. 89613 ON 9/4/2003

STATE OF TEXAS
DEEPAK MANGLORKAR
89613
REGISTERED
PROFESSIONAL ENGINEER

D. Manglorkar

Parsons Brinckerhoff
Quade & Douglas Inc.

Texas Department of Transportation
© 2003 by TxDOT

BUS 281
RETAINING WALL "R"
PLAN & PROFILE

PLAN 1"= 100' HORIZ
PROFILE 1"= 10' VERT

SHEET 1 OF 1 — 281RPP23.DGN

DESIGNED: JA	FED. RD DIV. No.	STATE	FEDERAL AID PROJECT No.			HIGHWAY No.
CHECKED: JP	6	TEXAS				US 281
DRAWN:	STATE DISTRICT	COUNTY	CONTROL No.	SECTION No.	JOB No.	SHEET No.
CHECKED: JDH	PHARR	HIDALGO	0255	08	091	467

$NAME$
$TIME$
8/19/2003
$FILE$

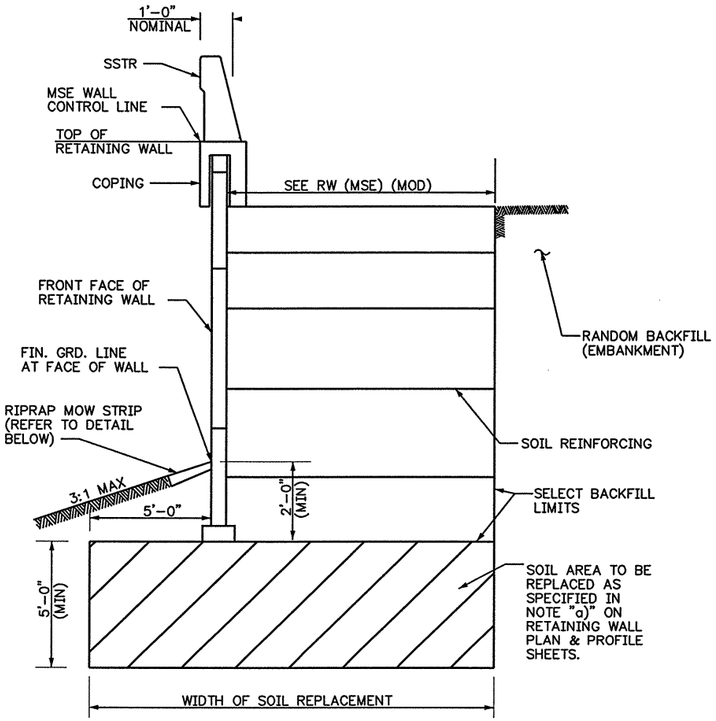

DETAIL "A"

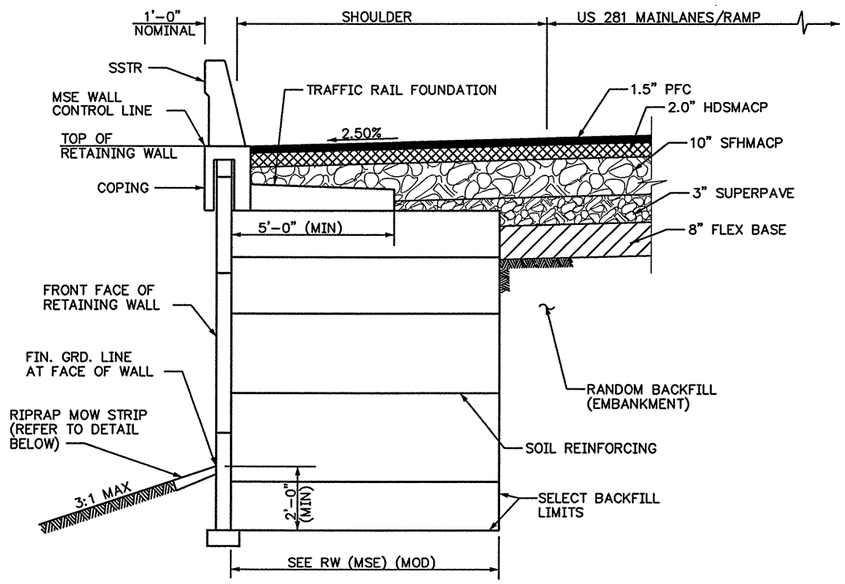

MSE WALL TYPICAL SECTION

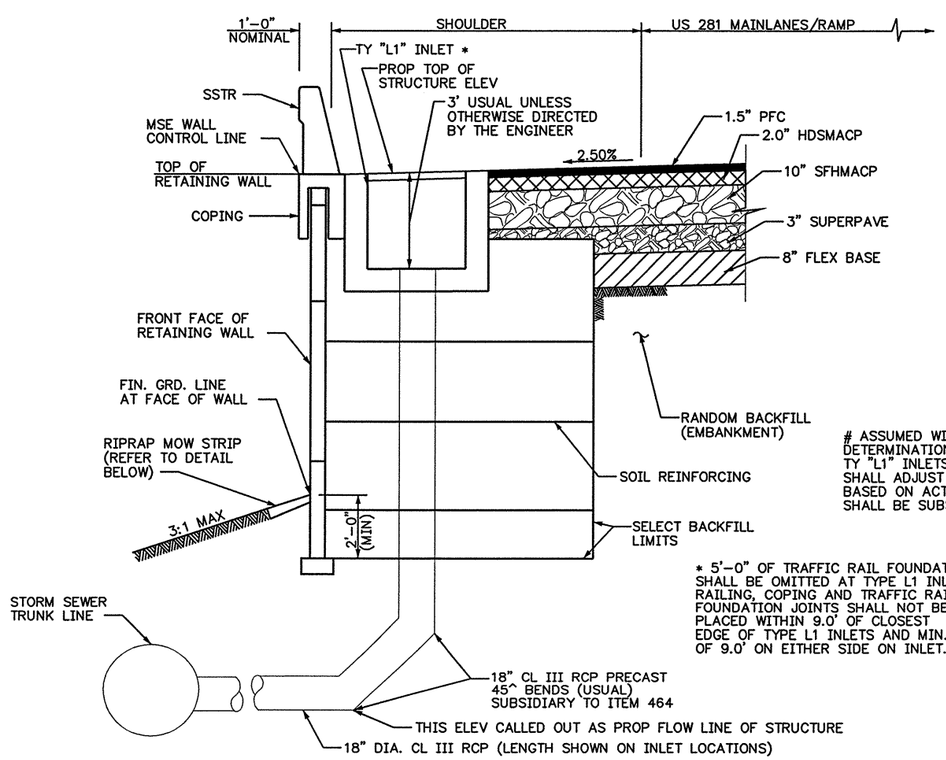

MSE WALL TYPICAL SECTION DETAIL
AT SPL TY "L" INLET WITH DROP PIPE
(REFER TO DRAINAGE PLANS FOR INLET LOCATIONS)

* 5'-0" OF TRAFFIC RAIL FOUNDATION SHALL BE OMITTED AT TYPE L1 INLETS. RAILING, COPING AND TRAFFIC RAIL FOUNDATION JOINTS SHALL NOT BE PLACED WITHIN 9.0' OF CLOSEST EDGE OF TYPE L1 INLETS AND MIN. OF 9.0' ON EITHER SIDE ON INLET.

ASSUMED WIDTH OF COPING FOR DETERMINATION OF LOCATION OF TY "L1" INLETS WAS 1'-6" CONTRACTOR SHALL ADJUST LOCATION OF TY "L1" INLETS BASED ON ACTURAL COPING WIDTH. ADJUSTMENT SHALL BE SUBSIDIARY TO ITEM 423.

GENERAL NOTES:

WHERE REQUIRED BY FIXTURES OR UNUSUAL CONDITIONS. THE GOVERNING SLOPES MAY BE VARIED WHEN SPECIFICALLY DIRECTED BY THE ENGINEER.

THE TOP 4" OF FLEX BASE SHALL BE NEW WHERE SALVAGE IS PART OF FLEX BASE.

THE 2% LIME SHOWN ON TYPICAL SECTIONS FOR ITEM 247 "FLEX BASE" IS SEPARATE FROM LIME WHICH MAY BE REQUIRED TO MEET P.I. AND TRIAXIAL REQUIREMENTS ADDED AT CONTRACTOR'S EXPENSE.

PCJ – DENOTES PERMISSIBLE CONSTRUCTION JOINT
PGL – DENOTES PROFILE GRADE LINE

WHERE POSSIBLE AND UNLESS OTHERWISE DIRECTED BY THE ENGINEER, PERMISSIBLE CONSTRUCTION JOINTS SHALL FALL ON STRIPING LINES AS SHOWN ON STRIPING DETAILS.

THE COMPLETE BASE SHALL BE ROLLED BEFORE THE EARTH SHOULDER IS SHAPED AND FINAL COMPACTION SHALL BE DONE OVER BASE AND EDGE OF SHOULDER. ALL GRADING SHALL BE WITHIN THE ROW LIMITS.

A STATION IS EQUIVALENT TO 100 FT.

114 LBS/YD2 IS EQUIVALENT TO 1" DEPTH.

* SEE SUPERELEVATION SECTION

⁴ MATCH EXIST CROSS SLOPE

EMBANKMENT BACKFILL UNDER ITEM 423 SHALL BE TYPE "A".

DURING CONSTRUCTION OF RETAINING WALLS CONTRACTOR SHALL TAKE ADEQUATE PRECAUTIONS TO PROTECT EMBANKMENT BACKFILL AND EXCAVATION AREAS WITH TEMPORARY SHORING OR OTHER METHODS APPROVED BY THE ENGINEER.

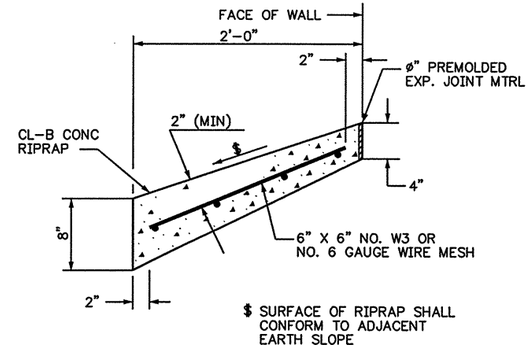

RIPRAP MOW STRIP DETAIL

THE SEAL APPEARING ON THIS DOCUMENT WAS AUTHORIZED BY DEEPAK MANGLORKAR, P.E. 89613 ON 8/18/03

STATE OF TEXAS
DEEPAK MANGLORKAR
89613
PROFESSIONAL ENGINEER
D. Manglorkar

Parsons Brinckerhoff Quade & Douglas Inc.

Texas Department of Transportation

© 2003 by TxDOT

RETAINING WALL TYPICAL SECTIONS AND DETAILS

SCALE: NTS

SHEET 1 OF 1				RETWALLDET01B.DGN			
DESIGNED: PAF	FED. RD DIV. No.	STATE	FEDERAL AID PROJECT No.			HIGHWAY No.	
CHECKED: JP	6	TEXAS				US 281	
DRAWN: RLJ	STATE DISTRICT	COUNTY	CONTROL No.	SECTION No.	JOB No.	SHEET No.	
CHECKED: JDH	PHARR	HIDALGO	0255	08	091	468	

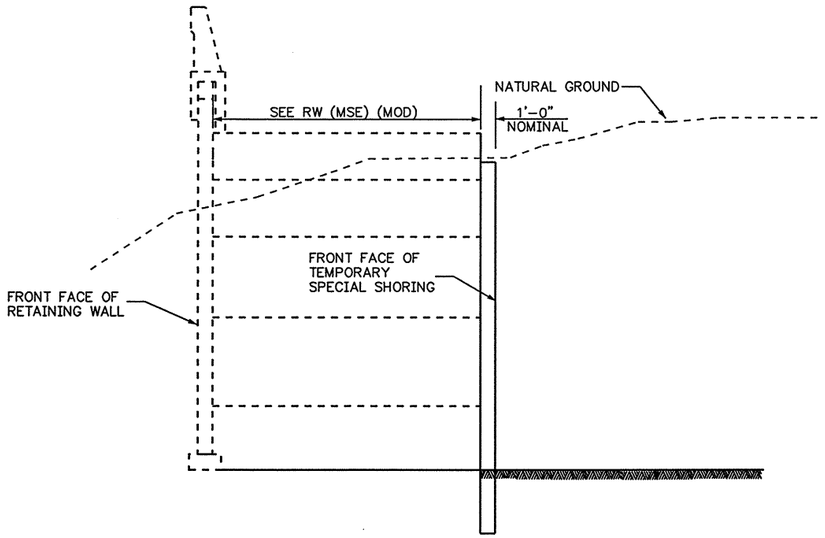

DETAIL FOR TEMPORARY SPECIAL SHORING

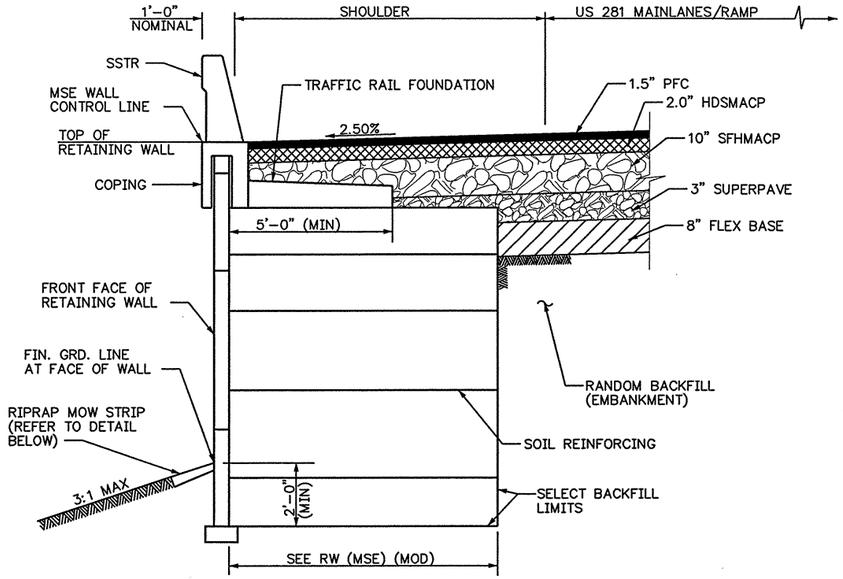

MSE WALL TYPICAL SECTION

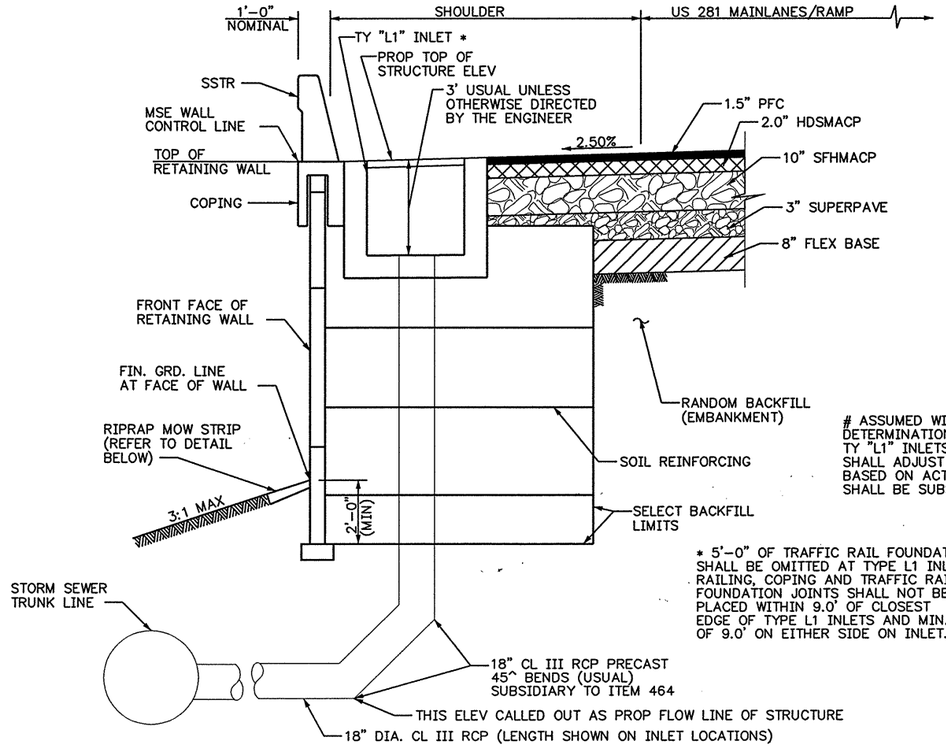

MSE WALL TYPICAL SECTION DETAIL
AT SPL TY "L" INLET WITH DROP PIPE
(REFER TO DRAINAGE PLANS FOR INLET LOCATIONS)

ASSUMED WIDTH OF COPING FOR DETERMINATION OF LOCATION OF TY "L1" INLETS WAS 1'-6" CONTRACTOR SHALL ADJUST LOCATION OF TY "L1" INLETS BASED ON ACTURAL COPING WIDTH. ADJUSTMENT SHALL BE SUBSIDIARY TO ITEM 423.

* 5'-0" OF TRAFFIC RAIL FOUNDATION SHALL BE OMITTED AT TYPE L1 INLETS. RAILING, COPING AND TRAFFIC RAIL FOUNDATION JOINTS SHALL NOT BE PLACED WITHIN 9.0' OF CLOSEST EDGE OF TYPE L1 INLETS AND MIN. OF 9.0' ON EITHER SIDE ON INLET.

THE SEAL APPEARING ON THIS DOCUMENT WAS AUTHORIZED BY DEEPAK MANGLORKAR, P.E. 89613 ON 8/18/03

STATE OF TEXAS
DEEPAK MANGLORKAR
89613
REGISTERED PROFESSIONAL ENGINEER

D. Manglorkar 9/24/03

REVISED 9-26-03

GENERAL NOTES:

WHERE REQUIRED BY FIXTURES OR UNUSUAL CONDITIONS. THE GOVERNING SLOPES MAY BE VARIED WHEN SPECIFICALLY DIRECTED BY THE ENGINEER.

THE TOP 4" OF FLEX BASE SHALL BE NEW WHERE SALVAGE IS PART OF FLEX BASE.

THE 2% LIME SHOWN ON TYPICAL SECTIONS FOR ITEM 247 "FLEX BASE" IS SEPARATE FROM LIME WHICH MAY BE REQUIRED TO MEET P.I. AND TRIAXIAL REQUIREMENTS ADDED AT CONTRACTOR'S EXPENSE.

PCJ – DENOTES PERMISSIBLE CONSTRUCTION JOINT
PGL – DENOTES PROFILE GRADE LINE

WHERE POSSIBLE AND UNLESS OTHERWISE DIRECTED BY THE ENGINEER, PERMISSIBLE CONSTRUCTION JOINTS SHALL FALL ON STRIPING LINES AS SHOWN ON STRIPING DETAILS.

THE COMPLETE BASE SHALL BE ROLLED BEFORE THE EARTH SHOULDER IS SHAPED AND FINAL COMPACTION SHALL BE DONE OVER BASE AND EDGE OF SHOULDER. ALL GRADING SHALL BE WITHIN THE ROW LIMITS.

A STATION IS EQUIVALENT TO 100 FT.

114 LBS/YD2 IS EQUIVALENT TO 1" DEPTH.

* SEE SUPERELEVATION SECTION

4 MATCH EXIST CROSS SLOPE

EMBANKMENT BACKFILL UNDER ITEM 423 SHALL BE TYPE "A".

TYPE "A" EMBANKMENT MATERIAL SHALL CONFORM TO THE FOLLOWING IN ACCORDANCE WITH TXDOT STANDARD SPECIFICATION ITEM 132 "EMBANKMENT", SECTION 132.2:
- LIQUID LIMIT SHALL NOT EXCEED 45
- PLASTICITY INDEX SHALL NOT EXCEED 15
- BAR LINEAR SHRINKAGE SHALL NOT BE LESS THAN 2

DURING CONSTRUCTION OF RETAINING WALLS CONTRACTOR SHALL TAKE ADEQUATE PRECAUTIONS TO PROTECT EMBANKMENT BACKFILL AND EXCAVATION AREAS WITH TEMPORARY SHORING OR OTHER METHODS APPROVED BY THE ENGINEER.

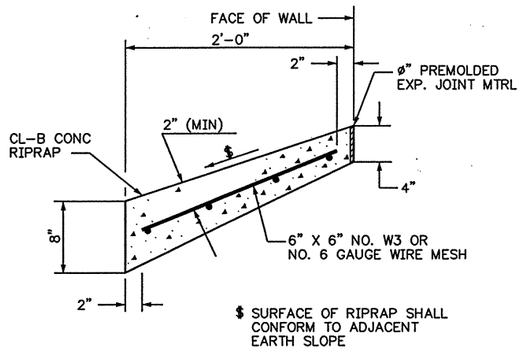

RIPRAP MOW STRIP DETAIL

Parsons Brinckerhoff Quade & Douglas Inc.

Texas Department of Transportation

© 2003 by TxDOT

RETAINING WALL TYPICAL SECTIONS AND DETAILS

SCALE: NTS

SHEET 1 OF 1				RETWALLDET01B.DGN			
DESIGNED: PAF	FED. RD DIV. No.	STATE	FEDERAL AID PROJECT No.			HIGHWAY No.	
CHECKED: JP	6	TEXAS				US 281	
DRAWN: RLJ	STATE DISTRICT	COUNTY	CONTROL No.	SECTION No.	JOB No.	SHEET No.	
CHECKED: JDH	PHARR	HIDALGO	0255	08	091	468	

$NAME$
$TIME$
9/24/2003
$FILE$

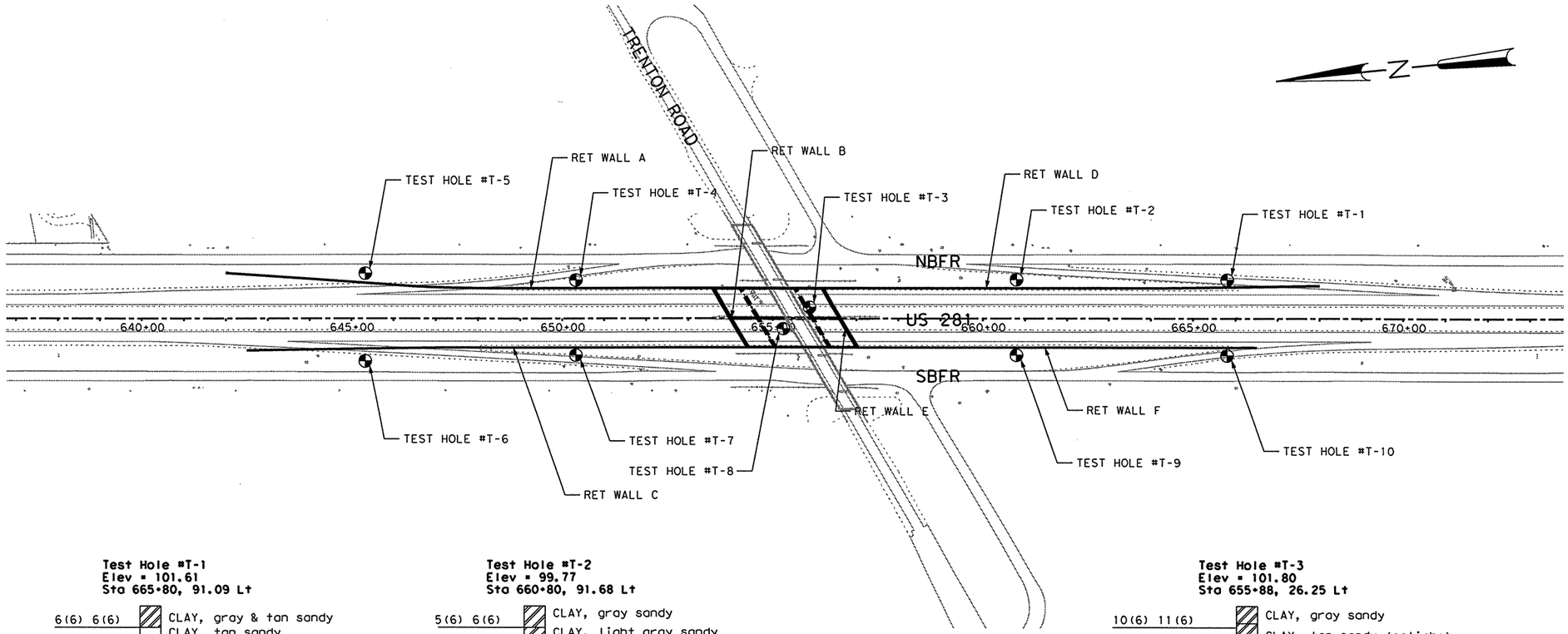

Test Hole #T-1
Elev = 101.61
Sta 665+80, 91.09 Lt

6(6) 6(6)	CLAY, gray & tan sandy
7(6) 7(6)	CLAY, tan sandy
8(6) 7(6)	CLAY, tan
15(6) 19(6)	CLAY, light tan
15(6) 15(6)	CLAY, tan & gray with calcarius nodules

B/H = 76.61

Test Hole #T-2
Elev = 99.77
Sta 660+80, 91.68 Lt

5(6) 6(6)	CLAY, gray sandy
8(6) 8(6)	CLAY, light gray sandy
10(6) 17(6)	CLAY, tan
19(6) 16(6)	
21(6) 23(6)	CLAY, tan with calcarius nodules
	CLAY, tan & gray with calcarius nodules

B/H = 73.77

Test Hole #T-3
Elev = 101.80
Sta 655+88, 26.25 Lt

10(6) 11(6)	CLAY, gray sandy
10(6) 12(6)	CLAY, tan sandy (caliche)
19(6) 20(6)	CLAY, tan
20(6) 20(6)	CLAY, light tan with calcarius nodules
24(6) 25(6)	CLAY, tan & gray with calcarius nodules
36(6) 50(5.5)	CLAY, tan with calcarius nodules (caliche)
14(6) 12(6)	CLAY, tan
50(6) 50(4.75)	
50(1) 50(1)	CALICHE, hard tan with traces of gray
50(2.5) 50(2.75)	CALICHE, hard tan
50(2) 50(1.75)	

B/H = 46.80

Test Hole #T-4
Elev = 99.84
Sta 650+33, 90.50 Lt

6(6) 7(6)	CLAY, gray sandy
14(6) 16(6)	CLAY, light tan sandy
19(6) 21(6)	CLAY, tan sandy
19(6) 23(6)	CLAY, tan
30(6) 28(6)	CLAY, tan & gray with calcarius nodules

B/H = 74.84

Test Hole #T-5
Elev = 98.43
Sta 645+33, 106.85 Lt

8(6) 8(6)	CLAY, gray sandy
8(6) 8(6)	CLAY, light tan sandy
8(6) 8(6)	CLAY, tan
19(6) 20(6)	CLAY, light tan sandy
20(6) 28(6)	CLAY, tan
	CLAY, tan & gray

B/H = 80.85

Test Hole #T-6
Elev = 98.98
Sta 645+33, 102.81 Rt

5(6) 7(6)	CLAY, brown & tan sandy
17(6) 18(6)	CLAY, tan sandy
12(6) 20(6)	CLAY, tan with calcarius nodules
26(6) 32(6)	CLAY, tan
25(6) 39(6)	CLAY, tan & gray with calcarius nodules

B/H = 73.98

Test Hole #T-7
Elev = 100.24
Sta 650+33, 89.08 Rt

8(6) 7(6)	CLAY, brown & tan with traces of calcarius nodules
12(6) 12(6)	
14(6) 20(6)	CLAY, tan
14(6) 18(6)	
22(6) 25(6)	CLAY, tan & gray

B/H = 75.24

Test Hole #T-8
Elev = 100.80
Sta 655+26, 24.27 Rt

4(6) 4(6)	CLAY, brown sandy
7(6) 11(6)	CLAY, tan sandy with calcarius nodules
23(6) 21(6)	CLAY, tan sandy
18(6) 27(6)	CLAY, tan with traces of calcarius nodules
20(6) 20(6)	CLAY, tan
34(6) 37(6)	
22(6) 28(6)	CLAY, tan & gray with calcarius nodules
40(6) 41(6)	
50(2.25) 50(2.25)	CLAY, tan & gray with calcarius nodules (caliche)
50(3) 50(2.75)	
50(3) 50(3)	CLAY, tan with traces of brown with calcarius nodules (caliche)

B/H = 45.80

Test Hole #T-9
Elev = 100.30
Sta 660+80, 88.76 Rt

6(6) 7(6)	CLAY, brown sandy
8(6) 9(6)	CLAY, tan sandy with calcarius nodules
8(6) 10(6)	CLAY, tan
19(6) 20(6)	
19(6) 22(6)	CLAY, tan & gray with calcarius nodules

B/H = 75.30

Test Hole #T-10
Elev = 101.39
Sta 665+80, 89.75 Rt

6(6) 6(6)	CLAY, brown & tan sandy
	CLAY, brown sandy
6(6) 9(6)	CLAY, tan
6(6) 8(6)	CLAY, tan sandy
17(6) 19(6)	CLAY, tan
14(6) 17(6)	CLAY, tan & gray with traces of calcarius nodules

B/H = 76.39

THE SEAL APPEARING ON THIS DOCUMENT WAS AUTHORIZED BY JAIME AGUILAR, P.E. 87606 ON 06/24/2003.

STATE OF TEXAS
JAIME AGUILAR
87606
REGISTERED PROFESSIONAL ENGINEER

Parsons Brinckerhoff Quade & Douglas Inc.

Texas Department of Transportation

© 2003 by TxDOT

US 281
TEST HOLE DATA SHEET

PLAN 1" = 300' HORIZ

SHEET 1 OF 6 | 281BOR01.DGN

DESIGNED: PAF	FED. RD DIV. NO.	STATE	FEDERAL AID PROJECT No.	HIGHWAY No.
CHECKED: JP	6	TEXAS		US 281

DRAWN: KTD	STATE DISTRICT	COUNTY	CONTROL No.	SECTION No.	JOB No.	SHEET No.
CHECKED: JDH	PHARR	HIDALGO	0255	08	091	469

NAME 04:40:55 PM 06/24/2003

i:\22322a\cadd\sheets\structures\boringlogs\281bor01.dgn

NAME
04:41:00 PM
06/24/2003
i:\22322\cadd\sheets\structures\boringlogs\281bor02.dgn

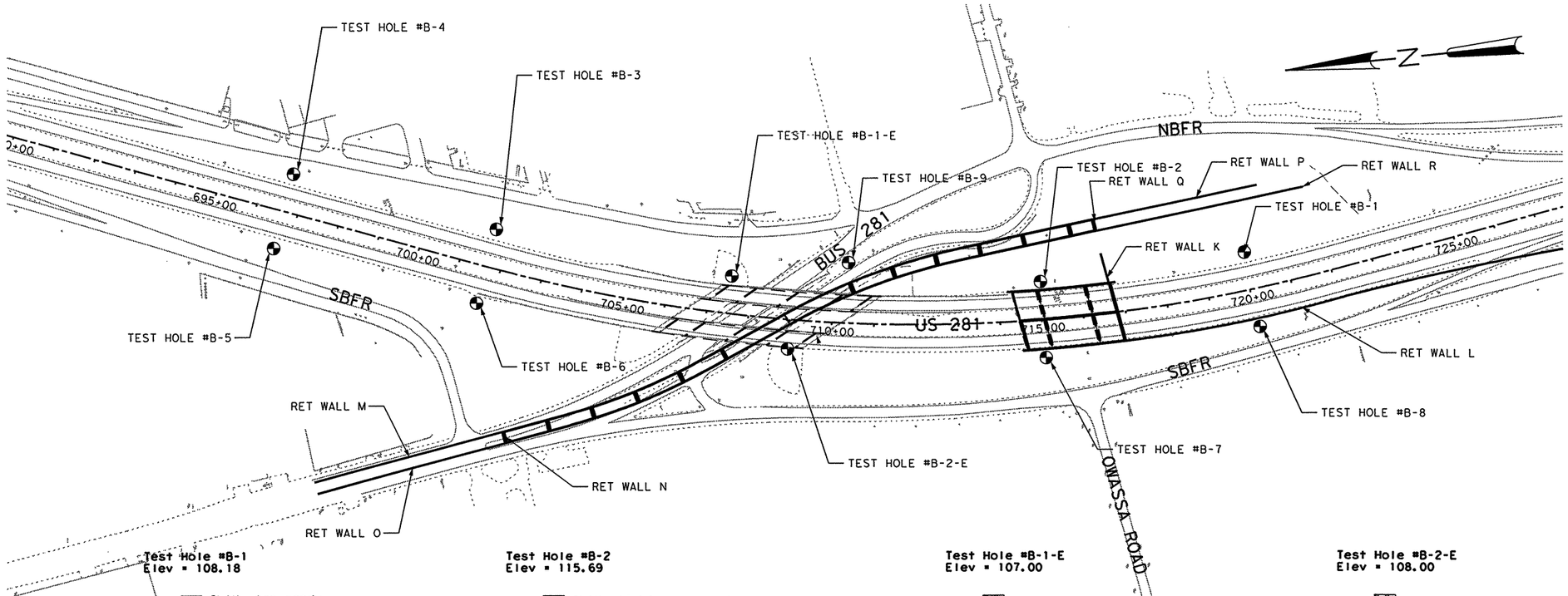

Test Hole #B-1
Elev = 108.18

9(6) 9(6)	CLAY, tan sandy CLAY, tan, sandy with asphalt
7(6) 10(6)	CLAY, dark gray sandy
8(6) 10(6)	
12(6) 15(6)	CLAY, tan
15(6) 16(6)	

B/H = 83.18

Test Hole #B-2
Elev = 115.69

4(6) 3(6)	CLAY, light gray sandy CLAY, gray sandy with gravel
8(6) 8(6)	CLAY, gray sandy CLAY, light gray
9(6) 9(6)	CLAY, light tan sandy
12(6) 12(6)	CLAY, tan
5(6) 8(6)	CLAY, light tan sandy

B/H = 90.69

Test Hole #B-1-E
Elev = 107.00

8(6) 8(6)	
9(6) 11(6)	CLAY, silty, tan, soft, wet
14(6) 14(6)	
20(6) 22(6)	CLAY, reddish brown, moi
22(6) 25(6)	CLAY, tan, firm, moi, w/cal nodules
38(6) 46(6)	CALICHE, clayey, tan, moi
50(5.75) 50(5.5)	CALICHE, tan, soft, moi
50(5.5) 50(2.75)	
50(2) 50(1.5)	SAND, tan, water bearing CLAY, rd, firm, moi
50(2.25) 50(.75)	SAND, tn, water bearing SANDSTONE, brn, soft
50(2) 50(1)	SAND, water bearing

B/H = 52.00

Test Hole #B-2-E
Elev = 108.00

10(6) 14(6)	CLAY, silty, tn, soft, wet
13(6) 15(6)	
21(6) 24(6)	CLAY, tn, gr, moi
26(6) 33(6)	
38(6) 41(6)	CALICHE, tn, soft, moi
50(4.5) 50(4.5)	
50(3) 50(2)	CLAY, tn, gr, hard, moi
50(1.25) 50(1)	
50(2) 50(1)	SAND, water bearing
50(1) 50(.75)	
50(1) 50(.5)	SANDSTONE, tn, soft SAND, tn, water bearing
50(.75) 50(.5)	SANDSTONE, 4 inch layer
50(1.5) 50(1)	SAND, tn, water bearing

B/H = 38.00

Test Hole #B-9
Elev = 104.94
Sta 710+32.24, 144.90 Lt

10(6) 10(6)	
5(6) 9(6)	
12(6) 13(6)	
24(6) 27(6)	
32(6) 37(6)	CLAY, clay, soft to hard, moist, tan , w/gypsum nodules.
49(6) 40(6)	
50(3) 50(4)	
50(3) 50(4)	
48(6) 50(3)	
26(6) 50(4)	CLAY, sandy, clay, hard very moist tan .
50(3) 50(3)	
50(2) 50(1)	CLAY, clay hard to very , hard to hard , very moist to wet , tan , w/ traces of gravel. At 65 feet traces of sand.
48(6) 50(4)	
45(6) 50(4)	

B/H = 33.94

Test Hole #B-3
Elev = 115.83

23(6) 21(6)	CLAY, tan sandy
14(6) 14(6)	CLAY, light tan sandy (caliche)
12(6) 12(6)	
15(6) 16(6)	CLAY, tan
21(6) 25(6)	CLAY, tan caliche

B/H = 90.83

Test Hole #B-4
Elev = 107.49

7(6) 8(6)	CLAY, tan sandy CLAY, gray sandy
10(6) 12(6)	CLAY, light gray sandy caliche
12(6) 12(6)	SAND, light tan caliche
14(6) 15(6)	CLAY, tan
21(6) 23(6)	

B/H = 82.49

Test Hole #B-5
Elev = 108.86

36(6) 30(6)	CLAY, tan sandy with calcarius nodules
10(6) 16(6)	CLAY, tan sandy with traces of calcarius nodules
11(6) 11(6)	CLAY, light gray with calcarius nodules
14(6) 16(6)	CLAY, tan
16(6) 19(6)	CLAY, tan with traces of gray

B/H = 83.86

Test Hole #B-6
Elev = 117.07

5(6) 6(6)	CLAY, brown sandy CLAY, dark brown sandy
7(6) 11(6)	CLAY, tan sandy with calcarius nodules
10(6) 9(6)	CLAY, light gray sandy with calcarius nodules
12(6) 12(6)	CLAY, tan with calcarius nodules CLAY, light gray sandy with calcarius nodules
15(6) 18(6)	CLAY, tan with traces of gray

B/H = 92.07

Test Hole #B-7
Elev = 119.10

7(6) 8(6)	CLAY, brown sandy with gravel
10(6) 9(6)	CLAY, tan sandy
9(6) 10(6)	CLAY, tan with traces of calcarius nodules
18(6) 17(6)	CLAY, tan
14(6) 15(6)	CLAY, light gray & tan sandy

B/H = 94.10

Test Hole #B-8
Elev = 108.42

6(6) 6(6)	CLAY, brown & tan sandy
9(6) 9(6)	CLAY, tan sandy
5(6) 7(6)	CLAY, tan sandy with traces of calcarius nodules
14(6) 15(6)	CLAY, tan
10(6) 12(6)	CLAY, tan with traces of calcarius nodules

B/H = 83.42

THE SEAL APPEARING ON THIS DOCUMENT WAS AUTHORIZED BY JAIME AGUILAR, P.E. 87606 ON 06/24/2003.

STATE OF TEXAS
JAIME AGUILAR
87606
REGISTERED PROFESSIONAL ENGINEER

PB Parsons Brinckerhoff Quade & Douglas Inc.

Texas Department of Transportation

© 2003 by TxDOT

US 281
TEST HOLE DATA SHEET

PLAN 1" = 300' HORIZ

SHEET 2 OF 6 | 281BOR02.DGN

DESIGNED: PAF	FED. RD DIV. No.	STATE	FEDERAL AID PROJECT No.	HIGHWAY No.
CHECKED: JP	6	TEXAS		US 281

DRAWN: KTD	STATE DISTRICT	COUNTY	CONTROL No.	SECTION No.	JOB No.	SHEET No.
CHECKED: JDH	PHARR	HIDALGO	0255	08	091	470

NAME
12:55:20 PM
06/25/2003
I:\22322a\CADD\Sheets\Structures\Boringlogs\281BOR02a.dgn

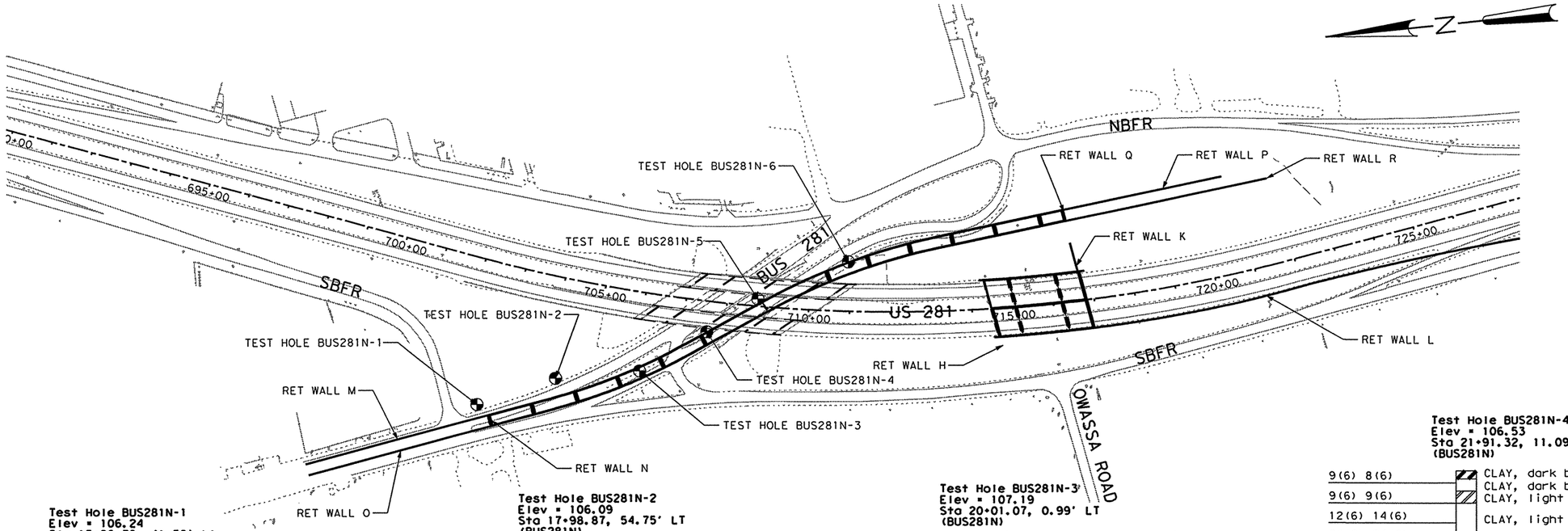

Test Hole BUS281N-1
Elev = 106.24
Sta 15+96.78, 41.58' Lt
(BUS281N)

6(6) 7(6)	CLAY, brown, silty clay, dry
13(6) 13(6)	CLAY, light brown, fat clay, moist
14(6) 16(6)	CLAY, light brown, fat clay, moist, calcareous
18(6) 20(6)	
39(6) 44(6)	
50(4.75) 50(2.75)	CLAY, light reddish brown, fat clay, slightly moist, calcareous
50(4.5) 50(4)	CLAY, light brown, fat clay, wet
50(1.5) 50(.75)	
50(1) 50(.75)	CLAY, light brown, fat clay, moist, calcareous
50(.5) 50(.5)	
50(1.75) 50(1.25)	
50(1.5) 50(1.5)	
50(1.75) 50(1.5)	CLAY, gray, sandy clay, moist
50(2) 50(1.5)	

B/H = 38.24
Water encountered at Elev. 75.24

Test Hole BUS281N-2
Elev = 106.09
Sta 17+98.87, 54.75' LT
(BUS281N)

6(6) 7(6)	CLAY, brown, clay with silt, slightly moist
10(6) 10(6)	CLAY, light brown, fat clay, moist, calcareous
12(6) 13(6)	
16(6) 17(6)	CLAY, light brown, fat clay, moist, calcareous
20(6) 24(6)	
32(6) 36(6)	CLAY, light brown, fat clay, wet, calcareous
44(6) 48(6)	CLAY, light brown, silty, clay moist, calcareous
50(1.5) 50(.75)	
50(1.5) 50(1)	CLAY, olive, fat clay, moist, calcareous
50(1) 50(.75)	
50(1) 50(.5)	CLAY, gray, sandy clay, moist
50(.5) 50(.25)	
50(.5) 50(.25)	CLAY, gray, sandy clay, moist
50(.75) 50(.5)	

B/H = 38.09
Water encountered at Elev. 79.09

Test Hole BUS281N-3
Elev = 107.19
Sta 20+01.07, 0.99' LT
(BUS281N)

10(6) 11(6)	CLAY, light brown, gravelly, silty clay, dry
9(6) 9(6)	CLAY, brown, silty clay, dry
8(6) 11(6)	CLAY, brown, sandy clay, moist, calcareous
16(6) 17(6)	CLAY, light brown, fat clay, moist, calcareous
18(6) 20(6)	
21(6) 23(6)	CLAY, brown, fat clay, slightly moist, calcareous
29(6) 34(6)	
50(4.5) 50(3.5)	CLAY, olive, fat clay, moist, calcareous
50(2.5) 50(2)	CLAY, light brown, fat clay, wet, calcareous
50(.75) 50(.25)	
50(.75) 50(.75)	CLAY, olive, fat clay, moist, calcareous
50(1) 50(.5)	
50(.75) 50(.25)	
50(1) 50(.25)	CLAY, gray, sandy clay, moist

B/H = 39.19
Water encountered at Elev. 71.19

Test Hole BUS281N-4
Elev = 106.53
Sta 21+91.32, 11.09' LT
(BUS281N)

9(6) 8(6)	CLAY, dark brown, silty clay, dry
9(6) 9(6)	CLAY, dark brown, fat clay, moist
12(6) 14(6)	CLAY, light brown, fat clay, moist, silt pockets
24(6) 24(6)	CLAY, light brown, sandy clay, moist, calcareous
28(6) 30(6)	
32(6) 34(6)	CLAY, light reddish brown, fat clay, moist, calcareous
38(6) 42(6)	
47(6) 50(4.75)	CLAY, light brown, fat clay, moist calcareous
50(5) 50(4.25)	CLAY, light brown, sandy clay, slightly moist, calcareous
50(2.5) 50(1.75)	CLAY, light brown, sandy clay, wet, calcareous Clay, slightly moist, silt pockets
50(2.75) 50(1.5)	
50(2.75) 50(1.75)	CLAY, light gray, sandy clay, moist
50(2.5) 50(1.5)	
50(2.5) 50(1)	CLAY, light brown, fat clay, moist, calcareous

B/H = 38.53
Water encountered at Elev. 66.53

Test Hole BUS281N-5
Elev = 105.97
Sta 23+28.82, 5.81' LT
(BUS281N)

8(6) 9(6)	CLAY, brown, silty clay, dry
8(6) 12(6)	CLAY, dark brown, fat clay, moist
14(6) 16(6)	CLAY, light brown, sandy clay, moist, calcareous
24(6) 26(6)	CLAY, brown, fat clay, moist, calcareous
29(6) 35(6)	
44(6) 50(5.25)	
50(3.5) 50(4.75)	CLAY, light brown, fat clay, moist, calcareous
50(4.25) 50(4)	
50(3.75) 50(1)	
50(1.5) 50(1)	
50(1.75) 50(1.25)	
50(1) 50(.75)	CLAY, gray, sandy clay, moist
50(1.25) 50(.75)	
50(1) 50(.5)	

B/H = 37.97
Water encountered at Elev. 66.97

Test Hole BUS281N-6
Elev = 104.95
Sta 25+74.15, 10.15' LT
(BUS281N)

8(6) 9(6)	CLAY, brown, silty clay, dry
10(6) 8(6)	CLAY, dark brown, sandy clay, moist
14(6) 16(6)	CLAY, light brown, sandy clay, moist, white silt pockets clay, moist, white silt pockets
23(6) 25(6)	CLAY, light brown, sandy clay, calcareous
29(6) 29(6)	
36(6) 42(6)	
44(6) 48(6)	CLAY, very light brown, sandy clay, calcareous
50(4.5) 50(4.5)	
50(5) 50(4.5)	
50(4) 50(2)	
50(3.75) 50(3)	
50(4) 50(2.75)	CLAY, brownish gray, sandy clay
50(4.25) 50(2.5)	
50(4.5) 50(2)	

B/H = 36.95
Water encountered at Elev. 62.95

THE SEAL APPEARING ON THIS DOCUMENT WAS AUTHORIZED BY JAIME AGUILAR, P.E. 87606 ON 06/25/2003.

STATE OF TEXAS
JAIME AGUILAR
87606
REGISTERED PROFESSIONAL ENGINEER

Parsons Brinckerhoff Quade & Douglas Inc.

Texas Department of Transportation

© 2003 by TxDOT

US 281
TEST HOLE DATA SHEET

PLAN 1" = 300' HORIZ

SHEET 3 OF 6 | 281BOR02A.DGN

DESIGNED: PAF	FED. RD DIV. NO.	STATE	FEDERAL AID PROJECT NO.	HIGHWAY NO.
CHECKED: JP	6	TEXAS		US 281

DRAWN: RLJ	STATE DISTRICT	COUNTY	CONTROL No.	SECTION No.	JOB No.	SHEET No.
CHECKED: JDH	PHARR	HIDALGO	0255	08	091	471

NAME
12:54:45 PM
06/25/2003
I:\22322o\CADD\Sheets\Structures\Boringlogs\281BOR02b.dgn

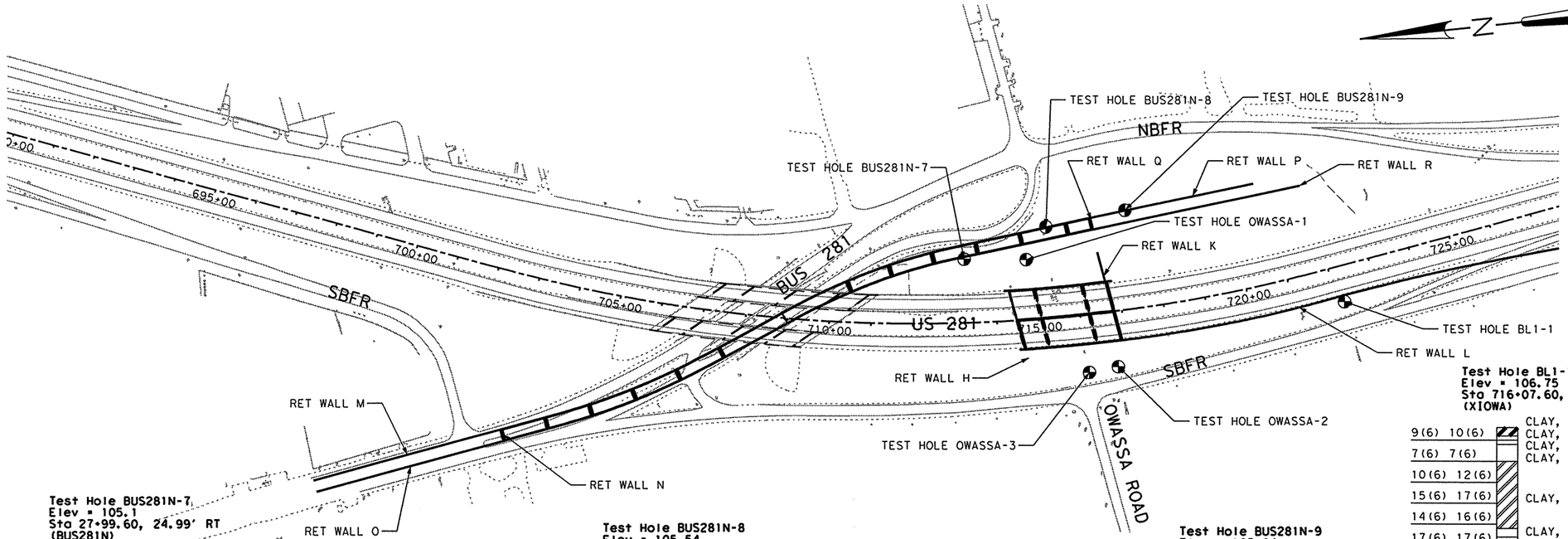

Test Hole BUS281N-7
Elev = 105.1
Sta 27+99.60, 24.99' RT
(BUS281N)

8(6) 6(6)	TOP SOIL, brown, top soil, dry, grass
11(6) 11(6)	CLAY, brown, sandy clay, dry
12(6) 14(6)	CLAY, brown & light brown, CLAY, light brown, fat clay, sandy clay, calcareous white silt pockets, slightly moist
18(6) 22(6)	CLAY, light brown, fat clay, moist
19(6) 25(6)	
24(6) 35(6)	CLAY, light reddish brown, fat clay, slightly moist, calcareous
26(6) 30(6)	
36(6) 41(6)	CLAY, light brown, fat clay, slightly moist, calcareous
30(6) 30(6)	
35(6) 43(6)	
50(5) 50(4.5)	
50(5) 50(4)	CLAY, light brown, fat clay, very wet, calcareous
48(6) 50(6)	
49(6) 50(5)	

B/H = 37.1
Water encountered at Elev. 55.10

Test Hole BUS281N-8
Elev = 105.54
Sta 30+05.43, 9.07' LT
(BUS281N)

5(6) 6(6)	CLAY, light brown, gravelly silty clay, dry
7(6) 7(6)	CLAY, brown, sandy clay, moist, calcareous CLAY, brown, fat clay, moist
9(6) 10(6)	CLAY, light brown, fat clay, moist
13(6) 15(6)	
15(6) 17(6)	CLAY, light reddish brown, fat clay, slightly moist
18(6) 21(6)	
25(6) 27(6)	CLAY, light brown, fat clay, white silt pockets
30(6) 31(6)	
50(5) 50(5)	
50(5.5) 50(5)	
50(6) 50(4)	
50(6) 50(5)	CLAY, light brown, fat clay, calcareous
50(5.5) 50(4.5)	
50(3.5) 50(3)	

B/H = 37.54
Water encountered at Elev. 82.54

Test Hole BL1-1
Elev = 106.75
Sta 716+07.60, 138.00' RT
(XIOWA)

9(6) 10(6)	CLAY, brown, silty clay, dry CLAY, dark brown, fat clay, silt, slightly moist
7(6) 7(6)	CLAY, light brown, clay with moist CLAY, light brown, fat clay, moist, calcareous
10(6) 12(6)	
15(6) 17(6)	CLAY, light reddish brown, fat clay, moist, calcareous
14(6) 16(6)	
17(6) 17(6)	CLAY, light brown, fat clay, wet, calcareous CLAY, light reddish brown, sandy clay, moist, calcareous

B/H = 79.75 (no water encountered)

Test Hole BUS281N-9
Elev = 103.04
Sta 31+98.92, 8.29' LT
(BUS281N)

7(6) 9(6)	CLAY, light brown, silty clay with gravel, dry CLAY, brown, fat clay, moist
8(6) 9(6)	
10(6) 12(6)	CLAY, light brown, fat clay, moist
14(6) 16(6)	CLAY, light brown, fat clay, slightly moist
18(6) 19(6)	CLAY, light brown, sandy clay, slightly moist
21(6) 23(6)	
35(6) 37(6)	
38(6) 40(6)	CLAY, light brown, fat clay, moist, calcareous
41(6) 47(6)	
43(6) 46(6)	
45(6) 48(6)	CLAY, light brown, sandy clay, hard, slightly moist calcareous
50(6) 50(4)	
50(6) 50(4)	
50(3) 50(1)	

B/H = 35.04
Water encountered at Elev. 80.04

Test Hole BUS281N-10
Elev = 104.07
Sta 29+43.23, 56.73' RT
(BUS281N)

13(6) 12(6)	CLAY, light brown, silty clay, dry
10(6) 10(6)	CLAY, brown, sandy clay, slightly moist, calcareous
11(6) 12(6)	
16(6) 17(6)	CLAY, light brown, fat clay, moist, white silt pockets
18(6) 20(6)	
24(6) 26(6)	CLAY, light reddish brown, fat clay, slightly moist, white silt pockets
28(6) 32(6)	
36(6) 41(6)	CLAY, very light brown, fat clay, moist, calcareous
36(6) 38(6)	
40(6) 41(6)	
50(6) 50(5)	CLAY, light brown, fat clay, moist, calcareous
50(3.25) 50(3.25)	
50(3.5) 50(2.5)	
50(4) 50(2.75)	CLAY, light brown, sandy clay, very wet

B/H = 36.07
Water encountered at Elev. 58.07

Test Hole OWASSA-1
Elev = 104.07
Sta 18+28.11, 58.18' LT
(XIOWA)

Test Hole OWASSA-2
Elev = 106.55
Sta 15+26.70, 91.31' RT
(XIOWA)

8(6) 11(6)	CLAY, brown, sandy clay, slightly moist, calcareous
12(6) 12(6)	CLAY, light brown, fat clay, moist, calcareous
11(6) 13(6)	
13(6) 13(6)	CLAY, light brown, fat clay, moist, calcareous
14(6) 16(6)	CLAY, light reddish brown, sandy clay, slightly moist, calcareous
17(6) 17(6)	
26(6) 26(6)	CLAY, light brown, fat clay, moist, calcareous
36(6) 40(6)	
39(6) 45(6)	
50(4) 50(4)	
50(4) 50(2.5)	CLAY, olive, fat clay, moist, calcareous
50(1.25) 50(1)	
50(4.5) 50(5.5)	
50(1) 50(.75)	CLAY, brown, sand, very wet

B/H = 38.55
Water encountered at Elev. 81.55

Test Hole OWASSA-3
Elev = 106.75
Sta 15+31.37, 20.81' RT
(XIOWA)

13(6) 13(6)	CLAY, brown, silty clay, dry CLAY, dark brown, sandy clay, moist, white silt pockets
12(6) 14(6)	
13(6) 16(6)	CLAY, light brown, clay with silt, calcareous
15(6) 17(6)	CLAY, light brown, clay with silt,moist, calcareous
16(6) 16(6)	
16(6) 18(6)	
15(6) 17(6)	
38(6) 49(6)	CLAY, light brown, clay with silt,moist, calcareous
50(5) 50(4)	
50(5.25) 50(4.5)	
50(5) 50(3.75)	
50(4.25) 50(3.75)	
50(3.75) 50(3.5)	
50(4.5) 50(3.5)	CLAY, brownish gray, sandy clay, wet

B/H = 38.75
Water encountered at Elev. 76.75

THE SEAL APPEARING ON THIS DOCUMENT WAS AUTHORIZED BY JAIME AGUILAR, P.E. 87606 ON 06/25/2003.

STATE OF TEXAS
JAIME AGUILAR
87606
REGISTERED PROFESSIONAL ENGINEER

Parsons Brinckerhoff Quade & Douglas Inc.

Texas Department of Transportation

© 2003 by TxDOT

US 281
TEST HOLE DATA SHEET

PLAN 1" = 300' HORIZ

SHEET 4 OF 6 | 281BOR02B.DGN

DESIGNED: PAF	FED. RD DIV. No.	STATE	FEDERAL AID PROJECT No.			HIGHWAY No.	
CHECKED: JP	6	TEXAS				US 281	
DRAWN: RLJ	STATE DISTRICT	COUNTY	CONTROL No.	SECTION No.	JOB No.	SHEET No.	
CHECKED: JDH	PHARR	HIDALGO	0255	08	091	471A	

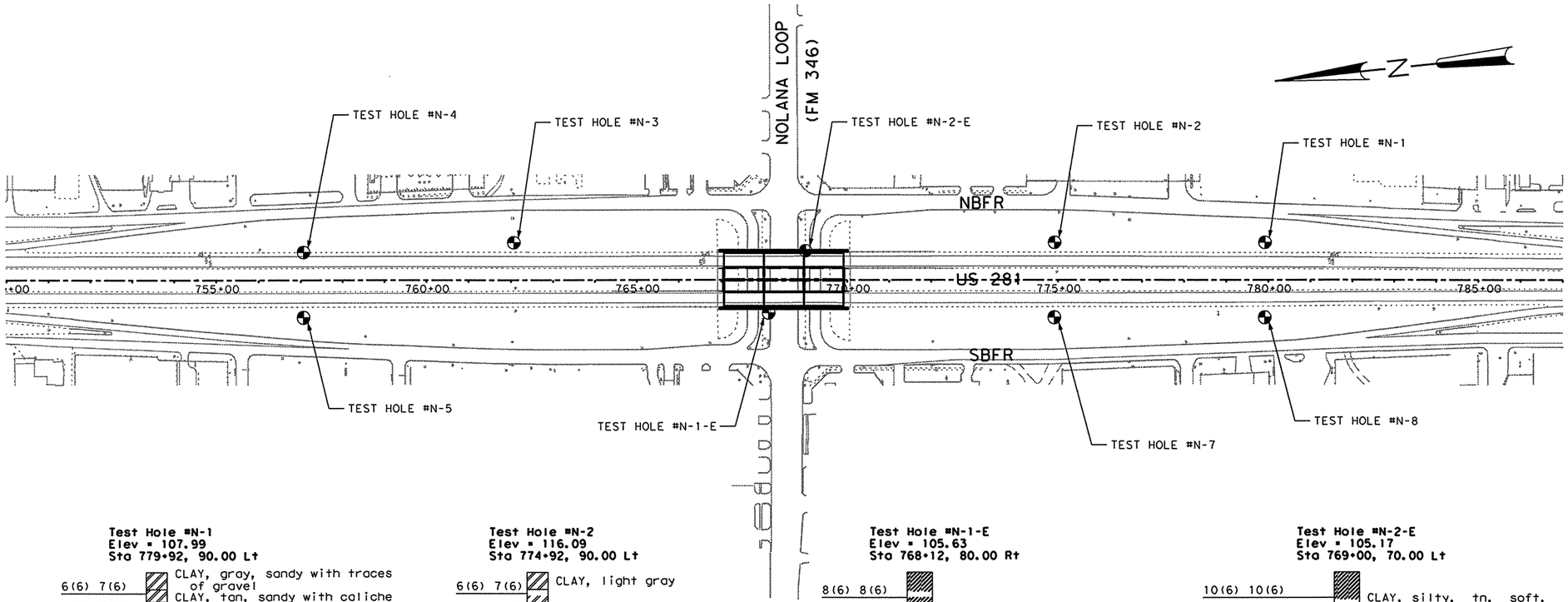

Test Hole #N-1
Elev = 107.99
Sta 779+92, 90.00 Lt

6(6) 7(6)	CLAY, gray, sandy with traces of gravel
6(6) 6(6)	CLAY, tan, sandy with caliche
6(6) 5(6)	CLAY, light gray sandy caliche
8(6) 8(6)	CLAY, light tan
11(6) 14(6)	CLAY, tan
	CLAY, light tan

B/H = 82.99

Test Hole #N-2
Elev = 116.09
Sta 774+92, 90.00 Lt

6(6) 7(6)	CLAY, light gray
5(6) 6(6)	
7(6) 8(6)	CLAY, tan
7(6) 7(6)	
7(6) 8(6)	

B/H = 91.09

Test Hole #N-1-E
Elev = 105.63
Sta 768+12, 80.00 Rt

8(6) 8(6)	
8(6) 10(6)	CLAY, silty, tn, moi
10(6) 8(6)	
11(6) 15(6)	CLAY, sdy, soft, wb, w/sd veins
14(6) 19(6)	MUCK, Water Bearing
20(6) 40(6)	CALICHE
42(6) 42(6)	
50(6) 50(5)	CLAY, tn, jointed, moi
35(6) 35(6)	CLAY, tn, gray, jointed, moist
42(6) 45(6)	CLAY, tn, soft, loose, friable, moist
50(4) 50(4)	CLAY, tn, gr, jointed, moist
40(6) 52(6)	CLAY, sdy, tn, gr, moist
50(2) 50(1)	
50(2) 50(1)	SAND, clay, tn, firm, moist

B/H = 32.60

Test Hole #N-2-E
Elev = 105.17
Sta 769+00, 70.00 Lt

10(6) 10(6)	CLAY, silty, tn, soft, moist
11(6) 12(6)	
8(6) 8(6)	
11(6) 8(6)	CLAY, tn, wet, (muck like)
15(6) 18(6)	
30(6) 36(6)	
42(6) 49(6)	CLAY, firm, friable, damp
43(6) 44(6)	
32(6) 30(6)	
50(4.75) 50(3.75)	CLAY, firm, tnish rd, jointed, moist
50(4.5) 50(4.25)	
37(6) 38(6)	

B/H = 43.20

Test Hole #N-3
Elev = 116.36
Sta 762+07, 90.00 Lt

8(6) 9(6)	CLAY, light gray sandy with traces of gravel
8(6) 8(6)	CLAY, gray sandy
6(6) 7(6)	CLAY, light tan sandy
11(6) 11(6)	CLAY, tan
7(6) 8(6)	

B/H = 91.36

Test Hole #N-4
Elev = 110.01
Sta 757+07, 67.00 Lt

9(6) 9(6)	CLAY, light gray sandy
9(6) 9(6)	CLAY, gray sandy
9(6) 12(6)	CLAY, light gray sandy
14(6) 15(6)	CLAY, tan sandy
8(6) 10(6)	CLAY, tan
	CLAY, light tan

B/H = 85.01

Test Hole #N-5
Elev = 107.50
Sta 757+07, 90.00 Rt

8(6) 9(6)	CLAY, brown sandy
9(6) 10(6)	CLAY, tan
7(6) 12(6)	CLAY, tan with calcarius nodules
14(6) 20(6)	CLAY, tan
9(6) 8(6)	

B/H = 82.50

Test Hole #N-7
Elev = 115.92
Sta 774+91, 90.00 Rt

7(6) 7(6)	CLAY, tan
7(6) 7(6)	CLAY, brown sandy with traces of gravel
7(6) 9(6)	CLAY, tan with traces of calcarius nodules
6(6) 8(6)	CLAY, tan
10(6) 12(6)	CLAY, tan and light gray

B/H = 90.92

Test Hole #N-8
Elev = 107.86
Sta 779+91, 90.00 Rt

12(6) 14(6)	CLAY, tan
	CLAY, brown sandy
8(6) 8(6)	CLAY, tan with traces of calcarius nodules
9(6) 7(6)	
11(6) 11(6)	CLAY, tan
10(6) 12(6)	

B/H = 82.86

THE SEAL APPEARING ON THIS DOCUMENT WAS AUTHORIZED BY JAIME AGUILAR, P.E. 87606 ON 06/24/2003.

STATE OF TEXAS
JAIME AGUILAR
87606
REGISTERED PROFESSIONAL ENGINEER

Parsons Brinckerhoff Quade & Douglas Inc.

Texas Department of Transportation

© 2003 by TxDOT

US 281
TEST HOLE DATA SHEET

PLAN 1" = 300' HORIZ

SHEET 5 OF 6 | 281BOR03.DGN

DESIGNED: PAF	FED. RD DIV. NO.	STATE	FEDERAL AID PROJECT No.		HIGHWAY No.
CHECKED: JP	6	TEXAS			US 281
DRAWN: KTD	STATE DISTRICT	COUNTY	CONTROL No.	SECTION No.	JOB No.	SHEET No.
CHECKED: JDH	PHARR	HIDALGO	0255	08	091	472

NAME
04:41:17 PM
06/24/2003
i:\22322a\cadd\sheets\structures\boringlogs\281bor03.dgn

NAME
04:41:22 PM
06/24/2003
I:\22322o\cadd\sheets\structures\boringlogs\281bor04.dgn

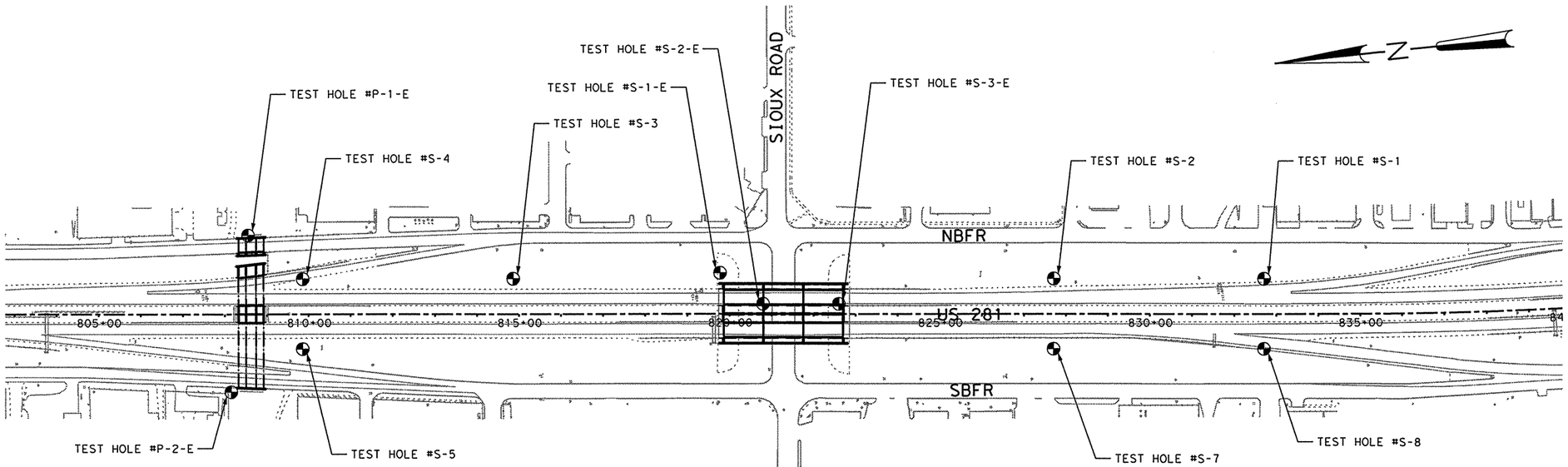

Test Hole #P-1-E
Elev = 106.70
Sta 808+55, 185.00 Lt

	CLAY, silty, dark, soft, moist
12(6) 11(6)	CLAY, brn, stiff, moist
13(6) 12(6)	CLAY, silty, stiff, moist
11(6) 11(6)	CLAY, red, stiff, moist
47(6) 53(5.25)	SILT, clayeyn, brn, stiff, moist
28(6) 47(6)	CLAY, silty, cal. nodule, tan, hard, moist
23(6) 21(6)	
50(6) 50(3.5)	SILT, clayey, brn, very stiff, moist
30(6) 26(6)	
30(6) 29(6)	CLAY, brn, very stiff, moist
49(6) 51(5.375)	SILT, clayey, tn, hard, moist
49(6) 51(6)	
50(2.25) 50(.875)	CLAY, red, very hard, moist

B/H = 40.70

Test Hole #P-2-E
Elev = 106.10
Sta 808+15, 185.00 Rt

	CLAY, silty, dk, soft, moist
14(6) 12(6)	CLAY, silty, brn, stiff, moist
17(6) 17(6)	CLAY, red, stiff, moist
13(6) 14(6)	
36(6) 38(6)	SILT, clayey, tan, stiff, moist
22(6) 18(6)	
25(6) 28(6)	
50(6) 50(5.875)	SILT, sandy, tan, hard, moist
39(6) 58(6)	
50(4.75) 50(4.375)	CLAY, silty, tan, hard, moist
50(6) 30(6)	
37(6) 46(6)	
49(6) 51(5)	

B/H = 41.10

Test Hole #S-1-E
Elev = 107.47
Sta 819+77, 96.00 Lt

14(6) 15(6)	CLAY, silty, lt. tan, moist, soft
19(6) 23(6)	CLAY, silty, reddish tan, moist, stiff
25(6) 23(6)	CLAY, silty w/ white streaks of caliche, lt tan, dry, very stiff
47(6) 53(5.625)	CLAY, silty, lt. tan w/rust streaks, dry, very stiff
	CLAY, silty, reddish tan, moist, very stiff
	CLAY, silty, lt. gray, moist, very stiff
	CLAY, silty, lt. tan w/rust streaks, moist

B/H = 57.47

Test Hole #S-2-E
Elev = 107.00
Sta 820+80, 24.00 Lt

9(6) 10(6)	CLAY, silty, lt. tan, moist
7(6) 7(6)	
12(6) 15(6)	CLAY, silty, lt. gray, moist

B/H = 90.30

Test Hole #S-1
Elev = 109.18
Sta 832+71, 83.00 Lt

14(6) 14(6)	CLAY, gray, sandy with gravel
16(6) 12(6)	CLAY, tan, sandy (caliche)
6(6) 5(6)	
11(6) 9(6)	CLAY, tan
20(6) 22(6)	

B/H = 84.18

Test Hole #S-2
Elev = 117.30
Sta 827+71, 83.00 Lt

16(6) 16(6)	CLAY, gray, sandy, with traces of gravel
7(6) 8(6)	CLAY, tan
6(6) 6(6)	CLAY, tan, sandy
11(6) 12(6)	
14(6) 15(6)	CLAY, tan

B/H = 92.30

Test Hole #S-3
Elev = 106.90
Sta 814+86, 83.00 Lt

10(6) 10(6)	CLAY, gray, sandy
11(6) 10(6)	CLAY, dark gray, sandy with organics
11(6) 11(6)	CLAY, tan sandy (caliche)
12(6) 12(6)	CLAY, tan
11(6) 15(6)	

B/H = 81.90

Test Hole #S-3-E
Elev = 106.90
Sta 822+60, 24.00 Lt

	TOP SOIL, gray
9(6) 10(6)	CLAY, silty, lt. tan, moist, soft
14(6) 15(6)	CLAY, silty, reddish tan, moist, stiff
11(6) 14(6)	CLAY, silty, lt. tan, moist, stiff
15(6) 17(6)	
13(6) 19(6)	CLAY, silty, lt. brown, moist, stiff
15(6) 21(6)	
23(6) 26(6)	
37(6) 47(6)	CLAY, silty, reddish tan, moist, hard, very stiff
48(6) 52(4.625)	

B/H = 56.90

Test Hole #S-4
Elev = 106.88
Sta 809+86, 83.00 Lt

17(6) 17(6)	CLAY, gray sandy with gravel
7(6) 9(6)	CLAY, tan sandy with caliche
7(6) 6(6)	
9(6) 9(6)	CLAY, tan
8(6) 8(6)	CLAY, light, silty, sandy

B/H = 81.88

Test Hole #S-5
Elev = 106.86
Sta 809+86, 83.00 Rt

8(6) 7(6)	CLAY, brown, sandy
12(6) 11(6)	CLAY, tan sandy
7(6) 7(6)	CLAY, tan with traces of calcarius nodules
9(6) 10(6)	CLAY, tan
20(6) 19(6)	CLAY, tan, sandy w/traces of calcarius nodules

B/H = 81.86

Test Hole #S-7
Elev = 115.89
Sta 827+71, 83.00 Rt

8(6) 9(6)	CLAY, brown, sandy
9(6) 9(6)	CLAY, tan sandy with traces of calcarius nodules
7(6) 11(6)	CLAY, tan, sandy
12(6) 12(6)	CLAY, tan
17(6) 23(6)	

B/H = 90.89

Test Hole #S-8
Elev = 109.40
Sta 832+71, 83.00 Rt

8(6) 9(6)	CLAY, tan, sandy
12(6) 12(6)	CLAY, brown, sandy
8(6) 10(6)	CLAY, tan, sandy with traces of calcarius nodules
9(6) 12(6)	CLAY, tan with traces of calcarius nodules
16(6) 20(6)	CLAY, tan

B/H = 84.40

THE SEAL APPEARING ON THIS DOCUMENT WAS AUTHORIZED BY JAIME AGUILAR, P.E. 87606 ON 06/24/2003.

STATE OF TEXAS
JAIME AGUILAR
87606
REGISTERED PROFESSIONAL ENGINEER

Parsons Brinckerhoff Quade & Douglas Inc.

Texas Department of Transportation

© 2003 by TxDOT

US 281
TEST HOLE DATA SHEET

PLAN 1" = 300' HORIZ

SHEET 6 OF 6 | 281BOR04.DGN

DESIGNED: PAF	FED. RD DIV. NO.	STATE	FEDERAL AID PROJECT NO.		HIGHWAY NO.	
CHECKED: JP	6	TEXAS			US 281	
DRAWN: KTD	STATE DISTRICT	COUNTY	CONTROL NO.	SECTION NO.	JOB NO.	SHEET NO.
CHECKED: JDH	PHARR	HIDALGO	0255	08	091	473

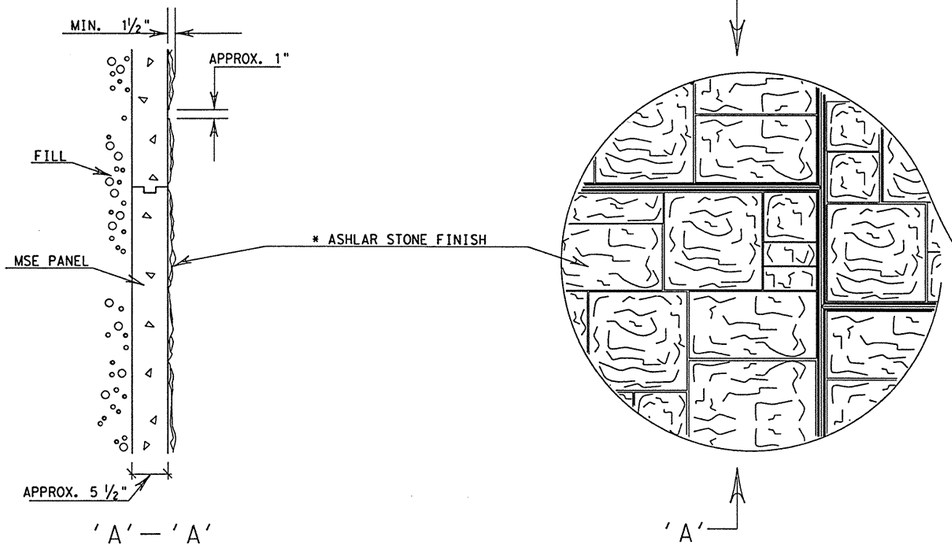

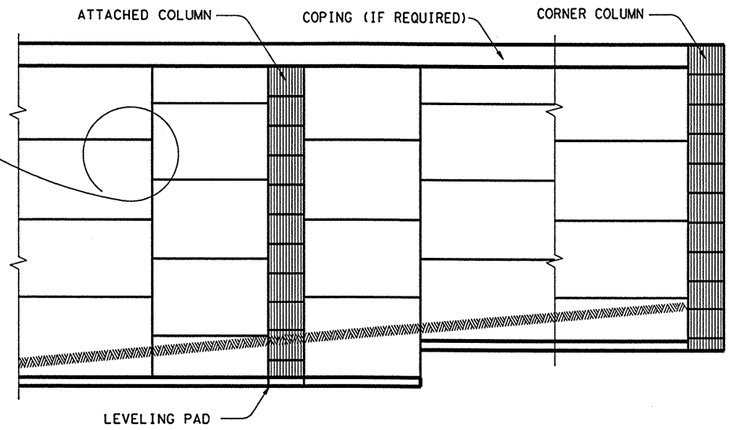

* ENGINEER TO APPROVE COLOR AND PATTERN

STATE OF TEXAS
STEPHEN P. WALKER
01774
REGISTERED
LANDSCAPE ARCHITECT

02.30.03

THE TEXAS BOARD OF ARCHITECTURAL EXAMINERS, 8213 SHOAL CREEK BLVD., SUITE 107, AUSTIN, TEXAS 78758, TELEPHONE (512) 458-4126, HAS JURISDICTION OVER THE INDIVIDUALS LICENSED UNDER THE LANDSCAPE ARCHITECTS REGISTRATION LAW ARTICLE 249C, VERNON'S TEXAS CIVIL STATUTES.

Texas Department of Transportation

© 2000 by Texas Department of Transportation. (512) 416-2055, All rights reserved.

TYPICAL MSE FORM LINER FINISH

SHEET 1 OF 1 SHEETS

FED. RD. DIV. NO.	STATE PROJECT NO.		SHEET NO.
6			474
STATE	DIST.	COUNTY	
TEXAS	PHRR	HIDALGO	
CONT.	SECT.	JOB	HIGHWAY NO.
0255	08	091, ETC	281

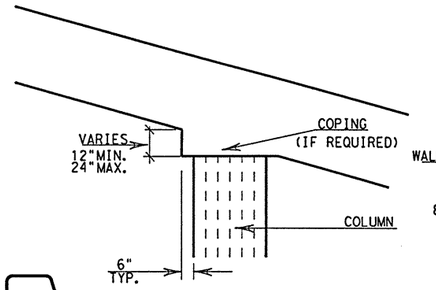

COLUMN PANEL AT COPING
DETAIL 'D' NO SCALE

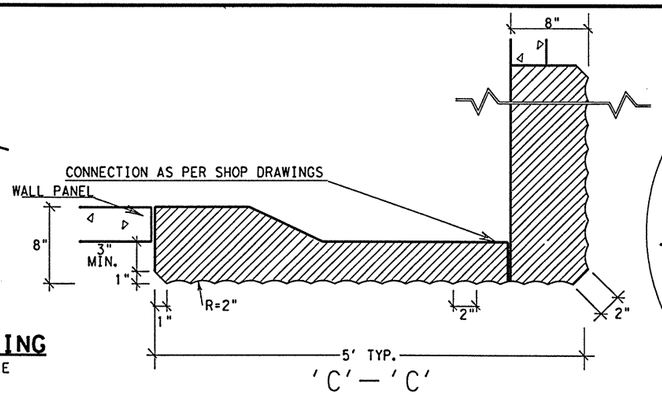

'C'—'C'

SECTION AT CORNER COLUMN PANEL

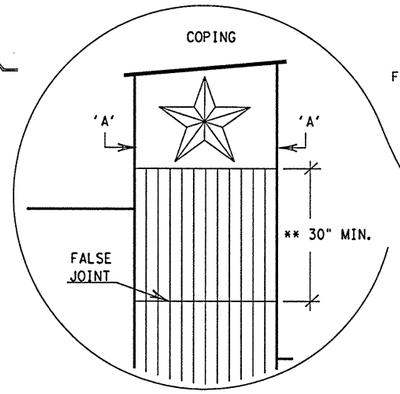

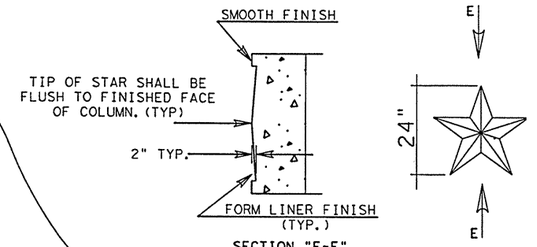

SECTION "E-E"

CAP ART AT COLUMN
ALTERNATE STAR
BETWEEN EACH COLUMN

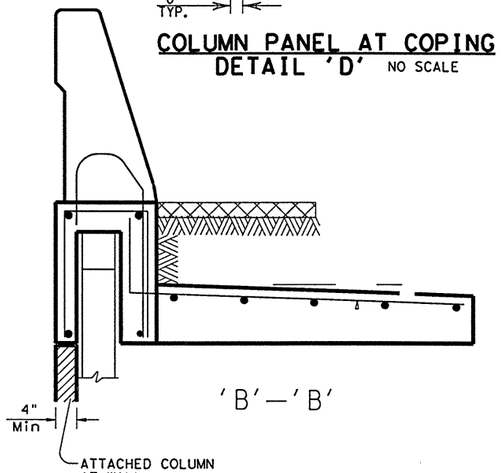

'B'—'B'

TYPICAL SECTION AT RAILING

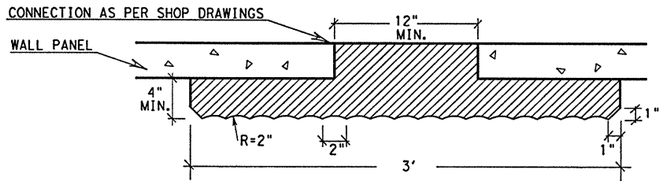

'A'—'A'

SECTION AT ATTACHED COLUMN PANEL

** ENGINEER TO VERIFY HEIGHT

COLUMN PANEL SURFACE FINISH SHALL BE AREA 1, CLASS B TYPE II. THIS ITEM SHALL NOT BE PAID FOR DIRECTLY BUT WILL BE CONSIDERED SUBSIDIARY TO BID ITEM 423.

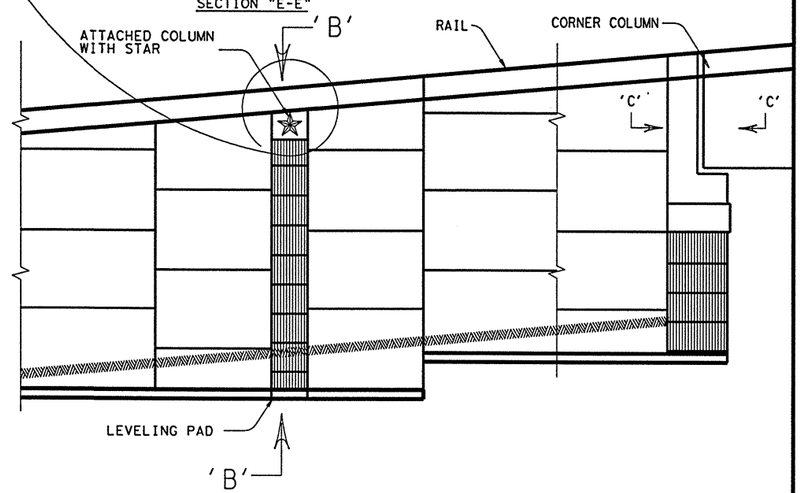

ELEVATION AT ATTACHED COLUMN PANEL

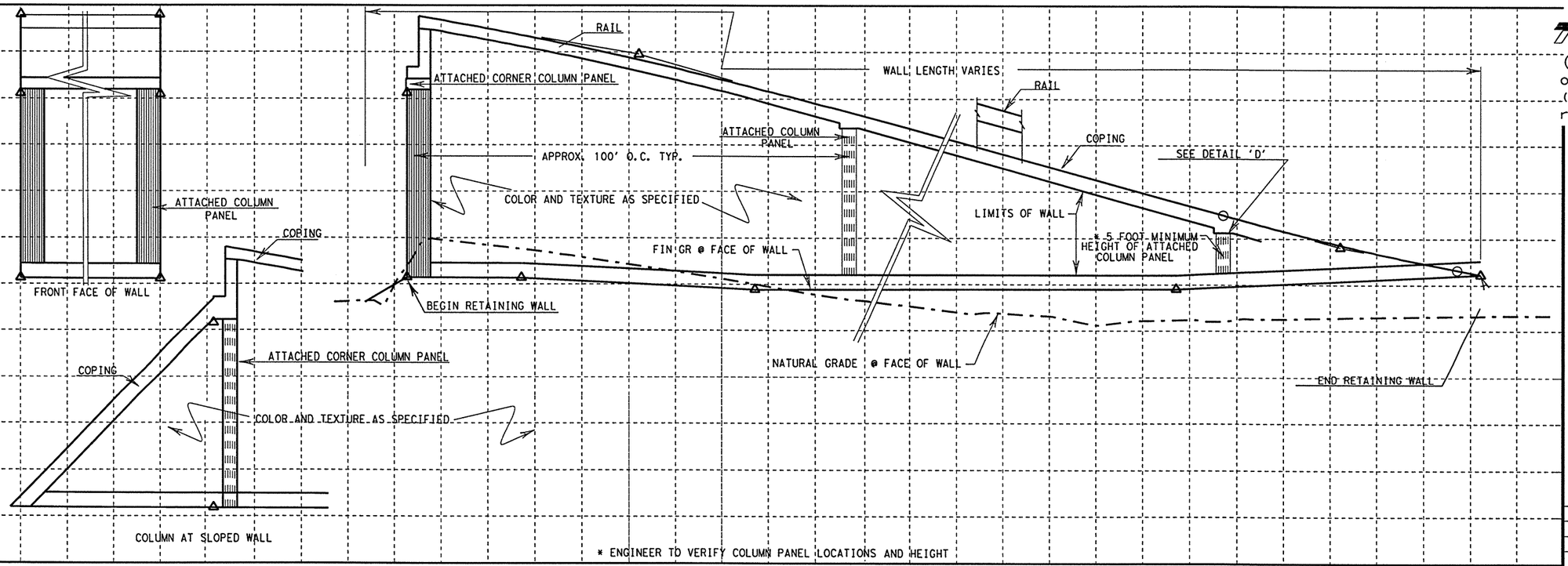

COLUMN AT SLOPED WALL

* ENGINEER TO VERIFY COLUMN PANEL LOCATIONS AND HEIGHT

Texas Department of Transportation

© 2000 by Texas Department of Transportation. (512) 416-2055, All rights reserved.

STATE OF TEXAS
STEPHEN P. WALKER
01774
REGISTERED
LANDSCAPE ARCHITECT

07-21-03

THE TEXAS BOARD OF ARCHITECTURAL EXAMINERS, 8213 SHOAL CREEK BLVD., SUITE 107, AUSTIN, TEXAS 78758, TELEPHONE (512) 458-4126, HAS JURISDICTION OVER THE INDIVIDUALS LICENSED UNDER THE LANDSCAPE ARCHITECTS REGISTRATION LAW ARTICLE 249C, VERNON'S TEXAS CIVIL STATUTES.

ATTACHED TYPICAL MSE, COLUMN TREATMENT

NO SCALE

SHEET 1 OF 1 SHEETS

FED.RD. DIV.NO.	STATE PROJECT NO.		SHEET NO.
6			475
STATE	DIST.	COUNTY	
TEXAS	PHARR	HIDALGO	
CONT.	SECT.	JOB	HIGHWAY NO.
0255	08	091, ETC	281

DISCLAIMER:
The use of this standard is governed by the "Texas Engineering Practice Act". No warranty of any kind is made by TxDOT for any purpose whatsoever. TxDOT assumes no responsibility for the conversion of this standard to other formats or for incorrect results or damages resulting from its use.

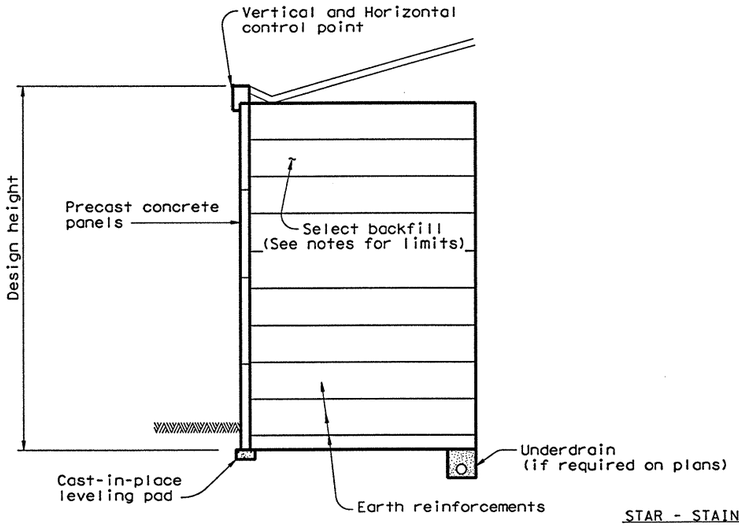

TYPICAL SECTION

(Wall at bottom of slope)

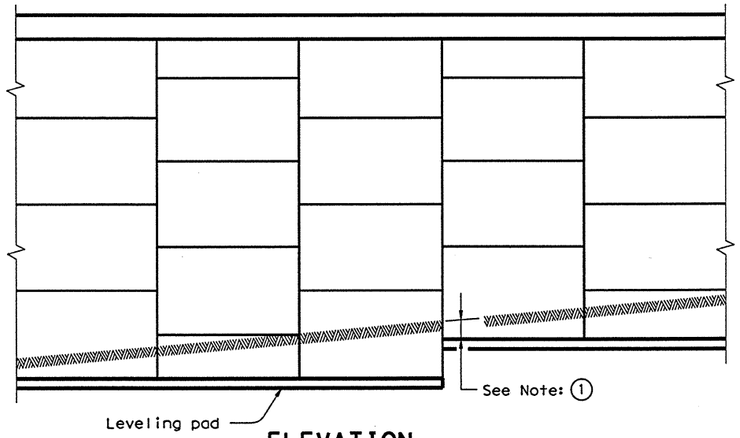

ELEVATION

(1) NOTE: Unless noted elsewhere in the plans, 1' minimum cover shall be provided from the top of leveling pad to finish grade.

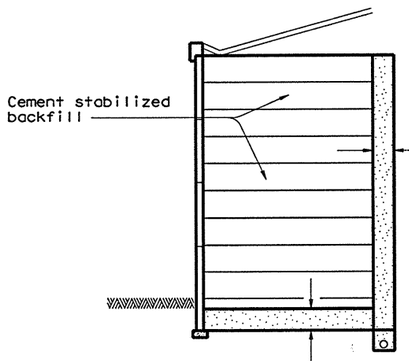

SPECIAL DRAINAGE PROVISIONS

(For use when cement stabilized backfill is used)

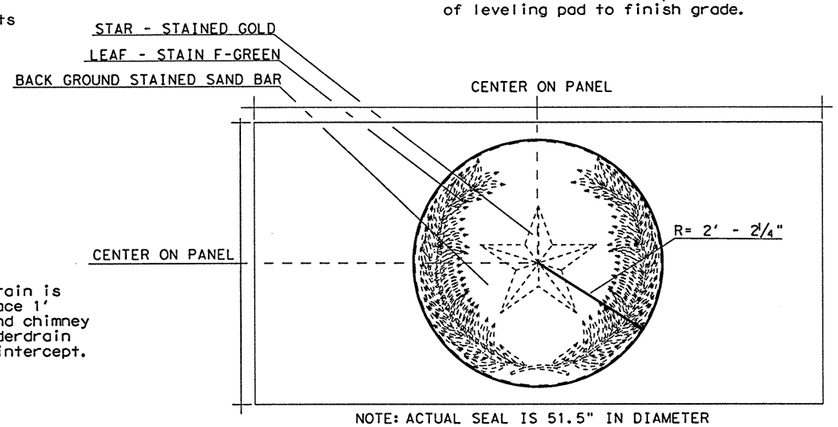

NOTE: ACTUAL SEAL IS 51.5" IN DIAMETER

STATE SEAL ON PANEL

A master epoxy 'State Seal of Texas' (male seal) shall be furnished to the contractor by TxDOT for the purpose of casting a femail form liner for the required panels. Upon completion the master seal shall be returned to TxDOT in its original condition.

Seals shall be formed into a wall panel next to the bridge abutment (two per bridge). The exact location of each seal shall be approved by the Engineer. The cost of casting of the seal and their placement will not be paid for directly, but shall be incidental to the Item "Retaining Wall".

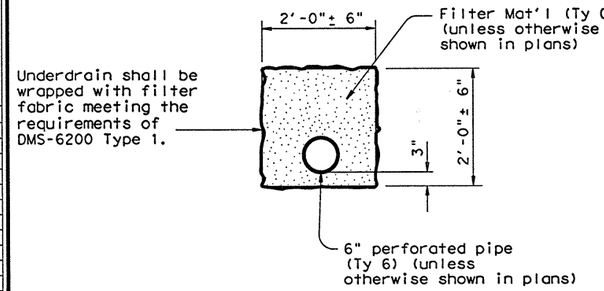

UNDERDRAIN DETAIL

MAP OF TEXAS EMBLEM

Map of Texas emblem shall be formed into a wall panel next to the bridge abutment (two per bridge). The exact location of each emblem shall be approved by the Engineer. The cost of forming the emblems will not be paid for directly, but shall be incidental to the Item "Retaining Wall".

The map of Texas shall be inset a minimum of ¾" into the face of the panel, and shall receive a smooth finish. The inset area shall be finished in a contrasting color as approved by the Engineer.

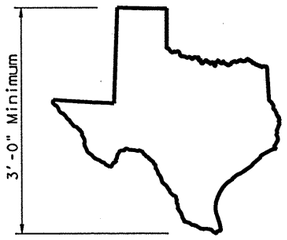

DESIGN PARAMETERS:

Design of retaining walls shall be based on the following design parameters:

Random Backfill (Embankment of Existing Soils)	unit weight = 125 pcf Ø = 30° c = 0 psf
Select Backfill	unit weight = 125 pcf Ø = 34° c = 0 psf
Cement Stabilized Select Backfill	unit weight = 125 pcf Ø = 45° c = 0 psf

Stress in steel and concrete shall be in accordance with current AASHTO Standard and Interim Specifications.

The minimum length of earth reinforcements shall be 8'-0".

STABILITY CRITERIA:

Factor of safety in sliding along the base of the structure shall be greater than or equal to 1.5.

Factor of safety in overturning shall be greater than or equal to 2.0.

The base pressure resultant shall fall within the middle third of the retaining wall.

The factor of safety against pullout of the earth reinforcements shall be greater than or equal to 1.5 at each level. Pullout resistance shall be determined from test data evaluated at ¾ inch strain.

CORROSION CRITERIA:

The earth reinforcement elements shall be designed to have a corrosion resistance - durability to ensure a minimum design life of 75 years. Maximum loss per side due to corrosion shall be computed by assuming a uniform loss model based on the following

Zinc corrosion rate (First 2 years) - 15 µm/yr.
Zinc corrosion rate (subsequent years) - 4 µm/yr.
Carbon steel corrosion rate - 12 µm/yr.

All stress and pullout calculations shall be done on the calculated earth reinforcement section remaining after 75 years.

GENERAL NOTES:

Section and elevation shown is for informational purposes only. Specific geometry is to be determined based on wall layouts and other plan information.

The select backfill specified for use within the mechanically stabilized earth volume shall extend horizontally from the back of the panels to the end of the earth reinforcements. The select backfill shall extend vertically from the top of the leveling pad or 4" below the lowest earth reinforcement, whichever is lower, to the top of panels.

The uppermost earth reinforcements shall be no more than 3.0' below the top of wall.

The lowest level of earth reinforcements shall be no more than 2.0' above the top of the leveling pad.

Minimum wire size for earth reinforcements shall be W7.0. If different longitudinal and cross wires are used in an earth reinforcement mesh, the smaller wire shall have at least 50% of the cross sectional area of the larger wire.

Standard precast concrete panels shall have a maximum height of 6', and a maximum surface area of 50 sq ft. Minimum panel thickness shall be 5". Panels shall be arranged to provide offset horizontal joints.

An open joint shall be provided around the perimeter of the concrete panels. The nominal joint opening shall be between ⅜" and ¾". The joint configuration shall be such that the filter fabric or pad materials are not exposed at the wall face.

A one-piece corner panel shall be provided for wall angle changes of greater than 30 degrees. Butting of chamfered panels will be allowed for angle changes of 30 degrees or less.

Concrete coping shall be provided along the top of wall, at the vertical steps at bridge backwalls, and at other vertical steps along the top of wall. The joints between all coping segments shall be sealed to prevent infiltration of water into the retaining wall backfill. Sealing shall be in accordance with the Item "Joint Sealants and Fillers", using Class 4 joint sealant.

STATE OF TEXAS
STEPHEN P. WALKER
01774
LICENSED REGISTERED ARCHITECT

SEAL COVERS DESIGN AND ART WORK OF STATE SEAL AND EMBLEM ONLY.

07.01.03

THE TEXAS BOARD OF ARCHITECTUAL EXAMINERS, 8213 SHOAL CREEK BLVD., SUITE 107, AUSTIN, TEXAS 78758, TELEPHONE (512) 458-4126, HAS JURISDICTION OVER THE INDIVIDUALS LICENSED UNDER THE LANDSCAPE ARCHITECTS REGISTRATION LAW ARTICLE 249C, VERNON'S TEXAS CIVIL STATUTES.

Texas Department of Transportation
Bridge Division

RETAINING WALL STATE SEAL AND MAP DETAIL SHEET RW(MSE) MOD

FILE:	Fed. Rd. Div. No.	DN: TxDOT	CK: TxDOT	DW:	CK:	
© TxDOT 2003		DISTRICT	FEDERAL AID PROJECT			SHEET
REVISIONS	6	21				476
	STATE	COUNTY	CONTROL	SECT	JOB	HIGHWAY
	TEXAS	HIDALGO	0255	08	091	US 281

LEVELS DISPLAYED
PATH: d-engdata-steve-77-rwstde01

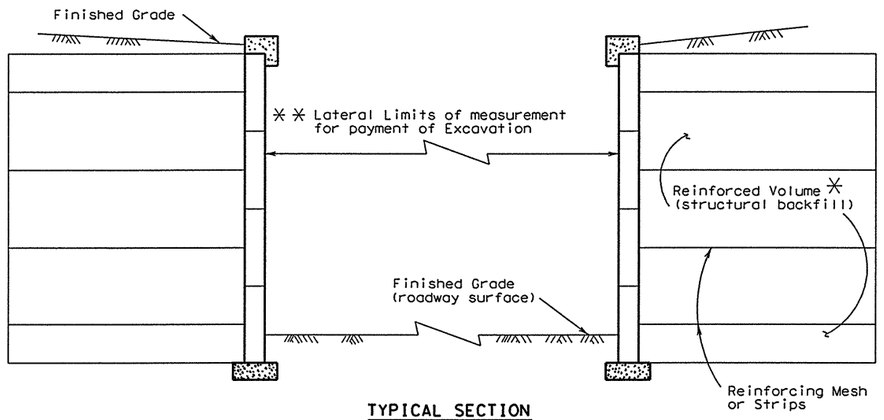

TYPICAL SECTION

Excavation Between Retained Earth or Reinforced Earth Retaining Walls

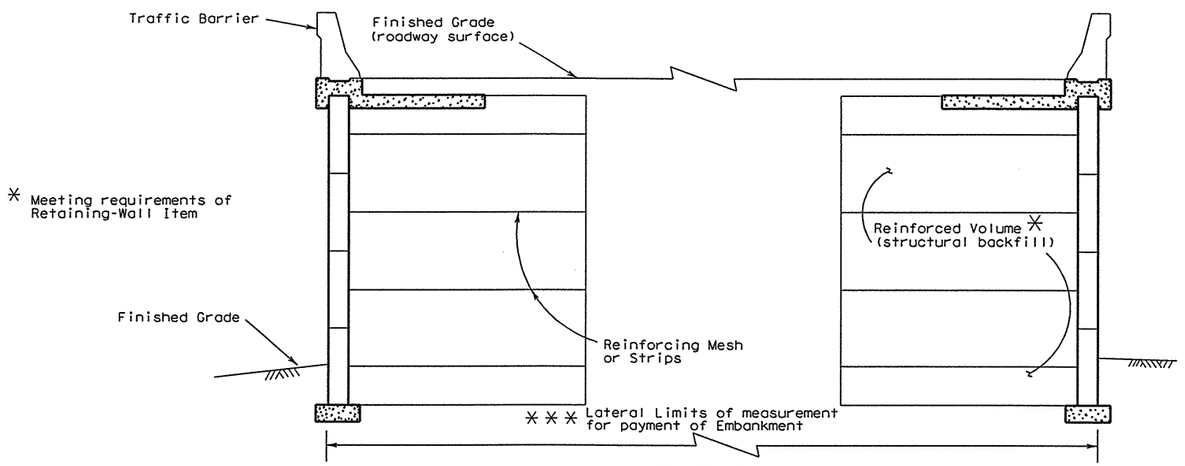

TYPICAL SECTION

Embankment Between Retained Earth or Reinforced Earth Retaining Walls

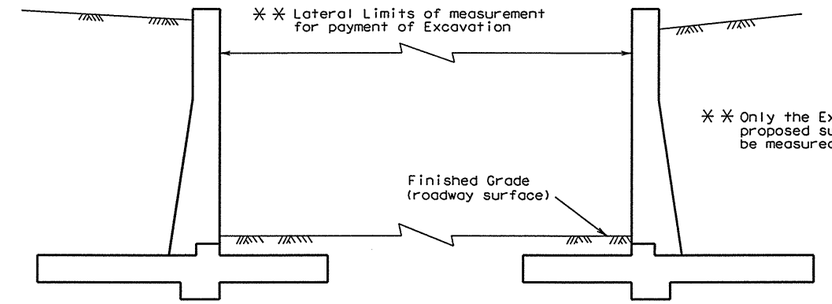

TYPICAL SECTION

Excavation Between Conventional Retaining Walls

Earthwork measurement with other designs of retaining walls will be made to the outside finished face in the same manner.

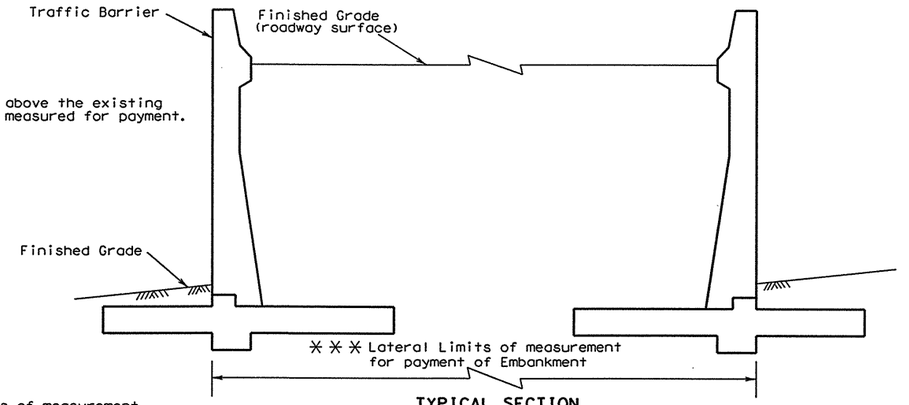

TYPICAL SECTION

Embankment Between Conventional Retaining Walls

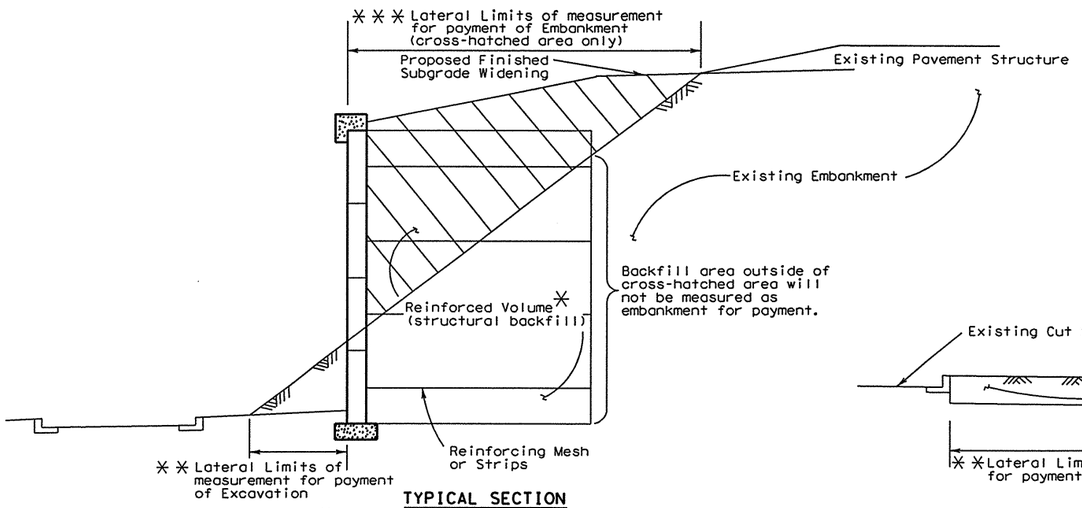

TYPICAL SECTION

Widening Embankment with Retained Earth or Reinforced Earth Retaining Walls

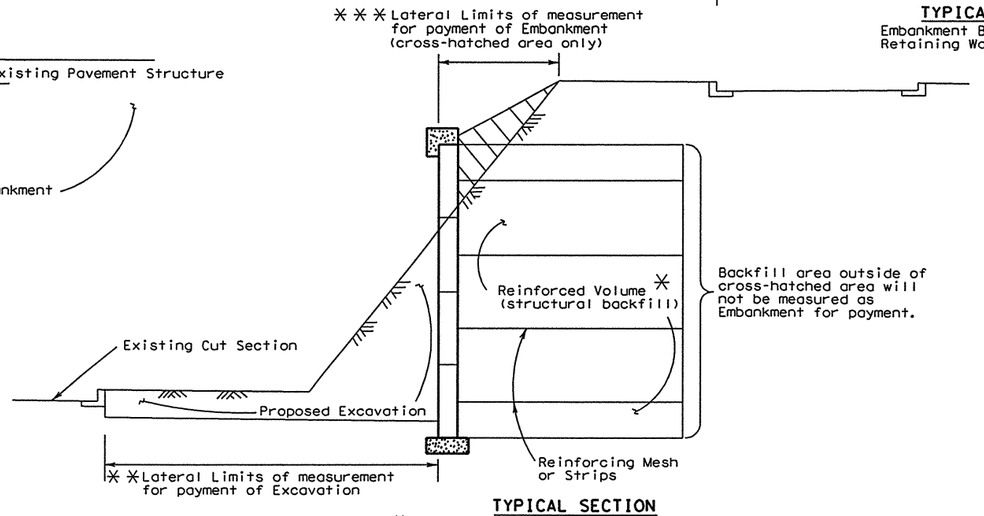

TYPICAL SECTION

Widening Cut Section with Retained Earth or Reinforced Earth Retaining Walls

LEVELS DISPLAYED
1 2 3 4 5 6 7 8 9 10 11 12 13 14 15 16
17 18 19 20 21 22 23 24 25 26 27 28 29 30 31 32
33 34 35 36 37 38 39 40 41 42 43 44 45 46 47 48
49 50 51 52 53 54 55 56 57 58 59 60 61 62 63

ACC: /usc/d481303

FILE: EMRW94.DGN

Texas Department of Transportation
Design Division (Roadway)

EARTHWORK MEASUREMENT AT RETAINING WALLS

EMRW-94

ORIG DRAW DATE: MARCH 1994	DW: TGM	CK: TGM	DW: BGD	CK:		MEG NO.:	A12
©TxDOT 1994	STATE DISTRICT	FEDERAL REGION	FEDERAL AID PROJECT				SHEET
MODIFICATIONS	PHARR	6					479
	COUNTY			CONTROL	SECTION	JOB	HIGHWAY
	HIDALGO			0255	08	091	US 281

DISCLAIMER:
The use of this standard is governed by the "Texas Engineering Practice Act". No warranty of any kind is made by TxDOT for any purpose whatsoever. TxDOT assumes no responsibility for the conversion of this standard to other formats or for incorrect results or damages resulting from its use.

LEVELS DISPLAYED

PATH:

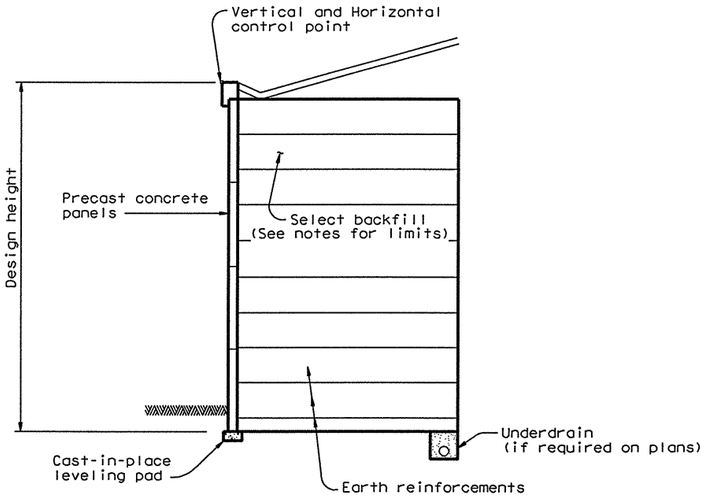

TYPICAL SECTION

(Wall at bottom of slope)

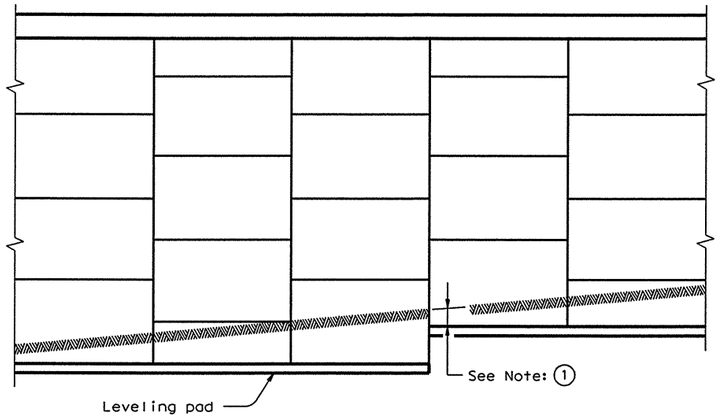

ELEVATION

① NOTE: Unless noted elsewhere in the plans, 1' minimum cover shall be provided from the top of leveling pad to finish grade.

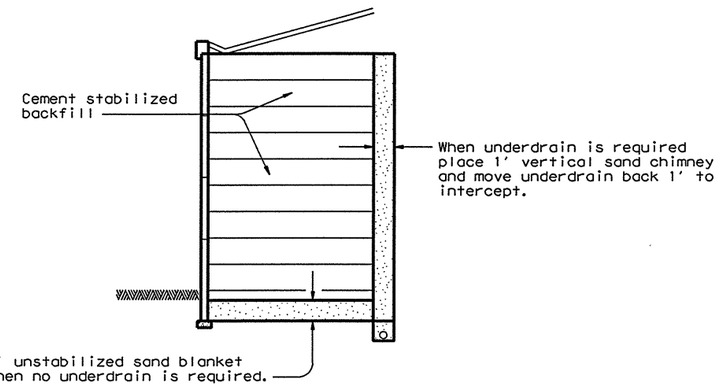

SPECIAL DRAINAGE PROVISIONS

(For use when cement stabilized backfill is used)

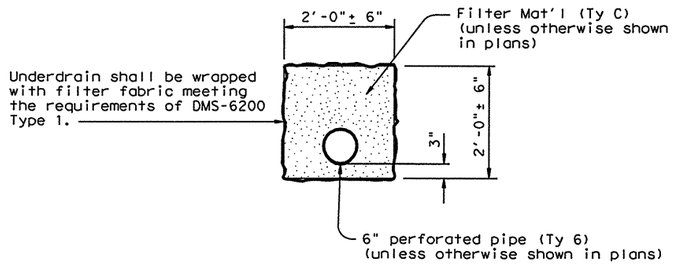

UNDERDRAIN DETAIL

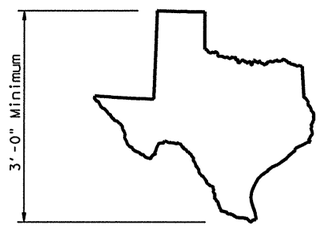

MAP OF TEXAS EMBLEM

Map of Texas emblem shall be formed into a wall panel next to each bridge abutment. The exact location of each emblem shall be approved by the Engineer. The cost of forming the emblems will not be paid for directly, but shall be incidental to the Item "Retaining Wall".

The map of Texas shall be inset a minimum of ¾" into the face of the panel, and shall receive a smooth finish. The inset area shall be finished in a contrasting color as approved by the Engineer.

DESIGN PARAMETERS:
Design of retaining walls shall be based on the following design parameters:

Random Backfill (Embankment of Existing Soils)	unit weight = 125 pcf Ø = 30° c = 0 psf
Select Backfill	unit weight = 125 pcf Ø = 34° c = 0 psf
Cement Stabilized Select Backfill	unit weight = 125 pcf Ø = 45° c = 0 psf

Stress in steel and concrete shall be in accordance with current AASHTO Standard and Interim Specifications.
The minimum length of earth reinforcements shall be 8'-0".

STABILITY CRITERIA:
Factor of safety in sliding along the base of the structure shall be greater than or equal to 1.5.
Factor of safety in overturning shall be greater than or equal to 2.0.
The base pressure resultant shall fall within the middle third of the retaining wall.
The factor of safety against pullout of the earth reinforcements shall be greater than or equal to 1.5 at each level. Pullout resistance shall be determined from test data evaluated at ¾inch strain.

CORROSION CRITERIA:
The earth reinforcement elements shall be designed to have a corrosion resistance - durability to ensure a minimum design life of 75 years. Maximum loss per side due to corrosion shall be computed by assuming a uniform loss model based on the following
Zinc corrosion rate (First 2 years) - 15 µm/yr.
Zinc corrosion rate (subsequent years) - 4 µm/yr.
Carbon steel corrosion rate - 12 µm/yr.
All stress and pullout calculations shall be done on the calculated earth reinforcement section remaining after 75 years.

GENERAL NOTES:

Section and elevation shown is for informational purposes only. Specific geometry is to be determined based on wall layouts and other plan information.
The select backfill specified for use within the mechanically stabilized earth volume shall extend horizontally from the back of the panels to the end of the earth reinforcements. The select backfill shall extend vertically from the top of the leveling pad or 4" below the lowest earth reinforcement, whichever is lower, to the top of panels.
The uppermost earth reinforcements shall be no more than 3.0' below the top of wall.
The lowest level of earth reinforcements shall be no more than 2.0' above the top of the leveling pad.
Minimum wire size for earth reinforcements shall be W7.0. If different longitudinal and cross wires are used in an earth reinforcement mesh, the smaller wire shall have at least 50% of the cross sectional area of the larger wire.
Standard precast concrete panels shall have a maximum height of 6', and a maximum surface area of 50 sq ft. Minimum panel thickness shall be 5". Panels shall be arranged to provide offset horizontal joints.
An open joint shall be provided around the perimeter of the concrete panels. The nominal joint opening shall be between ⅜" and ¾". The joint configuration shall be such that the filter fabric or pad materials are not exposed at the wall face.
A one-piece corner panel shall be provided for wall angle changes of greater than 30 degrees. Butting of chamfered panels will be allowed for angle changes of 30 degrees or less.
Concrete coping shall be provided along the top of wall, at the vertical steps at bridge backwalls, and at other vertical steps along the top of wall. The joints between all coping segments shall be sealed to prevent infiltration of water into the retaining wall backfill. Sealing shall be in accordance with the Item "Joint Sealants and Fillers", using Class 4 joint sealant.

Texas Department of Transportation
Bridge Division

MECHANICALLY STABILIZED EARTH RETAINING WALL

RW(MSE)

FILE: rwstde01.dgn	DN: TxDOT	CK: TxDOT	DW: GHO		CK: MPM		
©TxDOT April 2002	DISTRICT	FEDERAL AID PROJECT				SHEET	
REVISIONS	PHARR					480	
	COUNTY		CONTROL	SECT	JOB	HIGHWAY	
	HIDALGO		0255	08	091	US 281	

DISCLAIMER:
The use of this standard is governed by the "Texas Engineering Practice Act". No warranty of any kind is made by TxDOT for any purpose whatsoever. TxDOT assumes no responsibility for the conversion of this standard to other formats or for incorrect results or damages resulting from its use.

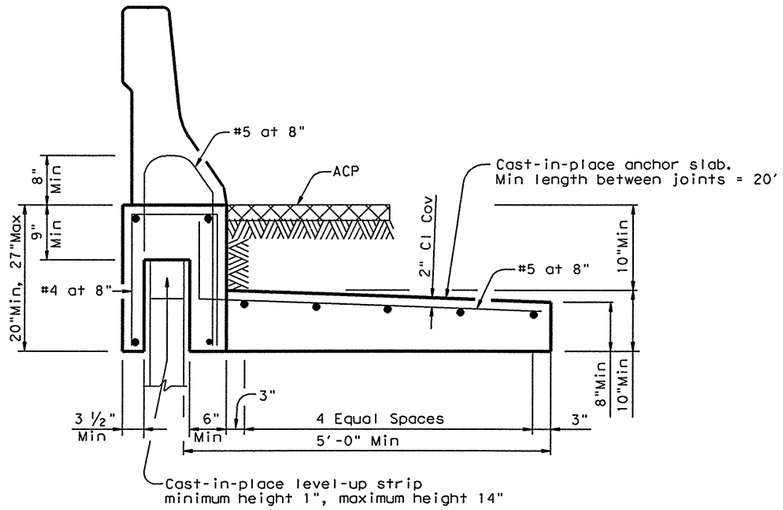

"WIDE BASED" RAILING
T501, T502, C501, C502 & SSTR
ADJACENT TO ACP

(SHOWING TYPE T501 RAIL)

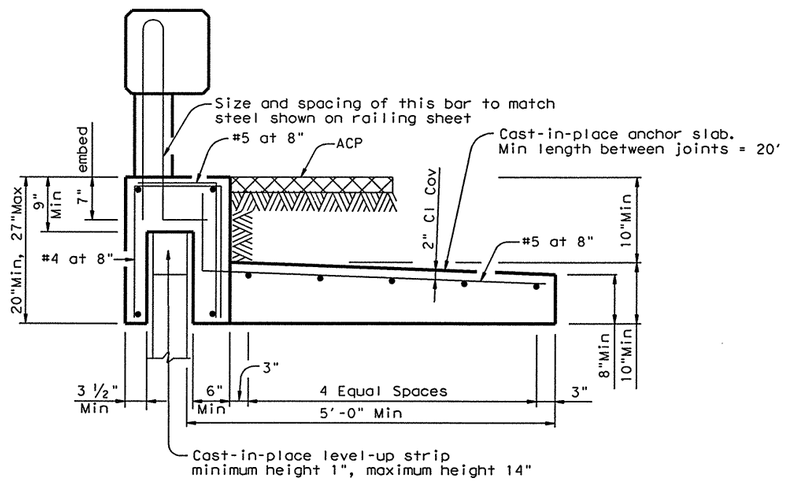

"NARROW BASED" RAILING
T201, T203, T4, T411, C201, C203, C4 & C411
ADJACENT TO ACP

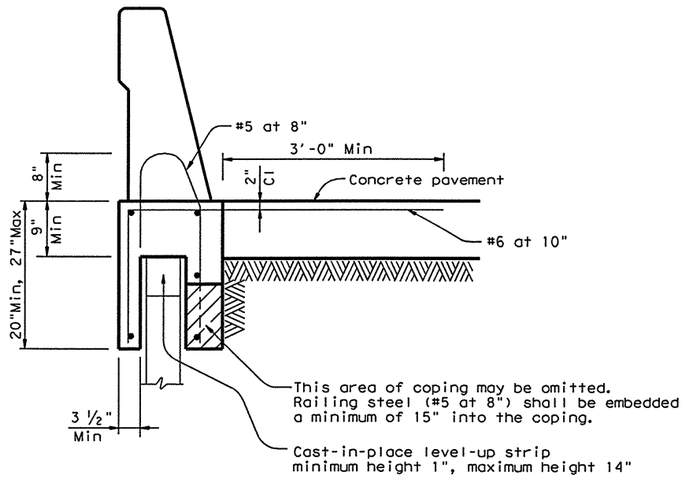

"WIDE BASED" RAILING
T501, T502, C501, C502 & SSTR
ADJACENT TO CONCRETE PAVEMENT

(SHOWING SINGLE SLOPE RAIL - TYPE SSTR)

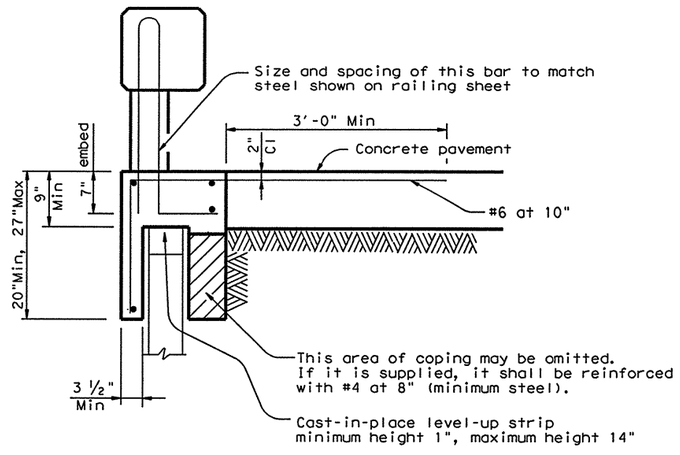

"NARROW BASED" RAILING
T201, T203, T4, T411, C201, C203, C4 & C411
ADJACENT TO CONCRETE PAVEMENT

CAST-IN-PLACE COPINGS:
Casting of the coping directly against the precast panel sides will not be permitted, as this may result in panel cracking. The contractor shall use a ¼" (Min) compressible material on both sides of the panel to isolate the coping from the precast panel.
When cast-in-place coping is anchored to reinforced concrete pavement, a smooth level-up strip shall be provided on the top of the precast panels. The purpose of the level-up is to allow the pavement and coping to move longitudinally relative to the wall without causing damage.
Railing and coping joints shall be provided at 33' maximum spacing. Railing and coping joints shall be placed to coincide with precast panel joints.

PRECAST COPINGS:
A smooth level-up strip shall be provided on top of the precast panels prior to installation of the coping. Shims may be used on top of the level-up strip to facilitate alignment.
Precast coping shall be provided in 10' minimum lengths.

JOINTED CONCRETE PAVEMENT:
When coping is adjacent to and anchored into jointed concrete pavement, the coping joints shall coincide with the pavement joints.

JOINT SEALER:
The joints between coping segments shall be sealed in accordance with the Item "Joint Sealants and Fillers", joint sealing material, Class 4. The joint shall be sealed 3" below and 6" above the adjoining pavement surface, or as directed by the Engineer. The purpose of the joint sealing is to contain surface drainage and prevent infiltration into the retaining wall backfill.

GENERAL NOTES:

Details on this sheet are to be used in development of specific details for mounting traffic railing on mechanically stabilized earth (MSE) walls.
The specific details proposed shall have strengths equivalent to those shown on this sheet. Areas of particular importance are the connection of the coping to the railing, the strength of the vertical coping leg connecting the railing to the anchor slab, and the connection of the coping to the anchor slab or concrete pavement.
Shop drawings for the traffic railing foundations shall be submitted to the Engineer in accordance with the Item "Retaining Wall". The shop drawings shall include bar bending details.
Precasting of the coping or coping and railing will be allowed. The anchor slab, when required, shall be cast-in-place.
The Contractor's attention is directed to the fact that various configurations of precast coping/railing combinations are covered by patent. The contractor shall provide for use of these systems in accordance with Article 7.3.
Concrete shall be Class "C".
All reinforcing steel shall be Grade 60.
Longitudinal bars shall be #4.
Coping and anchor slabs shall be considered subsidiary to the Item "Retaining Wall". The traffic railing will be paid for by the linear foot for the appropriate railing type.

PATH:
LEVELS DISPLAYED
1

Texas Department of Transportation
Bridge Division

RETAINING WALL TRAFFIC RAILING FOUNDATIONS

RW(TRF)

FILE: rwstde03.dgn	DN: TxDOT	CK: TxDOT	DW: GHO	CK: MPM
©TxDOT April 2002	DISTRICT	FEDERAL AID PROJECT		SHEET
REVISIONS	PHARR			481
	COUNTY	CONTROL	SECT	JOB	HIGHWAY
	HIDALGO	0255	08	091	US 281

① PROVIDE EITHER TOP MAT OR STRUT TO STABILIZE TOP OF WALL

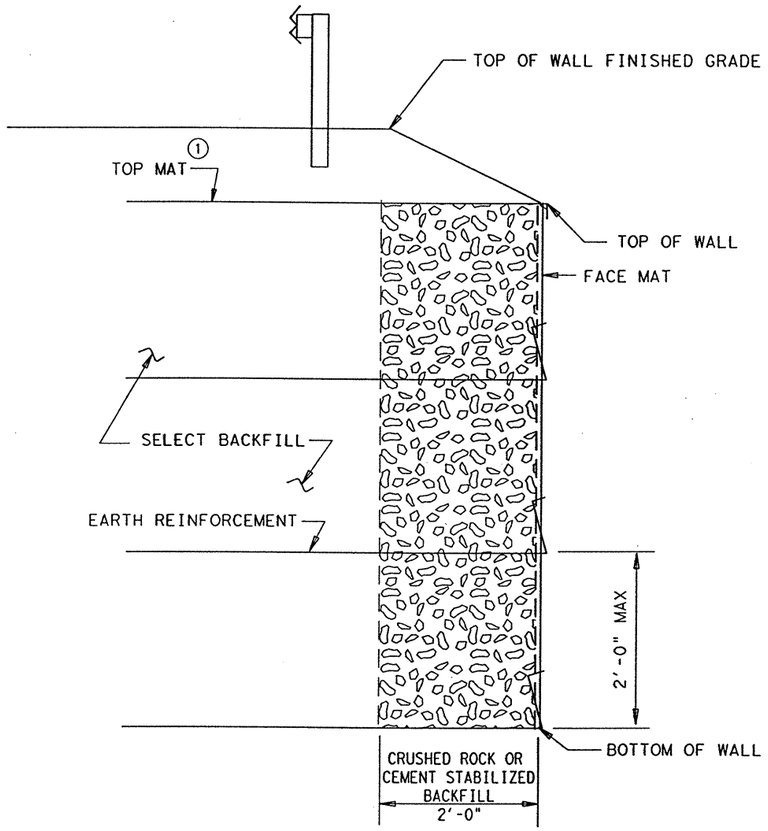

TYPICAL SECTION

(SHOWING TOP MAT OPTION)

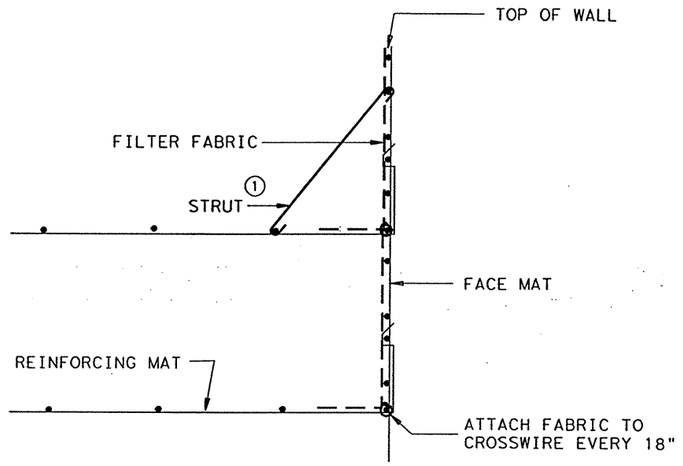

DETAIL OF WALL FACE

(SHOWING STRUT OPTION)

EARTH REINFORCEMENTS:

The maximum vertical spacing of earth reinforcements shall be 24 inches.

The minimum length of earth reinforcements shall be 6 feet for walls 6 feet and shorter, and 8 feet for walls over 6 feet tall.

Minimum wire size for welded wire earth reinforcements shall be W4.5. Longitudinal wire spacing shall not exceed 12 inches. Transverse wire spacing shall not exceed 24 inches.

Earth reinforcement allowable stresses and pullout shall be calculated with current AASHTO Standard and Interim Specifications.

Factor of safety in pullout of the earth reinforcements shall be greater than 1.5 at each reinforcement level.

WALL FACE:

Minimum wire size for welded wire material used for all facing shall be W4.5. Spacing of the wire shall not exceed 6 inches in either the horizontal or vertical direction. The facing shall be designed to maintain a vertical position during wall backfilling. This may be accomplished with wire struts, external bracing, or other means which provide acceptable performance. If the face does not remain vertical during wall backfilling, work shall be stopped until the system is modified to meet this requirement.

Angled struts or a top mat shall be provided to stabilize the top basket face. Strut spacing shall not exceed 24 inches.

STABILITY CRITERIA:

Factor of safety in sliding along the base of the structure shall be greater than or equal to 1.5.

Factor of safety in overturning shall be greater than or equal to 2.0.

The base pressure resultant shall fall within the middle third of the retaining wall.

DESIGN PARAMETERS:

Structure shall be based on the following design parameters:

Random Backfill: Unit weight = 120 pcf.
(Embankment or Existing Soils) ø = 30° c = 0 psf
Select Backfill: Unit weight = 120 pcf
ø = 30° c = 0 psf

GENERAL NOTES:

Sections shown are for informational purposes only. Specific geometry is to be determined based on wall layouts and other plan information.

Temporary earth walls shall also conform to all other requirements as per Special Specification "Temporary Earth Walls".

SPECIAL NOTE - FACE CONSTRUCTION

When constructing wire faced walls, it is critical that the area immediately behind the face mat be completely filled. Failure to fill and compact this area will result in bulging of the face mats and settlement of the top of wall. The filter fabric shall closely follow the contours of the face unit, with particular attention paid to the lower corner of the basket. The fabric shall be pulled into the corner and attached to the basket with hog rings or tie wire. The coarse rock or cement stabilized backfill in the two foot zone behind the face shall extend completely to the top of the face mat. Particular care shall be taken not to leave a gap or void below the next layer of earth reinforcement.

REVISED
9-26-03

Texas Department of Transportation
Bridge Division

TEMPORARY EARTH RETAINING WALL

RW(TEW)

FILE: rwstde04.dgn	DN: TxDOT	CK: TxDOT	DW: GHO	CK: MPW
©TxDOT April 2002	DISTRICT	FEDERAL AID PROJECT		SHEET
REVISIONS		MG 2003(689)		48A
	COUNTY	CONTROL	SECT	JOB	HIGHWAY
	HIDALGO	0255	08	091	US281

LEVELS DISPLAYED
PATH:

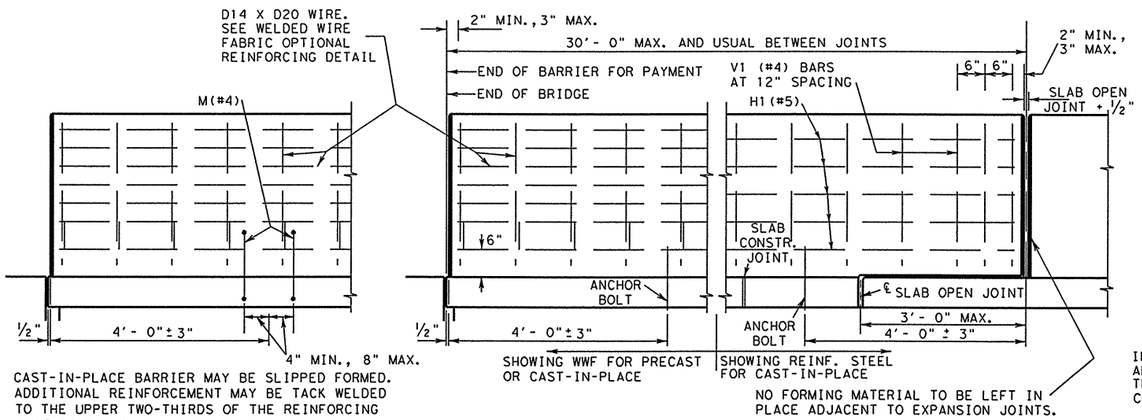

ELEVATION OF TRAFFIC BARRIER

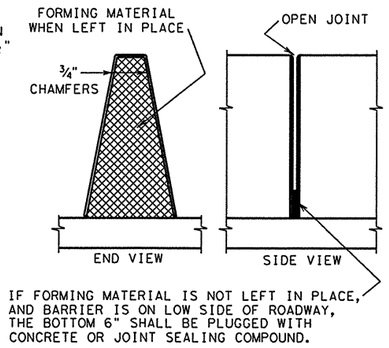

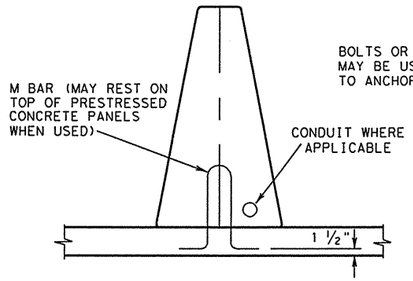

CAST-IN-PLACE ON NEW SLABS

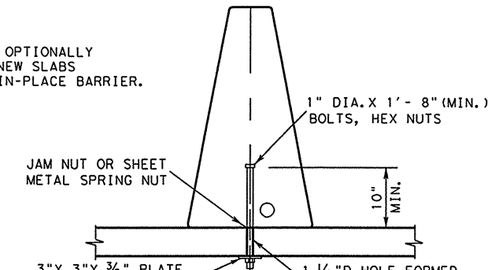

CAST-IN-PLACE ON NEW OR EXISTING SLABS

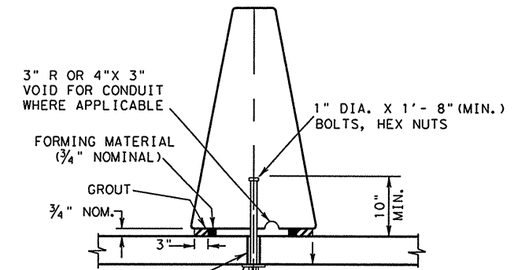

PRECAST ON NEW OR EXISTING SLABS

GENERAL NOTES

1. ALL CONCRETE, REINFORCEMENT, ANCHOR BOLTS, BLOCKING, GROUT, ETC., AS SHOWN ARE CONSIDERED AS PART OF THE BARRIER FOR PAYMENT.
2. CONCRETE FOR BARRIER SHALL BE CLASS A, C OR H. ALL REINFORCING STEEL SHALL BE GRADE 60, UNLESS OTHERWISE SPECIFIED.
3. WELDED WIRE FABRIC (WWF) MADE IN ACCORDANCE WITH ASTM A497 MAY BE USED AS AN OPTION TO THE CONVENTIONAL REINFORCEMENT FOR PRECAST OR CAST-IN-PLACE BARRIER WITH THE EXCEPTION THAT ONLY CONVENTIONAL REINFORCEMENT MAY BE USED FOR LIGHT POLE SECTIONS. THESE SECTIONS SHALL BE CAST-IN-PLACE WITH LENGTH, SHAPE, ANCHORAGE, AND REINFORCEMENT AS DETAILED ON SHEET SSCB (4).
4. CAST-IN-PLACE BARRIER MAY BE SLIPPED FORMED. ADDITIONAL REINFORCEMENT MAY BE TACK WELDED TO THE UPPER TWO-THIRDS OF THE REINFORCING CAGE TO PROVIDE BRACING. DO NOTE WELD TO M BARS OR ANCHOR BOLTS.
5. GROUT FOR PRECAST BARRIERS SHALL CONSIST OF TWO PARTS SAND AND ONE PART CEMENT. LATEX ADHESIVE MAY BE ADDED TO THE GROUT IF DIRECTED BY THE ENGINEER. WOOD OR OTHER MATERIAL APPROVED BY THE ENGINEER SHALL BE USED FOR BLOCKING. ENOUGH FIRM BLOCKING MUST BE USED TO PROPERLY ALIGN AND GRADE THE BARRIER SECTIONS. AT OTHER LOCATIONS, ANY SUITABLE MATERIAL MAY BE USED TO RETAIN THE GROUT.
6. JOINTS SHALL BE LOCATED NEAR ENDS OF SPANS, AT ENDS OF LIGHT POLE SECTIONS AND AT INTERVALS IN BETWEEN AS NECESSARY TO MAINTAIN 30 FT. MAXIMUM AND 15 FT. MINIMUM SECTION LENGTHS. WHEN BARRIER IS CAST-IN-PLACE, A JOINT SHALL BE PLACED AT INTERIOR SUPPORTS OF CONTINUOUS UNITS. JOINT OPENINGS SHALL BE ½ INCH MINIMUM AND 1 INCH MAXIMUM OR ½ INCH WIDER THAN ADJACENT OPEN SLAB JOINTS. MATERIAL USED IN FORMING JOINTS MAY BE LEFT IN PLACE IF IT IS COMPRESSIBLE AND LIGHT IN COLOR. WHERE PORTIONS OF BARRIERS PROJECT OVER ADJACENT SPANS, SIMILAR MATERIALS MAY ALSO BE USED TO PROVIDE ¾ INCH NOMINAL CLEARANCE.
7. ANCHOR BOLTS AND ASSOCIATED NUTS, WASHERS, AND PLATES FOR THE BARRIER TO SLAB ATTACHMENT SHALL BE GALVANIZED. ANCHOR BOLT ASSEMBLIES SHALL CONFORM TO ITEM 449, MILD STEEL ANCHOR BOLTS OR A36 THREADED ROD WITH TACK WELDED NUTS (0.906 INCH MIN. DIA. WITH ROLLED THREADS). DRILLED ANCHORAGE HOLES SHALL BE INSTALLED WITH ROTARY TYPE EQUIPMENT; PERCUSSION DRILLING DISALLOWED. SPALLS IN THE BOTTOM OF THE SLAB EXCEEDING ½" FROM THE EDGE OF THE HOLE SHALL BE PATCHED.
8. THE CENTERLINE AXIS OF THE BARRIER SHALL BE VERTICAL EXCEPT WHERE THE SLAB IS SUPERELEVATED IN WHICH CASE IT SHALL BE NORMAL TO THE CROSS SLOPE UNLESS OTHERWISE SHOWN IN THE PLANS OR DIRECTED BY THE ENGINEER.
9. THE MAXIMUM OFFSET FROM THE CENTER OF THE BARRIER TO THE TRUE CIRCULAR CENTERLINE SHALL BE ONE INCH FOR PRECAST SEGMENTS INSTALLED ON HORIZONTAL CURVES. IF THIS WOULD REQUIRE SEGMENT LENGTHS OF LESS THAN 15 FEET, THEN THE BARRIER SHALL BE CAST-IN-PLACE TO THE CORRECT RADIUS.
10. SHOP DRAWINGS ARE NOT REQUIRED FOR THIS BARRIER.
11. ANCHORAGE SYSTEMS EQUAL TO OR STRONGER THAN THOSE SHOWN MAY BE USED PROVIDED THE DETAILS OF SUCH SYSTEMS ARE SUBMITTED TO AND APPROVED BY THE ENGINEER PRIOR TO PLACEMENT.

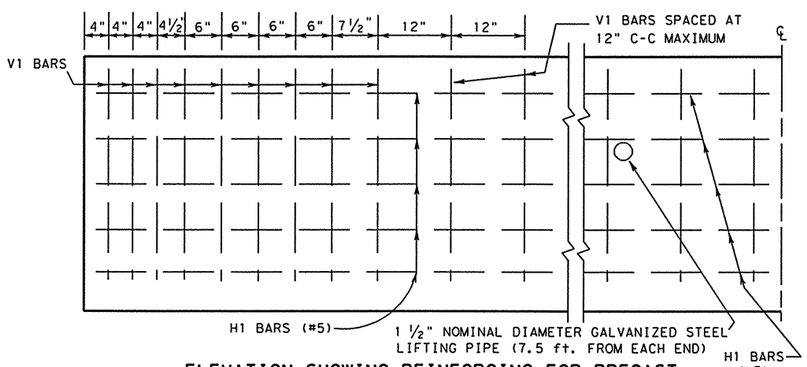

ELEVATION SHOWING REINFORCING FOR PRECAST

(SYMMETRICAL ABOUT BARRIER MIDPOINT)

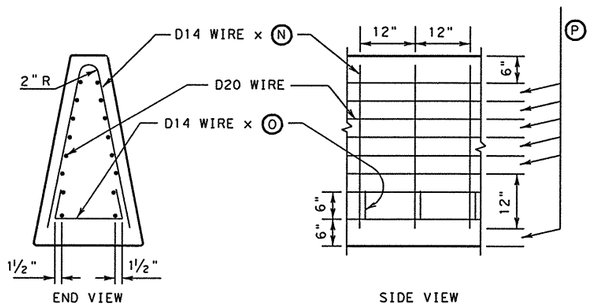

WELDED WIRE FABRIC OPTIONAL REINFORCING

(PRECAST OR CAST-IN-PLACE)

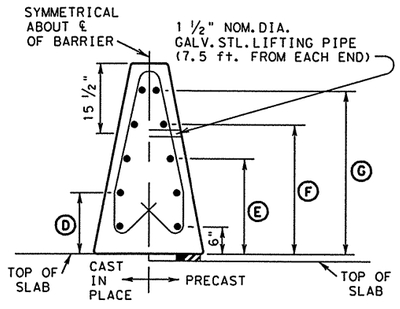

TYPICAL SECTION

(CONVENTIONAL REINFORCING)

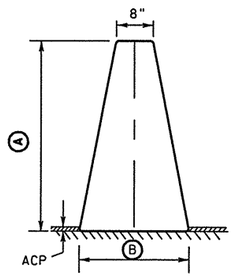

TYPICAL SECTION

(GEOMETRICS)

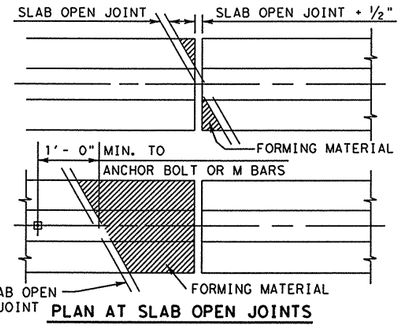

PLAN AT SLAB OPEN JOINTS

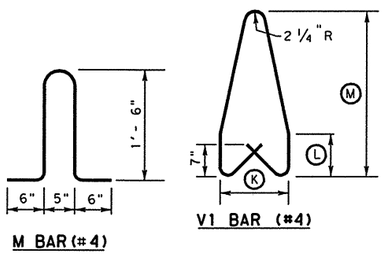

REINFORCING DETAILS

BARRIER HEIGHT (IN.)	DIMENSIONS (IN.)															
	Ⓐ	Ⓑ	Ⓒ	Ⓓ	Ⓔ	Ⓕ	Ⓖ	Ⓗ	Ⓘ	Ⓙ	Ⓚ	Ⓛ	Ⓜ	Ⓝ	Ⓞ	Ⓟ
42	42	24	33 ½	13 ½	21	28 ½	36	15	9 ¼	33 ¼	15	9 ¼	36	72	28	4
48	48	26 9/32	39 ½	15	24	33	42	17 ¼	10 ¾	39 ¼	17 ¼	10 ¾	42	84	31 ½	5
54	54	28 9/16	45 ½	16 ½	27	37 ½	48	19 ½	12 ¼	45 ¼	19 ½	12 ¼	48	96	34 ¾	6

R = Radius
D = Diameter

DISCLAIMER:
The use of this standard is governed by the "Texas Engineering Practice Act". Any use of it for any purpose whatsoever. TxDOT assumes no responsibility for the conversion of this standard to other formats or for incorrect results or damages resulting from its use.

LEVELS DISPLAYED
1 3 4 5 6 7 8 9 10 11 12 13 14 15 16
7 8 18 19 20 21 22 23 24 25 26 27 28 29 30 31 32
33 34 35 55 63 67 68 39 40 41 42 43 44 45 46 47 48
49 50 51 52 53 54 55 56 57 58 59 60 61 62 63

Texas Department of Transportation
Design Division (Roadway)

SINGLE SLOPE CONCRETE BARRIER

TYPE 1

(BRIDGE)

SSCB(1)-99

FILE: sscb199.dgn	DN: GTH	CK: GTH	DW: BGD	CK:
© TxDOT MAY 1992	DIST	FED REG	FEDERAL AID PROJECT •	SHEET
REVISIONS	PHARR	6		482

COUNTY	CONTROL	SECT	JOB	HIGHWAY
HIDALGO	0255	08	091	US 281

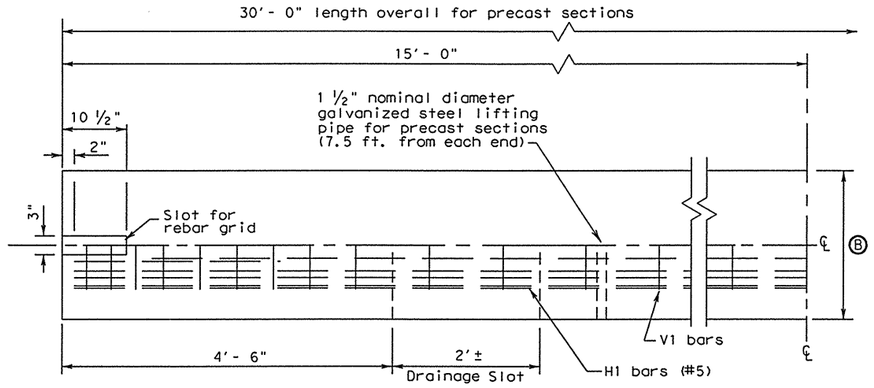

PLAN VIEW

(SYMMETRICAL ABOUTCENTER LINE)

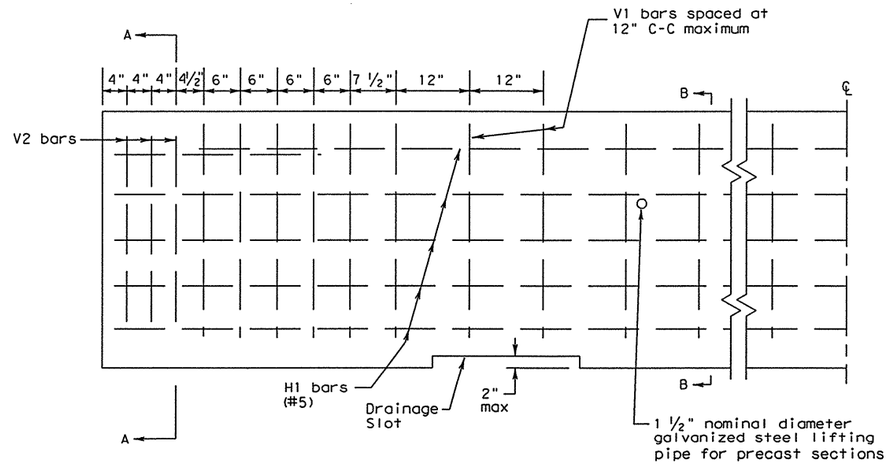

ELEVATION

(SYMMETRICAL ABOUT CENTERLINE)

GENERAL NOTES

1. Precast barrier length shall be 30 feet (±1") unless otherwise specified in the plans. Cast-in-place or slip-formed barrier shall have an intermediate barrier joint at a maximum spacing of 100 feet unless otherwise directed by the Engineer. Refer to the intermediate barrier joint detail. Cast-in-place or slip-formed barrier will have the vertical V1 bars placed at 12" C-C maximum except near joints. The narrower vertical bar spacing at the ends of each barrier segment, as shown in the elevation view, will be required at the joints. The V2 bars shown in the elevation view will be replaced by V1 bars for cast-in-place or slip-form construction.
2. The usual temporary installation will require the placement of the rebar grid in the ungrouted slot. The usual permanent installation using precast barrier will connect the barrier segments with the rebar grid placed in the slot and grouted in place.
3. When installed in a permanent roadway location, the end connections of the precast barrier shall be grouted with a mixture of two parts sand and one part cement with enough water to make the mixture plastic. Grouting shall be done in a manner that will assure a smooth surface at the joint.
4. All concrete shall be class C or H, unless otherwise specified.
5. All reinforcing steel shall be Grade 60, unless otherwise specified.
6. Each precast barrier to be installed in a temporary location shall be delivered with a rebar grid.
7. Chamfer top and end edges ¾ inch.
8. Unless otherwise shown in the plans, the Contractor has the option of placing either precast or cast-in-place permanent concrete barrier. Cast-in-place barrier may be slip-formed. Additional reinforcement may be tack welded to the upper two-thirds of the reinforcing cage to provide bracing. Lifting pipe, rebar grid and slot shall be omitted for cast-in-place or slip-form construction.
9. Bar splices for roadway barrier shall be a minimum of 24 times the nominal diameter of the bar.
10. Welded wire fabric may be used as an option to conventional reinforcement for precast or cast-in-place barrier. Welded wire fabric shall be made in accordance with ASTM A 497.
11. Conduit will be provided only when called for elsewhere in the plans. The position of the conduit or conduit passageway may be adjusted to facilitate construction, subject to approval of the Engineer.
12. Transitions to barrier height, as needed, shall be determined by the Engineer. Changes in barrier height should not normally exceed 2 inches per 30 foot. Vertical steel shall be uniformly transitioned throughout the variation in barrier height as directed by the Engineer.
13. A 36 inch minimum height differential between top of barrier and top of ACP shall be required at placement in order to allow for up to 6 inches of future overlays while maintaining a 30 inch minimum future effective height of barrier. Total minimal barrier height for design is therefore dictated by allowance for future overlays plus existing stairstep dimension "S". Minimums typically rounded to 42", 48" or 54" to facilitate precasting.

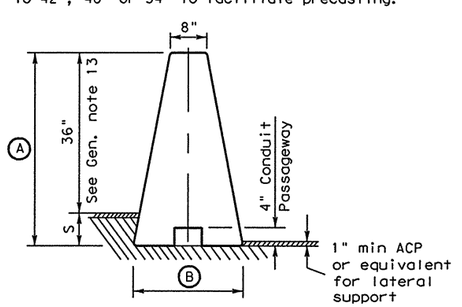

TYPICAL SECTION

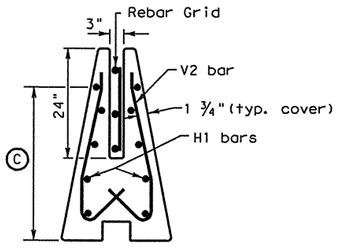

SECTION A-A

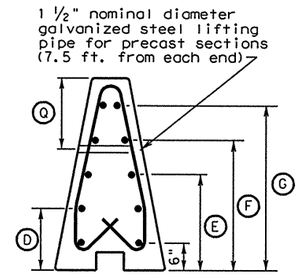

SECTION B-B

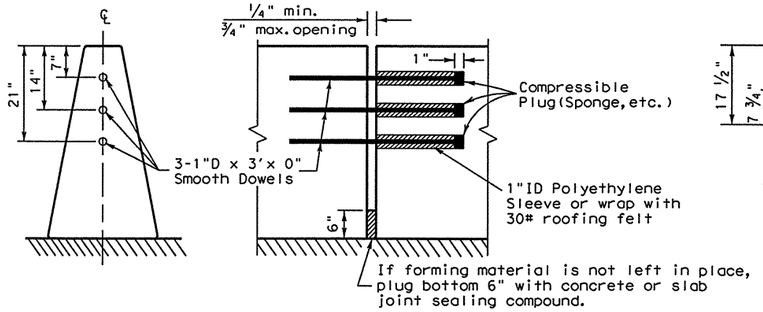

INTERMEDIATE BARRIER JOINT DETAIL (cast-in-place or slip-formed sections)

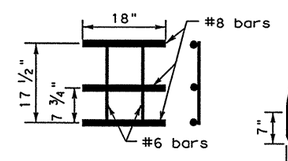

REBAR GRID

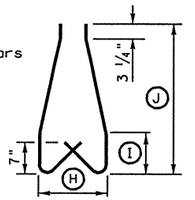

V2 BAR (#4)

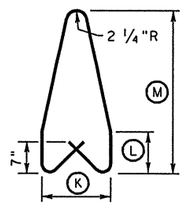

V1 BAR (#4)

REINFORCING DETAILS

R = Radius
D = Diameter

Barrier Height	DIMENSIONS (inches)															
Ⓐ	Ⓑ	Ⓒ	Ⓓ	Ⓔ	Ⓕ	Ⓖ	Ⓗ	Ⓘ	Ⓙ	Ⓚ	Ⓛ	Ⓜ	Ⓝ	Ⓞ	Ⓟ	Ⓠ
42	24	33 ½	13 ½	21	28 ½	36	15	9 ¼	33 ¼	15	9 ¼	36	72	28	4	15 ½
48	26 9/32	39 ½	15	24	33	42	17 ¼	10 ¾	39 ¼	17 ¼	10 ¾	42	84	31 ½	5	17
54	28 9/16	45 ½	16 ½	27	37 ½	48	19 ½	12 ¼	45 ¼	19 ½	12 ¼	48	96	34 ¾	6	18 ½

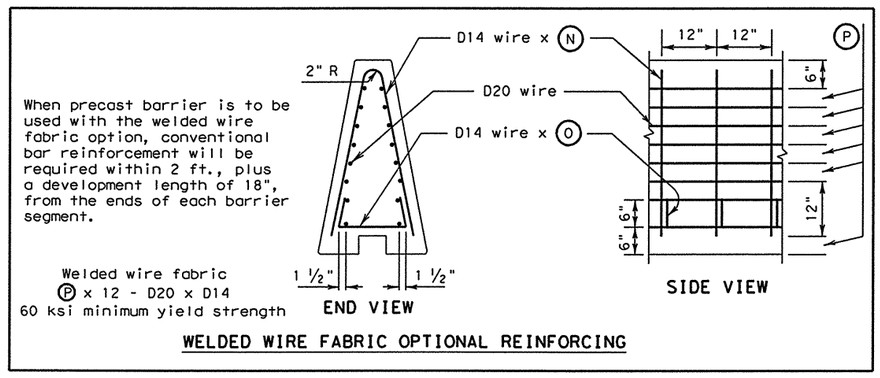

WELDED WIRE FABRIC OPTIONAL REINFORCING

Texas Department of Transportation
Design Division (Roadway)

SINGLE SLOPE CONCRETE BARRIER TYPE 2

SSCB(2)-00A

FILE: sscb200a.dgn	DN: GTH	CK: GTH	DW: BGD	CK: TGM	NEG:	
©TxDOT MAY 1992	DIST	FED REG	FEDERAL AID PROJECT •			SHEET
REVISIONS	PHARR	6				483
	COUNTY		CONTROL	SECT	JOB	HIGHWAY
	HIDALGO		0255	08	091	US 281

DISCLAIMER:
The use of this standard is governed by the "Texas Engineering Practice Act". No warranty of any kind is made by TxDOT for any purpose whatsoever. TxDOT assumes no responsibility for the conversion of this standard to other formats or for incorrect results or damages resulting from its use.

LEVELS DISPLAYED

1	3	4	5	6	7	8	9	10	11	21	31	41	51	61		
17	18	19	20	21	22	23	24	25	26	27	28	29	30	31	32	
33	34	35	55	63	73	83	94	04	14	24	34	44	54	64	74	84
96	05	15	25	35	45	55	65	75	85	96	06	16	26	36		

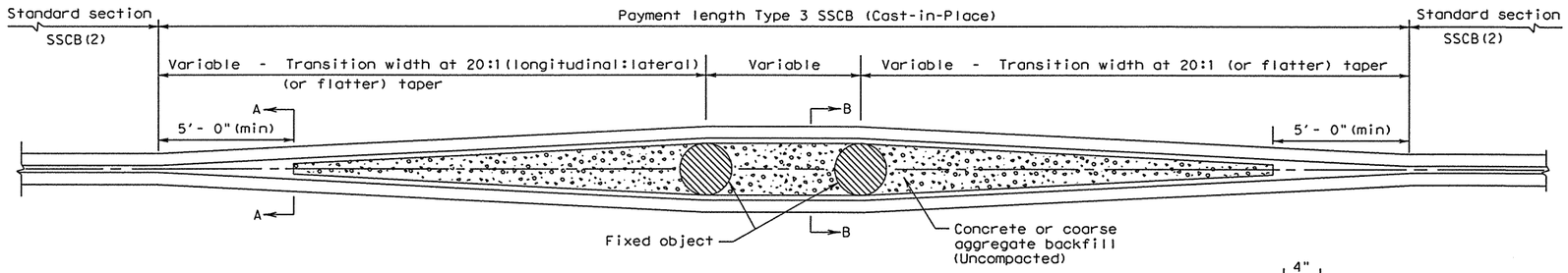

PLAN VIEW
BARRIER AT FIXED OBJECTS

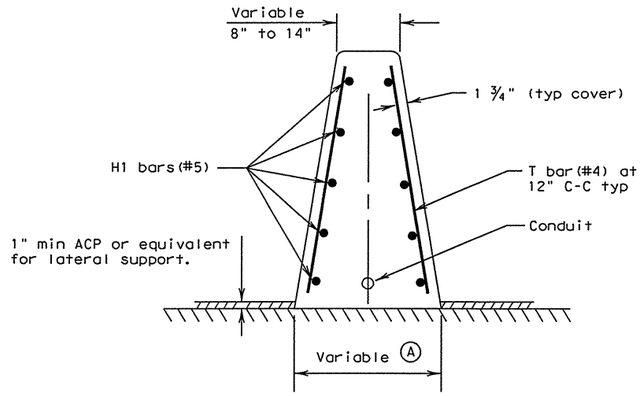

SECTION A-A

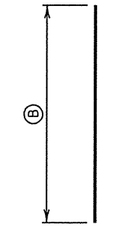

T BAR (#4)

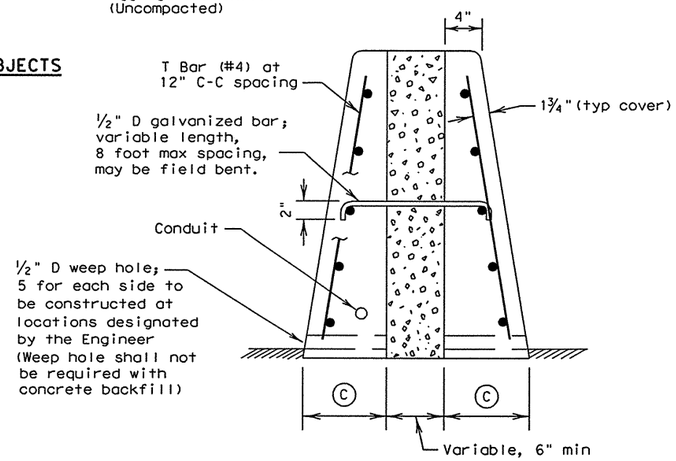

SECTION B-B

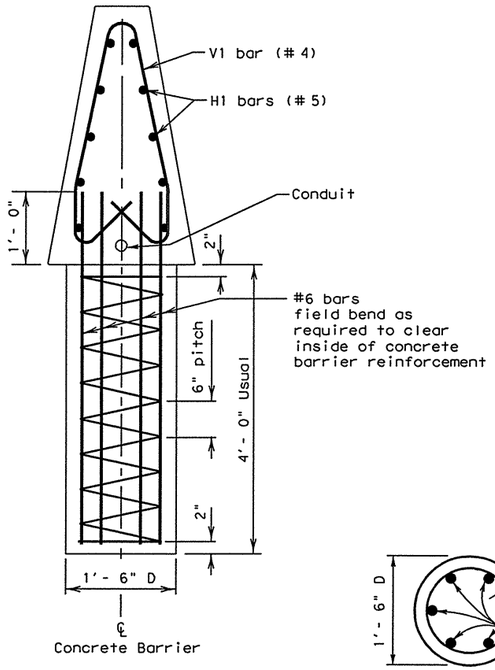

ANCHOR DETAIL - SECTION D-D

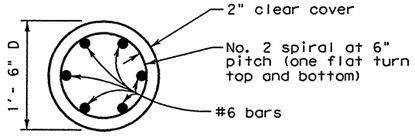

SECTION E-E

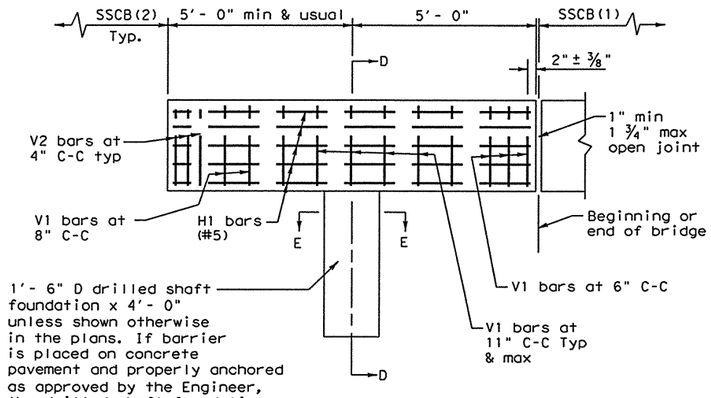

ELEVATION
ANCHOR OR TERMINAL BARRIER

GENERAL NOTES

1. Bid price per linear foot of SSCB, including terminal and anchor sections, shall include all of the concrete, reinforcement, drilled shaft foundations, conduit and aggregate or concrete backfill.
2. Connection with precast SSCB shall be made with rebar grid and slot as shown in SSCB(2).
3. See SSCB(2) for additional notes and details.
4. Outside face dimensions and slopes for Type 3 Barrier are the same as shown on SSCB(2).
5. Transverse reinforcement for Type 3 Barrier at Fixed Objects shall be as detailed hereon in sections A-A and B-B. Details for V1 and V2 bars for Type 3 Anchor or Terminal Barrier are as shown on SSCB(2).
6. Placement of longitudinal reinforcing shall be as detailed on SSCB(2).
7. Dimensions for Type 3 Anchor or Terminal Barrier sections are the same as detailed on SSCB(2).

Barrier height (IN.)	Dimensions (IN.)		
	(A)	(B)	(C)
42	24-30	36	12
48	$26\frac{9}{32}$-$32\frac{9}{32}$	42	$13\frac{9}{16}$
54	$28\frac{9}{16}$-$34\frac{9}{16}$	48	$14\frac{9}{32}$

R = Radius
D = Diameter

DISCLAIMER:
The use of this standard is governed by the "Texas Engineering Practice Act". No warranty of any kind is made by TxDOT for any purpose whatsoever. TxDOT assumes no responsibility for the conversion of this standard to other formats or for incorrect results or damages resulting from its use.

LEVELS DISPLAYED

Texas Department of Transportation
Design Division (Roadway)

SINGLE SLOPE CONCRETE BARRIER TYPE 3 CAST-IN-PLACE (AT BRIDGE ENDS OR MEDIAN OBSTRUCTIONS)

SSCB(3)-02

FILE: sscb302.dgn	DN: GTH	CK: GTH	DW: BGD	CK: TGM	NEG:	
©TxDOT MAY 1992	DIST	FED REG	FEDERAL AID PROJECT •			SHEET
REVISIONS	PHARR	6				484
	COUNTY		CONTROL	SECT	JOB	HIGHWAY
	HIDALGO		0255	08	091	US 281

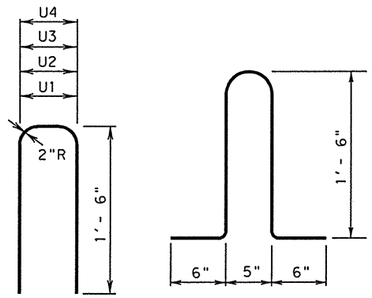

BARS U(1-4)#4 **BARS M(#4)**

* See SSCB(1) for reinforcement details and placement on bridge sections. See SSCB(2) for reinforcement details and placement on roadway sections.

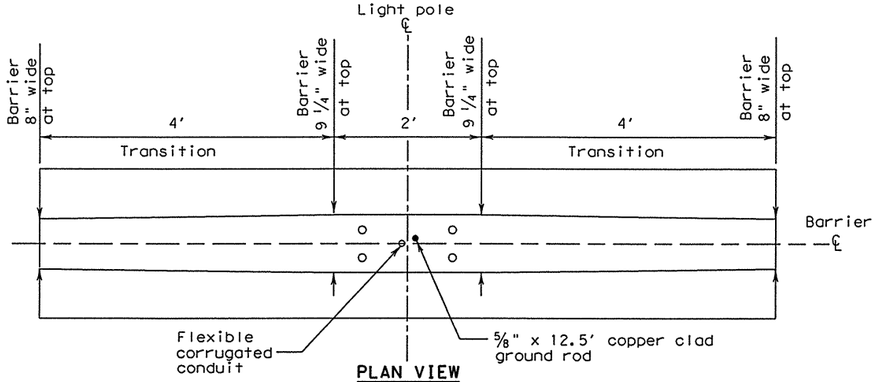

PLAN VIEW

10'-0" Cast-In-Place SSCB with anchor

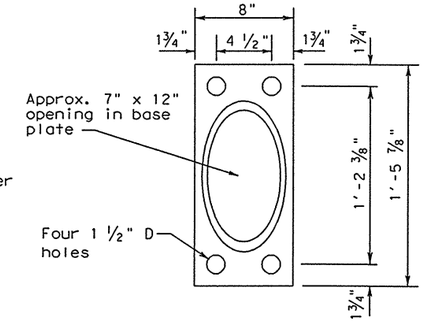

SECTION A-A

Shape of pole may be elliptical or polygonal

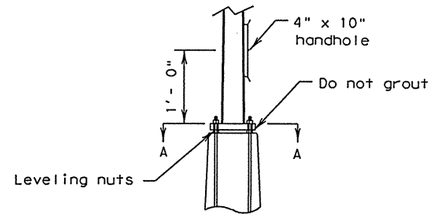

POLE DETAIL

Four 1¼" anchor bolts (ASTM A193 Grade B7 with the top threaded not less than 6 inches) or anchor rods (ASTM A321). The top end of the bolts or rods shall be galvanized not less than 8 inches and furnished with nuts (ASTM A563, Grade DH, galvanized, heavy hex) and flat and lock washers and templates. The length of the bolt or rod is specified in the table below.

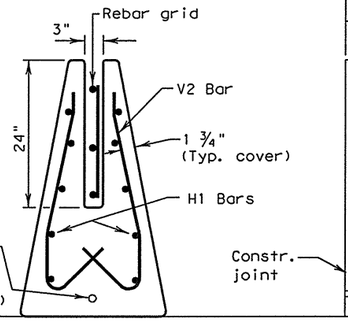

END SECTION

(ADJACENT TO PRECAST ROADWAY SECTIONS ONLY)

Each end of cast-in-place luminaire section shall be formed to mate with the precast concrete barrier. The cast-in-place section shall be connected at each end to the precast sections as shown above. Rebar grid and slot will be omitted when this barrier is placed on bridge or adjacent to cast-in-place roadway barrier.

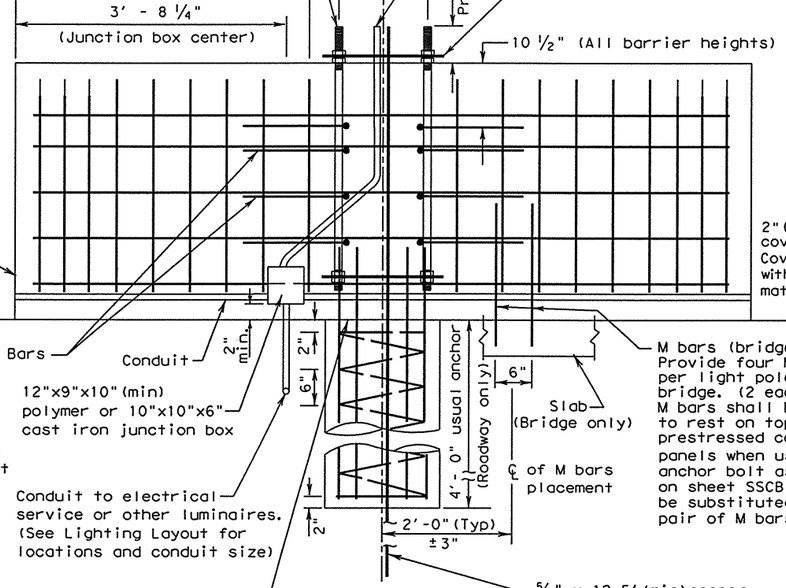

ELEVATION

10'-0" Cast-In-Place SSCB with anchor

M bars (bridge only). Provide four M bars per light pole on bridge. (2 each side) M bars shall be placed to rest on top of precast prestressed concrete panels when used. One anchor bolt as shown on sheet SSCB(1) may be substituted for each pair of M bars.

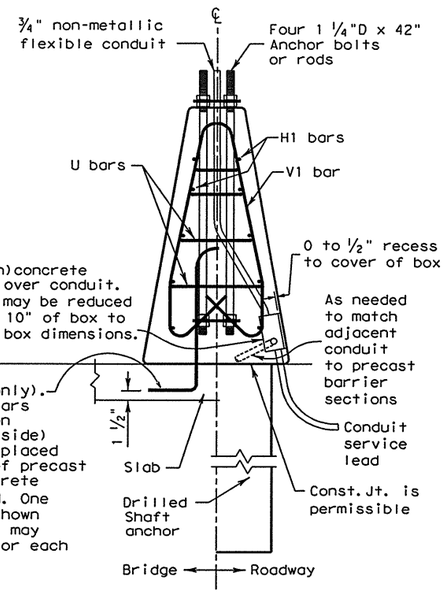

TYPICAL SECTION

GENERAL NOTES

1. Poles on bridge barrier shall be grounded using a ground rod near the wing wall and grounding conductor to each pole. The 1'-6" diameter anchor shall be omitted on bridge barrier. Anchorage on bridges shall be provided using four M bars as detailed hereon.
2. Anchor bolts, ground rods, drilled shaft anchor, junction box and rigid metal conduit as shown shall not be paid for directly, but will be considered subsidiary to the various bid items.
3. Use special pole designation Roadway Illumination Assemblies. Example: (TY SP48S-8-8)(.4kW), where length of arm is 8 feet. (See RID standard)
4. All conduit bends shall be in accordance with the National Electric Code.
5. Junction box shall be cast iron or polymer concrete, and shall be mounted flush (-0,+½") with concrete surface of CTB. Cast iron boxes shall have a grounding stud or lug and shall be grounded. See ED(1) standard for types.
6. Alternate forming methods may be used only with the prior approval of the Engineer.

Barrier height (in.)	Dimensions (in.)				
	U1	U2	U3	U4	Anchor Bolts
42	6 ¼	7 ½	10 ¾	14	42
48	6 ¼	8 ¼	12	16 ¼	48
54	6 ¼	8 ⅞	13 ⅜	18 ½	54

For other barrier requirements and reinforcement dimensions see SSCB(2)

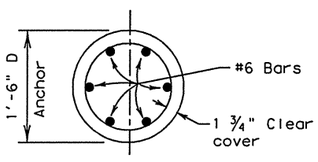

MW 30 spiral at 6" pitch (One flat turn top and bottom.)

ANCHOR SECTION

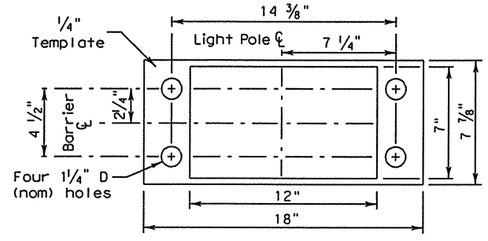

ANCHOR BOLT TEMPLATE DETAIL

R = Radius
D = Diameter

Texas Department of Transportation
Design Division (Roadway)

SINGLE SLOPE CONCRETE BARRIER
TYPE 4
CAST-IN-PLACE
(BRIDGE AND ROADWAY WITH ILLUMINATION)

SSCB(4)-00

FILE: sscb400.dgn	DN: GTH	CK: GTH	DW: BGD	CK:	NEG:	
©TxDOT MAY 1992	DIST	FED REG	FEDERAL AID PROJECT •			SHEET
REVISIONS	PHARR	6				485
	COUNTY			CONTROL	SECT	JOB	HIGHWAY
	HIDALGO			0255	08	091	US 281

LEVELS DISPLAYED
1 | 3 4 5 6 7 8 9 10 11 12 13 14 15 16
17 18 19 20 21 22 23 24 25 26 27 28 29 30 31 32
33 34 35 36 37 38 39 40 41 42 43 44 45 46 47 48
49 50 51 52 53 54 55 56 57 58 59 60 61 62 63

DISCLAIMER:
The use of this standard is governed by the "Texas Engineering Practice Act". No warranty of any kind is made by TxDOT for any purpose whatsoever. TxDOT assumes no responsibility for the conversion of this standard to other formats or for incorrect results or damages resulting from its use.

DISCLAIMER:
The use of this standard is governed by the "Texas Engineering Practice Act". No warranty of any kind is made by TxDOT for any purpose whatsoever. TxDOT assumes no responsibility for the conversion of this standard to other formats or for incorrect results or damages resulting from its use.

ACC:

LEVELS DISPLAYED

1

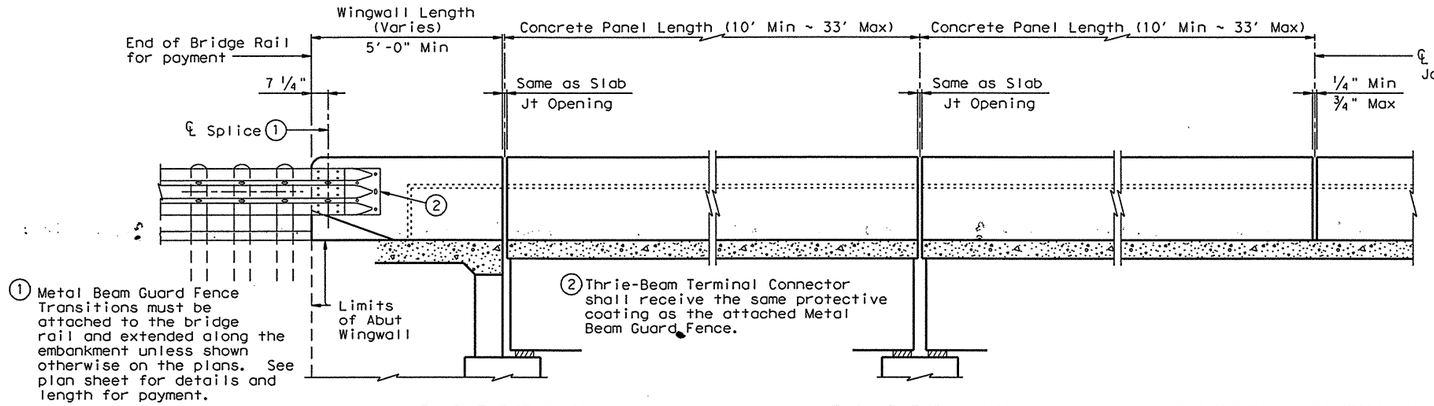

(1) Metal Beam Guard Fence Transitions must be attached to the bridge rail and extended along the embankment unless shown otherwise on the plans. See plan sheet for details and length for payment.

(2) Thrie-Beam Terminal Connector shall receive the same protective coating as the attached Metal Beam Guard Fence.

(3) Increase 2" for structures with Overlay.

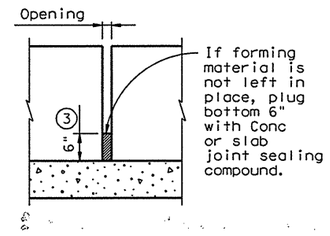

INTERMEDIATE WALL JOINT DETAIL

Note: Provide intermediate wall joints over all slab construction joints, over interior supports on continuous units, and at equal intervals in between as necessary to maintain a 33' maximum length of unbroken wall. Material used in forming joint may be left in place if it is compressible and light in color such as the following materials: polystyrene, molded cork granules, sponge rubber sheet, etc.

AT ABUTMENT BENTS

AT SLAB EXP JOINTS

AT INTERMEDIATE WALL JOINTS

ROADWAY ELEVATION OF RAIL

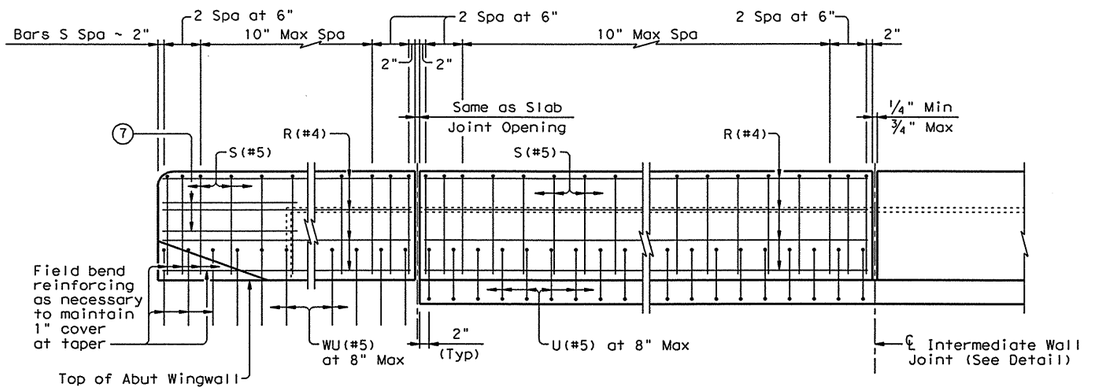

ELEVATION SHOWING TYPICAL REINFORCING PLACEMENT

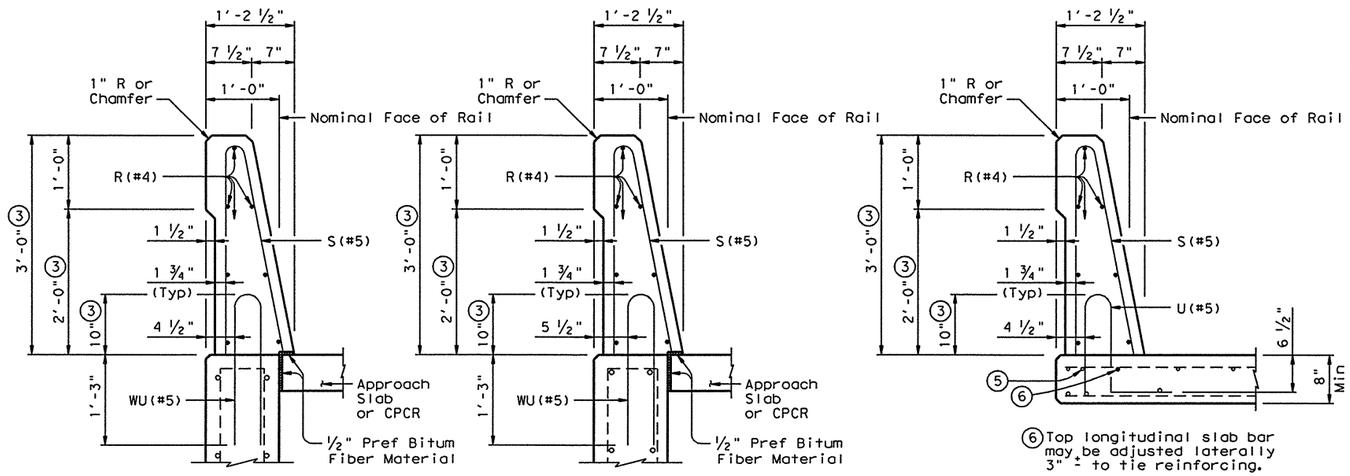

ON CANTILEVER ABUT WINGWALLS OR CIP RETAINING WALLS

ON FOUNDED ABUT WINGWALLS

ON BRIDGE SLAB

SECTIONS THRU RAIL

(6) Top longitudinal slab bar may be adjusted laterally 3" ± to tie reinforcing.

(5) As an aid in supporting reinforcement, additional longitudinal bars may be used in the slab with the approval of the Engineer. Such bars shall be furnished at the Contractors expense.

℄ 5 ~ 7/8" Dia A325 Hex Head Bolts with two 1 3/4" O.D. washers. Place washer under each head and nut. The 5 Terminal Connection Bolts shall be tightened in a well distributed pattern so to prevent damage or distortion of the Thrie-Beam Connection and the MBGF Transition. Bolts shall be cut off after installation so as to extend no more than 3/4" beyond nut. End of cut-off bolt shall be painted with Zinc-rich paint.

℄ 5 ~ 1" Dia holes and 2 1/2" Dia x 2" deep recesses. Holes and recesses must be formed or cored. Percussion drilling is not permitted. Adjust placement of reinforcing steel as necessary to avoid bolt holes and recesses.

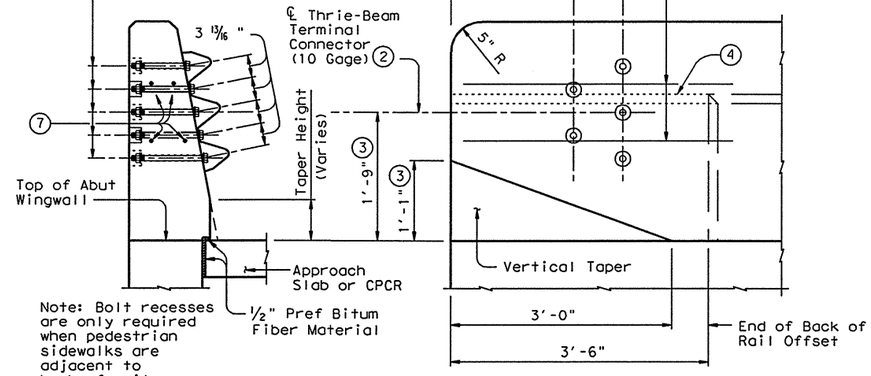

SECTION

ELEVATION

TERMINAL CONNECTION DETAILS

(7) 4 additional Bars R(#4) 3'-8" in length shall be placed inside Bars S(#5) and centered 2'-0" from end of rail when Terminal Connections are required.

(4) Back of rail offset may, with Engineer's approval be continued to the end of the railing.

Texas Department of Transportation
Bridge Division

SINGLE SLOPE TRAFFIC RAILING

TYPE SSTR

FILE: rlstde37.dgn	DN: GHO	CK: TxDOT	DW: JTR	CK: DWM
©TxDOT February 2003	DISTRICT	FEDERAL AID PROJECT		SHEET
REVISIONS	PHARR			486
	COUNTY	CONTROL	SECT	JOB	HIGHWAY
	HIDALGO	0255	08	091	US 281

DISCLAIMER:
The use of this standard is governed by the "Texas Engineering Practice Act". No warranty of any kind is made by TxDOT for any purpose whatsoever. TxDOT assumes no responsibility for the conversion of this standard to other formats or for incorrect results or damages resulting from its use.

LEVELS DISPLAYED

ACC:

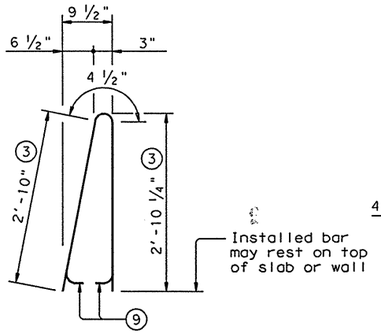

BARS S (#5)

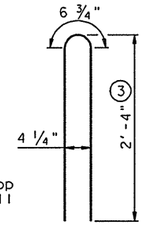

BARS WU (#5)

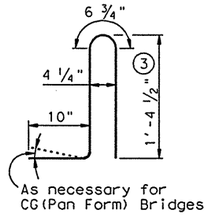

BARS U (#5)

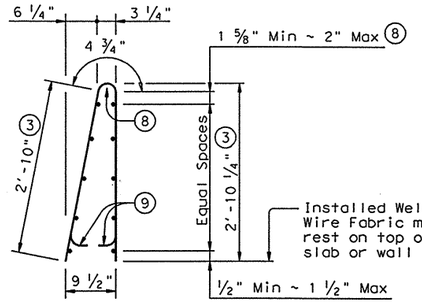

OPTIONAL WELDED WIRE FABRIC

DESCRIPTION	LONGITUDINAL WIRES	VERTICAL WIRES
Minimum (Cumulative Total) Wire Area	0.933 Sq In.	0.248 Sq In. per Ft
	No. of Wires	Spacing
Minimum	6	4"
Maximum	11	12"
Maximum Wire Size Differential	The smaller wire shall have an area of 40% or more of the larger wire.	

③ Increase 2" for structures with Overlay.

⑧ No longitudinal wires may be within upper bend.

⑨ Bend or cut as required to clear drain slots.

GENERAL NOTES:

This rail has been evaluated and accepted to be of equal strength to other safety-shaped railings with like geometry, which have been crash tested to meet NCHRP Report 350 TL-4 criteria and can be used for design speeds of 50 mph and greater.

All parts of the railing including concrete parapet wall, reinforcing, MBGF connections, bolts, nuts and washers are included in the price bid per linear foot of rail.

All steel components except reinforcing shall be galvanized unless otherwise shown in plans.

All concrete for railing wall shall be Class "C".

All reinforcing steel shall be grade 60.

Shop drawings will not be required for this rail.

This railing may be constructed with slip-forms when shown on the plans or approved by the Engineer, with equipment approved by the Engineer. Sensor control for both line and grade must be provided. When slip-forming is used, the concrete may be cured with membrane curing compound.

Additional reinforcing may be tack welded to the upper two thirds of the reinforcing cage to provide bracing when slip-forming is used. Additional anchorage devices may be added when welding is necessary in the lower one third of the cage. Do not weld to U or S bars in the lower one third of the cage.

The back of railing shall be vertical unless otherwise shown in the plans or approved by the Engineer.

Deformed welded wire fabric may be used as an option to conventional reinforcement and shall be made in accordance with ASTM A497 (Deformed Wire). Combinations of Reinforcing Steel and Welded Wire Fabric or configurations of Welded Wire Fabric other than shown will be permitted when the conditions in the table are satisfied and the dimension from end of section to first welded vertical wire does not exceed 3".

Epoxy coat bars U and WU if slab bars are epoxy coated.

Average weight of railing with no overlay is 376 plf.

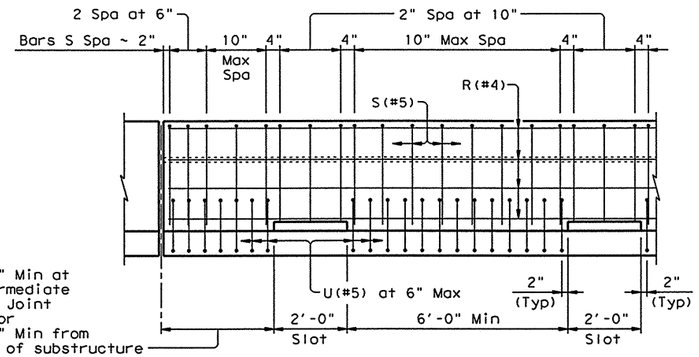

OPTIONAL SIDE SLOT DRAIN DETAIL

Note: Side Slot Drains may be used where shown elsewhere on the plans or as directed by the Engineer. Drains should not be placed over railroad tracks, lower roadways, or sidewalks. When this rail is used as a separator between a roadway surface and a sidewalk surface, side drain slots will not be permitted.

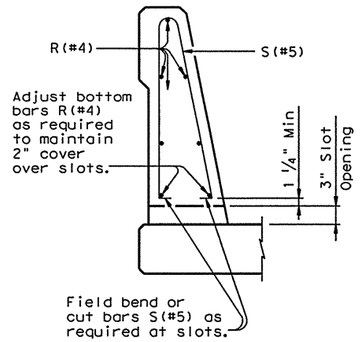

SECTION THRU OPTIONAL SIDE SLOT DRAIN

Texas Department of Transportation
Bridge Division

SINGLE SLOPE TRAFFIC RAILING

TYPE SSTR

FILE: rlstde37.dgn	DN: GHO	CK: TxDOT	DW: JTR	CK: DWW		
©TxDOT February 2003	DISTRICT	FEDERAL AID PROJECT				SHEET
REVISIONS	PHARR					487
	COUNTY		CONTROL	SECT	JOB	HIGHWAY
	HIDALGO		0255	08	091	US 281

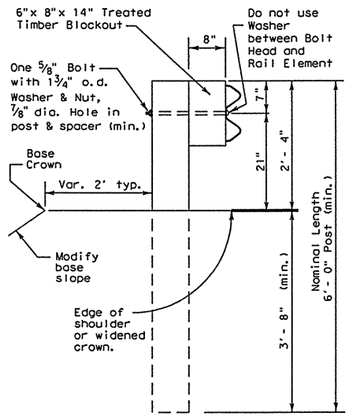

TYPICAL POST

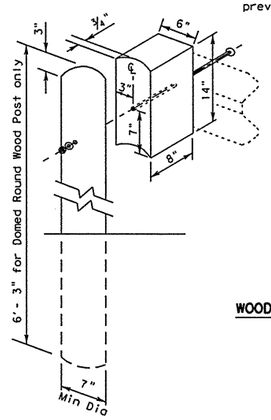

WOOD BLOCKOUT TO ROUND WOOD POST DETAIL

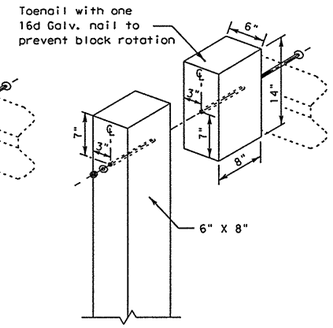

WOOD BLOCKOUT TO RECTANGULAR WOOD POST DETAIL

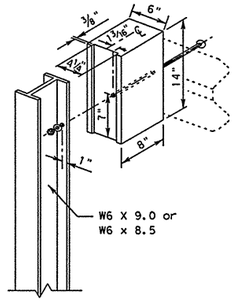

WOOD BLOCKOUT TO STEEL POST DETAIL

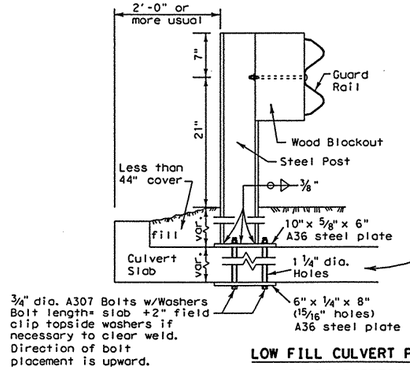

LOW FILL CULVERT POST MOUNTING OPTION

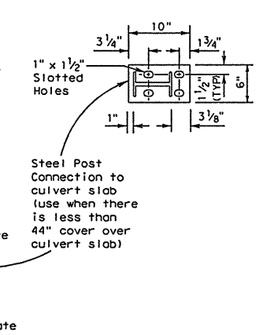

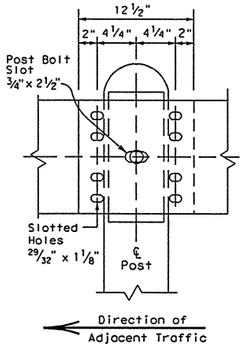

RAIL SPLICE

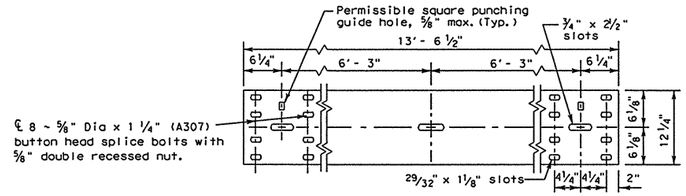

ELEVATION OF NOMINAL 12 1/2 FOOT GUARDRAIL

(25 foot sections may also be supplied)

GENERAL NOTES

1. The exact position of guard fence shall be as shown elsewhere on the plans or as directed by the Engineer. Guard fence shall be transitioned to a smooth connection with other guard fence or structure railing as shown elsewhere on plans.
2. Rail element shall meet all requirements of AASHTO M-180 except as modified on the plans. The terminal connectors shall be of the same material, but shall not be less than 10 gauge. Contractor shall verify that the locations of bolt holes match those in the Terminal Connector prior to ordering of materials.
3. Unless otherwise shown in the plans, guard fence placed in the vicinity of curbs shall be blocked out so that the face of curb is located directly below or behind the face of the blockout. Rail placed over curbs shall be installed so that the post bolt is located approximately 21-inches above the gutter pan or roadway surface.
4. Unless otherwise shown in the plans, MBGF shall be placed with the face of rail directly above the shoulder edge (or curbface) except for upstream end treatments.
5. At the option of the Contractor, the rail elements for the guard fence may be furnished in either 12 1/2 or 25 foot nominal lengths with post bolt slots for connection to posts.
6. The terminal anchor post shall be set in Class "A" concrete in (unless otherwise shown on plans) in accordance with Item, "Portland Cement Concrete". Concrete shall be subsidiary to the bid item requiring construction of the terminal rail section and anchorage system.
7. An anchor other than to a terminal anchor post shall consist of a connection similar to the rail splice or similar to the terminal connector.
8. Galvanized washers used with the eight 5/8" splice bolts and nuts that are provided for terminal connectors and/or terminal anchor posts shall be 1 3/4"x 3"x 3/16", or 1" i.d. and 2" o.d. x 0.134" (ANSI B27.2) narrow Type A plain washers.
9. Special fabrication will be required at installations having a curvature of less than 150' radius.
10. Button head post bolts (A307) shall be of sufficient length to extend through the full thickness of the nut and no more than 3/4" beyond it. Button head splice bolts (A307) are 5/8"x 1 1/4" with a 5/8" double recessed nut. Fittings (bolts, nuts, and washers) shall be in accordance with Item, Metal for Structures". Fittings shall be subsidiary.
11. Crown will be widened to accommodate guard fence.
12. If guardrail is placed on a side slope away from the pavement edge, then the slope rate between the edge of the pavement and the face of the barrier will be 1V:10H or flatter.
13. Posts shall not be set full depth in concrete.
14. Where solid rock is encountered or where shown on the plans, the diameter of the holes shall be approximately 12 inches, the backfilling shall be with a cohesionless material, and embedment depth shall be 1'-6" or more as directed by the Engineer.
15. Unless otherwise directed by the Engineer, a composite material post and/or blockout from the Department approved list of suppliers may be substituted for a post and/or blockout of similar dimensions. The list of approved suppliers of posts and blockouts will be maintained by the Construction Division, TxDOT.

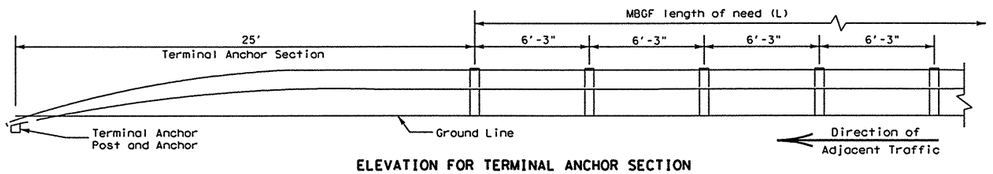

ELEVATION FOR TERMINAL ANCHOR SECTION

(Terminal anchor sections are only for downstream guardrail end anchorage usage outside the horizontal clearance area of opposing traffic)

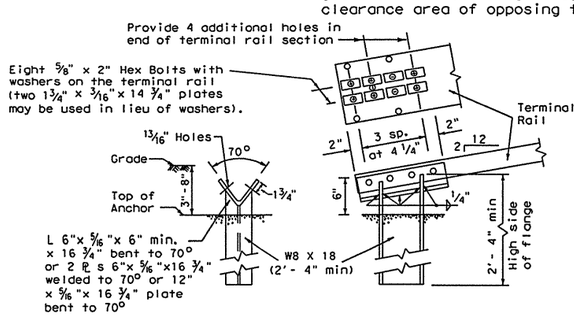

Note: This post requires four additional holes (shop or field) in the terminal rail member with eight 5/8" bolts and washer plates as shown for attachment.

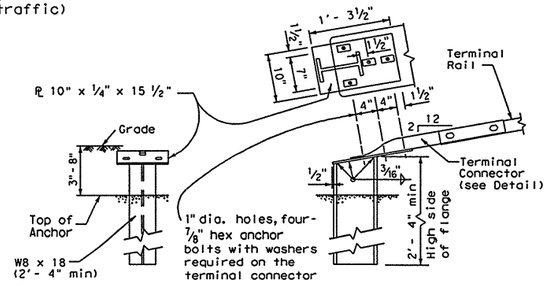

Note: This optional post requires the use of the 10 ga. terminal connector with four 7/8" hex bolts for attachment to the anchor post.

TERMINAL ANCHOR POST OPTIONS

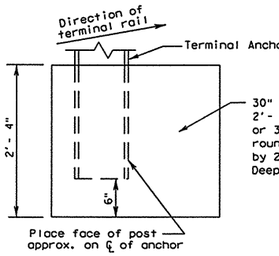

Notes:

Either post may be used with either anchor.

No construction joint is allowed in the concrete anchor.

Terminal rail may be bolted to post and in twist position prior to placing concrete anchor.

If concrete anchor is precast, the area should be compacted as directed by the Engineer, when placed in the field.

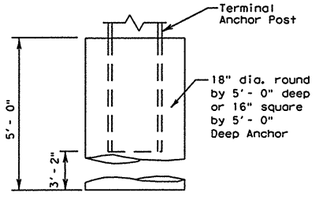

TERMINAL CONCRETE ANCHOR OPTIONS

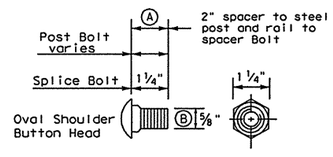

CONNECTOR DETAIL

(A) 1 1/4" spacer to steel post hex bolt. 2" rail to spacer button head bolt.

(B) (7/8" hex bolts required for terminal connector)

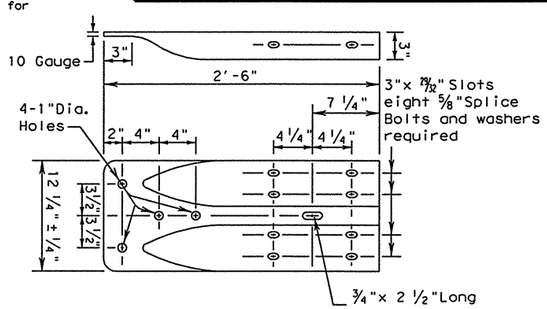

TERMINAL CONNECTOR

R = Radius
D = Diameter

Texas Department of Transportation
Design Division (Roadway)

METAL BEAM GUARD FENCE

MBGF-03

FILE: mbgf03.dgn	DN: MAM	CK: MAM	DW: RAR	CK: MAM	NEC:	
© TxDOT JULY 1994	DIST	FED REG	FEDERAL AID PROJECT •			SHEET
REVISIONS	PHARR	6				488
	COUNTY		CONTROL	SECT	JOB	HIGHWAY
	HIDALGO		0255	08	091	US 281

DISCLAIMER:
The use of this standard is governed by the "Texas Engineering Practice Act". No warranty of any kind is made by TxDOT for any purpose whatsoever. TxDOT assumes no responsibility for the conversion of this standard to other formats or for incorrect results or damages resulting from its use.

LEVELS DISPLAYED
1

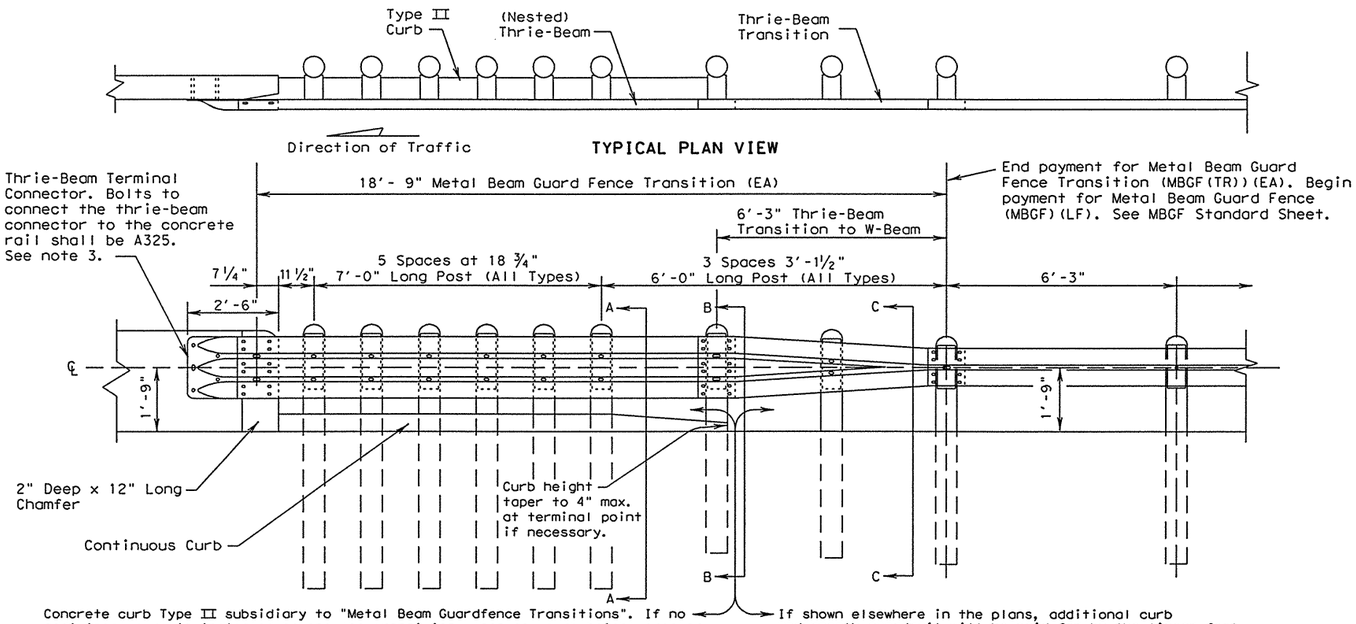

TYPICAL ELEVATION VIEW

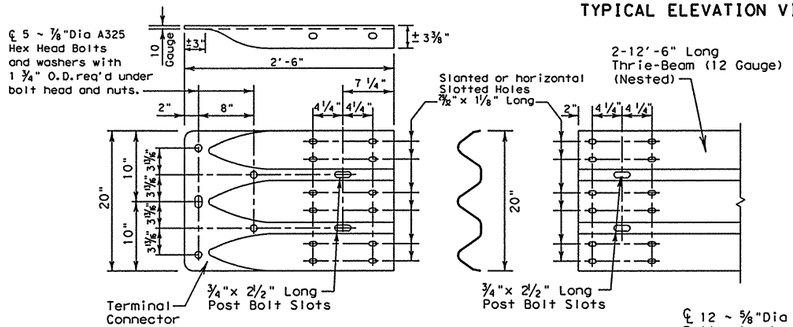

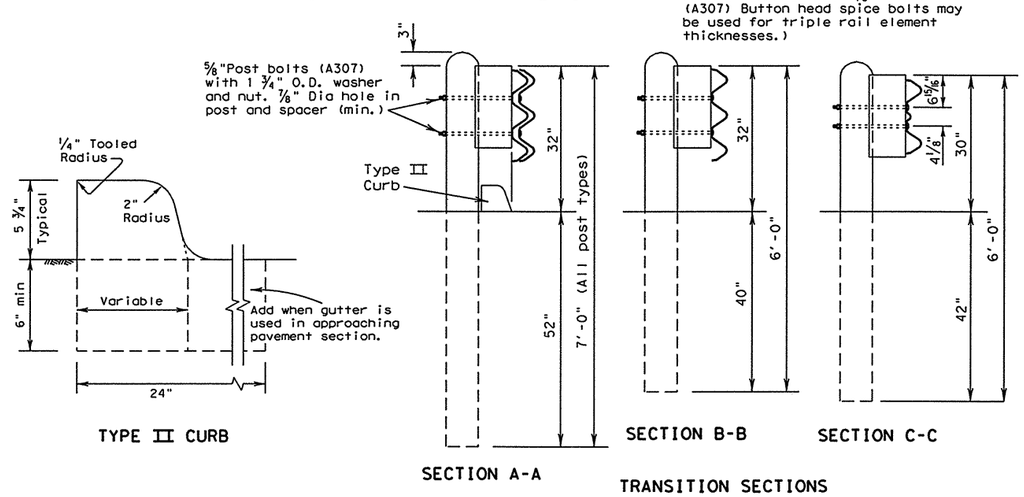

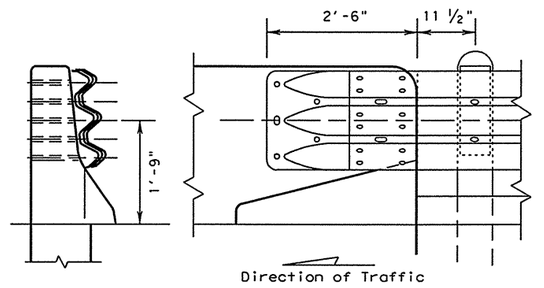

CONNECTION TO T5, SSTR, & HT SERIES BRIDGE RAILS AND CTB & SSCB TRAFFIC BARRIERS

Washers (FWR03)(3"x 1 3/4"x 3/16" with 1"x 3/4" slotted hole) under the head and nut will be required for the terminal connector to nested thrie beam splice bolts for these series rails.
See typical views and T5, SSTR, HT, CTB & SSCB Series Standard Sheets for additional details.

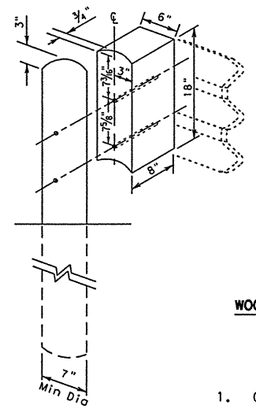

WOOD BLOCKOUT TO ROUND WOOD POST DETAIL

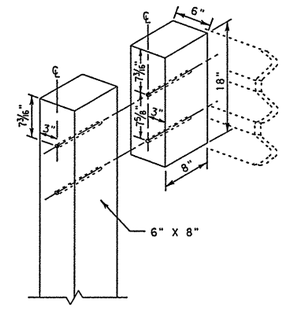

WOOD BLOCKOUT TO RECTANGULAR WOOD POST DETAIL

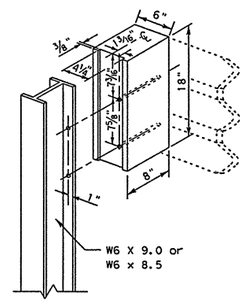

WOOD BLOCKOUT TO STEEL POST DETAIL

GENERAL NOTES

1. Concrete curbs used in conjunction with thrie-beam guardfence transitions shall be Type II (typically 5 3/4" height above surface; see CCCG standard sheet) unless otherwise shown in the plans. If other curb heights are shown in the plans in conjunction with the transition, this curb height may be from 4" to 8" with a relatively vertical face. Concrete curbs shall be continuous to the seventh post. Any drainage cuts must be located past this post.
2. The type of post (round wood post, rectangular wood post, or steel post) will be shown elsewhere in the plans. The exact position of transitions shall be shown elsewhere in the plans or as directed by the Engineer. See MBGF standard sheet for additional details and information.
3. Rail element shall meet all requirements of AASHTO M-180 except as modified on the plans. The terminal connector and the thrie-beam transition to w-beam shall be of the same material, but shall not be less than 10 gauge.

   Contractor shall verify that the locations of bolt holes match those in the Terminal Connector prior to ordering of materials.
4. Unless otherwise shown in the plans, transitions shall be placed with the blockout face in front of or directly above the curbface.
5. Galvanized washers used with the 5/8" splice bolts and nuts that are provided for terminal connectors shall be (FWR03)(3"x 1 3/4"x 3/16" with 1"x 3/4" slotted hole).
6. Button head post bolts (A307) shall be of sufficient length to extend through the full thickness of the nut and no more than 3/4" beyond it. Button head spice bolts (A307) are 5/8" x 1 1/4" with a 5/8" double recessed nut. Galvanized fittings (bolts, nuts, and washers) shall be in accordance with Item, "Metal For Structures". Fittings shall be subsidiary to the bid item requiring construction of transition.
7. Crown will be widened to accommodate transitions.
8. Where solid rock is encountered or where shown on the plans, the diameter of the holes shall be approximately 12 inches, the backfilling shall be with a cohesionless material, and embedment depth shall be 1'- 6" or more as directed by the Engineer.
9. Posts shall not be set full depth in concrete.
10. Unless otherwise directed by the Engineer, a composite material post and/or blockout from the Department approved list of suppliers may be substituted for a post and/or blockout of similar dimensions. The list of approved suppliers of posts and blockouts will be maintained by the Construction Division, TxDOT.
11. Refer to MBGF Standard Sheet for additional details.

DISCLAIMER:
The use of this standard is governed by the "Texas Engineering Practice Act". No warranty of any kind is made by TxDOT for any purpose whatsoever. TxDOT assumes no responsibility for the conversion of this standard to other formats or for incorrect results or damages resulting from its use.

LEVELS DISPLAYED

Texas Department of Transportation
Design Division (Roadway)

METAL BEAM GUARD FENCE TRANSITION

MBGF (TR) -03

FILE: mbgftr03.dgn	DN: MAM	CK: MAM	DW: BGD	CK:
©TxDOT DECEMBER 2001	DIST	FED REG	FEDERAL AID PROJECT #	SHEET
REVISIONS	PHARR	6		489
	COUNTY		CONTROL SECT JOB	HIGHWAY
	HIDALGO		0255 08 091	US 281

TYPICAL PLAN VIEW

Direction of Traffic

TYPICAL ELEVATION VIEW

SECTION A-A

WOOD BLOCKOUT TO ROUND WOOD POST DETAIL

WOOD BLOCKOUT TO RECTANGULAR WOOD POST DETAIL

WOOD BLOCKOUT TO STEEL POST DETAIL

GENERAL NOTES

1. The type of post (round wood post, rectangular wood post, or steel post) will be shown elsewhere in the plans. The exact position of transitions shall be shown elsewhere in the plans or as directed by the Engineer.
2. Rail element shall meet all requirements of AASHTO M-180 except as modified on the plans.
3. Button head post bolts (A307) shall be of sufficient length to extend through the full thickness of the nut and no more than 3/4" beyond it. Button head spice bolts (A307) are 5/8" x 1 1/4" with a 5/8" double recessed nut. Galvanized fittings (bolts, nuts, and washers) shall be in accordance with Item, "Metal For Structures". Fittings shall be subsidiary to the bid item requiring construction of transition.
4. Crown will be widened to accommodate transitions.
5. Where solid rock is encountered or where shown on the plans, the diameter of the holes shall be approximately 12 inches, the backfilling shall be with a cohesionless material, and embedment depth shall be 1'- 6" or more as directed by the Engineer.
6. Posts shall not be set full depth in concrete.
7. Unless otherwise directed by the Engineer, a composite material post and/or blockout from the Department approved list of suppliers may be substituted for a post and/or blockout of similar dimensions. The list of approved suppliers of posts and blockouts will be maintained by the Construction Division, TxDOT.
8. Refer to MBGF Standard Sheet for additional details.

DISCLAIMER:
The use of this standard is governed by the "Texas Engineering Practice Act". No warranty of any kind is made by TxDOT for any purpose whatsoever. TxDOT assumes no responsibility for the conversion of this standard to other formats or for incorrect results or damages resulting from its use.

LEVELS DISPLAYED

1		3	4	5	6	7	8	9	10	11	12	13	14	15	16
17	18	19	20	21	22	23	24	25	26	27	28	29	30	31	32
33	34	35	36	37	38	39	40	41	42	43	44	45	46	47	48
49	50	51	52	53	54	55	56	57	58	59	60	61	62	63	

Texas Department of Transportation
Design Division (Roadway)

METAL BEAM GUARD FENCE TRANSITION (T101)

(For T101 Bridge Rail)

MBGF(T101)-01

FILE: mbgft101.dgn	DN: MAM	CK: MAM	DW: BGD	CK:		
©TxDOT DECEMBER 2001	DIST	FED REG	FEDERAL AID PROJECT ●			SHEET
REVISIONS	PHARR	6				490
	COUNTY		CONTROL	SECT	JOB	HIGHWAY
	HIDALGO		0255	08	091	US 281

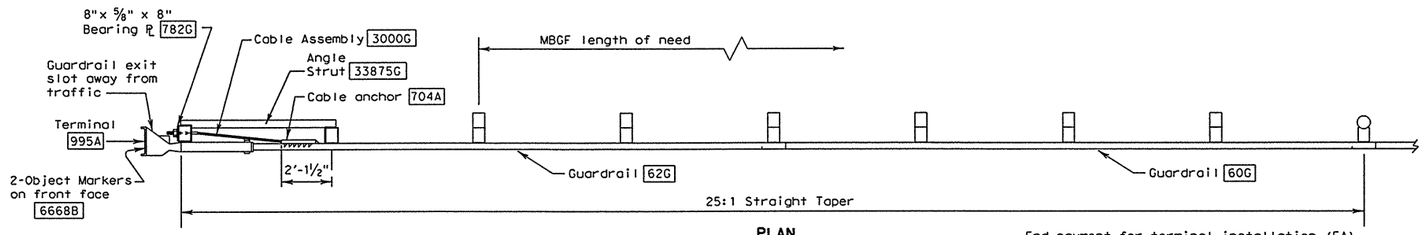

PLAN

End payment for terminal installation (EA) begin payment for standard metal beam guard fence (MBGF)(LF)

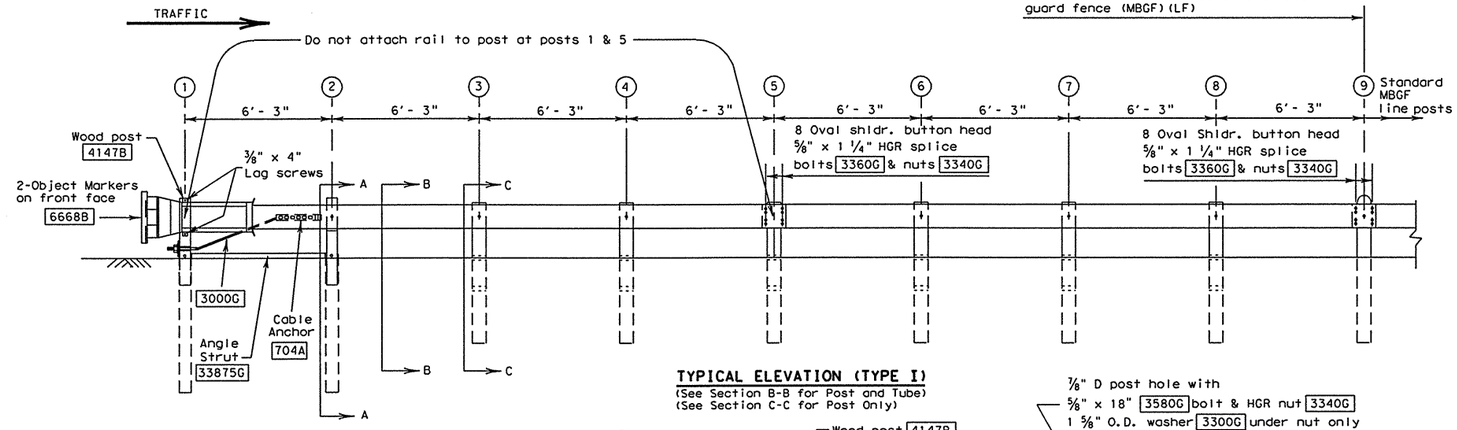

TYPICAL ELEVATION (TYPE I)
(See Section B-B for Post and Tube)
(See Section C-C for Post Only)

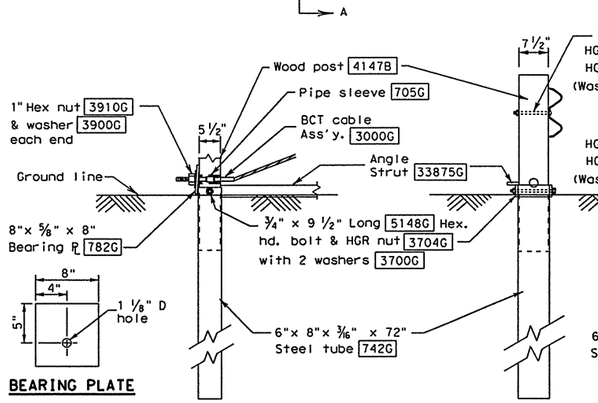

BEARING PLATE

PARTIAL VIEW AT POST #1

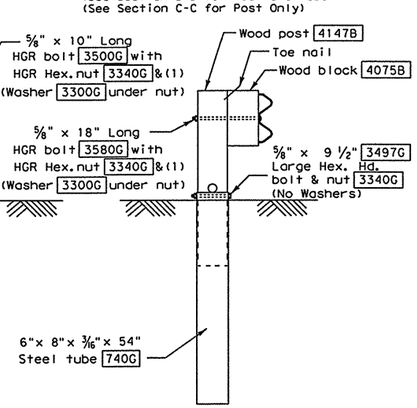

SECTION A-A
(at post #2)

SECTION B-B
(Typ. at post and tube positions)

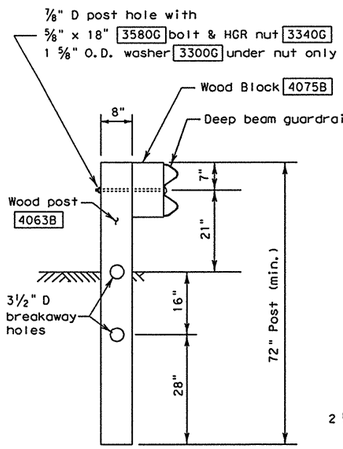

SECTION C-C
(Typ. at post only positions)

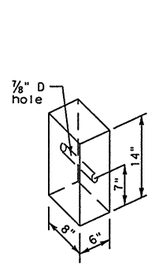

WOOD BLOCKOUT
4075B

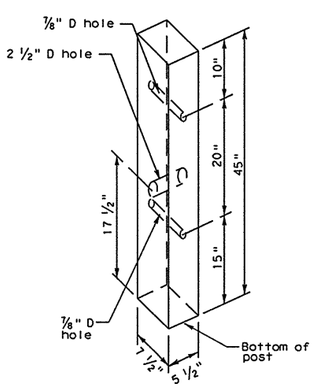

All measurements should be taken from bottom of posts.

POST & TUBE OPTIONS			
Type I	Posts	① thru	②
Type II	Posts	① thru	④
Type III	Posts	① thru	⑧

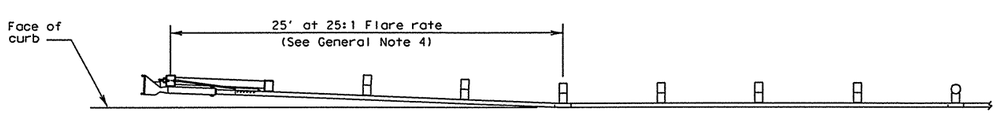

DETAIL A
Placement at curbed locations

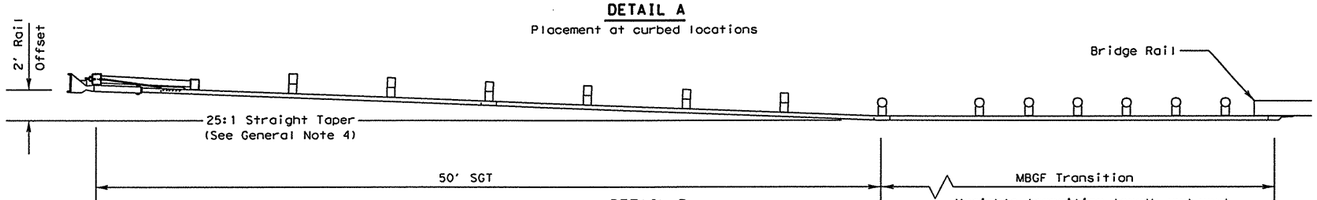

DETAIL B
Usual minimum placement to protect bridge ends

Variable transition length and post spacing depending on transition type

R = Radius
D = Diameter

GENERAL NOTES

1. The type of SGT unit will be specified elsewhere in the plans. (Numbers in circles indicate post position.)

Post & Tube Options		Post Only
Type I	Posts ① thru ②	Posts ③ thru ⑧
Type II	Posts ① thru ④	Posts ⑤ thru ⑧
Type III	Posts ① thru ⑧	None

2. Details shown here are for wood posts. For steel post option, see standard sheet SGT(7)HB.
3. All bolts, nuts, cable assemblies, cable anchors, steel tubes & bearing plates shall be galvanized.
4. For non-curb installations, the MBGF will be flared at a rate of 25:1 over the first 50 foot of the system to prevent the terminal head from encroaching on the shoulder. The flare may be decreased or eliminated for specific installations if directed by the Engineer. A 25:1 flare rate will be used at curb sections, beginning at post number 5 and ending at post number one.
5. The steel tubes shall not protrude more than 4 inches above ground. Site grading may be necessary to meet this requirement.
6. The steel tubes may be driven with an approved driving head. They shall not be driven with the wood post in the tube. If the steel tubes are placed in drilled holes, the backfill material must be satisfactorily compacted to prevent tube settlement.
7. When rock excavation is encountered, a 12 inch diameter post hole, 20 inches deep may be used if approved by the Engineer. Granular material will be placed in the bottom of the hole approximately 2 ½ inches deep to provide drainage. The steel tube sleeves will be field cut to 20 inches in length, placed in the hole and backfilled with adequately compacted material excavated from the hole.
8. The breakaway cable assembly must be taut. A locking device, (vice grips or channel lock pliers) should be used to prevent the cable from twisting when tightening the nuts.
9. The wood blockouts shall be "toe nailed" to the rectangular wood posts to prevent them from turning when the wood shrinks.
10. For curb installations, the soil tubes and posts shall be installed at the proper ground elevation behind the curb. The posts will then require field drilling new holes to accommodate the rail to post connection bolt to maintain the proper height of the rail above the gutter pan. The excess post length above the rail will be removed if directed by the Engineer.
11. An object marker shall be installed on the front of the impact head as detailed on D&OM(VIA).
12. A special site evaluation should be considered, prior to using this end treatment where there is less than 25 feet between the extrusion side of the end treatment and any adjacent driving lane.

BILL OF MATERIAL

Code #	POST & TUBE OPTIONS Type I Qty.	Type II Qty.	Type III Qty.	DESCRIPTION
62G	1	1	1	#1 Deep Beam Guardrail (12 Ga) at 25'
60G	1	1	1	#2 Deep Beam Guardrail (12 Ga) at 25'
742G	2	2	2	Steel Tube - 6"x 8"x 72"x 3/16"
740G	0	2	6	Steel Tube - 6"x 8"x 54"x 3/16"
4147B	2	4	8	Wood Posts - 5 ½" x 7 ½" x 45"
4063B	6	4	0	Wood CRT Posts - 6"x 8"x 72"
4075B	6	6	6	Wood Block - 6"x 8"x 14"
705G	1	1	1	Pipe Sleeve - 2" std. pipe x 5 ½"
782G	1	1	1	Bearing Plate - 8"x 8"x 5/8"
704A	1	1	1	Cable Anchor
3000G	1	1	1	Cable Assembly (3/4" x 78")
33875G	1	1	1	Angle Strut
995A	1	1	1	ET-2000 Plus Guardrail Terminal
				HARDWARE
5148G	2	2	2	3/4" x 9 ½" Hex Hd (Top of tubes 1&2) A325
3300G	7	7	7	5/8" Washers
3478G	2	2	2	5/8" x 7 ½" Hex Bolt
3500G	1	1	1	5/8" x 10" Post Bolt (Post 2 of LET)
3580G	6	6	6	5/8" x 18" HGR Post Bolt (posts ③ thru ⑧)
3360G	16	16	16	5/8" x 1 1/4" HGR Splice Bolt
3340G	25	27	31	5/8" HGR Nut (16-spl, 7-posts)
4228G	2	2	2	3/8" x 4" Lag Screw
3910G	2	2	2	1" Hex Nut (Anchor Cable)
3900G	2	2	2	1" Washer (Anchor Cable)
6668B	2	2	2	Object Marker (12" x 12")
3700G	4	4	4	3/4" Washer
3704G	2	2	2	3/4" Heavy Hex Nut
3497G	0	2	6	5/8" x 9 ½" Hex Hd (Top of Tubes 3-8) A307

DISCLAIMER:
The use of this standard is governed by the "Texas Engineering Practice Act". No warranty of any kind is made by TxDOT for any purpose whatsoever. TxDOT assumes no responsibility for the conversion of this standard to other formats or for incorrect results or damages resulting from its use.

LEVELS DISPLAYED

Texas Department of Transportation
Design Division (Roadway)

SINGLE GUARDRAIL TERMINAL
(ET-2000 PLUS)
(WOOD POST)
SGT(7)-03

FILE: sgt703.dgn	DN: MAM	CK: MAM	DW: BCD	CK:	NEG: R0000
©TxDOT APRIL 1997	DIST	FED REG	FEDERAL AID PROJECT #		SHEET
REVISIONS	PHARR	6			491
	COUNTY		CONTROL	SECT	JOB	HIGHWAY
	HIDALGO		0255	08	091	US 281

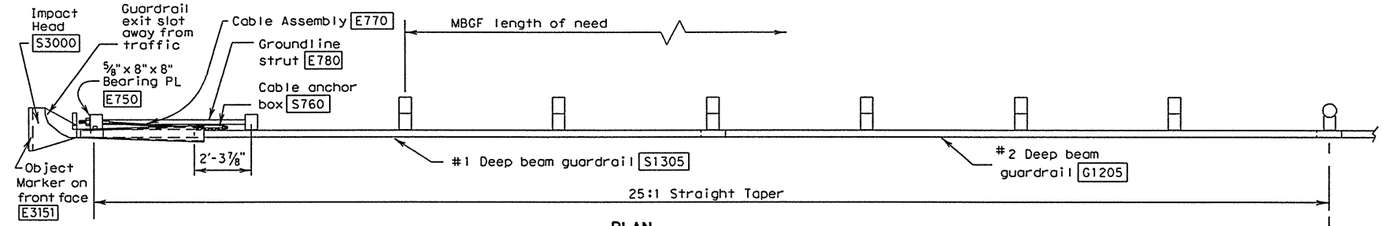

PLAN

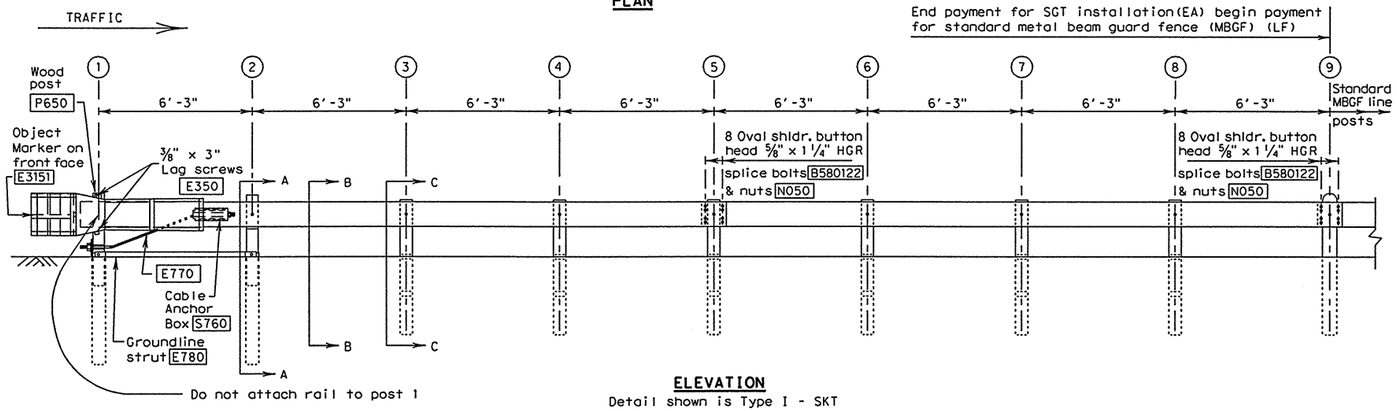

ELEVATION

Detail shown is Type I - SKT

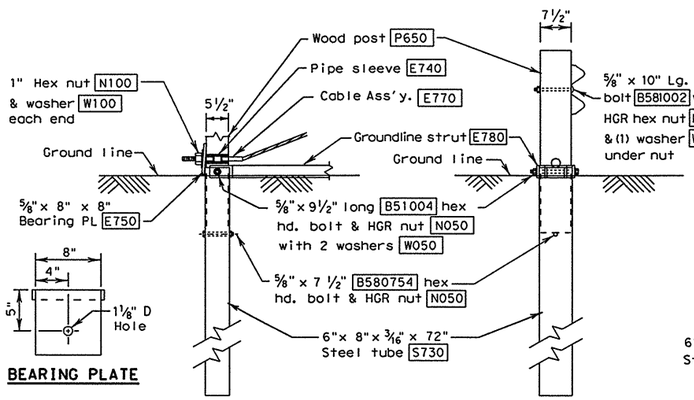

BEARING PLATE

PARTIAL VIEW AT POST #1

SECTION A-A
(at post #2)

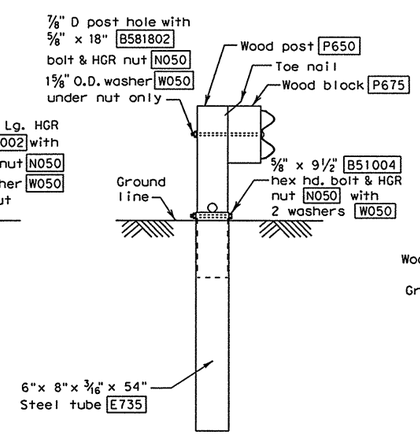

SECTION B-B
(Typ. at post and tube positions)

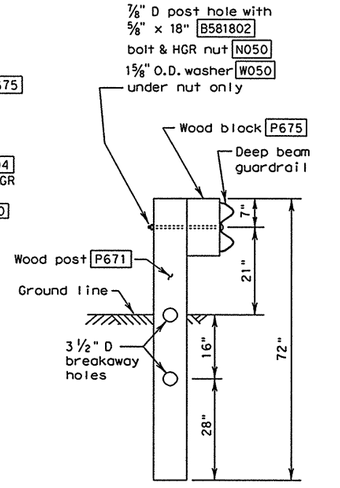

SECTION C-C
(Typ. at post only positions)

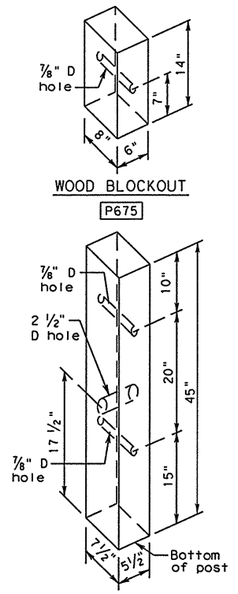

All measurements should be taken from bottom of posts.

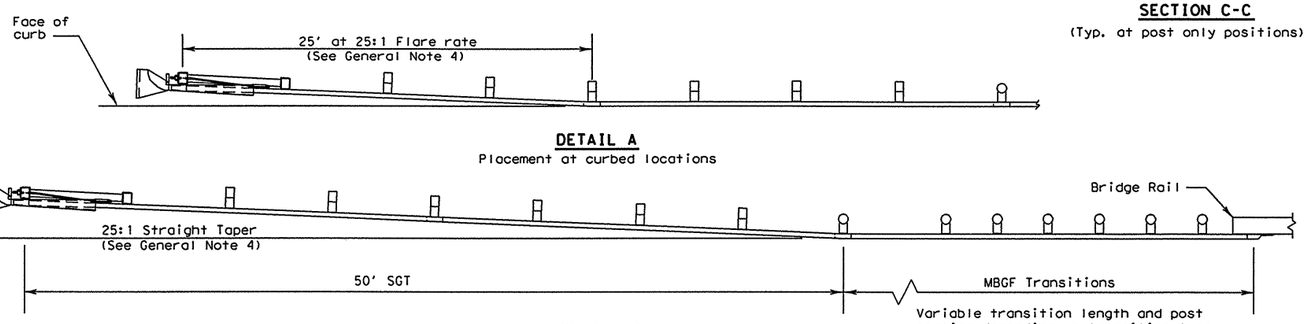

DETAIL A
Placement at curbed locations

DETAIL B
Usual minimum placement to protect bridge ends

GENERAL NOTES

1. The type of SGT unit will be specified elsewhere in the plans. (Numbers in circles indicate post position.)
   Post & Tube Options: Type I Posts ① thru ②; Type II Posts ① thru ④; Type III Posts ① thru ⑧
   Post Only: Posts ③ thru ⑧; Posts ⑤ thru ⑧; None
2. Details shown here are for wood posts. For steel post option(s), see standard sheets SGT(8)HB & SGT(8)STL.
3. All bolts, nuts cable assemblies, cable anchors, steel tubes & bearing plates shall be galvanized.
4. For non-curb installations, the MBGF will be flared at a rate of 25:1 over the first 50 foot of the system to prevent the terminal head from encroaching on the shoulder. The flare may be decreased or eliminated for specific installations if directed by the Engineer. A 25:1 flare rate will be used at curb sections, beginning at post number 5 and ending at post number one.
5. The steel tubes shall not protrude more than 4 inches above ground. Site grading may be necessary to meet this requirement.
6. The steel tubes may be driven with an approved driving head. They shall not be driven with the wood post in the tube. If the steel tubes are placed in drilled holes, the backfill material must be satisfactorily compacted to prevent tube settlement.
7. When rock excavation is encountered, a 12 inch diameter post hole, 20 inches into the rock may be used if approved by the Engineer. Granular material will be placed in the bottom of the hole approximately 2 ½ inches deep to provide drainage. The steel tube sleeves will be field cut to not less than 20 inches in length, placed in the hole and backfilled with adequately compacted material excavated from the hole.
8. The breakaway cable assembly must be taut. A locking device, (vice grips or channel lock pliers) should be used to prevent the cable from twisting when tightening the nuts.
9. The wood blockouts shall be "toe nailed" to the rectangular wood posts to prevent them from turning when the wood shrinks.
10. For curb installations, the soil tubes and posts shall be installed at the proper ground elevation behind the curb. The posts will then require field drilling new holes to accommodate the rail to post connection bolt to maintain the proper height of the rail above the gutter pan. The excess post length above the rail will be removed if directed by the Engineer.
11. An object marker shall be installed on the front of the impact head as detailed on D&OM(VIA).
12. A special site evaluation should be considered, prior to using this end treatment where there is less than 25 feet between the outlet side of the end treatment and any adjacent driving lane.

POST & TUBE OPTIONS

Type I - post ① thru ②
Type II - post ① thru ④
Type III - post ① thru ⑧

BILL OF MATERIAL

Code #	POST & TUBE OPTIONS Type I Qty.	Type II Qty.	Type III Qty.	DESCRIPTION
S1305	1	1	1	#1 Deep Beam Guardrail (12 Ga.)
G1205	1	1	1	#2 Deep Beam Guardrail (12 Ga.)
S730	2	2	2	Steel Tube - 6" x 8" x 3/16" x 72"
E735	0	2	6	Steel Tube - 6" x 8" x 3/16" x 54"
P650	2	4	8	Wood Posts - 5 1/2" x 7 1/2" x 45"
P671	6	4	0	Wood CRT Posts - 6" x 8" x 72"
P675	6	6	6	Wood Blockouts - 6" x 8" x 14"
E740	1	1	1	Pipe Sleeve - 2" Std. Pipe x 5 1/2"
E750	1	1	1	Bearing Plate - 5/8" x 8" x 8"
S760	1	1	1	Cable Anchor Box
E770	1	1	1	Cable Assembly
E780	1	1	1	Groundline Strut
S3000	1	1	1	Impact Head
				HARDWARE
B580754	2	2	2	5/8" x 7 1/2" Hex Hd. Bolt
B51004	2	4	8	5/8" x 9 1/2" Hex Hd. Bolt (Top of Tubes)
W050	11	15	23	5/8" Washers
B581002	1	1	1	5/8" x 10" HGR Post Bolt (Post 2)
B580122	16	16	16	5/8" x 1 1/4" HGR Splice Bolt
B581802	6	6	6	5/8" x 18" HGR Post Bolt (Posts ③ thru ⑧)
N050	27	29	33	5/8" HGR Nut (16-Spl, 7-Posts, 2-Strut)
E350	2	2	2	3/8" x 3" Lag Screw
N100	2	2	2	1" Hex Nut (Anchor Cable)
W100	2	2	2	1" Washer (Anchor Cable)
SB58A	8	8	8	Cable Anchor Box Shoulder Bolts
N055A	8	8	8	½" A325 Structural Nut
W050A	16	16	16	½" A325 Structural Washer
E3151	1	1	1	Object Marker - (18" x 18")

R = Radius
D = Diameter

Texas Department of Transportation
Design Division (Roadway)

SINGLE GUARDRAIL TERMINAL
(SKT 350) (WOOD POST)
SGT(8)-03

FILE: sgt803.dgn	DN: MAM	CK: MAM	DW: BGD	CK: MAM	NEC:	
©TxDOT July 2001	DIST	FED REG	FEDERAL AID PROJECT •			SHEET
REVISIONS	PHARR	6				492
	COUNTY			CONTROL	SECT	JOB	HIGHWAY
	HIDALGO			0255	08	091	US 281

LEVELS DISPLAYED

DISCLAIMER:
The use of this standard is governed by the "Texas Engineering Practice Act". No warranty of any kind is made by TxDOT for any purpose whatsoever. TxDOT assumes no responsibility for the conversion of this standard to other formats or for incorrect results or damages resulting from its use.

File Name: MB03 Date 1/7/03

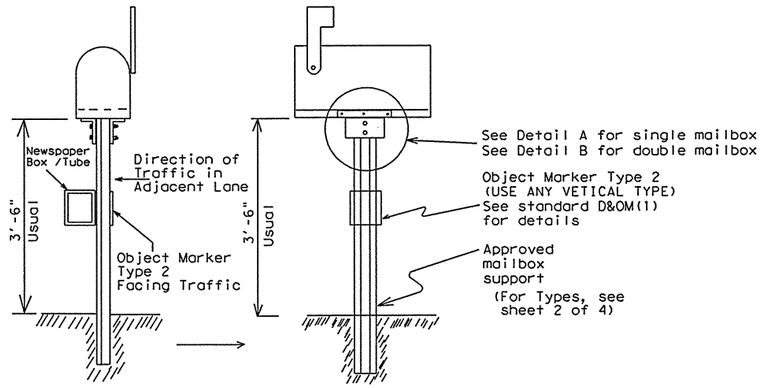

SINGLE AND DOUBLE MAILBOX MOUNT

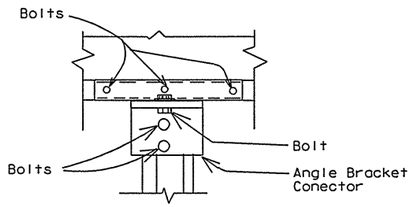

For bolt sizes see notes for Standard Mailbox Attachment Details

DETAIL A

SINGLE MAILBOX MOUNT

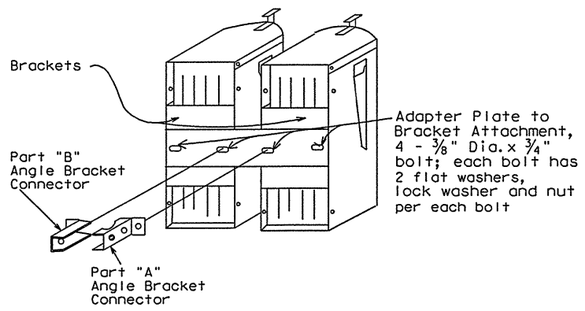

DETAIL B

DOUBLE MAILBOX MOUNT

(Not permitted for No. 2 Mailboxes)

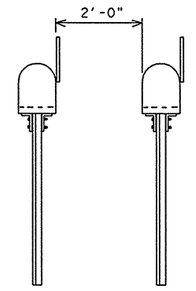

TWO SINGLE MAILBOX INSTALLATIONS

2' Clear Distance between installations

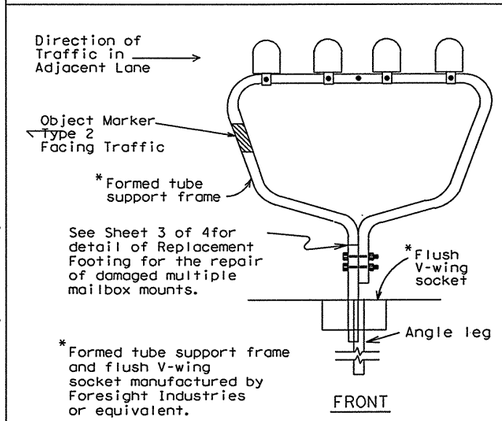

*Formed tube support frame and flush V-wing socket manufactured by Foresight Industries or equivalent.

Maximum insertion depth of formed tube support frame into V-wing socket is 9". Minimum insertion depth is 7".

Permissible Number of Mailboxes on Multiple Support:	Bolt
All Size No. 1	- 5 Maximum
Combination Various Sizes with no more than 2 Size No. 2	- 4 Maximum
All Size No. 2	- 3 Maximum

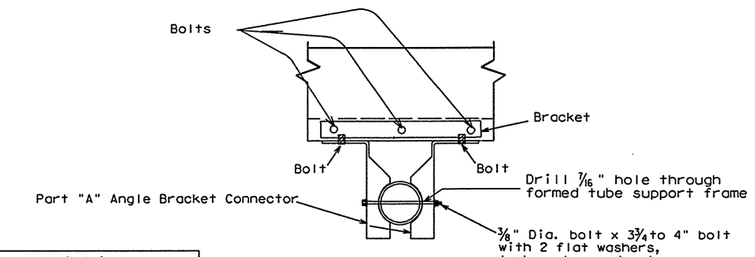

SECTION B-B

For bolt sizes see notes for Standard Mailbox Attachments Details

MULTIPLE MAILBOX MOUNT

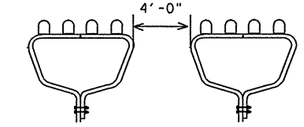

TWO OR MORE MULTIPLE MAILBOX INSTALLATIONS

4' Clear Distance between installations.

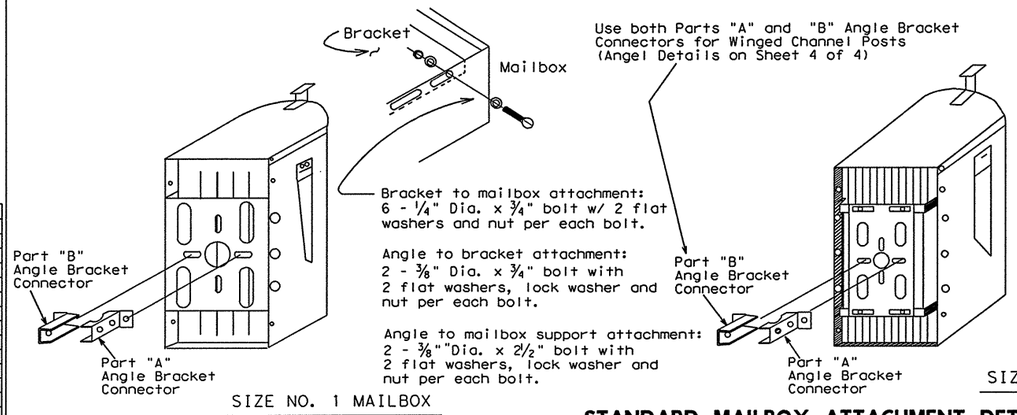

STANDARD MAILBOX ATTACHMENT DETAILS

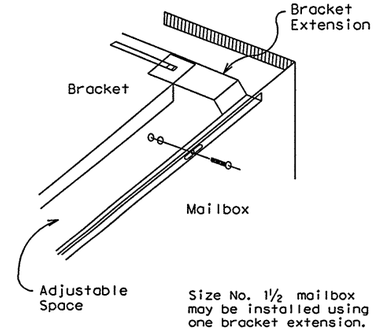

Size No. 1½ mailbox may be installed using one bracket extension.

Bracket to mailbox attachment: 6 - 1/4" Dia. x 3/4" bolt w/2 flat washers and nut per each bolt.

Bracket to bracket extension attachment: 2 - 1/4" Dia. x 3/4" carriage bolt w/ flat washer, lock washer and nut per bolt (4 bolts required if 2 bracket extensions are used).

Angle to bracket attachment: 2 - 3/8" Dia. x 3/4" bolt w/2 flat washers, lock washer and nut per each bolt.

Angle to mailbox support attachment: 2 - 3/8" Dia. x 2 1/2" bolt w/2 flat washers, lock washer, and nut per each bolt.

For General Notes See sheet 2 of 4.

See Sheet 4 of 4 for Angle Bracket Connector Detail

See Sheet 3 of 3 for Adapter Plate, Angle Bracket and Bracket Extension Hardware Details.

Bracket may be installed with edge down on size No. 1 mailboxes.

Texas Department of Transportation
Construction & Maintenance Division (Maintenance)

MAILBOX MOUNTING DETAILS

MB-03

Sheet 1 of 4

FILE: MB96.DGN	DN:	CK:	DW:	CK:	NEG:	
©TxDOT 1996	DIST	FED REG	FEDERAL AID PROJECT •			SHEET
REVISIONS	PHARR	6				493
	COUNTY			CONTROL	SECT	JOB	HIGHWAY
	HIDALGO			0255	08	091	US 281

DISCLAIMER:
The use of this standard is governed by the "Texas Engineering Practice Act". No warranty of any kind is made by TxDOT for any purpose whatsoever. TxDOT assumes no responsibility for the conversion of this standard to other formats or for incorrect results or damages resulting from its use.

LEVELS DISPLAYED
1 2 3 4 5 6 7 8 9 10 11 12 21 31 41 51 61
17 18 19 20 21 22 23 24 25 26 27 28 29 30 31 32
33 34 35 36 37 38 39 40 41 42 43 44 45 46 47 48
49 50 51 52 53 54 55 56 57 58 59 60 61 62 63

File Name: MB03 Date 1/7/03

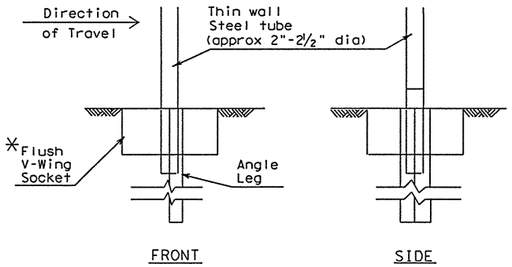

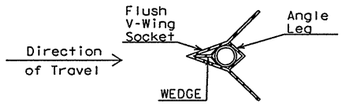

*See General Note 6.

TYPE 1 SUPPORT/FOUNDATION

THIN WALL STEEL TUBE w/ V-LOC ANCHORAGE

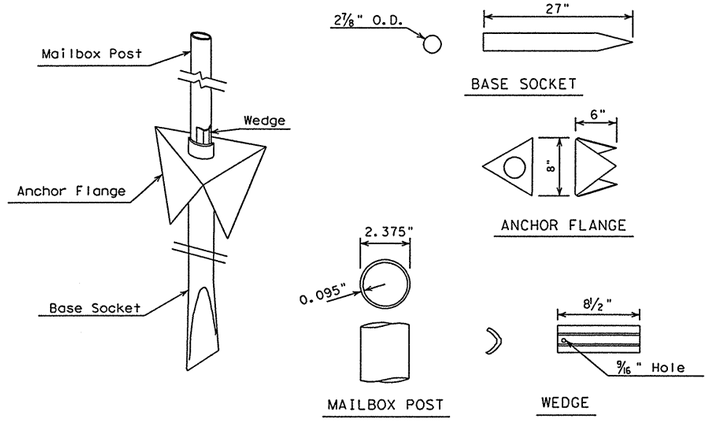

All dimensions may be varied to fit 2 inch thin wall steel tube post if approved by Engineer

TYPE 2 SUPPORT/FOUNDATION

THIN WALL STEEL TUBE w/ANCHOR FLANGE

NOTES FOR TYPE 2 SUPPORT/FOUNDATION

1. The Base Socket is formed from 2 ⅞" O.D. x 12 gauge galvanized pipe.
2. The Anchor Flange is formed from 12 gauge galvanized steel made to A-525. Only needed for soft soils as determined by the Engineer.
3. The Wedge is formed from 11 gauge galvanized steel made to ASTM A-525.
4. The Mailbox Post is 2.375" O. D. 0.095" thin wall steel tubing.
5. Steel Support Foundation unit shall be made from new material and shall be corrosion resistant. The unit shall be galvanized in accordance with ASTM designation A-123, A-525, G-90 or better. In addition, steel members of the support that are in direct contact with earth must be galvanized to ASTM Designation G-90 and coated with one mil of clear approved coating, or galvanized in accordance with ASTM Designation A-123.

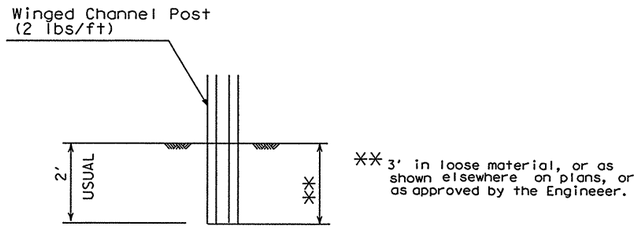

** 3' in loose material, or as shown elsewhere on plans, or as approved by the Engineeer.

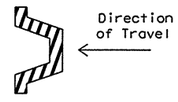

Recommended orientation to facilitate attachment of Object Marker.

DELINEATOR POST
2 lbs/ft

TYPE 3 SUPPORT/FOUNDATION

DELINEATOR POST

GENERAL NOTES

1. Bolts, nuts, washers and other miscellaneous hardware shall be galvanized in accordance to ASTM Designation: A-153, Class C or D, or B-454, Class 40. All bolts shall meet ASTM designation A-307.
2. Foundation and post must be driven plumb. Recommended procedure is to drive post or foundation about 10"-12", stop and check for straightness, front to back, side to side. Make adjustments, continue to drive an additional 10"-12", repeat check, make final adjustments, complete installation.
3. The 2 lbs/ft. winged channel posts for the Type 3 support shall conform to the requirements of departmental materials specification D-9-7130.
4. Hardware for mounting mailboxes to support/foundation furnished by TAPCO, Traffic and Parking Control Co., Inc. or equivalent may be used when approved by the Engineer.
5. Where more than two mailboxes are to be mounted at one location a multiple mailbox mount shall be used.
6. The formed tube support frame for the multiple mailbox mount and the Type 1 mailbox support system are patented and manufactured by TAPCO, Traffic and Parking Control Co. Inc.
7. Any support or foundation on these standards may be used for mounting single or double mailboxes.

Texas Department of Transportation
Construction & Maintenance Division (Maintenance)

MAILBOX SUPPORT/ FOUNDATION DETAILS

MB-03

Sheet 2 of 4

FILE: MB96.DGN	DN:	CK:	DW:	CK:	NEG:	
© TxDOT 1996	DIST	FED REG	FEDERAL AID PROJECT #			SHEET
REVISIONS	PHARR	6				494
	COUNTY			CONTROL	SECT	JOB	HIGHWAY
	HIDALGO			0255	08	091	US 281

DISCLAIMER:
The use of this standard is governed by the "Texas Engineering Practice Act". No warranty of any kind is made by TxDOT for any purpose whatsoever. TxDOT assumes no responsibility for the conversion of this standard to other formats or for incorrect results or damages resulting from its use.

LEVELS DISPLAYED

1	2	3	4	5	6	7	8	9	10	11	12	13	14	15	16	
17	18	19	20	21	22	23	24	25	26	27	28	29	30	31	32	
33	34	35	36	37	38	39	40	41	42	43	44	45	46	47	48	
49	50	51	52	53	54	55	56	57	58	59	60	61	62	63		

File Name: MB03 Date 1/7/2003

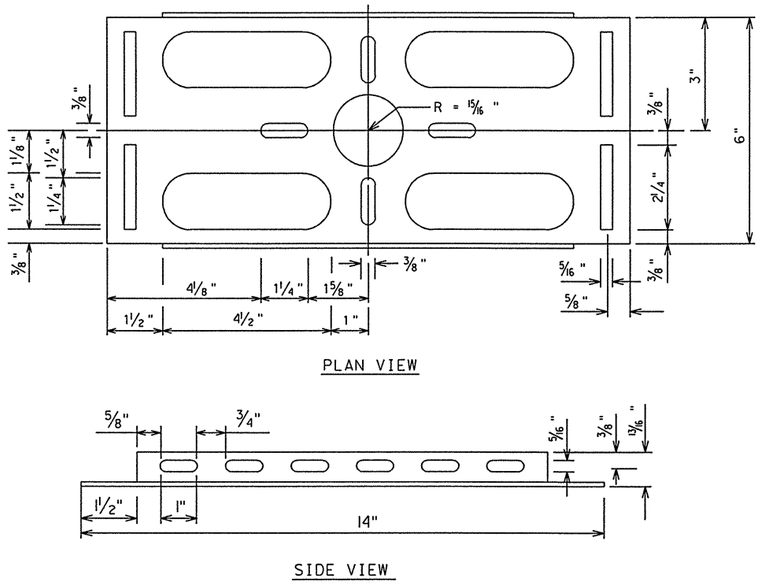

PLAN VIEW

SIDE VIEW

BRACKET

SEE SHEET 4 OF 4 FOR ANGLE BRACKET CONNECTORS FOR BOTH WING CHANNEL POST AND TUBILAR POST

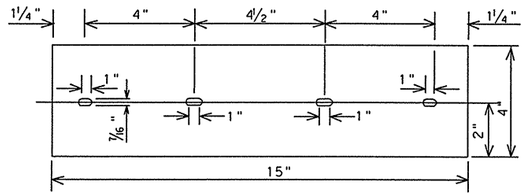

Holes Shall Have a Diameter of 7/16 ".

ADAPTER PLATE

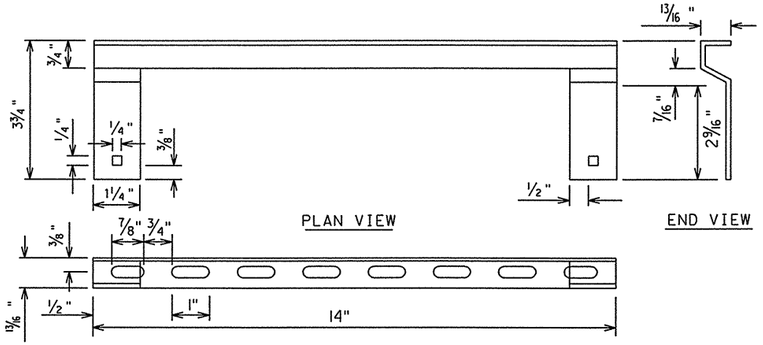

PLAN VIEW

END VIEW

SIDE VIEW

BRACKET EXTENSION

Object Marker Notes:

Object Markers for mailbox support should be any 6"x12" vertical Type 2. Object markers shall conform to Department Material Specification D-9-8600. Attachment of Object Marker to support may be:

1) For round or tubular support, with pressure sensitive adhesive.
2) For winged channel support, with reflective material on aluminum or plastic substrate and attached by nut/bolt with washers or pop rivet.

The marker is to be placed between 6" and 8" below the bottom of the mailbox.

The object marker is to be placed on the traffic approach side of the adjacent lane.

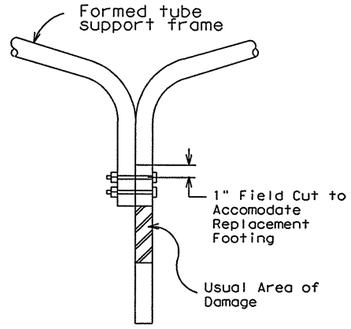

TYPICAL MULTIPLE MAILBOX MOUNT

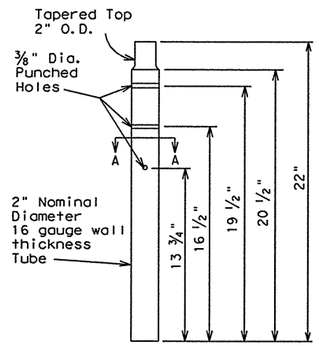

REPLACEMENT FOOTING

NOTES:

Only damaged multiple mailbox mounts having no visible damage other than to the portion of the footing that is to be discarded may be repaired.

Material for the repair footing is to be AISI-1008 hot rolled carbon steel. The unit shall be galvanized.

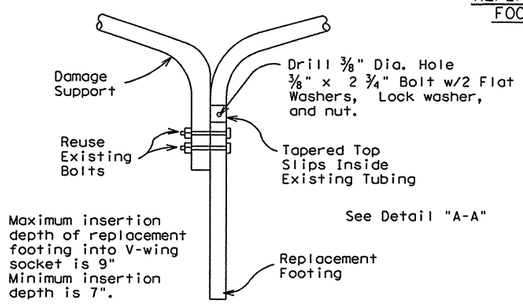

REPAIR DETAIL

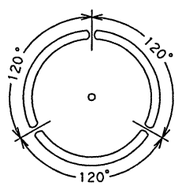

DETAIL "A-A"

3 - 0.375 Dia. Punched Holes to Create Weakened Section

DETAIL OF REPLACEMENT FOOTING
FOR REPAIR OF MULTIPLE MAILBOX MOUNT

Hardware for mounting mailboxes to support/foundation furnished by Foresight Industries or equivalent may be used when approved by the Engineer.

The bracket and bracket extension shall be constructed of 14 gauge galvanized steel sheet conforming to ASTM A-525(G-90).

The angles shall be constructed of 12 gauge steel sheet and the adapter plate shall be constructed of 12 gauge steel sheet. The angle and adapter plate shall be fabricated in accordance with ASTM A-123 or constructed of galvanized steel sheet conforming to ASTM A-525(G-90).

Items with evidence of damage to the galvanized coating or wet storage stains (white rust) will not be accepted.

Texas Department of Transportation
Construction & Maintenance Division (Maintenance)

STANDARD MAILBOX HARDWARE

MB-03

Sheet 3 of 4

FILE: MB96.DGN	DN:	CK:	DW:	CK:	NEG:	
©TxDOT 1996	DIST	FED REG	FEDERAL AID PROJECT #			SHEET
REVISIONS	PHARR	6				495
	COUNTY			CONTROL	SECT	JOB	HIGHWAY
	HIDALGO			0255	08	091	US 281

DISCLAIMER:
The use of this standard is governed by the "Texas Engineering Practice Act". No warranty of any kind is made by TxDOT for any purpose whatsoever. TxDOT assumes no responsibility for the conversion of this standard to other formats or for incorrect results or damages resulting from its use.

LEVELS DISPLAYED

1	2	3	4	5	6	7	8	9	10	11	12	13	14	15	16
17	18	19	20	21	22	23	24	25	26	27	28	29	30	31	32
33	34	35	36	37	38	39	40	41	42	43	44	45	46	47	48
49	50	51	52	53	54	55	56	57	58	59	60	61	62	63	

File Name: MB03 Date 1/7/2003

4

PART "B" ANGLE BRACKET CONNECTOR

12 GA. GALV.

PUNCH & NOTCH DETAIL

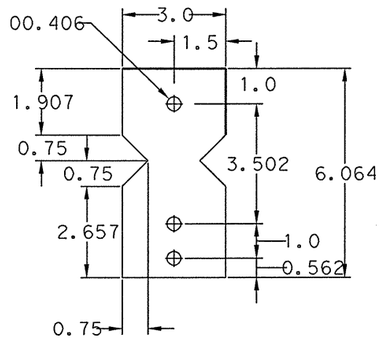

BEND DETAIL

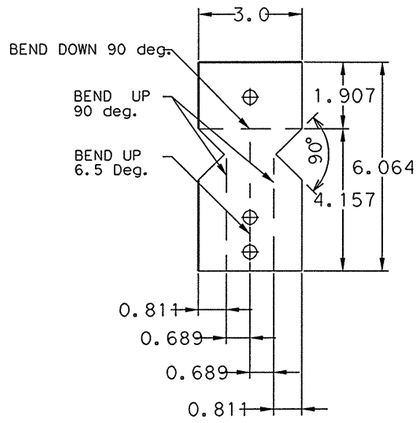

FINISHED DIMENSIONS
PART "B" ANGLE BRACKET CONNECTOR

12 GA. GALV.

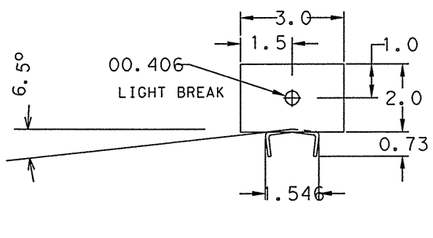

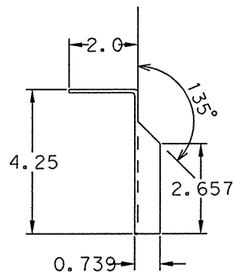

PART "A" ANGLE BRACKET CONNECTOR

12 GA. GALV.

BEND DETAIL

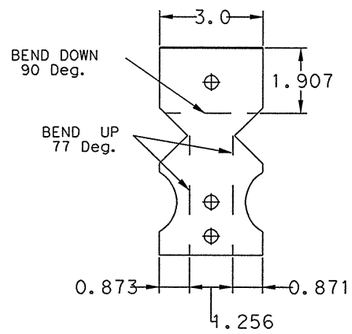

PUNCH & NOTCH DETAIL

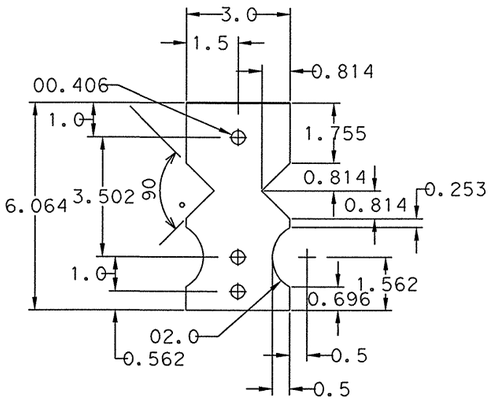

FINISHED DIMENSIONS
PART "A" ANGLE BRACKET CONNECTOR

12 GA. GALV.

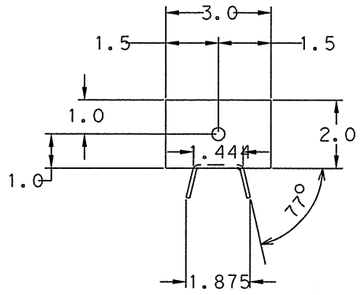

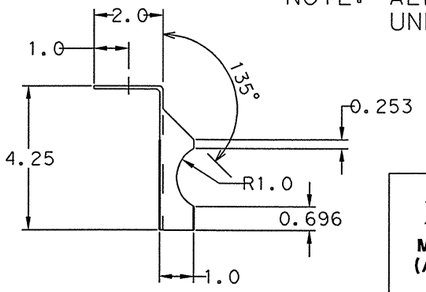

NOTE: ALL DIMENSIONS IN INCHES UNLESS OTHERWISE NOTED.

LEVELS DISPLAYED
1 2 3 4 5 6 7 8 9 10 11 12 31 41 51 61
17 81 92 02 12 22 32 42 52 62 72 82 93 03 13 23
33 43 53 63 73 83 94 04 14 24 34 44 54 64 74 84
49 05 15 25 35 45 55 65 76 85 96 06 16 26 36 46

ACC: /????
FILE: MB-2002B.dgn

Texas Department of Transportation
Design Division (Pavement)

MAILBOX HARDEWARE DETAILS (ANGLE BRACKET CONNECTORS)

MB-03

© TxDOT SEPTEMBER 1994

DW: LJB	CK:	DW:	CK:	MEG NO.:
MODIFICATIONS				

STATE DISTRICT	FEDERAL REGION	FEDERAL AID PROJECT		SHEET
PHARR	6			495A

COUNTY	CONTROL	SECTION	JOB	HIGHWAY
HIDALGO	0255	08	091	US 281

DISCLAIMER:
The use of this standard is governed by the "Texas Engineering Practice Act". No warranty of any kind is made by TxDOT for any purpose whatsoever. TxDOT assumes no responsibility for the conversion of this standard to other formats or for incorrect results or damages resulting from its use.

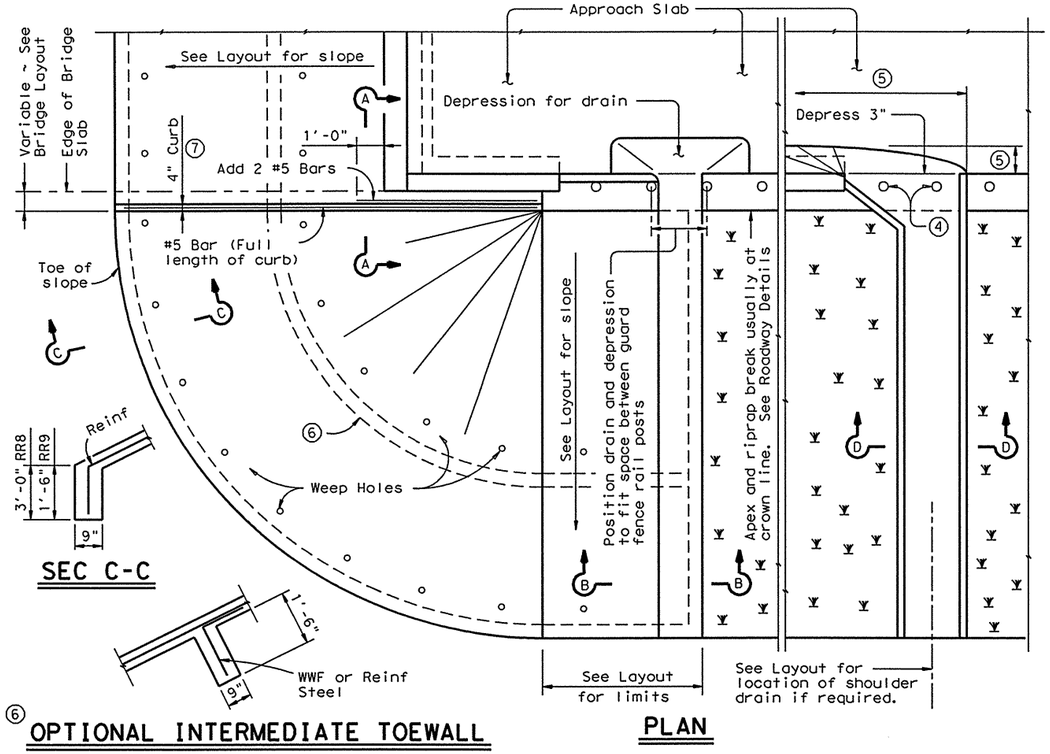

PLAN

SEC C-C

⑥ OPTIONAL INTERMEDIATE TOEWALL

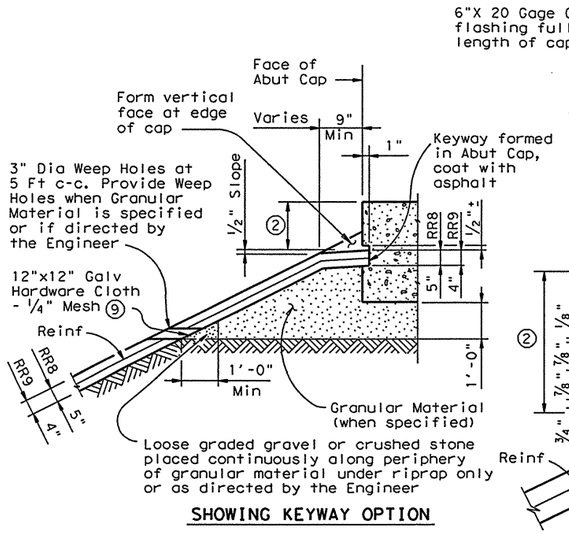

SHOWING KEYWAY OPTION

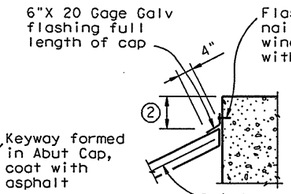

CAP OPTION A

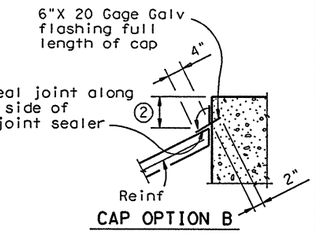

CAP OPTION B

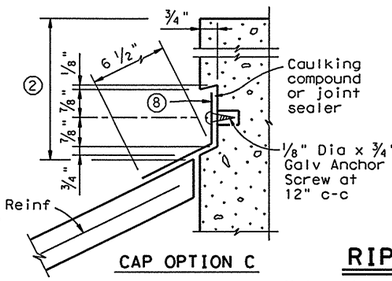

CAP OPTION C

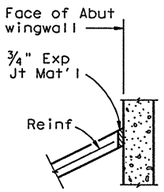

RIPRAP AT WINGWALL

Note: Flashing (shown in Cap Option A) may be used at wingwall in addition to Exp Jt Mat'l if shown on plans or directed by the Engineer.

SECTION THRU RIPRAP AT CAP

Note: The sealing option of the joint between the face of cap and riprap shall be as designated by the Engineer or as shown elsewhere on plans.

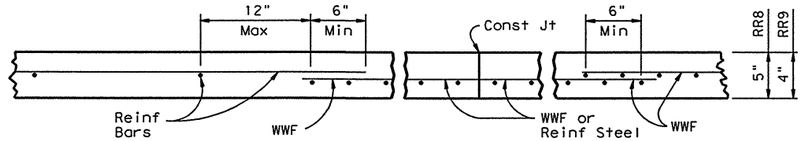

Note: Reinforcing bars shall be #3 at 18" spac c-c. Welded wire fabric shall be 6X6-W2.9XW2.9. Combinations of WWF and reinforcing bars may be used if both are permitted. Lap splices shall be a minimum of 6 inches, measured from the transverse wire of WWF, and the ends of reinforcing bars.

DETAILS OF WWF, REINF AND CONST JOINT

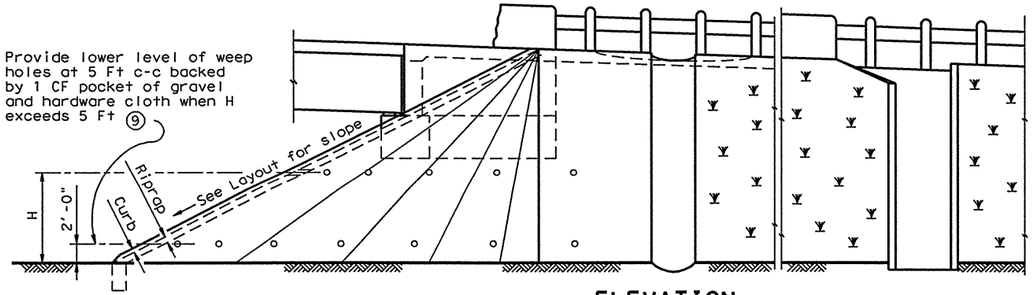

ELEVATION

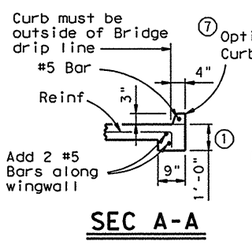

SEC A-A

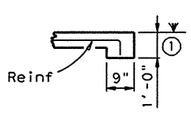

SEC B-B (No Drain)

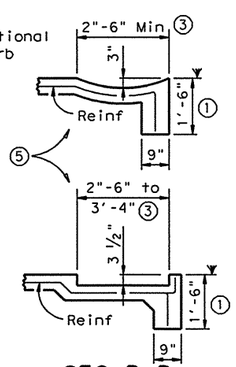

SEC B-B (With Drain)

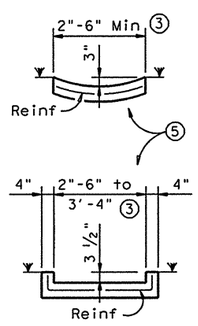

SEC D-D (Shoulder Drain)

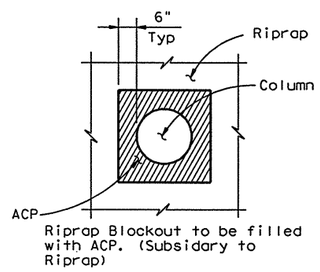

RIPRAP DETAIL AT COLUMNS (As directed by the Engineer)

① Wall extension may be reduced or modified if approved by the Engineer. Wall extension shall be increased to 1'-6" whenever the optional Intermediate Toewall is called for in the plans.

② Top of cap to top of riprap dimension varies as directed by the Engineer. Should be 9" Min for stringer type bridges and 1'-6" for slab type bridges.

③ Wider or other drain configurations shall be used if shown elsewhere in plans or if directed by the Engineer.

④ A 12 in. Dia void should be provided in the riprap at the guard fence location. Backfill with 4 in. of ACP if directed by the Engineer.

⑤ Limits and configuration of drains and depressions shall be as shown elsewhere in plans or as directed by the Engineer.

⑥ The optional Intermediate toe wall shall be constructed when designated elsewhere in the plans or included in the specifications.

⑦ When riprap is shown extended around header on layout, extend slab and toewall as shown and eliminate 4" curb.

⑧ 8" x 18 Gage Galv Sheet Metal

⑨ If erodable soils occur in the embankment

FOR CONTRACTOR'S INFORMATION ONLY:
5" of RR8 = 0.015 CY/SF
4" of RR9 = 0.012 CY/SF
#3 Reinf at 18" c-c = 0.501 Lbs/SF
6X6-W2.9XW2.9 = 0.394 Lbs/SF

GENERAL NOTES

Concrete shall be Class B unless noted elsewhere in plans.

Reinforcing other than that shown may be used by substituting reinforcement of equal or greater unit cross-sectional area. The Maximum reinforcement spacing shall be 18 inches.

Construction joints or grooved joints extending the full slant slope height shall be at intervals of approximately 20 feet unless otherwise directed by the Engineer.

Porus Concrete Filter Blanket and Gravel Backfill shall be placed if shown elsewhere in the plans or if directed by the Engineer.

Hardware cloth, loose graded stone behind weep holes, flashing, or other sealing material shall not be paid for directly but shall be subsidiary to the bid item, Riprap.

Unless specified elsewhere in the plans to be only reinforcing bars, the riprap reinforcing may be composed of reinforcing bars, welded wire fabric, or any suitable combination of both types.

See Layout for limits of riprap.

RR8 is to be used on stream crossings.

RR9 is to be used on other embankments.

LEVELS DISPLAYED 1 2 ACC: (LV=1,2 for English)

Texas Department of Transportation
Design Division (Bridge)

CONCRETE RIPRAP FOR EMBANKMENT SLOPES UNDER BRIDGE ENDS (TYPES RR8 & RR9)

CRR

FILE: crrstde1.dgn	DN: JJP	CK: THD	DW: DRG	CK: LDS	NEG: B202	
©TxDOT September 1998	DIST	FED REG	FEDERAL AID PROJECT #			SHEET
REVISIONS	PHARR	6				496
	COUNTY		CONTROL	SECT	JOB	HIGHWAY
	HIDALGO		0255	08	091	US 281

DISCLAIMER
The use of this standard is governed by the "Texas Engineering Practice Act". No warranty of any kind is made by TxDOT for any purpose whatsoever. TxDOT assumes no responsibility for the conversion of this standard to other formats or for incorrect results or damages resulting from its use.

OBJECT MARKER TYPES 1 and 4

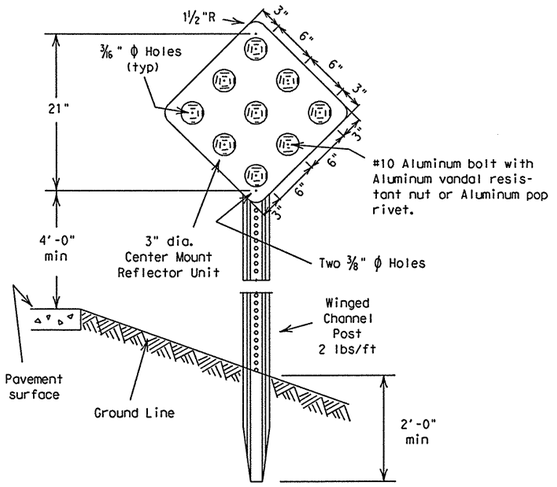

TYPE 1 and 4 Object Markers shall consist of Type (B) Center Mount Reflector Units mounted on 0.080" thick sheet aluminum conforming with ASTM B-209 Alloy 6061-T6.

TYPE 1 OM-1R

18" x 18"
Reflector Unit - YELLOW
Background - (YELLOW - Non-Reflective)

TYPE 4 OM-4R

18" x 18"
Reflector Unit - RED
Background - (RED - Non-Reflective)

OBJECT MARKER TYPE 3

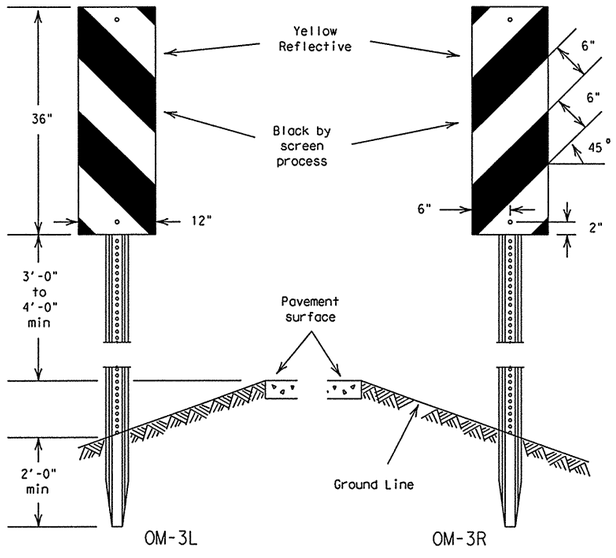

Sign blank to be .080" thick sheet aluminum conforming to ASTM B-209 Alloy 6061-T6.

Reflective sheeting shall be in accordance with Departmental Material Specification, D-9-8300, Type C.

TYPICAL REFLECTOR UNITS

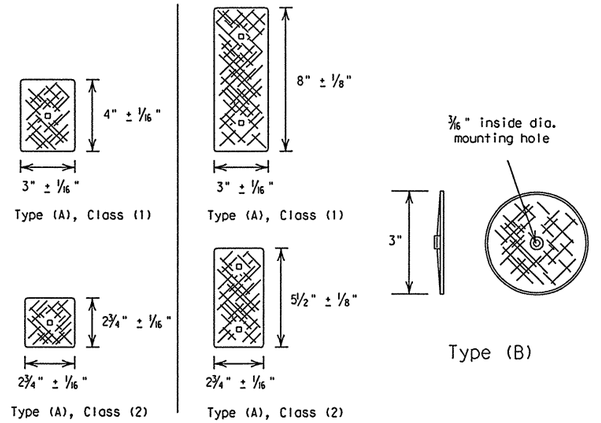

Type (A) - Reflective sheeting with pressure sensitive backing. For certain (non-flexible post) applications, reflective sheeting may be directly applied to approved metal, plastic or fiberglass backplate with 17/64" square mounting hole.

It is the contractor's option to provide Class (1) or Class (2) reflective sheeting in accordance with Departmental Material Specification D-9-8600. All reflector units per delineator or object marker shall be of the same type and class of reflective sheeting.

Type (B) - Centermount acrylic plastic prismatic reflector.

SPECIFICATION REFERENCE TABLE

MATERIALS AND TESTS DIVISION SPECIFICATIONS	
FLEXIBLE DELINEATOR & OBJECT MARKER POSTS (DRIVEABLE & SURFACE MOUNT TYPES)	D-9-4400
FLAT SURFACE REFLECTIVE SHEETING, TYPE C (HIGH SPECIFIC INTENSITY)	D-9-8300
NON-REFLECTIVE BACKGROUND COATING	D-9-8500
DELINEATOR AND OBJECT MARKER	D-9-8600

GENERAL NOTES:

1) Delineators shall be uniformly placed not less than 2 feet nor more than 8 feet from the edge of shoulder or the face of unmountable curb. They may be placed in line with guardrail where guardrail is used.
2) Object markers shall be located at points designated on the plan.
   When used for marking objects in the roadway or 8 feet or less from the shoulder or curb, the mounting height to the bottom of the object marker should normally be 4 feet above the surface of the nearest traffic lane. When used to mark objects more than 8 feet from the shoulder or curb, the mounting height to the bottom of the object marker may be 4 feet above the ground line.
   When object markers or markings are applied to a hazardous object which by its nature required a lower or higher mounting, the vertical mounting height may vary according to need.
3) Hardware shall be galvanized steel, stainless steel, or aluminum, except as noted.
4) Posts for supporting delineators and Type 2 object markers shall be 1.12 lbs/ft winged channel.
5) Type 1, 3 and 4 object marker posts shall be 2 lbs/ft winged channel.
6) Delineator and object markers shall be in accordance with Department Material Specification D-9-8600.

OBJECT MARKERS TYPE 2

YELLOW (R-reflector unit, P-panel)

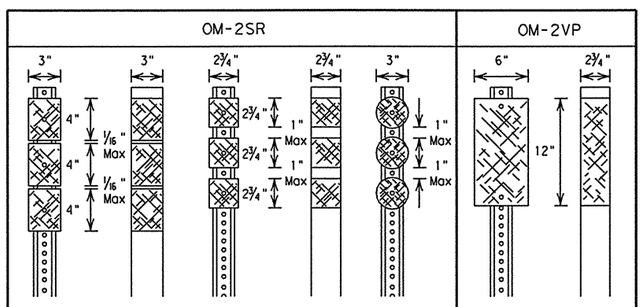

Type	A				B	A	
Class	1	1	2	2	n/a	1	2
Post	WC	FLEX	WC	FLEX	WC	WC	FLEX

ALL REFLECTOR UNITS ARE YELLOW
WC-wing channel post (1.12 lbs/ft)
FLEX-flexible post (driveable and semi-driveable)

DELINEATORS

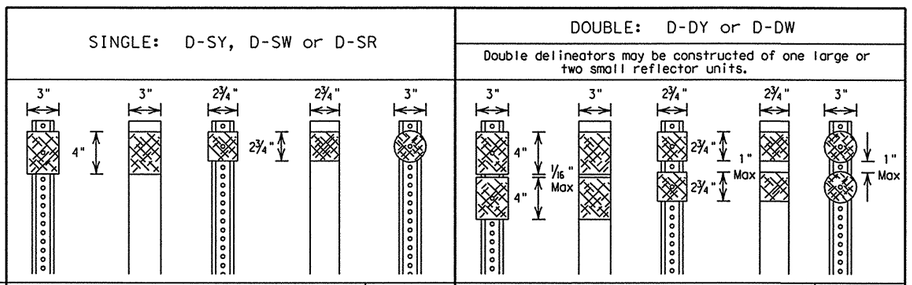

Type	A				B	A				B
Class	1	1	2	2	n/a	1	1	2	2	n/a
Post	WC	FLEX	WC	FLEX	WC	WC	FLEX	WC	FLEX	WC

Length of post may vary to meet field conditions.

REFLECTOR UNITS: W-white, Y-yellow, R-red
WC-wing channel post (1.12 lbs/ft)
FLEX-flexible post (driveable and semi-driveable)

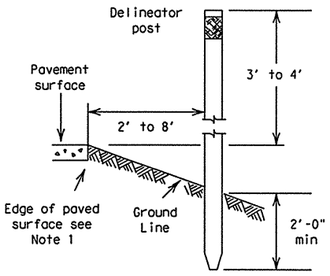

TYPICAL INSTALLATION

LEVELS DISPLAYED
1 2 3 4 5 6 7 8 9 10 11 12 13 14 15 16
17 18 19 20 21 22 23 24 25 26 27 28 29 30 31 32
33 34 35 36 37 38 39 40 41 42 43 44 45 46 47 48
49 50 51 52 53 54 55 56 57 58 59 60 61 62 63

ACC:

STANDARD PLANS
TEXAS DEPARTMENT OF TRANSPORTATION
Traffic Operations Division

DELINEATORS & OBJECT MARKERS

(1 of 2) D & OM(1)-95

© TxDOT January 1981

DN: LR	CK:	DW: DN	CK:	MSG NO.:

REVISIONS
1-82
4-92
8-95

STATE DISTRICT	FEDERAL REGION	FEDERAL AID PROJECT	SHEET
PHARR	6		497

COUNTY	CONTROL	SECTION	JOB	HIGHWAY
HIDALGO	0255	08	091	US 281

DISCLAIMER
The use of this standard is governed by the "Texas Engineering Practice Act". No warranty of any kind is made by TxDOT for any purpose whatsoever. TxDOT assumes no responsibility for the conversion of this standard to other formats or for incorrect results or damages resulting from its use.

PLAN VIEW OF BIDIRECTIONAL MOUNTING

For Single Delineators Only

Post oriented as directed by Engineer

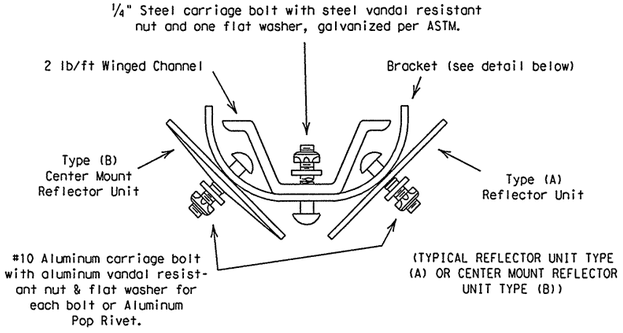

BIDIRECTIONAL BRACKET

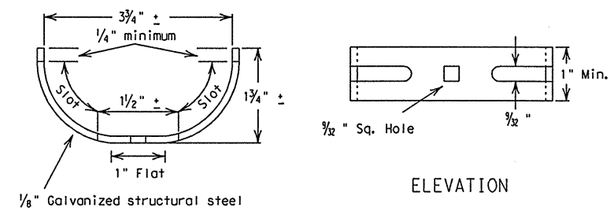

PLAN VIEW

ELEVATION

Strap Length = 6" Min.

DELINEATORS FOR CURVES OR TANGENT SECTIONS

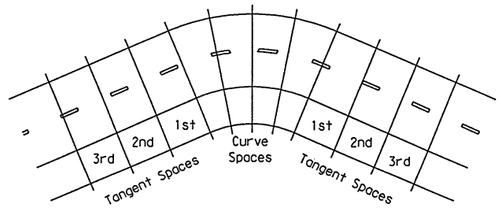

The delineator spacing, S, on the curve is found from the formula $S=3\sqrt{R-50}$, where R is the radius of the curve in feet. The first spaces immediately in advance of and beyond the curve are 2.0xS, the second spaces are 3.0xS, and the third spaces are 6.0xS but not to exceed 300 feet. Distance for spaces rounded to nearest 5 feet.

Spacing for Highway Delineators on Horizontal Curve

Degree of Curve	Radius on Curve	Spacing on Curve	Spacing in Advance of and Beyond Curves		
			First Space	Second Space	Third Space
	Feet	Feet	Feet	Feet	Feet
1	5730	225	300	300	300
2	2865	160			
3	1910	130	260		
4	1433	110	225		
5	1146	100	200		
6	955	90	185	275	
7	819	85	165	250	
8	716	75	155	230	
9	637	75	145	220	
10	573	70	135	205	
11	521	65	130	195	
12	478	60	125	185	

FLEXIBLE POSTS

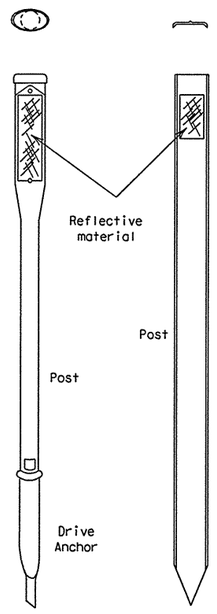

Driveable or Semi-Driveable Delineator Posts

Install to manufacturer's recommendations

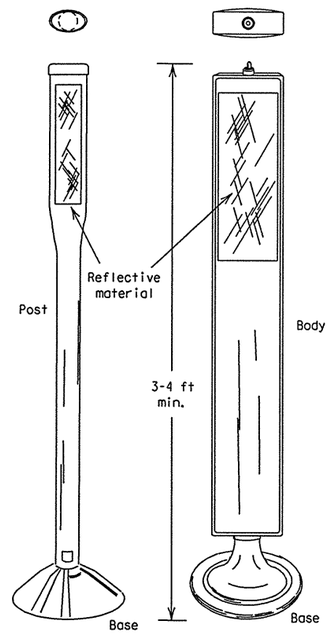

Pavement Surface Mount

Surface mounted delineator posts may use epoxy, or hot bituminous adhesive to mount post to flat surface.

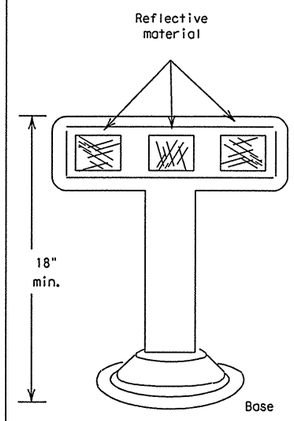

K Marker

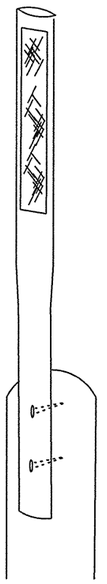

Guardrail Post Surface Mount

PLAN VIEW OF MONODIRECTIONAL MOUNTINGS

For Single and Double Delineators and Object Marker types OM-2YP(a) & OM-2SR

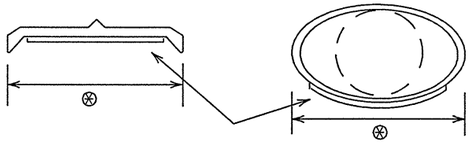

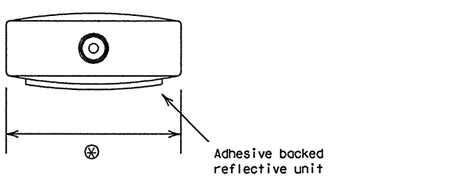

⊛ Not less than 3 ¼".

Various Cross Sections may be furnished if projected width of reflective unit appears to be 3" ± ⅜".

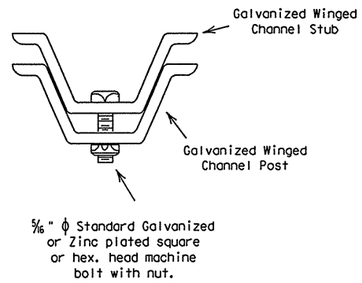

PLAN VIEW

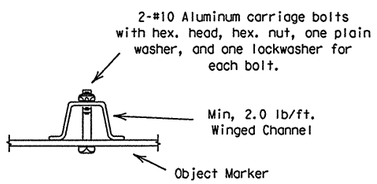

Length of post may vary to meet field conditions.

PLAN VIEW

BREAK AWAY CHANNEL POST

For Object Marker Types 1,3 and 4

(where specified in the plans)

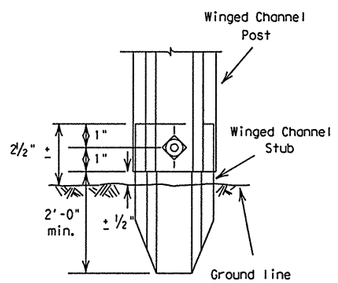

PARTIAL ELEVATION

LEVELS DISPLAYED ACC:

1	2	3	4	5	6	7	8	9	10	11	12	13	14	15	16
17	18	19	20	21	22	23	24	25	26	27	28	29	30	31	32
33	34	35	36	37	38	39	40	41	42	43	44	45	46	47	48
49	50	51	52	53	54	55	56	57	58	59	60	61	62	63	

STANDARD PLANS
TEXAS DEPARTMENT OF TRANSPORTATION
Traffic Operations Division

DELINEATORS & OBJECT MARKERS

(2 of 2) D & OM(2)-95

©TxDOT January 1981

DN: LR	CK: -	DW: DN	CK: -	HEC NO.:

REVISIONS: 2-82, 4-92, 8-95

STATE DISTRICT	FEDERAL REGION	FEDERAL AID PROJECT	SHEET
PHARR	6		498

COUNTY	CONTROL	SECTION	JOB	HIGHWAY
HIDALGO	0255	08	091	US 281

DISCLAIMER
The use of this standard is governed by the "Texas Engineering Practice Act". No warranty of any kind is made by TxDOT for any purpose whatsoever. TxDOT assumes no responsibility for the conversion of this standard to other formats or for incorrect results or damages resulting from its use.

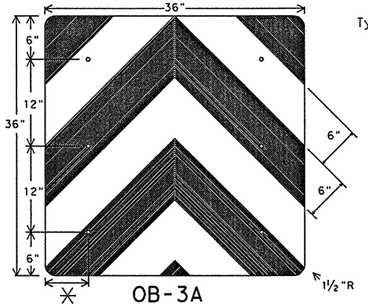

OB-3A

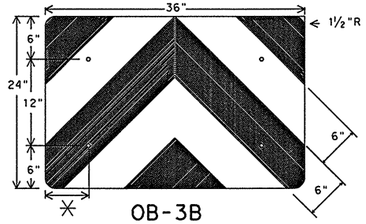

OB-3B

✳ adjust to fit attenuator per manufacturer's recommendation, or as directed by the Engineer.

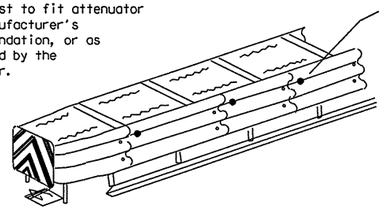

Type C reflector installed per manufacturer's recommendation (see Detail B)

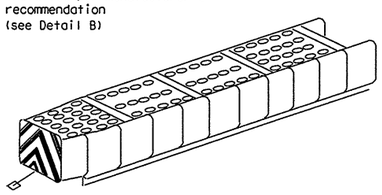

Type C reflector

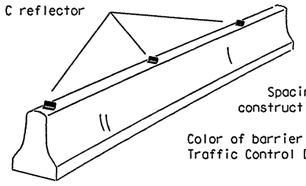

Barrier Reflectors will be installed only on barriers designated for reflectorization as required elsewhere in the plans.

Spacing of reflectors is 40 feet. Mount reflectors to barrier by construction adhesive or butyl rubber adhesive.

Color of barrier reflectors will conform to the Texas "Manual on Uniform Traffic Control Devices", (TMUTCD).

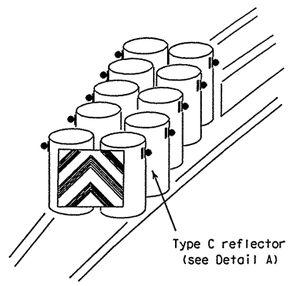

Type C reflector (see Detail A)

Object Marker blank to be ⅝" Plywood (Type A) in accordance with Item "PLYWOOD SIGNS (TYPE A)" or 0.08" Aluminum as per Specification D-9-7110.

Mounting should be flush with top of VIA. Minimum size 36" x 24".

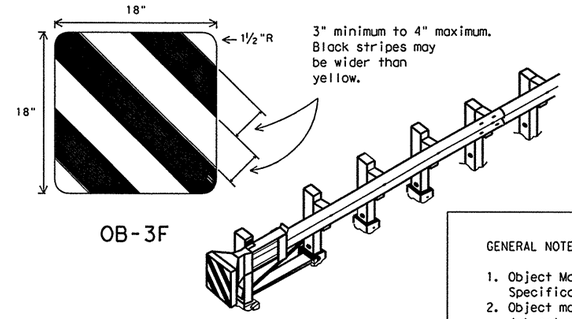

OB-3F

3" minimum to 4" maximum. Black stripes may be wider than yellow.

TYPICAL GUARDRAIL END TREATMENT

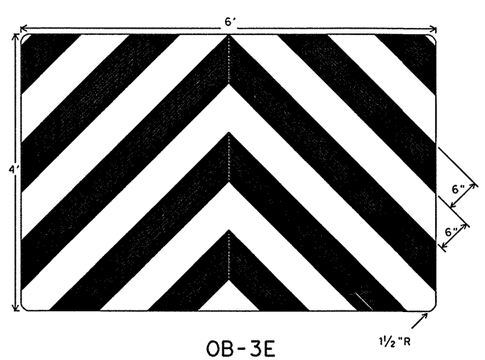

OB-3E

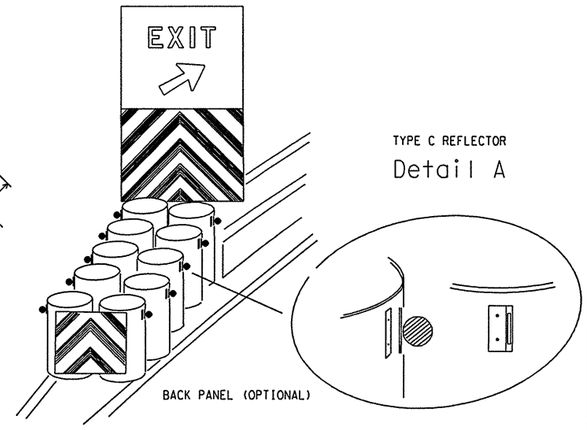

TYPE C REFLECTOR
Detail A

BACK PANEL (OPTIONAL)

GENERAL NOTES:

1. Back Panel (OB-3E) shall be made of 5/8" plywood (Type A) panels unless otherwise noted in the plans.
2. Back panel will be mounted independent of the attenuator. The minimum mounting height is flush with the top of the attenuator.
3. Alternating flashing yellow lights may be added. Lights should be mounted minimum 72" above pavement.
4. Attenuator may have additional yellow reflective and black striping, and/or reflectors placed on sides. CHEVRONS (W1-8) may be erected to delineate roadway curvature beyond the attenuator. These additional devices will be installed if required elsewhere in the plans.
5. Mount Back Panel per details on SMD Standards, or as detailed elsewhere in the plans.

GENERAL NOTES: OBJECT MARKERS

1. Object Markers shall conform to the Texas MUTCD and meet the color and reflectivity requirement of Department Material Specification D-9-8300, Type C. Background shall be yellow reflective and Chevron shall be black.
2. Object markers OB-3C, OB-3D and OB-3F may be fabricated from reflective sheeting applied to:
   (a) galvanized sheet metal gauge 24 to 28 per ASTM A366.025 nominal, aluminum sheet of 6061-T6 or 5052-H38 alloy approximately .065 inch thickness,
   (b) low or medium density polyetheylene approximately 0.08 inch thickness, or
   (c) other material as specified in the plans or approved by the Engineer.
3. OB-3F is intended for use only with guardrail end treatments (i.e. GET, CAT, BEST, BRAKEMASTER, SENTRE, etc.). OM-BF may be fabricated from adhesive backed reflective sheeting applied directly to guardrail end treatment, or applied directly to an "end cap" as per the manufacturer's recommendation. Direct applied sheeting shall provide a smooth surface and have no wrinkles, air bubbles, cuts or tears.
4. Size may be reduced to fit smaller devices, however, the minimum size shall be:
   (a) 24 x 24 inches for attenuators, and
   (b) 18 x 18 inches for guardrail end treatments.
5. Pop rivets, screws, or nuts and bolts may be used to attach object markers and reflectors. Holes, slots or other openings may be cut or drilled through object markers to allow cable or other attachments.
6. When traffic passes only on one side of attenuator, only the OM-3 marker should be installed. OM-3 should be installed per the requirements of D & OM Standards with a minimum mounting height of 18 inches.

TYPE C REFLECTORS

1. Type C reflectors shall consist of a reflector unit attached to a bracket to facilitate delineator mounting on attenuators, guardrails and concrete traffic barriers.
2. Type C reflectors may also be used to delineate side of attenuator, guardrail and concrete traffic barrier.
3. Type C reflectors shall meet the requirements of D-9-8600.

TRAFFIC FLOW	BOTH SIDES						ONE SIDE
ATTENUATOR TYPE	OB-3A	OB-3B	OB-3C	OB-3D	L	OM-1	
GREAT	NR	✓	NR	✓	96"	✓	
Steel Drum	✓	✓	✓	✓	114"	✓	
Hydraulic	✓	✓	NR	NR	NR	✓	OM-3
Hex Foam	✓	✓	NR	NR	NR	✓	
Low Maintenance	NR	✓	NR	✓	96"	✓	
Sand Filled Plastic Modules	NR	NR	NR	NR	NR	✓	
Sand Tire	NR	NR	NR	NR	NR	✓	

NR - Not Recommended

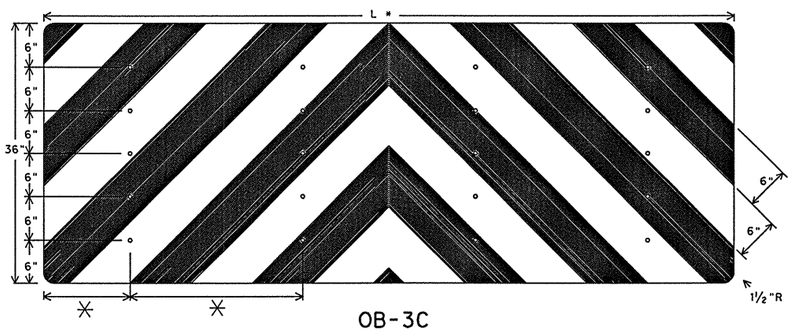

OB-3C

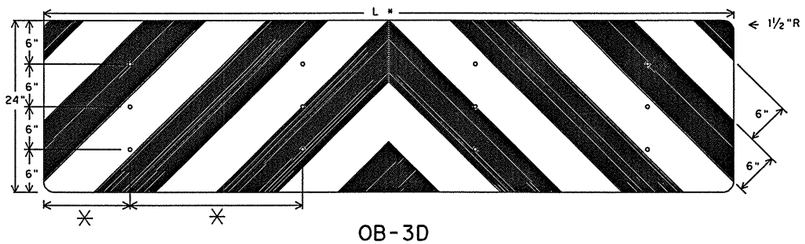

OB-3D

✳ spacing adjusted to attach through centerline of drum, per attenuator manufacturers recommendation, or as directed by the Engineer.

Mounting should be flush with top of attenuator. Minimum size 96" x 24".

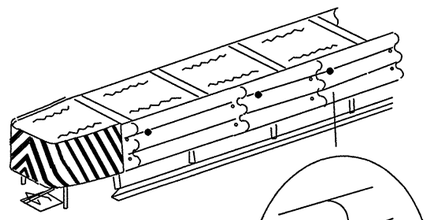

TYPE C REFLECTOR
Detail B

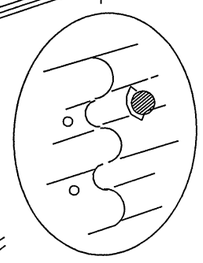

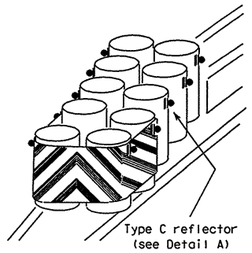

Type C reflector (see Detail A)

LEVELS DISPLAYED

1	2	3	4	5	6	7	8	9	10	11	12	13	14	15	16
17	18	19	20	21	22	23	24	25	26	27	28	29	30	31	32
33	34	35	36	37	38	39	40	41	42	43	44	45	46	47	48
49	50	51	52	53	54	55	56	57	58	59	60	61	62	63	

ACC:

STANDARD PLANS
TEXAS DEPARTMENT OF TRANSPORTATION
Traffic Operations Division

DELINEATORS & OBJECT MARKERS FOR VEHICLE IMPACT ATTENUATORS

D & OM(VIA)-98

©TxDOT December 1989

DN: LR	CK:	DW: DN	CK:	MEG NO.:

REVISIONS	STATE DISTRICT	FEDERAL REGION	FEDERAL AID PROJECT				SHEET
4-90	PHARR	6					499
4-92	COUNTY		CONTROL	SECTION	JOB	HIGHWAY	
8-95	HIDALGO		0255	08	091	US 281	
4-98							

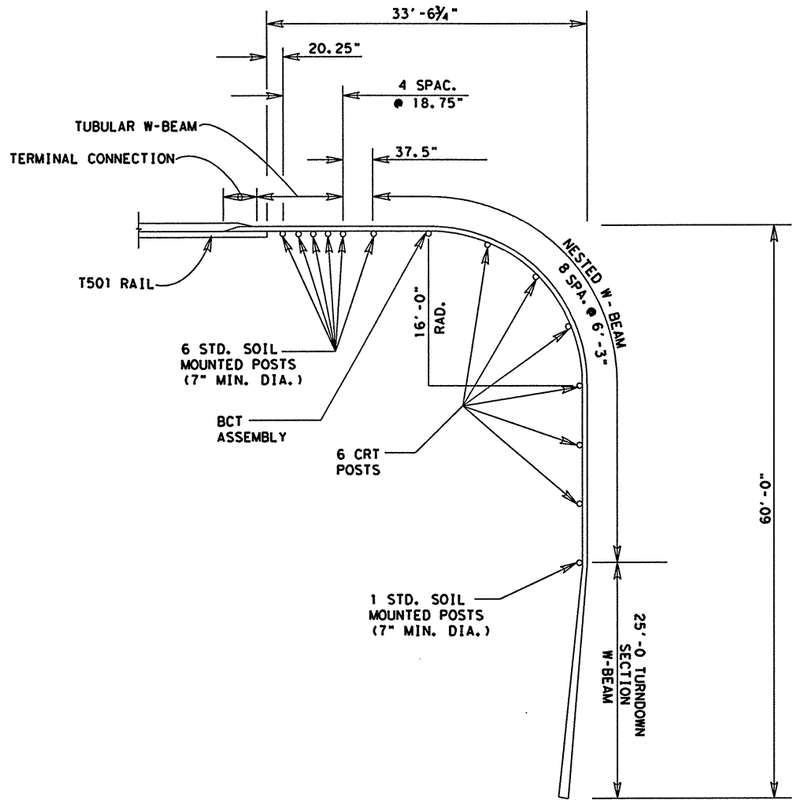

INSTALLATION LAYOUT

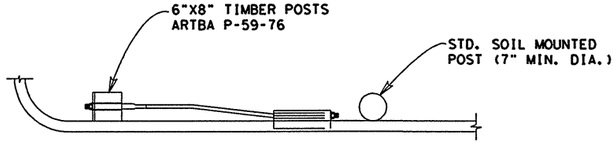

PLAN

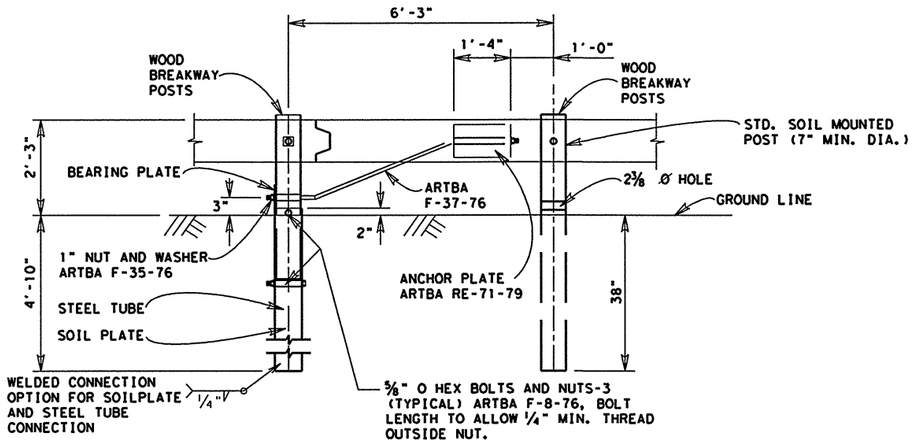

ELEVATION

BREAKAWAY TERMINAL POST SLEEVE

ARTBA F-34-76

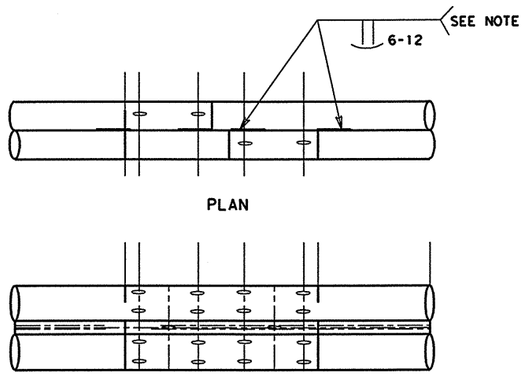

PLAN

ELEVATION

TUBULAR W-BEAM DETAILS

NOTE:
TUBULAR W-BEAM RAIL MEMBER IS TO BE FABRICATED FROM STANDARD 25' NOMINAL W-BEAM SECTIONS. TOP AND BOTTOM SEAMS SHALL BE BUTT WELDED 6" AT 12" SPACING. CONTINUOUS SEAM WELDING IS ALSO ACCEPTABLE. WELDS SHALL BE SHIPPED AND CLEANED AND THE COMPLETE 25 FT TUBULAR MEBMER SHALL BE GALVANIZED AFTER FABRICATION.

MEMBER SHALL BE 12 GAUGE STEEL ~ NOM. THICKNESS .1046" EXCLUSIVE OF PROTECTIVE COATING.

W-BEAM MEMBER

NOTE: ALL STEEL COMPONENTS SHALL BE GALVANIZED UNLESS OTHERWISE SHOWN IN PLANS.

© TXDOT 2003

PHARR DISTRICT

TEXAS DEPARTMENT OF TRANSPORTATION

SHORT RADIUS RAIL END TREATMENT DETAIL

SHEET 2 OF 2 SHEETS

REV. 6/99

CURVMBGF.DGN

FED.RD. DIV.NO.	PROJECT NO.		FILE NO.			SHEET NO.
6						500
STATE	STATE DIST.NO.	COUNTY	CONT.	SECT.	JOB	HIGHWAY NO.
TEXAS	PHARR	HIDALGO	0255	08	091	US 281

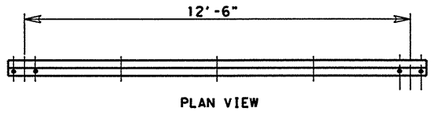

TUBULAR W-BEAM

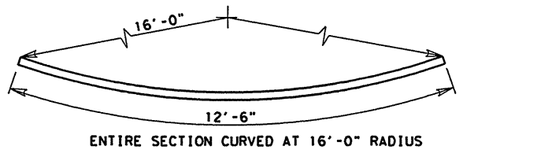

PREFABRICATED SECTION OF W-BEAM IN RADIUS

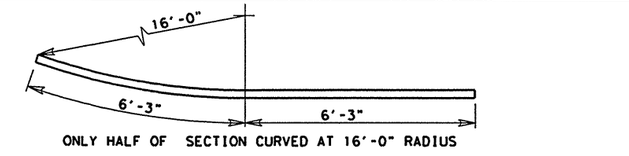

PREFABRICATED SECTION OF W-BEAM AT EDGE OF RADIUS

DISTRICT 21 STANDARD

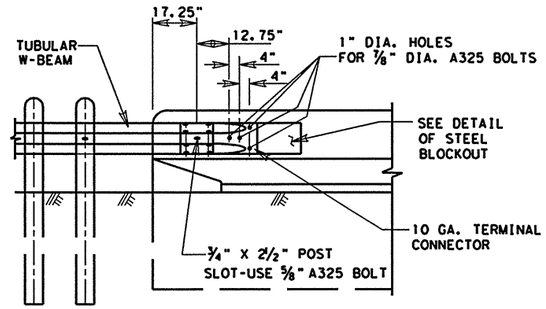

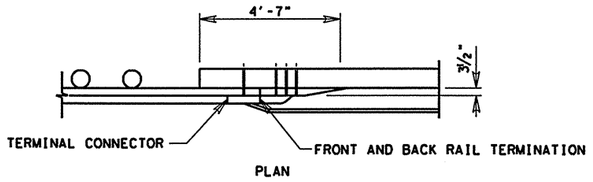

TERMINAL CONNECTION TO SAFETY SHAPE AS USED IN TESTED INSTALL.

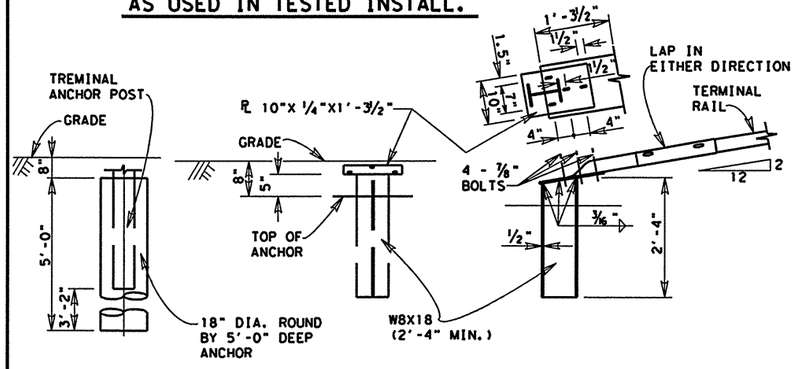

TERMINAL CONCRETE ANCHOR AND ANCHOR POST DETAILS

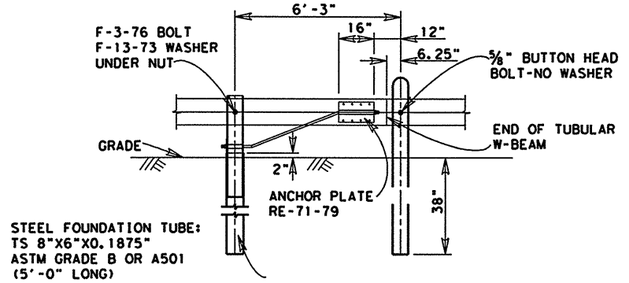

BREAKAWAY CABLE TERMINAL (BCT) ASSEMBLY

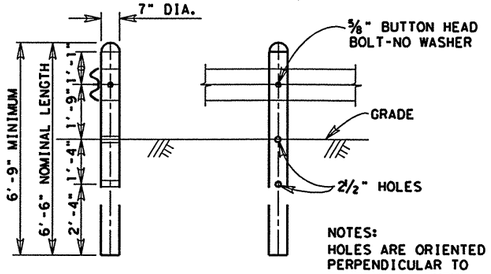

CONTROLLED RELEASE TERMINAL (CRT) POST

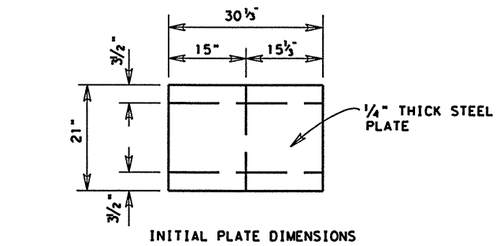

DETAILS OF STEEL BLOCKOUT AS USED IN TESTED INSTALL.

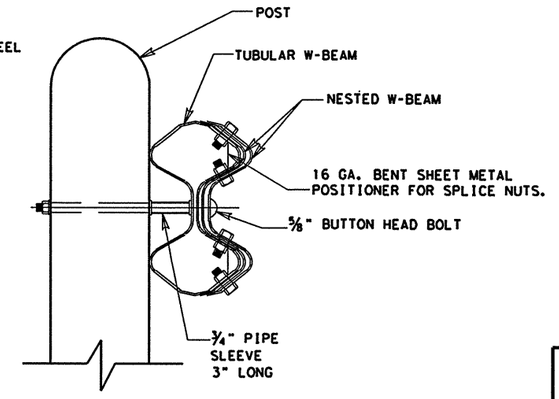

NOTE:
THE COMPLETE SPLICE SHALL HAVE 8 BOLTS. * THE NUTS MAY BE TACKED TO A BENT SHEET METAL POSITIONER AS SHOWN. OTHER SUTABLE POSITIONING METHODS OR DEVICES MAY BE SUBSITIUTED.

TUBULAR W-BEAM CONNECTION

GENERAL NOTES:

1. THE EXACT POSITION OF GUARD FENCE SHALL BE AS SHOWN ELSEWHERE ON THE PLANS OR AS DIRECTED BY THE ENGINEER. GUARD FENCE SHALL BE TRANSITIONED TO A SMOOTH CONNECTION WITH OTHER GUARD FENCE OR STRUCTURE RAILING AS SHOWN ELSEWHERE ON PLANS.
2. THE TOP OF THE TERMINAL ANCHOR POST AND ALL STEEL FITTINGS THREON SHALL BE GALVANIZED A MINIMUM OF 10' AS SHOWN.
3. WELDED STEEL POST AND SPACERS SHALL MEET THE REQUIREMENTS OF ASTM A-769.

© TXDOT 2003

PHARR DISTRICT

SHORT RADIUS RAIL END TREATMENT DETAIL

SHEET 1 OF 2 SHEETS

REV. 6/99

CURVMBGF.DGN

FED. RD. DIV. NO.	PROJECT NO.	FILE NO.	SHEET NO.
6			501

STATE	STATE DIST. NO.	COUNTY	CONT.	SECT.	JOB	HIGHWAY NO.
TEXAS	PHARR	HIDALGO	0255	08	091	US 281

GENERAL NOTES

- ALL RAMPS SHALL HAVE A 5' x 5' LANDING PAD.
- RAMP CENTER TO BE PERPENDICULAR TO FACE OF CURB. A PERPENDICULAR RAMP MAY BE LOCATED WITHIN THE RADIUS OF A CURBLINE.
- SIDEWALK GRADE TO BE PARALLEL TO TOP OF CURB AND GUTTER UNLESS OTHERWISE SHOWN ON PLANS OR DIRECTED BY THE ENGINEER.
- SIDEWALK WIDTH AS SHOWN ELSEWHERE IN PLANS. MIN WIDTH 5'. PROVIDE DROPPED CURBS AT INTERSECTIONS. ALL CONCRETE SHALL BE CLASS "A" PROPOSED SIDEWALKS TO MATCH EXIST. SIDEWALK.
- NO VERTICAL CHANGES SHALL EXCEED 1/4" IN ELEVATION AT ADJOINING SURFACES.
- TO PROVIDE ACCESS TO PEDESTRIAN BUTTON, SIDEWALK / LANDING PAD SHALL EXTEND AND/ OR ABUT TO SIGNAL POLE CONC. FOUNDATION.
- COLOR TEXTURIZED CONCRETE SHALL BE USED TO COLOR AREAS AT RAMPS. COLOR SHALL BE " BRICK RED " AS PER L.M. SCOFIELD COMPANY STANDARDS COLOR A-26 OR EQUAL. COLOR TEXTURIZED CONCRETE SHALL BE SUBSIDIARY TO CURB RAMP ITEM

Ⓐ DESIRABLE 3' OR GREATER FOR HIGH SPEED TRAFFIC. FOR BORDER WIDTHS OF 8' OR LESS, PLACE SIDEWALK ADJACENT TO CURB.

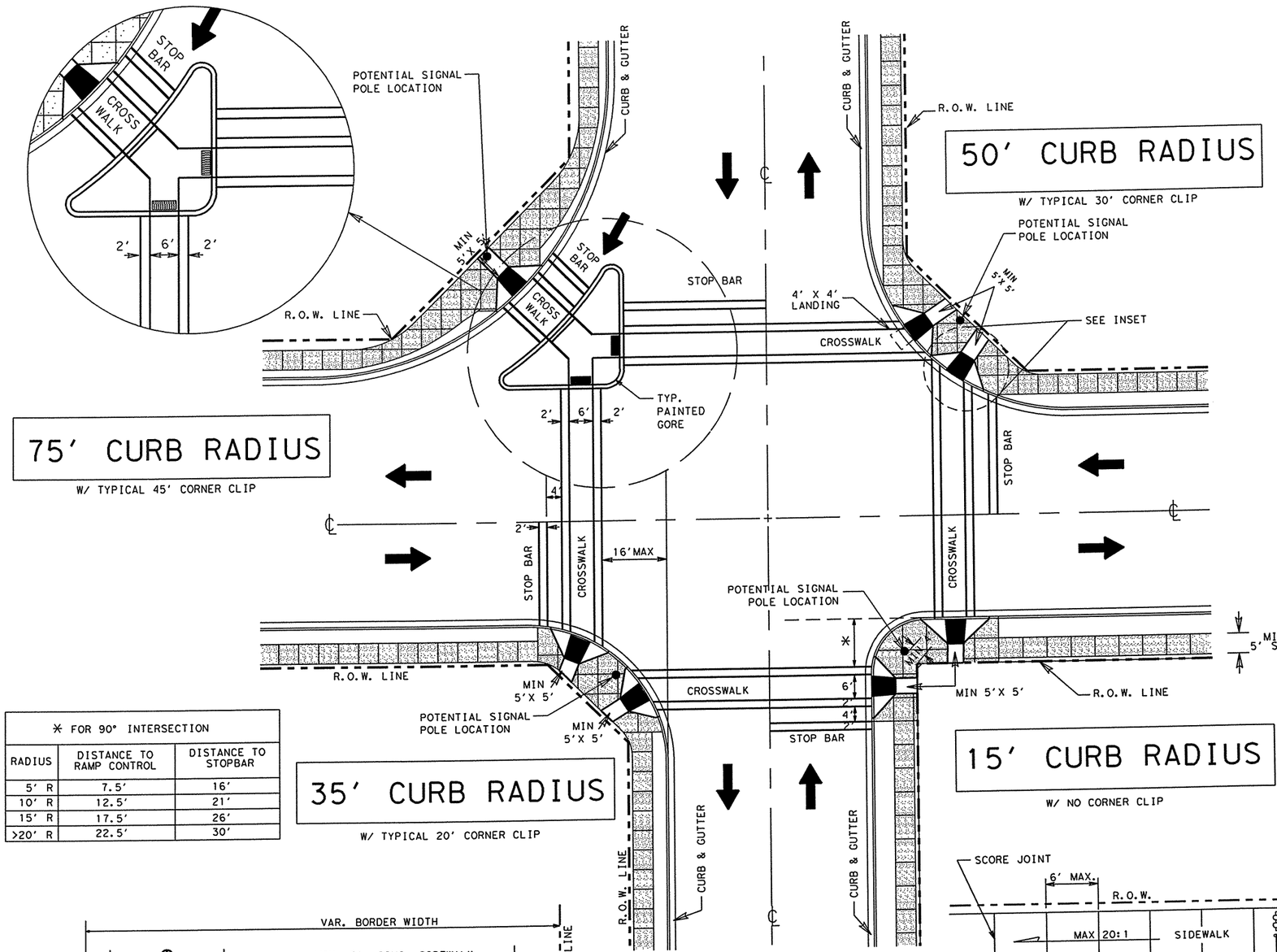

50' CURB RADIUS

W/ TYPICAL 30' CORNER CLIP

75' CURB RADIUS

W/ TYPICAL 45' CORNER CLIP

35' CURB RADIUS

W/ TYPICAL 20' CORNER CLIP

15' CURB RADIUS

W/ NO CORNER CLIP

* FOR 90° INTERSECTION		
RADIUS	DISTANCE TO RAMP CONTROL	DISTANCE TO STOPBAR
5' R	7.5'	16'
10' R	12.5'	21'
15' R	17.5'	26'
>20' R	22.5'	30'

TYPICAL WHEEL CHAIR RAMP LOCATION

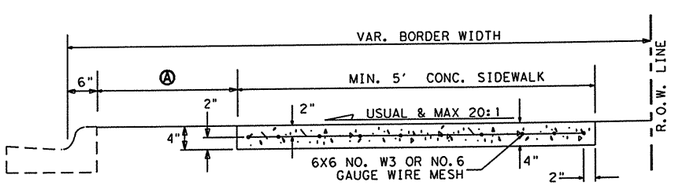

TYPICAL CONC. SIDEWALK

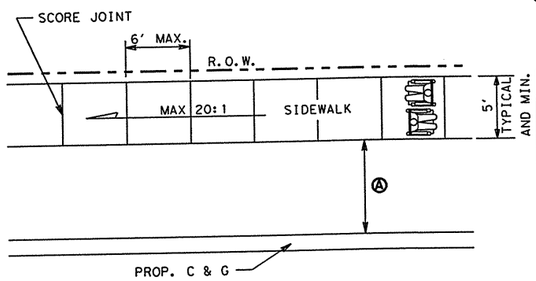

SCORE JOINTS 1/4" THICKNESS
EXPANSION JOINT EVERY 30'
JOINT IN CENTER OF SIDEWALK IF OVER 15' WIDE.

PLAN VIEW

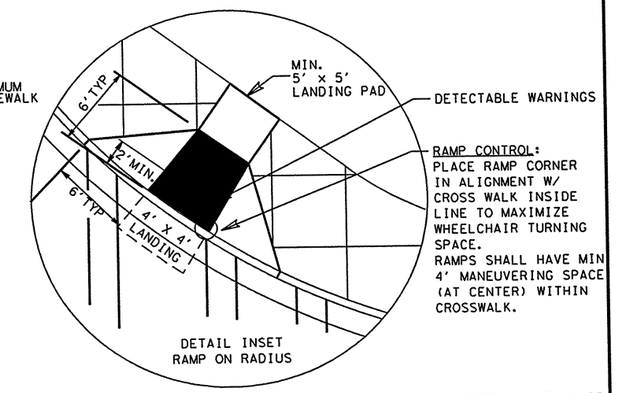

© TxDOT 2003

PHARR DISTRICT STANDARD

TEXAS DEPARTMENT OF TRANSPORTATION

SIDEWALK & WHEELCHAIR RAMP DETAILS

REV. 4/02

SIDEWALK.DGN

FED.RD. DIV.NO.	FEDERAL AID PROJECT NO.	FILE NO.	SHEET NO.
6			502

STATE	STATE DIST. NO.	COUNTY	CONT.	SECT.	JOB	HIGHWAY NO.
TEXAS	PHARR	HIDALGO	0255	08	091	US 281

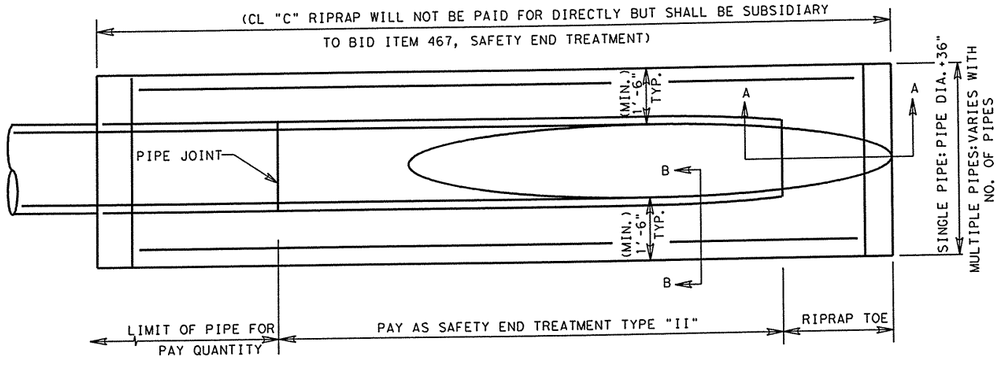

PLAN VIEW

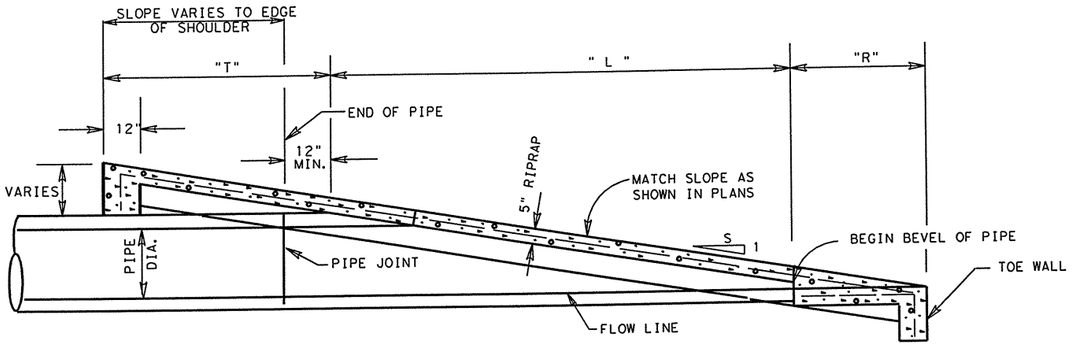

ELEVATION
SAFETY END TREATMENT

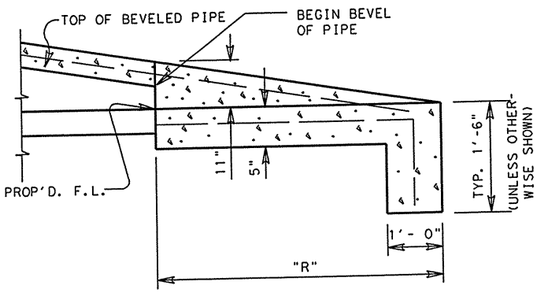

SEC. A-A

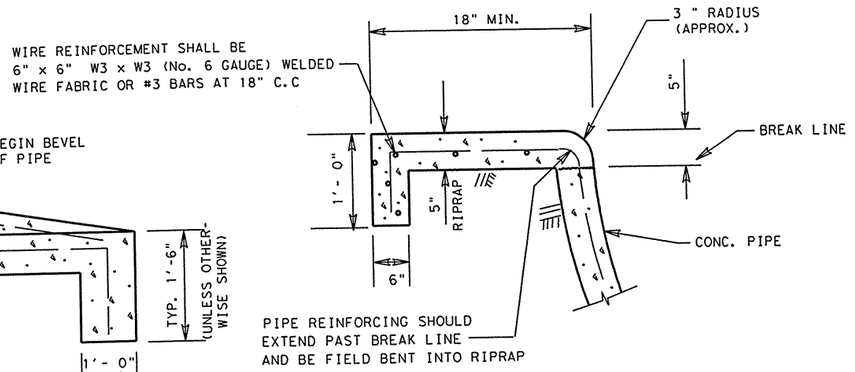

SEC. B-B

SAFETY END TREATMENT PIPE LENGTHS

PIPE DIA. (IN.)	"L" 3:1	4:1	5:1	6:1
12	2'-0"	2'-8"	3'-4"	4'-0"
15	2'-9"	3'-8"	4'-7"	5'-6"
18	3'-6"	4'-8"	5'-10"	7'-0"
24	5'-1½"	6'-10"	8'-6½"	10'-3"
30	6'-9"	9-0"	11'-3"	13'-6"
36	8'-6"	11'-4"	14'-2"	17'-0"
42	10'-1½"	13'-6"	16'-10½"	20'-3"
48	11'-9"	15'-8"	19'-7"	23'-6"

RIPRAP TOE LENGTHS

SLOPE	" R "	"T"
3:1	2'-9"	1'-9"
4:1	3'-8"	2'-4"
5:1	4'-7"	2'-11"
6:1	5'-6"	3'-6"

ESTIMATED RIPRAP CL "C" VOLUME (CY)

PIPE DIA. (IN.)	3:1	4:1	5:1	6:1
12	.9	1.1	1.3	1.6
15	1.0	1.2	1.5	1.8
18	1.1	1.4	1.6	1.9
24	1.3	1.6	2.0	2.3
30	1.5	1.9	2.3	2.7
36	1.7	2.2	2.7	3.2
42	2.0	2.5	3.1	3.6
48	2.2	2.8	3.4	4.1

* FOR CONTRACTORS INFORMATION ONLY (SINGLE PIPE)

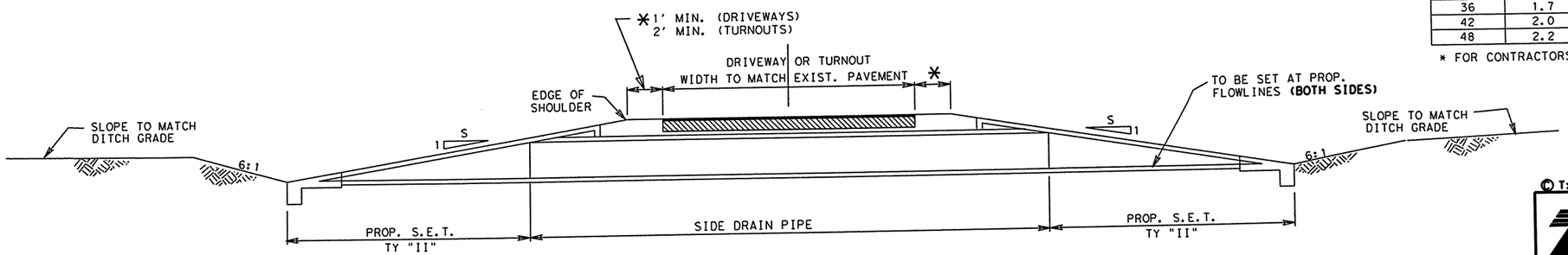

TYPICAL SIDEDRAIN SECTION

NOTE:

ALL EXCAVATION AND BACKFILL REQUIRED AT ALL PIPE SIDE DRAIN CONNECTIONS, ADJUSTMENTS AND/OR EXTENSIONS WILL NOT BE PAID FOR DIRECTLY BUT SHALL BE SUBSIDIARY TO THE BID ITEMS INVOLVED AND IN ACCORDANCE WITH ITEM 400 "STRUCTURAL EXCAVATION".

© TxDOT 2003

PHARR DISTRICT STANDARDS

TEXAS DEPARTMENT OF TRANSPORTATION

SAFETY END TREATMENT DETAILS

REV. 4/02

SET. DGN

FED. RD. DIV. NO.	STATE AID PROJECT NO.		FILE NO.			SHEET NO.
6						504
STATE	STATE DIST. NO.	COUNTY	CONT.	SECT.	JOB	HIGHWAY NO.
TEXAS	PHARR	HIDALGO	0255	08	091	US 281

DISCLAIMER:
The use of this standard is governed by the "Texas Engineering Practice Act". No warranty of any kind is made by TxDOT for any purpose whatsoever. TxDOT assumes no responsibility for the conversion of this standard to other formats or for incorrect results or damages resulting from its use.

LEVELS DISPLAYED

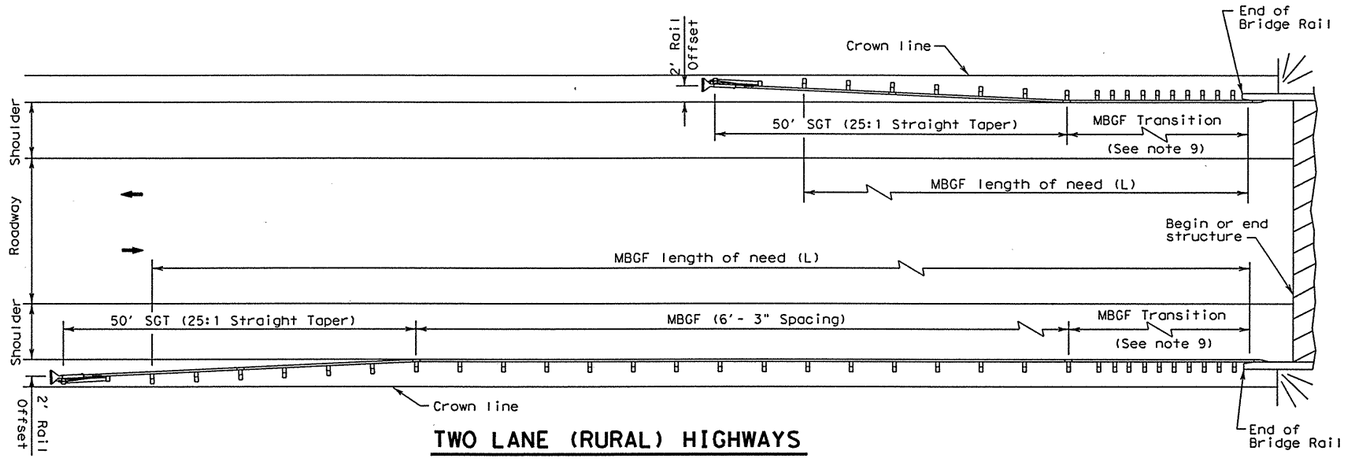

TWO LANE (RURAL) HIGHWAYS

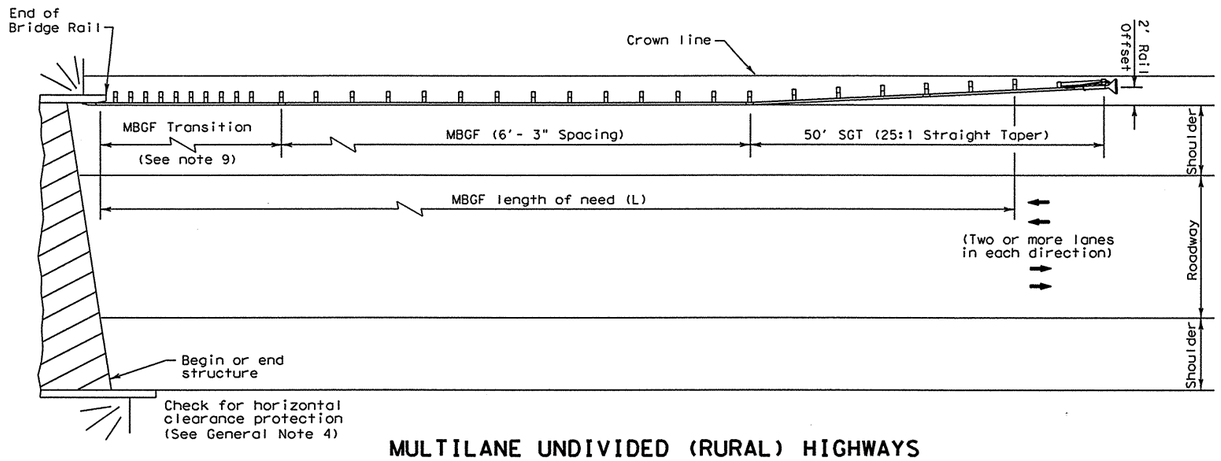

MULTILANE UNDIVIDED (RURAL) HIGHWAYS

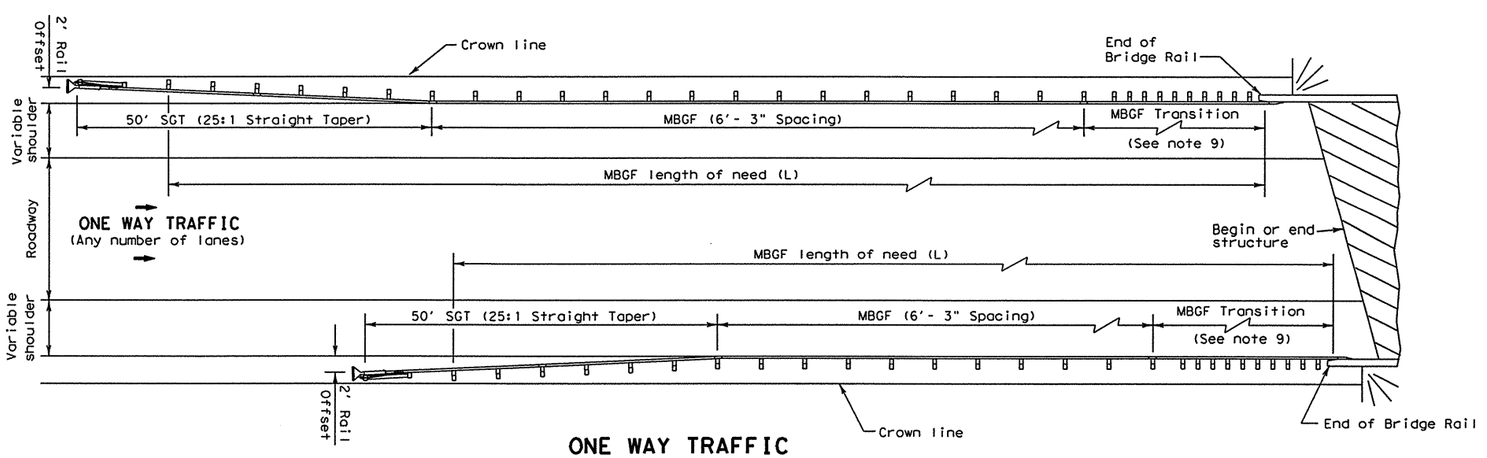

ONE WAY TRAFFIC

GENERAL NOTES

1. For more detail: See MBGF, SGT, and MBGF transition standard sheets.
2. Quantities of metal beam guard fence (MBGF) at individual bridge ends are shown elsewhere in plans.
3. Use average daily traffic (ADT) for the current year to determine MBGF length of need in accordance with the Roadway Design Manual unless otherwise specified. Where significant traffic volume growth is anticipated on low volume (0-750 ADT) highways, use length determinations for the higher volume category.
4. MBGF may not be required to shield departure end of bridge unless other obstacles within the horizontal clearance limits or opposing traffic indicate a MBGF consideration.
5. Terminal anchor sections (T.A.S) are only for downstream end anchorage usage outside the horizontal clearance area of opposing traffic.
6. The crown will be widened to accommodate MBGF. Typically the crown line should be 2'- 0" from the back of the MBGF post. This applies to new construction on new alignment or where existing roadway cross section is to be widened to increase roadway width. This does not apply to rehabilitation work where existing roadway crown width is to be retained (See Typical Cross Section at MBGF).
7. For restrictive width bridges, a 25' tangent section of MBGF should connect to the wingwall. The adjoining MBGF that lies within the roadway (Lanes & Shoulder area) crown should be flared at the rate of 25:1 (Longitudinal : Lateral). Length at these bridges should be determined as stated above or the length necessary to locate the terminal end at a 2'- 0" offset from shoulder edge, whichever is greater.
8. Variations in post spacings and/or the use of spacer blocks or shims may be required by the Engineer in order to accommodate the required rail connection to existing structures.
9. Transition length and post spacing will vary depending on the transition type. Transition type will be shown elsewhere in the plans.

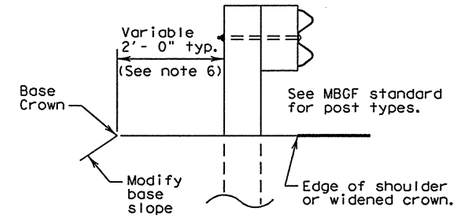

TYPICAL CROSS SECTION AT MBGF

Texas Department of Transportation
Design Division (Roadway)

BRIDGE END DETAILS

BED-02

FILE: bed02.dgn	DN: MAM	CK: MAM	DW: BGD	CK: MAM	NEG:	
© TxDOT SEPTEMBER 1991	DIST	FED REG	FEDERAL AID PROJECT #			SHEET
REVISIONS	PHARR	6				505
	COUNTY		CONTROL	SECT	JOB	HIGHWAY
	HIDALGO		0255	08	091	US 281

DISCLAIMER:
The use of this standard is governed by the "Texas Engineering Practice Act". No warranty of any kind is made by TxDOT for any purpose whatsoever. TxDOT assumes no responsibility for the conversion of this standard to other formats or for incorrect results or damages resulting from its use.

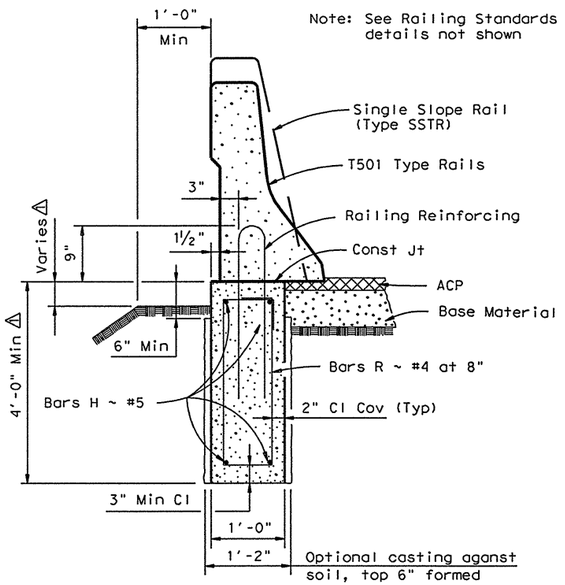

WIDE BASE RAILING
T501, T502, C501, C502 & SSTR

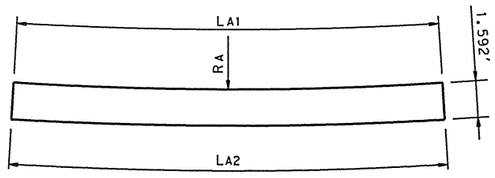

DEVELOPED SURFACE - A
(T501 TYPE)

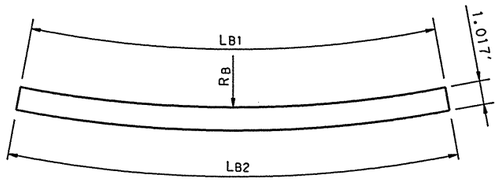

DEVELOPED SURFACE - B
(T501 TYPE)

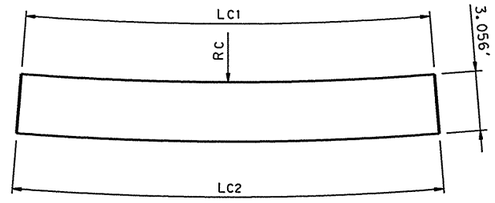

DEVELOPED SURFACE - C
(SSTR)

TABLE OF DEVELOPED SURFACES DIMENSIONS FOR Θ = 90°									
Reference Radius RR (ft) to back of Rail	T501 TYPE RAILS						SSTR		
	Radius	Arc Length		Radius	Arc Length		Radius	Arc Length	
	RA ft	LA1 ft	LA2 ft	RB ft	LB1 ft	LB2 ft	RC ft	LC1 ft	LC2 ft
10	101.50	16.69	16.95	18.82	16.95	17.87	55.67	16.69	17.61
15	149.26	24.54	24.81	27.54	24.81	25.72	81.86	24.54	25.46
20	197.02	32.40	32.66	36.26	32.66	33.58	108.06	32.40	33.31
25	244.78	40.25	40.51	44.98	40.51	41.43	134.25	40.25	41.17
30	292.54	48.11	48.37	53.69	48.37	49.28	160.45	48.11	49.02

RA =9.5525(RR+0.625') RB =1.7438(RR+0.792') Rc =5.2392(RR+0.625')
LA1=1.5708(RR+0.625') LB1=1.5708(RR+0.792') LC1=1.5708(RR+0.625')
LA2=1.5708(RR+0.792') LB2=1.5708(RR+1.375') LC2=1.5708(RR+1.208')

The above arc length dimensions may be linearly ratioed for included θ angles other than 90°. The dimensions are intended as an aid in constructing forms for curved SSTR & Type T501 Railing.

Example: For RR = 10' & 80° ~ LA1= 16.69(8/9)

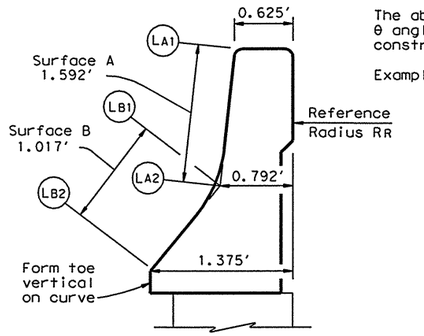

SECTION A-A
(T501 TYPE RAILS)

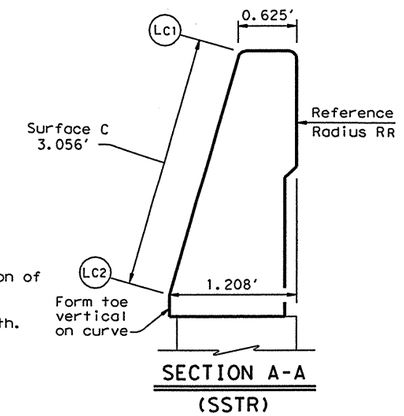

SECTION A-A
(SSTR)

DESIGN NOTES:
The curved end treatment at bridge ends should only be used in areas where traffic speed is 40 mph or less.

GENERAL NOTES:

The foundations indicated are suitable for mounting typical concrete bridge barrier type railings. The design resistance is based on the current AASHTO bridge railing requirements with the assumption of fair to good soil support conditions. Poor soil conditions will require suitably deeper foundations.

The primary use of the curved railing detail is to avoid the necessity of curved MBGF at the ends of bridges adjacent to grade intersections.

All concrete shall be Class C or better and all reinforcement shall be Grade 60.

This detail is intended for use as a guide to unusual railing anchorage situations but may be included in the plans, modified as necessary to apply to specific installations required on the project.

Payment for railing foundations will be by CY of Class C concrete.

The associated bridge railing will be paid for by the linear foot which includes the concrete and reinforcement.

Excavation will be considered subsidiary to other Items.

THE SEAL APPEARING ON THIS DOCUMENT WAS AUTHORIZED BY JOHN M PEREZ, P.E. 66425 ON 06/25/2003.

STATE OF TEXAS · JOHN M. PEREZ · 66425 · REGISTERED PROFESSIONAL ENGINEER

6/26/03

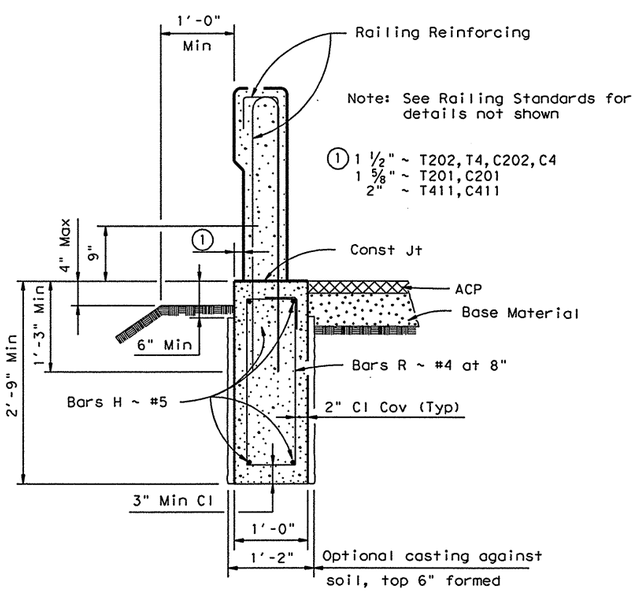

NARROW BASE RAILING
T201, T202, T4, T411, C201, C202, C4 & C411

Note: The above footings have approximateLY 0.10 CY per LF of concrete and 10.77 lbs per LF of reinforcement

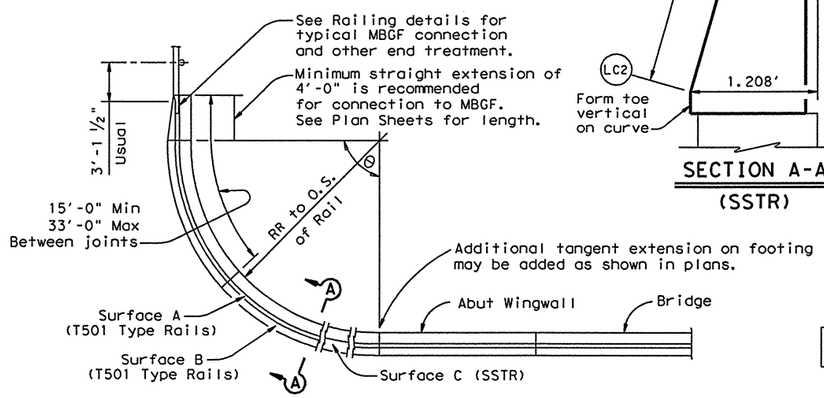

CURVED SSTR & T501 TYPE RAILING AT BRIDGE ENDS

⚠ MODIFIED 5/03 - REVISED DEPTH OF FOUNDATION

ACC: (LV=1,2 for English; 1,3 for Metric)
LEVELS DISPLAYED 1 2 42 44

Texas Department of Transportation
Design Division (Bridge)

TRAFFIC RAILING FOUNDATIONS AND MISCELLANEOUS DETAILS

TRF (MOD)

FILE: rlstd023.dgn	DN: JJP	CK: MPM	DW: DRG	CK: LDS	STD: BS88
©TxDOT January 1996	DIST	FED REG	FEDERAL AID PROJECT		SHEET
REVISIONS	PHARR	6			506
	COUNTY		CONTROL	SECT	JOB	HIGHWAY
	HIDALGO		0255	08	091	US 281

DISCLAIMER:
The use of this standard is governed by the "Texas Engineering Practice Act". No warranty of any kind is made by TxDOT for any purpose whatsoever. TxDOT assumes no responsibility for the conversion of this standard to other formats or for incorrect results or damages resulting from its use.

LEVELS DISPLAYED

TYPE 1

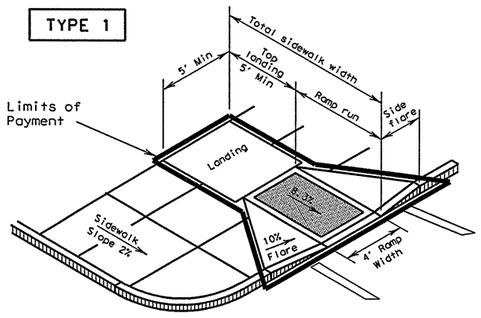

PERPENDICULAR CURB RAMP

TYPE 7

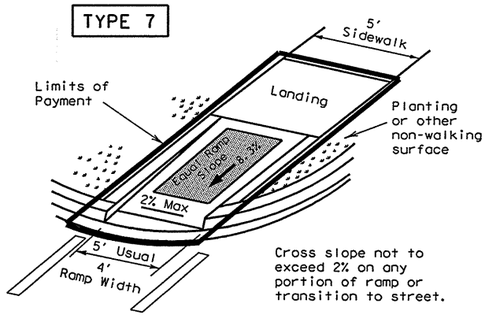

Cross slope not to exceed 2% on any portion of ramp or transition to street.

DIRECTIONAL RAMP WITHIN RADIUS

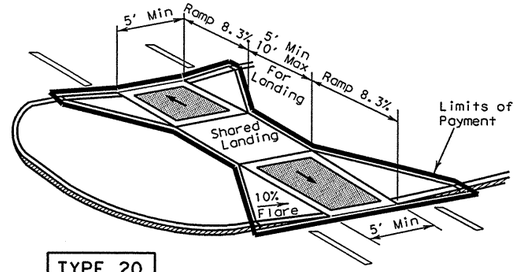

TYPE 20

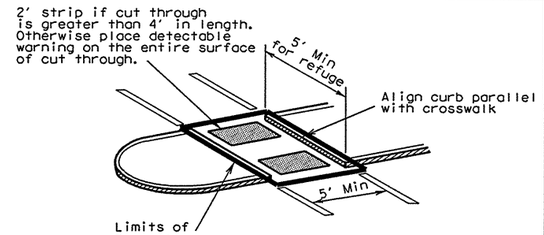

TYPE 21

CURB RAMPS AT MEDIAN ISLANDS

TYPE 2

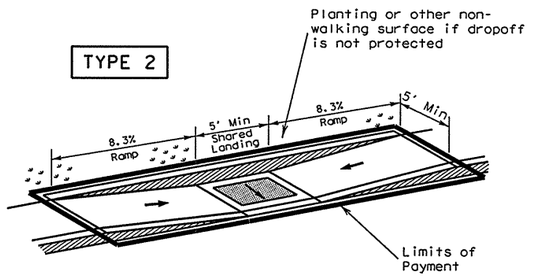

PARALLEL CURB RAMP

TYPE 8

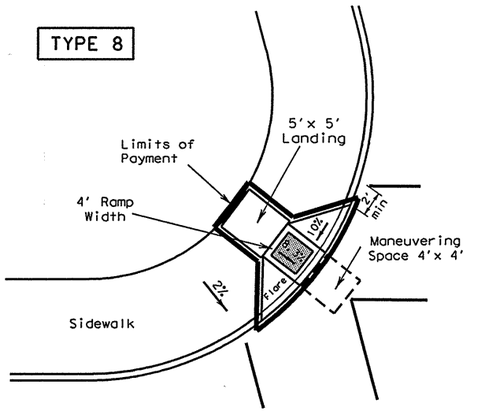

DIAGONAL CURB RAMP (FLARED SIDES)

TYPE 4

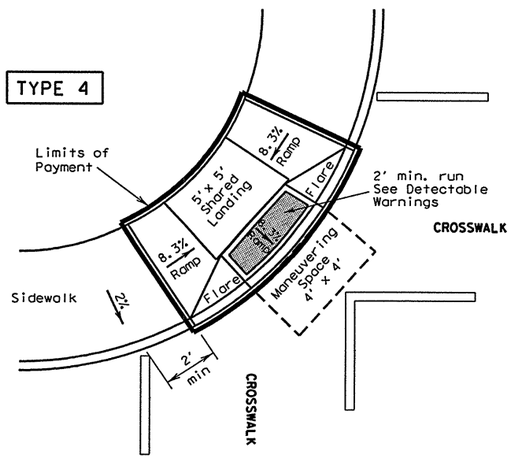

DIAGONAL COMBINATION CURB RAMP
Perpendicular to the Tangent of the Curb Radius and Contained in Crosswalk

TYPE 9

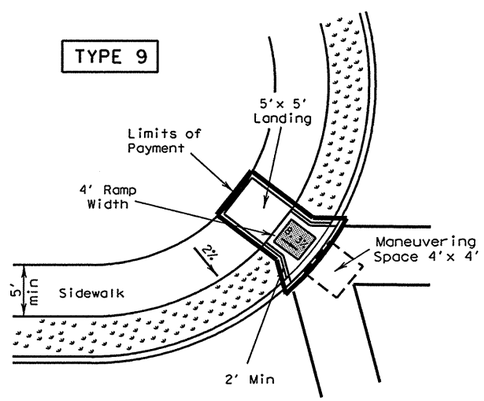

DIAGONAL CURB RAMP (RETURNED CURB)

TYPE 3

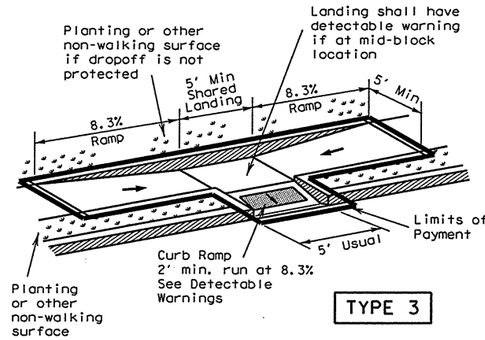

TYPE 6

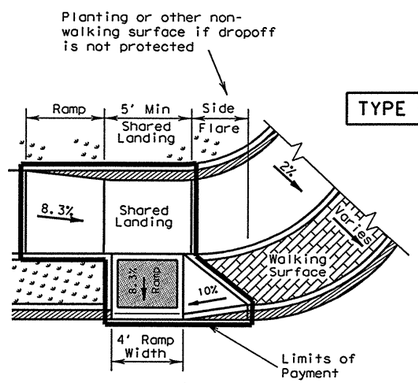

COMBINATION CURB RAMPS

TYPE 22

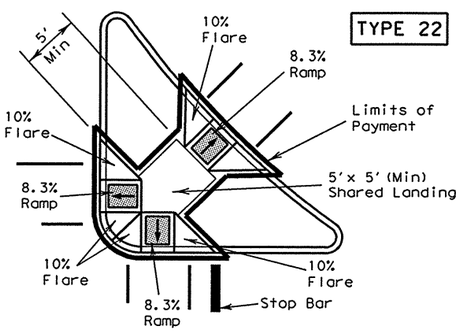

COMBINATION ISLAND RAMPS

General Notes

All slopes are maximum allowable. The least possible slope that will still drain properly should be used. Ramp length or grade of approach sidewalks may be adjusted as directed by the Engineer.

The minimum sidewalk width is 5'. Where a 5' sidewalk can not be provided due to site constraints, a minimum 3' sidewalk with 5'x 5' passing areas at intervals not to exceed 200 ft is required.

Landings shall be 5'x 5' minimum with a maximum 2% slope in any direction.

Maneuvering space at the bottom of curb ramps shall be a minimum of 4'x 4' wholly contained within the crosswalk and wholly outside the parallel vehicular travel path.

Maximum allowable cross slope on sidewalk and ramp surfaces is 2%.

Curb ramps with returned curbs may be used only where pedestrians would not normally walk across the ramp. Otherwise, flared sides shall be provided.

All concrete surfaces shall receive a light broom finish unless noted otherwise in the plans.

Ramp textures must consist of truncated domed surfaces. Textures are required to be detectable underfoot. Surfaces that would allow water to accumulate are prohibited.

Additional information on curb ramp location, design, light reflective value and texture may be found in the current edition of the Texas Accessibility Standards (TAS) prepared and administered by the Texas Department of Licensing and Regulation (TDLR).

Raised medians separate opposing directions of traffic and provide a refuge area for pedestrians unable to cross the entire roadway in the allotted signal phase. To serve as a refuge area, the median should be a minimum of 5' wide. Medians should be designed to provide accessible passage over or through them.

Small channelization islands, which can not provide a minimum 5'x 5' landing at the top of ramps, shall be cut through level with the surface of the street.

Crosswalk dimensions, crosswalk markings and stop bar locations shall be as shown elsewhere in the plans. At intersections where crosswalk markings are not required, ramps shall be aligned with theoretical crosswalks, or as directed by the Engineer.

Existing features that comply with TAS may remain in place unless otherwise shown on the plans.

Handrails are not required on curb ramps. Curb ramps shall be provided wherever on accessible route crosses (penetrates) a curb.

Shaded areas indicate locations of detectable warnings. (Color / light reflective value and texture contrast)

Curb ramps and landings shall be constructed and paid for in accordance with Item, "Curb ramp and Landing". Street curb transitions and curb bevels will be paid for in accordance with Item, "Concrete Curb, Gutter and Combined Curb and Gutter".

Texas Department of Transportation
Design Division (Roadway)

PEDESTRIAN FACILITIES
CURB RAMPS
PED-02

SHEET 1 OF 3

FILE: ped02.dgn	DN: MAM	CK: MAM	DW: BGD	CK:	
© TxDOT March 2002	DIST	FED REG	FEDERAL AID PROJECT #		SHEET
REVISIONS	PHARR	6			507
	COUNTY		CONTROL	SECT	JOB	HIGHWAY
	HIDALGO		0255	08	091	US 281

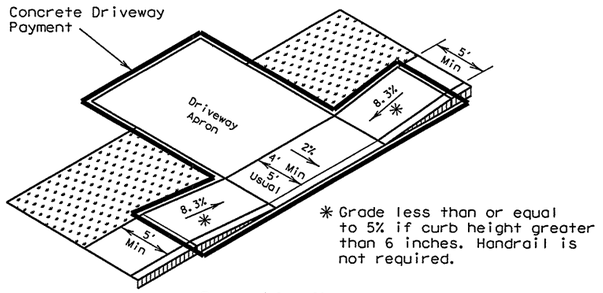

* Grade less than or equal to 5% if curb height greater than 6 inches. Handrail is not required.

Ramp sidewalk

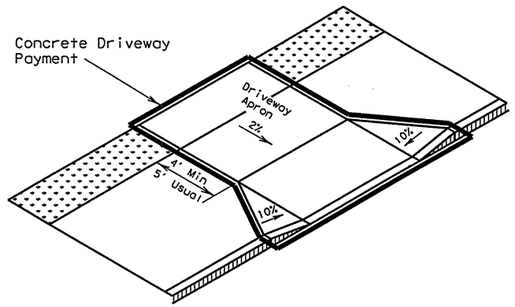

Wide sidewalk

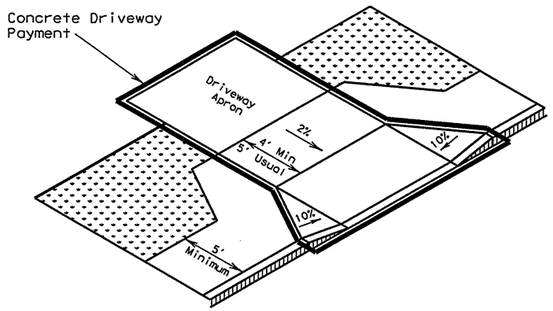

Apron offset sidewalk

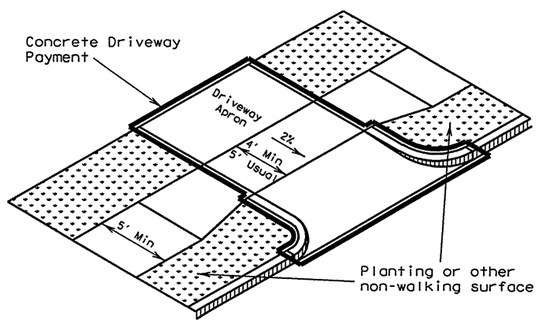

Setback sidewalk

SIDEWALK TREATMENT AT DRIVEWAYS

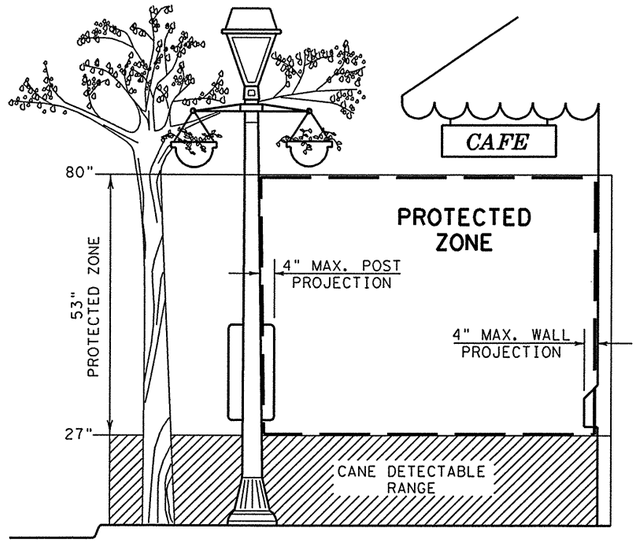

PROTECTED ZONE

In pedestrian circulation area, maximum 4" projection for post or wall mounted objects between 27"and 80" above the surface.

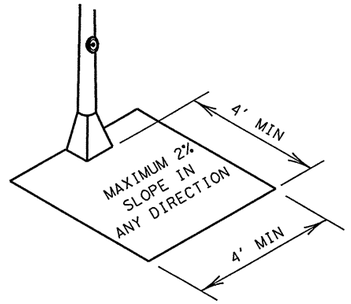

CLEAR GROUND SPACE AT PEDESTRIAN PUSH BUTTON

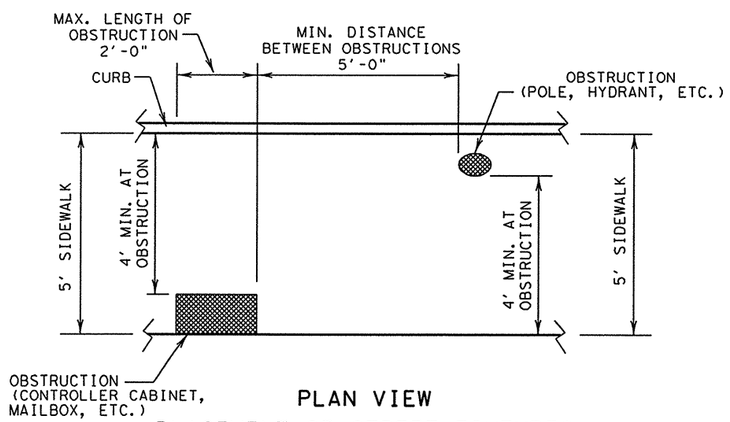

PLAN VIEW

PLACEMENT OF STREET FIXTURES

(ITEMS NOT INTENDED FOR PUBLIC USE. MINIMUM 4' x 4' CLEAR GROUND SPACE REQUIRED AT PUBLIC USE FIXTURES.)

General Notes

All slopes are maximum allowable. The least possible slope that will still drain properly should be used.

Traffic signal or illumination poles, ground boxes, controller boxes, signs, drainage facilities and other items shall be placed so not to obstruct the accessible route.

Usual sidewalk cross slope equals 1.5%. The maximum allowable sidewalk cross slope equals 2%.

Street grades and cross slopes shall be as shown elsewhere in the plans.

Existing features that comply with TAS may remain in place unless otherwise shown on the plans.

Changes in level greater than ¼ inch are not permitted.

Any part of the accessible route with a slope greater than 1:20 (5%) shall be considered a ramp. If a ramp has a rise greater than 6 inches or a horizontal projection greater than 72 inches, then it shall have handrails on both sides, with the following exceptions:

At ramp sidewalks shown at far left.

Handrails are not required on curb ramps. Curb ramps shall be provided wherever an accessible route crosses (penetrates) a curb.

The least possible grade should be used to maximize accessibility. Where structurally impractical to achieve TAS compliance, the running slope of sidewalks and crosswalks, within the public right of way, may follow the grade of the parallel roadway without invoking Texas Accessibility Standards (TAS) variances for landings or handrails. Where a continuous grade greater than 5% must be provided, handrails may be desirable on one or both sides of the sidewalk to improve accessibility. Handrails may also be needed to protect pedestrians from potentially hazardous conditions.

Parabolic crowns may require adjustment in crosswalk areas to limit the crosswalk grade to 5%.

Driveways and turnouts shall be constructed and paid for in accordance with Item, "Driveways and Turnouts". Sidewalks shall be constructed and paid for in accordance with Item, "Sidewalks".

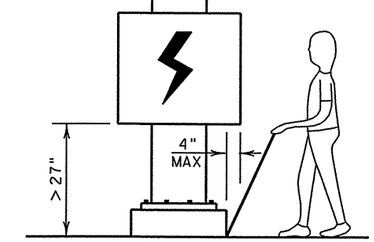

When an obstruction of a height greater than 27" from the surface would create a protrusion of more than 4" into the pedestrian circulation area, construct additional curb or foundation at the bottom to provide a maximum 4" overhang.

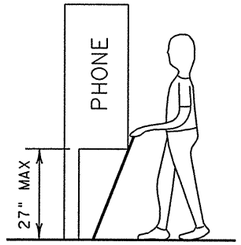

Protruding objects of a height ≤ 27" are detectable by cane and do not require additional treatment.

DETECTION BARRIER FOR VERTICAL CLEARANCE < 80"

DISCLAIMER:
The use of this standard is governed by the "Texas Engineering Practice Act". No warranty of any kind is made by TxDOT for any purpose whatsoever. TxDOT assumes no responsibility for the conversion of this standard to other formats or for incorrect results or damages resulting from its use.

LEVELS DISPLAYED
1

Texas Department of Transportation
Design Division (Roadway)

PEDESTRIAN FACILITIES
SIDEWALKS

PED-02

FILE: ped02.dgn	DN: MAM	CK: MAM	DW: BGD	CK:					
© TxDOT March 2002	DIST	FED REG	FEDERAL AID PROJECT •					SHEET	
REVISIONS	PHARR	6						508	
	COUNTY				CONTROL	SECT	JOB	HIGHWAY	
	HIDALGO				0255	08	091	US 281	

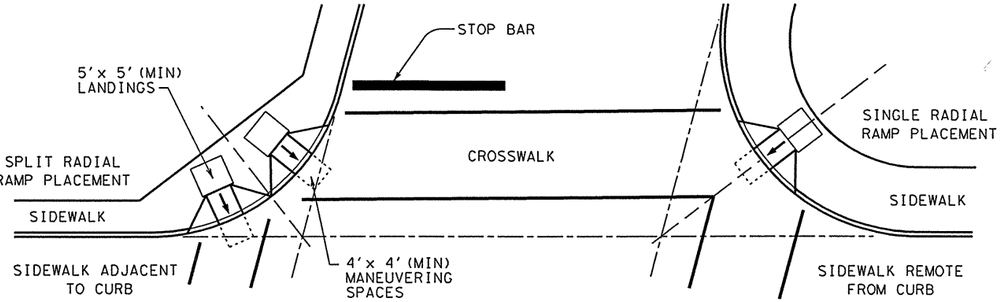

SKEWED INTERSECTION WITH "LARGE" RADIUS

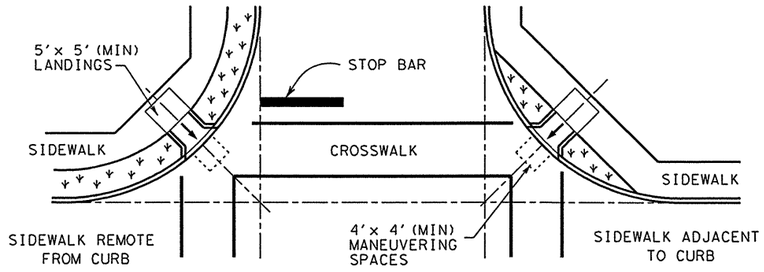

NORMAL INTERSECTION WITH "LARGE" RADIUS

General Notes

Street grades and cross slopes shall be as shown elsewhere in the plans.

Ramps are shown here without detectable warnings for simplicity. Detectable warnings are required at the locations shown on the PED Standard (Sheet 1 of 3) and in accordance with the details shown below.

Small channelization islands, which can not provide a minimum 5' x 5' landing at the top of ramps, shall be cut through level with the surface of the street.

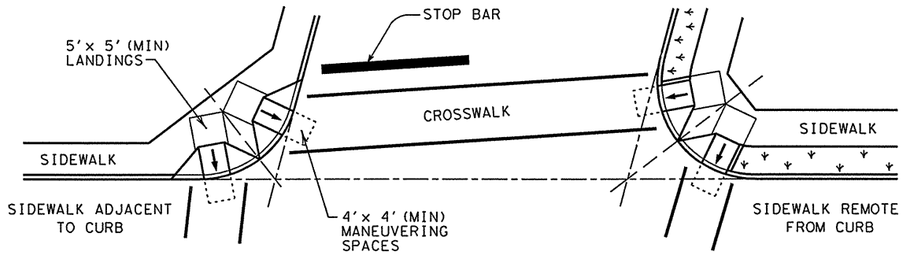

SKEWED INTERSECTION WITH "SMALL" RADIUS

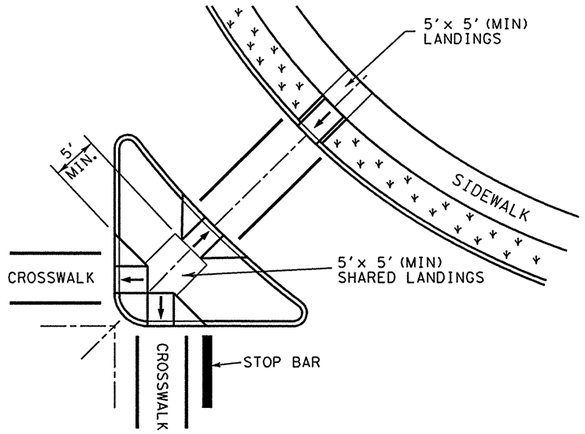

AT INTERSECTION
W/FREE RIGHT TURN & ISLAND

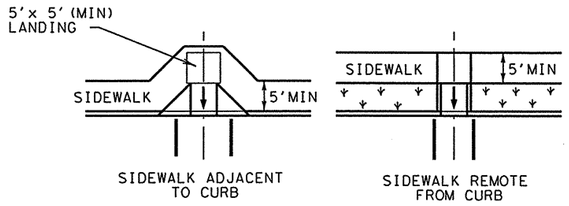

MID-BLOCK PLACEMENT
PERPENDICULAR RAMPS

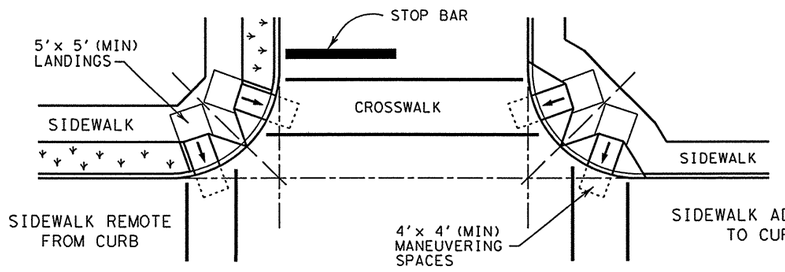

NORMAL INTERSECTION WITH "SMALL" RADIUS

TYPICAL CROSSING LAYOUTS

SEE SHEET 1 OF 3 FOR DETAILS AND DIMENSIONS

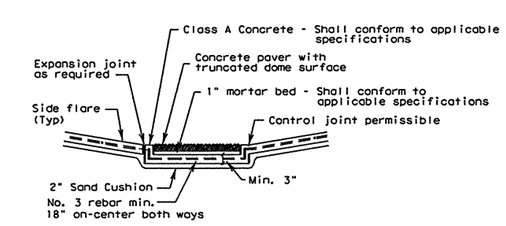

Section A-A

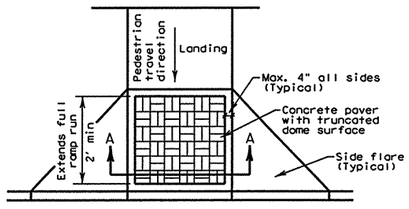

TYPE A
Truncated Dome Pattern Curb Ramp

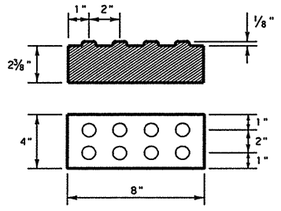

Concrete paver with truncated dome surface

DETECTABLE WARNINGS

General Notes

Concrete paver units shall meet all requirements of ASTM C-936, C-33, and shall be laid in a two by two unit basket weave pattern, unless shown otherwise in the plans.

Domes shall be aligned in the direction of pedestrian travel.

Concrete paver units shall have a truncated dome top surface for detectable warning to pedestrians.

Concrete paver unit color for the ramp shall be a contrasting color that provides a light reflective value that significantly contrasts with the adjacent surfaces. The color of the concrete paver units shall be shown elsewhere in the plans. (Adjacent surfaces include side flares).

Concrete paver units shall be saw cut only and any cut unit shall not be less than 25 percent of a full unit.

Texas Department of Transportation
Design Division (Roadway)

PEDESTRIAN FACILITIES

INTERSECTION LAYOUTS AND DETECTABLE WARNINGS

PED-02

SHEET 3 OF 3

FILE: ped02.dgn	DN: MAM	CK: MAM	DW: BGD	CK:
© TxDOT March 2002	DIST	FED REG	FEDERAL AID PROJECT #	SHEET
REVISIONS	PHARR	6		509
	COUNTY		CONTROL	SECT	JOB	HIGHWAY
	HIDALGO		0255	08	091	US 281

DISCLAIMER:
The use of this standard is governed by the "Texas Engineering Practice Act". No warranty of any kind is made by TxDOT for any purpose whatsoever. TxDOT assumes no responsibility for the conversion of this standard to other formats or for incorrect results or damages resulting from its use.

LEVELS DISPLAYED
1

PLAN

TOP OF INLET DETAIL

GUTTER DEPRESSION FOR 5 FOOT INLET

ELEVATION OF EXTENSION

INSET 1

SECTION "A-A"

SECTION "C-C"

SECTION "B-B"

DISCLAIMER:
The use of this standard is governed by the "Texas Engineering Practice Act". No warranty of any kind is made by TxDOT for any purpose whatsoever. TxDOT assumes no responsibility for the conversion of this standard to other formats or for incorrect results or damages resulting from its use.

LEVELS DISPLAYED

1			4	5	6	7	8	9	10	11	12	13	14	15	16
17	18	19	20	21	22	23	24	25	26	27	28	29	30	31	32
33	34	35	36	37	38	39	40	41	42	43	44	45	46	47	48
49	50	51	52	53	54	55	56	57	58	59	60	61	62	63	

Texas Department of Transportation
Design Division (Roadway)

BARRIER WALL INLET

TYPE I

BWI-99

FILE: BWI99.DGN	DN:	CK:	DW: RAR	CK:	
©TxDOT MARCH 1999	DIST	FED REG	FEDERAL AID PROJECT ●		SHEET
REVISIONS	PHARR	6			510
	COUNTY		CONTROL	SECT / JOB	HIGHWAY
	HIDALGO		0255	08 / 091	US 281

PLAN

TRAFFIC

ELEVATION

QUADGUARD SYSTEM DETAIL

Note: Monorail & Backup Assembly must be straight within one half inch.

PLAN

TRAFFIC

ELEVATION

MONORAIL ASSEMBLY DETAIL

(See the manufacturer's shop drawings for monorail hardware installation.)

DESIGN SPEED (MPH)	NO. OF BAYS	UNIT EFFECTIVE LENGTH	PAD LENGTH TYPE A	PAD LENGTH TYPE B
45 OR LESS	3	11'- 8"	12'- 0"	11'- 6"
50	4	14'- 8"	15'- 0"	14'- 6"
55	5	17'- 8"	18'- 0"	17'- 6"
60	6	20'- 8"	21'- 0"	20'- 6"
65	7	23'- 8"	24'- 0"	23'- 6"
70	9	29'- 8"	30'- 0"	29'- 6"
75	10	32'- 8"	33'- 0"	32'- 6"

Additional bays may be added if special considerations warrant and site conditions will accommodate additional length.

QUAD(N) units are available in 24", 30", or 36" widths from 3 to 12 bays. Unit width, number of bays, and backup type shall be specified elsewhere in the plans.

TYPE A
TENSION STRUT BACKUP

TENSION STRUT: Consists of diagonal struts, connections, and accessories, as detailed by the Manufacturer, located at the rear of the QUAD unit. Typical application is for QUAD units attached to double-face quardrail. When used, a 4'-0"x 4'-0"x 3'-0" concrete toe anchor block shall be provided beneath the front portion of the concrete pad, except where the QUAD unit is to be placed on continuously reinforced concrete pavement or bridge deck (7" minimum, 4,000 p.s.i.) or non-reinforced concrete pavement (8" minimum, 4,000 p.s.i.)

TYPE CZ
CONSTRUCTION ZONE UNIT

CONSTRUCTION ZONE UNIT: Details for the components will be included on the manufacturer's shop drawings furnished to the Engineer. (3 to 9 Bay lengths)

Anchorage requirements are as follows: (Type CZ only)

WITH FOUNDATION TYPE:	ANCHOR WITH:
Minimum six inch portland cement concrete pad	MP-3 polyester anchoring system with 7" studs, 5.5" embedment
Minimum three inch asphaltic concrete over minimum three inch portland cement concrete	MP-3 polyester anchoring system with 18" studs, 16.5" embedment
Minimum six inch asphaltic concrete over minimum six inch compacted base	MP-3 polyester anchoring system with 18" studs, 16.5" embedment
Minimum eight inch asphaltic concrete	MP-3 polyester anchoring system with 18" studs, 16.5" embedment

If the unit is anchored to asphaltic concrete, it should be relocated to fresh, undisturbed asphalt and re-anchored after each impact to ensure adequate future performance. A zero clearance between the backup and barrier wall is recommended in no case should this distance exceed 7 inches.

GENERAL NOTES

1. For bi-directional traffic, appropriate transition panels will be required.
2. Details of components for the QUAD and backups and reinforcing details will be shown on the manufacturer's shop drawings furnished to the Engineer.
3. Concrete shall be class "S" with a minimum compressive strength of 4,000 p.s.i.
4. If the cross-slope varies more than 2% over the length of the system, the concrete pad will require levelling. Maximum permissible cross-slope is 8%.
5. The installation area should be free from curbs, elevated objects, or depressions.
6. The QUAD system should be approximately parallel with the barrier or ℄ of merging barriers.
7. Unit width selected should be adequate to protect an errant vehicle travelling at 15 degrees to the roadway from the face or corner of the fixed object.
8. For the permanent steel backup, (Type A) the distance between the back of backup and the barrier wall should not exceed 7 inches in any case.

"B"	"W"
24"	24"
30"	30"
36"	36"

TYPE B
CONCRETE BACKUP

CAST-IN-PLACE CONCRETE WALL BACKUP: If cast-in-place structures such as bridge parapets, columns, or special walls are used as backup structures, then intermediate walls shall be provided between the structures and the QUAD unit. Intermediate walls shall be equal in height and width to the QUAD unit and reinforced with a steel cage. A cast-in-place transition section from concrete barrier may be used. Reinforcing steel should transition from the standard barrier section to the standard backup section. Details for the intermediate walls, cast-in-place transition sections, or other modifications will be shown elsewhere in the plans. Concrete wall backups may be used on continuously reinforced concrete pavement pavement or bridge deck (7" minimum, 4,000 p.s.i)or non-reinforced concrete pavement (8" minimum, 4,000 p.s.i.) In those cases, all vertical steel will be doweled (5 inch minimum) into existing decks or located and placed prior to pouring proposed decks as approved by the Engineer.

DISCLAIMER:
The use of this standard is governed by the "Texas Engineering Practice Act". No warranty of any kind is made by TxDOT for any purpose whatsoever. TxDOT assumes no responsibility for the conversion of this standard to other formats or for incorrect results or damages resulting from its use.

LEVELS DISPLAYED															
1		3	4	5	6	7	8	9	10	11	12	13	14	15	16
17	18	19	20	21	22	23	24	25	26	27	28	29	30	31	32
33	34	35	36	37	38	39	40	41	42	43	44	45	46	47	48
49	50	51	52	53	54	55	56	57	58	59	60	61	62	63	

Texas Department of Transportation
Design Division (Roadway)

QUADGUARD SYSTEM (NARROW)

QUAD(N)-99

FILE: quadn99.dgn	DN: MAM	CK: MAM	DW: BGD	CK:	NEG:
© TxDOT FEBRUARY 1998	DIST	FED REG	FEDERAL AID PROJECT ●		SHEET
REVISIONS	PHARR	6			510A
	COUNTY		CONTROL	SECT / JOB	HIGHWAY
	HIDALGO		0255	08 / 091	US 281

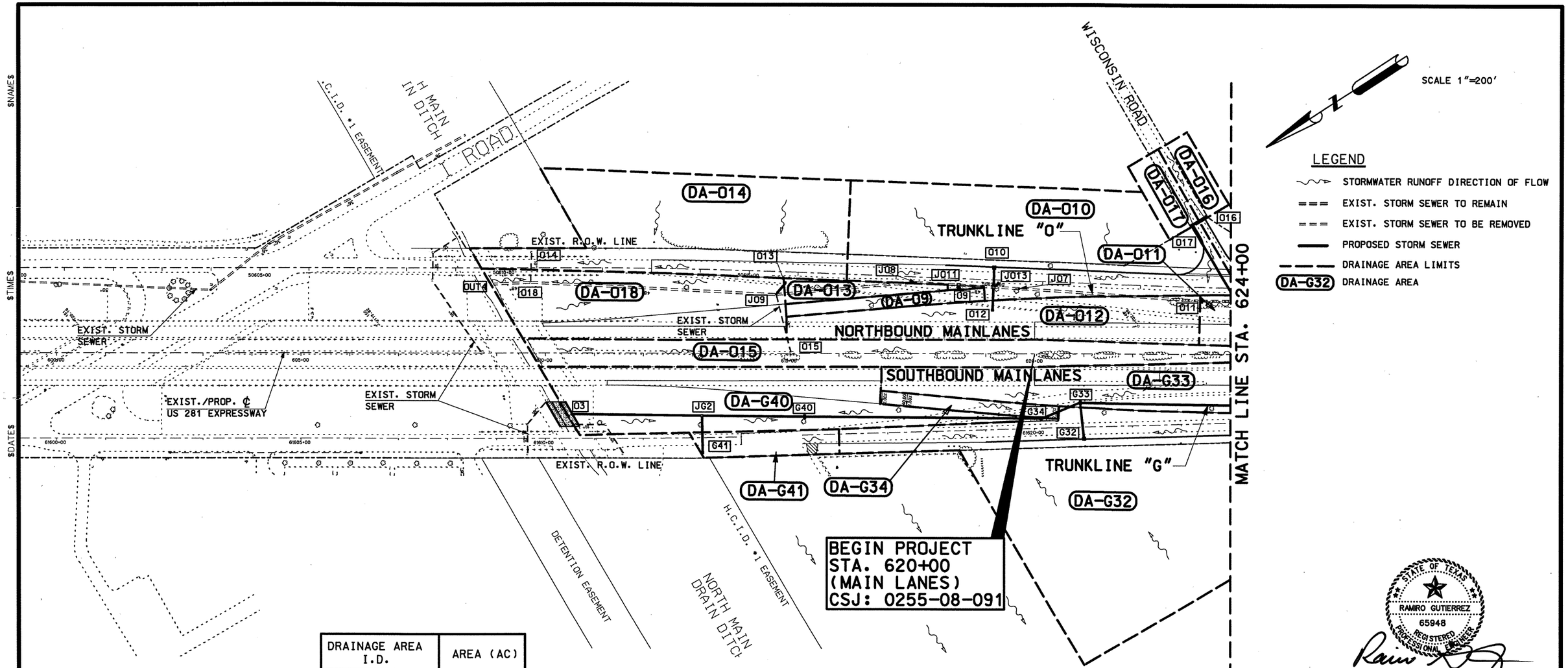

SCALE 1"=200'

LEGEND

- STORMWATER RUNOFF DIRECTION OF FLOW
- EXIST. STORM SEWER TO REMAIN
- EXIST. STORM SEWER TO BE REMOVED
- PROPOSED STORM SEWER
- DRAINAGE AREA LIMITS
- DA-G32 DRAINAGE AREA

DRAINAGE AREA I.D.	AREA (AC)
DA-G32	6.31 AC
DA-G33	1.77 AC
DA-G34	0.22 AC
DA-G40	1.46 AC
DA-G41	0.33 AC
DA-09	0.26 AC
DA-010	3.68 AC
DA-011	0.20 AC
DA-012	1.53 AC
DA-013	0.25 AC
DA-014	2.89 AC
DA-015	1.64 AC
DA-016	0.27 AC
DA-017	0.27 AC
DA-018	1.78 AC

NOTE:
REFER TO THE HYDRAULIC DATA SHEETS FOR THE HYDRAULIC COMPUTATION.

STATE OF TEXAS
RAMIRO GUTIERREZ
65948
REGISTERED PROFESSIONAL ENGINEER

THE SEAL APPEARING ON THIS DOCUMENT WAS AUTHORIZED BY RAMIRO GUTIERREZ, P.E. 65948

DATE: 6-23-03

ALTERATION OF A SEALED DOCUMENT WITHOUT PROPER NOTIFICATION TO THE RESPONSIBLE ENGINEER IS AN OFFENSE UNDER THE TEXAS ENGINEERING PRATICE LAW.

Parsons Brinckerhoff Quade & Douglas Inc.

R. Gutierrez Engineering Corporation

Texas Department of Transportation

©2003 by TxDOT

US 281
DRAINAGE AREA MAP

SHEET 1 OF 11

DESIGNED:	FED. RD DIV. No.	STATE	FEDERAL AID PROJECT No.			HIGHWAY No.
CHECKED:	6	TEXAS				US 281
DRAWN:	STATE DISTRICT	COUNTY	CONTROL No.	SECTION No.	JOB No.	SHEET No.
CHECKED:	21	HIDALGO	0255	08	091	511

$FILE$ 281dam01.dgn

$NAME$
$TIME$
$DATE$

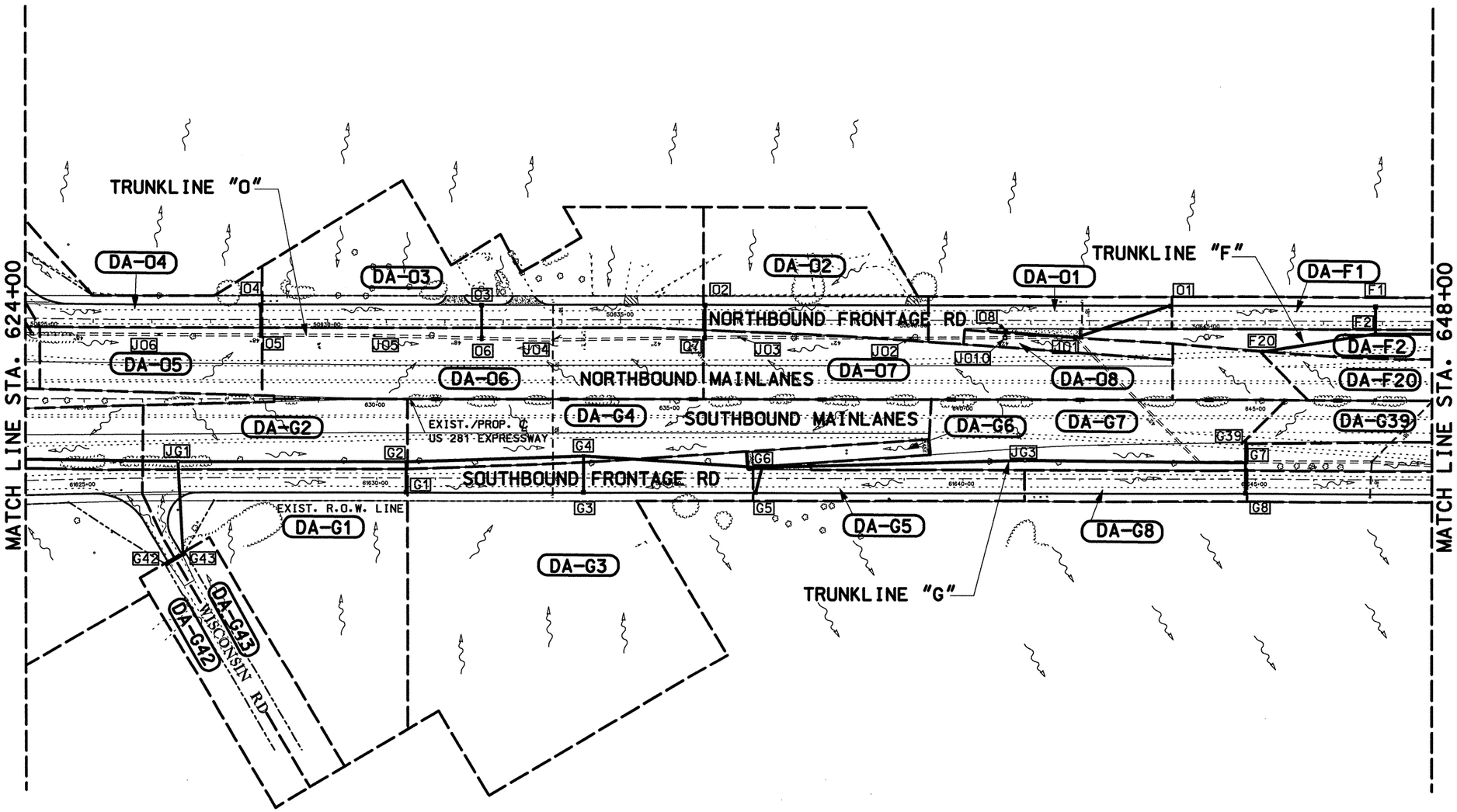

SCALE 1"=200'

LEGEND

- STORMWATER RUNOFF DIRECTION OF FLOW
- EXIST. STORM SEWER TO REMAIN
- EXIST. STORM SEWER TO BE REMOVED
- PROPOSED STORM SEWER
- DRAINAGE AREA LIMITS
- (DA-G32) DRAINAGE AREA

DRAINAGE AREA I.D.	AREA (AC)
DA-G1	3.14 AC
DA-G2	1.08 AC
DA-G3	5.33 AC
DA-G4	1.96 AC
DA-G5	0.58 AC
DA-G6	0.20 AC
DA-G7	1.62 AC
DA-G8	0.46 AC
DA-G39	0.73 AC
DA-G42	0.71 AC
DA-G43	0.72 AC

DRAINAGE AREA I.D.	AREA (AC)
DA-F1	0.87 AC
DA-F2	0.75 AC
DA-F20	0.69 AC
DA-01	0.59 AC
DA-02	1.69 AC
DA-03	2.95 AC
DA-04	0.78 AC
DA-05	1.45 AC
DA-06	1.07 AC
DA-07	2.33 AC
DA-08	0.58 AC

NOTE:
REFER TO THE HYDRAULIC DATA SHEETS FOR THE HYDRAULIC COMPUTATION.

STATE OF TEXAS
RAMIRO GUTIERREZ
65948
REGISTERED PROFESSIONAL ENGINEER

THE SEAL APPEARING ON THIS DOCUMENT WAS AUTHORIZED BY RAMIRO GUTIERREZ, P.E. 65948

DATE: 6-23-03

ALTERATION OF A SEALED DOCUMENT WITHOUT PROPER NOTIFICATION TO THE RESPONSIBLE ENGINEER IS AN OFFENSE UNDER THE TEXAS ENGINEERING PRATICE LAW.

Parsons Brinckerhoff Quade & Douglas Inc.

R. Gutierrez Engineering Corporation

Texas Department of Transportation

©2003 by TxDOT

US 281
DRAINAGE AREA MAP

SHEET 2 OF 11

DESIGNED:	FED. RD DIV. No.	STATE	FEDERAL AID PROJECT No.			HIGHWAY No.
CHECKED:	6	TEXAS				US 281
DRAWN:	STATE DISTRICT	COUNTY	CONTROL No.	SECTION No.	JOB No.	SHEET No.
CHECKED:	21	HIDALGO	0255	08	091	512

$FILE$281dam02.dgn

$NAME$
$TIME$
$DATE$

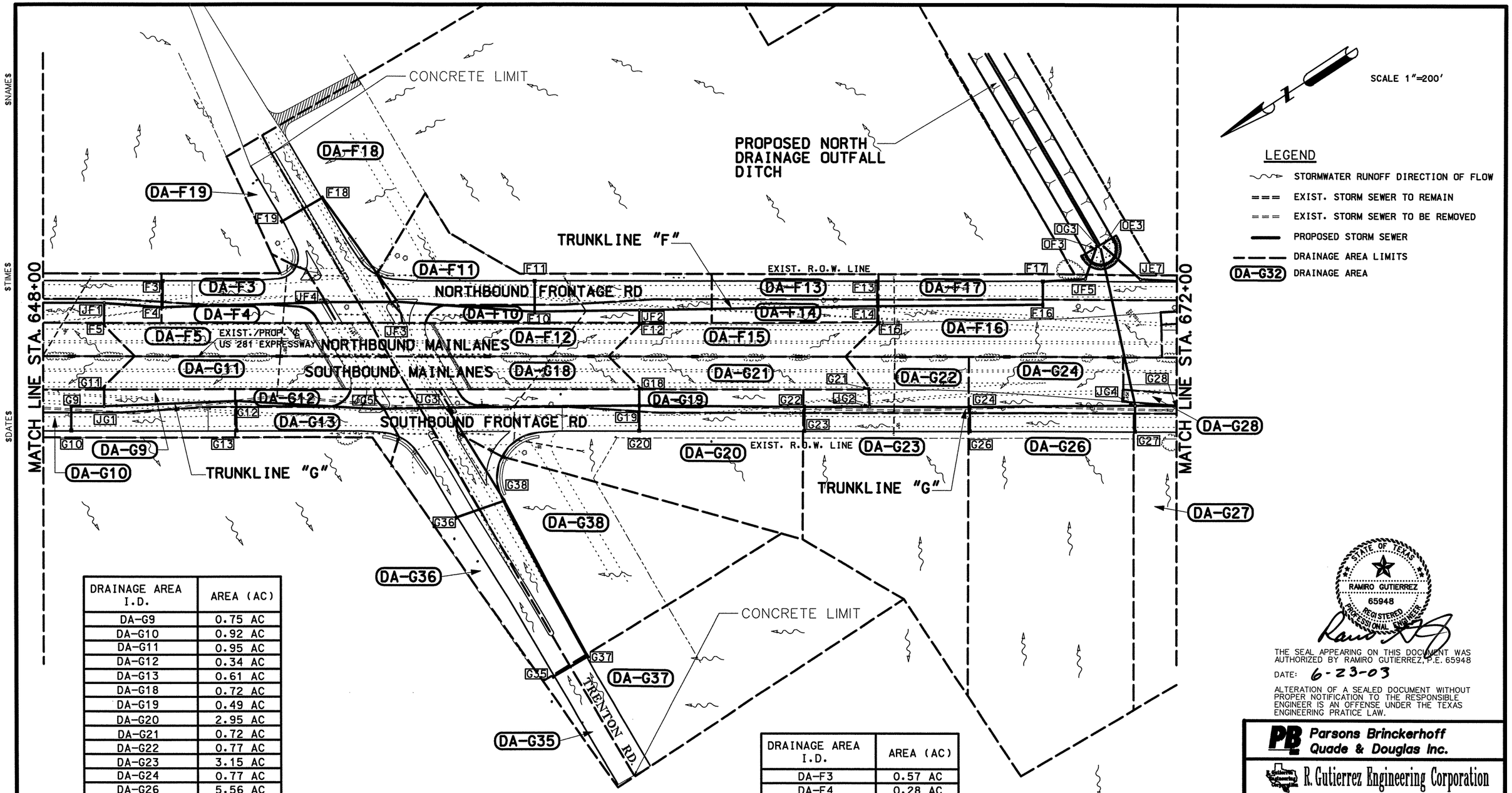

SCALE 1"=200'

LEGEND

- STORMWATER RUNOFF DIRECTION OF FLOW
- EXIST. STORM SEWER TO REMAIN
- EXIST. STORM SEWER TO BE REMOVED
- PROPOSED STORM SEWER
- DRAINAGE AREA LIMITS
- DA-G32 DRAINAGE AREA

DRAINAGE AREA I.D.	AREA (AC)
DA-G9	0.75 AC
DA-G10	0.92 AC
DA-G11	0.95 AC
DA-G12	0.34 AC
DA-G13	0.61 AC
DA-G18	0.72 AC
DA-G19	0.49 AC
DA-G20	2.95 AC
DA-G21	0.72 AC
DA-G22	0.77 AC
DA-G23	3.15 AC
DA-G24	0.77 AC
DA-G26	5.56 AC
DA-G27	4.92 AC
DA-G28	0.18 AC
DA-G35	0.34 AC
DA-G36	1.34 AC
DA-G37	3.67 AC
DA-G38	3.46 AC

DRAINAGE AREA I.D.	AREA (AC)
DA-F3	0.57 AC
DA-F4	0.28 AC
DA-F5	0.92 AC
DA-F10	0.64 AC
DA-F11	1.56 AC
DA-F12	0.82 AC
DA-F13	0.44 AC
DA-F14	0.39 AC
DA-F15	0.83 AC
DA-F16	1.78 AC
DA-F17	0.86 AC
DA-F18	1.93 AC
DA-F19	0.82 AC

NOTE:
REFER TO THE HYDRAULIC DATA SHEETS FOR THE HYDRAULIC COMPUTATION.

STATE OF TEXAS
RAMIRO GUTIERREZ
65948
REGISTERED PROFESSIONAL ENGINEER

THE SEAL APPEARING ON THIS DOCUMENT WAS AUTHORIZED BY RAMIRO GUTIERREZ, P.E. 65948

DATE: 6-23-03

ALTERATION OF A SEALED DOCUMENT WITHOUT PROPER NOTIFICATION TO THE RESPONSIBLE ENGINEER IS AN OFFENSE UNDER THE TEXAS ENGINEERING PRATICE LAW.

Parsons Brinckerhoff Quade & Douglas Inc.

R. Gutierrez Engineering Corporation

Texas Department of Transportation

©2003 by TxDOT

US 281
DRAINAGE AREA MAP
SHEET 3 OF 11

DESIGNED:	FED. RD DIV. No.	STATE	FEDERAL AID PROJECT No.		HIGHWAY No.	
CHECKED:	6	TEXAS			US 281	
DRAWN:	STATE DISTRICT	COUNTY	CONTROL No.	SECTION No.	JOB No.	SHEET No.
CHECKED:	21	HIDALGO	0255	08	091	513

$FILE$81dam03.dgn

$NAME$
$TIME$
$DATE$

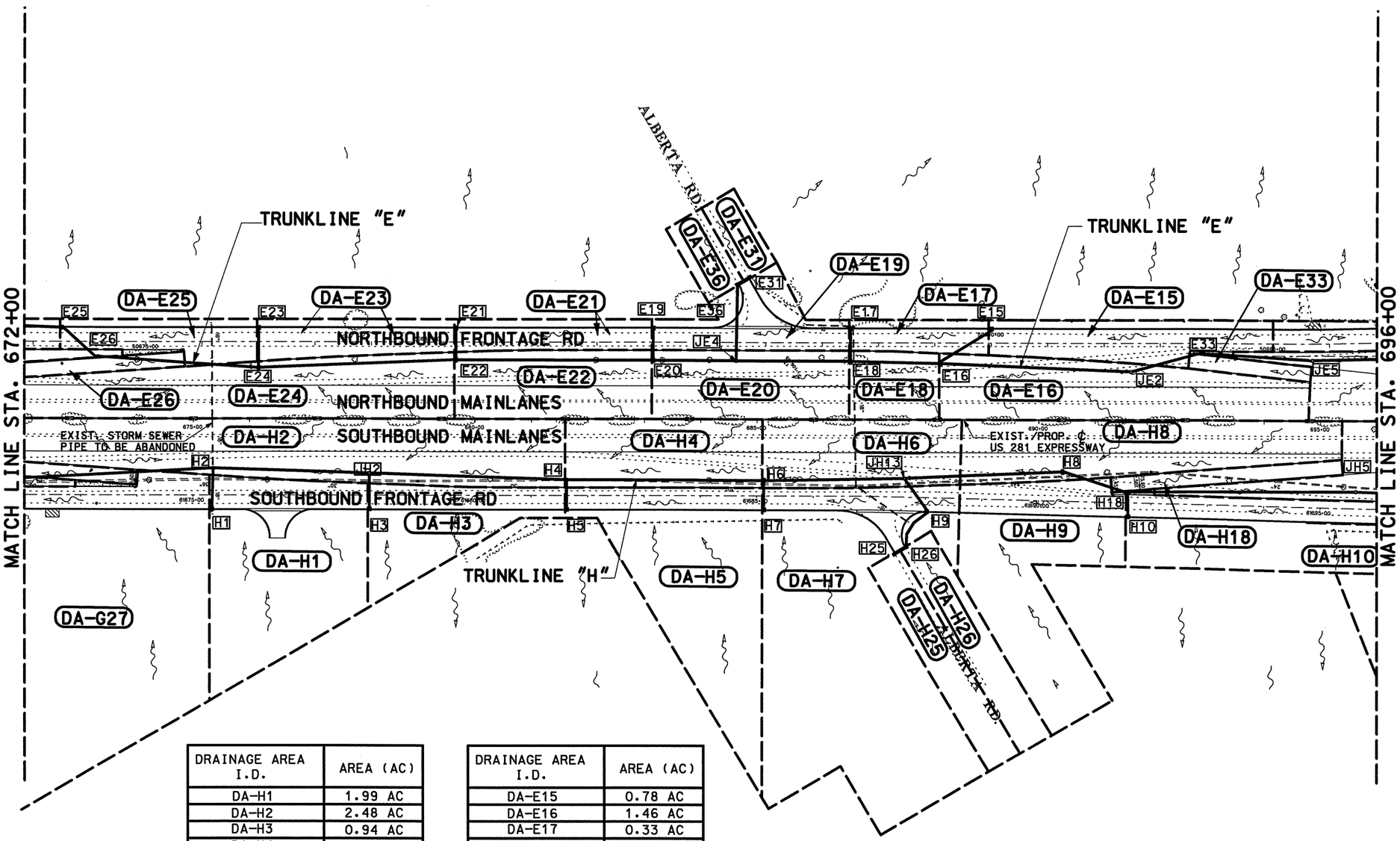

SCALE 1"=200'

LEGEND

- STORMWATER RUNOFF DIRECTION OF FLOW
- EXIST. STORM SEWER TO REMAIN
- EXIST. STORM SEWER TO BE REMOVED
- PROPOSED STORM SEWER
- DRAINAGE AREA LIMITS
- (DA-G32) DRAINAGE AREA

DRAINAGE AREA I.D.	AREA (AC)
DA-H1	1.99 AC
DA-H2	2.48 AC
DA-H3	0.94 AC
DA-H4	0.96 AC
DA-H5	2.10 AC
DA-H6	0.95 AC
DA-H7	3.90 AC
DA-H8	1.44 AC
DA-H9	1.87 AC
DA-H10	1.49 AC
DA-H18	0.20 AC
DA-H25	0.62 AC
DA-H26	0.62 AC

DRAINAGE AREA I.D.	AREA (AC)
DA-E15	0.78 AC
DA-E16	1.46 AC
DA-E17	0.33 AC
DA-E18	0.45 AC
DA-E19	0.65 AC
DA-E20	0.97 AC
DA-E21	0.43 AC
DA-E22	0.94 AC
DA-E23	0.52 AC
DA-E24	1.72 AC
DA-E25	0.52 AC
DA-E26	0.26 AC
DA-E31	0.23 AC
DA-E33	0.12 AC
DA-E36	0.25 AC

NOTE:
REFER TO THE HYDRAULIC DATA SHEETS FOR THE HYDRAULIC COMPUTATION.

STATE OF TEXAS
RAMIRO GUTIERREZ
65948
REGISTERED PROFESSIONAL ENGINEER

THE SEAL APPEARING ON THIS DOCUMENT WAS AUTHORIZED BY RAMIRO GUTIERREZ, P.E. 65948

DATE: 6-23-03

ALTERATION OF A SEALED DOCUMENT WITHOUT PROPER NOTIFICATION TO THE RESPONSIBLE ENGINEER IS AN OFFENSE UNDER THE TEXAS ENGINEERING PRATICE LAW.

Parsons Brinckerhoff Quade & Douglas Inc.

R. Gutierrez Engineering Corporation

Texas Department of Transportation

© 2003 by TxDOT

US 281
DRAINAGE AREA MAP

SHEET 4 OF 11

DESIGNED:	FED. RD DIV. No.	STATE	FEDERAL AID PROJECT No.			HIGHWAY No.	
CHECKED:	6	TEXAS				US 281	
DRAWN:	STATE DISTRICT	COUNTY	CONTROL No.	SECTION No.	JOB No.	SHEET No.	
CHECKED:	21	HIDALGO	0255	08	091	514	

$FILE$81dam04.dgn

$NAME$
$TIME$
$DATE$

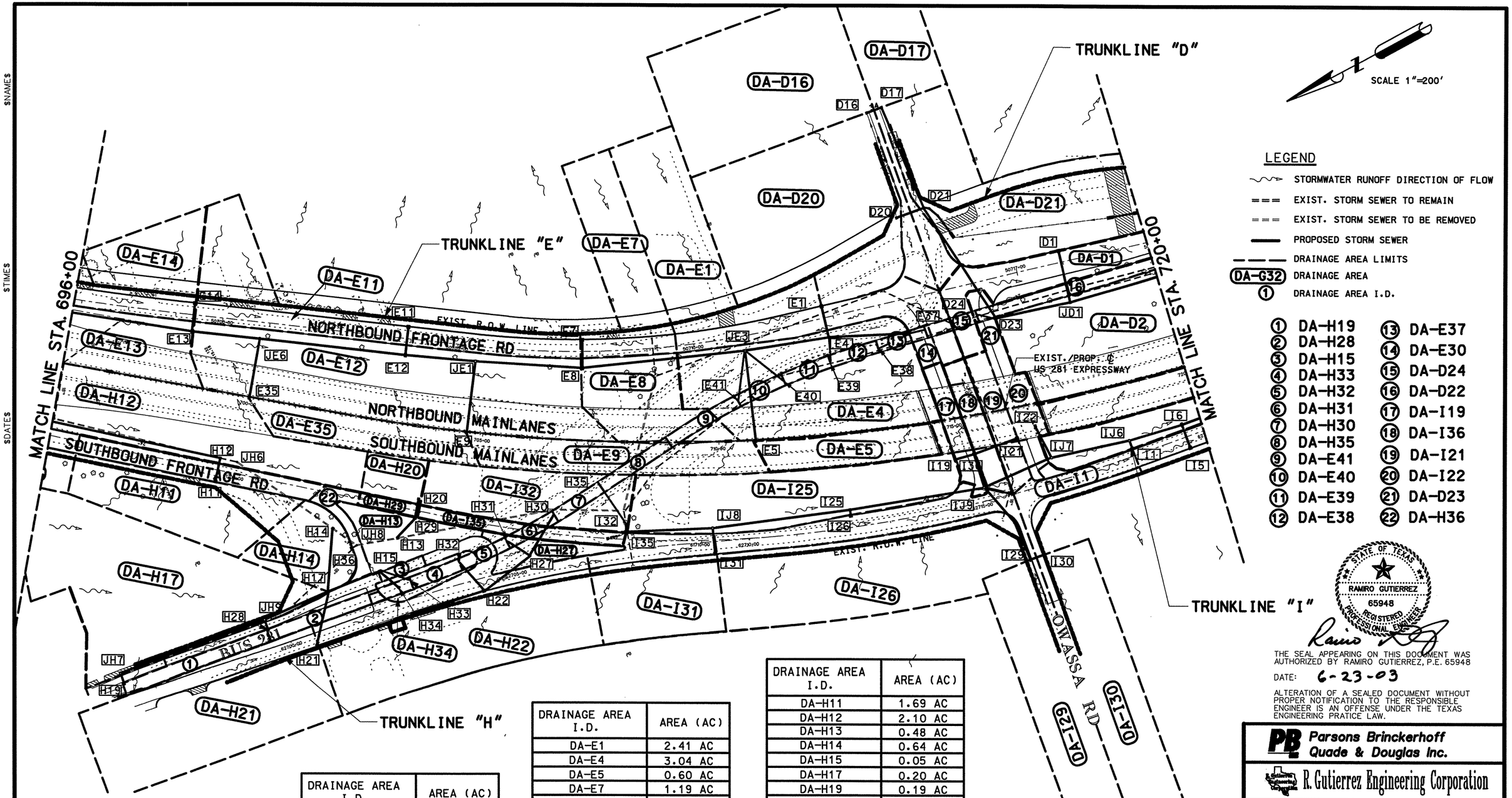

LEGEND

- STORMWATER RUNOFF DIRECTION OF FLOW
- EXIST. STORM SEWER TO REMAIN
- EXIST. STORM SEWER TO BE REMOVED
- PROPOSED STORM SEWER
- DRAINAGE AREA LIMITS
- (DA-G32) DRAINAGE AREA
- (1) DRAINAGE AREA I.D.

(1)	DA-H19	(13)	DA-E37
(2)	DA-H28	(14)	DA-E30
(3)	DA-H15	(15)	DA-D24
(4)	DA-H33	(16)	DA-D22
(5)	DA-H32	(17)	DA-I19
(6)	DA-H31	(18)	DA-I36
(7)	DA-H30	(19)	DA-I21
(8)	DA-H35	(20)	DA-I22
(9)	DA-E41	(21)	DA-D23
(10)	DA-E40	(22)	DA-H36
(11)	DA-E39		
(12)	DA-E38		

DRAINAGE AREA I.D.	AREA (AC)
DA-D1	2.56 AC
DA-D2	1.69 AC
DA-D16	2.53 AC
DA-D17	1.93 AC
DA-D20	3.10 AC
DA-D21	4.20 AC
DA-D22	0.21 AC
DA-D23	0.18 AC
DA-D24	0.07 AC

DRAINAGE AREA I.D.	AREA (AC)
DA-I1	0.41 AC
DA-I19	0.28 AC
DA-I21	0.31 AC
DA-I22	0.22 AC
DA-I25	1.78 AC
DA-I26	3.07 AC
DA-I29	1.73 AC
DA-I30	1.73 AC
DA-I31	1.29 AC
DA-I32	1.11 AC
DA-I35	0.36 AC
DA-I36	0.32 AC

DRAINAGE AREA I.D.	AREA (AC)
DA-E1	2.41 AC
DA-E4	3.04 AC
DA-E5	0.60 AC
DA-E7	1.19 AC
DA-E8	0.95 AC
DA-E9	0.95 AC
DA-E11	1.60 AC
DA-E12	3.12 AC
DA-E13	1.19 AC
DA-E14	1.26 AC
DA-E30	0.08 AC
DA-E35	0.90 AC
DA-E37	0.06 AC
DA-E38	0.06 AC
DA-E39	0.06 AC
DA-E40	0.06 AC
DA-E41	0.10 AC

DRAINAGE AREA I.D.	AREA (AC)
DA-H11	1.69 AC
DA-H12	2.10 AC
DA-H13	0.48 AC
DA-H14	0.64 AC
DA-H15	0.05 AC
DA-H17	0.20 AC
DA-H19	0.19 AC
DA-H20	0.27 AC
DA-H21	2.36 AC
DA-H22	2.78 AC
DA-H27	0.28 AC
DA-H28	0.20 AC
DA-H29	0.08 AC
DA-H30	0.07 AC
DA-H31	0.07 AC
DA-H32	0.07 AC
DA-H33	0.07 AC
DA-H34	0.23 AC
DA-H35	0.10 AC
DA-H36	0.18 AC

NOTE:
REFER TO THE HYDRAULIC DATA SHEETS FOR THE HYDRAULIC COMPUTATION.

STATE OF TEXAS
RAMIRO GUTIERREZ
65948
REGISTERED PROFESSIONAL ENGINEER

THE SEAL APPEARING ON THIS DOCUMENT WAS AUTHORIZED BY RAMIRO GUTIERREZ, P.E. 65948

DATE: 6-23-03

ALTERATION OF A SEALED DOCUMENT WITHOUT PROPER NOTIFICATION TO THE RESPONSIBLE ENGINEER IS AN OFFENSE UNDER THE TEXAS ENGINEERING PRATICE LAW.

Parsons Brinckerhoff Quade & Douglas Inc.

R. Gutierrez Engineering Corporation

Texas Department of Transportation

©2003 by TxDOT

US 281
DRAINAGE AREA MAP
SHEET 5 OF 11

DESIGNED:	FED. RD DIV. No.	STATE	FEDERAL AID PROJECT No.		HIGHWAY No.	
CHECKED:	6	TEXAS			US 281	
DRAWN:	STATE DISTRICT	COUNTY	CONTROL No.	SECTION No.	JOB No.	SHEET No.
CHECKED:	21	HIDALGO	0255	08	091	515

$FILE$ 281dam05.dgn

$NAME$
$TIME$
$DATE$

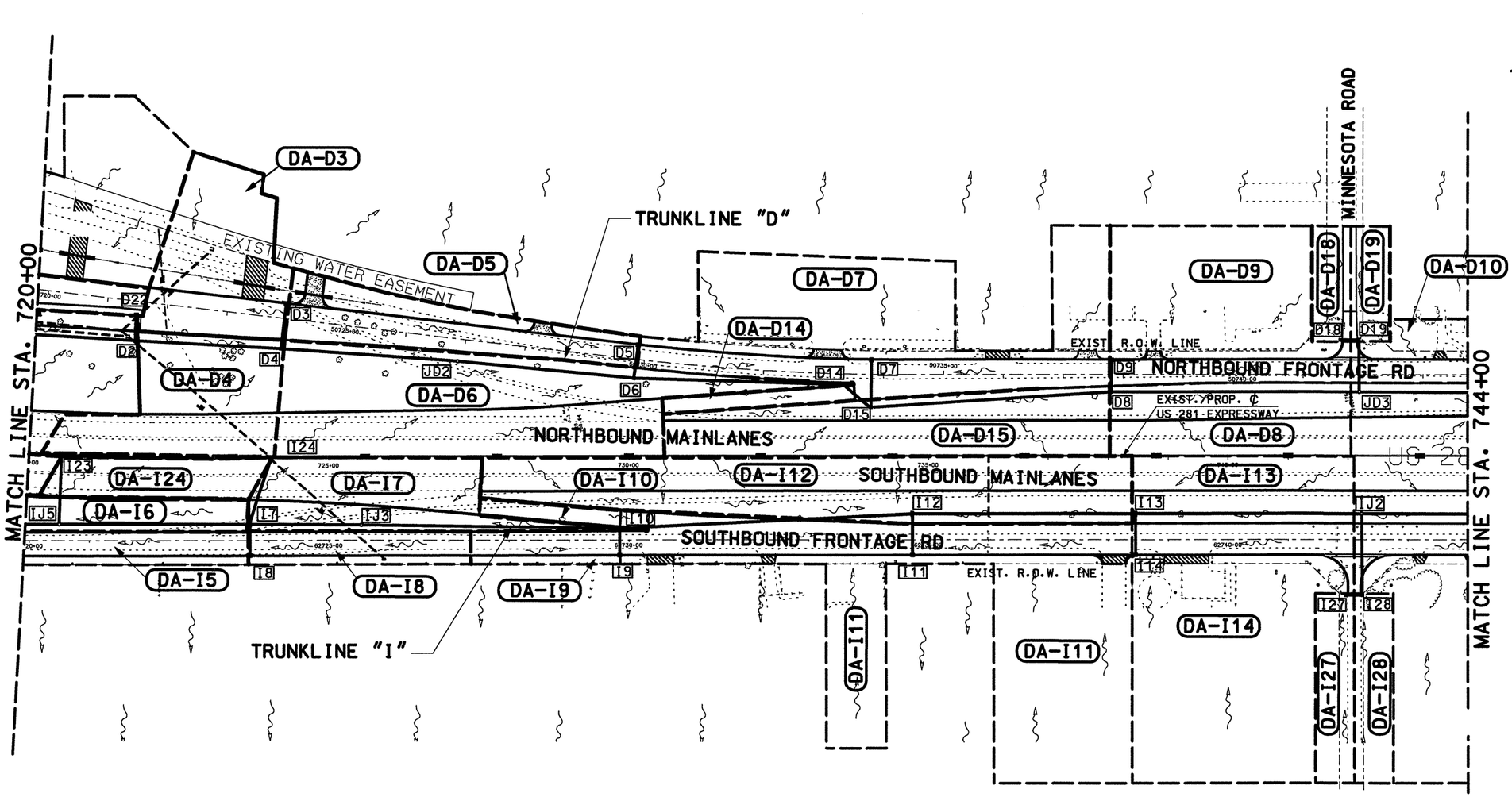

DRAINAGE AREA I.D.	AREA (AC)
DA-I5	0.65 AC
DA-I6	1.00 AC
DA-I7	1.12 AC
DA-I8	0.46 AC
DA-I9	0.37 AC
DA-I10	0.15 AC
DA-I11	3.84 AC
DA-I12	1.90 AC
DA-I13	1.03 AC
DA-I14	3.11 AC
DA-I22	0.28 AC
DA-I24	0.53 AC
DA-I27	1.51 AC
DA-I28	0.36 AC

DRAINAGE AREA I.D.	AREA (AC)
DA-D3	1.46 AC
DA-D4	3.66 AC
DA-D5	0.55 AC
DA-D6	0.23 AC
DA-D7	3.07 AC
DA-D8	1.09 AC
DA-D9	2.14 AC
DA-D14	0.19 AC
DA-D15	1.60 AC
DA-D18	0.28 AC
DA-D19	0.28 AC

NOTE:
REFER TO THE HYDRAULIC DATA SHEETS FOR THE HYDRAULIC COMPUTATION.

THE SEAL APPEARING ON THIS DOCUMENT WAS AUTHORIZED BY RAMIRO GUTIERREZ, P.E. 65948

DATE: 6-23-03

ALTERATION OF A SEALED DOCUMENT WITHOUT PROPER NOTIFICATION TO THE RESPONSIBLE ENGINEER IS AN OFFENSE UNDER THE TEXAS ENGINEERING PRATICE LAW.

Parsons Brinckerhoff Quade & Douglas Inc.

R. Gutierrez Engineering Corporation

Texas Department of Transportation

© 2003 by TxDOT

US 281
DRAINAGE AREA MAP

SHEET 6 OF 11

DESIGNED:	FED. RD DIV. No.	STATE	FEDERAL AID PROJECT No.			HIGHWAY No.
CHECKED:	6	TEXAS				US 281
DRAWN:	STATE DISTRICT	COUNTY	CONTROL No.	SECTION No.	JOB No.	SHEET No.
CHECKED:	21	HIDALGO	0255	08	091	516

$FILE$281dam06.dgn

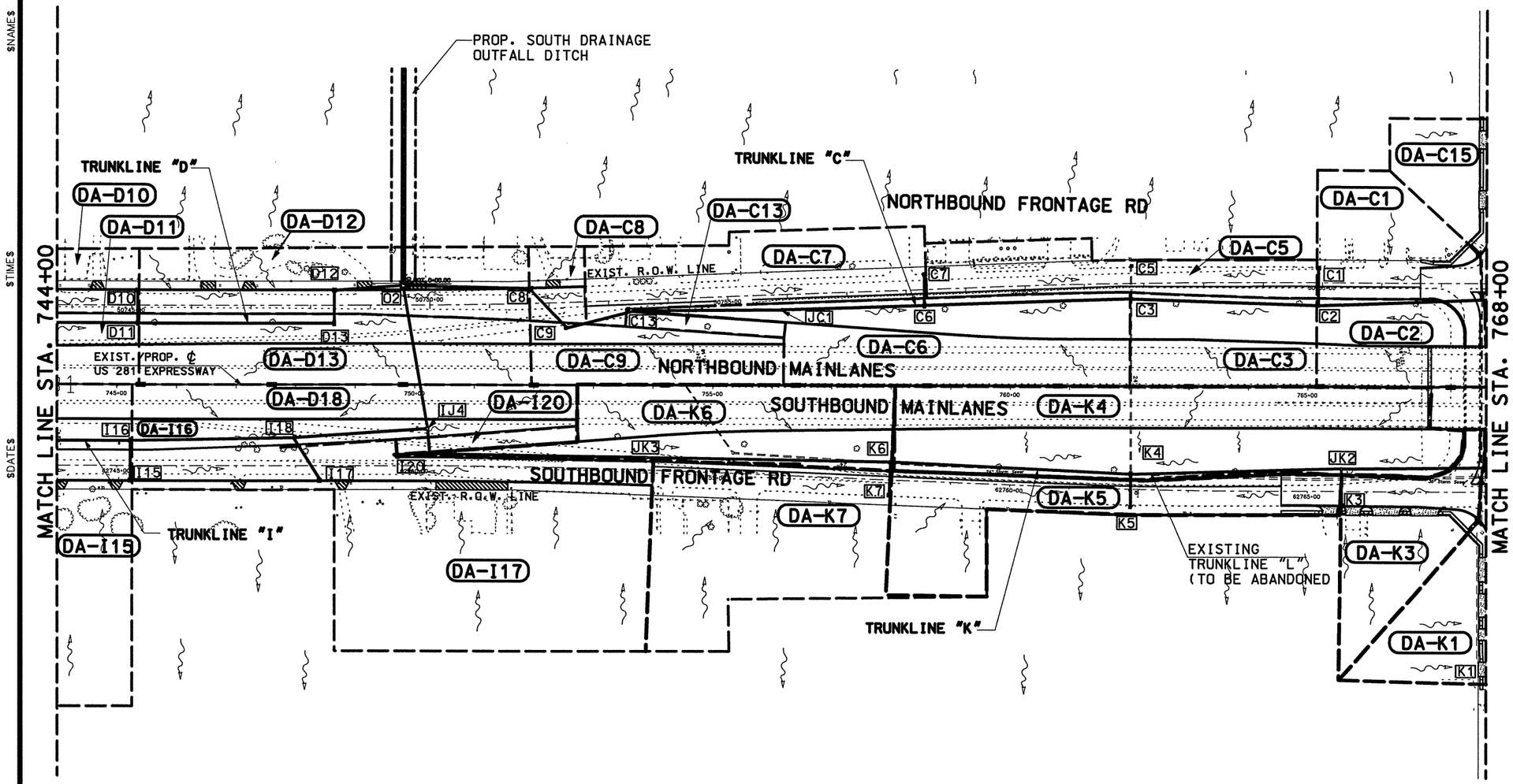

SCALE 1"=200'

LEGEND

- STORMWATER RUNOFF DIRECTION OF FLOW
- EXIST. STORM SEWER TO REMAIN
- EXIST. STORM SEWER TO BE REMOVED
- PROPOSED STORM SEWER
- DRAINAGE AREA LIMITS
- DA-G32 DRAINAGE AREA

DRAINAGE AREA I.D.	AREA (AC)
DA-I15	2.58 AC
DA-I16	0.87 AC
DA-I17	4.55 AC
DA-I18	1.61 AC
DA-I20	0.18 AC
DA-K1	1.35 AC
DA-K3	1.26 AC
DA-K4	3.16 AC
DA-K5	1.81 AC
DA-K6	1.67 AC
DA-K7	2.35 AC

DRAINAGE AREA I.D.	AREA (AC)
DA-D10	0.76 AC
DA-D11	0.91 AC
DA-D12	1.53 AC
DA-D13	1.77 AC
DA-C1	1.40 AC
DA-C2	0.96 AC
DA-C3	1.10 AC
DA-C5	1.09 AC
DA-C6	2.10 AC
DA-C7	2.01 AC
DA-C8	0.27 AC
DA-C9	0.92 AC
DA-C13	0.16 AC
DA-C15	0.94 AC

NOTE:
REFER TO THE HYDRAULIC DATA SHEETS FOR THE HYDRAULIC COMPUTATION.

STATE OF TEXAS
RAMIRO GUTIERREZ
65948
REGISTERED PROFESSIONAL ENGINEER

THE SEAL APPEARING ON THIS DOCUMENT WAS AUTHORIZED BY RAMIRO GUTIERREZ, P.E. 65948

DATE: 6-23-03

ALTERATION OF A SEALED DOCUMENT WITHOUT PROPER NOTIFICATION TO THE RESPONSIBLE ENGINEER IS AN OFFENSE UNDER THE TEXAS ENGINEERING PRATICE LAW.

Parsons Brinckerhoff Quade & Douglas Inc.

R. Gutierrez Engineering Corporation

Texas Department of Transportation

©2003 by TxDOT

US 281
DRAINAGE AREA MAP

SHEET 7 OF 11

DESIGNED:	FED. RD DIV. No.	STATE	FEDERAL AID PROJECT No.		HIGHWAY No.	
CHECKED:	6	TEXAS			US 281	
DRAWN:	STATE DISTRICT	COUNTY	CONTROL No.	SECTION No.	JOB No.	SHEET No.
CHECKED:	21	HIDALGO	0255	08	091	517

$NAME$ $TIME$ $DATE$ $FILE$ 81dam07.dgn

$NAME$
$TIME$
$DATE$

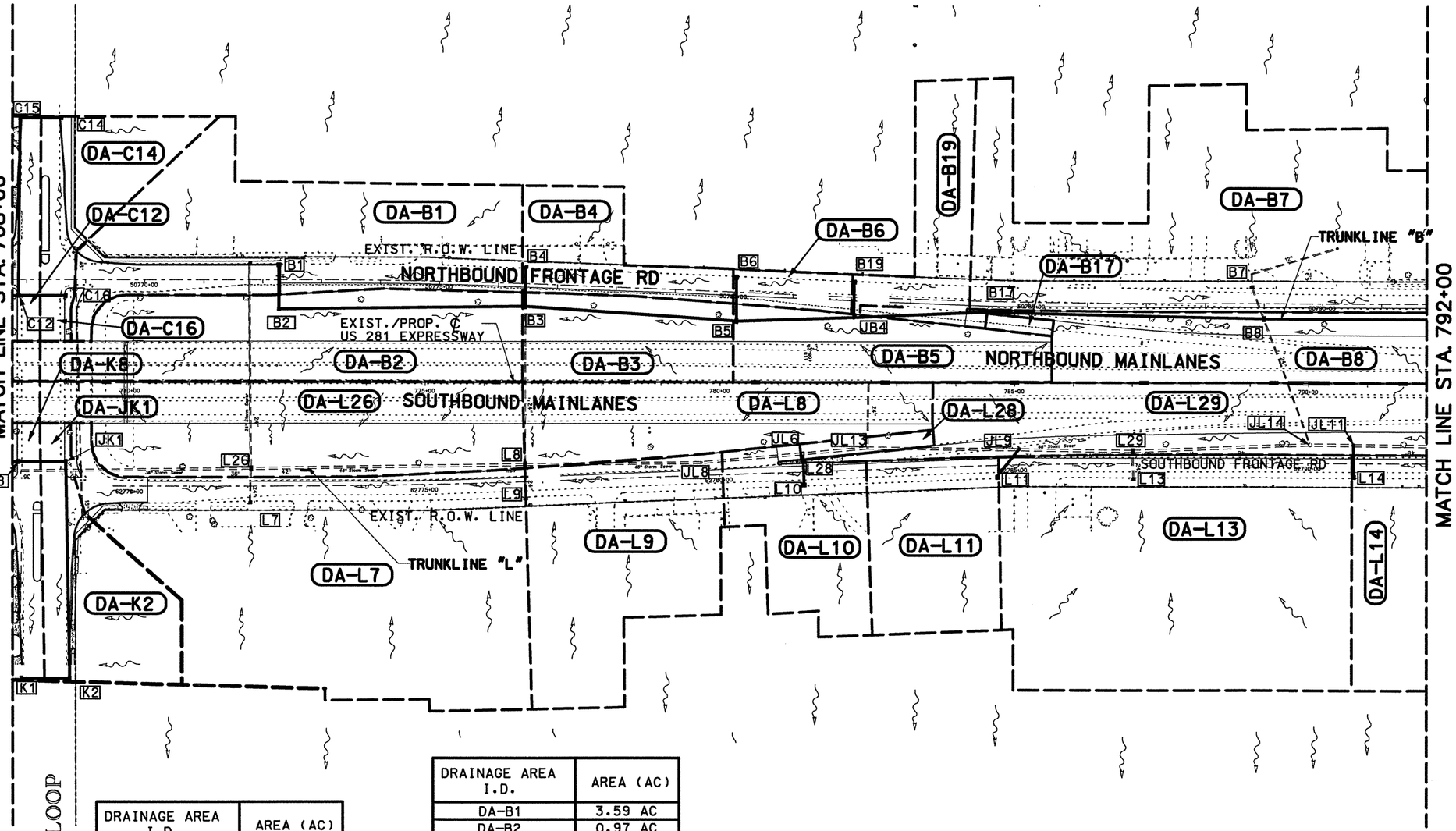

SCALE 1"=200'

LEGEND

- STORMWATER RUNOFF DIRECTION OF FLOW
- EXIST. STORM SEWER TO REMAIN
- EXIST. STORM SEWER TO BE REMOVED
- PROPOSED STORM SEWER
- DRAINAGE AREA LIMITS
- (DA-G32) DRAINAGE AREA

DRAINAGE AREA I.D.	AREA (AC)
DA-L7	3.57 AC
DA-L8	3.18 AC
DA-L9	1.75 AC
DA-L10	1.15 AC
DA-L11	1.04 AC
DA-L13	2.78 AC
DA-L14	1.75 AC
DA-L26	1.05 AC
DA-L28	0.16 AC
DA-L29	3.02 AC
DA-K2	1.46 AC

DRAINAGE AREA I.D.	AREA (AC)
DA-B1	3.59 AC
DA-B2	0.97 AC
DA-B3	2.60 AC
DA-B4	0.77 AC
DA-B5	0.77 AC
DA-B6	0.31 AC
DA-B7	5.45 AC
DA-B8	2.60 AC
DA-B17	0.15 AC
DA-B19	0.99 AC
DA-C12	0.07 AC
DA-C14	0.97 AC
DA-C16	0.07 AC
DA-JK1	0.07 AC
DA-K8	0.07 AC

NOTE:
REFER TO THE HYDRAULIC DATA SHEETS FOR THE HYDRAULIC COMPUTATION.

STATE OF TEXAS
RAMIRO GUTIERREZ
65948
REGISTERED PROFESSIONAL ENGINEER

THE SEAL APPEARING ON THIS DOCUMENT WAS AUTHORIZED BY RAMIRO GUTIERREZ, P.E. 65948

DATE: 6-23-03

ALTERATION OF A SEALED DOCUMENT WITHOUT PROPER NOTIFICATION TO THE RESPONSIBLE ENGINEER IS AN OFFENSE UNDER THE TEXAS ENGINEERING PRATICE LAW.

Parsons Brinckerhoff Quade & Douglas Inc.

R. Gutierrez Engineering Corporation

Texas Department of Transportation

©2003 by TxDOT

US 281
DRAINAGE AREA MAP

SHEET 8 OF 11

DESIGNED:	FED. RD DIV. No.	STATE	FEDERAL AID PROJECT No.		HIGHWAY No.	
CHECKED:	6	TEXAS			US 281	
DRAWN:	STATE DISTRICT	COUNTY	CONTROL No.	SECTION No.	JOB No.	SHEET No.
CHECKED:	21	HIDALGO	0255	08	091	518

$FILE$281dam08.dgn

$NAME$
$TIME$
$DATE$

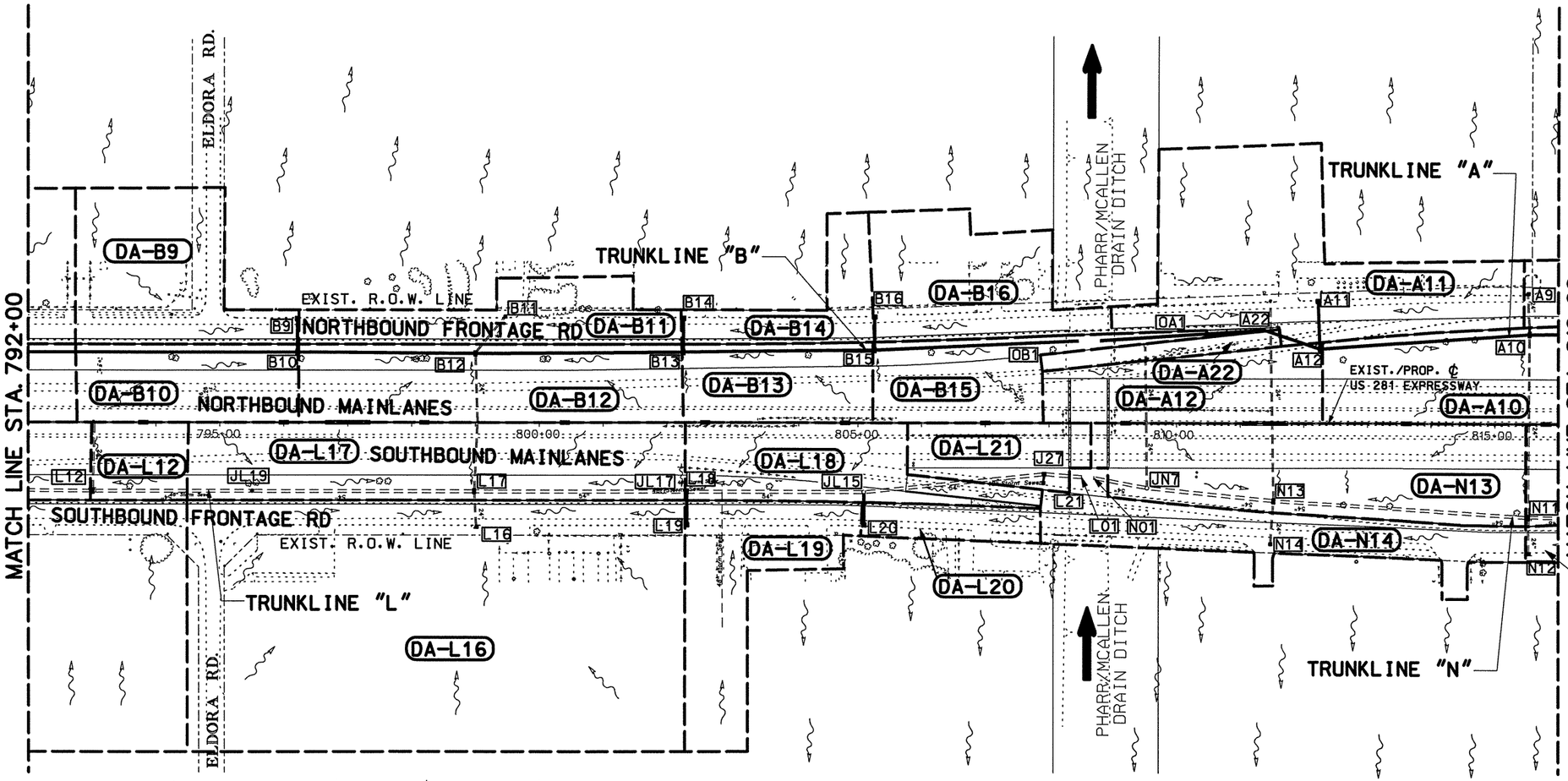

SCALE 1"=200'

LEGEND

- STORMWATER RUNOFF DIRECTION OF FLOW
- EXIST. STORM SEWER TO REMAIN
- EXIST. STORM SEWER TO BE REMOVED
- PROPOSED STORM SEWER
- DRAINAGE AREA LIMITS
- DA-G32 DRAINAGE AREA

DRAINAGE AREA I.D.	AREA (AC)
DA-L12	0.42 AC
DA-L16	3.64 AC
DA-L17	1.42 AC
DA-L18	1.16 AC
DA-L19	1.28 AC
DA-L20	1.33 AC
DA-L21	0.60 AC
DA-N12	1.61 AC
DA-N13	1.14 AC
DA-N14	1.14 AC

DRAINAGE AREA I.D.	AREA (AC)
DA-B9	1.69 AC
DA-B10	0.98 AC
DA-B11	0.97 AC
DA-B12	1.69 AC
DA-B13	0.85 AC
DA-B14	0.58 AC
DA-B15	0.84 AC
DA-B16	1.43 AC
DA-A10	2.90 AC
DA-A11	3.14 AC
DA-A12	0.20 AC
DA-A22	0.22 AC

NOTE:
REFER TO THE HYDRAULIC DATA SHEETS FOR THE HYDRAULIC COMPUTATION.

STATE OF TEXAS
RAMIRO GUTIERREZ
65948
REGISTERED PROFESSIONAL ENGINEER

THE SEAL APPEARING ON THIS DOCUMENT WAS AUTHORIZED BY RAMIRO GUTIERREZ, P.E. 65948

DATE: 6-23-03

ALTERATION OF A SEALED DOCUMENT WITHOUT PROPER NOTIFICATION TO THE RESPONSIBLE ENGINEER IS AN OFFENSE UNDER THE TEXAS ENGINEERING PRATICE LAW.

Parsons Brinckerhoff Quade & Douglas Inc.

R. Gutierrez Engineering Corporation

Texas Department of Transportation

©2003 by TxDOT

US 281
DRAINAGE AREA MAP

SHEET 9 OF 11

DESIGNED:	FED. RD DIV. No.	STATE	FEDERAL AID PROJECT No.			HIGHWAY No.	
CHECKED:	6	TEXAS				US 281	
DRAWN:	STATE DISTRICT	COUNTY	CONTROL No.	SECTION No.	JOB No.	SHEET No.	
CHECKED:	21	HIDALGO	0255	08	091	519	

$FILE$81dam09.dgn

$NAME$
$TIME$
$DATE$

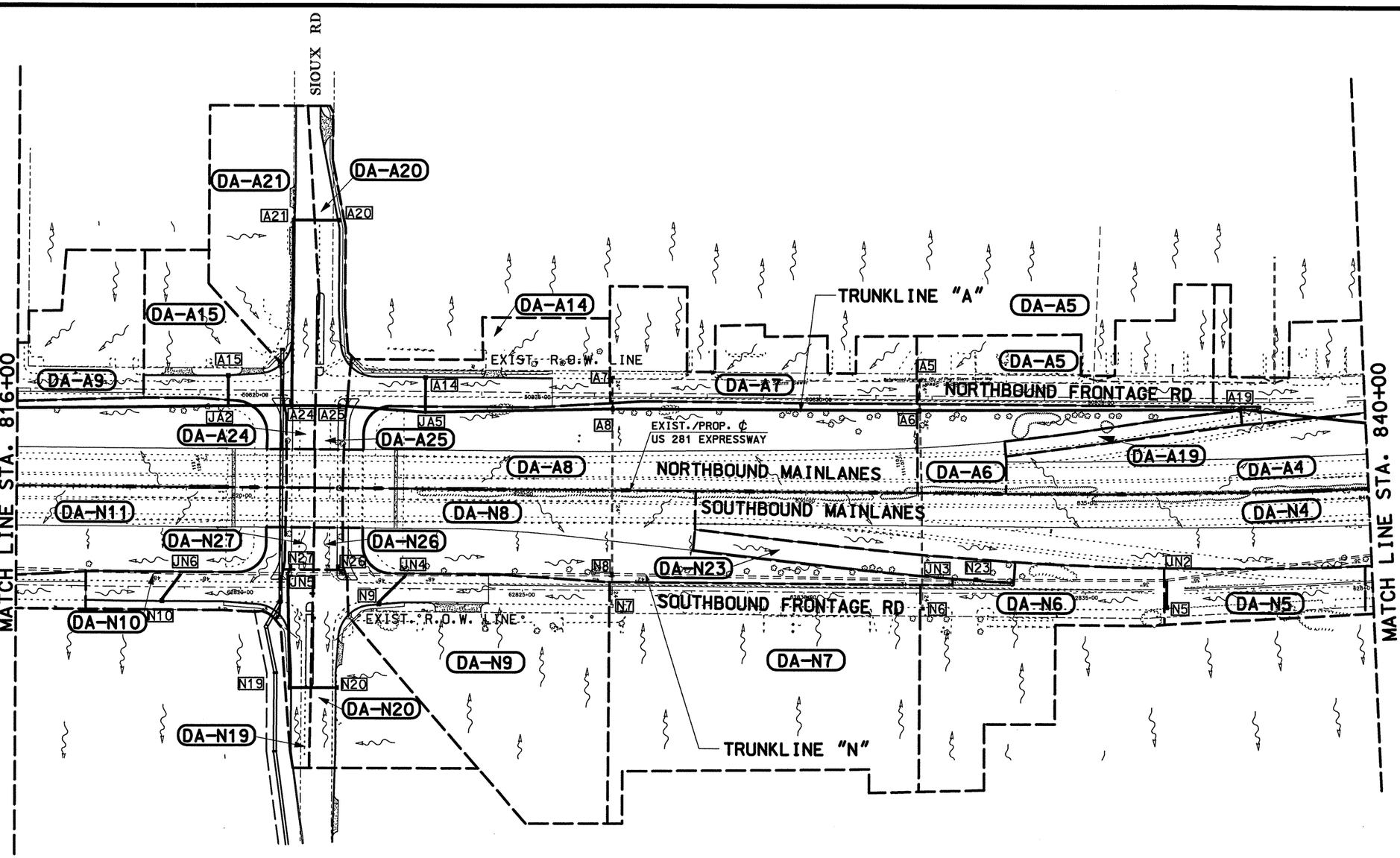

SCALE 1"=200'

LEGEND

- STORMWATER RUNOFF DIRECTION OF FLOW
- EXIST. STORM SEWER TO REMAIN
- EXIST. STORM SEWER TO BE REMOVED
- PROPOSED STORM SEWER
- DRAINAGE AREA LIMITS
- DA-G32 DRAINAGE AREA

DRAINAGE AREA I.D.	AREA (AC)
DA-N4	4.04 AC
DA-N5	0.73 AC
DA-N6	2.20 AC
DA-N7	4.31 AC
DA-N8	2.53 AC
DA-N9	3.39 AC
DA-N10	0.60 AC
DA-N11	1.84 AC
DA-N19	0.94 AC
DA-N20	1.05 AC
DA-N23	0.40 AC
DA-N26	0.16 AC
DA-N27	0.16 AC

DRAINAGE AREA I.D.	AREA (AC)
DA-A4	1.87 AC
DA-A5	1.62 AC
DA-A6	1.57 AC
DA-A7	1.64 AC
DA-A8	3.65 AC
DA-A9	2.30 AC
DA-A14	1.39 AC
DA-A15	1.17 AC
DA-A19	0.19 AC
DA-A20	0.66 AC
DA-A21	1.86 AC
DA-A24	0.17 AC
DA-A25	0.16 AC

NOTE:
REFER TO THE HYDRAULIC DATA SHEETS FOR THE HYDRAULIC COMPUTATION.

STATE OF TEXAS
RAMIRO GUTIERREZ
65948
REGISTERED
PROFESSIONAL ENGINEER

THE SEAL APPEARING ON THIS DOCUMENT WAS AUTHORIZED BY RAMIRO GUTIERREZ, P.E. 65948

DATE: 6-23-03

ALTERATION OF A SEALED DOCUMENT WITHOUT PROPER NOTIFICATION TO THE RESPONSIBLE ENGINEER IS AN OFFENSE UNDER THE TEXAS ENGINEERING PRATICE LAW.

Parsons Brinckerhoff Quade & Douglas Inc.

R. Gutierrez Engineering Corporation

Texas Department of Transportation

© 2003 by TxDOT

US 281
DRAINAGE AREA MAP

SHEET 10 OF 11

DESIGNED:	FED. RD DIV. No.	STATE	FEDERAL AID PROJECT No.			HIGHWAY No.
CHECKED:	6	TEXAS				US 281
DRAWN:	STATE DISTRICT	COUNTY	CONTROL No.	SECTION No.	JOB No.	SHEET No.
CHECKED:	21	HIDALGO	0255	08	091	520

$FILE$81dam10.dgn

$NAME$
$TIME$
$DATE$

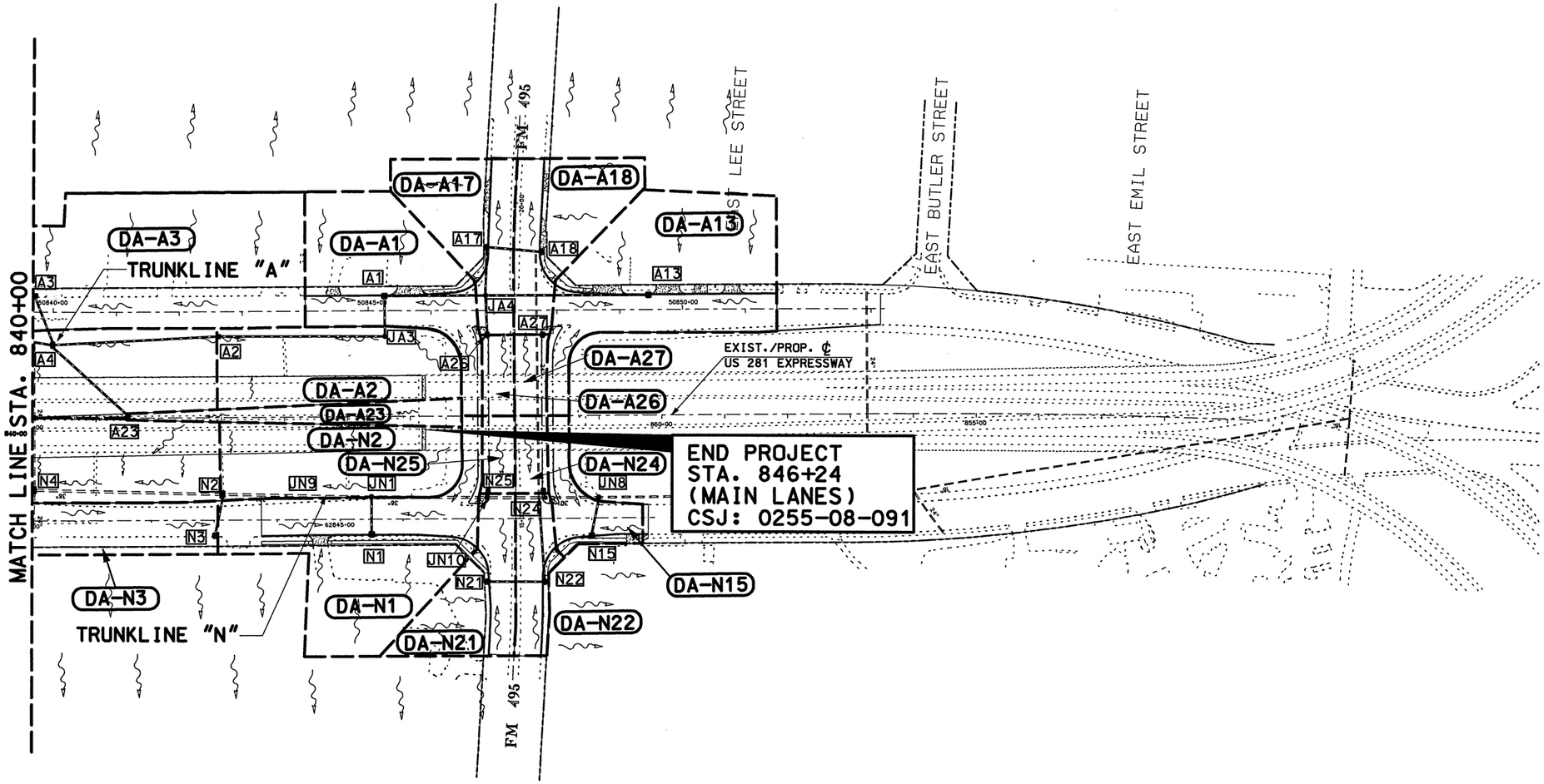

SCALE 1"=200'

LEGEND

- STORMWATER RUNOFF DIRECTION OF FLOW
- EXIST. STORM SEWER TO REMAIN
- EXIST. STORM SEWER TO BE REMOVED
- PROPOSED STORM SEWER
- DRAINAGE AREA LIMITS
- DA-G32 DRAINAGE AREA

DRAINAGE AREA I.D.	AREA (AC)
DA-N1	1.66 AC
DA-N2	1.03 AC
DA-N3	0.58 AC
DA-N15	0.30 AC
DA-N21	0.80 AC
DA-N22	1.45 AC
DA-N24	0.16 AC
DA-N25	0.16 AC

DRAINAGE AREA I.D.	AREA (AC)
DA-A1	1.24 AC
DA-A2	1.03 AC
DA-A3	2.85 AC
DA-A13	1.66 AC
DA-A17	0.95 AC
DA-A18	0.88 AC
DA-A23	0.34 AC
DA-A26	0.16 AC
DA-A27	0.16 AC

NOTE:
REFER TO THE HYDRAULIC DATA SHEETS FOR THE HYDRAULIC COMPUTATION.

STATE OF TEXAS
RAMIRO GUTIERREZ
65948
REGISTERED PROFESSIONAL ENGINEER

THE SEAL APPEARING ON THIS DOCUMENT WAS AUTHORIZED BY RAMIRO GUTIERREZ, P.E. 65948

DATE: 6-23-03

ALTERATION OF A SEALED DOCUMENT WITHOUT PROPER NOTIFICATION TO THE RESPONSIBLE ENGINEER IS AN OFFENSE UNDER THE TEXAS ENGINEERING PRATICE LAW.

Parsons Brinckerhoff Quade & Douglas Inc.

R. Gutierrez Engineering Corporation

Texas Department of Transportation

©2003 by TxDOT

US 281
DRAINAGE AREA MAP

SHEET 11 OF 11

DESIGNED:	FED. RD DIV. No.	STATE	FEDERAL AID PROJECT No.			HIGHWAY No.	
CHECKED:	6	TEXAS				US 281	
DRAWN:	STATE DISTRICT	COUNTY	CONTROL No.	SECTION No.	JOB No.	SHEET No.	
CHECKED:	21	HIDALGO	0255	08	091	521	

$FILE$81dgn11.dgn

TRUNK LINE "A"

Runoff Computation for Design Frequency.

ID	C Value	Area (acre)	Tc (min)	Tc Used (min)	Intensity (in/hr)	Supply Q (cfs)	Total Q (cfs)
A-1	0.71	1.24	14.74	14.74	6.41	0.000	5.641
A-10	0.54	2.90	72.17	72.17	2.42	0.000	3.794
A-11	0.69	2.63	13.37	13.37	6.71	0.000	12.185
A-12	0.67	1.04	63.24	63.24	2.66	0.000	1.851
A-13	0.7	1.66	14.78	14.78	6.40	0.000	7.436
A-14	0.75	1.39	16.03	16.03	6.15	0.000	6.407
A-15	0.69	1.17	15.48	15.48	6.25	0.000	5.049
A-17	0.75	0.95	16.98	16.98	5.97	0.000	4.252
A-18	0.75	0.88	11.04	11.04	7.32	0.000	4.833
A-19	0.9	0.19	13.27	13.27	6.74	0.000	1.152
A-2	0.46	1.03	55.50	55.50	2.91	0.000	1.377
A-20	0.86	0.66	14.33	14.33	6.50	0.000	3.687
A-21	0.69	1.86	14.40	14.40	6.48	0.000	8.317
A-22	0.9	0.22	12.13	12.13	7.02	0.000	1.391
A-23	0.2	0.34	72.92	12.13	0.00	1.039	1.039
A-24	0.62	0.17	10.00	10.00	7.64	0.000	0.805
A-25	0.62	0.17	10.00	10.00	7.64	0.000	0.805
A-26	0.8	0.16	10.00	10.00	7.64	0.000	0.977
A-27	0.8	0.16	10.00	10.00	7.64	0.000	0.977
A-3	0.69	2.85	21.00	21.00	5.33	0.000	10.476
A-4	0.59	1.87	69.39	69.39	2.49	0.000	2.748
A-5	0.69	1.62	25.74	25.74	4.74	0.000	5.303
A-6	0.49	1.57	95.83	95.83	1.98	0.000	1.521
A-7	0.7	1.64	21.89	21.89	5.21	0.000	5.976
A-8	0.54	3.65	48.12	48.12	3.20	0.000	6.308
A-9	0.68	1.26	23.65	23.65	4.98	0.000	4.269

On Grade Inlet Configuration Data

Inlet ID	Inlet Type	Inlet Length (ft)	Slopes Long (%)	Slopes Trans (%)	Gutter n	Gutter Depr. (ft)	Grate Width (ft)	Grate Type	Pond Width Allowed (ft)	Critic Elev. (ft)
A-12	Grate	7.00	0.17	16.60	0.012	n/a	4.00	Parall	14.00	105.81
A-19	Curb	5.00	0.15	2.00	0.012	0.40	n/a	n/a	12.00	107.58
A-2	Grate	4.00	0.18	16.60	0.012	n/a	4.00	Parall	14.00	107.06
A-22	Curb	5.00	0.15	2.00	0.012	0.40	n/a	n/a	20.00	106.06
A-23	Grate	4.00	2.69	16.60	0.012	n/a	4.00	Parall	10.00	125.00
A-24	Curb	5.00	0.50	2.50	0.013	0.33	n/a	n/a	12.00	106.05
A-25	Curb	5.00	0.50	2.50	0.013	0.33	n/a	n/a	12.00	106.05
A-26	Curb	5.00	0.50	2.50	0.013	0.40	n/a	n/a	12.00	108.17
A-27	Curb	5.00	0.50	2.50	0.013	0.40	n/a	n/a	12.00	108.17
A-5	Curb	10.00	0.14	2.00	0.012	0.40	n/a	n/a	20.00	107.55
A-6	Grate	7.00	0.16	16.60	0.014	n/a	4.00	Parall	14.00	106.46
A-7	Curb	10.00	0.04	2.00	0.012	0.40	n/a	n/a	24.00	106.00
A-9	Curb	10.00	0.12	2.00	0.012	0.40	n/a	n/a	20.00	106.43

On Grade Inlets Computation Data.

Inlet ID	Inlet Type	Total Q (cfs)	Intercept Capacity (cfs)	Q Bypass Allow (cfs)	Q Bypass Actual (cfs)	To Inlet ID	Required Length (ft)	Actual Length (ft)	Ponded Width (ft)
A-12	Grate	1.851	1.851	0.000	0.000		n/a	0.00	3.02
A-19	Curb	1.152	1.152	0.000	0.000		3.36	5.00	9.75
A-2	Grate	1.377	1.377	0.000	0.000		n/a	0.00	2.68
A-22	Curb	1.391	1.391	0.000	0.000		3.74	5.00	10.45
A-23	Grate	1.039	1.039	0.000	0.000		n/a	0.00	1.45
A-24	Curb	0.805	0.805	0.000	0.000		3.91	5.00	6.08
A-25	Curb	0.805	0.805	0.000	0.000		3.91	5.00	6.08
A-26	Curb	0.977	0.977	0.000	0.000		3.84	5.00	6.56
A-27	Curb	0.977	0.977	0.000	0.000		3.84	5.00	6.56
A-5	Curb	5.303	5.303	0.000	0.000		8.30	10.00	17.50
A-6	Grate	1.521	1.521	0.000	0.000		n/a	0.00	3.00
A-7	Curb	5.976	5.976	0.000	0.000		7.00	10.00	23.15
A-9	Curb	4.269	4.269	0.000	0.000		7.03	10.00	16.60

Sag Inlets Configuration Data.

Inlet ID	Inlet Type	Length/ Perim. (ft)	Grate Area (sf)	Left-Slope Long (%)	Left-Slope Trans (%)	Right-Slope Long (%)	Right-Slope Trans (%)	Gutter n	Gutter DeprW (ft)	Depth Allowed (ft)	Critic Elev. (ft)
A-1	Curb	10.00	n/a	0.35	2.00	0.25	2.00	0.012	0.40	0.50	106.56
A-10	Grate	22.00	28.00	0.1716.60		0.31	16.60	0.012	n/a	0.50	105.42
A-11	Curb	20.00	n/a	0.01	2.00	0.12	2.00	0.012	0.40	0.50	105.19
A-13	Curb	15.00	n/a	0.25	2.00	0.15	2.00	0.012	0.40	0.50	106.58
A-14	Curb	10.00	n/a	0.25	2.00	0.39	2.00	0.012	0.40	0.50	106.77
A-15	Curb	10.00	n/a	0.60	2.00	0.25	2.00	0.012	0.40	0.50	106.77
A-17	Curb	10.00	n/a	0.21	2.50	0.15	2.50	0.012	0.40	0.50	106.73
A-18	Curb	10.00	n/a	0.21	2.50	0.15	2.50	0.012	0.40	0.50	107.19
A-20	Curb	10.00	n/a	0.56	2.00	0.15	2.00	0.012	0.40	0.50	105.27
A-21	Curb	15.00	n/a	0.56	2.00	0.15	2.00	0.012	0.40	0.50	104.96
A-3	Curb	15.00	n/a	0.03	2.00	0.07	2.00	0.012	0.40	0.50	107.53
A-4	Grate	22.00	28.00	0.4316.60		0.18	16.60	0.012	n/a	0.50	106.84
A-8	Grate	22.00	28.00	0.5116.60		0.16	16.60	0.012	n/a	0.50	105.82

TRUNK LINE "A" - CONTINUED

Sag Inlets Computation Data.

Inlet ID	Inlet Type	Length (ft)	Grate Perim (ft)	Grate Area (sf)	Total Q (cfs)	Inlet Capacity (cfs)	Total Head (ft)	Ponded Width Left (ft)	Ponded Width Right (ft)
A-1	Curb	10.00	n/a	n/a	5.641	8.717	0.374	8.25	8.80
A-10	Grate	n/a	22.00	28.00	3.794	23.771	0.146	2.16	1.94
A-11	Curb	20.00	n/a	n/a	12.185	16.849	0.403	21.85	13.45
A-13	Curb	15.00	n/a	n/a	7.436	12.783	0.348	9.75	10.70
A-14	Curb	10.00	n/a	n/a	6.407	8.717	0.407	9.20	8.45
A-15	Curb	10.00	n/a	n/a	5.049	8.717	0.347	7.15	8.40
A-17	Curb	10.00	n/a	n/a	4.252	8.717	0.310	10.00	10.64
A-18	Curb	10.00	n/a	n/a	4.833	8.717	0.337	10.48	11.20
A-20	Curb	10.00	n/a	n/a	3.687	8.717	0.282	9.05	11.60
A-21	Curb	15.00	n/a	n/a	8.317	12.783	0.375	12.30	15.75
A-3	Curb	15.00	n/a	n/a	10.476	12.783	0.438	16.50	14.05
A-4	Grate	n/a	22.00	28.00	2.748	23.771	0.118	1.61	1.89
A-8	Grate	n/a	22.00	28.00	6.308	23.771	0.205	2.13	2.65

Cumulative Junction Discharge Computations

Node I.D.	Node Type	Weighted C-Value	Cumulat. Dr.Area (acres)	Cumulat. Tc (min)	Intens. (in/hr)	User Supply Q cfs)	Additional Q in Node (cfs)	Total Disch. (cfs)
A-1	Curb	0.727	5.05	17.95	5.80	0.000	0.00	21.285
A-10	Grate	0.645	29.05	17.95	5.80	1.039	0.00	109.617
A-11	Curb	0.690	2.63	13.37	6.71	0.000	0.00	12.185
A-12	Grate	0.649	32.72	17.95	5.80	1.039	0.00	124.179
A-13	Curb	0.700	1.66	14.78	6.40	0.000	0.00	7.436
A-14	Curb	0.750	1.39	16.03	6.15	0.000	0.00	6.407
A-15	Curb	0.690	1.17	15.48	6.25	0.000	0.00	5.049
A-17	Curb	0.750	1.83	16.98	5.97	0.000	0.00	8.191
A-18	Curb	0.750	0.88	11.04	7.32	0.000	0.00	4.833
A-19	Curb	0.672	10.99	17.95	5.80	1.039	0.00	43.862
A-2	Grate	0.682	6.08	17.95	5.80	0.000	0.00	24.032
A-20	Curb	0.860	0.66	14.33	6.50	0.000	0.00	3.687
A-21	Curb	0.735	2.52	14.83	6.39	0.000	0.00	11.823
A-22	Curb	0.651	32.94	17.95	5.80	1.039	0.00	125.327
A-23	Grate	0.000	0.00	0.00	0.00	1.039	0.00	1.039
A-24	Curb	0.653	23.72	17.95	5.80	1.039	0.00	90.888
A-25	Curb	0.644	21.03	17.95	5.80	1.039	0.00	79.544
A-26	Curb	0.800	0.32	10.73	7.41	0.000	0.00	1.897
A-27	Curb	0.800	0.16	10.00	7.64	0.000	0.00	0.977
A-3	Curb	0.690	2.85	21.00	5.33	0.000	0.00	10.476
A-4	Grate	0.668	10.80	17.95	5.80	1.039	0.00	42.870
A-5	Curb	0.690	1.62	25.74	4.74	0.000	0.00	5.303
A-6	Grate	0.654	14.18	17.95	5.80	1.039	0.00	54.804
A-7	Curb	0.700	1.64	21.89	5.21	0.000	0.00	5.976
A-8	Grate	0.636	19.47	17.95	5.80	1.039	0.00	72.888
A-9	Curb	0.680	1.26	23.65	4.98	0.000	0.00	4.269
JA1	CiroMh	0.000	0.00	0.00	0.00	0.000	0.00	0.000
JA2	CiroMh	0.655	24.89	17.95	5.80	1.039	0.00	95.569
JA3	CiroMh	0.727	5.05	17.95	5.80	0.000	0.00	21.285
JA4	CiroMh	0.732	3.81	17.25	5.92	0.000	0.00	16.517
JA5	CiroMh	0.644	20.86	17.95	5.80	1.039	0.00	78.933
JA6	CiroMh	0.000	0.00	0.00	0.00	0.000	0.00	0.000
OA1	Outlt	0.651	32.94	17.95	5.80	1.039	0.00	125.327

Conveyance Configuration Data

Run#	Node I.D. US	Node I.D. DS	Flowline Elev. US (ft)	Flowline Elev. DS (ft)	Shape #	Span (ft)	Rise (ft)	Length (ft)	Slope (%)	n value
2	A-18	A-17	103.05	102.87	Circ 1	0.00	1.50	88.00	0.20	0.012
4	A-17	JA4	102.87	102.62	Circ 1	0.00	2.00	76.00	0.33	0.012
5	A-13	JA4	103.00	102.62	Circ 1	0.00	2.00	259.00	0.15	0.012
7	A-27	A-26	102.34	102.21	Circ 1	0.00	1.50	88.00	0.15	0.012
8	A-26	JA4	102.21	102.12	Circ 1	0.00	1.50	62.00	0.15	0.013
9	JA4	A-1	102.12	101.88	Circ 1	0.00	2.50	161.00	0.15	0.012
10	A-1	JA3	101.38	101.29	Circ 1	0.00	3.00	64.00	0.14	0.012
15	JA3	A-2	101.29	100.89	Circ 1	0.00	3.00	264.00	0.15	0.012
20	A-2	A-4	100.89	100.43	Circ 1	0.00	3.00	264.00	0.17	0.012
30	A-3	A-4	103.00	102.23	Circ 1	0.00	1.50	78.00	0.99	0.012
35	A-23	A-4	119.50	103.23	Circ 1	0.00	1.50	165.00	9.91	0.012
40	A-4	A-19	99.67	99.28	Circ 1	0.00	4.00	258.00	0.15	0.012
45	A-19	A-6	99.28	98.18	Circ 1	0.00	4.00	567.00	0.19	0.012
60	A-5	A-6	103.00	102.80	Circ 1	0.00	1.50	54.00	0.37	0.012
70	A-6	A-8	98.18	97.36	Circ 1	0.00	4.00	546.00	0.15	0.012
80	A-7	A-8	102.10	101.90	Circ 1	0.00	2.00	54.00	0.37	0.012
90	A-8	JA5	96.86	96.36	Circ 1	0.00	4.50	333.00	0.15	0.012
93	A-14	JA5	99.12	99.00	Circ 1	0.00	2.00	62.00	0.19	0.012
95	JA5	A-25	96.36	96.13	Circ 1	0.00	4.50	154.00	0.15	0.012
100	A-25	A-24	96.13	95.98	Circ 1	0.00	4.50	84.00	0.18	0.012
132	A-20	A-21	100.50	100.38	Circ 1	0.00	1.50	82.00	0.15	0.012
134	A-21	A-24	99.38	97.98	Circ 1	0.00	2.50	330.00	0.42	0.012
140	A-24	JA2	95.50	95.33	Circ 1	0.00	5.00	114.00	0.15	0.012
143	A-15	JA2	99.00	98.83	Circ 1	0.00	1.50	54.00	0.31	0.012
145	JA2	A-10	95.33	94.70	Circ 1	0.00	5.00	419.00	0.15	0.012
150	A-9	A-10	101.70	101.00	Circ 1	0.00	1.50	64.00	1.09	0.012
160	A-10	A-12	94.70	94.20	Circ 1	0.00	5.00	330.00	0.15	0.012
170	A-11	A-12	101.60	101.00	Circ 1	0.00	2.00	74.00	0.81	0.012
180	A-12	A-22	93.70	93.56	Circ 1	0.00	5.50	96.00	0.15	0.012
185	A-22	OA1	93.56	93.17	Circ 1	0.00	5.50	253.00	0.15	0.012

TRUNK LINE "A" - CONTINUED

Conveyance Hydraulic Computations. Tailwater = 100.810 (ft)

Run#	Hydraulic Gradeline US Elev (ft)	Hydraulic Gradeline DS Elev (ft)	Fr.Slope (%)	Depth Unif. (ft)	Depth Actual (ft)	Velocity Unif. (f/s)	Velocity Actual (f/s)	Q (cfs)	Cap (cfs)	Junc Loss (ft)
2	105.39	105.24	0.180	1.17	1.50	3.26	2.73	4.83	5.15	0.000
4	105.24	105.15	0.112	1.09	2.00	4.66	2.61	8.19	14.06	0.000
5	105.39	105.15	0.092	1.38	2.00	3.23	2.37	7.44	9.39	0.000
7	105.18	105.17	0.007	0.48	1.50	2.00	0.55	0.98	4.37	0.000
8	105.17	105.15	0.033	0.73	1.50	2.24	1.07	1.90	4.00	0.000
9	105.15	104.93	0.138	2.03	2.50	3.87	3.36	16.52	17.16	0.000
10	104.93	104.88	0.087	1.97	3.00	4.33	3.01	21.28	27.10	0.000
15	104.88	104.65	0.087	1.97	3.00	4.33	3.01	21.28	28.13	0.000
20	104.65	104.36	0.111	2.06	3.00	4.64	3.40	24.03	30.17	0.000
30*	105.02	104.36	0.847	1.14	1.50	7.29	5.93	10.48	11.31	0.000
35*	119.68	104.36	0.008	0.18	1.12	9.01	0.73	1.04	35.83	0.000
40	104.36	104.16	0.076	2.50	4.00	5.19	3.41	42.87	60.51	0.000
45	104.16	103.71	0.079	2.31	4.00	5.83	3.49	43.86	68.55	0.000
60	103.98	103.71	0.217	0.98	0.98	4.31	4.31	5.30	6.93	0.000
70	103.71	103.03	0.124	3.00	4.00	5.42	4.36	54.80	60.31	0.000
80	103.06	103.03	0.059	0.88	1.13	4.52	3.25	5.98	14.92	0.000
90	103.03	102.64	0.117	3.38	4.50	5.70	4.58	72.89	82.56	0.000
93	102.69	102.64	0.068	1.13	2.00	3.52	2.04	6.41	10.78	0.000
95	102.64	102.43	0.137	3.66	4.50	5.70	4.96	78.93	82.34	0.000
100	102.43	102.32	0.139	3.23	4.50	6.50	5.00	79.54	90.04	0.000
132	102.64	102.55	0.105	1.08	1.50	2.71	2.09	3.69	4.35	0.000
134*	102.55	102.32	0.071	1.11	2.50	5.59	2.41	11.82	28.95	0.000
140	102.32	102.20	0.104	3.44	5.00	6.31	4.63	90.89	108.97	0.000
143	102.30	102.20	0.197	1.01	1.50	4.00	2.86	5.05	6.39	0.000
145	102.20	101.72	0.115	3.59	5.00	6.33	4.87	95.57	109.42	0.000
150*	102.32	101.72	0.141	0.62	0.72	6.18	5.11	4.27	11.90	0.000
160	101.72	101.22	0.151	4.06	5.00	6.42	5.58	109.62	109.84	0.000
170*	102.66	102.06	0.247	1.06	1.06	7.19	7.19	12.19	22.07	0.000
180	101.22	101.11	0.116	4.13	5.50	6.50	5.23	124.18	138.94	0.000
185	101.11	100.81	0.119	3.95	5.50	6.86	5.28	125.33	142.85	0.000

END

* Super critical flow.

NORMAL TERMINATION OF WINSTORM.

STATE OF TEXAS
RAMIRO GUTIERREZ
65948
REGISTERED PROFESSIONAL ENGINEER

THE SEAL APPEARING ON THIS DOCUMENT WAS AUTHORIZED BY RAMIRO GUTIERREZ, P.E. 65948
DATE: 8-12-03
ALTERATION OF A SEALED DOCUMENT WITHOUT PROPER NOTIFICATION TO THE RESPONSIBLE ENGINEER IS AN OFFENSE UNDER THE TEXAS ENGINEERING PRATICE LAW.

NOTES:

1. CALCULATIONS COMPILED BY TXDOT "WINSTORM V.3.05" COMPUTER PROGRAM.
2. SEWER CALCULATIONS BASED ON MANNING FORMULAS. JUNCTION LOSS WAS NOT TAKEN INTO ACCOUNT.
3. MAINLANE INLETS WERE ANALYSED BY MANUALLY ADDING THE 10 YEAR STORM FREQUENCY (SUPPLY Q)

Parsons Brinckerhoff Quade & Douglas Inc.

R. Gutierrez Engineering Corporation

Texas Department of Transportation

©2003 by TxDOT

US 281 EXPRESSWAY HYDRAULIC DATA SHEET

DESIGNED:	FED. RD DIV. No.	STATE	FEDERAL AID PROJECT No.		HIGHWAY No.
CHECKED:	6	TEXAS			US 281
DRAWN:	STATE DISTRICT	COUNTY	CONTROL No.	SECTION No.	JOB No. / SHEET No.
CHECKED:	21	HIDALGO	0255	08	091 / 522

TRUNK LINE "B"

Runoff Computation for Design Frequency.

ID	C Value	Area (acre)	To (min)	To Used (min)	Intensity (in/hr)	Supply Q (cfs)	Total Q (cfs)
B-1	0.65	3.36	31.89	31.89	4.17	0.000	9.108
B-10	0.6	0.98	31.67	31.67	4.19	0.000	2.463
B-11	0.77	0.97	24.15	24.15	4.92	0.000	3.677
B-12	0.65	1.69	29.58	29.58	4.37	0.000	4.797
B-13	0.62	0.85	27.87	27.87	4.53	0.000	2.385
B-14	0.69	0.60	29.04	29.04	4.42	0.000	1.828
B-15	0.64	0.79	26.20	26.20	4.69	0.000	2.374
B-16	0.65	1.28	25.32	25.32	4.79	0.000	3.985
B-17	0.9	0.07	10.00	10.00	7.64	0.000	0.481
B-18	0.86	0.29	10.00	10.00	7.64	0.000	1.904
B-19	0.65	0.99	22.96	22.96	5.07	0.000	3.261
B-2	0.46	2.41	36.93	36.93	3.80	0.000	4.217
B-20	0.68	1.66	33.53	33.53	4.04	0.000	4.563
B-3	0.49	1.20	32.10	32.10	4.15	0.000	2.442
B-4	0.69	0.95	26.52	26.52	4.66	0.000	3.056
B-5	0.59	1.34	46.83	46.83	3.26	0.000	2.577
B-6	0.76	0.31	15.05	15.05	6.34	0.000	1.494
B-7	0.63	5.36	46.73	46.73	3.26	0.000	11.021
B-8	0.62	2.00	42.67	42.67	3.47	0.000	4.297
B-9	0.64	1.55	33.77	33.77	4.02	0.000	3.992

On Grade Inlet Configuration Data

Inlet ID	Inlet Type	Inlet Length (ft)	Slopes Long (%)	Slopes Trans (%)	Gutter n	Gutter Depr. (ft)	Grate Width (ft)	Grate Type	Pond Width Allowed (ft)	Critic Elev. (ft)
B-10	Grate	7.00	0.22	16.60	0.014	n/a	4.00	Parall	14.00	104.11
B-13	Grate	7.00	0.11	16.60	0.014	n/a	4.00	Parall	14.00	104.29
B-14	Curb	5.00	0.11	2.00	0.012	0.40	n/a	n/a	14.00	104.51
B-15	Grate	7.00	0.11	16.60	0.014	n/a	4.00	Parall	14.00	104.63
B-16	Curb	10.00	0.11	2.00	0.012	0.40	n/a	n/a	20.00	104.94
B-17	Curb	5.00	0.15	2.00	0.012	0.40	n/a	n/a	14.00	105.84
B-19	Curb	5.00	0.04	2.00	0.012	0.40	n/a	n/a	20.00	104.81
B-2	Grate	7.00	0.40	16.60	0.014	n/a	4.00	Parall	14.00	104.27
B-4	Curb	5.00	0.04	2.00	0.012	0.40	n/a	n/a	20.00	105.51
B-5	Grate	7.00	0.10	16.60	0.014	n/a	4.00	Parall	14.00	104.50
B-6	Curb	5.00	0.04	2.00	0.012	0.40	n/a	n/a	20.00	104.73
B-9	Curb	10.00	0.07	2.00	0.012	0.40	n/a	n/a	20.00	104.23

On Grade Inlets Computation Data.

Inlet ID	Inlet Type	Total Q (cfs)	Intercept Capacity (cfs)	Q Bypass Allow (cfs)	Q Bypass Actual (cfs)	To Inlet ID	Required Length (ft)	Actual Length (ft)	Ponded Width (ft)
B-10	Grate	2.463	2.463	0.000	0.000		n/a	0.00	3.40
B-13	Grate	2.385	2.385	0.000	0.000		n/a	0.00	3.82
B-14	Curb	1.828	1.828	0.000	0.000		4.11	5.00	12.25
B-15	Grate	2.374	2.374	0.000	0.000		n/a	0.00	3.82
B-16	Curb	3.985	3.985	0.000	0.000		6.48	10.00	16.45
B-17	Curb	0.481	0.481	0.000	0.000		1.45	5.00	7.00
B-19	Curb	3.261	3.261	0.000	0.000		4.79	5.00	18.45
B-2	Grate	4.217	4.217	0.000	0.000		n/a	0.00	3.71
B-4	Curb	3.056	3.056	0.000	0.000		4.58	5.00	18.00
B-5	Grate	2.577	2.577	0.000	0.000		n/a	0.00	4.01
B-6	Curb	1.494	1.494	0.000	0.000		2.75	5.00	13.75
B-9	Curb	3.992	3.992	0.000	0.000		6.04	10.00	17.90

Sag Inlets Configuration Data.

Inlet ID	Inlet Type	Length/ Perim. (ft)	Grate Area (sf)	Left-Slope Long (%)	Left-Slope Trans (%)	Right-Slope Long (%)	Right-Slope Trans (%)	Gutter n	Gutter DeprW (ft)	Depth Allowed (ft)	Critic Elev. (ft)
B-1	Curb	15.00	n/a	0.15	2.50	0.15	2.50	0.012	0.40	0.50	104.40
B-11	Curb	10.00	n/a	0.05	2.00	0.11	2.00	0.012	0.40	0.50	104.90
B-12	Grate	22.00	28.00	0.05	16.60	0.10	16.60	0.012	n/a	1.00	103.96
B-3	Grate	22.00	28.00	0.03	16.60	0.10	16.60	0.012	n/a	1.00	103.56
B-7	Curb	20.00	n/a	0.09	2.00	0.18	2.00	0.012	0.40	0.50	105.50
B-8	Grate	22.00	28.00	0.20	16.60	0.34	16.60	0.012	n/a	1.00	103.71

Sag Inlets Computation Data.

Inlet ID	Inlet Type	Length (ft)	Grate Perim (ft)	Grate Area (sf)	Total Q (cfs)	Inlet Capacity (cfs)	Total Head (ft)	Ponded Width Left (ft)	Ponded Width Right (ft)
B-1	Curb	15.00	n/a	n/a	9.108	12.783	0.399	14.20	14.20
B-11	Curb	10.00	n/a	n/a	3.677	8.717	0.281	10.10	8.70
B-12	Grate	n/a	22.00	28.00	4.797	67.235	0.171	2.97	2.60
B-3	Grate	n/a	22.00	28.00	2.442	67.235	0.109	2.55	2.03
B-7	Curb	20.00	n/a	n/a	11.021	16.849	0.377	13.65	12.00
B-8	Grate	n/a	22.00	28.00	4.297	67.235	0.159	2.20	1.98

TRUNK LINE "B" - CONTINUED

Cumulative Junction Discharge Computations

Node I.D.	Node Type	Weighted C-Value	Cumulat. Dr.Area (acres)	Cumulat. To (min)	Intens. (in/hr)	User Supply Q cfs)	Additional Q In Node (cfs)	Total Disch. (cfs)
B-1	Curb	0.650	3.36	31.89	4.17	0.000	0.00	9.108
B-10	Grate	0.607	20.52	52.73	3.01	0.000	0.00	37.518
B-11	Curb	0.770	0.97	24.15	4.92	0.000	0.00	3.677
B-12	Grate	0.617	23.18	53.66	2.97	0.000	0.00	42.563
B-13	Grate	0.619	24.63	54.72	2.94	0.000	0.00	44.766
B-14	Curb	0.690	0.60	29.04	4.42	0.000	0.00	1.828
B-15	Grate	0.621	26.70	55.69	2.90	0.000	0.00	48.108
B-16	Curb	0.650	1.28	25.32	4.79	0.000	0.00	3.985
B-17	Curb	0.590	10.63	47.63	3.22	0.000	0.00	20.200
B-19	Curb	0.650	0.99	22.96	5.07	0.000	0.00	3.261
B-2	Grate	0.571	5.77	36.93	3.80	0.000	0.00	12.525
B-3	Grate	0.573	7.92	38.73	3.69	0.000	0.00	16.739
B-4	Curb	0.690	0.95	26.52	4.66	0.000	0.00	3.056
B-5	Grate	0.581	9.57	46.83	3.26	0.000	0.00	18.128
B-6	Curb	0.760	0.31	15.05	6.34	0.000	0.00	1.494
B-7	Curb	0.630	5.36	46.73	3.26	0.000	0.00	11.021
B-8	Grate	0.605	17.99	50.30	3.11	0.000	0.00	33.820
B-9	Curb	0.640	1.55	33.77	4.02	0.000	0.00	3.992
JB4	CiroWh	0.588	10.56	47.63	3.22	0.000	0.00	19.997
OB1	Outlt	0.621	26.70	55.69	2.90	0.000	0.00	48.108

Conveyance Configuration Data

Run#	Node US	Node I.D. DS	Flowline Elev. US (ft)	Flowline Elev. DS (ft)	Shape #	Span (ft)	Rise (ft)	Length (ft)	Slope (%)	n value
10	B-1	B-2	101.10	100.95	Ciro 1	0.00	2.00	79.00	0.19	0.012
26	B-2	B-3	100.37	99.75	Ciro 1	0.00	2.50	418.00	0.15	0.012
30	B-4	B-3	101.00	100.78	Ciro 1	0.00	2.00	67.00	0.33	0.012
44	B-3	B-5	99.75	99.23	Ciro 1	0.00	2.50	359.00	0.14	0.012
50	B-6	B-5	100.00	99.89	Ciro 1	0.00	1.50	75.00	0.15	0.012
60	B-5	JB4	98.73	98.43	Ciro 1	0.00	3.00	200.00	0.15	0.012
65	B-19	JB4	100.00	99.50	Ciro 1	0.00	1.50	61.00	0.82	0.012
68	JB4	B-17	98.43	98.09	Ciro 1	0.00	3.00	230.00	0.15	0.012
70	B-17	B-8	97.59	96.90	Ciro 1	0.00	3.50	467.00	0.15	0.012
80	B-7	B-8	100.00	99.60	Ciro 1	0.00	2.00	58.00	0.69	0.012
90	B-8	B-10	96.90	95.86	Ciro 1	0.00	3.50	698.00	0.15	0.012
100	B-9	B-10	97.06	96.86	Ciro 1	0.00	1.50	51.00	0.39	0.012
110	B-10	B-12	95.36	94.95	Ciro 1	0.00	4.00	279.00	0.15	0.012
120	B-11	B-12	100.50	98.30	Ciro 1	0.00	2.00	74.00	2.97	0.012
130	B-12	B-13	94.95	94.47	Ciro 1	0.00	4.00	326.00	0.15	0.012
140	B-14	B-13	96.17	95.97	Ciro 1	0.00	1.50	52.00	0.38	0.012
150	B-13	B-15	94.47	94.03	Ciro 1	0.00	4.00	300.00	0.15	0.012
160	B-16	B-15	95.73	95.53	Ciro 1	0.00	1.50	51.00	0.39	0.012
170	B-15	OB1	94.03	93.51	Ciro 1	0.00	4.00	320.00	0.16	0.012

Conveyance Hydraulic Computations. Tailwater = 98.500 (ft)

Run#	Hydraulic Gradeline US Elev (ft)	Hydraulic Gradeline DS Elev (ft)	Fr.Slope (%)	Depth Unif. (ft)	Depth Actual (ft)	Velocity Unif. (f/s)	Velocity Actual (f/s)	Q (cfs)	Cap (cfs)	Junc Loss (ft)
10	102.54	102.13	0.138	1.44	1.44	3.77	3.77	9.11	10.68	0.000
26	102.13	101.78	0.079	1.56	2.03	3.88	2.93	12.52	17.12	0.000
30	101.80	101.78	0.016	0.63	1.00	3.58	1.94	3.06	14.05	0.000
44	101.78	100.62	0.142	2.03	2.03	3.92	3.92	16.74	16.91	0.000
50	100.68	100.62	0.017	0.61	0.73	2.22	1.74	1.49	4.36	0.000
60	100.62	100.43	0.063	1.78	2.00	4.15	3.62	18.13	27.99	0.000
65*	100.58	100.43	0.082	0.58	0.93	5.17	2.84	3.26	10.30	0.000
68	100.43	100.18	0.077	1.88	2.09	4.30	3.80	20.00	27.79	0.000
70	100.18	100.05	0.034	1.70	3.15	4.37	2.21	20.20	41.90	0.000
80*	101.05	100.65	0.202	1.05	1.05	6.62	6.62	11.02	20.36	0.000
90	100.05	99.46	0.096	2.41	3.50	4.80	3.52	33.82	42.08	0.000
100	99.52	99.46	0.123	0.80	1.50	4.19	2.26	3.99	7.13	0.000
110	99.46	99.30	0.058	2.31	4.00	4.98	2.99	37.52	59.66	0.000
120*	100.90	99.30	0.023	0.40	1.00	8.27	2.35	3.68	42.27	0.000
130	99.30	99.05	0.075	2.50	4.00	5.15	3.39	42.56	59.72	0.000
140	99.07	99.05	0.026	0.52	1.50	3.35	1.03	1.83	7.06	0.000
150	99.05	98.80	0.083	2.63	4.00	5.12	3.56	44.77	59.60	0.000
160	98.87	98.80	0.123	0.80	1.50	4.18	2.26	3.99	7.13	0.000
170	98.80	98.50	0.096	2.63	4.00	5.50	3.83	48.11	62.74	0.000

END

* Super critical flow.

NORMAL TERMINATION OF WINSTORM.

NOTES:

1. CALCULATIONS COMPILED BY TXDOT "WINSTORM V.3.05" COMPUTER PROGRAM.
2. SEWER CALCULATIONS BASED ON MANNING FORMULAS. JUNCTION LOSS WAS NOT TAKEN INTO ACCOUNT.
3. MAINLANE INLETS WERE ANALYSED BY MANUALLY ADDING THE 10 YEAR STORM FREQUENCY (SUPPLY Q)

STATE OF TEXAS
RAMIRO GUTIERREZ
65948
REGISTERED PROFESSIONAL ENGINEER

THE SEAL APPEARING ON THIS DOCUMENT WAS AUTHORIZED BY RAMIRO GUTIERREZ, P.E. 65948
DATE: 8-12-03
ALTERATION OF A SEALED DOCUMENT WITHOUT PROPER NOTIFICATION TO THE RESPONSIBLE ENGINEER IS AN OFFENSE UNDER THE TEXAS ENGINEERING PRATICE LAW.

Parsons Brinckerhoff Quade & Douglas Inc.

R. Gutierrez Engineering Corporation

Texas Department of Transportation

© 2003 by TxDOT

US 281 EXPRESSWAY HYDRAULIC DATA SHEET

DESIGNED:	FED. RD DIV. No.	STATE	FEDERAL AID PROJECT No.			HIGHWAY No.	
CHECKED:	6	TEXAS				US 281	
DRAWN:	STATE DISTRICT	COUNTY	CONTROL No.	SECTION No.	JOB No.	SHEET No.	
CHECKED:	21	HIDALGO	0255	08	091	523	

TRUNK LINE "C"

Runoff Computation for Design Frequency.

ID	C Value	Area (acre)	To (min)	To Used (min)	Intensity (in/hr)	Supply Q (cfs)	Total Q (cfs)
C-1	0.61	1.40	14.40	14.40	6.48	0.000	5.535
C-12	0.9	0.25	30.00	30.00	4.33	0.000	0.974
C-13	0.9	0.16	10.00	10.00	7.64	0.000	1.100
C-14	0.71	0.97	12.67	12.67	6.89	0.000	4.742
C-15	0.7	0.94	12.67	12.67	6.89	0.000	4.530
C-16	0.9	0.25	30.00	30.00	4.33	0.000	0.974
C-2	0.55	0.96	30.06	30.06	4.32	0.000	2.283
C-3	0.56	1.10	28.78	28.78	4.44	0.000	2.735
C-5	0.77	1.09	13.88	13.88	6.60	0.000	5.536
C-6	0.6	2.10	27.75	27.75	4.54	0.000	5.718
C-7	0.55	2.01	22.01	22.01	5.19	0.000	5.737
C-8	0.73	0.27	10.00	10.00	7.64	0.000	1.505
C-9	0.72	0.92	61.50	61.50	2.71	0.000	1.794

On Grade Inlet Configuration Data

Inlet ID	Inlet Type	Inlet Length (ft)	Slopes Long (%)	Slopes Trans (%)	Gutter n	Gutter Depr. (ft)	Grate Width (ft)	Grate Type	Pond Width Allowed (ft)	Critic Elev. (ft)
C-1	Curb	10.00	0.09	2.00	0.012	0.40	n/a	n/a	20.00	103.94
C-13	Curb	5.00	0.15	2.50	0.012	0.40	n/a	n/a	12.00	105.10
C-14	Curb	10.00	0.45	2.00	0.012	0.40	n/a	n/a	14.00	103.64
C-15	Curb	10.00	0.45	2.00	0.012	0.40	n/a	n/a	14.00	103.11
C-2	Grate	4.00	0.33	16.60	0.012	n/a	4.00	Parall	14.00	103.97
C-3	Grate	7.00	0.15	16.60	0.012	n/a	4.00	Parall	14.00	104.00
C-7	Curb	10.00	0.07	2.00	0.012	0.40	n/a	n/a	22.00	103.96
C-8	Curb	5.00	0.28	2.00	0.012	0.40	n/a	n/a	14.00	104.11
C-9	Grate	4.00	0.86	16.60	0.012	n/a	4.00	Parall	14.00	105.04

On Grade Inlets Computation Data.

Inlet ID	Inlet Type	Total Q (cfs)	Intercept Capacity (cfs)	Q Bypass Allow (cfs)	Q Bypass Actual (cfs)	To Inlet ID	Required Length (ft)	Actual Length (ft)	Ponded Width (ft)
C-1	Curb	5.535	5.535	0.000	0.000		7.82	10.00	19.30
C-13	Curb	1.100	1.100	0.000	0.000		2.54	5.00	8.32
C-14	Curb	4.742	4.742	0.000	0.000		9.06	10.00	13.45
C-15	Curb	4.530	4.530	0.000	0.000		8.78	10.00	13.25
C-2	Grate	2.283	2.283	0.000	0.000		n/a	0.00	2.89
C-3	Grate	2.735	2.735	0.000	0.000		n/a	0.00	3.58
C-7	Curb	5.737	5.737	0.000	0.000		7.61	10.00	20.50
C-8	Curb	1.505	1.505	0.000	0.000		4.50	5.00	9.55
C-9	Grate	1.794	1.794	0.000	0.000		n/a	0.00	2.20

Sag Inlets Configuration Data.

Inlet ID	Inlet Type	Length/ Perim. (ft)	Grate Area (sf)	Left-Slope Long (%)	Left-Slope Trans (%)	Right-Slope Long (%)	Right-Slope Trans (%)	Gutter n	Gutter DeprW (ft)	Depth Allowed (ft)	Critic Elev. (ft)
C-12	Curb	5.00	n/a	0.15	2.00	0.15	2.00	0.012	0.33	0.50	105.00
C-16	Curb	5.00	n/a	0.15	2.00	0.15	2.00	0.012	0.33	0.50	105.00
C-5	Curb	10.00	n/a	0.07	2.00	0.09	2.00	0.012	0.40	0.50	104.50
C-6	Grate	22.00	28.00	0.3816.60		0.15	16.60	0.012	n/a	1.00	103.73

Sag Inlets Computation Data.

Inlet ID	Inlet Type	Length (ft)	Grate Perim (ft)	Grate Area (sf)	Total Q (cfs)	Inlet Capacity (cfs)	Total Head (ft)	Ponded Width Left (ft)	Ponded Width Right (ft)
C-12	Curb	5.00	n/a	n/a	0.974	4.549	0.179	7.05	7.05
C-16	Curb	5.00	n/a	n/a	0.974	4.549	0.179	7.05	7.05
C-5	Curb	10.00	n/a	n/a	5.536	8.717	0.369	11.05	10.55
C-6	Grate	n/a	22.00	28.00	5.718	67.235	0.192	2.18	2.59

TRUNK LINE "C" - CONTINUED

Cumulative Junction Discharge Computations

Node I.D.	Node Type	Weighted C-Value	Cumulat. Dr.Area (acres)	Cumulat. To (min)	Intens. (in/hr)	User Supply Q cfs)	Additional Q in Node (cfs)	Total Disch. (cfs)
C-1	Curb	0.610	1.40	14.40	6.48	0.000	0.00	5.535
C-12	Curb	0.746	2.41	12.97	6.81	0.000	0.00	12.236
C-13	Curb	0.636	11.23	34.57	3.97	0.000	0.00	28.332
C-14	Curb	0.710	0.97	12.67	6.89	0.000	0.00	4.742
C-15	Curb	0.705	1.91	12.97	6.81	0.000	0.00	9.172
C-16	Curb	0.900	0.25	30.00	4.33	0.000	0.00	0.974
C-2	Grate	0.666	4.77	31.87	4.17	0.000	0.00	13.261
C-3	Grate	0.666	6.96	33.22	4.07	0.000	0.00	18.841
C-5	Curb	0.770	1.09	13.88	6.60	0.000	0.00	5.536
C-6	Grate	0.632	11.07	34.57	3.97	0.000	0.00	27.761
C-7	Curb	0.550	2.01	22.01	5.19	0.000	0.00	5.737
C-8	Curb	0.644	12.42	34.57	3.97	0.000	0.00	31.741
C-9	Grate	0.642	12.15	34.57	3.97	0.000	0.00	30.959
JC1	CiroMh	0.632	11.07	34.57	3.97	0.000	0.00	27.761
JC2	CiroMh	0.000	0.00	0.00	0.00	0.000	0.00	0.000
JC3	CiroMh	0.000	0.00	0.00	0.00	0.000	0.00	0.000
02	Outlt	0.644	12.42	34.57	3.97	0.000	0.00	31.741

Conveyance Configuration Data

Run#	Node I.D. US	Node I.D. DS	Flowline Elev. US (ft)	Flowline Elev. DS (ft)	Shape #	Span (ft)	Rise (ft)	Length (ft)	Slope (%)	n value
22	C-14	C-15	98.20	98.00	Circ 1	0.00	2.00	70.00	0.29	0.012
24	C-15	C-12	98.00	97.22	Circ 1	0.00	2.00	300.00	0.26	0.012
26	C-16	C-12	99.40	99.20	Circ 1	0.00	2.00	81.00	0.25	0.012
30	C-12	C-2	97.22	96.78	Circ 1	0.00	2.50	293.00	0.15	0.012
50	C-1	C-2	100.03	99.83	Circ 1	0.00	1.50	64.00	0.31	0.012
60	C-2	C-3	96.78	96.29	Circ 1	0.00	2.50	315.00	0.16	0.012
70	C-5	C-3	102.10	101.50	Circ 1	0.00	1.50	56.00	1.07	0.012
80	C-3	C-6	95.79	95.27	Circ 1	0.00	3.00	348.00	0.15	0.012
90	C-7	C-6	99.05	98.85	Circ 1	0.00	1.50	50.00	0.40	0.012
100	C-6	JC1	95.27	94.91	Circ 1	0.00	3.00	239.00	0.15	0.012
110	JC1	C-13	94.91	94.00	Circ 1	0.00	3.00	242.00	0.38	0.012
112	C-13	C-9	94.00	93.50	Circ 1	0.00	3.00	125.00	0.40	0.012
115	C-9	C-8	93.50	93.00	Circ 1	0.00	3.00	88.00	0.57	0.012
130	C-8	02	92.21	90.12	Circ 1	0.00	3.00	214.00	0.98	0.012

Conveyance Hydraulic Computations. Tailwater = 99.960 (ft)

Run#	Hydraulic Gradeline US Elev (ft)	Hydraulic Gradeline DS Elev (ft)	Fr.Slope (%)	Depth Unif. (ft)	Depth Actual (ft)	Velocity Unif. (f/s)	Velocity Actual (f/s)	Q (cfs)	Cap (cfs)	Junc Loss (ft)
22	102.62	102.59	0.037	0.83	2.00	3.86	1.51	4.74	13.10	0.000
24	102.59	102.17	0.140	1.28	2.00	4.31	2.92	9.17	12.50	0.000
26	102.17	102.17	0.002	0.38	2.00	2.32	0.31	0.97	12.18	0.000
30	102.17	101.95	0.076	1.56	2.50	3.79	2.49	12.24	17.22	0.000
50	102.10	101.95	0.236	1.08	1.50	4.07	3.13	5.53	6.36	0.000
60	101.95	101.67	0.089	1.64	2.50	3.88	2.70	13.26	17.53	0.000
70*	102.82	102.22	0.237	0.72	0.72	6.56	6.56	5.54	11.78	0.000
80	101.67	101.44	0.068	1.78	3.00	4.31	2.67	18.84	27.93	0.000
90	101.56	101.44	0.254	1.01	1.50	4.54	3.25	5.74	7.20	0.000
100	101.44	101.08	0.148	2.44	3.00	4.51	3.93	27.76	28.05	0.000
110	101.08	100.73	0.148	1.73	3.00	6.56	3.93	27.76	44.31	0.000
112*	100.73	100.53	0.154	1.71	3.00	6.80	4.01	28.33	45.71	0.000
115*	100.53	100.37	0.184	1.62	3.00	7.97	4.38	30.96	54.47	0.000
130*	100.37	99.96	0.193	1.40	3.00	9.81	4.49	31.74	71.42	0.000

END

* Super critical flow.

NORMAL TERMINATION OF WINSTORM.

NOTES:

1. CALCULATIONS COMPILED BY TXDOT "WINSTORM V.3.05" COMPUTER PROGRAM.
2. SEWER CALCULATIONS BASED ON MANNING FORMULAS. JUNCTION LOSS WAS NOT TAKEN INTO ACCOUNT.
3. MAINLANE INLETS WERE ANALYSED BY MANUALLY ADDING THE 10 YEAR STORM FREQUENCY (SUPPLY Q)

STATE OF TEXAS
RAMIRO GUTIERREZ
65948
REGISTERED
PROFESSIONAL ENGINEER

THE SEAL APPEARING ON THIS DOCUMENT WAS AUTHORIZED BY RAMIRO GUTIERREZ, P.E. 65948
DATE: 8-12-09
ALTERATION OF A SEALED DOCUMENT WITHOUT PROPER NOTIFICATION TO THE RESPONSIBLE ENGINEER IS AN OFFENSE UNDER THE TEXAS ENGINEERING PRATICE LAW.

Parsons Brinckerhoff Quade & Douglas Inc.

R. Gutierrez Engineering Corporation

Texas Department of Transportation

© 2003 by TxDOT

US 281 EXPRESSWAY HYDRAULIC DATA SHEET

DESIGNED:	FED. RD DIV. No.	STATE	FEDERAL AID PROJECT No.		HIGHWAY No.
CHECKED:	6	TEXAS			US 281
DRAWN:	STATE DISTRICT	COUNTY	CONTROL No.	SECTION No.	JOB No. / SHEET No.
CHECKED:	21	HIDALGO	0255	08	091 / 524

TRUNK LINE "D"

Runoff Computation for Design Frequency.

ID	C Value	Area (acre)	Tc (min)	Tc Used (min)	Intensity (in/hr)	Supply Q (cfs)	Total Q (cfs)
D-1	0.8	0.88	12.27	12.27	6.99	0.000	4.919
D-10	0.68	0.76	33.63	33.63	4.04	0.000	2.085
D-11	0.53	0.91	30.00	30.00	4.33	0.000	2.088
D-12	0.68	1.68	38.83	38.83	3.68	0.000	4.208
D-13	0.56	1.77	30.08	30.08	4.32	0.000	4.284
D-14	0.9	0.19	10.00	10.00	7.64	0.000	1.306
D-15	0.58	1.60	35.17	35.17	3.92	0.000	3.641
D-16	0.22	2.54	40.25	40.25	3.60	0.000	2.011
D-17	0.25	1.01	25.67	25.67	4.75	0.000	1.200
D-18	0.35	0.28	16.50	16.50	6.06	0.000	0.593
D-19	0.29	0.28	16.83	16.83	5.99	0.000	0.487
D-2	0.35	2.26	46.00	46.00	3.30	0.000	2.609
D-20	0.24	3.10	41.17	41.17	3.55	0.000	2.639
D-21	0.23	4.02	57.42	57.42	2.84	0.000	2.626
D-22	0.8	0.71	36.67	36.67	3.82	0.000	2.170
D-23	0.8	0.13	10.00	10.00	7.64	0.000	0.794
D-24	0.8	0.07	10.00	10.00	7.64	0.000	0.428
D-3	0.67	1.29	32.78	32.78	4.10	0.000	3.544
D-4	0.47	1.31	24.02	24.02	4.94	0.000	3.041
D-5	0.72	1.07	67.65	67.65	2.54	0.000	1.953
D-6	0.47	2.70	52.78	52.78	3.01	0.000	3.817
D-7	0.66	3.11	64.70	64.70	2.62	0.000	5.368
D-8	0.55	1.09	35.33	35.33	3.91	0.000	2.345
D-9	0.64	2.14	46.67	46.67	3.27	0.000	4.474

On Grade Inlet Configuration Data

Inlet ID	Inlet Type	Inlet Length (ft)	Slopes Long (%)	Slopes Trans (%)	Gutter n	Gutter Depr. (ft)	Grate Width (ft)	Grate Type	Pond Width Allowed (ft)	Critic Elev. (ft)
D-10	Curb	5.00	0.15	2.50	0.012	0.40	n/a	n/a	14.00	103.95
D-11	Grate	7.00	0.24	16.60	0.012	n/a	4.00	Parall	14.00	103.95
D-14	Curb	5.00	0.19	2.50	0.012	0.40	n/a	n/a	14.00	104.20
D-2	Grate	4.00	0.24	16.60	0.012	n/a	4.00	Parall	14.00	100.70
D-22	Curb	10.00	0.23	2.00	0.012	0.33	n/a	n/a	12.00	103.81
D-23	Curb	5.00	1.00	2.00	0.012	0.33	n/a	n/a	12.00	104.91
D-24	Grate	1.50	0.49	2.00	0.012	n/a	3.80	Parall	12.00	128.88
D-3	Curb	10.00	0.15	2.52	0.012	0.40	n/a	n/a	14.00	104.48
D-4	Grate	4.00	0.16	16.60	0.012	n/a	4.00	Parall	14.00	101.62
D-5	Curb	5.00	0.15	2.72	0.012	0.40	n/a	n/a	14.00	103.59
D-6	Grate	4.00	0.10	16.60	0.012	n/a	4.00	Parall	14.00	102.90
D-8	Grate	7.00	0.15	16.60	0.012	n/a	4.00	Parall	14.00	104.10
D-9	Curb	10.00	0.18	2.50	0.012	0.40	n/a	n/a	14.00	103.72

On Grade Inlets Conmputation Data.

Inlet ID	Inlet Type	Total Q (cfs)	Intercept Capacity (cfs)	Q Bypass Allow (cfs)	Q Bypass Actual (cfs)	To Inlet ID	Required Length (ft)	Actual Length (ft)	Ponded Width (ft)
D-10	Curb	2.085	2.085	0.000	0.000		4.56	5.00	10.60
D-11	Grate	2.088	2.088	0.000	0.000		n/a	0.00	2.97
D-14	Curb	1.306	1.306	0.000	0.000		3.68	5.00	8.48
D-2	Grate	2.609	2.609	0.000	0.000		n/a	0.00	3.23
D-22	Curb	2.170	2.170	0.000	0.000		6.09	10.00	11.40
D-23	Curb	0.794	0.794	0.000	0.000		4.97	5.00	5.95
D-24	Grate	0.428	0.414	0.990	0.013		n/a	0.00	5.35
D-3	Curb	3.544	3.544	0.000	0.000		6.23	10.00	12.86
D-4	Grate	3.041	3.041	0.000	0.000		n/a	0.00	3.68
D-5	Curb	1.953	1.953	0.000	0.000		4.32	5.00	9.78
D-6	Grate	3.817	3.816	0.990	0.001		n/a	0.00	4.38
D-8	Grate	2.345	2.345	0.000	0.000		n/a	0.00	3.37
D-9	Curb	4.474	4.474	0.000	0.000		7.46	10.00	13.60

TRUNK LINE "D" - (CONTINUED)

Sag Inlets Configuration Data.

Inlet ID	Inlet Type	Length/ Perim. (ft)	Grate Area (sf)	Left-Slope Long (%)	Left-Slope Trans (%)	Right-Slope Long (%)	Right-Slope Trans (%)	Gutter n	Gutter DeprW (ft)	Depth Allowed (ft)	Critic Elev. (ft)
D-1	Curb	10.00	n/a	1.00	2.50	0.64	2.50	0.012	0.40	0.50	103.23
D-12	Curb	10.00	n/a	0.15	2.04	0.34	2.04	0.012	0.40	0.50	103.58
D-13	Grate	22.00	28.00	0.24	16.60	0.40	16.60	0.012	n/a	0.50	102.93
D-15	Grate	22.00	28.00	0.93	16.60	0.15	16.60	0.012	n/a	0.50	103.52
D-16	Grate	16.00	16.00	0.50	2.50	0.50	2.50	0.012	n/a	0.50	104.95
D-17	Grate	16.00	16.00	0.10	2.50	0.50	2.50	0.012	n/a	0.50	104.95
D-18	Grate	12.00	9.00	0.50	2.00	0.50	2.00	0.014	n/a	0.50	104.00
D-19	Grate	12.00	9.00	0.50	2.00	0.50	2.00	0.014	n/a	0.50	104.00
D-20	Grate	12.00	9.00	0.15	2.00	0.15	2.00	0.012	n/a	0.50	103.00
D-21	Grate	12.00	9.00	0.15	2.00	0.15	2.00	0.012	n/a	0.50	103.00
D-7	Curb	10.00	n/a	0.15	2.80	0.18	2.80	0.012	0.40	0.50	103.00

Sag Inlets Computation Data.

Inlet ID	Inlet Type	Length (ft)	Grate Perim (ft)	Grate Area (sf)	Total Q (cfs)	Inlet Capacity (cfs)	Total Head (ft)	Ponded Width Left (ft)	Ponded Width Right (ft)
D-1	Curb	10.00	n/a	n/a	4.919	8.717	0.341	7.88	8.56
D-12	Curb	10.00	n/a	n/a	4.208	8.717	0.308	12.06	10.34
D-13	Grate	n/a	22.00	28.00	4.284	23.771	0.158	3.00	2.71
D-15	Grate	n/a	22.00	28.00	3.641	23.771	0.142	2.19	3.08
D-16	Grate	n/a	16.00	16.00	2.011	17.288	0.118	6.44	6.44
D-17	Grate	n/a	16.00	16.00	1.200	17.288	0.084	7.16	5.28
D-18	Grate	n/a	12.00	9.00	0.593	13.097	0.064	4.95	4.95
D-19	Grate	n/a	12.00	9.00	0.487	13.097	0.056	4.60	4.60
D-20	Grate	n/a	12.00	9.00	2.639	12.966	0.172	10.25	10.25
D-21	Grate	n/a	12.00	9.00	2.626	12.966	0.171	10.25	10.25
D-7	Curb	10.00	n/a	n/a	5.368	8.717	0.362	10.82	10.46

Cumulative Junction Discharge Computations

Node I.D.	Node Type	Weighted C-Value	Cumulat. Dr.Area (acres)	Cumulat. Tc (min)	Intens. (in/hr)	User Supply Q cfs)	Additional Q in Node (cfs)	Total Disch. (cfs)
D-1	Curb	0.800	0.88	12.27	6.99	0.000	0.00	4.919
D-10	Curb	0.680	0.76	33.63	4.04	0.000	0.00	2.085
D-11	Grate	0.462	31.45	73.45	2.39	0.000	0.00	34.745
D-12	Curb	0.477	34.90	74.73	2.36	0.000	0.00	39.364
D-13	Grate	0.467	33.22	74.56	2.37	0.000	0.00	36.724
D-14	Curb	0.394	21.28	69.20	2.50	0.000	0.00	20.944
D-15	Grate	0.438	25.99	69.44	2.49	0.000	0.00	28.310
D-16	Grate	0.220	2.54	40.25	3.60	0.000	0.00	2.011
D-17	Grate	0.229	3.55	40.48	3.59	0.000	0.00	2.909
D-18	Grate	0.350	0.28	16.50	6.06	0.000	0.00	0.593
D-19	Grate	0.320	0.56	16.83	5.99	0.000	0.00	1.074
D-2	Grate	0.319	14.72	61.36	2.71	0.000	0.00	12.760
D-20	Grate	0.240	3.10	41.17	3.55	0.000	0.00	2.639
D-21	Grate	0.232	10.67	57.42	2.84	0.000	0.00	7.043
D-22	Curb	0.800	0.71	36.67	3.82	0.000	0.00	2.170
D-23	Curb	0.243	10.87	58.92	2.79	0.000	0.00	7.366
D-24	Grate	0.800	0.07	10.00	7.64	0.000	0.00	0.428
D-3	Curb	0.670	1.29	32.78	4.10	0.000	0.00	3.544
D-4	Grate	0.357	17.32	62.35	2.68	0.000	0.00	16.590
D-5	Curb	0.720	1.07	67.65	2.54	0.000	0.00	1.953
D-6	Grate	0.390	21.09	67.86	2.53	0.000	0.00	20.799
D-7	Curb	0.660	3.11	64.70	2.62	0.000	0.00	5.368
D-8	Grate	0.457	29.22	70.94	2.45	0.000	0.00	32.717
D-9	Curb	0.640	2.14	46.67	3.27	0.000	0.00	4.474
JD1	CircMh	0.285	11.75	59.71	2.76	0.000	0.00	9.245
JD2	CircMh	0.357	17.32	62.35	2.68	0.000	0.00	16.590
JD3	CircMh	0.454	29.78	70.94	2.45	0.000	0.00	33.157
O1	Outlt	0.477	34.90	74.73	2.36	0.000	0.00	39.364

NOTES:

1. CALCULATIONS COMPILED BY TXDOT "WINSTORM V.3.05" COMPUTER PROGRAM.
2. SEWER CALCULATIONS BASED ON MANNING FORMULAS. JUNCTION LOSS WAS NOT TAKEN INTO ACCOUNT.
3. MAINLANE INLETS WERE ANALYSED BY MANUALLY ADDING THE 10 YEAR STORM FREQUENCY (SUPPLY Q)
4. Q BYPASS CONSIDERED ACCEPTABLE DUE TO THE CARRYOVER AMOUNT BEING MINIMAL (LESS THAN 1.0 CFS.) AND THE PONDING WIDTH BEING CONSIDERABLY LESS THAN ALLOWABLE THE CARRYOVER WOULD NOT SIGNIFICANTLY ICREASE THE PONDING WIDTH.

STATE OF TEXAS
RAMIRO GUTIERREZ
65948
REGISTERED PROFESSIONAL ENGINEER

THE SEAL APPEARING ON THIS DOCUMENT WAS AUTHORIZED BY RAMIRO GUTIERREZ, P.E. 65948
DATE: 8-19-03
ALTERATION OF A SEALED DOCUMENT WITHOUT PROPER NOTIFICATION TO THE RESPONSIBLE ENGINEER IS AN OFFENSE UNDER THE TEXAS ENGINEERING PRATICE LAW.

PB Parsons Brinckerhoff Quade & Douglas Inc.

R. Gutierrez Engineering Corporation

Texas Department of Transportation

©2003 by TxDOT

US 281 EXPRESSWAY HYDRAULIC DATA SHEET

DESIGNED:	FED. RD DIV. No.	STATE	FEDERAL AID PROJECT No.			HIGHWAY No.	
CHECKED:	6	TEXAS				US 281	
DRAWN:	STATE DISTRICT	COUNTY	CONTROL No.	SECTION No.	JOB No.	SHEET No.	
CHECKED:	21	HIDALGO	0255	08	091	525	

$NAME$

$TIME$

$DATE$

TRUNK LINE "D" - (CONTINUED)

Conveyance Configuration Data

Run#	Node I.D. US	DS	Flowline Elev. US (ft)	DS (ft)	Shape #	Span (ft)	Rise (ft)	Length (ft)	Slope (%)	n value
10	D-16	D-17	97.86	97.81	Circ 1	0.00	1.50	34.00	0.15	0.012
20	D-17	D-21	97.31	96.88	Circ 1	0.00	2.00	228.00	0.19	0.012
30	D-20	D-21	97.52	97.38	Circ 1	0.00	1.50	62.00	0.23	0.012
40	D-21	D-23	96.38	96.05	Circ 1	0.00	2.50	280.00	0.12	0.012
45	D-24	D-23	98.47	98.05	Circ 1	0.00	0.50	42.00	1.00	0.011
50	D-23	JD1	96.05	95.81	Circ 1	0.00	2.50	162.00	0.15	0.012
60	D-1	JD1	96.48	96.30	Circ 1	0.00	2.00	112.00	0.16	0.012
70	JD1	D-2	95.31	94.77	Circ 1	0.00	3.00	358.00	0.15	0.012
80	D-22	D-2	96.34	96.27	Circ 1	0.00	1.50	44.00	0.16	0.012
90	D-2	D-4	94.77	94.32	Circ 1	0.00	3.00	244.00	0.18	0.012
100	D-3	D-4	97.27	97.00	Circ 1	0.00	1.50	68.00	0.40	0.012
110	D-4	JD2	94.32	93.73	Circ 1	0.00	3.50	296.00	0.20	0.012
120	JD2	D-6	93.73	93.14	Circ 1	0.00	3.50	295.00	0.20	0.012
130	D-5	D-6	98.50	98.00	Circ 1	0.00	1.50	58.00	0.86	0.012
140	D-6	D-14	93.14	92.62	Circ 1	0.00	3.50	346.00	0.15	0.012
150	D-14	D-15	92.62	92.52	Circ 1	0.00	3.50	65.00	0.15	0.012
160	D-7	D-15	97.00	96.80	Circ 1	0.00	2.00	80.00	0.25	0.012
170	D-15	D-8	92.52	91.97	Circ 1	0.00	3.50	402.00	0.14	0.012
180	D-9	D-8	98.00	97.00	Circ 1	0.00	1.50	52.00	1.92	0.012
190	D-8	JD3	91.97	91.35	Circ 1	0.00	4.00	414.00	0.15	0.012
194	D-18	D-19	99.50	99.30	Circ 1	0.00	1.50	28.00	0.71	0.012
198	D-19	JD3	99.30	97.00	Circ 1	0.00	1.50	84.00	2.74	0.012
200	JD3	D-11	91.35	90.88	Circ 1	0.00	4.00	316.00	0.15	0.012
210	D-10	D-11	98.00	97.00	Circ 1	0.00	2.00	54.00	1.85	0.012
220	D-11	D-13	90.88	90.38	Circ 1	0.00	4.00	330.00	0.15	0.012
230	D-13	D-12	90.38	90.29	Circ 1	0.00	4.00	54.00	0.17	0.012
240	D-12	01	90.29	90.12	Circ 1	0.00	4.00	112.00	0.15	0.012

Conveyance Hydraulic Computations. Tailwater = 97.000 (ft)

Run#	Hydraulic Gradeline US Elev (ft)	DS Elev (ft)	Fr.Slope (%)	Depth Unif. (ft)	Depth Actual (ft)	Velocity Unif. (f/s)	Velocity Actual (f/s)	Q (cfs)	Cap (cfs)	Junc Loss (ft)
10	98.56	98.41	0.031	0.70	0.70	2.47	2.47	2.01	4.36	0.000
20	98.41	98.37	0.014	0.72	1.49	2.86	1.16	2.91	10.64	0.000
30	98.42	98.37	0.054	0.74	0.99	3.05	2.13	2.64	5.41	0.000
40	98.37	98.31	0.025	1.17	2.26	3.12	1.51	7.04	15.26	0.000
45*	98.76	98.34	0.416	0.29	0.29	3.58	3.58	0.43	0.66	0.000
50	98.31	98.28	0.027	1.13	2.47	3.41	1.50	7.37	17.11	0.000
60	98.31	98.28	0.040	1.00	1.98	3.13	1.57	4.92	9.83	0.000
70	98.28	98.22	0.016	1.17	3.00	3.61	1.31	9.25	28.07	0.000
80	98.24	98.22	0.036	0.73	1.50	2.56	1.23	2.17	4.54	0.000
90	98.22	98.14	0.031	1.36	3.00	4.10	1.81	12.76	31.03	0.000
100	98.19	98.14	0.097	0.75	1.14	4.01	2.45	3.54	7.17	0.000
110	98.14	98.08	0.023	1.42	3.50	4.52	1.72	16.59	48.67	0.000
120	98.08	98.01	0.023	1.42	3.50	4.52	1.72	16.59	48.75	0.000
130*	98.94	98.44	0.029	0.44	0.44	4.57	4.57	1.95	10.57	0.000
140	98.01	97.88	0.036	1.75	3.50	4.32	2.16	20.80	42.26	0.000
150	97.88	97.86	0.037	1.75	3.50	4.35	2.18	20.94	42.76	0.000
160	97.97	97.86	0.048	0.92	1.06	3.79	3.17	5.37	12.26	0.000
170	97.86	97.59	0.067	2.19	3.50	4.48	2.94	28.31	40.32	0.000
180*	98.55	97.59	0.155	0.55	0.59	7.69	6.93	4.47	15.78	0.000
190	97.59	97.41	0.044	2.13	4.00	4.82	2.60	32.72	60.23	0.000
194*	99.75	99.55	0.003	0.25	0.25	3.03	3.03	0.59	9.62	0.000
198*	99.54	97.41	0.009	0.24	0.41	5.78	2.76	1.07	18.84	0.000
200	97.41	97.26	0.045	2.13	4.00	4.89	2.64	33.16	60.02	0.000
210*	98.34	97.34	0.007	0.34	0.34	5.92	5.92	2.09	33.36	0.000
220	97.26	97.10	0.050	2.19	4.00	4.94	2.76	34.74	60.58	0.000
230	97.10	97.07	0.056	2.19	4.00	5.22	2.92	36.72	63.54	0.000
240	97.07	97.00	0.064	2.38	4.00	5.06	3.13	39.36	60.63	0.000

END

* Super critical flow.

NORMAL TERMINATION OF WINSTORM.

$FILES

STATE OF TEXAS
RAMIRO GUTIERREZ
65948
REGISTERED PROFESSIONAL ENGINEER

THE SEAL APPEARING ON THIS DOCUMENT WAS AUTHORIZED BY RAMIRO GUTIERREZ, P.E. 65948
DATE: 8-19-03
ALTERATION OF A SEALED DOCUMENT WITHOUT PROPER NOTIFICATION TO THE RESPONSIBLE ENGINEER IS AN OFFENSE UNDER THE TEXAS ENGINEERING PRATICE LAW.

NOTES:

1. CALCULATIONS COMPILED BY TXDOT "WINSTORM V.3.05" COMPUTER PROGRAM.
2. SEWER CALCULATIONS BASED ON MANNING FORMULAS. JUNCTION LOSS WAS NOT TAKEN INTO ACCOUNT.
3. MAINLANE INLETS WERE ANALYSED BY MANUALLY ADDING THE 10 YEAR STORM FREQUENCY (SUPPLY 0)

Parsons Brinckerhoff Quade & Douglas Inc.

R. Gutierrez Engineering Corporation

Texas Department of Transportation

© 2003 by TxDOT

US 281 EXPRESSWAY HYDRAULIC DATA SHEET

DESIGNED:	FED. RD DIV. No.	STATE	FEDERAL AID PROJECT No.			HIGHWAY No.
CHECKED:	6	TEXAS				US 281
DRAWN:	STATE DISTRICT	COUNTY	CONTROL No.	SECTION No.	JOB No.	SHEET No.
CHECKED:	21	HIDALGO	0255	08	091	526

$NAME$
$TIME$
$DATE$
$FILE$

TRUNK LINE "E"

Runoff Computation for Design Frequency.

ID	C Value	Area (acre)	Tc (min)	Tc Used (min)	Intensity (in/hr)	Supply Q (cfs)	Total Q (cfs)
E-1	0.67	2.47	40.98	40.98	3.56	0.000	5.888
E-11	0.69	1.60	37.10	37.10	3.79	0.000	4.187
E-12	0.46	3.12	40.17	40.17	3.60	0.000	5.172
E-13	0.56	1.19	46.40	46.40	3.28	0.000	2.185
E-14	0.66	1.26	32.58	32.58	4.12	0.000	3.422
E-15	0.76	0.78	37.65	37.65	3.76	0.000	2.227
E-16	0.52	0.86	29.93	29.93	4.34	0.000	1.939
E-17	0.75	0.33	18.48	18.48	5.71	0.000	1.413
E-18	0.49	0.45	15.45	15.45	6.26	0.000	1.380
E-19	0.73	0.65	13.96	13.96	6.58	0.000	3.121
E-20	0.53	0.97	27.18	27.18	4.59	0.000	2.362
E-21	0.74	0.43	13.58	13.58	6.67	0.000	2.121
E-22	0.54	0.94	26.90	26.90	4.62	0.000	2.346
E-23	0.75	0.52	13.65	13.65	6.65	0.000	2.593
E-24	0.62	1.72	64.57	64.57	2.62	0.000	2.793
E-25	0.75	0.52	13.58	13.58	6.67	0.000	2.600
E-26	0.9	0.26	10.00	10.00	7.64	0.000	1.787
E-30	0.8	0.08	10.00	10.00	7.64	0.000	0.489
E-31	0.2	0.23	21.53	21.53	5.25	0.000	0.242
E-33	0.8	0.12	10.00	10.00	7.64	0.000	0.733
E-35	0.9	0.90	19.50	11.83	0.00	5.379	5.379
E-36	0.2	0.25	21.94	21.94	5.20	0.000	0.260
E-37	0.8	0.07	10.00	10.00	7.64	0.000	0.428
E-38	0.8	0.07	10.00	10.00	7.64	0.000	0.428
E-39	0.8	0.07	10.00	10.00	7.64	0.000	0.428
E-4	0.343	3.04	30.82	30.82	4.26	0.000	4.441
E-40	0.8	0.06	10.00	10.00	7.64	0.000	0.367
E-41	0.8	0.10	10.00	10.00	7.64	0.000	0.611
E-5	0.8	0.60	13.20	13.20	6.76	0.000	3.243
E-6	0.2	0.59	51.11	51.11	3.07	0.000	0.363
E-7	0.63	1.19	26.79	26.79	4.63	0.000	3.474
E-8	0.47	0.95	21.33	21.33	5.28	0.000	2.358
E-9	0.8	0.95	21.50	51.11	0.00	3.420	3.420

On Grade Inlet Configuration Data

Inlet ID	Inlet Type	Inlet Length (ft)	Slopes Long (%)	Slopes Trans (%)	Gutter n	Gutter Depr. (ft)	Grate Width (ft)	Grate Type	Pond Width Allowed (ft)	Critic Elev. (ft)
E-13	Grate	7.00	0.36	16.60	0.012	n/a	4.00	Parall	14.00	103.75
E-14	Curb	10.00	0.36	2.50	0.012	0.40	n/a	n/a	14.00	104.70
E-15	Curb	10.00	0.24	2.50	0.012	0.40	n/a	n/a	14.00	105.08
E-16	Grate	7.00	0.24	16.60	0.012	n/a	4.00	Parall	14.00	104.41
E-17	Curb	5.00	0.24	2.50	0.012	0.40	n/a	n/a	14.00	104.47
E-18	Grate	7.00	0.24	16.60	0.012	n/a	4.00	Parall	14.00	104.01
E-19	Curb	10.00	0.36	2.50	0.012	0.40	n/a	n/a	14.00	103.47
E-20	Grate	7.00	0.35	16.60	0.012	n/a	4.00	Parall	14.00	102.95
E-21	Curb	10.00	0.36	2.50	0.012	0.40	n/a	n/a	14.00	102.20
E-22	Grate	7.00	0.35	16.60	0.012	n/a	4.00	Parall	14.00	101.73
E-23	Curb	10.00	0.36	2.50	0.012	0.40	n/a	n/a	14.00	100.83
E-25	Curb	10.00	0.45	2.50	0.012	0.40	n/a	n/a	14.00	99.34
E-30	Curb	5.00	0.50	2.00	0.012	0.40	n/a	n/a	14.00	101.50
E-31	Grate	4.00	0.43	2.00	0.012	n/a	4.00	Parall	14.00	105.69
E-33	Curb	5.00	0.50	2.00	0.012	0.40	n/a	n/a	14.00	106.77
E-35	Grate	4.00	2.60	4.60	0.012	n/a	4.00	Parall	10.00	112.98
E-36	Grate	4.00	0.92	2.00	0.012	n/a	4.00	Parall	14.00	105.69
E-37	Grate	1.50	4.90	2.00	0.012	n/a	3.80	Parall	12.00	134.36
E-38	Grate	1.50	4.90	2.00	0.012	n/a	3.80	Parall	12.00	139.21
E-39	Grate	1.50	4.90	2.00	0.012	n/a	3.80	Parall	12.00	144.13
E-40	Grate	1.50	4.90	2.00	0.012	n/a	3.80	Parall	12.00	147.97
E-41	Grate	1.50	4.90	2.00	0.012	n/a	3.80	Parall	12.00	150.56
E-5	Grate	3.00	2.50	2.00	0.012	n/a	3.00	Parall	12.00	128.62
E-7	Curb	10.00	0.15	4.50	0.012	0.40	n/a	n/a	14.00	103.90
E-8	Grate	4.00	0.37	16.60	0.012	n/a	4.00	Parall	14.00	103.14
E-9	Grate	4.00	2.60	4.60	0.012	n/a	4.00	Parall	10.00	116.65

On Grade Inlets Computation Data.

Inlet ID	Inlet Type	Total Q (cfs)	Intercept Capacity (cfs)	Q Bypass Allow (cfs)	Q Bypass Actual (cfs)	To Inlet ID	Required Length (ft)	Actual Length (ft)	Ponded Width (ft)
E-13	Grate	2.185	2.185	0.000	0.000		n/a	0.00	2.80
E-14	Curb	3.422	3.422	0.000	0.000		7.36	10.00	10.80
E-15	Curb	2.227	2.227	0.000	0.000		5.25	10.00	9.92
E-16	Grate	1.939	1.939	0.000	0.000		n/a	0.00	2.87
E-17	Curb	1.413	1.413	0.000	0.000		4.06	5.00	8.36
E-18	Grate	1.380	1.380	0.000	0.000		n/a	0.00	2.53
E-19	Curb	3.121	3.121	0.000	0.000		6.98	10.00	10.44
E-20	Grate	2.362	2.362	0.000	0.000		n/a	0.00	2.90
E-21	Curb	2.121	2.121	0.000	0.000		5.60	10.00	9.04
E-22	Grate	2.346	2.346	0.000	0.000		n/a	0.00	2.89
E-23	Curb	2.593	2.593	0.000	0.000		6.28	10.00	9.76
E-25	Curb	2.600	2.600	0.000	0.000		6.61	10.00	9.36
E-30	Curb	0.489	0.489	0.000	0.000		2.89	5.00	5.65
E-31	Grate	0.242	0.242	0.000	0.000		n/a	0.00	4.45
E-33	Curb	0.733	0.733	0.000	0.000		3.53	5.00	6.55
E-35	Grate	5.379	5.144	0.990	0.235		n/a	0.00	6.04
E-36	Grate	0.260	0.260	0.000	0.000		n/a	0.00	3.95
E-37	Grate	0.428	0.428	0.000	0.000		n/a	0.00	3.50
E-38	Grate	0.428	0.428	0.000	0.000		n/a	0.00	3.50
E-39	Grate	0.428	0.428	0.000	0.000		n/a	0.00	3.50
E-40	Grate	0.367	0.367	0.000	0.000		n/a	0.00	3.30
E-41	Grate	0.611	0.611	0.000	0.000		n/a	0.00	4.00
E-5	Grate	3.243	2.336	0.990	0.906		n/a	0.00	8.45
E-7	Curb	3.474	3.474	0.000	0.000		5.37	10.00	8.87
E-8	Grate	2.358	2.358	0.000	0.000		n/a	0.00	2.86
E-9	Grate	3.420	3.378	0.990	0.042		n/a	0.00	5.09

TRUNK LINE "E" - CONTINUED

Sag Inlets Configuration Data.

Inlet ID	Inlet Type	Length/ Perim. (ft)	Grate Area (sf)	Left-Slope Long (%)	Left-Slope Trans (%)	Right-Slope Long (%)	Right-Slope Trans (%)	Gutter n	Gutter DeprW (ft)	Depth Allowed (ft)	Critic Elev. (ft)
E-1	Curb	5.00	n/a	0.33	2.00	1.00	2.00	0.014	0.40	0.50	104.83
E-11	Curb	10.00	n/a	0.36	2.50	0.15	2.50	0.012	0.40	0.50	103.39
E-12	Grate	22.00	28.00	0.3616.60		0.38	16.60	0.012	n/a	1.00	102.35
E-24	Grate	22.00	28.00	0.3016.60		0.35	16.60	0.012	n/a	1.00	100.50
E-26	Curb	5.00	n/a	0.41	2.50	1.44	2.50	0.012	0.40	0.50	101.65
E-4	Grate	12.00	9.00	0.15	2.00	0.15	2.00	0.012	n/a	0.50	102.28
E-6	Grate	16.00	16.00	0.1516.60		0.15	16.60	0.012	n/a	1.00	102.80

Sag Inlets Computation Data.

Inlet ID	Inlet Type	Length (ft)	Grate Perim (ft)	Grate Area (sf)	Total Q (cfs)	Inlet Capacity (cfs)	Total Head (ft)	Ponded Width Left (ft)	Ponded Width Right (ft)
E-1	Curb	5.00	n/a	n/a	5.888	6.718	0.442	12.65	10.30
E-11	Curb	10.00	n/a	n/a	4.187	8.717	0.307	9.00	10.60
E-12	Grate	n/a	22.00	28.00	5.172	67.235	0.180	2.97	2.94
E-24	Grate	n/a	22.00	28.00	2.793	67.235	0.119	2.44	2.38
E-26	Curb	5.00	n/a	n/a	1.787	4.651	0.264	6.36	5.04
E-4	Grate	n/a	12.00	9.00	4.441	12.966	0.243	12.45	12.45
E-6	Grate	n/a	16.00	16.00	0.363	48.898	0.038	1.30	1.30

Cumulative Junction Discharge Computations

Node I.D.	Node Type	Weighted C-Value	Cumulat. Dr.Area (acres)	Cumulat. Tc (min)	Intens. (in/hr)	User Supply Q cfs)	Additional Q in Node (cfs)	Total Disch. (cfs)
E-1	Curb	0.670	2.47	40.98	3.56	0.000	0.00	5.888
E-11	Curb	0.690	1.60	37.10	3.79	0.000	0.00	4.187
E-12	Grate	0.542	13.42	45.16	3.34	3.420	0.00	27.702
E-13	Grate	0.553	15.87	46.75	3.26	8.799	0.00	37.416
E-14	Curb	0.660	1.26	32.58	4.12	0.000	0.00	3.422
E-15	Curb	0.760	0.78	37.65	3.76	0.000	0.00	2.227
E-16	Grate	0.562	17.63	50.31	3.11	8.799	0.00	39.578
E-17	Curb	0.750	0.33	18.48	5.71	0.000	0.00	1.413
E-18	Grate	0.564	18.41	50.70	3.09	8.799	0.00	40.863
E-19	Curb	0.730	0.65	13.96	6.58	0.000	0.00	3.121
E-20	Grate	0.559	20.51	51.81	3.05	8.799	0.00	43.702
E-21	Curb	0.740	0.43	13.58	6.67	0.000	0.00	2.121
E-22	Grate	0.561	21.88	52.91	3.00	8.799	0.00	45.688
E-23	Curb	0.750	0.52	13.65	6.65	0.000	0.00	2.593
E-24	Grate	0.570	24.12	52.91	3.00	8.799	0.00	50.061
E-25	Curb	0.577	24.90	52.91	3.00	8.799	0.00	51.935
E-26	Curb	0.573	24.38	52.91	3.00	8.799	0.00	50.764
E-30	Curb	0.800	0.22	10.33	7.53	0.000	0.00	1.326
E-31	Grate	0.200	0.23	21.53	5.25	0.000	0.00	0.242
E-33	Curb	0.555	15.99	46.75	3.26	8.799	0.00	37.729
E-35	Grate	0.000	0.00	0.00	0.00	5.379	0.00	5.379
E-36	Grate	0.200	0.48	21.94	5.20	0.000	0.00	0.499
E-37	Grate	0.800	0.07	10.00	7.64	0.000	0.00	0.428
E-38	Grate	0.800	0.07	10.00	7.64	0.000	0.00	0.428
E-39	Grate	0.800	0.07	10.00	7.64	0.000	0.00	0.428
E-4	Grate	0.505	5.80	41.33	3.54	0.000	0.00	10.365
E-40	Grate	0.800	0.06	10.00	7.64	0.000	0.00	0.367
E-41	Grate	0.800	0.10	10.00	7.64	0.000	0.00	0.611
E-5	Grate	0.800	0.60	13.20	6.76	0.000	0.00	3.243
E-6	Grate	0.000	0.00	0.00	0.00	0.000	0.00	0.000
E-7	Curb	0.630	1.19	26.79	4.63	0.000	0.00	3.474
E-8	Grate	0.544	8.70	43.66	3.41	0.000	0.00	16.158
E-9	Grate	0.000	0.00	0.00	0.00	3.420	0.00	3.420
JE1	CircMn	0.544	8.70	43.66	3.41	3.420	0.00	19.578
JE2	CircMn	0.555	15.99	46.75	3.26	8.799	0.00	37.729
JE3	CircMn	0.539	6.56	42.14	3.49	0.000	0.00	12.358
JE4	CircMn	0.554	18.89	51.34	3.06	8.799	0.00	40.886
JE5		0.553	15.87	46.75	3.26	8.799	0.00	37.416
JE6	CircMn	0.542	13.42	45.16	3.34	8.799	0.00	33.081
JE7		0.577	24.90	52.91	3.00	8.799	0.00	51.935
OE3	Outlt	0.577	24.90	52.91	3.00	8.799	0.00	51.935

NOTES:

1. CALCULATIONS COMPILED BY TXDOT "WINSTORM V.3.05" COMPUTER PROGRAM.
2. SEWER CALCULATIONS BASED ON MANNING FORMULAS. JUNCTION LOSS WAS NOT TAKEN INTO ACCOUNT.
3. MAINLANE INLETS WERE ANALYSED BY MANUALLY ADDING THE 10 YEAR STORM FREQUENCY (SUPPLY Q)
4. Q BYPASS CONSIDERED ACCEPTABLE DUE TO THE CARRYOVER AMOUNT BEING MINIMAL (LESS THAN 1.0 CFS.) AND THE PONDING WIDTH BEING CONSIDERABLY LESS THAN ALLOWABLE THE CARRYOVER WOULD NOT SIGNIFICANTLY ICREASE THE PONDING WIDTH.

TRUNK LINE "E" - CONTINUED

Conveyance Configuration Data

Run#	Node I.D. US	Node I.D. DS	Flowline Elev. US (ft)	Flowline Elev. DS (ft)	Shape #	Span (ft)	Rise (ft)	Length (ft)	Slope (%)	n value
1	E-37	E-30	99.54	99.19	Circ 1	0.00	0.50	35.00	1.00	0.011
5	E-38	E-30	99.89	99.19	Circ 1	0.00	0.50	70.00	1.00	0.011
8	E-30	E-4	97.69	97.43	Circ 1	0.00	2.00	170.00	0.15	0.012
10	E-39	E-4	99.50	98.93	Circ 1	0.00	0.50	56.00	1.02	0.011
12	E-1	E-4	97.53	97.43	Circ 1	0.00	2.00	68.00	0.15	0.012
14	E-4	JE3	96.93	96.66	Circ 1	0.00	2.50	178.00	0.15	0.012
16	E-5	JE3	122.00	97.66	Circ 1	0.00	1.50	194.00	12.65	0.012
18	E-40	JE3	99.18	98.14	Circ 1	0.00	0.50	104.00	1.00	0.011
20	E-41	JE3	99.22	97.50	Circ 1	0.00	0.50	108.00	1.59	0.013
22	JE3	E-8	96.16	95.64	Circ 1	0.00	3.00	346.00	0.15	0.012
24	E-7	E-8	99.50	97.50	Circ 1	0.00	1.50	60.00	3.34	0.012
26	E-8	JE1	95.64	95.30	Circ 1	0.00	3.00	226.00	0.15	0.012
28	E-9	JE1	110.37	96.80	Circ 1	0.00	1.50	154.00	8.85	0.012
30	JE1	E-12	95.30	95.07	Circ 1	0.00	3.00	149.00	0.15	0.012
32	E-11	E-12	98.50	98.30	Circ 1	0.00	1.50	61.00	0.33	0.012
34	E-12	JE6	94.57	94.11	Circ 1	0.00	3.50	310.00	0.15	0.012
36	E-35	JE6	106.98	96.41	Circ 1	0.00	1.50	128.00	8.29	0.012
38	JE6	E-13	94.11	93.89	Circ 1	0.00	3.50	144.00	0.15	0.012
40	E-14	E-13	99.50	97.50	Circ 1	0.00	1.50	60.00	3.34	0.012
42	E-13	JE5	93.89	93.33	Circ 1	0.00	3.50	370.00	0.15	0.012
44	JE5	E-33	93.33	93.04	Circ 1	0.00	3.50	195.00	0.15	0.012
46	E-33	JE2	93.04	92.84	Circ 1	0.00	3.50	132.00	0.15	0.012
48	JE2	E-16	92.84	92.33	Circ 1	0.00	3.50	338.00	0.15	0.012
160	E-15	E-16	100.50	97.00	Circ 1	0.00	1.50	108.00	3.24	0.012
170	E-16	E-18	92.33	91.80	Circ 1	0.00	3.50	162.00	0.33	0.012
180	E-17	E-18	100.00	97.00	Circ 1	0.00	1.50	58.00	5.18	0.012
190	E-18	JE4	91.30	91.00	Circ 1	0.00	4.00	203.00	0.15	0.012
192	E-31	E-36	99.50	98.00	Circ 1	0.00	1.50	24.00	6.26	0.012
194	E-36	JE4	98.00	97.00	Circ 1	0.00	1.50	135.00	0.74	0.012
196	JE4	E-20	91.00	90.78	Circ 1	0.00	4.00	147.00	0.15	0.012
200	E-19	E-20	98.50	96.80	Circ 1	0.00	1.50	56.00	3.04	0.012
210	E-20	E-22	90.78	90.24	Circ 1	0.00	4.50	350.00	0.15	0.012
220	E-21	E-22	97.50	96.50	Circ 1	0.00	1.50	56.00	1.79	0.012
230	E-22	E-24	90.24	89.71	Circ 1	0.00	4.50	351.00	0.15	0.012
240	E-23	E-24	96.50	96.30	Circ 1	0.00	1.50	70.00	0.29	0.012
250	E-24	E-26	89.71	89.24	Circ 1	0.00	5.00	287.00	0.16	0.012
260	E-26	E-25	89.24	89.14	Circ 1	0.00	5.00	82.00	0.12	0.012
270	E-25	JE7	89.14	89.02	Circ 1	0.00	5.00	144.00	0.08	0.012
280	JE7	OE3	89.02	87.19	Circ 1	0.00	5.00	106.00	1.73	0.012

STATE OF TEXAS
RAMIRO GUTIERREZ
65948
REGISTERED PROFESSIONAL ENGINEER

THE SEAL APPEARING ON THIS DOCUMENT WAS AUTHORIZED BY RAMIRO GUTIERREZ, P.E. 65948
DATE: 8-19-03
ALTERATION OF A SEALED DOCUMENT WITHOUT PROPER NOTIFICATION TO THE RESPONSIBLE ENGINEER IS AN OFFENSE UNDER THE TEXAS ENGINEERING PRATICE LAW.

PB Parsons Brinckerhoff Quade & Douglas Inc.

R. Gutierrez Engineering Corporation

Texas Department of Transportation

© 2003 by TxDOT

US 281 EXPRESSWAY HYDRAULIC DATA SHEET

DESIGNED:	FED. RD DIV. No.	STATE	FEDERAL AID PROJECT No.		HIGHWAY No.	
CHECKED:	6	TEXAS			US 281	
DRAWN:	STATE DISTRICT	COUNTY	CONTROL No.	SECTION No.	JOB No.	SHEET No.
CHECKED:	21	HIDALGO	0255	08	091	527

TRUNK LINE "E" - CONTINUED

Conveyance Hydraulic Computations. Tailwater = 96.500 (ft)

Run#	Hydraulic Gradeline US Elev (ft)	DS Elev (ft)	Fr.Slope (%)	Depth Unif. (ft)	Actual (ft)	Velocity Unif. (f/s)	Actual (f/s)	Q (cfs)	Cap (cfs)	Junc Loss (ft)
1*	99.83	99.48	0.416	0.29	0.29	3.58	3.58	0.43	0.66	0.000
5*	100.18	99.48	0.416	0.29	0.29	3.58	3.58	0.43	0.66	0.000
8	99.44	99.44	0.003	0.50	2.00	2.16	0.42	1.33	9.59	0.000
10*	99.83	99.44	0.416	0.29	0.50	3.61	2.18	0.43	0.67	0.000
12	99.47	99.44	0.058	1.13	2.00	3.23	1.87	5.89	9.40	0.000
14	99.44	99.34	0.054	1.41	2.50	3.64	2.11	10.37	17.31	0.000
16*	122.69	99.34	0.081	0.29	1.50	13.72	1.83	3.24	40.47	0.000
18*	99.66	99.34	0.305	0.27	0.50	3.46	1.87	0.37	0.66	0.000
20*	100.62	99.34	1.185	0.36	0.50	4.07	3.11	0.61	0.71	0.000
22	99.34	99.24	0.029	1.41	3.00	3.80	1.75	12.36	28.02	0.000
24*	100.21	99.24	0.093	0.41	1.50	8.73	1.97	3.47	20.78	0.000
26	99.24	99.13	0.050	1.64	3.00	4.09	2.29	16.16	28.03	0.000
28*	111.08	99.13	0.090	0.32	1.50	12.31	1.94	3.42	33.85	0.000
30	99.13	99.02	0.073	1.83	3.00	4.34	2.77	19.58	28.39	0.000
32	99.37	99.08	0.135	0.87	0.87	3.96	3.96	4.19	6.52	0.000
34	99.02	98.82	0.065	2.08	3.50	4.65	2.88	27.70	41.99	0.000
36*	107.87	98.82	0.223	0.41	1.50	13.69	3.04	5.38	32.76	0.000
38	98.82	98.69	0.092	2.30	3.50	4.94	3.44	33.08	42.61	0.000
40*	99.92	98.69	0.090	0.41	1.19	8.69	2.28	3.42	20.78	0.000
42	98.69	98.25	0.118	2.63	3.50	4.83	3.89	37.42	42.41	0.000
44	98.25	98.02	0.118	2.63	3.50	4.83	3.89	37.42	42.04	0.000
46	98.02	97.86	0.120	2.63	3.50	4.87	3.92	37.73	42.43	0.000
48	97.86	97.46	0.120	2.63	3.50	4.87	3.92	37.73	42.34	0.000
160*	100.83	97.46	0.038	0.33	0.46	7.60	4.83	2.23	20.49	0.000
170	97.46	97.25	0.132	2.02	3.50	6.87	4.11	39.58	62.35	0.000
180*	100.24	97.25	0.015	0.24	0.25	7.83	7.39	1.41	25.90	0.000
190	97.25	97.11	0.069	2.38	4.00	5.26	3.25	40.86	59.83	0.000
192	99.60	98.23	0.000	0.10	0.23	4.97	1.41	0.24	28.48	0.000
194*	98.23	97.23	0.002	0.23	0.23	2.91	2.91	0.50	9.80	0.000
196	97.11	97.01	0.069	2.38	4.00	5.26	3.25	40.89	60.21	0.000
200*	98.90	97.20	0.075	0.40	0.40	8.19	8.19	3.12	19.83	0.000
210	97.01	96.86	0.042	2.32	4.50	5.29	2.75	43.70	83.69	0.000
220*	97.88	96.88	0.035	0.38	0.38	6.07	6.07	2.12	15.21	0.000
230	96.86	96.70	0.046	2.39	4.50	5.32	2.87	45.69	82.79	0.000
240	97.18	96.91	0.052	0.68	0.68	3.33	3.33	2.59	6.08	0.000
250	96.70	96.61	0.031	2.34	5.00	5.54	2.55	50.06	114.19	0.000
260	96.61	96.58	0.032	2.50	5.00	5.17	2.59	50.76	98.54	0.000
270	96.58	96.54	0.034	2.81	5.00	4.57	2.65	51.93	81.46	0.000
280*	96.54	96.50	0.034	1.26	5.00	13.31	2.65	51.93	370.80	0.000

END

* Super critical flow.

NORMAL TERMINATION OF WINSTORM.

NOTES:

1. CALCULATIONS COMPILED BY TXDOT "WINSTORM V.3.05" COMPUTER PROGRAM.
2. SEWER CALCULATIONS BASED ON MANNING FORMULAS. JUNCTION LOSS WAS NOT TAKEN INTO ACCOUNT.
3. MAINLANE INLETS WERE ANALYSED BY MANUALLY ADDING THE 10 YEAR STORM FREQUENCY (SUPPLY Q)

STATE OF TEXAS
RAMIRO GUTIERREZ
65948
REGISTERED PROFESSIONAL ENGINEER

THE SEAL APPEARING ON THIS DOCUMENT WAS AUTHORIZED BY RAMIRO GUTIERREZ, P.E. 65948
DATE: 8-19-03
ALTERATION OF A SEALED DOCUMENT WITHOUT PROPER NOTIFICATION TO THE RESPONSIBLE ENGINEER IS AN OFFENSE UNDER THE TEXAS ENGINEERING PRATICE LAW.

Parsons Brinckerhoff Quade & Douglas Inc.

R. Gutierrez Engineering Corporation

Texas Department of Transportation

© 2003 by TxDOT

US 281 EXPRESSWAY HYDRAULIC DATA SHEET

DESIGNED:	FED. RD DIV. No.	STATE	FEDERAL AID PROJECT No.			HIGHWAY No.
CHECKED:	6	TEXAS				US 281
DRAWN:	STATE DISTRICT	COUNTY	CONTROL No.	SECTION No.	JOB No.	SHEET No.
CHECKED:	21	HIDALGO	0255	08	091	528

TRUNK LINE "F"

Runoff Computation for Design Frequency.

ID	C Value	Area (acre)	Tc (min)	Tc Used (min)	Intensity (in/hr)	Supply Q (cfs)	Total Q (cfs)
F-1	0.71	0.87	13.64	13.64	6.65	0.000	4.109
F-10	0.2	0.64	52.22	52.22	3.03	0.000	0.388
F-11	0.59	1.56	37.81	37.81	3.75	0.000	3.449
F-12	0.9	0.82	58.97	17.67	0.00	4.410	4.410
F-13	0.71	0.44	13.82	13.82	6.61	0.000	2.065
F-14	0.2	0.39	48.33	48.33	3.19	0.000	0.249
F-15	0.9	0.83	39.00	18.33	0.00	4.380	4.380
F-16	0.66	1.78	63.89	63.89	2.64	0.000	3.099
F-17	0.72	0.86	13.93	13.93	6.59	0.000	4.078
F-18	0.22	1.93	25.00	25.00	4.83	0.000	2.049
F-19	0.66	0.82	10.00	10.00	7.64	0.000	4.133
F-2	0.2	0.75	70.42	70.42	2.46	0.000	0.370
F-20	0.9	0.69	56.30	10.00	0.00	4.820	4.820
F-3	0.76	0.57	13.57	13.57	6.67	0.000	2.889
F-4	0.2	0.28	45.97	45.97	3.30	0.000	0.185
F-5	0.9	0.92	40.10	10.00	0.00	6.140	6.140

On Grade Inlet Configuration Data

Inlet ID	Inlet Type	Inlet Length (ft)	Slopes Long (%)	Slopes Trans (%)	Gutter n	Gutter Depr. (ft)	Grate Width (ft)	Grate Type	Pond Width Allowed (ft)	Critic Elev. (ft)
F-12	Grate	7.00	2.25	2.50	0.012	n/a	7.00	Parall	10.00	119.33
F-13	Curb	5.00	0.15	2.50	0.012	0.40	n/a	n/a	14.00	98.28
F-14	Grate	7.00	0.16	16.60	0.012	n/a	4.00	Parall	14.00	99.33
F-15	Grate	7.00	2.25	2.50	0.012	n/a	7.00	Parall	10.00	111.88
F-20	Grate	7.00	2.25	2.50	0.012	n/a	7.00	Parall	10.00	111.92
F-3	Curb	10.00	0.14	2.50	0.012	0.40	n/a	n/a	14.00	98.47
F-4	Grate	4.00	0.19	16.60	0.012	n/a	4.00	Parall	14.00	99.68
F-5	Grate	7.00	2.25	2.50	0.012	n/a	7.00	Parall	10.00	118.53

On Grade Inlets Computation Data.

Inlet ID	Inlet Type	Total Q (cfs)	Intercept Capacity (cfs)	Q Bypass Allow (cfs)	Q Bypass Actual (cfs)	To Inlet ID	Required Length (ft)	Actual Length (ft)	Ponded Width (ft)
F-12	Grate	4.410	4.388	0.990	0.022		n/a	0.00	8.44
F-13	Curb	2.065	2.065	0.000	0.000		4.53	5.00	10.56
F-14	Grate	0.249	0.249	0.000	0.000		n/a	0.00	1.44
F-15	Grate	4.380	4.360	0.990	0.020		n/a	0.00	8.40
F-20	Grate	4.820	4.785	0.990	0.035		n/a	0.00	8.72
F-3	Curb	2.889	2.889	0.000	0.000		5.44	10.00	12.12
F-4	Grate	0.185	0.185	0.000	0.000		n/a	0.00	1.24
F-5	Grate	6.140	6.033	0.990	0.107		n/a	0.00	9.56

Sag Inlets Configuration Data.

Inlet ID	Inlet Type	Length/ Perim. (ft)	Grate Area (sf)	Left-Slope Long (%)	Left-Slope Trans (%)	Right-Slope Long (%)	Right-Slope Trans (%)	Gutter n	Gutter DeprW (ft)	Depth Allowed (ft)	Critic Elev. (ft)
F-1	Curb	10.00	n/a	0.15	2.50	0.15	2.50	0.012	0.40	0.50	97.96
F-10	Grate	22.00	28.00	0.73	16.60	0.16	16.60	0.012	n/a	1.00	99.58
F-11	Curb	10.00	n/a	0.21	2.50	0.15	2.50	0.012	0.40	0.50	98.26
F-16	Grate	22.00	28.00	0.16	16.60	0.41	16.60	0.012	n/a	1.00	98.95
F-17	Curb	10.00	n/a	0.15	2.50	0.45	2.50	0.012	0.40	0.50	97.90
F-18	Curb	5.00	n/a	0.75	2.00	0.39	2.00	0.012	0.40	0.50	97.39
F-19	Curb	10.00	n/a	0.75	2.00	0.40	2.00	0.012	0.40	0.50	97.39
F-2	Grate	22.00	28.00	0.26	16.60	0.18	16.60	0.012	n/a	1.00	99.01

Sag Inlets Computation Data.

Inlet ID	Inlet Type	Length (ft)	Grate Perim (ft)	Grate Area (sf)	Total Q (cfs)	Inlet Capacity (cfs)	Total Head (ft)	Ponded Width Left (ft)	Ponded Width Right (ft)
F-1	Curb	10.00	n/a	n/a	4.109	8.717	0.303	10.52	10.60
F-10	Grate	n/a	22.00	28.00	0.388	67.235	0.032	0.99	1.32
F-11	Curb	10.00	n/a	n/a	3.449	8.717	0.269	9.24	9.84
F-16	Grate	n/a	22.00	28.00	3.099	67.235	0.128	2.86	2.40
F-17	Curb	10.00	n/a	n/a	4.078	8.717	0.301	10.48	8.52
F-18	Curb	5.00	n/a	n/a	2.049	4.651	0.289	6.90	7.80
F-19	Curb	10.00	n/a	n/a	4.133	8.717	0.304	8.95	10.10
F-2	Grate	n/a	22.00	28.00	0.370	67.235	0.031	1.17	1.26

TRUNK LINE "F"-CONTINUED

Cumulative Junction Discharge Computations

Node I.D.	Node Type	Weighted C-Value	Cumulat. Dr.Area (acres)	Cumulat. Tc (min)	Intens. (in/hr)	User Supply Q cfs)	Additional Q in Node (cfs)	Total Disch. (cfs)
F-1	Curb	0.710	0.87	13.64	6.65	0.000	0.00	4.109
F-10	Grate	0.441	7.42	13.64	6.65	10.960	0.00	32.718
F-11	Curb	0.590	1.56	37.81	3.75	0.000	0.00	3.449
F-12	Grate	0.000	0.00	0.00	0.00	4.410	0.00	4.410
F-13	Curb	0.710	0.44	13.82	6.61	0.000	0.00	2.065
F-14	Grate	0.444	8.25	13.64	6.65	19.750	0.00	44.105
F-15	Grate	0.000	0.00	0.00	0.00	4.380	0.00	4.380
F-16	Grate	0.482	10.03	13.64	6.65	19.750	0.00	51.919
F-17	Curb	0.501	10.89	13.64	6.65	19.750	0.00	56.038
F-18	Curb	0.351	2.75	25.00	4.83	0.000	0.00	4.660
F-19	Curb	0.660	0.82	10.00	7.64	0.000	0.00	4.133
F-2	Grate	0.474	1.62	13.64	6.65	4.820	0.00	9.926
F-20	Grate	0.000	0.00	0.00	0.00	4.820	0.00	4.820
F-3	Curb	0.760	0.57	13.57	6.67	0.000	0.00	2.889
F-4	Grate	0.509	2.47	13.64	6.65	10.960	0.00	19.320
F-5	Grate	0.000	0.00	0.00	0.00	6.140	0.00	6.140
JF1	CircMh	0.474	1.62	13.64	6.65	10.960	0.00	16.066
JF2	CircMh	0.441	7.42	13.64	6.65	15.370	0.00	37.128
JF3	CircMh	0.426	5.22	13.64	6.65	10.960	0.00	25.745
JF4	CircMh	0.509	2.47	13.64	6.65	10.960	0.00	19.320
JF5	CircMh	0.501	10.89	13.64	6.65	19.750	0.00	56.038
OF3	Outlt	0.501	10.89	13.64	6.65	19.750	0.00	56.038

Conveyance Configuration Data

Run#	Node I.D. US	Node I.D. DS	Flowline Elev. US (ft)	Flowline Elev. DS (ft)	Shape #	Span (ft)	Rise (ft)	Length (ft)	Slope (%)	n value
5	F-20	F-2	95.30	94.78	Circ 1	0.00	1.50	194.00	0.27	0.012
10	F-1	F-2	94.00	93.78	Circ 1	0.00	2.00	46.00	0.48	0.012
20	F-2	JF1	93.78	93.44	Circ 1	0.00	2.50	226.00	0.15	0.012
30	F-5	JF1	93.64	93.44	Circ 1	0.00	1.50	45.00	0.44	0.012
40	JF1	F-4	92.94	92.74	Circ 1	0.00	3.00	125.00	0.16	0.012
50	F-3	F-4	92.94	92.74	Circ 1	0.00	1.50	56.00	0.36	0.012
60	F-4	JF4	92.74	92.21	Circ 1	0.00	3.00	350.00	0.15	0.012
70	JF4	JF3	91.71	91.49	Circ 1	0.00	3.50	146.00	0.15	0.012
82	F-19	F-18	93.51	93.36	Circ 1	0.00	2.00	100.00	0.15	0.012
84	F-18	JF3	93.36	92.70	Circ 1	0.00	2.50	270.00	0.24	0.012
90	JF3	F-10	91.49	91.02	Circ 1	0.00	3.50	292.00	0.16	0.012
110	F-11	F-10	93.22	93.02	Circ 1	0.00	1.50	66.00	0.30	0.012
120	F-10	JF2	91.02	90.67	Circ 1	0.00	3.50	222.00	0.16	0.012
130	F-12	JF2	92.87	92.67	Circ 1	0.00	1.50	30.00	0.67	0.012
140	JF2	F-14	90.67	89.41	Circ 1	0.00	4.50	504.00	0.25	0.012
150	F-13	F-14	91.61	91.41	Circ 1	0.00	1.50	54.00	0.37	0.012
160	F-15	F-14	91.61	91.41	Circ 1	0.00	1.50	36.00	0.56	0.012
170	F-14	F-16	89.41	88.88	Circ 1	0.00	4.50	350.00	0.15	0.012
180	F-16	F-17	88.88	88.80	Circ 1	0.00	4.50	50.00	0.16	0.012
190	F-17	JF5	88.30	88.16	Circ 1	0.00	5.00	90.00	0.16	0.012
200	JF5	OF3	88.16	87.19	Circ 1	0.00	5.00	70.00	1.39	0.012

Conveyance Hydraulic Computations. Tailwater = 96.500 (ft)

Run#	Hydraulic Gradeline US Elev (ft)	Hydraulic Gradeline DS Elev (ft)	Fr.Slope (%)	Depth Unif. (ft)	Depth Actual (ft)	Velocity Unif. (f/s)	Velocity Actual (f/s)	Q (cfs)	Cap (cfs)	Junc Loss (ft)
5	98.07	97.72	0.179	1.03	1.50	3.72	2.73	4.82	5.89	0.000
10*	97.74	97.72	0.028	0.67	2.00	4.43	1.31	4.11	16.95	0.000
20	97.72	97.61	0.050	1.37	2.50	3.61	2.02	9.93	17.24	0.000
30	97.74	97.61	0.291	1.03	1.50	4.74	3.47	6.14	7.59	0.000
40	97.61	97.55	0.049	1.59	3.00	4.21	2.27	16.07	28.91	0.000
50	97.59	97.55	0.064	0.68	1.50	3.71	1.63	2.89	6.80	0.000
60	97.55	97.30	0.071	1.83	3.00	4.28	2.73	19.32	28.12	0.000
70	97.30	97.25	0.031	1.64	3.50	4.36	2.01	19.32	42.32	0.000
82	97.31	97.28	0.028	0.94	2.00	2.86	1.32	4.13	9.49	0.000
84	97.28	97.25	0.011	0.78	2.50	3.56	0.95	4.66	21.97	0.000
90	97.25	97.09	0.056	1.97	3.50	4.62	2.68	25.74	43.73	0.000
110	97.15	97.09	0.092	0.80	1.50	3.62	1.95	3.45	6.27	0.000
120	97.09	96.89	0.090	2.30	3.50	4.89	3.40	32.72	43.28	0.000
130*	96.94	96.89	0.150	0.73	1.50	5.20	2.50	4.41	9.29	0.000
140	96.89	96.74	0.030	1.83	4.50	6.12	2.33	37.13	106.53	0.000
150	96.76	96.74	0.033	0.56	1.50	3.41	1.17	2.07	6.93	0.000
160*	96.79	96.74	0.148	0.76	1.50	4.86	2.48	4.38	8.48	0.000
170	96.74	96.59	0.043	2.32	4.50	5.33	2.77	44.10	82.91	0.000
180	96.59	96.56	0.059	2.53	4.50	5.63	3.26	51.92	85.23	0.000
190	96.56	96.53	0.039	2.50	5.00	5.71	2.85	56.04	111.29	0.000
200*	96.53	96.50	0.039	1.39	5.00	12.56	2.85	56.04	332.19	0.000

END

* Super critical flow.

NORMAL TERMINATION OF WINSTORM.

NOTES:

1. CALCULATIONS COMPILED BY TXDOT "WINSTORM V.3.05" COMPUTER PROGRAM.
2. SEWER CALCULATIONS BASED ON MANNING FORMULAS. JUNCTION LOSS WAS NOT TAKEN INTO ACCOUNT.
3. MAINLANE INLETS WERE ANALYSED BY MANUALLY ADDING THE 10 YEAR STORM FREQUENCY (SUPPLY Q)
4. Q BYPASS CONSIDERED ACCEPTABLE DUE TO THE CARRYOVER AMOUNT BEING MINIMAL (LESS THAN 1.0 CFS.) AND THE PONDING WIDTH BEING CONSIDERABLY LESS THAN ALLOWABLE THE CARRYOVER WOULD NOT SIGNIFICANTLY ICREASE THE PONDING WIDTH.

STATE OF TEXAS
RAMIRO GUTIERREZ
65948
REGISTERED PROFESSIONAL ENGINEER

THE SEAL APPEARING ON THIS DOCUMENT WAS AUTHORIZED BY RAMIRO GUTIERREZ, P.E. 65948
DATE: 8-19-03
ALTERATION OF A SEALED DOCUMENT WITHOUT PROPER NOTIFICATION TO THE RESPONSIBLE ENGINEER IS AN OFFENSE UNDER THE TEXAS ENGINEERING PRATICE LAW.

PB Parsons Brinckerhoff Quade & Douglas Inc.

R. Gutierrez Engineering Corporation

Texas Department of Transportation

© 2003 by TxDOT

US 281 EXPRESSWAY HYDRAULIC DATA SHEET

DESIGNED:	FED. RD DIV. No.	STATE	FEDERAL AID PROJECT No.		HIGHWAY No.
CHECKED:	6	TEXAS			US 281
DRAWN:	STATE DISTRICT	COUNTY	CONTROL No.	SECTION No.	JOB No. / SHEET No.
CHECKED:	21	HIDALGO	0255	08	091 / 529

TRUNK LINE "G" & "H"

Runoff Computation for Design Frequency.

ID	C Value	Area (acre)	Tc (min)	Tc Used (min)	Intensity (in/hr)	Supply Q (cfs)	Total Q (cfs)
G-10	0.72	0.92	15.00	15.00	6.35	0.000	4.208
G-11	0.9	0.95	20.20	46.67	0.00	4.400	4.400
G-12	0.2	0.34	33.47	33.47	4.05	0.000	0.275
G-13	0.75	0.61	19.80	19.80	5.50	0.000	2.517
G-18	0.9	0.72	17.87	10.00	0.00	3.900	3.900
G-19	0.2	0.49	53.33	53.33	2.99	0.000	0.293
G-20	0.42	2.95	57.08	57.08	2.85	0.000	3.533
G-21	0.9	0.72	18.50	10.00	0.00	3.760	3.760
G-22	0.49	0.77	50.56	50.56	3.10	0.000	1.168
G-23	0.27	3.15	89.58	89.58	2.08	0.000	1.766
G-24	0.2	0.77	47.22	47.22	3.24	0.000	0.499
G-26	0.24	5.56	102.36	102.36	1.89	0.000	2.515
G-27	0.27	4.92	82.36	82.36	2.21	0.000	2.930
G-28	0.7	0.18	10.00	10.00	7.64	0.000	0.962
G-35	0.74	0.34	10.00	10.00	7.64	0.000	1.921
G-36	0.61	1.34	16.13	16.13	6.13	0.000	5.008
G-37	0.25	3.67	94.17	94.17	2.00	0.000	1.838
G-38	0.36	3.46	65.83	65.83	2.58	0.000	3.219
G-9	0.2	0.75	51.94	51.94	3.04	0.000	0.456
H-1	0.32	1.99	46.67	46.67	3.27	0.000	2.080
H-10	0.42	1.49	29.13	29.13	4.41	0.000	2.758
H-11	0.66	1.69	22.92	22.92	5.07	0.000	5.658
H-12	0.43	2.10	105.14	105.14	1.85	0.000	1.669
H-13	0.2	0.48	15.00	15.00	6.35	0.000	0.610
H-14	0.6	0.64	10.00	10.00	7.64	0.000	2.932
H-15	0.8	0.05	10.00	10.00	7.64	0.000	0.305
H-17	0.8	0.20	12.53	12.53	6.92	0.000	1.107
H-18	0.9	0.20	12.73	12.73	6.87	0.000	1.237
H-19	0.8	0.19	10.73	10.73	7.41	0.000	1.127
H-2	0.6	2.48	88.71	88.71	2.09	0.000	3.112
H-20	0.2	0.27	12.33	12.33	6.97	0.000	0.376
H-21	0.63	2.36	39.96	39.96	3.62	0.000	5.377
H-22	0.65	2.78	28.73	28.73	4.44	0.000	8.031
H-25	0.39	0.62	58.33	58.33	2.81	0.000	0.679
H-26	0.39	0.62	58.33	58.33	2.81	0.000	0.679
H-27	0.2	0.28	16.67	16.67	6.02	0.000	0.337
H-28	0.8	0.19	10.67	10.67	7.43	0.000	1.129
H-29	0.8	0.08	10.00	10.00	7.64	0.000	0.489
H-3	0.45	0.94	24.03	24.03	4.94	0.000	2.088
H-30	0.8	0.07	10.00	10.00	7.64	0.000	0.428
H-31	0.8	0.07	10.00	10.00	7.64	0.000	0.428
H-32	0.8	0.07	10.00	10.00	7.64	0.000	0.428
H-33	0.8	0.07	10.00	10.00	7.64	0.000	0.428
H-34	0.2	0.23	14.58	14.58	6.44	0.000	0.296
H-35	0.8	0.10	10.00	10.00	7.64	0.000	0.611
H-36	0.8	0.16	10.00	10.00	7.64	0.000	0.977
H-4	0.54	0.96	50.65	50.65	3.09	0.000	1.603
H-5	0.3	2.10	82.76	82.76	2.20	0.000	1.385
H-6	0.54	0.95	51.03	51.03	3.08	0.000	1.579
H-7	0.32	3.90	84.86	84.86	2.16	0.000	2.694
H-8	0.63	1.44	95.68	95.68	1.98	0.000	1.796
H-9	0.35	1.87	60.42	60.42	2.74	0.000	1.795

On Grade Inlet Configuration Data

Inlet ID	Inlet Type	Inlet Length (ft)	Slopes Long (%)	Slopes Trans (%)	Gutter n	Gutter Depr. (ft)	Grate Width (ft)	Grate Type	Pond Width Allowed (ft)	Critic Elev. (ft)
G-11	Grate	4.00	2.20	2.50	0.012	n/a	4.00	Parall	10.00	118.54
G-12	Grate	7.00	0.43	16.60	0.012	n/a	4.00	Parall	14.00	98.89
G-13	Curb	10.00	0.15	2.50	0.012	0.40	n/a	n/a	14.00	98.04
G-18	Grate	4.00	2.25	2.50	0.014	n/a	4.00	Parall	10.00	119.26
G-21	Grate	4.00	2.60	2.50	0.012	n/a	4.00	Parall	10.00	112.30
G-22	Grate	7.00	0.26	16.60	0.012	n/a	4.00	Parall	14.00	98.37
G-23	Curb	5.00	0.23	2.50	0.012	0.40	n/a	n/a	14.00	98.56
G-24	Grate	4.00	0.27	2.50	0.012	n/a	4.00	Parall	14.00	99.28
G-26	Curb	10.00	0.23	2.50	0.012	0.40	n/a	n/a	14.00	99.37
G-27	Curb	10.00	0.23	2.50	0.012	0.40	n/a	n/a	14.00	100.18
G-35	Curb	10.00	0.24	2.00	0.012	0.40	n/a	n/a	14.00	100.17
G-37	Curb	5.00	0.24	2.00	0.012	0.40	n/a	n/a	14.00	100.15
H-1	Curb	10.00	0.26	2.50	0.012	0.40	n/a	n/a	14.00	101.88
H-10	Curb	10.00	0.26	2.50	0.012	0.40	n/a	n/a	14.00	106.15
H-15	Curb	5.00	0.50	2.50	0.012	0.40	n/a	n/a	14.00	107.95
H-18	Curb	10.00	0.49	2.50	0.012	0.40	n/a	n/a	8.00	107.74
H-19	Grate	3.00	0.17	2.50	0.012	n/a	3.00	Parall	14.00	108.49
H-21	Curb	10.00	0.30	2.50	0.012	0.40	n/a	n/a	14.00	106.98
H-25	Grate	4.00	1.07	2.00	0.012	n/a	4.00	Parall	14.00	105.20
H-26	Grate	4.00	1.07	2.00	0.012	n/a	4.00	Parall	14.00	105.20
H-28	Grate	3.00	4.90	2.50	0.012	n/a	3.00	Parall	14.00	118.86
H-29	Curb	5.00	0.15	2.50	0.012	0.40	n/a	n/a	14.00	107.44
H-3	Curb	10.00	0.26	2.50	0.012	0.40	n/a	n/a	14.00	102.62
H-30	Grate	1.50	4.90	2.50	0.012	n/a	3.80	Parall	14.00	149.04
H-31	Grate	1.50	4.90	2.50	0.012	n/a	3.80	Parall	14.00	144.92
H-32	Grate	1.50	4.90	2.50	0.012	n/a	3.80	Parall	14.00	139.97
H-33	Grate	1.50	4.90	2.50	0.012	n/a	3.80	Parall	14.00	134.67
H-35	Grate	1.50	4.90	2.50	0.012	n/a	3.80	Parall	14.00	151.28
H-4	Grate	4.00	0.36	16.60	0.012	n/a	4.00	Parall	14.00	102.69
H-5	Curb	5.00	0.26	2.50	0.012	0.40	n/a	n/a	14.00	103.54
H-6	Grate	4.00	0.36	16.60	0.012	n/a	4.00	Parall	14.00	103.58
H-7	Curb	10.00	0.26	2.50	0.012	0.40	n/a	n/a	14.00	104.26
H-8	Grate	4.00	0.36	16.60	0.012	n/a	4.00	Parall	14.00	105.00
H-9	Curb	5.00	0.26	2.50	0.012	0.40	n/a	n/a	14.00	105.56

TRUNK LINE "G" & "H" CONTINUED

On Grade Inlets Conmputation Data.

Inlet ID	Inlet Type	Total Q (cfs)	Intercept Capacity (cfs)	Q Bypass Allow (cfs)	Q Bypass Actual (cfs)	To Inlet ID	Required Length (ft)	Actual Length (ft)	Ponded Width (ft)
G-11	Grate	4.400	3.755	0.990	0.645		n/a	0.00	8.44
G-12	Grate	0.275	0.275	0.000	0.000		n/a	0.00	1.24
G-13	Curb	2.517	2.517	0.000	0.000		5.08	10.00	11.36
G-18	Grate	3.900	3.345	0.990	0.555		n/a	0.00	8.52
G-21	Grate	3.760	3.321	0.990	0.439		n/a	0.00	7.72
G-22	Grate	1.168	1.168	0.000	0.000		n/a	0.00	2.35
G-23	Curb	1.766	1.766	0.000	0.000		4.55	5.00	9.16
G-24	Grate	0.499	0.494	0.990	0.005		n/a	0.00	5.56
G-26	Curb	2.515	2.515	0.000	0.000		5.58	10.00	10.48
G-27	Curb	2.930	2.930	0.000	0.000		6.10	10.00	11.08
G-35	Curb	1.921	1.921	0.000	0.000		5.01	10.00	10.80
G-37	Curb	1.838	1.838	0.000	0.000		4.88	5.00	10.60
H-1	Curb	2.080	2.080	0.000	0.000		5.14	10.00	9.52
H-10	Curb	2.758	2.758	0.000	0.000		6.05	10.00	10.60
H-15	Curb	0.305	0.305	0.000	0.000		2.28	5.00	4.12
H-18	Curb	1.237	1.237	0.000	0.000		4.48	10.00	6.96
H-19	Grate	1.127	0.977	0.990	0.150		n/a	0.00	8.20
H-21	Curb	5.377	5.377	0.000	0.000		9.27	10.00	13.24
H-25	Grate	0.679	0.667	0.990	0.012		n/a	0.00	5.50
H-26	Grate	0.679	0.667	0.990	0.012		n/a	0.00	5.50
H-28	Grate	1.129	1.085	0.990	0.045		n/a	0.00	4.36
H-29	Curb	0.489	0.489	0.000	0.000		2.06	5.00	6.16
H-3	Curb	2.088	2.088	0.000	0.000		5.15	10.00	9.56
H-30	Grate	0.428	0.428	0.000	0.000		n/a	0.00	3.04
H-31	Grate	0.428	0.428	0.000	0.000		n/a	0.00	3.04
H-32	Grate	0.428	0.428	0.000	0.000		n/a	0.00	3.04
H-33	Grate	0.428	0.428	0.000	0.000		n/a	0.00	3.04
H-35	Grate	0.611	0.611	0.000	0.000		n/a	0.00	3.48
H-4	Grate	1.603	1.603	0.000	0.000		n/a	0.00	2.49
H-5	Curb	1.385	1.385	0.000	0.000		4.10	5.00	8.20
H-6	Grate	1.579	1.579	0.000	0.000		n/a	0.00	2.47
H-7	Curb	2.694	2.694	0.000	0.000		5.97	10.00	10.52
H-8	Grate	1.796	1.796	0.000	0.000		n/a	0.00	2.60
H-9	Curb	1.795	1.795	0.000	0.000		4.73	5.00	9.04

Sag Inlets Configuration Data.

Inlet ID	Inlet Type	Length/ Perim. (ft)	Grate Area (sf)	Left-Slope Long (%)	Left-Slope Trans (%)	Right-Slope Long (%)	Right-Slope Trans (%)	Gutter n	Gutter DeprW (ft)	Depth Allowed (ft)	Critic Elev. (ft)
G-10	Curb	10.00	n/a	0.20	2.50	0.14	2.50	0.012	0.40	1.00	97.52
G-19	Grate	22.00	28.00	0.34	16.60	0.22	16.60	0.012	n/a	1.00	97.59
G-20	Curb	10.00	n/a	0.15	2.50	0.15	2.50	0.012	0.40	0.50	97.97
G-28	Curb	5.00	n/a	0.50	2.00	0.50	2.00	0.012	0.40	0.50	101.60
G-36	Curb	10.00	n/a	0.75	2.00	0.35	2.00	0.012	0.40	0.50	97.00
G-38	Curb	10.00	n/a	0.75	2.00	0.35	2.50	0.012	0.40	0.50	96.86
G-9	Grate	22.00	28.00	0.15	16.60	0.33	16.60	0.012	n/a	1.00	98.57
H-11	Curb	10.00	n/a	0.17	2.50	0.24	2.50	0.012	0.40	0.50	106.95
H-12	Grate	16.00	16.00	0.06	16.60	0.35	16.60	0.012	n/a	1.00	105.40
H-13	Grate	12.00	9.00	0.15	16.60	0.15	16.60	0.012	n/a	1.00	105.00
H-14	Grate	12.00	9.00	0.15	2.50	0.15	2.50	0.012	n/a	0.50	105.00
H-17	Curb	5.00	n/a	0.87	2.50	0.01	2.50	0.012	0.40	0.50	106.62
H-2	Grate	16.00	16.00	0.25	16.60	0.35	16.60	0.012	n/a	1.00	101.00
H-20	Grate	12.00	9.00	0.15	2.50	0.15	2.50	0.012	n/a	0.50	105.99
H-22	Curb	15.00	n/a	0.30	2.50	0.34	2.50	0.012	0.40	0.50	105.83
H-27	Grate	120.0	9.00	0.15	2.50	0.15	2.50	0.012	n/a	0.50	105.70
H-34	Grate	12.00	9.00	0.15	2.50	0.15	2.50	0.012	n/a	0.50	106.03
H-36	Curb	5.00	n/a	0.43	2.50	0.25	2.50	0.012	0.40	0.50	106.79

Sag Inlets Computation Data.

Inlet ID	Inlet Type	Length (ft)	Grate Perim (ft)	Grate Area (sf)	Total Q (cfs)	Inlet Capacity (cfs)	Total Head (ft)	Ponded Width Left (ft)	Ponded Width Right (ft)
G-10	Curb	10.00	n/a	n/a	4.208	24.656	0.308	10.04	10.76
G-19	Grate	n/a	22.00	28.00	0.293	67.235	0.026	1.02	1.11
G-20	Curb	10.00	n/a	n/a	3.533	8.717	0.274	9.96	9.96
G-28	Curb	5.00	n/a	n/a	0.962	4.651	0.175	3.95	3.95
G-36	Curb	10.00	n/a	n/a	5.008	8.717	0.346	9.65	11.10
G-38	Curb	10.00	n/a	n/a	3.219	8.717	0.257	8.15	8.20
G-9	Grate	n/a	22.00	28.00	0.456	67.235	0.036	1.41	1.21
H-11	Curb	10.00	n/a	n/a	5.658	8.717	0.375	11.60	10.84
H-12	Grate	n/a	16.00	16.00	1.669	48.898	0.105	2.77	1.95
H-13	Grate	n/a	12.00	9.00	0.610	36.674	0.065	1.57	1.57
H-14	Grate	n/a	12.00	9.00	2.932	12.966	0.184	9.28	9.28
H-17	Curb	5.00	n/a	n/a	1.107	4.651	0.192	4.64	10.68
H-2	Grate	n/a	16.00	16.00	3.112	48.898	0.158	2.63	2.47
H-20	Grate	n/a	12.00	9.00	0.376	12.966	0.047	4.28	4.28
H-22	Curb	15.00	n/a	n/a	8.031	12.783	0.367	11.88	11.60
H-27	Grate	n/a	120.00	9.00	0.337	33.861	0.009	4.12	4.12
H-34	Grate	n/a	12.00	9.00	0.296	12.966	0.040	3.92	3.92
H-36	Curb	5.00	n/a	n/a	0.977	4.651	0.177	5.04	5.56

NOTES:

1. CALCULATIONS COMPILED BY TXDOT "WINSTORM V.3.05" COMPUTER PROGRAM.
2. SEWER CALCULATIONS BASED ON MANNING FORMULAS. JUNCTION LOSS WAS NOT TAKEN INTO ACCOUNT.
3. MAINLANE INLETS WERE ANALYSED BY MANUALLY ADDING THE 10 YEAR STORM FREQUENCY (SUPPLY Q)
4. Q BYPASS CONSIDERED ACCEPTABLE DUE TO THE CARRYOVER AMOUNT BEING MINIMAL (LESS THAN 1.0 CFS.) AND THE PONDING WIDTH BEING CONSIDERABLY LESS THAN ALLOWABLE THE CARRYOVER WOULD NOT SIGNIFICANTLY ICREASE THE PONDING WIDTH.

STATE OF TEXAS
RAMIRO GUTIERREZ
65948
REGISTERED
PROFESSIONAL ENGINEER

THE SEAL APPEARING ON THIS DOCUMENT WAS AUTHORIZED BY RAMIRO GUTIERREZ, P.E. 65948
DATE: 8-19-03
ALTERATION OF A SEALED DOCUMENT WITHOUT PROPER NOTIFICATION TO THE RESPONSIBLE ENGINEER IS AN OFFENSE UNDER THE TEXAS ENGINEERING PRATICE LAW.

PB Parsons Brinckerhoff Quade & Douglas Inc.

R. Gutierrez Engineering Corporation

Texas Department of Transportation

©2003 by TxDOT

US 281 EXPRESSWAY HYDRAULIC DATA SHEET

DESIGNED:	FED. RD DIV. No.	STATE	FEDERAL AID PROJECT No.		HIGHWAY No.
CHECKED:	6	TEXAS			US 281
DRAWN:	STATE DISTRICT	COUNTY	CONTROL No.	SECTION No.	JOB No. / SHEET No.
CHECKED:	21	HIDALGO	0255	08	091 / 530

Cumulative Junction Discharge Computations

Node I.D.	Node Type	Weighted C-Value	Cumulat. Dr.Area (acres)	Cumulat. Tc (min)	Intens. (in/hr)	User Supply Q cfs)	Additional Q in Node (cfs)	Total Disch. (cfs)
G-10	Curb	0.720	0.92	15.00	6.35	0.000	0.00	4.208
G-11	Grate	0.000	0.00	0.00	0.00	4.400	0.00	4.400
G-12	Grate	0.511	2.62	15.00	6.35	4.400	0.00	12.899
G-13	Curb	0.750	0.61	19.80	5.50	0.000	0.00	2.517
G-18	Grate	0.000	0.00	0.00	0.00	3.900	0.00	3.900
G-19	Grate	0.397	14.87	99.65	1.92	8.300	0.00	19.654
G-20	Curb	0.420	2.95	57.08	2.85	0.000	0.00	3.533
G-21	Grate	0.000	0.00	0.00	0.00	3.760	0.00	3.760
G-22	Grate	0.380	18.79	101.00	1.90	8.300	0.00	21.881
G-23	Curb	0.270	3.15	89.58	2.08	0.000	0.00	1.766
G-24	Grate	0.343	25.12	102.60	1.88	12.060	0.00	28.288
G-26	Curb	0.240	5.56	102.36	1.89	0.000	0.00	2.515
G-27	Curb	0.270	4.92	82.36	2.21	0.000	0.00	2.930
G-28	Curb	0.482	31.72	41.01	3.56	0.000	0.00	54.417
G-35	Curb	0.740	0.34	10.00	7.64	0.000	0.00	1.921
G-36	Curb	0.610	1.34	16.13	6.13	0.000	0.00	5.008
G-37	Curb	0.292	4.01	94.17	2.00	0.000	0.00	2.342
G-38	Curb	0.367	8.81	96.69	1.96	0.000	0.00	6.350
G-9	Grate	0.486	1.67	15.00	6.35	0.000	0.00	5.161
H-1	Curb	0.320	1.99	46.67	3.27	0.000	0.00	2.080
H-10	Curb	0.420	1.49	29.13	4.41	0.000	0.00	2.758
H-11	Curb	0.660	1.69	22.92	5.07	0.000	0.00	5.658
H-12	Grate	0.573	11.98	41.01	3.56	0.000	0.00	24.424
H-13	Grate	0.258	0.83	15.00	6.35	0.000	0.00	1.359
H-14	Grate	0.592	8.19	41.01	3.56	0.000	0.00	17.246
H-15	Curb	0.406	0.35	15.19	6.31	0.000	0.00	0.896
H-17	Curb	0.629	6.56	40.57	3.58	0.000	0.00	14.767
H-18	Curb	0.561	13.67	41.01	3.56	0.000	0.00	27.289
H-19	Grate	0.800	0.19	10.73	7.41	0.000	0.00	1.127
H-2	Grate	0.481	31.54	41.01	3.56	0.000	0.00	53.969
H-20	Grate	0.200	0.27	12.33	6.97	0.000	0.00	0.376
H-21	Curb	0.625	5.63	39.96	3.62	0.000	0.00	12.721
H-22	Curb	0.621	3.27	28.73	4.44	0.000	0.00	9.026
H-25	Grate	0.390	0.62	58.33	2.81	0.000	0.00	0.679
H-26	Grate	0.390	1.24	58.46	2.81	0.000	0.00	1.357
H-27	Grate	0.400	0.42	16.67	6.02	0.000	0.00	1.012
H-28	Grate	0.800	0.19	10.67	7.43	0.000	0.00	1.129
H-29	Curb	0.337	0.35	12.76	6.86	0.000	0.00	0.810
H-3	Curb	0.450	0.94	24.03	4.94	0.000	0.00	2.088
H-30	Grate	0.800	0.07	10.00	7.64	0.000	0.00	0.428
H-31	Grate	0.800	0.07	10.00	7.64	0.000	0.00	0.428
H-32	Grate	0.800	0.07	10.00	7.64	0.000	0.00	0.428
H-33	Grate	0.800	0.07	10.00	7.64	0.000	0.00	0.428
H-34	Grate	0.200	0.23	14.58	6.44	0.000	0.00	0.296
H-35	Grate	0.000	0.00	0.00	0.00	0.000	0.00	0.000
H-36	Curb	0.800	0.16	10.00	7.64	0.000	0.00	0.977
H-4	Grate	0.483	26.13	41.01	3.56	0.000	0.00	44.909
H-5	Curb	0.300	2.10	82.76	2.20	0.000	0.00	1.385
H-6	Grate	0.498	23.07	41.01	3.56	0.000	0.00	40.825
H-7	Curb	0.320	3.90	84.86	2.16	0.000	0.00	2.694
H-8	Grate	0.568	15.11	41.01	3.56	0.000	0.00	30.515
H-9	Curb	0.366	3.11	60.42	2.74	0.000	0.00	3.121
JG1	CircMh	0.486	1.67	15.00	6.35	4.400	0.00	9.561
JG2	CircMh	0.380	18.79	101.00	1.90	12.060	0.00	25.641
JG3	CircMh	0.400	11.43	97.88	1.95	4.400	0.00	13.300
JG4	JnctBx	0.409	61.76	41.01	3.56	12.060	0.00	101.866
JG5	CircMh	0.511	2.62	15.00	6.35	4.400	0.00	12.899
JH13	JnctBx	0.533	18.22	41.01	3.56	0.000	0.00	34.563
JH2	CircMh	0.482	27.07	41.01	3.56	0.000	0.00	46.413
JH5	CircMh	0.573	11.98	41.01	3.56	0.000	0.00	24.424
JH6	CircMh	0.592	8.19	41.01	3.56	0.000	0.00	17.246
JH7	CircMh	0.800	0.19	10.73	7.41	0.000	0.00	1.127
JH8	JnctBx	0.345	0.99	15.72	6.21	0.000	0.00	2.122
JH9	CircMh	0.800	0.38	13.49	6.69	0.000	0.00	2.032
03	CircMh	0.000	0.00	0.00	0.00	0.000	0.00	0.000
OUT	Outlt	0.409	61.76	41.01	3.56	12.060	0.00	101.866

TRUNK LINE "G" & "H" CONTINUED

Conveyance Configuration Data

Run#	Node I.D. US	DS	Flowline Elev. US (ft)	DS (ft)	Shape #	Span (ft)	Rise (ft)	Length (ft)	Slope (%)	n value
90	G-10	G-9	93.20	92.57	Circ 1	0.00	2.00	52.00	1.21	0.012
100	G-9	JG1	92.57	92.46	Circ 1	0.00	2.00	70.00	0.16	0.012
110	G-11	JG1	94.50	94.30	Circ 1	0.00	1.50	40.00	0.50	0.012
120	JG1	G-12	92.46	92.04	Circ 1	0.00	2.50	280.00	0.15	0.012
130	G-13	G-12	92.64	92.04	Circ 1	0.00	2.00	64.00	0.94	0.012
140	G-12	JG5	91.54	91.11	Circ 1	0.00	3.00	286.00	0.15	0.012
142	JG5	JG3	91.11	90.87	Circ 1	0.00	3.00	160.00	0.15	0.012
150	G-35	G-37	93.00	92.87	Circ 1	0.00	2.00	85.00	0.15	0.012
152	G-37	G-38	92.87	92.31	Circ 1	0.00	2.00	371.00	0.15	0.012
154	G-36	G-38	92.47	92.31	Circ 1	0.00	2.00	108.00	0.15	0.012
156	G-38	JG3	91.31	90.95	Circ 1	0.00	3.00	232.00	0.16	0.012
160	JG3	G-19	90.37	89.76	Circ 1	0.00	4.00	407.00	0.15	0.012
190	G-18	G-19	94.50	94.30	Circ 1	0.00	1.50	38.00	0.53	0.012
200	G-20	G-19	93.50	93.30	Circ 1	0.00	1.50	54.00	0.37	0.012
210	G-19	G-22	89.25	88.72	Circ 1	0.00	4.50	350.00	0.15	0.012
220	G-23	G-22	92.50	92.30	Circ 1	0.00	1.50	52.00	0.38	0.012
230	G-22	JG2	88.72	88.49	Circ 1	0.00	5.00	137.00	0.17	0.012
240	G-21	JG2	93.50	93.30	Circ 1	0.00	1.50	39.00	0.51	0.012
250	JG2	G-24	88.49	88.19	Circ 1	0.00	5.00	213.00	0.14	0.012
260	G-26	G-24	92.00	91.80	Circ 1	0.00	1.50	52.00	0.38	0.012
270	G-24	JG4	88.19	87.66	Circ 1	0.00	6.00	350.00	0.15	0.012
280	G-27	JG4	92.51	92.39	Circ 1	0.00	1.50	56.00	0.21	0.012
300	H-30	H-27	100.07	99.50	Circ 1	0.00	0.50	98.00	0.58	0.011
302	H-31	H-27	100.03	99.50	Circ 1	0.00	0.50	58.00	0.91	0.013
304	H-27	H-22	98.97	98.81	Circ 1	0.00	1.50	124.00	0.13	0.012
306	H-32	H-22	99.90	99.40	Circ 1	0.00	0.50	80.00	0.63	0.011
308	H-22	H-21	97.94	97.07	Circ 1	0.00	2.00	370.00	0.24	0.013
310	H-21	H-17	97.07	96.95	Circ 1	0.00	2.50	118.00	0.10	0.012
312	H-34	H-15	97.84	97.76	Circ 1	0.00	1.50	52.00	0.15	0.012
314	H-33	H-15	99.42	99.00	Circ 1	0.00	0.50	68.00	0.62	0.011
316	H-15	H-17	97.76	97.58	Circ 1	0.00	1.50	118.00	0.15	0.012
318	H-19	JH7	99.23	99.20	Circ 1	0.00	1.50	22.00	0.14	0.012
320	JH7	JH9	99.20	98.71	Circ 1	0.00	1.50	324.00	0.15	0.012
322	H-28	JH9	98.74	98.71	Circ 1	0.00	1.50	22.00	0.14	0.012
324	JH9	H-17	97.71	97.08	Circ 1	0.00	2.50	148.00	0.43	0.012
326	H-17	H-14	96.95	96.60	Circ 1	0.00	2.50	132.00	0.27	0.012
328	H-20	H-29	97.96	97.90	Circ 1	0.00	1.50	40.00	0.15	0.012
330	H-29	H-13	97.90	97.82	Circ 1	0.00	1.50	55.00	0.15	0.012
332	H-13	JH8	97.32	97.21	Circ 1	0.00	2.00	88.00	0.13	0.012
334	H-36	JH8	98.23	98.21	Circ 1	0.00	1.50	12.00	0.17	0.012
336	JH8	H-14	97.21	97.10	Circ 1	0.00	2.00	62.00	0.18	0.012
350	H-14	JH6	96.60	96.15	Circ 1	0.00	2.50	248.00	0.18	0.012
360	JH6	H-12	96.15	96.08	Circ 1	0.00	2.50	37.00	0.19	0.012
370	H-11	H-12	102.50	99.50	Circ 1	0.00	2.00	51.00	5.89	0.012
380	H-12	JH5	95.58	94.98	Circ 1	0.00	3.00	400.00	0.15	0.012
390	JH5	H-18	94.98	94.37	Circ 1	0.00	3.00	406.00	0.15	0.012
391	H-10	H-18	100.50	98.50	Circ 1	0.00	2.00	44.00	4.55	0.012
410	H-18	H-8	94.37	94.19	Circ 1	0.00	3.00	121.00	0.15	0.012
420	H-8	JH13	93.69	93.27	Circ 1	0.00	3.50	280.00	0.15	0.012
426	H-25	H-26	100.50	100.30	Circ 1	0.00	1.50	26.00	0.77	0.012
427	H-26	H-9	100.30	100.18	Circ 1	0.00	1.50	76.00	0.16	0.012
428	H-9	JH13	100.18	98.00	Circ 1	0.00	2.00	71.00	3.07	0.012
440	JH13	H-6	93.27	92.89	Circ 1	0.00	3.50	250.00	0.15	0.012
443	H-7	H-6	101.00	98.00	Circ 1	0.00	2.00	52.00	5.78	0.012
445	H-6	H-4	92.89	92.36	Circ 1	0.00	3.50	350.00	0.15	0.012
470	H-5	H-4	98.00	97.50	Circ 1	0.00	2.00	52.00	0.96	0.012
480	H-4	JH2	91.86	91.33	Circ 1	0.00	4.00	350.00	0.15	0.012
490	H-3	JH2	98.50	97.40	Circ 1	0.00	2.00	64.00	1.72	0.012
500	JH2	H-2	91.33	90.88	Circ 1	0.00	4.00	278.00	0.16	0.012
510	H-1	H-2	98.00	97.00	Circ 1	0.00	1.50	72.00	1.39	0.012
520	H-2	G-28	90.88	90.37	Circ 1	0.00	4.00	336.00	0.15	0.012
530	G-28	JG4	90.37	90.24	Circ 1	0.00	4.00	88.00	0.15	0.012
540	JG4	OUT	87.66	87.19	Circ 1	0.00	6.00	342.00	0.14	0.012

TRUNK LINE "G" & "H" CONTINUED

Conveyance Hydraulic Computations. Tailwater = 96.500 (ft)

Run#	Hydraulic Gradeline US Elev (ft)	DS Elev (ft)	Fr.Slope (%)	Depth Unif. (ft)	Depth Actual (ft)	Velocity Unif. (f/s)	Velocity Actual (f/s)	Q (cfs)	Cap (cfs)	Junc Loss (ft)
90*	97.08	97.07	0.029	0.53	2.00	6.26	1.34	4.21	26.98	0.000
100	97.07	97.03	0.044	1.03	2.00	3.16	1.64	5.16	9.72	0.000
110*	97.09	97.03	0.149	0.79	1.50	4.66	2.49	4.40	8.05	0.000
120	97.03	96.91	0.046	1.33	2.50	3.61	1.95	9.56	17.21	0.000
130*	96.91	96.91	0.011	0.44	2.00	4.92	0.80	2.52	23.73	0.000
140	96.91	96.81	0.032	1.41	3.00	3.97	1.82	12.90	28.02	0.000
142	96.81	96.76	0.032	1.41	3.00	3.97	1.82	12.90	27.99	0.000
150	96.82	96.81	0.006	0.61	2.00	2.37	0.61	1.92	9.59	0.000
152	96.81	96.78	0.009	0.69	2.00	2.45	0.75	2.34	9.52	0.000
154	96.83	96.78	0.042	1.03	2.00	3.07	1.59	5.01	9.43	0.000
156	96.78	96.76	0.008	0.96	3.00	3.25	0.90	6.35	28.47	0.000
160	96.76	96.74	0.007	1.28	4.00	3.83	1.06	13.30	60.25	0.000
190*	96.78	96.74	0.117	0.73	1.50	4.60	2.21	3.90	8.26	0.000
200	96.79	96.74	0.096	0.76	1.50	3.92	2.00	3.53	6.93	0.000
210	96.74	96.71	0.009	1.48	4.50	4.33	1.24	19.65	82.91	0.000
220	96.72	96.71	0.024	0.51	1.50	3.34	1.00	1.77	7.06	0.000
230	96.71	96.70	0.006	1.48	5.00	4.48	1.11	21.88	115.62	0.000
240*	96.74	96.70	0.109	0.71	1.50	4.53	2.13	3.76	8.15	0.000
250	96.70	96.68	0.008	1.68	5.00	4.43	1.31	25.64	105.90	0.000
260	96.71	96.68	0.049	0.62	1.50	3.64	1.42	2.52	7.06	0.000
270	96.68	96.67	0.004	1.59	6.00	4.70	1.00	28.29	178.56	0.000
280	96.71	96.67	0.066	0.80	1.50	3.07	1.66	2.93	5.27	0.000
300	101.44	101.03	0.416	0.35	0.50	2.90	2.18	0.43	0.51	0.000
302	101.37	101.03	0.581	0.34	0.50	3.03	2.18	0.43	0.54	0.000
304*	101.03	101.03	0.008	0.52	1.50	1.88	0.57	1.01	4.09	0.000
306	101.36	101.03	0.416	0.34	0.50	2.97	2.18	0.43	0.52	0.000
308	101.03	100.44	0.159	1.38	2.00	3.92	2.87	9.03	10.97	0.000
310	100.44	100.34	0.082	1.88	2.50	3.22	2.59	12.72	14.17	0.000
312*	100.35	100.35	0.001	0.26	1.50	1.42	0.17	0.30	4.46	0.000
314	100.63	100.35	0.416	0.34	0.50	2.97	2.18	0.43	0.52	0.000
316	100.35	100.34	0.006	0.46	1.50	1.97	0.51	0.90	4.45	0.000
318	100.37	100.37	0.010	0.54	1.17	1.97	0.76	1.13	4.20	0.000
320	100.37	100.34	0.010	0.52	1.50	2.10	0.64	1.13	4.43	0.000
322	100.35	100.34	0.010	0.54	1.50	1.98	0.64	1.13	4.20	0.000
324*	100.34	100.34	0.002	0.45	2.50	3.39	0.41	2.03	29.00	0.000
326	100.34	100.20	0.110	1.45	2.50	5.02	3.01	14.77	22.88	0.000
328	100.20	100.20	0.001	0.29	1.50	1.55	0.21	0.38	4.41	0.000
330	100.20	100.20	0.005	0.45	1.50	1.84	0.46	0.81	4.34	0.000
332	100.20	100.20	0.003	0.53	2.00	2.03	0.43	1.36	8.67	0.000
334	100.20	100.20	0.007	0.47	1.50	2.07	0.55	0.98	4.65	0.000
336	100.20	100.20	0.007	0.61	2.00	2.62	0.68	2.12	10.32	0.000
350	100.20	99.82	0.151	1.88	2.50	4.37	3.51	17.25	18.93	0.000
360	99.82	99.77	0.151	1.88	2.50	4.37	3.51	17.25	19.33	0.000
370*	102.92	99.92	0.053	0.42	0.42	11.92	11.92	5.66	59.50	0.000
380	99.77	99.31	0.114	2.16	3.00	4.49	3.46	24.42	27.99	0.000
390	99.31	98.85	0.114	2.16	3.00	4.49	3.46	24.42	28.01	0.000
391*	100.81	98.85	0.013	0.31	0.35	8.84	7.50	2.76	52.28	0.000
410	98.85	98.68	0.143	2.44	3.00	4.44	3.86	27.29	27.87	0.000
420	98.68	98.46	0.078	2.19	3.50	4.82	3.17	30.52	42.22	0.000
426*	100.86	100.86	0.004	0.27	0.56	3.22	1.12	0.68	9.98	0.000
427	100.86	100.62	0.014	0.56	0.56	2.24	2.24	1.36	4.52	0.000
428*	100.55	98.46	0.016	0.36	0.46	7.98	5.75	3.12	42.96	0.000
440	98.46	98.21	0.101	2.41	3.50	4.90	3.59	34.56	42.50	0.000
443*	101.29	98.29	0.012	0.29	0.29	9.48	9.48	2.69	58.92	0.000
445	98.21	97.72	0.140	2.84	3.50	4.88	4.24	40.82	42.42	0.000
470*	98.33	97.83	0.003	0.33	0.33	4.15	4.15	1.38	24.04	0.000
480	97.72	97.43	0.083	2.63	4.00	5.14	3.57	44.91	60.56	0.000
490*	98.85	97.75	0.007	0.35	0.35	5.76	5.76	2.09	32.14	0.000
500	97.43	97.18	0.089	2.56	4.00	5.46	3.69	46.41	62.62	0.000
510*	98.40	97.40	0.033	0.40	0.40	5.50	5.50	2.08	13.41	0.000
520	97.18	96.78	0.120	3.00	4.00	5.34	4.29	53.97	60.63	0.000
530	96.78	96.67	0.122	3.00	4.00	5.38	4.33	54.42	59.82	0.000
540	96.67	96.50	0.049	3.38	6.00	6.22	3.60	101.87	170.11	0.000

END

* Super critical flow.

NORMAL TERMINATION OF WINSTORM.

NOTES:

1. CALCULATIONS COMPILED BY TXDOT "WINSTORM V.3.05" COMPUTER PROGRAM.
2. SEWER CALCULATIONS BASED ON MANNING FORMULAS. JUNCTION LOSS WAS NOT TAKEN INTO ACCOUNT.
3. MAINLANE INLETS WERE ANALYSED BY MANUALLY ADDING THE 10 YEAR STORM FREQUENCY (SUPPLY Q)

STATE OF TEXAS
RAMIRO GUTIERREZ
65948
REGISTERED PROFESSIONAL ENGINEER

THE SEAL APPEARING ON THIS DOCUMENT WAS AUTHORIZED BY RAMIRO GUTIERREZ, P.E. 65948
DATE: 8-19-03
ALTERATION OF A SEALED DOCUMENT WITHOUT PROPER NOTIFICATION TO THE RESPONSIBLE ENGINEER IS AN OFFENSE UNDER THE TEXAS ENGINEERING PRATICE LAW.

Parsons Brinckerhoff Quade & Douglas Inc.

R. Gutierrez Engineering Corporation

Texas Department of Transportation

© 2003 by TxDOT

US 281 EXPRESSWAY HYDRAULIC DATA SHEET

DESIGNED:	FED. RD DIV. No.	STATE	FEDERAL AID PROJECT No.		HIGHWAY No.	
CHECKED:	6	TEXAS			US 281	
DRAWN:	STATE DISTRICT	COUNTY	CONTROL No.	SECTION No.	JOB No.	SHEET No.
CHECKED:	21	HIDALGO	0255	08	091	531

TRUNK LINE "J"

Runoff Computation for Design Frequency.

ID	C Value	Area (acre)	Tc (min)	Tc Used (min)	Intensity (in/hr)	Supply Q (cfs)	Total Q (cfs)
G-1	0.3	3.14	67.08	67.08	2.55	0.000	2.402
G-2	0.55	1.08	63.96	63.96	2.64	0.000	1.566
G-3	0.29	5.33	75.14	75.14	2.35	0.000	3.639
G-32	0.32	6.31	54.17	54.17	2.96	0.000	5.967
G-33	0.57	1.77	71.98	71.98	2.43	0.000	2.449
G-34	0.9	0.22	10.97	10.97	7.34	0.000	1.454
G-39	0.9	0.73	47.20	10.00	0.00	5.090	5.090
G-4	0.63	1.96	84.25	84.25	2.17	0.000	2.680
G-40	0.58	1.46	61.39	61.39	2.71	0.000	2.297
G-41	0.52	0.33	39.59	39.59	3.64	0.000	0.624
G-42	0.43	0.71	52.57	52.57	3.02	0.000	0.921
G-43	0.42	0.72	52.57	52.57	3.02	0.000	0.912
G-5	0.69	0.58	17.66	17.66	5.85	0.000	2.340
G-6	0.9	0.20	20.00	20.00	5.47	0.000	0.985
G-7	0.65	1.62	102.92	102.92	1.88	0.000	1.977
G-8	0.72	0.46	15.11	15.11	6.33	0.000	2.096

On Grade Inlet Configuration Data

Inlet ID	Inlet Type	Inlet Length (ft)	Slopes Long (%)	Slopes Trans (%)	Gutter n	Gutter Depr. (ft)	Grate Width (ft)	Grate Type	Pond Width Allowed (ft)	Critic Elev. (ft)
G-1	Curb	10.00	0.29	2.50	0.012	0.40	n/a	n/a	14.00	98.40
G-2	Grate	7.00	0.21	16.60	0.012	n/a	4.00	Parall	14.00	98.85
G-34	Curb	5.00	0.15	2.00	0.012	0.40	n/a	n/a	20.00	98.93
G-39	Grate	7.00	2.25	2.50	0.012	n/a	7.00	Parall	10.00	111.63
G-41	Grate	7.00	0.40	2.00	0.012	n/a	7.00	Parall	14.00	97.60
G-42	Grate	7.00	0.43	2.00	0.012	n/a	7.00	Parall	14.00	98.64
G-43	Grate	7.00	0.43	2.00	0.012	n/a	7.00	Parall	14.00	98.64
G-5	Curb	5.00	0.15	2.50	0.012	0.40	n/a	n/a	14.00	98.37
G-6	Grate	7.00	0.26	2.50	0.012	n/a	7.00	Parall	20.00	99.43
G-7	Grate	7.00	0.18	16.60	0.012	n/a	4.00	Parall	14.00	99.33
G-8	Curb	5.00	0.20	2.50	0.012	0.40	n/a	n/a	14.00	98.29

On Grade Inlets Computation Data.

Inlet ID	Inlet Type	Total Q (cfs)	Intercept Capacity (cfs)	Q Bypass Allow (cfs)	Q Bypass Actual (cfs)	To Inlet ID	Required Length (ft)	Actual Length (ft)	Ponded Width (ft)
G-1	Curb	2.402	2.402	0.000	0.000		5.72	10.00	9.88
G-2	Grate	1.566	1.566	0.000	0.000		n/a	0.00	2.74
G-34	Curb	1.454	1.454	0.000	0.000		3.84	5.00	10.65
G-39	Grate	5.090	5.044	0.990	0.046		n/a	0.00	8.88
G-41	Grate	0.624	0.624	0.000	0.000		n/a	0.00	6.45
G-42	Grate	0.921	0.921	0.000	0.000		n/a	0.00	7.35
G-43	Grate	0.912	0.912	0.000	0.000		n/a	0.00	7.30
G-5	Curb	2.340	2.340	0.000	0.000		4.87	5.00	11.04
G-6	Grate	0.985	0.985	0.000	0.000		n/a	0.00	7.20
G-7	Grate	1.977	1.977	0.000	0.000		n/a	0.00	3.08
G-8	Curb	2.096	2.096	0.000	0.000		4.87	5.00	10.04

Sag Inlets Configuration Data.

Inlet ID	Inlet Type	Length/ Perim. (ft)	Grate Area (sf)	Left-Slope Long (%)	Left-Slope Trans (%)	Right-Slope Long (%)	Right-Slope Trans (%)	Gutter n	Gutter DeprW (ft)	Depth Allowed (ft)	Critic Elev. (ft)
G-3	Curb	5.00	n/a	0.29	2.50	0.15	2.50	0.012	0.40	1.00	97.56
G-32	Curb	10.00	n/a	0.15	2.50	0.46	2.50	0.012	0.40	0.50	97.55
G-33	Grate	22.00	28.00	1.48	16.66	0.45	16.66	0.014	n/a	1.00	99.14
G-4	Grate	22.00	28.00	0.21	16.60	0.26	16.60	0.012	n/a	1.00	99.25
G-40	Grate	22.00	28.00	0.25	16.60	0.40	16.60	0.012	n/a	0.50	98.60

TRUNK LINE "J" CONTINUED

Sag Inlets Computation Data.

Inlet ID	Inlet Type	Length (ft)	Grate Perim (ft)	Grate Area (sf)	Total Q (cfs)	Inlet Capacity (cfs)	Total Head (ft)	Ponded Width Left (ft)	Ponded Width Right (ft)
G-3	Curb	5.00	n/a	n/a	3.639	13.156	0.425	8.88	10.04
G-32	Curb	10.00	n/a	n/a	5.967	8.717	0.388	12.12	9.80
G-33	Grate	n/a	22.00	28.00	2.449	67.235	0.109	1.82	2.28
G-4	Grate	n/a	22.00	28.00	2.680	67.235	0.116	2.57	2.47
G-40	Grate	n/a	22.00	28.00	2.297	23.771	0.105	2.35	2.15

Cumulative Junction Discharge Computations

Node I.D.	Node Type	Weighted C-Value	Cumulat. Dr.Area (acres)	Cumulat. Tc (min)	Intens. (in/hr)	User Supply Q cfs)	Additional Q in Node (cfs)	Total Disch. (cfs)
G-1	Curb	0.300	3.14	67.08	2.55	0.000	0.00	2.402
G-2	Grate	0.437	14.37	109.79	1.79	5.090	0.00	16.338
G-3	Curb	0.290	5.33	75.14	2.35	0.000	0.00	3.639
G-32	Curb	0.320	6.31	54.17	2.96	0.000	0.00	5.967
G-33	Grate	0.415	23.88	113.66	1.75	5.090	0.00	22.403
G-34	Curb	0.420	24.10	113.98	1.74	5.090	0.00	22.712
G-39	Grate	0.000	0.00	0.00	0.00	5.090	0.00	5.090
G-4	Grate	0.467	10.15	108.53	1.81	5.090	0.00	13.660
G-40	Grate	0.429	25.56	115.81	1.72	5.090	0.00	23.965
G-41	Grate	0.520	0.33	39.59	3.64	0.000	0.00	0.624
G-42	Grate	0.430	0.71	52.57	3.02	0.000	0.00	0.921
G-43	Grate	0.425	1.43	52.74	3.01	0.000	0.00	1.829
G-5	Curb	0.690	0.58	17.66	5.85	0.000	0.00	2.340
G-6	Grate	0.687	2.86	107.05	1.82	5.090	0.00	8.674
G-7	Grate	0.665	2.08	102.92	1.88	5.090	0.00	7.689
G-8	Curb	0.720	0.46	15.11	6.33	0.000	0.00	2.096
JG6	CircMn	0.436	15.80	111.42	1.77	5.090	0.00	17.293
JG7	CircMn	0.430	25.89	116.61	1.71	5.090	0.00	24.163
JG8	CircMn	0.665	2.08	102.92	1.88	5.090	0.00	7.689
OG	Outlt	0.430	25.89	116.61	1.71	5.090	0.00	24.163

Conveyance Configuration Data

Run#	Node I.D. US	Node I.D. DS	Flowline Elev. US (ft)	Flowline Elev. DS (ft)	Shape #	Span (ft)	Rise (ft)	Length (ft)	Slope (%)	n value
5	G-39	G-7	94.40	94.30	Circ 1	0.00	1.50	37.00	0.27	0.012
7	G-8	G-7	93.50	93.33	Circ 1	0.00	1.50	52.00	0.33	0.012
10	G-7	JG8	93.33	92.76	Circ 1	0.00	2.00	377.00	0.15	0.012
30	JG8	G-6	92.76	92.09	Circ 1	0.00	2.00	450.00	0.15	0.012
35	G-5	G-6	94.50	92.50	Circ 1	0.00	1.50	44.00	4.55	0.012
40	G-6	G-4	92.09	91.63	Circ 1	0.00	2.00	305.00	0.15	0.012
45	G-3	G-4	93.50	91.50	Circ 1	0.00	1.50	62.00	3.23	0.012
50	G-4	G-2	91.13	90.67	Circ 1	0.00	2.50	303.00	0.15	0.012
55	G-1	G-2	94.50	92.50	Circ 1	0.00	1.50	52.00	3.85	0.012
60	G-2	JG6	90.67	90.09	Circ 1	0.00	2.50	389.00	0.15	0.012
64	G-42	G-43	95.50	95.30	Circ 1	0.00	1.50	33.00	0.61	0.012
68	G-43	JG6	94.80	91.50	Circ 1	0.00	2.00	158.00	2.09	0.012
70	JG6	G-33	89.59	88.74	Circ 1	0.00	3.00	567.00	0.15	0.012
75	G-32	G-33	92.00	90.65	Circ 1	0.00	2.00	74.00	1.82	0.012
80	G-33	G-34	88.74	88.59	Circ 1	0.00	3.00	87.00	0.17	0.012
90	G-34	G-40	88.59	87.87	Circ 1	0.00	3.00	482.00	0.15	0.012
100	G-40	JG7	87.87	87.55	Circ 1	0.00	3.00	211.00	0.15	0.012
110	G-41	JG7	92.50	90.50	Circ 1	0.00	1.50	76.00	2.63	0.012
120	JG7	OG	87.55	87.01	Circ 1	0.00	3.00	268.00	0.20	0.012

Conveyance Hydraulic Computations. Tailwater = 90.500 (ft)

Run#	Hydraulic Grade US Elev (ft)	Hydraulic Grade DS Elev (ft)	Fr.Slope (%)	Depth Unif. (ft)	Depth Actual (ft)	Velocity Unif. (f/s)	Velocity Actual (f/s)	Q (cfs)	Cap (cfs)	Junc Loss (ft)
5	95.48	95.17	0.200	1.08	1.08	3.74	3.74	5.09	5.92	0.000
7	94.72	94.71	0.034	0.59	1.38	3.28	1.24	2.10	6.51	0.000
10	94.71	94.16	0.098	1.38	1.40	3.34	3.28	7.69	9.53	0.000
30	94.16	93.59	0.098	1.38	1.50	3.34	3.04	7.69	9.46	0.000
35*	94.82	93.59	0.042	0.31	1.09	8.71	1.70	2.34	24.28	0.000
40	93.59	92.94	0.125	1.50	1.50	3.43	3.43	8.67	9.52	0.000
45*	93.94	92.94	0.102	0.43	1.44	8.74	2.09	3.64	20.45	0.000
50	92.94	92.62	0.094	1.64	1.95	4.00	3.32	13.66	17.32	0.000
55*	94.83	92.83	0.045	0.33	0.33	8.27	8.27	2.40	22.33	0.000
60	92.62	91.83	0.135	1.95	1.95	3.97	3.97	16.34	17.16	0.000
64*	95.83	95.63	0.007	0.33	0.33	3.24	3.24	0.92	8.86	0.000
68*	95.11	91.83	0.006	0.31	0.33	5.94	5.42	1.83	35.43	0.000
70	91.83	91.56	0.057	1.69	2.82	4.22	2.51	17.29	27.98	0.000
75*	92.58	91.56	0.059	0.57	0.91	8.00	4.31	5.97	33.11	0.000
80	91.56	91.49	0.096	1.97	2.90	4.56	3.20	22.40	30.01	0.000
90	91.49	91.03	0.099	2.06	3.00	4.38	3.21	22.71	27.93	0.000
100	91.03	90.80	0.110	2.16	3.00	4.41	3.39	23.96	28.14	0.000
110*	92.69	90.80	0.003	0.19	0.30	4.84	2.49	0.62	18.47	0.000
120	90.80	90.50	0.112	1.92	3.00	5.05	3.42	24.16	32.44	0.000

END

* Super critical flow.

NORMAL TERMINATION OF WINSTORM.

NOTES:

1. CALCULATIONS COMPILED BY TXDOT "WINSTORM V.3.05" COMPUTER PROGRAM.
2. SEWER CALCULATIONS BASED ON MANNING FORMULAS. JUNCTION LOSS WAS NOT TAKEN INTO ACCOUNT.
3. MAINLANE INLETS WERE ANALYSED BY MANUALLY ADDING THE 10 YEAR STORM FREQUENCY (SUPPLY Q)
4. Q BYPASS CONSIDERED ACCEPTABLE DUE TO THE CARRYOVER AMOUNT BEING MINIMAL (LESS THAN 1.0 CFS.) AND THE PONDING WIDTH BEING CONSIDERABLY LESS THAN ALLOWABLE THE CARRYOVER WOULD NOT SIGNIFICANTLY ICREASE THE PONDING WIDTH.

STATE OF TEXAS
RAMIRO GUTIERREZ
65948
REGISTERED PROFESSIONAL ENGINEER

THE SEAL APPEARING ON THIS DOCUMENT WAS AUTHORIZED BY RAMIRO GUTIERREZ, P.E. 65948
DATE: 8-19-03
ALTERATION OF A SEALED DOCUMENT WITHOUT PROPER NOTIFICATION TO THE RESPONSIBLE ENGINEER IS AN OFFENSE UNDER THE TEXAS ENGINEERING PRATICE LAW.

PB Parsons Brinckerhoff Quade & Douglas Inc.

R. Gutierrez Engineering Corporation

Texas Department of Transportation

© 2003 by TxDOT

US 281 EXPRESSWAY HYDRAULIC DATA SHEET

DESIGNED:	FED. RD DIV. No.	STATE	FEDERAL AID PROJECT No.		HIGHWAY No.	
CHECKED:	6	TEXAS			US 281	
DRAWN:	STATE DISTRICT	COUNTY	CONTROL No.	SECTION No.	JOB No.	SHEET No.
CHECKED:	21	HIDALGO	0255	08	091	532

TRUNK LINE "J"

Runoff Computation for Design Frequency.

ID	C Value	Area (acre)	Tc (min)	Tc Used (min)	Intensity (in/hr)	Supply Q (cfs)	Total Q (cfs)
G-1	0.3	3.14	67.08	67.08	2.55	0.000	2.402
G-2	0.55	1.08	63.96	63.96	2.64	0.000	1.566
G-3	0.29	5.33	75.14	75.14	2.35	0.000	3.639
G-32	0.32	6.31	54.17	54.17	2.96	0.000	5.967
G-33	0.57	1.77	71.98	71.98	2.43	0.000	2.449
G-34	0.9	0.22	10.97	10.97	7.34	0.000	1.454
G-39	0.9	0.73	47.20	10.00	0.00	5.090	5.090
G-4	0.63	1.96	84.25	84.25	2.17	0.000	2.680
G-40	0.58	1.46	61.39	61.39	2.71	0.000	2.297
G-41	0.52	0.33	39.59	39.59	3.64	0.000	0.624
G-42	0.43	0.71	52.57	52.57	3.02	0.000	0.921
G-43	0.42	0.72	52.57	52.57	3.02	0.000	0.912
G-5	0.69	0.58	17.66	17.66	5.85	0.000	2.340
G-6	0.9	0.20	20.00	20.00	5.47	0.000	0.985
G-7	0.65	1.62	102.92	102.92	1.88	0.000	1.977
G-8	0.72	0.46	15.11	15.11	6.33	0.000	2.096

On Grade Inlet Configuration Data

Inlet ID	Inlet Type	Inlet Length (ft)	Slopes Long (%)	Slopes Trans (%)	Gutter n	Gutter Depr. (ft)	Grate Width (ft)	Grate Type	Pond Width Allowed (ft)	Critic Elev. (ft)
G-1	Curb	10.00	0.29	2.50	0.012	0.40	n/a	n/a	14.00	98.40
G-2	Grate	7.00	0.21	16.60	0.012	n/a	4.00	Parall	14.00	98.85
G-34	Curb	5.00	0.15	2.00	0.012	0.40	n/a	n/a	20.00	98.93
G-39	Grate	7.00	2.25	2.50	0.012	n/a	7.00	Parall	10.00	111.63
G-41	Grate	7.00	0.40	2.00	0.012	n/a	7.00	Parall	14.00	97.60
G-42	Grate	7.00	0.43	2.00	0.012	n/a	7.00	Parall	14.00	98.64
G-43	Grate	7.00	0.43	2.00	0.012	n/a	7.00	Parall	14.00	98.64
G-5	Curb	5.00	0.15	2.50	0.012	0.40	n/a	n/a	14.00	98.37
G-6	Grate	7.00	0.26	2.50	0.012	n/a	7.00	Parall	20.00	99.43
G-7	Grate	7.00	0.18	16.60	0.012	n/a	4.00	Parall	14.00	99.33
G-8	Curb	5.00	0.20	2.50	0.012	0.40	n/a	n/a	14.00	98.29

On Grade Inlets Conmputation Data.

Inlet ID	Inlet Type	Total Q (cfs)	Intercept Capacity (cfs)	Q Bypass Allow (cfs)	Q Bypass Actual (cfs)	To Inlet ID	Required Length (ft)	Actual Length (ft)	Ponded Width (ft)
G-1	Curb	2.402	2.402	0.000	0.000		5.72	10.00	9.88
G-2	Grate	1.566	1.566	0.000	0.000		n/a	0.00	2.74
G-34	Curb	1.454	1.454	0.000	0.000		3.84	5.00	10.65
G-39	Grate	5.090	5.044	0.990	0.046		n/a	0.00	8.88
G-41	Grate	0.624	0.624	0.000	0.000		n/a	0.00	6.45
G-42	Grate	0.921	0.921	0.000	0.000		n/a	0.00	7.35
G-43	Grate	0.912	0.912	0.000	0.000		n/a	0.00	7.30
G-5	Curb	2.340	2.340	0.000	0.000		4.87	5.00	11.04
G-6	Grate	0.985	0.985	0.000	0.000		n/a	0.00	7.20
G-7	Grate	1.977	1.977	0.000	0.000		n/a	0.00	3.08
G-8	Curb	2.096	2.096	0.000	0.000		4.87	5.00	10.04

Sag Inlets Configuration Data.

Inlet ID	Inlet Type	Length/ Perim. (ft)	Grate Area (sf)	Left-Slope Long (%)	Left-Slope Trans (%)	Right-Slope Long (%)	Right-Slope Trans (%)	Gutter n	Gutter DeprW (ft)	Depth Allowed (ft)	Critic Elev. (ft)
G-3	Curb	5.00		0.29	2.50	0.15	2.50	0.012	0.40	1.00	97.56
G-32	Curb	10.00		0.15	2.50	0.46	2.50	0.012	0.40	0.50	97.55
G-33	Grate	22.00	28.00	1.4816.66		0.45	16.66	0.014	n/a	1.00	99.14
G-4	Grate	22.00	28.00	0.2116.60		0.26	16.60	0.012	n/a	1.00	99.25
G-40	Grate	22.00	28.00	0.2516.60		0.40	16.60	0.012	n/a	0.50	98.60

TRUNK LINE "J" CONTINUED

Sag Inlets Computation Data.

Inlet ID	Inlet Type	Length (ft)	Grate Perim (ft)	Grate Area (sf)	Total Q (cfs)	Inlet Capacity (cfs)	Total Head (ft)	Ponded Width Left (ft)	Ponded Width Right (ft)
G-3	Curb	5.00	n/a	n/a	3.639	13.156	0.425	8.88	10.04
G-32	Curb	10.00	n/a	n/a	5.967	8.717	0.388	12.12	9.80
G-33	Grate	n/a	22.00	28.00	2.449	67.914	0.109	1.72	2.16
G-4	Grate	n/a	22.00	28.00	2.680	67.914	0.116	2.57	2.47
G-40	Grate	n/a	22.00	28.00	2.297	24.011	0.105	2.35	2.15

Cumulative Junction Discharge Computations

Node I.D.	Node Type	Weighted C-Value	Cumulat. Dr.Area (acres)	Cumulat. Tc (min)	Intens. (in/hr)	User Supply Q cfs)	Additional Q in Node (cfs)	Total Disch. (cfs)
G-1	Curb	0.300	3.14	67.08	2.55	0.000	0.00	2.402
G-2	Grate	0.437	14.37	109.79	1.79	5.090	0.00	16.338
G-3	Curb	0.290	5.33	75.14	2.35	0.000	0.00	3.639
G-32	Curb	0.320	6.31	54.17	2.96	0.000	0.00	5.967
G-33	Grate	0.415	23.88	113.66	1.75	5.090	0.00	22.403
G-34	Curb	0.420	24.10	113.98	1.74	5.090	0.00	22.712
G-39	Grate	0.000	0.00	0.00	0.00	5.090	0.00	5.090
G-4	Grate	0.467	10.15	108.53	1.81	5.090	0.00	13.660
G-40	Grate	0.429	25.56	115.81	1.72	5.090	0.00	23.965
G-41	Grate	0.520	0.33	39.59	3.64	0.000	0.00	0.624
G-42	Grate	0.430	0.71	52.57	3.02	0.000	0.00	0.921
G-43	Grate	0.425	1.43	52.74	3.01	0.000	0.00	1.829
G-5	Curb	0.690	0.58	17.66	5.85	0.000	0.00	2.340
G-6	Grate	0.687	2.86	107.05	1.82	5.090	0.00	8.674
G-7	Grate	0.665	2.08	102.92	1.88	5.090	0.00	7.689
G-8	Curb	0.720	0.46	15.11	6.33	0.000	0.00	2.096
JG6	JunMh	0.436	15.80	111.42	1.77	5.090	0.00	17.293
JG7	JunMh	0.430	25.89	116.61	1.71	5.090	0.00	24.163
JG8	JunMh	0.665	2.08	102.92	1.88	5.090	0.00	7.689
OG	Outlt	0.430	25.89	116.61	1.71	5.090	0.00	24.163

Conveyance Configuration Data

Run#	Node I.D. US	Node I.D. DS	Flowline Elev. US (ft)	Flowline Elev. DS (ft)	Shape #	Span (ft)	Rise (ft)	Length (ft)	Slope (%)	n value
5	G-39	G-7	94.40	94.30	Circ 1	0.00	1.50	37.00	0.27	0.012
7	G-8	G-7	93.50	93.33	Circ 1	0.00	1.50	52.00	0.33	0.012
10	G-7	JG8	92.33	91.76	Circ 1	0.00	2.00	377.00	0.15	0.012
30	JG8	G-6	91.76	91.09	Circ 1	0.00	2.00	450.00	0.15	0.012
35	G-5	G-6	94.50	92.50	Circ 1	0.00	1.50	44.00	4.55	0.012
40	G-6	G-4	91.09	90.63	Circ 1	0.00	2.00	305.00	0.15	0.012
45	G-3	G-4	93.50	91.50	Circ 1	0.00	1.50	62.00	3.23	0.012
50	G-4	G-2	90.63	90.17	Circ 1	0.00	2.50	303.00	0.15	0.012
55	G-1	G-2	94.50	92.50	Circ 1	0.00	1.50	52.00	3.85	0.012
60	G-2	JG6	90.17	89.59	Circ 1	0.00	2.50	389.00	0.15	0.012
64	G-42	G-43	95.50	95.30	Circ 1	0.00	1.50	33.00	0.61	0.012
68	G-43	JG6	94.80	91.50	Circ 1	0.00	2.00	158.00	2.09	0.012
70	JG6	G-33	89.59	88.74	Circ 1	0.00	3.00	567.00	0.15	0.012
75	G-32	G-33	92.00	90.65	Circ 1	0.00	2.00	74.00	1.82	0.012
80	G-33	G-34	88.74	88.59	Circ 1	0.00	3.00	87.00	0.17	0.012
90	G-34	G-40	88.59	87.87	Circ 1	0.00	3.00	482.00	0.15	0.012
100	G-40	JG7	87.87	87.55	Circ 1	0.00	3.00	211.00	0.15	0.012
110	G-41	JG7	92.50	90.50	Circ 1	0.00	1.50	76.00	2.63	0.012
120	JG7	OG	87.55	87.01	Circ 1	0.00	3.00	268.00	0.20	0.012

Conveyance Hydraulic Computations. Tailwater = 90.500 (ft)

Run#	Hydraulic Gradeline US Elev (ft)	Hydraulic Gradeline DS Elev (ft)	Fr.Slope (%)	Depth Unif. (ft)	Depth Actual (ft)	Velocity Unif. (ft/s)	Velocity Actual (ft/s)	Q (cfs)	Cap (cfs)	Junc Loss (ft)
5	95.48	95.17	0.200	1.08	1.08	3.74	3.74	5.09	5.92	0.000
7	94.09	93.88	0.034	0.59	0.59	3.28	3.28	2.10	6.51	0.000
10	93.72	93.24	0.098	1.38	1.48	3.34	3.08	7.69	9.53	0.000
30	93.24	92.80	0.098	1.38	1.71	3.34	2.69	7.69	9.46	0.000
35*	94.82	92.81	0.042	0.31	0.31	8.71	8.71	2.34	24.28	0.000
40	92.80	92.47	0.125	1.50	1.84	3.43	2.87	8.67	9.52	0.000
45*	93.94	92.47	0.102	0.43	0.97	8.74	3.01	3.64	20.45	0.000
50	92.47	92.17	0.094	1.64	2.00	4.00	3.24	13.66	17.32	0.000
55*	94.83	92.83	0.045	0.33	0.33	8.27	8.27	2.40	22.33	0.000
60	92.17	91.65	0.135	1.95	2.06	3.97	3.78	16.34	17.16	0.000
64*	95.83	95.63	0.007	0.33	0.33	3.24	3.24	0.92	8.86	0.000
68*	95.11	91.81	0.006	0.31	0.31	5.94	5.94	1.83	35.43	0.000
70	91.65	91.34	0.057	1.69	2.60	4.22	2.66	17.29	27.98	0.000
75*	92.58	91.34	0.059	0.57	0.69	8.00	6.25	5.97	33.11	0.000
80	91.34	91.27	0.096	1.97	2.68	4.56	3.36	22.40	30.01	0.000
90	91.27	91.03	0.099	2.06	3.00	4.38	3.21	22.71	27.93	0.000
100	91.03	90.80	0.110	2.16	3.00	4.41	3.39	23.96	28.14	0.000
110*	92.69	90.80	0.003	0.19	0.30	4.84	2.49	0.62	18.47	0.000
120	90.80	90.50	0.112	1.92	3.00	5.05	3.42	24.16	32.44	0.000

END

* Super critical flow.

NORMAL TERMINATION OF WINSTORM.

REVISED
9-26-03

NOTES:

1. CALCULATIONS COMPILED BY TXDOT "WINSTORM V.3.05" COMPUTER PROGRAM.
2. SEWER CALCULATIONS BASED ON MANNING FORMULAS. JUNCTION LOSS WAS NOT TAKEN INTO ACCOUNT.
3. MAINLANE INLETS WERE ANALYSED BY MANUALLY ADDING THE 10 YEAR STORM FREQUENCY (SUPPLY Q)
4. Q BYPASS CONSIDERED ACCEPTABLE DUE TO THE CARRYOVER AMOUNT BEING MINIMAL (LESS THAN 1.0 CFS.) AND THE PONDING WIDTH BEING CONSIDERABLY LESS THAN ALLOWABLE THE CARRYOVER WOULD NOT SIGNIFICANTLY ICREASE THE PONDING WIDTH.

STATE OF TEXAS
RAMIRO GUTIERREZ
65948
REGISTERED PROFESSIONAL ENGINEER

THE SEAL APPEARING ON THIS DOCUMENT WAS AUTHORIZED BY RAMIRO GUTIERREZ, P.E. 65948
DATE: 9-17-03
ALTERATION OF A SEALED DOCUMENT WITHOUT PROPER NOTIFICATION TO THE RESPONSIBLE ENGINEER IS AN OFFENSE UNDER THE TEXAS ENGINEERING PRATICE LAW.

Parsons Brinckerhoff Quade & Douglas Inc.

R. Gutierrez Engineering Corporation

Texas Department of Transportation

© 2003 by TxDOT

US 281 EXPRESSWAY HYDRAULIC DATA SHEET

DESIGNED:	FED. RD DIV. No.	STATE	FEDERAL AID PROJECT No.		HIGHWAY No.	
CHECKED:	6	TEXAS			US 281	
DRAWN:	STATE DISTRICT	COUNTY	CONTROL No.	SECTION No.	JOB No.	SHEET No.
CHECKED:	21	HIDALGO	0255	08	091	532

TRUNK LINE "I"

Runoff Computation for Design Frequency.

ID	C Value	Area (acre)	Tc (min)	Tc Used (min)	Intensity (in/hr)	Supply Q (cfs)	Total Q (cfs)
H-35	0.8	0.10	10.00	10.00	7.64	0.000	0.611
I-1	0.75	0.41	21.71	21.71	5.23	0.000	1.608
I-10	0.8	0.15	10.00	10.00	7.64	0.000	0.916
I-11	0.5	3.84	30.53	30.53	4.28	0.000	8.224
I-12	0.55	1.90	53.32	53.32	2.99	0.000	3.122
I-13	0.53	1.03	63.46	63.46	2.65	0.000	1.447
I-14	0.42	3.11	67.78	67.78	2.53	0.000	3.307
I-15	0.29	2.58	62.64	62.64	2.67	0.000	2.001
I-16	0.53	0.87	45.68	45.68	3.31	0.000	1.528
I-17	0.66	4.55	31.89	31.89	4.17	0.000	12.523
I-18	0.61	1.61	62.39	62.39	2.68	0.000	2.634
I-19	0.8	0.28	10.00	10.00	7.64	0.000	1.710
I-2	0.2	1.42	73.61	73.61	2.39	0.000	0.678
I-20	0.8	0.31	25.00	25.00	4.83	0.000	1.197
I-21	0.8	0.31	10.00	10.00	0.00	2.160	2.160
I-22	0.8	0.28	10.00	10.00	7.64	0.000	1.710
I-23	0.8	0.59	12.50	45.00	0.00	4.052	4.052
I-24	0.8	0.53	13.00	38.17	0.00	3.632	3.632
I-25	0.2	1.78	38.17	38.17	3.72	0.000	1.326
I-26	0.65	3.07	27.97	27.97	4.52	0.000	9.012
I-27	0.343	1.51	39.67	39.67	3.63	0.000	1.882
I-28	0.8	0.36	48.93	48.93	3.17	0.000	0.912
I-29	0.62	1.72	27.50	27.50	4.56	0.000	4.865
I-3	0.42	1.25	34.34	34.34	3.98	0.000	2.091
I-30	0.62	1.72	27.50	27.50	4.56	0.000	4.865
I-31	0.64	1.27	21.60	21.60	5.24	0.000	4.263
I-32	0.2	1.12	36.50	36.50	3.83	0.000	0.858
I-35	0.8	0.27	14.60	14.60	6.44	0.000	1.390
I-36	0.8	0.32	10.00	10.00	7.64	0.000	1.955
I-4	0.2	0.79	48.75	48.75	3.17	0.000	0.501
I-5	0.75	0.66	30.91	30.91	4.25	0.000	2.104
I-6	0.2	1.01	34.42	34.42	3.98	0.000	0.803
I-7	0.56	1.12	61.93	61.93	2.70	0.000	1.691
I-8	0.74	0.46	27.63	27.63	4.55	0.000	1.549
I-9	0.75	0.37	18.60	18.60	5.69	0.000	1.579
JK1	0.8	0.25	10.00	10.00	7.64	0.000	1.527
K-1	0.71	1.35	12.29	12.29	6.98	0.000	6.692
K-2	0.71	1.46	14.40	14.40	6.48	0.000	6.718
K-3	0.7	1.26	14.05	14.05	6.56	0.000	5.784
K-4	0.57	3.16	82.55	82.55	2.20	0.000	3.966
K-5	0.76	1.81	21.46	21.46	5.26	0.000	7.240
K-6	0.61	1.67	101.25	101.25	1.90	0.000	1.936
K-7	0.65	2.35	26.40	26.40	4.67	0.000	7.140
K-8	0.8	0.25	10.00	10.00	7.64	0.000	1.527

On Grade Inlet Configuration Data

Inlet ID	Inlet Type	Inlet Length (ft)	Slopes Long (%)	Slopes Trans (%)	Gutter n	Gutter Depr. (ft)	Grate Width (ft)	Grate Type	Pond Width Allowed (ft)	Critic Elev. (ft)
I-27	Grate	7.00	0.54	2.00	0.012	n/a	7.00	Parall	14.00	105.40
I-28	Grate	3.00	0.25	2.00	0.012	n/a	3.00	Parall	12.00	104.52
I-29	Curb	15.00	0.22	2.00	0.012	0.25	n/a	n/a	13.00	107.07
I-3	Curb	5.00	0.15	3.50	0.012	0.40	n/a	n/a	14.00	104.21
I-30	Curb	15.00	0.22	2.00	0.012	0.25	n/a	n/a	13.00	107.07
I-31	Curb	15.00	0.16	25.00	0.012	0.33	n/a	n/a	36.00	105.51
I-32	Grate	7.00	0.54	2.00	0.012	n/a	7.00	Parall	14.00	106.61
I-35	Curb	5.00	0.21	2.00	0.012	0.33	n/a	n/a	12.00	105.95
I-36	Curb	10.00	0.90	2.00	0.012	0.33	n/a	n/a	12.00	105.02
I-4	Grate	7.00	0.24	2.50	0.012	n/a	7.00	Parall	14.00	102.58
I-7	Grate	7.00	0.23	16.60	0.012	n/a	4.00	Parall	14.00	103.18
I-8	Curb	5.00	0.21	2.50	0.012	0.40	n/a	n/a	14.00	104.13
I-9	Curb	5.00	0.21	2.50	0.012	0.40	n/a	n/a	14.00	104.37
H-35	Grate	1.50	0.49	2.00	0.012	n/a	3.80	Parall	12.00	151.28
I-1	Curb	10.00	1.00	3.50	0.012	0.40	n/a	n/a	14.00	104.28
I-10	Curb	10.00	3.10	3.50	0.012	0.40	n/a	n/a	20.00	106.05
I-13	Grate	7.00	0.29	2.50	0.012	n/a	7.00	Parall	14.00	103.20
I-14	Curb	10.00	0.15	2.50	0.012	0.40	n/a	n/a	14.00	103.85
I-15	Curb	5.00	0.21	2.50	0.012	0.40	n/a	n/a	14.00	103.74
I-16	Grate	7.00	0.23	16.60	0.012	n/a	4.00	Parall	14.00	103.08
I-2	Grate	7.00	0.16	16.66	0.012	n/a	4.00	Parall	14.00	103.27
I-23	Grate	7.00	2.59	4.60	0.012	n/a	7.00	Parall	10.00	128.54
I-24	Grate	7.00	2.59	4.60	0.012	n/a	7.00	Parall	10.00	122.46
JK1	Curb	5.00	0.50	2.00	0.014	0.33	n/a	n/a	12.00	105.63
K-1	Curb	15.00	0.36	2.00	0.012	0.40	n/a	n/a	22.00	103.77
K-2	Curb	15.00	0.36	2.00	0.012	0.40	n/a	n/a	22.00	103.48
K-3	Curb	10.00	0.16	2.00	0.012	0.40	n/a	n/a	22.00	104.53
K-6	Grate	4.00	0.13	16.60	0.012	n/a	4.00	Parall	14.00	104.41
K-7	Curb	10.00	0.08	2.00	0.012	0.40	n/a	n/a	22.00	104.47
K-8	Curb	5.00	0.50	2.00	0.012	0.33	n/a	n/a	12.00	105.63

TRUNK LINE "I"- CONTINUED

On Grade Inlets Conmputation Data.

Inlet ID	Inlet Type	Total Q (cfs)	Intercept Capacity (cfs)	Q Bypass Allow (cfs)	Q Bypass Actual (cfs)	To Inlet ID	Required Length (ft)	Actual Length (ft)	Ponded Width (ft)
I-27	Grate	1.882	1.871	0.990	0.011		n/a	0.00	9.20
I-28	Grate	0.912	0.774	0.990	0.138		n/a	0.00	8.15
I-29	Curb	4.865	4.865	0.000	0.000		11.60	15.00	15.65
I-3	Curb	2.091	2.091	0.000	0.000		4.27	5.00	8.57
I-30	Curb	4.865	4.865	0.000	0.000		11.60	15.00	15.65
I-31	Curb	4.263	4.263	0.000	0.000		3.26	15.00	3.26
I-32	Grate	0.858	0.858	0.000	0.000		n/a	0.00	6.85
I-35	Curb	1.390	1.390	0.000	0.000		3.79	5.00	9.85
I-36	Curb	1.955	1.955	0.000	0.000		6.05	10.00	8.55
I-4	Grate	0.501	0.501	0.000	0.000		n/a	0.00	5.68
I-7	Grate	1.691	1.691	0.000	0.000		n/a	0.00	2.77
I-8	Curb	1.549	1.549	0.000	0.000		4.14	5.00	8.88
I-9	Curb	1.579	1.579	0.000	0.000		4.19	5.00	8.96
H-35	Grate	0.611	0.569	0.990	0.042		n/a	0.00	6.20
I-1	Curb	1.608	1.608	0.000	0.000		5.88	10.00	5.46
I-10	Curb	0.916	0.916	0.000	0.000		6.10	10.00	3.57
I-13	Grate	1.447	1.446	0.990	0.001		n/a	0.00	8.16
I-14	Curb	3.307	3.307	0.000	0.000		5.98	10.00	12.56
I-15	Curb	2.001	2.001	0.000	0.000		4.80	5.00	9.80
I-16	Grate	1.528	1.528	0.000	0.000		n/a	0.00	2.66
I-2	Grate	0.678	0.678	0.000	0.000		n/a	0.00	2.10
I-23	Grate	4.052	4.052	0.000	0.000		n/a	0.00	5.43
I-24	Grate	3.632	3.632	0.000	0.000		n/a	0.00	5.22
JK1	Curb	1.527	1.506	0.990	0.021	None	5.51	5.00	9.15
K-1	Curb	6.692	6.692	0.000	0.000		11.25	15.00	16.00
K-2	Curb	6.718	6.718	0.000	0.000		11.27	15.00	16.00
K-3	Curb	5.784	5.784	0.000	0.000		8.93	10.00	17.60
K-6	Grate	1.936	1.936	0.000	0.000		n/a	0.00	3.23
K-7	Curb	7.140	7.140	0.000	0.000		9.22	10.00	21.70
K-8	Curb	1.527	1.527	0.000	0.000		4.63	5.00	8.70

Sag Inlets Configuration Data.

Inlet ID	Inlet Type	Length/ Perim. (ft)	Grate Area (sf)	Left-Slope Long (%)	Left-Slope Trans (%)	Right-Slope Long (%)	Right-Slope Trans (%)	Gutter n	Gutter DeprW (ft)	Depth Allowed (ft)	Critic Elev. (ft)
I-25	Grate	12.00	9.00	0.7716.60		0.80	16.60	0.012	n/a	0.50	103.00
I-26	Curb	15.00	n/a	0.7716.60		0.80	16.60	0.012	0.40	0.50	103.69
I-5	Curb	5.00	n/a	0.15	2.43	0.21	2.43	0.012	0.40	0.50	103.29
I-6	Grate	22.00	28.00	0.1616.60		0.32	16.60	0.012	n/a	1.00	102.58
I-11	Curb	15.00	n/a	0.22	2.50	0.15	2.50	0.012	0.40	0.50	103.30
I-12	Grate	22.00	28.00	0.4016.60		0.14	16.60	0.012	n/a	1.00	102.65
I-17	Curb	20.00	n/a	0.21	2.50	0.29	2.50	0.012	0.40	0.50	103.14
I-18	Grate	22.00	28.00	0.2316.60		0.42	16.60	0.012	n/a	1.00	103.05
I-19	Curb	5.00	n/a	0.7716.60		0.80	16.60	0.012	0.40	0.50	104.78
I-20	Curb	5.00	n/a	0.15	2.00	0.15	2.00	0.012	0.33	0.50	104.66
I-21	Curb	5.00	n/a	0.7716.60		0.80	16.60	0.012	0.40	0.50	105.02
I-22	Curb	5.00	n/a	0.7716.60		0.80	16.60	0.012	0.40	0.50	104.62
K-4	Grate	16.00	16.00	0.1316.60		0.42	16.60	0.012	n/a	0.50	103.06
K-5	Curb	15.00	n/a	0.06	2.00	0.07	2.00	0.012	0.40	0.50	104.24

Sag Inlets Computation Data.

Inlet ID	Inlet Type	Length (ft)	Grate Perim (ft)	Grate Area (sf)	Total Q (cfs)	Inlet Capacity (cfs)	Total Head (ft)	Ponded Width Left (ft)	Ponded Width Right (ft)
I-25	Grate	n/a	12.00	9.00	1.326	12.966	0.109	1.55	1.54
I-26	Curb	15.00	n/a	n/a	9.012	12.783	0.396	3.18	3.15
I-5	Curb	5.00	n/a	n/a	2.104	4.651	0.295	8.35	7.82
I-6	Grate	n/a	22.00	28.00	0.803	67.235	0.052	1.72	1.51
I-11	Curb	15.00	n/a	n/a	8.224	12.783	0.373	12.72	13.64
I-12	Grate	n/a	22.00	28.00	3.122	67.235	0.128	2.43	2.94
I-17	Curb	20.00	n/a	n/a	12.523	16.849	0.410	15.00	14.12
I-18	Grate	n/a	22.00	28.00	2.634	67.235	0.115	2.52	2.25
I-19	Curb	5.00	n/a	n/a	1.710	4.651	0.257	1.70	1.69
I-20	Curb	5.00	n/a	n/a	1.197	4.549	0.205	7.65	7.65
I-21	Curb	5.00	n/a	n/a	2.160	4.651	0.300	1.86	1.85
I-22	Curb	5.00	n/a	n/a	1.710	4.651	0.257	1.70	1.69
K-4	Grate	n/a	16.00	16.00	3.966	17.288	0.186	3.27	2.62
K-5	Curb	15.00	n/a	n/a	7.240	12.783	0.342	17.75	17.25

NOTES:

1. CALCULATIONS COMPILED BY TXDOT "WINSTORM V.3.05" COMPUTER PROGRAM.
2. SEWER CALCULATIONS BASED ON MANNING FORMULAS. JUNCTION LOSS WAS NOT TAKEN INTO ACCOUNT.
3. MAINLANE INLETS WERE ANALYSED BY MANUALLY ADDING THE 10 YEAR STORM FREQUENCY (SUPPLY Q)
4. Q BYPASS CONSIDERED ACCEPTABLE DUE TO THE CARRYOVER AMOUNT BEING MINIMAL (LESS THAN 1.0 CFS.) AND THE PONDING WIDTH BEING CONSIDERABLY LESS THAN ALLOWABLE THE CARRYOVER WOULD NOT SIGNIFICANTLY ICREASE THE PONDING WIDTH.

TRUNK LINE "I"- CONTINUED

Cumulative Junction Discharge Computations

Node I.D.	Node Type	Weighted C-Value	Cumulat. Dr.Area (acres)	Cumulat. Tc (min)	Intens. (in/hr)	User Supply Q cfs)	Additional Q in Node (cfs)	Total Disch. (cfs)
I-25	Grate	0.484	7.61	39.46	3.65	0.000	0.00	13.432
I-26	Curb	0.650	3.07	27.97	4.52	0.000	0.00	9.012
I-27	Grate	0.343	1.51	39.67	3.63	0.000	0.00	1.882
I-28	Grate	0.431	1.87	48.93	3.17	0.000	0.00	2.551
I-29	Curb	0.620	3.44	27.67	4.55	0.000	0.00	9.695
I-3	Curb	0.000	0.00	0.00	0.00	0.000	0.00	0.000
I-30	Curb	0.620	1.72	27.50	4.56	0.000	0.00	4.865
I-31	Curb	0.640	1.27	21.60	5.24	0.000	0.00	4.263
I-32	Grate	0.249	1.22	36.50	3.83	0.000	0.00	1.165
I-35	Curb	0.349	1.49	36.61	3.82	0.000	0.00	1.989
I-36	Curb	0.800	0.60	10.30	7.54	2.160	0.00	5.780
I-4	Grate	0.000	0.00	0.00	0.00	0.000	0.00	0.000
I-5	Curb	0.750	0.66	30.91	4.25	0.000	0.00	2.104
I-6	Grate	0.537	14.01	42.01	3.50	2.160	0.00	28.507
I-7	Grate	0.545	15.59	42.01	3.50	9.844	0.00	39.578
I-8	Curb	0.740	0.46	27.63	4.55	0.000	0.00	1.549
I-9	Curb	0.750	0.37	18.60	5.69	0.000	0.00	1.579
IJ1	CircMh	0.000	0.00	0.00	0.00	0.000	0.00	0.000
IJ2	CircMh	0.521	27.86	42.01	3.50	9.844	0.00	60.656
IJ3	CircMh	0.545	15.59	42.01	3.50	9.844	0.00	39.578
C-8	CircMh	0.000	0.00	0.00	0.00	0.000	30.96	30.960
D-12	CircMh	0.000	0.00	0.00	0.00	0.000	49.14	49.140
H-35	Grate	0.800	0.10	10.00	7.64	0.000	0.00	0.611
I-1	Curb	0.750	0.41	21.71	5.23	0.000	0.00	1.608
I-10	Curb	0.552	16.11	42.01	3.50	9.844	0.00	40.970
I-11	Curb	0.500	3.84	30.53	4.28	0.000	0.00	8.224
I-12	Grate	0.543	21.85	42.01	3.50	9.844	0.00	51.350
I-13	Grate	0.527	25.99	42.01	3.50	9.844	0.00	57.834
I-14	Curb	0.420	3.11	67.78	2.53	0.000	0.00	3.307
I-15	Curb	0.290	2.58	62.64	2.67	0.000	0.00	2.001
I-16	Grate	0.502	31.31	42.01	3.50	9.844	0.00	64.889
I-17	Curb	0.660	4.55	31.89	4.17	0.000	0.00	12.523
I-18	Grate	0.526	37.47	42.01	3.50	9.844	0.00	78.841
I-19	Curb	0.800	0.28	10.00	7.64	0.000	0.00	1.710
I-2	Grate	0.000	0.00	0.00	0.00	0.000	0.00	0.000
I-20	Curb	0.667	13.87	17.38	5.90	0.000	0.00	54.527
I-21	Curb	0.000	0.00	0.00	0.00	2.160	0.00	2.160
I-22	Curb	0.800	0.28	10.00	7.64	0.000	0.00	1.710
I-23	Grate	0.000	0.00	0.00	0.00	4.052	0.00	4.052
I-24	Grate	0.000	0.00	0.00	0.00	3.632	0.00	3.632
IJ4	CircMh	0.564	51.34	42.01	3.50	9.844	0.00	111.218
IJ5	JnctBx	0.537	14.01	42.01	3.50	6.212	0.00	32.559
IJ6	CircMh	0.553	12.34	41.51	3.53	2.160	0.00	26.251
IJ7	JnctBx	0.547	11.93	40.94	3.56	2.160	0.00	25.374
IJ8	JnctBx	0.483	2.76	37.87	3.74	0.000	0.00	4.989
IJ9	CircMh	0.541	11.65	40.35	3.59	2.160	0.00	24.791
JK1	Curb	0.717	3.06	16.01	6.15	0.000	0.00	13.500
JK2	CircMh	0.717	4.57	17.38	5.90	0.000	0.00	19.322
JK3	JnctBx	0.664	13.56	17.38	5.90	0.000	0.00	53.065
K-1	Curb	0.710	1.35	12.29	6.98	0.000	0.00	6.692
K-2	Curb	0.710	2.81	14.40	6.48	0.000	0.00	12.930
K-3	Curb	0.700	1.26	14.05	6.56	0.000	0.00	5.784
K-4	Grate	0.677	9.54	17.38	5.90	0.000	0.00	38.052
K-5	Curb	0.760	1.81	21.46	5.26	0.000	0.00	7.240
K-6	Grate	0.664	13.56	17.38	5.90	0.000	0.00	53.065
K-7	Curb	0.650	2.35	26.40	4.67	0.000	0.00	7.140
K-8	Curb	0.724	3.31	16.34	6.09	0.000	0.00	14.575
O2	CircMh	0.564	51.34	42.01	3.50	9.844	80.10	191.318
OUT	Outlt	0.564	51.34	42.01	3.50	9.844	80.10	191.318

STATE OF TEXAS
RAMIRO GUTIERREZ
65948
REGISTERED PROFESSIONAL ENGINEER

THE SEAL APPEARING ON THIS DOCUMENT WAS AUTHORIZED BY RAMIRO GUTIERREZ, P.E. 65948
DATE: 8-19-03
ALTERATION OF A SEALED DOCUMENT WITHOUT PROPER NOTIFICATION TO THE RESPONSIBLE ENGINEER IS AN OFFENSE UNDER THE TEXAS ENGINEERING PRATICE LAW.

PB Parsons Brinckerhoff Quade & Douglas Inc.

R. Gutierrez Engineering Corporation

Texas Department of Transportation

© 2003 by TxDOT

US 281 EXPRESSWAY HYDRAULIC DATA SHEET

DESIGNED:	FED. RD DIV. No.	STATE	FEDERAL AID PROJECT No.		HIGHWAY No.	
CHECKED:	6	TEXAS			US 281	
DRAWN:	STATE DISTRICT	COUNTY	CONTROL No.	SECTION No.	JOB No.	SHEET No.
CHECKED:	21	HIDALGO	0255	08	091	533

TRUNK LINE "I"- CONTINUED

Conveyance Configuration Data

Run#	Node US	Node DS	I.D. US	I.D. DS	Flowline Elev. US (ft)	Flowline Elev. DS (ft)	Shape #	Span (ft)	Rise (ft)	Length (ft)	Slope (%)	n value
2	H-35	I-32			103.00	102.07	Circ 1	0.00	0.50	96.00	0.97	0.011
4	I-32	I-35			101.07	101.05	Circ 1	0.00	1.50	14.00	0.14	0.012
6	I-35	IJ8			101.05	100.77	Circ 1	0.00	1.50	184.00	0.15	0.012
8	I-31	IJ8			100.85	100.77	Circ 1	0.00	1.50	54.00	0.15	0.012
10	IJ8	I-25			100.27	99.83	Circ 1	0.00	2.00	292.00	0.15	0.012
12	I-26	I-25			99.85	99.83	Circ 1	0.00	2.00	12.00	0.17	0.012
14	I-25	IJ9			99.83	98.75	Circ 1	0.00	2.00	288.00	0.38	0.012
16	I-19	I-36			100.07	100.01	Circ 1	0.00	1.50	42.00	0.14	0.012
18	I-21	I-36			100.16	100.01	Circ 1	0.00	1.50	98.00	0.15	0.012
20	I-36	IJ9			99.51	99.40	Circ 1	0.00	2.00	74.00	0.15	0.012
22	I-30	I-29			99.45	99.40	Circ 1	0.00	2.00	31.00	0.16	0.012
24	I-29	IJ9			99.40	98.75	Circ 1	0.00	2.00	182.00	0.36	0.012
26	IJ9	IJ7			98.40	98.17	Circ 1	0.00	3.00	156.00	0.15	0.012
28	I-22	IJ7			99.78	99.67	Circ 1	0.00	1.50	74.00	0.15	0.012
30	IJ7	IJ6			98.17	97.91	Circ 1	0.00	3.00	160.00	0.16	0.012
32	I-1	IJ6			99.46	99.41	Circ 1	0.00	1.50	20.00	0.25	0.012
34	IJ6	I-6			97.91	97.74	Circ 1	0.00	3.00	126.00	0.13	0.012
36	I-5	I-6			99.32	99.24	Circ 1	0.00	1.50	49.00	0.16	0.012
38	I-6	IJ5			97.24	97.10	Circ 1	0.00	3.50	96.00	0.15	0.012
40	I-23	IJ5			99.29	99.12	Circ 1	0.00	1.50	110.00	0.15	0.012
42	IJ5	I-7			97.10	96.64	Circ 1	0.00	3.50	319.00	0.14	0.013
44	I-8	I-7			98.80	98.64	Circ 1	0.00	1.50	49.00	0.33	0.012
46	I-24	I-7			116.50	98.64	Circ 1	0.00	1.50	110.00	16.45	0.012
48	I-7	IJ3			96.64	96.36	Circ 1	0.00	3.50	184.00	0.15	0.012
50	IJ3	I-10			96.36	95.71	Circ 1	0.00	3.50	431.00	0.15	0.012
52	I-9	I-10			98.90	98.83	Circ 1	0.00	1.50	44.00	0.16	0.012
120	I-10	I-12			95.71	94.94	Circ 1	0.00	3.50	488.00	0.16	0.012
130	I-11	I-12			97.98	97.78	Circ 1	0.00	2.00	64.00	0.31	0.012
140	I-12	I-13			94.44	93.88	Circ 1	0.00	4.00	372.00	0.15	0.012
150	I-14	I-13			99.02	98.82	Circ 1	0.00	1.50	64.00	0.31	0.012
160	I-13	IJ2			93.88	93.35	Circ 1	0.00	4.00	378.00	0.14	0.012
162	I-27	I-28			99.50	99.48	Circ 1	0.00	1.50	25.00	0.08	0.012
163	I-28	IJ2			99.48	98.50	Circ 1	0.00	1.50	134.00	0.73	0.012
165	IJ2	I-16			92.85	92.40	Circ 1	0.00	4.50	300.00	0.15	0.012
170	I-15	I-16			98.00	97.80	Circ 1	0.00	2.00	64.00	0.31	0.012
180	I-16	I-18			92.40	91.99	Circ 1	0.00	4.50	276.00	0.15	0.012
190	I-17	I-18			95.50	95.20	Circ 1	0.00	2.00	82.00	0.37	0.012
220	I-18	IJ4			91.99	91.66	Circ 1	0.00	4.50	222.00	0.15	0.012
230	K-1	K-2			99.00	98.79	Circ 1	0.00	2.00	80.00	0.26	0.012
240	K-2	JK1			98.29	97.74	Circ 1	0.00	2.50	365.00	0.15	0.012
245	JK1	K-8			97.74	97.62	Circ 1	0.00	2.50	80.00	0.15	0.012
250	K-8	JK2			97.62	97.23	Circ 1	0.00	2.50	252.00	0.15	0.012
260	K-3	JK2			99.50	99.30	Circ 1	0.00	1.50	63.00	0.32	0.012
270	JK2	K-4			96.73	96.20	Circ 1	0.00	3.00	354.00	0.15	0.012
280	K-5	K-4			99.00	98.80	Circ 1	0.00	2.00	54.00	0.37	0.012
290	K-4	K-6			95.70	95.09	Circ 1	0.00	3.50	404.00	0.15	0.012
300	K-7	K-6			99.00	98.80	Circ 1	0.00	2.00	55.00	0.36	0.012
310	K-6	JK3			94.59	93.97	Circ 1	0.00	4.00	408.00	0.15	0.012
320	JK3	I-20			93.97	93.38	Circ 1	0.00	4.00	363.00	0.16	0.012
330	I-20	IJ4			93.38	93.32	Circ 1	0.00	4.00	42.00	0.14	0.012
340	IJ4	02			91.16	90.12	Circ 1	0.00	6.00	246.00	0.42	0.012
350	C-8	02			91.71	90.12	Circ 1	0.00	3.50	210.00	0.76	0.012
360	D-12	02			90.29	90.12	Circ 1	0.00	4.00	112.00	0.15	0.012
370	02	OUT			90.12	89.12	Box 1	7.00	7.00	1027.00	0.10	0.012

TRUNK LINE "I"- CONTINUED

Conveyance Hydraulic Computations. Tailwater = 97.300 (ft)

Run#	Hydraulic Gradeline US Elev (ft)	Hydraulic Gradeline DS Elev (ft)	Fr.Slope (%)	Depth Unif. (ft)	Depth Actual (ft)	Velocity Unif. (f/s)	Velocity Actual (f/s)	Q (cfs)	Cap (cfs)	Junc Loss (ft)
2*	103.95	103.14	0.848	0.38	0.50	3.79	3.11	0.61	0.65	0.000
4	103.14	103.14	0.010	0.54	1.50	2.04	0.66	1.17	4.30	0.000
6	103.14	103.08	0.031	0.70	1.50	2.45	1.13	1.99	4.44	0.000
8	103.16	103.08	0.140	1.22	1.50	2.77	2.41	4.26	4.38	0.000
10	103.08	102.96	0.041	1.03	2.00	3.05	1.59	4.99	9.51	0.000
12	102.98	102.96	0.135	1.50	2.00	3.57	2.87	9.01	10.01	0.000
14	102.96	102.10	0.300	1.47	2.00	5.43	4.28	13.43	15.01	0.000
16	102.15	102.14	0.023	0.66	1.50	2.30	0.97	1.71	4.30	0.000
18	102.17	102.14	0.036	0.75	1.50	2.44	1.22	2.16	4.45	0.000
20	102.14	102.10	0.056	1.13	2.00	3.18	1.84	5.78	9.45	0.000
22	102.39	102.38	0.039	1.00	2.00	3.10	1.55	4.87	9.84	0.000
24	102.38	102.10	0.156	1.19	2.00	4.99	3.09	9.70	14.65	0.000
26	102.10	101.91	0.118	2.25	3.00	4.36	3.51	24.79	27.75	0.000
28	101.93	101.91	0.023	0.66	1.50	2.30	0.97	1.71	4.39	0.000
30	101.91	101.72	0.123	2.16	3.00	4.67	3.59	25.37	29.13	0.000
32	101.72	101.72	0.020	0.55	1.50	2.73	0.91	1.61	5.69	0.000
34	101.72	101.55	0.132	2.44	3.00	4.27	3.71	26.25	26.54	0.000
36	101.57	101.55	0.034	0.70	1.50	2.59	1.19	2.10	4.60	0.000
38	101.55	101.49	0.068	2.13	3.50	4.64	2.96	28.51	41.63	0.000
40	101.63	101.49	0.127	1.13	1.50	2.85	2.29	4.05	4.47	0.000
42	101.49	101.15	0.105	2.52	3.50	4.40	3.38	32.56	38.21	0.000
44	101.16	101.15	0.019	0.50	1.50	3.02	0.88	1.55	6.50	0.000
46*	117.23	101.15	0.102	0.28	1.50	15.54	2.06	3.63	46.17	0.000
48	101.15	100.91	0.132	2.63	3.50	5.11	4.11	39.58	42.52	0.000
50	100.91	100.34	0.132	2.63	3.50	5.11	4.11	39.58	42.33	0.000
52	100.35	100.34	0.019	0.61	1.50	2.34	0.89	1.58	4.54	0.000
120	100.34	99.65	0.141	2.73	3.50	5.08	4.26	40.97	43.30	0.000
130	99.70	99.65	0.113	1.13	1.87	4.52	2.69	8.22	13.70	0.000
140	99.65	99.25	0.109	2.88	4.00	5.31	4.09	51.35	60.38	0.000
150	99.79	99.51	0.084	0.77	0.77	3.60	3.60	3.31	6.36	0.000
160	99.25	98.73	0.138	3.25	4.00	5.29	4.60	57.83	58.28	0.000
162	100.34	100.02	0.027	0.84	0.84	1.84	1.84	1.88	3.22	0.000
163*	100.00	99.02	0.050	0.52	0.52	4.63	4.63	2.55	9.73	0.000
165	98.73	98.49	0.081	2.81	4.50	5.80	3.81	60.66	82.52	0.000
170	98.53	98.49	0.007	0.52	0.69	3.12	2.10	2.00	13.70	0.000
180	98.49	98.23	0.093	3.09	4.50	5.57	4.08	64.89	82.12	0.000
190	98.45	98.23	0.261	1.41	2.00	5.31	3.99	12.52	14.83	0.000
220	98.23	97.93	0.137	3.66	4.50	5.70	4.96	78.84	82.15	0.000
230	100.24	100.18	0.075	1.03	1.39	4.10	2.88	6.69	12.56	0.000
240	100.18	99.89	0.085	1.64	2.15	3.79	2.88	12.93	17.25	0.000
245	99.89	99.83	0.092	1.64	2.21	3.95	2.94	13.50	17.21	0.000
250	99.83	99.61	0.108	1.72	2.38	4.05	3.02	14.58	17.48	0.000
260	100.63	100.23	0.258	1.13	1.13	4.07	4.07	5.78	6.41	0.000
270	99.61	99.37	0.071	1.88	3.00	4.16	2.73	19.32	27.96	0.000
280	99.98	99.76	0.087	0.98	0.98	4.70	4.70	7.24	14.92	0.000
290	99.37	98.87	0.122	2.63	3.50	4.92	3.96	38.05	42.36	0.000
300	99.98	99.75	0.085	0.98	0.98	4.64	4.64	7.14	14.78	0.000
310	98.87	98.40	0.116	2.88	4.00	5.49	4.22	53.06	60.67	0.000
320	98.40	97.98	0.116	2.88	4.00	5.49	4.22	53.06	62.74	0.000
330	97.98	97.93	0.123	3.00	4.00	5.39	4.34	54.53	58.82	0.000
340*	97.93	97.78	0.059	2.53	6.00	9.81	3.93	111.22	298.36	0.000
350*	97.95	97.78	0.081	1.38	3.50	8.77	3.22	30.96	94.85	0.000
360	97.90	97.78	0.100	2.75	4.00	5.33	3.91	49.14	60.63	0.000
370	97.78	97.30	0.047	4.38	7.00	6.25	3.90	191.32	274.96	0.000

END

* Super critical flow.

NORMAL TERMINATION OF WINSTORM.

NOTES:

1. CALCULATIONS COMPILED BY TXDOT "WINSTORM v.3.05" COMPUTER PROGRAM.
2. SEWER CALCULATIONS BASED ON MANNING FORMULAS. JUNCTION LOSS WAS NOT TAKEN INTO ACCOUNT.
3. MAINLANE INLETS WERE ANALYSED BY MANUALLY ADDING THE 10 YEAR STORM FREQUENCY (SUPPLY Q)

STATE OF TEXAS
RAMIRO GUTIERREZ
65948
REGISTERED PROFESSIONAL ENGINEER

THE SEAL APPEARING ON THIS DOCUMENT WAS AUTHORIZED BY RAMIRO GUTIERREZ, P.E. 65948
DATE: 8-19-03
ALTERATION OF A SEALED DOCUMENT WITHOUT PROPER NOTIFICATION TO THE RESPONSIBLE ENGINEER IS AN OFFENSE UNDER THE TEXAS ENGINEERING PRATICE LAW.

Parsons Brinckerhoff Quade & Douglas Inc.

R. Gutierrez Engineering Corporation

Texas Department of Transportation

© 2003 by TxDOT

US 281 EXPRESSWAY HYDRAULIC DATA SHEET

DESIGNED:	FED. RD DIV. No.	STATE	FEDERAL AID PROJECT No.		HIGHWAY No.	
CHECKED:	6	TEXAS			US 281	
DRAWN:	STATE DISTRICT	COUNTY	CONTROL No.	SECTION No.	JOB No.	SHEET No.
CHECKED:	21	HIDALGO	0255	08	091	534

TRUNK LINE "L"

Runoff Computation for Design Frequency.

ID	C Value	Area (acre)	To (min)	To Used (min)	Intensity (in/hr)	Supply Q (cfs)	Total Q (cfs)
L-10	0.67	1.15	17.93	17.93	5.80	0.000	4.470
L-11	0.65	1.04	14.23	14.23	6.52	0.000	4.406
L-12	0.63	0.42	10.00	10.00	7.64	0.000	2.020
L-13	0.66	2.78	19.44	19.44	5.56	0.000	10.195
L-14	0.65	1.75	19.09	19.09	5.61	0.000	6.383
L-16	0.66	3.64	18.70	18.70	5.67	0.000	13.630
L-17	0.64	1.42	16.15	16.15	6.12	0.000	5.564
L-18	0.67	1.16	19.72	19.72	5.51	0.000	4.285
L-19	0.66	1.28	17.82	17.82	5.82	0.000	4.916
L-20	0.64	1.33	15.58	15.58	6.23	0.000	5.307
L-21	0.73	0.60	10.00	10.00	7.64	0.000	3.345
L-25	0.9	0.10	10.00	10.00	7.64	0.000	0.687
L-26	0.57	1.05	21.33	21.33	5.28	0.000	3.161
L-28	0.9	0.16	10.00	10.00	7.64	0.000	1.100
L-29	0.59	3.02	16.00	16.00	6.15	0.000	10.961
L-7	0.62	3.57	22.28	22.28	5.15	0.000	11.408
L-8	0.58	3.18	26.37	26.37	4.68	0.000	8.626
L-9	0.67	1.75	15.08	15.08	6.34	0.000	7.429

On Grade Inlet Configuration Data

Inlet ID	Inlet Type	Inlet Length (ft)	Slopes Long (%)	Slopes Trans (%)	Gutter n	Gutter Depr. (ft)	Grate Width (ft)	Grate Type	Pond Width Allowed (ft)	Critic Elev. (ft)
L-10	Curb	10.00	0.08	2.00	0.012	0.40	n/a	n/a	22.00	104.46
L-11	Curb	10.00	0.16	2.00	0.012	0.40	n/a	n/a	22.00	104.47
L-12	Grate	7.00	0.09	16.60	0.012	n/a	4.00	Parall	14.00	104.52
L-14	Curb	10.00	0.09	2.00	0.012	0.40	n/a	n/a	22.00	104.41
L-18	Grate	7.00	0.13	16.60	0.012	n/a	7.00	Parall	14.00	104.21
L-19	Curb	10.00	0.04	2.00	0.012	0.40	n/a	n/a	22.00	104.27
L-20	Curb	10.00	0.04	2.00	0.012	0.40	n/a	n/a	24.00	104.30
L-26	Grate	7.00	0.08	16.60	0.012	n/a	7.00	Parall	22.00	104.71
L-28	Curb	5.00	0.15	2.00	0.012	0.40	n/a	n/a	14.00	106.16
L-9	Curb	10.00	0.08	2.00	0.012	0.40	n/a	n/a	23.00	105.07

On Grade Inlets Conmputation Data.

Inlet ID	Inlet Type	Total Q (cfs)	Intercept Capacity (cfs)	Q Bypass Allow (cfs)	Q Bypass Actual (cfs)	To Inlet ID	Required Length (ft)	Actual Length (ft)	Ponded Width (ft)
L-10	Curb	4.470	4.470	0.000	0.000		6.66	10.00	18.25
L-11	Curb	4.406	4.406	0.000	0.000		7.58	10.00	15.95
L-12	Grate	2.020	2.020	0.000	0.000		n/a	0.00	3.52
L-14	Curb	6.383	6.383	0.000	0.000		8.55	10.00	20.35
L-18	Grate	4.285	4.285	0.000	0.000		n/a	0.00	4.35
L-19	Curb	4.916	4.916	0.000	0.000		6.19	10.00	21.50
L-20	Curb	5.307	5.307	0.000	0.000		6.49	10.00	22.10
L-26	Grate	3.161	3.161	0.000	0.000		n/a	0.00	4.26
L-28	Curb	1.100	1.100	0.000	0.000		3.27	5.00	9.55
L-9	Curb	7.429	7.429	0.000	0.000		9.17	10.00	22.10

Sag Inlets Configuration Data.

Inlet ID	Inlet Type	Length/ Perim. (ft)	Grate Area (sf)	Left-Slope Long (%)	Left-Slope Trans (%)	Right-Slope Long (%)	Right-Slope Trans (%)	Gutter n	Gutter DeprW (ft)	Depth Allowed (ft)	Critic Elev. (ft)
L-13	Curb	15.00	n/a	0.15	2.00	0.09	2.00	0.012	0.40	0.50	104.90
L-16	Curb	20.00	n/a	0.13	2.00	0.04	2.00	0.012	0.40	0.50	104.90
L-17	Grate	22.00	28.00	0.13	16.60	0.04	16.60	0.012	n/a	1.00	104.06
L-21	Grate	22.00	28.00	0.50	16.60	0.50	16.60	0.012	n/a	1.00	106.00
L-29	Grate	22.00	28.00	0.36	16.60	0.09	16.60	0.012	n/a	0.50	103.98
L-7	Curb	20.00	n/a	0.02	2.00	0.04	2.00	0.012	0.40	0.50	104.70
L-8	Grate	22.00	28.00	0.08	16.60	0.42	16.60	0.012	n/a	1.00	104.32

Sag Inlets Computation Data.

Inlet ID	Inlet Type	Length (ft)	Grate Perim (ft)	Grate Area (sf)	Total Q (cfs)	Inlet Capacity (cfs)	Total Head (ft)	Ponded Width Left (ft)	Ponded Width Right (ft)
L-13	Curb	15.00	n/a	n/a	10.195	12.783	0.430	12.05	13.30
L-16	Curb	20.00	n/a	n/a	13.630	16.849	0.434	13.80	17.25
L-17	Grate	n/a	22.00	28.00	5.564	67.235	0.189	2.63	3.29
L-21	Grate	n/a	22.00	28.00	3.345	67.235	0.134	1.69	1.69
L-29	Grate	n/a	22.00	28.00	10.961	23.771	0.296	3.95	5.12
L-7	Curb	20.00	n/a	n/a	11.408	16.849	0.386	19.40	16.10
L-8	Grate	n/a	22.00	28.00	8.626	67.235	0.253	3.39	2.49

TRUNK LINE "L"- CONTINUED

Cumulative Junction Discharge Computations

Node I.D.	Node Type	Weighted C-Value	Cumulat. Dr.Area (acres)	Cumulat. To (min)	Intens. (in/hr)	User Supply Q cfs)	Additional Q In Node (cfs)	Total Disch. (cfs)
JL11	CircMh	0.626	19.45	30.11	4.32	0.000	0.00	52.591
JL13	CircMh	0.621	10.86	27.67	4.55	0.000	0.00	30.651
JL14	CircMh	0.623	17.70	29.14	4.41	0.000	0.00	48.627
JL15	CircMh	0.635	28.70	34.05	4.00	0.000	0.00	72.963
JL17	CircMh	0.632	24.93	32.50	4.12	0.000	0.00	64.918
JL19	CircMh	0.626	19.87	30.66	4.27	0.000	0.00	53.142
JL5	CircMh	0.000	0.00	0.00	0.00	0.000	0.00	0.000
JL6	CircMh	0.621	10.86	27.67	4.55	0.000	0.00	30.651
JL7	CircMh	0.637	29.30	34.75	3.95	0.000	0.00	73.768
JL8	CircMh	0.610	9.55	26.37	4.68	0.000	0.00	27.262
JL9	CircMh	0.623	11.90	28.65	4.45	0.000	0.00	33.032
L-10	Curb	0.670	1.15	17.93	5.80	0.000	0.00	4.470
L-11	Curb	0.650	1.04	14.23	6.52	0.000	0.00	4.406
L-12	Grate	0.626	19.87	30.66	4.27	0.000	0.00	53.142
L-13	Curb	0.660	2.78	19.44	5.56	0.000	0.00	10.195
L-14	Curb	0.650	1.75	19.09	5.61	0.000	0.00	6.383
L-16	Curb	0.660	3.64	18.70	5.67	0.000	0.00	13.630
L-17	Grate	0.632	24.93	32.50	4.12	0.000	0.00	64.918
L-18	Grate	0.635	27.37	33.34	4.06	0.000	0.00	70.473
L-19	Curb	0.660	1.28	17.82	5.82	0.000	0.00	4.916
L-20	Curb	0.640	1.33	15.58	6.23	0.000	0.00	5.307
L-21	Grate	0.730	0.60	10.00	7.64	0.000	0.00	3.345
L-26	Grate	0.609	4.62	22.43	5.13	0.000	0.00	14.437
L-28	Curb	0.698	1.31	18.15	5.76	0.000	0.00	5.271
L-29	Grate	0.623	17.70	29.14	4.41	0.000	0.00	48.627
L-7	Curb	0.620	3.57	22.28	5.15	0.000	0.00	11.408
L-8	Grate	0.610	9.55	26.37	4.68	0.000	0.00	27.262
L-9	Curb	0.670	1.75	15.08	6.34	0.000	0.00	7.429
O1	Outlt	0.637	29.30	34.75	3.95	0.000	0.00	73.768

Conveyance Configuration Data

Run#	Node I.D. US	Node I.D. DS	Flowline Elev. US (ft)	Flowline Elev. DS (ft)	Shape #	Span (ft)	Rise (ft)	Length (ft)	Slope (%)	n value
170	L-7	L-26	101.00	100.90	Circ 1	0.00	1.50	59.00	0.17	0.012
180	L-26	L-8	100.86	100.02	Circ 1	0.00	2.50	466.00	0.18	0.012
190	L-9	L-8	100.65	100.50	Circ 1	0.00	2.00	59.00	0.25	0.012
200	L-8	JL8	100.02	99.13	Circ 1	0.00	3.50	302.00	0.29	0.012
205	JL8	JL6	99.13	98.60	Circ 1	0.00	3.50	172.00	0.31	0.012
210	L-10	L-28	100.68	100.61	Circ 1	0.00	1.50	40.00	0.18	0.012
225	L-28	JL6	100.11	100.10	Circ 1	0.00	2.00	11.00	0.09	0.012
228	JL6	JL13	98.60	98.27	Circ 1	0.00	3.50	108.00	0.31	0.013
230	JL13	JL9	98.27	97.44	Circ 1	0.00	3.50	256.00	0.32	0.012
240	L-11	JL9	100.44	99.00	Circ 1	0.00	2.00	62.00	2.32	0.012
250	JL9	L-29	97.44	96.83	Circ 1	0.00	3.50	193.00	0.32	0.012
260	L-13	L-29	100.40	98.00	Circ 1	0.00	2.00	46.00	5.22	0.012
270	L-29	JL14	96.83	96.09	Circ 1	0.00	4.00	302.00	0.25	0.012
280	JL14	JL11	96.09	95.89	Circ 1	0.00	4.00	74.00	0.27	0.012
290	L-14	JL11	99.39	98.00	Circ 1	0.00	2.00	53.00	2.62	0.012
300	JL11	L-12	95.89	95.30	Circ 1	0.00	4.00	224.00	0.26	0.012
310	L-12	JL19	95.30	94.85	Circ 1	0.00	4.50	250.00	0.18	0.012
320	JL19	L-17	94.85	94.46	Circ 1	0.00	4.50	348.00	0.11	0.012
330	L-16	L-17	100.00	99.00	Circ 1	0.00	2.00	55.00	1.82	0.012
340	L-17	JL17	94.46	93.83	Circ 1	0.00	4.50	296.00	0.21	0.012
341	JL17	L-18	93.83	93.75	Circ 1	0.00	4.50	38.00	0.21	0.012
350	L-19	L-18	97.75	97.00	Circ 1	0.00	2.00	49.00	1.53	0.012
360	L-18	JL15	93.75	93.20	Circ 1	0.00	4.50	278.00	0.20	0.012
380	L-20	JL15	97.20	96.80	Circ 1	0.00	2.00	50.00	0.80	0.012
390	JL15	JL7	93.20	92.59	Circ 1	0.00	4.50	285.00	0.21	0.012
395	L-21	JL7	96.59	96.00	Circ 1	0.00	2.00	13.00	4.54	0.012
400	JL7	O1	92.59	92.50	Circ 1	0.00	4.50	58.00	0.16	0.012

TRUNK LINE "L"- CONTINUED

Conveyance Hydraulic Computations. Tailwater = 96.900 (ft)

Run#	Hydraulic Gradeline US Elev (ft)	Hydraulic Gradeline DS Elev (ft)	Fr.Slope (%)	Depth Unif. (ft)	Depth Actual (ft)	Velocity Unif. (f/s)	Velocity Actual (f/s)	Q (cfs)	Cap (cfs)	Junc Loss (ft)
170	103.09	102.50	1.005	1.50	1.50	6.46	6.46	11.41	4.69	0.000
180	102.50	101.69	0.106	1.64	1.67	4.23	4.15	14.44	18.87	0.000
190	101.80	101.69	0.092	1.13	1.19	4.08	3.82	7.43	12.36	0.000
200	101.69	100.78	0.063	1.67	1.67	6.03	6.03	27.26	59.18	0.000
205	100.78	100.46	0.063	1.64	1.86	6.16	5.25	27.26	60.51	0.000
210	101.85	101.42	0.154	1.17	1.17	3.02	3.02	4.47	4.76	0.000
225	101.36	100.91	0.046	1.25	1.25	2.55	2.55	5.27	7.39	0.000
228	100.46	100.02	0.093	1.86	1.86	5.90	5.90	30.65	55.62	0.000
230	100.02	99.32	0.079	1.75	1.88	6.37	5.83	30.65	62.07	0.000
240*	100.90	99.46	0.032	0.46	0.46	7.98	7.98	4.41	37.36	0.000
250	99.32	99.14	0.092	1.83	2.31	6.48	4.90	33.03	61.28	0.000
260*	101.03	99.14	0.173	0.58	1.14	13.57	5.49	10.19	56.02	0.000
270	99.14	98.52	0.098	2.31	2.43	6.46	6.10	48.63	77.04	0.000
280	98.52	98.43	0.098	2.25	2.54	6.68	5.78	48.63	80.91	0.000
290*	99.93	98.54	0.068	0.54	0.54	9.28	9.28	6.38	39.70	0.000
300	98.43	98.16	0.114	2.38	2.86	6.76	5.46	52.59	79.87	0.000
310	98.16	97.98	0.062	2.46	3.13	5.97	4.50	53.14	90.40	0.000
320	97.98	97.70	0.062	2.81	3.24	5.08	4.33	53.14	71.33	0.000
330*	100.90	99.89	0.309	0.89	0.89	10.02	10.02	13.63	33.05	0.000
340	97.70	97.47	0.093	2.67	3.64	6.60	4.71	64.92	98.30	0.000
341	97.47	97.45	0.093	2.67	3.70	6.60	4.64	64.92	97.76	0.000
350*	98.29	97.54	0.040	0.54	0.54	7.09	7.09	4.92	30.33	0.000
360	97.45	97.21	0.109	2.88	4.01	6.55	4.71	70.47	94.77	0.000
380*	97.87	97.47	0.047	0.67	0.67	5.73	5.73	5.31	21.92	0.000
390	97.21	96.96	0.117	2.88	4.37	6.78	4.63	72.96	98.57	0.000
395*	97.01	96.96	0.019	0.34	0.96	9.33	2.25	3.34	52.24	0.000
400	96.96	96.90	0.120	3.23	4.40	6.03	4.66	73.77	83.93	0.000

END

* Super critical flow.

NORMAL TERMINATION OF WINSTORM.

STATE OF TEXAS
RAMIRO GUTIERREZ
65948
REGISTERED PROFESSIONAL ENGINEER

THE SEAL APPEARING ON THIS DOCUMENT WAS AUTHORIZED BY RAMIRO GUTIERREZ, P.E. 65948
DATE: 8-12-03
ALTERATION OF A SEALED DOCUMENT WITHOUT PROPER NOTIFICATION TO THE RESPONSIBLE ENGINEER IS AN OFFENSE UNDER THE TEXAS ENGINEERING PRATICE LAW.

NOTES:

1. CALCULATIONS COMPILED BY TXDOT "WINSTORM V.3.05" COMPUTER PROGRAM.
2. SEWER CALCULATIONS BASED ON MANNING FORMULAS. JUNCTION LOSS WAS NOT TAKEN INTO ACCOUNT.
3. MAINLANE INLETS WERE ANALYSED BY MANUALLY ADDING THE 10 YEAR STORM FREQUENCY (SUPPLY Q)

Parsons Brinckerhoff
Quade & Douglas Inc.

R. Gutierrez Engineering Corporation

Texas Department of Transportation

© 2003 by TxDOT

US 281 EXPRESSWAY HYDRAULIC DATA SHEET

DESIGNED:	FED. RD DIV. No.	STATE	FEDERAL AID PROJECT No.		HIGHWAY No.	
CHECKED:	6	TEXAS			US 281	
DRAWN:	STATE DISTRICT	COUNTY	CONTROL No.	SECTION No.	JOB No.	SHEET No.
CHECKED:	21	HIDALGO	0255	08	091	535

TRUNK LINE "N"

Runoff Computation for Design Frequency.

ID	C Value	Area (acre)	Tc (min)	Tc Used (min)	Intensity (in/hr)	Supply Q (cfs)	Total Q (cfs)
N1	0.73	1.66	34.77	34.77	3.17	0.000	3.836
N10	0.78	0.60	10.00	10.00	6.24	0.000	2.922
N11	0.55	1.84	73.18	73.18	1.89	0.000	1.908
N12	0.67	1.61	33.57	33.57	3.24	0.000	3.494
N13	0.84	1.14	14.23	14.23	5.31	0.000	5.082
N14	0.84	1.14	14.23	14.23	5.31	0.000	5.082
N15	0.81	0.30	10.00	10.00	6.24	0.000	1.517
N18	0.9	0.10	10.00	10.00	6.24	0.000	0.562
N19	0.45	0.94	17.65	17.65	4.75	0.000	2.008
N2	0.47	1.03	21.28	21.28	4.28	0.000	2.071
N20	0.71	1.05	12.39	12.39	5.67	0.000	4.230
N21	0.78	0.80	22.25	22.25	4.17	0.000	2.602
N22	0.76	1.45	22.57	22.57	4.14	0.000	4.557
N23	0.9	0.40	10.00	10.00	6.24	0.000	2.247
N24	0.8	0.15	10.00	10.00	6.24	0.000	0.749
N25	0.8	0.15	10.00	10.00	6.24	0.000	0.749
N26	0.8	0.08	10.00	10.00	6.24	0.000	0.400
N27	0.8	0.08	10.00	10.00	6.24	0.000	0.400
N3	0.66	0.58	12.18	12.18	5.72	0.000	2.189
N4	0.55	4.04	169.16	169.16	0.99	0.000	2.210
N5	0.68	0.73	15.21	15.21	5.13	0.000	2.548
N6	0.69	2.20	18.08	18.08	4.69	0.000	7.113
N7	0.63	4.31	33.70	33.70	3.23	0.000	8.773
N8	0.54	2.53	84.44	84.44	1.70	0.000	2.317
N9	0.65	3.39	32.01	32.01	3.34	0.000	7.359

On Grade Inlet Configuration Data

Inlet ID	Inlet Type	Inlet Length (ft)	Slopes Long (%)	Slopes Trans (%)	Gutter n	Gutter Depr. (ft)	Grate Width (ft)	Grate Type	Pond Width Allowed (ft)	Critic Elev. (ft)
N10	Curb	10.00	0.23	2.00	0.012	0.40	n/a	n/a	14.00	105.59
N11	Grate	7.00	0.25	16.60	0.012	n/a	4.00	Parall	14.00	105.13
N12	Curb	5.00	0.04	2.00	0.012	0.40	n/a	n/a	14.00	105.90
N14	Curb	10.00	0.12	2.00	0.012	0.40	n/a	n/a	14.00	105.00
N18	Curb	5.00	0.25	2.00	0.012	0.40	n/a	n/a	14.00	105.46
N2	Grate	7.00	0.14	16.60	0.012	n/a	4.00	Parall	14.00	106.47
N23	Curb	5.00	0.15	2.50	0.012	0.40	n/a	n/a	6.00	107.85
N24	Curb	5.00	0.15	2.50	0.014	0.33	n/a	n/a	12.00	106.00
N25	Curb	5.00	0.15	2.50	0.014	0.33	n/a	n/a	12.00	106.00
N26	Curb	5.00	0.15	2.50	0.014	0.33	n/a	n/a	12.00	106.00
N27	Curb	5.00	0.15	2.50	0.014	0.33	n/a	n/a	12.00	106.00
N3	Curb	5.00	0.06	2.00	0.012	0.40	n/a	n/a	14.00	106.86
N5	Curb	5.00	0.03	2.00	0.012	0.40	n/a	n/a	14.00	106.67
N6	Curb	10.00	0.03	2.00	0.012	0.40	n/a	n/a	14.00	107.23
N7	Curb	15.00	0.10	2.00	0.012	0.40	n/a	n/a	14.00	106.75

On Grade Inlets Computation Data.

Inlet ID	Inlet Type	Total Q (cfs)	Intercept Capacity (cfs)	Q Bypass Allow (cfs)	Q Bypass Actual (cfs)	To Inlet ID	Required Length (ft)	Actual Length (ft)	Ponded Width (ft)
N10	Curb	2.922	2.922	0.000	0.000		6.36	10.00	12.75
N11	Grate	1.908	1.908	0.000	0.000		n/a	0.00	2.84
N12	Curb	3.494	3.494	0.000	0.000		4.99	5.00	18.90
N14	Curb	5.082	5.082	0.000	0.000		7.84	10.00	17.70
N18	Curb	0.562	0.562	0.000	0.000		2.58	5.00	6.75
N2	Grate	2.071	2.071	0.000	0.000		n/a	0.00	3.27
N23	Curb	2.247	2.247	0.000	0.000		4.76	5.00	10.88
N24	Curb	0.749	0.749	0.000	0.000		2.70	5.00	7.64
N25	Curb	0.749	0.749	0.000	0.000		2.70	5.00	7.64
N26	Curb	0.400	0.400	0.000	0.000		1.94	5.00	6.04
N27	Curb	0.400	0.400	0.000	0.000		1.94	5.00	6.04
N3	Curb	2.189	2.189	0.000	0.000		4.05	5.00	14.70
N5	Curb	2.548	2.548	0.000	0.000		3.87	5.00	17.75
N6	Curb	7.113	7.113	0.000	0.000		7.37	10.00	26.05
N7	Curb	8.773	8.773	0.000	0.000		10.66	15.00	22.50

Sag Inlets Configuration Data.

Inlet ID	Inlet Type	Length/ Perim. (ft)	Grate Area (sf)	Left-Slope Long (%)	Left-Slope Trans (%)	Right-Slope Long (%)	Right-Slope Trans (%)	Gutter n	Gutter DeprW (ft)	Depth Allowed (ft)	Critic Elev. (ft)
N1	Curb	10.00	n/a	0.06	2.00	0.16	2.00	0.012	0.40	0.50	106.65
N13	Grate	22.00	28.00	0.0416.60		0.04	16.60	0.012	n/a	0.50	104.95
N15	Curb	5.00	n/a	0.25	2.00	0.47	2.00	0.012	0.40	0.50	106.72
N19	Curb	5.00	n/a	0.22	2.50	0.25	2.50	0.012	0.40	0.50	105.65
N20	Curb	10.00	n/a	0.22	2.50	0.25	2.50	0.012	0.40	0.50	105.65
N21	Curb	5.00	n/a	0.32	2.50	0.20	2.50	0.012	0.40	0.50	106.97
N22	Curb	10.00	n/a	0.32	2.50	0.20	2.50	0.012	0.40	0.50	106.94
N4	Grate	22.00	28.00	0.2816.60		0.14	16.60	0.012	n/a	1.00	105.95
N8	Grate	22.00	28.00	0.1716.60		0.08	16.60	0.012	n/a	1.00	106.00
N9	Curb	15.00	n/a	0.15	2.00	0.02	2.00	0.012	0.40	0.50	106.00

TRUNK LINE "N"- CONTINUED

Sag Inlets Computation Data.

Inlet ID	Inlet Type	Length (ft)	Grate Perim (ft)	Grate Area (sf)	Total Q (cfs)	Inlet Capacity (cfs)	Total Head (ft)	Ponded Width Left (ft)	Ponded Width Right (ft)
N1	Curb	10.00	n/a	n/a	3.836	8.717	0.289	9.95	8.25
N13	Grate	n/a	22.00	28.00	5.082	23.771	0.178	4.47	4.47
N15	Curb	5.00	n/a	n/a	1.517	4.651	0.237	7.55	6.70
N19	Curb	5.00	n/a	n/a	2.008	4.651	0.286	7.48	7.32
N20	Curb	10.00	n/a	n/a	4.230	8.717	0.309	9.92	9.68
N21	Curb	5.00	n/a	n/a	2.602	4.651	0.339	7.68	8.40
N22	Curb	10.00	n/a	n/a	4.557	8.717	0.324	9.48	10.36
N4	Grate	n/a	22.00	28.00	2.210	67.235	0.102	1.61	1.83
N8	Grate	n/a	22.00	28.00	2.317	67.235	0.105	1.81	2.07
N9	Curb	15.00	n/a	n/a	7.359	12.783	0.346	15.05	21.20

Cumulative Junction Discharge Computations

Node I.D.	Node Type	Weighted C-Value	Cumulat. Dr.Area (acres)	Cumulat. Tc (min)	Intens. (in/hr)	User Supply Q cfs)	Additional Q In Node (cfs)	Total Disch. (cfs)
AI	CircMh	0.000	0.00	0.00	0.00	0.000	0.00	0.000
JN1	JnctBx	0.758	4.51	34.89	3.16	0.000	0.00	10.806
JN10	CircMh	0.775	2.85	23.64	4.02	0.000	0.00	8.890
JN11	CircMh	0.774	2.70	23.09	4.08	0.000	0.00	8.525
JN12	JnctBx	0.807	0.45	10.77	6.05	0.000	0.00	2.195
JN13	JnctBx	0.640	23.80	36.32	3.08	0.000	0.00	46.867
JN2	JnctBx	0.643	10.89	36.32	3.08	0.000	0.00	21.555
JN3	JnctBx	0.659	13.49	36.32	3.08	0.000	0.00	27.333
JN4	CircMh	0.640	23.72	36.32	3.08	0.000	0.00	46.670
JN5	CircMh	0.636	25.87	36.32	3.08	0.000	0.00	50.659
JN6	JnctBx	0.640	26.47	36.32	3.08	0.000	0.00	52.099
JN7	JnctBx	0.650	32.20	36.32	3.08	0.000	0.00	64.424
JN8	JnctBx	0.810	0.30	10.00	6.24	0.000	0.00	1.517
JN9	JnctBx	0.758	4.51	34.89	3.16	0.000	0.00	10.806
N1	Curb	0.730	1.66	34.77	3.17	0.000	0.00	3.836
N10	Curb	0.780	0.60	10.00	6.24	0.000	0.00	2.922
N11	Grate	0.636	29.92	36.32	3.08	0.000	0.00	58.531
N12	Curb	0.670	1.61	33.57	3.24	0.000	0.00	3.494
N13	Grate	0.650	32.20	36.32	3.08	0.000	0.00	64.424
N14	Curb	0.840	1.14	14.23	5.31	0.000	0.00	5.082
N15	Curb	0.810	0.30	10.00	6.24	0.000	0.00	1.517
N18	Curb	0.000	0.00	0.00	0.00	0.000	0.00	0.000
N19	Curb	0.587	1.99	17.65	4.75	0.000	0.00	5.547
N2	Grate	0.701	6.12	36.32	3.08	0.000	0.00	13.192
N20	Curb	0.710	1.05	12.39	5.67	0.000	0.00	4.230
N21	Curb	0.780	0.80	22.25	4.17	0.000	0.00	2.602
N22	Curb	0.767	2.25	22.83	4.11	0.000	0.00	7.090
N23	Curb	0.652	11.29	36.32	3.08	0.000	0.00	22.663
N24	Curb	0.800	0.15	10.00	6.24	0.000	0.00	0.749
N25	Curb	0.800	0.15	10.00	6.24	0.000	0.00	0.749
N26	Curb	0.800	0.08	10.00	6.24	0.000	0.00	0.400
N27	Curb	0.800	0.08	10.00	6.24	0.000	0.00	0.400
N3	Curb	0.660	0.58	12.18	5.72	0.000	0.00	2.189
N4	Grate	0.641	10.16	36.32	3.08	0.000	0.00	20.028
N5	Curb	0.680	0.73	15.21	5.13	0.000	0.00	2.548
N6	Curb	0.690	2.20	18.08	4.69	0.000	0.00	7.113
N7	Curb	0.630	4.31	33.70	3.23	0.000	0.00	8.773
N8	Grate	0.638	20.33	36.32	3.08	0.000	0.00	39.891
N9	Curb	0.650	3.39	32.01	3.34	0.000	0.00	7.359
01	Outlt	0.650	32.20	36.32	3.08	0.000	0.00	64.424

Conveyance Configuration Data

Run#	Node I.D. US	Node I.D. DS	Flowline Elev. US (ft)	Flowline Elev. DS (ft)	Shape #	Span (ft)	Rise (ft)	Length (ft)	Slope (%)	n value
1	N15	JN8	101.97	100.00	Circ 1	0.00	1.50	60.00	3.29	0.012
2	JN8	JN12	99.38	99.22	Circ 1	0.00	2.50	86.00	0.19	0.012
3	N24	JN12	102.16	100.50	Circ 1	0.00	1.50	10.00	16.83	0.012
4	JN12	JN11	99.22	99.20	Circ 1	0.00	2.50	10.00	0.20	0.012
6	N21	N22	102.53	102.39	Circ 1	0.00	1.50	92.00	0.15	0.012
7	N22	JN11	101.89	99.20	Circ 1	0.00	2.00	134.00	2.01	0.012
8	JN11	JN10	99.20	99.15	Circ 1	0.00	3.00	80.00	0.06	0.012
10	N25	JN10	102.16	100.50	Circ 1	0.00	1.50	10.00	16.83	0.012
11	JN10	JN1	99.15	99.04	Circ 1	0.00	3.00	184.00	0.06	0.012
20	N1	JN1	102.13	100.50	Circ 1	0.00	1.50	60.00	2.72	0.012
22	JN1	JN9	99.04	98.95	Circ 1	0.00	3.00	137.00	0.07	0.012
24	JN9	N2	98.95	98.90	Circ 1	0.00	3.00	90.00	0.06	0.012
25	N3	N2	102.00	100.50	Circ 1	0.00	1.50	64.00	2.34	0.012
30	N2	N4	98.90	98.72	Circ 1	0.00	3.00	300.00	0.06	0.012
50	N4	JN2	98.72	97.92	Circ 1	0.00	3.00	370.00	0.22	0.012
60	N5	JN2	100.99	99.50	Circ 1	0.00	1.50	48.00	3.11	0.012
70	JN2	N23	97.92	97.30	Circ 1	0.00	3.00	340.00	0.18	0.012
75	N23	JN3	97.30	97.12	Circ 1	0.00	3.00	98.00	0.18	0.012
80	N6	JN3	102.20	102.00	Circ 1	0.00	1.50	50.00	0.40	0.012
90	JN3	N8	97.12	96.32	Circ 1	0.00	3.50	550.00	0.15	0.012
100	N7	N8	102.00	101.50	Circ 1	0.00	1.50	57.00	0.88	0.012
110	N8	JN4	96.32	95.80	Circ 1	0.00	4.00	368.00	0.14	0.012
120	N9	JN4	99.90	98.00	Circ 1	0.00	2.00	70.00	2.72	0.012
122	JN4	JN13	95.80	95.63	Circ 1	0.00	4.00	110.00	0.15	0.012
125	N26	JN13	99.50	98.50	Circ 1	0.00	1.50	16.00	6.26	0.012
128	JN13	JN5	95.63	95.48	Circ 1	0.00	4.00	98.00	0.15	0.012
140	N20	N19	99.91	99.78	Circ 1	0.00	1.50	84.00	0.15	0.012
150	N19	JN5	99.78	98.50	Circ 1	0.00	2.00	198.00	0.65	0.012
152	N27	JN5	99.50	98.50	Circ 1	0.00	1.50	13.00	7.72	0.012

TRUNK LINE "N"- CONTINUED

180	JN5	JN6	95.48	95.20	Circ 1	0.00	4.00	186.00	0.15	0.012
185	N10	JN6	99.29	98.00	Circ 1	0.00	1.50	60.00	2.15	0.012
190	JN6	N11	95.20	94.67	Circ 1	0.00	4.00	338.00	0.16	0.012
200	N12	N11	101.50	101.20	Circ 1	0.00	1.50	56.00	0.54	0.012
210	N11	N13	94.67	94.04	Circ 1	0.00	4.50	401.00	0.16	0.012
220	N14	N13	101.50	101.00	Circ 1	0.00	1.50	68.00	0.74	0.012
230	N13	JN7	94.04	93.71	Circ 1	0.00	4.50	200.00	0.17	0.012
240	JN7	01	93.71	93.58	Circ 1	0.00	4.50	87.00	0.15	0.012

Conveyance Hydraulic Computations. Tailwater = 98.070 (ft)

Run#	Hydraulic Gradeline US Elev (ft)	Hydraulic Gradeline DS Elev (ft)	Fr.Slope (%)	Depth Unif. (ft)	Depth Actual (ft)	Velocity Unif. (ft/s)	Velocity Actual (ft/s)	Q (cfs)	Cap (cfs)	Junc Loss (ft)
1*	102.25	100.95	0.018	0.28	0.95	6.82	1.28	1.52	20.63	0.000
2	100.95	100.95	0.001	0.48	1.73	2.31	0.42	1.52	19.17	0.000
3*	102.30	100.95	0.004	0.13	0.45	9.77	1.67	0.75	46.70	0.000
4	100.95	100.95	0.002	0.57	1.75	2.63	0.60	2.19	19.87	0.000
6	103.35	103.00	0.052	0.82	0.82	2.63	2.63	2.60	4.44	0.000
7*	102.51	100.95	0.084	0.61	1.75	8.68	2.43	7.09	34.73	0.000
8	100.95	100.93	0.014	1.50	1.78	2.41	1.95	8.52	18.07	0.000
10*	102.30	100.93	0.004	0.13	0.43	9.77	1.80	0.75	46.70	0.000
11	100.93	100.87	0.015	1.50	1.83	2.52	1.97	8.89	17.67	0.000
20*	102.59	100.96	0.114	0.46	0.46	8.35	8.35	3.84	18.76	0.000
22	100.87	100.81	0.022	1.69	1.86	2.64	2.34	10.81	18.52	0.000
24	100.81	100.78	0.022	1.69	1.88	2.64	2.33	10.81	17.03	0.000
25*	102.36	100.86	0.037	0.36	0.36	6.74	6.74	2.19	17.43	0.000
30	100.78	100.46	0.033	1.88	1.88	2.84	2.84	13.19	17.70	0.000
50	100.46	100.05	0.077	1.69	2.13	4.89	3.74	20.03	33.60	0.000
60*	101.36	100.05	0.050	0.36	0.55	7.78	4.37	2.55	20.06	0.000
70	100.05	99.76	0.089	1.88	2.46	4.64	3.48	21.56	30.86	0.000
75	99.76	99.68	0.098	1.88	2.56	4.88	3.53	22.66	30.97	0.000
80	103.42	103.03	0.391	1.22	1.22	4.63	4.63	7.11	7.20	0.000
90	99.68	99.36	0.063	2.08	3.04	4.59	3.08	27.33	41.57	0.000
100*	103.04	102.54	0.594	1.04	1.04	6.73	6.73	8.77	10.66	0.000
110	99.36	99.15	0.066	2.38	3.35	5.13	3.55	39.89	58.50	0.000
120*	100.50	99.15	0.090	0.58	1.15	9.78	3.94	7.36	40.39	0.000
122	99.15	99.07	0.090	2.63	3.44	5.34	4.06	46.67	61.18	0.000
125*	99.63	99.07	0.001	0.12	0.57	5.76	0.65	0.40	28.48	0.000
128	99.07	99.00	0.091	2.63	3.52	5.36	4.01	46.87	60.89	0.000
140	101.08	100.57	0.138	1.17	1.17	2.86	2.86	4.23	4.48	0.000
150*	100.51	99.23	0.051	0.73	0.73	5.38	5.38	5.55	19.71	0.000
152*	99.62	99.00	0.001	0.12	0.50	6.19	0.78	0.40	31.61	0.000
180	99.00	98.84	0.106	2.75	3.64	5.50	4.22	50.66	60.38	0.000
185*	99.72	98.84	0.066	0.42	0.84	7.10	2.89	2.92	16.69	0.000
190	98.84	98.53	0.112	2.88	3.86	5.39	4.19	52.10	61.63	0.000
200*	102.18	101.88	0.094	0.68	0.68	4.49	4.49	3.49	8.33	0.000
210	98.53	98.29	0.075	2.81	4.25	5.60	3.76	58.53	84.45	0.000
220*	102.27	101.77	0.199	0.77	0.77	5.58	5.58	5.08	9.76	0.000
230	98.29	98.14	0.091	2.95	4.43	5.82	4.06	64.42	86.55	0.000
240	98.14	98.07	0.091	2.95	4.49	5.82	4.05	64.42	82.36	0.000

END

* Super critical flow.

NORMAL TERMINATION OF WINSTORM.

NOTES:

1. CALCULATIONS COMPILED BY TXDOT "WINSTORM V.3.05" COMPUTER PROGRAM.
2. SEWER CALCULATIONS BASED ON MANNING FORMULAS. JUNCTION LOSS WAS NOT TAKEN INTO ACCOUNT.
3. MAINLANE INLETS WERE ANALYSED BY MANUALLY ADDING THE 10 YEAR STORM FREQUENCY (SUPPLY Q)

STATE OF TEXAS
RAMIRO GUTIERREZ
65948
REGISTERED
PROFESSIONAL ENGINEER

THE SEAL APPEARING ON THIS DOCUMENT WAS AUTHORIZED BY RAMIRO GUTIERREZ, P.E. 65948
DATE: 8-12-03
ALTERATION OF A SEALED DOCUMENT WITHOUT PROPER NOTIFICATION TO THE RESPONSIBLE ENGINEER IS AN OFFENSE UNDER THE TEXAS ENGINEERING PRATICE LAW.

Parsons Brinckerhoff Quade & Douglas Inc.

R. Gutierrez Engineering Corporation

Texas Department of Transportation

© 2003 by TxDOT

US 281 EXPRESSWAY HYDRAULIC DATA SHEET

DESIGNED:	FED. RD DIV. No.	STATE	FEDERAL AID PROJECT No.		HIGHWAY No.	
	6	TEXAS			US 281	
CHECKED:						
DRAWN:	STATE DISTRICT	COUNTY	CONTROL No.	SECTION No.	JOB No.	SHEET No.
CHECKED:	21	HIDALGO	0255	08	091	536

TRUNK LINE "O"

Runoff Computation for Design Frequency.

ID	C Value	Area (acre)	Tc (min)	Tc Used (min)	Intensity (in/hr)	Supply Q (cfs)	Total Q (cfs)
01	0.53	0.59	15.81	15.81	6.19	0.000	1.935
010	0.38	3.68	39.33	39.33	3.65	0.000	5.109
011	0.9	0.20	10.00	10.00	7.64	0.000	1.374
012	0.53	1.53	59.53	59.53	2.77	0.000	2.247
013	0.2	0.25	46.25	46.25	3.29	0.000	0.164
014	0.34	2.89	21.43	21.43	5.27	0.000	5.176
015	0.9	1.64	33.33	33.33	4.06	0.000	5.989
016	0.36	0.27	24.31	24.31	4.90	0.000	0.477
017	0.36	0.27	24.31	24.31	4.90	0.000	0.477
018	0.33	1.78	75.07	75.07	2.36	0.000	1.384
02	0.68	1.69	35.30	35.30	3.91	0.000	4.498
03	0.67	2.95	35.03	35.03	3.93	0.000	7.774
04	0.55	0.78	15.31	15.31	6.29	0.000	2.698
05	0.4	1.45	60.81	60.81	2.73	0.000	1.583
06	0.64	1.07	19.63	19.63	5.53	0.000	3.785
07	0.52	2.33	35.27	35.27	3.92	0.000	4.745
08	0.9	0.58	10.00	10.00	7.64	0.000	3.986
09	0.9	0.26	11.87	11.87	7.09	0.000	1.660

On Grade Inlet Configuration Data

Inlet ID	Inlet Type	Inlet Length (ft)	Slopes Long (%)	Slopes Trans (%)	Gutter n	Gutter Depr. (ft)	Grate Width (ft)	Grate Type	Pond Width Allowed (ft)	Critic Elev. (ft)
01	Curb	5.00	0.15	2.50	0.012	0.40	n/a	n/a	14.00	98.48
011	Grate	7.00	0.15	16.60	0.012	n/a	4.00	Parall	14.00	98.80
013	Grate	7.00	0.21	16.60	0.012	n/a	4.00	Parall	14.00	97.00
016	Grate	4.00	1.00	2.00	0.012	n/a	4.00	Parall	14.00	99.50
017	Grate	4.00	1.00	2.00	0.012	n/a	4.00	Parall	14.00	99.50
02	Curb	10.00	0.15	2.50	0.012	0.40	n/a	n/a	14.00	98.63
04	Curb	10.00	0.15	2.50	0.012	0.40	n/a	n/a	14.00	98.61
05	Grate	7.00	0.21	16.60	0.012	n/a	4.00	Parall	14.00	98.31
07	Grate	7.00	0.25	2.50	0.012	n/a	4.00	Parall	14.00	98.17
08	Curb	5.00	0.15	25.00	0.012	0.40	n/a	n/a	12.00	100.62
09	Curb	5.00	0.45	2.00	0.012	0.40	n/a	n/a	6.00	98.57

On Grade Inlets Conmputation Data.

Inlet ID	Inlet Type	Total Q (cfs)	Intercept Capacity (cfs)	Q Bypass Allow (cfs)	Q Bypass Actual (cfs)	To Inlet ID	Required Length (ft)	Actual Length (ft)	Ponded Width (ft)
01	Curb	1.935	1.935	0.000	0.000		4.36	5.00	10.32
011	Grate	1.374	1.374	0.000	0.000		n/a	0.00	2.77
013	Grate	0.164	0.164	0.000	0.000		n/a	0.00	1.17
016	Grate	0.477	0.474	0.990	0.003		n/a	0.00	4.90
017	Grate	0.477	0.474	0.990	0.003		n/a	0.00	4.90
02	Curb	4.498	4.498	0.000	0.000		7.21	10.00	14.12
04	Curb	2.698	2.698	0.000	0.000		5.30	10.00	11.68
05	Grate	1.583	1.583	0.000	0.000		n/a	0.00	2.72
07	Grate	4.745	4.346	0.990	0.399		n/a	0.00	13.08
08	Curb	3.986	3.986	0.000	0.000		2.92	5.00	3.20
09	Curb	1.660	1.660	0.000	0.000		4.20	5.00	9.10

Sag Inlets Configuration Data.

Inlet ID	Inlet Type	Length/ Perim. (ft)	Grate Area (sf)	Left-Slope Long (%)	Left-Slope Trans (%)	Right-Slope Long (%)	Right-Slope Trans (%)	Gutter n	Gutter DeprW (ft)	Depth Allowed (ft)	Critic Elev. (ft)
010	Curb	10.00	n/a	0.15	2.50	0.36	2.50	0.012	0.40	0.50	97.40
012	Grate	16.00	16.00	1.06	16.60	0.33	16.60	0.012	n/a	0.50	97.48
014	Grate	18.00	18.00	0.50	2.00	0.50	2.00	0.014	n/a	0.50	95.50
015	Grate	16.00	16.00	0.50	16.60	0.50	16.60	0.012	n/a	0.50	101.19
018	Grate	22.00	28.00	1.03	16.60	0.21	16.60	0.012	n/a	0.50	96.00
03	Curb	15.00	n/a	0.15	2.50	0.15	2.50	0.012	0.40	0.50	98.05
06	Grate	22.00	28.00	0.21	16.60	0.18	16.60	0.012	n/a	1.00	97.50

Sag Inlets Computation Data.

Inlet ID	Inlet Type	Length (ft)	Grate Perim (ft)	Grate Area (sf)	Total Q (cfs)	Inlet Capacity (cfs)	Total Head (ft)	Ponded Width Left (ft)	Ponded Width Right (ft)
010	Curb	10.00	n/a	n/a	5.109	8.717	0.350	11.40	9.68
012	Grate	n/a	16.00	16.00	2.247	17.288	0.127	1.78	2.22
014	Grate	n/a	18.00	18.00	5.176	19.646	0.205	11.15	11.15
015	Grate	n/a	16.00	16.00	5.989	17.288	0.245	2.96	2.96
018	Grate	n/a	22.00	28.00	1.384	23.771	0.075	1.49	2.01
03	Curb	15.00	n/a	n/a	7.774	12.783	0.359	13.40	13.36
06	Grate	n/a	22.00	28.00	3.785	67.235	0.146	2.92	3.03

TRUNK LINE "O"- CONTINUED

Cumulative Junction Discharge Computations

Node I.D.	Node Type	Weighted C-Value	Cumulat. Dr.Area (acres)	Cumulat. Tc (min)	Intens. (in/hr)	User Supply Q (cfs)	Additional Q in Node (cfs)	Total Disch. (cfs)
J01	CircMh	0.530	0.59	15.81	6.19	0.000	0.00	1.935
J010	CircMh	0.713	1.17	17.16	5.94	0.000	0.00	4.955
J011	JnctBx	0.549	17.65	37.16	3.79	0.000	0.00	36.692
J012	CircMh	0.589	11.98	37.16	3.79	0.000	0.00	26.752
J013	JnctBx	0.543	17.39	37.16	3.79	0.000	0.00	35.805
J02	JnctBx	0.713	1.17	17.16	5.94	0.000	0.00	4.955
J03	CircMh	0.713	1.17	17.16	5.94	0.000	0.00	4.955
J04	CircMh	0.616	5.19	35.39	3.91	0.000	0.00	12.488
J05	JnctBx	0.636	9.21	37.16	3.79	0.000	0.00	22.192
J06	CircMh	0.600	11.44	37.16	3.79	0.000	0.00	26.015
J07	JnctBx	0.594	12.18	37.16	3.79	0.000	0.00	27.434
J08	JnctBx	0.549	17.65	37.16	3.79	0.000	0.00	36.692
J09	CircMh	0.574	19.54	37.16	3.79	0.000	0.00	42.474
01	Curb	0.530	0.59	15.81	6.19	0.000	0.00	1.935
010	Curb	0.380	3.68	39.33	3.65	0.000	0.00	5.109
011	Grate	0.594	12.18	37.16	3.79	0.000	0.00	27.434
012	Grate	0.530	1.53	59.53	2.77	0.000	0.00	2.247
013	Grate	0.200	0.25	46.25	3.29	0.000	0.00	0.164
014	Grate	0.340	2.89	21.43	5.27	0.000	0.00	5.176
015	Grate	0.900	1.64	33.33	4.06	0.000	0.00	5.989
016	Grate	0.360	0.27	24.31	4.90	0.000	0.00	0.477
017	Grate	0.360	0.54	24.49	4.88	0.000	0.00	0.949
018	Grate	0.528	24.21	37.16	3.79	0.000	0.00	48.423
02	Curb	0.680	1.69	35.30	3.91	0.000	0.00	4.498
03	Curb	0.670	2.95	35.03	3.93	0.000	0.00	7.774
04	Curb	0.550	0.78	15.31	6.29	0.000	0.00	2.698
05	Grate	0.600	11.44	37.16	3.79	0.000	0.00	26.015
06	Grate	0.636	9.21	37.16	3.79	0.000	0.00	22.192
07	Grate	0.616	5.19	35.39	3.91	0.000	0.00	12.488
08	Curb	0.900	0.58	10.00	7.64	0.000	0.00	3.986
09	Curb	0.900	0.26	11.87	7.09	0.000	0.00	1.660
OUT4	Outlt	0.528	24.21	37.16	3.79	0.000	0.00	48.423

Conveyance Configuration Data

Run#	Node I.D. US	Node I.D. DS	Flowline Elev. US (ft)	Flowline Elev. DS (ft)	Shape #	Span (ft)	Rise (ft)	Length (ft)	Slope (%)	n value
10	01	J01	95.00	91.50	Circ 1	0.00	1.50	171.00	2.05	0.012
20	J01	J010	89.25	89.07	Circ 1	0.00	3.50	120.00	0.15	0.012
22	08	J010	94.00	91.00	Circ 1	0.00	2.00	10.00	31.45	0.012
24	J010	J02	89.07	88.82	Circ 1	0.00	3.50	161.00	0.16	0.012
26	J02	J03	88.82	88.37	Circ 1	0.00	3.50	294.00	0.15	0.012
28	J03	07	88.37	88.30	Circ 1	0.00	3.50	58.00	0.12	0.012
30	02	07	93.50	91.00	Circ 1	0.00	1.50	56.00	4.47	0.012
40	07	J04	88.30	87.92	Circ 1	0.00	3.50	260.00	0.15	0.012
45	J04	06	87.92	87.81	Circ 1	0.00	4.00	122.00	0.09	0.012
50	03	06	93.00	90.00	Circ 1	0.00	2.00	56.00	5.36	0.012
60	06	J05	87.81	87.64	Circ 1	0.00	4.00	184.00	0.09	0.012
65	J05	05	87.64	87.46	Circ 1	0.00	4.00	194.00	0.09	0.012
70	04	05	94.00	91.50	Circ 1	0.00	1.50	52.00	4.81	0.012
80	05	J06	87.46	87.27	Circ 1	0.00	4.00	174.00	0.11	0.012
90	J06	J012	87.27	87.05	Circ 1	0.00	4.00	216.00	0.10	0.012
94	016	017	95.50	95.30	Circ 1	0.00	1.50	30.00	0.67	0.012
96	017	J012	95.30	91.00	Circ 1	0.00	1.50	180.00	2.39	0.012
98	J012	011	87.05	86.96	Circ 1	0.00	4.00	72.00	0.13	0.012
100	011	J07	86.96	86.58	Circ 1	0.00	4.00	373.00	0.10	0.012
105	012	J013	91.98	91.00	Circ 1	0.00	1.50	46.00	2.13	0.012
110	J07	J013	86.58	86.52	Circ 1	0.00	4.00	54.00	0.11	0.012
112	010	J013	92.50	89.50	Circ 1	0.00	2.00	40.00	7.52	0.012
114	J013	J011	86.52	86.43	Circ 1	0.00	4.00	66.00	0.14	0.012
115	09	J011	94.00	91.00	Circ 1	0.00	2.00	5.00	75.00	0.012
120	J011	J08	86.43	86.34	Circ 1	0.00	4.00	94.00	0.10	0.012
130	J08	J09	86.34	86.02	Circ 1	0.00	4.00	286.00	0.11	0.012
135	013	J09	91.50	91.02	Circ 1	0.00	1.50	30.00	1.60	0.012
137	015	J09	99.00	94.00	Circ 1	0.00	2.00	122.00	4.10	0.012
140	J09	018	86.02	85.46	Circ 1	0.00	4.00	504.00	0.11	0.012
150	014	018	92.50	92.00	Circ 1	0.00	2.00	56.00	0.89	0.012
160	018	OUT4	85.46	85.37	Circ 1	0.00	4.00	75.00	0.12	0.012

TRUNK LINE "O"- CONTINUED

Conveyance Hydraulic Computations. Tailwater = 90.700 (ft)

Run#	Hydraulic Gradeline US Elev (ft)	Hydraulic Gradeline DS Elev (ft)	Fr.Slope (%)	Depth Unif. (ft)	Depth Actual (ft)	Velocity Unif. (f/s)	Velocity Actual (f/s)	Q (cfs)	Cap (cfs)	Junc Loss (ft)
10*	95.35	91.85	0.029	0.35	0.35	6.19	6.19	1.94	16.28	0.000
20	91.77	91.77	0.000	0.51	2.70	2.26	0.24	1.94	42.22	0.000
22*	94.29	91.77	0.026	0.23	0.77	19.44	3.57	3.99	137.45	0.000
24	91.77	91.77	0.002	0.79	2.95	3.03	0.57	4.95	42.96	0.000
26	91.77	91.76	0.002	0.79	3.39	3.03	0.52	4.95	42.65	0.000
28	91.76	91.76	0.002	0.85	3.46	2.75	0.52	4.95	37.87	0.000
30*	93.95	91.76	0.156	0.44	0.76	10.43	4.97	4.50	24.06	0.000
40	91.76	91.73	0.013	1.31	3.50	3.79	1.30	12.49	41.67	0.000
45	91.73	91.72	0.006	1.38	3.91	3.27	1.00	12.49	46.73	0.000
50*	93.53	91.72	0.101	0.50	1.72	12.66	2.70	7.77	56.77	0.000
60	91.72	91.69	0.020	1.88	4.00	3.84	1.77	22.19	47.31	0.000
65	91.69	91.65	0.020	1.88	4.00	3.84	1.77	22.19	47.41	0.000
70*	94.33	91.83	0.056	0.33	0.33	9.23	9.23	2.70	24.97	0.000
80	91.65	91.60	0.028	2.00	4.00	4.14	2.07	26.02	51.43	0.000
90	91.60	91.54	0.028	2.00	4.00	4.14	2.07	26.02	49.67	0.000
94*	95.73	95.54	0.002	0.23	0.24	2.75	2.67	0.48	9.29	0.000
96*	95.54	91.54	0.007	0.24	0.54	5.31	1.65	0.95	17.59	0.000
98	91.54	91.52	0.030	2.00	4.00	4.26	2.13	26.75	55.03	0.000
100	91.52	91.41	0.031	2.13	4.00	4.04	2.18	27.43	49.68	0.000
105*	92.35	91.39	0.039	0.37	0.39	6.56	6.13	2.25	16.61	0.000
110	91.41	91.39	0.031	2.13	4.00	4.04	2.18	27.43	51.88	0.000
112*	92.91	91.39	0.043	0.37	1.89	12.62	1.66	5.11	67.22	0.000
114	91.39	91.36	0.053	2.25	4.00	4.92	2.85	35.81	57.47	0.000
115*	94.15	91.36	0.005	0.13	0.36	20.07	4.37	1.66	212.27	0.000
120	91.36	91.30	0.056	2.63	4.00	4.20	2.92	36.69	48.16	0.000
130	91.30	91.15	0.056	2.50	4.00	4.44	2.92	36.69	52.06	0.000
135*	91.61	91.15	0.000	0.11	0.13	2.72	2.28	0.16	14.40	0.000
137*	99.47	94.47	0.060	0.47	0.47	10.65	10.65	5.99	49.64	0.000
140	91.15	90.77	0.074	2.75	4.00	4.61	3.38	42.47	51.88	0.000
150*	93.14	92.64	0.045	0.64	0.64	5.94	5.94	5.18	23.16	0.000
160	90.77	90.70	0.097	3.00	4.00	4.79	3.85	48.42	53.91	0.000

END

* Super critical flow.

NORMAL TERMINATION OF WINSTORM.

NOTES:

1. CALCULATIONS COMPILED BY TXDOT "WINSTORM V.3.05" COMPUTER PROGRAM.
2. SEWER CALCULATIONS BASED ON MANNING FORMULAS. JUNCTION LOSS WAS NOT TAKEN INTO ACCOUNT.
3. MAINLANE INLETS WERE ANALYSED BY MANUALLY ADDING THE 10 YEAR STORM FREQUENCY (SUPPLY Q)
4. O BYPASS CONSIDERED ACCEPTABLE DUE TO THE CARRYOVER AMOUNT BEING MINIMAL (LESS THAN 1.0 CFS.) AND THE PONDING WIDTH BEING CONSIDERABLY LESS THAN ALLOWABLE THE CARRYOVER WOULD NOT SIGNIFICANTLY ICREASE THE PONDING WIDTH.

STATE OF TEXAS
RAMIRO GUTIERREZ
65948
REGISTERED
PROFESSIONAL ENGINEER

THE SEAL APPEARING ON THIS DOCUMENT WAS AUTHORIZED BY RAMIRO GUTIERREZ, P.E. 65948
DATE: 8-19-03
ALTERATION OF A SEALED DOCUMENT WITHOUT PROPER NOTIFICATION TO THE RESPONSIBLE ENGINEER IS AN OFFENSE UNDER THE TEXAS ENGINEERING PRATICE LAW.

PB Parsons Brinckerhoff Quade & Douglas Inc.

R. Gutierrez Engineering Corporation

Texas Department of Transportation

© 2003 by TxDOT

US 281 EXPRESSWAY HYDRAULIC DATA SHEET

DESIGNED:	FED. RD DIV. No.	STATE	FEDERAL AID PROJECT No.		HIGHWAY No.
CHECKED:	6	TEXAS			US 281
DRAWN:	STATE DISTRICT	COUNTY	CONTROL No.	SECTION No.	JOB No. / SHEET No.
CHECKED:	21	HIDALGO	0255	08	091 / 537

$NAME$

$TIME$

$DATE$

PROPOSED NORTH DRAINAGE DITCH 5FT BOTTOM (TxDOT+COUNTY FLOW)

Profile Output Table - ND(TxDOT+County)
HEC-RAS Plan: TxDOT+County River: PROPNORTH Reach: 2 Profile: Max WS
River Stations = 60

Reach	River Sta	Profile	Q Total (cfs)	Min Ch El (ft)	W.S. Elev (ft)	Crit W.S. (ft)	E.G. Elev (ft)	E.G. Slope (ft/ft)	Vel Chnl (ft/s)	Flow Area (sq ft)	Top Width (ft)	Froude # Chl
2	7029	Max WS	130.23	87.12	97.38		97.38	0.000003	0.31	416.32	61.18	0.02
2	7000	Max WS	130.23	87.11	97.38		97.38	0.000003	0.31	416.70	61.18	0.02
2	6800	Max WS	130.22	87.06	97.38		97.38	0.000003	0.31	418.83	61.22	0.02
2	6600	Max WS	130.22	87.00	97.38		97.38	0.000003	0.31	421.43	61.25	0.02
2	6500	Max WS	193.76	86.97	97.37		97.38	0.000006	0.46	423.82	61.50	0.03
2	6400	Max WS	193.76	86.94	97.37		97.38	0.000006	0.45	427.40	61.96	0.03
2	6300	Max WS	193.75	86.91	97.37		97.38	0.000006	0.45	429.15	62.06	0.03
2	6200	Max WS	193.74	86.88	97.37		97.37	0.000006	0.45	431.35	62.25	0.03
2	6100	Max WS	193.74	86.85	97.37		97.37	0.000006	0.45	432.61	62.26	0.03
2	6000	Max WS	193.73	86.82	97.37		97.37	0.000005	0.44	435.76	62.62	0.03
2	5950	Max WS	193.73	86.81	97.33		97.40	0.000060	2.05	94.70	62.48	0.11
2	5900		Culvert									
2	5800	Max WS	189.46	86.64	96.43		96.50	0.000073	2.15	88.08	59.36	0.12
2	5700	Max WS	189.41	86.62	96.47		96.47	0.000007	0.48	391.64	59.53	0.03
2	5600	Max WS	198.31	86.56	96.47		96.47	0.000007	0.50	395.50	59.81	0.03
2	5500	Max WS	198.28	86.54	96.42		96.50	0.000078	2.23	88.89	59.64	0.13
2	5435		Culvert									
2	5400	Max WS	183.30	86.35	95.63		95.70	0.000082	2.20	83.51	57.25	0.13
2	5100	Max WS	183.28	86.33	95.67		95.67	0.000008	0.51	361.74	57.44	0.04
2	5050	Max WS	183.23	86.30	95.67		95.67	0.000008	0.50	366.64	58.25	0.04
2	5025	Max WS	183.22	86.28	95.62		95.70	0.000080	2.18	84.05	57.38	0.13
2	5010		Culvert									
2	4800	Max WS	170.10	85.99	94.71		94.78	0.000087	2.17	78.43	54.58	0.13
2	4700	Max WS	170.08	85.96	94.74		94.75	0.000009	0.52	328.25	54.77	0.04
2	4600	Max WS	183.15	85.93	94.74		94.75	0.000010	0.55	330.56	55.06	0.04
2	4400	Max WS	183.10	85.87	94.74		94.74	0.000010	0.55	333.64	55.26	0.04
2	4200	Max WS	183.05	85.81	94.74		94.74	0.000010	0.54	337.05	55.54	0.04
2	4000	Max WS	183.00	85.75	94.74		94.74	0.000009	0.54	341.08	55.94	0.04
2	3800	Max WS	182.95	85.69	94.74		94.74	0.000009	0.53	344.84	56.28	0.04
2	3700	Max WS	182.92	85.66	94.73		94.74	0.000009	0.53	346.72	56.45	0.04
2	3600	Max WS	182.90	85.63	94.73		94.74	0.000009	0.53	348.31	56.55	0.04
2	3500	Max WS	182.84	85.57	94.73		94.74	0.000009	0.52	350.89	56.63	0.04
2	3400	Max WS	182.83	85.56	94.69		94.76	0.000086	2.23	82.11	56.46	0.13
2	3344		Culvert									
2	3100	Max WS	177.20	85.14	93.65		93.73	0.000102	2.31	76.57	54.34	0.14
2	3000	Max WS	177.18	85.11	93.69		93.70	0.000011	0.55	319.78	54.55	0.04
2	2800	Max WS	177.15	85.08	93.69		93.70	0.000010	0.55	321.05	54.59	0.04
2	2600	Max WS	177.09	85.02	93.69		93.69	0.000010	0.55	323.52	54.66	0.04
2	2400	Max WS	195.44	84.96	93.68		93.69	0.000012	0.60	327.06	54.99	0.04
2	2200	Max WS	195.37	84.90	93.68		93.69	0.000012	0.59	330.13	55.20	0.04
2	2100	Max WS	195.34	84.87	93.68		93.69	0.000012	0.59	332.27	55.44	0.04
2	2000	Max WS	195.30	84.87	93.68		93.69	0.000012	0.59	332.21	55.43	0.04
2	1900	Max WS	195.27	84.81	93.68		93.69	0.000011	0.58	335.96	55.77	0.04
2	1800	Max WS	195.23	84.78	93.68		93.68	0.000011	0.58	337.82	55.95	0.04
2	1500	Max WS	195.14	84.70	93.68		93.68	0.000011	0.57	341.28	56.04	0.04
2	1490	Max WS	195.13	84.69	93.62		93.71	0.000105	2.43	80.39	55.84	0.14
2	1475		Culvert									
2	1100	Max WS	186.90	84.20	92.59		92.69	0.000119	2.48	75.50	53.44	0.15
2	1000	Max WS	188.26	84.18	92.64		92.65	0.000013	0.60	311.88	53.68	0.04
2	900	Max WS	188.23	84.15	92.64		92.65	0.000013	0.60	313.11	53.77	0.04
2	800	Max WS	202.75	84.12	92.64		92.65	0.000014	0.64	315.34	54.06	0.05
2	600	Max WS	202.69	84.06	92.64		92.64	0.000014	0.64	318.88	54.39	0.05
2	500	Max WS	202.65	84.03	92.64		92.64	0.000014	0.63	320.39	54.49	0.05
2	400	Max WS	202.62	84.00	92.63		92.64	0.000013	0.63	322.18	54.66	0.05
2	300	Max WS	202.58	83.97	92.63		92.64	0.000013	0.63	323.55	54.70	0.05
2	250	Max WS	201.34	83.96	92.54		92.71	0.000211	3.35	60.07	54.35	0.20
2	241		Culvert									
2	50	Max WS	124.62	83.76	90.41		90.52	0.000189	2.68	46.57	46.33	0.18
2	25	Max WS	129.89	83.92	90.47		90.48	0.000016	0.60	216.95	46.24	0.05
2	0	Max WS	129.89	83.91	90.47		90.48	0.000016	0.60	217.23	46.26	0.05

PROPOSED SOUTH DRAINAGE DITCH 5FT BOTTOM (TxDOT+COUNTY FLOW)

Profile Output Table - SD(TxDOT+County)
HEC-RAS Plan: TxDOT+County River: PROPSOUTH Reach: 1 Profile: Max WS
River Stations = 46

Reach	River Sta	Profile	Q Total (cfs)	Min Ch El (ft)	W.S. Elev (ft)	Crit W.S. (ft)	E.G. Elev (ft)	E.G. Slope (ft/ft)	Vel Chnl (ft/s)	Flow Area (sq ft)	Top Width (ft)	Froude # Chl
1	65062	Max WS	108.18	89.12	97.96		97.97	0.000013	0.54	200.53	40.36	0.04
1	64862	Max WS	107.80	89.09	97.96		97.96	0.000013	0.53	201.79	40.50	0.04
1	64662	Max WS	107.41	89.06	97.96		97.96	0.000012	0.53	203.06	40.64	0.04
1	64462	Max WS	207.91	89.03	97.93		97.94	0.000046	1.02	203.34	40.70	0.08
1	64262	Max WS	207.47	89.00	97.92		97.94	0.000045	1.02	204.36	40.81	0.08
1	64062	Max WS	207.02	88.97	97.91		97.93	0.000044	1.01	205.38	40.92	0.08
1	63862	Max WS	206.55	88.94	97.90		97.92	0.000044	1.00	206.51	41.06	0.08
1	63662	Max WS	206.08	88.91	97.90		97.91	0.000043	0.99	207.56	41.17	0.08
1	63462	Max WS	205.59	88.88	97.89		97.90	0.000042	0.99	208.60	41.29	0.08
1	63262	Max WS	205.10	88.84	97.88		97.90	0.000041	0.98	209.66	41.40	0.08
1	63062	Max WS	204.58	88.81	97.87		97.89	0.000041	0.97	210.86	41.55	0.08
1	62862	Max WS	204.04	88.78	97.87		97.88	0.000040	0.96	211.95	41.67	0.08
1	62662	Max WS	203.50	88.75	97.86		97.87	0.000039	0.96	213.06	41.79	0.07
1	62462	Max WS	202.96	88.72	97.85		97.87	0.000038	0.95	214.29	41.94	0.07
1	62262	Max WS	202.40	88.69	97.85		97.86	0.000037	0.94	215.63	42.11	0.07
1	62062	Max WS	201.80	88.66	97.84		97.85	0.000022	0.77	263.32	47.35	0.06
1	61862	Max WS	194.48	88.63	97.84		97.85	0.000020	0.74	264.21	47.38	0.05
1	61662	Max WS	194.48	88.60	97.84		97.85	0.000020	0.73	266.18	47.63	0.05
1	61462	Max WS	194.45	88.57	97.83		97.84	0.000032	0.88	221.09	42.76	0.07
1	61262	Max WS	194.41	88.54	97.82		97.83	0.000032	0.87	222.36	42.90	0.07
1	61062	Max WS	194.36	88.51	97.82		97.83	0.000032	0.87	223.51	43.02	0.07
1	60862	Max WS	194.30	88.48	97.81		97.82	0.000031	0.87	224.18	43.04	0.07
1	60662	Max WS	194.23	88.45	97.81		97.82	0.000031	0.86	225.22	43.13	0.07
1	60404	Max WS	194.13	88.41	97.80		97.81	0.000030	0.86	226.73	43.29	0.07
1	60364	Max WS	194.12	88.40	97.74		97.82	0.000104	2.37	82.06	43.15	0.14
1	60333		Culvert									
1	60068	Max WS	185.74	88.05	96.86		96.95	0.000116	2.40	77.31	40.22	0.14
1	59978	Max WS	239.20	88.03	96.89		96.91	0.000063	1.19	200.99	40.40	0.09
1	59798	Max WS	239.14	88.01	96.88		96.90	0.000062	1.19	201.37	40.40	0.09
1	59698	Max WS	239.11	87.99	96.87		96.89	0.000062	1.18	202.47	40.60	0.09
1	59498	Max WS	239.04	87.96	96.86		96.88	0.000061	1.18	203.33	40.70	0.09
1	59298	Max WS	238.96	87.93	96.85		96.87	0.000060	1.17	204.23	40.80	0.09
1	59098	Max WS	238.88	87.90	96.84		96.86	0.000059	1.16	205.22	40.92	0.09
1	58898	Max WS	238.79	87.87	96.82		96.85	0.000059	1.16	206.12	41.03	0.09
1	58698	Max WS	238.70	87.84	96.81		96.83	0.000058	1.15	207.03	41.13	0.09
1	58498	Max WS	238.61	87.81	96.80		96.82	0.000056	1.13	210.74	41.85	0.09
1	58298	Max WS	238.52	87.78	96.80		96.81	0.000034	0.94	254.45	46.39	0.07
1	58098	Max WS	238.42	87.75	96.79		96.81	0.000033	0.93	255.21	46.41	0.07
1	57898	Max WS	238.32	87.72	96.79		96.80	0.000033	0.93	255.98	46.43	0.07
1	57698	Max WS	238.22	87.68	96.78		96.79	0.000033	0.93	256.74	46.45	0.07
1	57572	Max WS	238.16	87.67	96.78		96.79	0.000033	0.93	257.22	46.46	0.07
1	57532	Max WS	238.15	87.66	96.64		96.86	0.000254	3.79	62.86	45.92	0.22
1	57531		Culvert									
1	57392	Max WS	150.51	87.59	94.42		94.57	0.000253	3.15	47.77	37.47	0.21
1	57351	Max WS	149.60	87.48	94.51		94.53	0.000051	1.00	150.03	33.24	0.08
1	50000	Max WS	115.25	83.91	93.89		93.90	0.000006	0.43	269.09	44.48	0.03

$FILE$

STATE OF TEXAS
RAMIRO GUTIERREZ
65948
REGISTERED PROFESSIONAL ENGINEER

THE SEAL APPEARING ON THIS DOCUMENT WAS AUTHORIZED BY RAMIRO GUTIERREZ, P.E. 65948
DATE: 5-12-03
ALTERATION OF A SEALED DOCUMENT WITHOUT PROPER NOTIFICATION TO THE RESPONSIBLE ENGINEER IS AN OFFENSE UNDER THE TEXAS ENGINEERING PRATICE LAW.

Parsons Brinckerhoff Quade & Douglas Inc.

R. Gutierrez Engineering Corporation

Texas Department of Transportation

© 2001 by TxDOT

US 281 EXPRESSWAY HYDRAULIC DATA SHEET

DESIGNED:	FED. RD DIV. No.	STATE	FEDERAL AID PROJECT No.			HIGHWAY No.
CHECKED:	6	TEXAS				US 281
DRAWN:	STATE DISTRICT	COUNTY	CONTROL No.	SECTION No.	JOB No.	SHEET No.
CHECKED:	21	HIDALGO	0255	08	091	538

$NAME$
$TIME$
$DATE$

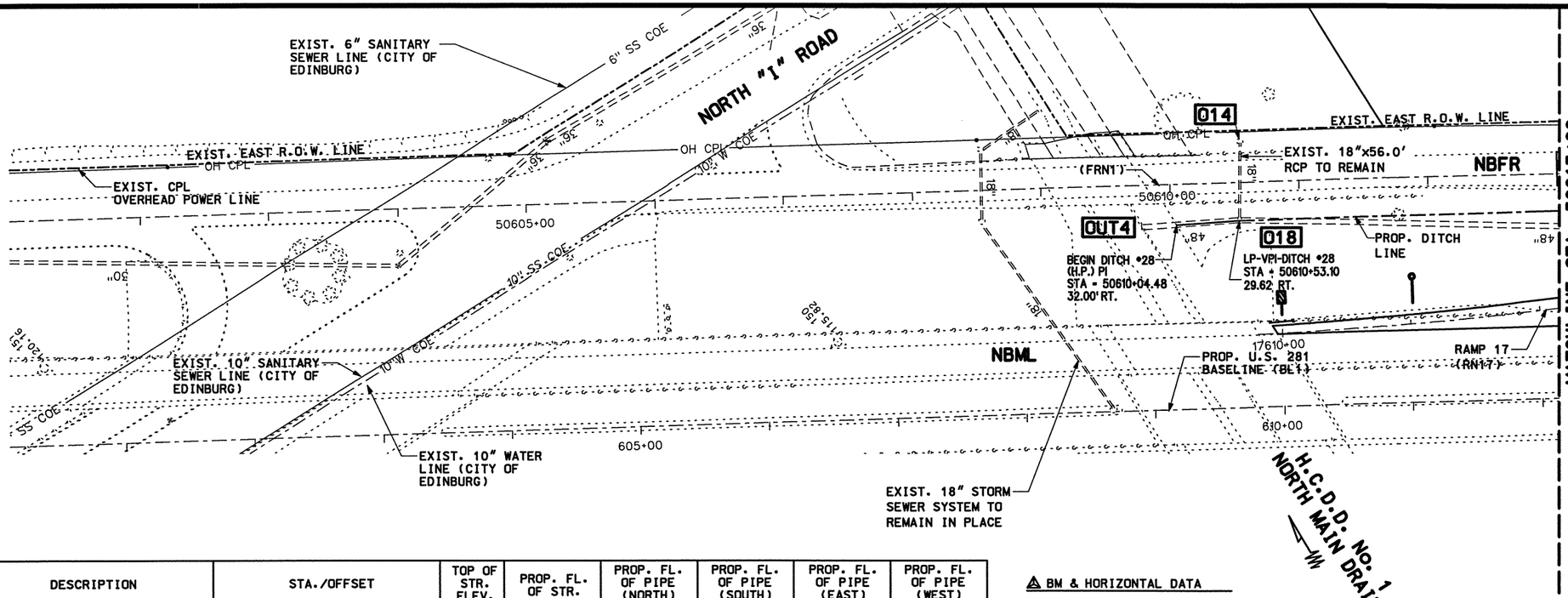

LEGEND

- PROP. DITCH FLOWLINE
- STORM SEWER FLOW DIRECTION
- NBFR — NORTH BOUND FRONTAGE ROAD
- NBML — NORTH BOUND MAINLANES
- B — BURIED TELEPHONE CABLE
- OH — OVERHEAD POWER LINES
- 8" SS — EXIST. SANITARY SEWER LINE
- DRAINAGE STR. TO BE CAPPED
- PROPOSED LUMINAIRE
- 07 — STRUCTURE I.D.
- RCP TO REMAIN
- RCP TO BE ABANDONED
- H.P. — DITCH HIGH POINT
- L.P. — DITCH LOW POINT
- LAT1 — LATERAL I.D.
- EXIST. MANHOLE/INLET TO BE REMOVED (ITEM 496)

NOTE:

1.) ALL UTILITIES SHALL BE THE RESPONSIBITILY OF THE CONTRACTOR TO VERIFY HORIZONTAL & VERTICAL INFORMATION IN THE FIELD.
2.) ALL ABANDONED PIPE TO BE CAPPED, SUBSIDIARY TO ITEM 496.
3.) CONTRACTOR TO COORDINATE WITH S.W.B. TELEPHONE FOR NEW/EXIST SERVICE LINE PRIOR TO CONSTRUCTION

STR. I.D.	DESCRIPTION	STA./OFFSET	TOP OF STR. ELEV.	PROP. FL. OF STR.	PROP. FL. OF PIPE (NORTH)	PROP. FL. OF PIPE (SOUTH)	PROP. FL. OF PIPE (EAST)	PROP. FL. OF PIPE (WEST)
014	EXIST. TY "CC" GRATE INLET	STA. 50610+55.10, 32.00' LT.	95.50'	92.50'	–	–	–	92.50'
018	EXIST. TY "CC" GRATE INLET	STA. 50610+53.10, 29.60' RT.	96.00'	85.46'	85.46'	85.46'	92.00'	–
OUT4	EXIST. OUTFALL	STA. 50609+77.50, 33.00' RT.	–	85.37'	–	–	–	–

⚠ BM & HORIZONTAL DATA

BM #US 281-25
EL=98.54'
STA. 616+12.65, 199.63' LT.
3¼" TxDOT ALUMINUM DISK

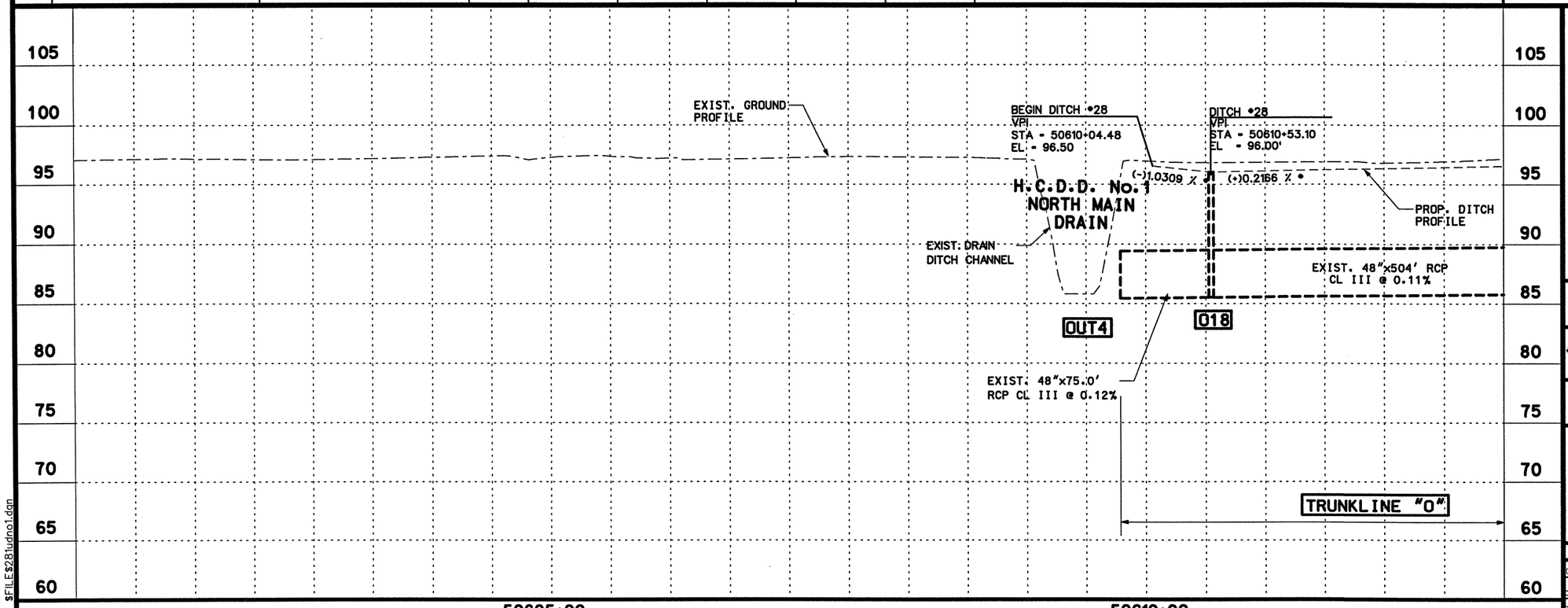

THE SEAL APPEARING ON THIS DOCUMENT WAS AUTHORIZED BY RAMIRO GUTIERREZ, P.E. 65948

DATE: 8-12-03

ALTERATION OF A SEALED DOCUMENT WITHOUT PROPER NOTIFICATION TO THE RESPONSIBLE ENGINEER IS AN OFFENSE UNDER THE TEXAS ENGINEERING PRATICE LAW.

Parsons Brinckerhoff Quade & Douglas Inc.

R. Gutierrez Engineering Corporation

Texas Department of Transportation

© 2003 by TxDOT

UTILITIES & DRAINAGE PLAN & PROFILE NORTHBOUND FRONTAGE ROAD

STA. 50602+00 "FRN1" TO
STA. 50613+00 "FRN1"

SHEET 1 OF 22

PLAN 1"= 100' HORIZ
PROFILE 1"= 10' VERT

DESIGNED:	FED. RD DIV. No.	STATE	FEDERAL AID PROJECT No.			HIGHWAY No.
CHECKED:	6	TEXAS				US 281
DRAWN:	STATE DISTRICT	COUNTY	CONTROL No.	SECTION No.	JOB No.	SHEET No.
CHECKED:	21	HIDALGO	0255	08	091	539

$FILE$28tudno1.dgn

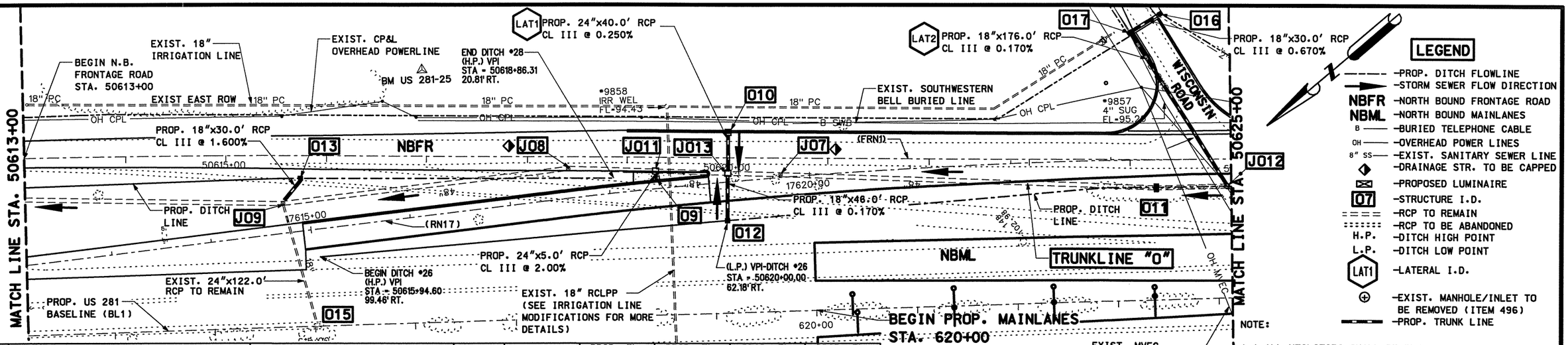

STR. I.D.	DESCRIPTION	STA./OFFSET	TOP OF STR. ELEV.	PROP. FL. OF STR.	PROP. FL. OF PIPE (NORTH)	PROP. FL. OF PIPE (SOUTH)	PROP. FL. OF PIPE (EAST)	PROP. FL. OF PIPE (WEST)
09	PROP. TY "A" INLET	STA. 50619+29.07, 22.97' RT.	98.57'	94.00'	-	-	94.00'	-
010	PROP. TY "F" INLET W/1- 5.0' EXT.	STA. 50620+00.00, 26.0' LT	97.40'	92.50'	-	-	-	92.50'
011	PROP. TY "CC" GRATE INLET	STA. 50624+25.64, 27.93' RT	98.80'	86.96'	86.96'	86.96'	-	-
012	PROP. TY "C" GRATE INLET	STA. 50620+00.00, 62.18' RT	97.48'	91.98'	-	-	91.98'	-
013	PROP. TY "C" GRATE INLET	STA. 50615+74.00, 22.56' RT	97.00'	91.50'	-	-	-	91.50'
015	EXIST. TY "C" GRATE INLET ⊕	STA. 615+01.68, 0.77' LT (BL1)	101.19'	99.00'	-	-	99.00'	-
016	PROP. TY "C" GRATE INLET	STA. 50624+30.25, 144.71' LT.	99.50'	95.50'	95.50'	-	-	-
017	PROP. TY "C" GRATE INLET	STA. 50624+00.53, 126.20' LT.	99.50'	95.30'	-	95.30'	-	95.30'
J07	EXIST. MANHOLE (TO BE CAPPED)	STA. 50620+52.72, 16.52' RT	91.00'	86.58'	86.58'	86.58'	-	-
J08	EXIST. MANHOLE (TO BE CAPPED)	STA. 50618+40.75, 11.65' RT.	90.76'	86.34'	86.34'	86.34'	-	-
J09	EXIST. MANHOLE	STA. 50615+56.77, 47.36' RT.	98.31'	86.02'	86.02'	86.02'	91.02'	94.00'
J011	PROP. JUNCTION BOX (6'x6')	STA. 50619+28.36, 13.60' RT.	95.00'	86.43'	86.43'	86.43'	-	91.00'
J012	PROP. TY "M" MANHOLE	STA. 50624+96.24, 26.65' RT	99.00'	87.05'	87.05'	87.05'	91.00'	-
J013	PROP. JUNCTION BOX (6'x6')	STA. 50620+00.00, 15.28' RT.	95.00'	86.52'	86.52'	86.52'	89.50'	91.00'

⊕ MAINLANE STATIONS

SHEET TOTALS

ITEM	EST.	FINAL	UNIT	DESCRIPTION
*400	181		CY	SEWER EXCAVATION
402	300		LF	TRENCH EXCAVATION PROTECTION
464	286		LF	RCP CL III 18"
464	40		LF	RCP CL III 24"
465	4		EA	INLET (TY) "C"
465	1		EA	INLET (TY) "A"
465	1		EA	INLET (TY) "F"
465	2		EA	JUNCTION BOX (6'x6')
465	1		EA	INLET (TY) "CC"
465	1		EA	MANHOLE (TY) "M"
465	1		EA	5.0' EXTENTIONS
479	2		EA	ADJUST MANHOLE/INLET (JUNC. BOX)

* FOR CONTRACTORS INFORMATION ONLY

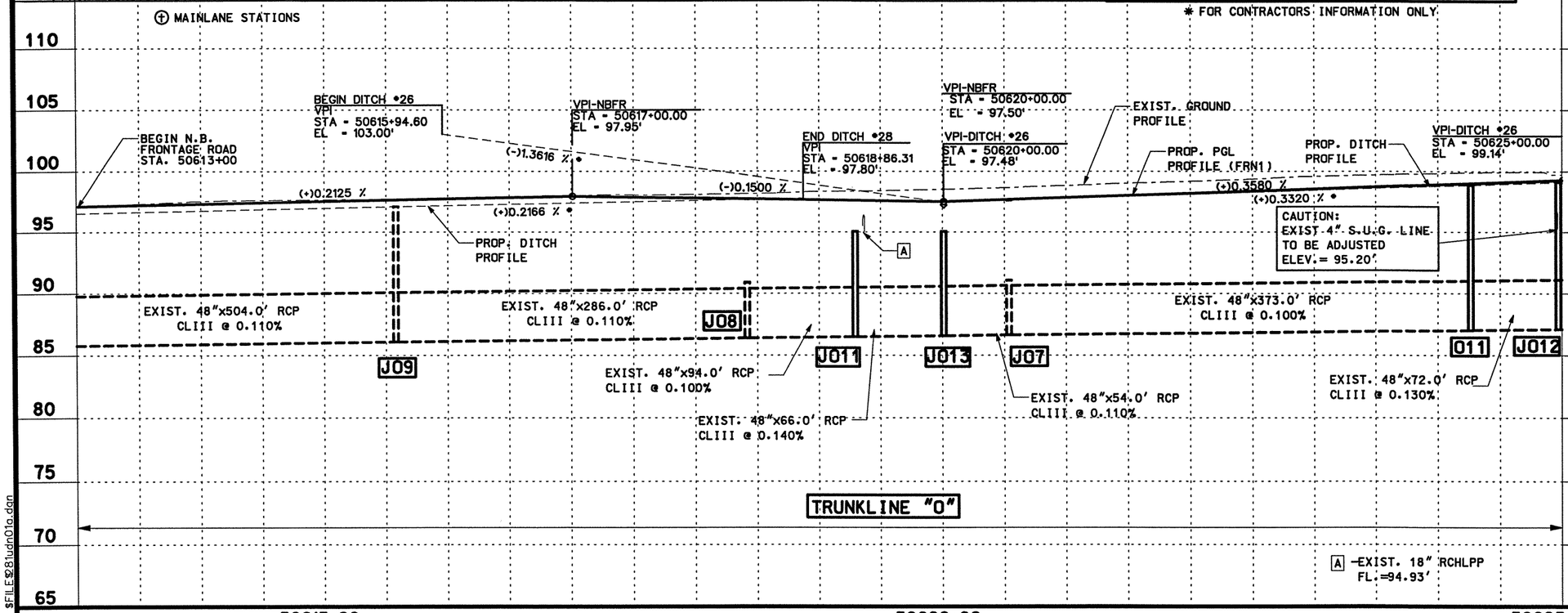

LEGEND

- PROP. DITCH FLOWLINE
- STORM SEWER FLOW DIRECTION
- NBFR -NORTH BOUND FRONTAGE ROAD
- NBML -NORTH BOUND MAINLANES
- B -BURIED TELEPHONE CABLE
- OH -OVERHEAD POWER LINES
- 8" SS -EXIST. SANITARY SEWER LINE
- -DRAINAGE STR. TO BE CAPPED
- -PROPOSED LUMINAIRE
- 07 -STRUCTURE I.D.
- -RCP TO REMAIN
- -RCP TO BE ABANDONED
- H.P. -DITCH HIGH POINT
- L.P. -DITCH LOW POINT
- LAT1 -LATERAL I.D.
- ⊕ -EXIST. MANHOLE/INLET TO BE REMOVED (ITEM 496)
- -PROP. TRUNK LINE

NOTE:

1.) ALL UTILITIES SHALL BE THE RESPONSIBITILY OF THE CONTRACTOR TO VERIFY HORIZONTAL & VERTICAL INFORMATION IN THE FIELD.
2.) ALL ABANDONED PIPE TO BE CAPPED. SUBSIDIARY TO ITEM 496.
3.) CONTRACTOR TO COORDINATE WITH S.W.B. TELEPHONE FOR NEW/EXIST SERVICE LINE PRIOR TO CONSTRUCTION

⚠ BM & HORIZONTAL DATA

BM #US 281-25
EL=98.54'
STA. 616+12.65, 199.63' LT.
3¼" TxDOT ALUMINUM DISK

STATE OF TEXAS
RAMIRO GUTIERREZ
65948
REGISTERED PROFESSIONAL ENGINEER

THE SEAL APPEARING ON THIS DOCUMENT WAS AUTHORIZED BY RAMIRO GUTIERREZ, P.E. 65948

DATE: 8-12-03

ALTERATION OF A SEALED DOCUMENT WITHOUT PROPER NOTIFICATION TO THE RESPONSIBLE ENGINEER IS AN OFFENSE UNDER THE TEXAS ENGINEERING PRATICE LAW.

Parsons Brinckerhoff Quade & Douglas Inc.

R. Gutierrez Engineering Corporation

Texas Department of Transportation

©2003 by TxDOT

UTILITIES & DRAINAGE PLAN & PROFILE
NORTHBOUND FRONTAGE ROAD

STA. 50613+00 "FRN1" TO
STA. 50625+00 "FRN1"

SHEET 2 OF 22

PLAN 1"= 100' HORIZ
PROFILE 1"= 10' VERT

DESIGNED:	FED. RD DIV. No.	STATE	FEDERAL AID PROJECT No.			HIGHWAY No.
CHECKED:	6	TEXAS				US 281
DRAWN:	STATE DISTRICT	COUNTY	CONTROL No.	SECTION No.	JOB No.	SHEET No.
CHECKED:	21	HIDALGO	0255	08	091	540

$NAME$ $TIME$ $DATE$ $FILE$ 281tudn01a.dgn

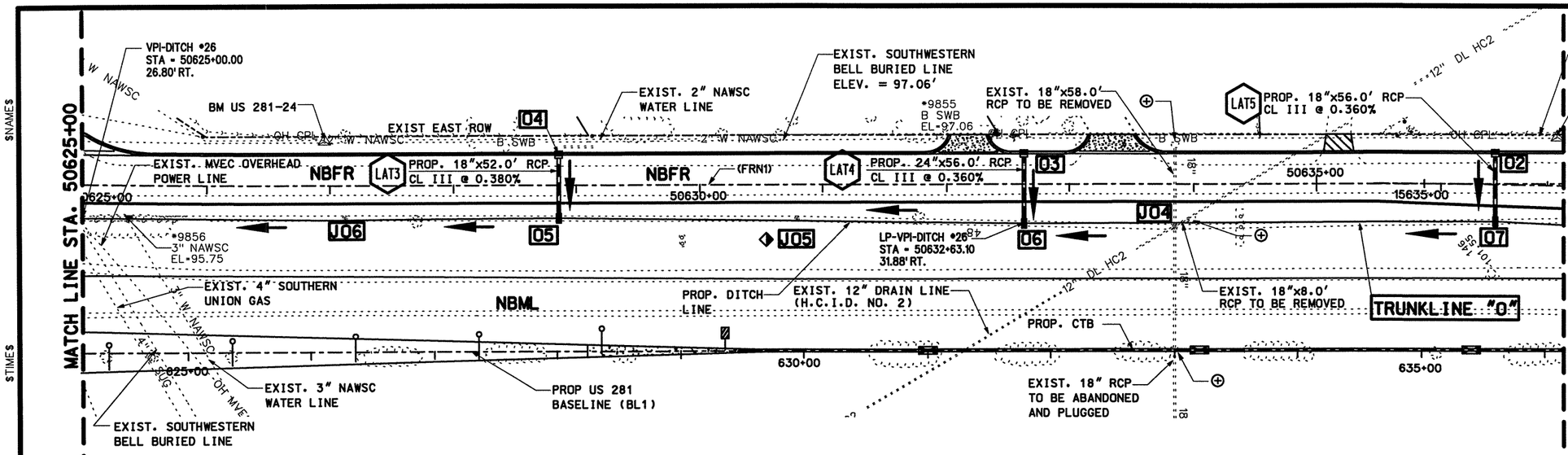

LEGEND

- –PROP. DITCH FLOWLINE
- –STORM SEWER FLOW DIRECTION
- NBFR –NORTH BOUND FRONTAGE ROAD
- NBML –NORTH BOUND MAINLANES
- B –BURIED TELEPHONE CABLE
- OH –OVERHEAD POWER LINES
- 8" SS –EXIST. SANITARY SEWER LINE
- –DRAINAGE STR. TO BE CAPPED
- –PROPOSED LUMINAIRE
- 07 –STRUCTURE I.D.
- –RCP TO REMAIN
- –RCP TO BE ABANDONED
- H.P. –DITCH HIGH POINT
- L.P. –DITCH LOW POINT
- LAT1 –LATERAL I.D.
- –EXIST. MANHOLE/INLET TO BE REMOVED (ITEM 496)
- –PROP. TRUNK LINE

STR. I.D.	DESCRIPTION	STA./OFFSET	TOP OF STR. ELEV.	PROP. FL. OF STR.	PROP. FL. OF PIPE (NORTH)	PROP. FL. OF PIPE (SOUTH)	PROP. FL. OF PIPE (EAST)	PROP. FL. OF PIPE (WEST)
02	PROP. TY "F" INLET W/1-5.0' EXT.	STA. 50636+44.00, 26.00' LT	98.63'	93.50'	–	–	–	93.50'
03	PROP. TY "F" INLET W/2-5.0' EXT.	STA. 50632+63.00, 26.00' LT	98.05'	93.00'	–	–	–	93.00'
04	PROP. TY "F" INLET W/1-5.0' EXT.	STA. 50628+86.00, 26.00' LT	98.61'	94.00'	–	–	–	94.00'
05	PROP. TY "CC" GRATE INLET	STA. 50628+86.00, 26.72' RT	98.31'	87.46'	87.46'	87.46'	91.50'	–
06	PROP. TY "CC" GRATE INLET	STA. 50632+63.00, 31.88' RT	97.50'	87.81'	87.81'	87.81'	90.00'	–
07	PROP. TY "CC" GRATE INLET	STA. 50636+44.00, 30.65' RT	98.17'	88.30'	88.30'	88.30'	91.00'	–
J04	EXIST. MANHOLE	STA. 50633+84.70, 34.71' RT	97.64'	87.92'	87.92'	87.92'	–	–
J05	EXIST. MANHOLE (TO BE CAPPED)	STA. 50630+79.20, 27.65' RT	92.14'	87.64'	87.64'	87.64'	–	–
J06	EXIST. MANHOLE	STA. 50627+12.20, 25.93' RT	98.68'	87.27'	87.27'	87.27'	–	–

NOTE:

1.) ALL UTILITIES SHALL BE THE RESPONSIBITILY OF THE CONTRACTOR TO VERIFY HORIZONTAL & VERTICAL INFORMATION IN THE FIELD.
2.) ALL ABANDONED PIPE TO BE CAPPED, SUBSIDIARY TO ITEM 496.
3.) CONTRACTOR TO COORDINATE WITH S.W.B. TELEPHONE FOR NEW/EXIST SERVICE LINE PRIOR TO CONSTRUCTION

⚠ BM & HORIZONTAL DATA

BM #US 281-23
EL=98.73'
STA. 636+10.30, 172.95' LT.
3¼" TxDOT ALUMINUM DISK

BM #US 281-24
EL=98.94'
STA. 626+11.32, 171.49' LT.
3¼" TxDOT ALUMINUM DISK

* FOR CONTRACTORS INFORMATION ONLY

SHEET TOTALS

ITEM	EST.	FINAL	UNIT	DESCRIPTION
*400	126		CY	SEWER EXCAVATION
402	168		LF	TRENCH EXCAVATION PROTECTION
464	108		FT	RCP (CL III) 18 IN
464	56		FT	RCP (CL III) 24 IN
465	3		EA	INLET (TY) "F"
465	3		EA	INLET (TY) "CC"
465	4		EA	5.0' EXTENTIONS
479	1		EA	ADJUST MANHOLE (JUNC. BOX)
496	3		EA	REMOVE OLD STR. (SMALL)
496	66		LF	REMOVE OLD STR. (PIPE)

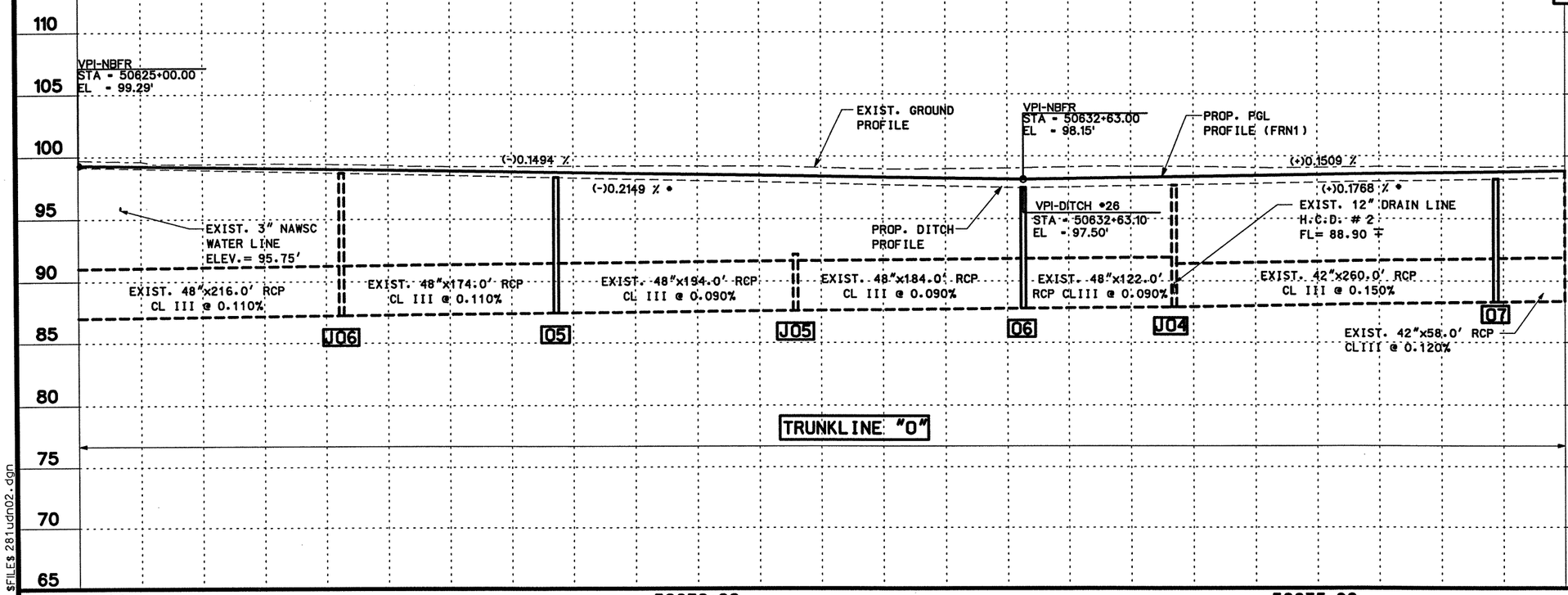

THE SEAL APPEARING ON THIS DOCUMENT WAS AUTHORIZED BY RAMIRO GUTIERREZ, P.E. 65948

DATE: 8-12-03

ALTERATION OF A SEALED DOCUMENT WITHOUT PROPER NOTIFICATION TO THE RESPONSIBLE ENGINEER IS AN OFFENSE UNDER THE TEXAS ENGINEERING PRATICE LAW.

Parsons Brinckerhoff Quade & Douglas Inc.

R. Gutierrez Engineering Corporation

Texas Department of Transportation

© 2003 by TxDOT

UTILITIES & DRAINAGE PLAN & PROFILE
NORTHBOUND FRONTAGE ROAD

STA. 50625+00 "FRN1" TO
STA. 50637+00 "FRN1"

SHEET 3 OF 22

PLAN 1"= 100' HORIZ
PROFILE 1"= 10' VERT

DESIGNED:	FED. RD DIV. No.	STATE	FEDERAL AID PROJECT No.			HIGHWAY No.
CHECKED:	6	TEXAS				US 281
DRAWN:	STATE DISTRICT	COUNTY	CONTROL No.	SECTION No.	JOB No.	SHEET No.
CHECKED:	21	HIDALGO	0255	08	091	541

$NAME$
$TIME$
$DATE$
$FILE$ 281udn02.dgn

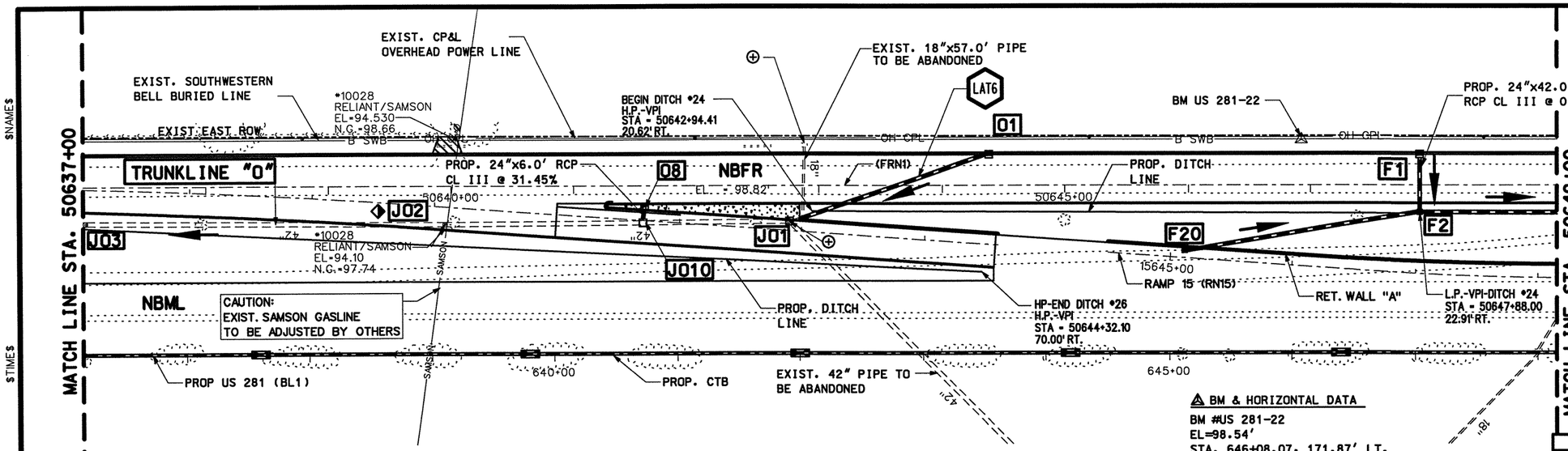

STR. I.D.	DESCRIPTION	STA./OFFSET	TOP OF STR. ELEV.	PROP. FL. OF STR.	PROP. FL. OF PIPE (NORTH)	PROP. FL. OF PIPE (SOUTH)	PROP. FL. OF PIPE (EAST)	PROP. FL. OF PIPE (WEST)
F1	PROP. TY "F" INLET W/1-5.0' EXT.	STA. 50647+88.00, 26.00' LT	97.96'	94.00'	-	-	-	94.00'
F2	PROP. TY "C" GRATE INLET	STA. 50647+88.00, 22.91' RT	97.51'	93.78'	94.78'	93.78'	93.78'	-
O1	PROP. TY "F" INLET	STA. 50644+38.00, 26.00' LT	98.48'	95.00'	-	-	-	95.00'
J01	PROP. JUNCTION BOX (5'x5')	STA. 50642+76.00, 28.80' RT	96.50'	89.25'	89.25'	-	91.50'	-
O8	PROP. TY "A" INLET W/1-5.0' EXT.	STA. 50641+57.20, 20.02' RT.	100.62'	94.00'	-	-		94.00'
J010	PROP. JUNCTION BOX (5'x5')	STA. 50641+56.00, 29.45' RT.	96.20'	89.07'	89.07'	89.07'	91.00'	-
J02	EXIST. MANHOLE (TO BE CAPPED)	STA. 50639+95.00, 30.90' RT.	92.80'	88.82'	88.82'	88.82'	-	-
J03	EXIST. MANHOLE	STA. 50637+02.00, 29.80' RT.	98.18'	88.37'	88.37'	88.37'	-	-
F20	PROP. TY "L1" GRATE INLET	STA. 645+12.10, 82.25' LT ⊗	111.92'	95.30'	-	95.30'	-	-

⊗ MAINLANE STATION

⚠ BM & HORIZONTAL DATA

BM #US 281-22
EL=98.54'
STA. 646+08.07, 171.87' LT.
3¼" TxDOT ALUMINUM DISK

NOTE:

1.) ALL UTILITIES SHALL BE THE RESPONSIBITILY OF THE CONTRACTOR TO VERIFY HORIZONTAL & VERTICAL INFORMATION IN THE FIELD.
2.) ALL ABANDONED PIPE TO BE CAPPED, SUBSIDIARY TO ITEM 496.
3.) CONTRACTOR TO COORDINATE WITH S.W.B. TELEPHONE FOR NEW/EXIST SERVICE LINE PRIOR TO CONSTRUCTION

LEGEND

- -PROP. DITCH FLOWLINE
- -STORM SEWER FLOW DIRECTION
- NBFR -NORTH BOUND FRONTAGE ROAD
- NBML -NORTH BOUND MAINLANES
- B -BURIED TELEPHONE CABLE
- OH -OVERHEAD POWER LINES
- 8" SS -EXIST. SANITARY SEWER LINE
- -DRAINAGE STR. TO BE CAPPED
- -PROPOSED LUMINAIRE
- O7 -STRUCTURE I.D.
- -RCP TO REMAIN
- -RCP TO BE ABANDONED
- H.P. -DITCH HIGH POINT
- L.P. -DITCH LOW POINT
- LAT1 -LATERAL I.D.
- -EXIST. MANHOLE/INLET TO BE REMOVED (ITEM 496)
- -PROP. TRUNK LINE

SHEET TOTALS

ITEM	EST.	FINAL	UNIT	DESCRIPTION
*400	270		CY	SEWER EXCAVATION
464	357		FT	RCP (CL III) 18 IN
464	48		FT	RCP (CL III) 24 IN
465	2		EA	JUNCTION BOX (5'x5')
465	2		EA	INLET (TY) "F"
465	1		EA	INLET (TY) "C"
465	1		EA	INLET (TY) "A"
465	1		EA	INLET (TY) "L1"
465	2		EA	5.0' EXTENTIONS
479	1		EA	ADJUST INLET (JUNC. BOX)
496	2		EA	REMOVE OLD STR. (SMALL)

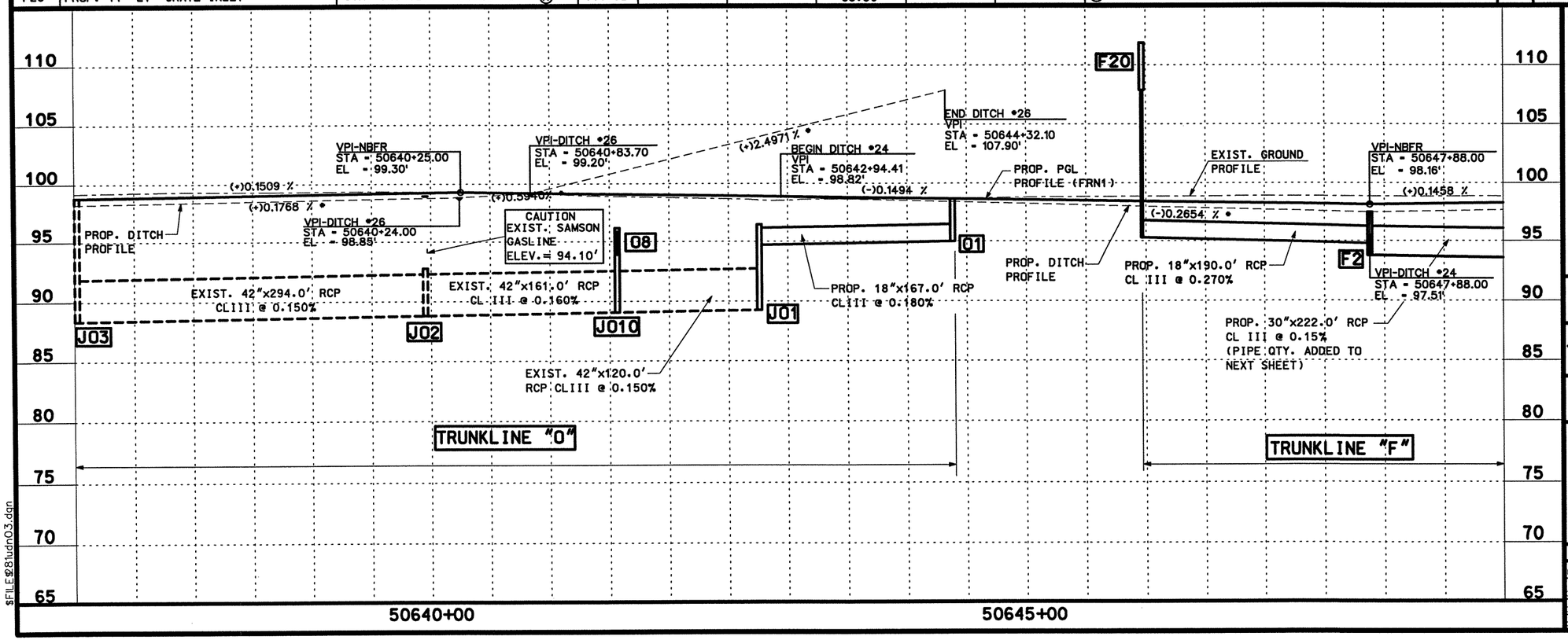

* FOR CONTRACTORS INFORMATION ONLY

STATE OF TEXAS
RAMIRO GUTIERREZ
65948
REGISTERED PROFESSIONAL ENGINEER

THE SEAL APPEARING ON THIS DOCUMENT WAS AUTHORIZED BY RAMIRO GUTIERREZ, P.E. 65948

DATE: 8-12-03

ALTERATION OF A SEALED DOCUMENT WITHOUT PROPER NOTIFICATION TO THE RESPONSIBLE ENGINEER IS AN OFFENSE UNDER THE TEXAS ENGINEERING PRATICE LAW.

Parsons Brinckerhoff Quade & Douglas Inc.

R. Gutierrez Engineering Corporation

Texas Department of Transportation

© 2003 by TxDOT

UTILITIES & DRAINAGE PLAN & PROFILE NORTHBOUND FRONTAGE ROAD

STA. 50637+00 "FRN1" TO STA. 50649+00 "FRN1"

SHEET 4 OF 22

PLAN 1"= 100' HORIZ
PROFILE 1"= 10' VERT

DESIGNED:	FED. RD DIV. No.	STATE	FEDERAL AID PROJECT No.		HIGHWAY No.	
CHECKED:	6	TEXAS			US 281	
DRAWN:	STATE DISTRICT	COUNTY	CONTROL No.	SECTION No.	JOB No.	SHEET No.
CHECKED:	21	HIDALGO	0255	08	091	542

$NAME$
$TIME$
$DATE$
$FILE$ 281udn03.dgn

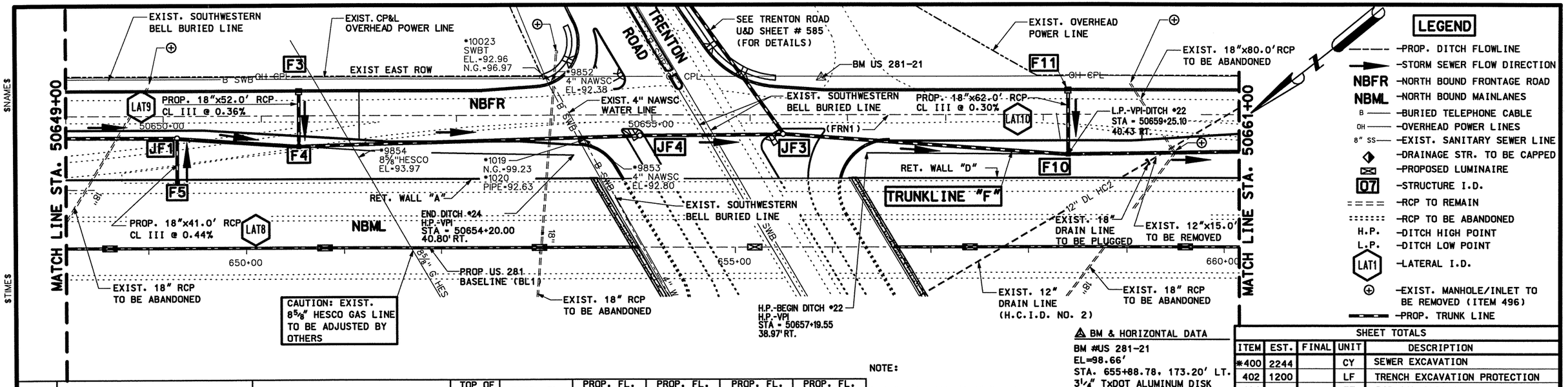

STR. I.D.	DESCRIPTION	STA./OFFSET	TOP OF STR. ELEV.	PROP. FL. OF STR.	PROP. FL. OF PIPE (NORTH)	PROP. FL. OF PIPE (SOUTH)	PROP. FL. OF PIPE (EAST)	PROP. FL. OF PIPE (WEST)
F3	PROP. TY "F" INLET W/1-5.0' EXT.	STA. 50651+38.00, 26.00' LT	98.47'	92.94'	–	–	–	92.94'
F4	PROP. TY "C" GRATE INLET	STA. 50651+37.97, 31.20' RT	98.16'	92.74'	92.74'	92.74'	92.74'	–
F5	PROP. TY "L1" GRATE INLET	STA. 649+29.62, 68.02' LT ⊗	118.53'	93.64'	–	–	93.64'	–
F10	PROP. TY "C" GRATE INLET	STA. 50659+25.10, 40.43' RT	97.90'	91.02'	91.02'	91.02'	93.02'	–
F11	PROP. TY "F" INLET W/1-5.0' EXT.	STA. 50659+25.00, 26.00' LT	98.26'	93.22'	–	–	–	93.22'
JF1	PROP. TY "M" MANHOLE	STA. 50650+13.93, 22.48' RT	97.93'	92.94'	93.44'	92.94'	–	93.44'
JF3	PROP. TY "M" MANHOLE	STA. 50656+33.87, 19.63' RT.	99.87'	91.49'	91.49'	91.49'	92.70'	–
JF4	PROP. JUNCTION BOX	STA. 50654+87.73, 20.94' RT	97.00'	91.71'	92.21'	91.71'	–	–

NOTE:
1.) ALL UTILITIES SHALL BE THE RESPONSIBILITIY OF THE CONTRACTOR TO VERIFY HORIZONTAL & VERTICAL INFORMATION IN THE FIELD.
2.) ALL ABANDONED PIPE TO BE CAPPED, SUBSIDIARY TO ITEM 496.
3.) CONTRACTOR TO COORDINATE WITH S.W.B. TELEPHONE FOR NEW/EXIST SERVICE LINE PRIOR TO CONSTRUCTION

⊗ MAINLANE STATION * FOR CONTRACTORS INFORMATION ONLY

⚠ BM & HORIZONTAL DATA
BM #US 281-21
EL=98.66'
STA. 655+88.78. 173.20' LT.
3¼" TxDOT ALUMINUM DISK

SHEET TOTALS

ITEM	EST.	FINAL	UNIT	DESCRIPTION
*400	2244		CY	SEWER EXCAVATION
402	1200		LF	TRENCH EXCAVATION PROTECTION
464	155		FT	RCP (CL III) 18 IN
464	222		FT	RCP (CL III) 30 IN
464	467		FT	RCP (CL III) 36 IN
464	648		FT	RCP (CL III) 42 IN
465	2		EA	MANHOLE (TY) "M"
465	2		EA	INLET (TY) "C"
465	2		EA	INLET (TY) "F"
465	2		EA	5.0' EXTENTIONS
465	1		EA	INLET (TY) "L1"
465	1		EA	JUNCTION BOX
496	4		EA	REMOVE OLD STR. (SMALL)
496	80		LF	REMOVE OLD STR. (PIPE)

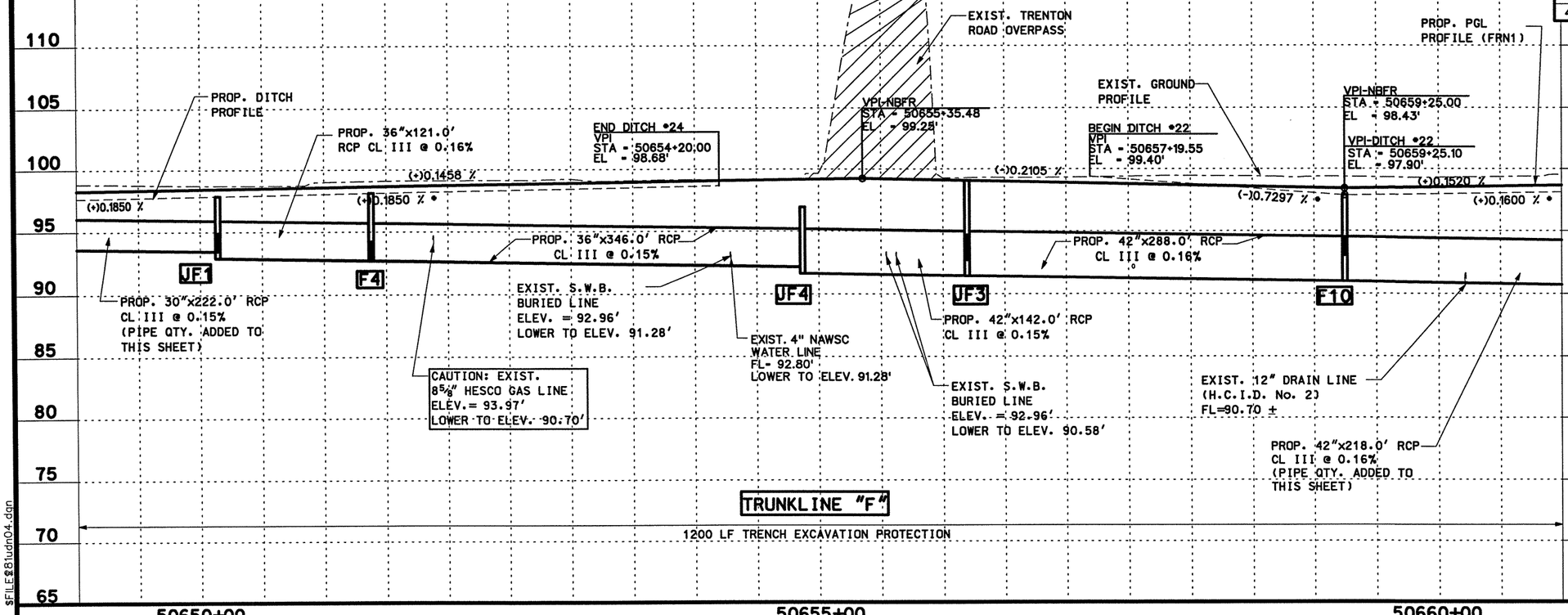

STATE OF TEXAS
RAMIRO GUTIERREZ
65948
REGISTERED PROFESSIONAL ENGINEER

THE SEAL APPEARING ON THIS DOCUMENT WAS AUTHORIZED BY RAMIRO GUTIERREZ, P.E. 65948
DATE: 8-12-03
ALTERATION OF A SEALED DOCUMENT WITHOUT PROPER NOTIFICATION TO THE RESPONSIBLE ENGINEER IS AN OFFENSE UNDER THE TEXAS ENGINEERING PRATICE LAW.

Parsons Brinckerhoff Quade & Douglas Inc.

R. Gutierrez Engineering Corporation

Texas Department of Transportation

© 2003 by TxDOT

UTILITIES & DRAINAGE PLAN & PROFILE NORTHBOUND FRONTAGE ROAD

STA. 50649+00 "FRN1" TO STA. 50661+00 "FRN1"

SHEET 5 OF 22

PLAN 1"= 100' HORIZ
PROFILE 1"= 10' VERT

DESIGNED:	FED. RD DIV. No.	STATE	FEDERAL AID PROJECT No.			HIGHWAY No.
CHECKED:	6	TEXAS				US 281
DRAWN:	STATE DISTRICT	COUNTY	CONTROL No.	SECTION No.	JOB No.	SHEET No.
CHECKED:	21	HIDALGO	0255	08	091	543

$NAME$
$TIME$
$DATE$
$FILE$81udn04.dgn

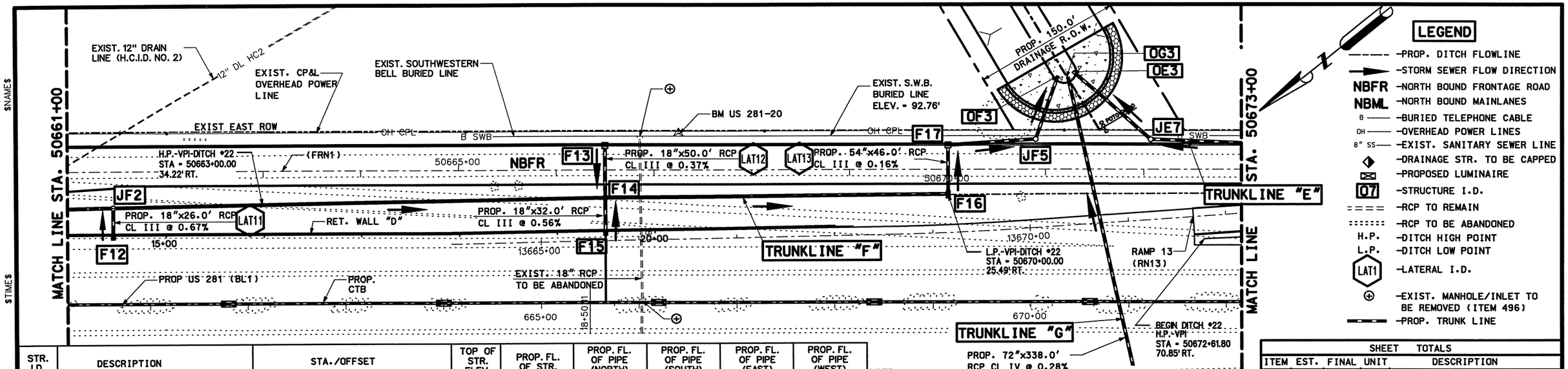

LEGEND

- PROP. DITCH FLOWLINE
- STORM SEWER FLOW DIRECTION
- NBFR — NORTH BOUND FRONTAGE ROAD
- NBML — NORTH BOUND MAINLANES
- B —— BURIED TELEPHONE CABLE
- OH —— OVERHEAD POWER LINES
- 8" SS —— EXIST. SANITARY SEWER LINE
- DRAINAGE STR. TO BE CAPPED
- PROPOSED LUMINAIRE
- 07 — STRUCTURE I.D.
- RCP TO REMAIN
- RCP TO BE ABANDONED
- H.P. — DITCH HIGH POINT
- L.P. — DITCH LOW POINT
- LAT1 — LATERAL I.D.
- EXIST. MANHOLE/INLET TO BE REMOVED (ITEM 496)
- PROP. TRUNK LINE

STR. I.D.	DESCRIPTION	STA./OFFSET	TOP OF STR. ELEV.	PROP. FL. OF STR.	PROP. FL. OF PIPE (NORTH)	PROP. FL. OF PIPE (SOUTH)	PROP. FL. OF PIPE (EAST)	PROP. FL. OF PIPE (WEST)
F12	PROP. TY "L1" GRATE INLET	STA. 660+62.15, 68.0' LT ⊗	119.33'	92.87'	–	–	92.87'	–
F13	PROP. TY "F" INLET	STA. 50666+50.00, 26.00' LT	98.28'	91.61'	–	–	–	91.61'
F14	PROP. TY "CC" GRATE INLET	STA. 50666+50.04, 28.22' RT	97.94'	89.41'	89.41'	89.41'	91.41'	91.41'
F15	PROP. TY "L1" GRATE INLET	STA. 665+66.06, 70.45' LT ⊗	111.88'	91.61'	–	–	91.61'	–
F16	PROP. TY "CC" GRATE INLET	STA. 50670+00.00, 25.49' RT	97.38'	88.88'	88.88'	–	88.88'	–
F17	PROP. TY "F" INLET W/1-5.0' EXT.	STA. 50670+00.00, 26.00' LT	97.90'	88.30'	–	88.30'	–	88.80'
JF2	PROP. TY "A1" MANHOLE	STA. 50661+46.61, 36.85' LT	98.17'	90.67'	90.67'	90.67'	–	92.67'
OG3	PROP. OUTFALL LINE "G"	STA. 50671+22.15, 94.71' LT	–	87.19'	–	–	87.19'	–
JF5	PROP. JUNC. BOX	STA. 50670+90.00, 30.00' LT	93.66'	88.16'	88.16'	–	88.16'	–
JE7	PROP. JUNC. BOX	STA. 50672+08.00, 30.00' LT	94.52'	89.02'	–	89.02'	89.02'	–
OF3	PROP. OUTFALL LINE "F"	STA. 50671+12.67, 95.79' LT	–	87.19'	–	–	87.19'	–
OE3	PROP. OUTFALL LINE "E"	STA. 50671+27.94, 100.42' LT	–	87.19'	–	–	87.19'	–

NOTE:

1.) ALL UTILITIES SHALL BE THE RESPONSIBITIY OF THE CONTRACTOR TO VERIFY HORIZONTAL & VERTICAL INFORMATION IN THE FIELD.
2.) ALL ABANDONED PIPE TO BE CAPPED, SUBSIDIARY TO ITEM 496.
3.) CONTRACTOR TO COORDINATE WITH S.W.B. TELEPHONE FOR NEW/EXIST SERVICE LINE PRIOR TO CONSTRUCTION

⊗ MAINLANE STATION

⚠ BM & HORIZONTAL DATA

BM #US 281-20
EL=98.51'
STA. 666+40.54, 172.14' LT.
3¼" TxDOT ALUMINUM DISK

SHEET TOTALS

ITEM	EST.	FINAL	UNIT	DESCRIPTION
*400	4418		CY	SEWER EXCAVATION
402	1200		LF	TRENCH EXCAVATION PROTECTION
464	108		FT	RCP (CL III) 18 IN
464	892		FT	RCP (CL III) 54 IN
464	394		FT	RCP (CL III) 60 IN
465	2		EA	INLET (TY) "F"
465	2		EA	INLET (TY) "CC"
465	2		EA	INLET (TY) "L1"
465	2		EA	JUNCTION BOX
465	1		EA	5.0' EXTENTIONS
465	1		EA	MANHOLE (TY) "A1"
496	2		EA	REMOVE OLD STR. (SMALL)

* FOR CONTRACTORS INFORMATION ONLY

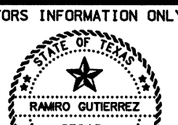

THE SEAL APPEARING ON THIS DOCUMENT WAS AUTHORIZED BY RAMIRO GUTIERREZ, P.E. 65948

DATE: 8-12-03

ALTERATION OF A SEALED DOCUMENT WITHOUT PROPER NOTIFICATION TO THE RESPONSIBLE ENGINEER IS AN OFFENSE UNDER THE TEXAS ENGINEERING PRATICE LAW.

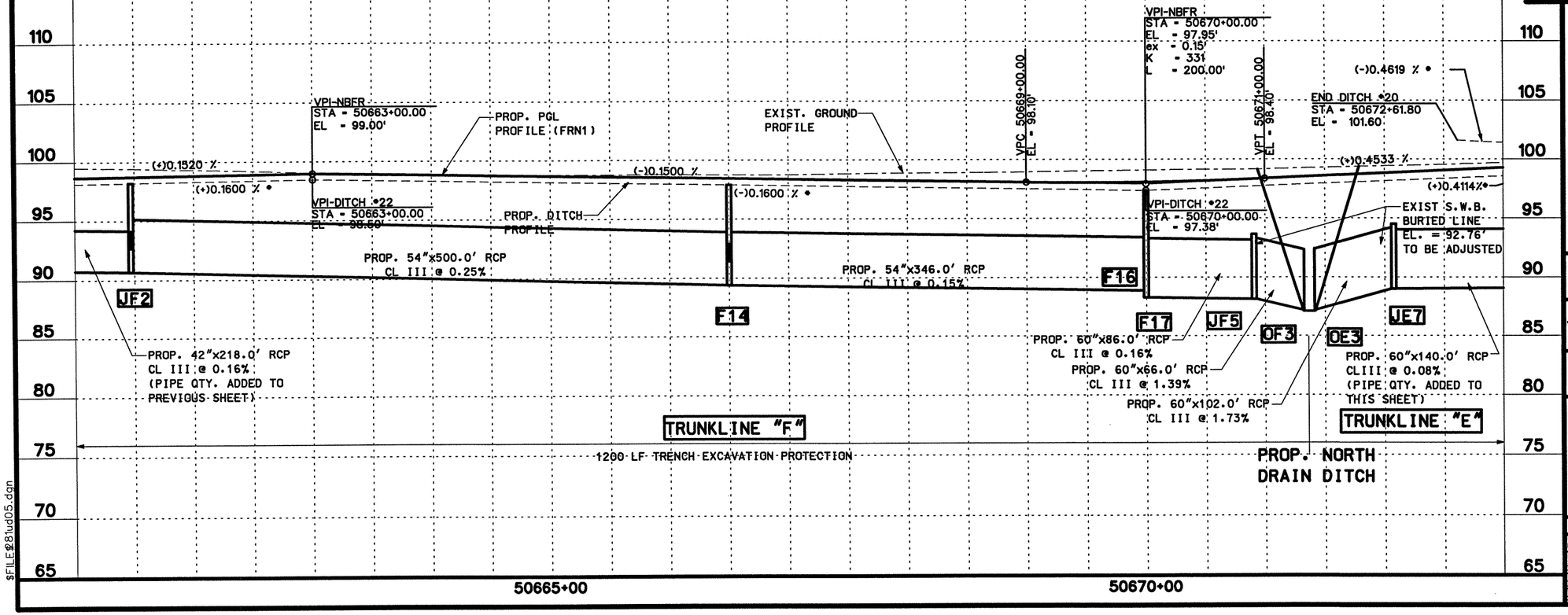

Parsons Brinckerhoff Quade & Douglas Inc.

R. Gutierrez Engineering Corporation

Texas Department of Transportation

© 2003 by TxDOT

UTILITIES & DRAINAGE PLAN & PROFILE NORTHBOUND FRONTAGE ROAD

STA. 50661+00 "FRN1" TO
STA. 50673+00 "FRN1"

SHEET 6 OF 22

PLAN 1"= 100' HORIZ
PROFILE 1"= 10' VERT

DESIGNED:	FED. RD DIV. No.	STATE	FEDERAL AID PROJECT No.		HIGHWAY No.	
CHECKED:	6	TEXAS			US 281	
DRAWN:	STATE DISTRICT	COUNTY	CONTROL No.	SECTION No.	JOB No.	SHEET No.
CHECKED:	21	HIDALGO	0255	08	091	544

$NAME$
$TIME$
$DATE$
$FILE@281ud05.dgn

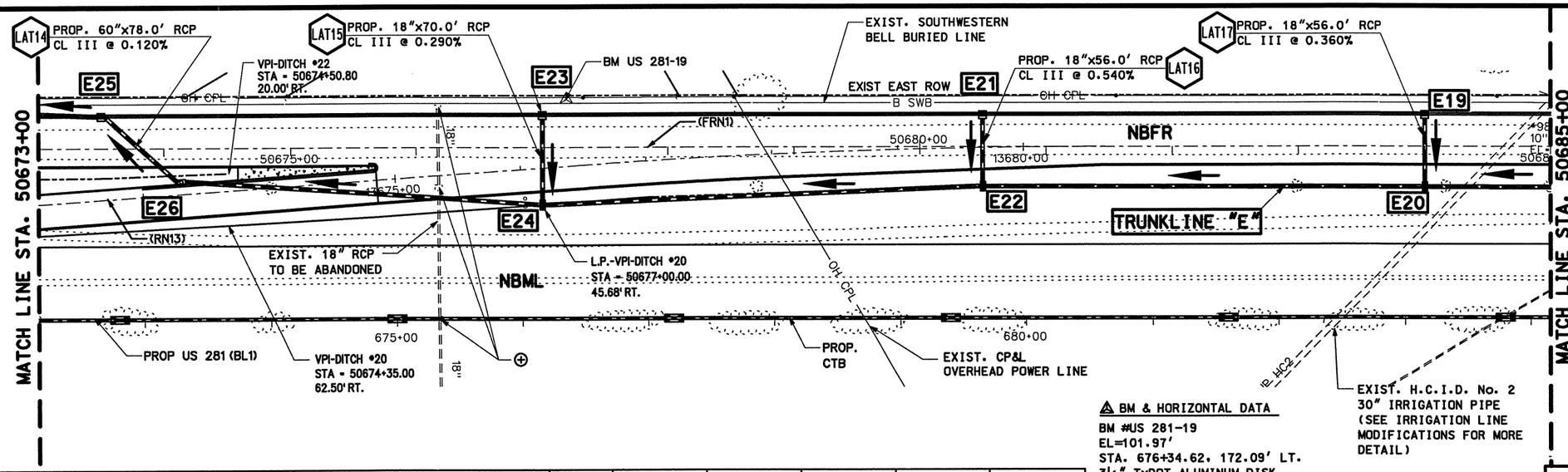

LEGEND

- –PROP. DITCH FLOWLINE
- –STORM SEWER FLOW DIRECTION
- NBFR –NORTH BOUND FRONTAGE ROAD
- NBML –NORTH BOUND MAINLANES
- B –BURIED TELEPHONE CABLE
- OH –OVERHEAD POWER LINES
- 8" SS –EXIST. SANITARY SEWER LINE
- –DRAINAGE STR. TO BE CAPPED
- –PROPOSED LUMINAIRE
- 07 –STRUCTURE I.D.
- –RCP TO REMAIN
- –RCP TO BE ABANDONED
- H.P. –DITCH HIGH POINT
- L.P. –DITCH LOW POINT
- LAT1 –LATERAL I.D.
- –EXIST. MANHOLE/INLET TO BE REMOVED (ITEM 496)
- –PROP. TRUNK LINE

STR. I.D.	DESCRIPTION	STA./OFFSET	TOP OF STR. ELEV.	PROP. FL. OF STR.	PROP. FL. OF PIPE (NORTH)	PROP. FL. OF PIPE (SOUTH)	PROP. FL. OF PIPE (EAST)	PROP. FL. OF PIPE (WEST)
E19	PROP. TY "F" INLET W/1-5.0' EXT.	STA. 50684+00.00, 26.00' LT	103.47'	98.50'	–	–	–	98.50'
E20	PROP. TY "CC" INLET	STA. 50684+00.00, 32.29' RT	102.95'	90.78'	90.78'	90.78'	96.80'	–
E21	PROP. TY "F" INLET W/1-5.0' EXT.	STA. 50680+50.00, 26.00' LT	102.20'	97.50'	–	–	–	97.50'
E22	PROP. TY "CC" INLET	STA. 50680+50.29, 31.53' RT	101.73'	90.24'	90.24'	90.24'	96.50'	–
E23	PROP. TY "F" INLET W/1-5.0' EXT.	STA. 50677+00.00, 26.00' LT	100.83'	96.50'	–	–	–	96.50'
E24	PROP. TY "CC" INLET	STA. 50677+00.00, 45.68' RT	100.50'	89.71'	89.71'	89.71'	96.30'	–
E25	PROP. TY "F" INLET W/1-5.0' EXT.	STA. 50673+50.00, 26.00' LT	99.34'	89.14'	89.14'	89.14'	–	–
E26	PROP. TY "A2" INLET	STA. 50674+13.81, 28.61' RT	101.65'	89.24'	89.24'	89.24'	–	–

⚠ BM & HORIZONTAL DATA

BM #US 281-19
EL=101.97'
STA. 676+34.62, 172.09' LT.
3¼" TxDOT ALUMINUM DISK

NOTE:

1.) ALL UTILITIES SHALL BE THE RESPONSIBITILY OF THE CONTRACTOR TO VERIFY HORIZONTAL & VERTICAL INFORMATION IN THE FIELD.
2.) ALL ABANDONED PIPE TO BE CAPPED, SUBSIDIARY TO ITEM 496.
3.) CONTRACTOR TO COORDINATE WITH S.W.B. TELEPHONE FOR NEW/EXIST SERVICE LINE PRIOR TO CONSTRUCTION

SHEET TOTALS

ITEM	EST.	FINAL	UNIT	DESCRIPTION
* 400	4205		CY	SEWER EXCAVATION
402	1200		LF	TRENCH EXCAVATION PROTECTION
464	182		FT	RCP (CL III) 18 IN
464	143		FT	RCP (CL III) 48 IN
464	693		FT	RCP (CL III) 54 IN
464	361		FT	RCP (CL III) 60 IN
465	4		EA	INLET (TY) "F"
465	3		EA	INLET (TY) "CC"
465	1		EA	INLET (TY) "A2"
465	4		EA	5.0' EXTENTIONS
496	3		EA	REMOVE OLD STR. (SMALL)

* FOR CONTRACTORS INFORMATION ONLY

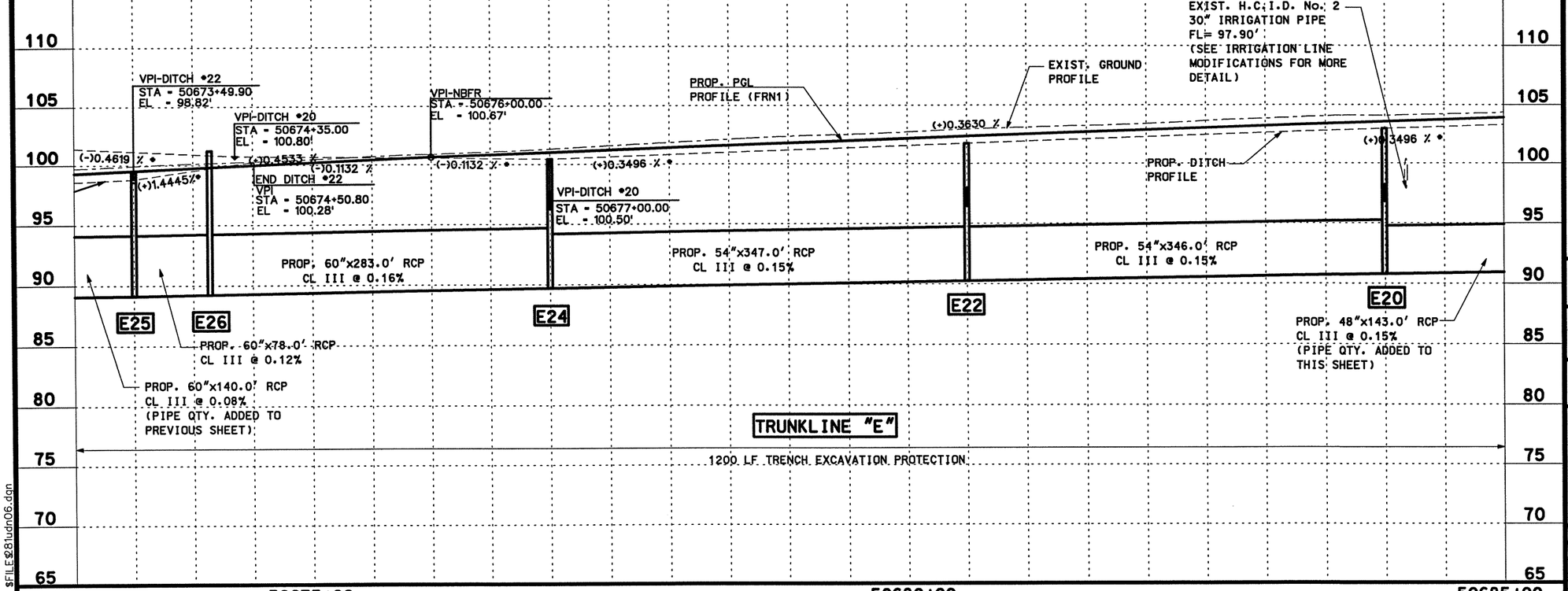

THE SEAL APPEARING ON THIS DOCUMENT WAS AUTHORIZED BY RAMIRO GUTIERREZ, P.E. 65948

DATE: 8-12-03

ALTERATION OF A SEALED DOCUMENT WITHOUT PROPER NOTIFICATION TO THE RESPONSIBLE ENGINEER IS AN OFFENSE UNDER THE TEXAS ENGINEERING PRATICE LAW.

Parsons Brinckerhoff Quade & Douglas Inc.

R. Gutierrez Engineering Corporation

Texas Department of Transportation

© 2003 by TxDOT

UTILITIES & DRAINAGE PLAN & PROFILE NORTHBOUND FRONTAGE ROAD

STA. 50673+00 "FRN1" TO
STA. 50685+00 "FRN1"

SHEET 7 OF 22

PLAN 1"= 100' HORIZ
PROFILE 1"= 10' VERT

DESIGNED:	FED. RD DIV. No.	STATE	FEDERAL AID PROJECT No.			HIGHWAY No.
CHECKED:	6	TEXAS				US 281
DRAWN:	STATE DISTRICT	COUNTY	CONTROL No.	SECTION No.	JOB No.	SHEET No.
CHECKED:	21	HIDALGO	0255	08	091	545

$NAME$
$TIME$
$DATE$
$FILE$281udn06.dgn

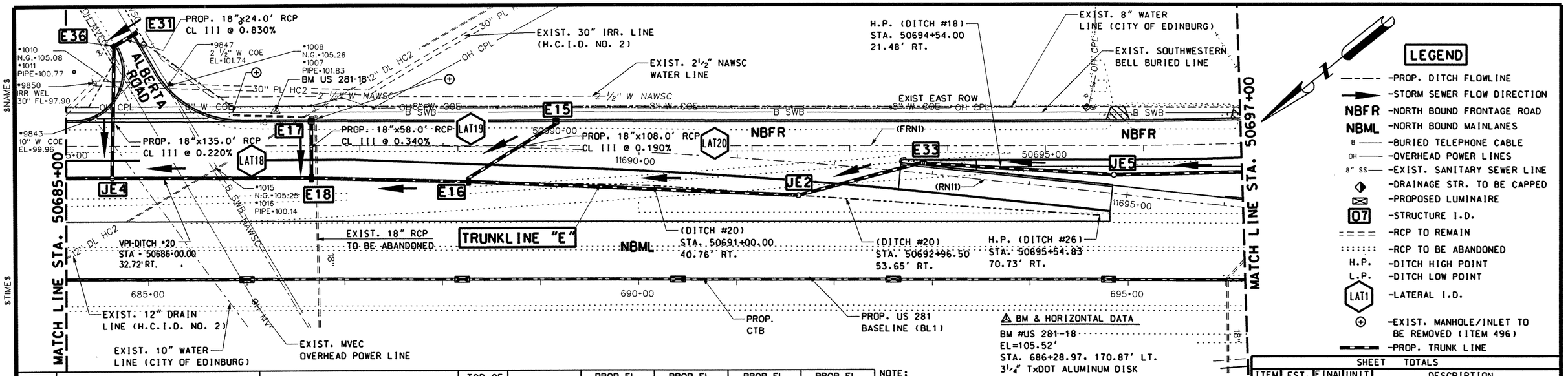

STR. I.D.	DESCRIPTION	STA./OFFSET	TOP OF STR. ELEV.	PROP. FL. OF STR.	PROP. FL. OF PIPE (NORTH)	PROP. FL. OF PIPE (SOUTH)	PROP. FL. OF PIPE (EAST)	PROP. FL. OF PIPE (WEST)
E15	PROP. TY "F" INLET W/1-5.0' EXT.	STA. 50690+00.00, 26.00' LT	105.08'	100.50'	-	-	-	100.50'
E16	PROP. TY "CC" GRATE INLET	STA. 50689+10.72, 36.56' RT	104.41'	92.33'	92.33'	92.33'	97.00'	-
E17	PROP. TY "F" INLET W/1-5.0' EXT.	STA. 50687+50.00, 26.00' LT	104.47'	100.00'	-	-	-	100.00'
E18	PROP. TY "CC" GRATE INLET	STA. 50687+50.00, 33.00' RT	104.01'	91.30'	91.30'	91.80'	97.00'	-
E31	PROP. TY."C" GRATE INLET	STA. 50685+71.50, 115.40' LT	105.69'	99.50'	99.50'	-	-	-
E33	PROP. TY "A" INLET	STA. 11692+90.04, 8.00' LT ●	106.77'	93.04'	93.04'	93.04'	-	-
E36	PROP. TY "C" GRATE INLET	STA. 50685+48.40, 101.80' LT	105.69'	98.00'	-	98.00'	-	98.00'
JE2	PROP. TY "A1" MANHOLE	STA. 50692+47.75, 50.45 RT	105.71'	92.84'	92.84'	92.84'	-	-
JE4	PROP. TY "A1" MANHOLE	STA. 50685+47.20, 32.64' RT	103.46'	91.00'	91.00'	91.00'	97.00'	-
JE5	PROP. JUNCTION BOX	STA. 50695+69.45, 29.66' RT	97.23'	93.33'	93.33'	93.33'	-	-

NOTE:

1.) ALL UTILITIES SHALL BE THE RESPONSIBITILY OF THE CONTRACTOR TO VERIFY HORIZONTAL & VERTICAL INFORMATION IN THE FIELD.
2.) ALL ABANDONED PIPE TO BE CAPPED, SUBSIDIARY TO ITEM 496.
3.) CONTRACTOR TO COORDINATE WITH S.W.B. TELEPHONE FOR NEW/EXIST SERVICE LINE PRIOR TO CONSTRUCTION

● RAMP 11 STATIONING

⚠ BM & HORIZONTAL DATA

BM #US 281-18
EL=105.52'
STA. 686+28.97, 170.87' LT.
3 1/4" TxDOT ALUMINUM DISK

LEGEND

- -PROP. DITCH FLOWLINE
- -STORM SEWER FLOW DIRECTION
- NBFR -NORTH BOUND FRONTAGE ROAD
- NBML -NORTH BOUND MAINLANES
- B -BURIED TELEPHONE CABLE
- OH -OVERHEAD POWER LINES
- 8" SS -EXIST. SANITARY SEWER LINE
- -DRAINAGE STR. TO BE CAPPED
- -PROPOSED LUMINAIRE
- 07 -STRUCTURE I.D.
- -RCP TO REMAIN
- -RCP TO BE ABANDONED
- H.P. -DITCH HIGH POINT
- L.P. -DITCH LOW POINT
- LAT1 -LATERAL I.D.
- -EXIST. MANHOLE/INLET TO BE REMOVED (ITEM 496)
- -PROP. TRUNK LINE

SHEET TOTALS

ITEM	EST.	FINAL	UNIT	DESCRIPTION
* 400	6313		CY	SEWER EXCAVATION
402	1200		FT	TRENCH EXCAVATION PROTECTION
464	326		FT	RCP (CL III) 18 IN
464	1177		FT	RCP (CL III) 42 IN
464	199		FT	RCP (CL III) 48 IN
465	2		EA	INLET (TY) "F"
465	1		EA	INLET (TY) "A"
465	2		EA	INLET (TY) "CC"
465	2		EA	INLET (TY) "C"
465	2		EA	5.0' EXTENTIONS
465	2		EA	MANHOLE (TY) "A1"
465	1		EA	JUNCTION BOX
496	2		EA	REMOVE OLD STR. (SMALL)

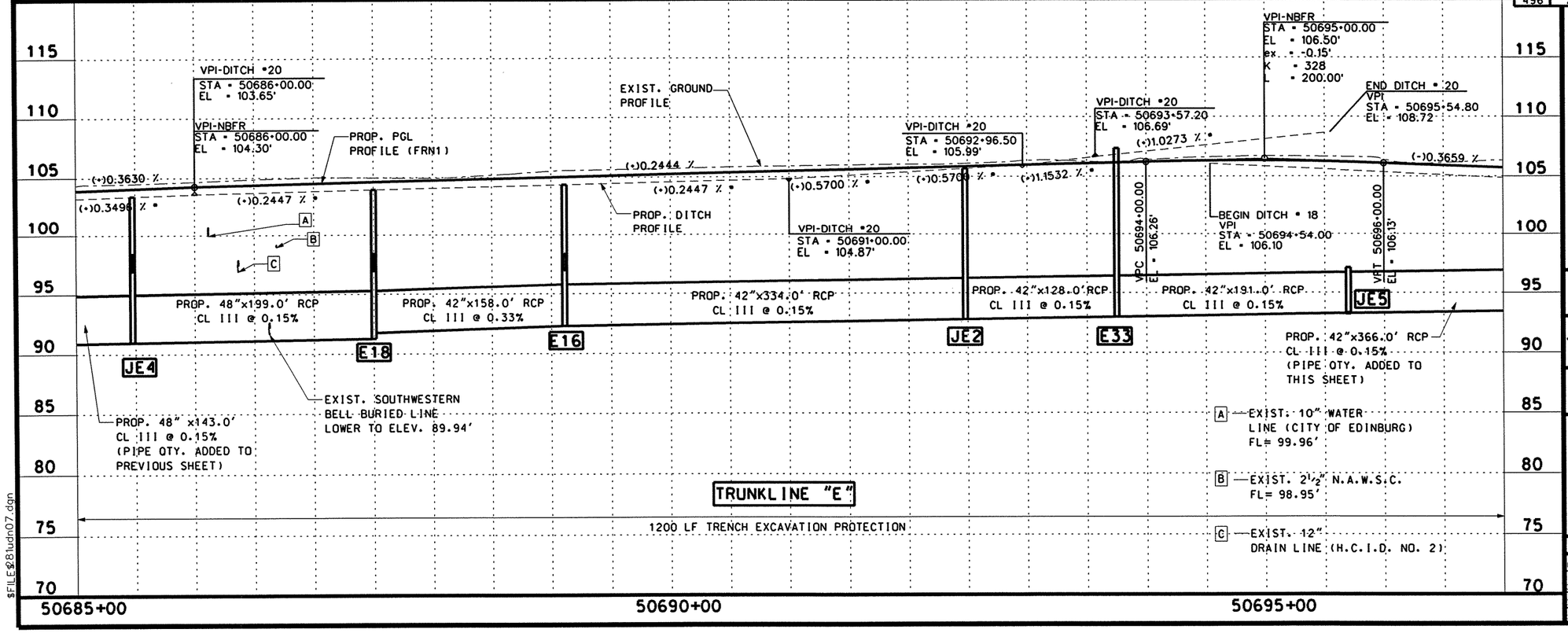

* FOR CONTRACTORS INFORMATION ONLY

STATE OF TEXAS
RAMIRO GUTIERREZ
65948
REGISTERED
PROFESSIONAL ENGINEER

THE SEAL APPEARING ON THIS DOCUMENT WAS AUTHORIZED BY RAMIRO GUTIERREZ, P.E. 65948

DATE: 8-15-03

ALTERATION OF A SEALED DOCUMENT WITHOUT PROPER NOTIFICATION TO THE RESPONSIBLE ENGINEER IS AN OFFENSE UNDER THE TEXAS ENGINEERING PRATICE LAW.

PB Parsons Brinckerhoff Quade & Douglas Inc.

R. Gutierrez Engineering Corporation

Texas Department of Transportation

© 2003 by TxDOT

UTILITIES & DRAINAGE PLAN & PROFILE
NORTHBOUND FRONTAGE ROAD

STA. 50685+00 "FRN1" TO
STA. 50697+00 "FRN1"

SHEET 8 OF 22

PLAN 1"= 100' HORIZ
PROFILE 1"= 10' VERT

DESIGNED:	FED. RD DIV. No.	STATE	FEDERAL AID PROJECT No.			HIGHWAY No.	
CHECKED:	6	TEXAS				US 281	
DRAWN:	STATE DISTRICT	COUNTY	CONTROL No.	SECTION No.	JOB No.	SHEET No.	
CHECKED:	21	HIDALGO	0255	08	091	546	

$FILE$281udn07.dgn
$NAME$
$TIME$
$DATE$

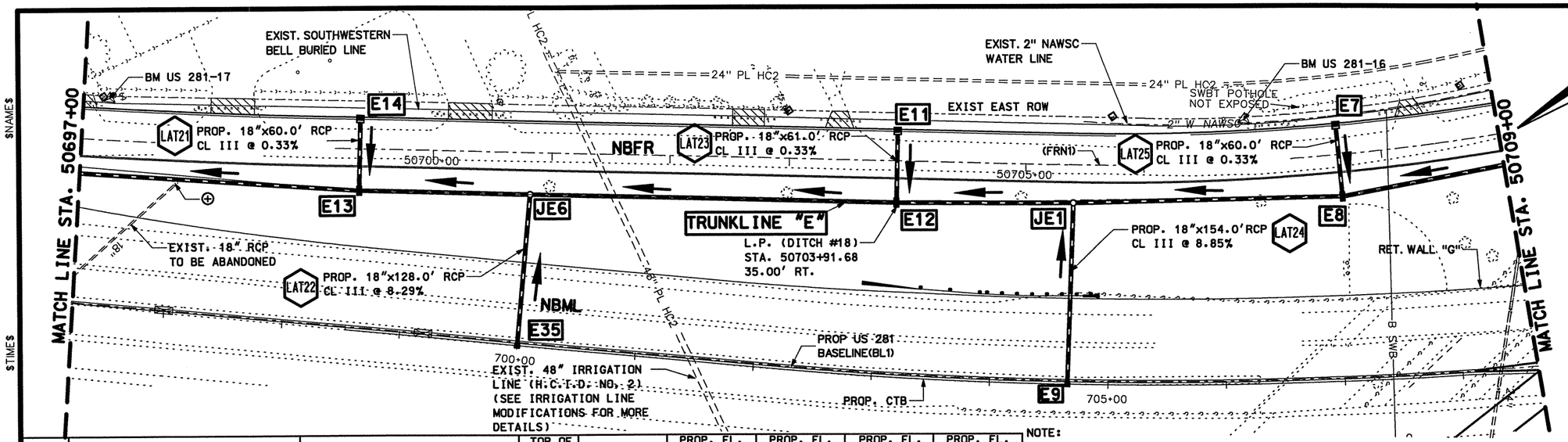

LEGEND

- PROP. DITCH FLOWLINE
- STORM SEWER FLOW DIRECTION
- NBFR —NORTH BOUND FRONTAGE ROAD
- NBML —NORTH BOUND MAINLANES
- B —BURIED TELEPHONE CABLE
- OH —OVERHEAD POWER LINES
- 8" SS —EXIST. SANITARY SEWER LINE
- DRAINAGE STR. TO BE CAPPED
- PROPOSED LUMINAIRE
- 07 —STRUCTURE I.D.
- RCP TO REMAIN
- RCP TO BE ABANDONED
- H.P. —DITCH HIGH POINT
- L.P. —DITCH LOW POINT
- LAT1 —LATERAL I.D.
- EXIST. MANHOLE/INLET TO BE REMOVED (ITEM 496)
- PROP. TRUNK LINE

STR. I.D.	DESCRIPTION	STA./OFFSET	TOP OF STR. ELEV.	PROP. FL. OF STR.	PROP. FL. OF PIPE (NORTH)	PROP. FL. OF PIPE (SOUTH)	PROP. FL. OF PIPE (EAST)	PROP. FL. OF PIPE (WEST)
E7	PROP. TY "F" INLET W/1-5.0' EXT.	STA. 50707+63.40, 26.00' LT	103.90'	99.50'	-	-	-	99.50'
E8	PROP. TY "CC" GRATE INLET	STA. 50707+63.78, 35.00' RT	103.14'	95.64'	95.64'	95.64'	97.50'	-
E9	PROP. TY "L1" GRATE INLET	STA. 704+65.52, 3.0' RT ⊗	116.65'	110.37'	-	-	110.37'	-
E11	PROP. TY "F" INLET W/1-5.0' EXT.	STA. 50703+91.59, 26.00' LT	103.39'	98.50'	-	-	-	98.50'
E12	PROP. TY "CC" GRATE INLET	STA. 50703+91.68, 35.00' RT	102.35'	94.57'	94.57'	95.07'	98.30'	-
E13	PROP. TY "CC" GRATE INLET	STA. 50699+37.70, 34.92' RT	103.75'	93.89'	93.89'	93.89'	97.50'	-
E14	PROP. TY "F" INLET W/1-5.0' EXT.	STA. 50699+37.65, 26.00' LT	104.70'	99.50'	-	-	-	99.50'
JE1	PROP. TY "A" MANHOLE	STA. 50705+40.65, 32.00' RT	102.67'	95.30'	95.30'	95.30'	-	96.80'
E35	PROP. TY "L1" INLET	STA. 700+00.00, 3.0' RT ⊗	112.98'	106.98'	-	-	106.98'	-
JE6	PROP. TY "A" MANHOLE	STA. 50700+82.00, 34.92' RT	103.30'	94.11'	94.11'	94.11'	-	96.41'

NOTE:

1.) ALL UTILITIES SHALL BE THE RESPONSIBITILY OF THE CONTRACTOR TO VERIFY HORIZONTAL & VERTICAL INFORMATION IN THE FIELD.
2.) ALL ABANDONED PIPE TO BE CAPPED, SUBSIDIARY TO ITEM 496.
3.) CONTRACTOR TO COORDINATE WITH S.W.B. TELEPHONE FOR NEW/EXIST SERVICE LINE PRIOR TO CONSTRUCTION

⊗ MAINLANE STATION

⚠ BM & HORIZONTAL DATA

BM #US 281-16
EL=103.82'
STA. 706+19.13, 220.37' LT.
3¼" TxDOT ALUMINUM DISK

BM #US 281-17
EL=105.58'
STA. 696+39.23, 173.41' LT.
3¼" TxDOT ALUMINUM DISK

SHEET TOTALS

ITEM	EST.	FINAL	UNIT	DESCRIPTION
*400	3872		CY	SEWER EXCAVATION
402	1453		LF	TRENCH EXCAVATION PROTECTION
464	709		FT	RCP (CL III) 36 IN
464	463		FT	RCP (CL III) 18 IN
464	446		FT	RCP (CL III) 42 IN
465	2		EA	MANHOLE (TY) "A"
465	3		EA	INLET (TY) "F"
465	3		EA	5.00 FT. EXTENTIONS
465	2		EA	INLET (TY) "L1"
465	3		EA	INLET (TY) "CC"
496	1		EA	REMOVE OLD STR. (SMALL)

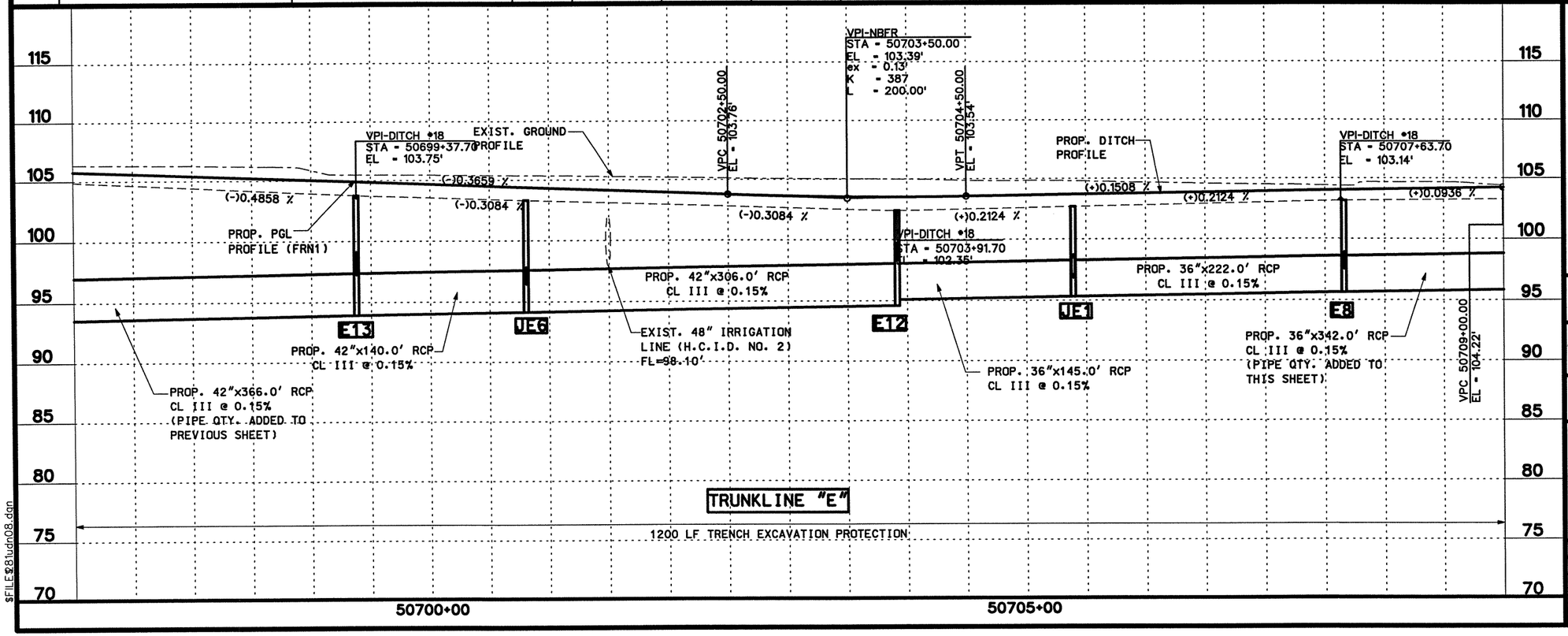

* FOR CONTRACTORS INFORMATION ONLY

STATE OF TEXAS
RAMIRO GUTIERREZ
65948
REGISTERED PROFESSIONAL ENGINEER

THE SEAL APPEARING ON THIS DOCUMENT WAS AUTHORIZED BY RAMIRO GUTIERREZ, P.E. 65948

DATE: 8-12-03

ALTERATION OF A SEALED DOCUMENT WITHOUT PROPER NOTIFICATION TO THE RESPONSIBLE ENGINEER IS AN OFFENSE UNDER THE TEXAS ENGINEERING PRATICE LAW.

Parsons Brinckerhoff Quade & Douglas Inc.

R. Gutierrez Engineering Corporation

Texas Department of Transportation

© 2003 by TxDOT

UTILITIES & DRAINAGE PLAN & PROFILE NORTHBOUND FRONTAGE ROAD

STA. 50697+00 "FRN1" TO
STA. 50709+00 "FRN1"

SHEET 9 OF 22

PLAN 1"= 100' HORIZ
PROFILE 1"= 10' VERT

DESIGNED:	FED. RD DIV. No.	STATE	FEDERAL AID PROJECT No.			HIGHWAY No.	
CHECKED:	6	TEXAS				US 281	
DRAWN:	STATE DISTRICT	COUNTY	CONTROL No.	SECTION No.	JOB No.	SHEET No.	
CHECKED:	21	HIDALGO	0255	08	091	547	

$NAME$
$TIME$
$DATE$
$FILE$81udn08.dgn

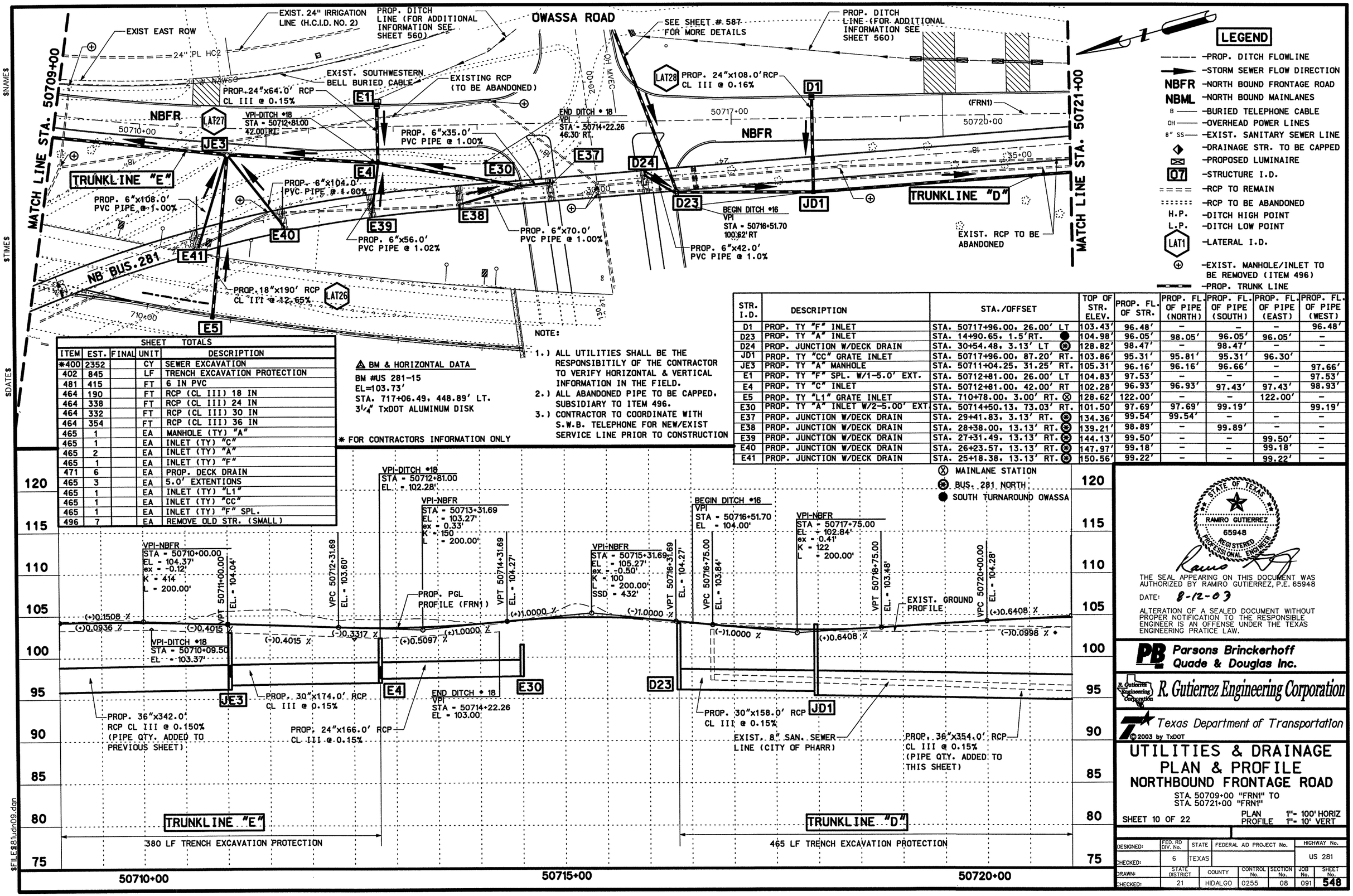

LEGEND

- –PROP. DITCH FLOWLINE
- –STORM SEWER FLOW DIRECTION
- NBFR –NORTH BOUND FRONTAGE ROAD
- NBML –NORTH BOUND MAINLANES
- B –BURIED TELEPHONE CABLE
- OH –OVERHEAD POWER LINES
- 8" SS –EXIST. SANITARY SEWER LINE
- –DRAINAGE STR. TO BE CAPPED
- –PROPOSED LUMINAIRE
- 07 –STRUCTURE I.D.
- –RCP TO REMAIN
- –RCP TO BE ABANDONED
- H.P. –DITCH HIGH POINT
- L.P. –DITCH LOW POINT
- LAT1 –LATERAL I.D.
- –EXIST. MANHOLE/INLET TO BE REMOVED (ITEM 496)
- –PROP. TRUNK LINE

SHEET TOTALS				
ITEM	EST.	FINAL	UNIT	DESCRIPTION
*400	2352		CY	SEWER EXCAVATION
402	845		LF	TRENCH EXCAVATION PROTECTION
481	415		FT	6 IN PVC
464	190		FT	RCP (CL III) 18 IN
464	338		FT	RCP (CL III) 24 IN
464	332		FT	RCP (CL III) 30 IN
464	354		FT	RCP (CL III) 36 IN
465	1		EA	MANHOLE (TY) "A"
465	1		EA	INLET (TY) "C"
465	2		EA	INLET (TY) "A"
465	1		EA	INLET (TY) "F"
471	6		EA	PROP. DECK DRAIN
465	3		EA	5.0' EXTENTIONS
465	1		EA	INLET (TY) "L1"
465	1		EA	INLET (TY) "CC"
465	1		EA	INLET (TY) "F" SPL.
496	7		EA	REMOVE OLD STR. (SMALL)

BM & HORIZONTAL DATA

BM #US 281-15
EL=103.73'
STA. 717+06.49, 448.89' LT.
3¼" TxDOT ALUMINUM DISK

* FOR CONTRACTORS INFORMATION ONLY

NOTE:

1.) ALL UTILITIES SHALL BE THE RESPONSIBITILY OF THE CONTRACTOR TO VERIFY HORIZONTAL & VERTICAL INFORMATION IN THE FIELD.
2.) ALL ABANDONED PIPE TO BE CAPPED. SUBSIDIARY TO ITEM 496.
3.) CONTRACTOR TO COORDINATE WITH S.W.B. TELEPHONE FOR NEW/EXIST SERVICE LINE PRIOR TO CONSTRUCTION

STR. I.D.	DESCRIPTION	STA./OFFSET	TOP OF STR. ELEV.	PROP. FL. OF STR.	PROP. FL. OF PIPE (NORTH)	PROP. FL. OF PIPE (SOUTH)	PROP. FL. OF PIPE (EAST)	PROP. FL. OF PIPE (WEST)
D1	PROP. TY "F" INLET	STA. 50717+96.00, 26.00' LT	103.43'	96.48'	–	–	–	96.48'
D23	PROP. TY "A" INLET	STA. 14+90.65, 1.5'RT. ●	104.98'	96.05'	98.05'	96.05'	96.05'	–
D24	PROP. JUNCTION W/DECK DRAIN	STA. 30+54.48, 3.13' LT ⊛	128.82'	98.47'	–	98.47'	–	–
JD1	PROP. TY "CC" GRATE INLET	STA. 50717+96.00, 87.20' RT.	103.86'	95.31'	95.81'	95.31'	96.30'	
JE3	PROP. TY "A" MANHOLE	STA. 50711+04.25, 31.25' RT.	105.31'	96.16'	96.16'	96.66'	–	97.66'
E1	PROP. TY "F" SPL. W/1-5.0' EXT.	STA. 50712+81.00, 26.00' LT	104.83'	97.53'	–	–	–	97.53'
E4	PROP. TY "C" INLET	STA. 50712+81.00, 42.00' RT	102.28'	96.93'	96.93'	97.43'	97.43'	98.93'
E5	PROP. TY "L1" GRATE INLET	STA. 710+78.00, 3.00' RT. ⊗	128.62'	122.00'	–	–	122.00'	–
E30	PROP. TY "A" INLET W/2-5.00' EXT	STA. 50714+50.13, 73.03' RT.	101.50'	97.69'	97.69'	99.19'		99.19'
E37	PROP. JUNCTION W/DECK DRAIN	STA. 29+41.83, 3.13' RT. ⊛	134.36'	99.54'	99.54'	–	–	–
E38	PROP. JUNCTION W/DECK DRAIN	STA. 28+38.00, 13.13' RT. ⊛	139.21'	98.89'	–	99.89'	–	–
E39	PROP. JUNCTION W/DECK DRAIN	STA. 27+31.49, 13.13' RT. ⊛	144.13'	99.50'	–	–	99.50'	–
E40	PROP. JUNCTION W/DECK DRAIN	STA. 26+23.57, 13.13' RT. ⊛	147.97'	99.18'	–	–	99.18'	–
E41	PROP. JUNCTION W/DECK DRAIN	STA. 25+18.38, 13.13' RT. ⊛	150.56'	99.22'	–	–	99.22'	–

⊗ MAINLANE STATION
⊛ BUS. 281 NORTH
● SOUTH TURNAROUND OWASSA

STATE OF TEXAS
RAMIRO GUTIERREZ
65948
REGISTERED PROFESSIONAL ENGINEER

THE SEAL APPEARING ON THIS DOCUMENT WAS AUTHORIZED BY RAMIRO GUTIERREZ, P.E. 65948

DATE: 8-12-03

ALTERATION OF A SEALED DOCUMENT WITHOUT PROPER NOTIFICATION TO THE RESPONSIBLE ENGINEER IS AN OFFENSE UNDER THE TEXAS ENGINEERING PRATICE LAW.

Parsons Brinckerhoff Quade & Douglas Inc.

R. Gutierrez Engineering Corporation

Texas Department of Transportation

© 2003 by TxDOT

UTILITIES & DRAINAGE PLAN & PROFILE NORTHBOUND FRONTAGE ROAD

STA. 50709+00 "FRN1" TO STA. 50721+00 "FRN1"

SHEET 10 OF 22

PLAN 1"= 100' HORIZ
PROFILE 1"= 10' VERT

DESIGNED:	FED. RD DIV. No.	STATE	FEDERAL AID PROJECT No.				HIGHWAY No.	
CHECKED:	6	TEXAS					US 281	
DRAWN:	STATE DISTRICT	COUNTY	CONTROL No.	SECTION No.	JOB No.	SHEET No.		
CHECKED:	21	HIDALGO	0255	08	091	548		

$FILE$81udn09.dgn
$NAME$
$TIME$
$DATE$

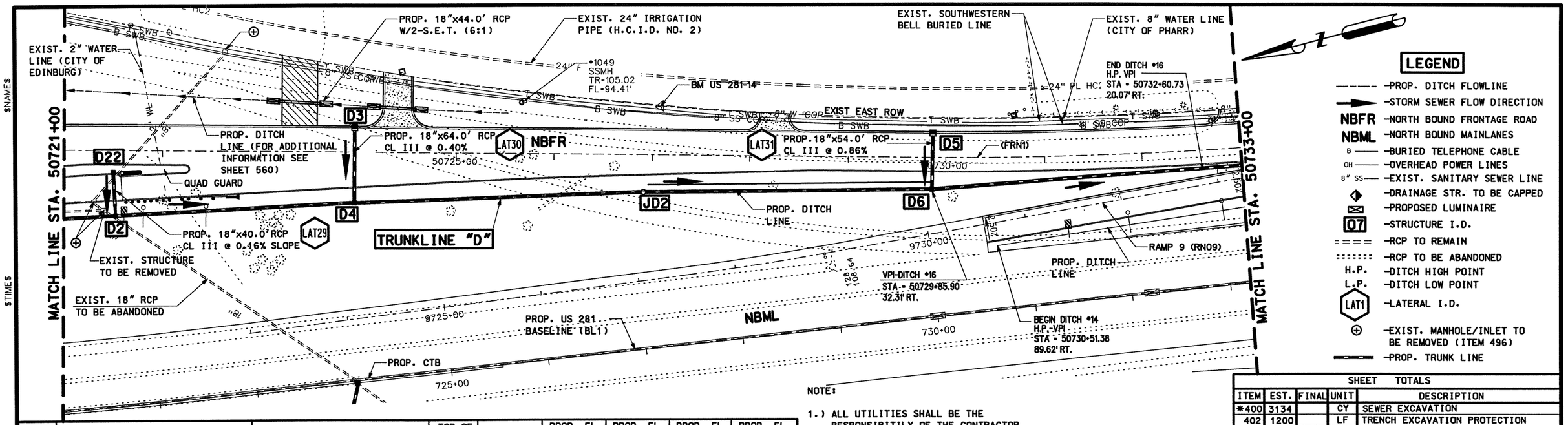

STR. I.D.	DESCRIPTION	STA./OFFSET	TOP OF STR. ELEV.	PROP. FL. OF STR.	PROP. FL. OF PIPE (NORTH)	PROP. FL. OF PIPE (SOUTH)	PROP. FL. OF PIPE (EAST)	PROP. FL. OF PIPE (WEST)
D2	PROP. TY "CC" INLET	STA. 50721+50.79, 66.38' RT	103.50'	94.77'	94.77'	94.77'	96.27'	–
D3	PROP. TY "F" INLET W/1-5.00' EXT.	STA. 50723+96.00, 26.00' LT	104.27'	97.27'	–	–	–	97.27'
D4	PROP. TY "CC" GRATE INLET	STA. 50723+96.00, 42.54' RT	103.25'	94.32'	94.32'	94.32'	97.00'	–
D5	PROP. TY "F" INLET	STA. 50729+86.56, 26.00' LT	103.39'	98.50'	–	–	–	98.50'
D6	PROP. TY "CC" GRATE INLET	STA. 50729+85.90, 32.31' RT	102.44'	93.14'	93.14'	93.14'	98.00'	–
JD2	PROP. TY "M" MANHOLE	STA. 50726+90.96, 37.90' RT.	102.84'	93.73'	93.73'	93.73'	–	–
D22	PROP. TY "L1" INLET	STA. 50721+49.54, 22.50' RT	105.97'	96.34'	–	–	–	96.34'

NOTE:

1.) ALL UTILITIES SHALL BE THE RESPONSIBITILY OF THE CONTRACTOR TO VERIFY HORIZONTAL & VERTICAL INFORMATION IN THE FIELD.
2.) ALL ABANDONED PIPE TO BE CAPPED, SUBSIDIARY TO ITEM 496.
3.) CONTRACTOR TO COORDINATE WITH S.W.B. TELEPHONE FOR NEW/EXIST SERVICE LINE PRIOR TO CONSTRUCTION

⚠ BM & HORIZONTAL DATA

BM #US 281-14
EL=103.90'
STA. 727+41.86, 241.71' LT.
3¼" TxDOT ALUMINUM DISK

LEGEND

- ——— –PROP. DITCH FLOWLINE
- ——► –STORM SEWER FLOW DIRECTION
- NBFR –NORTH BOUND FRONTAGE ROAD
- NBML –NORTH BOUND MAINLANES
- B —— –BURIED TELEPHONE CABLE
- OH —— –OVERHEAD POWER LINES
- 8" SS —— –EXIST. SANITARY SEWER LINE
- ◆ –DRAINAGE STR. TO BE CAPPED
- ⊠ –PROPOSED LUMINAIRE
- O7 –STRUCTURE I.D.
- ==== –RCP TO REMAIN
- ::::::: –RCP TO BE ABANDONED
- H.P. –DITCH HIGH POINT
- L.P. –DITCH LOW POINT
- LAT1 –LATERAL I.D.
- ⊕ –EXIST. MANHOLE/INLET TO BE REMOVED (ITEM 496)
- ——— –PROP. TRUNK LINE

SHEET TOTALS

ITEM	EST.	FINAL	UNIT	DESCRIPTION
*400	3134		CY	SEWER EXCAVATION
402	1200		LF	TRENCH EXCAVATION PROTECTION
464	158		FT	RCP (CL III) 18 IN
464	240		FT	RCP (CL III) 36 IN
464	925		FT	RCP (CL III) 42 IN
465	1		EA	MANHOLE (TY) "M"
465	3		EA	INLET (TY) "CC"
465	2		EA	INLET (TY) "F"
465	1		EA	5.0' EXTENTIONS
465	1		EA	INLET (TY) "L1"
496	3		EA	REMOVE OLD STR. (SMALL)

* FOR CONTRACTORS INFORMATION ONLY

THE SEAL APPEARING ON THIS DOCUMENT WAS AUTHORIZED BY RAMIRO GUTIERREZ, P.E. 65948

DATE: 8-12-03

ALTERATION OF A SEALED DOCUMENT WITHOUT PROPER NOTIFICATION TO THE RESPONSIBLE ENGINEER IS AN OFFENSE UNDER THE TEXAS ENGINEERING PRATICE LAW.

Parsons Brinckerhoff Quade & Douglas Inc.

R. Gutierrez Engineering Corporation

Texas Department of Transportation

©2003 by TxDOT

UTILITIES & DRAINAGE PLAN & PROFILE NORTHBOUND FRONTAGE ROAD

STA. 50721+00 "FRN1" TO STA. 50733+00 "FRN1"

SHEET 11 OF 22

PLAN 1"= 100' HORIZ
PROFILE 1"= 10' VERT

DESIGNED:	FED. RD DIV. No.	STATE	FEDERAL AID PROJECT No.	HIGHWAY No.
CHECKED:	6	TEXAS		US 281

DRAWN:	STATE DISTRICT	COUNTY	CONTROL No.	SECTION No.	JOB No.	SHEET No.
CHECKED:	21	HIDALGO	0255	08	091	549

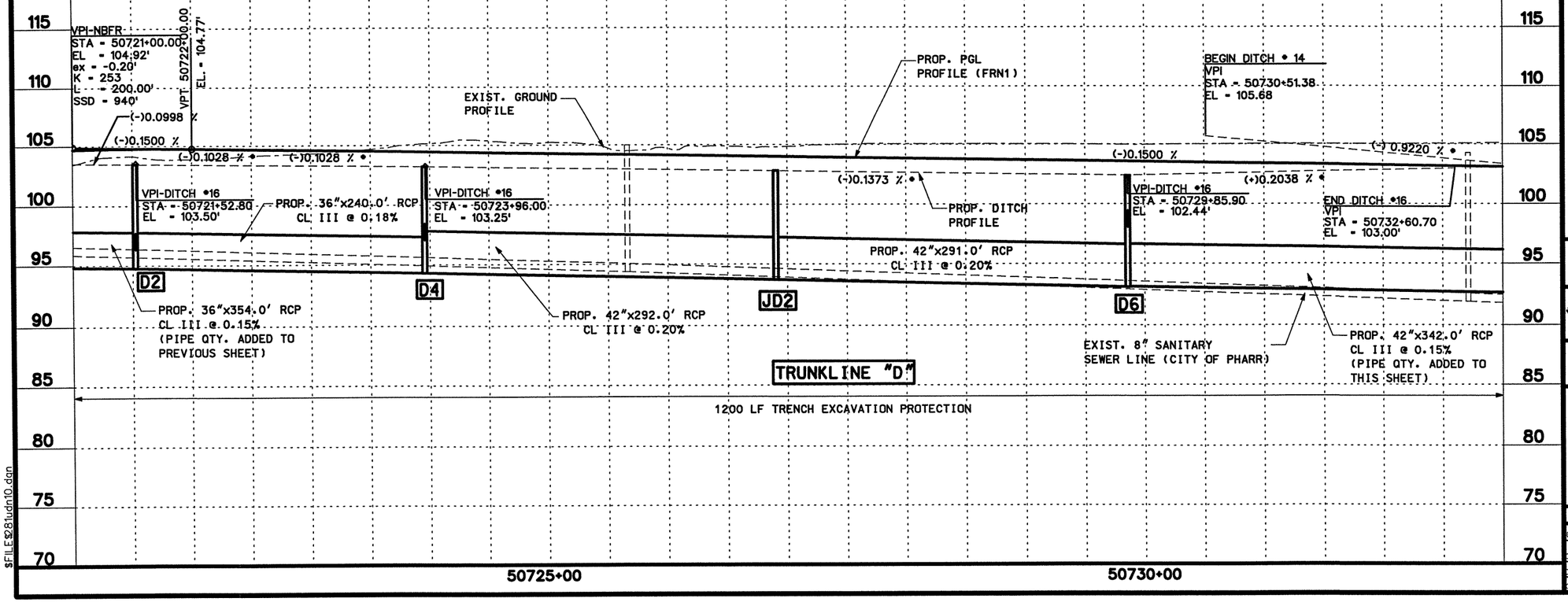

$FILE$281udn10.dgn
$NAME$
$TIME$
$DATE$

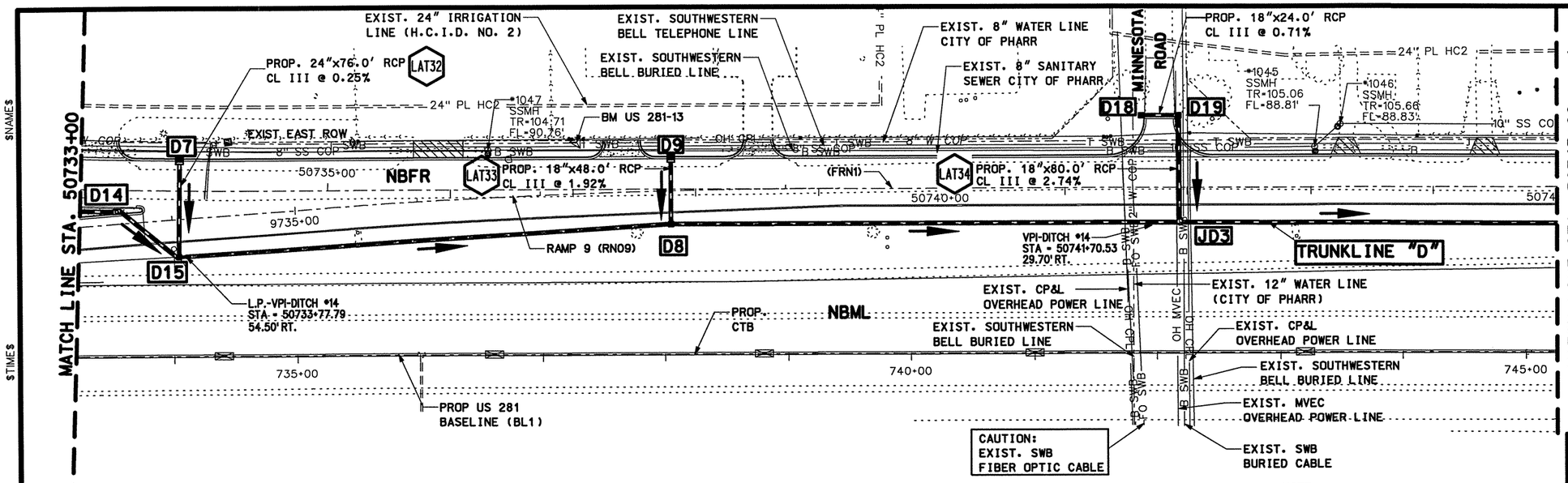

LEGEND

- PROP. DITCH FLOWLINE
- STORM SEWER FLOW DIRECTION
- NBFR — NORTH BOUND FRONTAGE ROAD
- NBML — NORTH BOUND MAINLANES
- B —— BURIED TELEPHONE CABLE
- OH —— OVERHEAD POWER LINES
- 8" SS —— EXIST. SANITARY SEWER LINE
- DRAINAGE STR. TO BE CAPPED
- PROPOSED LUMINAIRE
- D7 — STRUCTURE I.D.
- RCP TO REMAIN
- RCP TO BE ABANDONED
- H.P. — DITCH HIGH POINT
- L.P. — DITCH LOW POINT
- LAT1 — LATERAL I.D.
- EXIST. MANHOLE/INLET TO BE REMOVED (ITEM 496)
- PROP. TRUNK LINE

STR. I.D.	DESCRIPTION	STA./OFFSET	TOP OF STR. ELEV.	PROP. FL. OF STR.	PROP. FL. OF PIPE (NORTH)	PROP. FL. OF PIPE (SOUTH)	PROP. FL. OF PIPE (EAST)	PROP. FL. OF PIPE (WEST)
D7	PROP. TY "F" INLET	STA. 50733+79.63, 26.00' LT	102.80'	97.00'	–	–	–	97.00'
D8	PROP. TY "CC" GRATE INLET	STA. 50737+79.90, 29.02' RT	102.67'	91.97'	91.97'	91.97'	97.00'	–
D9	PROP. TY "F" INLET W/1-5.0' EXT	STA. 50737+80.00, 26.00' LT	103.52'	98.00'	–	–	–	98.00'
D15	PROP. TY "CC" GRATE INLET	STA. 50733+79.72, 54.30' RT	102.65'	92.52'	92.52'	92.52'	96.80'	–
JD3	PROP. TY "M" MANHOLE	STA. 50741+93.66, 28.62' RT	103.00'	91.35'	91.35'	91.35'	97.00'	–
D14	PROP. TY "A2" INLET	STA. 50733+29.97, 19.78' RT.	103.93'	92.62'	92.62'	92.62'	–	–
D18	PROP. TY "C" INLET	STA. 50741+62.57, 58.95' LT.	103.87'	99.50'	–	99.50'	–	–
D19	PROP. TY "C" INLET	STA. 50741+93.22, 59.13' LT.	103.87'	99.30'	99.30'	–	–	99.30'

⚠ BM & HORIZONTAL DATA

BM #US 281-13
EL=104.89'
STA. 737+28.11, 172.67' LT.
3¼" TxDOT ALUMINUM DISK

NOTE:

1.) ALL UTILITIES SHALL BE THE RESPONSIBILITY OF THE CONTRACTOR TO VERIFY HORIZONTAL & VERTICAL INFORMATION IN THE FIELD.
2.) ALL ABANDONED PIPE TO BE CAPPED, SUBSIDIARY TO ITEM 496.
3.) CONTRACTOR TO COORDINATE WITH S.W.B. TELEPHONE FOR NEW/EXIST SERVICE LINE PRIOR TO CONSTRUCTION

SHEET TOTALS

ITEM	EST.	FINAL	UNIT	DESCRIPTION
*400	1583		CY	SEWER EXCAVATION
402	1200		LF	TRENCH EXCAVATION PROTECTION
464	152		FT	RCP (CL III) 18 IN
464	76		FT	RCP (CL III) 24 IN
464	457		FT	RCP (CL III) 42 IN
464	722		FT	RCP (CL III) 48 IN
465	2		EA	INLET (TY) "F"
465	1		EA	MANHOLE (TY) "M"
465	1		EA	INLET (TY) "A2"
465	2		EA	INLET (TY) "C"
465	1		EA	5.0' EXTENTIONS
465	2		EA	INLET (TY) "CC"

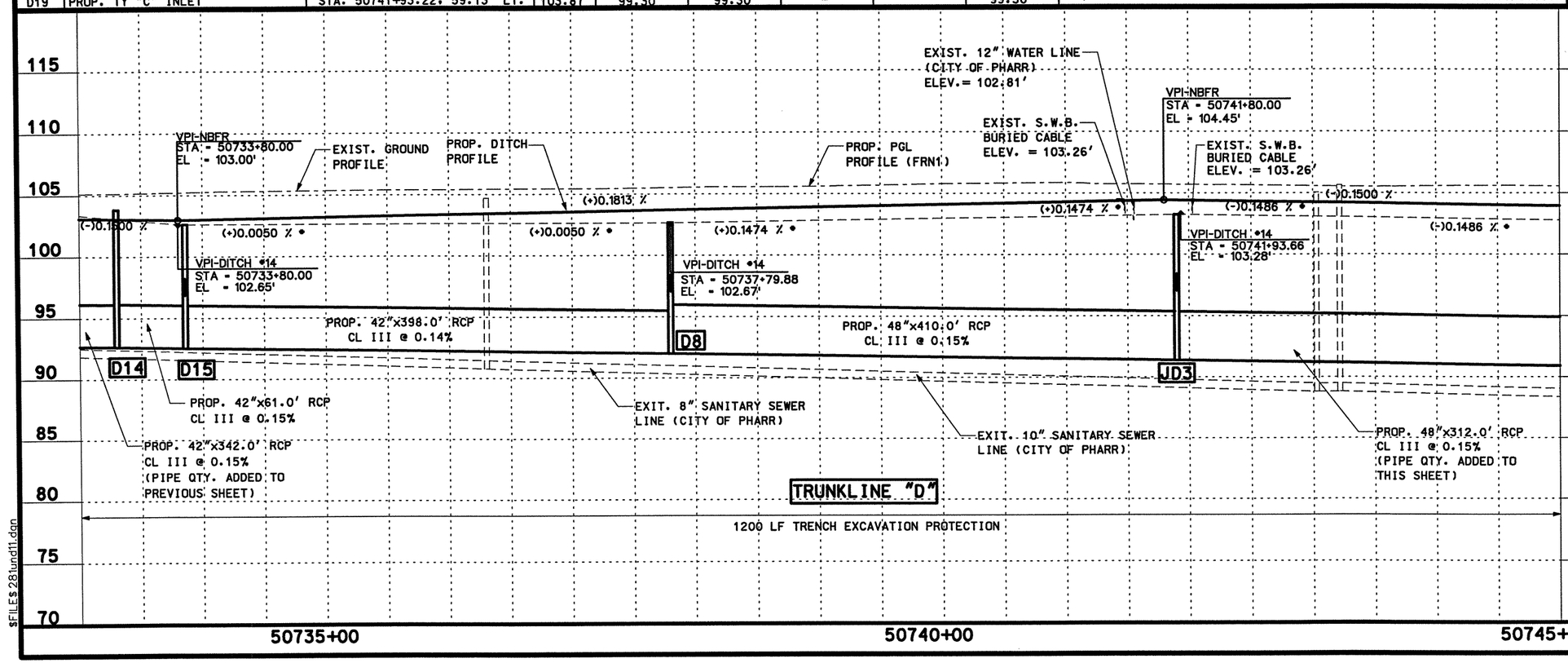

* FOR CONTRACTORS INFORMATION ONLY

STATE OF TEXAS — RAMIRO GUTIERREZ — 65948 — REGISTERED PROFESSIONAL ENGINEER

THE SEAL APPEARING ON THIS DOCUMENT WAS AUTHORIZED BY RAMIRO GUTIERREZ, P.E. 65948

DATE: 8-12-03

ALTERATION OF A SEALED DOCUMENT WITHOUT PROPER NOTIFICATION TO THE RESPONSIBLE ENGINEER IS AN OFFENSE UNDER THE TEXAS ENGINEERING PRATICE LAW.

Parsons Brinckerhoff Quade & Douglas Inc.

R. Gutierrez Engineering Corporation

Texas Department of Transportation

© 2003 by TxDOT

UTILITIES & DRAINAGE PLAN & PROFILE NORTHBOUND FRONTAGE ROAD

STA. 50733+00 "FRN" TO STA. 50745+00 "FRN"

SHEET 12 OF 22

PLAN 1"= 100' HORIZ
PROFILE 1"= 10' VERT

DESIGNED:	FED. RD DIV. No.	STATE	FEDERAL AID PROJECT No.			HIGHWAY No.	
CHECKED:	6	TEXAS				US 281	
DRAWN:	STATE DISTRICT	COUNTY	CONTROL No.	SECTION No.	JOB No.	SHEET No.	
CHECKED:	21	HIDALGO	0255	08	091	550	

$NAME$
$TIME$
$DATE$
$FILE$ 281und11.dgn

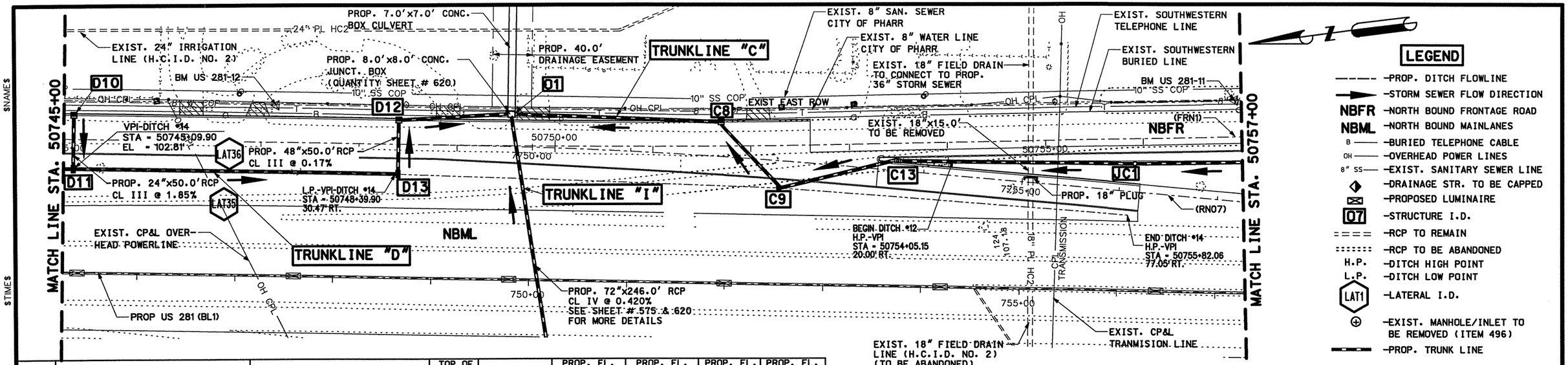

LEGEND

- —— —PROP. DITCH FLOWLINE
- ——► —STORM SEWER FLOW DIRECTION
- NBFR —NORTH BOUND FRONTAGE ROAD
- NBML —NORTH BOUND MAINLANES
- B —— —BURIED TELEPHONE CABLE
- OH —— —OVERHEAD POWER LINES
- 8" SS —— —EXIST. SANITARY SEWER LINE
- ◆ —DRAINAGE STR. TO BE CAPPED
- ⊠ —PROPOSED LUMINAIRE
- Q7 —STRUCTURE I.D.
- = = = = —RCP TO REMAIN
- ::::::: —RCP TO BE ABANDONED
- H.P. —DITCH HIGH POINT
- L.P. —DITCH LOW POINT
- LAT1 —LATERAL I.D.
- ⊕ —EXIST. MANHOLE/INLET TO BE REMOVED (ITEM 496)
- —PROP. TRUNK LINE

STR. I.D.	DESCRIPTION	STA./OFFSET	TOP OF STR. ELEV.	PROP. FL. OF STR.	PROP. FL. OF PIPE (NORTH)	PROP. FL. OF PIPE (SOUTH)	PROP. FL. OF PIPE (EAST)	PROP. FL. OF PIPE (WEST)
JC1	PROP. TY "M" MANHOLE	STA. 50755+91.03, 25.74' RT	103.86'	94.91'	94.91'	94.91'	-	-
C13	PROP. "A" INLET	STA 50753+49.02, 19.90' RT	102.14'	94.00'	94.00'	94.00'	-	-
C8	PROP. TY "F" INLET	STA. 50751+70.19, 26.00' LT	104.62'	92.21'	92.21'	-	-	93.00'
C9	PROP. TY "C" GRATE INLET	STA. 50752+27.35, 43.01' RT	104.00'	93.50'	-	93.50'	93.50'	-
D10	PROP. TY "F" INLET	STA. 50745+10.00, 26.00' LT	103.70'	98.00'	-	-	-	98.00'
D11	PROP. TY "CC" GRATE INLET	STA. 50745+10.00, 30.29' RT	102.80'	90.88'	90.88'	90.88'	97.00'	-
D12	PROP. TY "F" INLET	STA. 50748+40.00, 26.00' LT	103.58'	90.29'	-	90.29'	-	90.29'
D13	PROP. TY "CC" GRATE INLET	STA. 50748+39.90, 30.47' RT	102.36'	90.38'	90.38'	-	90.38'	-
01	PROP. 8'x8' JUNCTION BOX	STA. 50749+56.00, 32.40' LT.	100.00'	90.12'	90.12'	90.12'	-	-

⚠ BM & HORIZONTAL DATA

BM #US 281-11
EL=104.75'
STA. 757+16.56, 194.71' LT.
3¼" TxDOT ALUMINUM DISK

BM #US 281-12
EL=104.33'
STA. 747+40.09, 172.11' LT.
3¼" TxDOT ALUMINUM DISK

NOTE:

1.) ALL UTILITIES SHALL BE THE RESPONSIBITILY OF THE CONTRACTOR TO VERIFY HORIZONTAL & VERTICAL INFORMATION IN THE FIELD.
2.) ALL ABANDONED PIPE TO BE CAPPED, SUBSIDIARY TO ITEM 496.
3.) CONTRACTOR TO COORDINATE WITH S.W.B. TELEPHONE FOR NEW/EXIST SERVICE LINE PRIOR TO CONSTRUCTION

SHEET TOTALS

ITEM	EST.	FINAL	UNIT	DESCRIPTION
*400	4196		CY	SEWER EXCAVATION
402	1308		LF	TRENCH EXCAVATION PROTECTION
464	50		FT	RCP (CL III) 24 IN
464	484		FT	RCP (CL III) 48 IN
464	888		FT	RCP (CL III) 36 IN
465	1		EA	MANHOLE (TY) "M"
465	1		EA	INLET (TY) "A"
465	2		EA	INLET (TY) "CC"
465	3		EA	INLET (TY) "F"
465	1		EA	INLET (TY) "C"

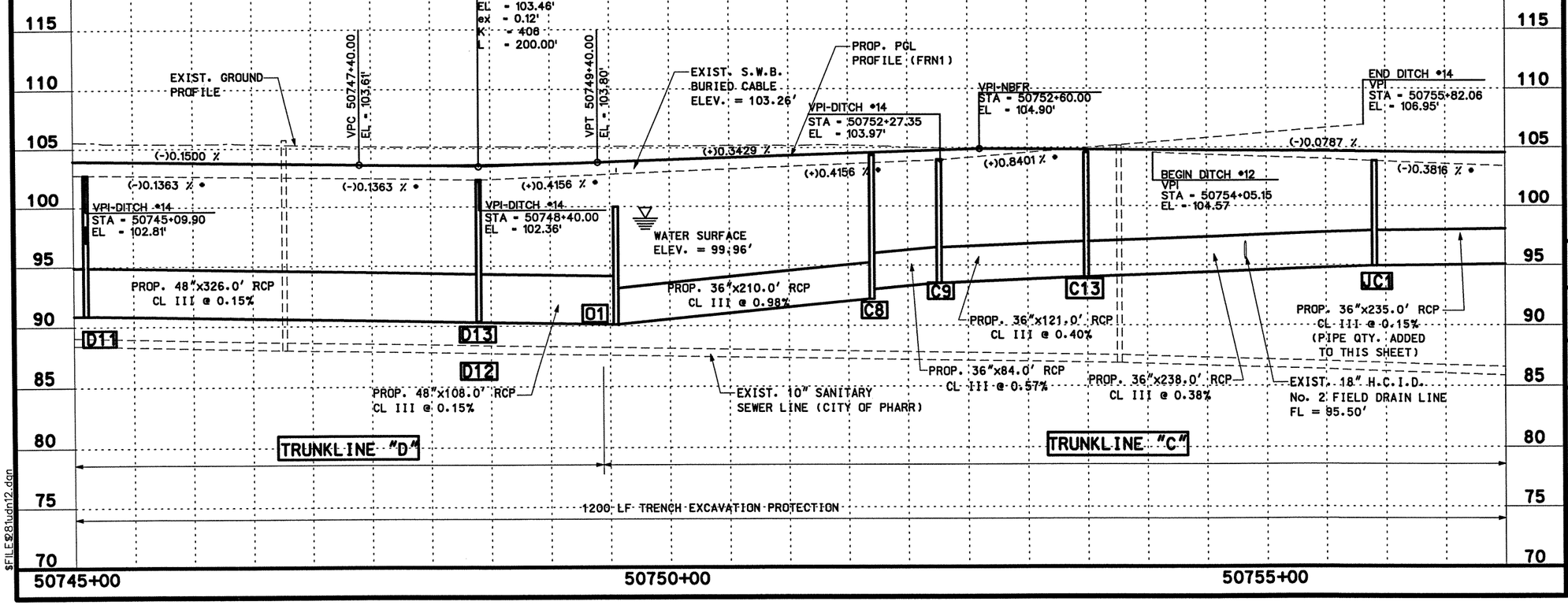

* FOR CONTRACTORS INFORMATION ONLY

STATE OF TEXAS — RAMIRO GUTIERREZ — 65948 — REGISTERED PROFESSIONAL ENGINEER

THE SEAL APPEARING ON THIS DOCUMENT WAS AUTHORIZED BY RAMIRO GUTIERREZ, P.E. 65948

DATE: 8-12-03

ALTERATION OF A SEALED DOCUMENT WITHOUT PROPER NOTIFICATION TO THE RESPONSIBLE ENGINEER IS AN OFFENSE UNDER THE TEXAS ENGINEERING PRATICE LAW.

Parsons Brinckerhoff Quade & Douglas Inc.

R. Gutierrez Engineering Corporation

Texas Department of Transportation

© 2003 by TxDOT

UTILITIES & DRAINAGE PLAN & PROFILE
NORTHBOUND FRONTAGE ROAD
STA. 50745+00 "FRN1" TO
STA. 50757+00 "FRN1"

SHEET 13 OF 22

PLAN 1"= 100' HORIZ
PROFILE 1"= 10' VERT

DESIGNED:	FED. RD DIV. No.	STATE	FEDERAL AID PROJECT No.		HIGHWAY No.	
CHECKED:	6	TEXAS			US 281	
DRAWN:	STATE DISTRICT	COUNTY	CONTROL No.	SECTION No.	JOB No.	SHEET No.
CHECKED:	21	HIDALGO	0255	08	091	551

$NAME$
$TIME$
$DATE$
$FILE$281udn12.dgn

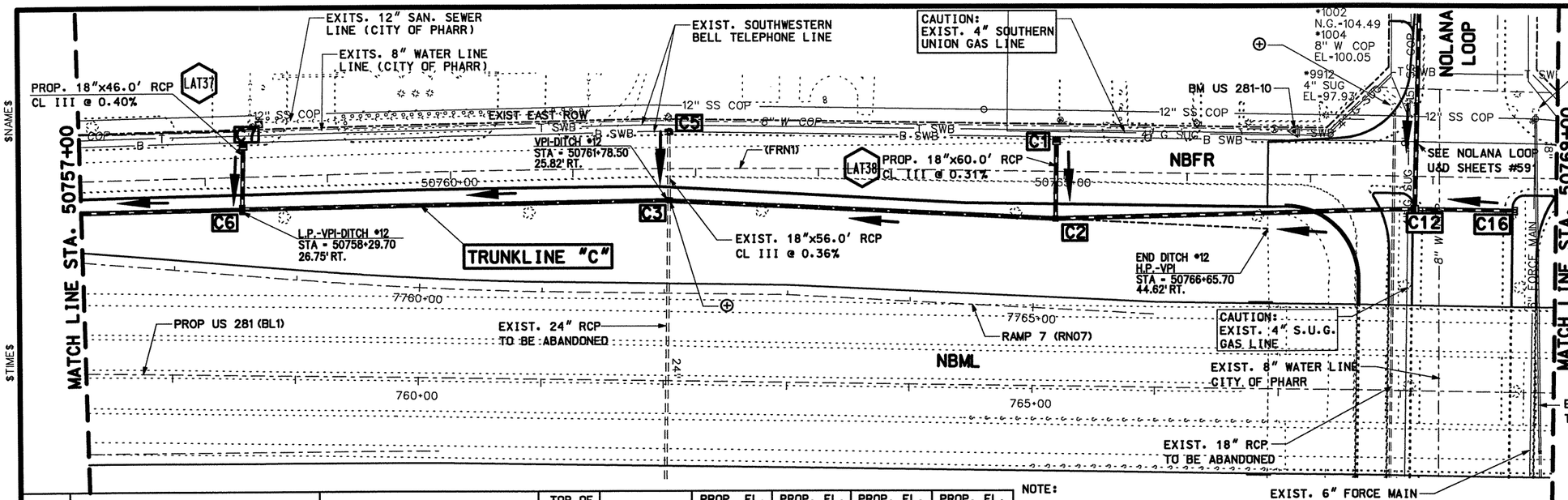

STR. I.D.	DESCRIPTION	STA./OFFSET	TOP OF STR. ELEV.	PROP. FL. OF STR.	PROP. FL. OF PIPE (NORTH)	PROP. FL. OF PIPE (SOUTH)	PROP. FL. OF PIPE (EAST)	PROP. FL. OF PIPE (WEST)
C1	PROP. TY "F" INLET W/1-5' EXT.	STA. 50764+93.40, 26.00' LT	104.24'	100.03'	-	-	-	100.03'
C2	PROP. TY "C" GRATE INLET	STA. 50764+93.29, 38.75' RT	103.97'	96.78'	96.78'	96.78'	99.83'	-
C3	PROP. TY "CC" GRATE INLET	STA. 50761+78.54, 25.80' RT	103.48'	95.79'	95.97'	96.29'	101.50'	-
C5	EXIST. TY "A" INLET ADD 1-5' EXT.	STA. 50761+78.69, 27.15' LT	104.00'	102.10'	-	-	-	102.10'
C6	PROP. TY "CC" GRATE INLET	STA. 50758+29.71, 26.75' RT	102.95'	95.27'	95.27'	95.27'	98.85'	-
C7	PROP. TY "F" INLET	STA. 50758+31.85, 25.80' LT	104.26'	99.05'	-	-	-	99.05'
C12	PROP. TY "F" INLET	STA. 50767+84.37, 27.00' RT.	105.06'	97.22'	97.22'	99.20'	97.22'	-
C16	PROP. TY "A" INLET	STA. 50768+64.30, 27.19' RT	105.10'	99.40'	99.40'			

NOTE:
1.) ALL UTILITIES SHALL BE THE RESPONSIBITILY OF THE CONTRACTOR TO VERIFY HORIZONTAL & VERTICAL INFORMATION IN THE FIELD.
2.) ALL ABANDONED PIPE TO BE CAPPED. SUBSIDIARY TO ITEM 496.
3.) CONTRACTOR TO COORDINATE WITH S.W.B. TELEPHONE FOR NEW/EXIST SERVICE LINE PRIOR TO CONSTRUCTION

⚠ BM & HORIZONTAL DATA
BM #US 281-10
EL=105.56'
STA. 767+10.57, 210.84' LT.
3¼" TxDOT ALUMINUM DISK

LEGEND
- PROP. DITCH FLOWLINE
- STORM SEWER FLOW DIRECTION
- NBFR NORTH BOUND FRONTAGE ROAD
- NBML NORTH BOUND MAINLANES
- B BURIED TELEPHONE CABLE
- OH OVERHEAD POWER LINES
- 8" SS EXIST. SANITARY SEWER LINE
- DRAINAGE STR. TO BE CAPPED
- PROPOSED LUMINAIRE
- 07 STRUCTURE I.D.
- RCP TO REMAIN
- RCP TO BE ABANDONED
- H.P. DITCH HIGH POINT
- L.P. DITCH LOW POINT
- LAT1 LATERAL I.D.
- EXIST. MANHOLE/INLET TO BE REMOVED (ITEM 496)
- PROP. TRUNK LINE

SHEET TOTALS

ITEM	EST.	FINAL	UNIT	DESCRIPTION
*400	1659		CY	SEWER EXCAVATION
402	1082		LF	TRENCH EXCAVATION PROTECTION
464	114		FT	RCP (CL III) 18 IN
464	77		FT	RCP (CL III) 24 IN
464	600		FT	RCP (CL III) 30 IN
464	344		FT	RCP (CL III) 36 IN
465	1		EA	INLET (TY) "C"
465	2		EA	INLET (TY) "CC"
465	3		EA	INLET (TY) "F"
465	2		EA	5.0' INLET EXTENTSION
465	2		EA	INLET (TY) "A"
496	3		EA	REMOVE OLD STR. (SMALL)

* FOR CONTRACTORS INFORMATION ONLY

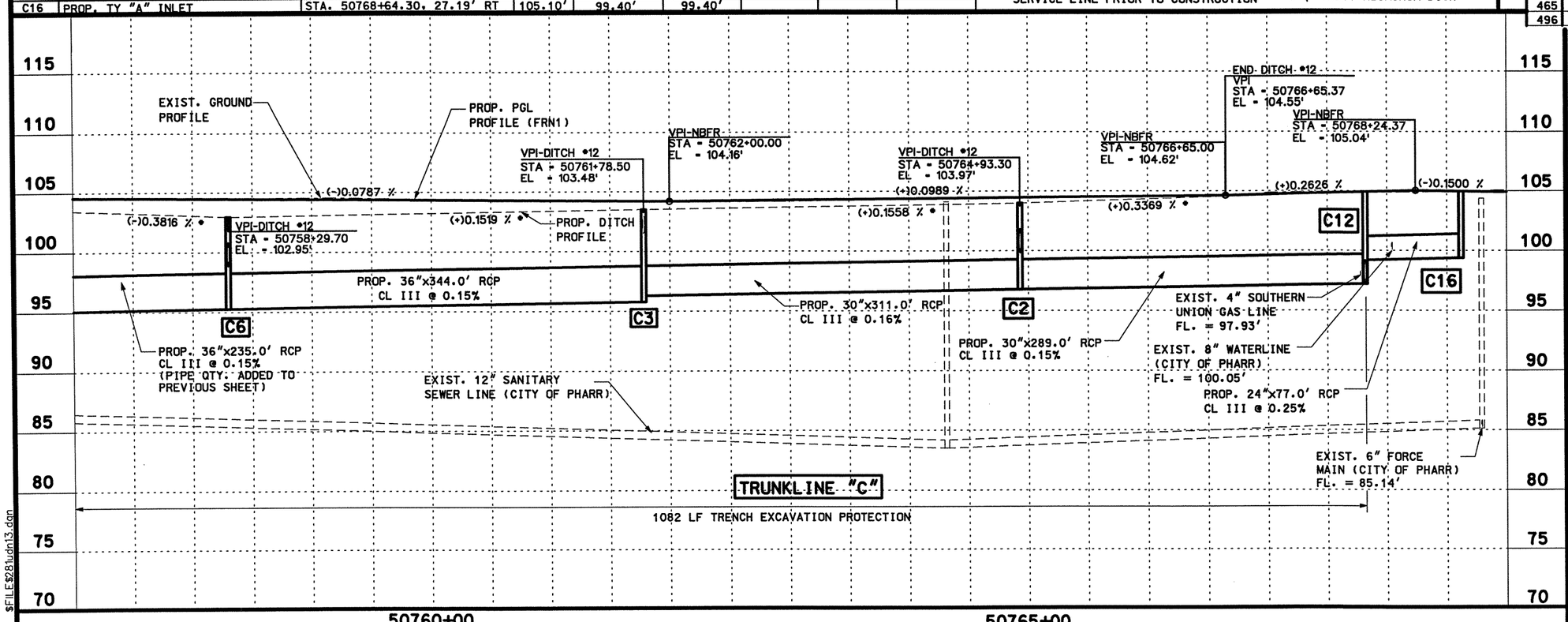

THE SEAL APPEARING ON THIS DOCUMENT WAS AUTHORIZED BY RAMIRO GUTIERREZ, P.E. 65948
DATE: 8-12-03
ALTERATION OF A SEALED DOCUMENT WITHOUT PROPER NOTIFICATION TO THE RESPONSIBLE ENGINEER IS AN OFFENSE UNDER THE TEXAS ENGINEERING PRATICE LAW.

Parsons Brinckerhoff Quade & Douglas Inc.
R. Gutierrez Engineering Corporation
Texas Department of Transportation
© 2003 by TxDOT

UTILITIES & DRAINAGE PLAN & PROFILE NORTHBOUND FRONTAGE ROAD

STA. 50757+00 "FRN1" TO STA. 50769+00 "FRN1"

SHEET 14 OF 22

PLAN 1"= 100' HORIZ
PROFILE 1"= 10' VERT

DESIGNED:	FED. RD DIV. No.	STATE	FEDERAL AID PROJECT No.		HIGHWAY No.	
CHECKED:	6	TEXAS			US 281	
DRAWN:	STATE DISTRICT	COUNTY	CONTROL No.	SECTION No.	JOB No.	SHEET No.
CHECKED:	21	HIDALGO	0255	08	091	552

$NAME$
$TIME$
$DATE$
$FILE$281udn13.dgn

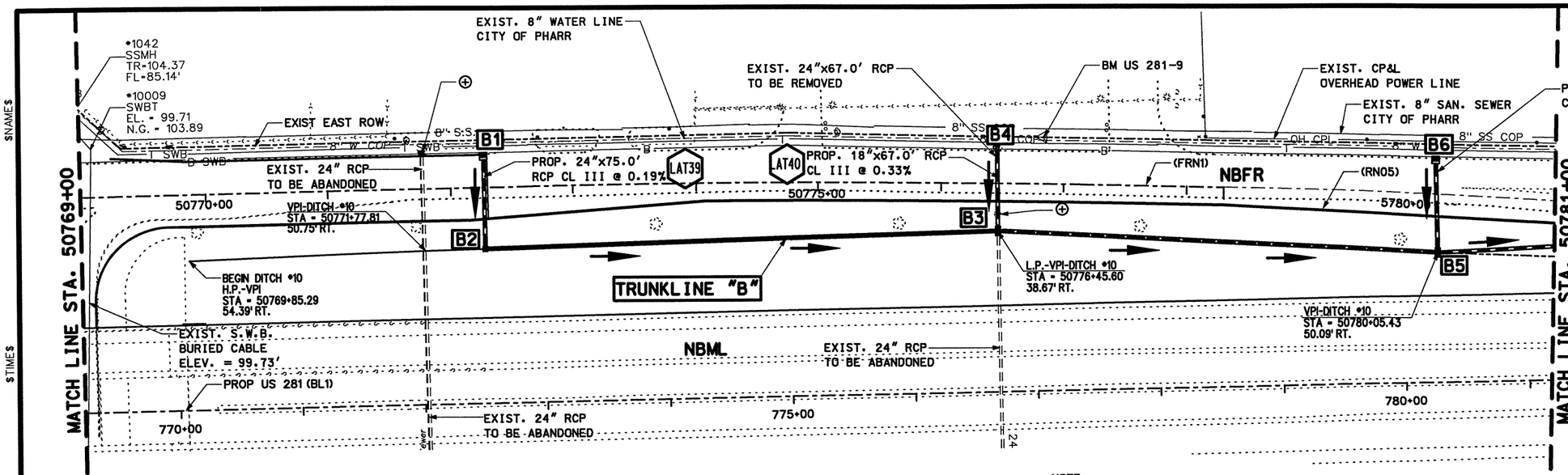

LEGEND

- PROP. DITCH FLOWLINE
- STORM SEWER FLOW DIRECTION
- NBFR — NORTH BOUND FRONTAGE ROAD
- NBML — NORTH BOUND MAINLANES
- B —— BURIED TELEPHONE CABLE
- OH —— OVERHEAD POWER LINES
- 8" SS —— EXIST. SANITARY SEWER LINE
- DRAINAGE STR. TO BE CAPPED
- PROPOSED LUMINAIRE
- 07 — STRUCTURE I.D.
- = = = = RCP TO REMAIN
- ::::::: RCP TO BE ABANDONED
- H.P. — DITCH HIGH POINT
- L.P. — DITCH LOW POINT
- LAT1 — LATERAL I.D.
- EXIST. MANHOLE/INLET TO BE REMOVED (ITEM 496)
- PROP. TRUNK LINE

STR. I.D.	DESCRIPTION	STA./OFFSET	TOP OF STR. ELEV.	PROP. FL. OF STR.	PROP. FL. OF PIPE (NORTH)	PROP. FL. OF PIPE (SOUTH)	PROP. FL. OF PIPE (EAST)	PROP. FL. OF PIPE (WEST)
B1	PROP. TY "F" INLET	STA. 50772+27.00, 26.40' LT.	104.22'	101.10'	–	–	–	101.10'
B2	PROP. TY "C" INLET	STA. 50772+27.80, 50.00' RT	104.27'	100.37'	–	100.37'	100.95'	–
B3	PROP. TY "C" INLET	STA. 50776+45.20, 38.60' RT	103.56'	99.75'	99.75'	99.75'	100.78'	–
B4	EXIST. TY "A" INLET ADD 1-5.0' EXT.	STA. 50776+45.20, 26.30' LT	104.40'	101.00'	–	–	–	101.00'
B5	PROP. TY "C" INLET	STA. 50780+03.00, 50.00' RT	104.50'	98.73'	99.23'	98.73'	99.89'	–
B6	PROP. TY "F" INLET	STA. 50780+03.00, 26.00' LT	104.55'	100.00'	–	–	–	100.00'

NOTE:

1.) ALL UTILITIES SHALL BE THE RESPONSIBITILY OF THE CONTRACTOR TO VERIFY HORIZONTAL & VERTICAL INFORMATION IN THE FIELD.
2.) ALL ABANDONED PIPE TO BE CAPPED. SUBSIDIARY TO ITEM 496.
3.) CONTRACTOR TO COORDINATE WITH S.W.B. TELEPHONE FOR NEW/EXIST SERVICE LINE PRIOR TO CONSTRUCTION

△ BM & HORIZONTAL DATA

BM #US 281-9
EL=104.73'
STA. 777+08.34, 205.90' LT.
3¼" TxDOT ALUMINUM DISK

SHEET TOTALS

ITEM	EST.	FINAL	UNIT	DESCRIPTION
*400	1617		CY	SEWER EXCAVATION
402	457		LF	TRENCH EXCAVATION PROTECTION
464	142		FT	RCP (CL III) 18 IN
464	75		FT	RCP (CL III) 24 IN
464	769		FT	RCP (CL III) 30 IN
464	196		FT	RCP (CL III) 36 IN
465	3		EA	INLET (TY) "C"
465	2		EA	INLET (TY) "F"
465	1		EA	5.0' INLET EXTENSIONS
496	2		EA	REMOVE STR. (SMALL)
496	67		LF	REMOVE STR. (PIPE)

* FOR CONTRACTORS INFORMATION ONLY

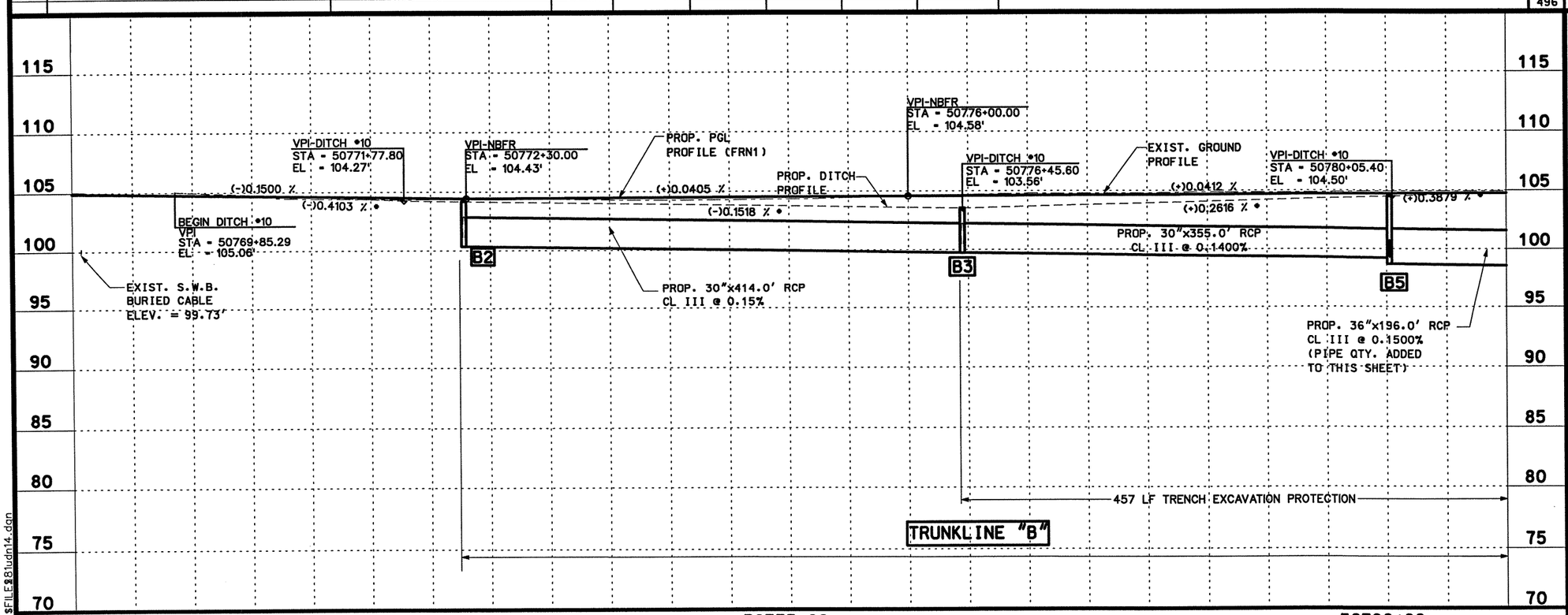

STATE OF TEXAS
RAMIRO GUTIERREZ
65948
REGISTERED
PROFESSIONAL ENGINEER

THE SEAL APPEARING ON THIS DOCUMENT WAS AUTHORIZED BY RAMIRO GUTIERREZ, P.E. 65948

DATE: 8-12-03

ALTERATION OF A SEALED DOCUMENT WITHOUT PROPER NOTIFICATION TO THE RESPONSIBLE ENGINEER IS AN OFFENSE UNDER THE TEXAS ENGINEERING PRATICE LAW.

Parsons Brinckerhoff Quade & Douglas Inc.

R. Gutierrez Engineering Corporation

Texas Department of Transportation

© 2003 by TxDOT

UTILITIES & DRAINAGE PLAN & PROFILE

NORTHBOUND FRONTAGE ROAD

STA. 50769+00 "FRN1" TO
STA. 50781+00 "FRN1"

SHEET 15 OF 22

PLAN 1"= 100' HORIZ
PROFILE 1"= 10' VERT

DESIGNED:	FED. RD DIV. No.	STATE	FEDERAL AID PROJECT No.			HIGHWAY No.
CHECKED:	6	TEXAS				US 281
DRAWN:	STATE DISTRICT	COUNTY	CONTROL No.	SECTION No.	JOB No.	SHEET No.
CHECKED:	21	HIDALGO	0255	08	091	553

$NAME$
$TIME$
$DATE$
$FILE$81udn14.dan

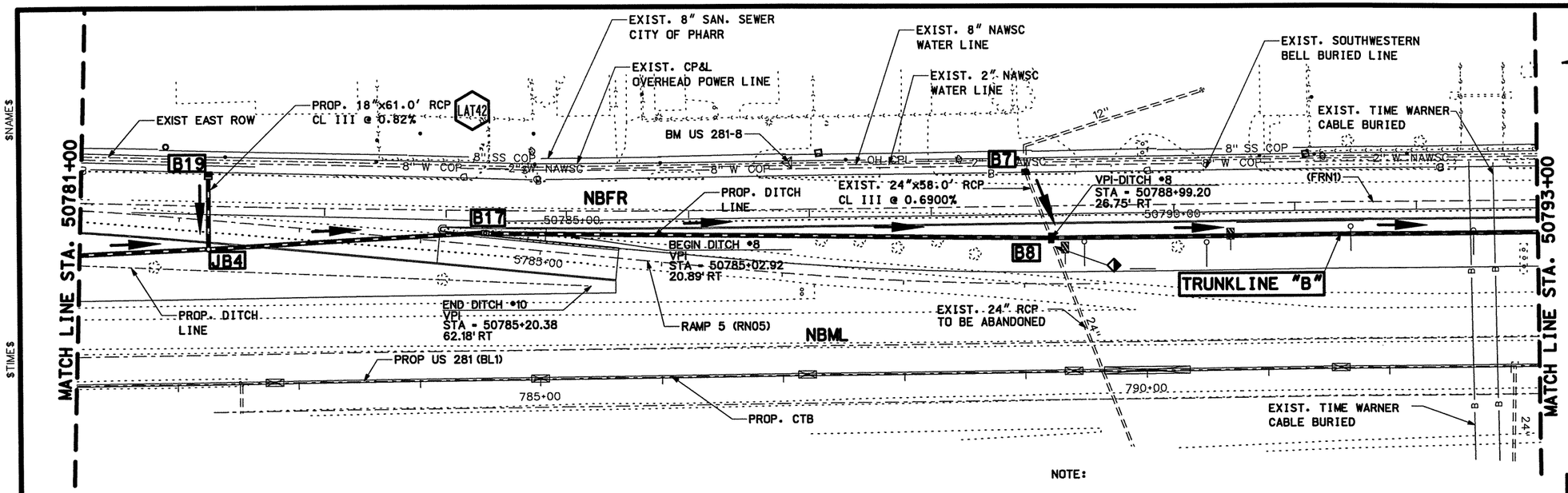

LEGEND

- PROP. DITCH FLOWLINE
- STORM SEWER FLOW DIRECTION
- NBFR — NORTH BOUND FRONTAGE ROAD
- NBML — NORTH BOUND MAINLANES
- B — BURIED TELEPHONE CABLE
- OH — OVERHEAD POWER LINES
- 8" SS — EXIST. SANITARY SEWER LINE
- DRAINAGE STR. TO BE CAPPED
- PROPOSED LUMINAIRE
- 07 — STRUCTURE I.D.
- RCP TO REMAIN
- RCP TO BE ABANDONED
- H.P. — DITCH HIGH POINT
- L.P. — DITCH LOW POINT
- LAT1 — LATERAL I.D.
- EXIST. MANHOLE/INLET TO BE REMOVED (ITEM 496)
- PROP. TRUNK LINE

STR. I.D.	DESCRIPTION	STA./OFFSET	TOP OF STR. ELEV.	PROP. FL. OF STR.	PROP. FL. OF PIPE (NORTH)	PROP. FL. OF PIPE (SOUTH)	PROP. FL. OF PIPE (EAST)	PROP. FL. OF PIPE (WEST)
B17	PROP. TY "A" INLET	STA. 50784+32.33, 21.02' RT.	105.32'	97.59'	98.09'	97.59'	–	–
B7	EXIST. TY "A" INLET ADD 3-5.0' EXT.	STA. 50788+78.81, 26.00' LT.	105.50'	100.00'	–	–	–	100.00'
B8	PROP. TY "CC" GRATE INLET	STA. 50788+99.17, 26.75' RT.	103.71'	96.90'	96.90'	96.90'	99.60'	–
B19	PROP. TY "F" INLET.	STA 50782+03.00, 26.00' LT.	104.63'	100.00'	–	–	–	100.00'
JB4	PROP. TY "A" MANHOLE	STA 50782+03.00, 35.75' RT.	105.00'	98.43'	98.43'	98.43'	99.50'	–

NOTE:

1.) ALL UTILITIES SHALL BE THE RESPONSIBILITIY OF THE CONTRACTOR TO VERIFY HORIZONTAL & VERTICAL INFORMATION IN THE FIELD.
2.) ALL ABANDONED PIPE TO BE CAPPED. SUBSIDIARY TO ITEM 496.
3.) CONTRACTOR TO COORDINATE WITH S.W.B. TELEPHONE FOR NEW/EXIST SERVICE LINE PRIOR TO CONSTRUCTION

BM & HORIZONTAL DATA

BM #US 281-8
EL=104.98'
STA. 787+06.77, 175.17' LT.
3¼" TxDOT ALUMINUM DISK

SHEET TOTALS

ITEM	EST.	FINAL	UNIT	DESCRIPTION
*400	2617		CY	SEWER EXCAVATION
402	1200		LF	TRENCH EXCAVATION PROTECTION
464	61		FT	RCP (CL III) 18 IN
464	226		FT	RCP (CL III) 36 IN
464	1157		FT	RCP (CL III) 42 IN
465	1		EA	MANHOLE (TY) "A"
465	2		EA	INLET (TY) "A"
465	1		EA	INLET (TY) "CC"
465	1		EA	INLET (TY) "F"
465	3		EA	5.0' INLET EXTENSION

* FOR CONTRACTORS INFORMATION ONLY

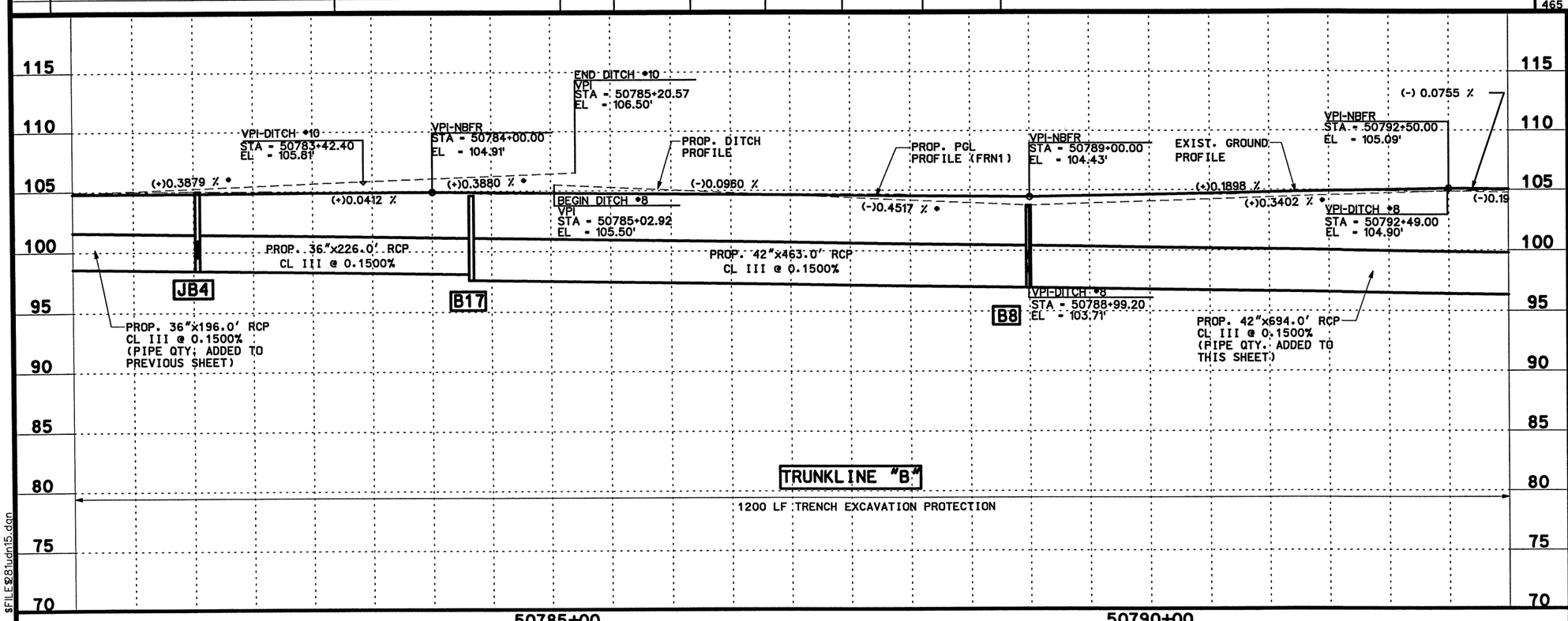

THE SEAL APPEARING ON THIS DOCUMENT WAS AUTHORIZED BY RAMIRO GUTIERREZ, P.E. 65948

DATE: 8-12-03

ALTERATION OF A SEALED DOCUMENT WITHOUT PROPER NOTIFICATION TO THE RESPONSIBLE ENGINEER IS AN OFFENSE UNDER THE TEXAS ENGINEERING PRATICE LAW.

Parsons Brinckerhoff Quade & Douglas Inc.

R. Gutierrez Engineering Corporation

Texas Department of Transportation

© 2003 by TxDOT

UTILITIES & DRAINAGE PLAN & PROFILE

NORTHBOUND FRONTAGE ROAD

STA. 50781+00 "FRN1" TO STA. 50793+00 "FRN1"

SHEET 16 OF 22

PLAN 1"= 100' HORIZ
PROFILE 1"= 10' VERT

DESIGNED:	FED. RD DIV. No.	STATE	FEDERAL AID PROJECT No.			HIGHWAY No.
CHECKED:	6	TEXAS				US 281
DRAWN:	STATE DISTRICT	COUNTY	CONTROL No.	SECTION No.	JOB No.	SHEET No.
CHECKED:	21	HIDALGO	0255	08	091	554

$NAME$
$TIME$
$DATE$
$FILE$281udn15.dgn

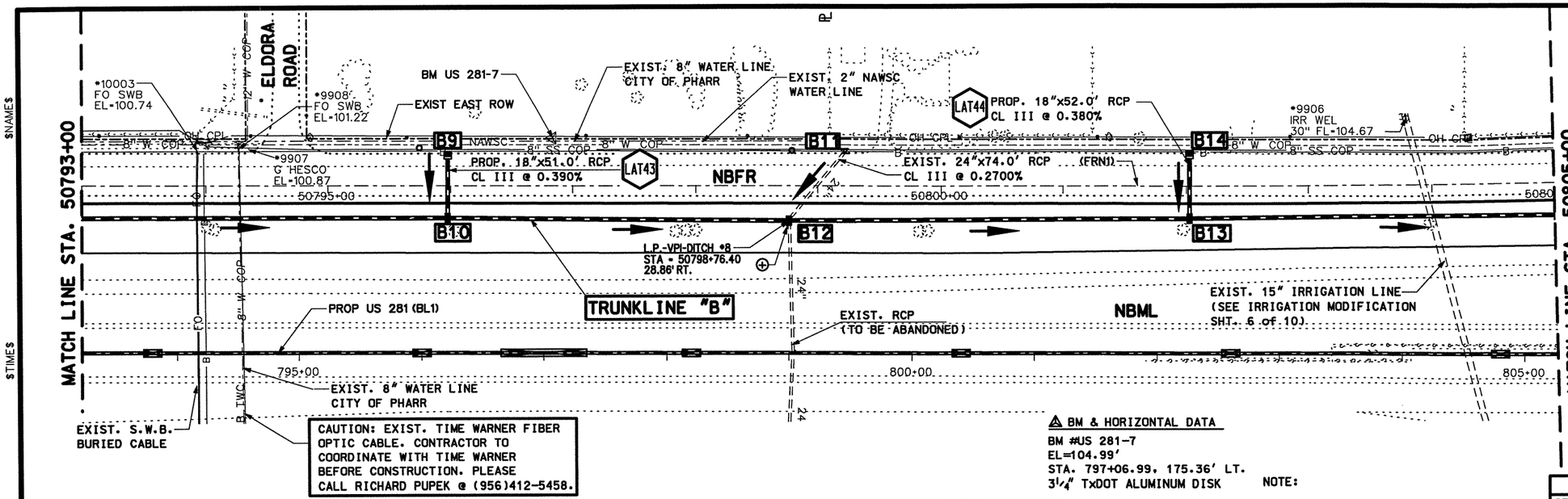

⚠ BM & HORIZONTAL DATA

BM #US 281-7
EL=104.99'
STA. 797+06.99, 175.36' LT.
3¼" TxDOT ALUMINUM DISK

NOTE:

1.) ALL UTILITIES SHALL BE THE RESPONSIBITILY OF THE CONTRACTOR TO VERIFY HORIZONTAL & VERTICAL INFORMATION IN THE FIELD.
2.) ALL ABANDONED PIPE TO BE CAPPED, SUBSIDIARY TO ITEM 496.
3.) CONTRACTOR TO COORDINATE WITH S.W.B. TELEPHONE FOR NEW/EXIST SERVICE LINE PRIOR TO CONSTRUCTION

STR. I.D.	DESCRIPTION	STA./OFFSET	TOP OF STR. ELEV.	PROP. FL. OF STR.	PROP. FL. OF PIPE (NORTH)	PROP. FL. OF PIPE (SOUTH)	PROP. FL. OF PIPE (EAST)	PROP. FL. OF PIPE (WEST)
B9	PROP. TY "F" INLET W/1-5.0' EXT.	STA. 50795+97.50, 26.00' LT.	104.63'	97.06'	–	–	–	97.06'
B10	PROP. TY "CC" GRATE INLET	STA. 50795+97.50, 26.75' RT	104.11'	95.36'	95.86'	95.36'	96.86'	–
B11	EXIST. TY "A" INLET ADD 2-5.0' EXT.	STA. 50799+22.40, 26.25' LT	102.34'	100.50'	–	–	–	100.50'
B12	PROP. TY "CC" GRATE INLET	STA. 50798+76.40, 28.90' RT	103.65'	94.95'	94.95'	94.95'	100.40'	–
B13	PROP. TY "CC" GRATE INLET	STA. 50802+02.50, 26.70' RT	104.29'	94.47'	94.47'	94.47'	95.97'	–
B14	PROP. TY "F" INLET W/1-5.0'EXT.	STA. 50802+02.50, 26.75' LT	104.80'	96.17'	–	–	–	96.17'

SHEET TOTALS

ITEM	EST.	FINAL	UNIT	DESCRIPTION
*400	2528		CY	SEWER EXCAVATION
402	1200		LF	TRENCH EXCAVATION PROTECTION
464	103		FT	RCP (CL III) 18 IN
464	893		FT	RCP (CL III) 48 IN
465	2		EA	INLET (TY) "F"
465	3		EA	INLET (TY) "CC"
465	4		EA	5.0' INLET EXTENSION
496	1		EA	REMOVE OLD STR. (SMALL)

LEGEND

- PROP. DITCH FLOWLINE
- STORM SEWER FLOW DIRECTION
- NBFR – NORTH BOUND FRONTAGE ROAD
- NBML – NORTH BOUND MAINLANES
- B – BURIED TELEPHONE CABLE
- OH – OVERHEAD POWER LINES
- 8" SS – EXIST. SANITARY SEWER LINE
- DRAINAGE STR. TO BE CAPPED
- PROPOSED LUMINAIRE
- 07 – STRUCTURE I.D.
- RCP TO REMAIN
- RCP TO BE ABANDONED
- H.P. – DITCH HIGH POINT
- L.P. – DITCH LOW POINT
- LAT1 – LATERAL I.D.
- EXIST. MANHOLE/INLET TO BE REMOVED (ITEM 496)
- PROP. TRUNK LINE

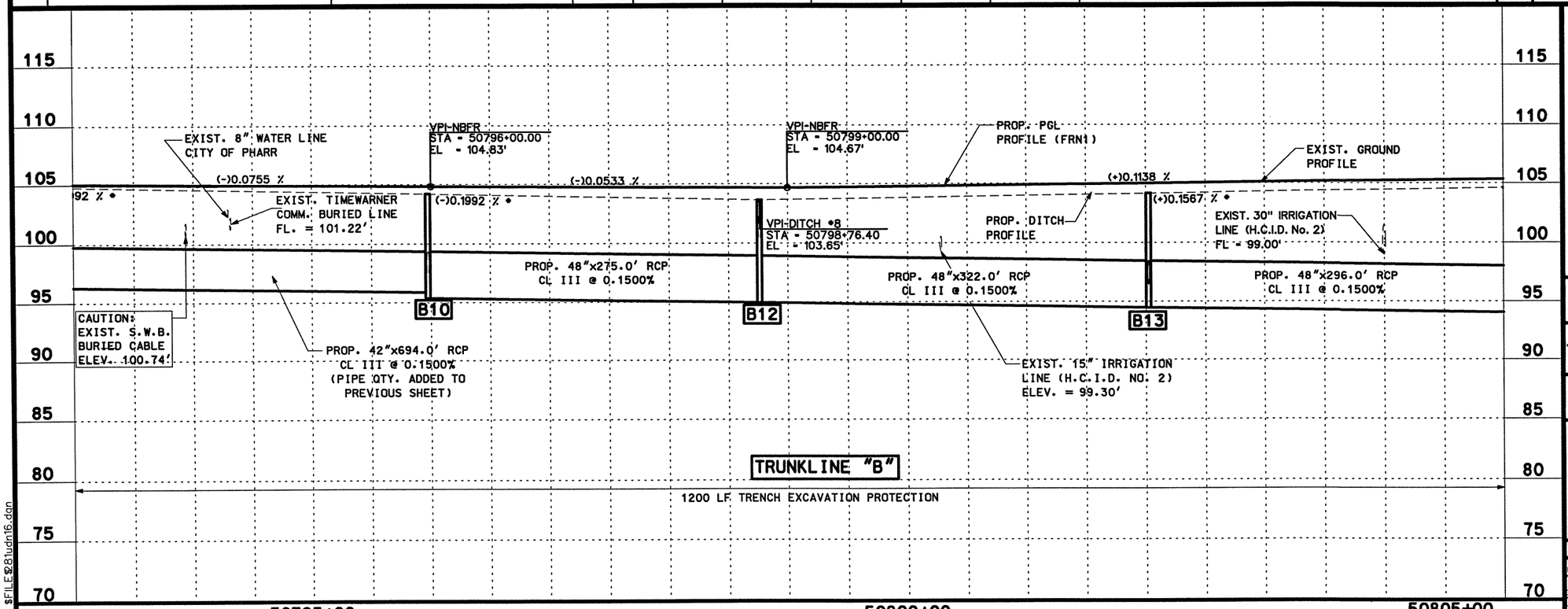

* FOR CONTRACTORS INFORMATION ONLY

STATE OF TEXAS
RAMIRO GUTIERREZ
65948
REGISTERED PROFESSIONAL ENGINEER

THE SEAL APPEARING ON THIS DOCUMENT WAS AUTHORIZED BY RAMIRO GUTIERREZ, P.E. 65948

DATE: 8-12-03

ALTERATION OF A SEALED DOCUMENT WITHOUT PROPER NOTIFICATION TO THE RESPONSIBLE ENGINEER IS AN OFFENSE UNDER THE TEXAS ENGINEERING PRATICE LAW.

PB Parsons Brinckerhoff Quade & Douglas Inc.

R. Gutierrez Engineering Corporation

Texas Department of Transportation

© 2003 by TxDOT

UTILITIES & DRAINAGE PLAN & PROFILE NORTHBOUND FRONTAGE ROAD

STA. 50793+00 "FRN1" TO
STA. 50805+00 "FRN1"

SHEET 17 OF 22

PLAN 1"= 100' HORIZ
PROFILE 1"= 10' VERT

DESIGNED:	FED. RD DIV. No.	STATE	FEDERAL AID PROJECT No.		HIGHWAY No.	
CHECKED:	6	TEXAS			US 281	
DRAWN:	STATE DISTRICT	COUNTY	CONTROL No.	SECTION No.	JOB No.	SHEET No.
CHECKED:	21	HIDALGO	0255	08	091	555

$NAME$
$TIME$
$DATE$
$FILE$281udn16.dgn

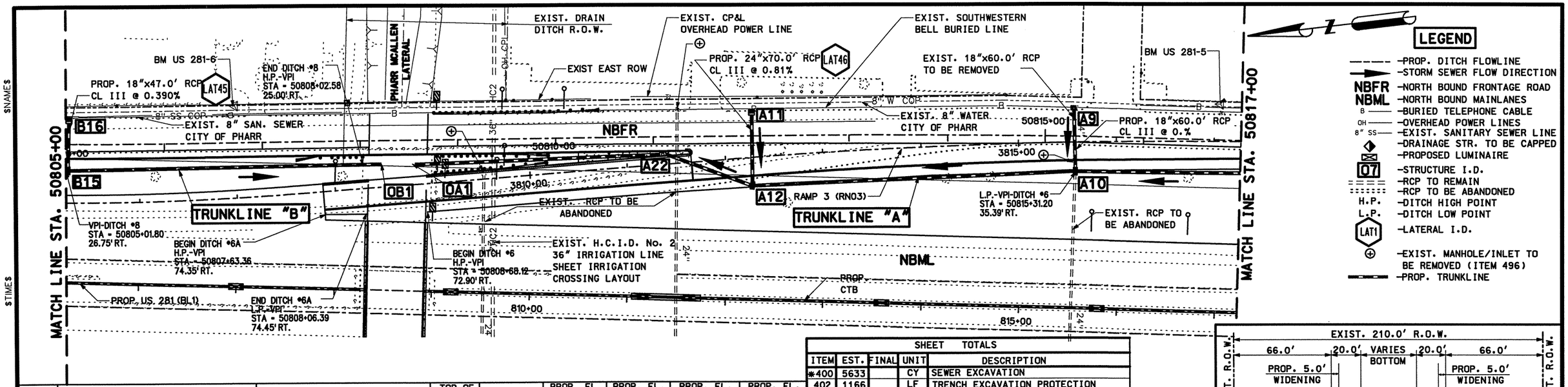

STR. I.D.	DESCRIPTION	STA./OFFSET	TOP OF STR. ELEV.	PROP. FL. OF STR.	PROP. FL. OF PIPE (NORTH)	PROP. FL. OF PIPE (SOUTH)	PROP. FL. OF PIPE (EAST)	PROP. FL. OF PIPE (WEST)
A9	EXIST. TY "A" INLET ADD 1-5' EXT.	STA. 50815+31.10, 28.36' LT	105.88'	101.70'	–	–	–	101.70'
A10	PROP. TY "CC" GRATE INLET	STA. 50815+31.10, 35.40' RT	105.00'	94.70'	94.70'	94.70'	101.00'	–
A11	PROP. TY "F" INLET	STA. 50812+00.00, 25.30' LT	105.52'	101.60'	–	–	–	101.60'
A12	PROP. TY "CC" GRATE INLET	STA. 50812+00.00, 50.00' RT	105.50'	93.70'	93.70'	94.20'	101.00'	–
A22	PROP. TY "A2" CURB INLET	STA 50811+09.54, 19.74' RT	106.56'	93.56'	93.56'	93.56'	–	–
OA1	PROP. OUTFALL LINE "A"	STA. 50808+56.51, 24.74' LT	–	93.17'	–	93.17'	–	–
B15	PROP. TY "CC" GRATE INLET	STA. 50805+03.00, 26.00' RT	104.63'	94.03'	94.03'	94.03'	95.53'	–
B16	PROP. TY "F" INLET W/1-5' EXT.	STA. 50805+03.00, 25.50' LT	105.15'	95.73'	–	–	–	95.73'
OB1	PROP. OUTFALL LINE "B"	STA. 50808+21.00, 24.00' RT	–	93.51'	93.51'	–	–	–

SHEET TOTALS

ITEM	EST.	FINAL	UNIT	DESCRIPTION
*400	5633		CY	SEWER EXCAVATION
402	1166		LF	TRENCH EXCAVATION PROTECTION
464	107		FT	RCP (CL III) 18 IN
464	70		FT	RCP (CL III) 24 IN
464	316		FT	RCP (CL III) 48 IN
464	741		FT	RCP (CL III) 60 IN
464	341		FT	RCP (CL III) 66 IN
465	1		EA	INLET (TY) "A2"
465	2		EA	INLET (TY) "F"
465	3		EA	INLET (TY) "CC"
465	2		EA	5' INLET EXTENSION
496	3		EA	REMOVE STR. (SMALL)
496	60		FT	REMOVE STR. (PIPE)

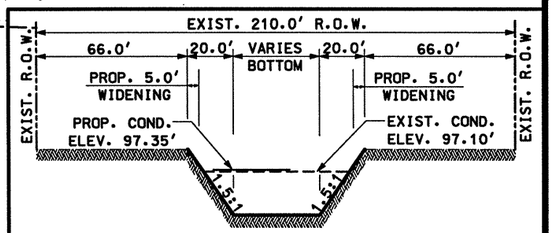

EXIST TYP. NORTH DRAINAGE DITCH

"HCDD No. 1 NORTH MAIN DRAIN"

N.T.S

* FOR CONTRACTORS INFORMATION ONLY

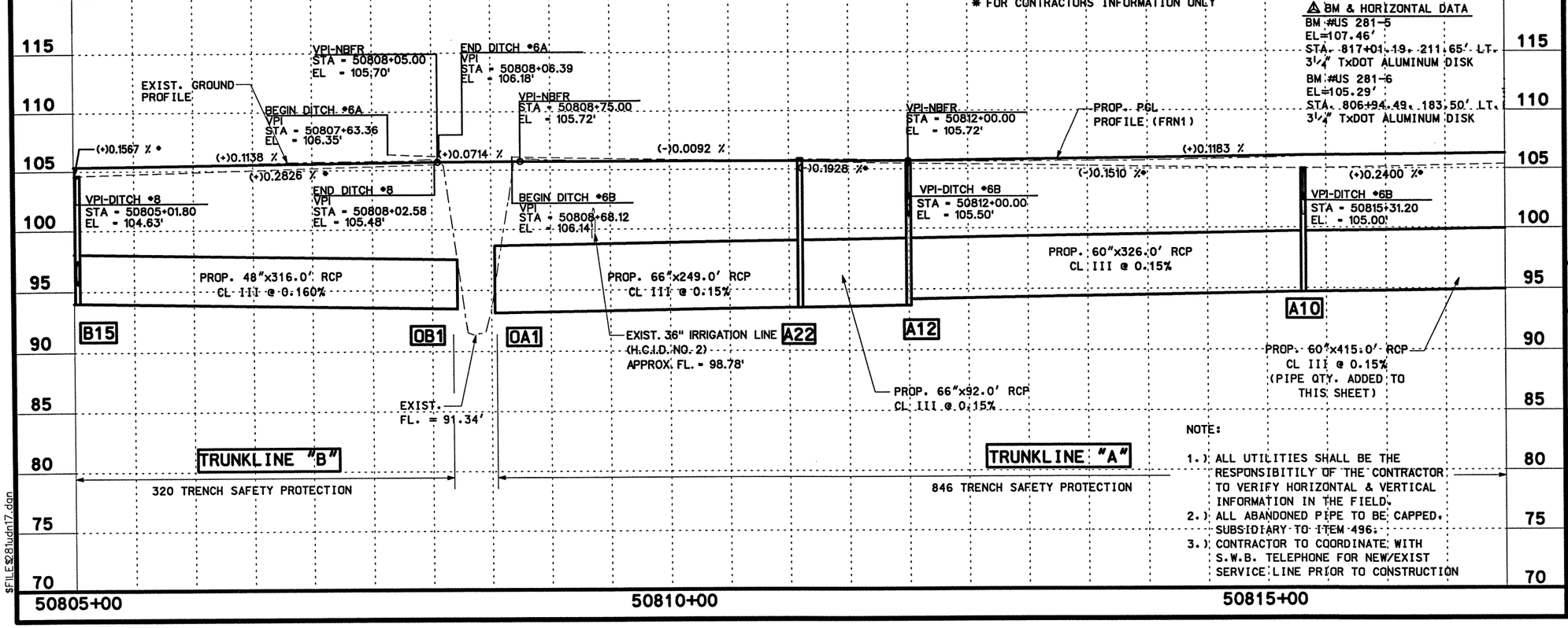

NOTE:

1.) ALL UTILITIES SHALL BE THE RESPONSIBITILY OF THE CONTRACTOR TO VERIFY HORIZONTAL & VERTICAL INFORMATION IN THE FIELD.
2.) ALL ABANDONED PIPE TO BE CAPPED, SUBSIDIARY TO ITEM 496.
3.) CONTRACTOR TO COORDINATE WITH S.W.B. TELEPHONE FOR NEW/EXIST SERVICE LINE PRIOR TO CONSTRUCTION

⚠ BM & HORIZONTAL DATA

BM #US 281-5
EL=107.46'
STA. 817+01.19, 211.65' LT.
3 1/4" TxDOT ALUMINUM DISK

BM #US 281-6
EL=105.29'
STA. 806+94.49, 183.50' LT.
3 1/4" TxDOT ALUMINUM DISK

STATE OF TEXAS
RAMIRO GUTIERREZ
65948
REGISTERED PROFESSIONAL ENGINEER

THE SEAL APPEARING ON THIS DOCUMENT WAS AUTHORIZED BY RAMIRO GUTIERREZ, P.E. 65948

DATE: 8-12-03

ALTERATION OF A SEALED DOCUMENT WITHOUT PROPER NOTIFICATION TO THE RESPONSIBLE ENGINEER IS AN OFFENSE UNDER THE TEXAS ENGINEERING PRATICE LAW.

Parsons Brinckerhoff Quade & Douglas Inc.

R. Gutierrez Engineering Corporation

Texas Department of Transportation

© 2003 by TxDOT

UTILITIES & DRAINAGE PLAN & PROFILE

NORTHBOUND FRONTAGE ROAD

STA. 50805+00 "FRN1" TO STA. 50817+00 "FRN1"

SHEET 18 OF 22

PLAN 1"= 100' HORIZ
PROFILE 1"= 10' VERT

DESIGNED:	FED. RD DIV. No.	STATE	FEDERAL AID PROJECT No.			HIGHWAY No.	
CHECKED:	6	TEXAS				US 281	
DRAWN:	STATE DISTRICT	COUNTY	CONTROL No.	SECTION No.	JOB No.	SHEET No.	
CHECKED:	21	HIDALGO	0255	08	091	556	

$NAME$
$TIME$
$DATE$
$FILE$281udn17.dgn

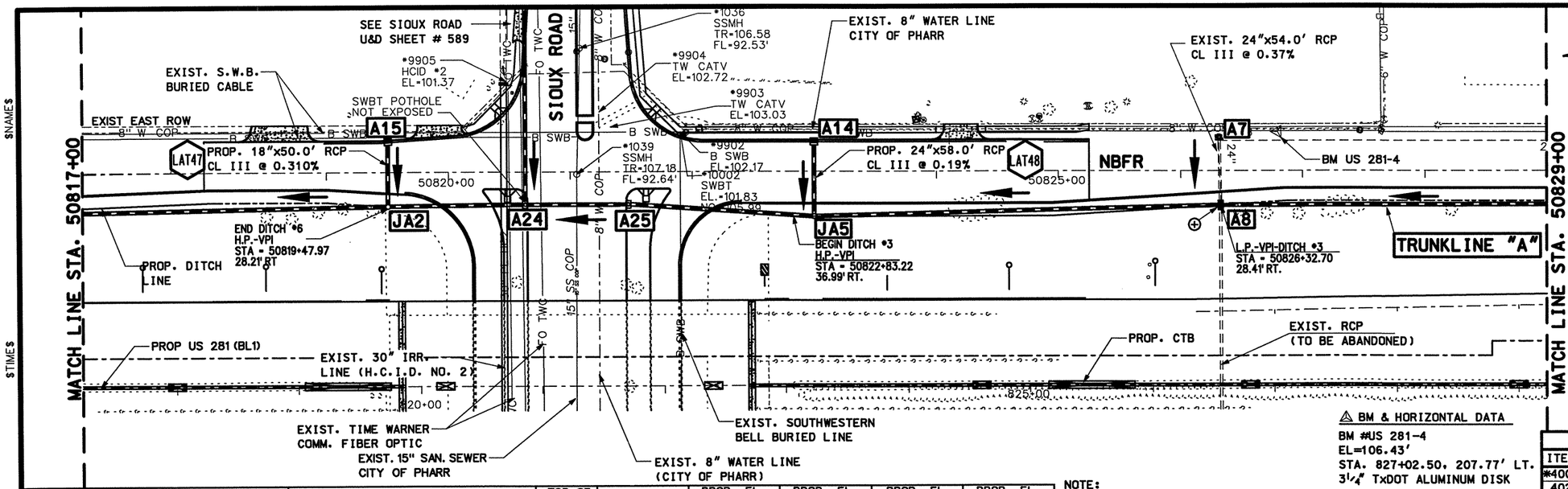

LEGEND

- -PROP. DITCH FLOWLINE
- -STORM SEWER FLOW DIRECTION
- NBFR -NORTH BOUND FRONTAGE ROAD
- NBML -NORTH BOUND MAINLANES
- B -BURIED TELEPHONE CABLE
- OH -OVERHEAD POWER LINES
- 8" SS -EXIST. SANITARY SEWER LINE
- -DRAINAGE STR. TO BE CAPPED
- -PROPOSED LUMINAIRE
- Q7 -STRUCTURE I.D.
- -RCP TO REMAIN
- -RCP TO BE ABANDONED
- H.P. -DITCH HIGH POINT
- L.P. -DITCH LOW POINT
- LAT1 -LATERAL I.D.
- -EXIST. MANHOLE/INLET TO BE REMOVED (ITEM 496)
- -PROP. TRUNK LINE

⚠ BM & HORIZONTAL DATA

BM #US 281-4
EL=106.43'
STA. 827+02.50, 207.77' LT.
3¼" TxDOT ALUMINUM DISK

STR. I.D.	DESCRIPTION	STA./OFFSET	TOP OF STR. ELEV.	PROP. FL. OF STR.	PROP. FL. OF PIPE (NORTH)	PROP. FL. OF PIPE (SOUTH)	PROP. FL. OF PIPE (EAST)	PROP. FL. OF PIPE (WEST)
A7	EXIST. TY "A" INLET	STA. 50826+31.65, 26.00' LT	106.50'	102.10'	–	–	–	102.10'
A8	PROP. TY "CC" GRATE INLET	STA. 50826+32.67, 28.52' RT	105.00'	96.86'	96.86'	97.36'	101.90'	–
JA2	PROP. TY "M" MANHOLE	STA. 50819+50.00, 28.30' RT	106.00'	95.33'	95.33'	95.33'	98.83'	–
A14	PROP. TY "F" INLET	STA. 50823+00.00, 26.00' LT	105.68'	99.12'	–	–	–	99.12'
A15	PROP. TY "F" INLET	STA. 50819+50.00, 26.30' LT	105.80'	99.00'	–	–	–	99.00'
A25	PROP. TY "A" INLET	STA. 50821+45.15, 27.00' RT	106.05'	96.13'	96.13'	96.13'	–	–
A24	PROP. TY "A" INLET	STA. 50820+65.15, 27.00' RT	106.05'	95.50'	95.50'	95.98'	97.98'	–
JA5	PROP. TY "M" MANHOLE	STA. 50823+00.00, 36.95' RT	106.26'	96.36'	96.36'	96.36'	99.00'	–

NOTE:

1.) ALL UTILITIES SHALL BE THE RESPONSIBITILY OF THE CONTRACTOR TO VERIFY HORIZONTAL & VERTICAL INFORMATION IN THE FIELD.
2.) ALL ABANDONED PIPE TO BE CAPPED, SUBSIDIARY TO ITEM 496.
3.) CONTRACTOR TO COORDINATE WITH S.W.B. TELEPHONE FOR NEW/EXIST SERVICE LINE PRIOR TO CONSTRUCTION

SHEET TOTALS

ITEM	EST.	FINAL	UNIT	DESCRIPTION
*400	3731		CY	SEWER EXCAVATION
402	1316		LF	TRENCH EXCAVATION PROTECTION
464	50		FT	RCP (CL III) 18 IN
464	58		FT	RCP (CL III) 24 IN
464	542		FT	RCP (CL III) 48 IN
464	559		FT	RCP (CL III) 54 IN
464	110		FT	RCP (CL III) 60 IN
465	2		EA	MANHOLE (TY) "M"
465	2		EA	INLET (TY) "F"
465	1		EA	INLET (TY) "CC"
465	2		EA	INLET (TY) "A"
496	1		EA	REMOVE STR. (SMALL)

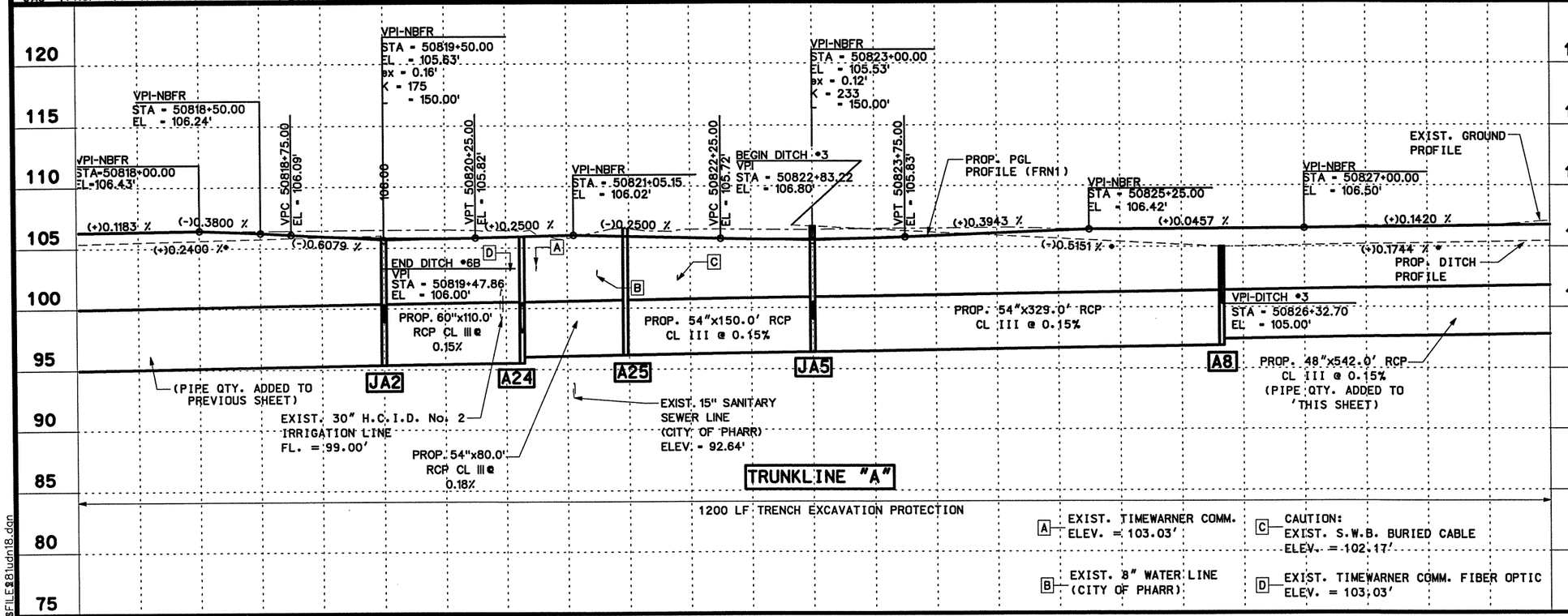

* FOR CONTRACTORS INFORMATION ONLY

STATE OF TEXAS — RAMIRO GUTIERREZ — 65948 — REGISTERED PROFESSIONAL ENGINEER

THE SEAL APPEARING ON THIS DOCUMENT WAS AUTHORIZED BY RAMIRO GUTIERREZ, P.E. 65948

DATE: 8-12-03

ALTERATION OF A SEALED DOCUMENT WITHOUT PROPER NOTIFICATION TO THE RESPONSIBLE ENGINEER IS AN OFFENSE UNDER THE TEXAS ENGINEERING PRATICE LAW.

Parsons Brinckerhoff Quade & Douglas Inc.

R. Gutierrez Engineering Corporation

Texas Department of Transportation

© 2003 by TxDOT

UTILITIES & DRAINAGE PLAN & PROFILE

NORTHBOUND FRONTAGE ROAD

STA. 50817+00 "FRN1" TO STA. 50829+00 "FRN1"

SHEET 19 OF 22

PLAN 1"= 100' HORIZ
PROFILE 1"= 10' VERT

DESIGNED:	FED. RD DIV. No.	STATE	FEDERAL AID PROJECT No.				HIGHWAY No.
CHECKED:	6	TEXAS					US 281
DRAWN:	STATE DISTRICT	COUNTY	CONTROL No.	SECTION No.	JOB No.	SHEET No.	
CHECKED:	21	HIDALGO	0255	08	091	557	

$NAME$ $TIME$ $DATE$ $FILE$81udn18.dgn

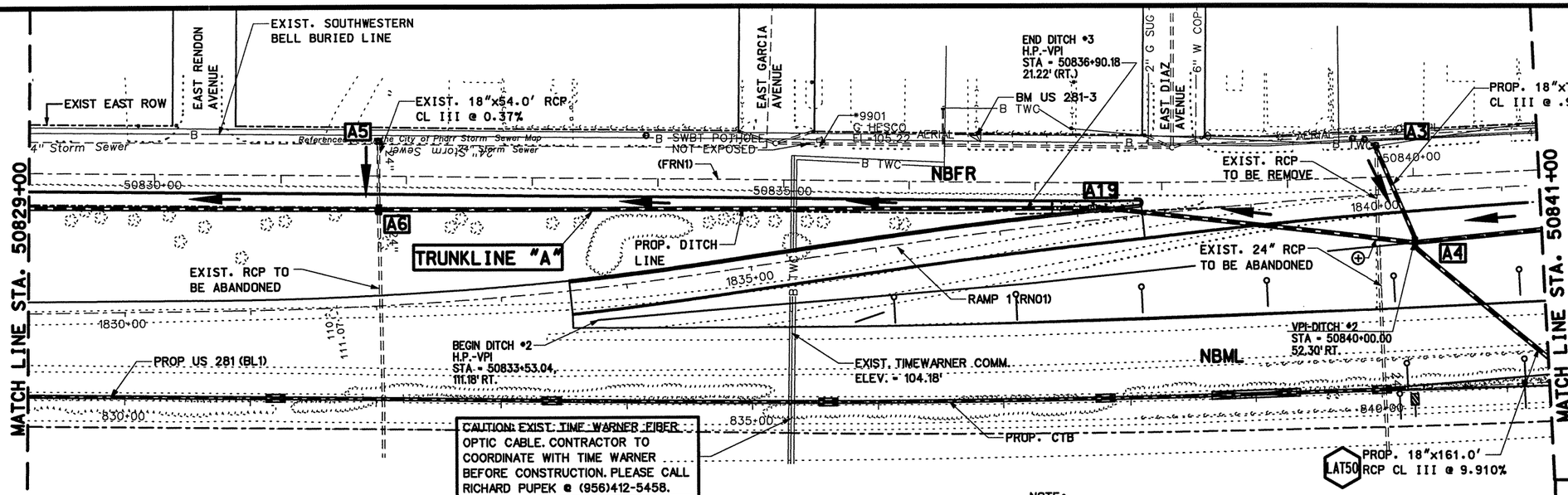

STR. I.D.	DESCRIPTION	STA./OFFSET	TOP OF STR. ELEV.	PROP. FL. OF STR.	PROP. FL. OF PIPE (NORTH)	PROP. FL. OF PIPE (SOUTH)	PROP. FL. OF PIPE (EAST)	PROP. FL. OF PIPE (WEST)
A3	EXIST. TY "A" INLET	STA. 50839+70.70, 23.40' LT.	107.16'	103.00'	-	-	-	103.00'
A4	PROP. TY "CC" GRATE INLET	STA. 50840+00.00, 52.35' RT	106.50'	99.67'	99.67'	100.43'	102.23'	103.23'
A5	EXIST. TY "A" INLET ADD 1-5.0' EXT.	STA. 50831+77.36, 25.80' LT	107.18'	103.00'	-	-	-	103.00'
A6	PROP. TY "CC" GRATE INLET	STA. 50831+78.10, 26.75' RT	105.95'	98.18'	98.18'	98.18'	102.80'	-
A19	PROP. TY "A1" INLET	STA. 1837+74.35, 8.0' LT. ●	107.54'	99.28'	99.28'	99.28'	-	-

NOTE:

1.) ALL UTILITIES SHALL BE THE RESPONSIBITILY OF THE CONTRACTOR TO VERIFY HORIZONTAL & VERTICAL INFORMATION IN THE FIELD.
2.) ALL ABANDONED PIPE TO BE CAPPED, SUBSIDIARY TO ITEM 496.
3.) CONTRACTOR TO COORDINATE WITH S.W.B. TELEPHONE FOR NEW/EXIST SERVICE LINE PRIOR TO CONSTRUCTION

△ BM & HORIZONTAL DATA

BM #US 281-3
EL=107.76'
STA. 836+81.89, 209.01' LT.
3¼" TxDOT ALUMINUM DISK

SHEET TOTALS

ITEM	EST.	FINAL	UNIT	DESCRIPTION
*400	2350		CY	SEWER EXCAVATION
402	1443		LF	TRENCH EXCAVATION PROTECTION
464	235		FT	RCP (CL III) 18 IN
464	817		FT	RCP (CL III) 48 IN
464	260		FT	RCP (CL III) 36 IN
465	1		EA	INLET (TY) "A1"
465	2		EA	INLET (TY) "CC"
465	1		EA	5.0' INLET EXTENTION
496	1		EA	REMOVE OLD STR. (SMALL)
496	70		LF	REMOVE OLD STR. (PIPE)

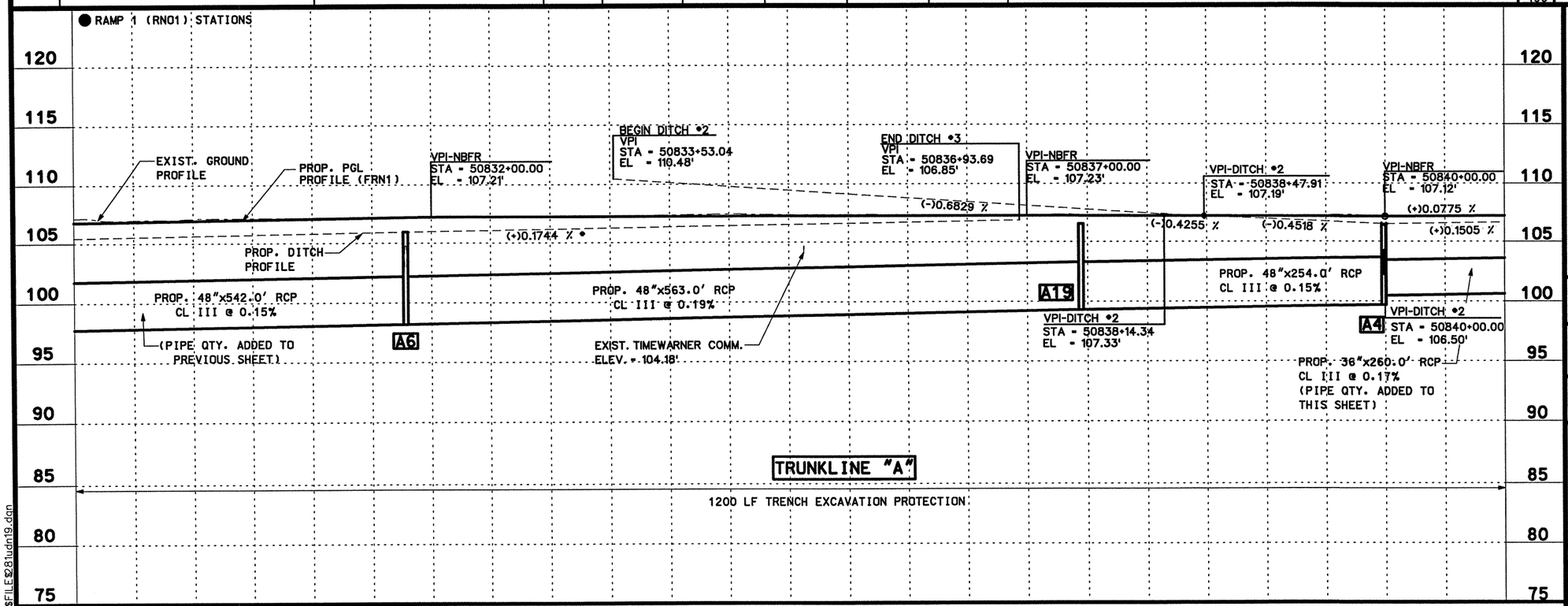

* FOR CONTRACTORS INFORMATION ONLY

STATE OF TEXAS
RAMIRO GUTIERREZ
65948
REGISTERED PROFESSIONAL ENGINEER

THE SEAL APPEARING ON THIS DOCUMENT WAS AUTHORIZED BY RAMIRO GUTIERREZ, P.E. 65948

DATE: 8-12-03

ALTERATION OF A SEALED DOCUMENT WITHOUT PROPER NOTIFICATION TO THE RESPONSIBLE ENGINEER IS AN OFFENSE UNDER THE TEXAS ENGINEERING PRATICE LAW.

Parsons Brinckerhoff Quade & Douglas Inc.

R. Gutierrez Engineering Corporation

Texas Department of Transportation

© 2003 by TxDOT

UTILITIES & DRAINAGE PLAN & PROFILE NORTHBOUND FRONTAGE ROAD

STA. 50829+00 "FRN1" TO STA. 50841+00 "FRN1"

SHEET 20 OF 22

PLAN 1"= 100' HORIZ
PROFILE 1"= 10' VERT

DESIGNED:	FED. RD DIV. No.	STATE	FEDERAL AID PROJECT No.			HIGHWAY No.
CHECKED:	6	TEXAS				US 281
DRAWN:	STATE DISTRICT	COUNTY	CONTROL No.	SECTION No.	JOB No.	SHEET No.
CHECKED:	21	HIDALGO	0255	08	091	558

$NAME$
$TIME$
$DATE$
$FILE$281udn19.dgn

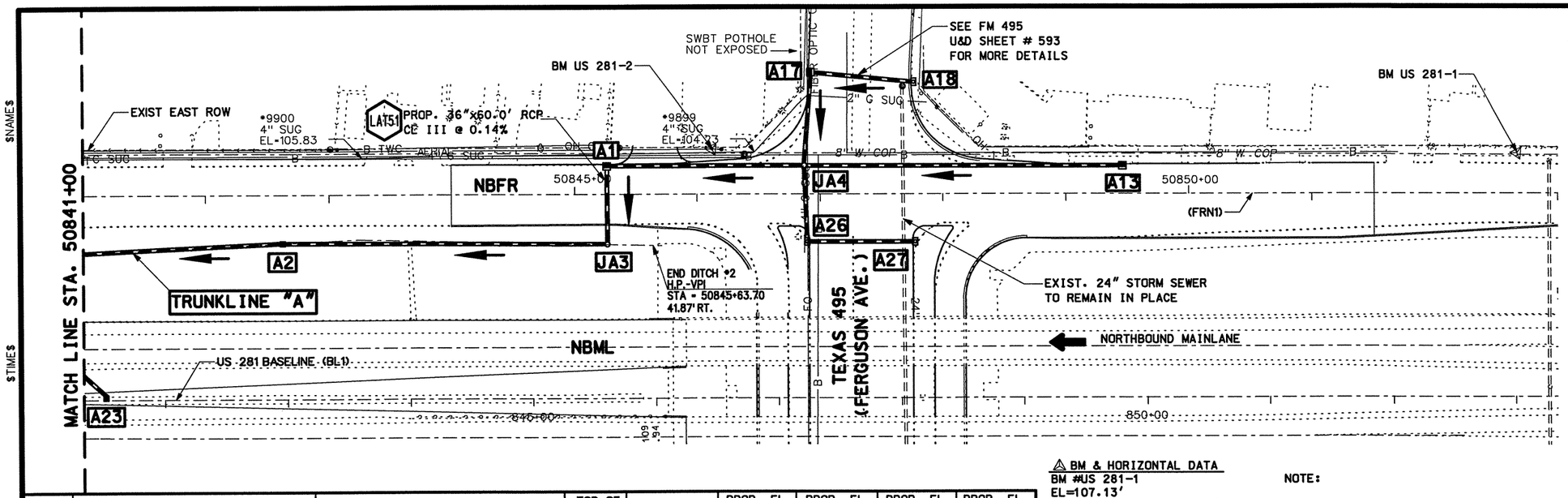

LEGEND

- PROP. DITCH FLOWLINE
- STORM SEWER FLOW DIRECTION
- NBFR — NORTH BOUND FRONTAGE ROAD
- NBML — NORTH BOUND MAINLANES
- B — BURIED TELEPHONE CABLE
- OH — OVERHEAD POWER LINES
- 8" SS — EXIST. SANITARY SEWER LINE
- DRAINAGE STR. TO BE CAPPED
- PROPOSED LUMINAIRE
- 07 — STRUCTURE I.D.
- ==== RCP TO REMAIN
- :::::: RCP TO BE ABANDONED
- H.P. — DITCH HIGH POINT
- L.P. — DITCH LOW POINT
- LAT1 — LATERAL I.D.
- ⊕ — EXIST. MANHOLE/INLET TO BE REMOVED (ITEM 496)
- PROP. TRUNK LINE

STR. I.D.	DESCRIPTION	STA./OFFSET	TOP OF STR. ELEV.	PROP. FL. OF STR.	PROP. FL. OF PIPE (NORTH)	PROP. FL. OF PIPE (SOUTH)	PROP. FL. OF PIPE (EAST)	PROP. FL. OF PIPE (WEST)
A1	PROP. TY "F" INLET	STA. 50845+25.96, 24.30' LT.	107.12'	101.38'	–	101.88'	–	101.88'
A2	PROP. TY "C" GRATE INLET	STA. 50842+62.33, 39.68' RT	106.89'	100.89'	101.89'	100.89'	–	–
A23	PROP. TY "C" GRATE INLET	STA. 841+51.56, 1.53' LT ⊗	123.81'	119.50'	–	–	119.50'	–
JA4	PROP. JUNCTION BOX	STA. 50846+86.98, 23.30' LT	105.12'	102.12'	102.12'	102.62'	102.62'	102.12'
JA3	PROP. TY "A" MANHOLE	STA. 50845+26.40, 40.90' RT.	107.45'	101.29'	101.29'	–	101.29'	–
A13	PROP. TY "F" INLET	STA. 50849+45.69, 24.00' LT.	106.99'	103.00'	103.00'	–	–	–

⚠ BM & HORIZONTAL DATA

BM #US 281-1
EL=107.13'
STA. 853+00.67, 198.90' LT.
3¼" TxDOT ALUMINUM DISK

BM #US 281-2
EL=108.36'
STA. 846+46.19, 203.37' LT.
3¼" TxDOT ALUMINUM DISK

⊗ MAINLANE STATION

NOTE:

1.) ALL UTILITIES SHALL BE THE RESPONSIBITILY OF THE CONTRACTOR TO VERIFY HORIZONTAL & VERTICAL INFORMATION IN THE FIELD.
2.) ALL ABANDONED PIPE TO BE CAPPED, SUBSIDIARY TO ITEM 496.
3.) CONTRACTOR TO COORDINATE WITH S.W.B. TELEPHONE FOR NEW/EXIST SERVICE LINE PRIOR TO CONSTRUCTION

SHEET TOTALS

ITEM	EST.	FINAL	UNIT	DESCRIPTION
*400	910		CY	SEWER EXCAVATION
402	842		LF	TRENCH EXCAVATION PROTECTION
464	255		FT	RCP (CL III) 24 IN
464	157		FT	RCP (CL III) 30 IN
464	320		FT	RCP (CL III) 36 IN
465	1		EA	MANHOLE (TY) "A"
465	2		EA	INLET (TY) "F"
465	2		EA	INLET (TY) "C"
465	1		EA	JUNCTION BOX

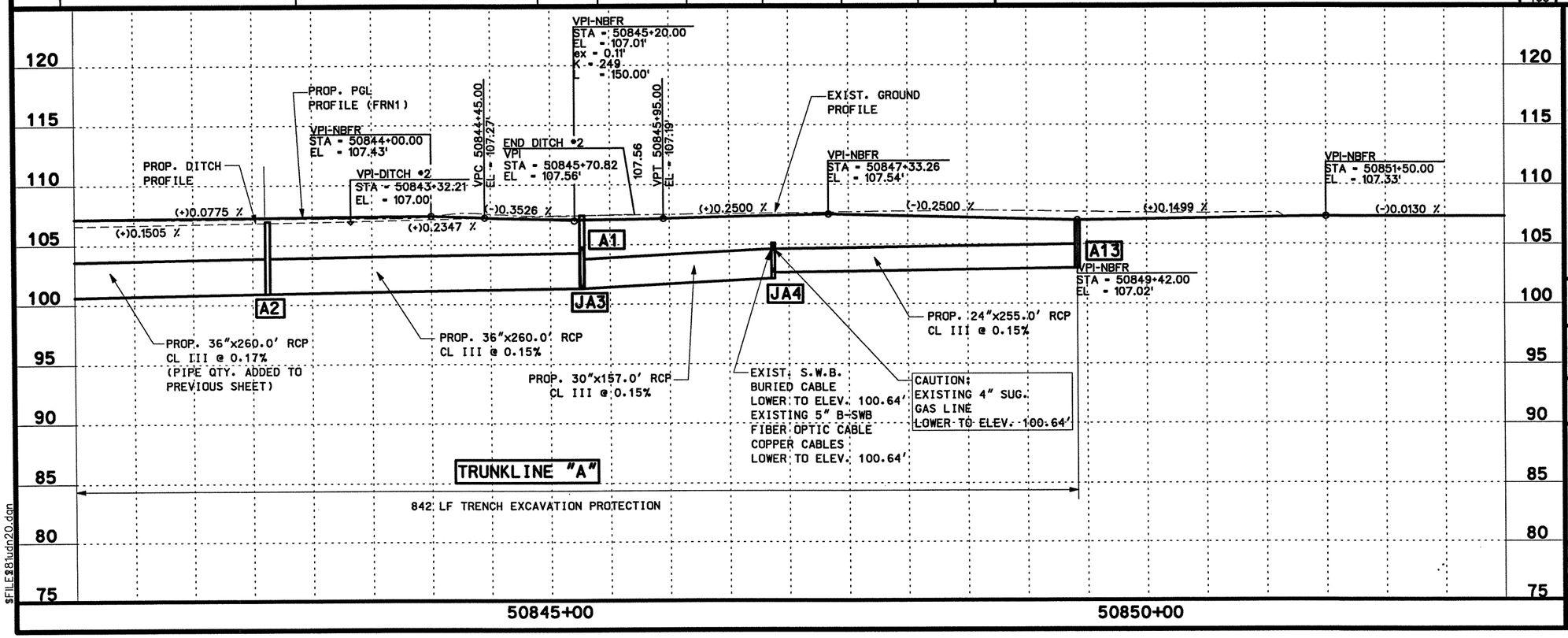

* FOR CONTRACTORS INFORMATION ONLY

STATE OF TEXAS — RAMIRO GUTIERREZ — 65948 — REGISTERED PROFESSIONAL ENGINEER

THE SEAL APPEARING ON THIS DOCUMENT WAS AUTHORIZED BY RAMIRO GUTIERREZ, P.E. 65948

DATE: 8-12-09

ALTERATION OF A SEALED DOCUMENT WITHOUT PROPER NOTIFICATION TO THE RESPONSIBLE ENGINEER IS AN OFFENSE UNDER THE TEXAS ENGINEERING PRATICE LAW.

Parsons Brinckerhoff Quade & Douglas Inc.

R. Gutierrez Engineering Corporation

Texas Department of Transportation

© 2003 by TxDOT

UTILITIES & DRAINAGE PLAN & PROFILE

NORTHBOUND FRONTAGE ROAD

STA. 50841+00 "FRN1" TO STA. 50853+00 "FRN1"

SHEET 21 OF 22

PLAN 1"= 100' HORIZ
PROFILE 1"= 10' VERT

DESIGNED:	FED. RD DIV. No.	STATE	FEDERAL AID PROJECT No.			HIGHWAY No.
CHECKED:	6	TEXAS				US 281
DRAWN:	STATE DISTRICT	COUNTY	CONTROL No.	SECTION No.	JOB No.	SHEET No.
CHECKED:	21	HIDALGO	0255	08	091	559

$NAME$ $TIME$ $DATE$ $FILE$ 81udn20.dgn

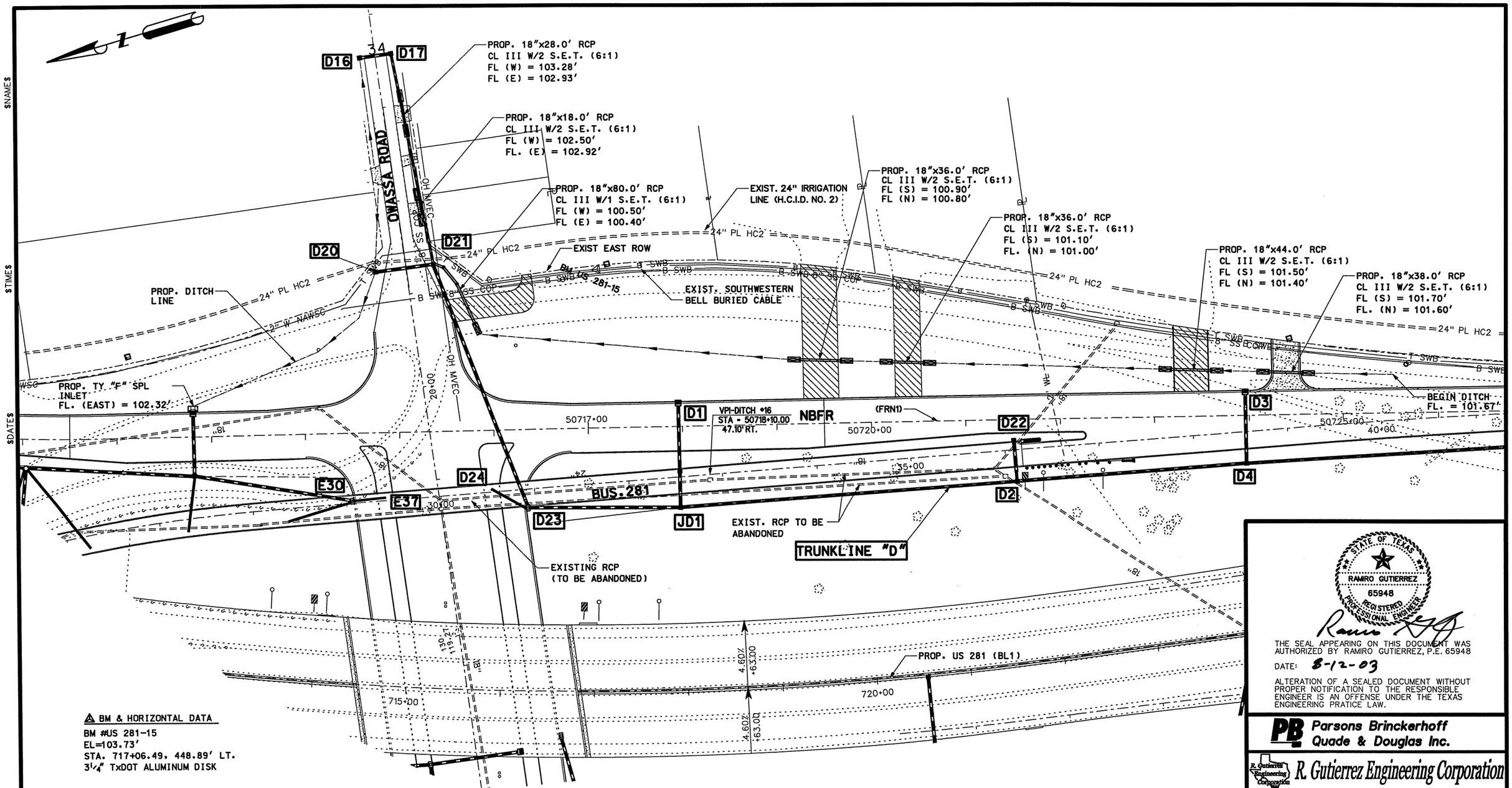

△ BM & HORIZONTAL DATA

BM #US 281-15
EL=103.73'
STA. 717+06.49, 448.89' LT.
3¼" TxDOT ALUMINUM DISK

NOTE:

1.) ALL UTILITIES SHALL BE THE RESPONSIBITILY OF THE CONTRACTOR TO VERIFY HORIZONTAL & VERTICAL INFORMATION IN THE FIELD.
2.) ALL ABANDONED PIPE TO BE CAPPED, SUBSIDIARY TO ITEM 496.
3.) CONTRACTOR TO COORDINATE WITH S.W.B. TELEPHONE FOR NEW/EXIST SERVICE LINE PRIOR TO CONSTRUCTION

SHEET TOTALS				
ITEM	EST.	FINAL	UNIT	DESCRIPTION
464	280		FT	RCP (CL III) 18 IN
467	13		EA	S.E.T. (6:1)

STATE OF TEXAS
RAMIRO GUTIERREZ
65948
REGISTERED PROFESSIONAL ENGINEER

THE SEAL APPEARING ON THIS DOCUMENT WAS AUTHORIZED BY RAMIRO GUTIERREZ, P.E. 65948

DATE: 8-12-03

ALTERATION OF A SEALED DOCUMENT WITHOUT PROPER NOTIFICATION TO THE RESPONSIBLE ENGINEER IS AN OFFENSE UNDER THE TEXAS ENGINEERING PRATICE LAW.

Parsons Brinckerhoff Quade & Douglas Inc.

R. Gutierrez Engineering Corporation

Texas Department of Transportation

©2003 by TxDOT

UTILITIES & DRAINAGE PLAN & PROFILE
NORTHBOUND DITCH LAYOUT

SHEET 22 OF 22 PLAN 1"= 100' HORIZ

DESIGNED:	FED. RD DIV. No.	STATE	FEDERAL AID PROJECT No.			HIGHWAY No.	
CHECKED:	6	TEXAS				US 281	
DRAWN:	STATE DISTRICT	COUNTY	CONTROL No.	SECTION No.	JOB No.	SHEET No.	
CHECKED:	21	HIDALGO	0255	08	091	560	

$NAME$ $TIME$ $DATE$ $FILE$

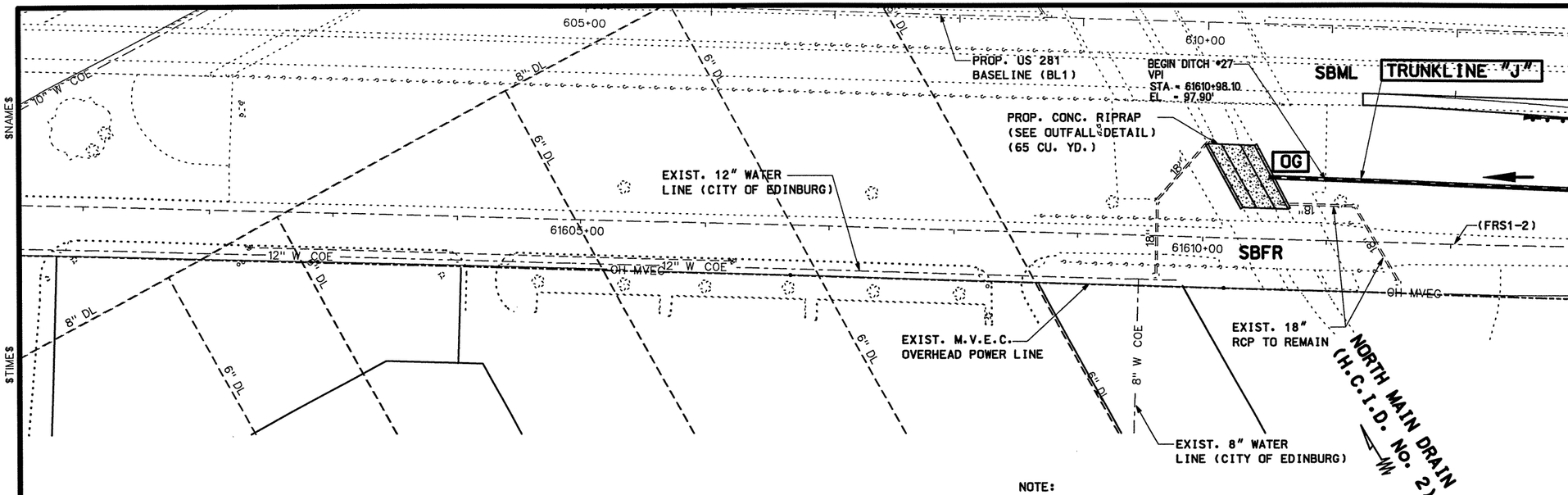

LEGEND

- PROP. DITCH FLOWLINE
- STORM SEWER FLOW DIRECTION
- NBFR — NORTH BOUND FRONTAGE ROAD
- NBML — NORTH BOUND MAINLANES
- B — BURIED TELEPHONE CABLE
- OH — OVERHEAD POWER LINES
- 8" SS — EXIST. SANITARY SEWER LINE
- DRAINAGE STR. TO BE CAPPED
- PROPOSED LUMINAIRE
- 07 — STRUCTURE I.D.
- RCP TO REMAIN
- RCP TO BE ABANDONED
- H.P. — DITCH HIGH POINT
- L.P. — DITCH LOW POINT
- LAT1 — LATERAL I.D.
- EXIST. MANHOLE/INLET TO BE REMOVED (ITEM 496)
- PROP. TRUNK LINE

NOTE:

1.) ALL UTILITIES SHALL BE THE RESPONSIBITILY OF THE CONTRACTOR TO VERIFY HORIZONTAL & VERTICAL INFORMATION IN THE FIELD.
2.) ALL ABANDONED PIPE TO BE CAPPED, SUBSIDIARY TO ITEM 496.
3.) CONTRACTOR TO COORDINATE WITH S.W.B. TELEPHONE FOR NEW/EXIST SERVICE LINE PRIOR TO CONSTRUCTION

STR. I.D.	DESCRIPTION	STA./OFFSET	TOP OF STR. ELEV.	PROP. FL. OF STR.	PROP. FL. OF PIPE (NORTH)	PROP. FL. OF PIPE (SOUTH)	PROP. FL. OF PIPE (EAST)	PROP. FL. OF PIPE (WEST)
OG	PROP.OUTFALL	STA. 61610+48.95, 49.62' LT.	-	87.01'	-	87.01'	-	-

SHEET TOTALS

ITEM	EST.	FINAL	UNIT	DESCRIPTION
*400	515		CY	SEWER EXCAVATION
402	248		FT	TRENCH EXCAVATION PROTECTION
432	65		CY	RIPRAP (CONC.)(CL B)(RR8)
464	266		FT	RCP (CL III) 36 IN

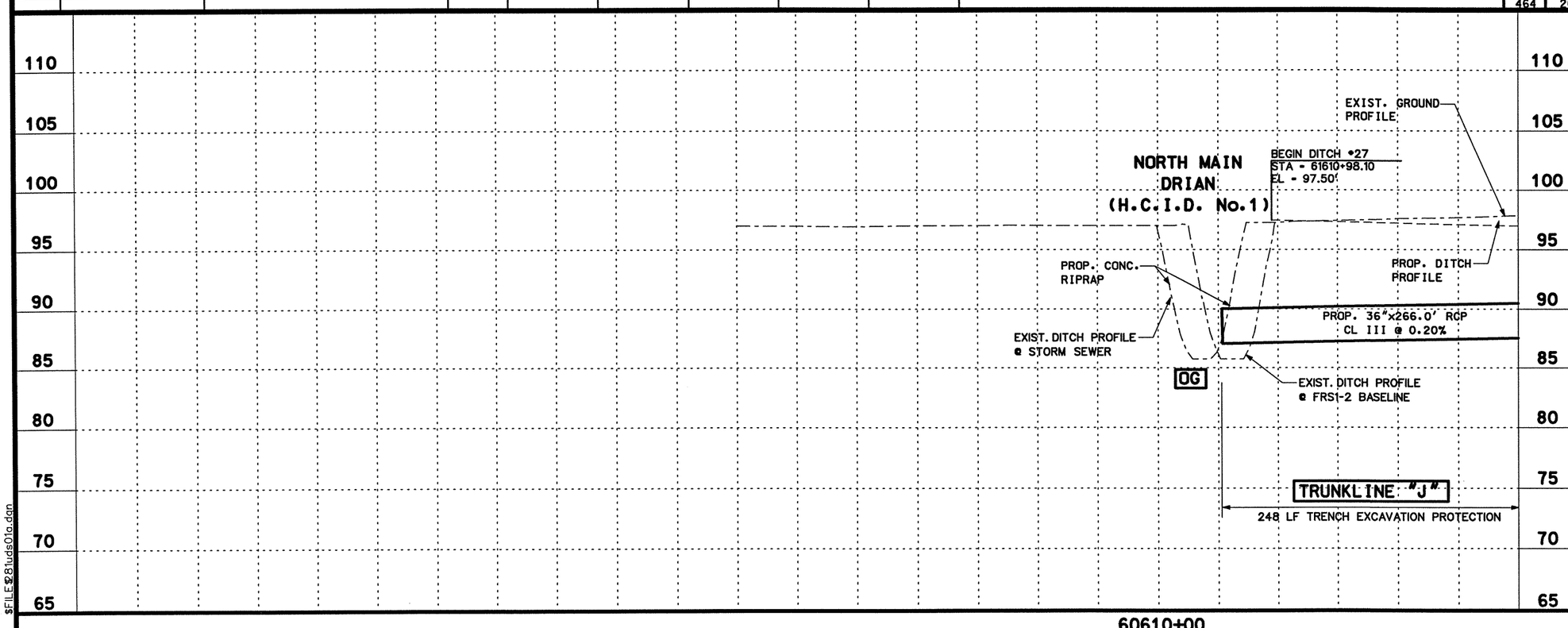

* FOR CONTRACTORS INFORMATION ONLY

STATE OF TEXAS
RAMIRO GUTIERREZ
65948
REGISTERED PROFESSIONAL ENGINEER

THE SEAL APPEARING ON THIS DOCUMENT WAS AUTHORIZED BY RAMIRO GUTIERREZ, P.E. 65948

DATE: 8-12-03

ALTERATION OF A SEALED DOCUMENT WITHOUT PROPER NOTIFICATION TO THE RESPONSIBLE ENGINEER IS AN OFFENSE UNDER THE TEXAS ENGINEERING PRATICE LAW.

Parsons Brinckerhoff Quade & Douglas Inc.

R. Gutierrez Engineering Corporation

Texas Department of Transportation

©2003 by TxDOT

UTILITIES & DRAINAGE PLAN & PROFILE
SOUTHBOUND FRONTAGE ROAD

STA.61605+00 "FRS1-2" TO
STA. 61613+00 "FRS1-2"

SHEET 1 OF 23

PLAN 1"= 100' HORIZ
PROFILE 1"= 10' VERT

DESIGNED:	FED. RD DIV. No.	STATE	FEDERAL AID PROJECT No.	HIGHWAY No.
CHECKED:	6	TEXAS		US 281

DRAWN:	STATE DISTRICT	COUNTY	CONTROL No.	SECTION No.	JOB No.	SHEET No.
CHECKED:	21	HIDALGO	0255	08	091	561

$NAME$ $TIME$ $DATE$ $FILE$281uds01a.dgn

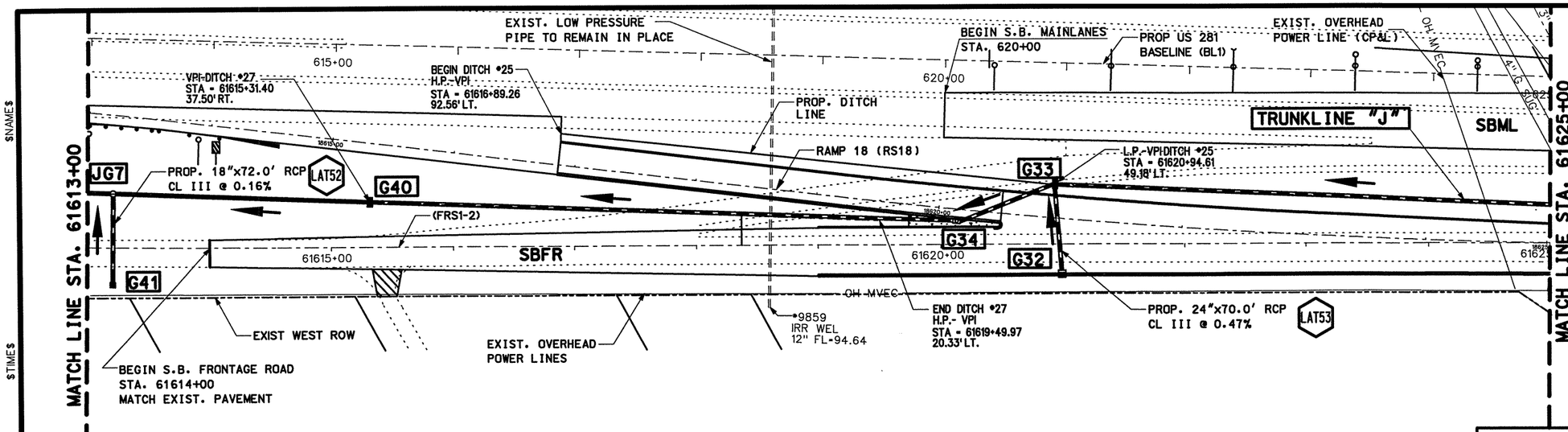

LEGEND

- ——— –PROP. DITCH FLOWLINE
- ➡ –STORM SEWER FLOW DIRECTION
- NBFR –NORTH BOUND FRONTAGE ROAD
- NBML –NORTH BOUND MAINLANES
- B —— –BURIED TELEPHONE CABLE
- OH —— –OVERHEAD POWER LINES
- 8" SS—— –EXIST. SANITARY SEWER LINE
- ◆ –DRAINAGE STR. TO BE CAPPED
- ⊠ –PROPOSED LUMINAIRE
- 07 –STRUCTURE I.D.
- ==== –RCP TO REMAIN
- :::::::: –RCP TO BE ABANDONED
- H.P. –DITCH HIGH POINT
- L.P. –DITCH LOW POINT
- LAT1 –LATERAL I.D.
- ⊕ –EXIST. MANHOLE/INLET TO BE REMOVED (ITEM 496)
- ——— –PROP. TRUNK LINE

STR. I.D.	DESCRIPTION	STA./OFFSET	TOP OF STR. ELEV.	PROP. FL. OF STR.	PROP. FL. OF PIPE (NORTH)	PROP. FL. OF PIPE (SOUTH)	PROP. FL. OF PIPE (EAST)	PROP. FL. OF PIPE (WEST)
G32	PROP. TY "F" INLET W/1-5' EXTENSION	STA. 61621+00.00, 26.00' RT	97.96'	92.00'	–	–	92.00'	–
G33	PROP. TY "CC" GRATE INLET	STA. 61620+94.68, 49.21' LT	97.74'	88.74'	88.74'	88.74'	–	90.65'
G34	PROP. TY "A" INLET	STA. 61620+13.22, 21.35' LT	98.93'	88.59'	88.59'	88.59'	–	–
G40	PROP. TY "CC" GRATE INLET	STA. 61615+31.40, 37.51' RT	96.50'	87.87'	87.87	87.87'	–	–
JG7	PROP. TY "A" MANHOLE	STA. 61613+20.50, 45.02' LT.	96.97'	87.55'	87.55'	87.55'	–	90.50'
G41	PROP. TY "C" INLET	STA. 61613+20.50, 30.52' RT.	96.29'	92.50'	–	–	92.50'	–

NOTE:

1.) ALL UTILITIES SHALL BE THE RESPONSIBITILY OF THE CONTRACTOR TO VERIFY HORIZONTAL & VERTICAL INFORMATION IN THE FIELD.
2.) ALL ABANDONED PIPE TO BE CAPPED, SUBSIDIARY TO ITEM 496.
3.) CONTRACTOR TO COORDINATE WITH S.W.B. TELEPHONE FOR NEW/EXIST SERVICE LINE PRIOR TO CONSTRUCTION

SHEET TOTALS

ITEM	EST.	FINAL	UNIT	DESCRIPTION
* 400	2764		CY	SEWER EXCAVATION
402	1342		LF	TRENCH EXCAVATION PROTECTION
464	72		FT	RCP (CL III) 18 IN
464	70		FT	RCP (CL III) 24 IN
464	1331		FT	RCP (CL III) 36 IN
465	1		EA	INLET (TY) "A"
465	1		EA	INLET (TY) "C"
465	2		EA	INLET (TY) "CC"
465	1		EA	INLET (TY) "F"
465	1		EA	MANHOLE (TY) "A"
465	1		EA	5' INLET EXTENSION

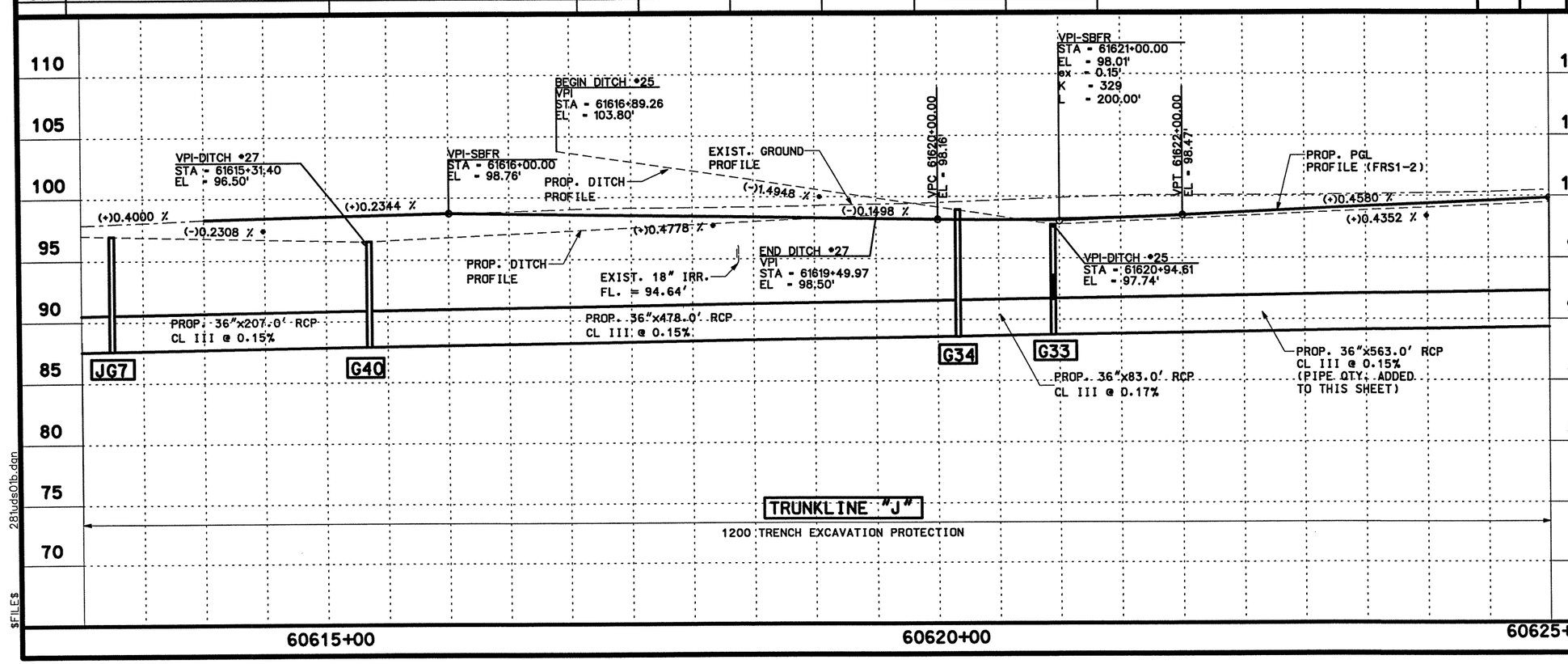

* FOR CONTRACTORS INFORMATION ONLY

STATE OF TEXAS
RAMIRO GUTIERREZ
65948
REGISTERED PROFESSIONAL ENGINEER

THE SEAL APPEARING ON THIS DOCUMENT WAS AUTHORIZED BY RAMIRO GUTIERREZ, P.E. 65948

DATE: 8-12-03

ALTERATION OF A SEALED DOCUMENT WITHOUT PROPER NOTIFICATION TO THE RESPONSIBLE ENGINEER IS AN OFFENSE UNDER THE TEXAS ENGINEERING PRATICE LAW.

Parsons Brinckerhoff Quade & Douglas Inc.

R. Gutierrez Engineering Corporation

Texas Department of Transportation

© 2003 by TxDOT

UTILITIES & DRAINAGE PLAN & PROFILE
SOUTHBOUND FRONTAGE ROAD

STA. 61613+00 "FRSI-2" TO
STA. 61625+00 "FRSI-2"

SHEET 2 OF 23

PLAN 1"= 100' HORIZ
PROFILE 1"= 10' VERT

DESIGNED:	FED. RD DIV. No.	STATE	FEDERAL AID PROJECT No.			HIGHWAY No.
CHECKED:	6	TEXAS				US 281
DRAWN:	STATE DISTRICT	COUNTY	CONTROL No.	SECTION No.	JOB No.	SHEET No.
CHECKED:	21	HIDALGO	0255	08	091	562

$NAME$
$TIME$
$DATE$
$FILE$
281uds01b.dgn

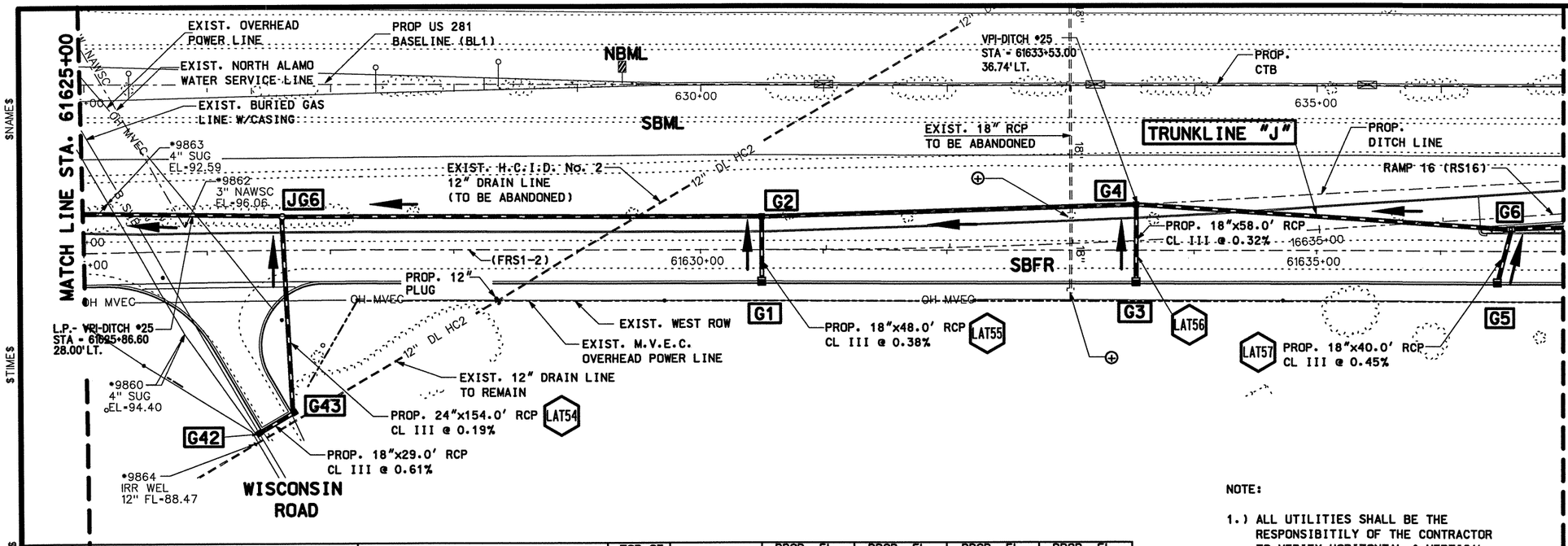

STR. I.D.	DESCRIPTION	STA./OFFSET	TOP OF STR. ELEV.	PROP. FL. OF STR.	PROP. FL. OF PIPE (NORTH)	PROP. FL. OF PIPE (SOUTH)	PROP. FL. OF PIPE (EAST)	PROP. FL. OF PIPE (WEST)
G1	PROP. TY "F" INLET W/5' EXTENSION	STA. 61630+50.00, 26.00' RT	98.80'	94.50'	–	–	94.50'	–
G2	PROP. TY "C" GRATE INLET	STA. 61630+50.00, 26.75' LT	99.00'	90.67'	90.67'	90.67'	–	92.50'
G3	PROP. TY "F" INLET	STA. 61633+53.00, 26.00' RT	97.93'	93.50'	–	–	93.50'	–
G4	PROP. TY "C" INLET	STA. 61633+53.00, 36.74' LT	98.35'	91.13'	91.13'	91.63'	–	91.50'
G5	PROP. TY "F" INLET	STA. 61636+46.27, 26.00' RT	98.37'	94.50'	–	–	94.50'	–
G6	PROP. TY "A" INLET	STA. 61636+56.98, 19.57' LT	99.43'	92.09'	92.09'	92.09'	–	92.50'
JG6	PROP. TY "A" MANHOLE	STA. 61626+61.09, 27.04' LT.	99.80'	89.59'	89.59'	90.09'	–	91.50'
G42	PROP. TY "C" GRATE INLET	STA. 61626+40.70, 146.82' RT.	98.64'	95.50'	–	95.50'	–	–
G43	PROP. TY "C" GRATE INLET	STA. 61626+69.62, 130.32' RT.	98.64'	95.30'	95.30'	–	94.80'	–

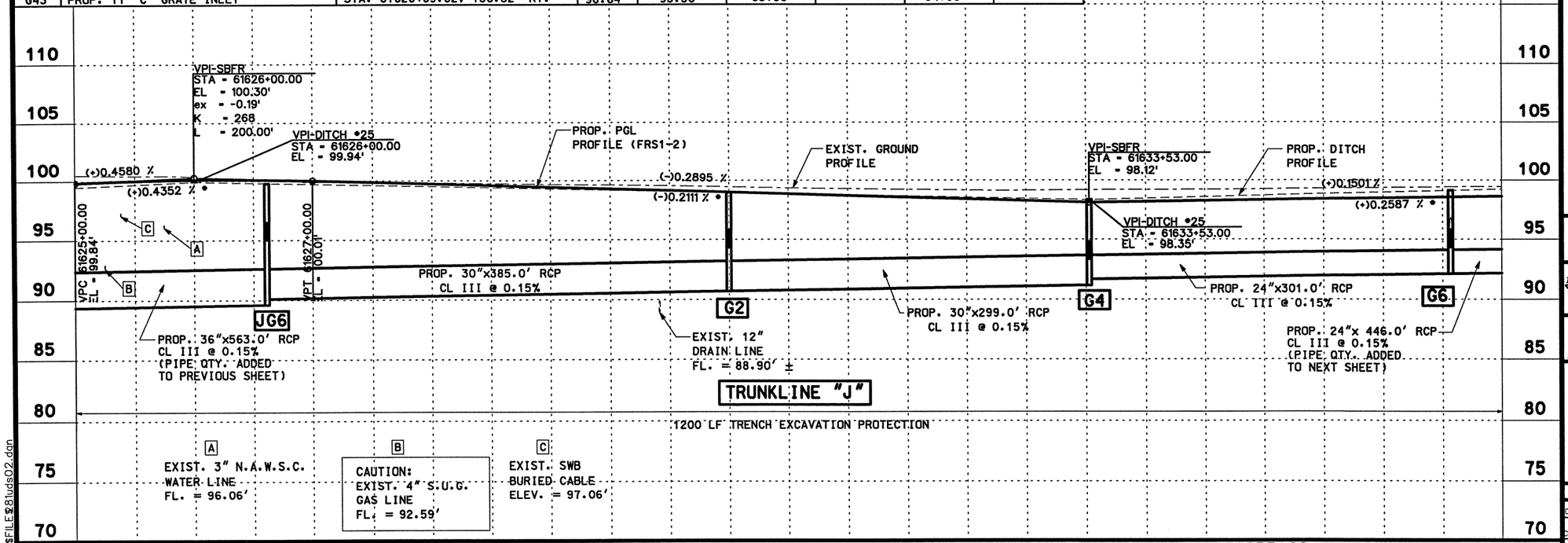

NOTE:

1.) ALL UTILITIES SHALL BE THE RESPONSIBITILY OF THE CONTRACTOR TO VERIFY HORIZONTAL & VERTICAL INFORMATION IN THE FIELD.
2.) ALL ABANDONED PIPE TO BE CAPPED, SUBSIDIARY TO ITEM 496.
3.) CONTRACTOR TO COORDINATE WITH S.W.B. TELEPHONE FOR NEW/EXIST SERVICE LINE PRIOR TO CONSTRUCTION

LEGEND

- PROP. DITCH FLOWLINE
- STORM SEWER FLOW DIRECTION
- NBFR – NORTH BOUND FRONTAGE ROAD
- NBML – NORTH BOUND MAINLANES
- B – BURIED TELEPHONE CABLE
- OH – OVERHEAD POWER LINES
- 8" SS – EXIST. SANITARY SEWER LINE
- DRAINAGE STR. TO BE CAPPED
- PROPOSED LUMINAIRE
- O7 – STRUCTURE I.D.
- RCP TO REMAIN
- RCP TO BE ABANDONED
- H.P. – DITCH HIGH POINT
- L.P. – DITCH LOW POINT
- LAT1 – LATERAL I.D.
- EXIST. MANHOLE/INLET TO BE REMOVED (ITEM 496)
- PROP. TRUNK LINE

SHEET TOTALS

ITEM	EST.	FINAL	UNIT	DESCRIPTION
*400	1724		CY	SEWER EXCAVATION
402	1500		LF	TRENCH EXCAVATION PROTECTION
464	175		FT	RCP (CL III) 18 IN
464	455		FT	RCP (CL III) 24 IN
464	684		FT	RCP (CL III) 30 IN
465	1		EA	INLET (TY) "A"
465	4		EA	INLET (TY) "C"
465	3		EA	INLET (TY) "F"
465	1		EA	MANHOLE (TY) "A"
465	1		EA	5' INLET EXTENSION
496	2		EA	REMOVE OLD STR. (SMALL)

* FOR CONTRACTORS INFORMATION ONLY

STATE OF TEXAS
RAMIRO GUTIERREZ
65948
REGISTERED PROFESSIONAL ENGINEER

THE SEAL APPEARING ON THIS DOCUMENT WAS AUTHORIZED BY RAMIRO GUTIERREZ, P.E. 65948

DATE: 8-12-03

ALTERATION OF A SEALED DOCUMENT WITHOUT PROPER NOTIFICATION TO THE RESPONSIBLE ENGINEER IS AN OFFENSE UNDER THE TEXAS ENGINEERING PRATICE LAW.

Parsons Brinckerhoff Quade & Douglas Inc.

R. Gutierrez Engineering Corporation

Texas Department of Transportation

© 2003 by TxDOT

UTILITIES & DRAINAGE PLAN & PROFILE

SOUTHBOUND FRONTAGE ROAD

STA. 61625+00 "FRS1-2" TO
STA. 61637+00 "FRS1-2"

SHEET 3 OF 23

PLAN 1"= 100' HORIZ
PROFILE 1"= 10' VERT

DESIGNED:	FED. RD DIV. No.	STATE	FEDERAL AID PROJECT No.			HIGHWAY No.	
CHECKED:	6	TEXAS				US 281	
DRAWN:	STATE DISTRICT	COUNTY	CONTROL No.	SECTION No.	JOB No.	SHEET No.	
CHECKED:	21	HIDALGO	0255	08	091	563	

$NAME$
$TIME$
$DATE$
$FILE@81uds02.dgn

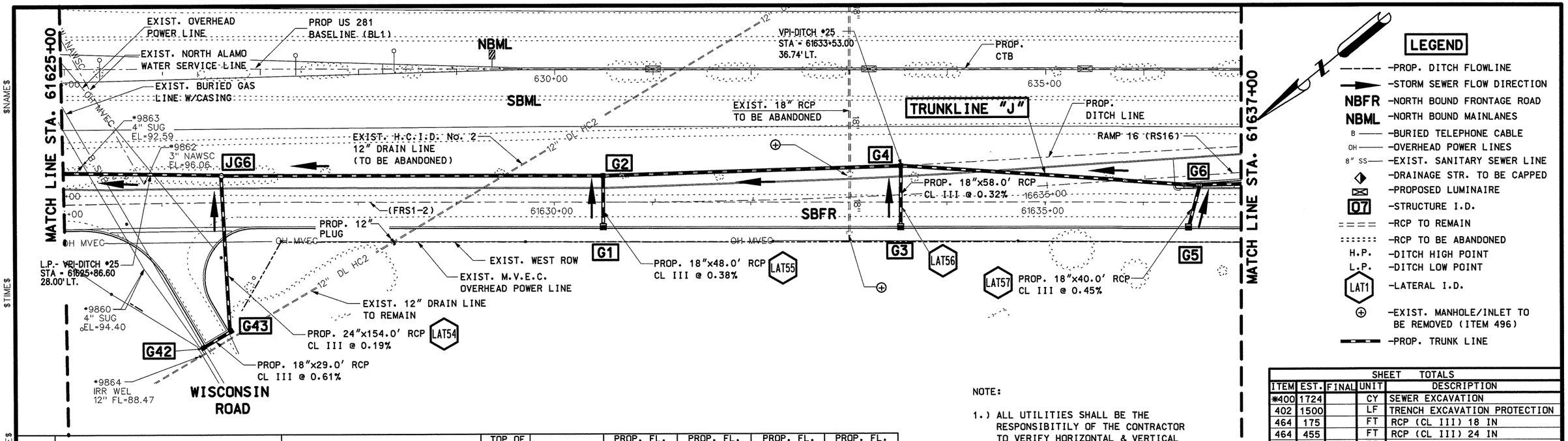

STR. I.D.	DESCRIPTION	STA./OFFSET	TOP OF STR. ELEV.	PROP. FL. OF STR.	PROP. FL. OF PIPE (NORTH)	PROP. FL. OF PIPE (SOUTH)	PROP. FL. OF PIPE (EAST)	PROP. FL. OF PIPE (WEST)
G1	PROP. TY "F" INLET W/5' EXTENSION	STA. 61630+50.00, 26.00' RT	98.80'	94.50'	–	–	94.50'	–
G2	PROP. TY "C" GRATE INLET	STA. 61630+50.00, 26.75' LT	99.00'	90.17'	90.17'	90.17'	–	92.50'
G3	PROP. TY "F" INLET	STA. 61633+53.00, 26.00' RT	97.93'	93.50'	–	–	93.50'	–
G4	PROP. TY "C" INLET	STA. 61633+53.00, 36.74' LT	98.35'	90.63'	90.63'	90.63'	–	91.50'
G5	PROP. TY "F" INLET	STA. 61636+46.27, 26.00' RT	98.37'	94.50'	–	–	94.50'	–
G6	PROP. TY "A" INLET	STA. 61636+56.98, 19.57' LT	99.43'	91.09'	91.09'	91.09'	–	92.50'
JG6	PROP. TY "A" MANHOLE	STA. 61626+61.09, 27.04' LT.	99.80'	89.59'	89.59'	89.59'	–	91.50'
G42	PROP. TY "C" GRATE INLET	STA. 61626+40.70, 146.82' RT.	98.64'	95.50'	–	95.50'	–	–
G43	PROP. TY "C" GRATE INLET	STA. 61626+69.62, 130.32' RT.	98.64'	95.30'	95.30'	–	94.80'	–

NOTE:

1.) ALL UTILITIES SHALL BE THE RESPONSIBILITIY OF THE CONTRACTOR TO VERIFY HORIZONTAL & VERTICAL INFORMATION IN THE FIELD.
2.) ALL ABANDONED PIPE TO BE CAPPED, SUBSIDIARY TO ITEM 496.
3.) CONTRACTOR TO COORDINATE WITH S.W.B. TELEPHONE FOR NEW/EXIST SERVICE LINE PRIOR TO CONSTRUCTION

SHEET TOTALS

ITEM	EST.	FINAL	UNIT	DESCRIPTION
*400	1724		CY	SEWER EXCAVATION
402	1500		LF	TRENCH EXCAVATION PROTECTION
464	175		FT	RCP (CL III) 18 IN
464	455		FT	RCP (CL III) 24 IN
464	684		FT	RCP (CL III) 30 IN
465	1		EA	INLET (TY) "A"
465	4		EA	INLET (TY) "C"
465	3		EA	INLET (TY) "F"
465	1		EA	MANHOLE (TY) "A"
465	1		EA	5' INLET EXTENSION
496	2		EA	REMOVE OLD STR. (SMALL)

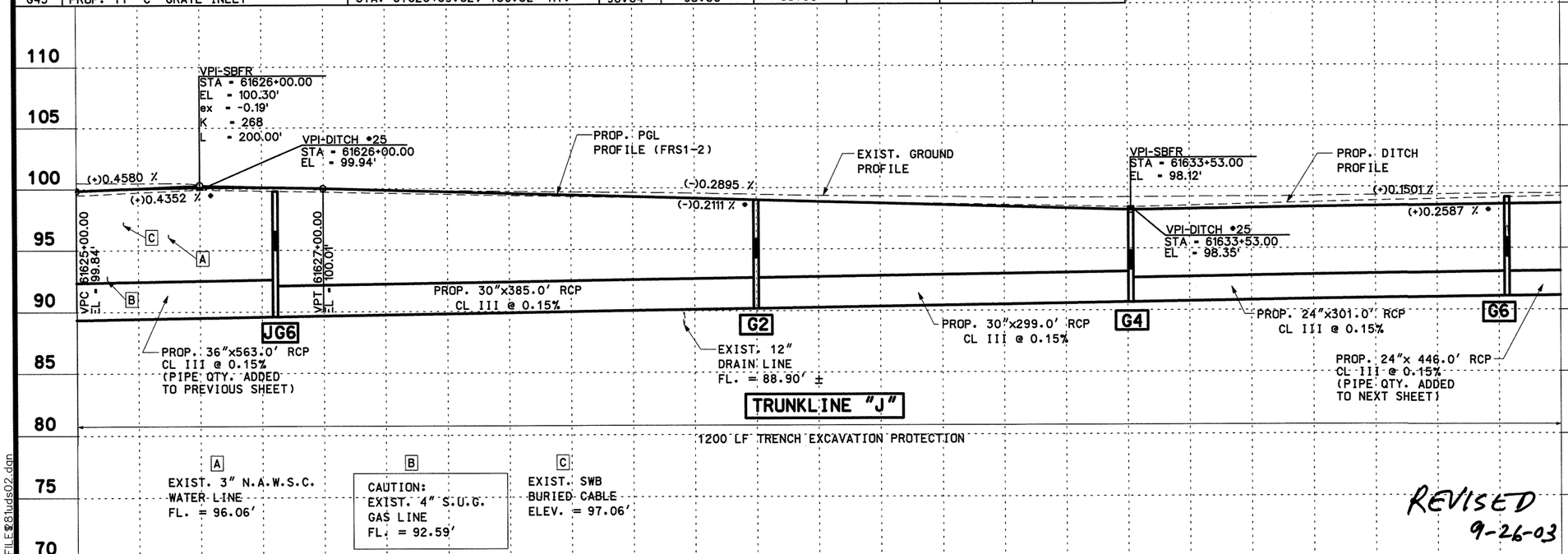

* FOR CONTRACTORS INFORMATION ONLY

STATE OF TEXAS
RAMIRO GUTIERREZ
65948
REGISTERED PROFESSIONAL ENGINEER

THE SEAL APPEARING ON THIS DOCUMENT WAS AUTHORIZED BY RAMIRO GUTIERREZ, P.E. 65948

DATE: 9-17-03

ALTERATION OF A SEALED DOCUMENT WITHOUT PROPER NOTIFICATION TO THE RESPONSIBLE ENGINEER IS AN OFFENSE UNDER THE TEXAS ENGINEERING PRATICE LAW.

Parsons Brinckerhoff Quade & Douglas Inc.

R. Gutierrez Engineering Corporation

Texas Department of Transportation

© 2003 by TxDOT

UTILITIES & DRAINAGE PLAN & PROFILE

SOUTHBOUND FRONTAGE ROAD

STA. 61625+00 "FRS1-2" TO
STA. 61637+00 "FRS1-2"

SHEET 3 OF 23

PLAN 1"= 100' HORIZ
PROFILE 1"= 10' VERT

DESIGNED:	FED. RD DIV. No.	STATE	FEDERAL AID PROJECT No.			HIGHWAY No.
CHECKED:	6	TEXAS				US 281
DRAWN:	STATE DISTRICT	COUNTY	CONTROL No.	SECTION No.	JOB No.	SHEET No.
CHECKED:	21	HIDALGO	0255	08	091	563

$NAME$
$TIME$
$DATE$
$FILE$ 281uds02.dgn

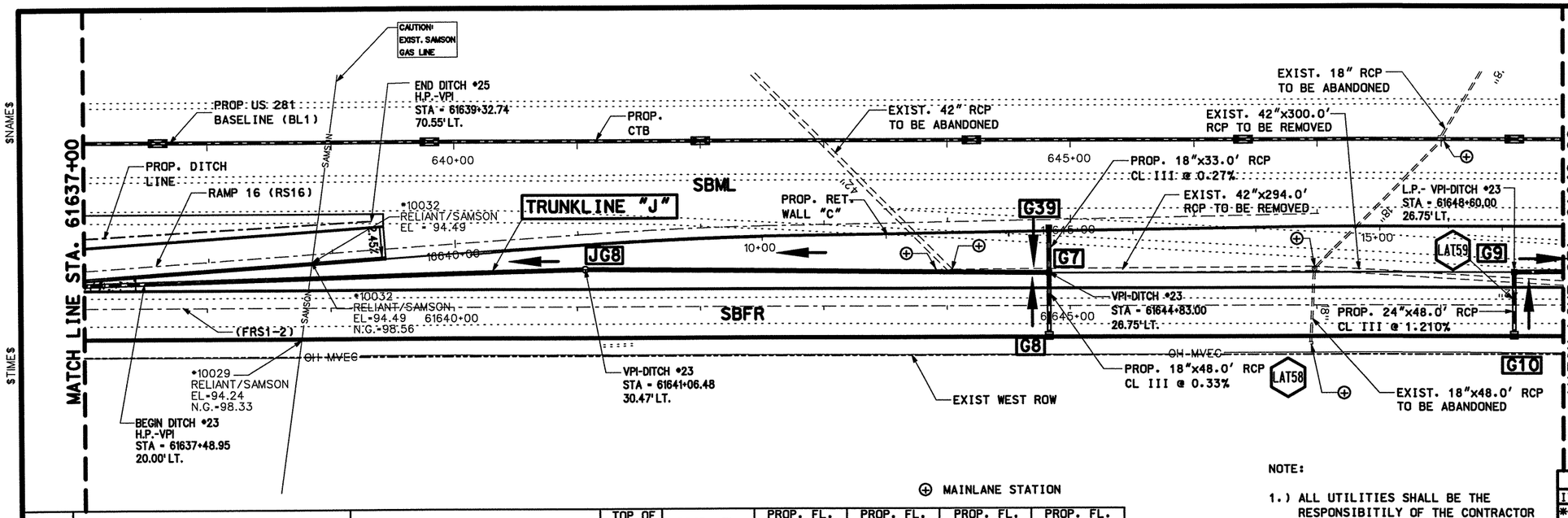

LEGEND

- PROP. DITCH FLOWLINE
- STORM SEWER FLOW DIRECTION
- NBFR — NORTH BOUND FRONTAGE ROAD
- NBML — NORTH BOUND MAINLANES
- B — BURIED TELEPHONE CABLE
- OH — OVERHEAD POWER LINES
- 8" SS — EXIST. SANITARY SEWER LINE
- DRAINAGE STR. TO BE CAPPED
- PROPOSED LUMINAIRE
- O7 — STRUCTURE I.D.
- RCP TO REMAIN
- RCP TO BE ABANDONED
- H.P. — DITCH HIGH POINT
- L.P. — DITCH LOW POINT
- LAT1 — LATERAL I.D.
- EXIST. MANHOLE/INLET TO BE REMOVED (ITEM 496)
- PROP. TRUNK LINE

⊕ MAINLANE STATION

STR. I.D.	DESCRIPTION	STA./OFFSET	TOP OF STR. ELEV.	PROP. FL. OF STR.	PROP. FL. OF PIPE (NORTH)	PROP. FL. OF PIPE (SOUTH)	PROP. FL. OF PIPE (EAST)	PROP. FL. OF PIPE (WEST)
G7	PROP. TY "C" INLET	STA. 61644+83.00, 26.75' LT	97.33'	93.33'	93.33'	–	94.30	93.33'
G8	PROP. TY "F" INLET	STA. 61644+83.00, 26.00' RT	98.29'	93.50'	–	–	93.50'	–
G9	PROP. TY "C" INLET	STA. 61648+60.00, 26.75' LT	96.75'	92.57'	–	92.57'	–	92.57'
G10	PROP. TY "F' INLET	STA. 61648+60.00, 26.00' RT	97.52'	93.20'	–	–	93.20'	–
JG8	PROP. TY "A" MANHOLE	STA. 61641+06.48, 30.47' LT	98.30'	92.76'	92.76	92.76	–	–
G39	PROP. TY "L1" INLET	STA. 644+82.51, 71.40' RT. ⊗	111.63'	94.40'	–	–	–	94.40'

⊗ MAINLANE STATION

NOTE:

1.) ALL UTILITIES SHALL BE THE RESPONSIBITILY OF THE CONTRACTOR TO VERIFY HORIZONTAL & VERTICAL INFORMATION IN THE FIELD.
2.) ALL ABANDONED PIPE TO BE CAPPED, SUBSIDIARY TO ITEM 496.
3.) CONTRACTOR TO COORDINATE WITH S.W.B. TELEPHONE FOR NEW/EXIST SERVICE LINE PRIOR TO CONSTRUCTION

SHEET TOTALS

ITEM	EST.	FINAL	UNIT	DESCRIPTION
*400	920		CY	SEWER EXCAVATION
402	913		LF	TRENCH EXCAVATION PROTECTION
464	81		FT	RCP (CL III) 18 IN
464	933		FT	RCP (CL III) 24 IN
465	1		EA	MANHOLE (TY) "A"
465	2		EA	INLET (TY) "C"
465	2		EA	INLET (TY) "F"
465	1		EA	INLET (TY) "L1"
496	5		EA	REMOVE OLD STR. (SMALL)
496	594		LF	REMOVE OLD STR. (PIPE)

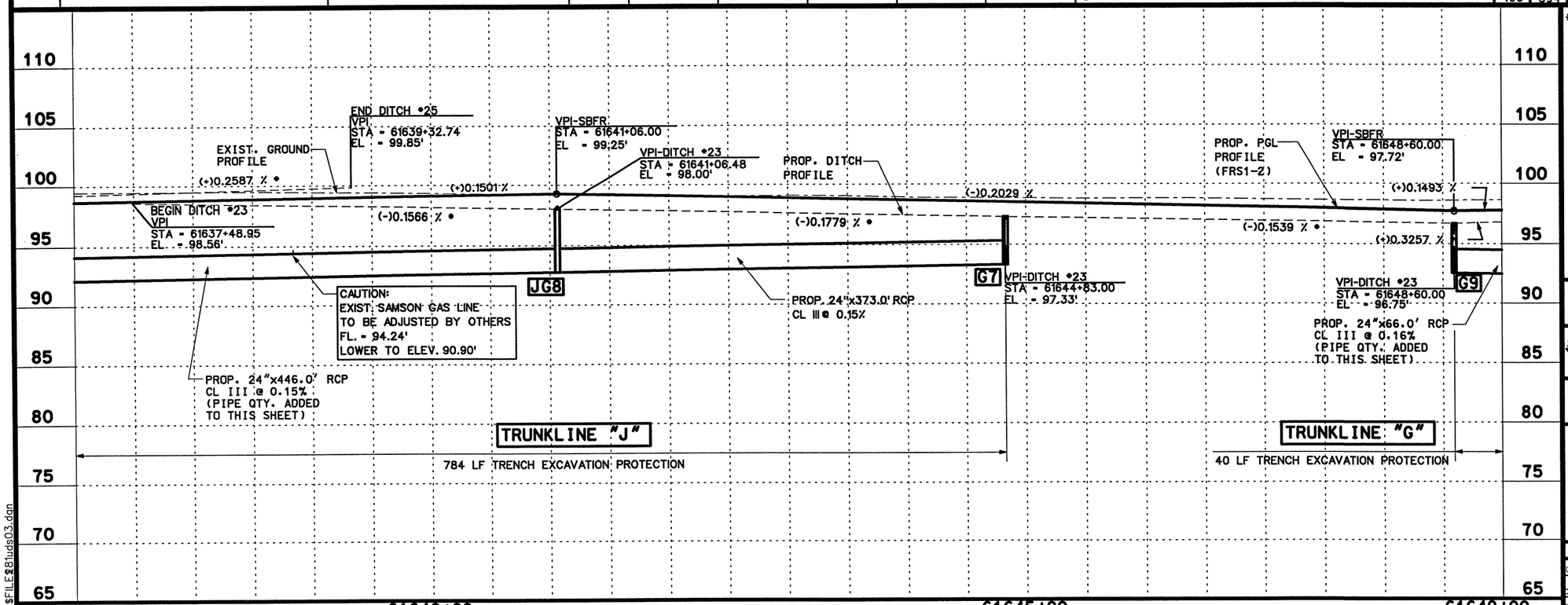

* FOR CONTRACTORS INFORMATION ONLY

STATE OF TEXAS
RAMIRO GUTIERREZ
65948
REGISTERED PROFESSIONAL ENGINEER

THE SEAL APPEARING ON THIS DOCUMENT WAS AUTHORIZED BY RAMIRO GUTIERREZ, P.E. 65948

DATE: 8-12-03

ALTERATION OF A SEALED DOCUMENT WITHOUT PROPER NOTIFICATION TO THE RESPONSIBLE ENGINEER IS AN OFFENSE UNDER THE TEXAS ENGINEERING PRATICE LAW.

Parsons Brinckerhoff Quade & Douglas Inc.

R. Gutierrez Engineering Corporation

Texas Department of Transportation

© 2003 by TxDOT

UTILITIES & DRAINAGE PLAN & PROFILE

SOUTHBOUND FRONTAGE ROAD

STA. 61637+00 "FRS1-2" TO
STA. 61649+00 "FRS1-2"

SHEET 4 OF 23

PLAN 1"= 100' HORIZ
PROFILE 1"= 10' VERT

DESIGNED:	FED. RD DIV. No.	STATE	FEDERAL AID PROJECT No.			HIGHWAY No.	
CHECKED:	6	TEXAS				US 281	
DRAWN:	STATE DISTRICT	COUNTY	CONTROL No.	SECTION No.	JOB No.	SHEET No.	
CHECKED:	21	HIDALGO	0255	08	091	564	

$FILE$81uds03.dgn
$NAME$
$TIME$
$DATE$

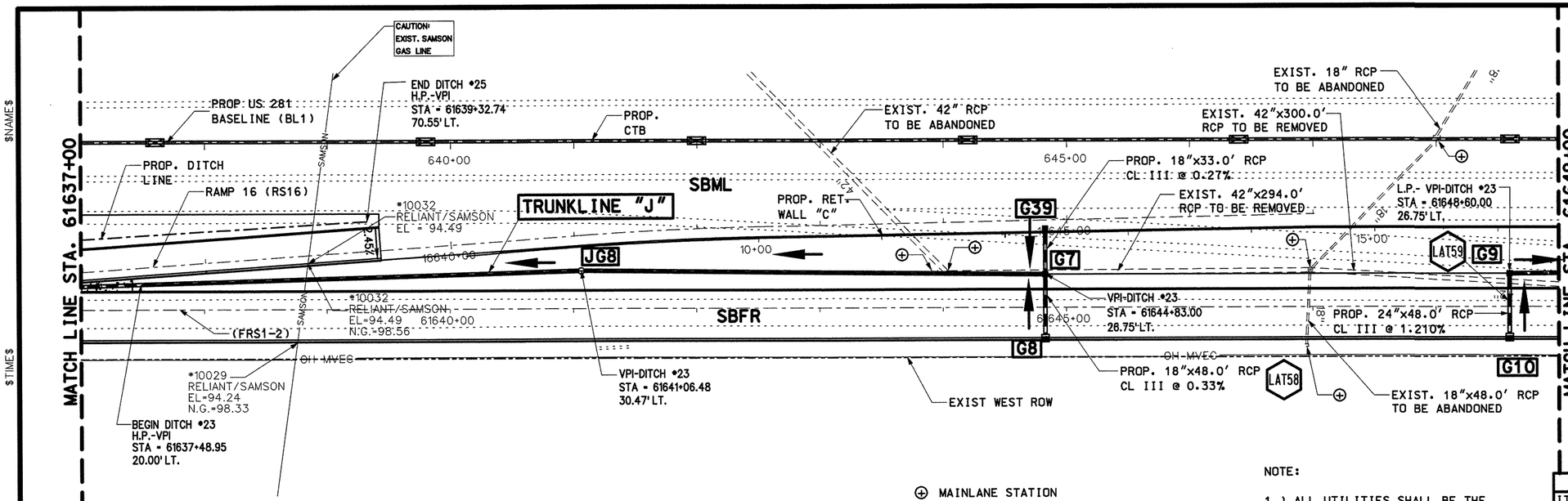

⊕ MAINLANE STATION

STR. I.D.	DESCRIPTION	STA./OFFSET	TOP OF STR. ELEV.	PROP. FL. OF STR.	PROP. FL. OF PIPE (NORTH)	PROP. FL. OF PIPE (SOUTH)	PROP. FL. OF PIPE (EAST)	PROP. FL. OF PIPE (WEST)
G7	PROP. TY "C" INLET	STA. 61644+83.00, 26.75' LT	97.33'	92.33'	92.33'	-	94.30	93.33'
G8	PROP. TY "F" INLET	STA. 61644+83.00, 26.00' RT	98.29'	93.50'	-	-	93.50'	-
G9	PROP. TY "C" INLET	STA. 61648+60.00, 26.75' LT	96.75'	92.57'	-	92.57'	-	92.57'
G10	PROP. TY "F' INLET	STA. 61648+60.00, 26.00' RT	97.52'	93.20'	-	-	93.20'	-
JG8	PROP. TY "A" MANHOLE	STA. 61641+06.48, 30.47' LT	98.30'	91.76'	91.76	91.76	-	-
G39	PROP. TY "L1" INLET	STA. 644+82.51, 71.40' RT. ⊗	111.63'	94.40'	-	-	-	94.40'

⊗ MAINLANE STATION

NOTE:

1.) ALL UTILITIES SHALL BE THE RESPONSIBITILY OF THE CONTRACTOR TO VERIFY HORIZONTAL & VERTICAL INFORMATION IN THE FIELD.
2.) ALL ABANDONED PIPE TO BE CAPPED, SUBSIDIARY TO ITEM 496.
3.) CONTRACTOR TO COORDINATE WITH S.W.B. TELEPHONE FOR NEW/EXIST SERVICE LINE PRIOR TO CONSTRUCTION

LEGEND

- -PROP. DITCH FLOWLINE
- -STORM SEWER FLOW DIRECTION
- NBFR -NORTH BOUND FRONTAGE ROAD
- NBML -NORTH BOUND MAINLANES
- B -BURIED TELEPHONE CABLE
- OH -OVERHEAD POWER LINES
- 8" SS -EXIST. SANITARY SEWER LINE
- -DRAINAGE STR. TO BE CAPPED
- -PROPOSED LUMINAIRE
- Q7 -STRUCTURE I.D.
- -RCP TO REMAIN
- -RCP TO BE ABANDONED
- H.P. -DITCH HIGH POINT
- L.P. -DITCH LOW POINT
- LAT1 -LATERAL I.D.
- ⊕ -EXIST. MANHOLE/INLET TO BE REMOVED (ITEM 496)
- -PROP. TRUNK LINE

SHEET TOTALS

ITEM	EST.	FINAL	UNIT	DESCRIPTION
*400	920		CY	SEWER EXCAVATION
402	913		LF	TRENCH EXCAVATION PROTECTION
464	81		FT	RCP (CL III) 18 IN
464	933		FT	RCP (CL III) 24 IN
465	1		EA	MANHOLE (TY) "A"
465	2		EA	INLET (TY) "C"
465	2		EA	INLET (TY) "F"
465	1		EA	INLET (TY) "L1"
496	5		EA	REMOVE OLD STR. (SMALL)
496	594		LF	REMOVE OLD STR. (PIPE)

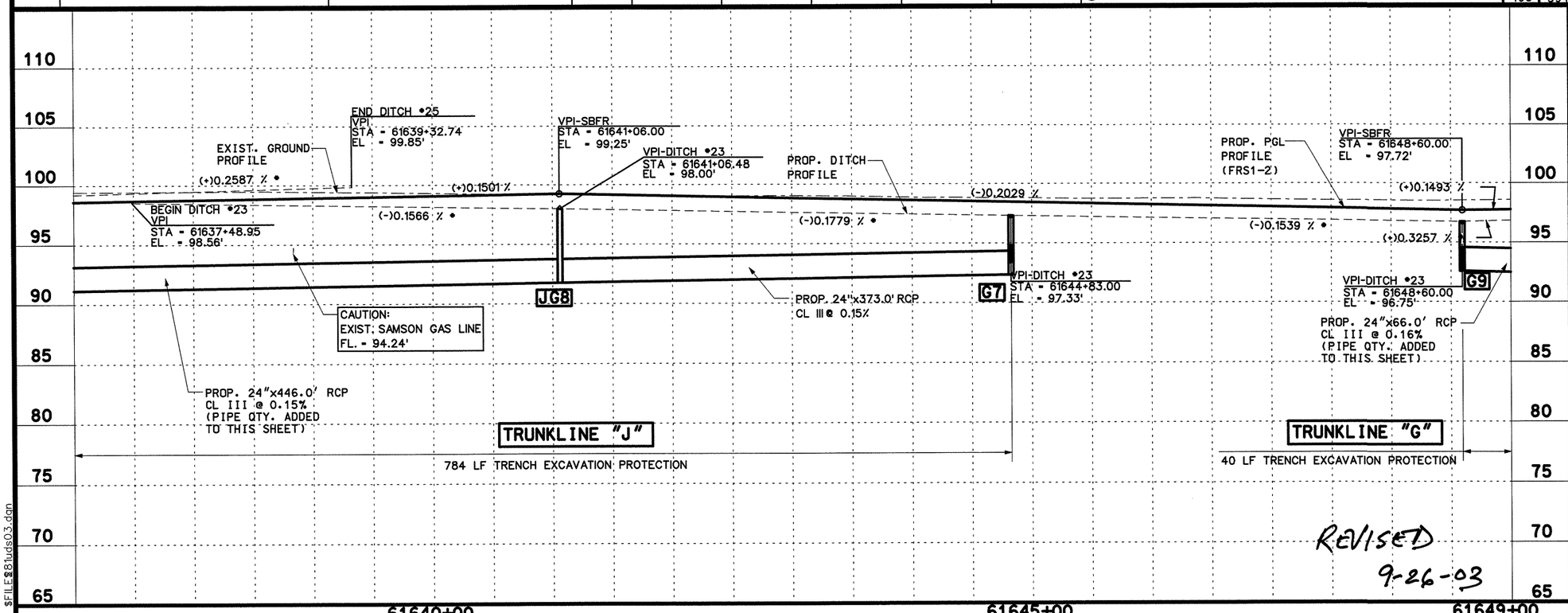

REVISED 9-26-03

* FOR CONTRACTORS INFORMATION ONLY

STATE OF TEXAS
RAMIRO GUTIERREZ
65948
REGISTERED PROFESSIONAL ENGINEER

THE SEAL APPEARING ON THIS DOCUMENT WAS AUTHORIZED BY RAMIRO GUTIERREZ, P.E. 65948

DATE: 9-17-03

ALTERATION OF A SEALED DOCUMENT WITHOUT PROPER NOTIFICATION TO THE RESPONSIBLE ENGINEER IS AN OFFENSE UNDER THE TEXAS ENGINEERING PRATICE LAW.

Parsons Brinckerhoff Quade & Douglas Inc.

R. Gutierrez Engineering Corporation

Texas Department of Transportation

© 2003 by TxDOT

UTILITIES & DRAINAGE PLAN & PROFILE
SOUTHBOUND FRONTAGE ROAD
STA. 61637+00 "FRS1-2" TO
STA. 61649+00 "FRS1-2"

SHEET 4 OF 23

PLAN 1"= 100' HORIZ
PROFILE 1"= 10' VERT

DESIGNED:	FED. RD DIV. No.	STATE	FEDERAL AID PROJECT No.		HIGHWAY No.	
CHECKED:	6	TEXAS			US 281	
DRAWN:	STATE DISTRICT	COUNTY	CONTROL No.	SECTION No.	JOB No.	SHEET No.
CHECKED:	21	HIDALGO	0255	08	091	564

$NAME$ $TIME$ $DATE$ $FILE$ 281uds03.dgn

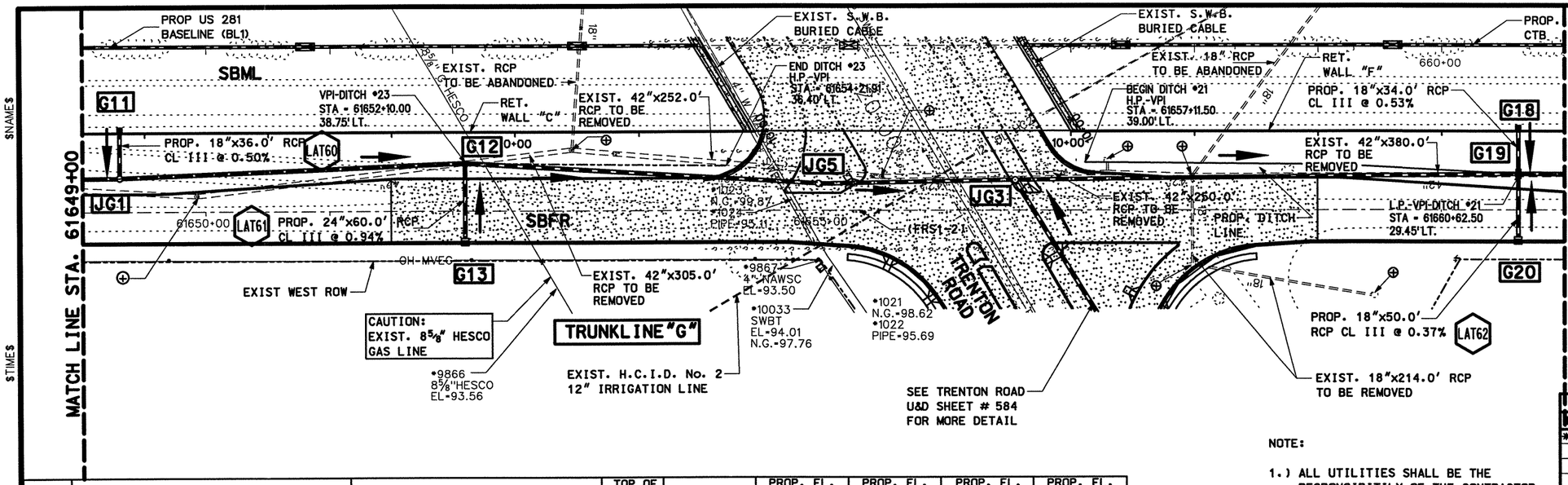

STR. I.D.	DESCRIPTION	STA./OFFSET	TOP OF STR. ELEV.	PROP. FL. OF STR.	PROP. FL. OF PIPE (NORTH)	PROP. FL. OF PIPE (SOUTH)	PROP. FL. OF PIPE (EAST)	PROP. FL. OF PIPE (WEST)
G11	PROP. TY "L1" GRATE INLET	STA. 649+29.69, 68.00' RT ⊗	118.54'	94.50'	–	–	–	94.50'
G12	PROP. TY "C" GRATE INLET	STA. 61652+10.00, 38.75' LT	97.89'	91.54'	92.04'	91.54'	–	92.04'
G13	PROP. TY "F" INLET W/1-5.0' EXT.	STA. 61652+10.00, 26.00' RT	98.04'	92.64'	–	–	92.64'	–
JG3	PROP. TY "A" MANHOLE	STA. 61656+55.63, 24.62' LT	99.40'	90.37'	90.87'	90.37'	–	90.95'
G18	PROP. TY "L1" GRATE INLET	STA. 660+62.10, 68.00' LT ⊗	119.26'	94.50'	–	–	–	94.50'
G19	PROP. TY "CC" GRATE INLET	STA. 61660+62.80, 29.45' LT	97.59'	89.25'	89.76'	89.25'	94.30'	93.30'
G20	PROP. TY "F" INLET W/1-5.0' EXT.	STA. 61660+62.37, 26.00' RT	97.97'	93.50'	–	–	93.50'	–
JG1	PROP. TY "A" MANHOLE	STA. 61649+30.00, 27.42' LT	96.98'	92.46'	92.46'	92.46'	94.30'	–
JG5	PROP. TY "A" MANHOLE	STA. 61654+95.80, 21.75' LT	99.40'	91.11'	91.11'	91.11'	–	–

⊗ MAINLANE STATION

NOTE:

1.) ALL UTILITIES SHALL BE THE RESPONSIBITILY OF THE CONTRACTOR TO VERIFY HORIZONTAL & VERTICAL INFORMATION IN THE FIELD.
2.) ALL ABANDONED PIPE TO BE CAPPED. SUBSIDIARY TO ITEM 496.
3.) CONTRACTOR TO COORDINATE WITH S.W.B. TELEPHONE FOR NEW/EXIST SERVICE LINE PRIOR TO CONSTRUCTION

LEGEND

- -PROP. DITCH FLOWLINE
- -STORM SEWER FLOW DIRECTION
- NBFR -NORTH BOUND FRONTAGE ROAD
- NBML -NORTH BOUND MAINLANES
- B -BURIED TELEPHONE CABLE
- OH -OVERHEAD POWER LINES
- 8" SS -EXIST. SANITARY SEWER LINE
- -DRAINAGE STR. TO BE CAPPED
- -PROPOSED LUMINAIRE
- 07 -STRUCTURE I.D.
- -RCP TO REMAIN
- -RCP TO BE ABANDONED
- H.P. -DITCH HIGH POINT
- L.P. -DITCH LOW POINT
- LAT1 -LATERAL I.D.
- -EXIST. MANHOLE/INLET TO BE REMOVED (ITEM 496)
- -PROP. TRUNK LINE

SHEET TOTALS

ITEM	EST.	FINAL	UNIT	DESCRIPTION
*400	1820		CY	SEWER EXCAVATION
402	1344		LF	TRENCH EXCAVATION PROTECTION
464	120		FT	RCP (CL III) 18 IN
464	60		FT	RCP (CL III) 24 IN
464	276		FT	RCP (CL III) 30 IN
464	438		FT	RCP (CL III) 36 IN
464	403		FT	RCP (CL III) 48 IN
465	1		EA	INLET (TY) "C"
465	3		EA	MANHOLE (TY) "A"
465	1		EA	INLET (TY) "CC"
465	2		EA	INLET (TY) "F"
465	2		EA	INLET (TY) "L1"
465	2		EA	5' INLET EXTENSION
496	7		EA	REMOVE OLD STR. (SMALL)
496	1401		LF	REMOVE OLD STR. (PIPE)

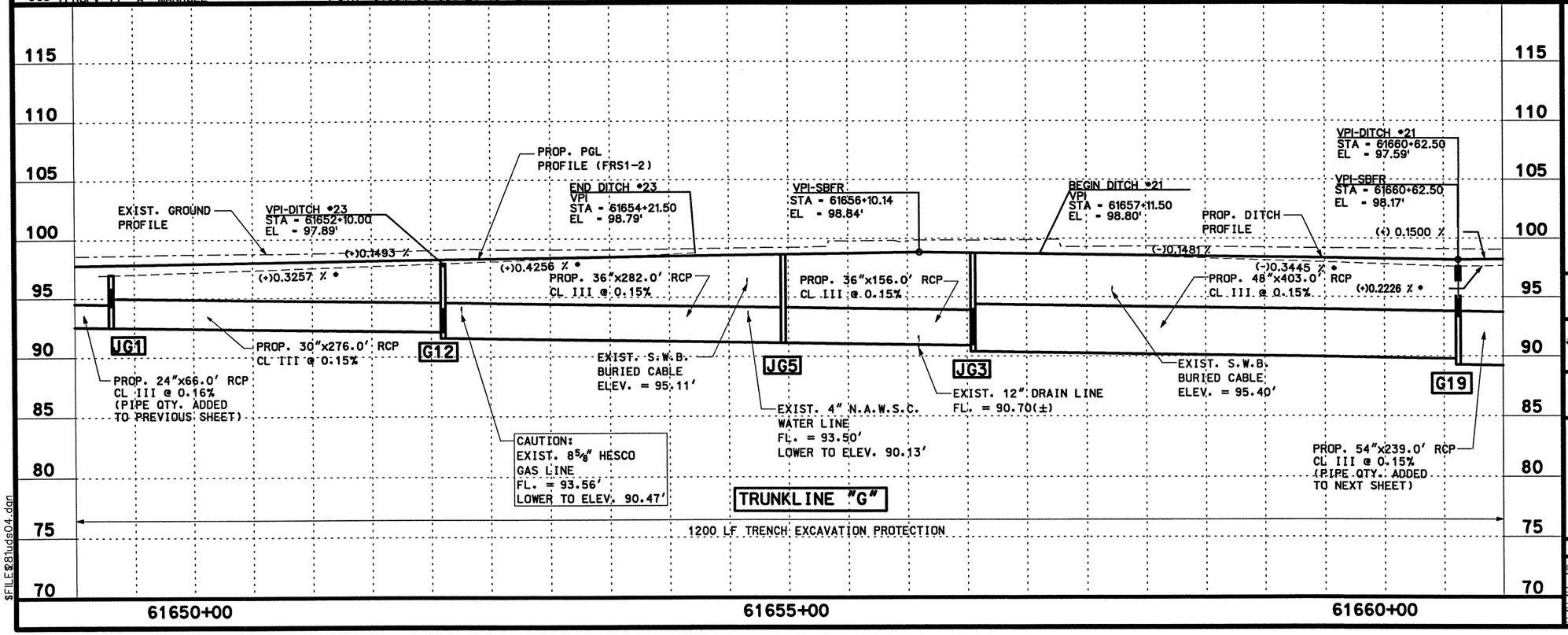

* FOR CONTRACTORS INFORMATION ONLY

STATE OF TEXAS
RAMIRO GUTIERREZ
65948
REGISTERED
PROFESSIONAL ENGINEER

THE SEAL APPEARING ON THIS DOCUMENT WAS AUTHORIZED BY RAMIRO GUTIERREZ, P.E. 65948

DATE: 8-12-03

ALTERATION OF A SEALED DOCUMENT WITHOUT PROPER NOTIFICATION TO THE RESPONSIBLE ENGINEER IS AN OFFENSE UNDER THE TEXAS ENGINEERING PRATICE LAW.

Parsons Brinckerhoff
Quade & Douglas Inc.

R. Gutierrez Engineering Corporation

Texas Department of Transportation

© 2003 by TxDOT

UTILITIES & DRAINAGE PLAN & PROFILE

SOUTHBOUND FRONTAGE ROAD

STA. 61649+00 "FRS1-2" TO
STA. 61661+00 "FRS1-2"

SHEET 5 OF 23

PLAN 1"= 100' HORIZ
PROFILE 1"= 10' VERT

DESIGNED:	FED. RD DIV. No.	STATE	FEDERAL AID PROJECT No.			HIGHWAY No.	
CHECKED:	6	TEXAS				US 281	
DRAWN:	STATE DISTRICT	COUNTY	CONTROL No.	SECTION No.	JOB No.	SHEET No.	
CHECKED:	21	HIDALGO	0255	08	091	565	

$NAME$
$TIME$
$DATE$
$FILE$ 281uds04.dgn

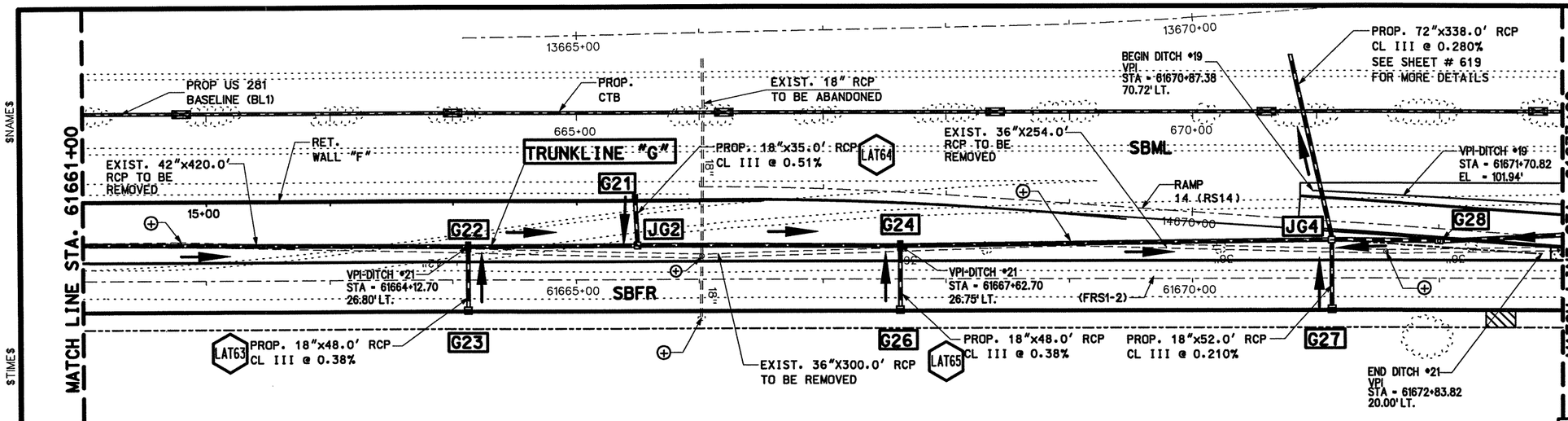

LEGEND

- PROP. DITCH FLOWLINE
- STORM SEWER FLOW DIRECTION
- NBFR — NORTH BOUND FRONTAGE ROAD
- NBML — NORTH BOUND MAINLANES
- B — BURIED TELEPHONE CABLE
- OH — OVERHEAD POWER LINES
- 8" SS — EXIST. SANITARY SEWER LINE
- DRAINAGE STR. TO BE CAPPED
- PROPOSED LUMINAIRE
- 07 — STRUCTURE I.D.
- RCP TO REMAIN
- RCP TO BE ABANDONED
- H.P. — DITCH HIGH POINT
- L.P. — DITCH LOW POINT
- LAT1 — LATERAL I.D.
- EXIST. MANHOLE/INLET TO BE REMOVED (ITEM 496)
- PROP. TRUNK LINE

STR. I.D.	DESCRIPTION	STA./OFFSET	TOP OF STR. ELEV.	PROP. FL. OF STR.	PROP. FL. OF PIPE (NORTH)	PROP. FL. OF PIPE (SOUTH)	PROP. FL. OF PIPE (EAST)	PROP. FL. OF PIPE (WEST)
G21	PROP. TY "L1" GRATE INLET	STA. 665+47.47, 68.00' RT ⊗	112.30'	93.50'	–	–	–	93.50'
G22	PROP. TY "CC" GRATE INLET	STA. 61664+12.70, 26.80' LT	98.37'	88.72'	88.72'	88.72'	–	92.30'
G23	PROP. TY "F" INLET	STA. 61664+12.50, 26.00' RT	98.56'	92.50'	–	–	92.50'	–
G24	PROP. TY "CC" GRATE INLET	STA. 61667+62.70, 26.75' LT	99.28'	88.19'	88.19'	88.19'	–	91.80'
JG4	PROP. JUNCTION BOX	STA. 61671+12.34, 30.77' LT	94.74'	87.66'	87.66'	90.24	87.66'	92.39'
G26	PROP. TY "F" INLET W/1-5.0' EXT.	STA. 61667+62.50, 26.00' RT	99.37'	92.00'	–	–	92.00'	–
G27	PROP. TY "F" INLET W/1-5.0' EXT.	STA. 61671+12.50, 26.00' RT	100.18'	92.51'	–	–	92.51'	–
G28	PROP. TY "A2" INLET	STA. 61671+99.86, 31.83' LT	101.60'	90.37'	90.37'	90.37'	–	–
JG2	PROP. JUNCTION BOX	STA. 61665+49.92, 27.58' LT	95.80'	88.49'	88.49'	88.49'	93.30'	–

NOTE:

1.) ALL UTILITIES SHALL BE THE RESPONSIBITILY OF THE CONTRACTOR TO VERIFY HORIZONTAL & VERTICAL INFORMATION IN THE FIELD.
2.) ALL ABANDONED PIPE TO BE CAPPED, SUBSIDIARY TO ITEM 496.
3.) CONTRACTOR TO COORDINATE WITH S.W.B. TELEPHONE FOR NEW/EXIST SERVICE LINE PRIOR TO CONSTRUCTION

⊗ MAINLANE STATION

SHEET TOTALS

ITEM	EST.	FINAL	UNIT	DESCRIPTION
*400	2566		CY	SEWER EXCAVATION
402	1383		LF	TRENCH EXCAVATION PROTECTION
464	183		FT	RCP (CL III) 18 IN
464	84		FT	RCP (CL III) 48 IN
464	342		FT	RCP (CL III) 54 IN
464	342		FT	RCP (CL III) 60 IN
464	346		FT	RCP (CL III) 72 IN
465	1		EA	INLET (TY) "A2"
465	2		EA	INLET (TY) "CC"
465	3		EA	INLET (TY) "F"
465	1		EA	INLET (TY) "L1"
465	2		EA	5' INLET EXTENSION
465	2		EA	PROP. JUNCTION BOX
496	5		EA	REMOVE OLD STR. (SMALL)
496	974		LF	REMOVE OLD STR. (PIPE)

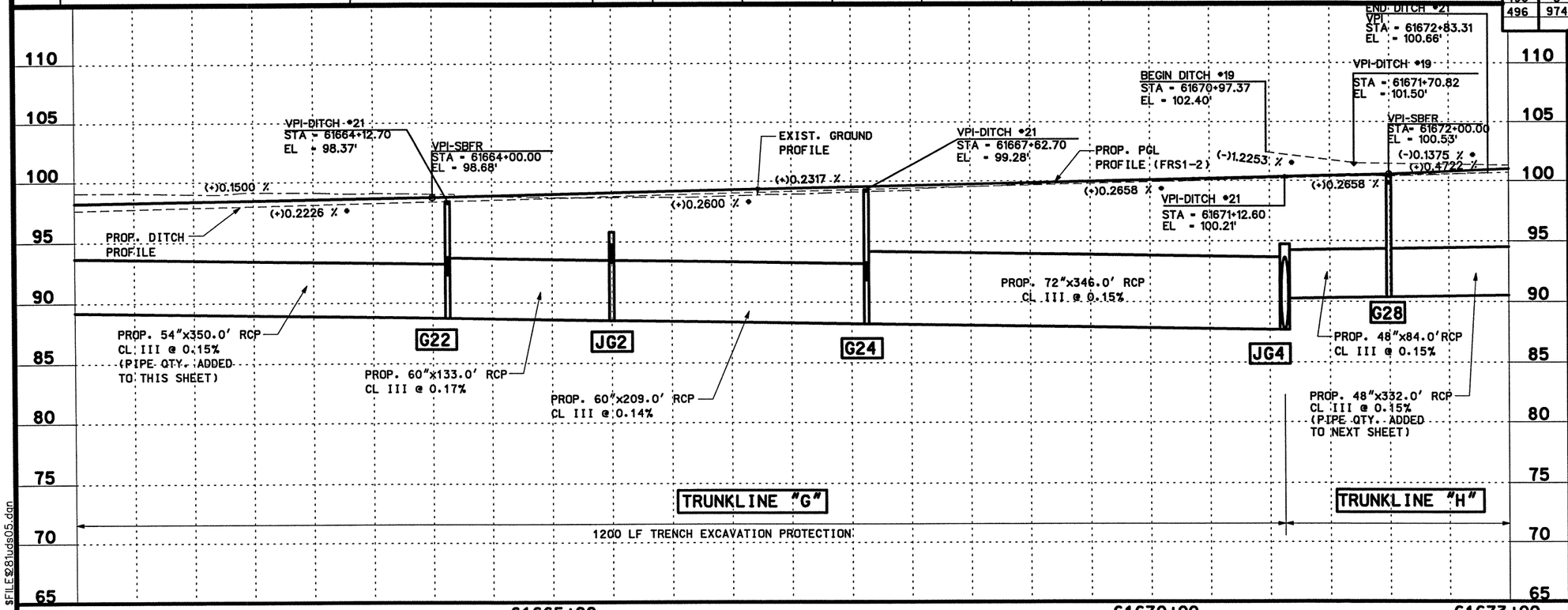

* FOR CONTRACTORS INFORMATION ONLY

STATE OF TEXAS
RAMIRO GUTIERREZ
65948
REGISTERED PROFESSIONAL ENGINEER

THE SEAL APPEARING ON THIS DOCUMENT WAS AUTHORIZED BY RAMIRO GUTIERREZ, P.E. 65948

DATE: 8-12-03

ALTERATION OF A SEALED DOCUMENT WITHOUT PROPER NOTIFICATION TO THE RESPONSIBLE ENGINEER IS AN OFFENSE UNDER THE TEXAS ENGINEERING PRATICE LAW.

Parsons Brinckerhoff
Quade & Douglas Inc.

R. Gutierrez Engineering Corporation

Texas Department of Transportation

© 2003 by TxDOT

UTILITIES & DRAINAGE PLAN & PROFILE
SOUTHBOUND FRONTAGE ROAD

STA. 61661+00 "FRS1-2" TO
STA. 61673+00 "FRS1-2"

SHEET 6 OF 23

PLAN 1"= 100' HORIZ
PROFILE 1"= 10' VERT

DESIGNED:	FED. RD DIV. No.	STATE	FEDERAL AID PROJECT No.			HIGHWAY No.	
CHECKED:	6	TEXAS				US 281	
DRAWN:	STATE DISTRICT	COUNTY	CONTROL No.	SECTION No.	JOB No.	SHEET No.	
CHECKED:	21	HIDALGO	0255	08	091	566	

$NAME$
$TIME$
$DATE$
$FILE$ 281uds05.dgn

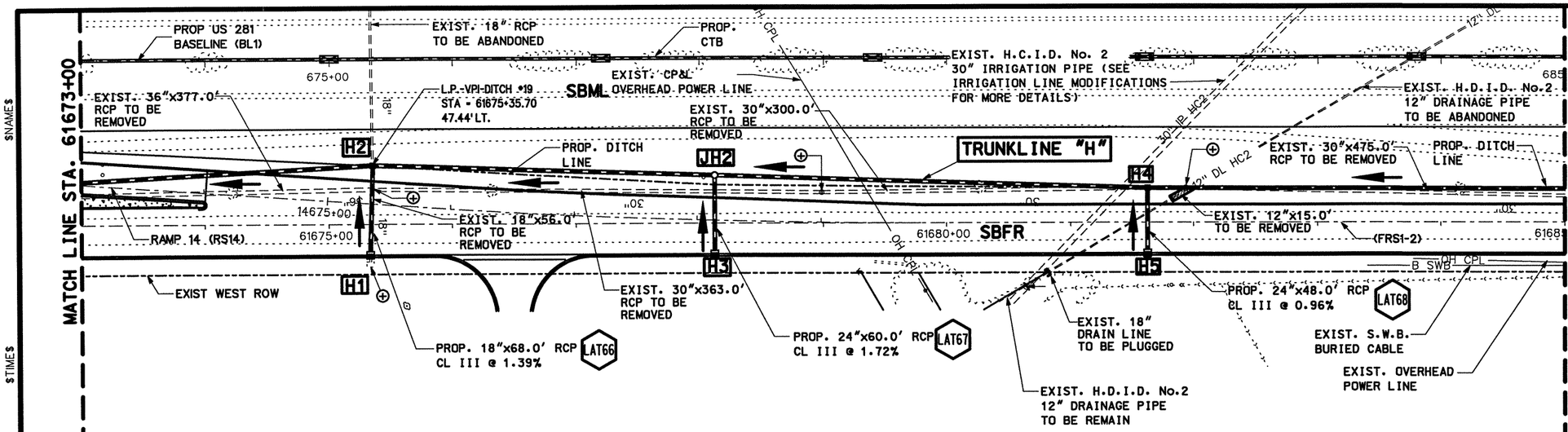

STR. I.D.	DESCRIPTION	STA./OFFSET	TOP OF STR. ELEV.	PROP. FL. OF STR.	PROP. FL. OF PIPE (NORTH)	PROP. FL. OF PIPE (SOUTH)	PROP. FL. OF PIPE (EAST)	PROP. FL. OF PIPE (WEST)
H1	PROP. TY "F" INLET W/1-5.0' EXT.	STA. 61675+33.60, 26.00' RT	101.88'	98.00'	-	-	98.00'	-
H2	PROP. TY "CC" GRATE INLET	STA. 61675+35.68, 47.50' LT	101.00'	90.88'	90.88	90.88	-	97.00'
H3	PROP. TY "F" INLET W/1-5.0' EXT.	STA. 61678+12.50, 26.00' RT	102.62'	98.50'	-	-	98.50'	-
H4	PROP. TY "CC" GRATE INLET	STA. 61681+62.57, 27.90' LT	102.69'	91.86'	91.86'	92.36'	-	97.50'
H5	PROP. TY "F" INLET	STA. 61681+62.50, 26.00' RT	103.54'	98.00'	-	-	98.00'	-
JH2	PROP. TY "M". MANHOLE	STA. 61678+12.60, 38.76' LT	101.75'	91.33'	91.33'	91.33'	-	97.40'

NOTE:

1.) ALL UTILITIES SHALL BE THE RESPONSIBITILY OF THE CONTRACTOR TO VERIFY HORIZONTAL & VERTICAL INFORMATION IN THE FIELD.
2.) ALL ABANDONED PIPE TO BE CAPPED, SUBSIDIARY TO ITEM 496.
3.) CONTRACTOR TO COORDINATE WITH S.W.B. TELEPHONE FOR NEW/EXIST SERVICE LINE PRIOR TO CONSTRUCTION

SHEET TOTALS

ITEM	EST.	FINAL	UNIT	DESCRIPTION
*400	3284		CY	SEWER EXCAVATION
402	1248		LF	TRENCH EXCAVATION PROTECTION
464	68		FT	RCP (CL III) 18 IN
464	108		FT	RCP (CL III) 24 IN
464	346		FT	RCP (CL III) 42 IN
464	952		FT	RCP (CL III) 48 IN
465	1		EA	MANHOLE (TY) "M"
465	3		EA	INLET (TY) "F"
465	2		EA	INLET (TY) "CC"
465	2		EA	5' INLET EXTENSION
496	4		EA	REMOVED OLD STR. (SMALL)
496	1586		LF	REMOVED OLD STR. (PIPE)

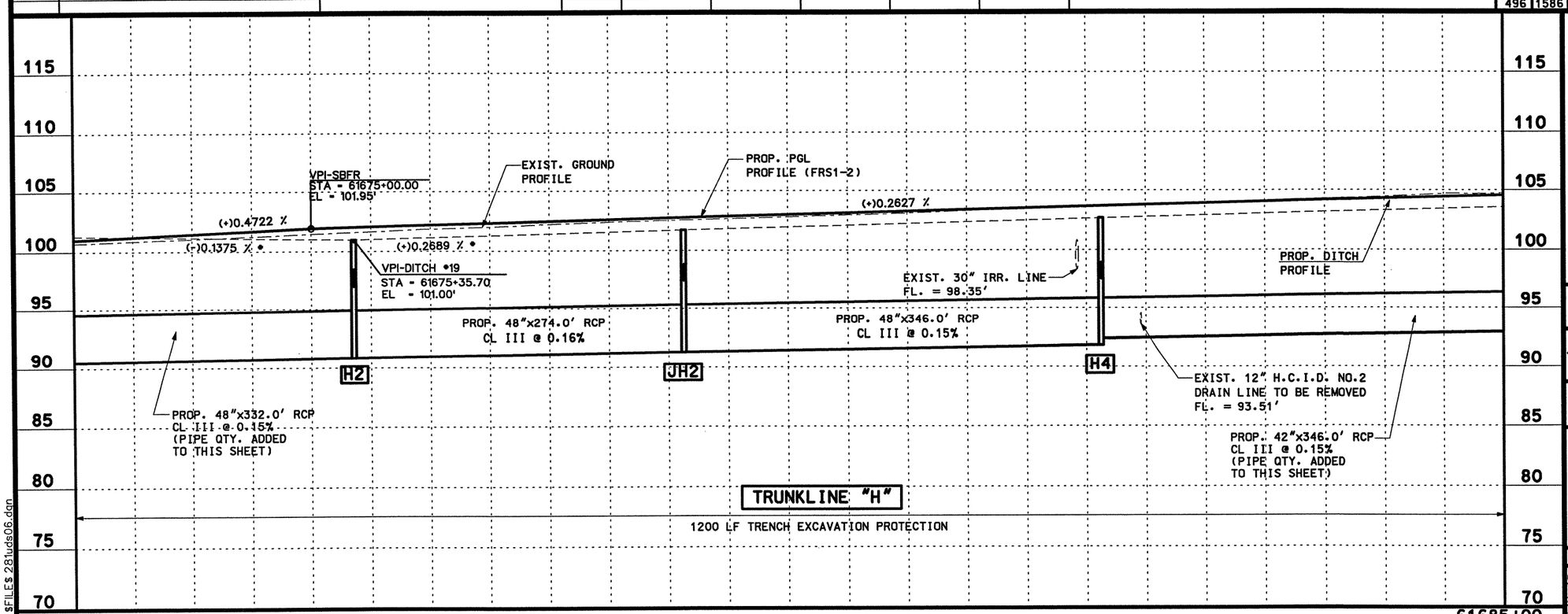

* FOR CONTRACTORS INFORMATION ONLY

STATE OF TEXAS
RAMIRO GUTIERREZ
65948
REGISTERED PROFESSIONAL ENGINEER

THE SEAL APPEARING ON THIS DOCUMENT WAS AUTHORIZED BY RAMIRO GUTIERREZ, P.E. 65948

DATE: 8-12-03

ALTERATION OF A SEALED DOCUMENT WITHOUT PROPER NOTIFICATION TO THE RESPONSIBLE ENGINEER IS AN OFFENSE UNDER THE TEXAS ENGINEERING PRATICE LAW.

Parsons Brinckerhoff Quade & Douglas Inc.

R. Gutierrez Engineering Corporation

Texas Department of Transportation

© 2003 by TxDOT

UTILITIES & DRAINAGE PLAN & PROFILE

SOUTHBOUND FRONTAGE ROAD

STA. 61673+00 "FRS1-2" TO
STA. 61685+00 "FRS1-2"

SHEET 7 OF 23

PLAN 1"= 100' HORIZ
PROFILE 1"= 10' VERT

DESIGNED:	FED. RD DIV. No.	STATE	FEDERAL AID PROJECT No.			HIGHWAY No.
CHECKED:	6	TEXAS				US 281
DRAWN:	STATE DISTRICT	COUNTY	CONTROL No.	SECTION No.	JOB No.	SHEET No.
CHECKED:	21	HIDALGO	0255	08	091	567

$NAME$
$TIME$
$DATE$
$FILE$ 281uds06.dgn

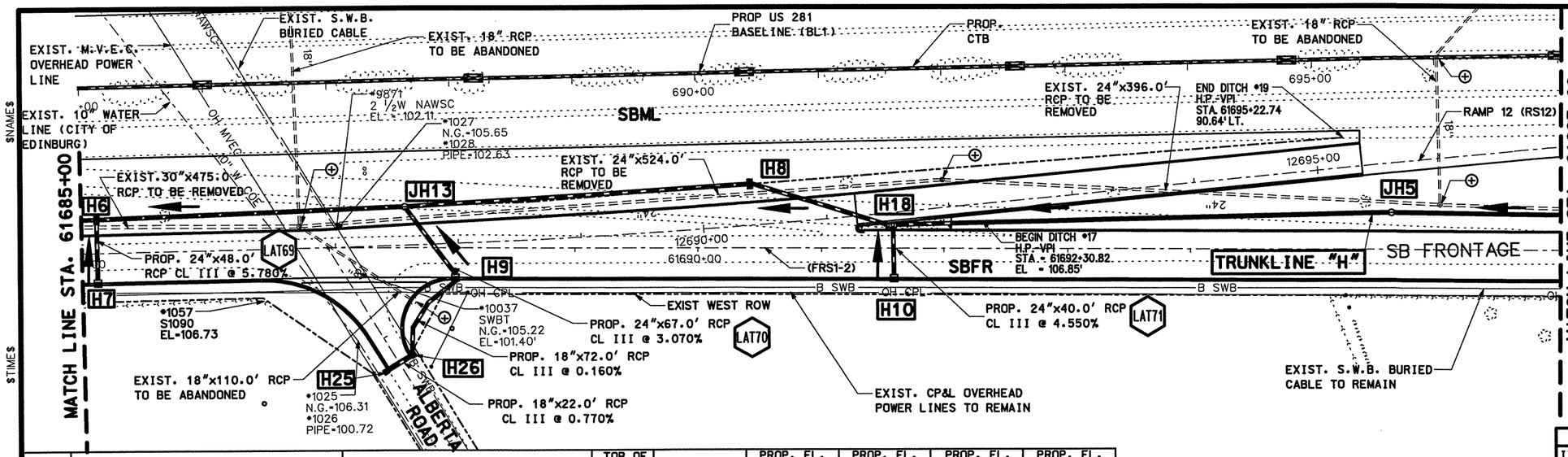

STR. I.D.	DESCRIPTION	STA./OFFSET	TOP OF STR. ELEV.	PROP. FL. OF STR.	PROP. FL. OF PIPE (NORTH)	PROP. FL. OF PIPE (SOUTH)	PROP. FL. OF PIPE (EAST)	PROP. FL. OF PIPE (WEST)
H6	PROP. TY "CC" GRATE INLET	STA. 61685+12.60, 27.00' LT	103.58'	92.89'	92.89'	92.89'	-	98.000'
H7	PROP. TY "F" INLET W/1-5.0' EXT.	STA. 61685+12.50, 26.00' RT	104.26'	101.00'	-	-	101.00'	-
H8	PROP. TY "CC" GRATE INLET	STA. 61690+41.75, 51.61' LT	105.00'	93.69'	93.69'	94.19'	-	-
H9	PROP. TY "F" INLET	STA. 61688+02.68, 26.00' RT	105.56'	100.18'	-	-	100.18'	100.18'
H10	PROP. TY "F" INLET W/1-5.0' EXT.	STA. 61691+58.12, 26.00' RT	106.15'	100.50'	-	-	100.50'	-
JH5	PROP. TY "A" MANHOLE	STA. 61695+62.68, 29.61' LT	105.95'	94.98'	94.98'	94.98'	-	-
H18	PROP. TY "A" INLET	STA. 61691+58.12, 26.00' LT.	107.74'	94.37'	94.37'	94.37'	-	98.50'
JH13	PROP. JUNCTION BOX	STA. 61687+61.31, 32.90' LT.	102.08'	93.27'	93.27'	93.27'	-	98.00'
H25	PROP. TY "C" INLET	STA. 61687+46.35, 101.40' RT.	105.20'	100.50'	-	100.50'	-	-
H26	PROP. TY "C" INLET	STA. 61687+68.44, 87.70' RT.	105.20'	100.30'	100.30'	-	100.30'	-

NOTE:

1.) ALL UTILITIES SHALL BE THE RESPONSIBITIY OF THE CONTRACTOR TO VERIFY HORIZONTAL & VERTICAL INFORMATION IN THE FIELD.
2.) ALL ABANDONED PIPE TO BE CAPPED, SUBSIDIARY TO ITEM 496.
3.) CONTRACTOR TO COORDINATE WITH S.W.B. TELEPHONE FOR NEW/EXIST SERVICE LINE PRIOR TO CONSTRUCTION

LEGEND

- -PROP. DITCH FLOWLINE
- -STORM SEWER FLOW DIRECTION
- NBFR -NORTH BOUND FRONTAGE ROAD
- NBML -NORTH BOUND MAINLANES
- B -BURIED TELEPHONE CABLE
- OH -OVERHEAD POWER LINES
- 8" SS -EXIST. SANITARY SEWER LINE
- -DRAINAGE STR. TO BE CAPPED
- -PROPOSED LUMINAIRE
- Q7 -STRUCTURE I.D.
- -RCP TO REMAIN
- -RCP TO BE ABANDONED
- H.P. -DITCH HIGH POINT
- L.P. -DITCH LOW POINT
- LAT1 -LATERAL I.D.
- -EXIST. MANHOLE/INLET TO BE REMOVED (ITEM 496)
- -PROP. TRUNK LINE

SHEET TOTALS

ITEM	EST.	FINAL	UNIT	DESCRIPTION
*400	3243		CY	SEWER EXCAVATION
402	1310		LF	TRENCH EXCAVATION PROTECTION
464	94		FT	RCP (CL III) 18 IN
464	115		FT	RCP (CL III) 24 IN
464	519		FT	RCP (CL III) 36 IN
464	522		FT	RCP (CL III) 42 IN
465	1		EA	INLET (TY) "A"
465	2		EA	INLET (TY) "C"
465	2		EA	INLET (TY) "CC"
465	3		EA	INLET (TY) "F"
465	1		EA	MANHOLE (TY) "A"
465	1		EA	JUNCTION BOX
465	2		EA	5' INLET EXTENSION
496	920		LF	REMOVE OLD STR. (PIPE)
496	5		EA	REMOVE OLD STR. (SMALL)

* FOR CONTRACTORS INFORMATION ONLY

THE SEAL APPEARING ON THIS DOCUMENT WAS AUTHORIZED BY RAMIRO GUTIERREZ, P.E. 65948

DATE: 8-12-03

ALTERATION OF A SEALED DOCUMENT WITHOUT PROPER NOTIFICATION TO THE RESPONSIBLE ENGINEER IS AN OFFENSE UNDER THE TEXAS ENGINEERING PRATICE LAW.

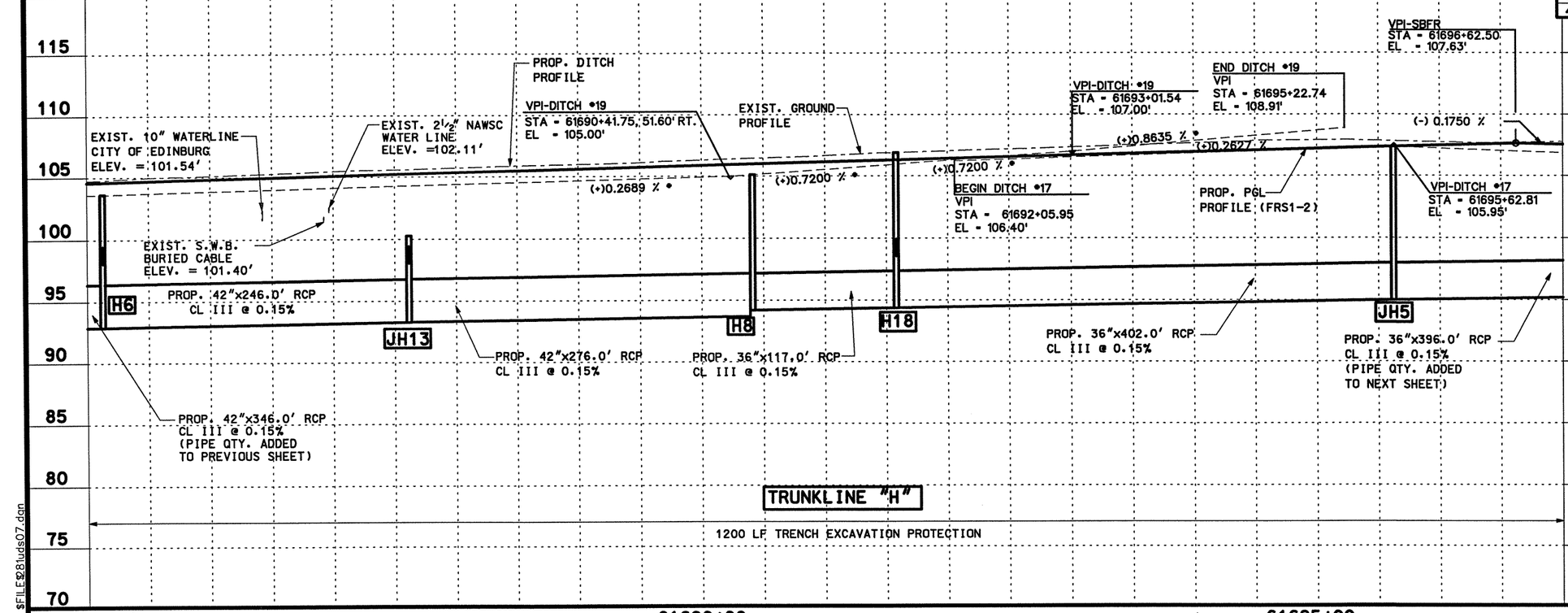

Parsons Brinckerhoff Quade & Douglas Inc.

R. Gutierrez Engineering Corporation

Texas Department of Transportation

© 2003 by TxDOT

UTILITIES & DRAINAGE PLAN & PROFILE

SOUTHBOUND FRONTAGE ROAD

STA. 61685+00 "FRS1-2" TO
STA. 61697+00 "FRS1-2"

SHEET 8 OF 23

PLAN 1"= 100' HORIZ
PROFILE 1"= 10' VERT

DESIGNED:	FED. RD DIV. No.	STATE	FEDERAL AID PROJECT No.			HIGHWAY No.	
CHECKED:	6	TEXAS				US 281	
DRAWN:	STATE DISTRICT	COUNTY	CONTROL No.	SECTION No.	JOB No.	SHEET No.	
CHECKED:	21	HIDALGO	0255	08	091	568	

$FILE$281uds07.dgn
$DATE$
$TIME$
$NAME$

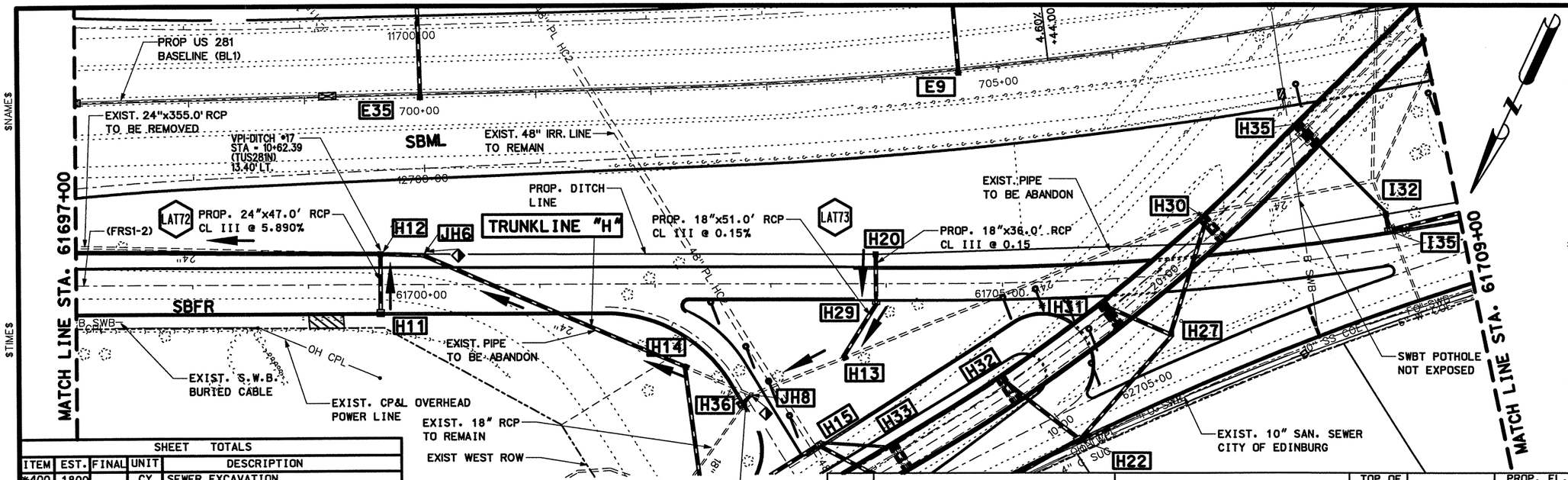

LEGEND

- PROP. DITCH FLOWLINE
- STORM SEWER FLOW DIRECTION
- NBFR – NORTH BOUND FRONTAGE ROAD
- NBML – NORTH BOUND MAINLANES
- B – BURIED TELEPHONE CABLE
- OH – OVERHEAD POWER LINES
- 8" SS – EXIST. SANITARY SEWER LINE
- DRAINAGE STR. TO BE CAPPED
- PROPOSED LUMINAIRE
- 07 – STRUCTURE I.D.
- RCP TO REMAIN
- RCP TO BE ABANDONED
- H.P. – DITCH HIGH POINT
- L.P. – DITCH LOW POINT
- LAT1 – LATERAL I.D.
- EXIST. MANHOLE/INLET TO BE REMOVED (ITEM 496)
- PROP. TRUNK LINE

SHEET TOTALS

ITEM	EST.	FINAL	UNIT	DESCRIPTION
*400	1800		CY	SEWER EXCAVATION
402	633		LF	TRENCH EXCAVATION PROTECTION
464	95		FT	RCP (CL III) 18 IN
464	47		FT	RCP (CL III) 24 IN
464	277		FT	RCP (CL III) 30 IN
464	396		FT	RCP (CL III) 36 IN
465	2		EA	INLET (TY) "A"
465	1		EA	INLET (TY) "F"
465	4		EA	INLET (TY) "C"
465	1		EA	5' INLET EXTENSION
479	2		EA	ADJUST MANHOLE (JUNC. BOX)
496	355		LF	REMOVE OLD STR. (PIPE)

STR. I.D.	DESCRIPTION	STA./OFFSET	TOP OF STR. ELEV.	PROP. FL. OF STR.	PROP. FL. OF PIPE (NORTH)	PROP. FL. OF PIPE (SOUTH)	PROP. FL. OF PIPE (EAST)	PROP. FL. OF PIPE (WEST)
H11	PROP. TY "F" INLET W/1-5.0' EXT.	STA. 61699+62.50, 26.00' RT	106.95'	102.50'	–	–	102.50'	–
H12	PROP. TY "C" GRATE INLET	STA. 61699+62.40, 25.90' LT	105.40'	95.58'	95.58'	96.08'	–	99.50'
H13	PROP. TY "C" GRATE INLET	STA. 61703+63.83, 62.00' RT	105.00'	97.32'	97.32'	97.82'	–	
JH6	EXIST. MANHOLE (TO BE CAPPED)	STA. 61699+95.79, 26.89' LT	99.65'	96.15'	96.15'	96.15'	–	–
H20	PROP. TY "C" GRATE INLET	STA. 61703+91.08, 25.00 LT	105.99'	97.96'	–	–	–	97.96'
H29	PROP. TY "A" INLET	STA. 61703+91.32, 16.00 RT	107.44'	97.90'	97.90'	–	97.90'	–
JH8	EXIST. MANHOLE (TO BE CAPPED)	STA. 61702+84.00, 95.00 RT	100.71'	97.21'	97.21'	97.21'	–	98.21'
H36	PROP. TY "A" INLET	STA. 61702+73.85, 102.0 RT	106.79'	98.23'	–	–	98.23'	–
H14	PROP. TY "C" GRATE INLET	STA. 61702+24.66, 70.00 RT	105.00'	96.60'	96.60'	97.10'	–	96.60'

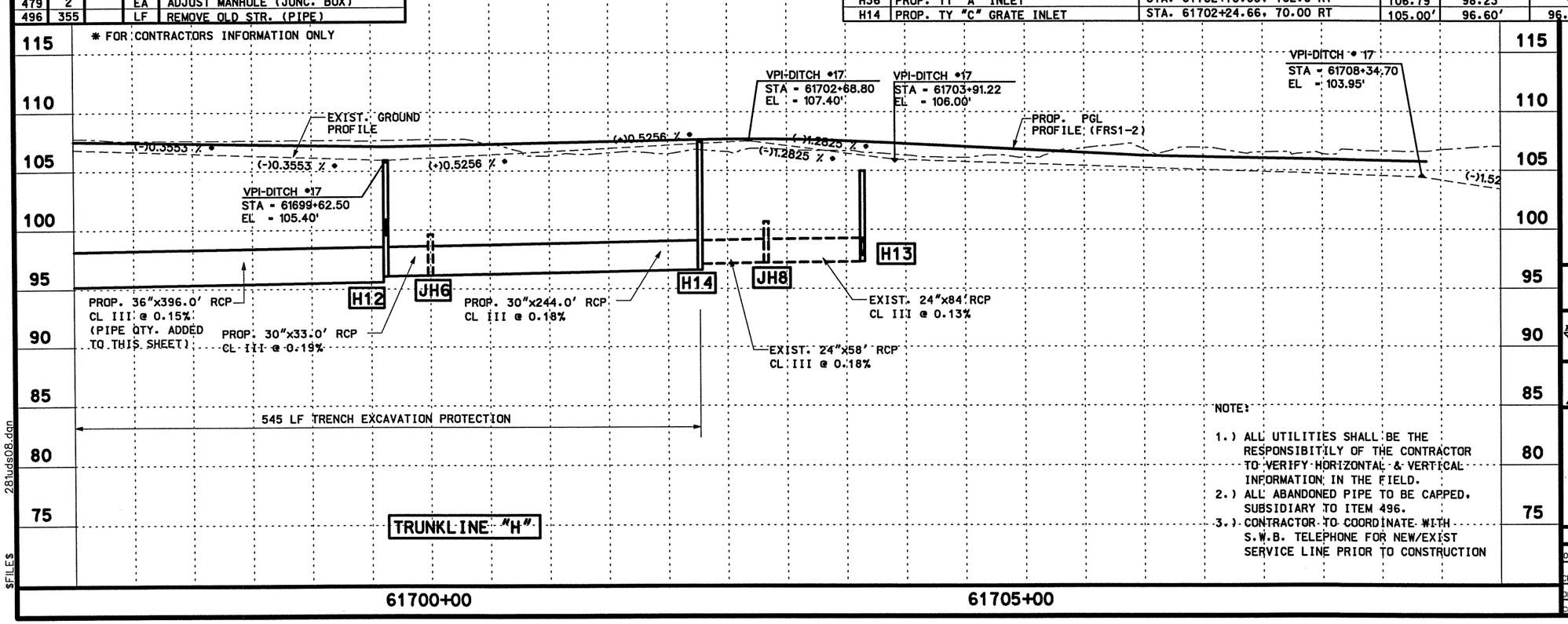

NOTE:

1.) ALL UTILITIES SHALL BE THE RESPONSIBILITY OF THE CONTRACTOR TO VERIFY HORIZONTAL & VERTICAL INFORMATION IN THE FIELD.
2.) ALL ABANDONED PIPE TO BE CAPPED, SUBSIDIARY TO ITEM 496.
3.) CONTRACTOR TO COORDINATE WITH S.W.B. TELEPHONE FOR NEW/EXIST SERVICE LINE PRIOR TO CONSTRUCTION

STATE OF TEXAS
RAMIRO GUTIERREZ
65948
REGISTERED PROFESSIONAL ENGINEER

THE SEAL APPEARING ON THIS DOCUMENT WAS AUTHORIZED BY RAMIRO GUTIERREZ, P.E. 65948

DATE: 8-12-03

ALTERATION OF A SEALED DOCUMENT WITHOUT PROPER NOTIFICATION TO THE RESPONSIBLE ENGINEER IS AN OFFENSE UNDER THE TEXAS ENGINEERING PRATICE LAW.

Parsons Brinckerhoff
Quade & Douglas Inc.

R. Gutierrez Engineering Corporation

Texas Department of Transportation

© 2003 by TxDOT

UTILITIES & DRAINAGE PLAN & PROFILE SOUTHBOUND FRONTAGE ROAD

STA. 61697+00 "FRS1-2" TO
STA. 61709+00 "FRS1-2"

PLAN 1"= 100' HORIZ
PROFILE 1"= 10' VERT

SHEET 9 OF 23

DESIGNED:	FED. RD DIV. No.	STATE	FEDERAL AID PROJECT No.			HIGHWAY No.	
CHECKED:	6	TEXAS				US 281	
DRAWN:	STATE DISTRICT	COUNTY	CONTROL No.	SECTION No.	JOB No.	SHEET No.	
CHECKED:	21	HIDALGO	0255	08	091	569	

$NAME$
$TIME$
$DATE$
$FILE$
281uds08.dgn

$NAME$
$TIME$
$DATE$

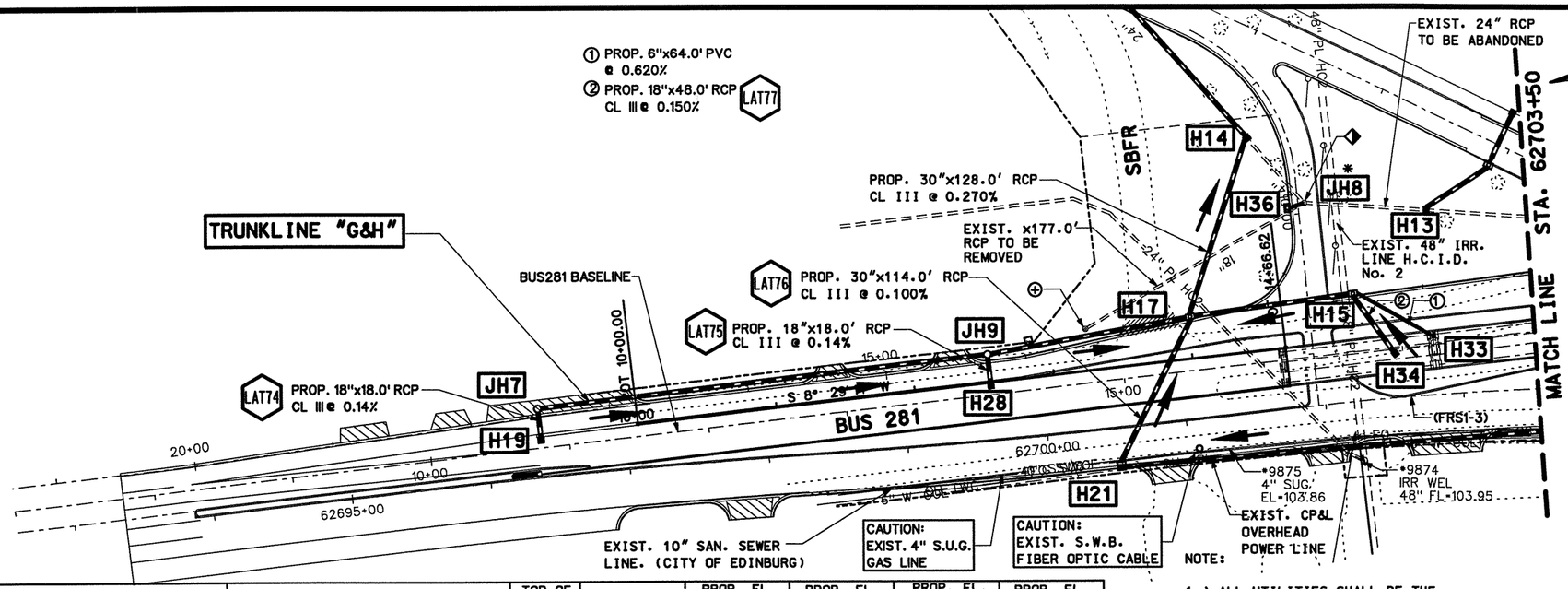

LEGEND

- ----- –PROP. DITCH FLOWLINE
- ——► –STORM SEWER FLOW DIRECTION
- NBFR –NORTH BOUND FRONTAGE ROAD
- NBML –NORTH BOUND MAINLANES
- B —— –BURIED TELEPHONE CABLE
- OH —— –OVERHEAD POWER LINES
- 8" SS —— –EXIST. SANITARY SEWER LINE
- ◆ –DRAINAGE STR. TO BE CAPPED
- ⊠ –PROPOSED LUMINAIRE
- 07 –STRUCTURE I.D.
- ==== –RCP TO REMAIN
- ::::::: –RCP TO BE ABANDONED
- H.P. –DITCH HIGH POINT
- L.P. –DITCH LOW POINT
- LAT1 –LATERAL I.D.
- ⊕ –EXIST. MANHOLE/INLET TO BE REMOVED (ITEM 496)
- –PROP. TRUNK LINE

STR. I.D.	DESCRIPTION	STA./OFFSET	TOP OF STR. ELEV.	PROP. FL. OF STR.	PROP. FL. OF PIPE (NORTH)	PROP. FL. OF PIPE (SOUTH)	PROP. FL. OF PIPE (EAST)	PROP. FL. OF PIPE (WEST)
H19	PROP. TY "C" GRATE INLET	STA. 62696+38.76, 26.81' LT	108.49'	99.23'	–	–	99.23'	–
JH7	PROP. JUNCTION BOX	STA. 62696+38.34, 48.93' LT	101.20'	99.20'	–	99.20'	–	99.20'
JH9	PROP. TY "A" MANHOLE	STA. 62699+61.91, 61.68' LT	107.36'	97.71'	98.71'	97.71'	–	98.71'
H28	PROP. TY "L1" INLET	STA. 62699+62.58, 39.24' LT	118.86'	98.74'	–	–	98.74'	–
H17	PROP. TY "A" INLET	STA. 62701+11.23, 71.57' LT	106.62'	96.95'	97.08'	97.58'	96.95'	96.95'
H21	PROP. TY "F" INLET W/1-5.0' EXT.	STA. 62700+50.54, 28.00' RT	106.98'	97.07'	–	97.07'	97.07'	–
H15	PROP. TY "A" INLET	STA. 62702+27.16, 74.80' LT	107.95'	97.76'	97.76'	99.00'	–	97.76'
H33	PROP. DECK DRAINS	STA. 62702+81.23, 37.62' LT	134.67'	99.42'	99.42'	–	–	–
H34	PROP. TY "C" GRATE INLET	STA. 62702+53.03, 31.31' LT	106.03'	97.84'	–	–	97.84'	–

NOTE:
1.) ALL UTILITIES SHALL BE THE RESPONSIBILITIY OF THE CONTRACTOR TO VERIFY HORIZONTAL & VERTICAL INFORMATION IN THE FIELD.
2.) ALL ABANDONED PIPE TO BE CAPPED, SUBSIDIARY TO ITEM 496.
3.) CONTRACTOR TO COORDINATE WITH S.W.B. TELEPHONE FOR NEW/EXIST SERVICE LINE PRIOR TO CONSTRUCTION

SHEET TOTALS

ITEM	EST.	FINAL	UNIT	DESCRIPTION
402	1211		LF	TRENCH EXCAVATION PROT.
* 400	1794		CY	SEWER EXCAVATION
464	518		LF	PROP. 18" RCP
464	366		LF	PROP. 24" RCP
464	386		LF	PROP. 30" RCP
464	64		LF	PROP. 6" PVC
465	1		EA	INLET (TY) "F"
465	2		EA	INLET (TY) "A"
465	1		EA	MANHOLE (TY) "A"
471	1		EA	DECK DRAIN
465	2		EA	INLET (TY) "C"
465	1		EA	INLET (TY) "L1"
465	1		EA	5.0' INLET EXTENSION
465	1		EA	JUNCTION BOX
496	1		EA	REMOVE OLD STR. (SMALL)
496	177		LF	REMOVE OLD STR. (PIPE)

* FOR CONTRACTORS INFORMATION ONLY

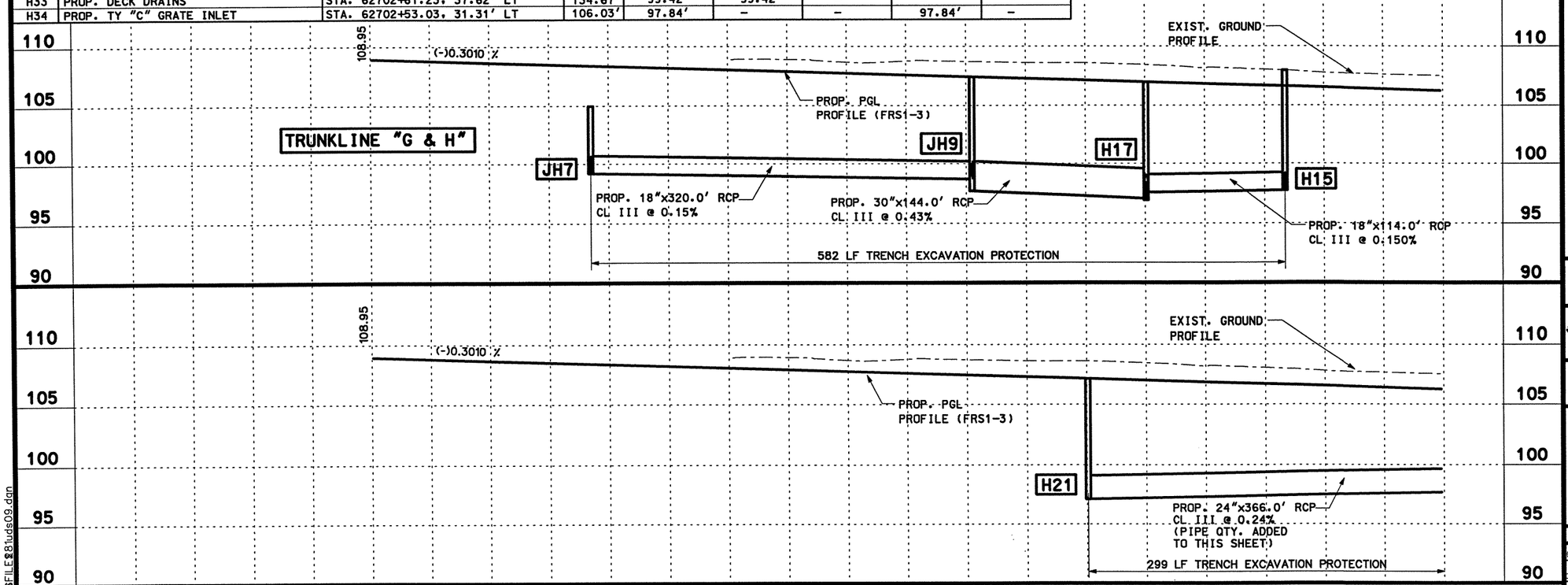

THE SEAL APPEARING ON THIS DOCUMENT WAS AUTHORIZED BY RAMIRO GUTIERREZ, P.E. 65948
DATE: 8-12-03
ALTERATION OF A SEALED DOCUMENT WITHOUT PROPER NOTIFICATION TO THE RESPONSIBLE ENGINEER IS AN OFFENSE UNDER THE TEXAS ENGINEERING PRATICE LAW.

Parsons Brinckerhoff Quade & Douglas Inc.

R. Gutierrez Engineering Corporation

Texas Department of Transportation

©2003 by TxDOT

UTILITIES & DRAINAGE PLAN & PROFILE
SOUTHBOUND FRONTAGE ROAD

STA. 62698+00 "FRS1-3" TO
STA. 62710+00 "FRS1-3"

SHEET 10 OF 23

PLAN 1"= 100' HORIZ
PROFILE 1"= 10' VERT

DESIGNED:	FED. RD DIV. No.	STATE	FEDERAL AID PROJECT No.			HIGHWAY No.
CHECKED:	6	TEXAS				US 281
DRAWN:	STATE DISTRICT	COUNTY	CONTROL No.	SECTION No.	JOB No.	SHEET No.
CHECKED:	21	HIDALGO	0255	08	091	570

$FILE$8tuds09.dgn

$NAME$
$TIME$
$DATE$

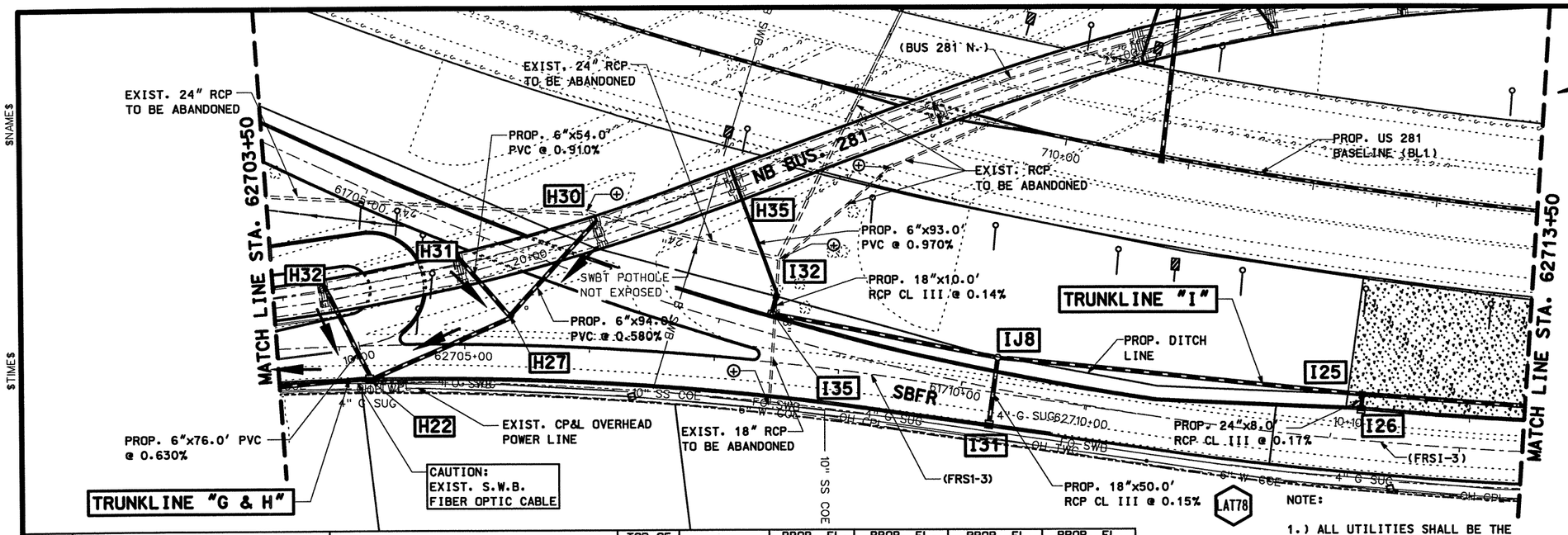

LEGEND

- –––– –PROP. DITCH FLOWLINE
- ⟶ –STORM SEWER FLOW DIRECTION
- NBFR –NORTH BOUND FRONTAGE ROAD
- NBML –NORTH BOUND MAINLANES
- B —— –BURIED TELEPHONE CABLE
- OH —— –OVERHEAD POWER LINES
- 8" SS —— –EXIST. SANITARY SEWER LINE
- ◆ –DRAINAGE STR. TO BE CAPPED
- ⊠ –PROPOSED LUMINAIRE
- 07 –STRUCTURE I.D.
- = = = = –RCP TO REMAIN
- ::::::: –RCP TO BE ABANDONED
- H.P. –DITCH HIGH POINT
- L.P. –DITCH LOW POINT
- LAT1 –LATERAL I.D.
- ⊕ –EXIST. MANHOLE/INLET TO BE REMOVED (ITEM 496)
- ——— –PROP. TRUNK LINE

STR. I.D.	DESCRIPTION	STA./OFFSET	TOP OF STR. ELEV.	PROP. FL. OF STR.	PROP. FL. OF PIPE (NORTH)	PROP. FL. OF PIPE (SOUTH)	PROP. FL. OF PIPE (EAST)	PROP. FL. OF PIPE (WEST)
H30	PROP. DECK DRAINS	STA. 20+59.00, 4.17'LT (℄ BUS281 N.)⊗	149.64'	100.07'	100.07'	–	–	–
H27	PROP. TY "C" GRATE INLET	STA. 62705+36.23, 20.77'LT	105.70'	98.97'	98.97'	99.50'	99.50'	–
H31	PROP. DECK DRAINS	STA. 19+43.86, 4.17'LT (℄ BUS281 N.)⊗	144.92'	100.03'	–	–	–	100.03'
H22	PROP. TY "F" INLET W/2-5.0' EXT.	STA. 62704+24.36, 28.00'RT	105.83'	97.94'	97.94'	98.81'	99.40'	–
H32	PROP. DECK DRAINS	STA. 18+33.80, 4.17'LT(℄ BUS281 N.) ⊗	139.97'	99.90'	–	–	–	99.90'
H35	PROP. DECK DRAINS	STA. 21+73.90, 4.17'LT(℄ BUS 281 N.)⊗	151.28'	103.00'	–	–	–	103.00'
I32	PROP. TY "C" INLET	STA. 62707+44.13, 52.35'LT	103.95'	101.07'	–	–	102.07'	101.07'
I35	PROP. TY "A" INLET	STA. 62707+41.52, 36.60'LT	105.95'	101.05'	–	101.05'	101.05'	–
IJ8	PROP. JUNCTION BOX	STA. 62709+24.04, 28.30'LT	102.77'	100.27'	100.77'	100.27'	–	100.77'
I31	PROP. TY "F" INLET W/1-5.0' EXT.	STA. 62709+20.42, 27.20'RT	105.51'	100.85'	–	–	100.85'	–
I25	PROP. TY "C" INLET	STA. 62712+25.58, 37.11'LT	103.00'	99.83'	99.83'	99.83'	–	99.83'
I26	PROP. TY "F" INLET W/2-5.0' EXT.	STA. 62712+18.85, 26.00'LT	103.69'	99.85'	–	–	99.85'	–

⊗ BUS. 281 NORTH

NOTE:
1.) ALL UTILITIES SHALL BE THE RESPONSIBILITIY OF THE CONTRACTOR TO VERIFY HORIZONTAL & VERTICAL INFORMATION IN THE FIELD.
2.) ALL ABANDONED PIPE TO BE CAPPED. SUBSIDIARY TO ITEM 496.
3.) CONTRACTOR TO COORDINATE WITH S.W.B. TELEPHONE FOR NEW/EXIST SERVICE LINE PRIOR TO CONSTRUCTION

SHEET TOTALS

ITEM	EST.	FINAL	UNIT	DESCRIPTION
*400	717		CY	SEWER EXCAVATION
402	862		LF	TRENCH EXCAVATION PROT.
464	360		LF	PROP. 18" RCP
464	296		LF	PROP. 24" RCP
464	317		LF	PROP. 6" PVC
465	3		EA	INLET (TY) "F"
465	1		EA	INLET (TY) "A"
465	3		EA	INLET (TY) "C"
465	1		EA	JUNCTION BOX
471	4		EA	DECK DRAIN
465	5		EA	5.0' INLET EXTENSION
496	4		EA	REMOVE OLD STR. (SMALL)

* FOR CONTRACTORS INFORMATION ONLY

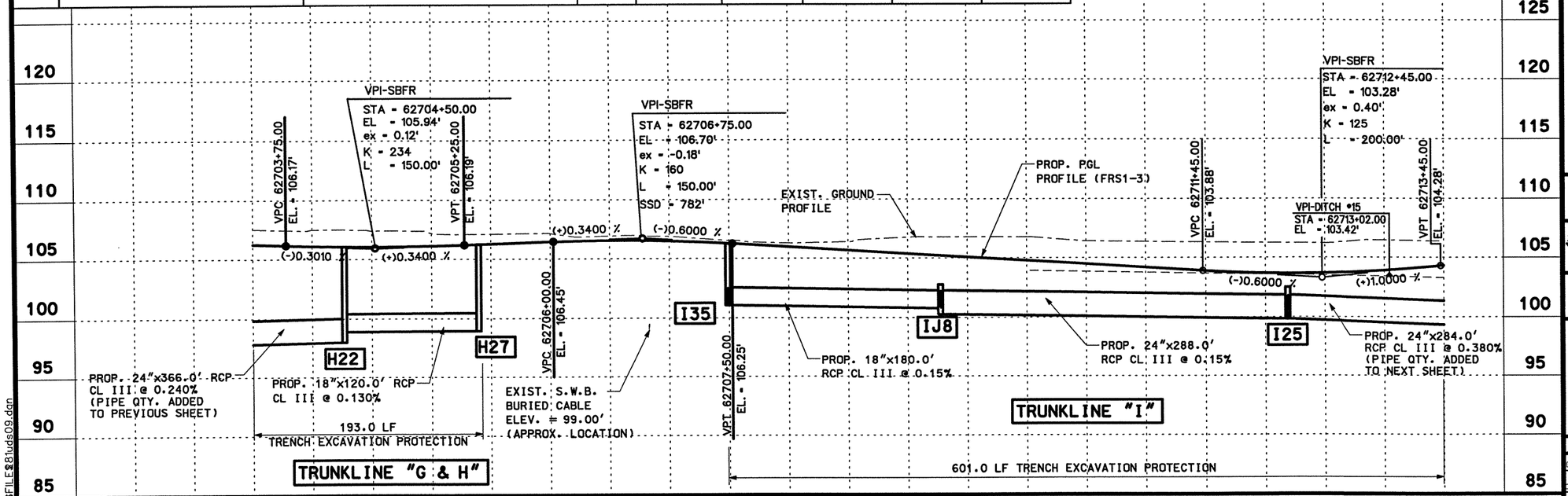

THE SEAL APPEARING ON THIS DOCUMENT WAS AUTHORIZED BY RAMIRO GUTIERREZ, P.E. 65948

DATE: 8-12-03

ALTERATION OF A SEALED DOCUMENT WITHOUT PROPER NOTIFICATION TO THE RESPONSIBLE ENGINEER IS AN OFFENSE UNDER THE TEXAS ENGINEERING PRATICE LAW.

Parsons Brinckerhoff Quade & Douglas Inc.

R. Gutierrez Engineering Corporation

Texas Department of Transportation

© 2003 by TxDOT

UTILITIES & DRAINAGE PLAN & PROFILE
SOUTHBOUND FRONTAGE ROAD
STA. 62698+00 "FRS1-3" TO
STA. 62710+00 "FRS1-3"

SHEET 11 OF 23

PLAN 1"= 100' HORIZ
PROFILE 1"= 10' VERT

DESIGNED:	FED. RD DIV. No.	STATE	FEDERAL AID PROJECT No.			HIGHWAY No.
CHECKED:	6	TEXAS				US 281
DRAWN:	STATE DISTRICT	COUNTY	CONTROL No.	SECTION No.	JOB No.	SHEET No.
CHECKED:	21	HIDALGO	0255	08	091	571

$FILE$81uds09.dgn

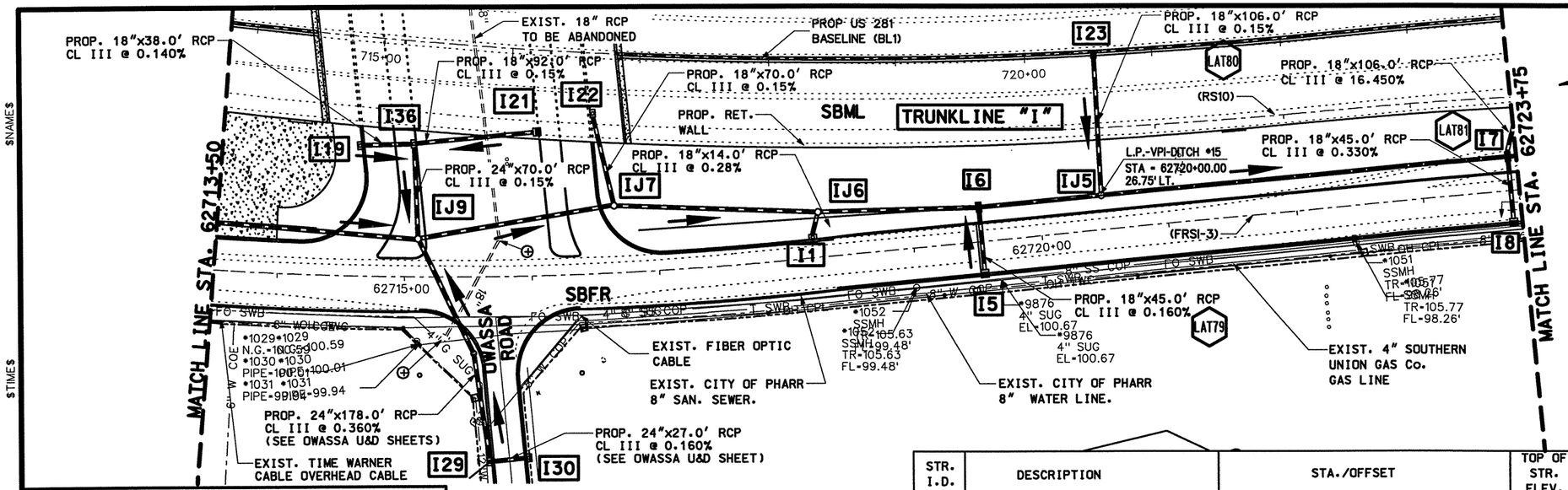

LEGEND

- ——— PROP. DITCH FLOWLINE
- ——► STORM SEWER FLOW DIRECTION
- NBFR NORTH BOUND FRONTAGE ROAD
- NBML NORTH BOUND MAINLANES
- B —— BURIED TELEPHONE CABLE
- OH —— OVERHEAD POWER LINES
- 8" SS —— EXIST. SANITARY SEWER LINE
- DRAINAGE STR. TO BE CAPPED
- PROPOSED LUMINAIRE
- 07 STRUCTURE I.D.
- ==== RCP TO REMAIN
- ::::::: RCP TO BE ABANDONED
- H.P. DITCH HIGH POINT
- L.P. DITCH LOW POINT
- LAT1 LATERAL I.D.
- ⊕ EXIST. MANHOLE/INLET TO BE REMOVED (ITEM 496)
- PROP. TRUNK LINE

STR. I.D.	DESCRIPTION	STA./OFFSET	TOP OF STR. ELEV.	PROP. FL. OF STR.	PROP. FL. OF PIPE (NORTH)	PROP. FL. OF PIPE (SOUTH)	PROP. FL. OF PIPE (EAST)	PROP. FL. OF PIPE (WEST)
I1	PROP. TY "A" INLET W/1-5.0' EXT.	STA. 62718+21.30, 14.00' LT	104.28'	99.46'	–	–	99.46'	–
I7	PROP. TY "CC" GRATE INLET	STA. 62723+68.50, 26.80' LT	103.18'	96.64'	96.64'	96.64'	98.64'	98.64'
I8	PROP. TY "F" INLET	STA. 62723+68.50, 26.00' RT	104.13'	98.80'	–	–	98.80'	–
I5	PROP. TY "F" INLET	STA. 62719+53.00, 26.00' RT	103.29'	99.32'	–	–	99.32'	–
I6	PROP. TY "CC" GRATE INLET	STA. 62719+50.00, 27.02' LT	103.21'	97.24'	97.74'	97.24'	–	99.24'
IJ5	PROP. JUNCTION BOX	STA. 62720+49.40, 26.90' LT	102.60'	97.10'	97.10'	97.10'	99.12'	–
IJ6	PROP. TY "A" MANHOLE	STA. 62718+27.20, 35.10' LT.	104.40'	97.91'	97.91'	97.91'	–	99.41'
IJ7	PROP. JUNCTION BOX	STA. 62716+64.37, 52.12' LT.	102.67'	98.17'	98.17'	98.17'	99.67'	–
I22	PROP. TY "A" INLET	STA. 62716+50.74, 125.10' LT.	104.58'	99.78'	–	–	–	99.78'
I23	PROP. TY "L1" GRATE INLET	STA. 720+54.20, 3.0' RT. US281(BL1)⊗	128.54'	99.29'	–	–	–	99.29'
IJ9	PROP. TY "A" MANHOLE	STA. 62715+10.43, 29.30' LT	105.24'	98.40'	98.75'	98.40'	99.40'	98.75'

⊗MAINLANE STATION

SHEET TOTALS				
ITEM	EST.	FINAL	UNIT	DESCRIPTION
*400	1854		CY	SEWER EXCAVATION
402	1177		LF	TRENCH EXCAVATION PROTECTION
464	210		FT	RCP (CL III) 18 IN
464	428		FT	RCP (CL III) 36 IN
464	407		FT	RCP (CL III) 42 IN
465	2		EA	INLET (TY) "F"
465	2		EA	INLET (TY) "CC"
465	2		EA	MANHOLE (TY) "A"
465	2		EA	INLET (TY) "A"
465	1		EA	INLET (TY) "L1"
465	2		EA	JUNCTION BOX
465	1		EA	5' INLET EXTENSION
496	2		EA	REMOVE OLD STR. (SMALL)

NOTE:

1.) ALL UTILITIES SHALL BE THE RESPONSIBITILY OF THE CONTRACTOR TO VERIFY HORIZONTAL & VERTICAL INFORMATION IN THE FIELD.
2.) ALL ABANDONED PIPE TO BE CAPPED, SUBSIDIARY TO ITEM 496.
3.) CONTRACTOR TO COORDINATE WITH S.W.B. TELEPHONE FOR NEW/EXIST SERVICE LINE PRIOR TO CONSTRUCTION

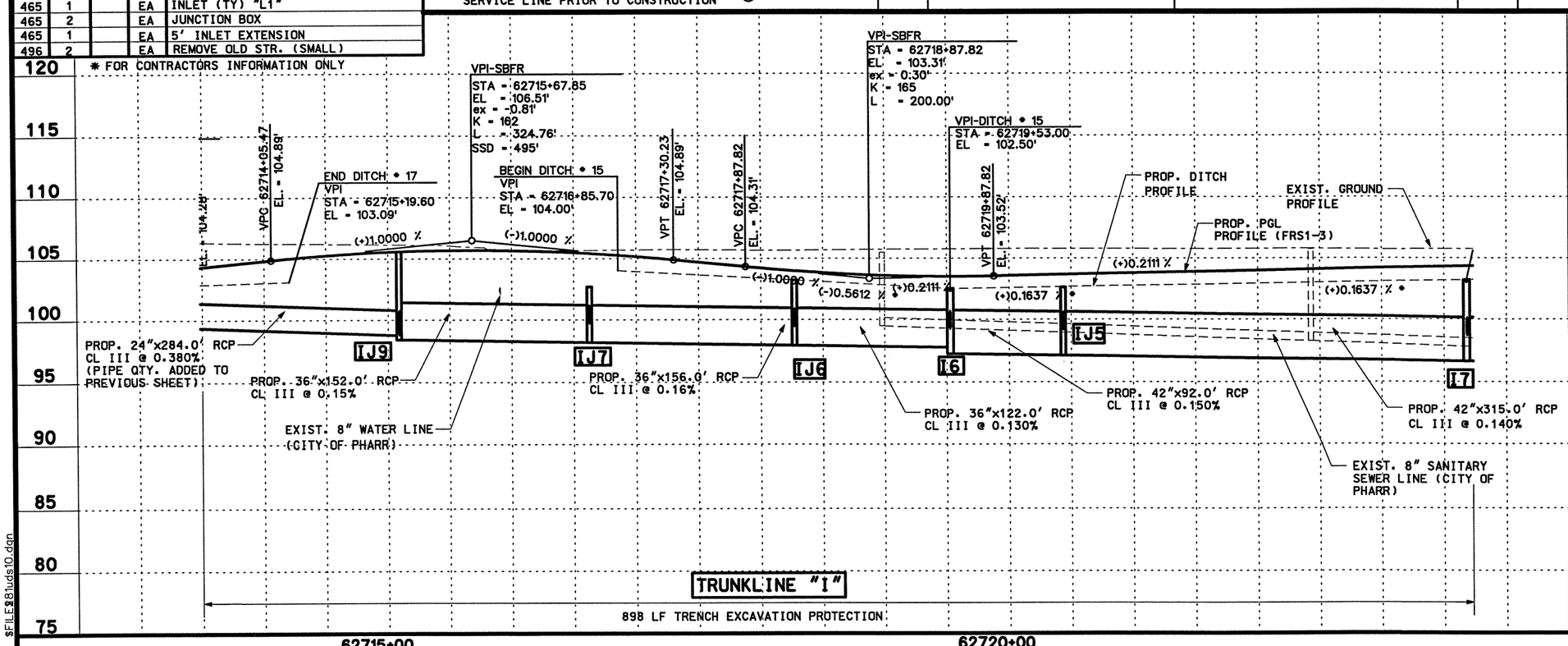

THE SEAL APPEARING ON THIS DOCUMENT WAS AUTHORIZED BY RAMIRO GUTIERREZ, P.E. 65948

DATE: 8-12-03

ALTERATION OF A SEALED DOCUMENT WITHOUT PROPER NOTIFICATION TO THE RESPONSIBLE ENGINEER IS AN OFFENSE UNDER THE TEXAS ENGINEERING PRATICE LAW.

Parsons Brinckerhoff Quade & Douglas Inc.

R. Gutierrez Engineering Corporation

Texas Department of Transportation

© 2003 by TxDOT

UTILITIES & DRAINAGE PLAN & PROFILE

SOUTHBOUND FRONTAGE ROAD

STA. 62710+00 "FRS1-3" TO
STA. 62722+00 "FRS1-3"

SHEET 12 OF 23

PLAN 1"= 100' HORIZ
PROFILE 1"= 10' VERT

DESIGNED:	FED. RD DIV. No.	STATE	FEDERAL AID PROJECT No.			HIGHWAY No.
CHECKED:	6	TEXAS				US 281
DRAWN:	STATE DISTRICT	COUNTY	CONTROL No.	SECTION No.	JOB No.	SHEET No.
CHECKED:	21	HIDALGO	0255	08	091	572

$NAME$
$TIME$
$DATE$
$FILE$81uds10.dgn

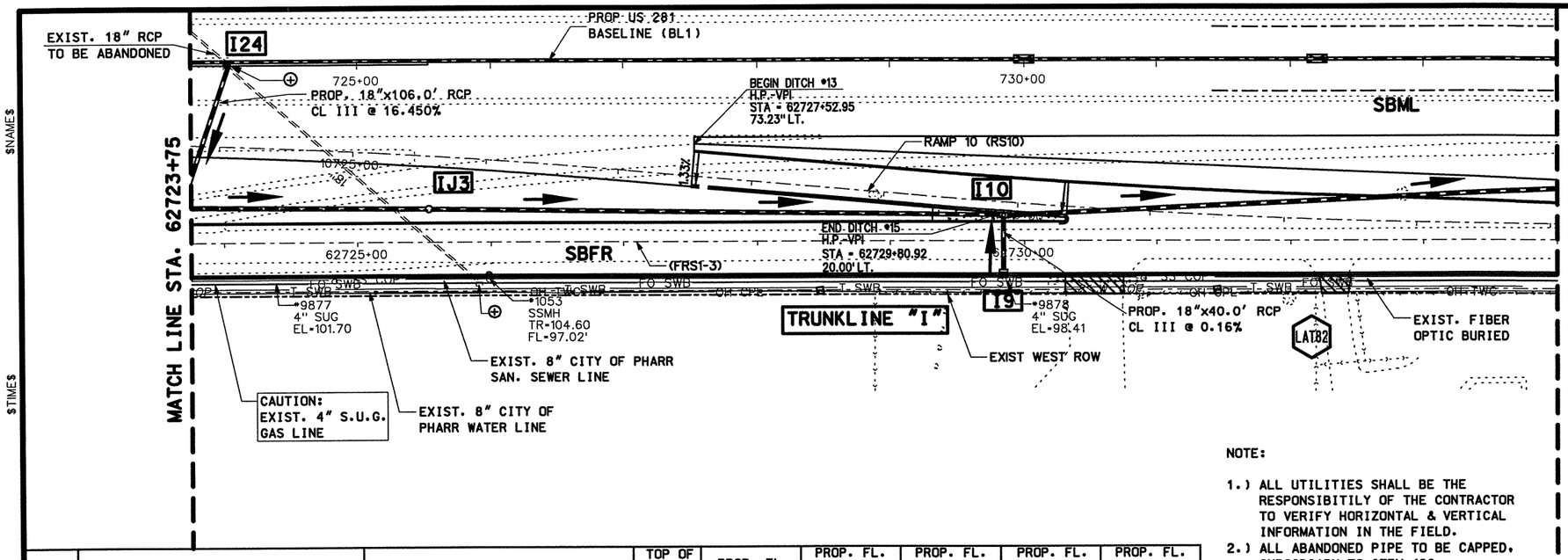

STR. I.D.	DESCRIPTION	STA./OFFSET	TOP OF STR. ELEV.	PROP. FL. OF STR.	PROP. FL. OF PIPE (NORTH)	PROP. FL. OF PIPE (SOUTH)	PROP. FL. OF PIPE (EAST)	PROP. FL. OF PIPE (WEST)
I9	PROP. TY "F" INLET	STA. 62729+84.30, 26.00' RT	104.37'	98.90'	–	–	98.90'	–
I10	PROP. TY "A" GRATE INLET	STA. 10729+90.00, 8.00' RT ●	106.05'	95.71'	95.71'	95.71'	–	98.83'
IJ3	PROP. TY "A" MANHOLE	STA. 62725+53.30, 25.00' LT	103.84'	96.36'	96.36'	96.36'	–	–
I24	PROP. TY "L1" INLET	STA. 724+03.10, 3.00' RT ⊗	122.46'	116.50'				116.50'

NOTE:

1.) ALL UTILITIES SHALL BE THE RESPONSIBITILY OF THE CONTRACTOR TO VERIFY HORIZONTAL & VERTICAL INFORMATION IN THE FIELD.
2.) ALL ABANDONED PIPE TO BE CAPPED, SUBSIDIARY TO ITEM 496.
3.) CONTRACTOR TO COORDINATE WITH S.W.B. TELEPHONE FOR NEW/EXIST SERVICE LINE PRIOR TO CONSTRUCTION

⊗ MAINLANE STATION
● RAMP 10 STATIONING

LEGEND

- ——— –PROP. DITCH FLOWLINE
- ——► –STORM SEWER FLOW DIRECTION
- NBFR –NORTH BOUND FRONTAGE ROAD
- NBML –NORTH BOUND MAINLANES
- B —— –BURIED TELEPHONE CABLE
- OH —— –OVERHEAD POWER LINES
- 8" SS —— –EXIST. SANITARY SEWER LINE
- ◆ –DRAINAGE STR. TO BE CAPPED
- ⊠ –PROPOSED LUMINAIRE
- 07 –STRUCTURE I.D.
- = = = = –RCP TO REMAIN
- ::::::: –RCP TO BE ABANDONED
- H.P. –DITCH HIGH POINT
- L.P. –DITCH LOW POINT
- LAT1 –LATERAL I.D.
- ⊕ –EXIST. MANHOLE/INLET TO BE REMOVED (ITEM 496)
- ——— –PROP. TRUNK LINE

SHEET TOTALS

ITEM	EST.	FINAL	UNIT	DESCRIPTION
*400	2383		CY	SEWER EXCAVATION
402	1069		LF	TRENCH EXCAVATION PROTECTION
464	146		FT	RCP (CL III) 18 IN
464	1091		FT	RCP (CL III) 42 IN
465	1		EA	MANHOLE (TY) "A"
465	1		EA	INLET (TY) "L1"
465	1		EA	INLET (TY) "F"
465	1		EA	INLET (TY) "A"
496	2		EA	REMOVE OLD STR. (SMALL)

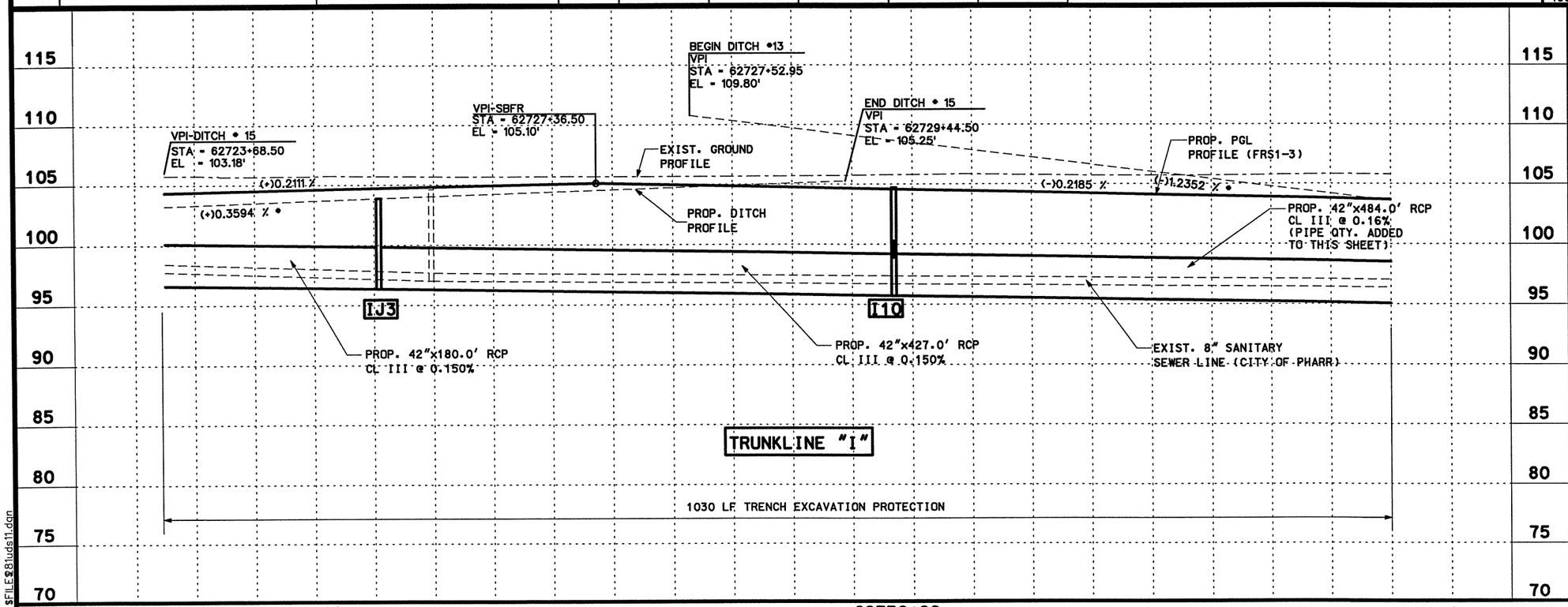

* FOR CONTRACTORS INFORMATION ONLY

STATE OF TEXAS
RAMIRO GUTIERREZ
65948
REGISTERED
PROFESSIONAL ENGINEER

THE SEAL APPEARING ON THIS DOCUMENT WAS AUTHORIZED BY RAMIRO GUTIERREZ, P.E. 65948

DATE: 8-12-03

ALTERATION OF A SEALED DOCUMENT WITHOUT PROPER NOTIFICATION TO THE RESPONSIBLE ENGINEER IS AN OFFENSE UNDER THE TEXAS ENGINEERING PRATICE LAW.

Parsons Brinckerhoff Quade & Douglas Inc.

R. Gutierrez Engineering Corporation

Texas Department of Transportation

© 2003 by TxDOT

UTILITIES & DRAINAGE PLAN & PROFILE

SOUTHBOUND FRONTAGE ROAD

STA. 62722+00 "FRS1-3" TO
STA. 62734+00 "FRS1-3"

SHEET 13 OF 23

PLAN 1"= 100' HORIZ
PROFILE 1"= 10' VERT

DESIGNED:	FED. RD DIV. No.	STATE	FEDERAL AID PROJECT No.			HIGHWAY No.	
CHECKED:	6	TEXAS				US 281	
DRAWN:	STATE DISTRICT	COUNTY	CONTROL No.	SECTION No.	JOB No.	SHEET No.	
CHECKED:	21	HIDALGO	0255	08	091	573	

$NAME$
$TIME$
$DATE$
$FILE$ 81uds11.dgn

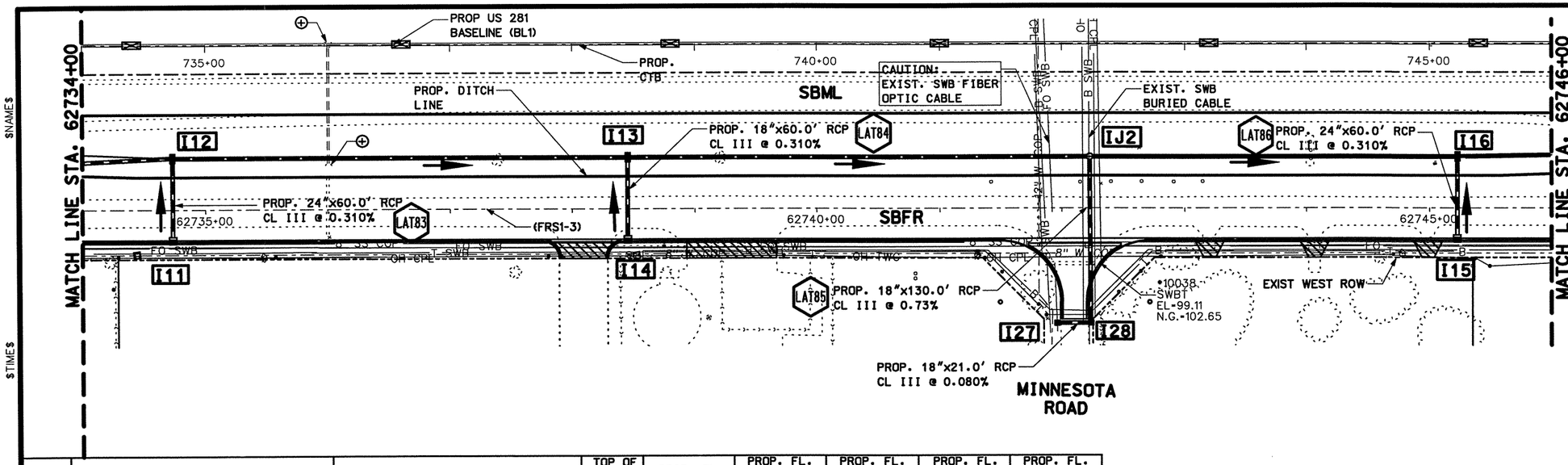

STR. I.D.	DESCRIPTION	STA./OFFSET	TOP OF STR. ELEV.	PROP. FL. OF STR.	PROP. FL. OF PIPE (NORTH)	PROP. FL. OF PIPE (SOUTH)	PROP. FL. OF PIPE (EAST)	PROP. FL. OF PIPE (WEST)
I11	PROP. TY "F" INLET W/2-5.0' EXT.	STA. 62734+73.00, 26.00' RT	103.30'	97.98'	-	-	97.98'	-
I12	PROP. TY "CC" GRATE INLET	STA. 62734+73.00, 42.00' LT	102.65'	94.44'	94.94'	94.44'	-	97.78'
I13	PROP. TY "CC" GRATE INLET	STA. 62738+44.90, 42.00' LT	103.20'	93.88'	93.88'	93.88'	-	98.82'
I14	PROP. TY "F" INLET W/1-5.0' EXT.	STA. 62738+44.90, 26.00' RT	103.85'	99.02'	-	-	99.02'	-
I15	PROP. TY "F" INLET	STA. 62745+22.50, 26.00' RT	103.74'	98.00'	-	-	98.00'	-
I16	PROP. TY "CC" GRATE INLET	STA. 62745+22.50, 42.00' LT	103.08'	92.40'	92.40'	92.40'	-	97.80'
IJ2	PROP. TY "A1" MANHOLE	STA. 62742+22.50, 42.00' LT	103.75'	92.85'	93.35'	92.85'	-	98.50'
I27	PROP. TY "C" GRATE INLET	STA. 62741+96.00, 93.00' RT.	104.21'	99.50'	-	99.50'	-	-
I28	PROP. TY "C" GRATE INLET	STA. 62742+23.77, 93.00' RT	104.52'	99.48'	99.48'	-	99.48'	-

NOTE:

1.) ALL UTILITIES SHALL BE THE RESPONSIBITILY OF THE CONTRACTOR TO VERIFY HORIZONTAL & VERTICAL INFORMATION IN THE FIELD.
2.) ALL ABANDONED PIPE TO BE CAPPED, SUBSIDIARY TO ITEM 496.
3.) CONTRACTOR TO COORDINATE WITH S.W.B. TELEPHONE FOR NEW/EXIST SERVICE LINE PRIOR TO CONSTRUCTION

SHEET TOTALS

ITEM	EST.	FINAL	UNIT	DESCRIPTION
*400	3153		CY	SEWER EXCAVATION
402	1510		LF	TRENCH EXCAVATION PROTECTION
464	211		FT	RCP (CL III) 18 IN
464	120		FT	RCP (CL III) 24 IN
464	742		FT	RCP (CL III) 48 IN
464	296		FT	RCP (CL III) 54 IN
465	1		EA	MANHOLE (TY) "A1"
465	3		EA	INLET (TY) "CC"
465	3		EA	INLET (TY) "F"
465	2		EA	INLET (TY) "C"
465	3		EA	5' INLET EXTENSION
496	2		EA	REMOVE OLD STR. (SMALL)

LEGEND

- PROP. DITCH FLOWLINE
- STORM SEWER FLOW DIRECTION
- NBFR -NORTH BOUND FRONTAGE ROAD
- NBML -NORTH BOUND MAINLANES
- B —— -BURIED TELEPHONE CABLE
- OH —— -OVERHEAD POWER LINES
- 8" SS —— -EXIST. SANITARY SEWER LINE
- -DRAINAGE STR. TO BE CAPPED
- -PROPOSED LUMINAIRE
- 07 -STRUCTURE I.D.
- ==== -RCP TO REMAIN
- ::::::: -RCP TO BE ABANDONED
- H.P. -DITCH HIGH POINT
- L.P. -DITCH LOW POINT
- LAT1 -LATERAL I.D.
- -EXIST. MANHOLE/INLET TO BE REMOVED (ITEM 496)
- -PROP. TRUNK LINE

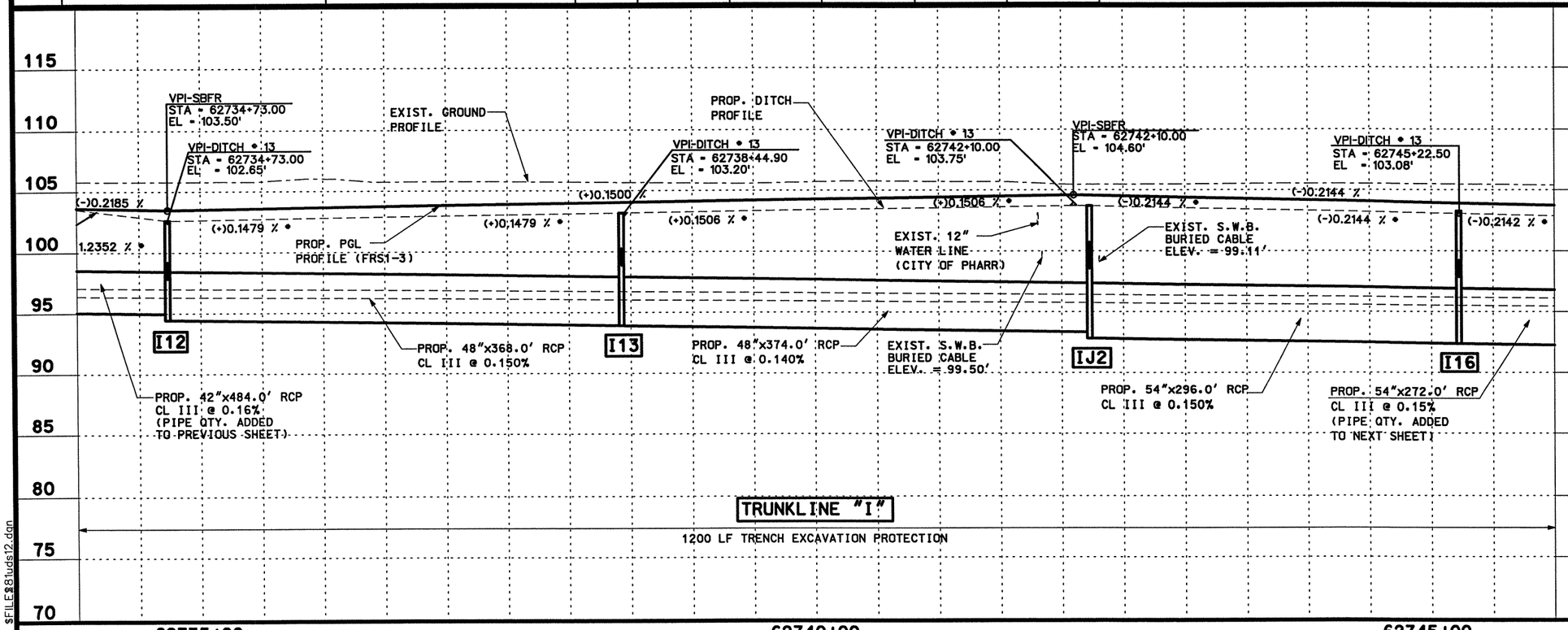

* FOR CONTRACTORS INFORMATION ONLY

STATE OF TEXAS
RAMIRO GUTIERREZ
65948
REGISTERED PROFESSIONAL ENGINEER

THE SEAL APPEARING ON THIS DOCUMENT WAS AUTHORIZED BY RAMIRO GUTIERREZ, P.E. 65948

DATE: 8-12-03

ALTERATION OF A SEALED DOCUMENT WITHOUT PROPER NOTIFICATION TO THE RESPONSIBLE ENGINEER IS AN OFFENSE UNDER THE TEXAS ENGINEERING PRATICE LAW.

Parsons Brinckerhoff Quade & Douglas Inc.

R. Gutierrez Engineering Corporation

Texas Department of Transportation

© 2003 by TxDOT

UTILITIES & DRAINAGE PLAN & PROFILE
SOUTHBOUND FRONTAGE ROAD
STA. 62734+00 "FRS1-3" TO STA. 62746+00 "FRS1-3"

SHEET 14 OF 23

PLAN 1"= 100' HORIZ
PROFILE 1"= 10' VERT

DESIGNED:	FED. RD DIV. No.	STATE	FEDERAL AID PROJECT No.			HIGHWAY No.
CHECKED:	6	TEXAS				US 281
DRAWN:	STATE DISTRICT	COUNTY	CONTROL No.	SECTION No.	JOB No.	SHEET No.
CHECKED:	21	HIDALGO	0255	08	091	574

$NAME$
$TIME$
$DATE$
$FILE$
281uds12.dgn

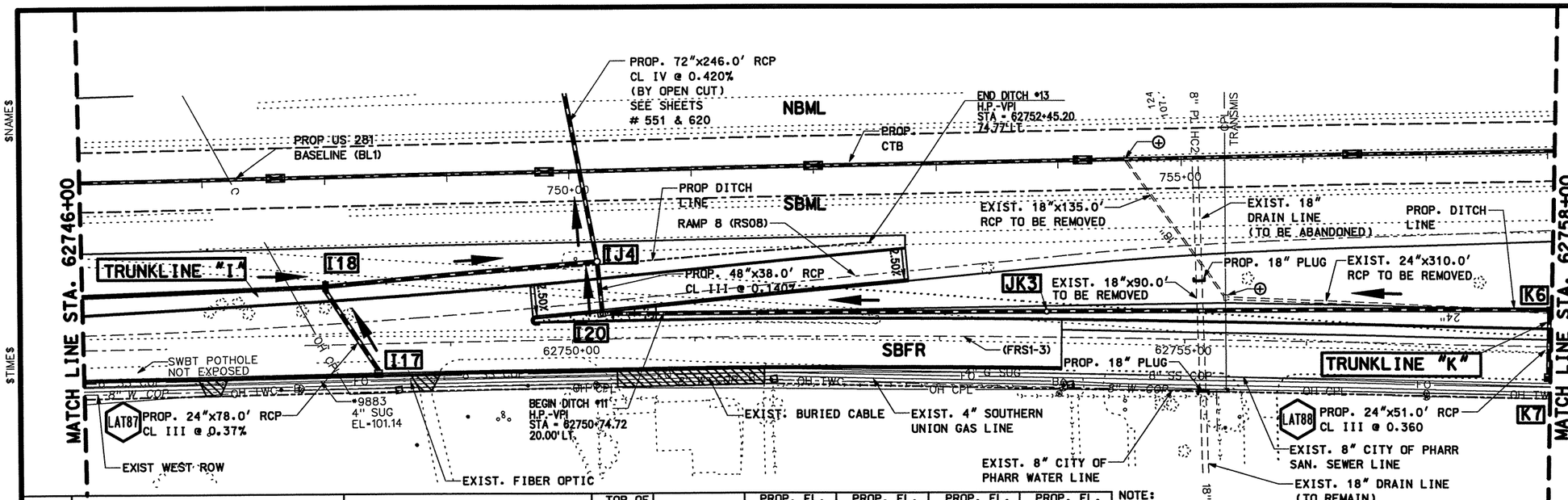

LEGEND

- ——— –PROP. DITCH FLOWLINE
- ——► –STORM SEWER FLOW DIRECTION
- NBFR –NORTH BOUND FRONTAGE ROAD
- NBML –NORTH BOUND MAINLANES
- B —— –BURIED TELEPHONE CABLE
- OH —— –OVERHEAD POWER LINES
- 8" SS —— –EXIST. SANITARY SEWER LINE
- –DRAINAGE STR. TO BE CAPPED
- –PROPOSED LUMINAIRE
- 07 –STRUCTURE I.D.
- ==== –RCP TO REMAIN
- :::::::: –RCP TO BE ABANDONED
- H.P. –DITCH HIGH POINT
- L.P. –DITCH LOW POINT
- LAT1 –LATERAL I.D.
- –EXIST. MANHOLE/INLET TO BE REMOVED (ITEM 496)
- –PROP. TRUNK LINE

STR. I.D.	DESCRIPTION	STA./OFFSET	TOP OF STR. ELEV.	PROP. FL. OF STR.	PROP. FL. OF PIPE (NORTH)	PROP. FL. OF PIPE (SOUTH)	PROP. FL. OF PIPE (EAST)	PROP. FL. OF PIPE (WEST)
K6	PROP. TY "CC" GRATE INLET	STA. 62757+98.24, 36.50' LT.	103.41'	94.59'	94.59'	95.09'	–	98.80'
K7	PROP. TY "F" INLET W/1-5.0' EXT.	STA. 62757+98.19, 26.80' RT.	104.47'	99.00'	–	–	99.00'	–
JK3	PROP. JUNCTION BOX	STA. 62753+88.50, 28.32' LT.	98.50'	93.97'	93.97'	93.97'	–	–
I17	PROP. TY "F" INLET W/3-5.0'EXT.	STA. 62748+40.00, 26.00' RT.	103.05'	95.50'	–	–	95.50'	–
I18	PROP. TY "CC" GRATE INLET	STA. 62747+98.66, 47.20' LT.	102.40'	91.99'	91.99'	91.99'	–	95.20'
I20	PROP. TY "A" INLET	STA. 8750+22.10, 10.00' RT. ●	104.66'	93.38'	–	93.38'	93.38'	–
IJ4	PROP. JUNCTION BOX	STA. 62750+21.27, 62.39' LT.	97.80'	91.16'	91.66'	–	91.16'	93.32'

NOTE:
1.) ALL UTILITIES SHALL BE THE RESPONSIBITILY OF THE CONTRACTOR TO VERIFY HORIZONTAL & VERTICAL INFORMATION IN THE FIELD.
2.) ALL ABANDONED PIPE TO BE CAPPED, SUBSIDIARY TO ITEM 496.
3.) CONTRACTOR TO COORDINATE WITH S.W.B. TELEPHONE FOR NEW/EXIST SERVICE LINE PRIOR TO CONSTRUCTION

SHEET TOTALS

ITEM	EST.	FINAL	UNIT	DESCRIPTION
*400	3704		CY	SEWER EXCAVATION
402	1315		LF	TRENCH EXCAVATION PROTECTION
464	129		FT	RCP (CL III) 24 IN
464	801		FT	RCP (CL III) 48 IN
464	490		FT	RCP (CL III) 54 IN
465	1		EA	INLET (TY) "A"
465	2		EA	JUNCTION BOX
465	2		EA	INLET (TY) "CC"
465	2		EA	INLET (TY) "F"
465	4		EA	5' INLET EXTENSION
496	2		EA	REMOVE OLD STR. (SMALL)
496	445		LF	REMOVE OLD STR. (PIPE)

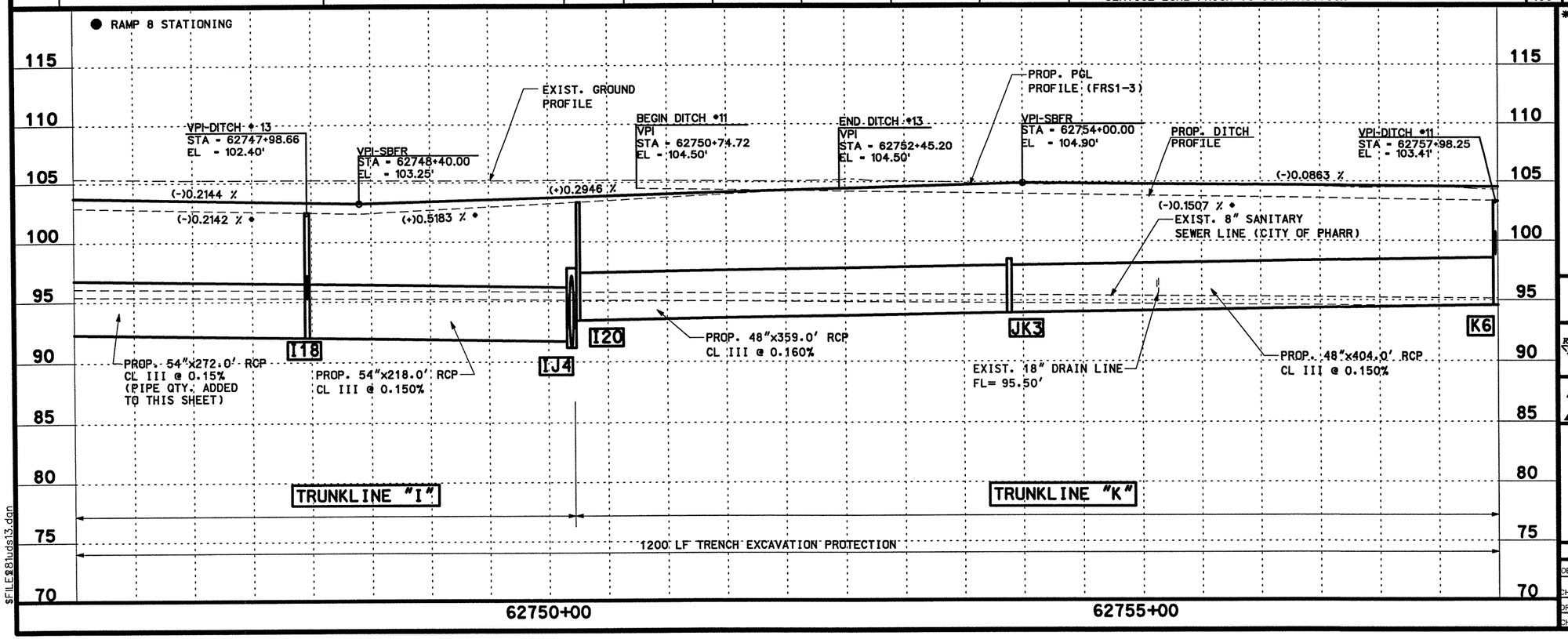

* FOR CONTRACTORS INFORMATION ONLY

STATE OF TEXAS
RAMIRO GUTIERREZ
65948
REGISTERED
PROFESSIONAL ENGINEER

THE SEAL APPEARING ON THIS DOCUMENT WAS AUTHORIZED BY RAMIRO GUTIERREZ, P.E. 65948

DATE: 8-12-03

ALTERATION OF A SEALED DOCUMENT WITHOUT PROPER NOTIFICATION TO THE RESPONSIBLE ENGINEER IS AN OFFENSE UNDER THE TEXAS ENGINEERING PRATICE LAW.

Parsons Brinckerhoff
Quade & Douglas Inc.

R. Gutierrez Engineering Corporation

Texas Department of Transportation

© 2003 by TxDOT

UTILITIES & DRAINAGE PLAN & PROFILE
SOUTHBOUND FRONTAGE ROAD

STA. 62746+00 "FRS1-3" TO
STA. 62758+00 "FRS1-3"

PLAN 1"= 100' HORIZ
PROFILE 1"= 10' VERT

SHEET 15 OF 23

DESIGNED:	FED. RD DIV. No.	STATE	FEDERAL AID PROJECT No.			HIGHWAY No.	
CHECKED:	6	TEXAS				US 281	
DRAWN:	STATE DISTRICT	COUNTY	CONTROL No.	SECTION No.	JOB No.	SHEET No.	
CHECKED:	21	HIDALGO	0255	08	091	575	

$NAME$
$TIME$
$DATE$
$FILE$ 8studs13.dgn

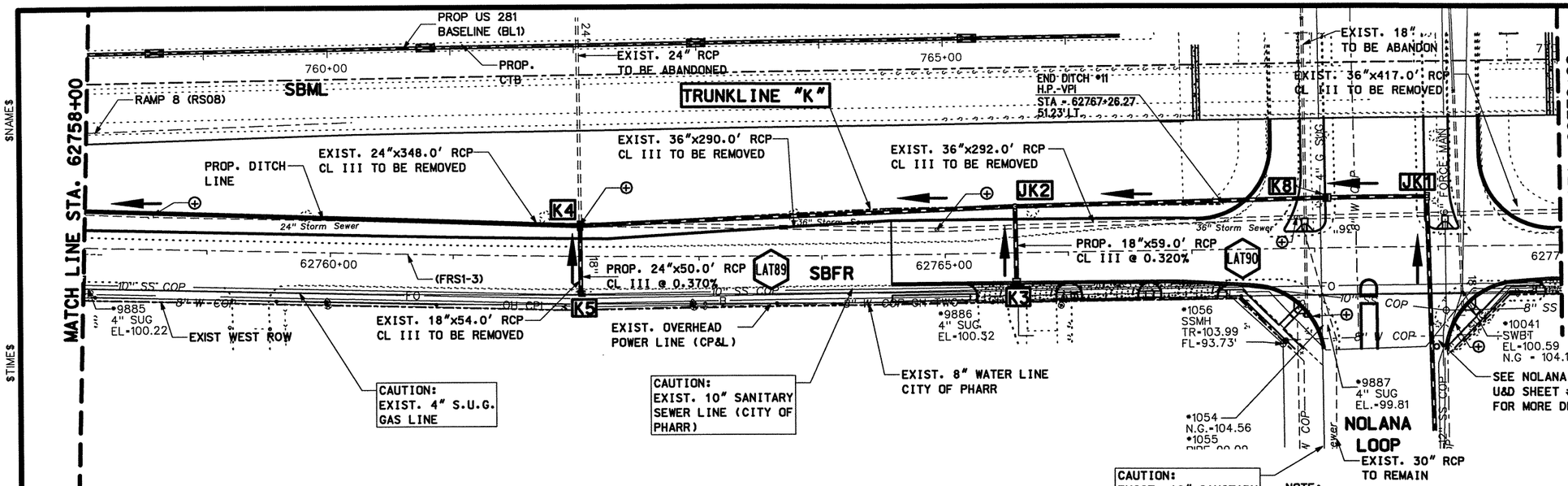

LEGEND

- PROP. DITCH FLOWLINE
- STORM SEWER FLOW DIRECTION
- NBFR — NORTH BOUND FRONTAGE ROAD
- NBML — NORTH BOUND MAINLANES
- B — BURIED TELEPHONE CABLE
- OH — OVERHEAD POWER LINES
- 8" SS — EXIST. SANITARY SEWER LINE
- DRAINAGE STR. TO BE CAPPED
- PROPOSED LUMINAIRE
- 07 — STRUCTURE I.D.
- RCP TO REMAIN
- RCP TO BE ABANDONED
- H.P. — DITCH HIGH POINT
- L.P. — DITCH LOW POINT
- LAT1 — LATERAL I.D.
- EXIST. MANHOLE/INLET TO BE REMOVED (ITEM 496)
- PROP. TRUNK LINE

STR. I.D.	DESCRIPTION	STA./OFFSET	TOP OF STR. ELEV.	PROP. FL. OF STR.	PROP. FL. OF PIPE (NORTH)	PROP. FL. OF PIPE (SOUTH)	PROP. FL. OF PIPE (EAST)	PROP. FL. OF PIPE (WEST)
K3	PROP. TY "F" INLET W/1-5.0' EXT.	STA. 62765+57.70, 25.00' RT.	104.53'	99.50'	-	-	99.50'	-
K4	PROP. TY "CC" GRATE INLET	STA. 62762+00.00, 38.00' LT.	103.06'	95.70'	95.70'	96.20'	-	98.80'
K5	EXIST. TY "A" INLET	STA. 62762+00.00, 26.00' RT.	104.24'	99.00'	-	-	99.00'	-
K8	PROP. TY "F" INLET	STA. 62768+08.38, 41.22' LT.	105.63'	97.62'	97.62'	97.62'	-	-
JK1	PROP. TY "A" INLET	STA. 62768+89.38, 41.22' LT.	105.63'	97.74'	97.74'	-	-	97.74'
JK2	PROP. TY "A" MANHOLE	STA. 62765+57.10, 52.00' LT.	103.61'	96.73'	96.73'	97.23'	-	99.30'

NOTE:

1.) ALL UTILITIES SHALL BE THE RESPONSIBITILY OF THE CONTRACTOR TO VERIFY HORIZONTAL & VERTICAL INFORMATION IN THE FIELD.
2.) ALL ABANDONED PIPE TO BE CAPPED, SUBSIDIARY TO ITEM 496.
3.) CONTRACTOR TO COORDINATE WITH S.W.B. TELEPHONE FOR NEW/EXIST SERVICE LINE PRIOR TO CONSTRUCTION

SHEET TOTALS

ITEM	EST	FINAL	UNIT	DESCRIPTION
*400	1825		CY	SEWER EXCAVATION
402	1207		LF	TRENCH EXCAVATION PROTECTION
464	59		FT	RCP (CL III) 18 IN
464	50		FT	RCP (CL III) 24 IN
464	324		FT	RCP (CL III) 30 IN
464	350		FT	RCP (CL III) 36 IN
464	400		FT	RCP (CL III) 42 IN
465	1		EA	INLET (TY) "A"
465	1		EA	MANHOLE (TY) "A"
465	1		EA	INLET (TY) "CC"
465	2		EA	INLET (TY) "F"
465	1		EA	5.0' INLET EXTENSION
496	6		EA	REMOVE OLD STR. (SMALL)
496	1401		LF	REMOVE OLD STR. (PIPE)

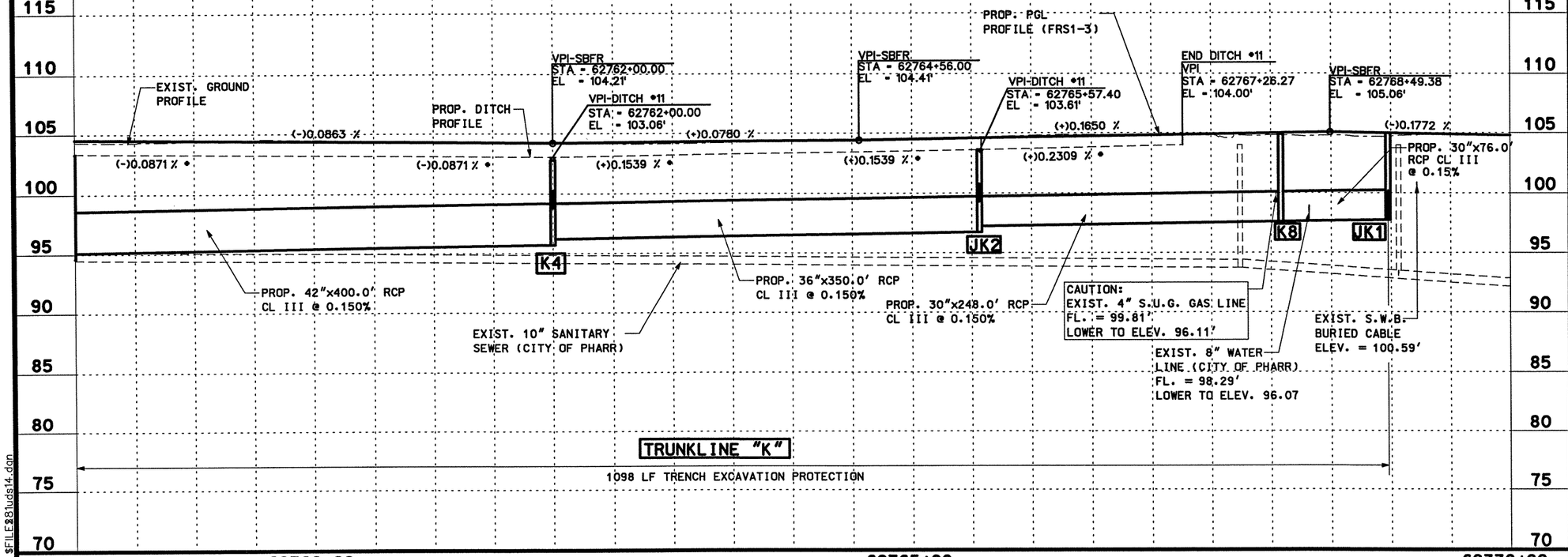

* FOR CONTRACTORS INFORMATION ONLY

STATE OF TEXAS
RAMIRO GUTIERREZ
65948
REGISTERED
PROFESSIONAL ENGINEER

THE SEAL APPEARING ON THIS DOCUMENT WAS AUTHORIZED BY RAMIRO GUTIERREZ, P.E. 65948

DATE: 8-12-03

ALTERATION OF A SEALED DOCUMENT WITHOUT PROPER NOTIFICATION TO THE RESPONSIBLE ENGINEER IS AN OFFENSE UNDER THE TEXAS ENGINEERING PRATICE LAW.

Parsons Brinckerhoff Quade & Douglas Inc.

R. Gutierrez Engineering Corporation

Texas Department of Transportation

© 2003 by TxDOT

UTILITIES & DRAINAGE PLAN & PROFILE

SOUTHBOUND FRONTAGE ROAD

STA. 62758+00 "FRS1-3" TO
STA. 62770+00 "FRS1-3"

SHEET 16 OF 23

PLAN 1"= 100' HORIZ
PROFILE 1"= 10' VERT

DESIGNED:	FED. RD DIV. No.	STATE	FEDERAL AID PROJECT No.			HIGHWAY No.	
CHECKED:	6	TEXAS				US 281	
DRAWN:	STATE DISTRICT	COUNTY	CONTROL No.	SECTION No.	JOB No.	SHEET No.	
CHECKED:	21	HIDALGO	0255	08	091	576	

$NAME$
$TIME$
$DATE$
$FILE$81uds14.dgn

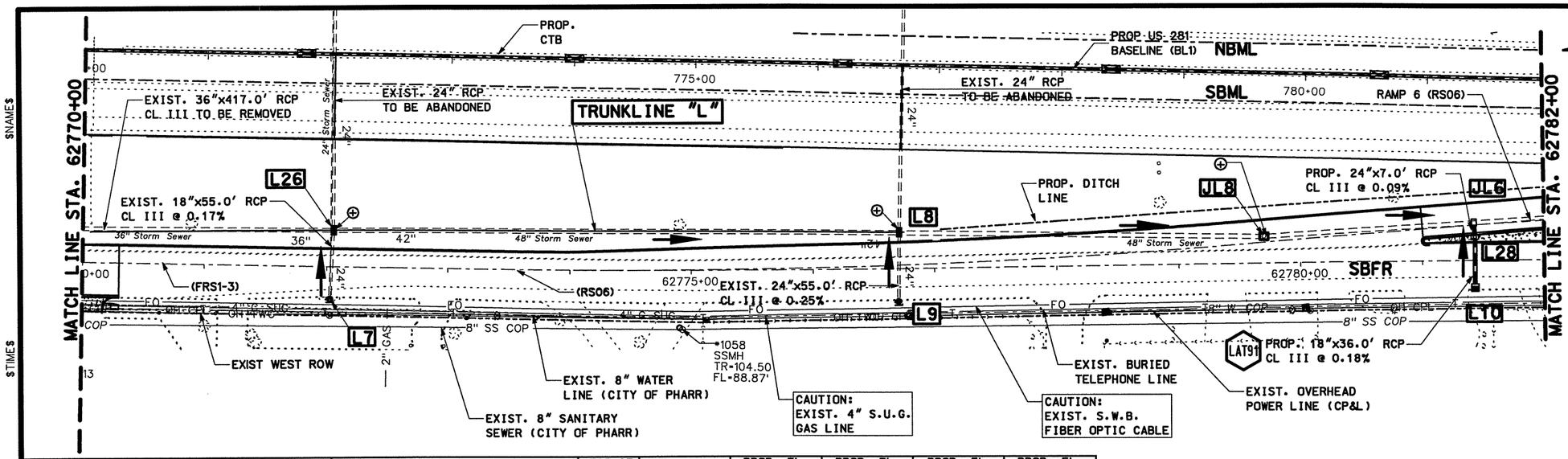

LEGEND

- PROP. DITCH FLOWLINE
- STORM SEWER FLOW DIRECTION
- NBFR NORTH BOUND FRONTAGE ROAD
- NBML NORTH BOUND MAINLANES
- B BURIED TELEPHONE CABLE
- OH OVERHEAD POWER LINES
- 8" SS EXIST. SANITARY SEWER LINE
- DRAINAGE STR. TO BE CAPPED
- PROPOSED LUMINAIRE
- 07 STRUCTURE I.D.
- RCP TO REMAIN
- RCP TO BE ABANDONED
- H.P. DITCH HIGH POINT
- L.P. DITCH LOW POINT
- LAT1 LATERAL I.D.
- EXIST. MANHOLE/INLET TO BE REMOVED (ITEM 496)
- PROP. TRUNK LINE

STR. I.D.	DESCRIPTION	STA./OFFSET	TOP OF STR. ELEV.	PROP. FL. OF STR.	PROP. FL. OF PIPE (NORTH)	PROP. FL. OF PIPE (SOUTH)	PROP. FL. OF PIPE (EAST)	PROP. FL. OF PIPE (WEST)
L7	EXIST. TY "A" INLET ADD 3-5.0' EXT.	STA. 62772+02.88, 26.37' RT	104.70'	101.00'	–	–	101.00'	–
L8	PROP. TY "CC" GRATE INLET	STA. 62776+71.50, 43.53' LT	104.56'	100.02'	100.02'	100.02'	–	100.50'
L9	EXIST. TY "A" INLET ADD 1-5.0' EXT	STA. 62776+69.95, 27.73' RT	104.89'	100.65'	–	–	100.65'	–
L10	PROP. TY "F" INLET W/1-5.0' EXT.	STA. 62781+43.20, 23.30' RT	105.30'	100.68'	–	–	100.68'	–
JL8	PROP. JUNCTION BOX (5'x5')	STA. 62779+70.25, 21.52' LT	103.13'	99.13'	99.13'	99.13'	–	–
L26	PROP. TY "CC" GRATE INLET	STA. 62772+04.90, 39.87' LT	103.80'	100.86'	–	100.86'	–	100.90'
L28	PROP. TY "A" INLET	STA. 6781+38.51, 8.00' RT ●	106.26'	100.11'	–	–	100.11'	100.61'
JL6	PROP. JUNCTION BOX (5'x5')	STA. 6781+38.72, 01.98' LT ●	104.60'	98.60'	98.60'	98.60'	–	100.10'

● RAMP 6 STATIONING

NOTE:

1.) ALL UTILITIES SHALL BE THE RESPONSIBITILY OF THE CONTRACTOR TO VERIFY HORIZONTAL & VERTICAL INFORMATION IN THE FIELD.
2.) ALL ABANDONED PIPE TO BE CAPPED, SUBSIDIARY TO ITEM 496.
3.) CONTRACTOR TO COORDINATE WITH S.W.B. TELEPHONE FOR NEW/EXIST SERVICE LINE PRIOR TO CONSTRUCTION

SHEET TOTALS

ITEM	EST.	FINAL	UNIT	DESCRIPTION
*400	30		CY	SEWER EXCAVATION
464	36		FT	RCP (CL III) 18 IN
464	7		FT	RCP (CL III) 24 IN
465	1		EA	INLET (TY) "A"
465	2		EA	INLET (TY) "CC"
465	1		EA	INLET (TY) "F"
465	2		EA	JUNCTION BOX (5'x5')
465	5		EA	5' INLET EXTENSION
496	3		EA	REMOVE OLD STR. (SMALL)

* FOR CONTRACTORS INFORMATION ONLY

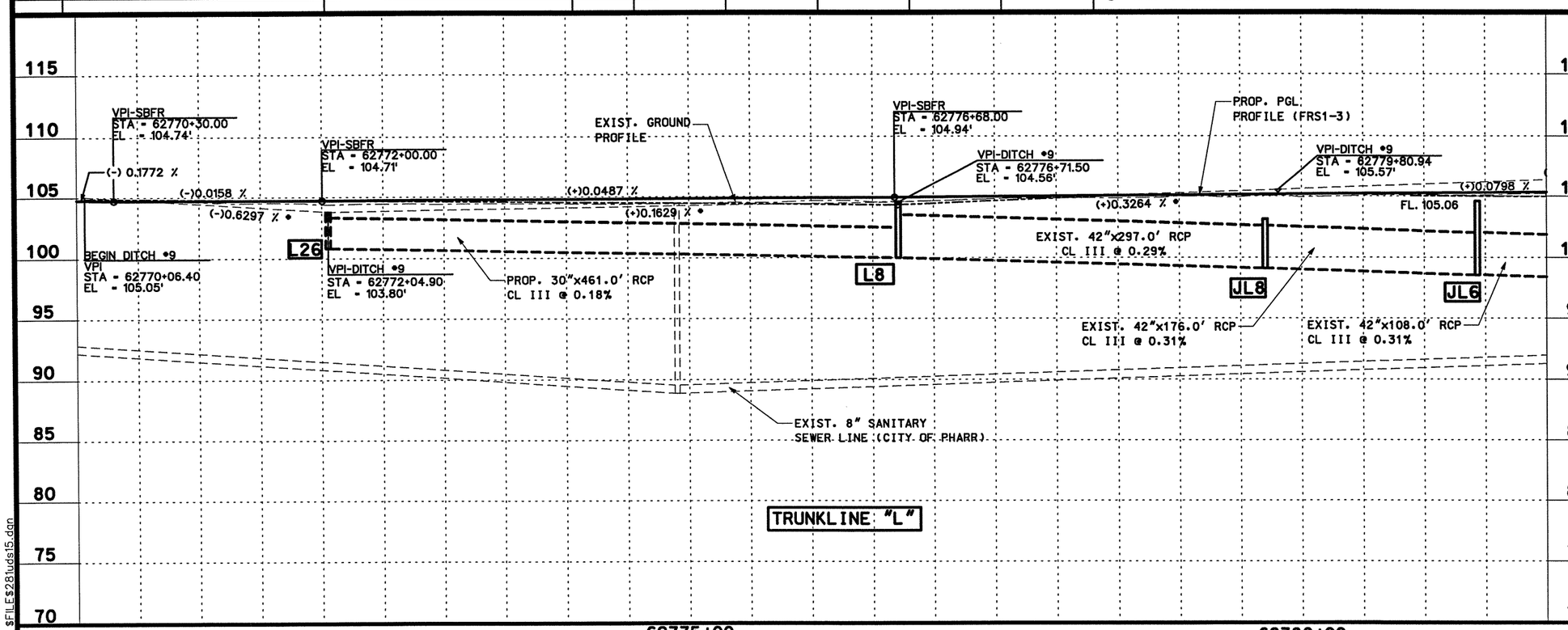

THE SEAL APPEARING ON THIS DOCUMENT WAS AUTHORIZED BY RAMIRO GUTIERREZ, P.E. 65948

DATE: 8-12-03

ALTERATION OF A SEALED DOCUMENT WITHOUT PROPER NOTIFICATION TO THE RESPONSIBLE ENGINEER IS AN OFFENSE UNDER THE TEXAS ENGINEERING PRATICE LAW.

Parsons Brinckerhoff Quade & Douglas Inc.

R. Gutierrez Engineering Corporation

Texas Department of Transportation

© 2003 by TxDOT

UTILITIES & DRAINAGE PLAN & PROFILE

SOUTHBOUND FRONTAGE ROAD

STA. 62770+00 "FRS1-3" TO STA. 62782+00 "FRS1-3"

SHEET 17 OF 23

PLAN 1"= 100' HORIZ
PROFILE 1"= 10' VERT

DESIGNED:	FED. RD DIV. No.	STATE	FEDERAL AID PROJECT No.			HIGHWAY No.
CHECKED:	6	TEXAS				US 281
DRAWN:	STATE DISTRICT	COUNTY	CONTROL No.	SECTION No.	JOB No.	SHEET No.
CHECKED:	21	HIDALGO	0255	08	091	577

$NAME$
$TIME$
$DATE$
$FILE$281uds15.dgn

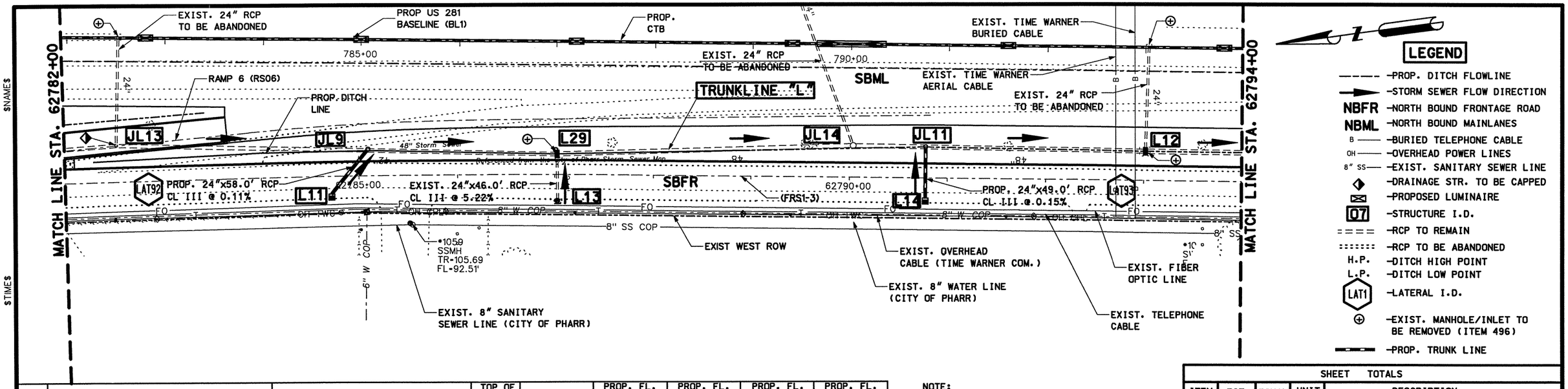

STR. I.D.	DESCRIPTION	STA./OFFSET	TOP OF STR. ELEV.	PROP. FL. OF STR.	PROP. FL. OF PIPE (NORTH)	PROP. FL. OF PIPE (SOUTH)	PROP. FL. OF PIPE (EAST)	PROP. FL. OF PIPE (WEST)
L11	PROP. TY "F" INLET W/1-5.0' EXT.	STA. 62784+71.88, 21.70' LT	105.67'	100.44'	-	-	100.44'	-
L12	PROP. TY "CC" GRATE INLET	STA. 62793+01.68, 29.19' LT	104.73'	95.30'	95.30'	95.30'	-	-
L13	EXIST. TY "A" INLET ADD 2-5.0' EXT.	STA. 62787+02.84, 24.77' RT	105.40'	100.40'	-	-	100.40'	-
L14	PROP. TY "F" INLET W/1-5.0' EXT.	STA. 62790+77.52, 24.25' RT	105.11'	99.39'	-	-	99.39'	-
JL9	PROP. TY "M" MANHOLE	STA. 62785+09.54, 26.69' LT	103.90'	97.44'	97.44'	97.44'	-	99.00'
JL11	PROP. JUNCTION BOX	STA. 62790+77.57, 31.36' LT	101.80'	95.89'	95.89'	95.89'	-	98.00'
JL13	EXIST. MANHOLE (TO BE CAPPED)	STA. 62782+53.34, 36.74' LT	102.27'	98.27'	98.27'	98.27'	-	-
JL14	EXIST. MANHOLE	STA. 62790+03.72, 31.87' LT	104.26'	96.09'	96.09'	96.09'	-	-
L29	PROP. TY "CC" GRATE INLET	STA. 62787+02.30, 20.52' LT	103.00'	96.83'	96.83'	96.83'	-	98.00'

NOTE:

1.) ALL UTILITIES SHALL BE THE RESPONSIBITILY OF THE CONTRACTOR TO VERIFY HORIZONTAL & VERTICAL INFORMATION IN THE FIELD.
2.) ALL ABANDONED PIPE TO BE CAPPED, SUBSIDIARY TO ITEM 496.
3.) CONTRACTOR TO COORDINATE WITH S.W.B. TELEPHONE FOR NEW/EXIST SERVICE LINE PRIOR TO CONSTRUCTION

SHEET TOTALS

ITEM	EST.	FINAL	UNIT	DESCRIPTION
* 400	70		CY	SEWER EXCAVATION
402	49		LF	TRENCH EXCAVATION PROTECTION
464	107		FT	RCP (CL III) 24 IN
465	1		EA	MANHOLE (TY) "M"
465	2		EA	INLET (TY) "CC"
465	2		EA	INLET (TY) "F"
465	1		EA	JUNCTION BOX
465	4		EA	5' INLET EXTENSION
479	1		EA	ADJUST INLET/MANHOLE (JUNC. BOX)
496	4		EA	REMOVE OLD STR. (SMALL)

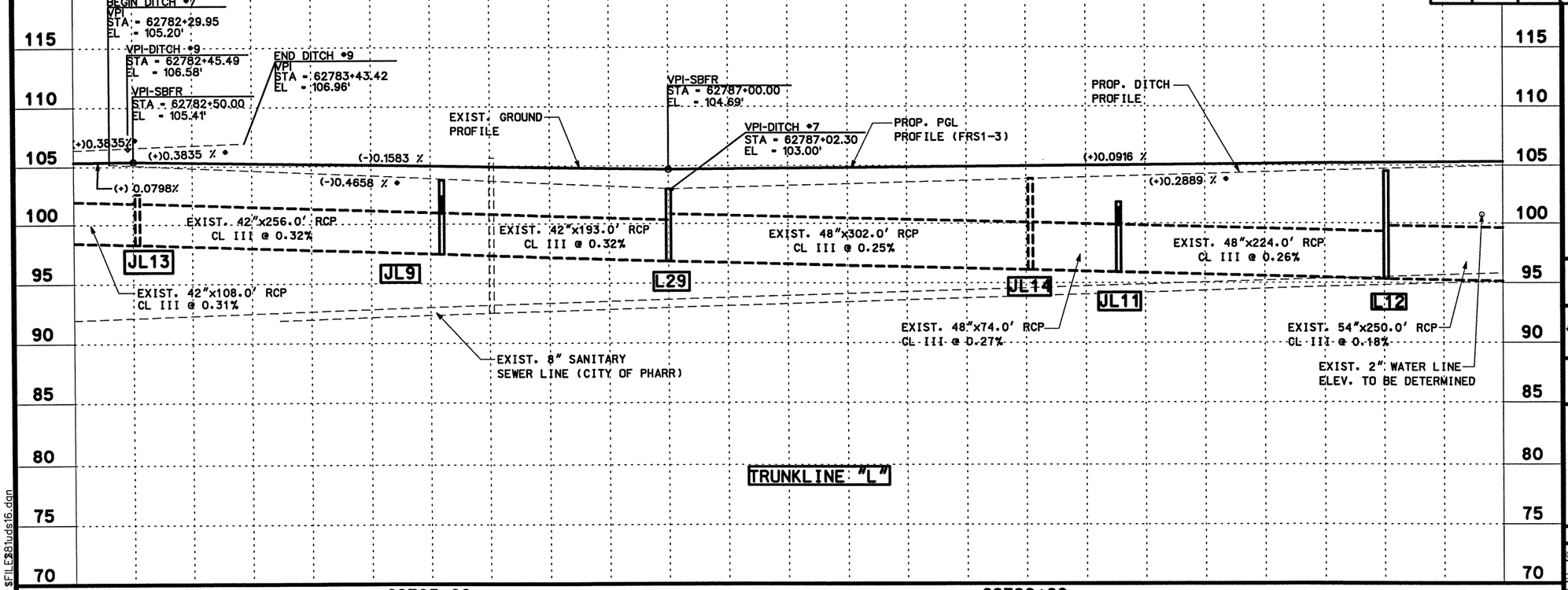

THE SEAL APPEARING ON THIS DOCUMENT WAS AUTHORIZED BY RAMIRO GUTIERREZ, P.E. 65948

DATE: 8-12-03

ALTERATION OF A SEALED DOCUMENT WITHOUT PROPER NOTIFICATION TO THE RESPONSIBLE ENGINEER IS AN OFFENSE UNDER THE TEXAS ENGINEERING PRATICE LAW.

Parsons Brinckerhoff Quade & Douglas Inc.

R. Gutierrez Engineering Corporation

Texas Department of Transportation

©2003 by TxDOT

UTILITIES & DRAINAGE PLAN & PROFILE SOUTHBOUND FRONTAGE ROAD

STA. 62782+00 "FRS1-3" TO STA. 62794+00 "FRS1-3"

SHEET 18 OF 23

PLAN 1"= 100' HORIZ
PROFILE 1"= 10' VERT

DESIGNED:	FED. RD DIV. No.	STATE	FEDERAL AID PROJECT No.			HIGHWAY No.
CHECKED:	6	TEXAS				US 281
DRAWN:	STATE DISTRICT	COUNTY	CONTROL No.	SECTION No.	JOB No.	SHEET No.
CHECKED:	21	HIDALGO	0255	08	091	578

$NAME$
$TIME$
$DATE$
$FILE$281uds16.dgn

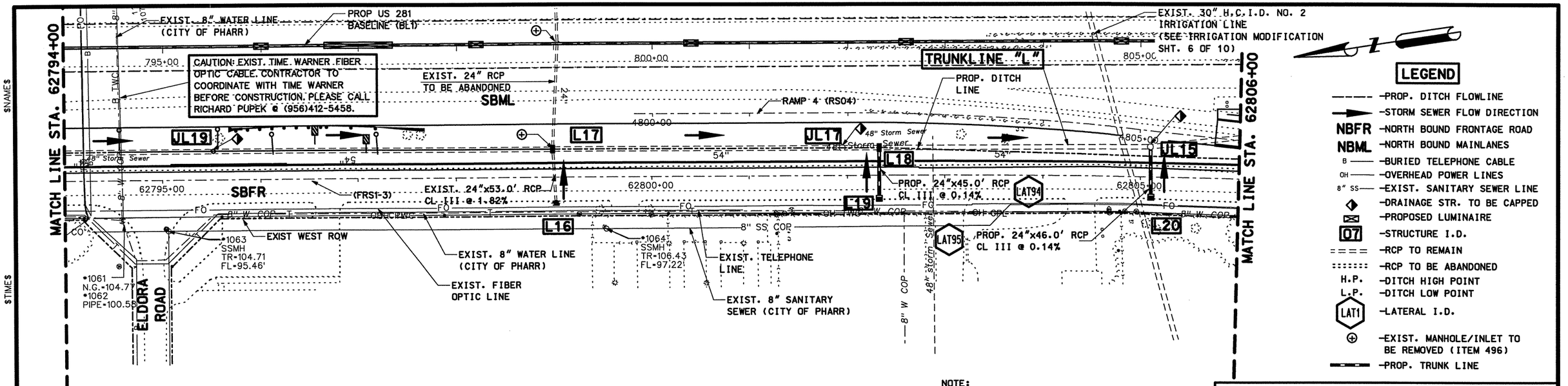

STR. I.D.	DESCRIPTION	STA./OFFSET	TOP OF STR. ELEV.	PROP. FL. OF STR.	PROP. FL. OF PIPE (NORTH)	PROP. FL. OF PIPE (SOUTH)	PROP. FL. OF PIPE (EAST)	PROP. FL. OF PIPE (WEST)
JL19	EXIST. MANHOLE (TO BE CAPPED)	STA. 62795+51.50, 29.32' LT	99.85'	94.85'	94.85'	94.85'	-	-
L16	EXIST. TY "A" INLET ADD 3-5.0' EXT.	STA. 62799+02.48, 25.00' RT	104.78'	100.00'	-	-	100.00'	-
L17	PROP. TY "CC" GRATE INLET	STA. 62798+99.40, 28.64' LT	104.20'	94.46'	94.46'	94.46'	-	99.00'
L18	PROP. TY "CC" GRATE INLET	STA. 62802+32.67, 28.24' LT	104.72'	93.75'	93.75'	93.75'	-	97.00'
L19	PROP. TY "F" INLET W/1-5.0' EXT.	STA. 62802+32.49, 24.50' RT	105.00'	97.75'	-	-	97.75'	-
L20	PROP. TY "F" INLET W/1-5.0' EXT.	STA. 62805+11.00, 22.00' RT	105.17'	97.20'	-	-	97.20'	-
JL15	EXIST. MANHOLE (TO BE CAPPED)	STA. 62805+09.77, 30.87' LT	102.63'	93.20'	93.20'	93.20'	-	96.80'
JL17	EXIST. MANHOLE (TO BE CAPPED)	STA. 62801+94.86, 28.30' LT.	98.83'	93.83'	93.83'	93.83'	-	-

NOTE:

1.) ALL UTILITIES SHALL BE THE RESPONSIBITILY OF THE CONTRACTOR TO VERIFY HORIZONTAL & VERTICAL INFORMATION IN THE FIELD.
2.) ALL ABANDONED PIPE TO BE CAPPED, SUBSIDIARY TO ITEM 496.
3.) CONTRACTOR TO COORDINATE WITH S.W.B. TELEPHONE FOR NEW/EXIST SERVICE LINE PRIOR TO CONSTRUCTION

SHEET TOTALS

ITEM	EST.	FINAL	UNIT	DESCRIPTION
*400	110		CY	SEWER EXCAVATION
402	91		LF	TRENCH EXCAVATION PROTECTION
464	91		FT	RCP (CL III) 24 IN
465	2		EA	INLET (TY) "CC"
465	2		EA	INLET (TY) "F"
465	5		EA	5' INLET EXTENSION
479	3		EA	ADJUST INLET/MANHOLE (JUNC. BOX)
496	2		EA	REMOVE OLD STR. (SMALL)

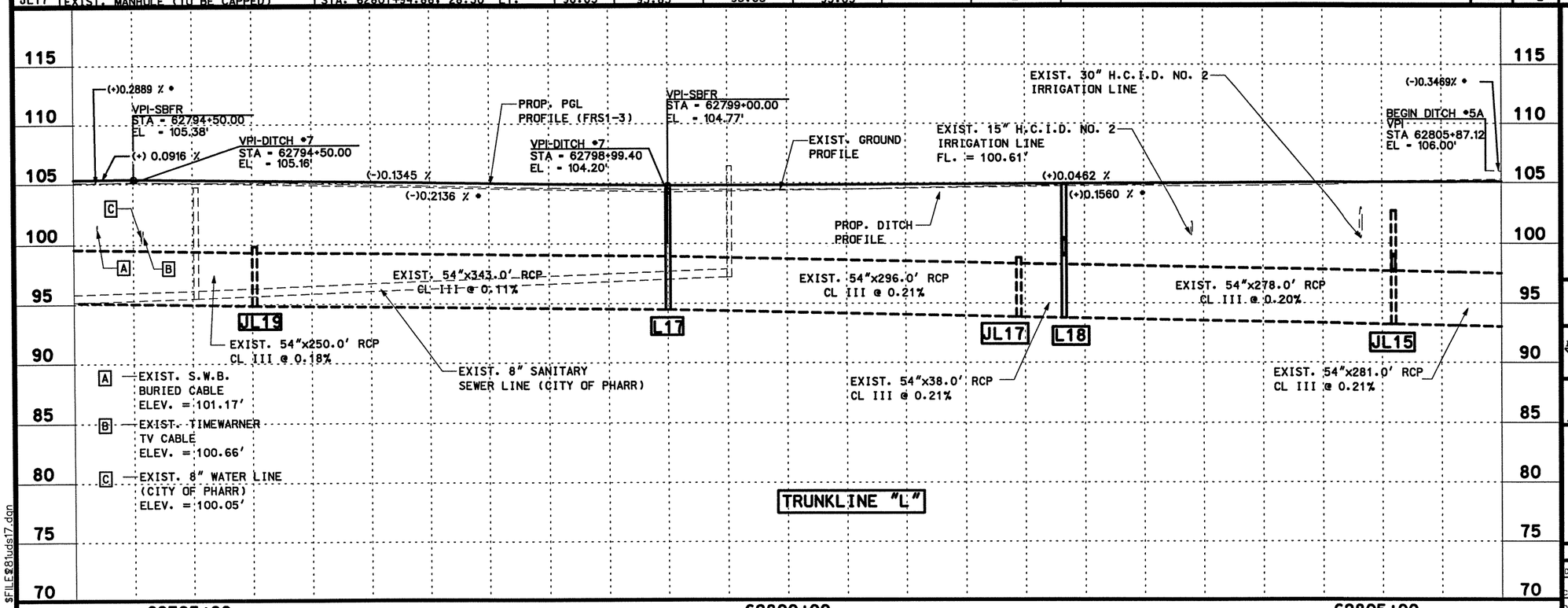

* FOR CONTRACTORS INFORMATION ONLY

STATE OF TEXAS
RAMIRO GUTIERREZ
65948
REGISTERED PROFESSIONAL ENGINEER

THE SEAL APPEARING ON THIS DOCUMENT WAS AUTHORIZED BY RAMIRO GUTIERREZ, P.E. 65948

DATE: 8-12-03

ALTERATION OF A SEALED DOCUMENT WITHOUT PROPER NOTIFICATION TO THE RESPONSIBLE ENGINEER IS AN OFFENSE UNDER THE TEXAS ENGINEERING PRATICE LAW.

Parsons Brinckerhoff Quade & Douglas Inc.

R. Gutierrez Engineering Corporation

Texas Department of Transportation

© 2003 by TxDOT

UTILITIES & DRAINAGE PLAN & PROFILE SOUTHBOUND FRONTAGE ROAD

STA. 62794+00 "FRS1-3" TO STA. 62806+00 "FRS1-3"

SHEET 19 OF 23

PLAN 1"= 100' HORIZ
PROFILE 1"= 10' VERT

DESIGNED:	FED. RD DIV. No.	STATE	FEDERAL AID PROJECT No.			HIGHWAY No.	
CHECKED:	6	TEXAS				US 281	
DRAWN:	STATE DISTRICT	COUNTY	CONTROL No.	SECTION No.	JOB No.	SHEET No.	
CHECKED:	21	HIDALGO	0255	08	091	579	

$NAME$
$TIME$
$DATE$
$FILE$ 281uds17.dgn

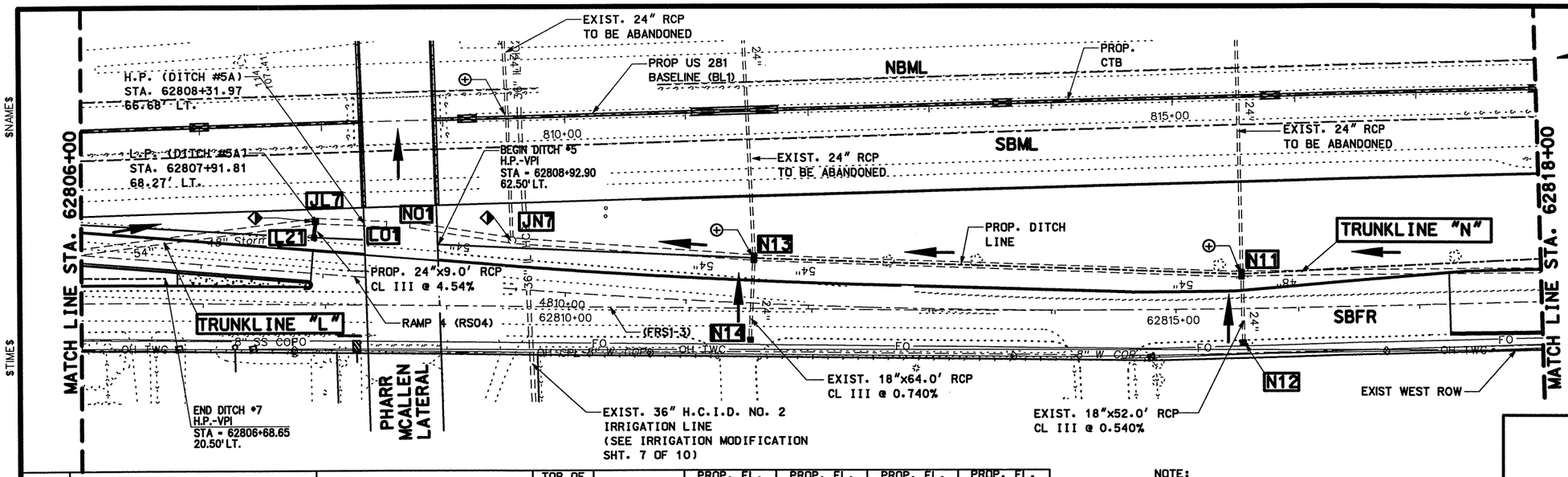

STR. I.D.	DESCRIPTION	STA./OFFSET	TOP OF STR. ELEV.	PROP. FL. OF STR.	PROP. FL. OF PIPE (NORTH)	PROP. FL. OF PIPE (SOUTH)	PROP. FL. OF PIPE (EAST)	PROP. FL. OF PIPE (WEST)
N11	PROP. TY "CC" GRATE INLET	STA. 62815+53.95, 28.10' LT	105.33'	94.67'	94.67'	94.67'	–	101.20'
N12	EXIST. TY "A" INLET W/1-5.0' EXT.	STA. 62815+54.91, 28.17' RT	105.78'	101.50'	–	–	101.50'	–
N13	PROP. TY "CC" GRATE INLET	STA. 62811+52.20, 41.12' LT	104.50'	94.04'	94.04'	94.04'	–	101.00'
N14	EXIST. TY "C" GRATE INLET	STA. 62811+49.99, 26.04' RT	105.00'	101.50'	–	–	101.50'	–
JN7	EXIST. GRATE INLET (TO BE CAPPED)	STA. 62809+53.04, 53.62' LT	98.71'	93.71'	93.71'	93.71'	–	–
NO1	EXIST. OUTFALL LINE "N"	STA. 62808+69.25, 65.58' LT	–	93.58'	–	93.58'	–	–
L21	PROP. TY "C" GRATE INLET	STA. 62807+91.09, 52.73' LT	105.29'	96.59'	–	–	96.59'	–
01	EXIST. OUTFALL LINE "L"	STA. 62808+49.94, 66.17' LT	–	92.50'	92.50'	–	–	–
JL7	EXIST. INLET (TO BE CAPPED)	STA. 62807+91.09, 68.27' LT	99.10'	92.59'	92.59'	92.59'	–	96.00'

NOTE:

1.) ALL UTILITIES SHALL BE THE RESPONSIBITILY OF THE CONTRACTOR TO VERIFY HORIZONTAL & VERTICAL INFORMATION IN THE FIELD.
2.) ALL ABANDONED PIPE TO BE CAPPED, SUBSIDIARY TO ITEM 496.
3.) CONTRACTOR TO COORDINATE WITH S.W.B. TELEPHONE FOR NEW/EXIST SERVICE LINE PRIOR TO CONSTRUCTION

LEGEND

- PROP. DITCH FLOWLINE
- STORM SEWER FLOW DIRECTION
- NBFR – NORTH BOUND FRONTAGE ROAD
- NBML – NORTH BOUND MAINLANES
- B – BURIED TELEPHONE CABLE
- OH – OVERHEAD POWER LINES
- 8" SS – EXIST. SANITARY SEWER LINE
- DRAINAGE STR. TO BE CAPPED
- PROPOSED LUMINAIRE
- 07 – STRUCTURE I.D.
- RCP TO REMAIN
- RCP TO BE ABANDONED
- H.P. – DITCH HIGH POINT
- L.P. – DITCH LOW POINT
- LAT1 – LATERAL I.D.
- EXIST. MANHOLE/INLET TO BE REMOVED (ITEM 496)
- PROP. TRUNK LINE

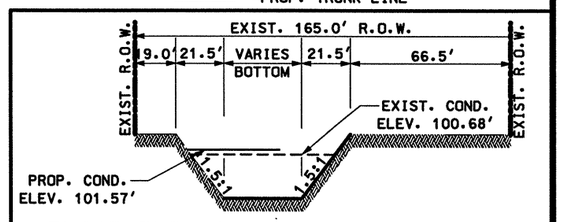

EXIST TYP. SOUTH DRAINAGE DITCH
"HCDD No. 1 PHARR-McALLEN LATERAL"
N.T.S

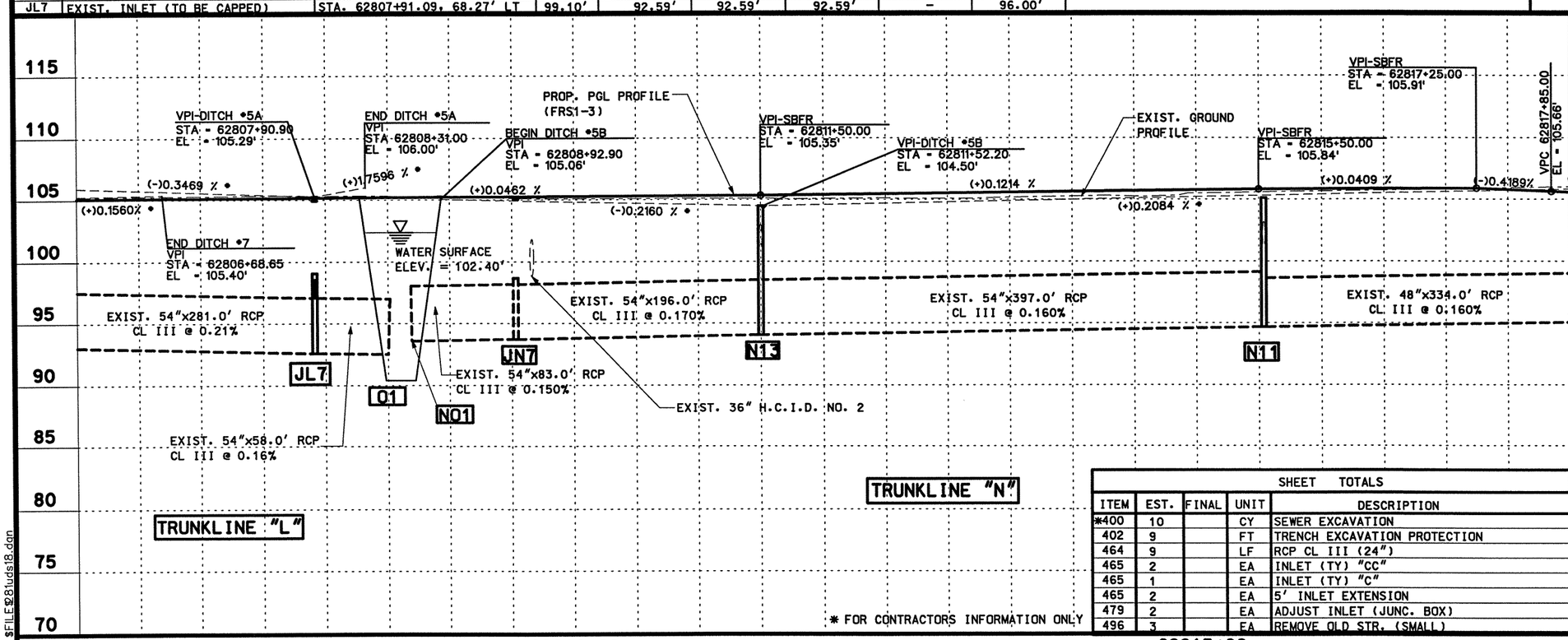

* FOR CONTRACTORS INFORMATION ONLY

SHEET TOTALS

ITEM	EST.	FINAL	UNIT	DESCRIPTION
*400	10		CY	SEWER EXCAVATION
402	9		FT	TRENCH EXCAVATION PROTECTION
464	9		LF	RCP CL III (24")
465	2		EA	INLET (TY) "CC"
465	1		EA	INLET (TY) "C"
465	2		EA	5' INLET EXTENSION
479	2		EA	ADJUST INLET (JUNC. BOX)
496	3		EA	REMOVE OLD STR. (SMALL)

STATE OF TEXAS
RAMIRO GUTIERREZ
65948
REGISTERED
PROFESSIONAL ENGINEER

THE SEAL APPEARING ON THIS DOCUMENT WAS AUTHORIZED BY RAMIRO GUTIERREZ, P.E. 65948
DATE: 8-12-03

ALTERATION OF A SEALED DOCUMENT WITHOUT PROPER NOTIFICATION TO THE RESPONSIBLE ENGINEER IS AN OFFENSE UNDER THE TEXAS ENGINEERING PRATICE LAW.

Parsons Brinckerhoff Quade & Douglas Inc.

R. Gutierrez Engineering Corporation

Texas Department of Transportation

© 2003 by TxDOT

UTILITIES & DRAINAGE PLAN & PROFILE
SOUTHBOUND FRONTAGE ROAD
STA. 62806+00 "FRS1-3" TO
STA. 62818+00 "FRS1-3"

SHEET 20 OF 23

PLAN 1"= 100' HORIZ
PROFILE 1"= 10' VERT

DESIGNED:	FED. RD DIV. No.	STATE	FEDERAL AID PROJECT No.			HIGHWAY No.	
CHECKED:	6	TEXAS				US 281	
DRAWN:	STATE DISTRICT	COUNTY	CONTROL No.	SECTION No.	JOB No.	SHEET No.	
CHECKED:	21	HIDALGO	0255	08	091	580	

$NAME$
$TIME$
$DATE$
$FILE$ 281uds18.dgn

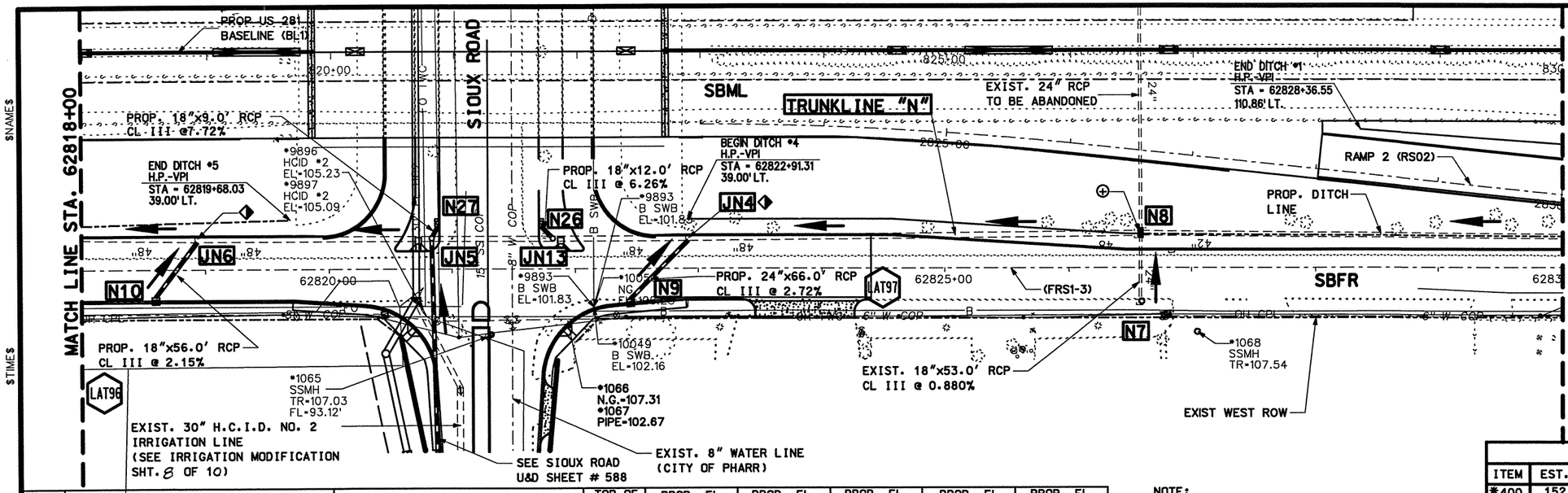

STR. I.D.	DESCRIPTION	STA./OFFSET	TOP OF STR. ELEV.	PROP. FL. OF STR.	PROP. FL. OF PIPE (NORTH)	PROP. FL. OF PIPE (SOUTH)	PROP. FL. OF PIPE (EAST)	PROP. FL. OF PIPE (WEST)
N7	EXIST. TY "A" INLET W/2-5.0' EXT.	STA. 62826+59.47, 26.84' RT	106.66'	102.00'	-	-	102.00'	-
N8	PROP. TY "CC" GRATE INLET	STA. 62826+58.55, 27.66' LT	106.00'	96.32'	96.32'	96.32'	-	101.50'
N9	PROP. TY "F" INLET W/2-5.0' EXT.	STA. 62822+45.00, 28.67' RT	105.97'	99.90'	-	-	99.90'	-
JN4	EXIST. MANHOLE (TO BE CAPPED)	STA. 62822+91.82, 24.25' LT	102.30'	95.80'	95.80'	95.80'	-	98.00'
N10	PROP. TY "F" INLET W/1-5.0' EXT.	STA. 62818+83.28, 26.00' RT	105.44'	99.29'	-	-	99.29'	-
JN5	PROP. TY "M" MANHOLE	STA. 62820+83.45, 24.34' LT	106.63'	95.48'	95.48'	95.48'	98.50'	98.50'
JN6	EXIST. MANHOLE (TO BE CAPPED)	STA. 62818+93.66, 24.13' LT	101.20'	95.20'	95.20'	95.20'	-	98.00'
JN13	PROP. JUNCTION BOX	STA. 62821+81.50, 24.34' LT	101.50'	95.63'	95.63'	95.63'	98.50'	-

NOTE:

1.) ALL UTILITIES SHALL BE THE RESPONSIBITILY OF THE CONTRACTOR TO VERIFY HORIZONTAL & VERTICAL INFORMATION IN THE FIELD.
2.) ALL ABANDONED PIPE TO BE CAPPED, SUBSIDIARY TO ITEM 496.
3.) CONTRACTOR TO COORDINATE WITH S.W.B. TELEPHONE FOR NEW/EXIST SERVICE LINE PRIOR TO CONSTRUCTION

LEGEND

- PROP. DITCH FLOWLINE
- STORM SEWER FLOW DIRECTION
- NBFR — NORTH BOUND FRONTAGE ROAD
- NBML — NORTH BOUND MAINLANES
- B — BURIED TELEPHONE CABLE
- OH — OVERHEAD POWER LINES
- 8" SS — EXIST. SANITARY SEWER LINE
- DRAINAGE STR. TO BE CAPPED
- PROPOSED LUMINAIRE
- 07 — STRUCTURE I.D.
- RCP TO REMAIN
- RCP TO BE ABANDONED
- H.P. — DITCH HIGH POINT
- L.P. — DITCH LOW POINT
- LAT1 — LATERAL I.D.
- EXIST. MANHOLE/INLET TO BE REMOVED (ITEM 496)
- PROP. TRUNK LINE

SHEET TOTALS

ITEM	EST.	FINAL	UNIT	DESCRIPTION
*400	152		CY	SEWER EXCAVATION
402	122		LF	TRENCH EXCAVATION PROTECTION
464	56		FT	RCP (CL III) 18 IN
464	66		FT	RCP (CL III) 24 IN
465	1		EA	MANHOLE (TY) "M"
465	1		EA	INLET (TY) "CC"
465	2		EA	INLET (TY) "F"
465	1		EA	JUNCTION BOX
465	3		EA	5' INLET EXTENSION
496	1		EA	REMOVE OLD STR. (SMALL)
479	2		EA	ADJUST MANHOLE (JUNCTION BOX)

* FOR CONTRACTORS INFORMATION ONLY

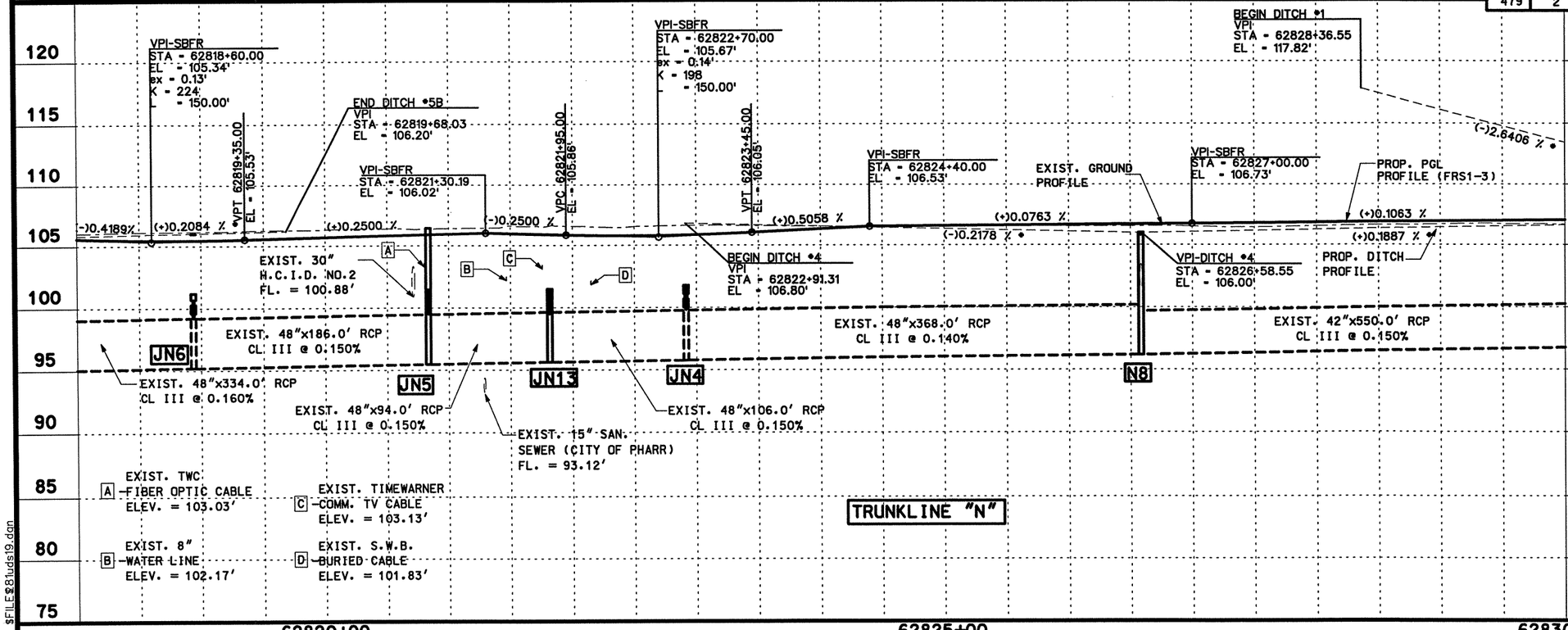

THE SEAL APPEARING ON THIS DOCUMENT WAS AUTHORIZED BY RAMIRO GUTIERREZ, P.E. 65948

DATE: 8-12-03

ALTERATION OF A SEALED DOCUMENT WITHOUT PROPER NOTIFICATION TO THE RESPONSIBLE ENGINEER IS AN OFFENSE UNDER THE TEXAS ENGINEERING PRATICE LAW.

Parsons Brinckerhoff Quade & Douglas Inc.

R. Gutierrez Engineering Corporation

Texas Department of Transportation

© 2003 by TxDOT

UTILITIES & DRAINAGE PLAN & PROFILE

SOUTHBOUND FRONTAGE ROAD

STA. 62818+00 "FRS1-3" TO
STA. 62830+00 "FRS1-3"

SHEET 21 OF 23

PLAN 1"= 100' HORIZ
PROFILE 1"= 10' VERT

DESIGNED:	FED. RD DIV. No.	STATE	FEDERAL AID PROJECT No.				HIGHWAY No.
CHECKED:	6	TEXAS					US 281
DRAWN:	STATE DISTRICT	COUNTY	CONTROL No.	SECTION No.	JOB No.	SHEET No.	
CHECKED:	21	HIDALGO	0255	08	091	581	

$NAME$
$TIME$
$DATE$
$FILE$281uds19.dgn

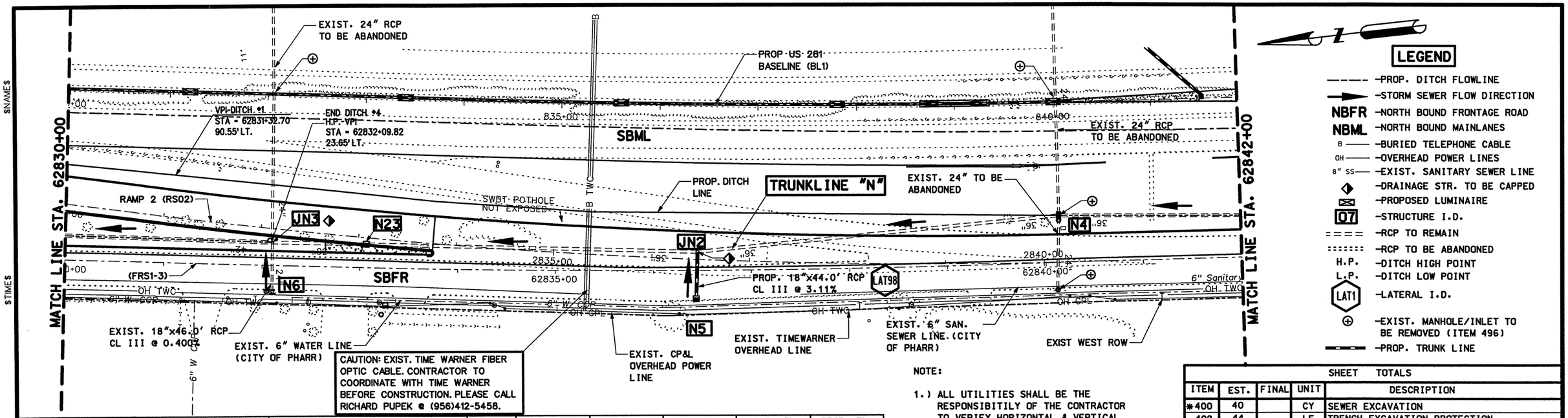

LEGEND

- PROP. DITCH FLOWLINE
- STORM SEWER FLOW DIRECTION
- NBFR — NORTH BOUND FRONTAGE ROAD
- NBML — NORTH BOUND MAINLANES
- B — BURIED TELEPHONE CABLE
- OH — OVERHEAD POWER LINES
- 8" SS — EXIST. SANITARY SEWER LINE
- DRAINAGE STR. TO BE CAPPED
- PROPOSED LUMINAIRE
- 07 — STRUCTURE I.D.
- RCP TO REMAIN
- RCP TO BE ABANDONED
- H.P. — DITCH HIGH POINT
- L.P. — DITCH LOW POINT
- LAT1 — LATERAL I.D.
- EXIST. MANHOLE/INLET TO BE REMOVED (ITEM 496)
- PROP. TRUNK LINE

STR. I.D.	DESCRIPTION	STA./OFFSET	TOP OF STR. ELEV.	PROP. FL. OF STR.	PROP. FL. OF PIPE (NORTH)	PROP. FL. OF PIPE (SOUTH)	PROP. FL. OF PIPE (EAST)	PROP. FL. OF PIPE (WEST)
N4	PROP. TY "CC" GRATE INLET	STA. 62840+14.40, 48.35' LT	107.00'	98.72'	98.72'	98.72'	–	–
N5	PROP. TY "F" INLET	STA. 62840+43.72, 30.73' RT	107.42'	100.99'	–	–	100.99'	–
JN2	EXIST. MANHOLE (TO BE CAPPED)	STA. 62836+45.33, 18.59' LT	102.90'	97.92'	97.92'	97.92'	–	99.50'
N6	EXIST. TY "A" INLET ADD 1-5.0' EXT.	STA. 62832+11.11, 27.13' RT	107.22'	102.20'	–	–	102.20'	–
JN3	EXIST. MANHOLE (TO BE CAPPED)	STA. 62832+10.03, 23.32' LT	104.50'	97.12'	97.12'	97.12'	–	102.0'
N23	PROP. TY "F" INLET	STA. 2833+08.24, 8.0' RT ●	108.46'	97.30'	97.30'	97.30'	–	–

NOTE:

1.) ALL UTILITIES SHALL BE THE RESPONSIBITILY OF THE CONTRACTOR TO VERIFY HORIZONTAL & VERTICAL INFORMATION IN THE FIELD.
2.) ALL ABANDONED PIPE TO BE CAPPED, SUBSIDIARY TO ITEM 496.
3.) CONTRACTOR TO COORDINATE WITH S.W.B. TELEPHONE FOR NEW/EXIST SERVICE LINE PRIOR TO CONSTRUCTION

● RAMP 2 STATIONING

SHEET TOTALS

ITEM	EST.	FINAL	UNIT	DESCRIPTION
*400	40		CY	SEWER EXCAVATION
402	44		LF	TRENCH EXCAVATION PROTECTION
464	44		FT	RCP (CL III) 18 IN
465	1		EA	INLET (TY) "CC"
465	2		EA	INLET (TY) "F"
465	1		EA	5' INLET EXTENSION
479	2		EA	ADJUST MANHOLE (JUNC. BOX)
496	4		EA	REMOVE OLD STR. (SMALL)

* FOR CONTRACTORS INFORMATION ONLY

STATE OF TEXAS — RAMIRO GUTIERREZ — 65948 — REGISTERED PROFESSIONAL ENGINEER

THE SEAL APPEARING ON THIS DOCUMENT WAS AUTHORIZED BY RAMIRO GUTIERREZ, P.E. 65948

DATE: 8-12-03

ALTERATION OF A SEALED DOCUMENT WITHOUT PROPER NOTIFICATION TO THE RESPONSIBLE ENGINEER IS AN OFFENSE UNDER THE TEXAS ENGINEERING PRATICE LAW.

Parsons Brinckerhoff Quade & Douglas Inc.

R. Gutierrez Engineering Corporation

Texas Department of Transportation

© 2003 by TxDOT

UTILITIES & DRAINAGE PLAN & PROFILE

SOUTHBOUND FRONTAGE ROAD

STA. 62830+00 "FRS1-3" TO STA. 62842+00 "FRS1-3"

SHEET 22 OF 23

PLAN 1"= 100' HORIZ
PROFILE 1"= 10' VERT

DESIGNED:	FED. RD DIV. No.	STATE	FEDERAL AID PROJECT No.			HIGHWAY No.	
CHECKED:	6	TEXAS				US 281	
DRAWN:	STATE DISTRICT	COUNTY	CONTROL No.	SECTION No.	JOB No.	SHEET No.	
CHECKED:	21	HIDALGO	0255	08	091	582	

$NAME$ $TIME$ $DATE$ $FILE$ 281uds20.dgn

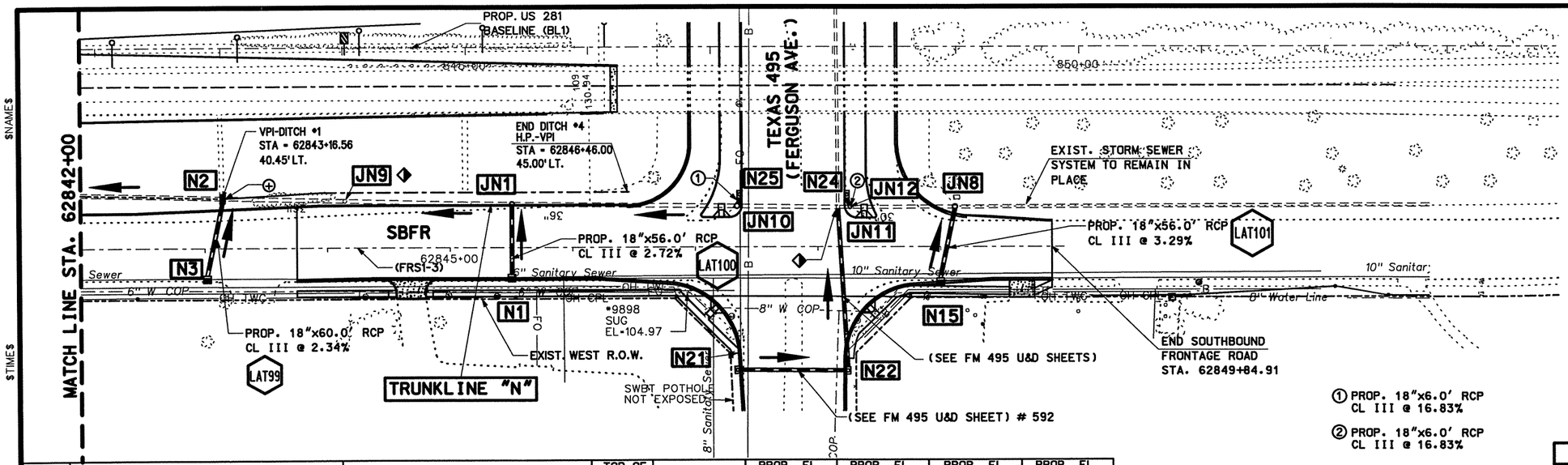

LEGEND

- ----- –PROP. DITCH FLOWLINE
- ——► –STORM SEWER FLOW DIRECTION
- NBFR –NORTH BOUND FRONTAGE ROAD
- NBML –NORTH BOUND MAINLANES
- B —— –BURIED TELEPHONE CABLE
- OH —— –OVERHEAD POWER LINES
- 8" SS —— –EXIST. SANITARY SEWER LINE
- ◆ –DRAINAGE STR. TO BE CAPPED
- ⊠ –PROPOSED LUMINAIRE
- 07 –STRUCTURE I.D.
- ==== –RCP TO REMAIN
- ::::::: –RCP TO BE ABANDONED
- H.P. –DITCH HIGH POINT
- L.P. –DITCH LOW POINT
- LAT1 –LATERAL I.D.
- ⊕ –EXIST. MANHOLE/INLET TO BE REMOVED (ITEM 496)
- ——— –PROP. TRUNK LINE

STR. I.D.	DESCRIPTION	STA./OFFSET	TOP OF STR. ELEV.	PROP. FL. OF STR.	PROP. FL. OF PIPE (NORTH)	PROP. FL. OF PIPE (SOUTH)	PROP. FL. OF PIPE (EAST)	PROP. FL. OF PIPE (WEST)
JN11	EXIST. MANHOLE	STA. 62848+12.74, 32.42' LT.	107.60'	99.20'	99.20'	99.20'	102.00'	99.20'
N1	PROP. TY "F" INLET W/1-5.0' EXT.	STA. 62845+50.00, 26.00' RT.	106.25'	102.13'	–	–	102.13'	–
N2	PROP. TY "CC" GRATE INLET	STA. 62843+14.10, 40.34' LT.	107.49'	98.90'	98.90'	98.90'	–	100.50'
N3	PROP. TY "F" INLET	STA. 62843+01.73, 26.00' RT.	107.36'	102.00'	–	–	102.00'	–
N15	PROP. TY "F" INLET	STA. 62848+99.93, 29.00' RT.	107.54'	101.97'	–	–	101.97'	–
JN1	PROP. JUNCTION BOX	STA. 62845+50.10, 35.40' LT.	104.50'	99.04'	99.04'	99.04'	–	100.50'
JN8	PROP. JUNCTION BOX	STA. 62849+00.00, 32.53' LT.	103.90'	99.38'	99.38'	99.38'	–	100.00'
JN9	EXIST. MANHOLE (TO BE CAPPED)	STA. 62844+12.75, 38.22' LT.	102.45'	98.95'	98.95'	98.95'	–	–
JN10	PROP. TY "A" MANHOLE	STA. 62847+33.63, 33.31' LT.	107.78'	99.15'	99.15'	99.15'	100.50'	–
N24	PROP. TY "A" INLET	STA. 62848+22.31, 42.61' LT.	108.00'	102.16'	102.16'	–	–	–
N25	PROP. TY "A" INLET	STA. 62847+37.31, 42.61' LT.	108.00'	102.16'	–	–	–	102.16'
JN12	PROP. JUNCTION BOX	STA. 62848+27.30, 33.31' LT.	104.15'	99.22'	99.22'	99.22'	100.50'	–

NOTE:

1.) ALL UTILITIES SHALL BE THE RESPONSIBITILY OF THE CONTRACTOR TO VERIFY HORIZONTAL & VERTICAL INFORMATION IN THE FIELD.
2.) ALL ABANDONED PIPE TO BE CAPPED, SUBSIDIARY TO ITEM 496.
3.) CONTRACTOR TO COORDINATE WITH S.W.B. TELEPHONE FOR NEW/EXIST SERVICE LINE PRIOR TO CONSTRUCTION

SHEET TOTALS

ITEM	EST.	FINAL	UNIT	DESCRIPTION
*400	260		CY	SEWER EXCAVATION
402	184		LF	TRENCH EXCAVATION PROTECTION
464	184		FT	RCP (CL III) 18 IN
465	1		EA	MANHOLE (TY) "A"
465	3		EA	INLET (TY) "F"
465	1		EA	INLET (TY) "CC"
465	3		EA	JUNCTION BOX
465	1		EA	5' INLET EXTENSION
465	2		EA	INLET (TY) "A"
479	1		EA	ADJUST MANHOLE (JUNC. BOX)
496	1		EA	REMOVE OLD STR. (SMALL)

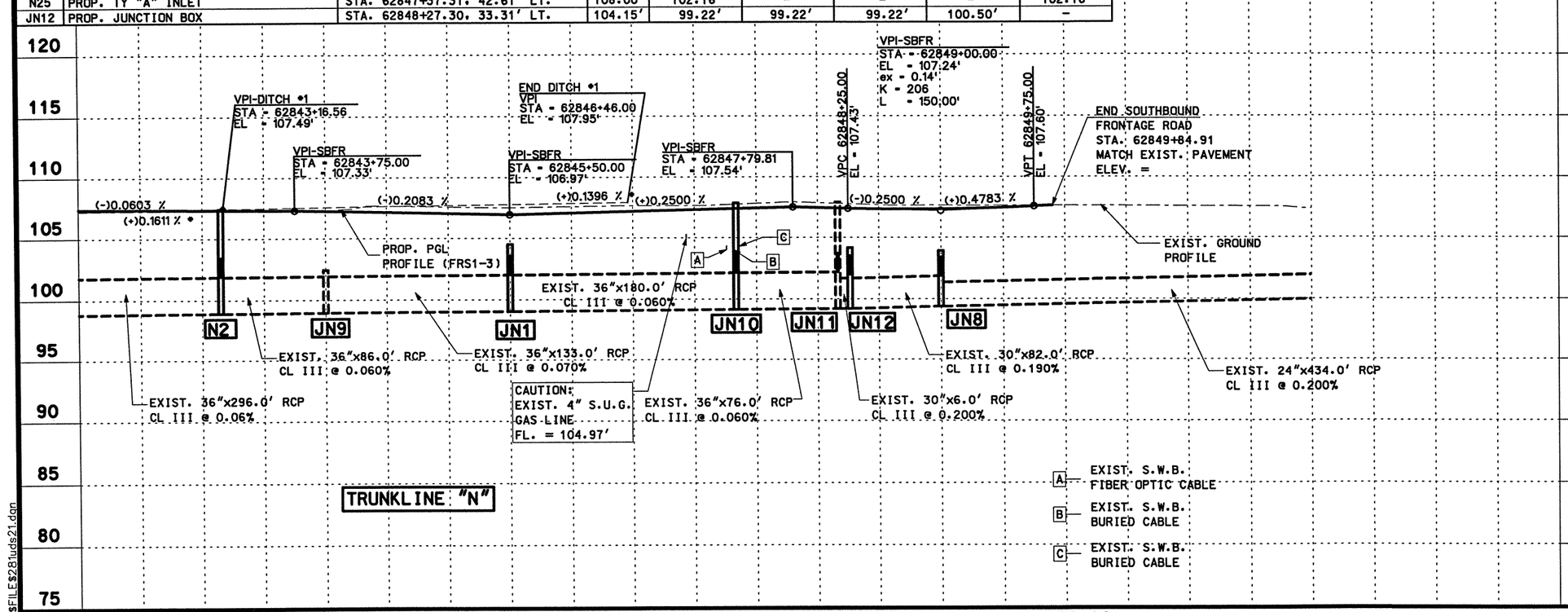

A— EXIST. S.W.B. FIBER OPTIC CABLE
B— EXIST. S.W.B. BURIED CABLE
C— EXIST. S.W.B. BURIED CABLE

* FOR CONTRACTORS INFORMATION ONLY

STATE OF TEXAS
RAMIRO GUTIERREZ
65948
REGISTERED
PROFESSIONAL ENGINEER

THE SEAL APPEARING ON THIS DOCUMENT WAS AUTHORIZED BY RAMIRO GUTIERREZ, P.E. 65948

DATE: 8-12-03

ALTERATION OF A SEALED DOCUMENT WITHOUT PROPER NOTIFICATION TO THE RESPONSIBLE ENGINEER IS AN OFFENSE UNDER THE TEXAS ENGINEERING PRATICE LAW.

Parsons Brinckerhoff Quade & Douglas Inc.

R. Gutierrez Engineering Corporation

Texas Department of Transportation

© 2003 by TxDOT

UTILITIES & DRAINAGE PLAN & PROFILE
SOUTHBOUND FRONTAGE ROAD

STA. 62842+00 "FRS1-3" TO
STA. 62854+00 "FRS1-3"

SHEET 23 OF 23

PLAN 1"= 100' HORIZ
PROFILE 1"= 10' VERT

DESIGNED:	FED. RD DIV. No.	STATE	FEDERAL AID PROJECT No.			HIGHWAY No.	
CHECKED:	6	TEXAS				US 281	
DRAWN:	STATE DISTRICT	COUNTY	CONTROL No.	SECTION No.	JOB No.	SHEET No.	
CHECKED:	21	HIDALGO	0255	08	091	583	

$NAME$
$TIME$
$DATE$
$FILE$281uds21.dgn

STR. I.D.	DESCRIPTION	STA./OFFSET	TOP OF STR. ELEV.	PROP. FL. OF STR.	PROP. FL. OF PIPE (NORTH)	PROP. FL. OF PIPE (SOUTH)	PROP. FL. OF PIPE (EAST)	PROP. FL. OF PIPE (WEST)
G35	PROP. TY "A" INLET W/1-5' EXT.	STA. 13+00.00, 40.00' LT.	100.17'	93.00'	-	93.00'	-	-
G36	PROP. TY "A" INLET	STA. 16+92.00, 48.00' LT.	97.00'	92.47'	-	92.47'	-	-
G37	PROP. TY "A" INLET	STA. 13+00.00, 41.00' RT.	100.15'	92.87'	92.87'	-	92.87'	-
G38	PROP. TY "A" INLET W/1-5' EXT.	STA. 16+71.00, 53.70' RT.	96.86'	92.31'	92.31'	-	91.31'	92.31'
JG5	PROP. TY "A" MANHOLE ⊗	STA. 61656+55.63,24.62'LT.	99.40'	90.37'	90.87'	90.37'	-	90.95'

⊗ SOUTHBOUND STATION

$NAME$
$TIME$
$DATE$

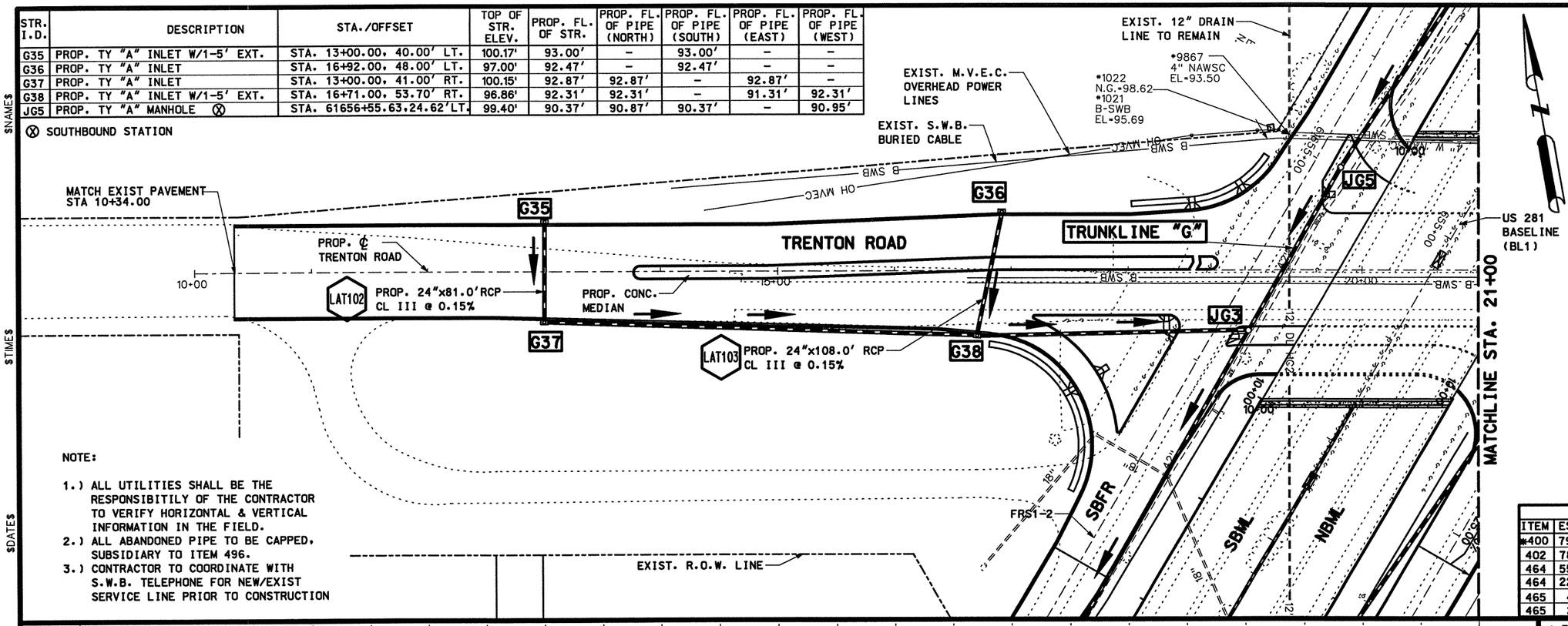

NOTE:

1.) ALL UTILITIES SHALL BE THE RESPONSIBITILY OF THE CONTRACTOR TO VERIFY HORIZONTAL & VERTICAL INFORMATION IN THE FIELD.
2.) ALL ABANDONED PIPE TO BE CAPPED, SUBSIDIARY TO ITEM 496.
3.) CONTRACTOR TO COORDINATE WITH S.W.B. TELEPHONE FOR NEW/EXIST SERVICE LINE PRIOR TO CONSTRUCTION

LEGEND

- -PROP. DITCH FLOWLINE
- -STORM SEWER FLOW DIRECTION
- NBFR -NORTH BOUND FRONTAGE ROAD
- NBML -NORTH BOUND MAINLANES
- B —— -BURIED TELEPHONE CABLE
- OH —— -OVERHEAD POWER LINES
- 8" SS —— -EXIST. SANITARY SEWER LINE
- -DRAINAGE STR. TO BE CAPPED
- -PROPOSED LUMINAIRE
- Q7 -STRUCTURE I.D.
- ==== -RCP TO REMAIN
- ::::::: -RCP TO BE ABANDONED
- H.P. -DITCH HIGH POINT
- L.P. -DITCH LOW POINT
- LAT1 -LATERAL I.D.
- ⊕ -EXIST. MANHOLE/INLET TO BE REMOVED (ITEM 496)
- -PROP. TRUNK LINE

SHEET TOTALS

ITEM	EST.	FINAL	UNIT	DESCRIPTION
*400	799		CY	SEWER EXCAVATION
402	788		LF	TRENCH EXCAVATION PROTECTION
464	556		LF	RCP CL III (24 IN)
464	228		LF	RCP CL III (36 IN)
465	4		EA	INLET (TY "A")
465	2		EA	5.0' EXTENTIONS

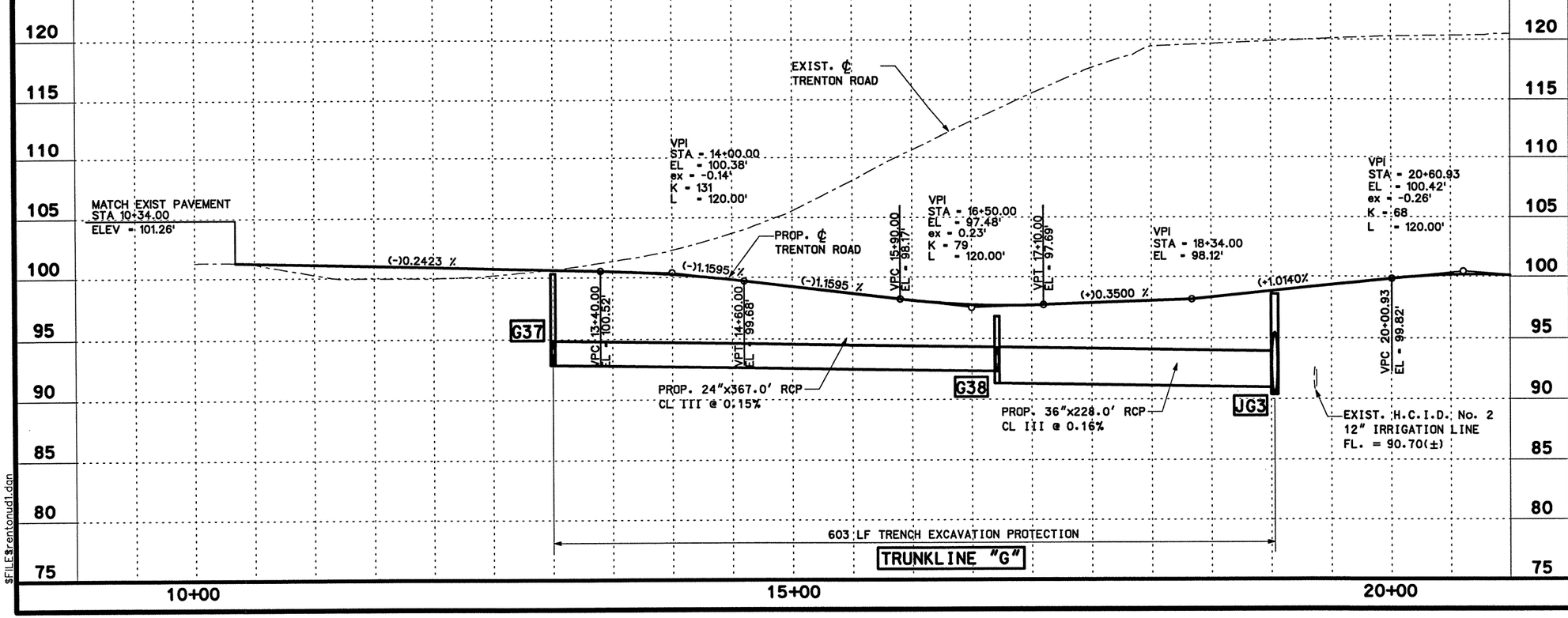

$FILE$\trentonud1.dgn

* FOR CONTRACTORS INFORMATION ONLY

STATE OF TEXAS
RAMIRO GUTIERREZ
65948
REGISTERED PROFESSIONAL ENGINEER

THE SEAL APPEARING ON THIS DOCUMENT WAS AUTHORIZED BY RAMIRO GUTIERREZ, P.E. 65948

DATE: 8-12-03

ALTERATION OF A SEALED DOCUMENT WITHOUT PROPER NOTIFICATION TO THE RESPONSIBLE ENGINEER IS AN OFFENSE UNDER THE TEXAS ENGINEERING PRATICE LAW.

Parsons Brinckerhoff Quade & Douglas Inc.

R. Gutierrez Engineering Corporation

Texas Department of Transportation

©2003 by TxDOT

UTILITIES & DRAINAGE PLAN & PROFILE TRENTON ROAD

SHEET 1 OF 2

PLAN 1"= 100' HORIZ
PROFILE 1"= 10' VERT

DESIGNED:	FED. RD DIV. No.	STATE	FEDERAL AID PROJECT No.			HIGHWAY No.	
CHECKED:	6	TEXAS				US 281	
DRAWN:	STATE DISTRICT	COUNTY	CONTROL No.	SECTION No.	JOB No.	SHEET No.	
CHECKED:	21	HIDALGO	0255	08	091	584	

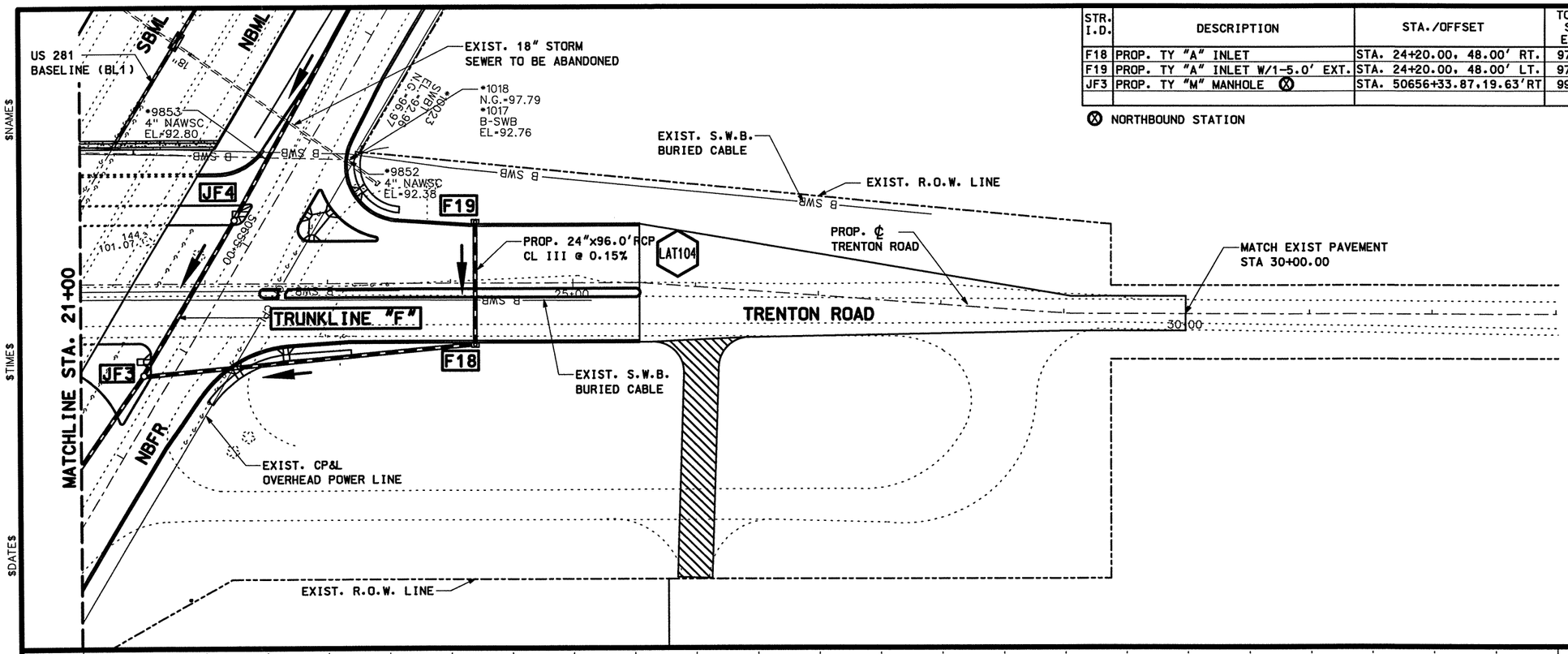

STR. I.D.	DESCRIPTION	STA./OFFSET	TOP OF STR. ELEV.	PROP. FL. OF STR.	PROP. FL. OF PIPE (NORTH)	PROP. FL. OF PIPE (SOUTH)	PROP. FL. OF PIPE (EAST)	PROP. FL. OF PIPE (WEST)
F18	PROP. TY "A" INLET	STA. 24+20.00, 48.00' RT.	97.69'	93.36'	93.86'	–	–	93.36'
F19	PROP. TY "A" INLET W/1-5.0' EXT.	STA. 24+20.00, 48.00' LT.	97.39'	93.51'	–	93.51'	–	–
JF3	PROP. TY "M" MANHOLE ⊗	STA. 50656+33.87, 19.63'RT	99.87'	91.49'	91.49'	91.49'	92.70'	–

⊗ NORTHBOUND STATION

NOTE:

1.) ALL UTILITIES SHALL BE THE RESPONSIBITILY OF THE CONTRACTOR TO VERIFY HORIZONTAL & VERTICAL INFORMATION IN THE FIELD.
2.) ALL ABANDONED PIPE TO BE CAPPED, SUBSIDIARY TO ITEM 496.
3.) CONTRACTOR TO COORDINATE WITH S.W.B. TELEPHONE FOR NEW/EXIST SERVICE LINE PRIOR TO CONSTRUCTION

SHEET TOTALS

ITEM	EST.	FINAL	UNIT	DESCRIPTION
*400	570		CY	SEWER EXCAVATION
402	266		LF	TRENCH EXCAVATION PROTECTION
464	96		LF	RCP CL III (24 IN)
464	266		LF	RCP CL III (30 IN)
465	2		EA	INLET (TY "A")
465	1		EA	5.0' EXTENTIONS

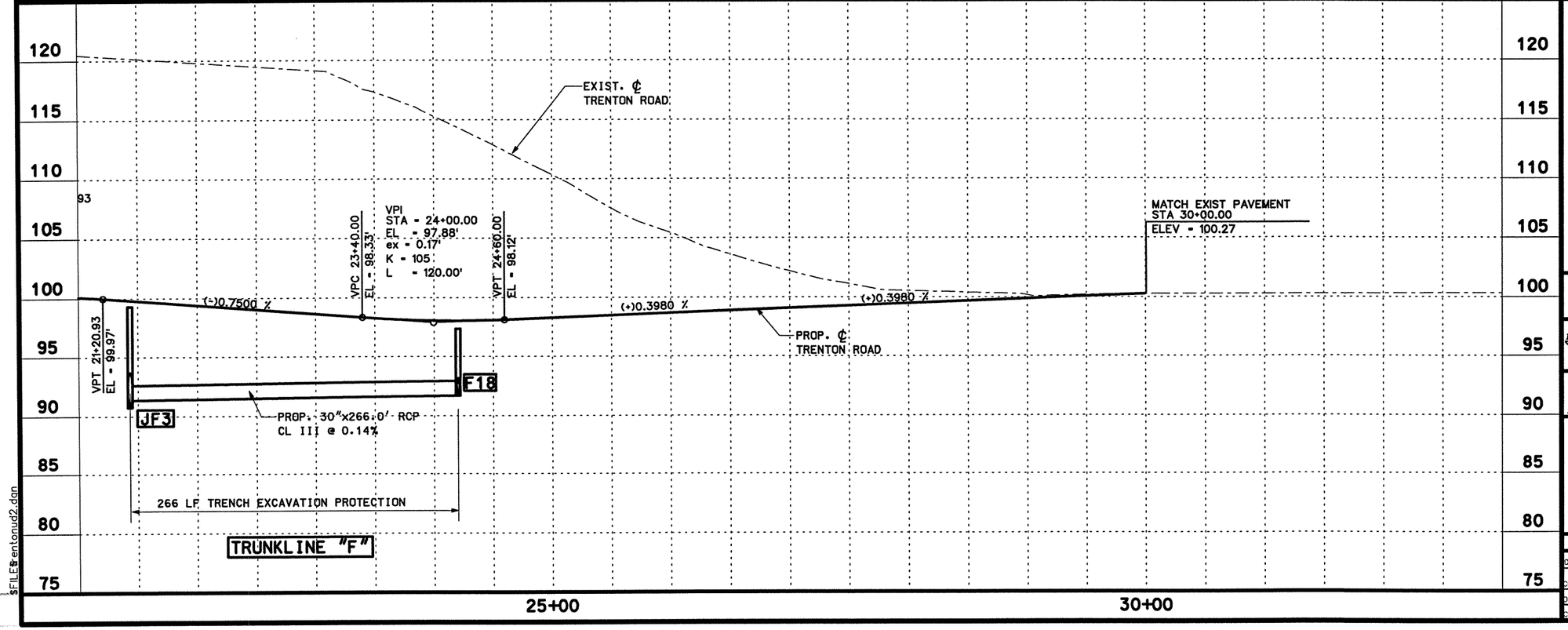

* FOR CONTRACTORS INFORMATION ONLY

STATE OF TEXAS
RAMIRO GUTIERREZ
65948
REGISTERED PROFESSIONAL ENGINEER

THE SEAL APPEARING ON THIS DOCUMENT WAS AUTHORIZED BY RAMIRO GUTIERREZ, P.E. 65948

DATE: 8-12-03

ALTERATION OF A SEALED DOCUMENT WITHOUT PROPER NOTIFICATION TO THE RESPONSIBLE ENGINEER IS AN OFFENSE UNDER THE TEXAS ENGINEERING PRATICE LAW.

Parsons Brinckerhoff Quade & Douglas Inc.

R. Gutierrez Engineering Corporation

Texas Department of Transportation

© 2003 by TxDOT

UTILITIES & DRAINAGE PLAN & PROFILE TRENTON ROAD

SHEET 2 OF 2

PLAN 1"= 100' HORIZ
PROFILE 1"= 10' VERT

DESIGNED:	FED. RD DIV. No.	STATE	FEDERAL AID PROJECT No.			HIGHWAY No.	
CHECKED:	6	TEXAS				US 281	
DRAWN:	STATE DISTRICT	COUNTY	CONTROL No.	SECTION No.	JOB No.	SHEET No.	
CHECKED:	21	HIDALGO	0255	08	091	585	

$NAME$
$TIME$
$DATE$
$FILE$ entonud2.dgn

$NAME$
$TIME$
$DATE$
$FILE$

NOTE:

1.) ALL UTILITIES SHALL BE THE RESPONSIBITILY OF THE CONTRACTOR TO VERIFY HORIZONTAL & VERTICAL INFORMATION IN THE FIELD.
2.) ALL ABANDONED PIPE TO BE CAPPED, SUBSIDIARY TO ITEM 496.
3.) CONTRACTOR TO COORDINATE WITH S.W.B. TELEPHONE FOR NEW/EXIST SERVICE LINE PRIOR TO CONSTRUCTION

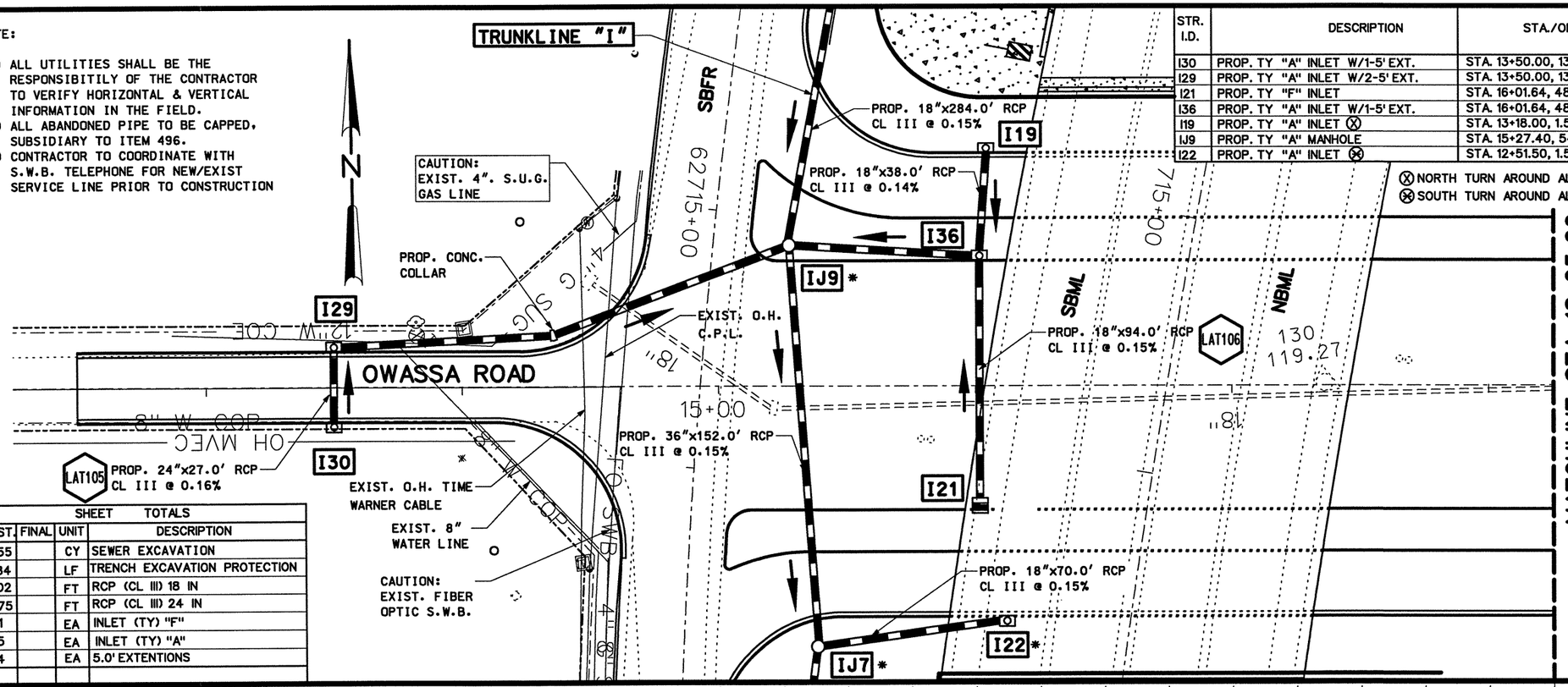

STR. I.D.	DESCRIPTION	STA./OFFSET	TOP OF STR. ELEV.	PROP. FL. OF STR.	PROP. FL. OF PIPE (NORTH)	PROP. FL. OF PIPE (SOUTH)	PROP. FL. OF PIPE (EAST)	PROP. FL. OF PIPE (WEST)
I30	PROP. TY "A" INLET W/1-5' EXT.	STA. 13+50.00, 13.50' RT	107.07'	99.45'	99.45'	-	-	-
I29	PROP. TY "A" INLET W/2-5' EXT.	STA. 13+50.00, 13.50' LT	107.07'	99.40'	-	99.40'	99.40'	-
I21	PROP. TY "F" INLET	STA. 16+01.64, 48.00' RT	105.02'	100.16'	100.16'	-	-	-
I36	PROP. TY "A" INLET W/1-5' EXT.	STA. 16+01.64, 48.00' LT	105.02'	99.51'	100.01'	-	-	99.51'
I19	PROP. TY "A" INLET ⊗	STA. 13+18.00, 1.50' LT.	104.78'	100.07'	-	100.07'	-	-
IJ9	PROP. TY "A" MANHOLE	STA. 15+27.40, 54.00' LT.	105.31'	98.40'	98.75'	98.40'	99.40'	98.75'
I22	PROP. TY "A" INLET ⊗	STA. 12+51.50, 1.50' RT.	104.62'	99.78'	-	-	-	99.78'

⊗ NORTH TURN AROUND ALIGNMENT
⊗ SOUTH TURN AROUND ALIGNMENT

LEGEND

- ----- –PROP. DITCH FLOWLINE
- ➔ –STORM SEWER FLOW DIRECTION
- NBFR –NORTH BOUND FRONTAGE ROAD
- NBML –NORTH BOUND MAINLANES
- B —— –BURIED TELEPHONE CABLE
- OH —— –OVERHEAD POWER LINES
- 8" SS —— –EXIST. SANITARY SEWER LINE
- ◆ –DRAINAGE STR. TO BE CAPPED
- ⊠ –PROPOSED LUMINAIRE
- Q7 –STRUCTURE I.D.
- ==== –RCP TO REMAIN
- ::::::: –RCP TO BE ABANDONED
- H.P. –DITCH HIGH POINT
- L.P. –DITCH LOW POINT
- LAT1 –LATERAL I.D.
- ⊕ –EXIST. MANHOLE/INLET TO BE REMOVED (ITEM 496)
- –PROP. TRUNK LINE

SHEET TOTALS				
ITEM	EST.	FINAL	UNIT	DESCRIPTION
*400	355		CY	SEWER EXCAVATION
402	384		LF	TRENCH EXCAVATION PROTECTION
464	202		FT	RCP (CL III) 18 IN
464	275		FT	RCP (CL III) 24 IN
465	1		EA	INLET (TY) "F"
465	5		EA	INLET (TY) "A"
465	4		EA	5.0' EXTENTIONS

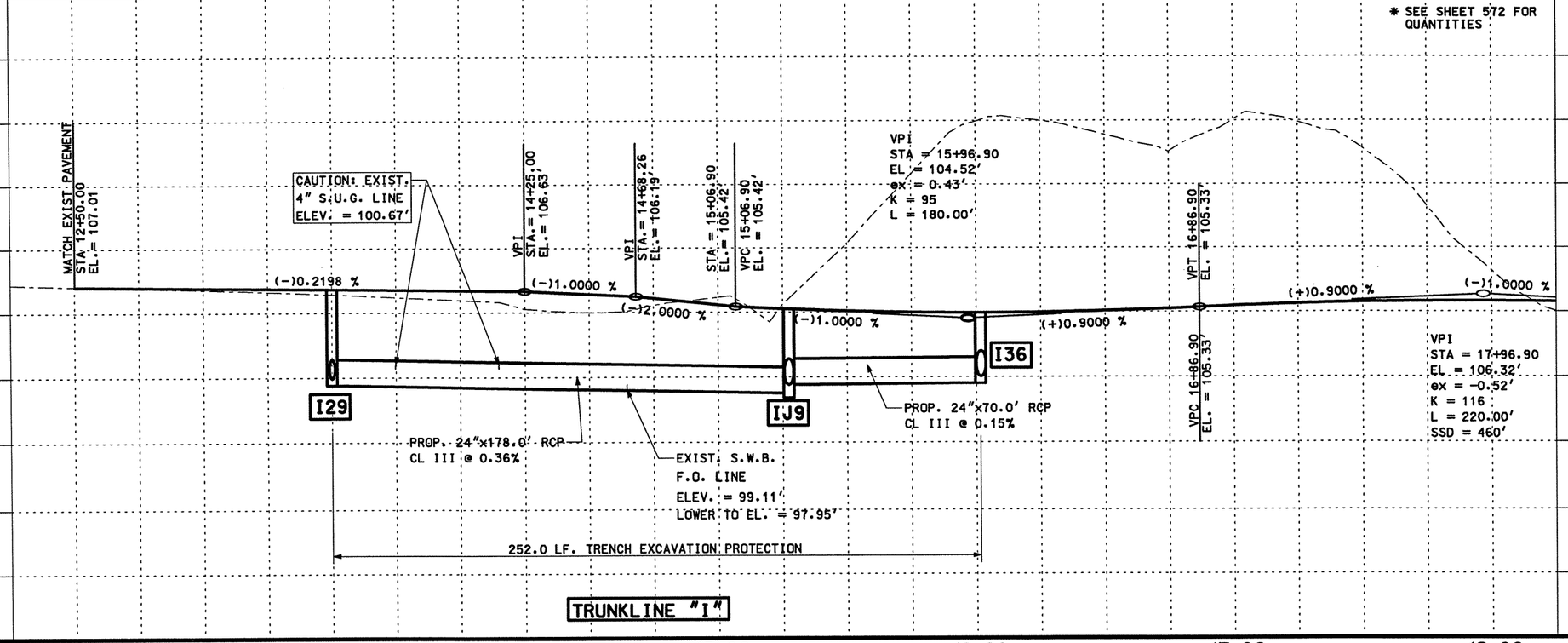

STATE OF TEXAS
RAMIRO GUTIERREZ
65948
REGISTERED PROFESSIONAL ENGINEER

THE SEAL APPEARING ON THIS DOCUMENT WAS AUTHORIZED BY RAMIRO GUTIERREZ, P.E. 65948

DATE: 8-12-03

ALTERATION OF A SEALED DOCUMENT WITHOUT PROPER NOTIFICATION TO THE RESPONSIBLE ENGINEER IS AN OFFENSE UNDER THE TEXAS ENGINEERING PRATICE LAW.

Parsons Brinckerhoff Quade & Douglas Inc.

Texas Department of Transportation

© 2003 by TxDOT

UTILITIES & DRAINAGE PLAN & PROFILE OWASSA ROAD

SHEET 1 OF 2

PLAN 1"= 50' HORIZ
PROFILE 1"= 10' VERT

DESIGNED:	FED. RD DIV. No.	STATE	FEDERAL AID PROJECT No.		HIGHWAY No.	
CHECKED:	6	TEXAS			US 281	
DRAWN:	STATE DISTRICT	COUNTY	CONTROL No.	SECTION No.	JOB No.	SHEET No.
CHECKED:	21	HIDALGO	0255	08	091	586

$NAME$

$TIME$

$DATE$

$FILES$

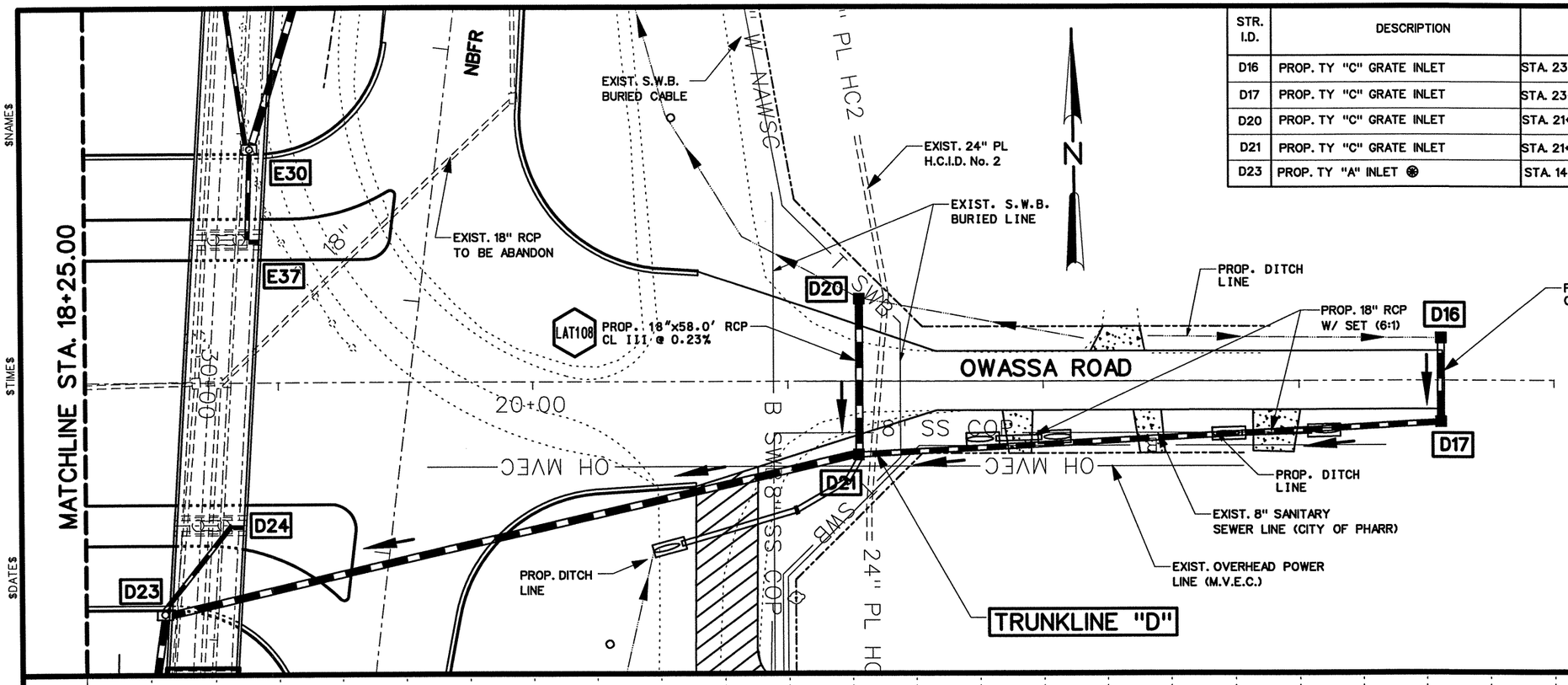

STR. I.D.	DESCRIPTION	STA./OFFSET	TOP OF STR. ELEV.	PROP. FL. OF STR.	PROP. FL. OF PIPE (NORTH)	PROP. FL. OF PIPE (SOUTH)	PROP. FL. OF PIPE (EAST)	PROP. FL. OF PIPE (WEST)
D16	PROP. TY "C" GRATE INLET	STA. 23+56.00, 16.5' LT	102.95'	97.86'		97.86'		
D17	PROP. TY "C" GRATE INLET	STA. 23+56.00, 16.5 RT	102.95'	97.31'	97.81'			97.31'
D20	PROP. TY "C" GRATE INLET	STA. 21+28.23, 32.2' LT	102.23'	97.52'		97.52'		
D21	PROP. TY "C" GRATE INLET	STA. 21+27.83, 29.11' RT	102.23'	96.38'	97.38'		96.88'	96.38'
D23	PROP. TY "A" INLET ⊛	STA. 14+95.12, 1.50 RT	105.47'	96.05'	98.05'	96.05'	96.05	

⊛ SOUTH TURNAROUND ALIGNMENT

NOTE:

1.) ALL UTILITIES SHALL BE THE RESPONSIBITILY OF THE CONTRACTOR TO VERIFY HORIZONTAL & VERTICAL INFORMATION IN THE FIELD.
2.) ALL ABANDONED PIPE TO BE CAPPED, SUBSIDIARY TO ITEM 496.
3.) CONTRACTOR TO COORDINATE WITH S.W.B. TELEPHONE FOR NEW/EXIST SERVICE LINE PRIOR TO CONSTRUCTION

SHEET TOTALS

ITEM	EST.	FINAL	UNIT	DESCRIPTION
*400	772		CY	SEWER EXCAVATION
402	592		LF	TRENCH EXCAVATION PROTECTION
464	88		FT	RCP (CL III) 18 IN
464	224		FT	RCP (CL III) 24 IN
464	276		FT	RCP (CL III) 30 IN
465	4		EA	INLET (TY) "C"

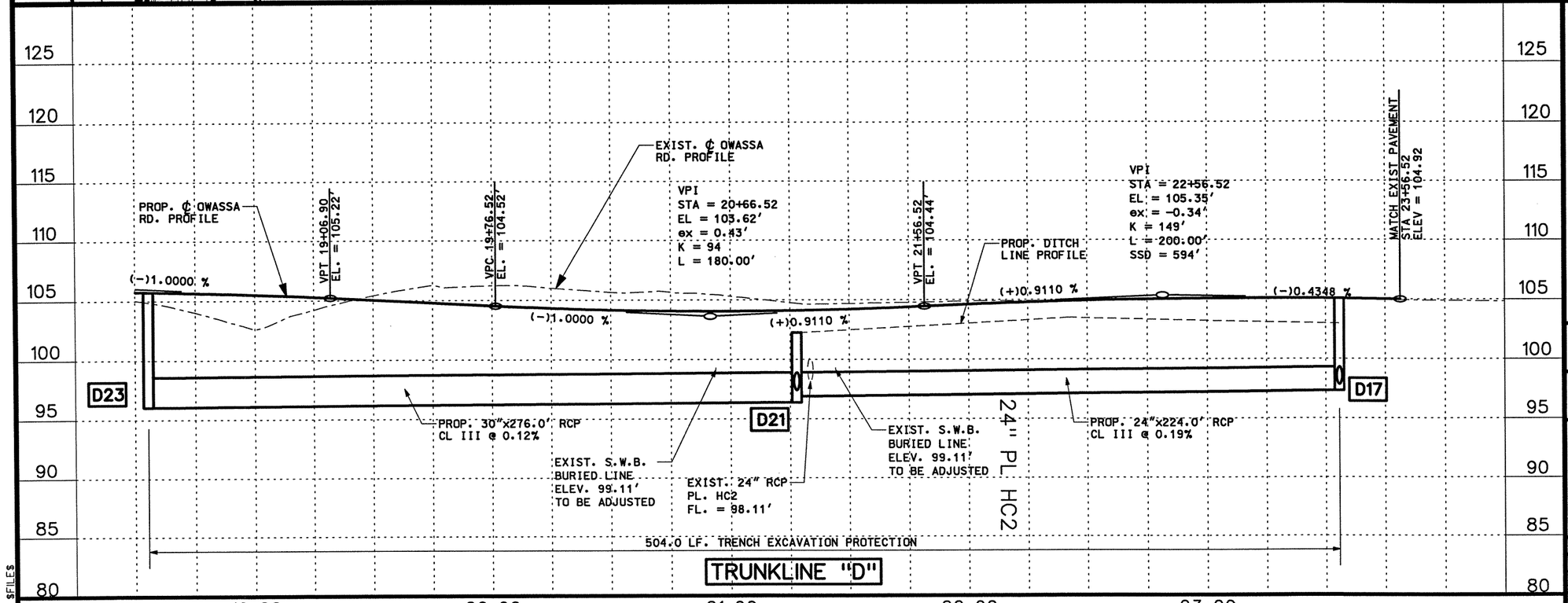

THE SEAL APPEARING ON THIS DOCUMENT WAS AUTHORIZED BY RAMIRO GUTIERREZ, P.E. 65948

DATE: 8-12-03

ALTERATION OF A SEALED DOCUMENT WITHOUT PROPER NOTIFICATION TO THE RESPONSIBLE ENGINEER IS AN OFFENSE UNDER THE TEXAS ENGINEERING PRATICE LAW.

Parsons Brinckerhoff Quade & Douglas Inc.

Texas Department of Transportation

© 2003 by TxDOT

UTILITIES & DRAINAGE PLAN & PROFILE OWASSA ROAD

SHEET 2 OF 2

PLAN 1"= 50' HORIZ
PROFILE 1"= 10' VERT

DESIGNED:	FED. RD DIV. No.	STATE	FEDERAL AID PROJECT No.			HIGHWAY No.	
	6	TEXAS				US 281	
CHECKED:							
DRAWN:	STATE DISTRICT	COUNTY	CONTROL No.	SECTION No.	JOB No.	SHEET No.	
CHECKED:	21	HIDALGO	0255	08	091	587	

8-10

PROP. 30" IRRIGATION LINE (SEE SHEET 8 OF 10 "IRRIGATION LINE MODIFICATIONS")

EXIST. FIBER OPTIC LINE

PROP. 30.0' IRRIGATION EASEMENT

PROP. R.O.W. LINE

EXIST. 30" IRRIGATION TO BE REMOVED

EXIST. R.O.W. LINE

SIOUX ROAD

PROP. CONC. MEDIAN

PROP. ℄ SIOUX ROAD

LAT109

PROP. 18"x80.0' RCP CL III @ 0.15%

8" W COP

15+00

#1065 SSMH TR=107.03 FL=93.12'

EXIST 6" COP WATER LINE

EXIST. R.O.W. LINE

PROP. R.O.W. LINE

N20

N19

EXIST. OH TIMEWARNER CABLE

#9895 TW CATV EL=103.13

#9894 B SWB EL=103.96

B SWB

#9896 HCID #2 EL=105.23

#9897 HCID #2 EL=105.09

SBFR

NORTHBOUND TURNAROUND

30" PE HC2

FO TWC

N27

JN5

US 281 BASELINE (BL1)

EXIST. TIMEWARNER FIBER OPTIC CABLE

EXIST. 15" SAN. SEWER LINE

15" SS COP

TRUNKLINE "N"

EXIST. S.W.B. BURIED CABLE

PROP. 18"x16.0' RCP CL III @ 0.13%

N26

JN13

EXIST. TIMEWARNER COMM. TV CABLE

MATCHLINE 18+75

SOUTHBOUND TURNAROUND

EXIST. S.W.B. BURIED CABLE

EXIST. 48" RCP TO REMAIN

48" RCP

STR. I.D.	DESCRIPTION	STA./OFFSET	TOP OF STR. ELEV.	PROP. FL. OF STR.	PROP. FL. OF PIPE (NORTH)	PROP. FL. OF PIPE (SOUTH)	PROP. FL. OF PIPE (EAST)	PROP. FL. OF PIPE (WEST)
N19	PROP. TY "A" INLET	STA. 14+43.23, 40.00' LT.	105.05'	99.78'	-	99.78'	99.78'	-
N20	PROP. TY "A" INLET W/1-5.0'EXT.	STA. 14+43.23, 40.00' RT.	105.05'	99.91'	99.91'	-	-	-
N26	PROP. TY "A" INLET	STA. 16+54.25, 40.00' RT	106.48'	99.50'	-	99.50'	-	-
N27	PROP. TY "A" INLET	STA. 16+54.25, 40.00' LT	106.48'	99.50'	-	-	-	99.50'
JN5	PROP. TY "M" MANHOLE	STA. 16+41.77, 46.75' LT.	106.59'	95.48'	95.48'	95.48'	98.50'	98.50'

LEGEND

- PROP. DITCH FLOWLINE
- STORM SEWER FLOW DIRECTION
- NBFR — NORTH BOUND FRONTAGE ROAD
- NBML — NORTH BOUND MAINLANES
- B — BURIED TELEPHONE CABLE
- OH — OVERHEAD POWER LINES
- 8" SS — EXIST. SANITARY SEWER LINE
- DRAINAGE STR. TO BE CAPPED
- PROPOSED LUMINAIRE
- 07 — STRUCTURE I.D.
- RCP TO REMAIN
- RCP TO BE ABANDONED
- H.P. — DITCH HIGH POINT
- L.P. — DITCH LOW POINT
- LAT1 — LATERAL I.D.
- EXIST. MANHOLE/INLET TO BE REMOVED (ITEM 496)
- PROP. TRUNK LINE

SHEET TOTALS

ITEM	EST.	FINAL	UNIT	DESCRIPTION
*400	458		CY	SEWER EXCAVATION
402	303		LF	TRENCH EXCAVATION PROTECTION
464	105		LF	RCP CL III (18 IN)
464	194		LF	RCP CL III (24 IN)
465	4		EA	INLET (TY "A")
465	1		EA	5.0' EXTENTIONS

* FOR CONTRACTORS INFORMATION ONLY

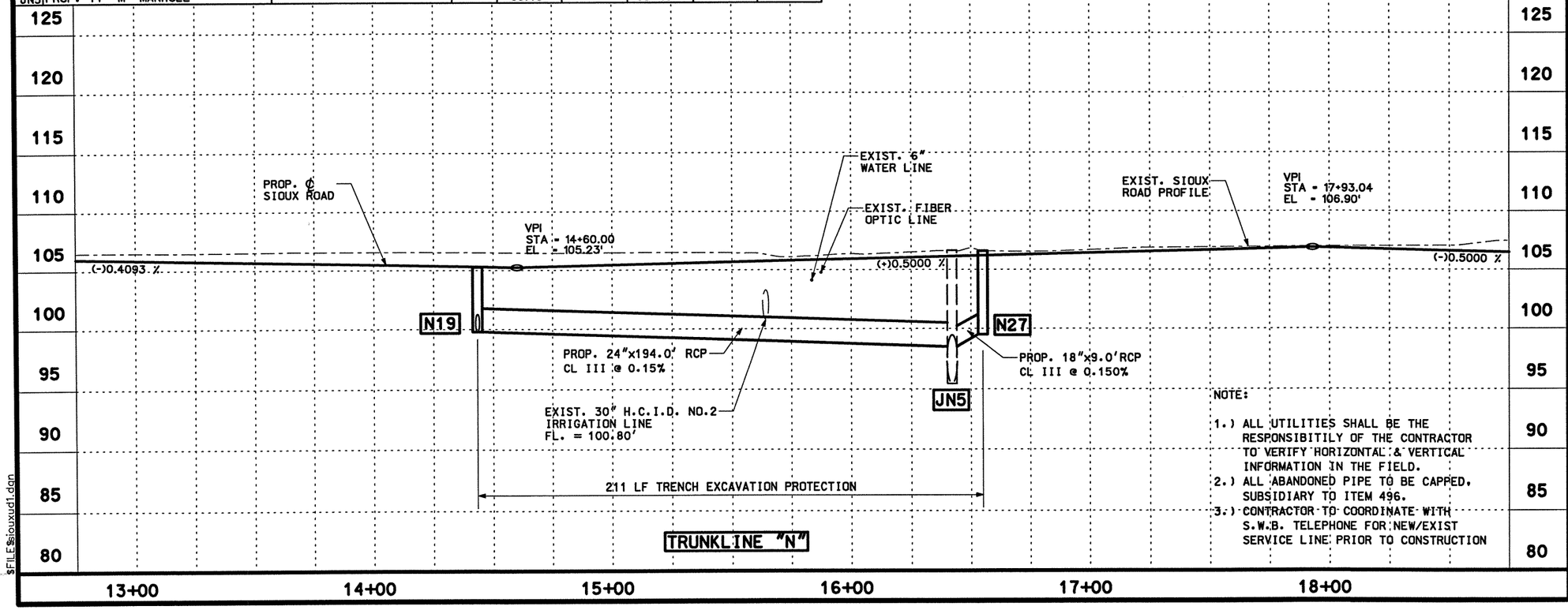

NOTE:

1.) ALL UTILITIES SHALL BE THE RESPONSIBITILY OF THE CONTRACTOR TO VERIFY HORIZONTAL & VERTICAL INFORMATION IN THE FIELD.
2.) ALL ABANDONED PIPE TO BE CAPPED, SUBSIDIARY TO ITEM 496.
3.) CONTRACTOR TO COORDINATE WITH S.W.B. TELEPHONE FOR NEW/EXIST SERVICE LINE PRIOR TO CONSTRUCTION

STATE OF TEXAS
RAMIRO GUTIERREZ
65948
REGISTERED PROFESSIONAL ENGINEER

THE SEAL APPEARING ON THIS DOCUMENT WAS AUTHORIZED BY RAMIRO GUTIERREZ, P.E. 65948

DATE: 8-12-03

ALTERATION OF A SEALED DOCUMENT WITHOUT PROPER NOTIFICATION TO THE RESPONSIBLE ENGINEER IS AN OFFENSE UNDER THE TEXAS ENGINEERING PRATICE LAW.

Parsons Brinckerhoff Quade & Douglas Inc.

Texas Department of Transportation

© 2003 by TxDOT

UTILITIES & DRAINAGE PLAN & PROFILE SIOUX ROAD

SHEET 1 OF 2

PLAN 1"= 50' HORIZ
PROFILE 1"= 10' VERT

DESIGNED:	FED. RD DIV. No.	STATE	FEDERAL AID PROJECT No.			HIGHWAY No.	
CHECKED:	6	TEXAS				US 281	
DRAWN:	STATE DISTRICT	COUNTY	CONTROL No.	SECTION No.	JOB No.	SHEET No.	
CHECKED:	21	HIDALGO	0255	08	091	588	

$NAME$
$TIME$
$DATE$
$FILE$siouxutl1.dgn

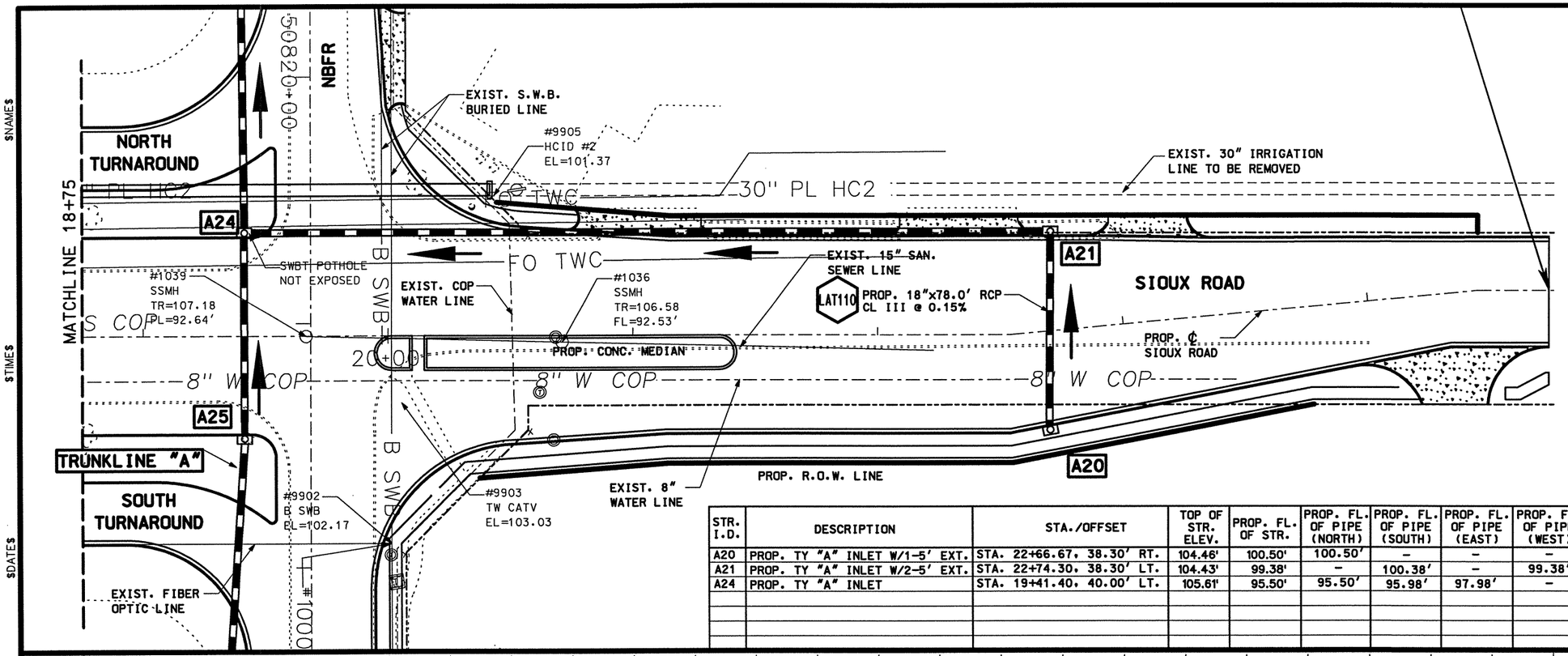

NOTE:

1.) ALL UTILITIES SHALL BE THE RESPONSIBITILY OF THE CONTRACTOR TO VERIFY HORIZONTAL & VERTICAL INFORMATION IN THE FIELD.
2.) ALL ABANDONED PIPE TO BE CAPPED, SUBSIDIARY TO ITEM 496.
3.) CONTRACTOR TO COORDINATE WITH S.W.B. TELEPHONE FOR NEW/EXIST SERVICE LINE PRIOR TO CONSTRUCTION

STR. I.D.	DESCRIPTION	STA./OFFSET	TOP OF STR. ELEV.	PROP. FL. OF STR.	PROP. FL. OF PIPE (NORTH)	PROP. FL. OF PIPE (SOUTH)	PROP. FL. OF PIPE (EAST)	PROP. FL OF PIPE (WEST)
A20	PROP. TY "A" INLET W/1-5' EXT.	STA. 22+66.67, 38.30' RT.	104.46'	100.50'	100.50'	–	–	–
A21	PROP. TY "A" INLET W/2-5' EXT.	STA. 22+74.30, 38.30' LT.	104.43'	99.38'	–	100.38'	–	99.38'
A24	PROP. TY "A" INLET	STA. 19+41.40, 40.00' LT.	105.61'	95.50'	95.50'	95.98'	97.98'	–

SHEET TOTALS

ITEM	EST.	FINAL	UNIT	DESCRIPTION
*400	806		CY	SEWER EXCAVATION
402	408		LF	TRENCH EXCAVATION PROTECTION
464	326		LF	RCP CL III (30 IN)
464	78		LF	RCP CL III (18 IN)
465	2		EA	INLET (TY "A")
465	3		EA	5.0' EXTENTIONS

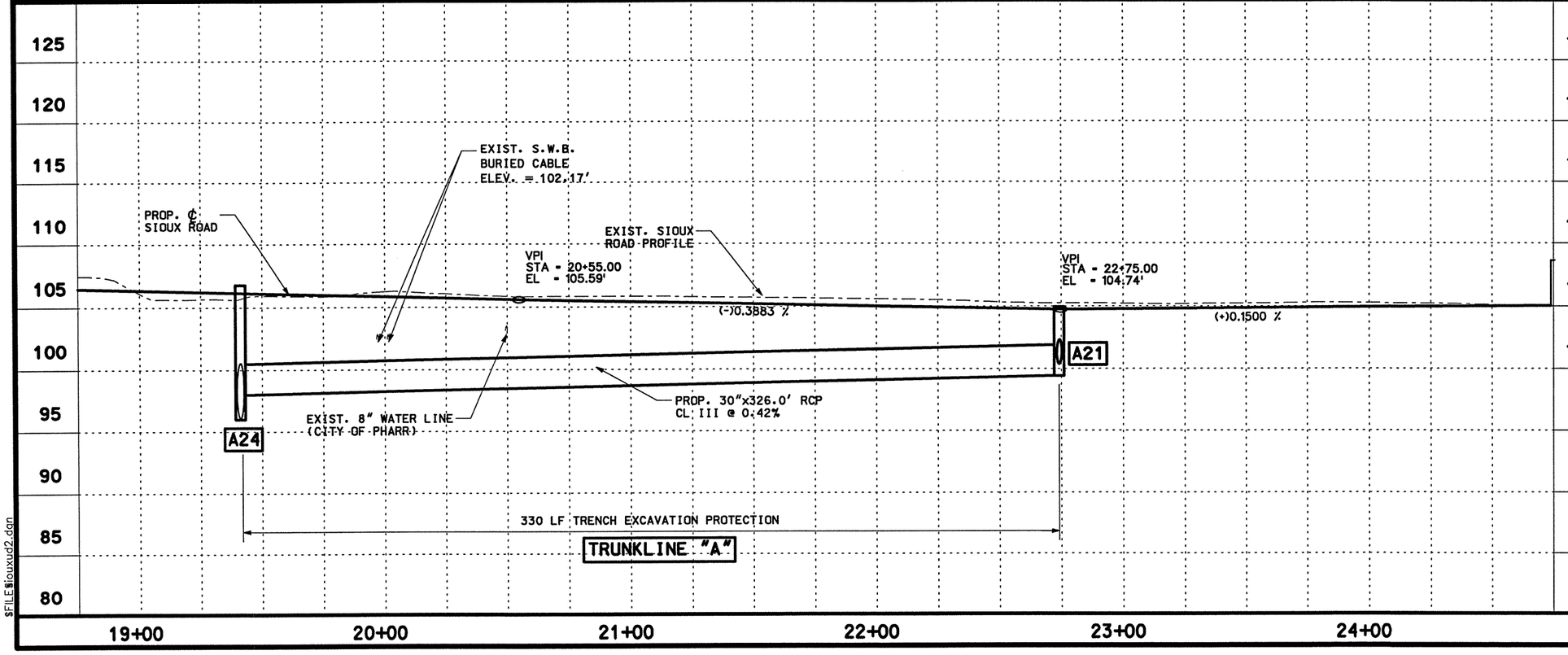

* FOR CONTRACTORS INFORMATION ONLY

STATE OF TEXAS
RAMIRO GUTIERREZ
65948
REGISTERED PROFESSIONAL ENGINEER

THE SEAL APPEARING ON THIS DOCUMENT WAS AUTHORIZED BY RAMIRO GUTIERREZ, P.E. 65948

DATE: 8-12-03

ALTERATION OF A SEALED DOCUMENT WITHOUT PROPER NOTIFICATION TO THE RESPONSIBLE ENGINEER IS AN OFFENSE UNDER THE TEXAS ENGINEERING PRATICE LAW.

Parsons Brinckerhoff Quade & Douglas Inc.

Texas Department of Transportation

©2003 by TxDOT

UTILITIES & DRAINAGE PLAN & PROFILE SIOUX ROAD

SHEET 2 OF 2

PLAN 1"= 50' HORIZ
PROFILE 1"= 10' VERT

DESIGNED:	FED. RD DIV. No.	STATE	FEDERAL AID PROJECT No.			HIGHWAY No.
CHECKED:	6	TEXAS				US 281
DRAWN:	STATE DISTRICT	COUNTY	CONTROL No.	SECTION No.	JOB No.	SHEET No.
CHECKED:	21	HIDALGO	0255	08	091	589

$NAME$
$TIME$
$DATE$
$FILE$siouxud2.dgn

$NAME$
$TIME$
$DATE$

NOTE:

1.) ALL UTILITIES SHALL BE THE RESPONSIBITILY OF THE CONTRACTOR TO VERIFY HORIZONTAL & VERTICAL INFORMATION IN THE FIELD.
2.) ALL ABANDONED PIPE TO BE CAPPED, SUBSIDIARY TO ITEM 496.
3.) CONTRACTOR TO COORDINATE WITH S.W.B. TELEPHONE FOR NEW/EXIST SERVICE LINE PRIOR TO CONSTRUCTION

STR. I.D.	DESCRIPTION	STA./OFFSET	TOP OF STR. ELEV.	PROP. FL. OF STR.	PROP. FL. OF PIPE (NORTH)	PROP. FL. OF PIPE (SOUTH)	PROP. FL. OF PIPE (EAST)	PROP. FL. OF PIPE (WEST)
K1	PROP. TY "A" INLET W/2-5.0'EXT.	STA. 12+60.52, 31.70' LT.	103.77'	99.00'	–	99.00'	–	–
K2	PROP. TY "A" INLET W/2-5.0'EXT.	STA. 12+60.52, 46.20' RT.	103.48'	98.29'	98.79'	–	98.29'	–
JK1	PROP. TY "A" INLET	STA. 16+24.20, 46.20' RT.	105.59'	97.74'	97.74'	–	–	97.74'

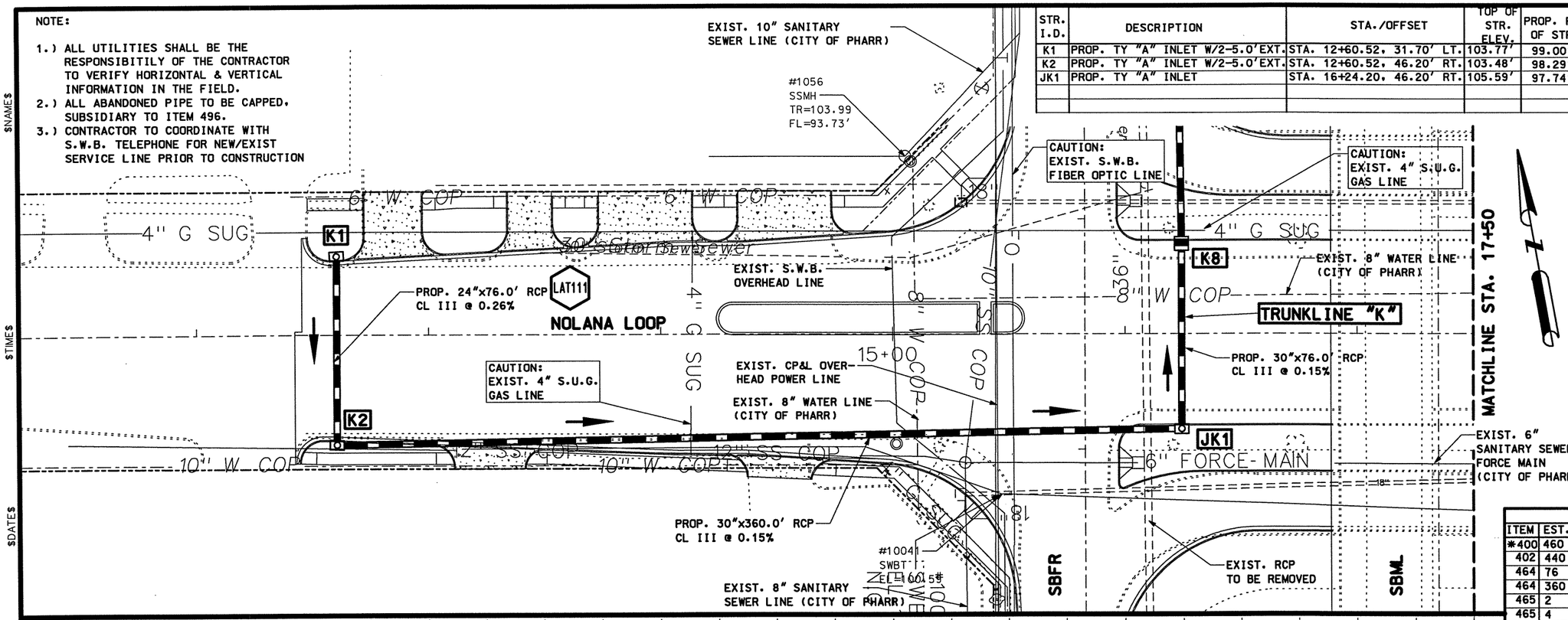

LEGEND

- PROP. DITCH FLOWLINE
- STORM SEWER FLOW DIRECTION
- NBFR – NORTH BOUND FRONTAGE ROAD
- NBML – NORTH BOUND MAINLANES
- B – BURIED TELEPHONE CABLE
- OH – OVERHEAD POWER LINES
- 8" SS – EXIST. SANITARY SEWER LINE
- DRAINAGE STR. TO BE CAPPED
- PROPOSED LUMINAIRE
- 07 – STRUCTURE I.D.
- RCP TO REMAIN
- RCP TO BE ABANDONED
- H.P. – DITCH HIGH POINT
- L.P. – DITCH LOW POINT
- LAT1 – LATERAL I.D.
- EXIST. MANHOLE/INLET TO BE REMOVED (ITEM 496)
- PROP. TRUNK LINE

SHEET TOTALS

ITEM	EST.	FINAL	UNIT	DESCRIPTION
*400	460		CY	SEWER EXCAVATION
402	440		LF	TRENCH EXCAVATION PROTECTION
464	76		FT	RCP CL III 24"
464	360		FT	RCP CL III 30"
465	2		EA	INLET (TY) "A"
465	4		EA	5.0' EXTENTIONS

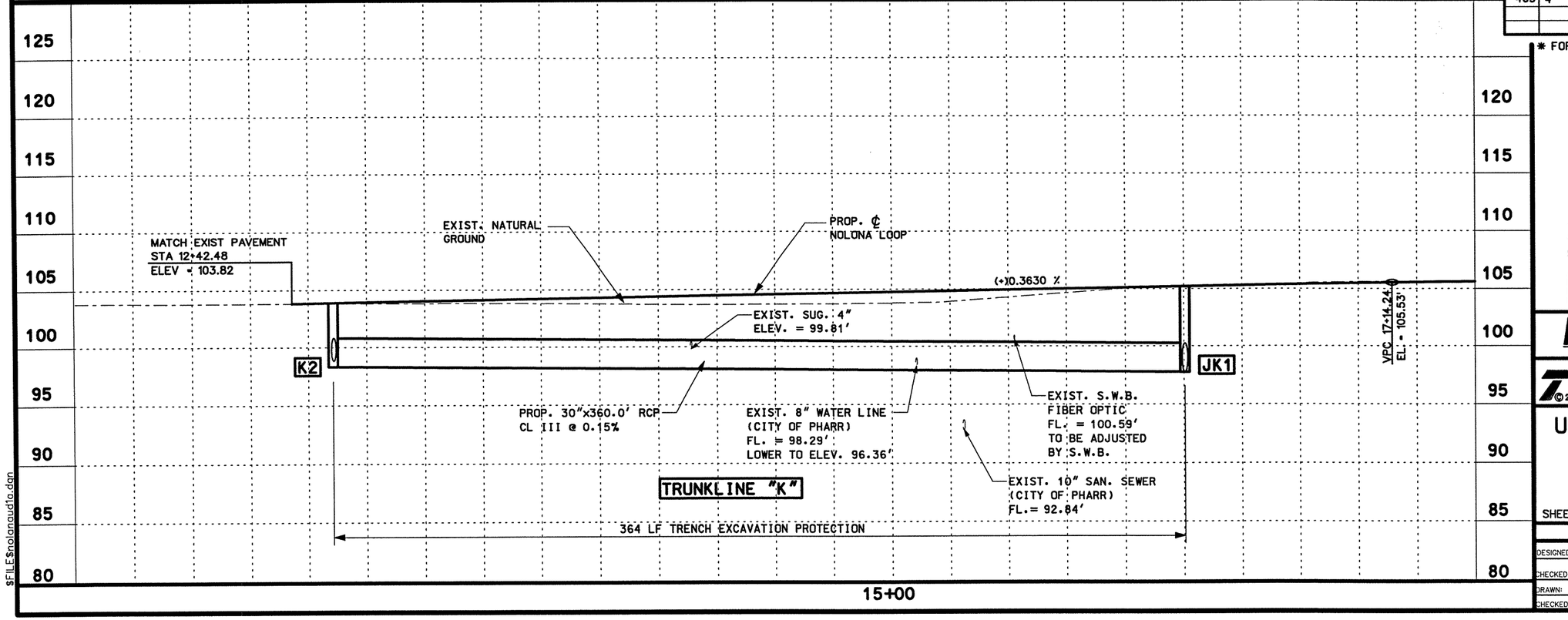

* FOR CONTRACTORS INFORMATION ONLY

STATE OF TEXAS
RAMIRO GUTIERREZ
65948
REGISTERED PROFESSIONAL ENGINEER

THE SEAL APPEARING ON THIS DOCUMENT WAS AUTHORIZED BY RAMIRO GUTIERREZ, P.E. 65948

DATE: 8-12-03

ALTERATION OF A SEALED DOCUMENT WITHOUT PROPER NOTIFICATION TO THE RESPONSIBLE ENGINEER IS AN OFFENSE UNDER THE TEXAS ENGINEERING PRATICE LAW.

Parsons Brinckerhoff Quade & Douglas Inc.

Texas Department of Transportation

© 2003 by TxDOT

UTILITIES & DRAINAGE PLAN & PROFILE NOLANA LOOP

SHEET 1 OF 2

PLAN 1"= 50' HORIZ
PROFILE 1"= 10' VERT

DESIGNED:	FED. RD DIV. No.	STATE	FEDERAL AID PROJECT No.			HIGHWAY No.
CHECKED:	6	TEXAS				US 281
DRAWN:	STATE DISTRICT	COUNTY	CONTROL No.	SECTION No.	JOB No.	SHEET No.
CHECKED:	21	HIDALGO	0255	08	091	590

$FILE$nolanaudia.dgn

STR. I.D.	DESCRIPTION	STA./OFFSET	TOP OF STR. ELEV.	PROP. FL. OF STR.	PROP. FL. OF PIPE (NORTH)	PROP. FL. OF PIPE (SOUTH)	PROP. FL. OF PIPE (EAST)	PROP. FL. OF PIPE (WEST)
C14	PROP. TY "A" INLET W/1-5' EXT.	STA. 22+07.60, 32.60' RT.	103.64'	98.20'	98.20'	–	–	–
C15	PROP. TY "A" INLET W/1-5' EXT.	STA. 22+07.60, 33.90' LT.	103.61'	98.00'	–	98.00'	–	98.00'
C12	PROP. TY "F" INLET	STA. 19+07.45, 40.00' LT.	105.65'	97.22'	97.22'	99.20'	97.22'	–
C16	PROP. TY "A" INLET	STA. 19+07.27, 40.00' RT.	105.65'	99.40'	99.40'	–	–	–

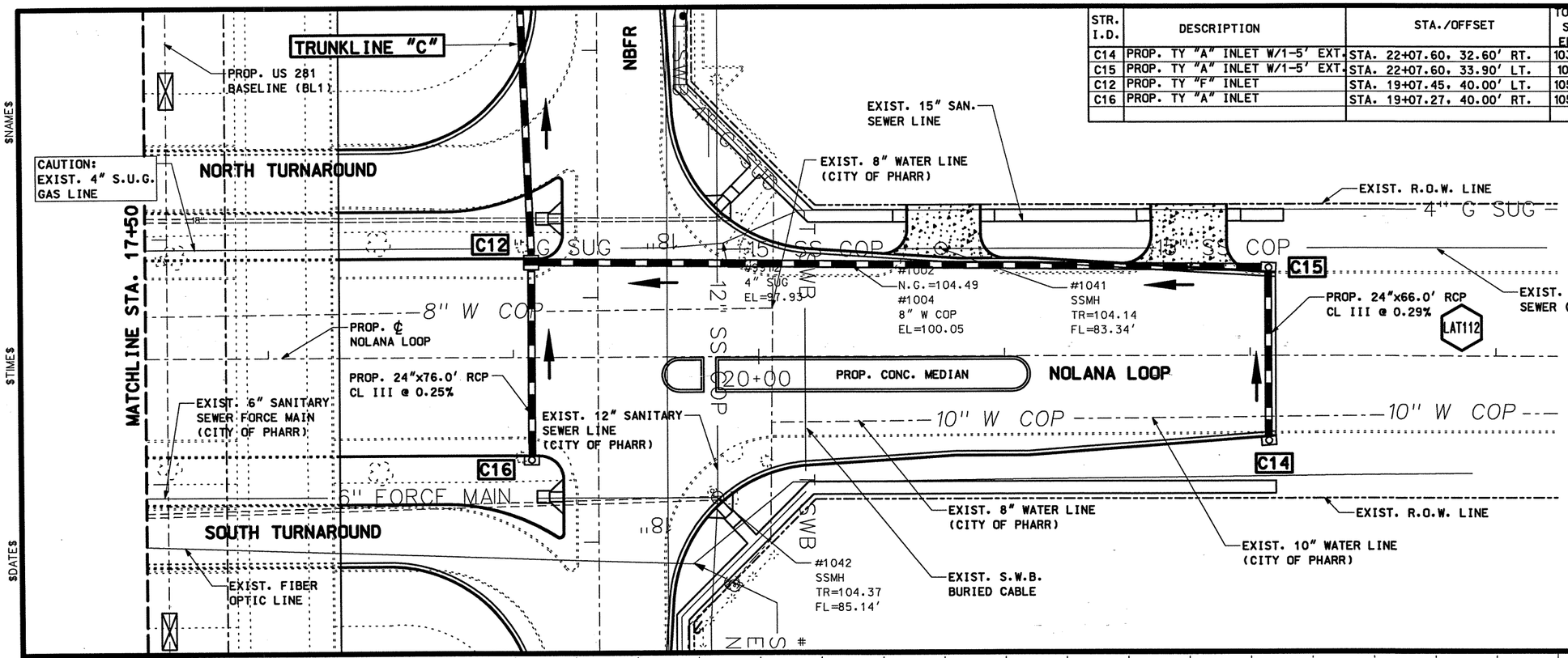

NOTE:

1.) ALL UTILITIES SHALL BE THE RESPONSIBITILY OF THE CONTRACTOR TO VERIFY HORIZONTAL & VERTICAL INFORMATION IN THE FIELD.
2.) ALL ABANDONED PIPE TO BE CAPPED. SUBSIDIARY TO ITEM 496.
3.) CONTRACTOR TO COORDINATE WITH S.W.B. TELEPHONE FOR NEW/EXIST SERVICE LINE PRIOR TO CONSTRUCTION

SHEET TOTALS

ITEM	EST.	FINAL	UNIT	DESCRIPTION
*400	258		CY	SEWER EXCAVATION
402	300		LF	TRENCH EXCAVATION PROTECTION
464	364		FT	RCP CL III (24 IN)
465	2		EA	INLET (TY "A")
465	2		EA	5.0' EXTENTIONS

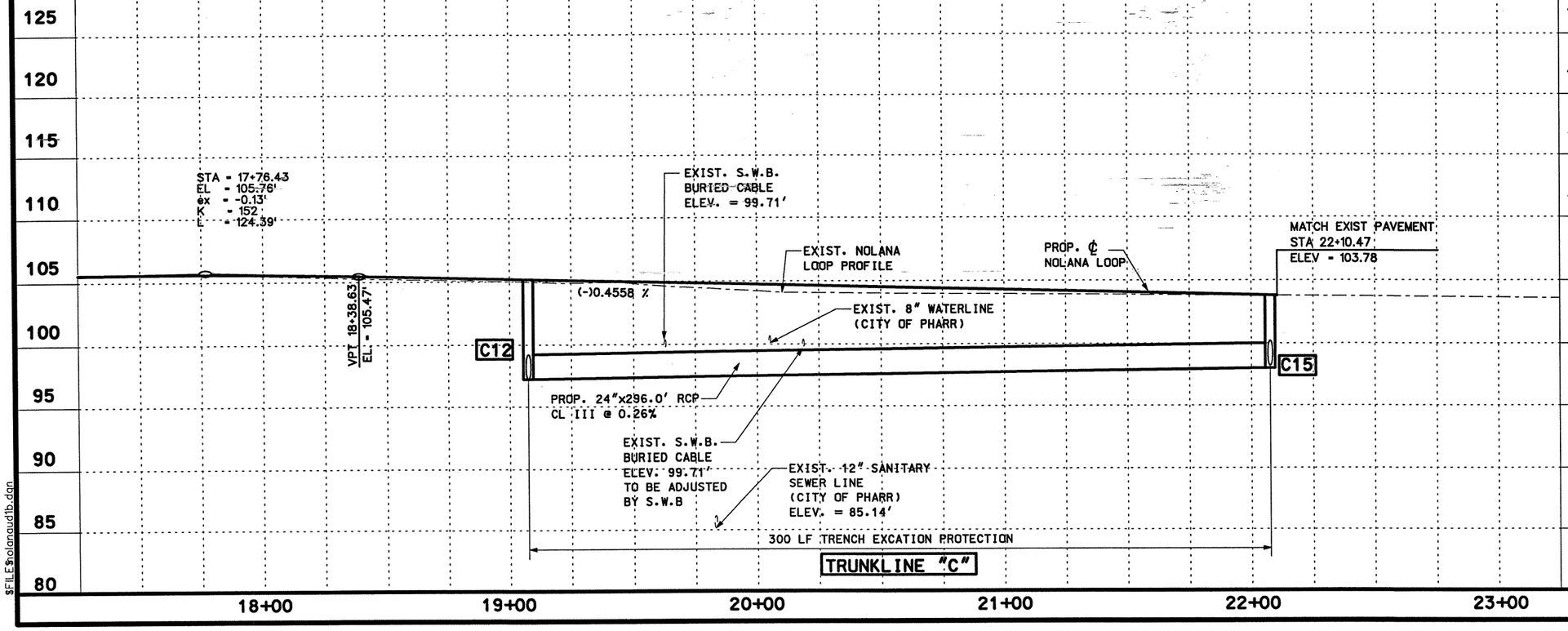

* FOR CONTRACTORS INFORMATION ONLY

STATE OF TEXAS
RAMIRO GUTIERREZ
65948
REGISTERED PROFESSIONAL ENGINEER

THE SEAL APPEARING ON THIS DOCUMENT WAS AUTHORIZED BY RAMIRO GUTIERREZ, P.E. 65948

DATE: 8-12-03

ALTERATION OF A SEALED DOCUMENT WITHOUT PROPER NOTIFICATION TO THE RESPONSIBLE ENGINEER IS AN OFFENSE UNDER THE TEXAS ENGINEERING PRATICE LAW.

Parsons Brinckerhoff Quade & Douglas Inc.

Texas Department of Transportation

© 2003 by TxDOT

UTILITIES & DRAINAGE PLAN & PROFILE NOLANA LOOP

SHEET 2 OF 2

PLAN 1"= 50' HORIZ
PROFILE 1"= 10' VERT

DESIGNED:	FED. RD DIV. No.	STATE	FEDERAL AID PROJECT No.			HIGHWAY No.	
CHECKED:	6	TEXAS				US 281	
DRAWN:	STATE DISTRICT	COUNTY	CONTROL No.	SECTION No.	JOB No.	SHEET No.	
CHECKED:	21	HIDALGO	0255	08	091	591	

$NAME$
$TIME$
$DATE$
$FILE$nolanaudtb.dgn

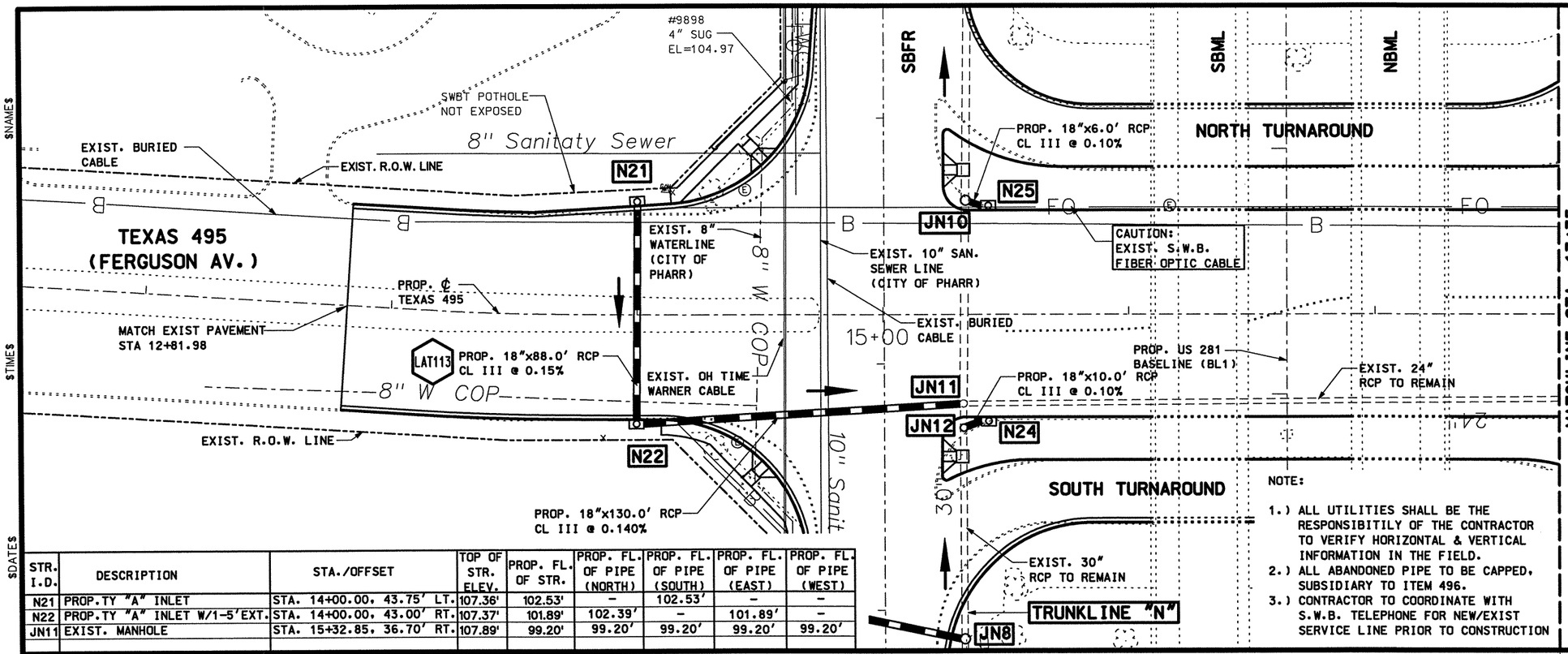

STR. I.D.	DESCRIPTION	STA./OFFSET	TOP OF STR. ELEV.	PROP. FL. OF STR.	PROP. FL. OF PIPE (NORTH)	PROP. FL. OF PIPE (SOUTH)	PROP. FL. OF PIPE (EAST)	PROP. FL. OF PIPE (WEST)
N21	PROP.TY "A" INLET	STA. 14+00.00, 43.75' LT.	107.36'	102.53'	–	102.53'	–	–
N22	PROP.TY "A" INLET W/1-5'EXT.	STA. 14+00.00, 43.00' RT.	107.37'	101.89'	102.39'	–	101.89'	–
JN11	EXIST. MANHOLE	STA. 15+32.85, 36.70' RT.	107.89'	99.20'	99.20'	99.20'	99.20'	99.20'

LEGEND

- PROP. DITCH FLOWLINE
- STORM SEWER FLOW DIRECTION
- NBFR –NORTH BOUND FRONTAGE ROAD
- NBML –NORTH BOUND MAINLANES
- B –BURIED TELEPHONE CABLE
- OH –OVERHEAD POWER LINES
- 8" SS –EXIST. SANITARY SEWER LINE
- –DRAINAGE STR. TO BE CAPPED
- –PROPOSED LUMINAIRE
- 07 –STRUCTURE I.D.
- –RCP TO REMAIN
- –RCP TO BE ABANDONED
- H.P. –DITCH HIGH POINT
- L.P. –DITCH LOW POINT
- LAT1 –LATERAL I.D.
- –EXIST. MANHOLE/INLET TO BE REMOVED (ITEM 496)
- –PROP. TRUNK LINE

NOTE:

1.) ALL UTILITIES SHALL BE THE RESPONSIBITILY OF THE CONTRACTOR TO VERIFY HORIZONTAL & VERTICAL INFORMATION IN THE FIELD.
2.) ALL ABANDONED PIPE TO BE CAPPED, SUBSIDIARY TO ITEM 496.
3.) CONTRACTOR TO COORDINATE WITH S.W.B. TELEPHONE FOR NEW/EXIST SERVICE LINE PRIOR TO CONSTRUCTION

SHEET TOTALS

ITEM	EST.	FINAL	UNIT	DESCRIPTION
*400	242		CY	SEWER EXCAVATION
402	222		LF	TRENCH EXCAVATION PROTECTION
464	104		LF	RCP CL III (18 IN)
464	130		LF	RCP CL III (24 IN)
465	2		EA	INLET (TY "A")
465	1		EA	5.0' EXTENTIONS

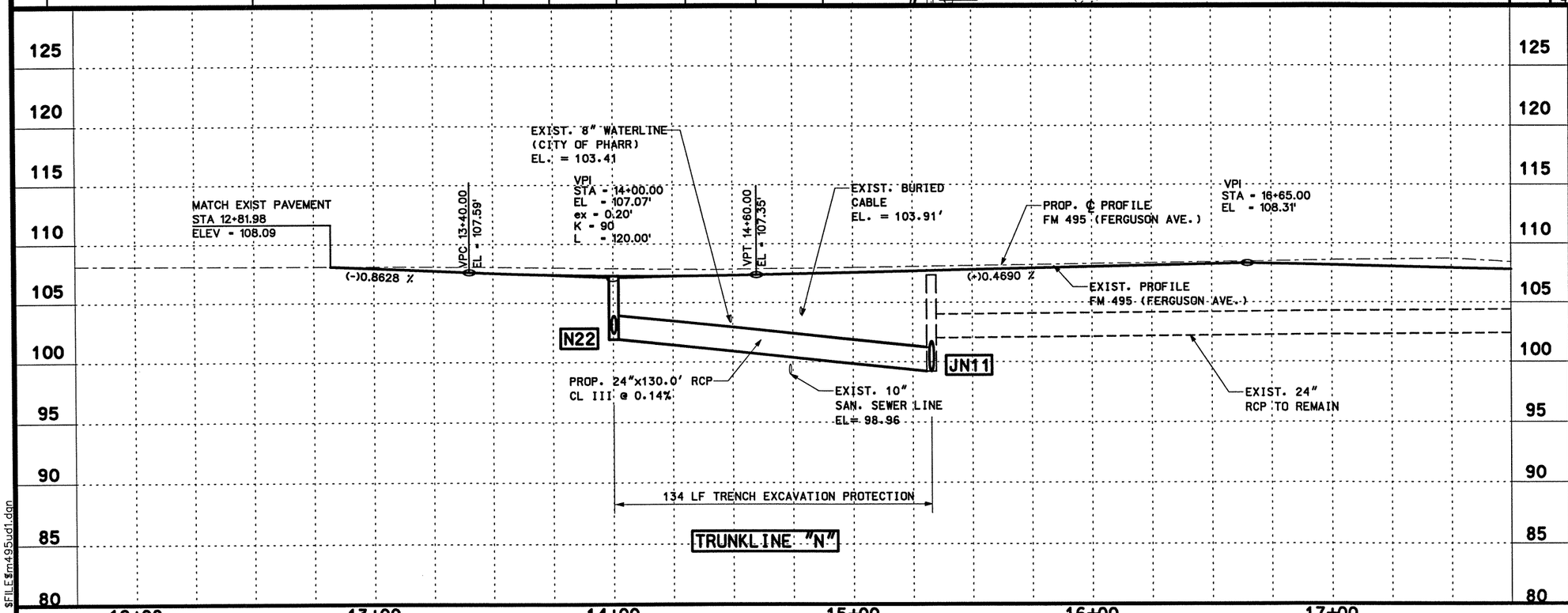

* FOR CONTRACTORS INFORMATION ONLY

STATE OF TEXAS
RAMIRO GUTIERREZ
65948
REGISTERED
PROFESSIONAL ENGINEER

THE SEAL APPEARING ON THIS DOCUMENT WAS AUTHORIZED BY RAMIRO GUTIERREZ, P.E. 65948

DATE: 8-12-03

ALTERATION OF A SEALED DOCUMENT WITHOUT PROPER NOTIFICATION TO THE RESPONSIBLE ENGINEER IS AN OFFENSE UNDER THE TEXAS ENGINEERING PRATICE LAW.

Parsons Brinckerhoff
Quade & Douglas Inc.

Texas Department of Transportation

© 2003 by TxDOT

UTILITIES & DRAINAGE PLAN & PROFILE TEXAS 495(FERGUSON AV.)

SHEET 1 OF 2

PLAN 1"= 50' HORIZ
PROFILE 1"= 10' VERT

DESIGNED:	FED. RD DIV. No.	STATE	FEDERAL AID PROJECT No.		HIGHWAY No.	
CHECKED:	6	TEXAS			US 281	
DRAWN:	STATE DISTRICT	COUNTY	CONTROL No.	SECTION No.	JOB No.	SHEET No.
CHECKED:	21	HIDALGO	0255	08	091	592

$NAME$
$TIME$
$DATE$
$FILE$m495ud1.dgn

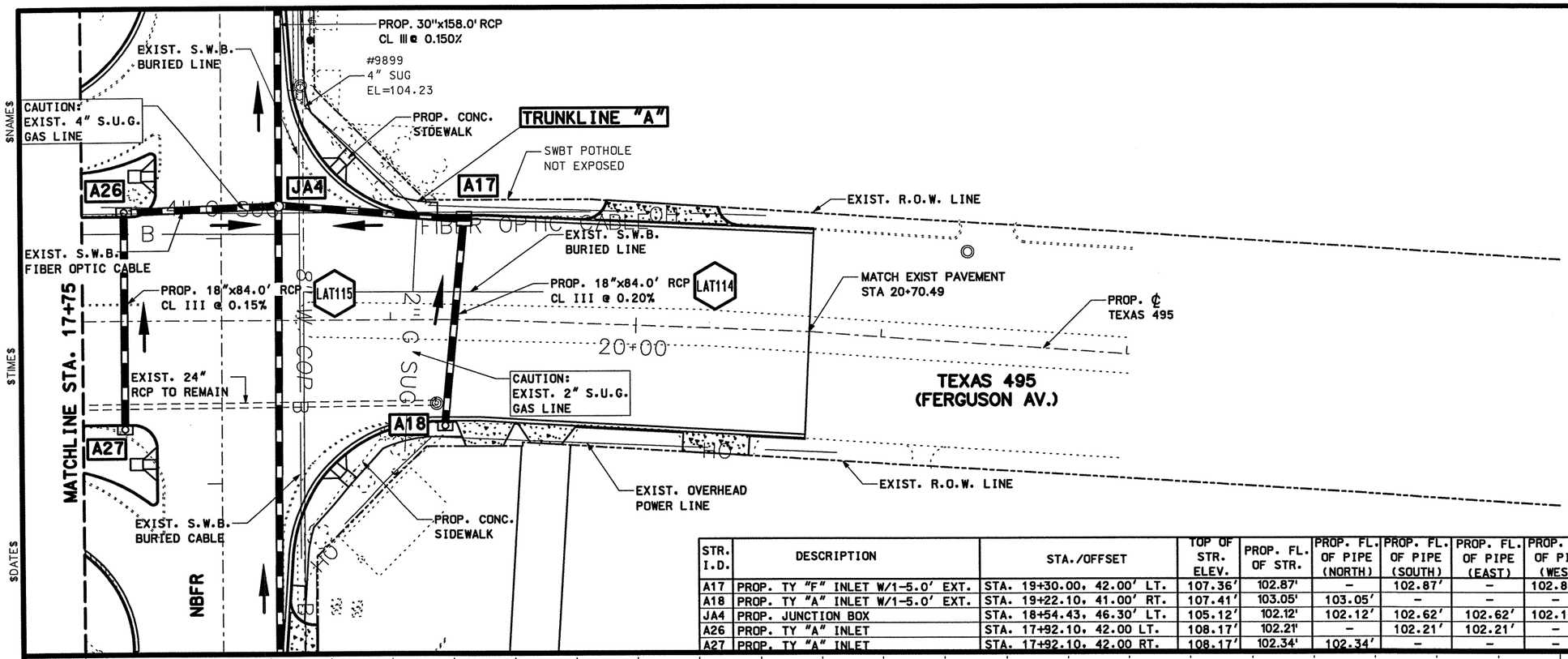

STR. I.D.	DESCRIPTION	STA./OFFSET	TOP OF STR. ELEV.	PROP. FL. OF STR.	PROP. FL. OF PIPE (NORTH)	PROP. FL. OF PIPE (SOUTH)	PROP. FL. OF PIPE (EAST)	PROP. FL. OF PIPE (WEST)
A17	PROP. TY "F" INLET W/1-5.0' EXT.	STA. 19+30.00, 42.00' LT.	107.36'	102.87'	–	102.87'	–	102.87'
A18	PROP. TY "A" INLET W/1-5.0' EXT.	STA. 19+22.10, 41.00' RT.	107.41'	103.05'	103.05'	–	–	–
JA4	PROP. JUNCTION BOX	STA. 18+54.43, 46.30' LT.	105.12'	102.12'	102.12'	102.62'	102.62'	102.12'
A26	PROP. TY "A" INLET	STA. 17+92.10, 42.00 LT.	108.17'	102.21'	–	102.21'	102.21'	–
A27	PROP. TY "A" INLET	STA. 17+92.10, 42.00 RT.	108.17'	102.34'	102.34'	–	–	–

NOTE:

1.) ALL UTILITIES SHALL BE THE RESPONSIBITILY OF THE CONTRACTOR TO VERIFY HORIZONTAL & VERTICAL INFORMATION IN THE FIELD.
2.) ALL ABANDONED PIPE TO BE CAPPED. SUBSIDIARY TO ITEM 496.
3.) CONTRACTOR TO COORDINATE WITH S.W.B. TELEPHONE FOR NEW/EXIST SERVICE LINE PRIOR TO CONSTRUCTION

SHEET TOTALS

ITEM	EST.	FINAL	UNIT	DESCRIPTION
*400	257		CY	SEWER EXCAVATION
402	306		LF	TRENCH EXCAVATION PROTECTION
464	226		LF	RCP CL III (18 IN)
464	72		LF	RCP CL III (24 IN)
465	3		EA	INLET (TY "A")
465	1		EA	INLET (TY "F")
465	2		EA	5.0' EXTENTIONS

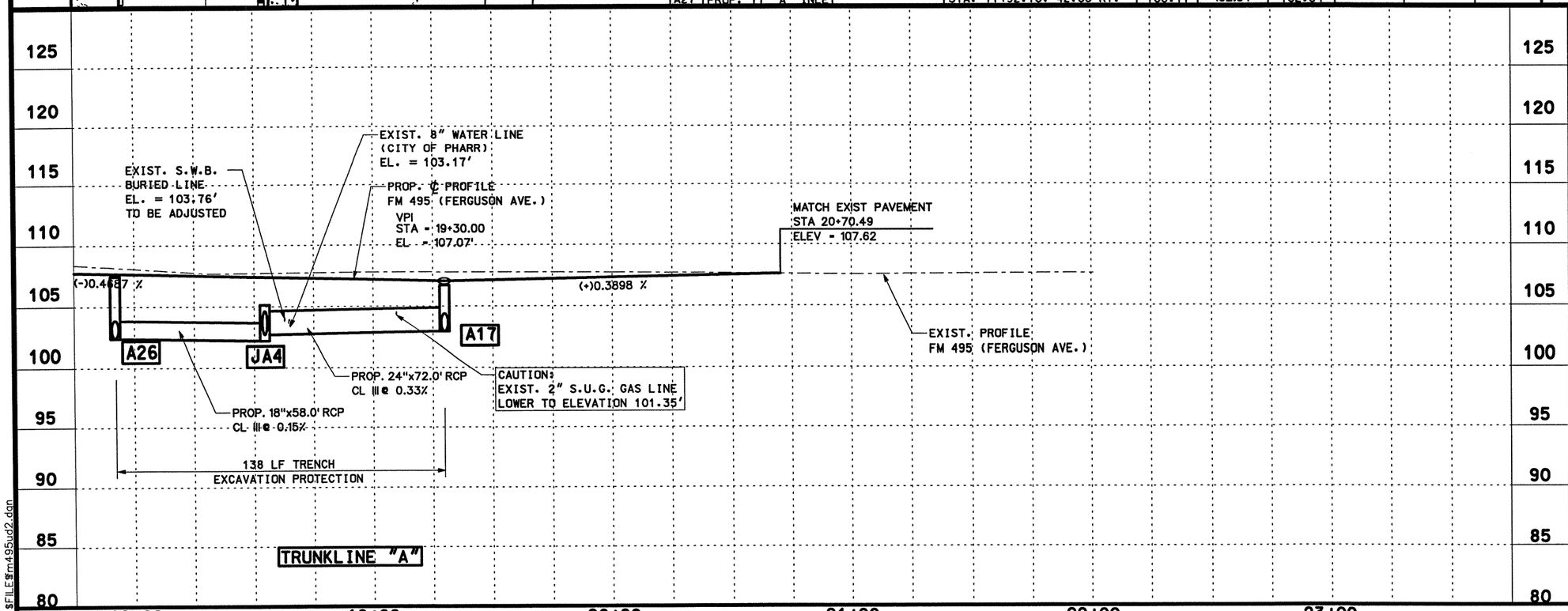

* FOR CONTRACTORS INFORMATION ONLY

STATE OF TEXAS
RAMIRO GUTIERREZ
65948
REGISTERED
PROFESSIONAL ENGINEER

THE SEAL APPEARING ON THIS DOCUMENT WAS AUTHORIZED BY RAMIRO GUTIERREZ, P.E. 65948

DATE: 8-12-03

ALTERATION OF A SEALED DOCUMENT WITHOUT PROPER NOTIFICATION TO THE RESPONSIBLE ENGINEER IS AN OFFENSE UNDER THE TEXAS ENGINEERING PRATICE LAW.

Parsons Brinckerhoff
Quade & Douglas Inc.

Texas Department of Transportation

© 2003 by TxDOT

UTILITIES & DRAINAGE PLAN & PROFILE TEXAS 495(FERGUSON AV.)

SHEET 2 OF 2

PLAN 1"= 50' HORIZ
PROFILE 1"= 10' VERT

DESIGNED:	FED. RD DIV. No.	STATE	FEDERAL AID PROJECT No.			HIGHWAY No.
CHECKED:	6	TEXAS				US 281
DRAWN:	STATE DISTRICT	COUNTY	CONTROL No.	SECTION No.	JOB No.	SHEET No.
CHECKED:	21	HIDALGO	0255	08	091	593

$NAME$
$TIME$
$DATE$
$FILE$fm495ud2.dgn

$NAME$

$TIME$

$DATE$

$FILE$

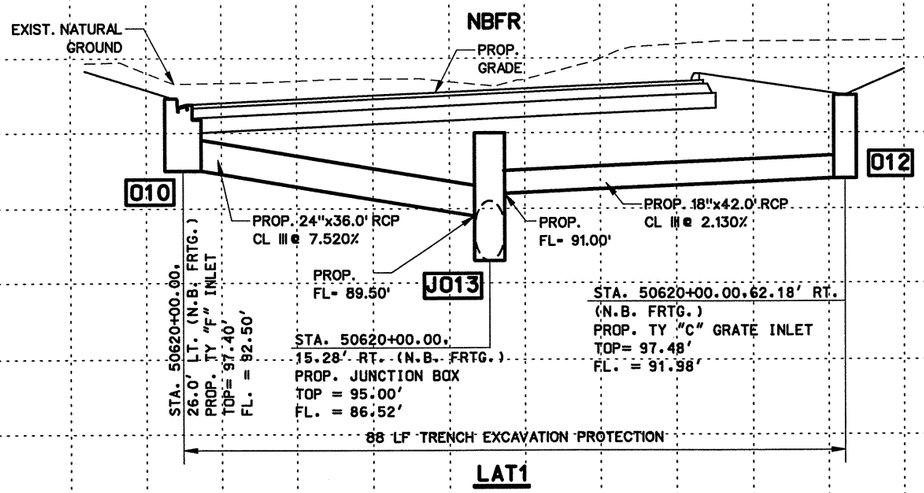

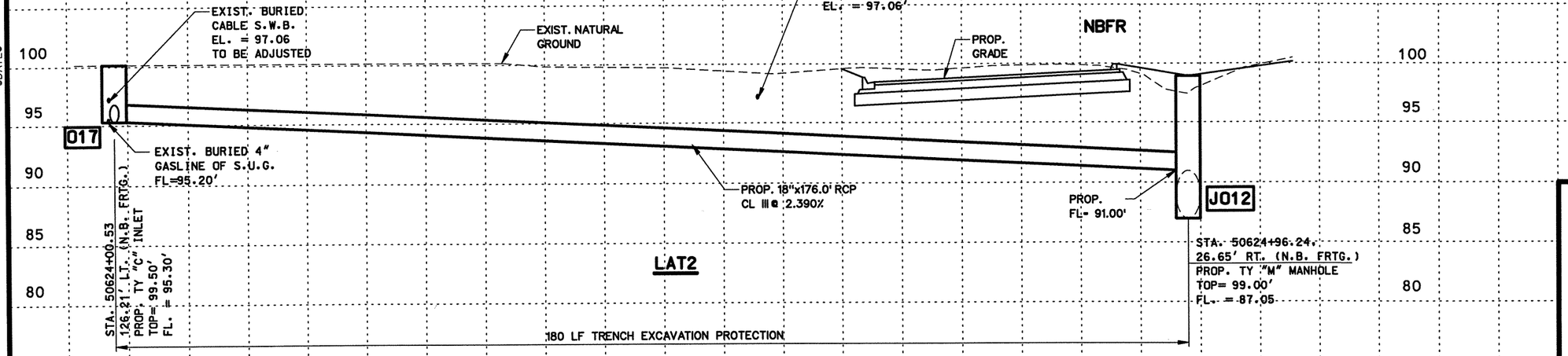

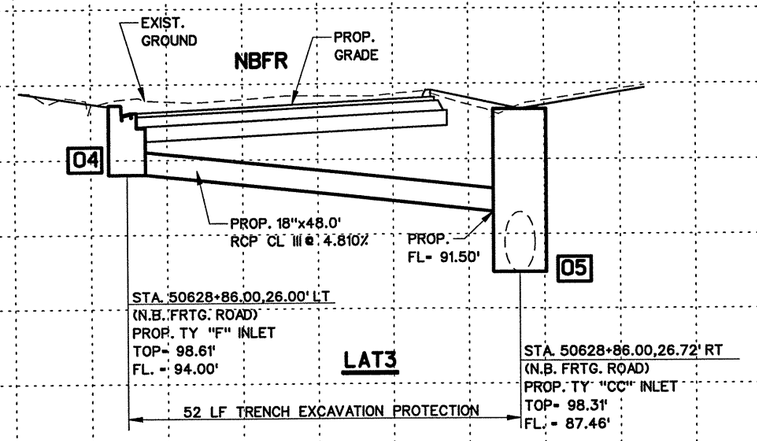

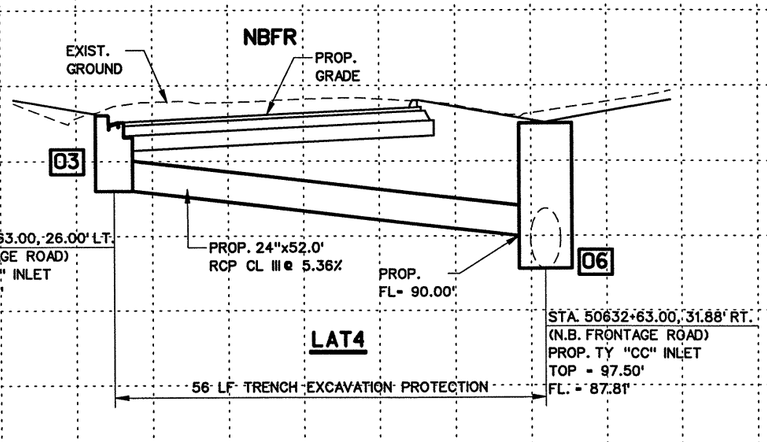

THE SEAL APPEARING ON THIS DOCUMENT WAS AUTHORIZED BY RAMIRO GUTIERREZ, P.E. 65948

DATE: 8-12-03

ALTERATION OF A SEALED DOCUMENT WITHOUT PROPER NOTIFICATION TO THE RESPONSIBLE ENGINEER IS AN OFFENSE UNDER THE TEXAS ENGINEERING PRATICE LAW.

Parsons Brinckerhoff Quade & Douglas Inc.

R. Gutierrez Engineering Corporation

Texas Department of Transportation

© 2003 by TxDOT

NORTHBOUND FRONTAGE ROAD LATERAL PROFILES

SHEET 1 OF 11

DESIGNED:	FED. RD DIV. No.	STATE	FEDERAL AID PROJECT No.			HIGHWAY No.
CHECKED:	6	TEXAS				US 281
DRAWN:	STATE DISTRICT	COUNTY	CONTROL No.	SECTION No.	JOB No.	SHEET No.
CHECKED:	21	HIDALGO	0255	08	091	584

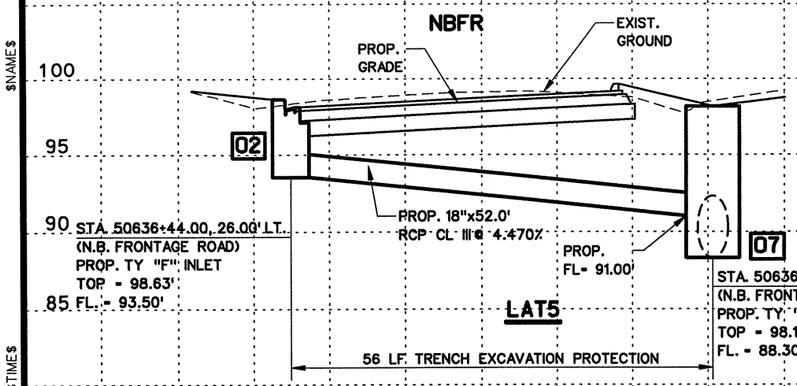

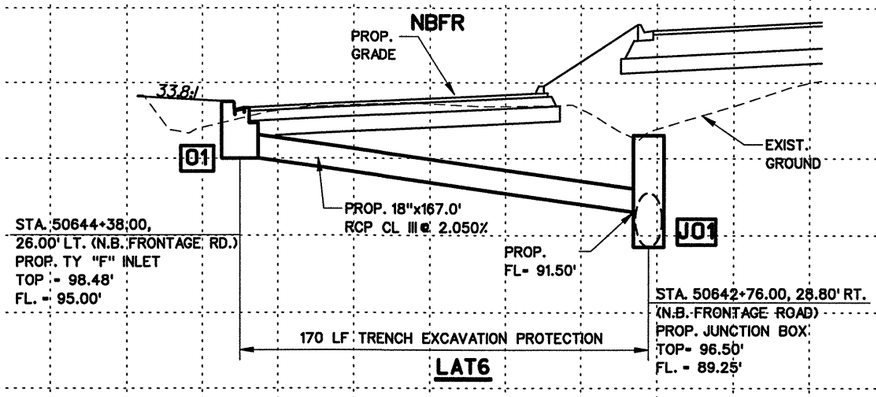

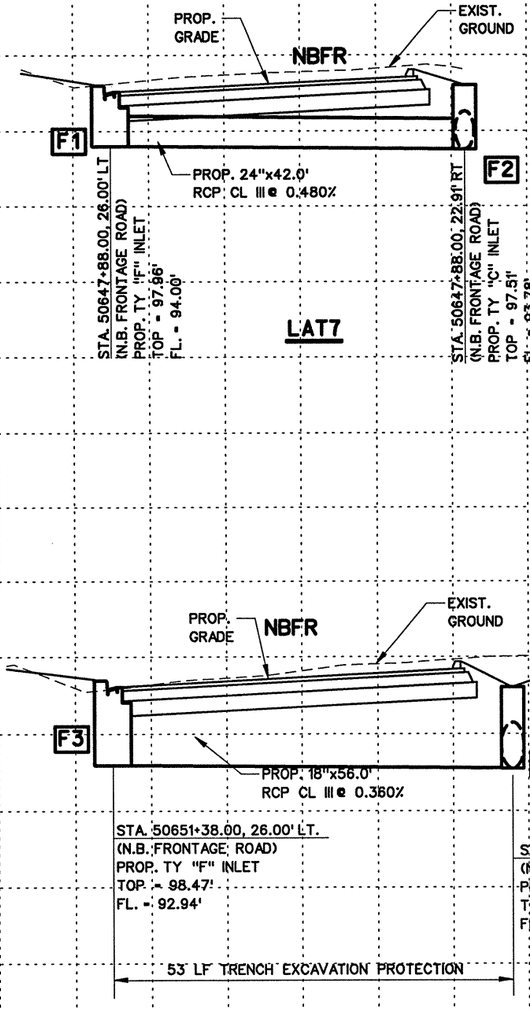

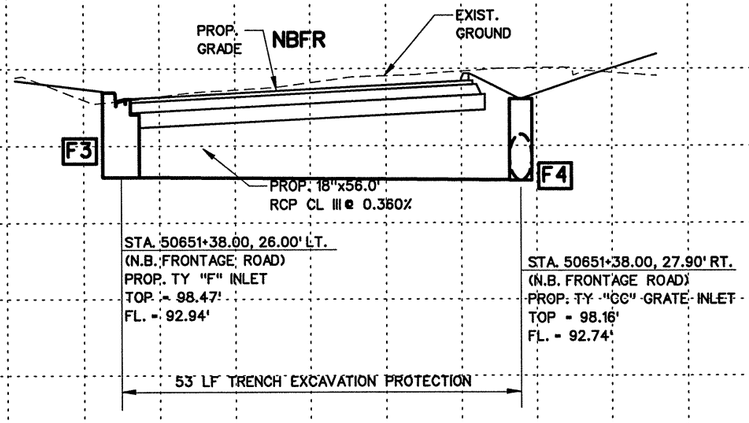

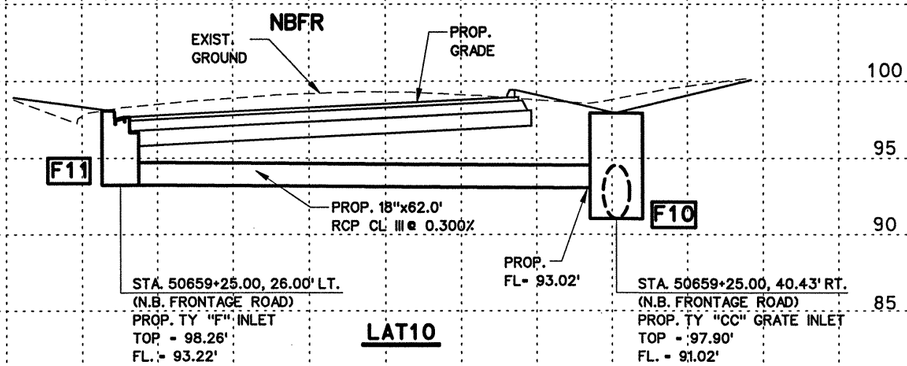

$NAME$
$TIME$
$DATE$
$FILE$

STATE OF TEXAS
RAMIRO GUTIERREZ
65948
REGISTERED PROFESSIONAL ENGINEER

THE SEAL APPEARING ON THIS DOCUMENT WAS AUTHORIZED BY RAMIRO GUTIERREZ, P.E. 65948

DATE: 8-12-03

ALTERATION OF A SEALED DOCUMENT WITHOUT PROPER NOTIFICATION TO THE RESPONSIBLE ENGINEER IS AN OFFENSE UNDER THE TEXAS ENGINEERING PRATICE LAW.

Parsons Brinckerhoff Quade & Douglas Inc.

R. Gutierrez Engineering Corporation

Texas Department of Transportation

©2003 by TxDOT

NORTHBOUND FRONTAGE ROAD LATERAL PROFILES

SHEET 2 OF 11

DESIGNED:	FED. RD DIV. No.	STATE	FEDERAL AID PROJECT No.			HIGHWAY No.
CHECKED:	6	TEXAS				US 281
DRAWN:	STATE DISTRICT	COUNTY	CONTROL No.	SECTION No.	JOB No.	SHEET No.
CHECKED:	21	HIDALGO	0255	08	091	595

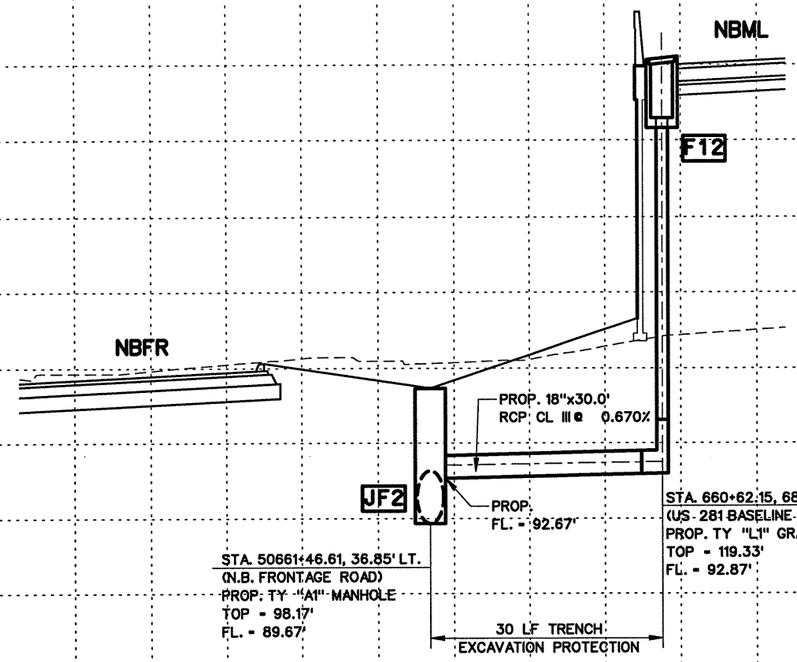

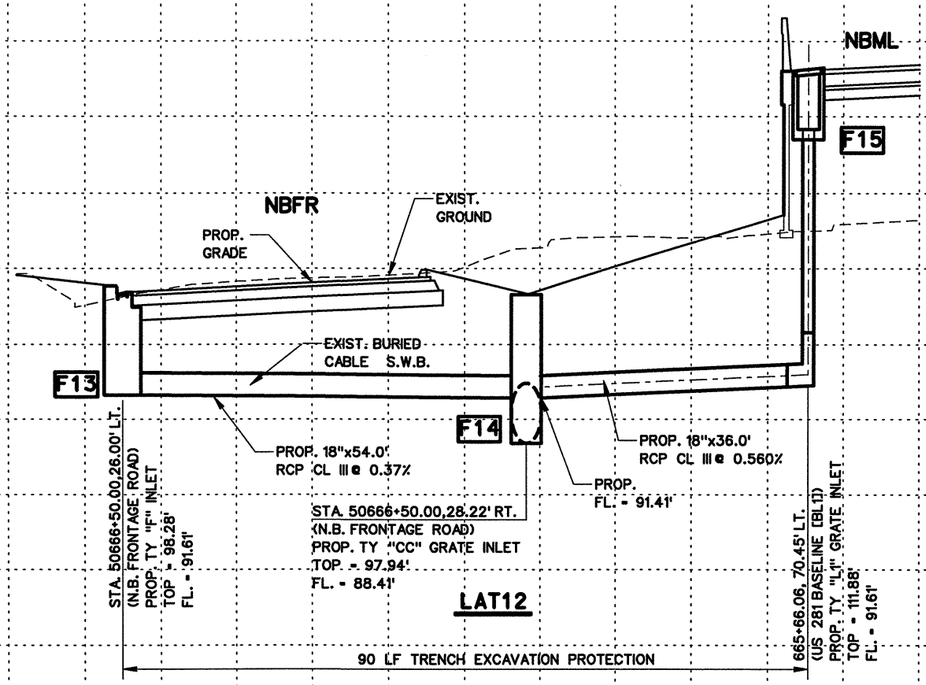

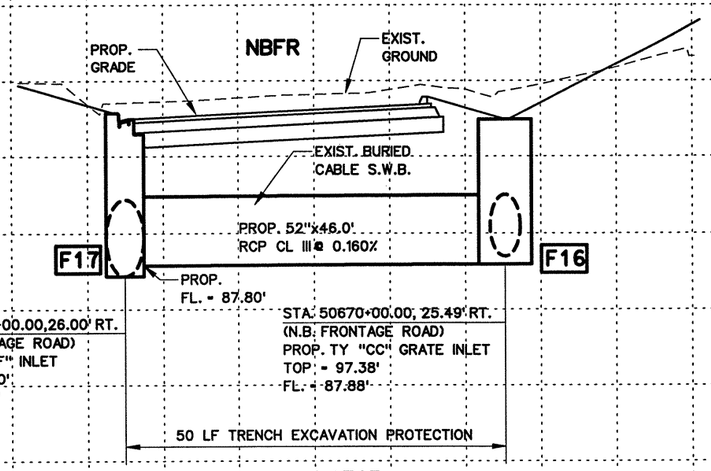

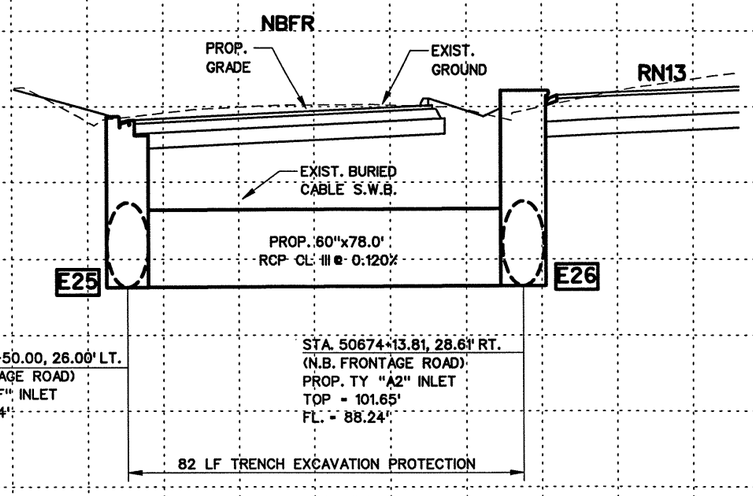

$NAME$
$TIME$
$DATE$
$FILE$

THE SEAL APPEARING ON THIS DOCUMENT WAS AUTHORIZED BY RAMIRO GUTIERREZ, P.E. 65948

DATE: 8-12-03

ALTERATION OF A SEALED DOCUMENT WITHOUT PROPER NOTIFICATION TO THE RESPONSIBLE ENGINEER IS AN OFFENSE UNDER THE TEXAS ENGINEERING PRATICE LAW.

Parsons Brinckerhoff Quade & Douglas Inc.

R. Gutierrez Engineering Corporation

Texas Department of Transportation

© 2003 by TxDOT

NORTHBOUND FRONTAGE ROAD LATERAL PROFILES

SHEET 3 OF 11

DESIGNED:	FED. RD DIV. No.	STATE	FEDERAL AID PROJECT No.			HIGHWAY No.
CHECKED:	6	TEXAS				US 281
DRAWN:	STATE DISTRICT	COUNTY	CONTROL No.	SECTION No.	JOB No.	SHEET No.
CHECKED:	21	HIDALGO	0255	08	091	596

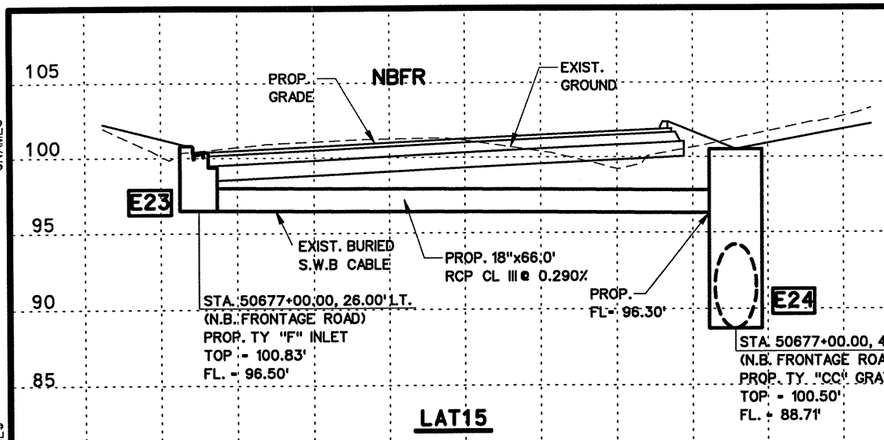

LAT15

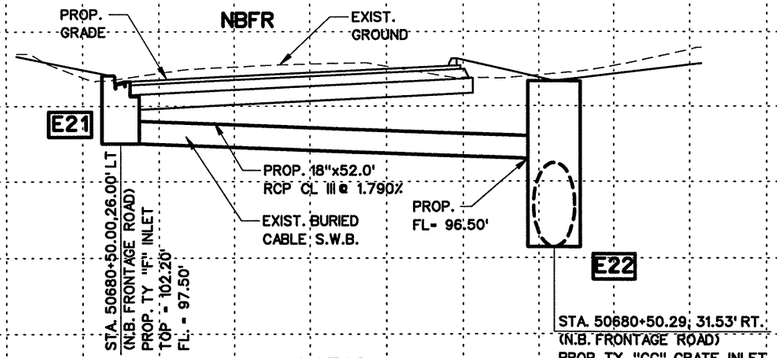

LAT16

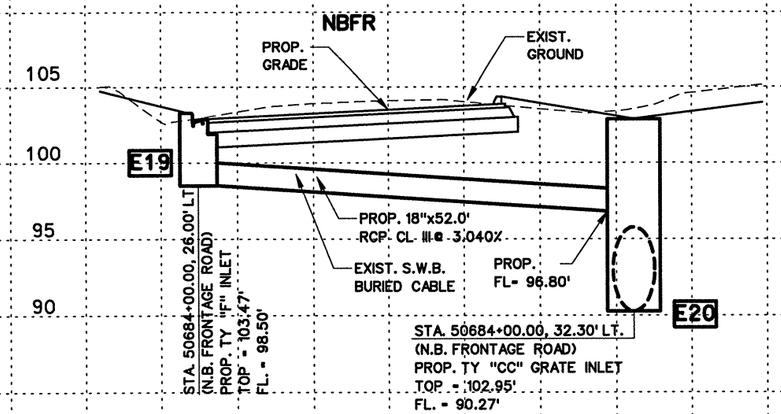

LAT17

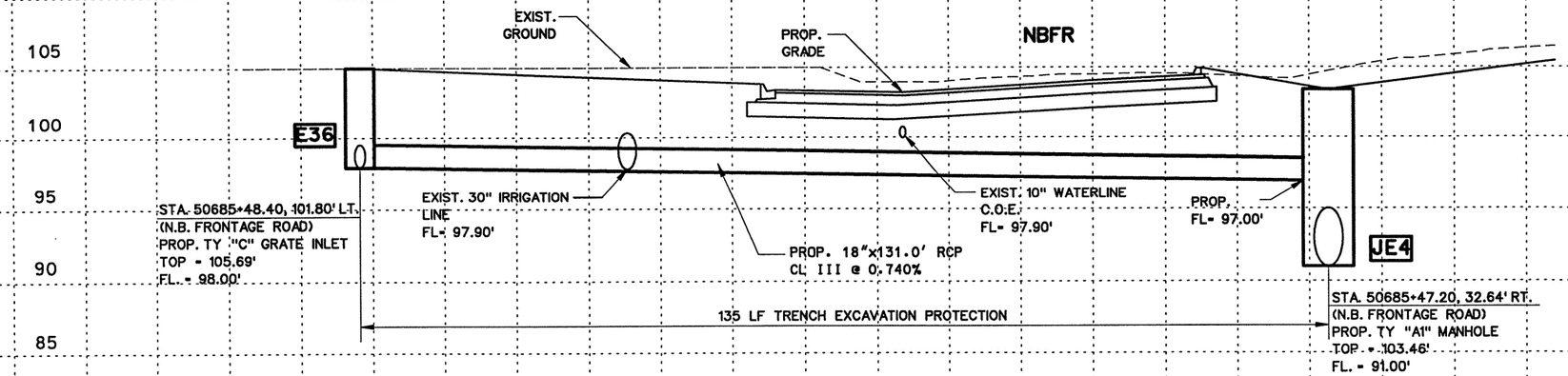

LAT18

STATE OF TEXAS
RAMIRO GUTIERREZ
65948
REGISTERED PROFESSIONAL ENGINEER

THE SEAL APPEARING ON THIS DOCUMENT WAS AUTHORIZED BY RAMIRO GUTIERREZ, P.E. 65948

DATE: 8-12-03

ALTERATION OF A SEALED DOCUMENT WITHOUT PROPER NOTIFICATION TO THE RESPONSIBLE ENGINEER IS AN OFFENSE UNDER THE TEXAS ENGINEERING PRATICE LAW.

Parsons Brinckerhoff Quade & Douglas Inc.

R. Gutierrez Engineering Corporation

Texas Department of Transportation

© 2003 by TxDOT

NORTHBOUND FRONTAGE ROAD LATERAL PROFILES

SHEET 4 OF 11

DESIGNED:	FED. RD DIV. No.	STATE	FEDERAL AID PROJECT No.			HIGHWAY No.
CHECKED:	6	TEXAS				US 281
DRAWN:	STATE DISTRICT	COUNTY	CONTROL No.	SECTION No.	JOB No.	SHEET No.
CHECKED:	21	HIDALGO	0255	08	091	597

$NAME$
$TIME$
$DATE$
$FILES$

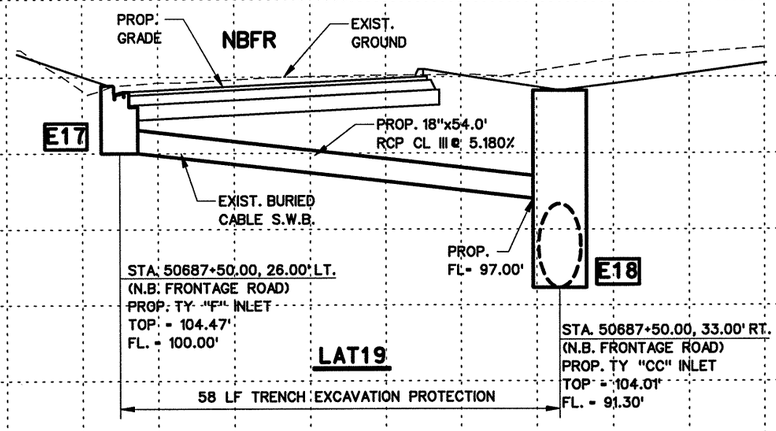

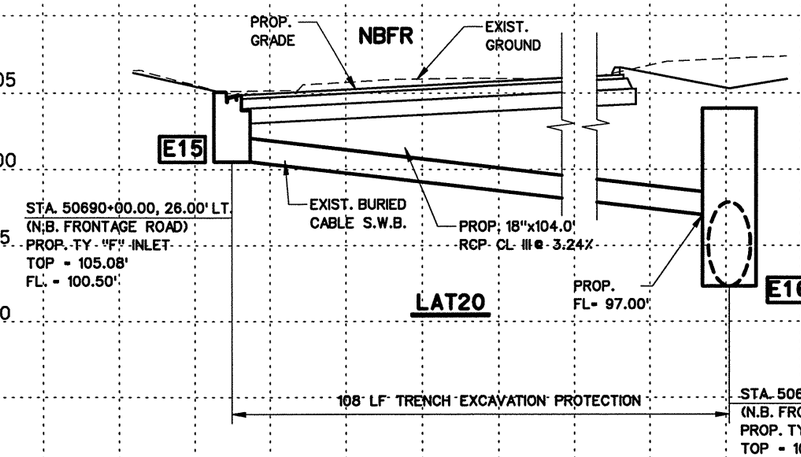

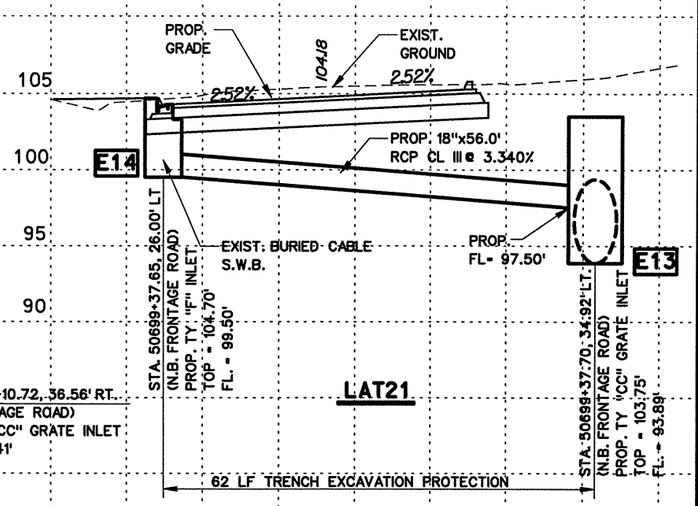

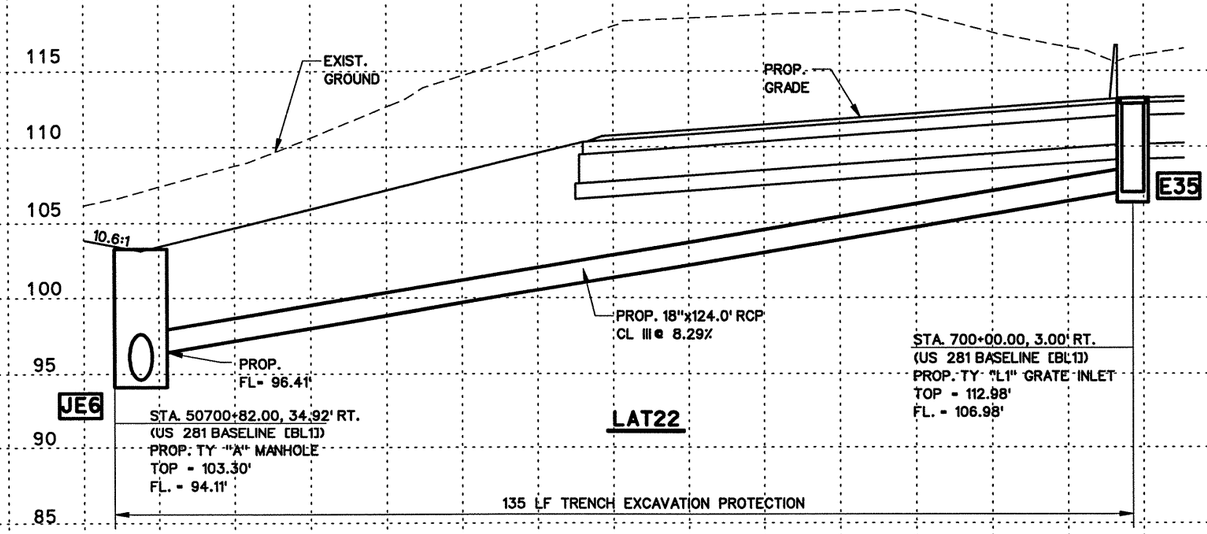

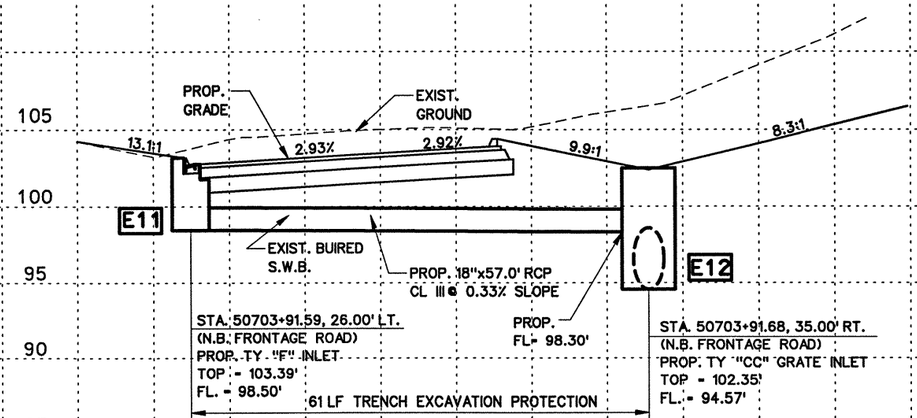

STATE OF TEXAS
RAMIRO GUTIERREZ
65948
REGISTERED PROFESSIONAL ENGINEER

THE SEAL APPEARING ON THIS DOCUMENT WAS AUTHORIZED BY RAMIRO GUTIERREZ, P.E. 65948

DATE: 8-12-03

ALTERATION OF A SEALED DOCUMENT WITHOUT PROPER NOTIFICATION TO THE RESPONSIBLE ENGINEER IS AN OFFENSE UNDER THE TEXAS ENGINEERING PRATICE LAW.

Parsons Brinckerhoff Quade & Douglas Inc.

R. Gutierrez Engineering Corporation

Texas Department of Transportation

© 2003 by TxDOT

NORTHBOUND FRONTAGE ROAD LATERAL PROFILES

SHEET 5 OF 11

DESIGNED:	FED. RD DIV. No.	STATE	FEDERAL AID PROJECT No.				HIGHWAY No.
CHECKED:	6	TEXAS					US 281
DRAWN:	STATE DISTRICT	COUNTY	CONTROL No.	SECTION No.	JOB No.	SHEET No.	
CHECKED:	21	HIDALGO	0255	08	091	598	

$NAME$
$TIME$
$DATE$
$FILES$

$NAME$
$TIME$
$DATE$
$FILE$

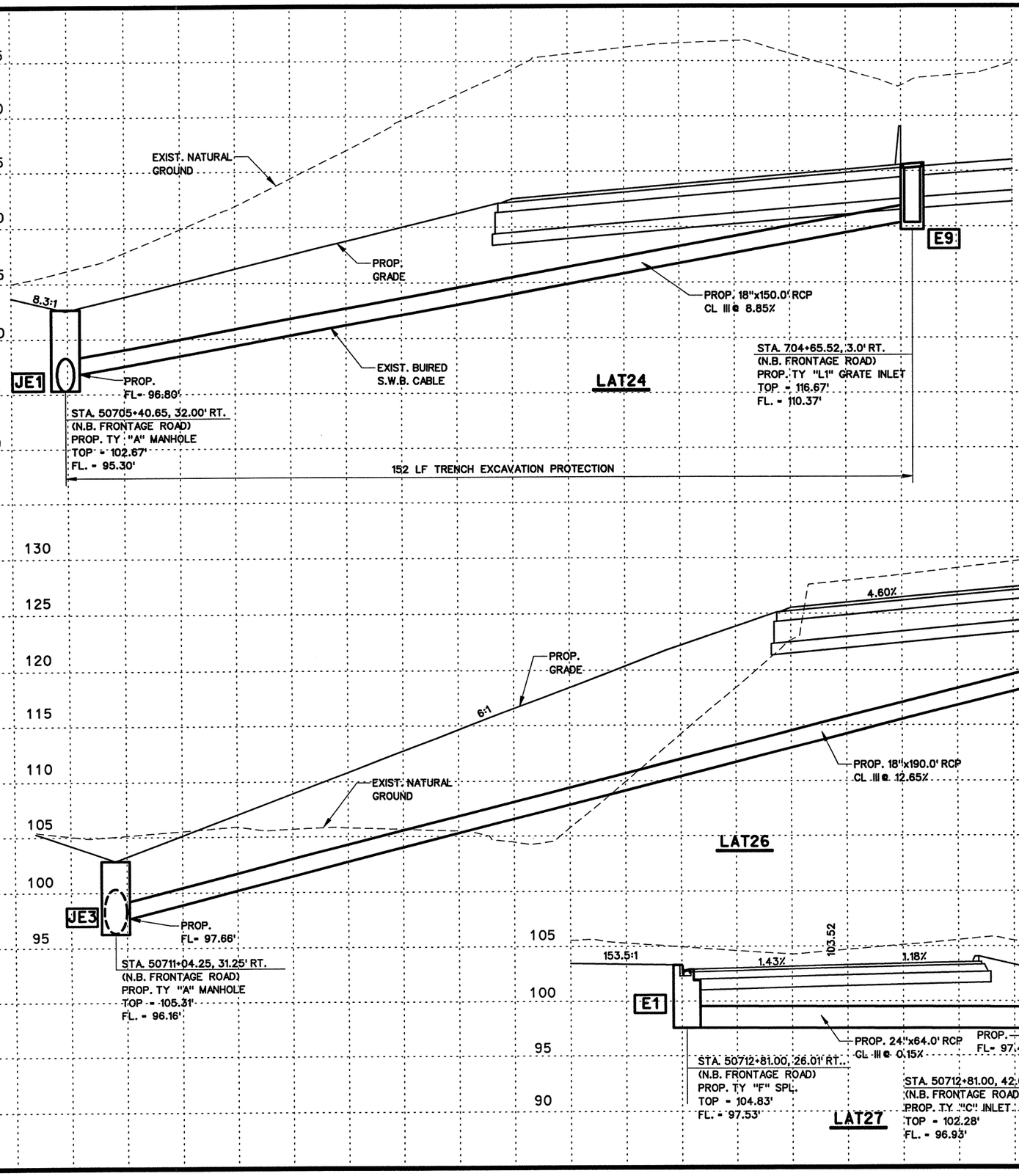

STATE OF TEXAS
RAMIRO GUTIERREZ
65948
REGISTERED PROFESSIONAL ENGINEER

THE SEAL APPEARING ON THIS DOCUMENT WAS AUTHORIZED BY RAMIRO GUTIERREZ, P.E. 65948

DATE: 8-12-03

ALTERATION OF A SEALED DOCUMENT WITHOUT PROPER NOTIFICATION TO THE RESPONSIBLE ENGINEER IS AN OFFENSE UNDER THE TEXAS ENGINEERING PRATICE LAW.

Parsons Brinckerhoff Quade & Douglas Inc.

R. Gutierrez Engineering Corporation

Texas Department of Transportation

© 2003 by TxDOT

NORTHBOUND FRONTAGE ROAD LATERAL PROFILES

SHEET 6 OF 11

DESIGNED:	FED. RD DIV. No.	STATE	FEDERAL AID PROJECT No.			HIGHWAY No.
CHECKED:	6	TEXAS				US 281
DRAWN:	STATE DISTRICT	COUNTY	CONTROL No.	SECTION No.	JOB No.	SHEET No.
CHECKED:	21	HIDALGO	0255	08	091	599

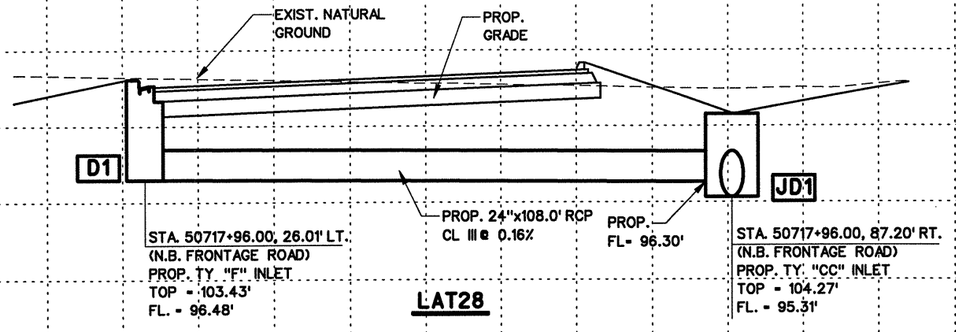

LAT28

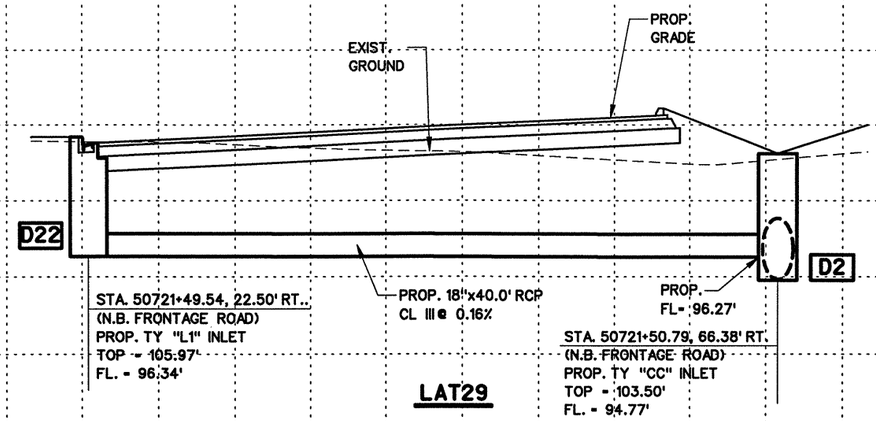

LAT29

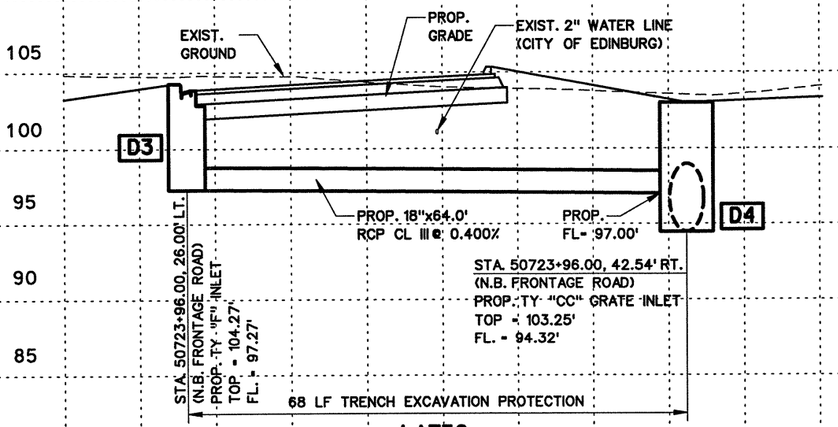

LAT30

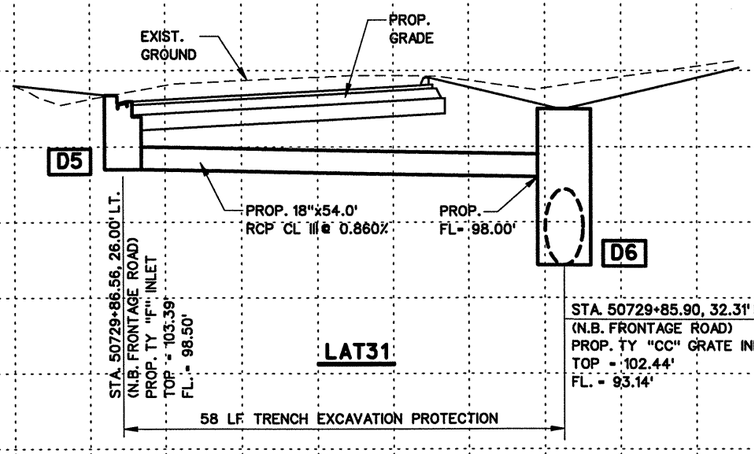

LAT31

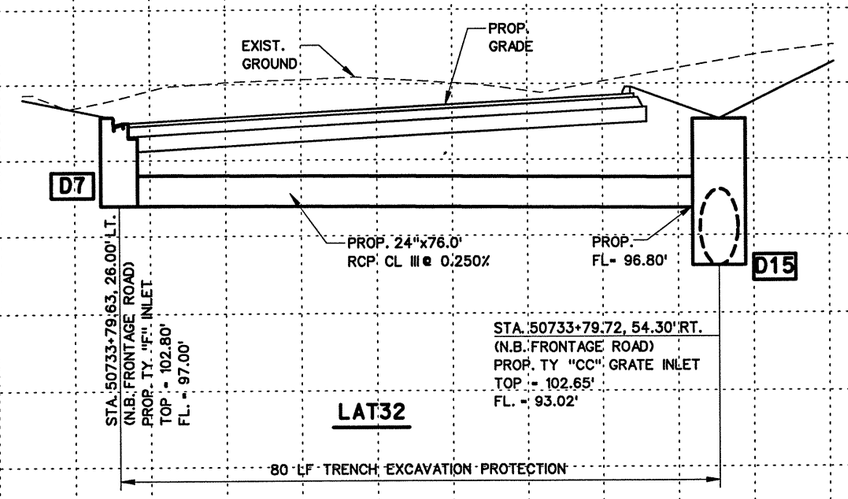

LAT32

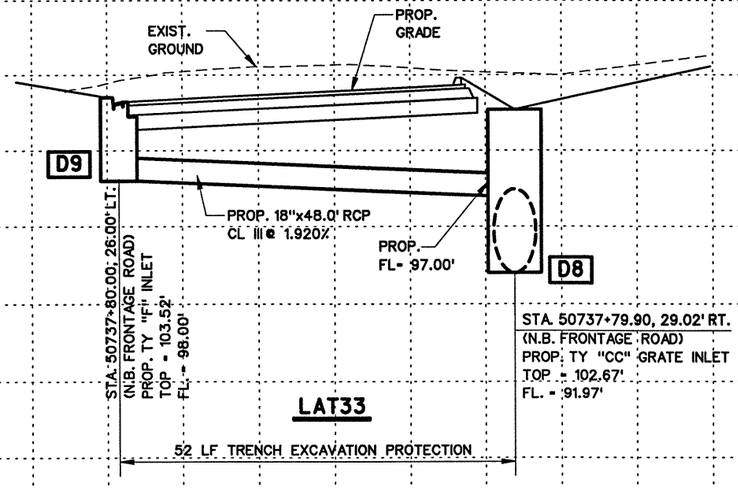

LAT33

STATE OF TEXAS
RAMIRO GUTIERREZ
65948
REGISTERED PROFESSIONAL ENGINEER

THE SEAL APPEARING ON THIS DOCUMENT WAS AUTHORIZED BY RAMIRO GUTIERREZ, P.E. 65948

DATE: 8-12-03

ALTERATION OF A SEALED DOCUMENT WITHOUT PROPER NOTIFICATION TO THE RESPONSIBLE ENGINEER IS AN OFFENSE UNDER THE TEXAS ENGINEERING PRATICE LAW.

Parsons Brinckerhoff Quade & Douglas Inc.

R. Gutierrez Engineering Corporation

Texas Department of Transportation

© 2003 by TxDOT

NORTHBOUND FRONTAGE ROAD LATERAL PROFILES

SHEET 7 OF 11

DESIGNED:	FED. RD DIV. No.	STATE	FEDERAL AID PROJECT No.			HIGHWAY No.
CHECKED:	6	TEXAS				US 281
DRAWN:	STATE DISTRICT	COUNTY	CONTROL No.	SECTION No.	JOB No.	SHEET No.
CHECKED:	21	HIDALGO	0255	08	091	600

$NAME$
$TIME$
$DATE$
$FILES$

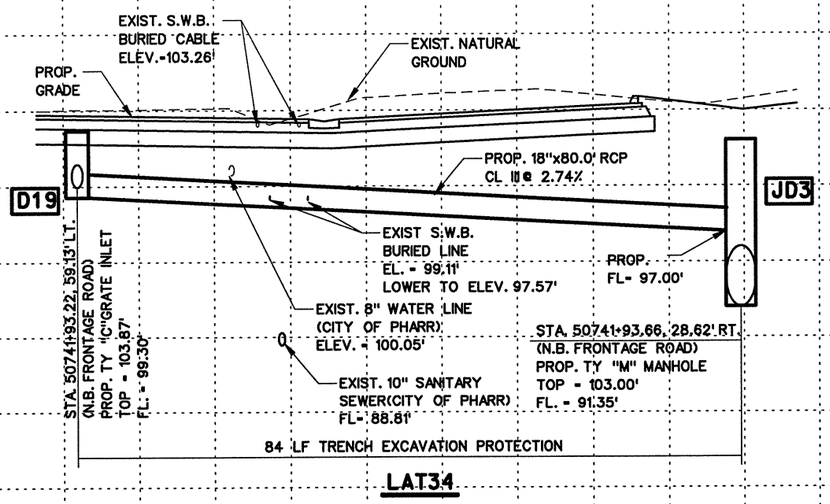

LAT34

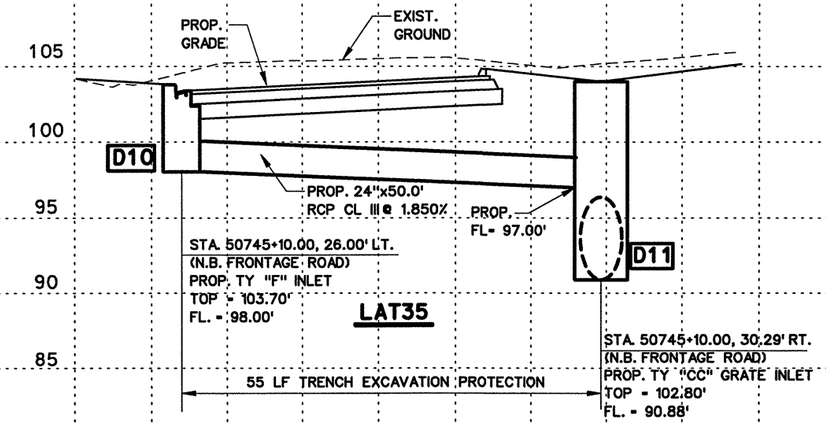

LAT35

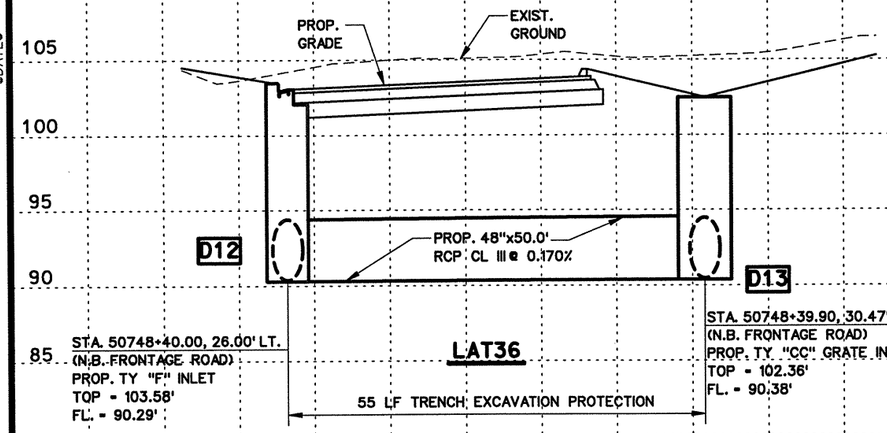

LAT36

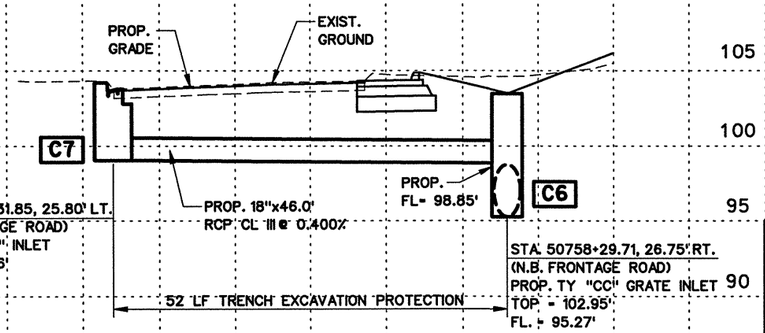

LAT37

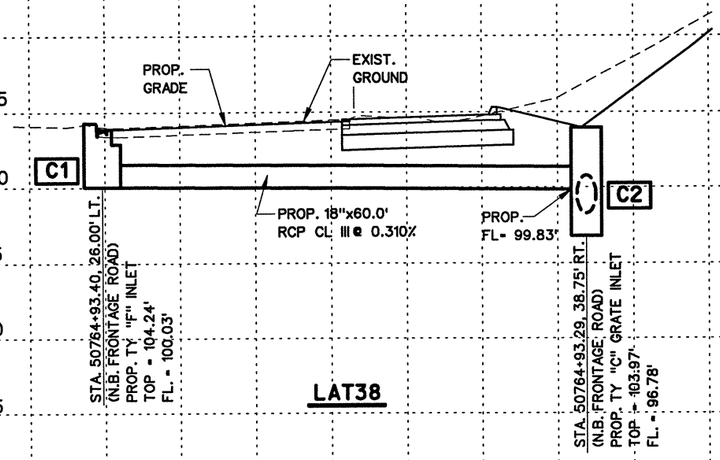

LAT38

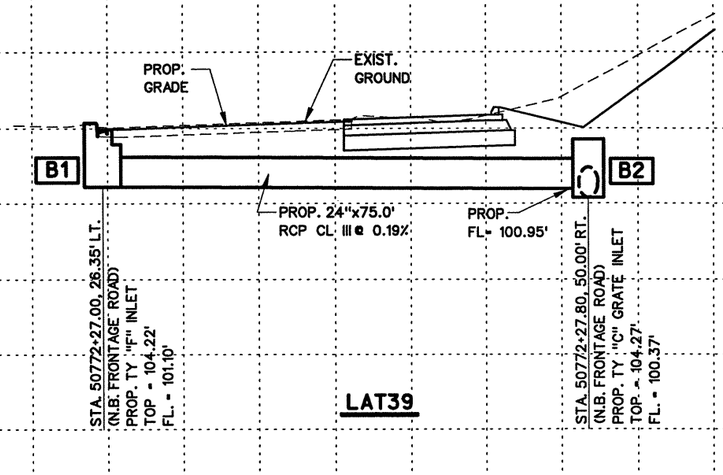

LAT39

THE SEAL APPEARING ON THIS DOCUMENT WAS AUTHORIZED BY RAMIRO GUTIERREZ, P.E. 65948

DATE: 8-12-03

ALTERATION OF A SEALED DOCUMENT WITHOUT PROPER NOTIFICATION TO THE RESPONSIBLE ENGINEER IS AN OFFENSE UNDER THE TEXAS ENGINEERING PRATICE LAW.

Parsons Brinckerhoff Quade & Douglas Inc.

R. Gutierrez Engineering Corporation

Texas Department of Transportation

© 2003 by TxDOT

NORTHBOUND FRONTAGE ROAD LATERAL PROFILES

SHEET 8 OF 11

DESIGNED:	FED. RD DIV. No.	STATE	FEDERAL AID PROJECT No.			HIGHWAY No.	
CHECKED:	6	TEXAS				US 281	
DRAWN:	STATE DISTRICT	COUNTY	CONTROL No.	SECTION No.	JOB No.	SHEET No.	
CHECKED:	21	HIDALGO	0255	08	091	601	

$NAME$
$TIME$
$DATE$
$FILE$

$NAME$

$TIME$

$DATE$

$FILE$

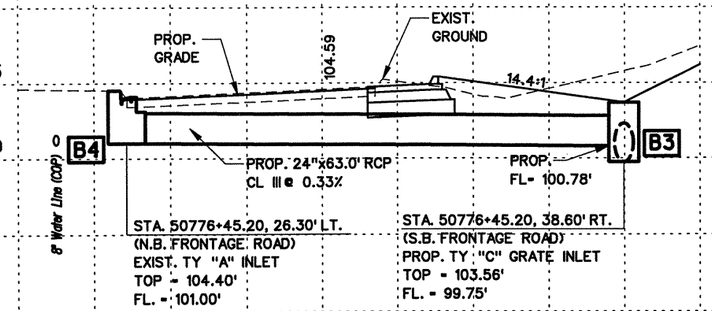

LAT40

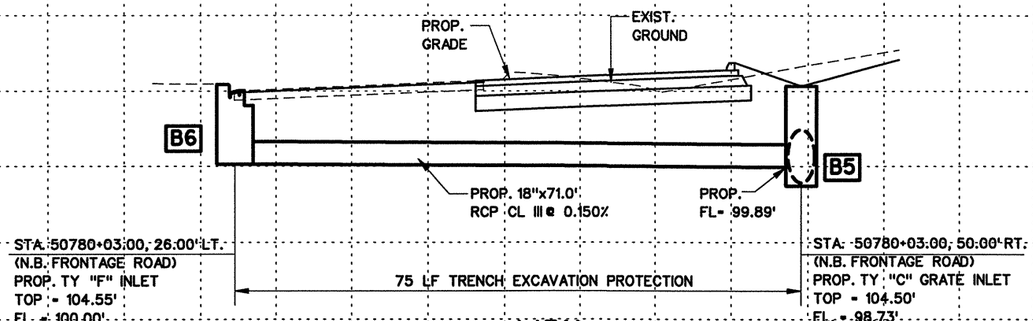

LAT41

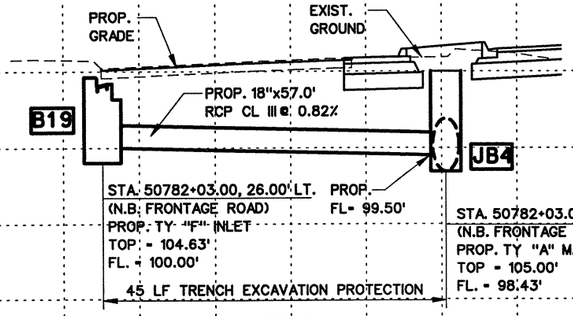

LAT42

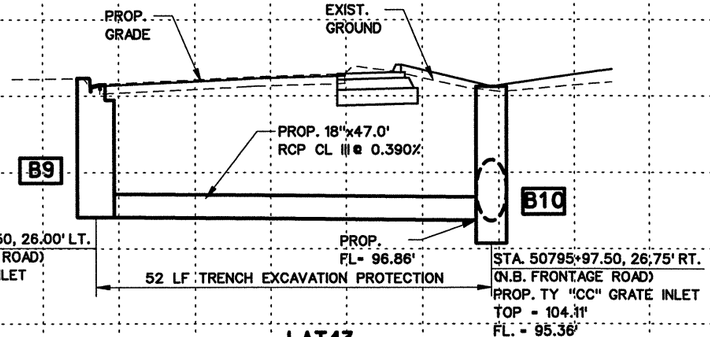

LAT43

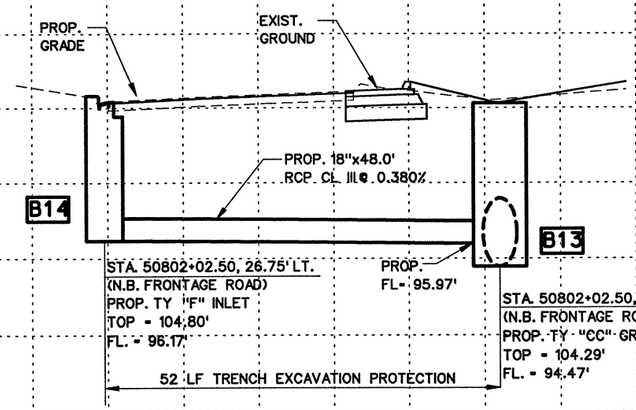

LAT44

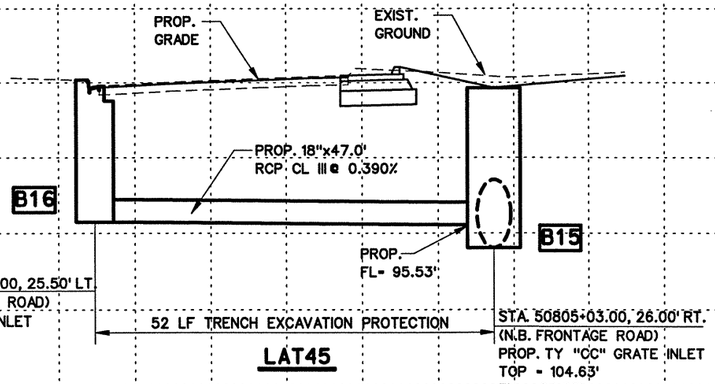

LAT45

STATE OF TEXAS
RAMIRO GUTIERREZ
65948
REGISTERED PROFESSIONAL ENGINEER

THE SEAL APPEARING ON THIS DOCUMENT WAS AUTHORIZED BY RAMIRO GUTIERREZ, P.E. 65948

DATE: 8-12-03

ALTERATION OF A SEALED DOCUMENT WITHOUT PROPER NOTIFICATION TO THE RESPONSIBLE ENGINEER IS AN OFFENSE UNDER THE TEXAS ENGINEERING PRATICE LAW.

Parsons Brinckerhoff Quade & Douglas Inc.

R. Gutierrez Engineering Corporation

Texas Department of Transportation

© 2003 by TxDOT

NORTHBOUND FRONTAGE ROAD LATERAL PROFILES

SHEET 9 OF 11

DESIGNED:	FED. RD DIV. No.	STATE	FEDERAL AID PROJECT No.			HIGHWAY No.
CHECKED:	6	TEXAS				US 281
DRAWN:	STATE DISTRICT	COUNTY	CONTROL No.	SECTION No.	JOB No.	SHEET No.
CHECKED:	21	HIDALGO	0255	08	091	602

$NAME$

$TIME$

$DATE$

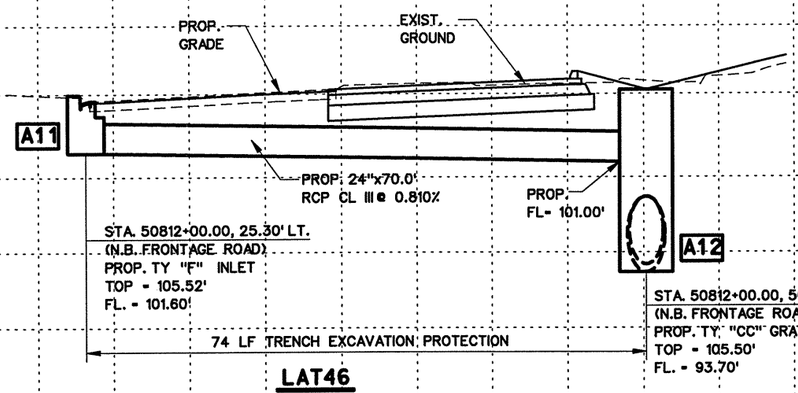

LAT46

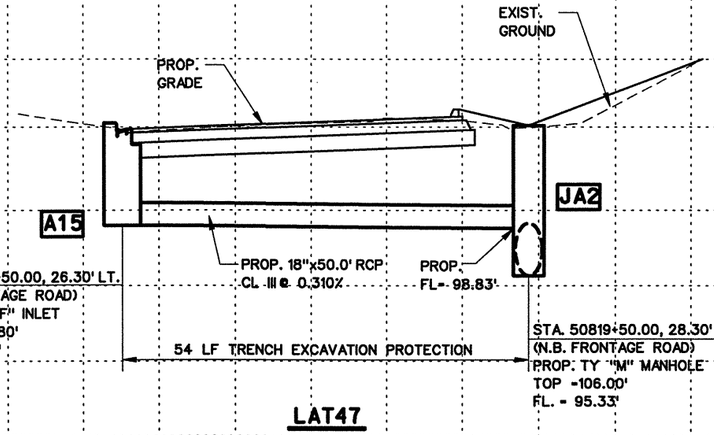

LAT47

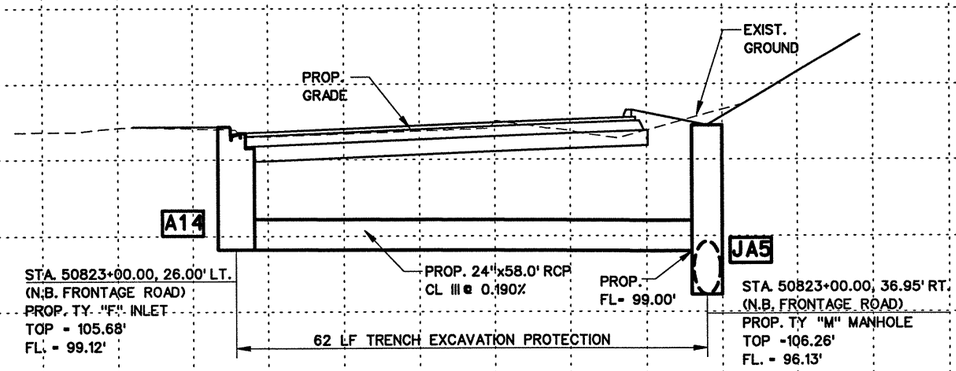

LAT48

STATE OF TEXAS
RAMIRO GUTIERREZ
65948
REGISTERED PROFESSIONAL ENGINEER

THE SEAL APPEARING ON THIS DOCUMENT WAS AUTHORIZED BY RAMIRO GUTIERREZ, P.E. 65948

DATE: 8-12-03

ALTERATION OF A SEALED DOCUMENT WITHOUT PROPER NOTIFICATION TO THE RESPONSIBLE ENGINEER IS AN OFFENSE UNDER THE TEXAS ENGINEERING PRATICE LAW.

Parsons Brinckerhoff Quade & Douglas Inc.

R. Gutierrez Engineering Corporation

Texas Department of Transportation

© 2001 by TxDOT

NORTHBOUND FRONTAGE ROAD LATERAL PROFILES

SHEET 10 OF 11

DESIGNED:	FED. RD DIV. No.	STATE	FEDERAL AID PROJECT No.			HIGHWAY No.
CHECKED:	6	TEXAS				US 281
DRAWN:	STATE DISTRICT	COUNTY	CONTROL No.	SECTION No.	JOB No.	SHEET No.
CHECKED:	21	HIDALGO	0255	08	091	603

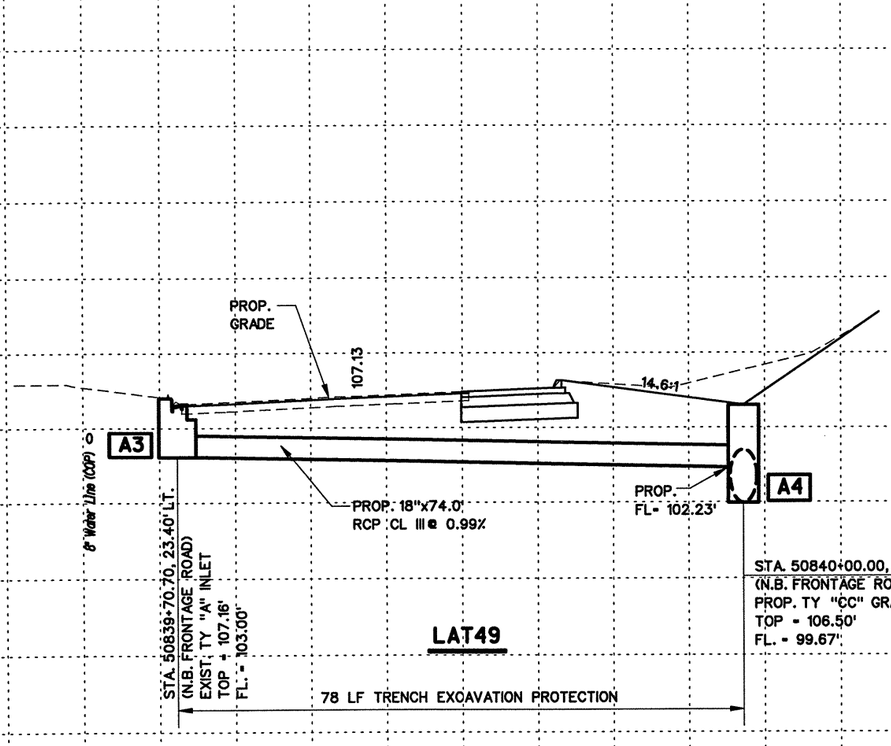

LAT49

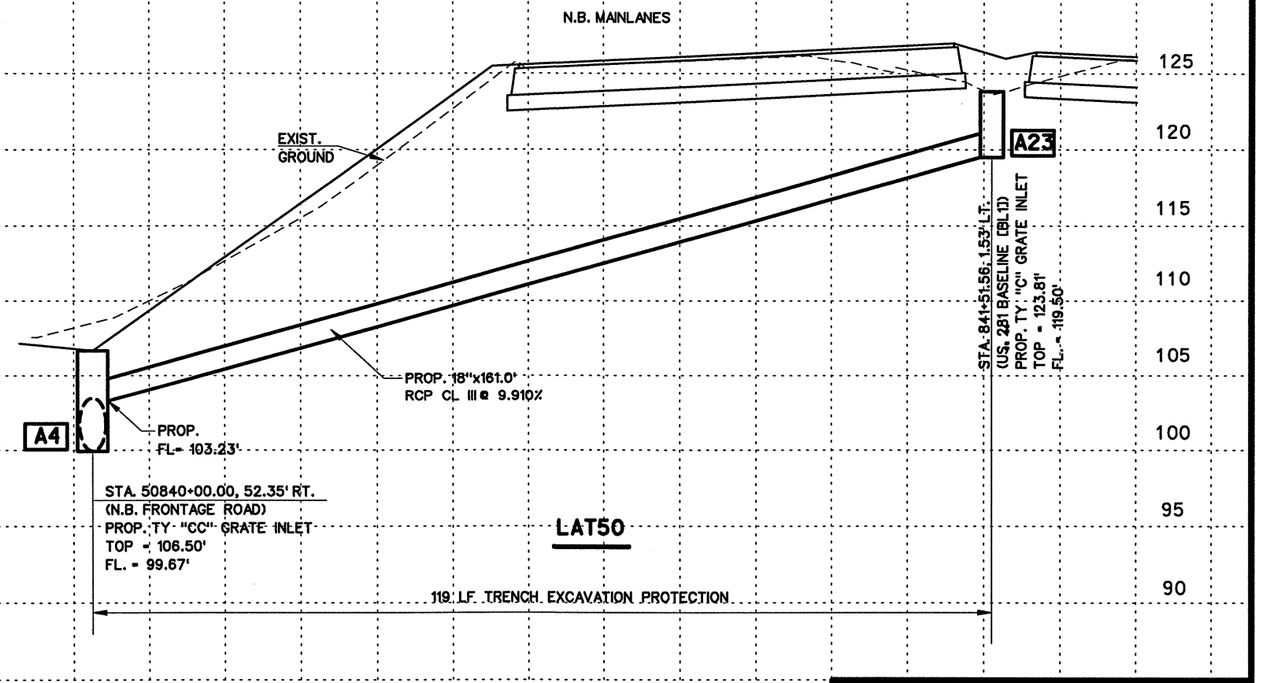

LAT50

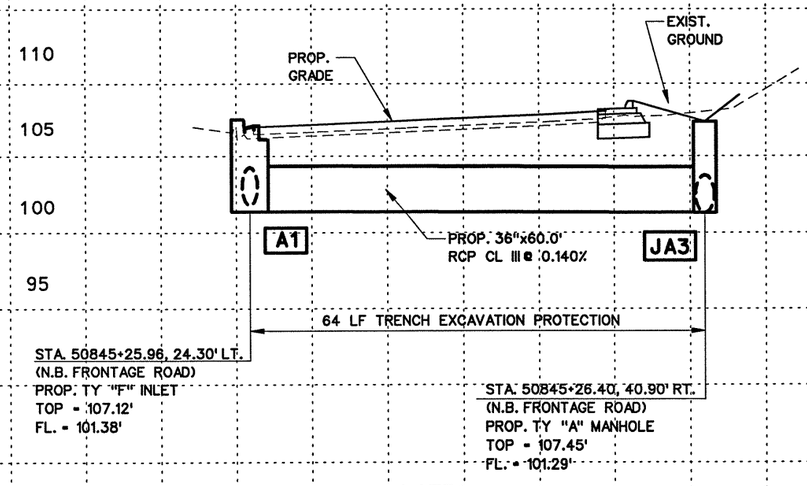

LAT51

STATE OF TEXAS
RAMIRO GUTIERREZ
65948
REGISTERED PROFESSIONAL ENGINEER

THE SEAL APPEARING ON THIS DOCUMENT WAS AUTHORIZED BY RAMIRO GUTIERREZ, P.E. 65948

DATE: 8-12-03

ALTERATION OF A SEALED DOCUMENT WITHOUT PROPER NOTIFICATION TO THE RESPONSIBLE ENGINEER IS AN OFFENSE UNDER THE TEXAS ENGINEERING PRATICE LAW.

Parsons Brinckerhoff Quade & Douglas Inc.

R. Gutierrez Engineering Corporation

Texas Department of Transportation

© 2003 by TxDOT

NORTHBOUND FRONTAGE ROAD LATERAL PROFILES

SHEET 11 OF 11

DESIGNED:	FED. RD DIV. No.	STATE	FEDERAL AID PROJECT No.			HIGHWAY No.
CHECKED:	6	TEXAS				US 281
DRAWN:	STATE DISTRICT	COUNTY	CONTROL No.	SECTION No.	JOB No.	SHEET No.
CHECKED:	21	HIDALGO	0255	08	091	504

$NAME$
$TIME$
$DATE$
$FILE$

$NAME$
$TIME$
$DATE$
$FILE$

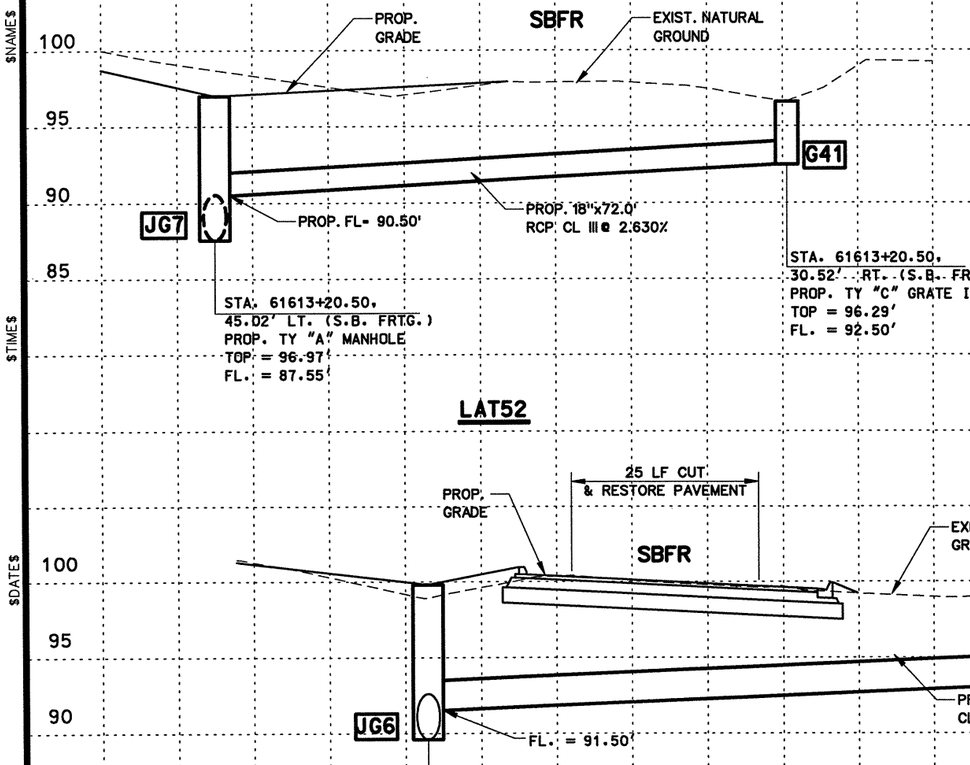

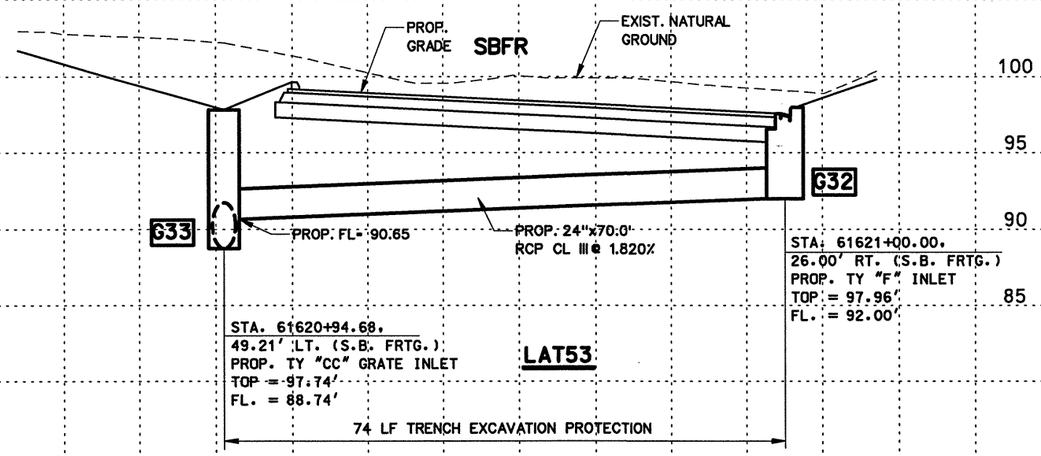

LAT52

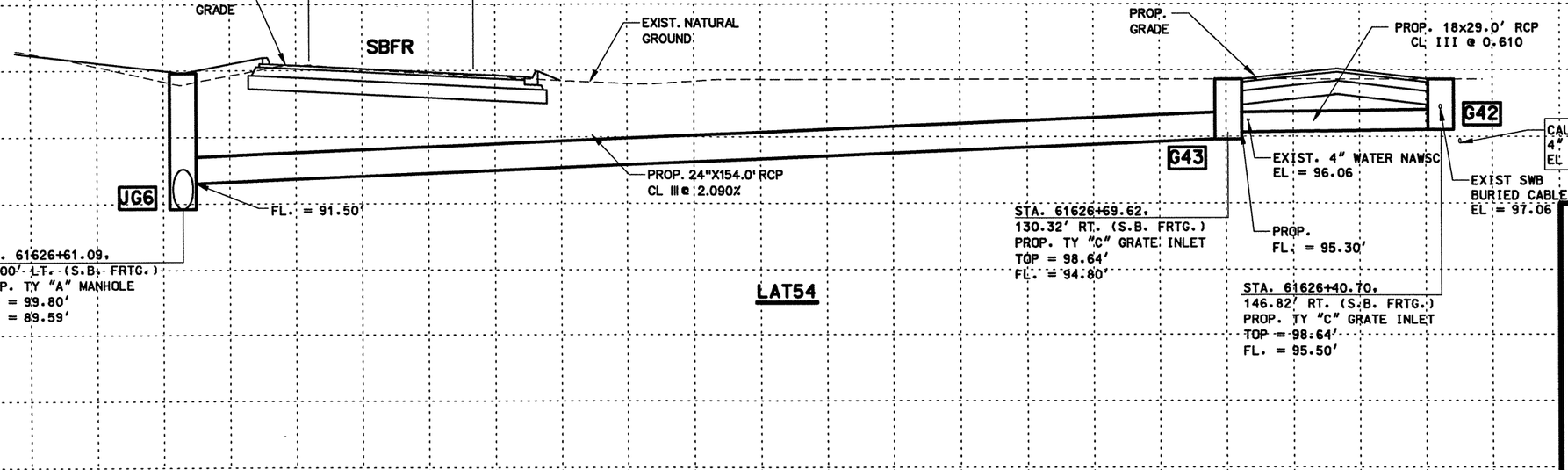

LAT54

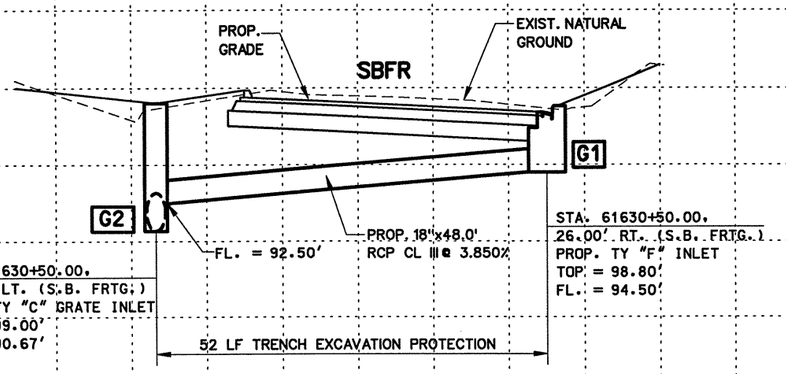

LAT55

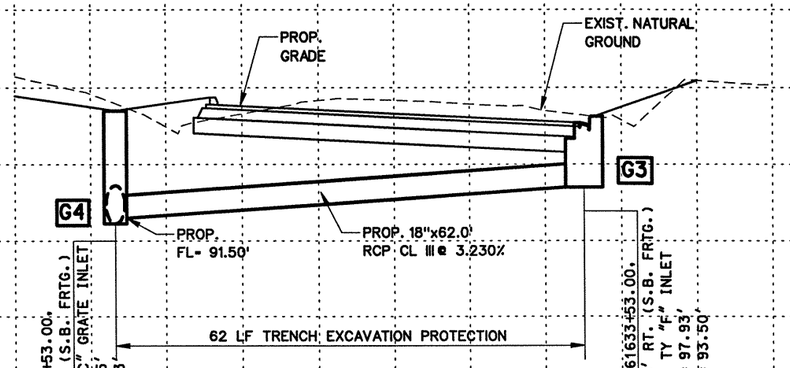

LAT56

STATE OF TEXAS
RAMIRO GUTIERREZ
65948
REGISTERED PROFESSIONAL ENGINEER

THE SEAL APPEARING ON THIS DOCUMENT WAS AUTHORIZED BY RAMIRO GUTIERREZ, P.E. 65948

DATE: 8-12-03

ALTERATION OF A SEALED DOCUMENT WITHOUT PROPER NOTIFICATION TO THE RESPONSIBLE ENGINEER IS AN OFFENSE UNDER THE TEXAS ENGINEERING PRATICE LAW.

Parsons Brinckerhoff Quade & Douglas Inc.

R. Gutierrez Engineering Corporation

Texas Department of Transportation

© 2003 by TxDOT

SOUTHBOUND FRONTAGE ROAD LATERAL PROFILES

SHEET 1 OF 11

DESIGNED:	FED. RD DIV. No.	STATE	FEDERAL AID PROJECT No.			HIGHWAY No.	
CHECKED:	6	TEXAS				US 281	
DRAWN:	STATE DISTRICT	COUNTY	CONTROL No.	SECTION No.	JOB No.	SHEET No.	
CHECKED:	21	HIDALGO	0255	08	091	605	

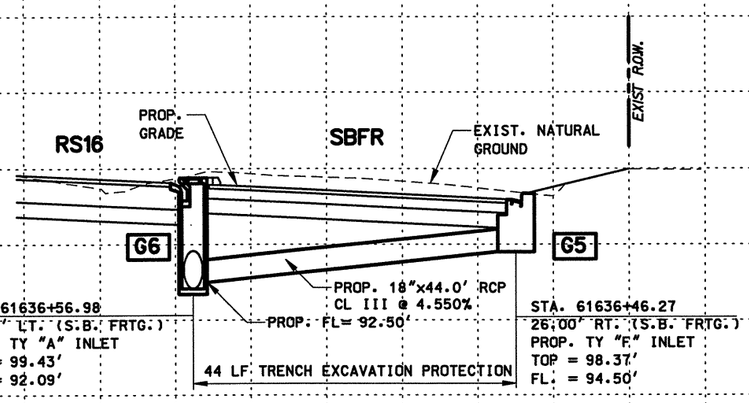

LAT57

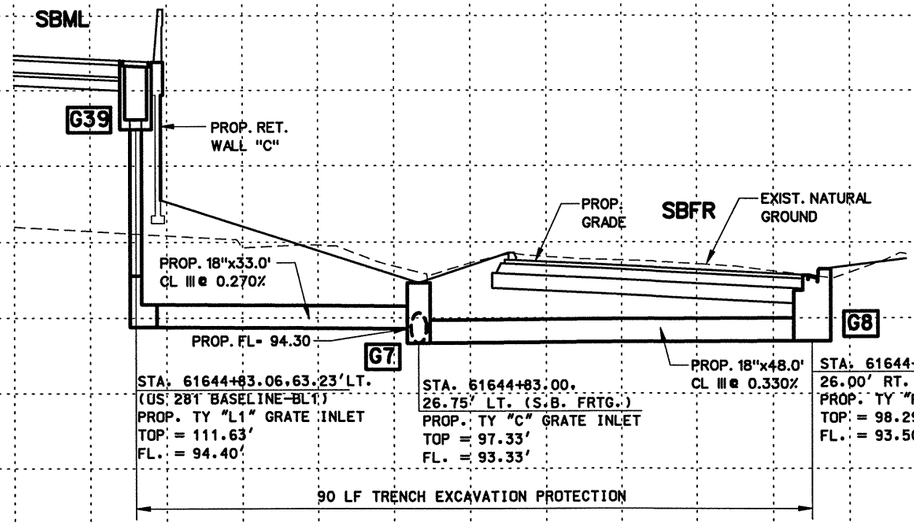

LAT58

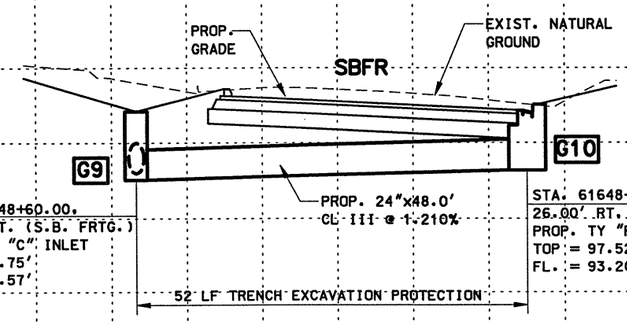

LAT59

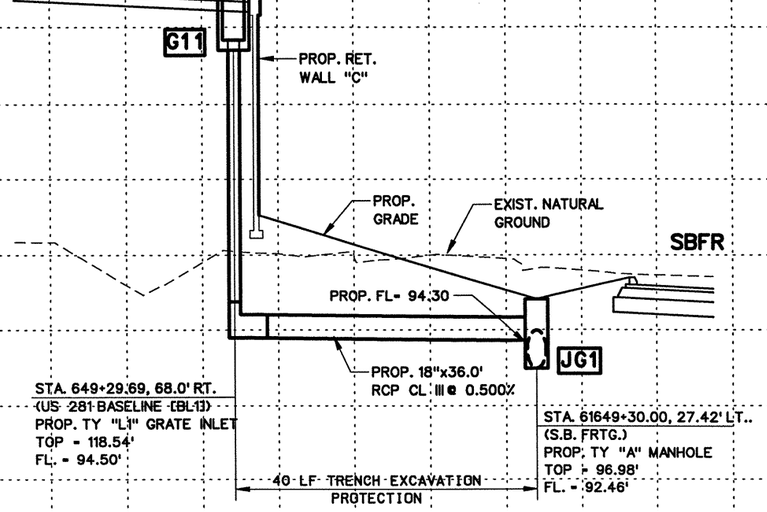

LAT60

THE SEAL APPEARING ON THIS DOCUMENT WAS AUTHORIZED BY RAMIRO GUTIERREZ, P.E. 65948

DATE: 8-12-03

ALTERATION OF A SEALED DOCUMENT WITHOUT PROPER NOTIFICATION TO THE RESPONSIBLE ENGINEER IS AN OFFENSE UNDER THE TEXAS ENGINEERING PRATICE LAW.

Parsons Brinckerhoff Quade & Douglas Inc.

R. Gutierrez Engineering Corporation

Texas Department of Transportation

©2003 by TxDOT

SOUTHBOUND FRONTAGE ROAD LATERAL PROFILES

SHEET 2 OF 11

DESIGNED:	FED. RD DIV. No.	STATE	FEDERAL AID PROJECT No.			HIGHWAY No.	
CHECKED:	6	TEXAS				US 281	
DRAWN:	STATE DISTRICT	COUNTY	CONTROL No.	SECTION No.	JOB No.	SHEET No.	
CHECKED:	21	HIDALGO	0255	08	091	606	

$NAME$ $TIME$ $DATE$ $FILES$

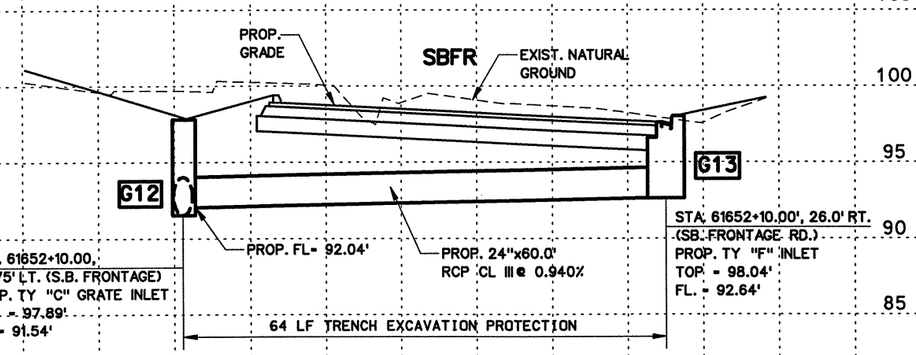

LAT61

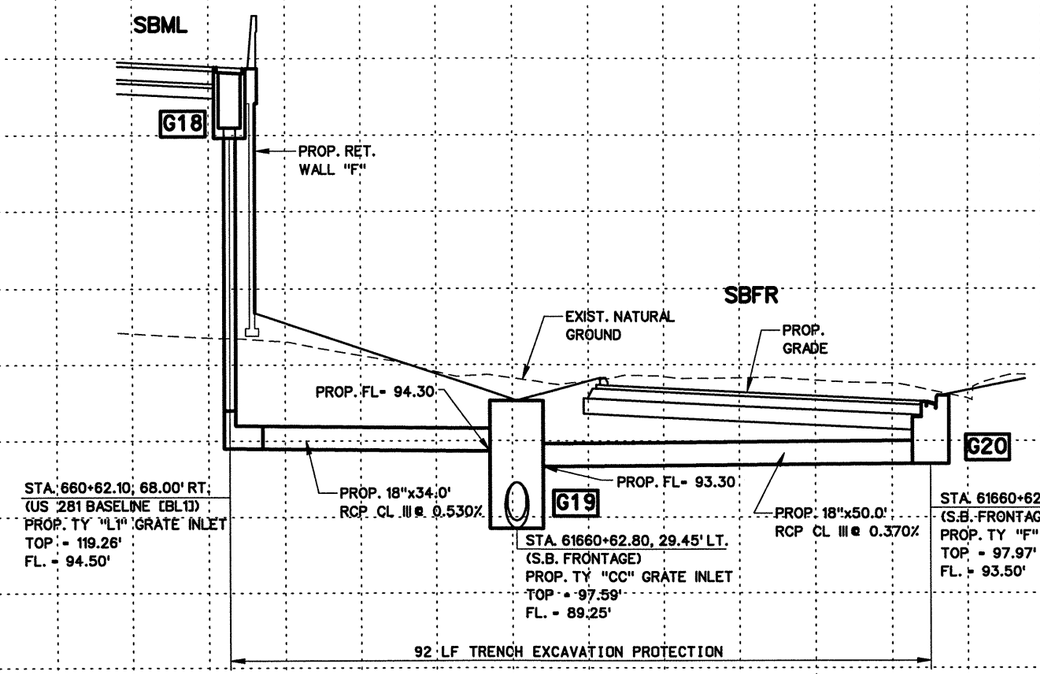

LAT62

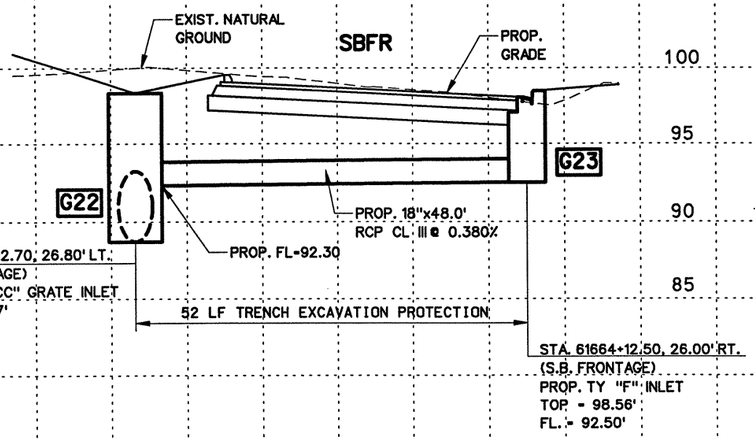

LAT63

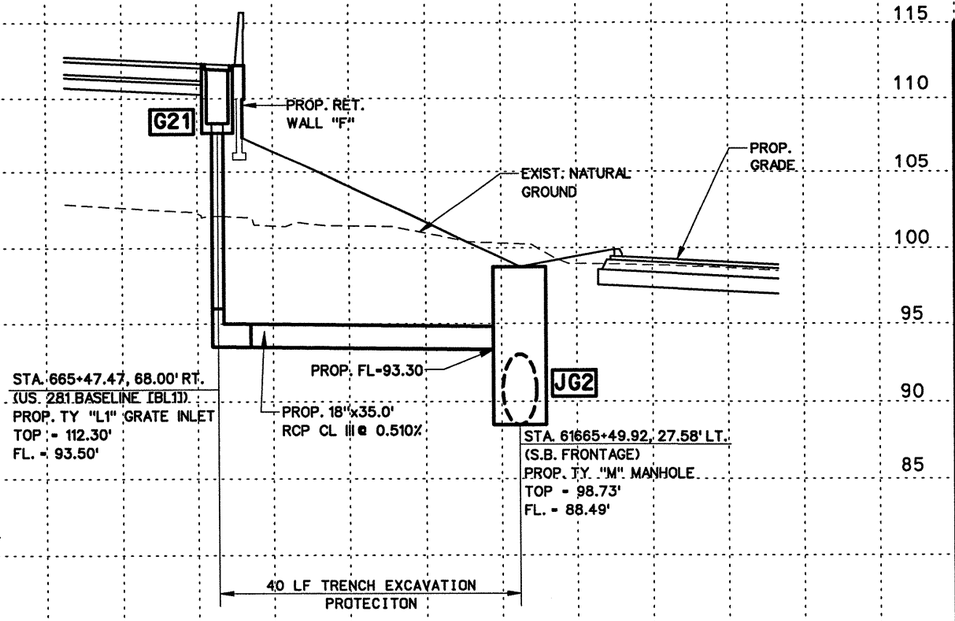

LAT64

STATE OF TEXAS
RAMIRO GUTIERREZ
65948
REGISTERED PROFESSIONAL ENGINEER

THE SEAL APPEARING ON THIS DOCUMENT WAS AUTHORIZED BY RAMIRO GUTIERREZ, P.E. 65948

DATE: 8-12-03

ALTERATION OF A SEALED DOCUMENT WITHOUT PROPER NOTIFICATION TO THE RESPONSIBLE ENGINEER IS AN OFFENSE UNDER THE TEXAS ENGINEERING PRATICE LAW.

Parsons Brinckerhoff Quade & Douglas Inc.

R. Gutierrez Engineering Corporation

Texas Department of Transportation

© 2003 by TxDOT

SOUTHBOUND FRONTAGE ROAD LATERAL PROFILES

SHEET 3 OF 11

DESIGNED:	FED. RD DIV. No.	STATE	FEDERAL AID PROJECT No.			HIGHWAY No.	
CHECKED:	6	TEXAS				US 281	
DRAWN:	STATE DISTRICT	COUNTY	CONTROL No.	SECTION No.	JOB No.	SHEET No.	
CHECKED:	21	HIDALGO	0255	08	091	607	

$NAME$
$TIME$
$DATE$
$FILE$

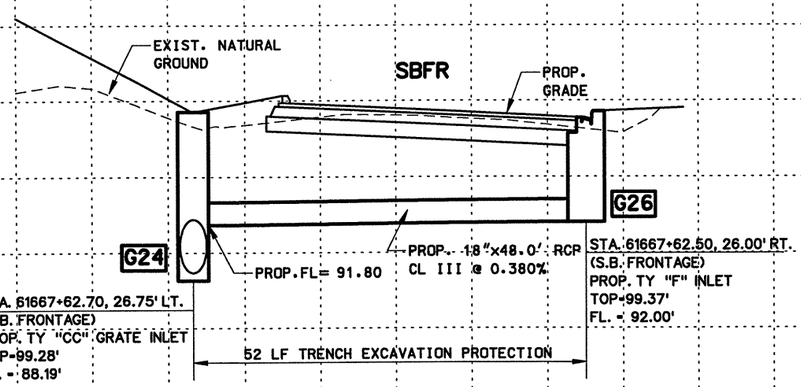

LAT65

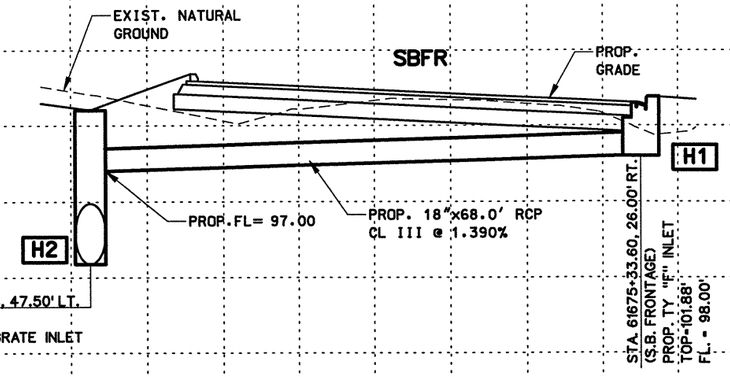

LAT66

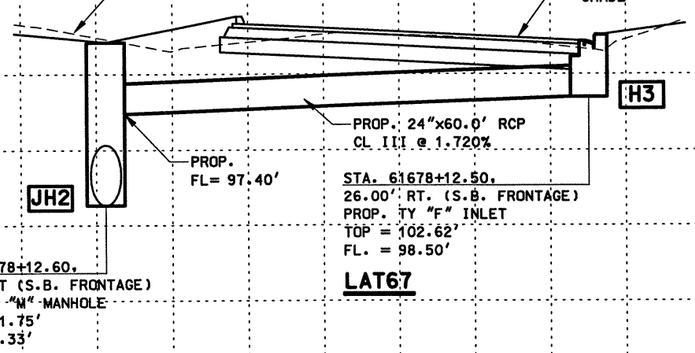

LAT67

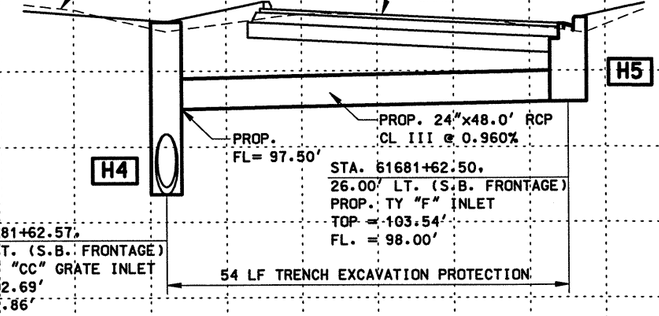

LAT68

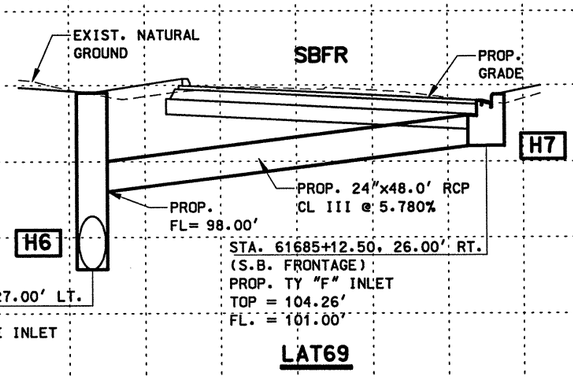

LAT69

STATE OF TEXAS
RAMIRO GUTIERREZ
65948
REGISTERED
PROFESSIONAL ENGINEER

THE SEAL APPEARING ON THIS DOCUMENT WAS AUTHORIZED BY RAMIRO GUTIERREZ, P.E. 65948

DATE: 8-12-03

ALTERATION OF A SEALED DOCUMENT WITHOUT PROPER NOTIFICATION TO THE RESPONSIBLE ENGINEER IS AN OFFENSE UNDER THE TEXAS ENGINEERING PRATICE LAW.

Parsons Brinckerhoff
Quade & Douglas Inc.

R. Gutierrez Engineering Corporation

Texas Department of Transportation

© 2003 by TxDOT

SOUTHBOUND FRONTAGE ROAD LATERAL PROFILES

SHEET 4 OF 11

DESIGNED:	FED. RD DIV. No.	STATE	FEDERAL AID PROJECT No.			HIGHWAY No.
CHECKED:	6	TEXAS				US 281
DRAWN:	STATE DISTRICT	COUNTY	CONTROL No.	SECTION No.	JOB No.	SHEET No.
CHECKED:	21	HIDALGO	0255	08	091	608

$NAME$
$TIME$
$DATE$
$FILE$

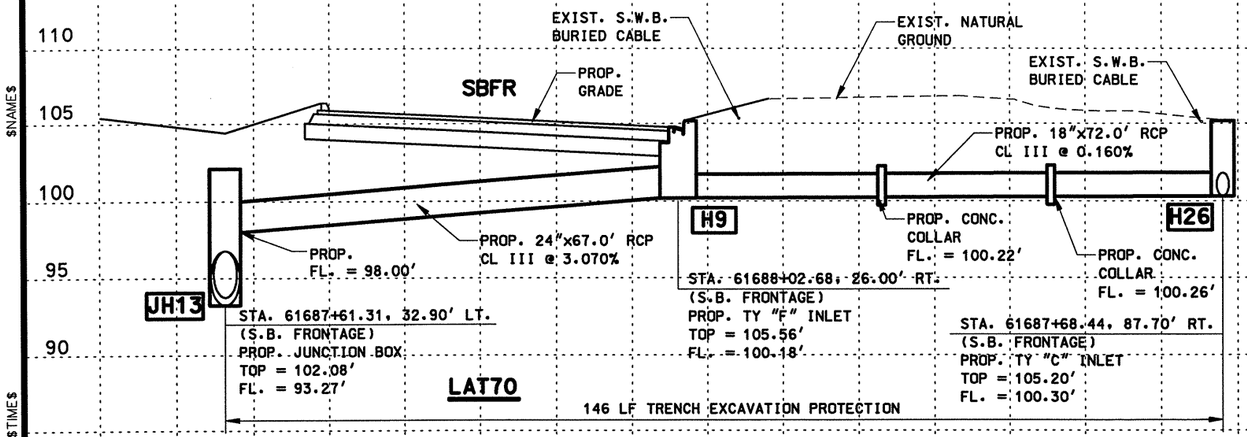

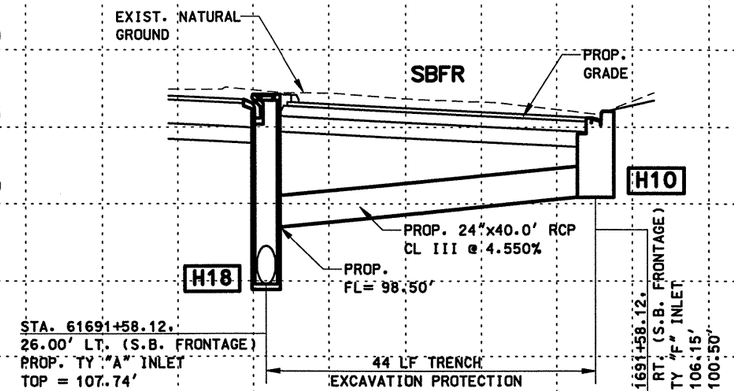

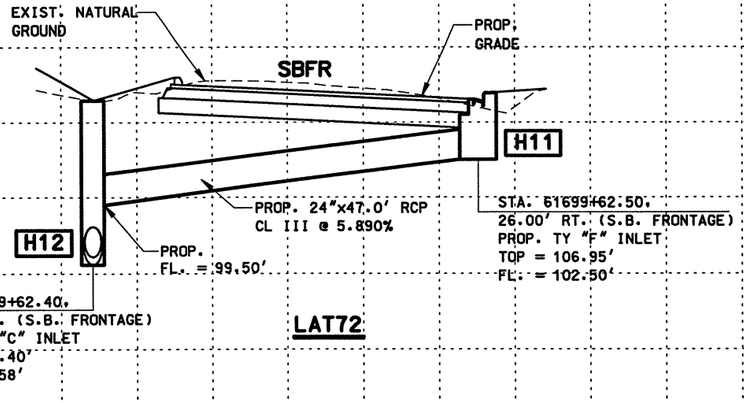

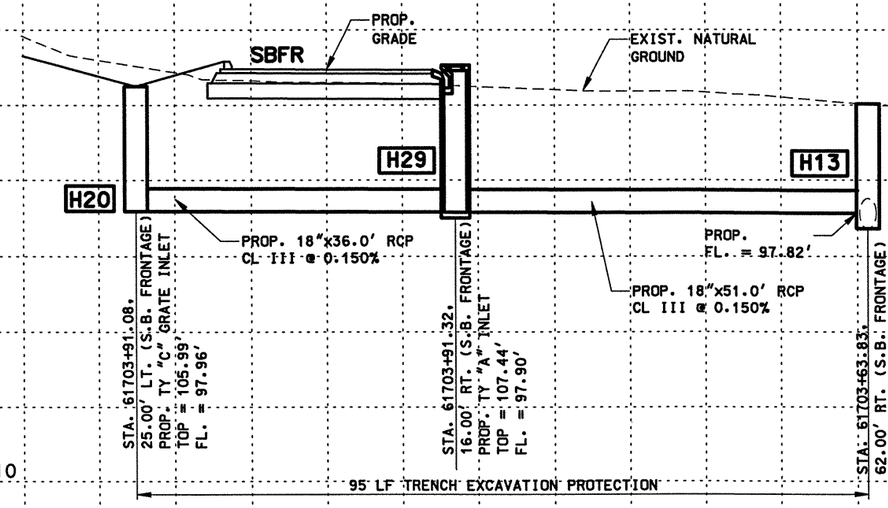

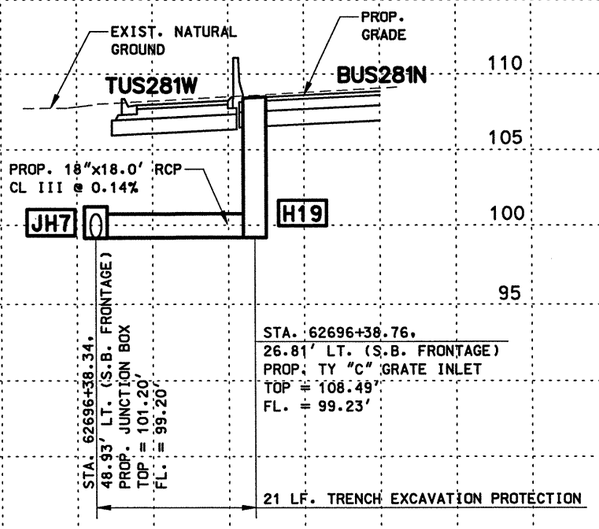

THE SEAL APPEARING ON THIS DOCUMENT WAS AUTHORIZED BY RAMIRO GUTIERREZ, P.E. 65948

DATE: 8-12-03

ALTERATION OF A SEALED DOCUMENT WITHOUT PROPER NOTIFICATION TO THE RESPONSIBLE ENGINEER IS AN OFFENSE UNDER THE TEXAS ENGINEERING PRATICE LAW.

Parsons Brinckerhoff Quade & Douglas Inc.

R. Gutierrez Engineering Corporation

Texas Department of Transportation

© 2003 by TxDOT

SOUTHBOUND FRONTAGE ROAD LATERAL PROFILES

SHEET 5 OF 11

DESIGNED:	FED. RD DIV. No.	STATE	FEDERAL AID PROJECT No.			HIGHWAY No.	
CHECKED:	6	TEXAS				US 281	
DRAWN:	STATE DISTRICT	COUNTY	CONTROL No.	SECTION No.	JOB No.	SHEET No.	
CHECKED:	21	HIDALGO	0255	08	091	609	

$NAME$ $TIME$ $DATE$ $FILE$

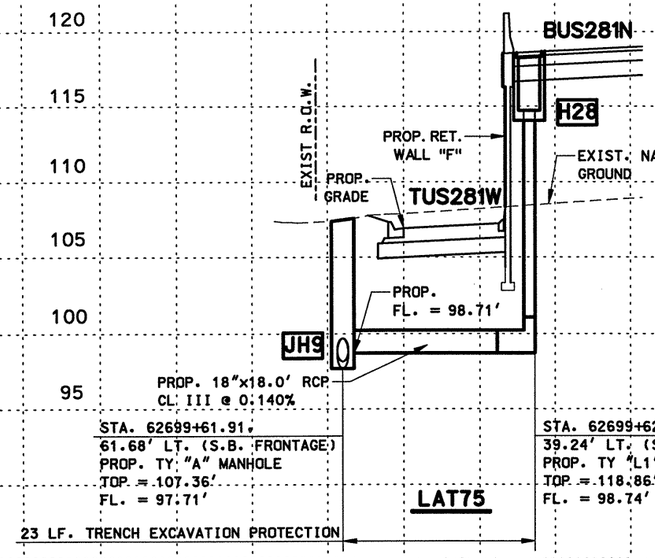

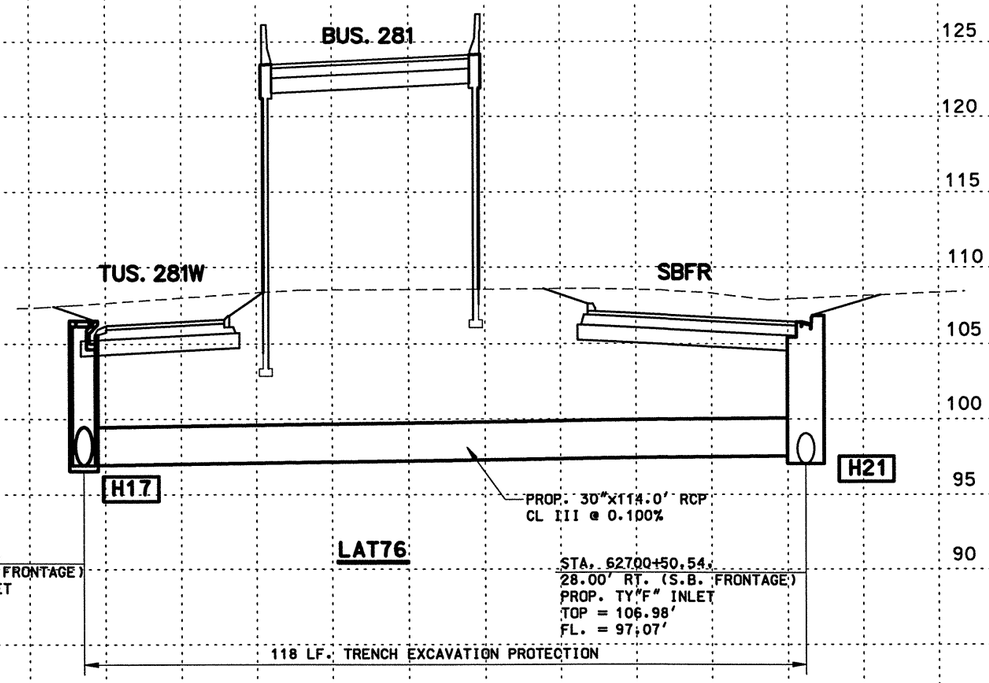

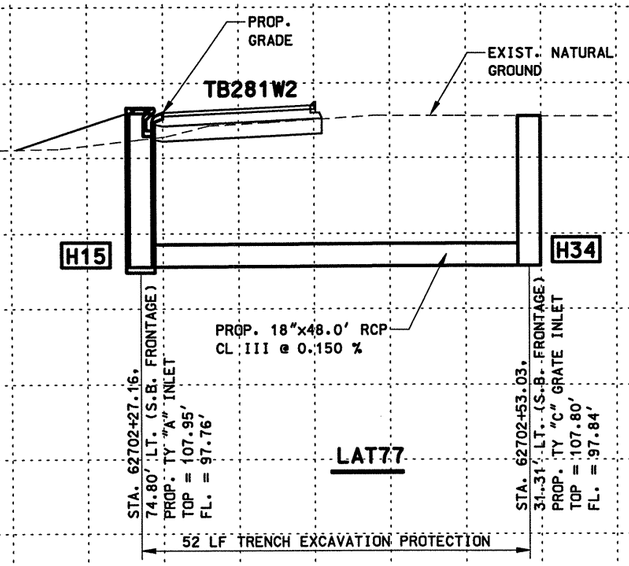

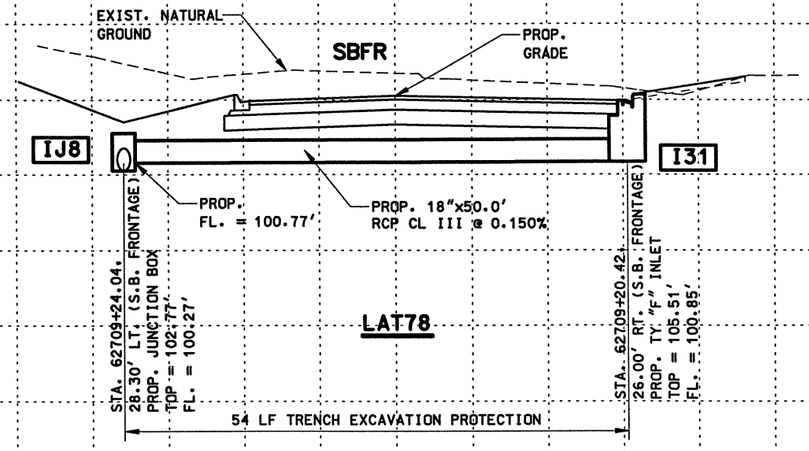

STATE OF TEXAS
RAMIRO GUTIERREZ
65948
REGISTERED PROFESSIONAL ENGINEER

THE SEAL APPEARING ON THIS DOCUMENT WAS AUTHORIZED BY RAMIRO GUTIERREZ, P.E. 65948

DATE: 8-12-03

ALTERATION OF A SEALED DOCUMENT WITHOUT PROPER NOTIFICATION TO THE RESPONSIBLE ENGINEER IS AN OFFENSE UNDER THE TEXAS ENGINEERING PRATICE LAW.

Parsons Brinckerhoff Quade & Douglas Inc.

R. Gutierrez Engineering Corporation

Texas Department of Transportation

©2003 by TxDOT

SOUTHBOUND FRONTAGE ROAD LATERAL PROFILES

SHEET 6 OF 11

DESIGNED:	FED. RD DIV. No.	STATE	FEDERAL AID PROJECT No.			HIGHWAY No.	
CHECKED:	6	TEXAS				US 281	
DRAWN:	STATE DISTRICT	COUNTY	CONTROL No.	SECTION No.	JOB No.	SHEET No.	
CHECKED:	21	HIDALGO	0255	08	091	610	

$NAME$
$TIME$
$DATE$
$FILE$

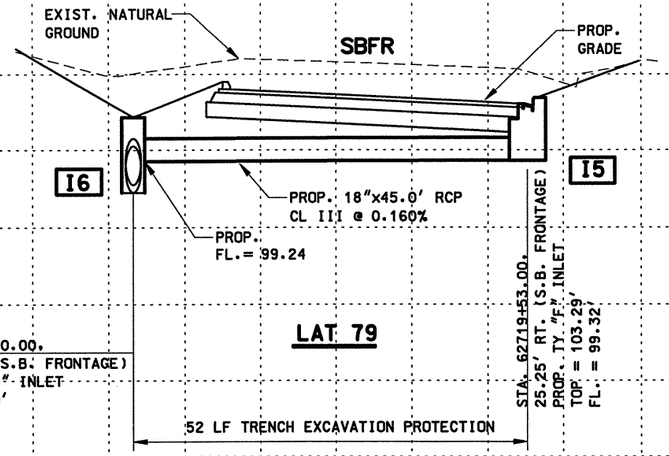

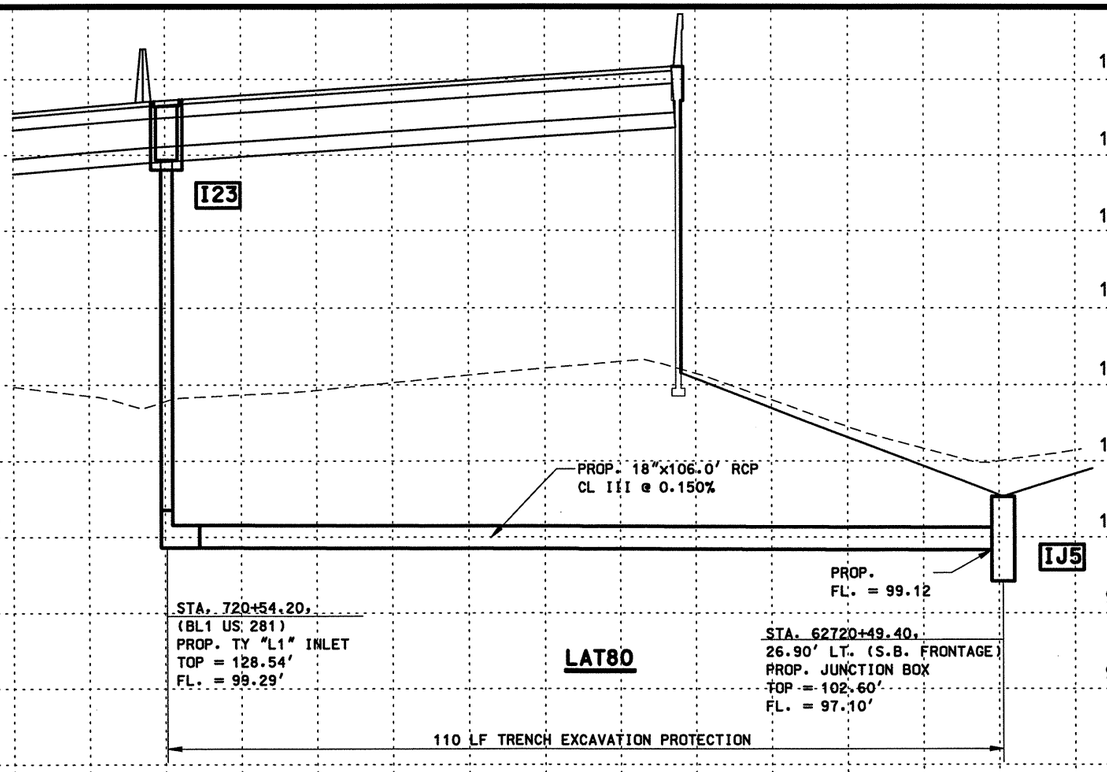

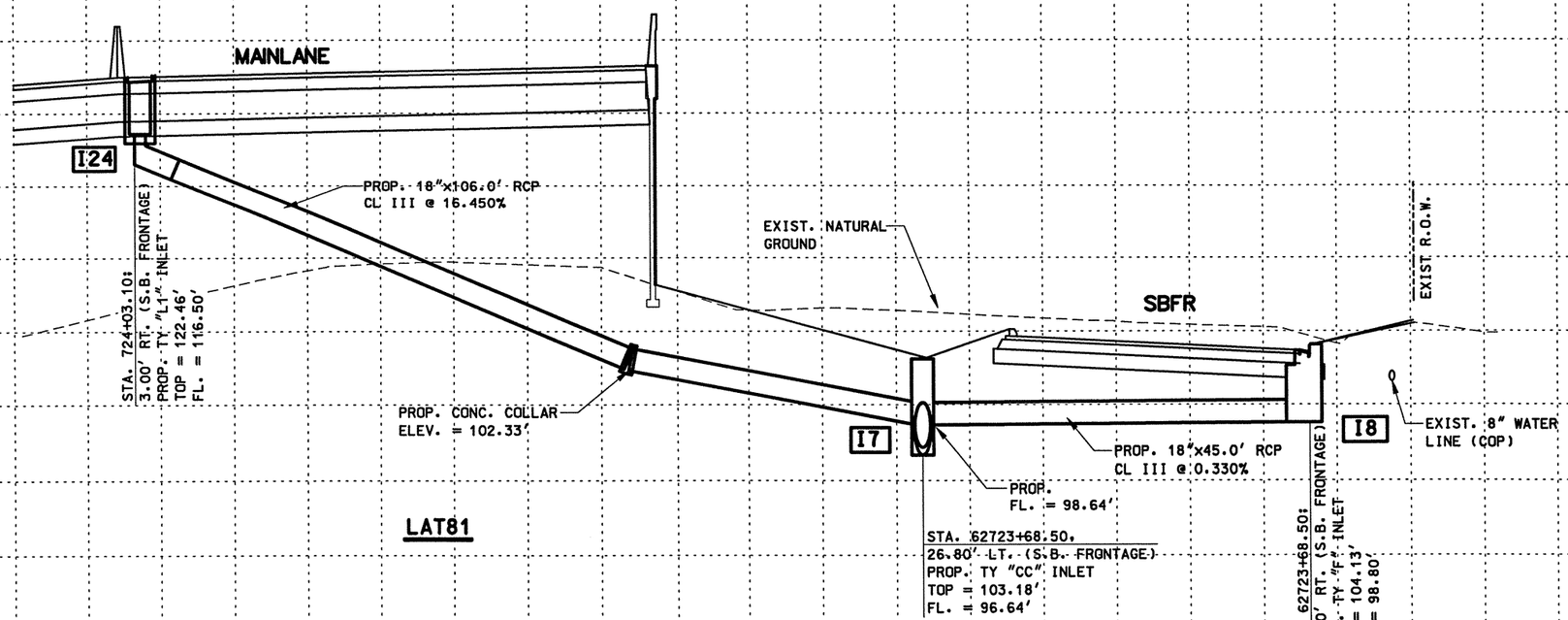

THE SEAL APPEARING ON THIS DOCUMENT WAS AUTHORIZED BY RAMIRO GUTIERREZ, P.E. 65948

DATE: 8-12-03

ALTERATION OF A SEALED DOCUMENT WITHOUT PROPER NOTIFICATION TO THE RESPONSIBLE ENGINEER IS AN OFFENSE UNDER THE TEXAS ENGINEERING PRATICE LAW.

Parsons Brinckerhoff Quade & Douglas Inc.

R. Gutierrez Engineering Corporation

Texas Department of Transportation

© 2003 by TxDOT

SOUTHBOUND FRONTAGE ROAD LATERAL PROFILES

SHEET 7 OF 11

DESIGNED:	FED. RD DIV. No.	STATE	FEDERAL AID PROJECT No.			HIGHWAY No.	
CHECKED:	6	TEXAS				US 281	
DRAWN:	STATE DISTRICT	COUNTY	CONTROL No.	SECTION No.	JOB No.	SHEET No.	
CHECKED:	21	HIDALGO	0255	08	091	611	

$NAME$ $TIME$ $DATE$ $FILE$

$NAME$
$TIME$
$DATE$
$FILE$

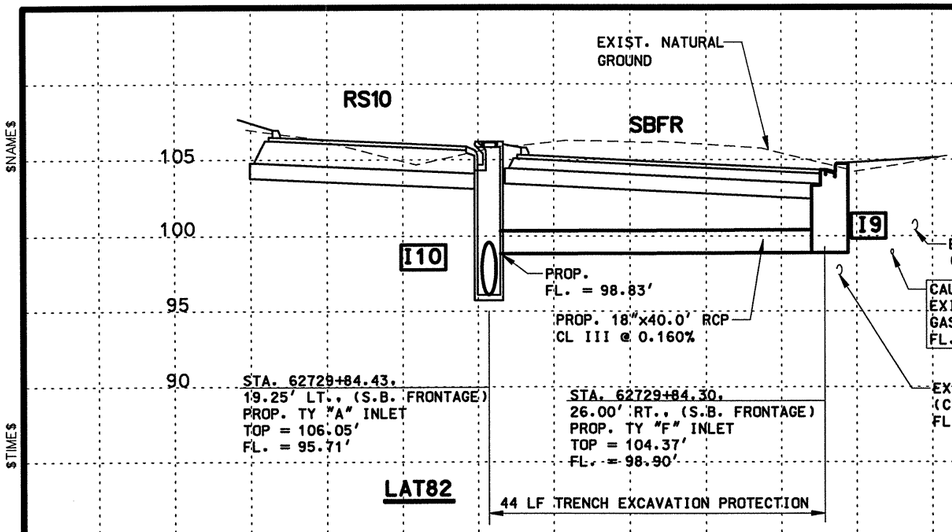

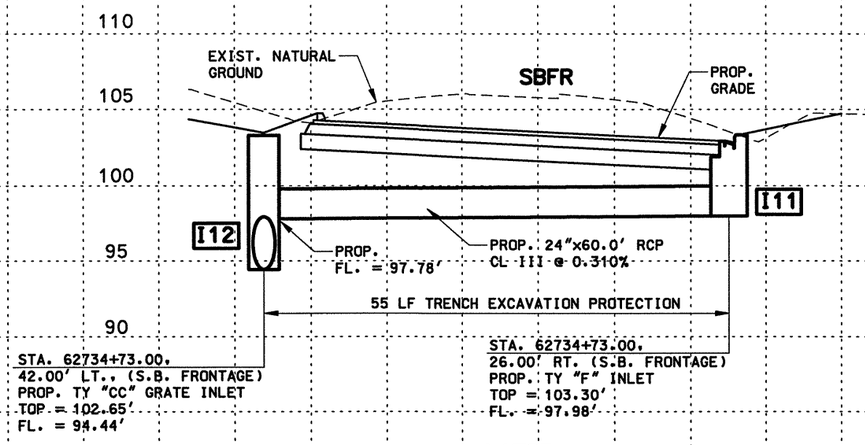

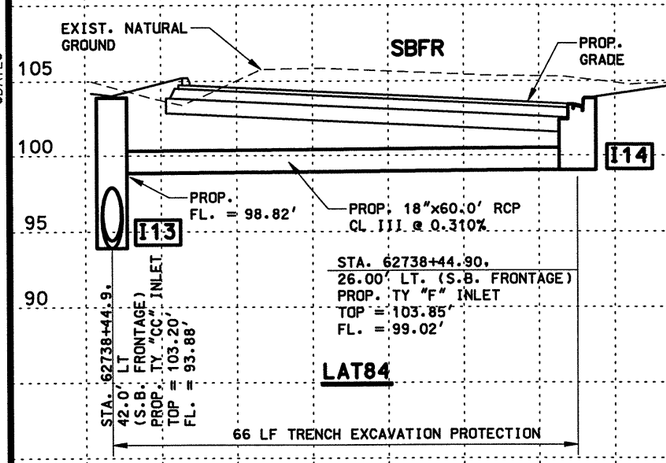

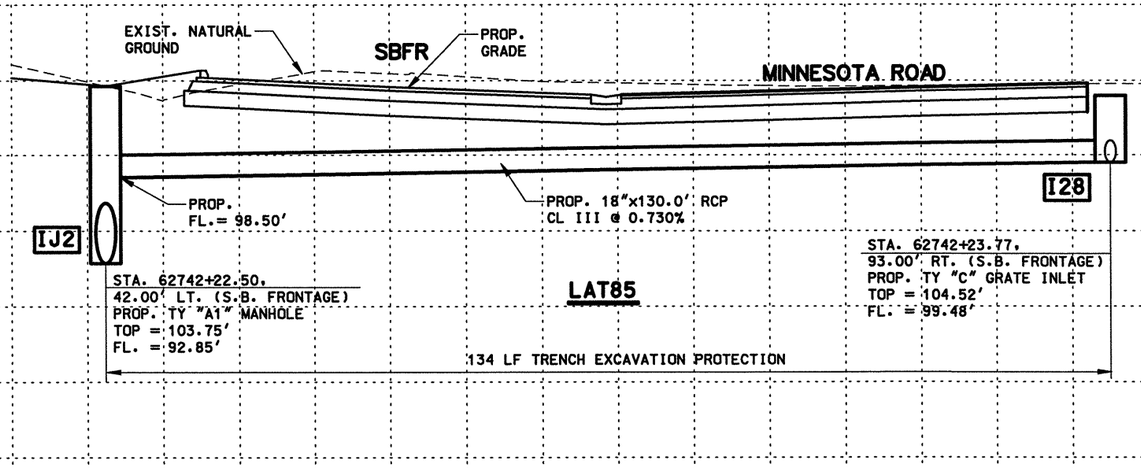

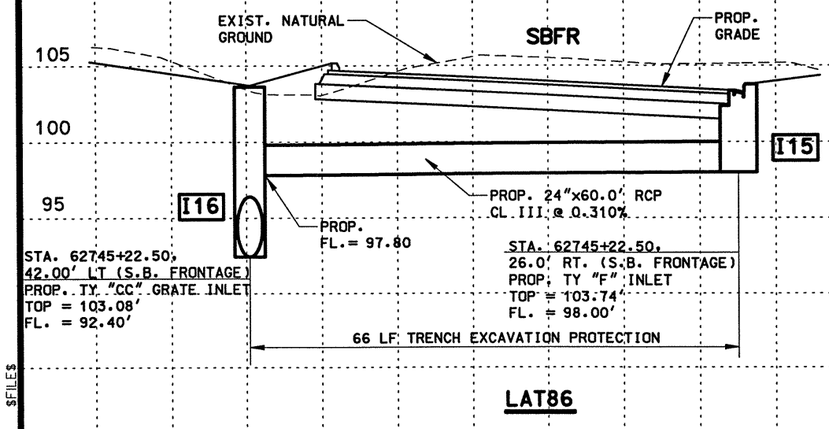

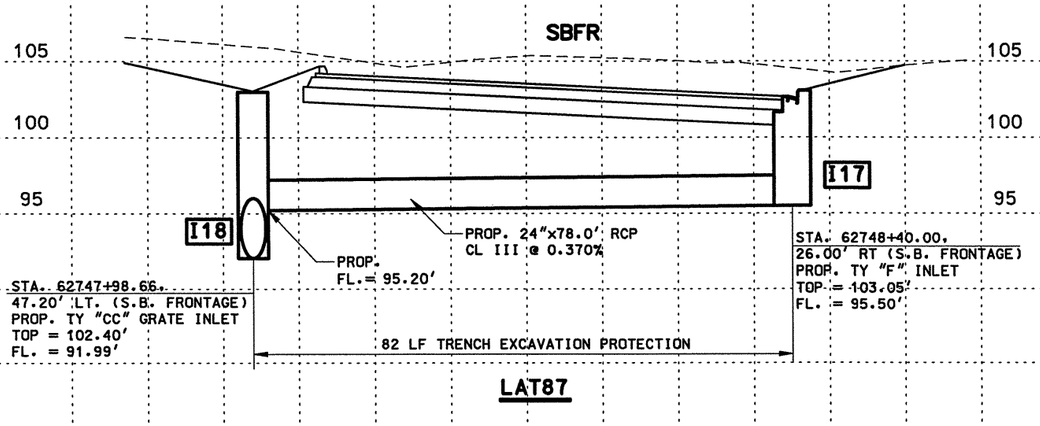

STATE OF TEXAS
RAMIRO GUTIERREZ
65948
REGISTERED PROFESSIONAL ENGINEER

THE SEAL APPEARING ON THIS DOCUMENT WAS AUTHORIZED BY RAMIRO GUTIERREZ, P.E. 65948

DATE: 8-12-03

ALTERATION OF A SEALED DOCUMENT WITHOUT PROPER NOTIFICATION TO THE RESPONSIBLE ENGINEER IS AN OFFENSE UNDER THE TEXAS ENGINEERING PRATICE LAW.

Parsons Brinckerhoff Quade & Douglas Inc.

R. Gutierrez Engineering Corporation

Texas Department of Transportation

© 2003 by TxDOT

SOUTHBOUND FRONTAGE ROAD LATERAL PROFILES

SHEET 8 OF 11

DESIGNED:	FED. RD DIV. No.	STATE	FEDERAL AID PROJECT No.			HIGHWAY No.
CHECKED:	6	TEXAS				US 281
DRAWN:	STATE DISTRICT	COUNTY	CONTROL No.	SECTION No.	JOB No.	SHEET No.
CHECKED:	21	HIDALGO	0255	08	091	612

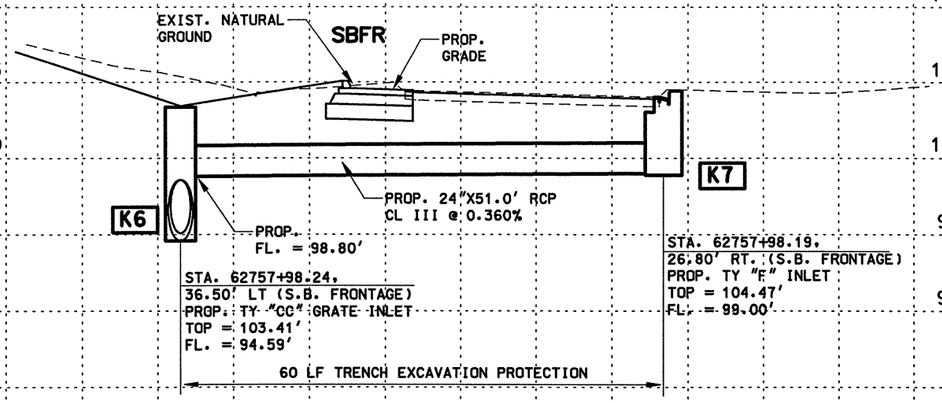

LAT88

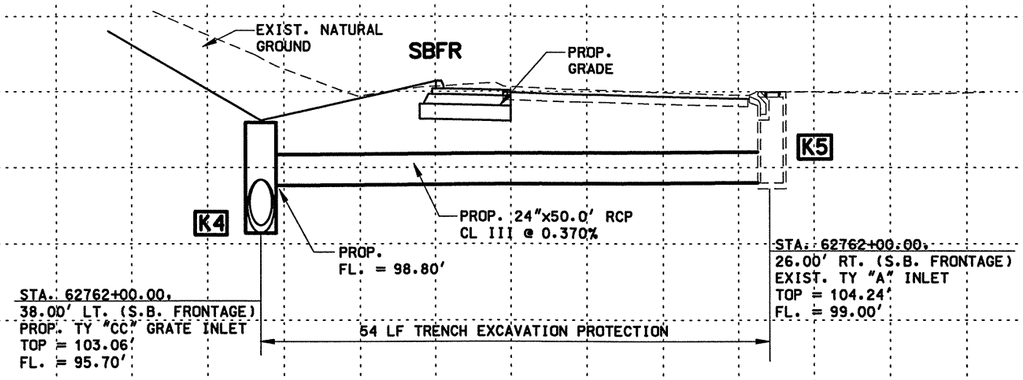

LAT89

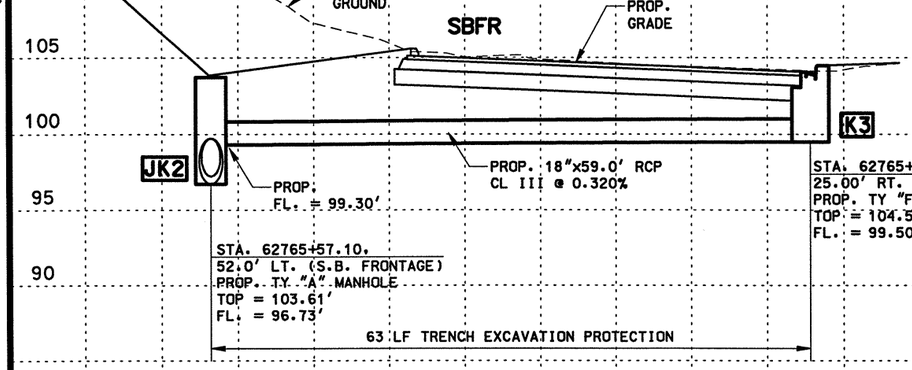

LAT90

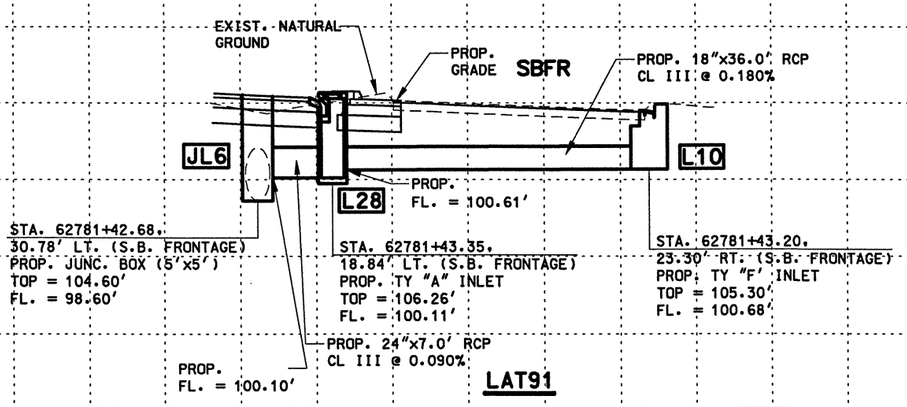

LAT91

$NAME$
$TIME$
$DATE$
$FILE$

STATE OF TEXAS
RAMIRO GUTIERREZ
65948
REGISTERED PROFESSIONAL ENGINEER

THE SEAL APPEARING ON THIS DOCUMENT WAS AUTHORIZED BY RAMIRO GUTIERREZ, P.E. 65948

DATE: 8-12-07

ALTERATION OF A SEALED DOCUMENT WITHOUT PROPER NOTIFICATION TO THE RESPONSIBLE ENGINEER IS AN OFFENSE UNDER THE TEXAS ENGINEERING PRATICE LAW.

Parsons Brinckerhoff
Quade & Douglas Inc.

R. Gutierrez Engineering Corporation

Texas Department of Transportation

© 2003 by TxDOT

SOUTHBOUND FRONTAGE ROAD LATERAL PROFILES

SHEET 9 OF 11

DESIGNED:	FED. RD DIV. No.	STATE	FEDERAL AID PROJECT No.		HIGHWAY No.
CHECKED:	6	TEXAS			US 281
DRAWN:	STATE DISTRICT	COUNTY	CONTROL No.	SECTION No.	JOB No.	SHEET No.
CHECKED:	21	HIDALGO	0255	08	091	613

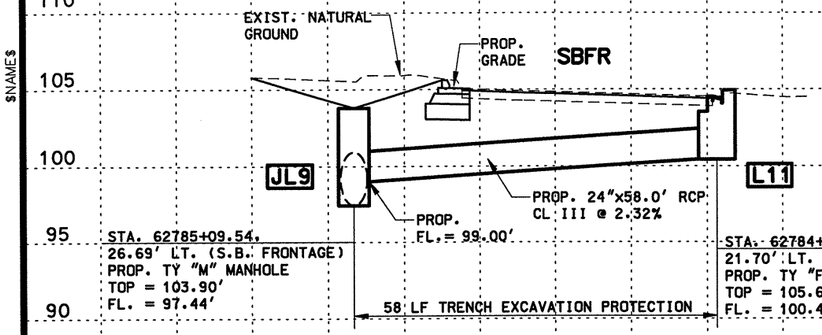

LAT92

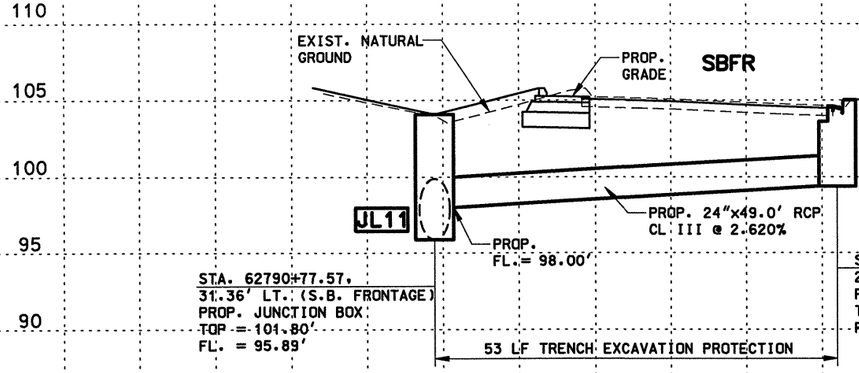

LAT93

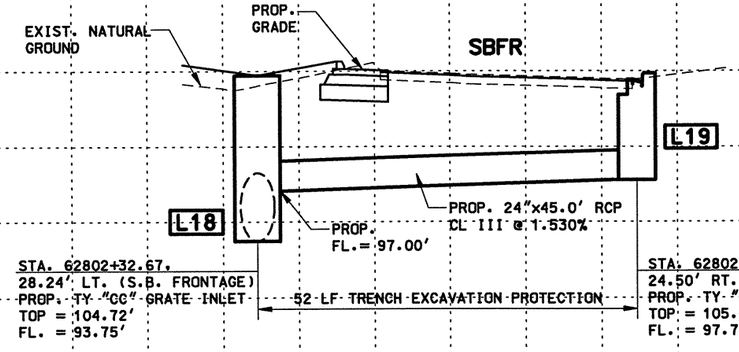

LAT94

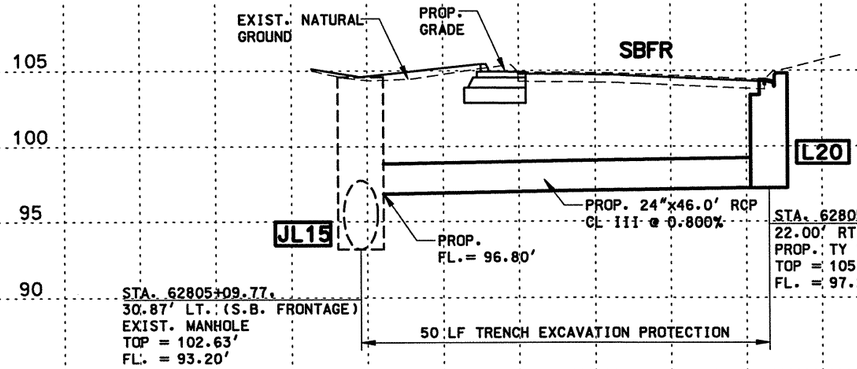

LAT95

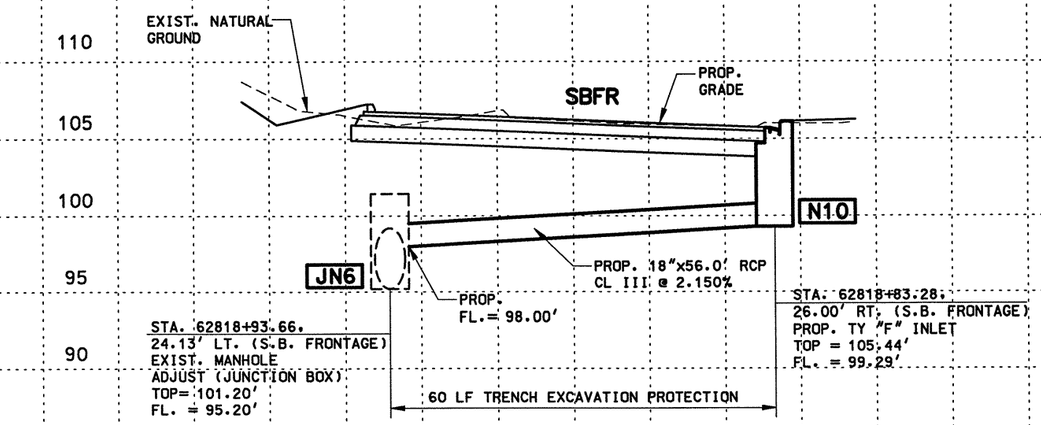

LAT96

$NAME$
$TIME$
$DATE$
$FILE$

STATE OF TEXAS
RAMIRO GUTIERREZ
65948
REGISTERED PROFESSIONAL ENGINEER

THE SEAL APPEARING ON THIS DOCUMENT WAS AUTHORIZED BY RAMIRO GUTIERREZ, P.E. 65948

DATE: 8-12-03

ALTERATION OF A SEALED DOCUMENT WITHOUT PROPER NOTIFICATION TO THE RESPONSIBLE ENGINEER IS AN OFFENSE UNDER THE TEXAS ENGINEERING PRATICE LAW.

Parsons Brinckerhoff Quade & Douglas Inc.

R. Gutierrez Engineering Corporation

Texas Department of Transportation

© 2003 by TxDOT

SOUTHBOUND FRONTAGE ROAD LATERAL PROFILES

SHEET 10 OF 11

DESIGNED:	FED. RD DIV. No.	STATE	FEDERAL AID PROJECT No.			HIGHWAY No.	
CHECKED:	6	TEXAS				US 281	
DRAWN:	STATE DISTRICT	COUNTY	CONTROL No.	SECTION No.	JOB No.	SHEET No.	
CHECKED:	21	HIDALGO	0255	08	091	614	

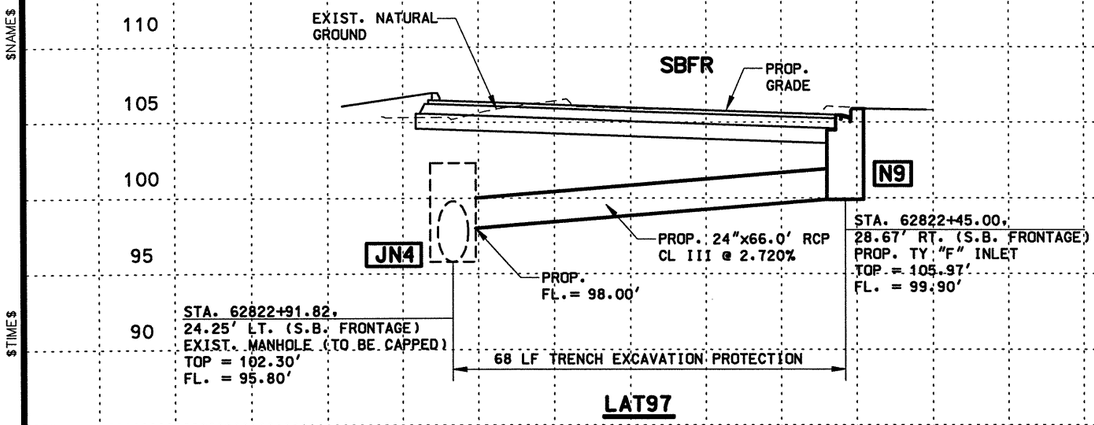

LAT97

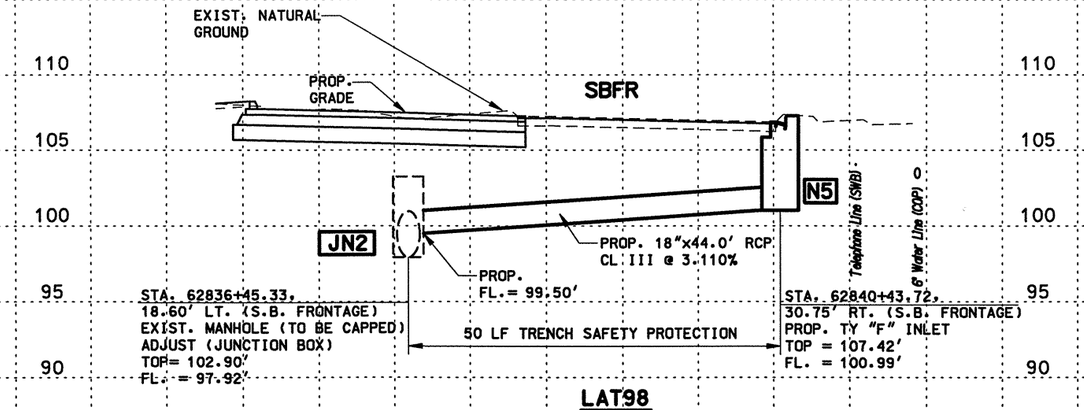

LAT98

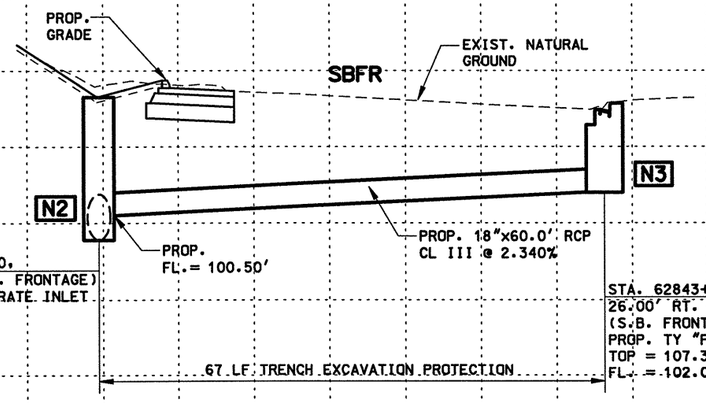

LAT99

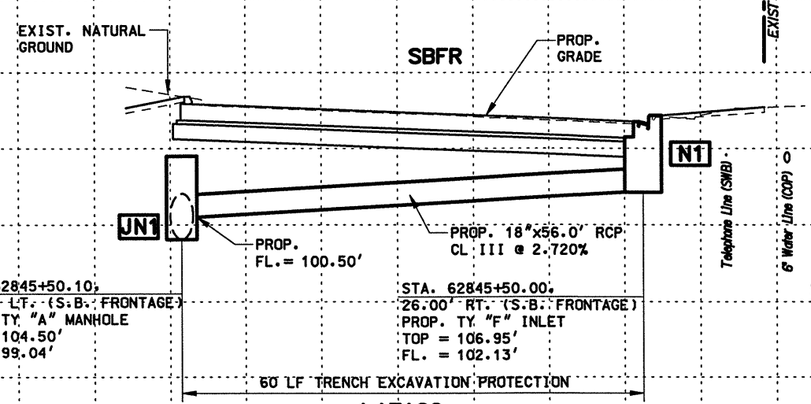

LAT100

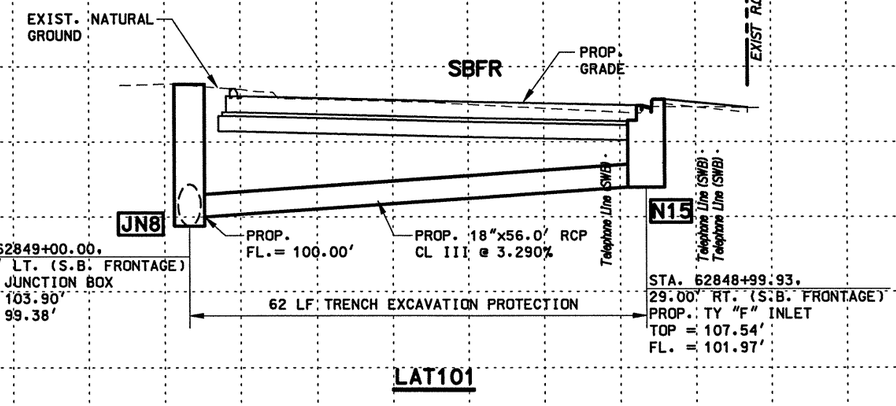

LAT101

STATE OF TEXAS
RAMIRO GUTIERREZ
65948
REGISTERED PROFESSIONAL ENGINEER

THE SEAL APPEARING ON THIS DOCUMENT WAS AUTHORIZED BY RAMIRO GUTIERREZ, P.E. 65948

DATE: 8-12-03

ALTERATION OF A SEALED DOCUMENT WITHOUT PROPER NOTIFICATION TO THE RESPONSIBLE ENGINEER IS AN OFFENSE UNDER THE TEXAS ENGINEERING PRATICE LAW.

Parsons Brinckerhoff Quade & Douglas Inc.

R. Gutierrez Engineering Corporation

Texas Department of Transportation

© 2003 by TxDOT

SOUTHBOUND FRONTAGE ROAD LATERAL PROFILES

SHEET 11 OF 11

DESIGNED:	FED. RD DIV. No.	STATE	FEDERAL AID PROJECT No.			HIGHWAY No.	
CHECKED:	6	TEXAS				US 281	
DRAWN:	STATE DISTRICT	COUNTY	CONTROL No.	SECTION No.	JOB No.	SHEET No.	
CHECKED:	21	HIDALGO	0255	08	091	615	

$NAME$
$TIME$
$DATE$
$FILE$

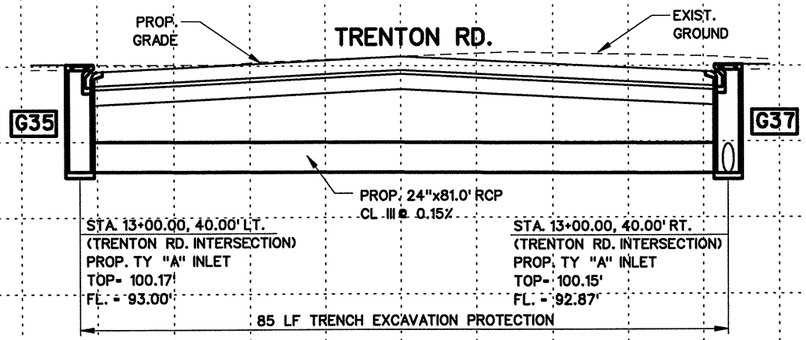

LAT102

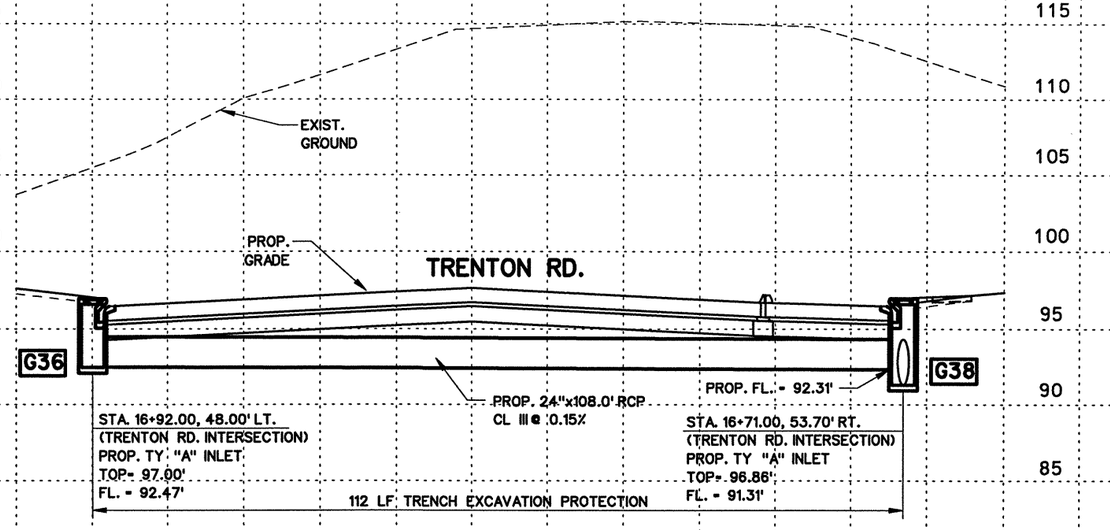

LAT103

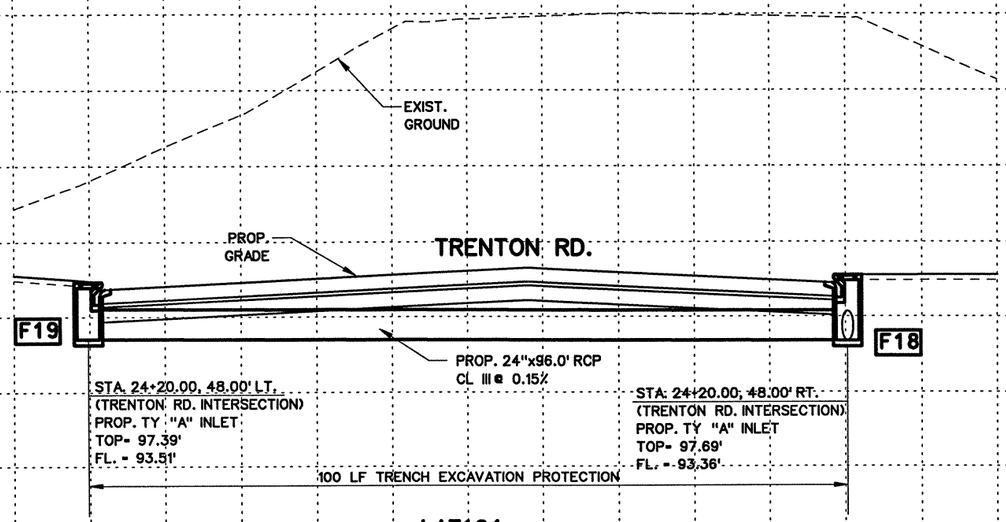

LAT104

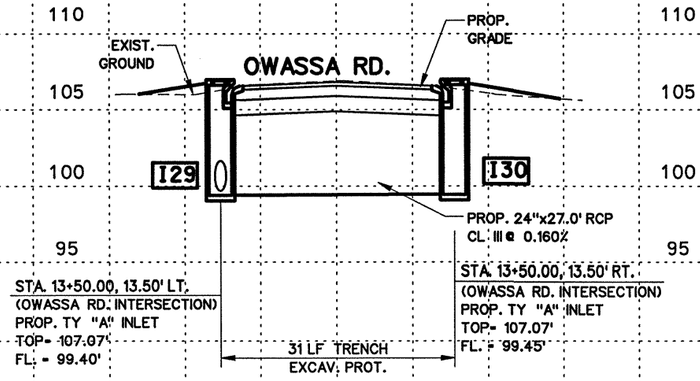

LAT105

$NAME$
$TIME$
$DATE$
$FILE$

STATE OF TEXAS
RAMIRO GUTIERREZ
65948
REGISTERED PROFESSIONAL ENGINEER

THE SEAL APPEARING ON THIS DOCUMENT WAS AUTHORIZED BY RAMIRO GUTIERREZ, P.E. 65948

DATE: 8-12-03

ALTERATION OF A SEALED DOCUMENT WITHOUT PROPER NOTIFICATION TO THE RESPONSIBLE ENGINEER IS AN OFFENSE UNDER THE TEXAS ENGINEERING PRATICE LAW.

Parsons Brinckerhoff Quade & Douglas Inc.

R. Gutierrez Engineering Corporation

Texas Department of Transportation

© 2003 by TxDOT

INTERSECTIONS LATERAL PROFILES

SHEET 1 OF 3

DESIGNED:	FED. RD DIV. No.	STATE	FEDERAL AID PROJECT No.			HIGHWAY No.
CHECKED:	6	TEXAS				US 281
DRAWN:	STATE DISTRICT	COUNTY	CONTROL No.	SECTION No.	JOB No.	SHEET No.
CHECKED:	21	HIDALGO	0255	08	091	616

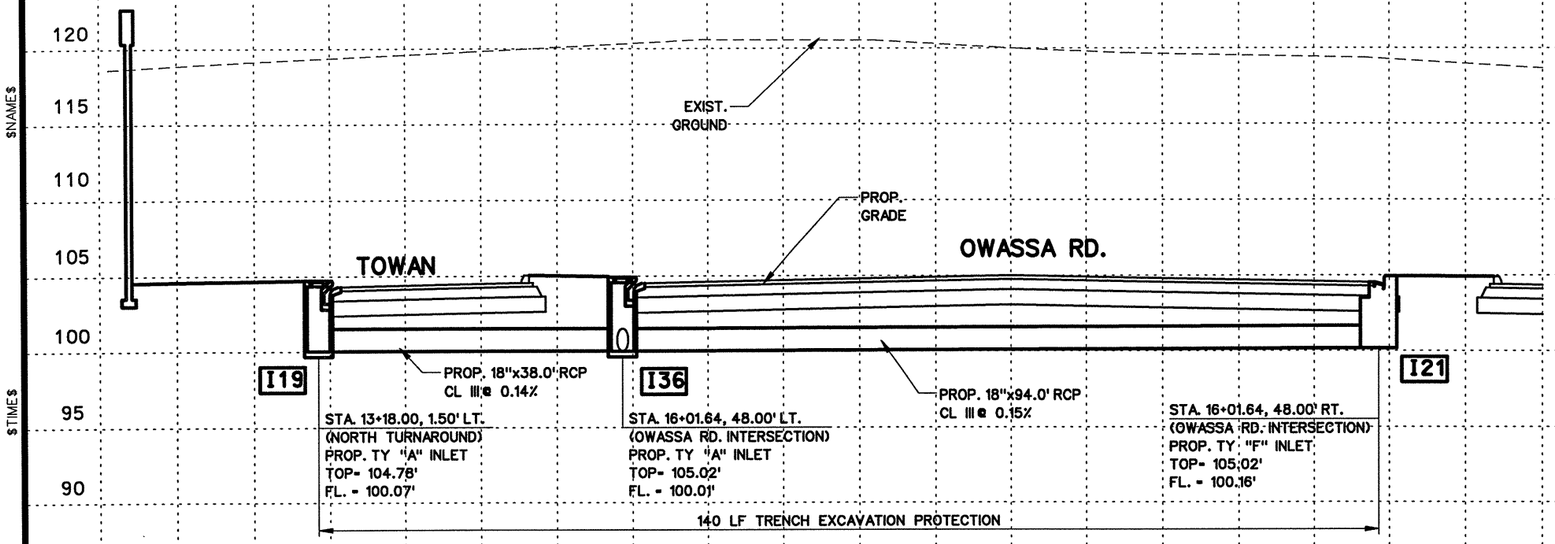

LAT106

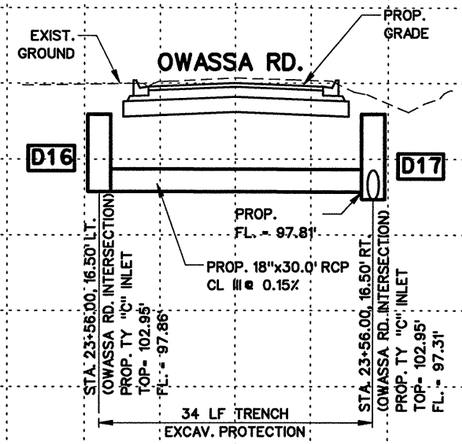

LAT107

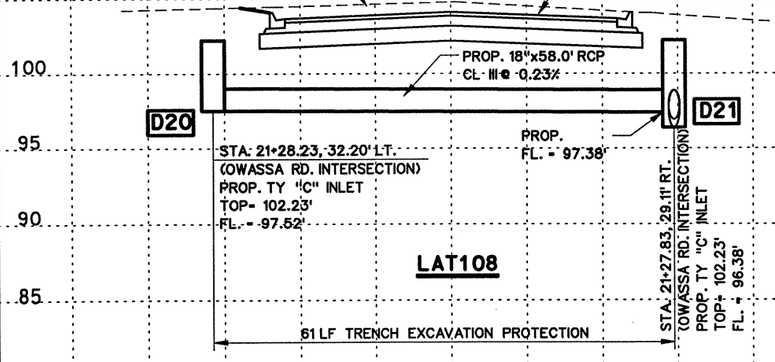

LAT108

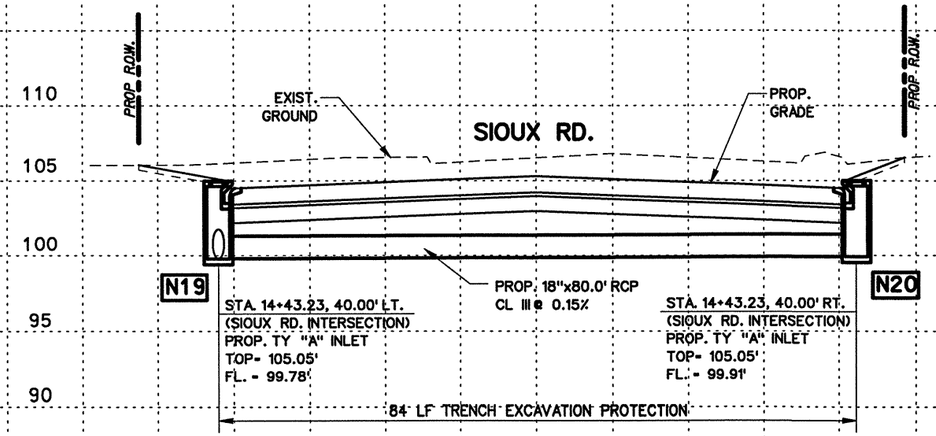

LAT109

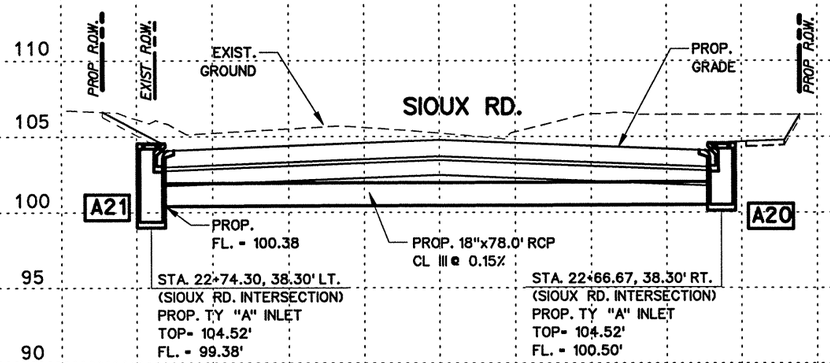

LAT110

STATE OF TEXAS
RAMIRO GUTIERREZ
65948
REGISTERED PROFESSIONAL ENGINEER

THE SEAL APPEARING ON THIS DOCUMENT WAS AUTHORIZED BY RAMIRO GUTIERREZ, P.E. 65948

DATE: 8-12-03

ALTERATION OF A SEALED DOCUMENT WITHOUT PROPER NOTIFICATION TO THE RESPONSIBLE ENGINEER IS AN OFFENSE UNDER THE TEXAS ENGINEERING PRATICE LAW.

Parsons Brinckerhoff Quade & Douglas Inc.

R. Gutierrez Engineering Corporation

Texas Department of Transportation

© 2003 by TxDOT

INTERSECTIONS LATERAL PROFILES

SHEET 2 OF 3

DESIGNED:	FED. RD DIV. No.	STATE	FEDERAL AID PROJECT No.			HIGHWAY No.
CHECKED:	6	TEXAS				US 281
DRAWN:	STATE DISTRICT	COUNTY	CONTROL No.	SECTION No.	JOB No.	SHEET No.
CHECKED:	21	HIDALGO	0255	08	091	617

$NAME$
$TIME$
$DATE$
$FILE$

$NAME$ $TIME$ $TIME$ $DATE$

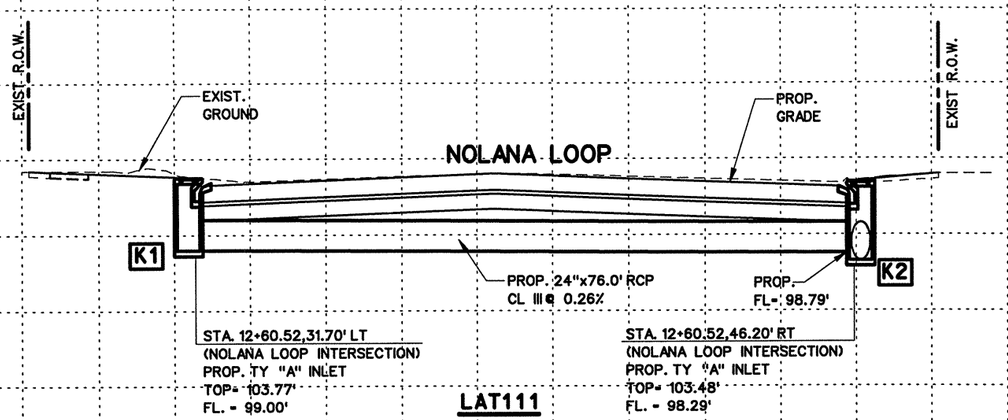

LAT111

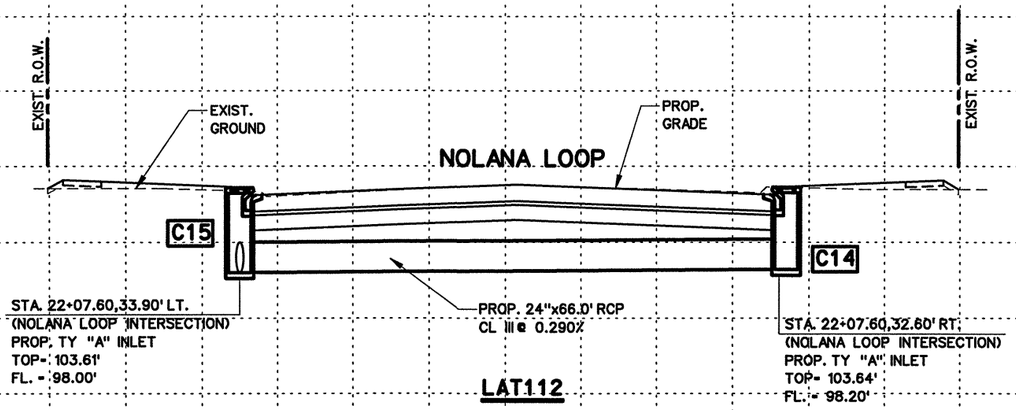

LAT112

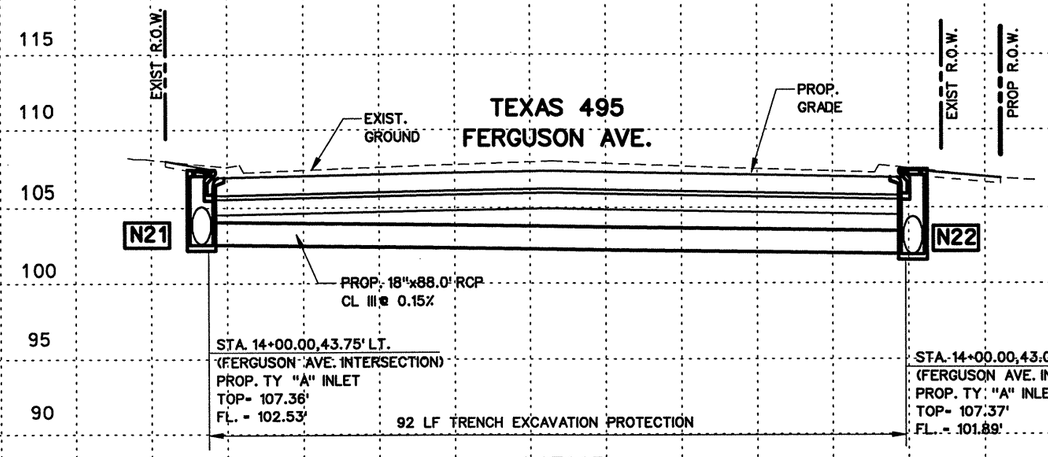

LAT113

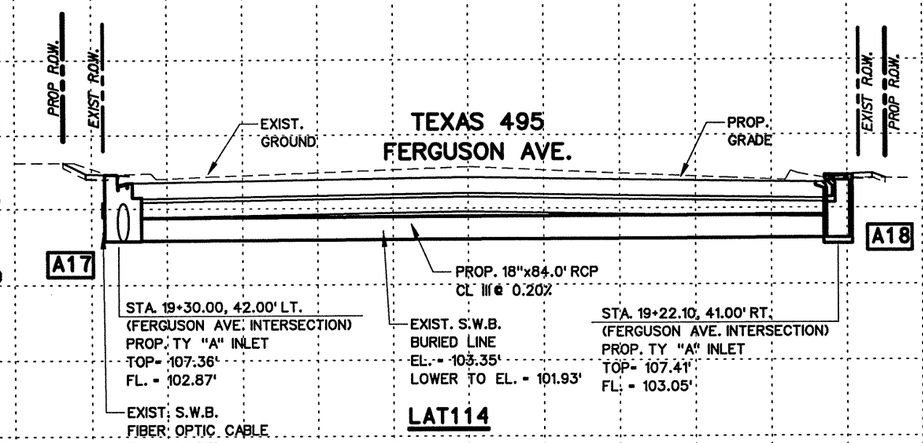

LAT114

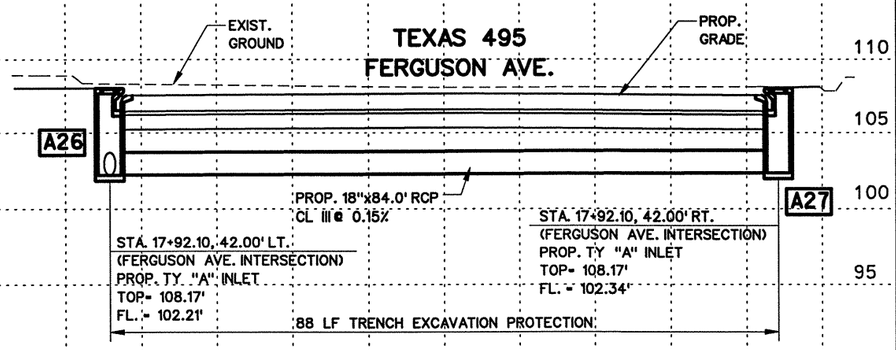

LAT115

$FILE$

STATE OF TEXAS
RAMIRO GUTIERREZ
65948
REGISTERED
PROFESSIONAL ENGINEER

THE SEAL APPEARING ON THIS DOCUMENT WAS AUTHORIZED BY RAMIRO GUTIERREZ, P.E. 65948

DATE: 8-12-03

ALTERATION OF A SEALED DOCUMENT WITHOUT PROPER NOTIFICATION TO THE RESPONSIBLE ENGINEER IS AN OFFENSE UNDER THE TEXAS ENGINEERING PRATICE LAW.

Parsons Brinckerhoff
Quade & Douglas Inc.

R. Gutierrez Engineering Corporation

Texas Department of Transportation

© 2003 by TxDOT

INTERSECTIONS LATERAL PROFILES

SHEET 3 OF 3

DESIGNED:	FED. RD DIV. No.	STATE	FEDERAL AID PROJECT No.			HIGHWAY No.
CHECKED:	6	TEXAS				US 281
DRAWN:	STATE DISTRICT	COUNTY	CONTROL No.	SECTION No.	JOB No.	SHEET No.
CHECKED:	21	HIDALGO	0255	08	091	618

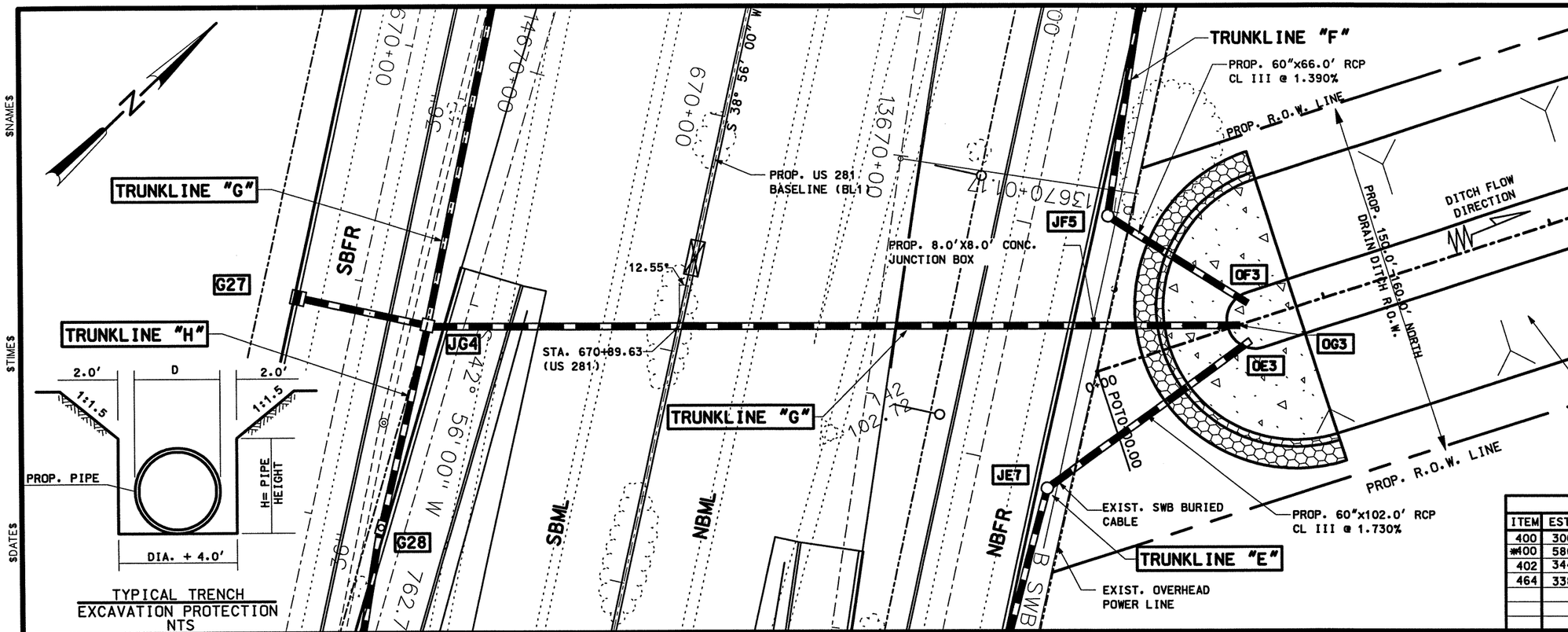

LEGEND

- — — -PROP. DITCH FLOWLINE
- -STORM SEWER FLOW DIRECTION
- NBFR -NORTH BOUND FRONTAGE ROAD
- NBML -NORTH BOUND MAINLANES
- B —— -BURIED TELEPHONE CABLE
- OH —— -OVERHEAD POWER LINES
- 8" SS —— -EXIST. SANITARY SEWER LINE
- -DRAINAGE STR. TO BE CAPPED
- -PROPOSED LUMINAIRE
- 07 -STRUCTURE I.D.
- ==== -RCP TO REMAIN
- ::::::: -RCP TO BE ABANDONED
- H.P. -DITCH HIGH POINT
- L.P. -DITCH LOW POINT
- LAT1 -LATERAL I.D.
- ⊕ -EXIST. MANHOLE/INLET TO BE REMOVED (ITEM 496)

SHEET TOTALS

ITEM	EST.	FINAL	UNIT	DESCRIPTION
400	300		CY	CEMENT STABLIZED BACKFILL
*400	586		CY	STRUCTURAL EXCAVATION
402	344		LF	TRENCH EXCAVATION PROTECTION
464	338		FT	72" RCP CL III

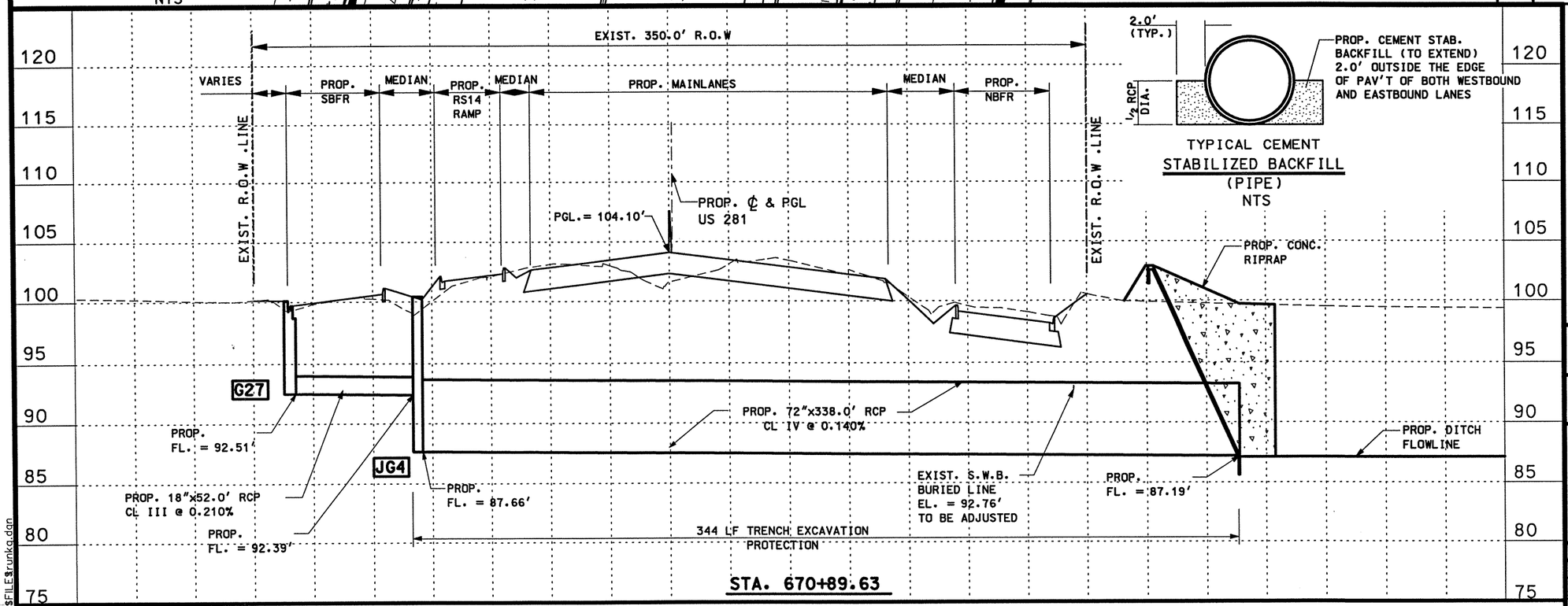

* FOR CONTRACTORS INFORMATION ONLY

STATE OF TEXAS
RAMIRO GUTIERREZ
65948
REGISTERED PROFESSIONAL ENGINEER

THE SEAL APPEARING ON THIS DOCUMENT WAS AUTHORIZED BY RAMIRO GUTIERREZ, P.E. 65948

DATE: 8-12-03

ALTERATION OF A SEALED DOCUMENT WITHOUT PROPER NOTIFICATION TO THE RESPONSIBLE ENGINEER IS AN OFFENSE UNDER THE TEXAS ENGINEERING PRATICE LAW.

Parsons Brinckerhoff Quade & Douglas Inc.

Texas Department of Transportation

©2003 by TxDOT

STORM DRAIN CROSSING CULVERT LAYOUT TRUNKLINE "G"

PLAN 1"= 50' HORIZ
PROFILE 1"= 10' VERT

DESIGNED:	FED. RD DIV. No.	STATE	FEDERAL AID PROJECT No.			HIGHWAY No.	
CHECKED:	6	TEXAS				US 281	
DRAWN:	STATE DISTRICT	COUNTY	CONTROL No.	SECTION No.	JOB No.	SHEET No.	
CHECKED:	21	HIDALGO	0255	08	091	619	

$NAME$ $TIME$ $DATE$ $FILE$trunkg.dgn

$NAME$
$TIME$
$DATE$

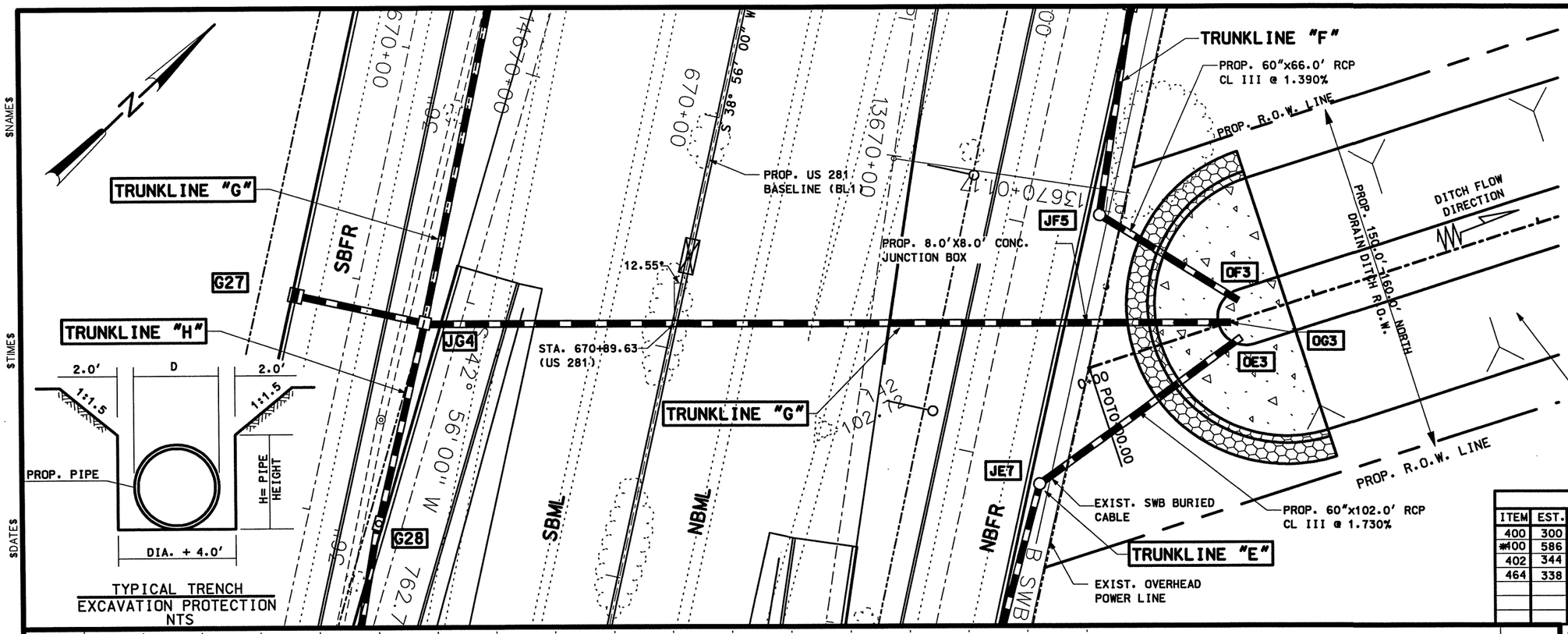

TYPICAL TRENCH
EXCAVATION PROTECTION
NTS

LEGEND

- — — PROP. DITCH FLOWLINE
- STORM SEWER FLOW DIRECTION
- NBFR NORTH BOUND FRONTAGE ROAD
- NBML NORTH BOUND MAINLANES
- B —— BURIED TELEPHONE CABLE
- OH —— OVERHEAD POWER LINES
- 8" SS —— EXIST. SANITARY SEWER LINE
- DRAINAGE STR. TO BE CAPPED
- PROPOSED LUMINAIRE
- 07 STRUCTURE I.D.
- ==== RCP TO REMAIN
- :::::::: RCP TO BE ABANDONED
- H.P. DITCH HIGH POINT
- L.P. DITCH LOW POINT
- LAT1 LATERAL I.D.
- EXIST. MANHOLE/INLET TO BE REMOVED (ITEM 496)

SHEET TOTALS

ITEM	EST.	FINAL	UNIT	DESCRIPTION
400	300		CY	CEMENT STABLIZED BACKFILL
*400	586		CY	STRUCTURAL EXCAVATION
402	344		LF	TRENCH EXCAVATION PROTECTION
464	338		FT	72" RCP CL IV

1

* FOR CONTRACTORS INFORMATION ONLY

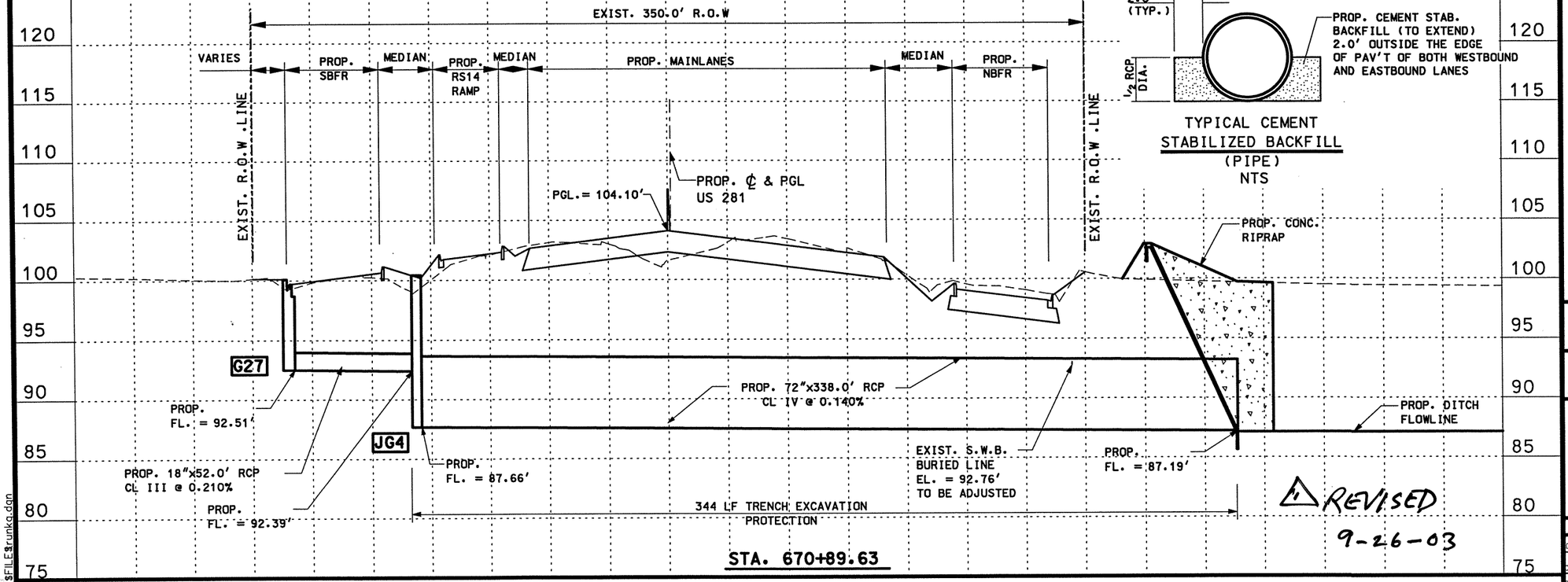

STA. 670+89.63

TYPICAL CEMENT
STABILIZED BACKFILL
(PIPE)
NTS

1 REVISED 9-26-03

THE SEAL APPEARING ON THIS DOCUMENT WAS AUTHORIZED BY RAMIRO GUTIERREZ, P.E. 65948

DATE: 8-12-03

ALTERATION OF A SEALED DOCUMENT WITHOUT PROPER NOTIFICATION TO THE RESPONSIBLE ENGINEER IS AN OFFENSE UNDER THE TEXAS ENGINEERING PRATICE LAW.

Parsons Brinckerhoff Quade & Douglas Inc.

Texas Department of Transportation

© 2003 by TxDOT

STORM DRAIN CROSSING CULVERT LAYOUT TRUNKLINE "G"

PLAN 1"= 50' HORIZ
PROFILE 1"= 10' VERT

DESIGNED:	FED. RD DIV. No.	STATE	FEDERAL AID PROJECT No.		HIGHWAY No.	
CHECKED:	6	TEXAS			US 281	
DRAWN:	STATE DISTRICT	COUNTY	CONTROL No.	SECTION No.	JOB No.	SHEET No.
CHECKED:	21	HIDALGO	0255	08	091	619

$FILE$trunkg.dgn

$NAME$
$TIME$
$DATE$

EXIST. 350.0' R.O.W.

CAUTION:
EXIST. S.W.B.
FIBER OPTIC CABLE

EXIST. S.W.B.
BURIED LINE

EXIST. 8" WATER
LINE COP

CAUTION:
EXIST. 4" SUG.
GAS LINE

SBFR

SBML

NBML

NBFR

PROP. US 281
BASELINE (BL1)

TRUNKLINE "I"

D13

D12

SS COP

EXIST. 8" SANITARY
SEWER COP

EXIST. 8" WATER
LINE COP

PROP. 8.0'x8.0' CONC.
JUNCTION BOX

OD2

OI2

OC2

PROF. 40.0'
DRAINAGE
R.O.W.

PROP. 7.0'x7.0'x1028.0'
CONC. BOX CULVERT
(SEE PROP. SOUTH DRAINAGE
DITCH PLANS FOR MORE DETAILS)

I20

IJ4

9.79°

PROP. 72"x242.0' RCP
CL III @ 0.420%

EXIST. S.W.B
BURIED LINE

PROP.
CTB

LEGEND

- — — –PROP. DITCH FLOWLINE
- ——► –STORM SEWER FLOW DIRECTION
- NBFR –NORTH BOUND FRONTAGE ROAD
- NBML –NORTH BOUND MAINLANES
- B —— –BURIED TELEPHONE CABLE
- OH —— –OVERHEAD POWER LINES
- 8" SS —— –EXIST. SANITARY SEWER LINE
- ◆ –DRAINAGE STR. TO BE CAPPED
- ⊠ –PROPOSED LUMINAIRE
- O7 –STRUCTURE I.D.
- ==== –RCP TO REMAIN
- ::::::: –RCP TO BE ABANDONED
- H.P. –DITCH HIGH POINT
- L.P. –DITCH LOW POINT
- LAT1 –LATERAL I.D.
- ⊕ –EXIST. MANHOLE/INLET TO BE REMOVED (ITEM 496)

N

SHEET TOTALS

ITEM	EST.	FINAL	UNIT	DESCRIPTION
400	268		CY	CEMENT STABLIZED BACKFILL
*400	526		CY	STRUCTURAL EXCAVATION
402	288		FT	TRENCH EXCAVATION PROTECTION
464	242		FT	72" RCP CL III
465	1		EA	8'x8' JUNCTION BOX

* FOR CONTRACTORS INFORMATION ONLY

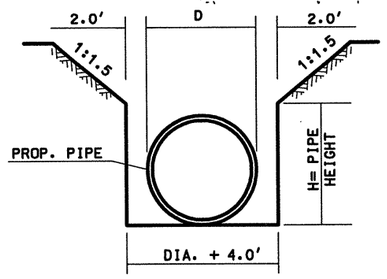

TYPICAL TRENCH
EXCAVATION PROTECTION
NTS

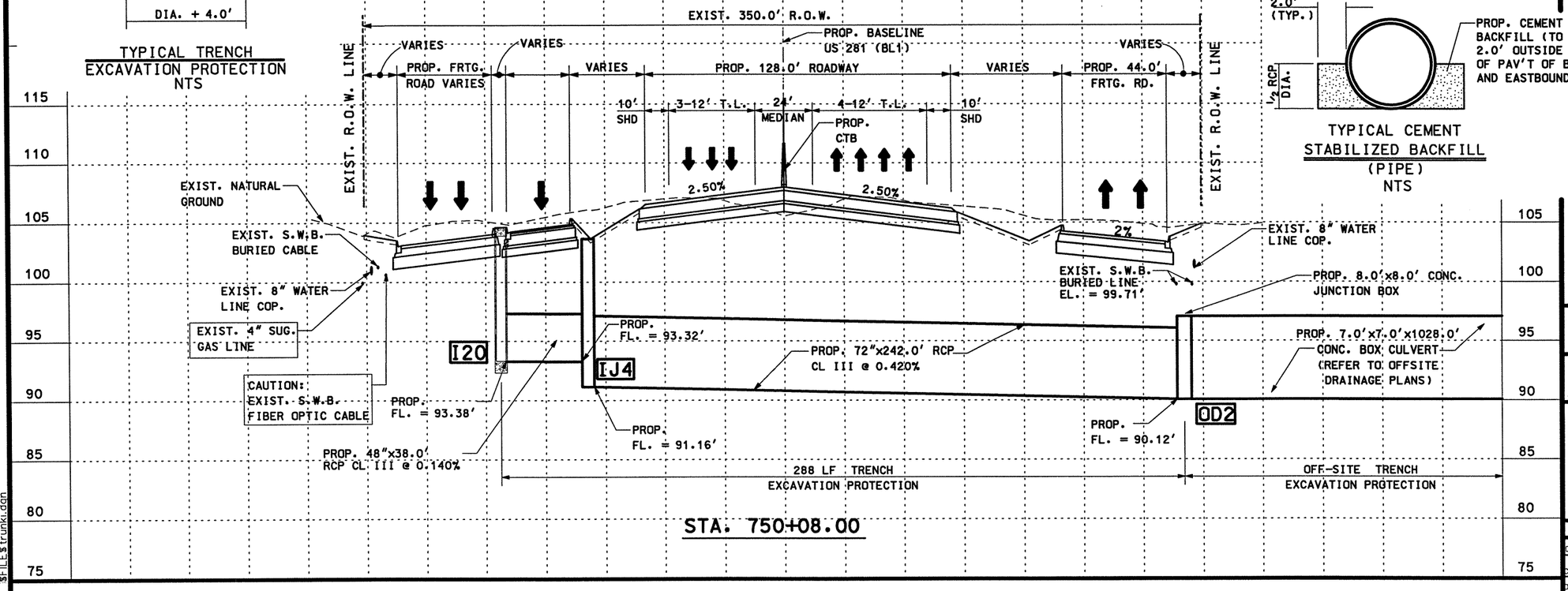

STA. 750+08.00

TYPICAL CEMENT
STABILIZED BACKFILL
(PIPE)
NTS

STATE OF TEXAS
RAMIRO GUTIERREZ
65948
REGISTERED
PROFESSIONAL ENGINEER

THE SEAL APPEARING ON THIS DOCUMENT WAS AUTHORIZED BY RAMIRO GUTIERREZ, P.E. 65948

DATE: 8-12-03

ALTERATION OF A SEALED DOCUMENT WITHOUT PROPER NOTIFICATION TO THE RESPONSIBLE ENGINEER IS AN OFFENSE UNDER THE TEXAS ENGINEERING PRATICE LAW.

Parsons Brinckerhoff
Quade & Douglas Inc.

Texas Department of Transportation

©2003 by TxDOT

STORM DRAIN CROSSING CULVERT LAYOUT TRUNKLINE "I"

PLAN 1"= 50' HORIZ
PROFILE 1"= 10' VERT

DESIGNED:	FED. RD DIV. No.	STATE	FEDERAL AID PROJECT No.		HIGHWAY No.	
CHECKED:	6	TEXAS			US 281	
DRAWN:	STATE DISTRICT	COUNTY	CONTROL No.	SECTION No.	JOB No.	SHEET No.
CHECKED:	21	HIDALGO	0255	08	091	620

$FILE$ trunki.dgn

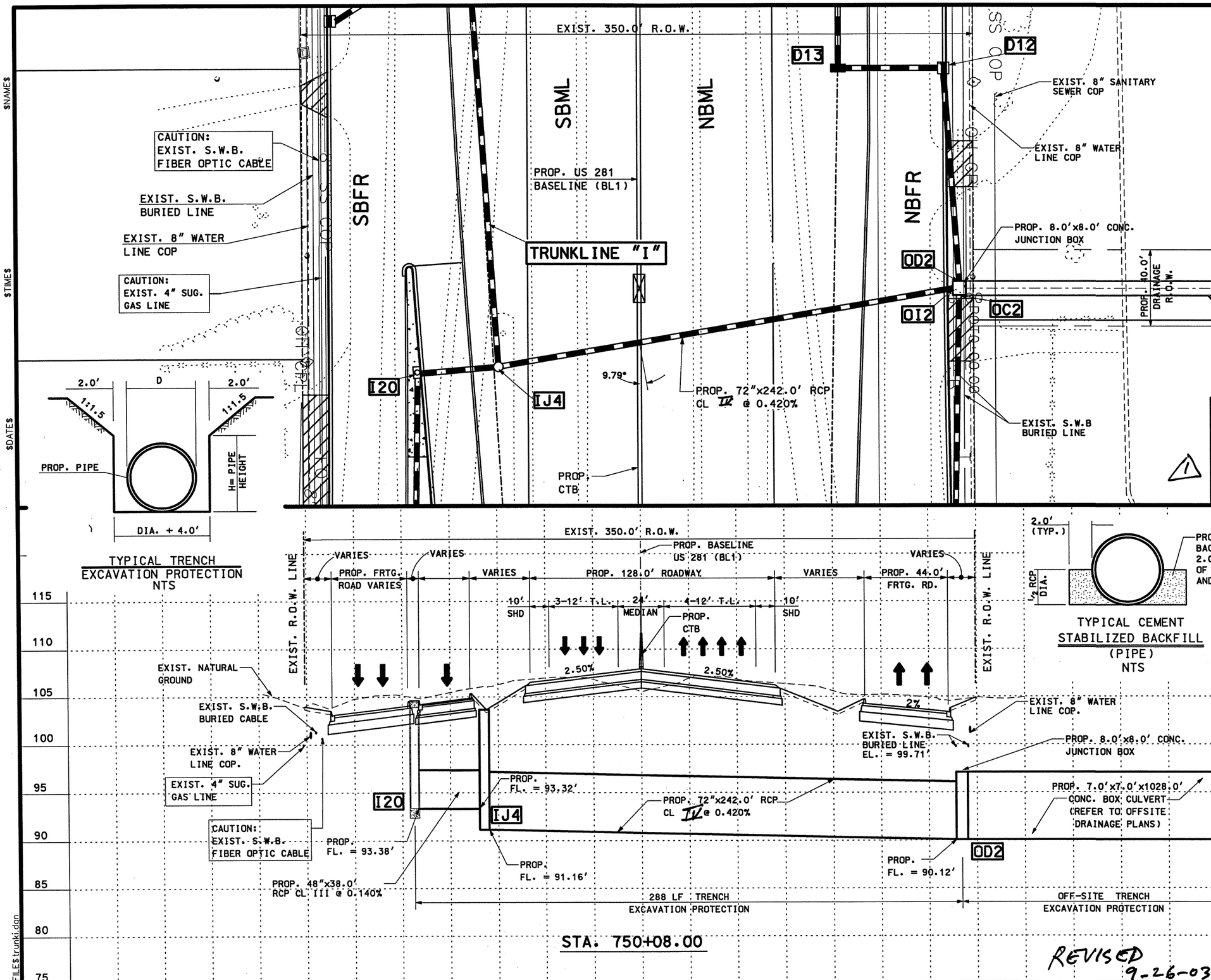

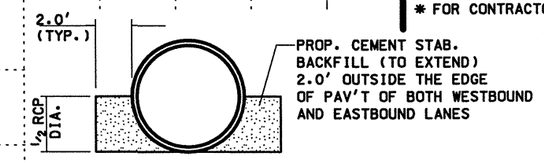

TYPICAL CEMENT STABILIZED BACKFILL (PIPE) NTS

LEGEND

- PROP. DITCH FLOWLINE
- STORM SEWER FLOW DIRECTION
- NBFR — NORTH BOUND FRONTAGE ROAD
- NBML — NORTH BOUND MAINLANES
- B — BURIED TELEPHONE CABLE
- OH — OVERHEAD POWER LINES
- 8" SS — EXIST. SANITARY SEWER LINE
- DRAINAGE STR. TO BE CAPPED
- PROPOSED LUMINAIRE
- 07 — STRUCTURE I.D.
- RCP TO REMAIN
- RCP TO BE ABANDONED
- H.P. — DITCH HIGH POINT
- L.P. — DITCH LOW POINT
- LAT1 — LATERAL I.D.
- EXIST. MANHOLE/INLET TO BE REMOVED (ITEM 496)

N

SHEET TOTALS				
ITEM	EST.	FINAL	UNIT	DESCRIPTION
400	268		CY	CEMENT STABLIZED BACKFILL
*400	526		CY	STRUCTURAL EXCAVATION
402	288		FT	TRENCH EXCAVATION PROTECTION
464	242		FT	72" RCP CL IV
465	1		EA	8'x8' JUNCTION BOX

* FOR CONTRACTORS INFORMATION ONLY

STATE OF TEXAS
RAMIRO GUTIERREZ
65948
REGISTERED PROFESSIONAL ENGINEER

THE SEAL APPEARING ON THIS DOCUMENT WAS AUTHORIZED BY RAMIRO GUTIERREZ, P.E. 65948

DATE: 8-12-03

ALTERATION OF A SEALED DOCUMENT WITHOUT PROPER NOTIFICATION TO THE RESPONSIBLE ENGINEER IS AN OFFENSE UNDER THE TEXAS ENGINEERING PRATICE LAW.

Parsons Brinckerhoff Quade & Douglas Inc.

Texas Department of Transportation

©2003 by TxDOT

STORM DRAIN CROSSING CULVERT LAYOUT TRUNKLINE "I"

PLAN 1"= 50' HORIZ
PROFILE 1"= 10' VERT

DESIGNED:	FED. RD DIV. No.	STATE	FEDERAL AID PROJECT No.			HIGHWAY No.
CHECKED:	6	TEXAS				US 281
DRAWN:	STATE DISTRICT	COUNTY	CONTROL No.	SECTION No.	JOB No.	SHEET No.
CHECKED:	21	HIDALGO	0255	08	091	620

REVISED 9-26-03

$NAME$ $TIME$ $DATE$ $FILE$trunki.dgn

NOT TO SCALE

TRENTON ROAD

M.L. WOODS #4

LOT 15 | LOT 16 | LOT 17 | LOT 18 | LOT 19 | LOT 20

67 AC

H

M.L. WOODS CO. TRACT NO. 4

95 AC

I(B)

JOHN CLOSNER ET AL SUBDIVISION

91 AC

J(B)

80 AC

L

112 AC

K

NORTH "I" ROAD

PHARR-SAN JUAN LATERAL

LOT 26 | LOT 25 | LOT 24 | LOT 23 | LOT 22 | LOT 21

LOT 38 | LOT 37 | LOT 36

250 AC

G

ALBERTA ROAD

115 AC

I(A)

116 AC

J(A)

JOHN CLOSNER ET AL SUBDIVISION

$Q_{project}$ = 209.87 CFS
(D.A. US 281)

$Q_{9.5yr}$ = 278.68 CFS
(D.A. US 281+G)

$Q_{9.5yr}$ = 288.66 CFS
(D.A. US 281+G+H)

$Q_{9.5yr}$ = 303.86 CFS
(D.A. US 281+G+H+IA)

$Q_{9.5yr}$ = 315.15 CFS
(D.A. US 281+G+H+IA+IB)

$Q_{9.5yr}$ = 337.06 CFS
(D.A. US 281+G+H+IA+IB+JA+JB)

$Q_{9.5yr}$ = 327.81 CFS
(D.A. US 281+G+H+IA+IB+JA)

$Q_{9.5yr}$ = 347.80 CFS
(D.A. US 281+G+H+IA+IB+JA+JB+K)

$Q_{9.5yr}$ = 355.11 CFS
(D.A. US 281+G+H+IA+IB+JA+JB+K+L)

Q_{Allow} = 144.96 CFS
(D.A. G+H+IA+IB+JA+JB+K+L)

PROP. OUTFALL DITCH WAS SIZED BY USE OF HEC-RAS MODEL TO CONVEY THE ALLOWABLE 9.5 YR. FLOW THAT THE HIDALGO COUNTY MASTER DRAINAGE SYSTEM WAS DESIGNED TO CONVEY PLUS THE US 281 PROJECT FLOW. THE OUTFALL INTO THE PHARR-SAN JUAN LATERAL WAS DESIGNED TO CONVEY ONLY THE ALLOWABLE 9.5 YR. FLOW FOR DRAINAGE AREAS G, H, IA, IB, JA, JB, K & L. THE FLOW FROM THE US 281 PROJECT WAS DETAINED WITHIN THE PROPOSED DITCH BY OVERSIZING.

STATE OF TEXAS
RAMIRO GUTIERREZ
65948
REGISTERED PROFESSIONAL ENGINEER

THE SEAL APPEARING ON THIS DOCUMENT WAS AUTHORIZED BY RAMIRO GUTIERREZ, P.E. 65948

DATE: 8-12-03

ALTERATION OF A SEALED DOCUMENT WITHOUT PROPER NOTIFICATION TO THE RESPONSIBLE ENGINEER IS AN OFFENSE UNDER THE TEXAS ENGINEERING PRATICE LAW.

Parsons Brinckerhoff Quade & Douglas Inc.

R. Gutierrez Engineering Corporation

Texas Department of Transportation

© 2003 by TxDOT

PROPOSED NORTH DRAINAGE DITCH Qin AND Qout EXHIBIT

DESIGNED:	FED. RD DIV. No.	STATE	FEDERAL AID PROJECT No.			HIGHWAY No.
CHECKED:	6	TEXAS				US 281
DRAWN:	STATE DISTRICT	COUNTY	CONTROL No.	SECTION No.	JOB No.	SHEET No.
CHECKED:	21	HIDALGO	0255	08	091	621

file name: propnorthditch.dgn

PROP. OUTFALL DITCH WAS SIZED BY USE OF HEC-RAS (UNSTEADY FLOW) MODEL TO CONVEY THE ALLOWABLE 9.5 YR. FLOW THAT THE HIDALGO COUNTY MASTER DRAINAGE SYSTEM WAS DESIGNED TO CONVEY PLUS THE US 281 PROJECT FLOW. THE OUTFALL INTO THE PHARR-SAN JUAN LATERAL WAS DESIGNED TO CONVEY ONLY THE ALLOWABLE 9.5 YR. FLOW FOR DRAINAGE AREAS A,B,C,D,E,& F. THE FLOW FROM THE US 281 PROJECT WAS DETAINED WITHIN THE PROPOSED DITCH BY OVERSIZING. THE DETENTION REQUIREMENT WAS CALCULATED USING THE ____, WITH A 10 YR. FREQUENCY STORM. THE DITCH TO CONVEY THE ALLOWABLE 9.5 YR. FLOW REQUIRED A 5 FOOT BOTTOM. THE DITCH WAS WIDENED AN ADDITIONAL ____- FOOT TO ACCOMODATE THE ADDITIONAL ____ ACRE-FT. OF STORM VOLUME REQUIRED.

SCALE 1"=600'

MINNESOTA ROAD

84 83 3 3 3 3

B 211 AC

$Q_{project}$ =191.78 CFS (D.A. US 281)

93 94 D 95 259 AC 96 F 4 4 4 4 228 AC

$Q_{9.5yr}$=279.52 CFS (D.A. US281+A&B)

$Q_{9.5yr}$=247.48 CFS (D.A. US281+A)

$Q_{9.5yr}$=326.71 CFS (D.A. US281+A+B+C&D)

$Q_{9.5yr}$=340.58 CFS (D.A. US281+A+B+C+D&E)

EXIST. 180.0' DITCH R.O.W. 100.0'

Q_{allow}=167.73 CFS (D.A. A+B+C+D+E&F)

PHARR-SAN JUAN LATERAL

$Q_{9.5yr}$=300.27 CFS (D.A. US281+A+B&C)

$Q_{9.5yr}$=359.51 CFS (D.A. US281+A+B+C+D+E&F)

A 174 AC 100 99 C 98 173 AC 97 5 E 5 150 AC 5 5

LOT 9 BLK 8

RODRIGUEZ STREET

NOLANA LOOP

109 110 111 112 6 6 6

116 115 114 113

STATE OF TEXAS
RAMIRO GUTIERREZ
65948
REGISTERED PROFESSIONAL ENGINEER

THE SEAL APPEARING ON THIS DOCUMENT WAS AUTHORIZED BY RAMIRO GUTIERREZ, P.E. 65948

DATE: 8-12-03

ALTERATION OF A SEALED DOCUMENT WITHOUT PROPER NOTIFICATION TO THE RESPONSIBLE ENGINEER IS AN OFFENSE UNDER THE TEXAS ENGINEERING PRATICE LAW.

Parsons Brinckerhoff Quade & Douglas Inc.

R. Gutierrez Engineering Corporation

Texas Department of Transportation

© 2003 by TxDOT

PROPOSED SOUTH DRAINAGE DITCH Qin AND Qout EXHIBIT

DESIGNED:	FED. RD DIV. No.	STATE	FEDERAL AID PROJECT No.			HIGHWAY No.	
CHECKED:	6	TEXAS				US 281	
DRAWN:	STATE DISTRICT	COUNTY	CONTROL No.	SECTION No.	JOB No.	SHEET No.	
CHECKED:	21	HIDALGO	0255	08	091	622	

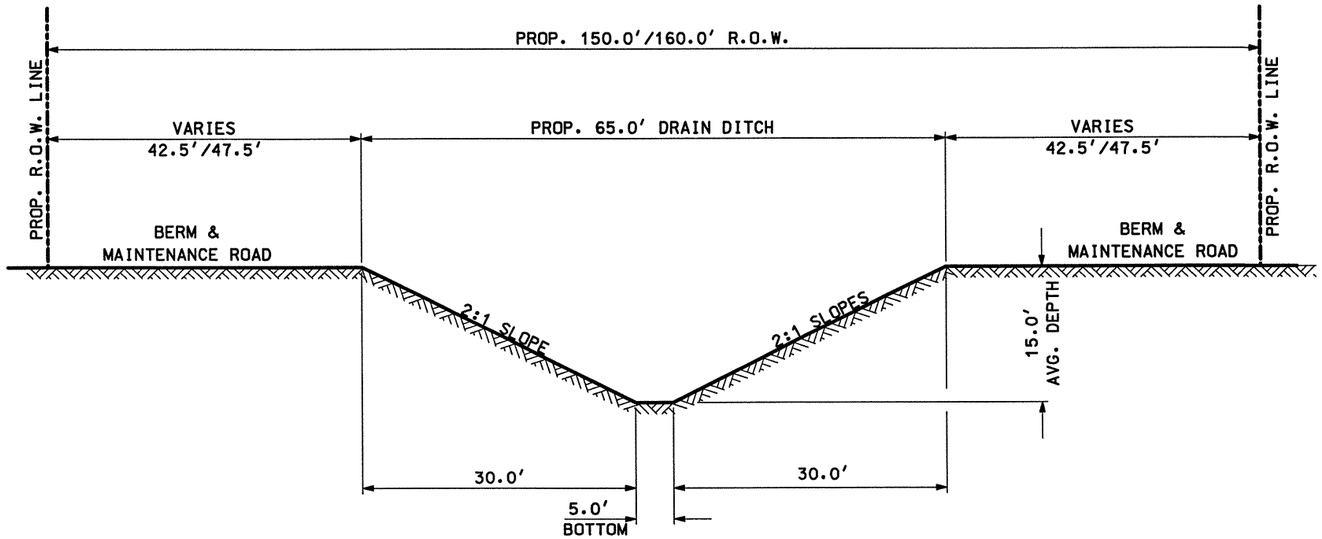

PROP. TYPICAL NORTH/ SOUTH DRAINAGE DITCH

STATE OF TEXAS
RAMIRO GUTIERREZ
65948
REGISTERED
PROFESSIONAL ENGINEER

THE SEAL APPEARING ON THIS DOCUMENT WAS AUTHORIZED BY RAMIRO GUTIERREZ, P.E. 65948

DATE: 8-12-03

ALTERATION OF A SEALED DOCUMENT WITHOUT PROPER NOTIFICATION TO THE RESPONSIBLE ENGINEER IS AN OFFENSE UNDER THE TEXAS ENGINEERING PRATICE LAW.

Parsons Brinckerhoff Quade & Douglas Inc.

R. Gutierrez Engineering Corporation

Texas Department of Transportation

©2001 by TxDOT

PROPOSED OUTFALL TYPICAL SECTIONS

DESIGNED:	FED. RD DIV. No.	STATE	FEDERAL AID PROJECT No.			HIGHWAY No.	
CHECKED:	6	TEXAS				US 281	
DRAWN:	STATE DISTRICT	COUNTY	CONTROL No.	SECTION No.	JOB No.	SHEET No.	
CHECKED:	21	HIDALGO	0255	08	091	623	

$NAME$ $TIME$ $DATE$ $FILE$

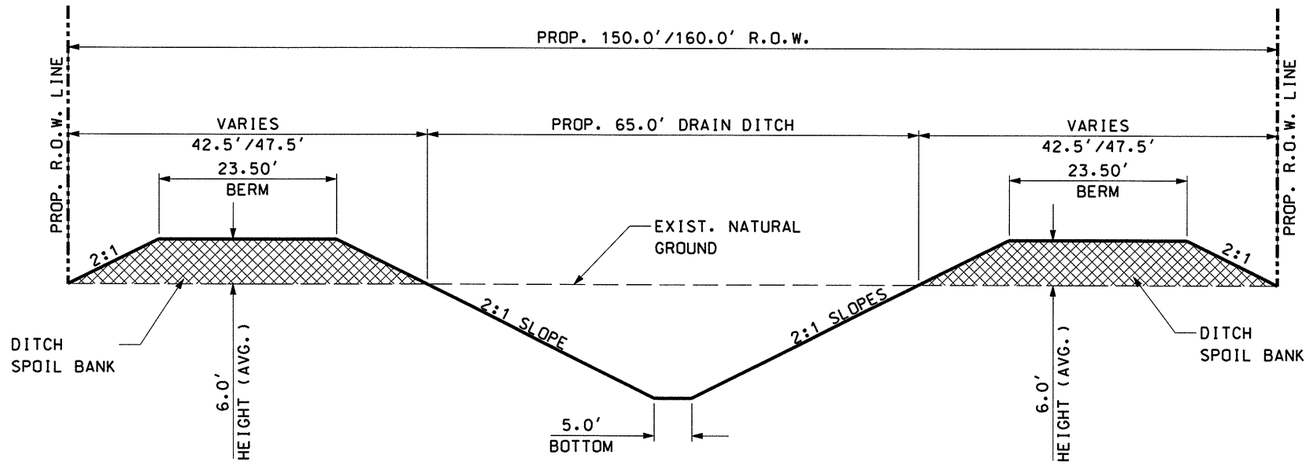

PROP. TYPICAL NORTH/ SOUTH DRAINAGE DITCH

NOTES:
1.) CONTRACTOR TO BUILD UP SPOIL BANKS AS INDICATED IN THE DITCH TYPICAL SECTION.

REVISED
9-26-03

STATE OF TEXAS
RAMIRO GUTIERREZ
65948
REGISTERED
PROFESSIONAL ENGINEER

THE SEAL APPEARING ON THIS DOCUMENT WAS AUTHORIZED BY RAMIRO GUTIERREZ, P.E. 65948

DATE: 9-25-03

ALTERATION OF A SEALED DOCUMENT WITHOUT PROPER NOTIFICATION TO THE RESPONSIBLE ENGINEER IS AN OFFENSE UNDER THE TEXAS ENGINEERING PRATICE LAW.

Parsons Brinckerhoff Quade & Douglas Inc.

R. Gutierrez Engineering Corporation

Texas Department of Transportation

©2001 by TxDOT

PROPOSED OUTFALL TYPICAL SECTIONS

DESIGNED:	FED. RD DIV. No.	STATE	FEDERAL AID PROJECT No.			HIGHWAY No.
CHECKED:	6	TEXAS				US 281
DRAWN:	STATE DISTRICT	COUNTY	CONTROL No.	SECTION No.	JOB No.	SHEET No.
CHECKED:	21	HIDALGO	0255	08	091	623

$NAME$ $TIME$ $DATE$ $FILE$

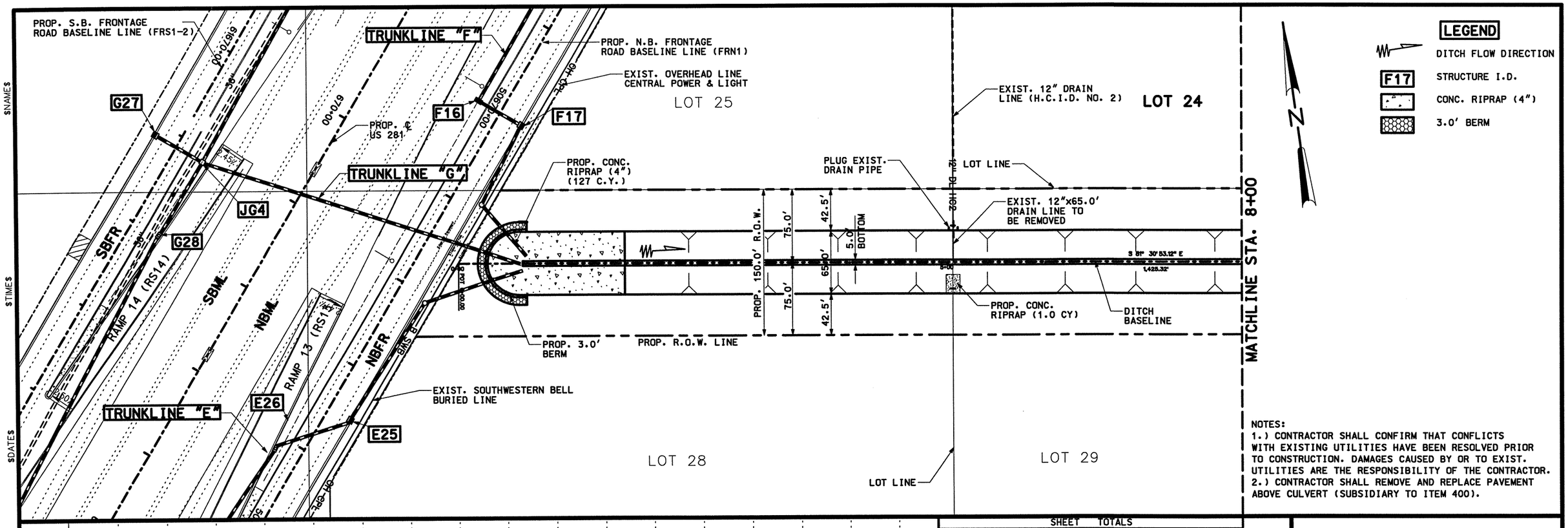

SHEET TOTALS

ITEM	EST.	FINAL	UNIT	DESCRIPTION
400	104960		CY	CHANNEL EXCAVATION
432	128		CY	CONC. RIPRAP (4")
496	65		LF	REMOVE OLD STR. (PIPE)

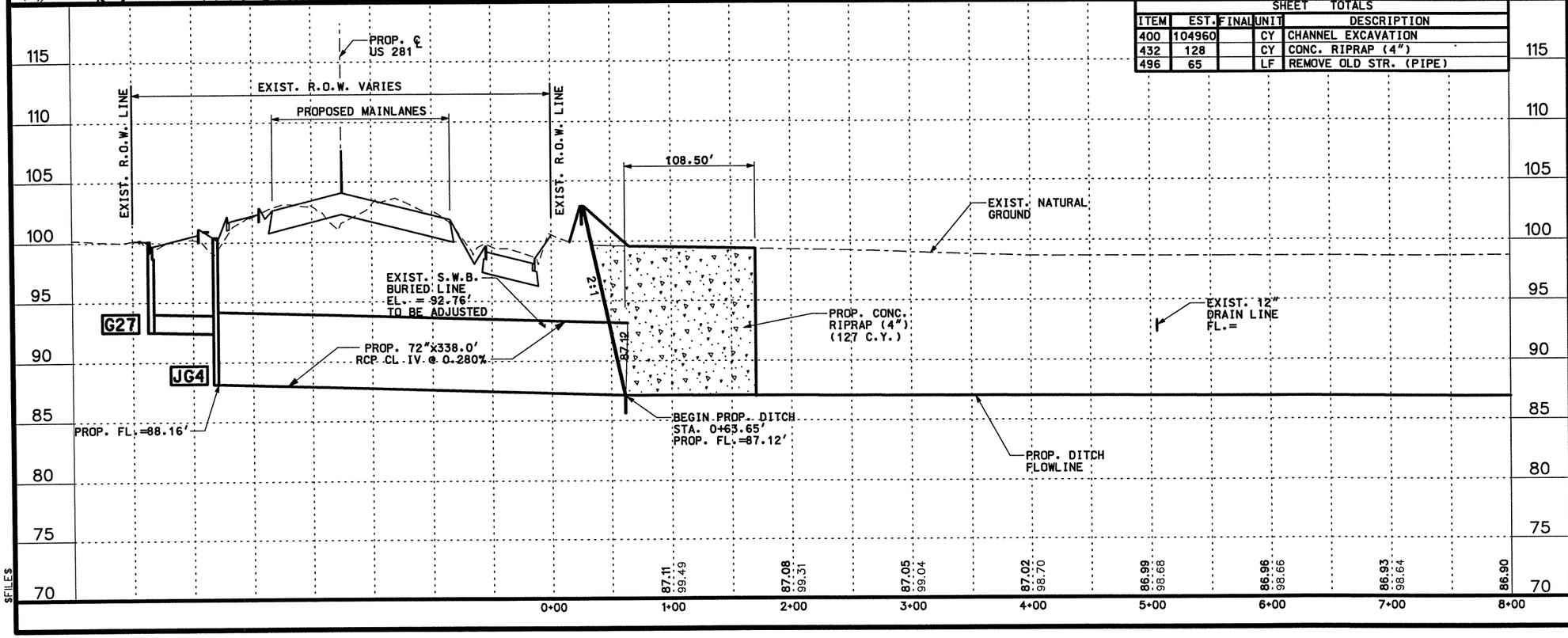

STATE OF TEXAS
RAMIRO GUTIERREZ
65948
REGISTERED PROFESSIONAL ENGINEER

THE SEAL APPEARING ON THIS DOCUMENT WAS AUTHORIZED BY RAMIRO GUTIERREZ, P.E. 65948

DATE: 8-12-03

ALTERATION OF A SEALED DOCUMENT WITHOUT PROPER NOTIFICATION TO THE RESPONSIBLE ENGINEER IS AN OFFENSE UNDER THE TEXAS ENGINEERING PRATICE LAW.

Parsons Brinckerhoff Quade & Douglas Inc.

R. Gutierrez Engineering Corporation

Texas Department of Transportation

© 2003 by TxDOT

PROPOSED NORTH DRAINAGE DITCH US 281 EXPRESSWAY

SHEET 1 OF 7

PLAN 1"= 100' HORIZ
PROFILE 1"= 10' VERT

DESIGNED:	FED. RD DIV. No.	STATE	FEDERAL AID PROJECT No.			HIGHWAY No.	
CHECKED:	6	TEXAS				US 281	
DRAWN:	STATE DISTRICT	COUNTY	CONTROL No.	SECTION No.	JOB No.	SHEET No.	
CHECKED:	21	HIDALGO	0255	08	091	624	

$NAME$
$TIME$
$DATE$
$FILES$

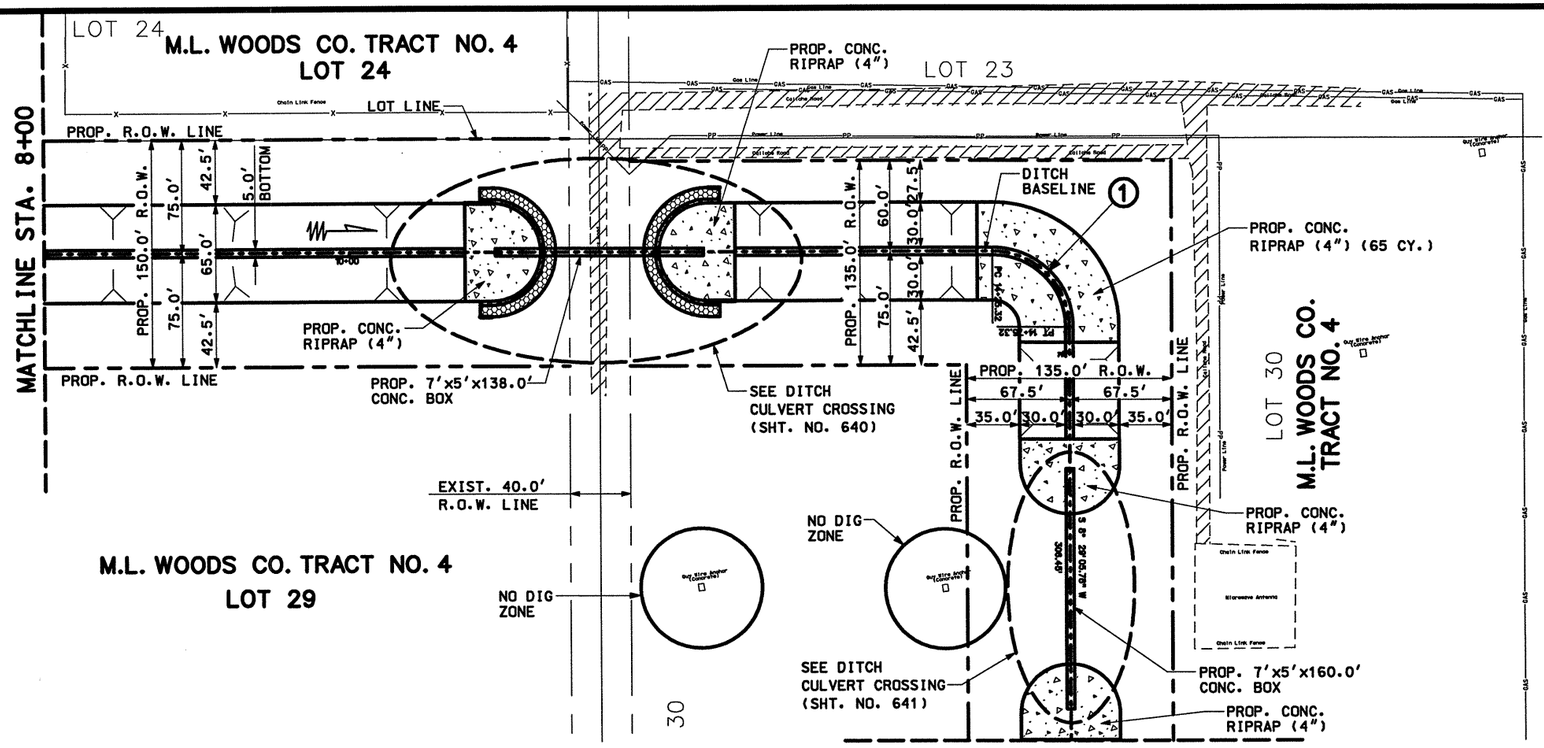

CURVE DATA

① PI STATION - 14+75.32
DELTA - 89° 59' 58.90" (RT)
DEGREE OF CURVE - 180° 00' 00.00"
TANGENT - 50.00
LENGTH - 50.00
RADIUS - 50.00
PC STATION - 14+25.32
PT STATION - 14+75.32

LEGEND

- DITCH FLOW DIRECTION
- EXIST. CALICHE/DIRT ROAD
- CONC. RIPRAP (4")
- 3.0' BERM

NOTES:
1.) CONTRACTOR SHALL CONFIRM THAT CONFLICTS WITH EXISTING UTILITIES HAVE BEEN RESOLVED PRIOR TO CONSTRUCTION. DAMAGES CAUSED BY OR TO EXIST. UTILITIES ARE THE RESPONSIBILITY OF THE CONTRACTOR.
2.) CONTRACTOR SHALL REMOVE AND REPLACE PAVEMENT ABOVE CULVERT (SUBSIDIARY TO ITEM 400).

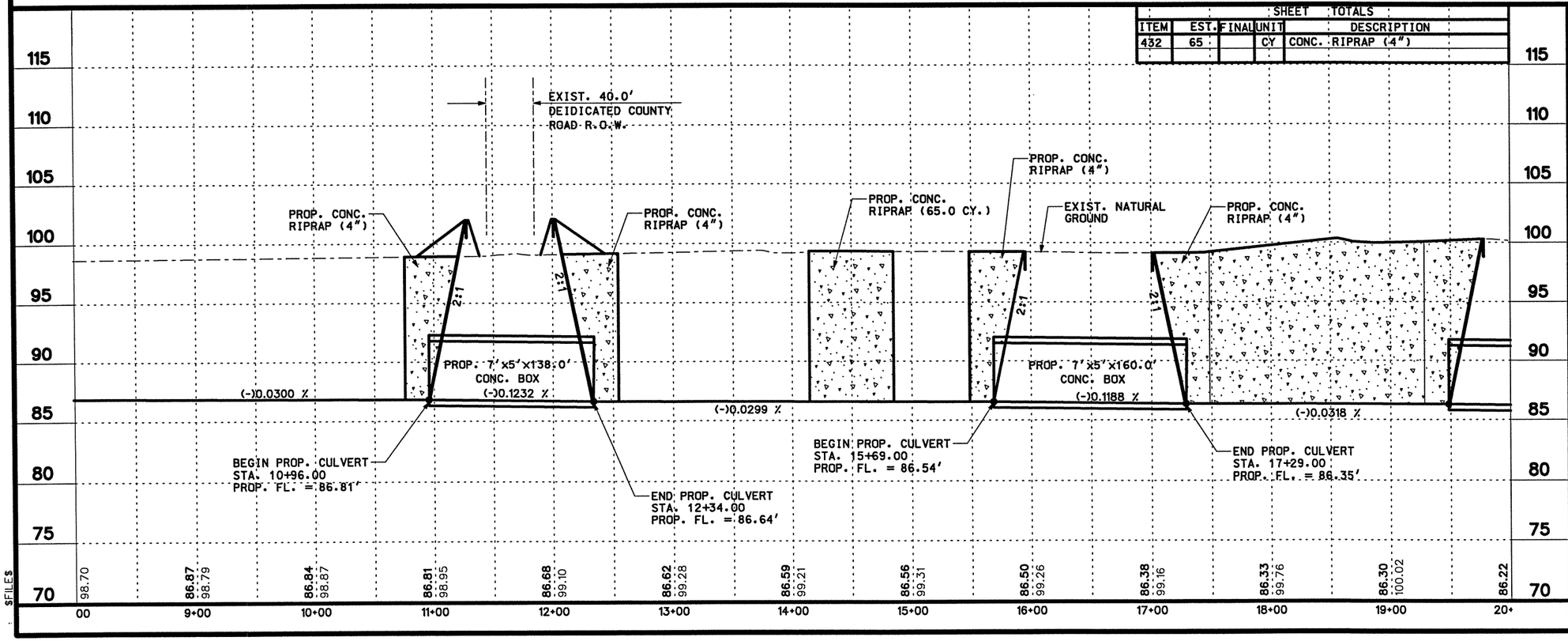

SHEET TOTALS

ITEM	EST.	FINAL	UNIT	DESCRIPTION
432	65		CY	CONC. RIPRAP (4")

THE SEAL APPEARING ON THIS DOCUMENT WAS AUTHORIZED BY RAMIRO GUTIERREZ, P.E. 65948
DATE: 8-12-03
ALTERATION OF A SEALED DOCUMENT WITHOUT PROPER NOTIFICATION TO THE RESPONSIBLE ENGINEER IS AN OFFENSE UNDER THE TEXAS ENGINEERING PRATICE LAW.

Parsons Brinckerhoff Quade & Douglas Inc.
R. Gutierrez Engineering Corporation
Texas Department of Transportation
© 2003 by TxDOT

PROPOSED NORTH DRAINAGE DITCH US 281 EXPRESSWAY

SHEET 2 OF 7
PLAN 1"= 100' HORIZ
PROFILE 1"= 10' VERT

DESIGNED:	FED. RD DIV. No.	STATE	FEDERAL AID PROJECT No.			HIGHWAY No.	
CHECKED:	6	TEXAS				US 281	
DRAWN:	STATE DISTRICT	COUNTY	CONTROL No.	SECTION No.	JOB No.	SHEET No.	
CHECKED:	21	HIDALGO	0255	08	091	625	

$NAME$
$TIME$
$DATE$
$FILES$

MATCHLINE STA. 17+50

PROP. CONC. RIPRAP (173 CY.)

PROP. CONC. RIPRAP (4")

M.L. WOODS CO. TRACT NO. 4 LOT 30

PROP. 7'x5'x244.0' CONC. BOX

PROP. R.O.W. LINE

SEE DITCH CULVERT CROSSING (SHT No. 642)

EXIST. R.O.W. LINE

EXIST. 40.0' R.O.W. LINE

EXIST. IRRIGATION LINE H.C.I.D. #2

CAUTION: EXIST. GAS LINE IN AREA

PROP. CONC. RIPRAP (4")

LOT 31

EXIST. 40.0' R.O.W. LINE

EXIST. R.O.W. LINE

EXIST. R.O.W. LINE

EXIST. R.O.W. LINE

EXIST. 40.0' R.O.W. LINE

M.L. WOODS CO. TRACT NO. 4
LOT 35

PROP. 150.0' R.O.W.

PROP. 150.0' R.O.W.

75.0'

42.5'

5.0' BOTTOM

65.0'

75.0'

42.5'

PROP. IRRIGATION CROSSING (SEE SHEET No. 648 FOR MORE DETAILS)

EXIST. R.O.W. LINE

EXIST. R.O.W. LINE

PROP. CONC. RIPRAP (79 CY.)

EXIST. 12" FIELD DRAIN

PROP. R.O.W. LINE

MATCHLINE STA. 29+50

CURVE DATA

② PI STATION = 18+56.80
DELTA = 90° 01' 32.32" (LT)
DEGREE OF CURVE = 83° 37' 14.27"
TANGENT = 75.03
LENGTH = 107.66
RADIUS = 75.00
PC STATION = 17+81.77
PT STATION = 18+89.43

③ PI STATION = 24+18.20
DELTA = 44° 38' 34.63" (LT)
DEGREE OF CURVE = 83° 37' 14.27"
TANGENT = 30.79
LENGTH = 53.39
RADIUS = 75.00
PC STATION = 23+87.41
PT STATION = 24+40.80

LEGEND

DITCH FLOW DIRECTION

EXIST. CALICHE/DIRT ROAD

NOTES:
1.) CONTRACTOR SHALL CONFIRM THAT CONFLICTS WITH EXISTING UTILITIES HAVE BEEN RESOLVED PRIOR TO CONSTRUCTION. DAMAGES CAUSED BY OR TO EXIST. UTILITIES ARE THE RESPONSIBILITY OF THE CONTRACTOR.
2.) CONTRACTOR SHALL REMOVE AND REPLACE PAVEMENT ABOVE CULVERT (SUBSIDIARY TO ITEM 400).

SHEET TOTALS

ITEM	EST.	FINAL	UNIT	DESCRIPTION
432	252		CY	CONC. RIPRAP CL "B"-4"

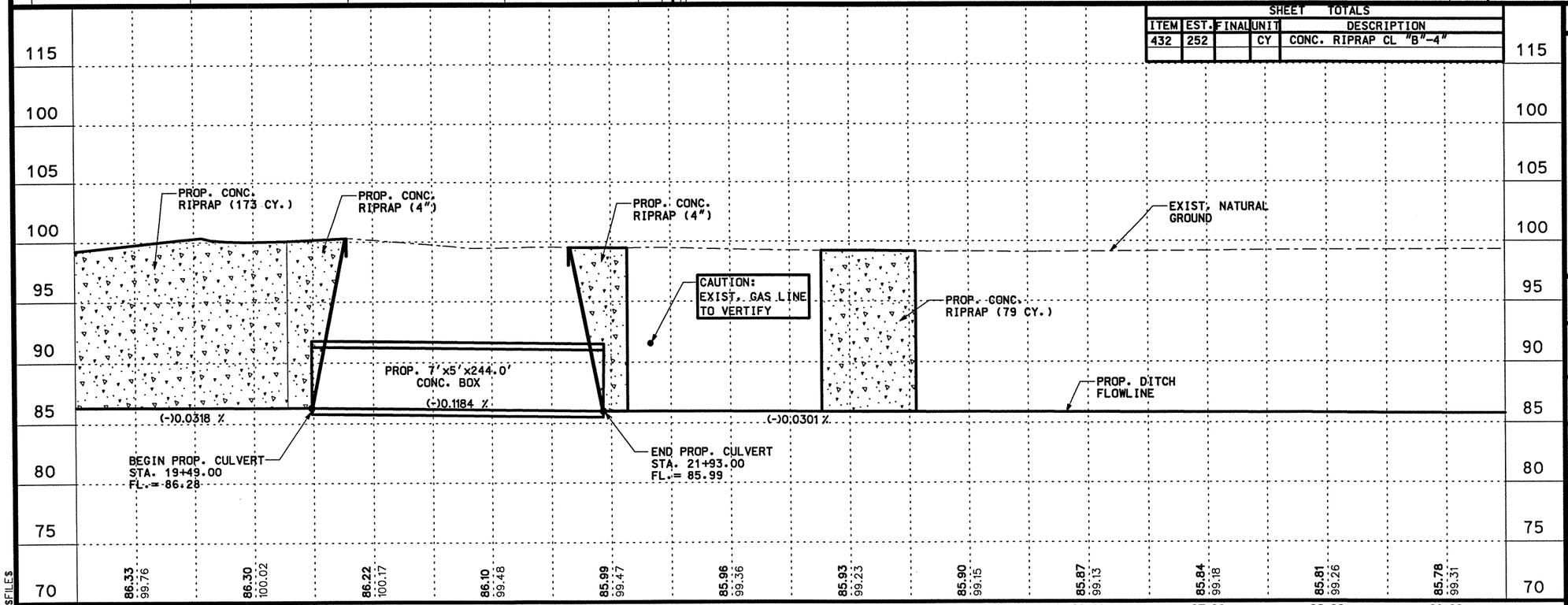

STATE OF TEXAS
RAMIRO GUTIERREZ
65948
REGISTERED PROFESSIONAL ENGINEER

THE SEAL APPEARING ON THIS DOCUMENT WAS AUTHORIZED BY RAMIRO GUTIERREZ, P.E. 65948

DATE: 8-12-03

ALTERATION OF A SEALED DOCUMENT WITHOUT PROPER NOTIFICATION TO THE RESPONSIBLE ENGINEER IS AN OFFENSE UNDER THE TEXAS ENGINEERING PRATICE LAW.

Parsons Brinckerhoff Quade & Douglas Inc.

R. Gutierrez Engineering Corporation

Texas Department of Transportation

© 2003 by TxDOT

PROPOSED NORTH DRAINAGE DITCH US 281 EXPRESSWAY

SHEET 3 OF 7

PLAN 1"= 100' HORIZ
PROFILE 1"= 10' VERT

DESIGNED:	FED. RD DIV. No.	STATE	FEDERAL AID PROJECT No.			HIGHWAY No.
CHECKED:	6	TEXAS				US 281
DRAWN:	STATE DISTRICT	COUNTY	CONTROL No.	SECTION No.	JOB No.	SHEET No.
CHECKED:	21	HIDALGO	0255	08	091	626

$NAME$
$TIME$
$DATE$
$FILE$

$NAME$
$TIME$
$DATE$

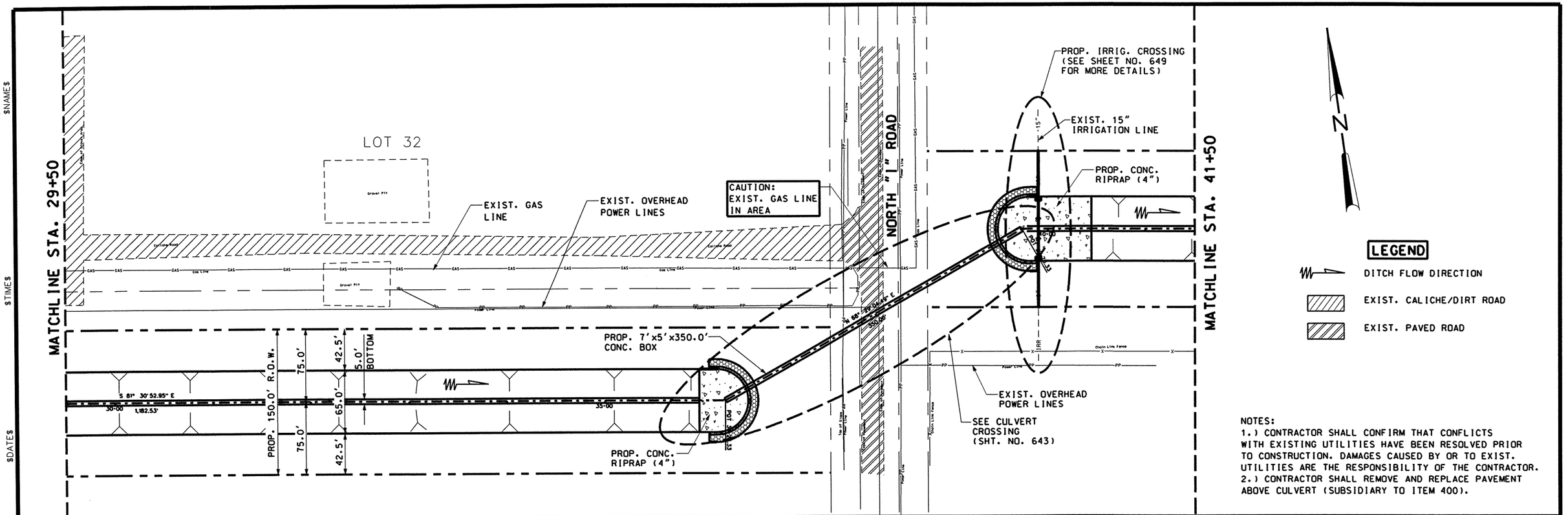

NOTES:
1.) CONTRACTOR SHALL CONFIRM THAT CONFLICTS WITH EXISTING UTILITIES HAVE BEEN RESOLVED PRIOR TO CONSTRUCTION. DAMAGES CAUSED BY OR TO EXIST. UTILITIES ARE THE RESPONSIBILITY OF THE CONTRACTOR.
2.) CONTRACTOR SHALL REMOVE AND REPLACE PAVEMENT ABOVE CULVERT (SUBSIDIARY TO ITEM 400).

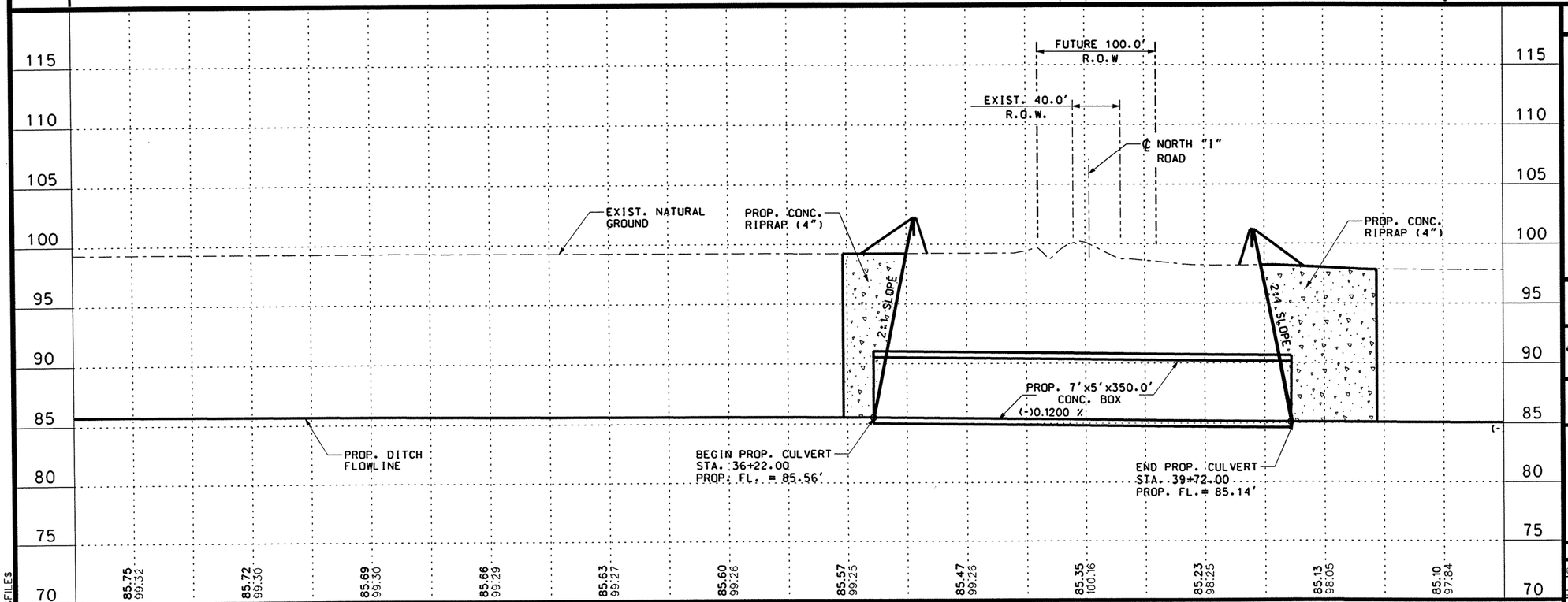

$FILE$

STATE OF TEXAS
RAMIRO GUTIERREZ
65948
REGISTERED PROFESSIONAL ENGINEER

THE SEAL APPEARING ON THIS DOCUMENT WAS AUTHORIZED BY RAMIRO GUTIERREZ, P.E. 65948

DATE: 8-15-03

ALTERATION OF A SEALED DOCUMENT WITHOUT PROPER NOTIFICATION TO THE RESPONSIBLE ENGINEER IS AN OFFENSE UNDER THE TEXAS ENGINEERING PRATICE LAW.

Parsons Brinckerhoff Quade & Douglas Inc.

R. Gutierrez Engineering Corporation

Texas Department of Transportation

© 2003 by TxDOT

PROPOSED NORTH DRAINAGE DITCH US 281 EXPRESSWAY

SHEET 4 OF 7

PLAN 1"= 100' HORIZ
PROFILE 1"= 10' VERT

DESIGNED:	FED. RD DIV. No.	STATE	FEDERAL AID PROJECT No.			HIGHWAY No.
CHECKED:	6	TEXAS				US 281
DRAWN:	STATE DISTRICT	COUNTY	CONTROL No.	SECTION No.	JOB No.	SHEET No.
CHECKED:	21	HIDALGO	0255	08	091	627

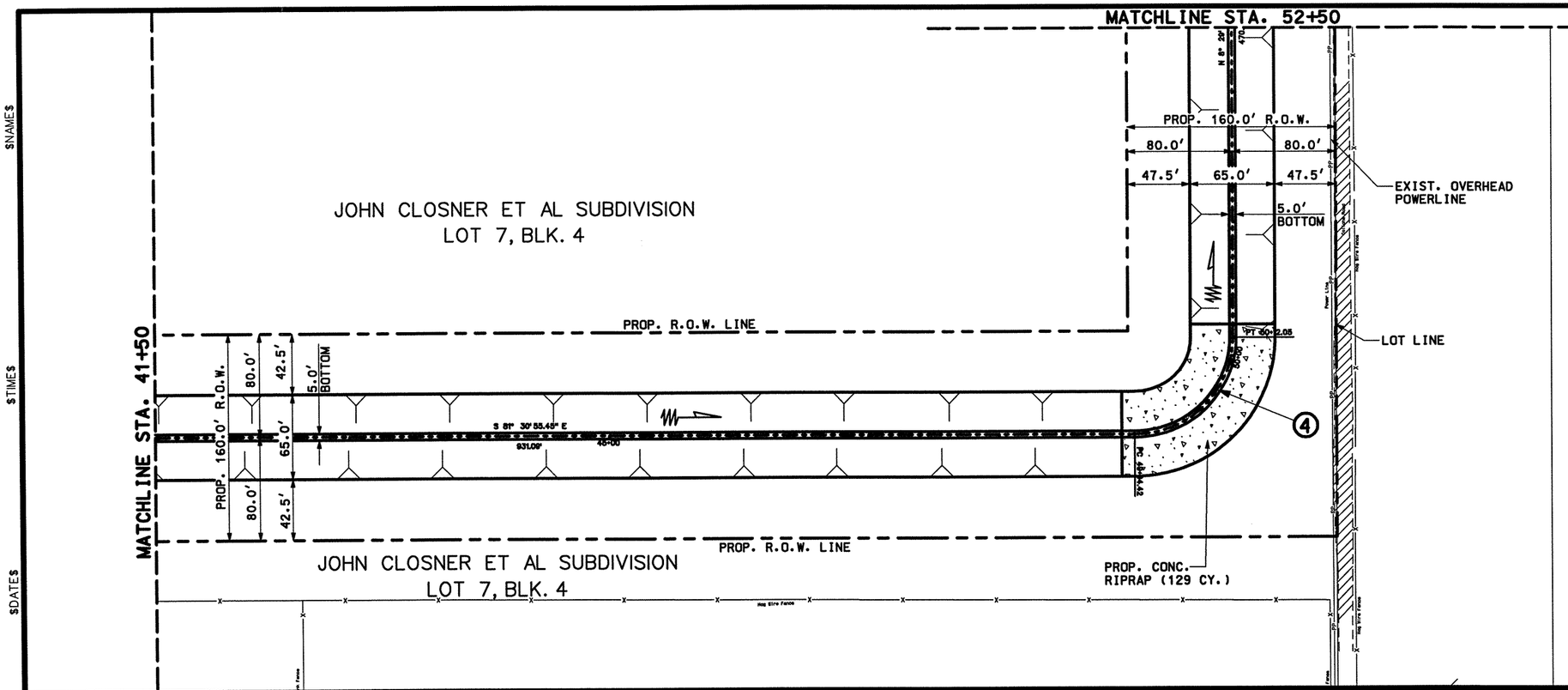

CURVE DATA

4 PI STATION	- 49+79.42
DELTA	- 90° 00' 00.21" (LT)
DEGREE OF CURVE	- 83° 37' 14.27"
TANGENT	- 75.00
LENGTH	- 107.63
RADIUS	- 75.00
PC STATION	- 49+04.42
PT STATION	- 50+12.05

LEGEND

DITCH FLOW DIRECTION

EXIST. CALICHE ROAD

NOTES:
1.) CONTRACTOR SHALL CONFIRM THAT CONFLICTS WITH EXISTING UTILITIES HAVE BEEN RESOLVED PRIOR TO CONSTRUCTION. DAMAGES CAUSED BY OR TO EXIST. UTILITIES ARE THE RESPONSIBILITY OF THE CONTRACTOR.
2.) CONTRACTOR SHALL REMOVE AND REPLACE PAVEMENT ABOVE CULVERT (SUBSIDIARY TO ITEM 400).

SHEET TOTALS

ITEM	EST.	FINAL	UNIT	DESCRIPTION
432	129		CY	CONC. RIPRAP CL "B" 4"

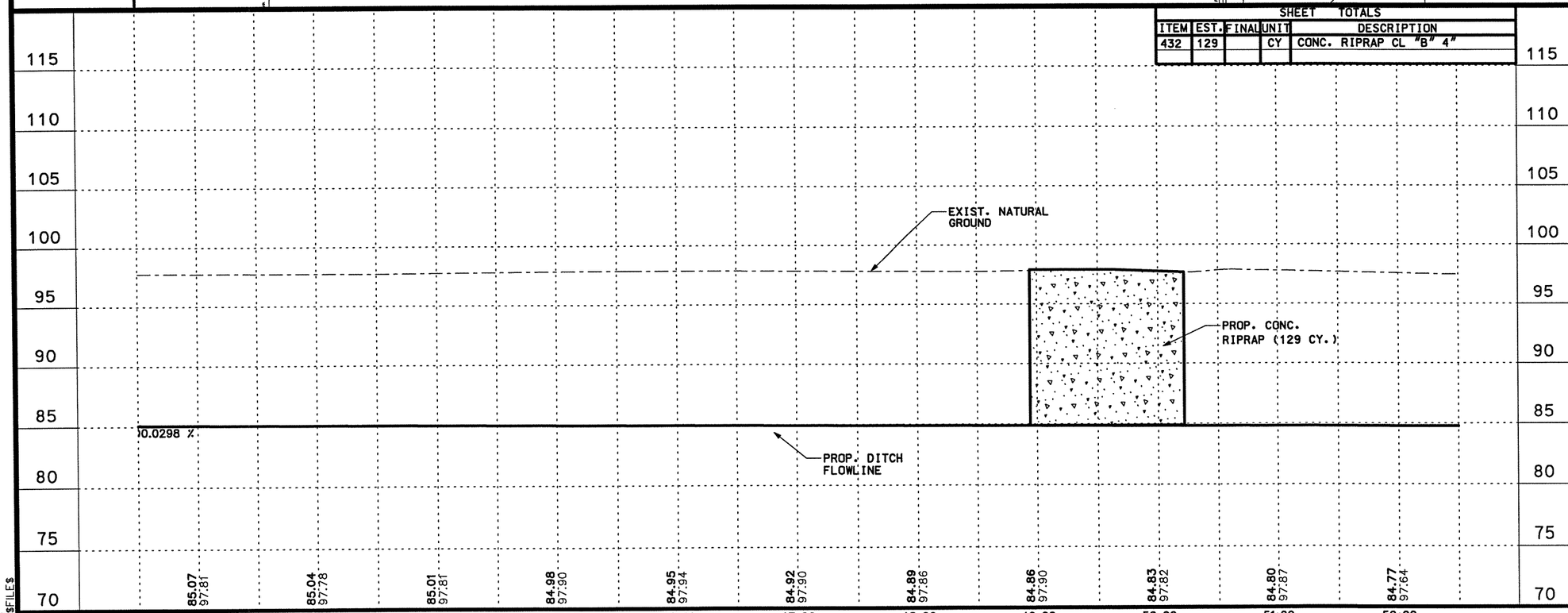

STATE OF TEXAS
RAMIRO GUTIERREZ
65948
REGISTERED PROFESSIONAL ENGINEER

THE SEAL APPEARING ON THIS DOCUMENT WAS AUTHORIZED BY RAMIRO GUTIERREZ, P.E. 65948

DATE: 8-12-03

ALTERATION OF A SEALED DOCUMENT WITHOUT PROPER NOTIFICATION TO THE RESPONSIBLE ENGINEER IS AN OFFENSE UNDER THE TEXAS ENGINEERING PRATICE LAW.

Parsons Brinckerhoff Quade & Douglas Inc.

R. Gutierrez Engineering Corporation

Texas Department of Transportation

©2003 by TxDOT

PROPOSED NORTH DRAINAGE DITCH US 281 EXPRESSWAY

SHEET 5 OF 7

PLAN 1"= 100' HORIZ
PROFILE 1"= 10' VERT

DESIGNED:	FED. RD DIV. No.	STATE	FEDERAL AID PROJECT No.	HIGHWAY No.
CHECKED:	6	TEXAS		US 281

DRAWN:	STATE DISTRICT	COUNTY	CONTROL No.	SECTION No.	JOB No.	SHEET No.
CHECKED:	21	HIDALGO	0255	08	091	628

$NAME$
$TIME$
$DATE$

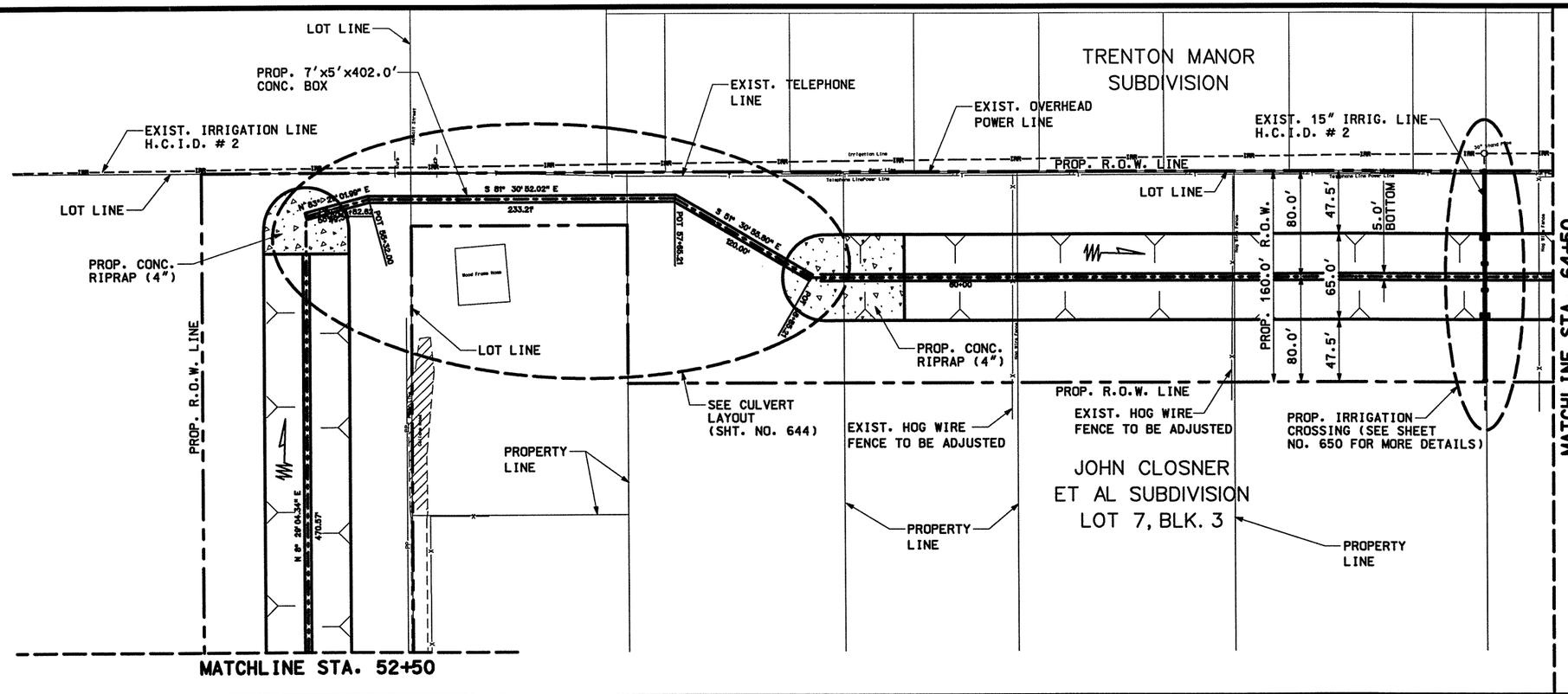

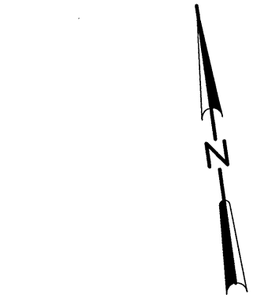

NOTES:
1.) CONTRACTOR SHALL CONFIRM THAT CONFLICTS WITH EXISTING UTILITIES HAVE BEEN RESOLVED PRIOR TO CONSTRUCTION. DAMAGES CAUSED BY OR TO EXIST. UTILITIES ARE THE RESPONSIBILITY OF THE CONTRACTOR.
2.) CONTRACTOR SHALL REMOVE AND REPLACE PAVEMENT ABOVE CULVERT (SUBSIDIARY TO ITEM 400).

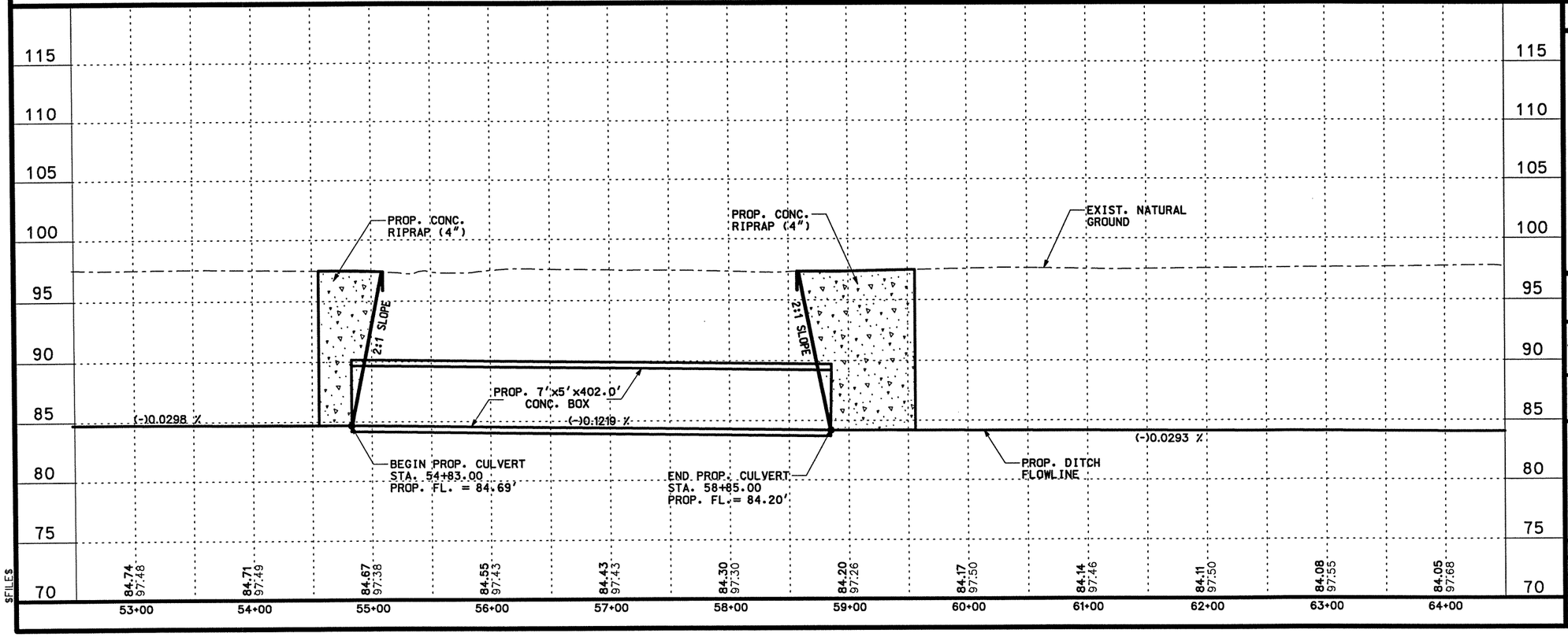

$FILE$

STATE OF TEXAS
RAMIRO GUTIERREZ
65948
REGISTERED PROFESSIONAL ENGINEER

THE SEAL APPEARING ON THIS DOCUMENT WAS AUTHORIZED BY RAMIRO GUTIERREZ, P.E. 65948

DATE: 8-12-03

ALTERATION OF A SEALED DOCUMENT WITHOUT PROPER NOTIFICATION TO THE RESPONSIBLE ENGINEER IS AN OFFENSE UNDER THE TEXAS ENGINEERING PRATICE LAW.

Parsons Brinckerhoff
Quade & Douglas Inc.

R. Gutierrez Engineering Corporation

Texas Department of Transportation

©2003 by TxDOT

PROPOSED NORTH DRAINAGE DITCH US 281 EXPRESSWAY

SHEET 6 OF 7

PLAN 1"= 100' HORIZ
PROFILE 1"= 10' VERT

DESIGNED:	FED. RD DIV. No.	STATE	FEDERAL AID PROJECT No.			HIGHWAY No.
CHECKED:	6	TEXAS				US 281
DRAWN:	STATE DISTRICT	COUNTY	CONTROL No.	SECTION No.	JOB No.	SHEET No.
CHECKED:	21	HIDALGO	0255	08	091	629

$NAME$

$TIME$

$DATE$

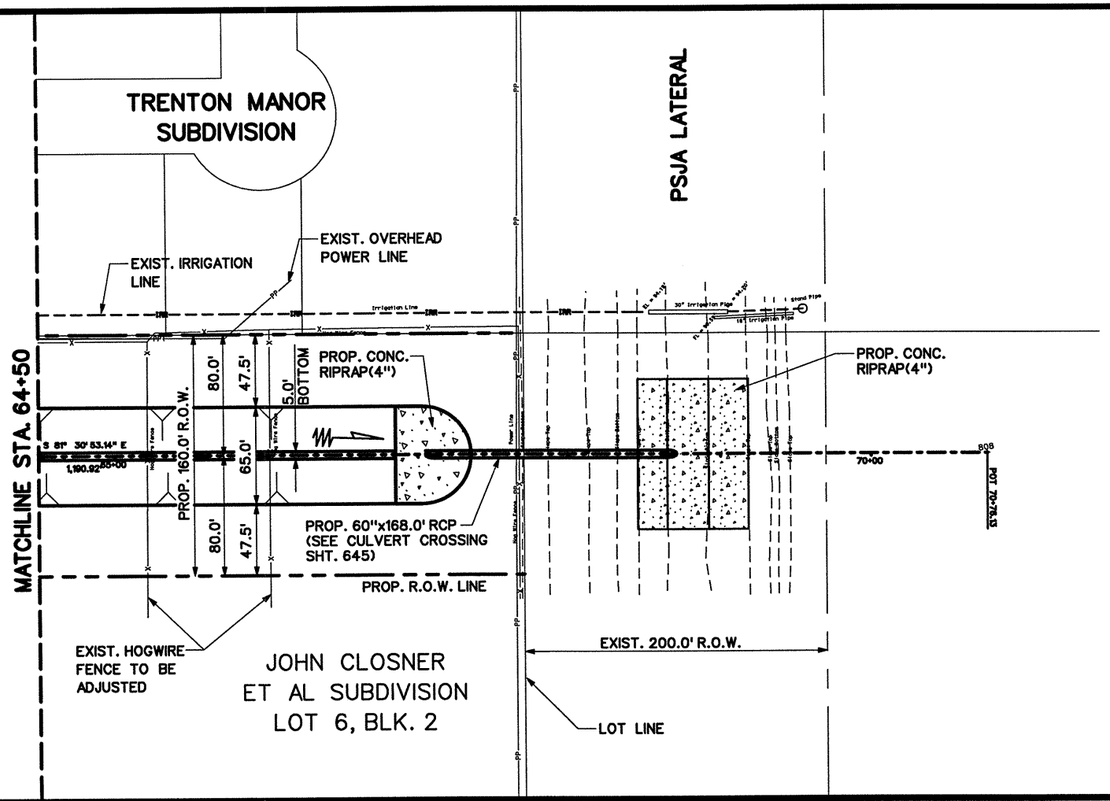

N

LEGEND

DITCH FLOW DIRECTION

NOTES:
1.) CONTRACTOR SHALL CONFIRM THAT CONFLICTS WITH EXISTING UTILITIES HAVE BEEN RESOLVED PRIOR TO CONSTRUCTION. DAMAGES CAUSED BY OR TO EXIST. UTILITIES ARE THE RESPONSIBILITY OF THE CONTRACTOR.
2.) CONTRACTOR SHALL REMOVE AND REPLACE PAVEMENT ABOVE CULVERT (SUBSIDIARY TO ITEM 400).

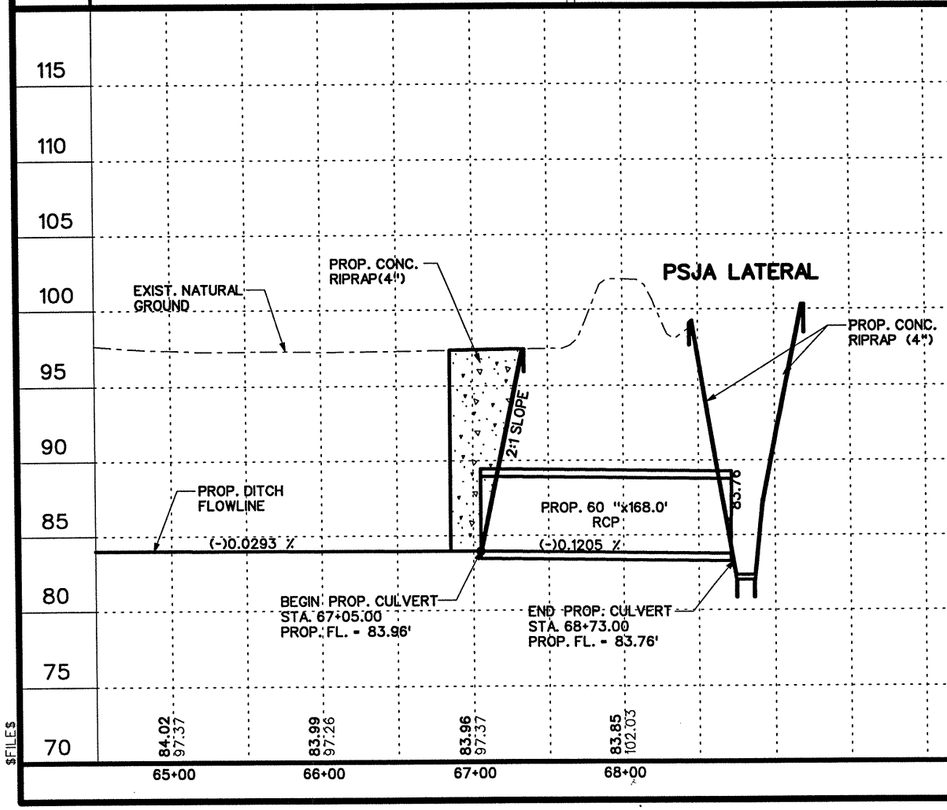

$FILES$

STATE OF TEXAS
RAMIRO GUTIERREZ
65948
REGISTERED PROFESSIONAL ENGINEER

THE SEAL APPEARING ON THIS DOCUMENT WAS AUTHORIZED BY RAMIRO GUTIERREZ, P.E. 65948

DATE: 8-12-03

ALTERATION OF A SEALED DOCUMENT WITHOUT PROPER NOTIFICATION TO THE RESPONSIBLE ENGINEER IS AN OFFENSE UNDER THE TEXAS ENGINEERING PRATICE LAW.

Parsons Brinckerhoff Quade & Douglas Inc.

R. Gutierrez Engineering Corporation

Texas Department of Transportation

© 2003 by TxDOT

PROPOSED NORTH DRAINAGE DITCH US 281 EXPRESSWAY

SHEET 7 OF 7

PLAN 1"= 100' HORIZ
PROFILE 1"= 10' VERT

DESIGNED:	FED. RD DIV. No.	STATE	FEDERAL AID PROJECT No.			HIGHWAY No.
CHECKED:	6	TEXAS				US 281
DRAWN:	STATE DISTRICT	COUNTY	CONTROL No.	SECTION No.	JOB No.	SHEET No.
CHECKED:	21	HIDALGO	0255	08	091	630

$NAME$

$TIME$

$DATE$

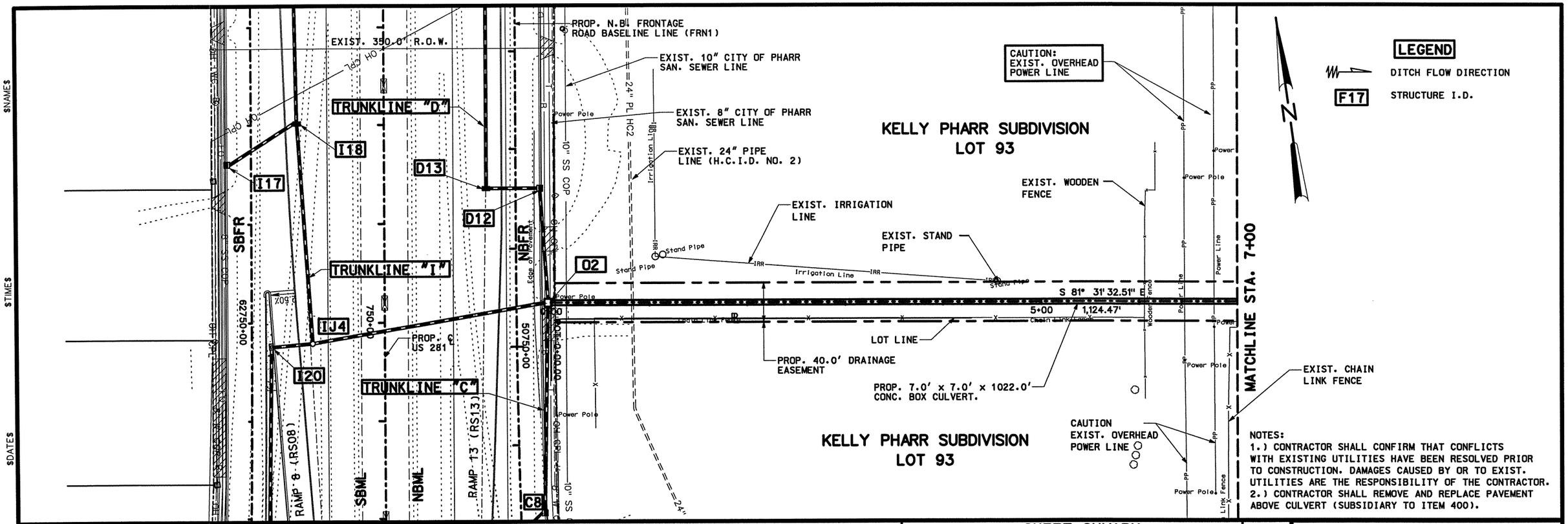

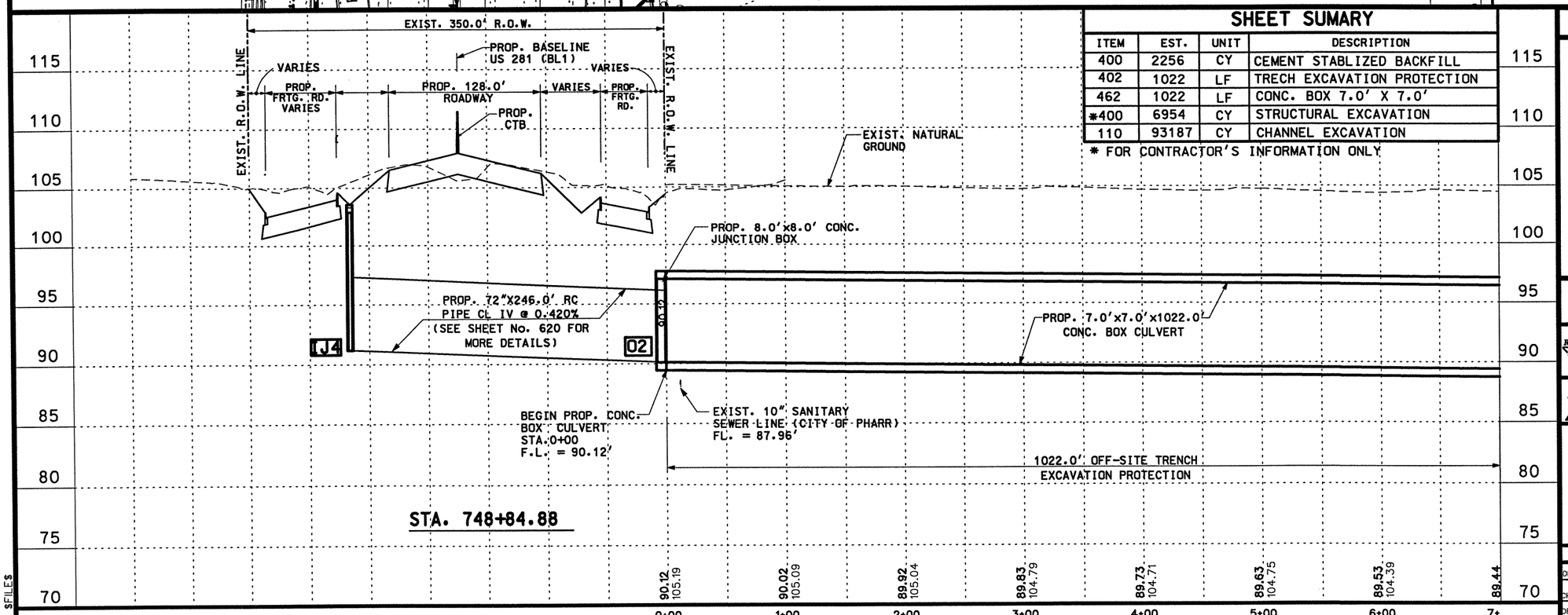

SHEET SUMMARY

ITEM	EST.	UNIT	DESCRIPTION
400	2256	CY	CEMENT STABLIZED BACKFILL
402	1022	LF	TRECH EXCAVATION PROTECTION
462	1022	LF	CONC. BOX 7.0' X 7.0'
*400	6954	CY	STRUCTURAL EXCAVATION
110	93187	CY	CHANNEL EXCAVATION

* FOR CONTRACTOR'S INFORMATION ONLY

STATE OF TEXAS
RAMIRO GUTIERREZ
65948
REGISTERED PROFESSIONAL ENGINEER

THE SEAL APPEARING ON THIS DOCUMENT WAS AUTHORIZED BY RAMIRO GUTIERREZ, P.E. 65948

DATE: 8-12-03

ALTERATION OF A SEALED DOCUMENT WITHOUT PROPER NOTIFICATION TO THE RESPONSIBLE ENGINEER IS AN OFFENSE UNDER THE TEXAS ENGINEERING PRATICE LAW.

Parsons Brinckerhoff Quade & Douglas Inc.

R. Gutierrez Engineering Corporation

Texas Department of Transportation

© 2003 by TxDOT

PROPOSED SOUTH DRAINAGE DITCH US 281 EXPRESSWAY

SHEET 1 OF 9

PLAN 1"= 100' HORIZ
PROFILE 1"= 10' VERT

DESIGNED:	FED. RD DIV. No.	STATE	FEDERAL AID PROJECT No.			HIGHWAY No.	
CHECKED:	6	TEXAS				US 281	
DRAWN:	STATE DISTRICT	COUNTY	CONTROL No.	SECTION No.	JOB No.	SHEET No.	
CHECKED:	21	HIDALGO	0255	08	091	631	

$FILE$

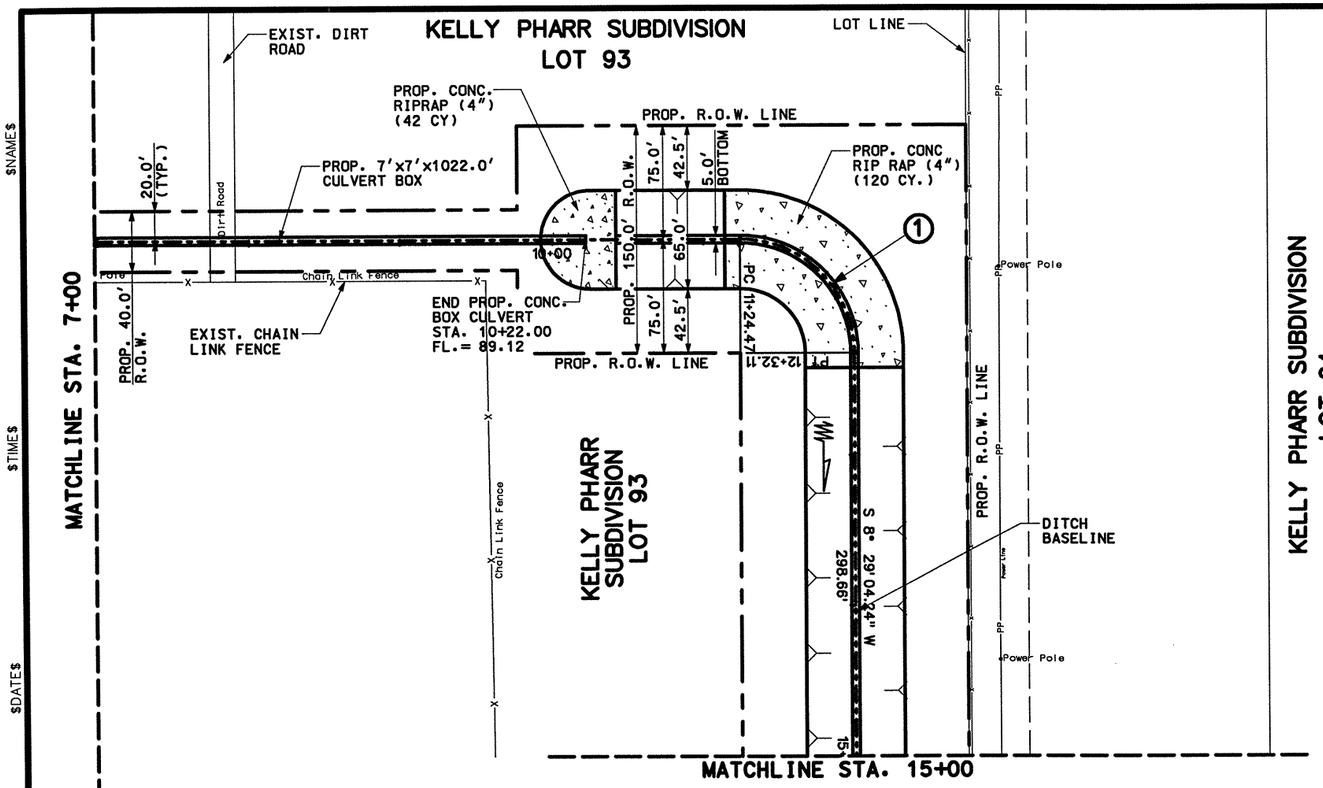

LEGEND

DITCH FLOW DIRECTION

F17 STRUCTURE I.D.

CURVE DATA

① PISTATION - 11+99.49
DELTA - 90° 00' 36.36" (RT)
DEGREE OF CURVE - 83° 37' 14.27"
TANGENT - 75.01
LENGTH - 107.64
RADIUS - 75.00
PC STATION - 11+24.47
PT STATION - 12+32.11

N

NOTES:
1.) CONTRACTOR SHALL CONFIRM THAT CONFLICTS WITH EXISTING UTILITIES HAVE BEEN RESOLVED PRIOR TO CONSTRUCTION. DAMAGES CAUSED BY OR TO EXIST. UTILITIES ARE THE RESPONSIBILITY OF THE CONTRACTOR.
2.) CONTRACTOR SHALL REMOVE AND REPLACE PAVEMENT ABOVE CULVERT (SUBSIDIARY TO ITEM 400).

SHEET TOTALS

ITEM	EST.	FINAL	UNIT	DESCRIPTION
432	162		CY	CONC. RIPRAP CL "B"- 4"

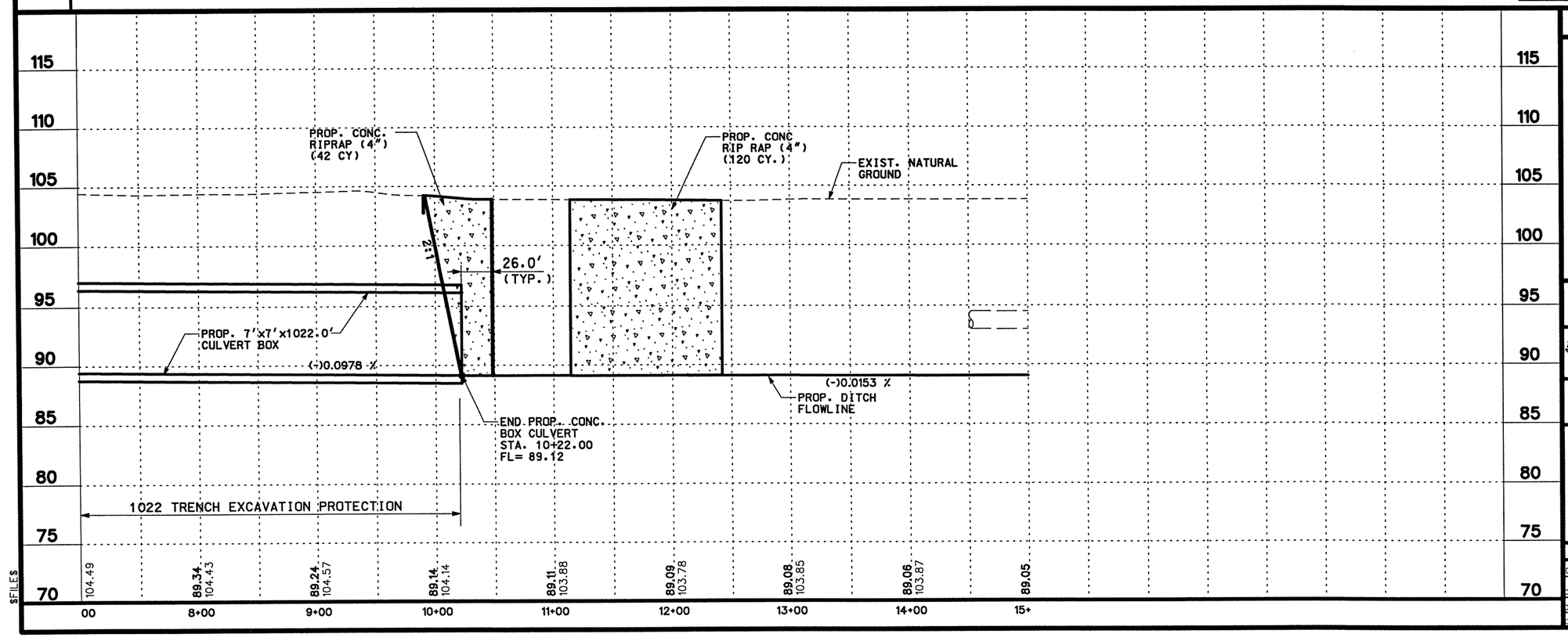

STATE OF TEXAS
RAMIRO GUTIERREZ
65948
REGISTERED PROFESSIONAL ENGINEER

THE SEAL APPEARING ON THIS DOCUMENT WAS AUTHORIZED BY RAMIRO GUTIERREZ, P.E. 65948

DATE: 8-12-03

ALTERATION OF A SEALED DOCUMENT WITHOUT PROPER NOTIFICATION TO THE RESPONSIBLE ENGINEER IS AN OFFENSE UNDER THE TEXAS ENGINEERING PRATICE LAW.

Parsons Brinckerhoff Quade & Douglas Inc.

R. Gutierrez Engineering Corporation

Texas Department of Transportation

© 2003 by TxDOT

PROPOSED SOUTH DRAINAGE DITCH US 281 EXPRESSWAY

SHEET 2 OF 9

PLAN 1"= 100' HORIZ
PROFILE 1"= 10' VERT

DESIGNED:	FED. RD DIV. No.	STATE	FEDERAL AID PROJECT No.			HIGHWAY No.
CHECKED:	6	TEXAS				US 281
DRAWN:	STATE DISTRICT	COUNTY	CONTROL No.	SECTION No.	JOB No.	SHEET No.
CHECKED:	21	HIDALGO	0255	08	091	632

$NAME$
$TIME$
$DATE$
$FILE$

$NAME$
$TIME$
$DATE$
$FILE$

CURVE DATA

②
PISTATION	= 15+74.08
DELTA	= 59° 59' 57.99" (LT)
DEGREE OF CURVE	= 83° 37' 14.27"
TANGENT	= 43.30
LENGTH	= 71.75
RADIUS	= 75.00
PC STATION	= 15+30.78
PT STATION	= 16+02.53

CURVE DATA

③
PISTATION	= 18+19.01
DELTA	= 30° 00' 14.19" (LT)
DEGREE OF CURVE	= 83° 37' 14.27"
TANGENT	= 20.10
LENGTH	= 35.88
RADIUS	= 75.00
PC STATION	= 17+98.91
PT STATION	= 18+34.79

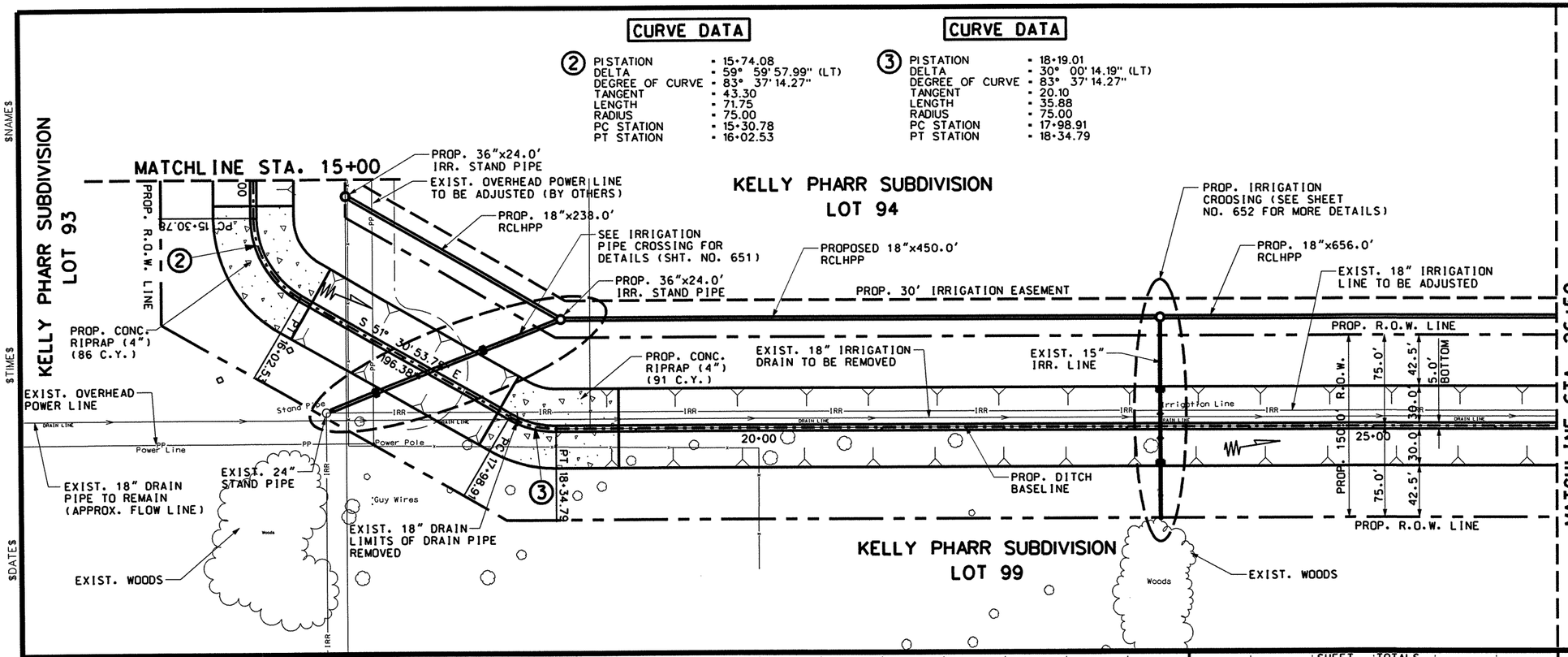

LEGEND

DITCH FLOW DIRECTION

F17 STRUCTURE I.D.

NOTES:
1.) CONTRACTOR SHALL CONFIRM THAT CONFLICTS WITH EXISTING UTILITIES HAVE BEEN RESOLVED PRIOR TO CONSTRUCTION. DAMAGES CAUSED BY OR TO EXIST. UTILITIES ARE THE RESPONSIBILITY OF THE CONTRACTOR.
2.) CONTRACTOR SHALL REMOVE AND REPLACE PAVEMENT ABOVE CULVERT (SUBSIDIARY TO ITEM 400).

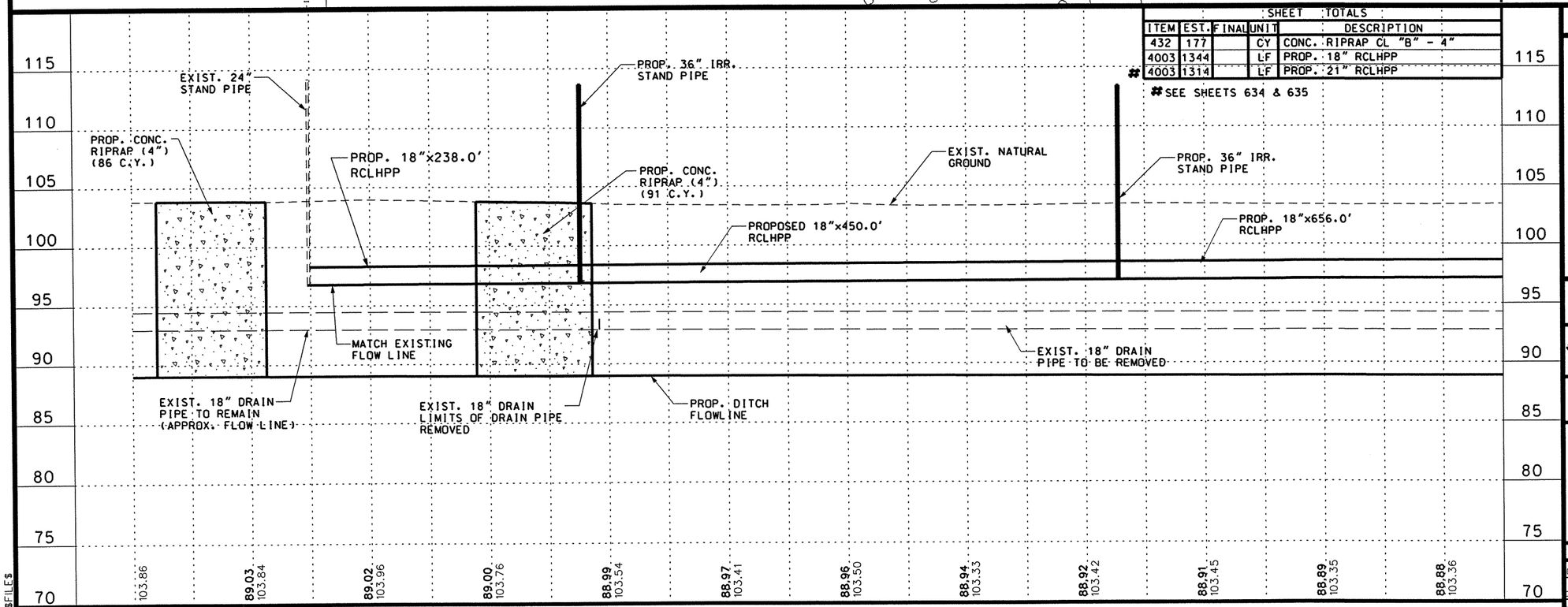

SHEET TOTALS

ITEM	EST.	FINAL	UNIT	DESCRIPTION
432	177		CY	CONC. RIPRAP CL "B" - 4"
4003	1344		LF	PROP. 18" RCLHPP
# 4003	1314		LF	PROP. 21" RCLHPP

SEE SHEETS 634 & 635

STATE OF TEXAS
RAMIRO GUTIERREZ
65948
REGISTERED PROFESSIONAL ENGINEER

THE SEAL APPEARING ON THIS DOCUMENT WAS AUTHORIZED BY RAMIRO GUTIERREZ, P.E. 65948

DATE: 8-15-03

ALTERATION OF A SEALED DOCUMENT WITHOUT PROPER NOTIFICATION TO THE RESPONSIBLE ENGINEER IS AN OFFENSE UNDER THE TEXAS ENGINEERING PRATICE LAW.

Parsons Brinckerhoff Quade & Douglas Inc.

R. Gutierrez Engineering Corporation

Texas Department of Transportation

©2003 by TxDOT

PROPOSED SOUTH DRAINAGE DITCH US 281 EXPRESSWAY

SHEET 3 OF 9

PLAN 1"= 100' HORIZ
PROFILE 1"= 10' VERT

DESIGNED:	FED. RD DIV. No.	STATE	FEDERAL AID PROJECT No.			HIGHWAY No.	
CHECKED:	6	TEXAS				US 281	
DRAWN:	STATE DISTRICT	COUNTY	CONTROL No.	SECTION No.	JOB No.	SHEET No.	
CHECKED:	21	HIDALGO	0255	08	091	633	

$NAME$
$TIME$
$DATE$
$FILE$

KELLY PHARR SUBDIVISION
LOT 94

KELLY PHARR SUBDIVISION
LOT 95

KELLY PHARR SUBDIVISION
LOT 99

KELLY PHARR SUBDIVISION
LOT 98

LOT LINE

LOT LINE

LOT LINE

EXIST. ROAD
TO REMIAN

PROP 18"x656.0'
RCLHPP

Dirt Road

Dirt Road

Dirt Road

PROP 21"x1314.0'
RCLHPP

EXIST. 18" IRRIGATION
DRAIN TO BE REMOVED

EXIST.21" IRR. LINE
TO BE RELOCATED

PROP. 30' IRRIGATION EASEMENT

PROP. R.O.W. LINE

EXIST. JUNCTION BOX WITH
VENT TO BE RELOCATED

JUNCTION BOX

IRR

DRAIN LINE

30+00

35+00

DITCH
BASELINE

Irrigation Line
S 81° 31' 07.93" E
3,886.90'

PROP. R.O.W. LINE

PROP. 150.0' R.O.W.

75.0'
42.5'
5.0'
BOTTOM
65.0'
75.0'
42.5'

PROP. IRRIGATION
CROSSING (SEE SHEET
NO. 653 FOR MORE DETAILS)

MATCHLINE STA. 26+50

MATCHLINE STA. 38+50

N

LEGEND

DITCH FLOW DIRECTION

F17 STRUCTURE I.D.

NOTES:
1.) CONTRACTOR SHALL CONFIRM THAT CONFLICTS WITH EXISTING UTILITIES HAVE BEEN RESOLVED PRIOR TO CONSTRUCTION. DAMAGES CAUSED BY OR TO EXIST. UTILITIES ARE THE RESPONSIBILITY OF THE CONTRACTOR.
2.) CONTRACTOR SHALL REMOVE AND REPLACE PAVEMENT ABOVE CULVERT (SUBSIDIARY TO ITEM 400).

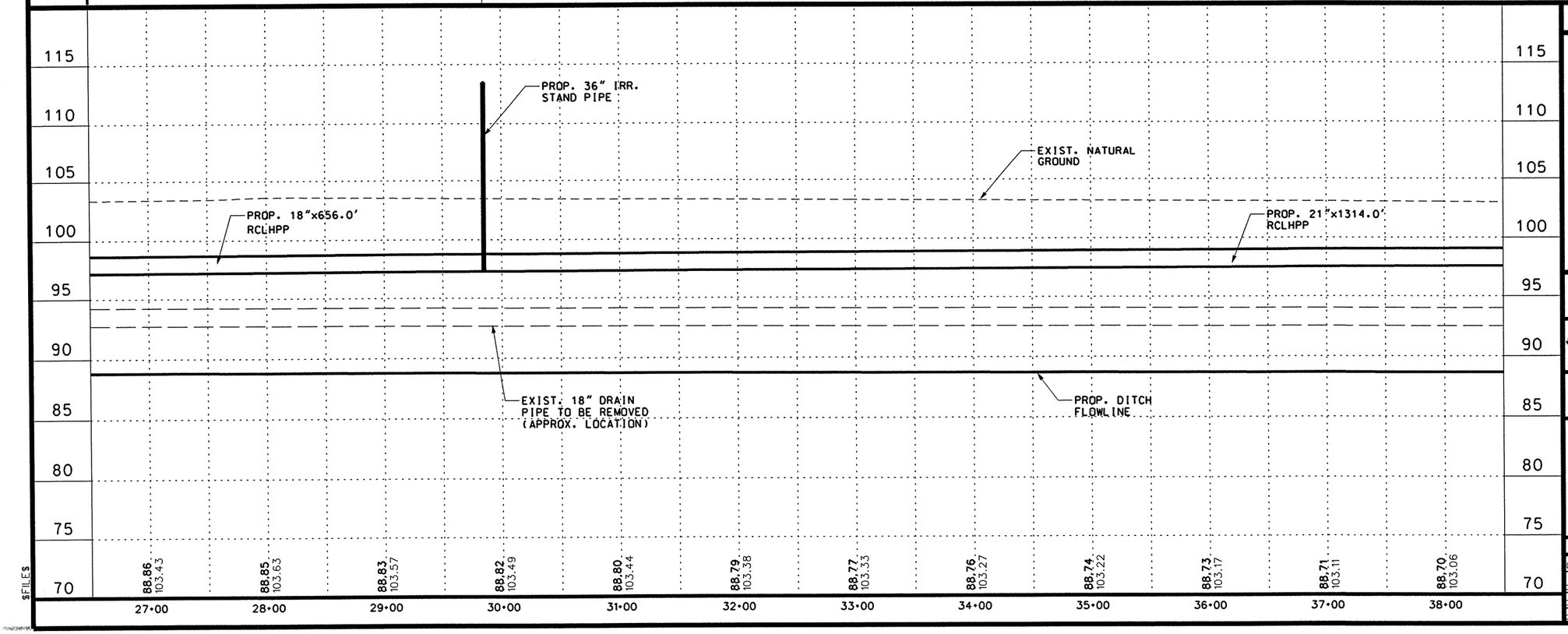

STATE OF TEXAS
RAMIRO GUTIERREZ
65948
REGISTERED
PROFESSIONAL ENGINEER

THE SEAL APPEARING ON THIS DOCUMENT WAS AUTHORIZED BY RAMIRO GUTIERREZ, P.E. 65948

DATE: 8-15-03

ALTERATION OF A SEALED DOCUMENT WITHOUT PROPER NOTIFICATION TO THE RESPONSIBLE ENGINEER IS AN OFFENSE UNDER THE TEXAS ENGINEERING PRATICE LAW.

Parsons Brinckerhoff Quade & Douglas Inc.

R. Gutierrez Engineering Corporation

Texas Department of Transportation

© 2003 by TxDOT

PROPOSED SOUTH DRAINAGE DITCH US 281 EXPRESSWAY

SHEET 4 OF 9

PLAN 1"= 100' HORIZ
PROFILE 1"= 10' VERT

DESIGNED:	FED. RD DIV. No.	STATE	FEDERAL AID PROJECT No.			HIGHWAY No.	
CHECKED:	6	TEXAS				US 281	
DRAWN:	STATE DISTRICT	COUNTY	CONTROL No.	SECTION No.	JOB No.	SHEET No.	
CHECKED:	21	HIDALGO	0255	08	091	634	

$NAME$
$TIME$
$DATE$

EXIST. 24" IRRIGATION LINE

KELLY PHARR SUBDIVISION
LOT 95

KELLY PHARR SUBDIVISION
LOT 96

PROP. 21"x1314.0' RCLHPP

EXIST. 21" IRRIGATION LINE TO BE RELOCATED

PROP. LOCATION OF EXIST. JUNCTION BOX WITH VENT AS PER IRRIG. DIST. NO. 2

EXIST. JUNCTION BOX WITH VENT TO BE RELOCATED

EXIST. 18" IRRIGATION DRAIN TO BE REMOVED

PROP.30' IRRIGATION EASEMENT

30'

PROP. R.O.W. LINE

LOT LINE

MATCHLINE STA. 38+50

MATCHLINE STA. 50+50

IRR

DRAIN LINE

JUNCTION BOX

40+00

45+00

50+00

PROP. R.O.W. 150.0'

75.0'

42.5'

65.0'

5.0' BOTTOM

PROP. R.O.W. LINE

LOT LINE

PROP. IRRIGATION CROSSING (SEE SHEET NO. 654 FOR MORE DETAILS)

LOT LINE

KELLY PHARR SUBDIVISION
LOT 98

KELLY PHARR SUBDIVISION
LOT 97

N

LEGEND

DITCH FLOW DIRECTION

F17 STRUCTURE I.D.

NOTES:
1.) CONTRACTOR SHALL CONFIRM THAT CONFLICTS WITH EXISTING UTILITIES HAVE BEEN RESOLVED PRIOR TO CONSTRUCTION. DAMAGES CAUSED BY OR TO EXIST. UTILITIES ARE THE RESPONSIBILITY OF THE CONTRACTOR.
2.) CONTRACTOR SHALL REMOVE AND REPLACE PAVEMENT ABOVE CULVERT (SUBSIDIARY TO ITEM 400).

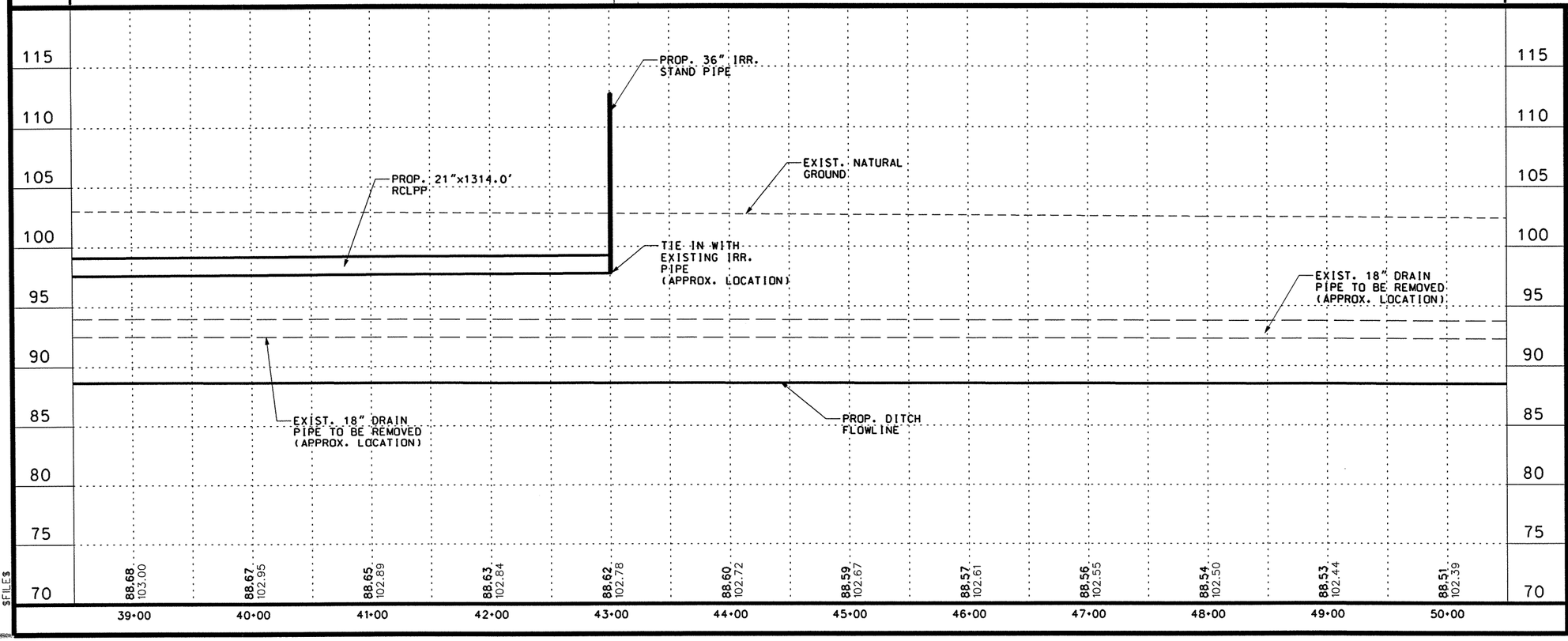

$FILE$

STATE OF TEXAS
RAMIRO GUTIERREZ
65948
REGISTERED PROFESSIONAL ENGINEER

THE SEAL APPEARING ON THIS DOCUMENT WAS AUTHORIZED BY RAMIRO GUTIERREZ, P.E. 65948

DATE: 8-15-03

ALTERATION OF A SEALED DOCUMENT WITHOUT PROPER NOTIFICATION TO THE RESPONSIBLE ENGINEER IS AN OFFENSE UNDER THE TEXAS ENGINEERING PRATICE LAW.

Parsons Brinckerhoff Quade & Douglas Inc.

R. Gutierrez Engineering Corporation

Texas Department of Transportation

© 2003 by TxDOT

PROPOSED SOUTH DRAINAGE DITCH US 281 EXPRESSWAY

SHEET 5 OF 9

PLAN 1"= 100' HORIZ
PROFILE 1"= 10' VERT

DESIGNED:	FED. RD DIV. No.	STATE	FEDERAL AID PROJECT No.			HIGHWAY No.	
CHECKED:	6	TEXAS				US 281	
DRAWN:	STATE DISTRICT	COUNTY	CONTROL No.	SECTION No.	JOB No.	SHEET No.	
CHECKED:	21	HIDALGO	0255	08	091	635	

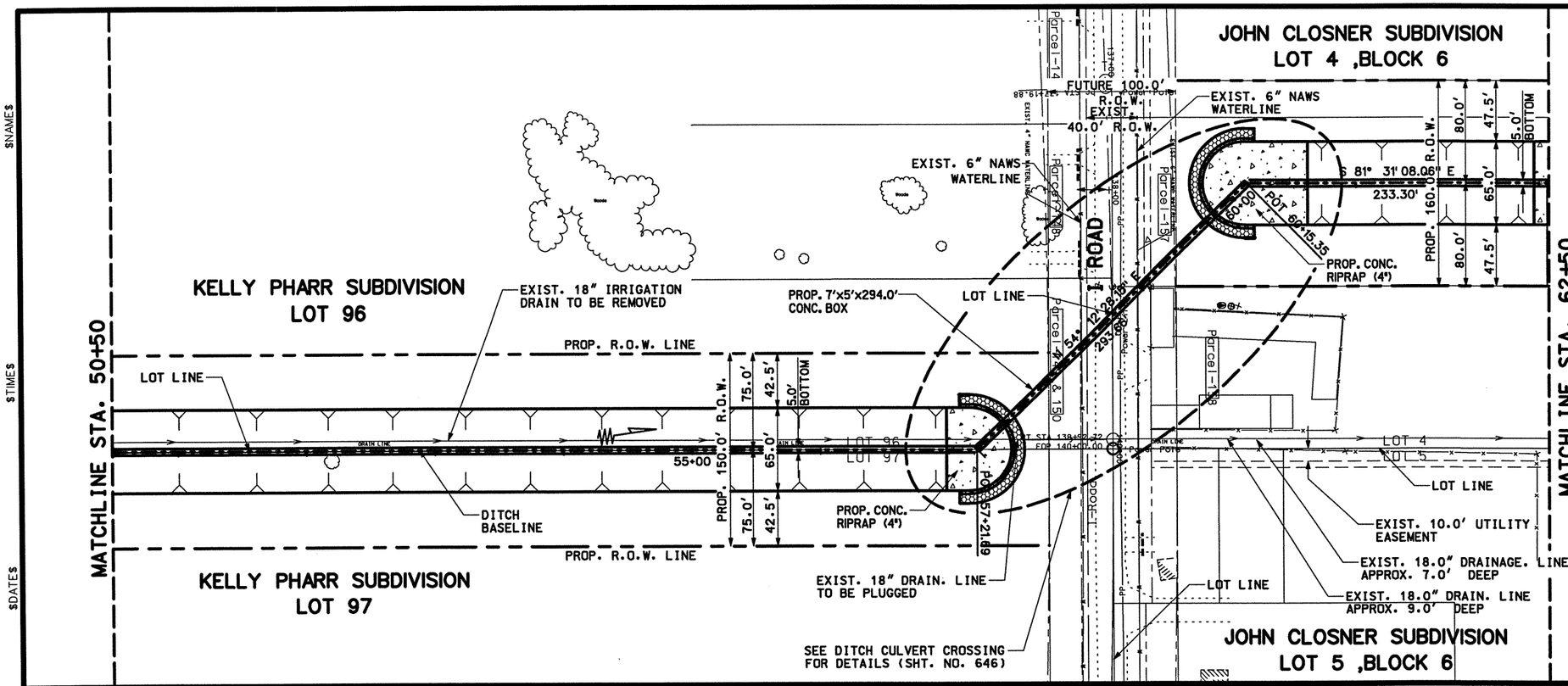

LEGEND

DITCH FLOW DIRECTION

F17 STRUCTURE I.D.

NOTES:
1.) CONTRACTOR SHALL CONFIRM THAT CONFLICTS WITH EXISTING UTILITIES HAVE BEEN RESOLVED PRIOR TO CONSTRUCTION. DAMAGES CAUSED BY OR TO EXIST. UTILITIES ARE THE RESPONSIBILITY OF THE CONTRACTOR.
2.) CONTRACTOR SHALL REMOVE AND REPLACE PAVEMENT ABOVE CULVERT (SUBSIDIARY TO ITEM 400).

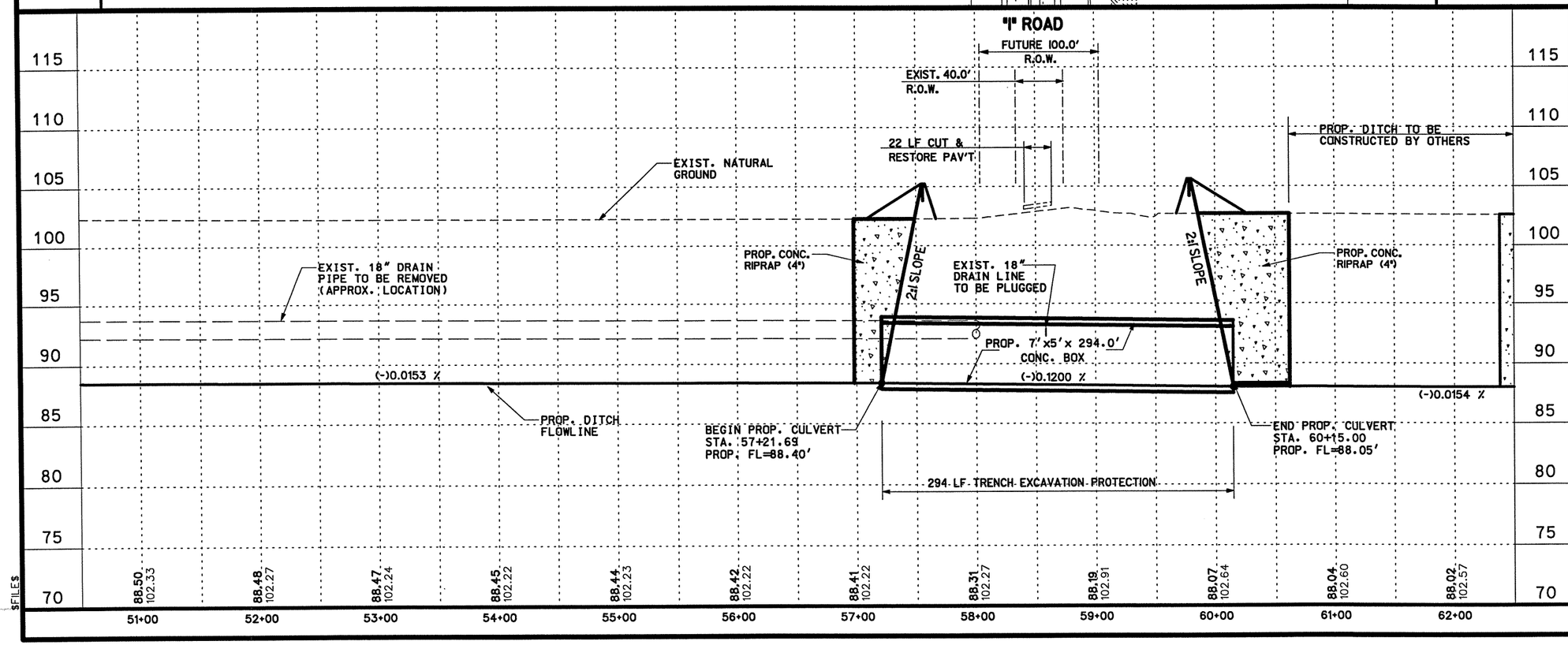

STATE OF TEXAS
RAMIRO GUTIERREZ
65948
REGISTERED PROFESSIONAL ENGINEER

THE SEAL APPEARING ON THIS DOCUMENT WAS AUTHORIZED BY RAMIRO GUTIERREZ, P.E. 65948

DATE: 8-12-03

ALTERATION OF A SEALED DOCUMENT WITHOUT PROPER NOTIFICATION TO THE RESPONSIBLE ENGINEER IS AN OFFENSE UNDER THE TEXAS ENGINEERING PRATICE LAW.

Parsons Brinckerhoff Quade & Douglas Inc.

R. Gutierrez Engineering Corporation

Texas Department of Transportation

© 2003 by TxDOT

PROPOSED SOUTH DRAINAGE DITCH US 281 EXPRESSWAY

SHEET 6 OF 9

PLAN 1"= 100' HORIZ
PROFILE 1"= 10' VERT

DESIGNED:	FED. RD DIV. No.	STATE	FEDERAL AID PROJECT No.			HIGHWAY No.
CHECKED:	6	TEXAS				US 281
DRAWN:	STATE DISTRICT	COUNTY	CONTROL No.	SECTION No.	JOB No.	SHEET No.
CHECKED:	21	HIDALGO	0255	08	091	636

$NAME$
$TIME$
$DATE$

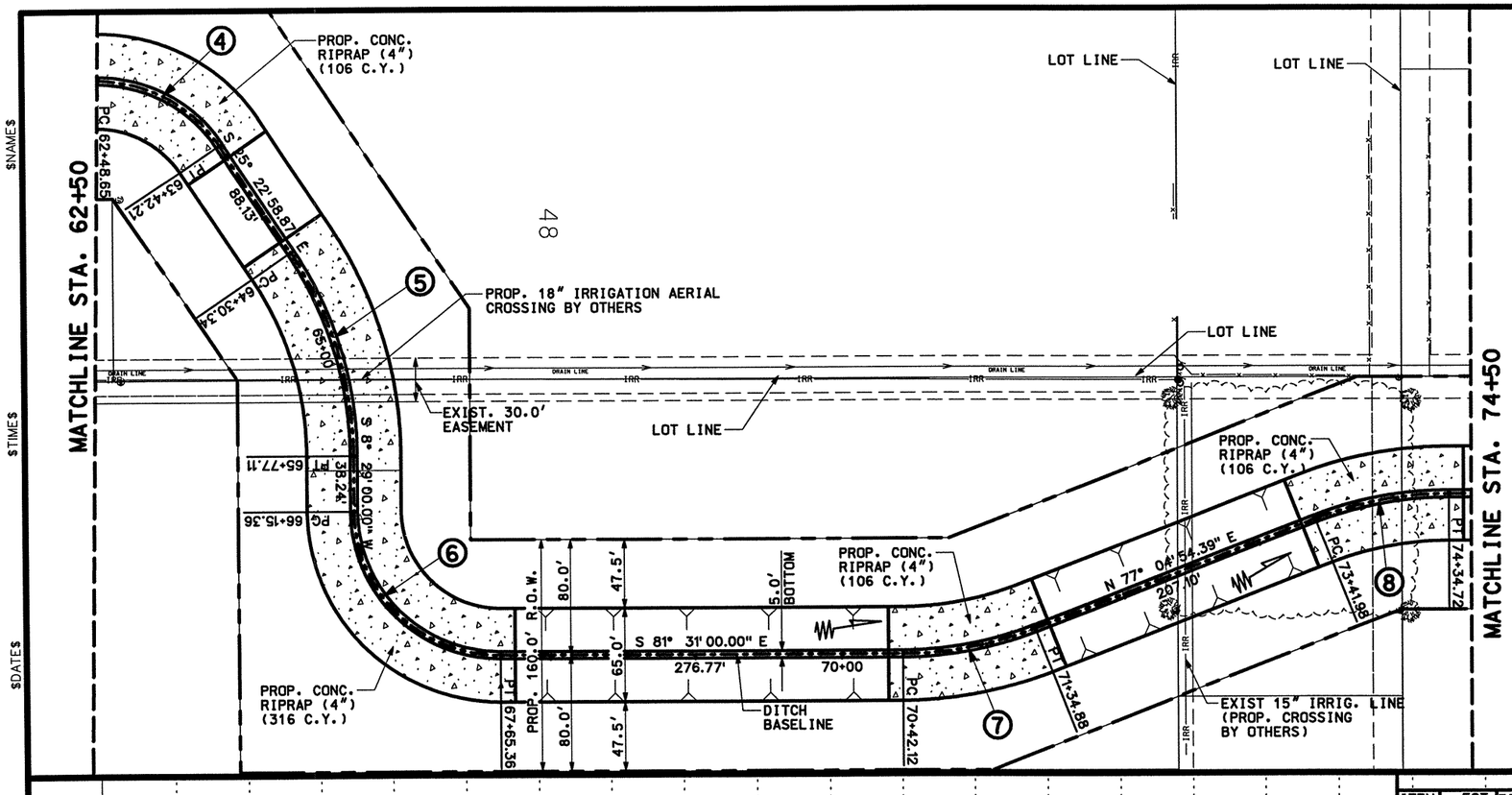

48

CURVE DATA

④
- PI STATION - 63+01.97
- DELTA - 56° 08' 09.19" (RT)
- DEGREE OF CURVE - 60° 00' 00.00"
- TANGENT - 53.32
- LENGTH - 93.56
- RADIUS - 100.00
- PC STATION - 62+48.65
- PT STATION - 63+42.21

CURVE DATA

⑤
- PI STATION - 65+06.46
- DELTA - 33° 51' 58.87" (LT)
- DEGREE OF CURVE - 23° 04' 26.11"
- TANGENT - 76.11
- LENGTH - 146.77
- RADIUS - 250.00
- PC STATION - 64+30.34
- PT STATION - 65+77.11

CURVE DATA

⑥
- PI STATION - 67+15.36
- DELTA - 90° 00' 00.00" (RT)
- DEGREE OF CURVE - 60° 00' 00.00"
- TANGENT - 100.00
- LENGTH - 150.00
- RADIUS - 100.00
- PC STATION - 66+15.36
- PT STATION - 67+65.36

CURVE DATA

⑦
- PI STATION - 70+89.37
- DELTA - 21° 24' 05.61" (LT)
- DEGREE OF CURVE - 23° 04' 26.11"
- TANGENT - 47.24
- LENGTH - 92.75
- RADIUS - 250.00
- PC STATION - 70+42.12
- PT STATION - 71+34.88

CURVE DATA

⑧
- PI STATION - 73+89.22
- DELTA - 21° 23' 57.55" (RT)
- DEGREE OF CURVE - 23° 04' 26.11"
- TANGENT - 47.24
- LENGTH - 92.74
- RADIUS - 250.00
- PC STATION - 73+41.98
- PT STATION - 74+34.72

N

LEGEND

DITCH FLOW DIRECTION

NOTES:
1.) CONTRACTOR SHALL CONFIRM THAT CONFLICTS WITH EXISTING UTILITIES HAVE BEEN RESOLVED PRIOR TO CONSTRUCTION. DAMAGES CAUSED BY OR TO EXIST. UTILITIES ARE THE RESPONSIBILITY OF THE CONTRACTOR.
2.) CONTRACTOR SHALL REMOVE AND REPLACE PAVEMENT ABOVE CULVERT (SUBSIDIARY TO ITEM 400).

SHEET TOTALS

ITEM	EST.	FINAL	UNIT	DESCRIPTION
432	634		CY	CONC. RIPRAP (4")

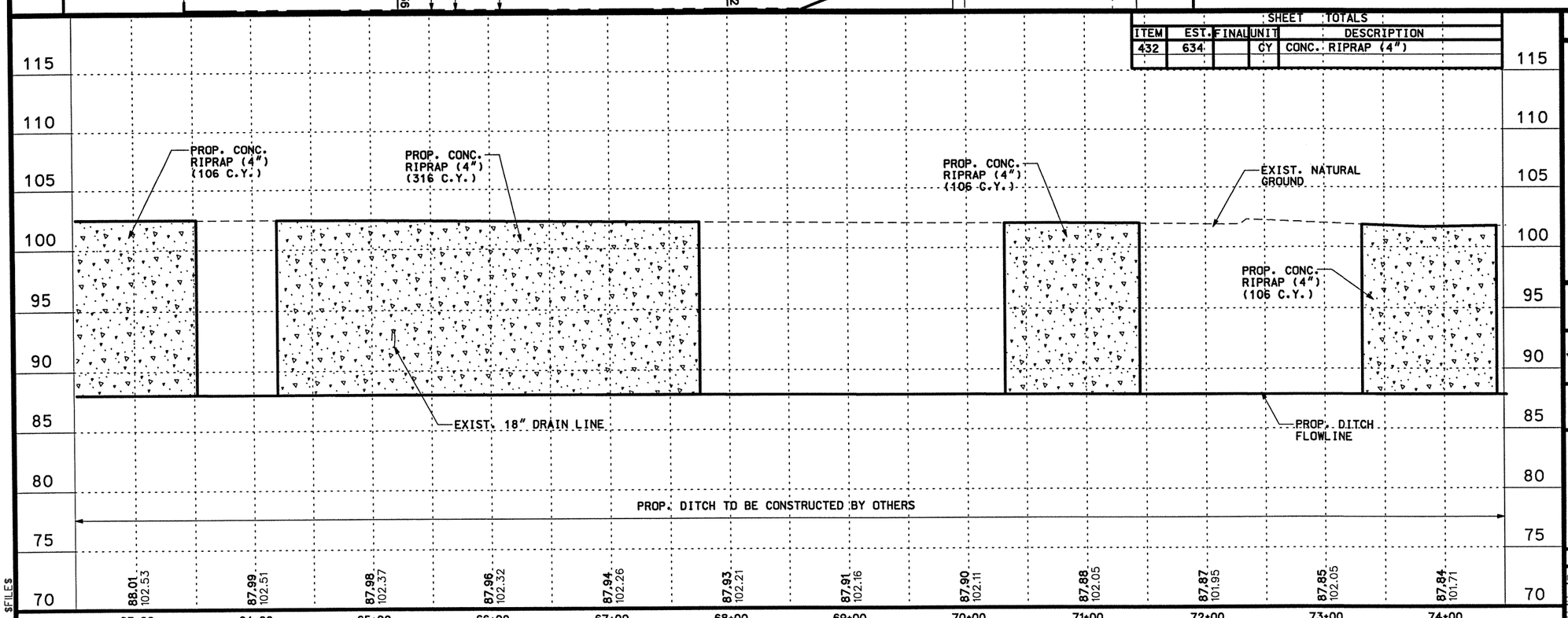

$FILE$

STATE OF TEXAS
RAMIRO GUTIERREZ
65948
REGISTERED PROFESSIONAL ENGINEER

THE SEAL APPEARING ON THIS DOCUMENT WAS AUTHORIZED BY RAMIRO GUTIERREZ, P.E. 65948

DATE: 8-12-03

ALTERATION OF A SEALED DOCUMENT WITHOUT PROPER NOTIFICATION TO THE RESPONSIBLE ENGINEER IS AN OFFENSE UNDER THE TEXAS ENGINEERING PRATICE LAW.

Parsons Brinckerhoff Quade & Douglas Inc.

R. Gutierrez Engineering Corporation

Texas Department of Transportation

© 2003 by TxDOT

PROPOSED SOUTH DRAINAGE DITCH US 281 EXPRESSWAY

SHEET 7 OF 9

PLAN 1"= 100' HORIZ
PROFILE 1"= 10' VERT

DESIGNED:	FED. RD DIV. No.	STATE	FEDERAL AID PROJECT No.		HIGHWAY No.
CHECKED:	6	TEXAS			US 281
DRAWN:	STATE DISTRICT	COUNTY	CONTROL No.	SECTION No.	JOB No.	SHEET No.
CHECKED:	21	HIDALGO	0255	08	091	637

$NAME$
$TIME$
$DATE$

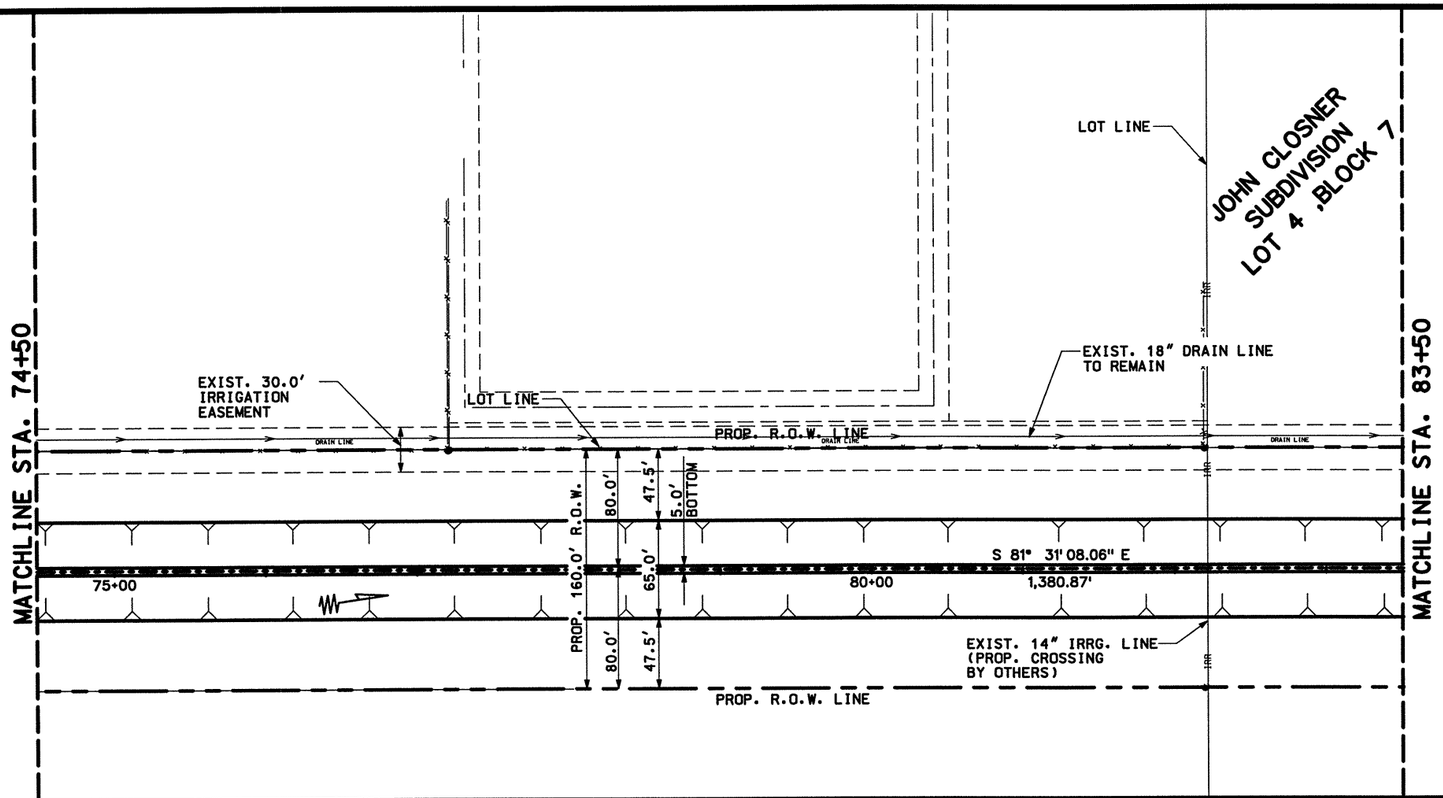

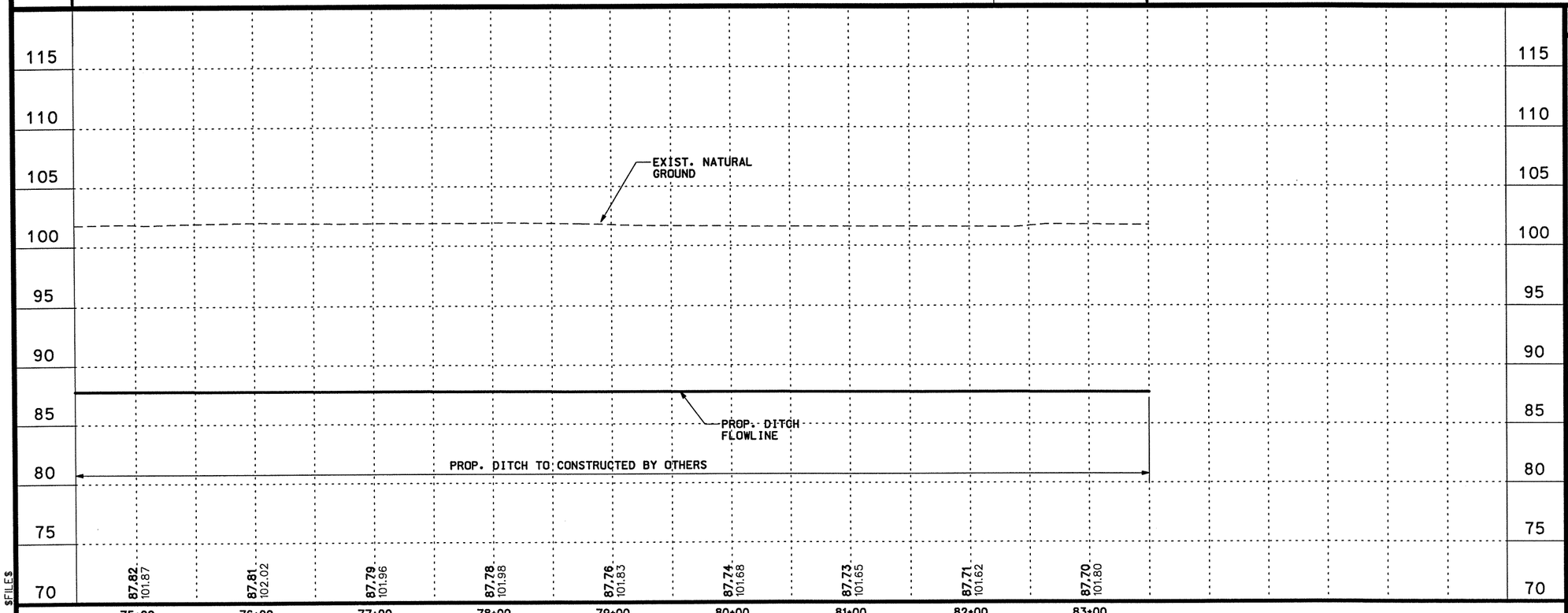

$FILE$

LEGEND

DITCH FLOW DIRECTION

F17 STRUCTURE I.D.

NOTES:
1.) CONTRACTOR SHALL CONFIRM THAT CONFLICTS WITH EXISTING UTILITIES HAVE BEEN RESOLVED PRIOR TO CONSTRUCTION. DAMAGES CAUSED BY OR TO EXIST. UTILITIES ARE THE RESPONSIBILITY OF THE CONTRACTOR.
2.) CONTRACTOR SHALL REMOVE AND REPLACE PAVEMENT ABOVE CULVERT (SUBSIDIARY TO ITEM 400).

STATE OF TEXAS
RAMIRO GUTIERREZ
65948
REGISTERED PROFESSIONAL ENGINEER

THE SEAL APPEARING ON THIS DOCUMENT WAS AUTHORIZED BY RAMIRO GUTIERREZ, P.E. 65948

DATE: 8-12-03

ALTERATION OF A SEALED DOCUMENT WITHOUT PROPER NOTIFICATION TO THE RESPONSIBLE ENGINEER IS AN OFFENSE UNDER THE TEXAS ENGINEERING PRATICE LAW.

Parsons Brinckerhoff Quade & Douglas Inc.

R. Gutierrez Engineering Corporation

Texas Department of Transportation

©2003 by TxDOT

PROPOSED SOUTH DRAINAGE DITCH US 281 EXPRESSWAY

SHEET 8 OF 9

PLAN 1"= 100' HORIZ
PROFILE 1"= 10' VERT

DESIGNED:	FED. RD DIV. No.	STATE	FEDERAL AID PROJECT No.			HIGHWAY No.	
CHECKED:	6	TEXAS				US 281	
DRAWN:	STATE DISTRICT	COUNTY	CONTROL No.	SECTION No.	JOB No.	SHEET No.	
CHECKED:	21	HIDALGO	0255	08	091	638	

$NAME$
$TIME$
$DATE$
$FILES

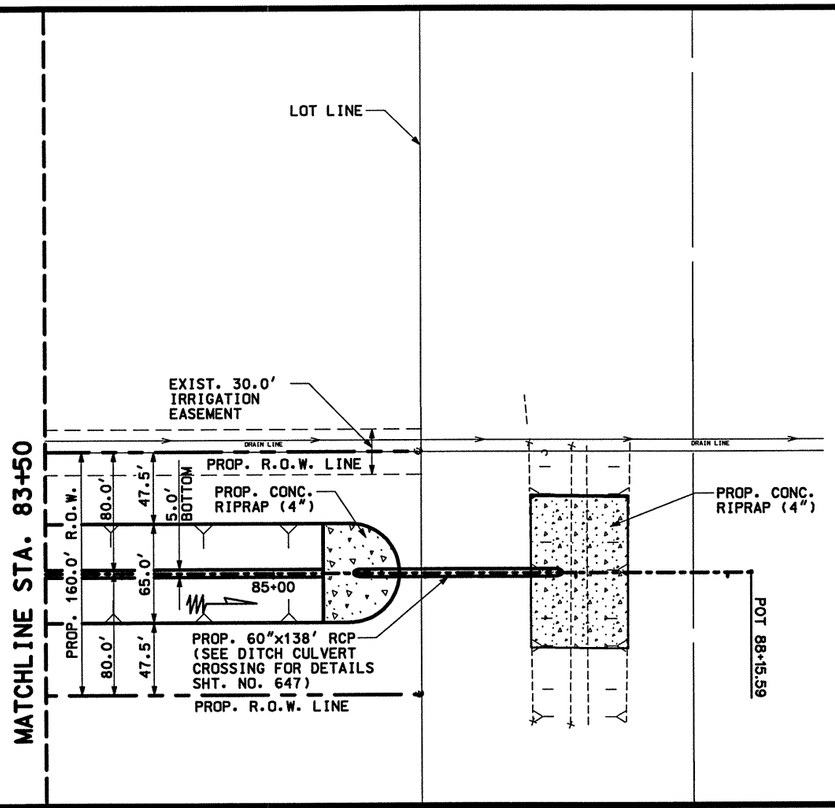

LEGEND

DITCH FLOW DIRECTION

F17 STRUCTURE I.D.

NOTES:
1.) CONTRACTOR SHALL CONFIRM THAT CONFLICTS WITH EXISTING UTILITIES HAVE BEEN RESOLVED PRIOR TO CONSTRUCTION. DAMAGES CAUSED BY OR TO EXIST. UTILITIES ARE THE RESPONSIBILITY OF THE CONTRACTOR.
2.) CONTRACTOR SHALL REMOVE AND REPLACE PAVEMENT ABOVE CULVERT (SUBSIDIARY TO ITEM 400).

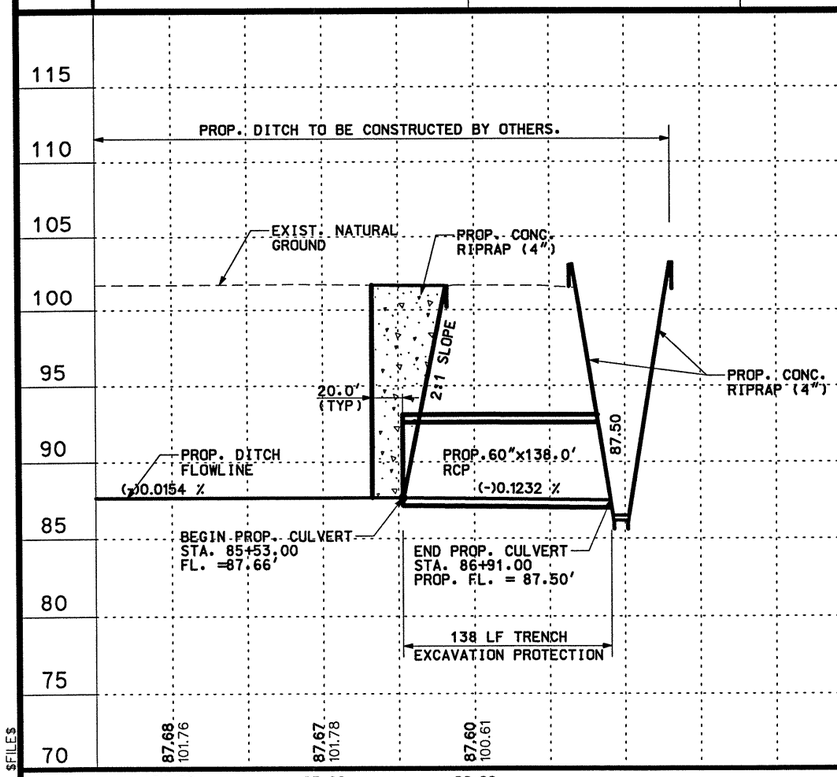

THE SEAL APPEARING ON THIS DOCUMENT WAS AUTHORIZED BY RAMIRO GUTIERREZ, P.E. 65948

DATE: 8-12-03

ALTERATION OF A SEALED DOCUMENT WITHOUT PROPER NOTIFICATION TO THE RESPONSIBLE ENGINEER IS AN OFFENSE UNDER THE TEXAS ENGINEERING PRATICE LAW.

Parsons Brinckerhoff Quade & Douglas Inc.

R. Gutierrez Engineering Corporation

Texas Department of Transportation

© 2003 by TxDOT

PROPOSED SOUTH DRAINAGE DITCH US 281 EXPRESSWAY

SHEET 9 OF 9

PLAN 1"= 100' HORIZ
PROFILE 1"= 10' VERT

DESIGNED:	FED. RD DIV. No.	STATE	FEDERAL AID PROJECT No.			HIGHWAY No.
CHECKED:	6	TEXAS				US 281
DRAWN:	STATE DISTRICT	COUNTY	CONTROL No.	SECTION No.	JOB No.	SHEET No.
CHECKED:	21	HIDALGO	0255	08	091	639

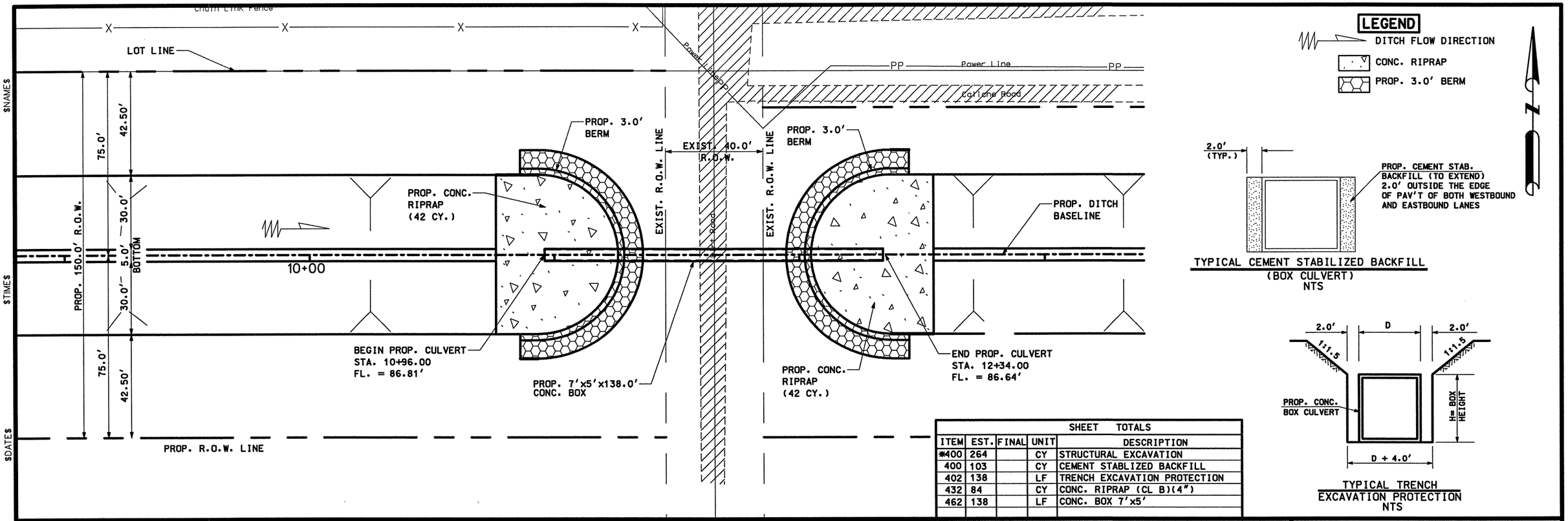

SHEET TOTALS				
ITEM	EST.	FINAL	UNIT	DESCRIPTION
*400	264		CY	STRUCTURAL EXCAVATION
400	103		CY	CEMENT STABLIZED BACKFILL
402	138		LF	TRENCH EXCAVATION PROTECTION
432	84		CY	CONC. RIPRAP (CL B)(4")
462	138		LF	CONC. BOX 7'x5'

* FOR CONTRACTOR'S INFORMATION ONLY

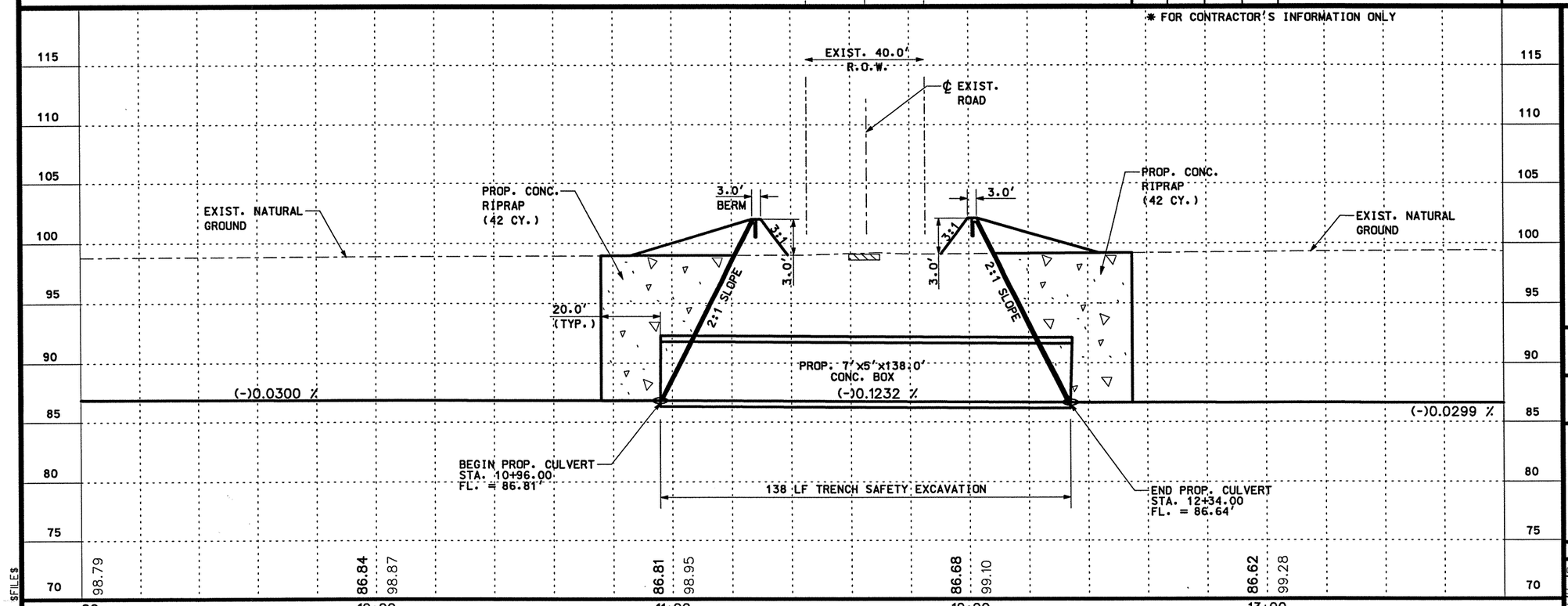

STATE OF TEXAS
RAMIRO GUTIERREZ
65948
REGISTERED PROFESSIONAL ENGINEER

THE SEAL APPEARING ON THIS DOCUMENT WAS AUTHORIZED BY RAMIRO GUTIERREZ, P.E. 65948

DATE: 8-12-03

ALTERATION OF A SEALED DOCUMENT WITHOUT PROPER NOTIFICATION TO THE RESPONSIBLE ENGINEER IS AN OFFENSE UNDER THE TEXAS ENGINEERING PRATICE LAW.

Parsons Brinckerhoff Quade & Douglas Inc.

Texas Department of Transportation

©2003 by TxDOT

NORTH DRAIN DITCH CULVERT LAYOUT

STA. 10+96.00 TO STA. 12+34.00

1 OF 6

PLAN 1"= 40' HORIZ
PROFILE 1"= 10' VERT

DESIGNED:	FED. RD DIV. No.	STATE	FEDERAL AID PROJECT No.			HIGHWAY No.	
CHECKED:	6	TEXAS				US 281	
DRAWN:	STATE DISTRICT	COUNTY	CONTROL No.	SECTION No.	JOB No.	SHEET No.	
CHECKED:	21	HIDALGO	0255	08	091	640	

$NAME$
$TIME$
$DATE$
$FILE$

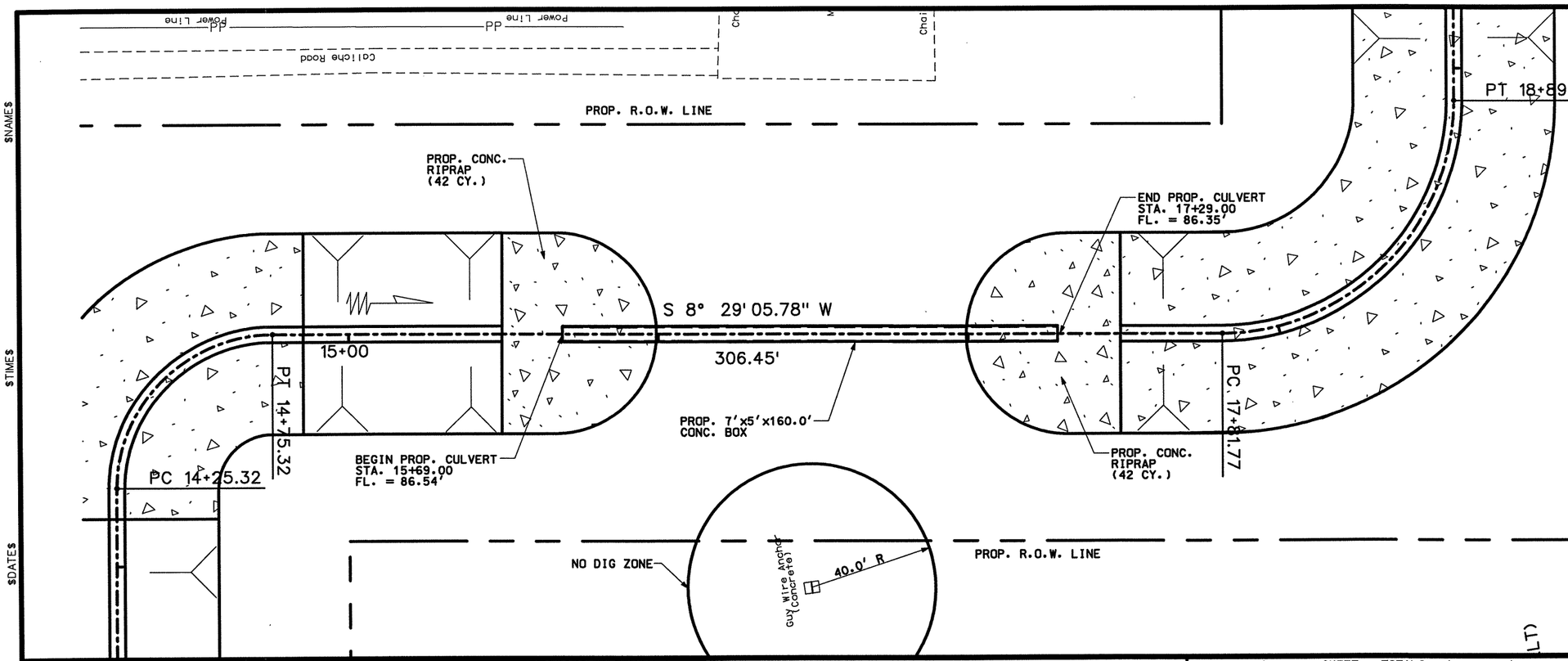

LEGEND

- DITCH FLOW DIRECTION
- CONC. RIPRAP
- PROP. 3.0' BERM

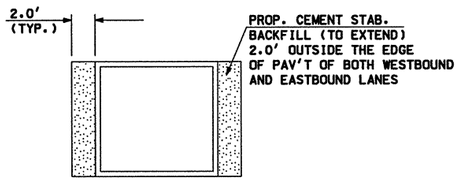

TYPICAL CEMENT STABILIZED BACKFILL
(BOX CULVERT)
NTS

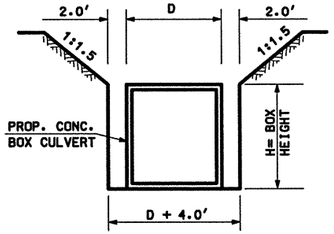

TYPICAL TRENCH
EXCAVATION PROTECTION
NTS

SHEET TOTALS

ITEM	EST.	FINAL	UNIT	DESCRIPTION
*400	287		CY	STRUCTURAL EXCAVATION
400	111		CY	CEMENT STABLIZED BACKFILL
402	160		LF	TRENCH EXCAVATION PROTECTION
432	84		CY	CONC. RIPRAP (CL B)(4")
462	160		LF	CONC. BOX 7'x5'

* FOR CONTRACTOR'S INFORMATION ONLY

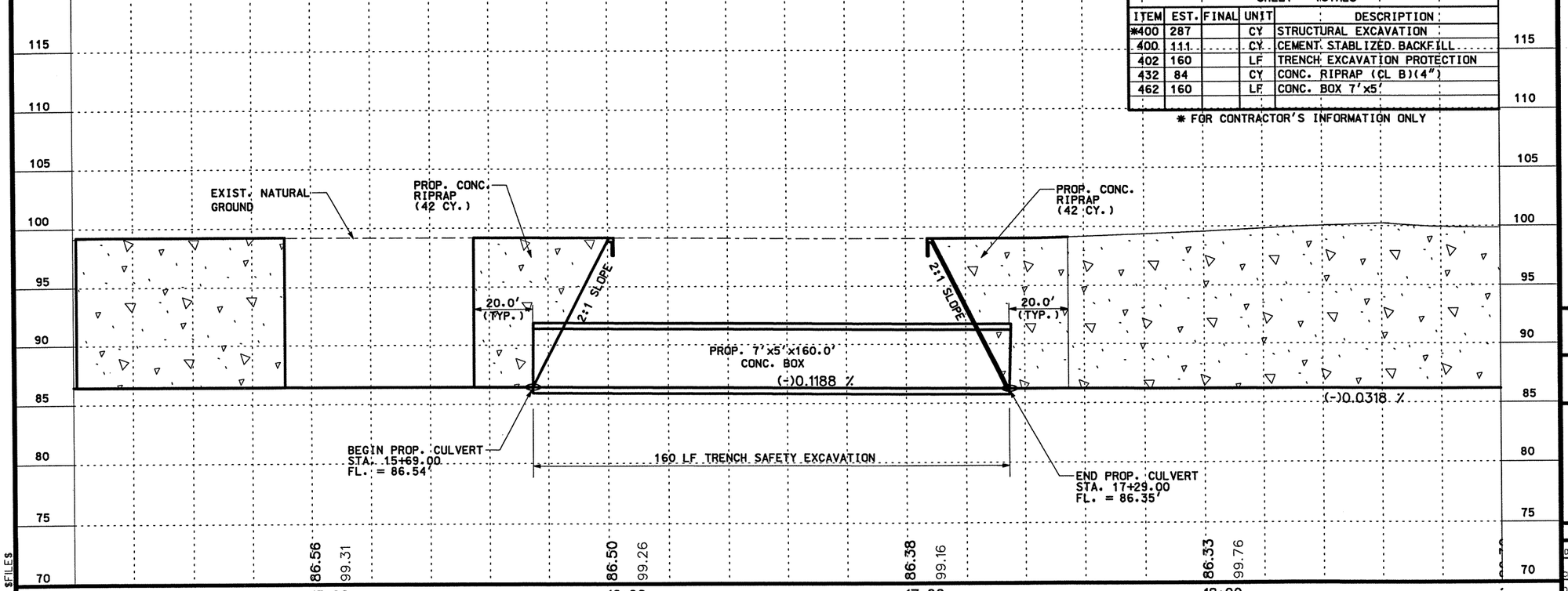

STATE OF TEXAS
RAMIRO GUTIERREZ
65948
REGISTERED PROFESSIONAL ENGINEER

THE SEAL APPEARING ON THIS DOCUMENT WAS AUTHORIZED BY RAMIRO GUTIERREZ, P.E. 65948

DATE: 8-12-07

ALTERATION OF A SEALED DOCUMENT WITHOUT PROPER NOTIFICATION TO THE RESPONSIBLE ENGINEER IS AN OFFENSE UNDER THE TEXAS ENGINEERING PRATICE LAW.

Parsons Brinckerhoff Quade & Douglas Inc.

Texas Department of Transportation

©2003 by TxDOT

NORTH DRAIN DITCH CULVERT LAYOUT

STA. 14+40.00 TO STA. 15+90.00

2 OF 6

PLAN 1"= 40' HORIZ
PROFILE 1"= 10' VERT

DESIGNED:	FED. RD DIV. No.	STATE	FEDERAL AID PROJECT No.	HIGHWAY No.
CHECKED:	6	TEXAS		US 281

DRAWN:	STATE DISTRICT	COUNTY	CONTROL No.	SECTION No.	JOB No.	SHEET No.
CHECKED:	21	HIDALGO	0255	08	091	641

$NAME$
$TIME$
$DATE$

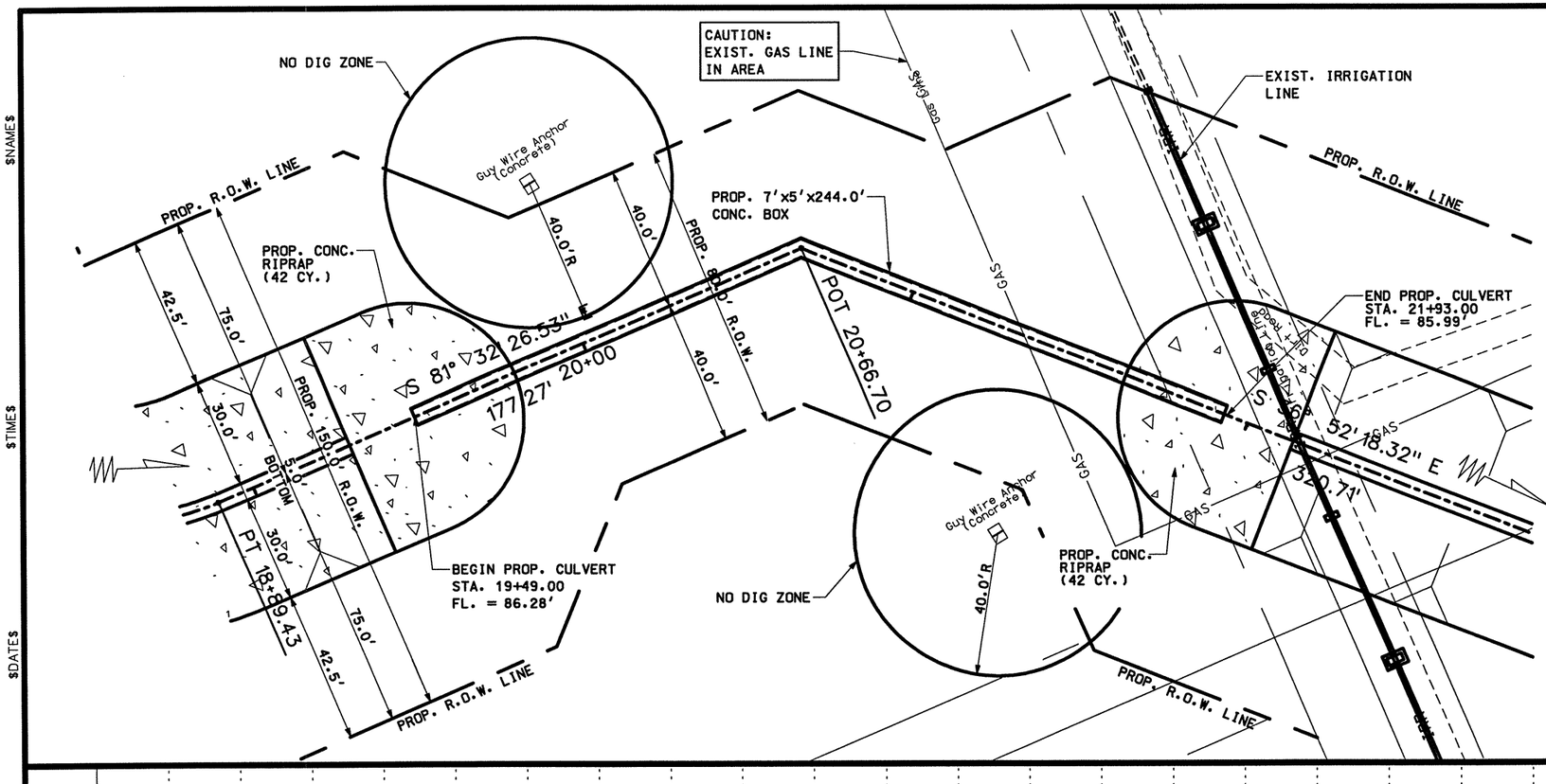

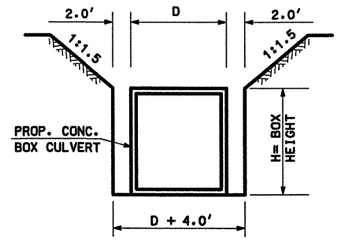

TYPICAL TRENCH
EXCAVATION PROTECTION
NTS

LEGEND

DITCH FLOW DIRECTION

CONC. RIPRAP

PROP. 3.0' BERM

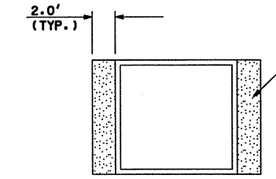

TYPICAL CEMENT STABILIZED BACKFILL
(BOX CULVERT)
NTS

SHEET TOTALS

ITEM	EST.	FINAL	UNIT	DESCRIPTION
*400	504		CY	STRUCTURAL EXCAVATION
400	195		CY	CEMENT STABLIZED BACKFILL
402	244		LF	TRENCH EXCAVATION PROTECTION
432	84		CY	CONC. RIPRAP (CL B)(4")
462	244		LF	CONC. BOX 7'x5'

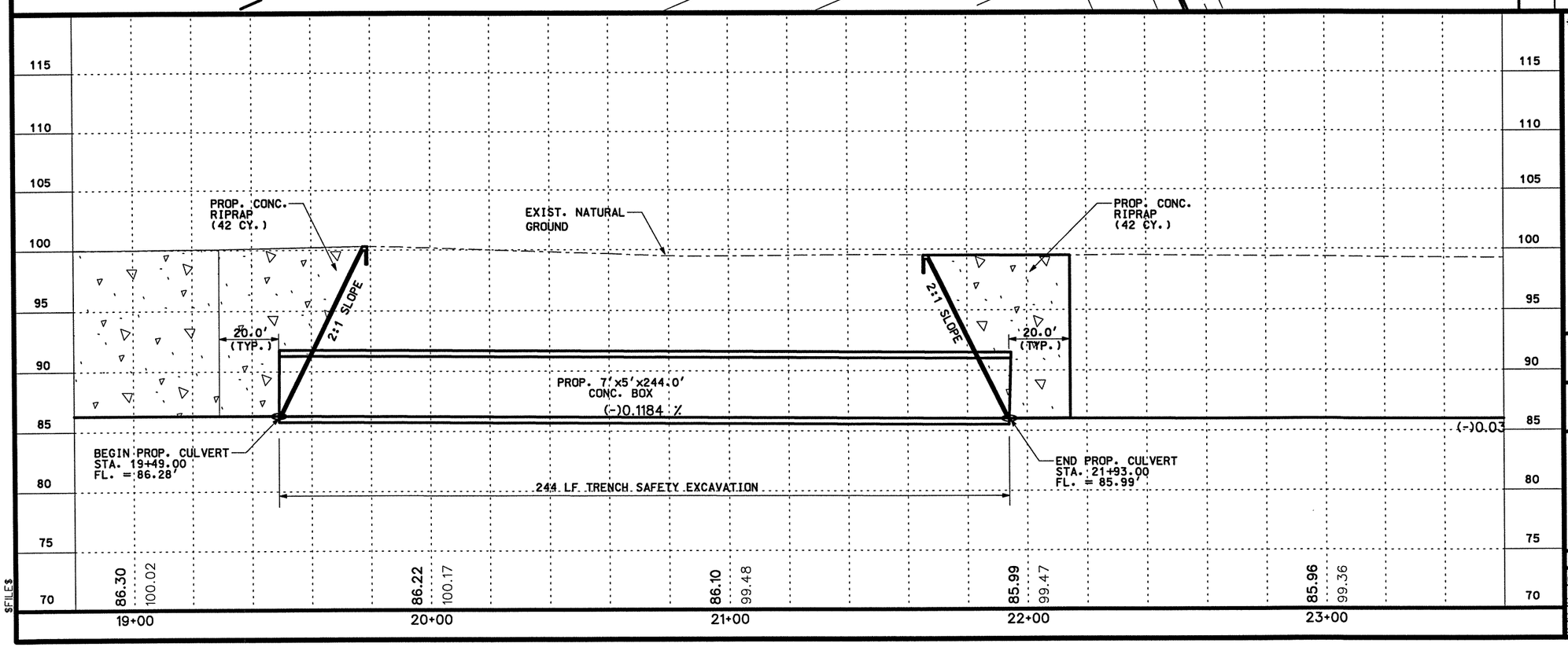

$FILE$

* FOR CONTRACTOR'S INFORMATION ONLY

STATE OF TEXAS
RAMIRO GUTIERREZ
65948
REGISTERED PROFESSIONAL ENGINEER

THE SEAL APPEARING ON THIS DOCUMENT WAS AUTHORIZED BY RAMIRO GUTIERREZ, P.E. 65948

DATE: 8-12-03

ALTERATION OF A SEALED DOCUMENT WITHOUT PROPER NOTIFICATION TO THE RESPONSIBLE ENGINEER IS AN OFFENSE UNDER THE TEXAS ENGINEERING PRATICE LAW.

Parsons Brinckerhoff
Quade & Douglas Inc.

Texas Department of Transportation

©2003 by TxDOT

NORTH DRAIN DITCH CULVERT LAYOUT

STA. 19+88.00 TO STA. 22+32.00

3 OF 6

PLAN 1"= 40' HORIZ
PROFILE 1"= 10' VERT

DESIGNED:	FED. RD DIV. No.	STATE	FEDERAL AID PROJECT No.			HIGHWAY No.	
CHECKED:	6	TEXAS				US 281	
DRAWN:	STATE DISTRICT	COUNTY	CONTROL No.	SECTION No.	JOB No.	SHEET No.	
CHECKED:	21	HIDALGO	0255	08	091	642	

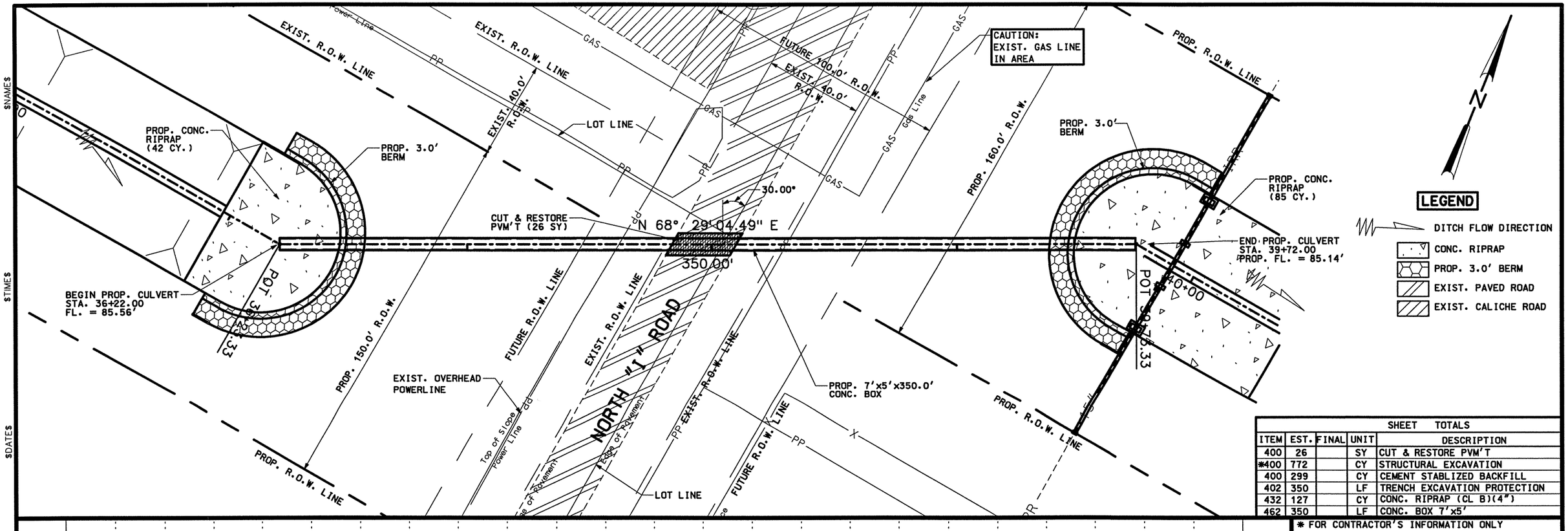

SHEET TOTALS

ITEM	EST.	FINAL	UNIT	DESCRIPTION
400	26		SY	CUT & RESTORE PVM'T
*400	772		CY	STRUCTURAL EXCAVATION
400	299		CY	CEMENT STABLIZED BACKFILL
402	350		LF	TRENCH EXCAVATION PROTECTION
432	127		CY	CONC. RIPRAP (CL B)(4")
462	350		LF	CONC. BOX 7'x5'

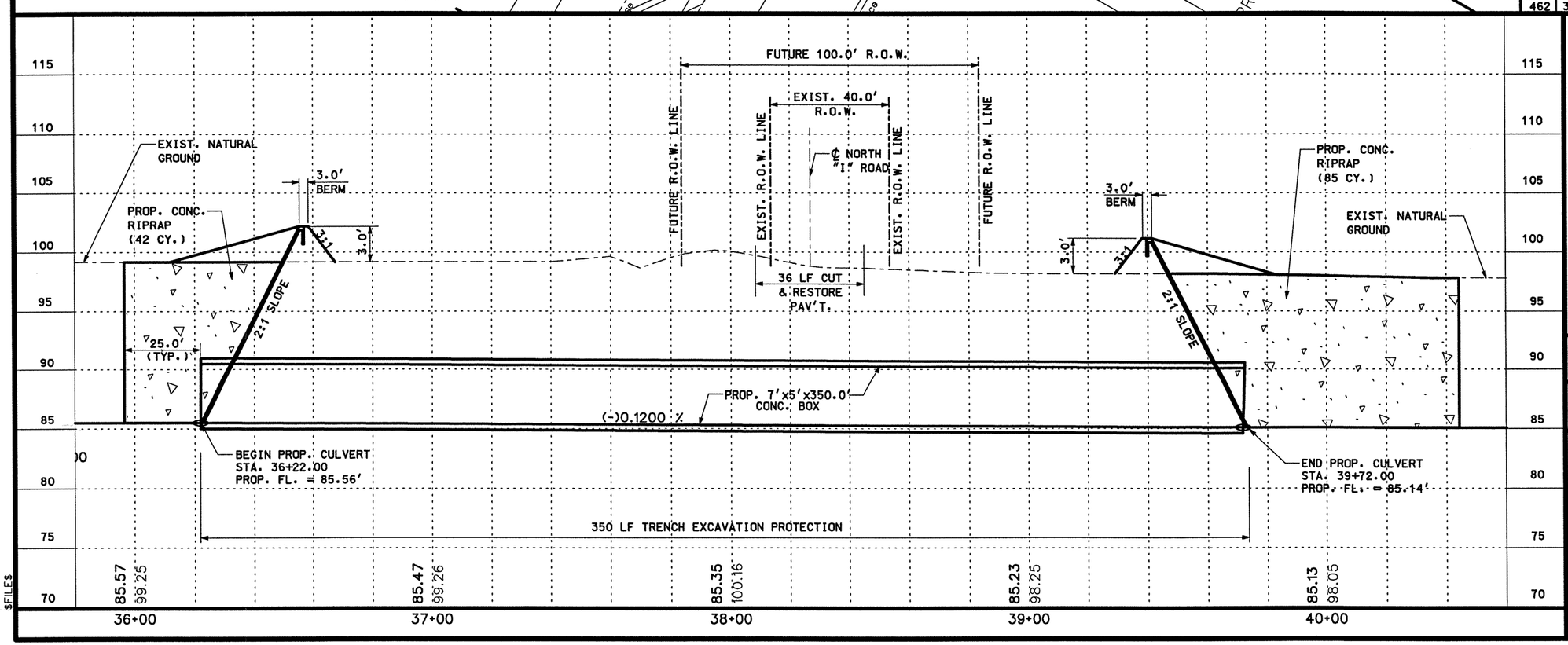

* FOR CONTRACTOR'S INFORMATION ONLY

STATE OF TEXAS
RAMIRO GUTIERREZ
65948
REGISTERED PROFESSIONAL ENGINEER

THE SEAL APPEARING ON THIS DOCUMENT WAS AUTHORIZED BY RAMIRO GUTIERREZ, P.E. 65948

DATE: 8-12-03

ALTERATION OF A SEALED DOCUMENT WITHOUT PROPER NOTIFICATION TO THE RESPONSIBLE ENGINEER IS AN OFFENSE UNDER THE TEXAS ENGINEERING PRATICE LAW.

Parsons Brinckerhoff Quade & Douglas Inc.

Texas Department of Transportation

© 2003 by TxDOT

NORTH DRAIN DITCH CULVERT LAYOUT

STA. 36+62.00 TO STA. 40+22.00

4 OF 6

PLAN 1"= 40' HORIZ
PROFILE 1"= 10' VERT

DESIGNED:	FED. RD DIV. No.	STATE	FEDERAL AID PROJECT No.			HIGHWAY No.	
CHECKED:	6	TEXAS				US 281	
DRAWN:	STATE DISTRICT	COUNTY	CONTROL No.	SECTION No.	JOB No.	SHEET No.	
CHECKED:	21	HIDALGO	0255	08	091	643	

$NAME$ $TIME$ $DATE$ $FILES

$NAME$
$TIME$
$DATE$
$FILE$

TRENTON MANOR SUBDIVISION

Asphalt Street
Curb
Curb
PROP. 40.0' R.O.W.
EXIST. IRRIGATION LINE
LOT LINE
EXIST. TELEPHONE LINE
Irrigation
IRR
T
PP
Telephone Line
Power

PROP. CONC. RIPRAP (42 CY.)
N 83° 29' 01.99" E
POT 55+82.62
55+00.36
POT 55+32.00
S 81° 30' 52.02" E
233.21'
PROP. R.O.W. LINE
Wood Frame Home
PROP. 7'x5'x402.0' CONC. BOX
POT 57+65.21
S 51° 30' 55.80" E
120.00'
END PROP. CULVERT
STA. 58+85.00
PROP. FL. = 84.20'
BEGIN PROP. CULVERT
STA. 54+83.00
PROP. FL. = 84.68'
PROPERTY LINE
LOT LINE
PROP. 160.0' R.O.W.
80.0'
80.0'
47.5'
30.0'
5' BOTTOM
30.0'
47.5'
PROP. DITCH BASELINE
PROP. CONC. RIPRAP (83 CY.)
POT 58+85.21
PROP. 160.0' R.O.W.
80.0'
30.0'
5' BOTTOM
30.0'
80.0'
47.5'
47.5'

2.0' (TYP.)
PROP. CEMENT STAB. BACKFILL (TO EXTEND) 2.0' OUTSIDE THE EDGE OF PAV'T OF BOTH WESTBOUND AND EASTBOUND LANES

TYPICAL CEMENT STABILIZED BACKFILL
(BOX CULVERT)
NTS

LEGEND

- DITCH FLOW DIRECTION
- CONC. RIPRAP
- PROP. 3.0' BERM
- EXIST. PAVED ROAD
- EXIST. CALICHE ROAD

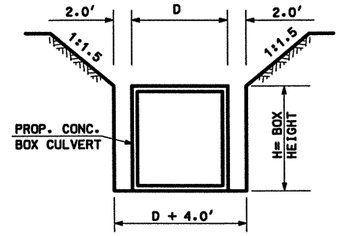

TYPICAL TRENCH EXCAVATION PROTECTION
NTS

SHEET TOTALS

ITEM	EST.	FINAL	UNIT	DESCRIPTION
*400	820		CY	STRUCTURAL EXCAVATION
400	318		CY	CEMENT STABLIZED BACKFILL
402	402		LF	TRENCH EXCAVATION PROTECTION
432	125		CY	CONC. RIPRAP (CL B)(4")
462	402		LF	CONC. BOX 7'x5'

* FOR CONTRACTOR'S INFORMATION ONLY

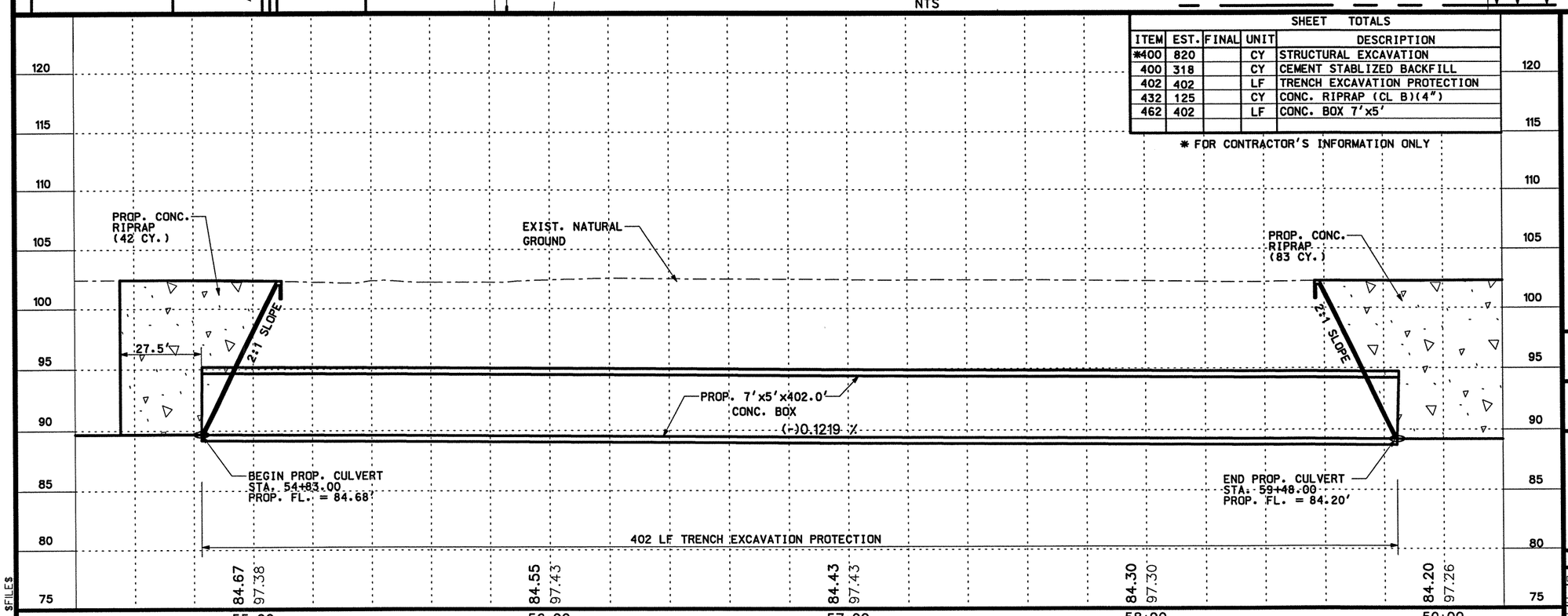

STATE OF TEXAS
RAMIRO GUTIERREZ
65948
REGISTERED PROFESSIONAL ENGINEER

THE SEAL APPEARING ON THIS DOCUMENT WAS AUTHORIZED BY RAMIRO GUTIERREZ, P.E. 65948

DATE: 8-12-09

ALTERATION OF A SEALED DOCUMENT WITHOUT PROPER NOTIFICATION TO THE RESPONSIBLE ENGINEER IS AN OFFENSE UNDER THE TEXAS ENGINEERING PRATICE LAW.

PB Parsons Brinckerhoff Quade & Douglas Inc.

Texas Department of Transportation

© 2003 by TxDOT

NORTH DRAIN DITCH CULVERT LAYOUT

STA. 55+36.00 TO STA. 59+48.00

5 OF 6

PLAN 1"= 40' HORIZ
PROFILE 1"= 10' VERT

DESIGNED:	FED. RD DIV. No.	STATE	FEDERAL AID PROJECT No.			HIGHWAY No.	
CHECKED:	6	TEXAS				US 281	
DRAWN:	STATE DISTRICT	COUNTY	CONTROL No.	SECTION No.	JOB No.	SHEET No.	
CHECKED:	21	HIDALGO	0255	08	091	644	

$NAME$
$TIME$
$DATE$

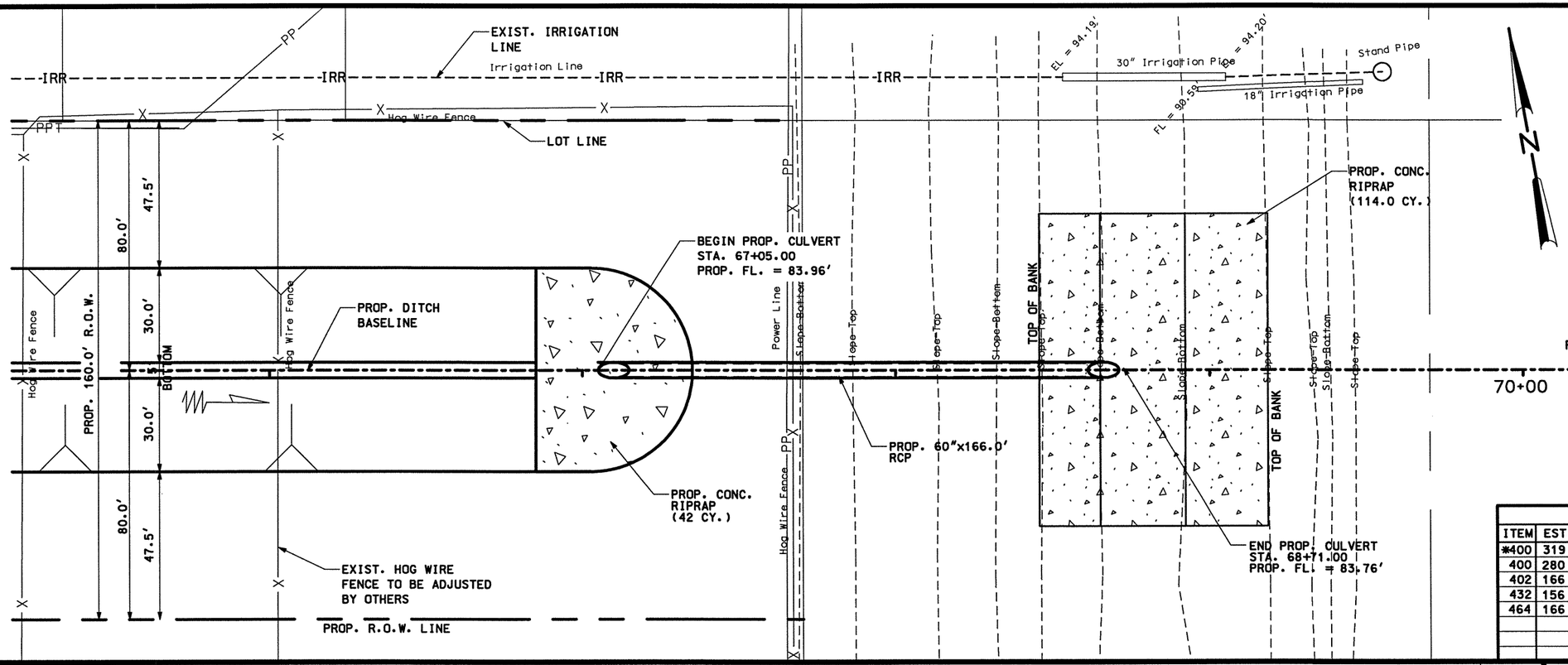

LEGEND

- DITCH FLOW DIRECTION
- CONC. RIPRAP
- PROP. 3.0' BERM
- EXIST. PAVED ROAD
- EXIST. CALICHE ROAD

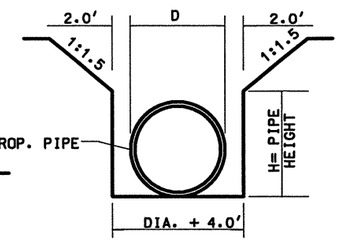

TYPICAL TRENCH EXC. PROTECTION
(N.T.S.)

				SHEET TOTALS
ITEM	EST.	FINAL	UNIT	DESCRIPTION
*400	319		CY	STRUCTURAL EXCAVATION
400	280		CY	CEMENT STABLIZED BACKFILL
402	166		LF	TRENCH EXCAVATION PROTECTION
432	156		CY	CONC. RIPRAP (CL B)(4")
464	166		FT	RCP CL III 60"

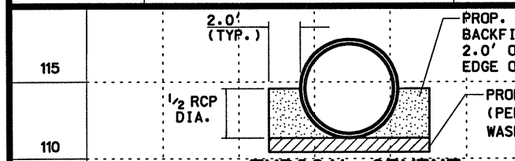

TYPICAL CEMENT STABILIZED BACKFILL
(PIPE) (N.T.S.)

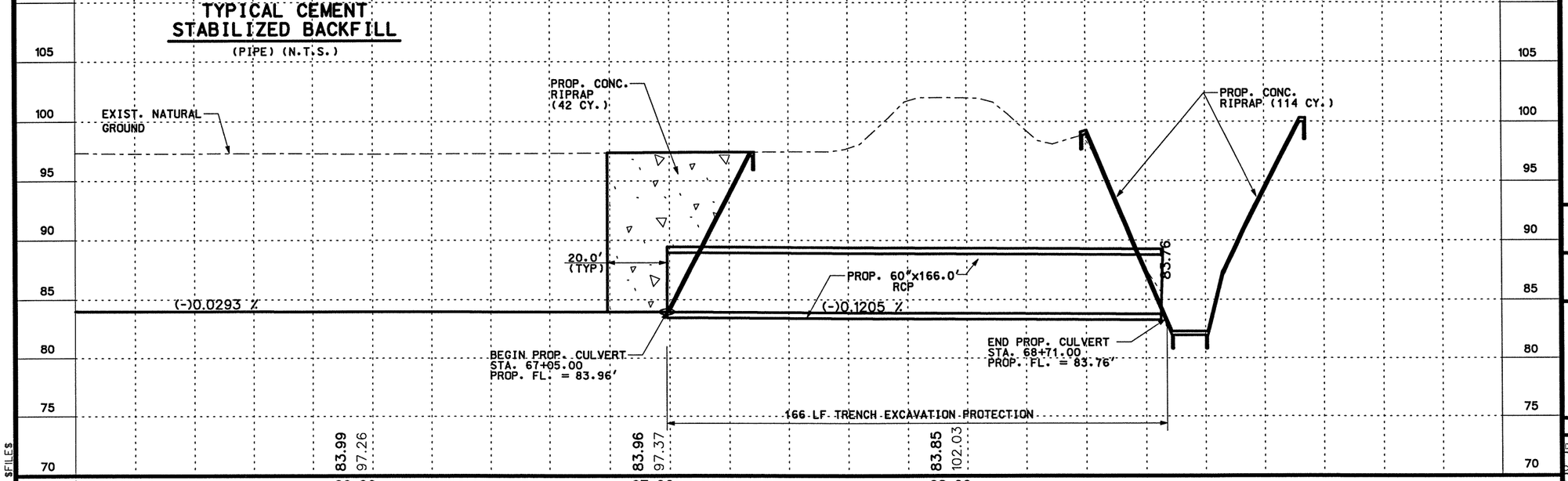

* FOR CONTRACTOR'S INFORMATION ONLY

STATE OF TEXAS
RAMIRO GUTIERREZ
65948
REGISTERED
PROFESSIONAL ENGINEER

THE SEAL APPEARING ON THIS DOCUMENT WAS AUTHORIZED BY RAMIRO GUTIERREZ, P.E. 65948

DATE: 8-12-03

ALTERATION OF A SEALED DOCUMENT WITHOUT PROPER NOTIFICATION TO THE RESPONSIBLE ENGINEER IS AN OFFENSE UNDER THE TEXAS ENGINEERING PRATICE LAW.

Parsons Brinckerhoff Quade & Douglas Inc.

Texas Department of Transportation

© 2003 by TxDOT

NORTH DRAIN DITCH CULVERT LAYOUT

STA. 67+59.00 TO STA. 69+27.00

6 OF 6

PLAN 1"= 40' HORIZ
PROFILE 1"= 10' VERT

DESIGNED:	FED. RD DIV. No.	STATE	FEDERAL AID PROJECT No.		HIGHWAY No.	
CHECKED:	6	TEXAS			US 281	
DRAWN:	STATE DISTRICT	COUNTY	CONTROL No.	SECTION No.	JOB No.	SHEET No.
CHECKED:	21	HIDALGO	0255	08	091	645

$FILE$

$NAME$
$TIME$
$DATE$
$FILES$

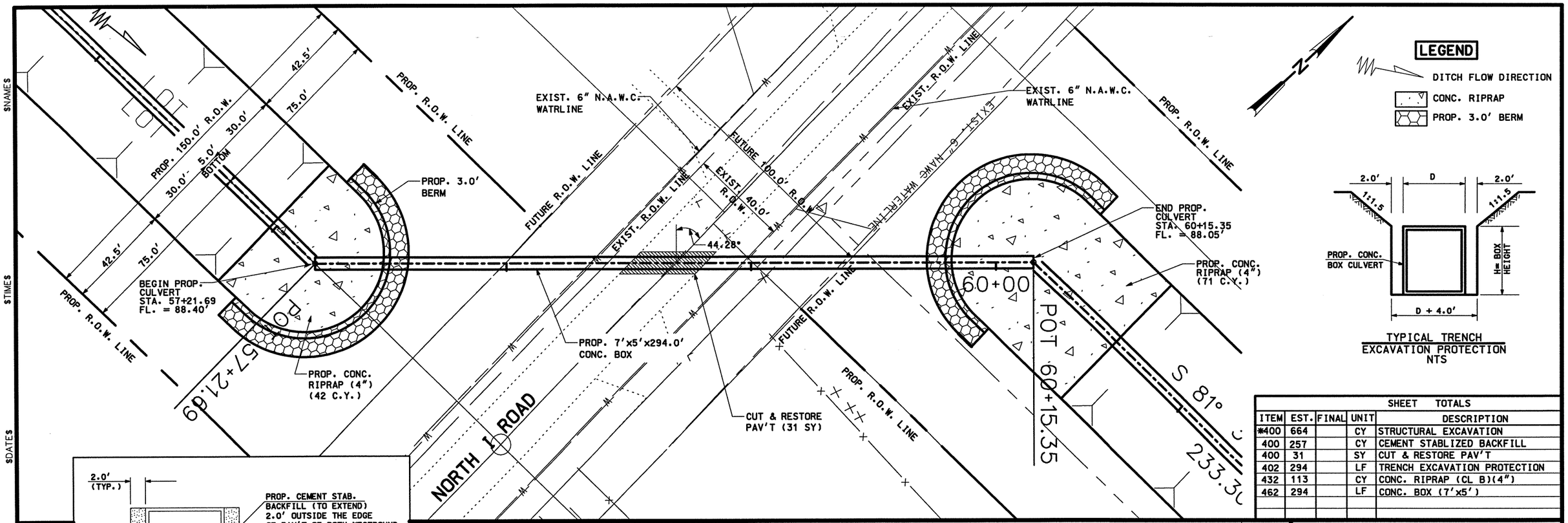

LEGEND

DITCH FLOW DIRECTION
CONC. RIPRAP
PROP. 3.0' BERM

TYPICAL TRENCH EXCAVATION PROTECTION
NTS

SHEET TOTALS				
ITEM	EST.	FINAL	UNIT	DESCRIPTION
*400	664		CY	STRUCTURAL EXCAVATION
400	257		CY	CEMENT STABLIZED BACKFILL
400	31		SY	CUT & RESTORE PAV'T
402	294		LF	TRENCH EXCAVATION PROTECTION
432	113		CY	CONC. RIPRAP (CL B)(4")
462	294		LF	CONC. BOX (7'x5')

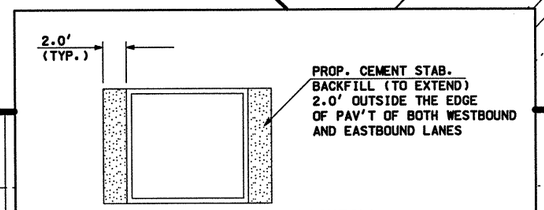

TYPICAL CEMENT STABILIZED BACKFILL
(BOX CULVERT)
NTS

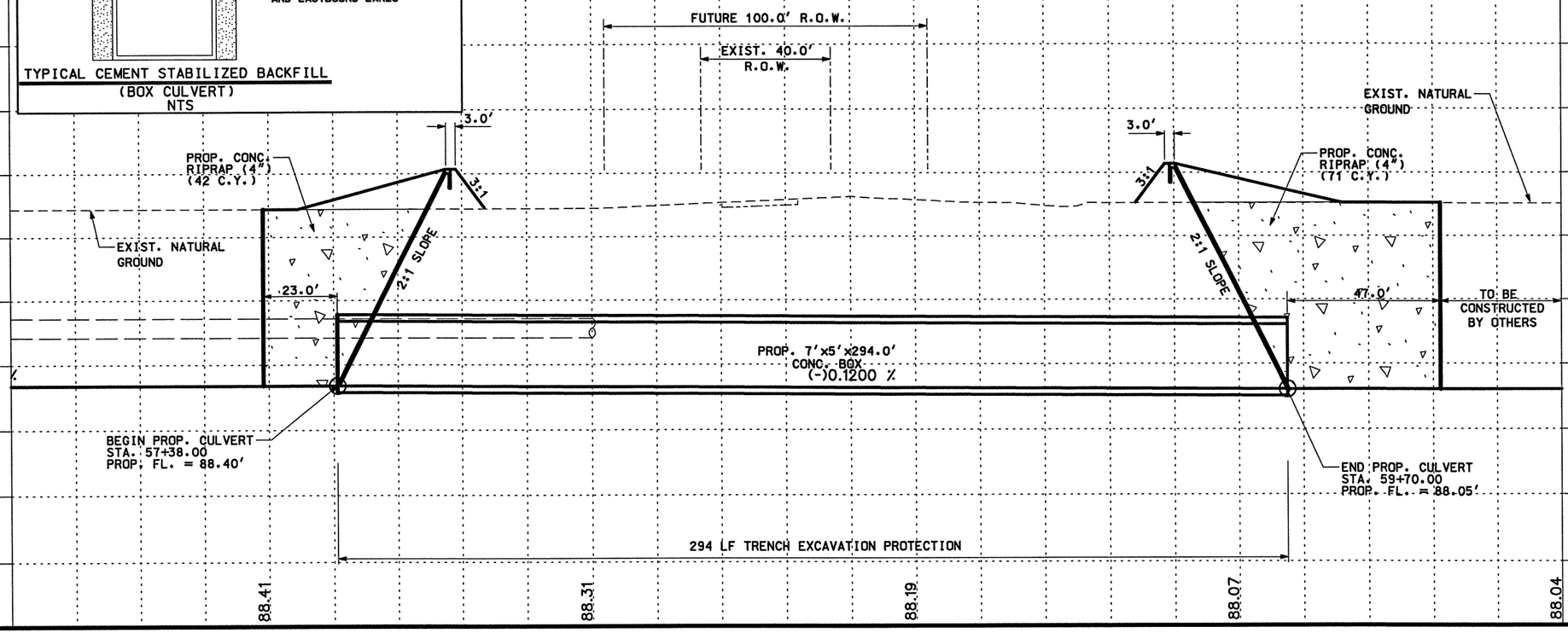

* FOR CONTRACTOR'S INFORMATION ONLY

STATE OF TEXAS
RAMIRO GUTIERREZ
65948
REGISTERED PROFESSIONAL ENGINEER

THE SEAL APPEARING ON THIS DOCUMENT WAS AUTHORIZED BY RAMIRO GUTIERREZ, P.E. 65948

DATE: 8-12-03

ALTERATION OF A SEALED DOCUMENT WITHOUT PROPER NOTIFICATION TO THE RESPONSIBLE ENGINEER IS AN OFFENSE UNDER THE TEXAS ENGINEERING PRATICE LAW.

Parsons Brinckerhoff Quade & Douglas Inc.

Texas Department of Transportation
© 2003 by TxDOT

SOUTH DRAIN DITCH CULVERT LAYOUT

STA. 57+22.00 TO STA. 59+54.00

1 OF 2

PLAN 1"= 40' HORIZ
PROFILE 1"= 10' VERT

DESIGNED:	FED. RD DIV. No.	STATE	FEDERAL AID PROJECT No.		HIGHWAY No.	
CHECKED:	6	TEXAS			US 281	
DRAWN:	STATE DISTRICT	COUNTY	CONTROL No.	SECTION No.	JOB No.	SHEET No.
CHECKED:	21	HIDALGO	0255	08	091	646

$NAME$

$TIME$

$DATE$

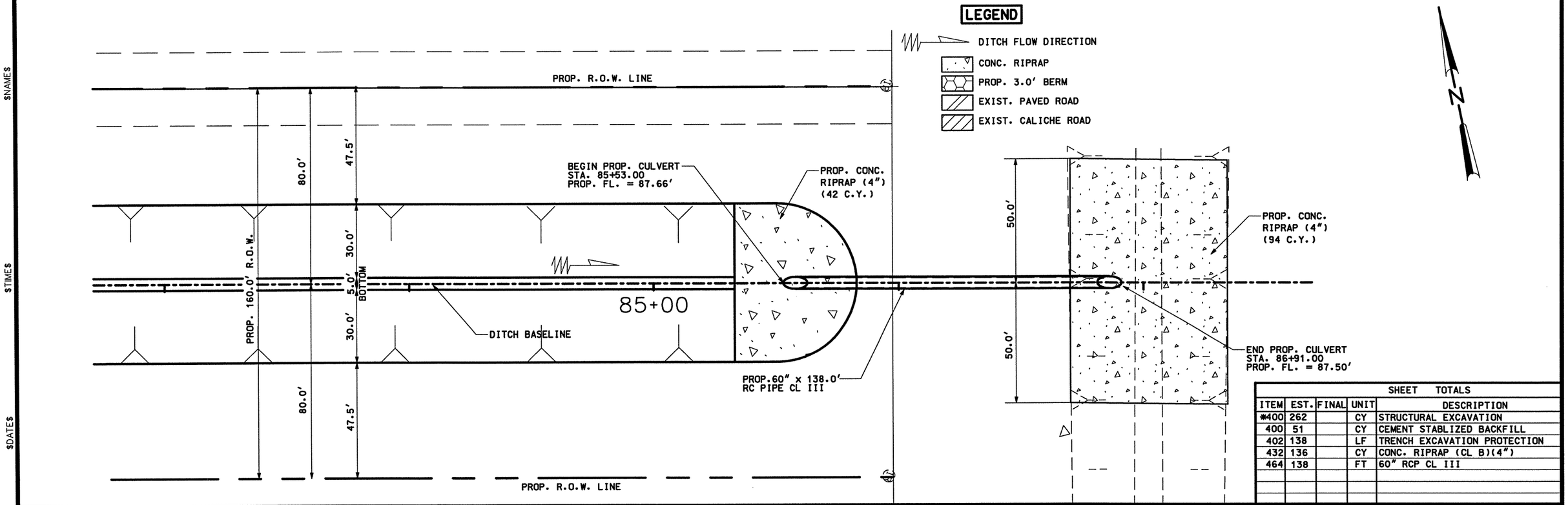

SHEET TOTALS				
ITEM	EST.	FINAL	UNIT	DESCRIPTION
*400	262		CY	STRUCTURAL EXCAVATION
400	51		CY	CEMENT STABLIZED BACKFILL
402	138		LF	TRENCH EXCAVATION PROTECTION
432	136		CY	CONC. RIPRAP (CL B)(4")
464	138		FT	60" RCP CL III

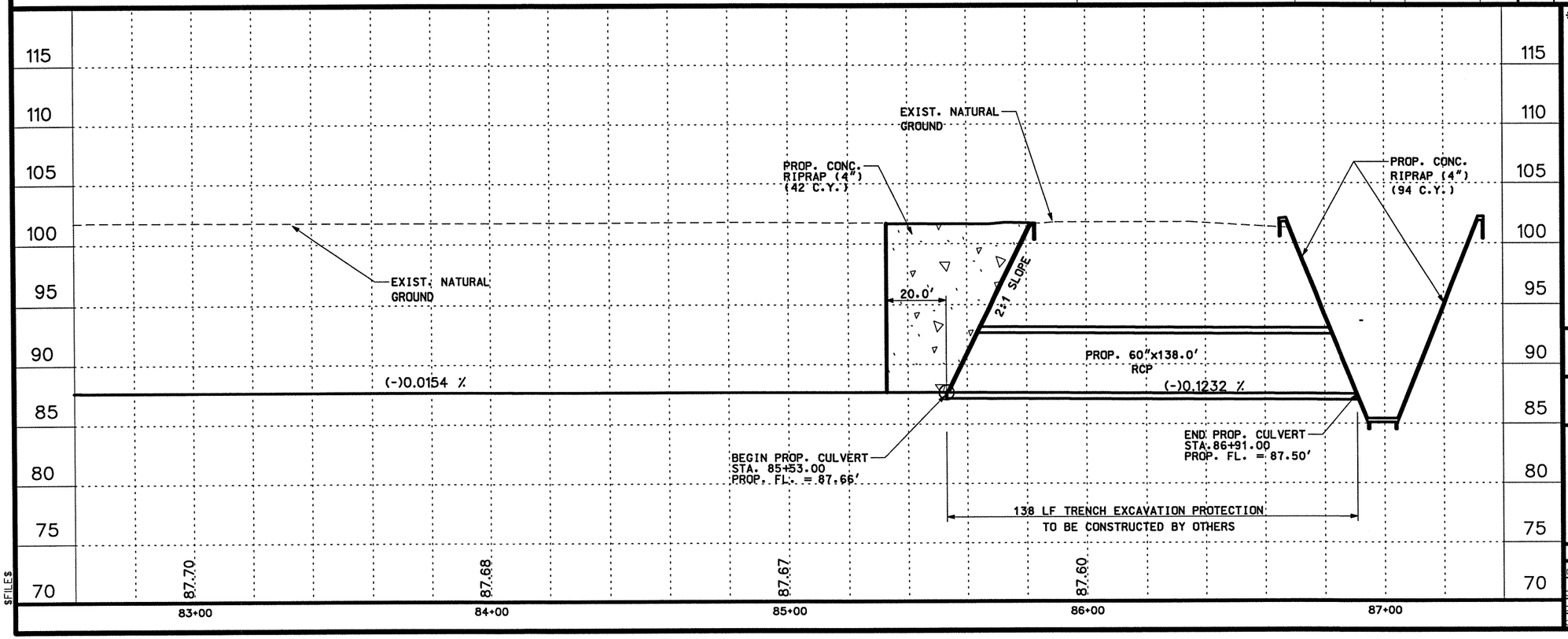

$FILE$

* FOR CONTRACTOR'S INFORMATION ONLY

STATE OF TEXAS
RAMIRO GUTIERREZ
65948
REGISTERED
PROFESSIONAL ENGINEER

THE SEAL APPEARING ON THIS DOCUMENT WAS AUTHORIZED BY RAMIRO GUTIERREZ, P.E. 65948

DATE: 6-12-03

ALTERATION OF A SEALED DOCUMENT WITHOUT PROPER NOTIFICATION TO THE RESPONSIBLE ENGINEER IS AN OFFENSE UNDER THE TEXAS ENGINEERING PRATICE LAW.

Parsons Brinckerhoff Quade & Douglas Inc.

Texas Department of Transportation

© 2003 by TxDOT

SOUTH DRAIN DITCH CULVERT LAYOUT

STA. 83+23.00 TO STA. 84+61.00

2 OF 2

PLAN 1"= 40' HORIZ
PROFILE 1"= 10' VERT

DESIGNED:	FED. RD DIV. No.	STATE	FEDERAL AID PROJECT No.		HIGHWAY No.	
CHECKED:	6	TEXAS			US 281	
DRAWN:	STATE DISTRICT	COUNTY	CONTROL No.	SECTION No.	JOB No.	SHEET No.
CHECKED:	21	HIDALGO	0255	08	091	647

$NAME$
$TIME$
$DATE$
$FILE$

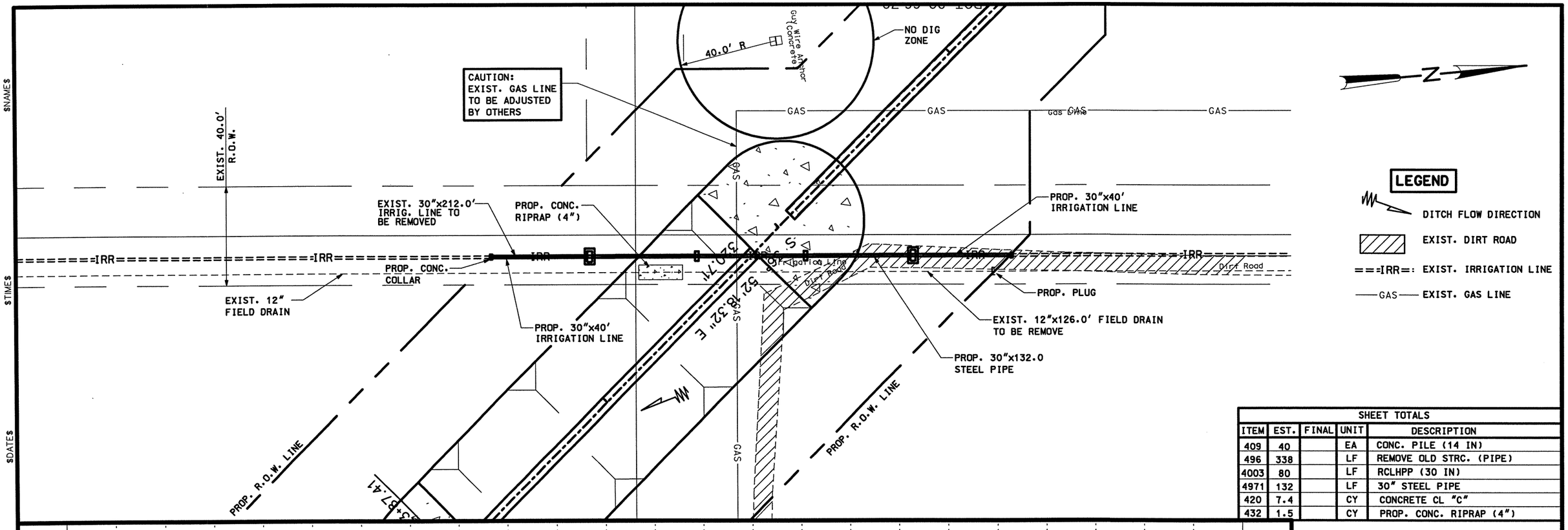

LEGEND

- DITCH FLOW DIRECTION
- EXIST. DIRT ROAD
- ==IRR==: EXIST. IRRIGATION LINE
- —GAS— EXIST. GAS LINE

SHEET TOTALS				
ITEM	EST.	FINAL	UNIT	DESCRIPTION
409	40		EA	CONC. PILE (14 IN)
496	338		LF	REMOVE OLD STRC. (PIPE)
4003	80		LF	RCLHPP (30 IN)
4971	132		LF	30" STEEL PIPE
420	7.4		CY	CONCRETE CL "C"
432	1.5		CY	PROP. CONC. RIPRAP (4")

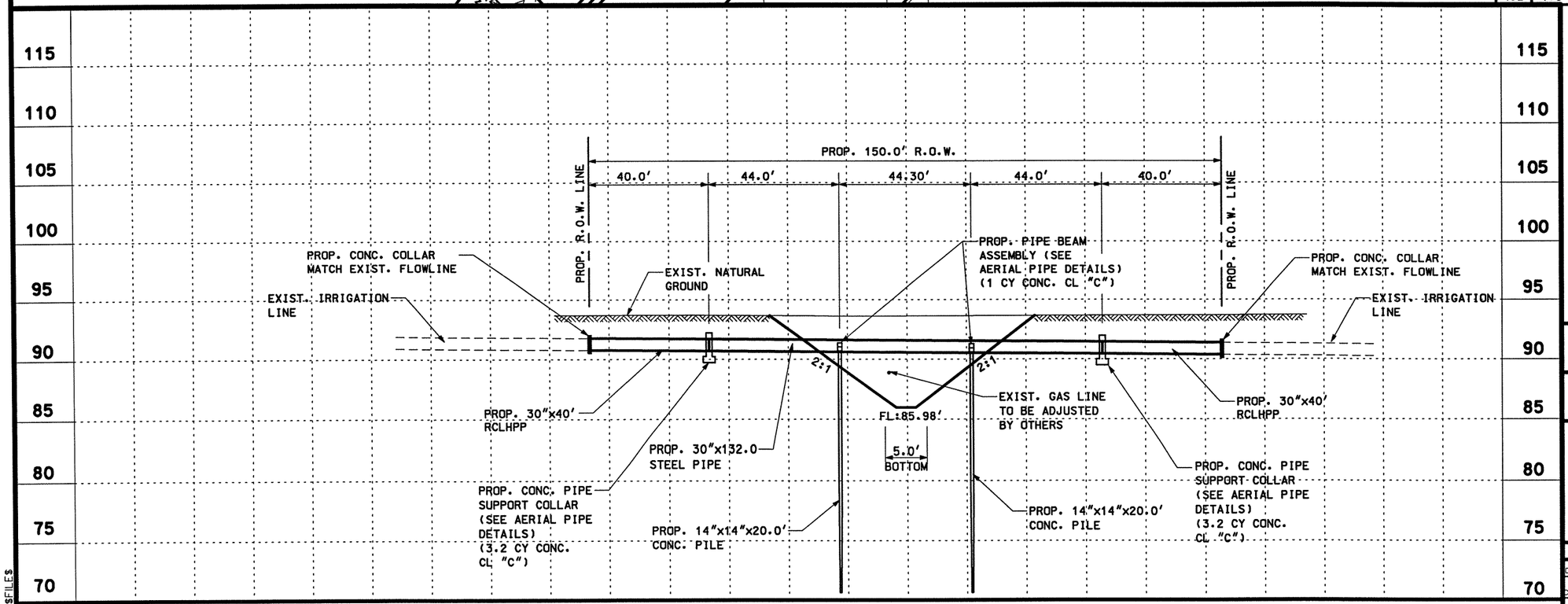

STATE OF TEXAS
RAMIRO GUTIERREZ
65948
REGISTERED
PROFESSIONAL ENGINEER

THE SEAL APPEARING ON THIS DOCUMENT WAS AUTHORIZED BY RAMIRO GUTIERREZ, P.E. 65948

DATE: 8-12-05

ALTERATION OF A SEALED DOCUMENT WITHOUT PROPER NOTIFICATION TO THE RESPONSIBLE ENGINEER IS AN OFFENSE UNDER THE TEXAS ENGINEERING PRATICE LAW.

Parsons Brinckerhoff Quade & Douglas Inc.

Texas Department of Transportation

© 2003 by TxDOT

H.C.I.D. No. 2
IRRIGATION LINE
AERIAL CROSSING

SHEET 1 OF 7

PLAN 1"= 40' HORIZ
PROFILE 1"= 10' VERT

DESIGNED:	FED. RD DIV. No.	STATE	FEDERAL AID PROJECT No.			HIGHWAY No.	
CHECKED:	6	TEXAS				US 281	
DRAWN:	STATE DISTRICT	COUNTY	CONTROL No.	SECTION No.	JOB No.	SHEET No.	
CHECKED:	21	HIDALGO	0255	08	091	648	

$NAME$
$TIME$
$DATE$

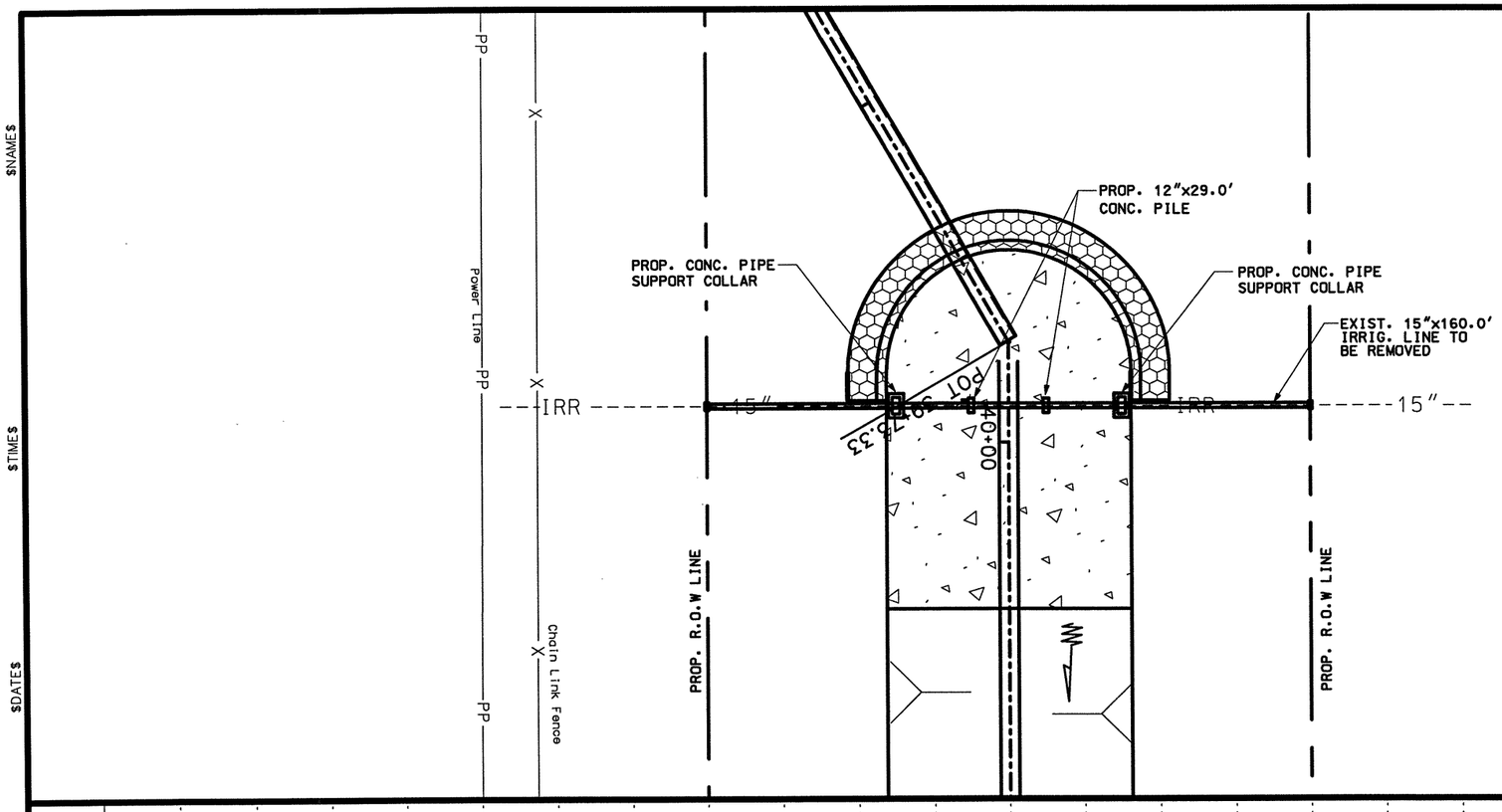

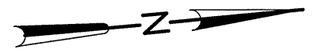

LEGEND

- DITCH FLOW DIRECTION
- EXIST. DIRT ROAD
- ===IRR=== EXIST. IRRIGATION LINE
- —GAS— EXIST. GAS LINE

SHEET TOTALS				
ITEM	EST.	FINAL	UNIT	DESCRIPTION
409	40		EA	CONC. PILE (14 IN)
496	160		LF	REMOVE OLD STRC. (PIPE)
4003	100		LF	RCLHPP (15 IN)
4971	60		LF	15" STEEL PIPE
420	7.4		CY	CONCRETE CL "C"

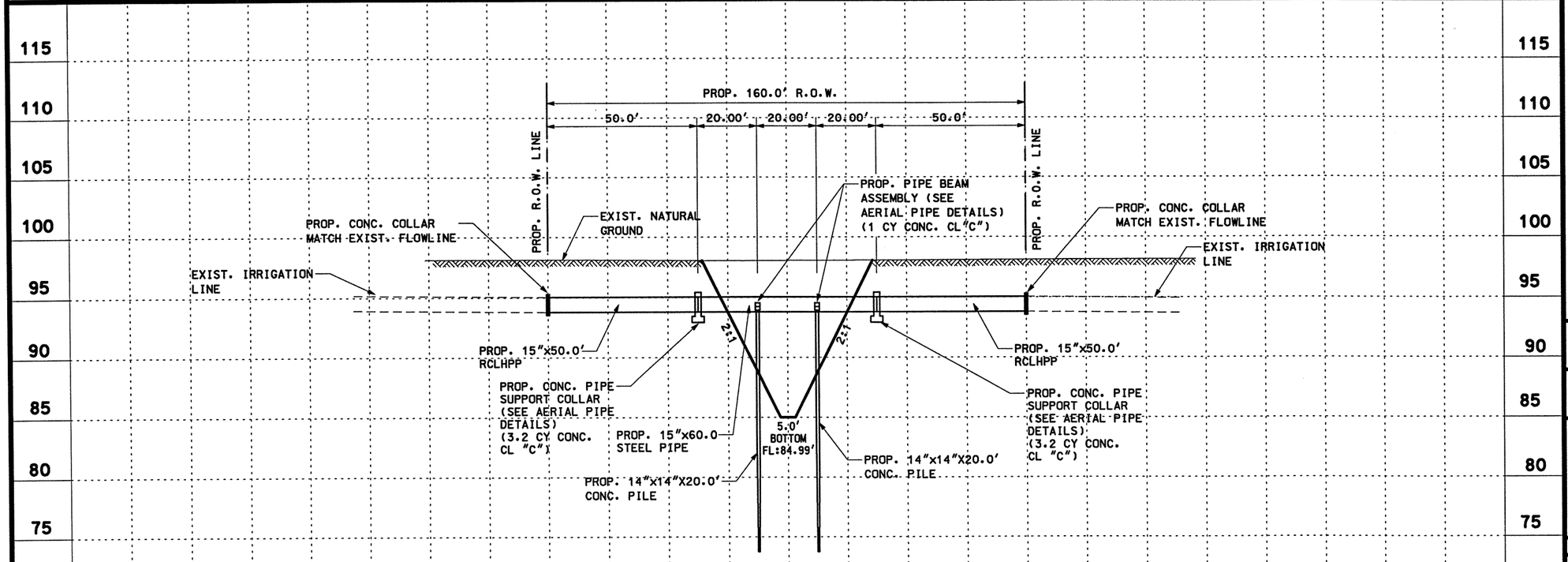

$FILE$

THE SEAL APPEARING ON THIS DOCUMENT WAS AUTHORIZED BY RAMIRO GUTIERREZ, P.E. 65948

DATE: 8-12-03

ALTERATION OF A SEALED DOCUMENT WITHOUT PROPER NOTIFICATION TO THE RESPONSIBLE ENGINEER IS AN OFFENSE UNDER THE TEXAS ENGINEERING PRATICE LAW.

Parsons Brinckerhoff Quade & Douglas Inc.

Texas Department of Transportation

© 2003 by TxDOT

H.C.I.D. No. 2 IRRIGATION LINE AERIALCROSSING

SHEET 2 OF 7

PLAN 1"= 40' HORIZ
PROFILE 1"= 10' VERT

DESIGNED:	FED. RD DIV. No.	STATE	FEDERAL AID PROJECT No.			HIGHWAY No.	
CHECKED:	6	TEXAS				US 281	
DRAWN:	STATE DISTRICT	COUNTY	CONTROL No.	SECTION No.	JOB No.	SHEET No.	
CHECKED:	21	HIDALGO	0255	08	091	649	

$NAME$
$TIME$
$DATE$

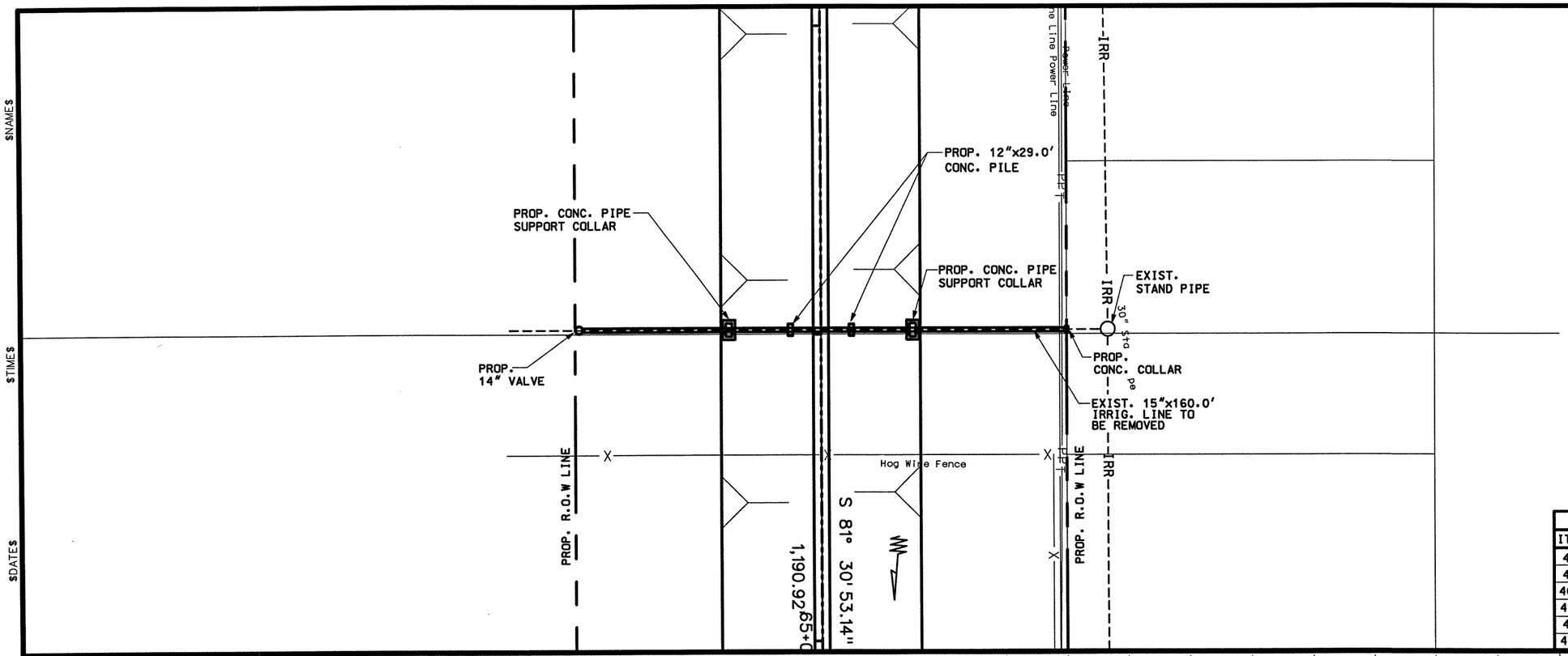

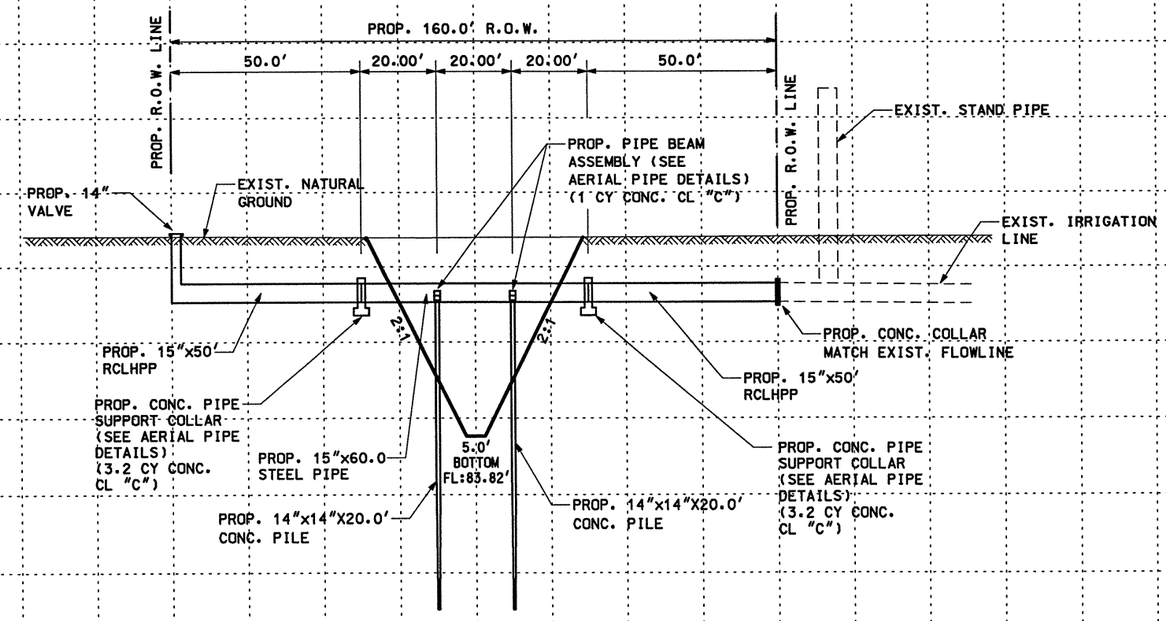

115
110
105
100
95
90
85
80
75
70

N

LEGEND

- DITCH FLOW DIRECTION
- EXIST. DIRT ROAD
- ==IRR==: EXIST. IRRIGATION LINE
- —GAS— EXIST. GAS LINE

SHEET TOTALS

ITEM	EST.	FINAL	UNIT	DESCRIPTION
409	40		EA	CONC. PILE (14 IN)
496	160		CY	REMOVE OLD STRUC. (PIPE)
4003	100		LF	RCLHPP (15 IN)
4971	60		LF	15" STEEL PIPE
420	7.4		CY	CONCRETE CL "C"
4001	1		EA	PROP. 14" VALVE

STATE OF TEXAS
RAMIRO GUTIERREZ
65948
REGISTERED PROFESSIONAL ENGINEER

THE SEAL APPEARING ON THIS DOCUMENT WAS AUTHORIZED BY RAMIRO GUTIERREZ, P.E. 65948

DATE: 8-12-03

ALTERATION OF A SEALED DOCUMENT WITHOUT PROPER NOTIFICATION TO THE RESPONSIBLE ENGINEER IS AN OFFENSE UNDER THE TEXAS ENGINEERING PRATICE LAW.

Parsons Brinckerhoff Quade & Douglas Inc.

Texas Department of Transportation
© 2003 by TxDOT

H.C.I.D. No. 2 IRRIGATION LINE AERIALCROSSING

SHEET 3 OF 7

PLAN 1"= 40' HORIZ
PROFILE 1"= 10' VERT

DESIGNED:	FED. RD DIV. No.	STATE	FEDERAL AID PROJECT No.		HIGHWAY No.	
CHECKED:	6	TEXAS			US 281	
DRAWN:	STATE DISTRICT	COUNTY	CONTROL No.	SECTION No.	JOB No.	SHEET No.
CHECKED:	21	HIDALGO	0255	08	091	650

$FILE$

$NAME$
$TIME$
$DATE$

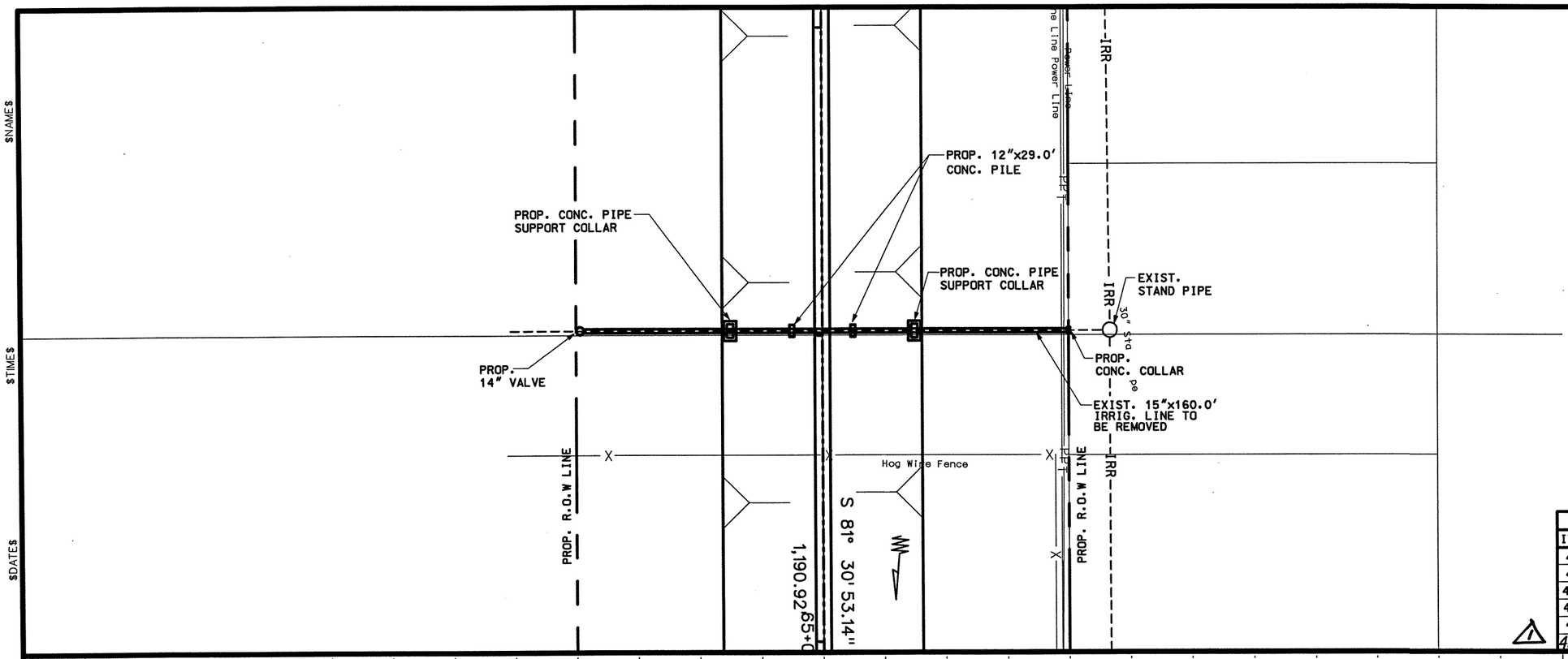

LEGEND

- DITCH FLOW DIRECTION
- EXIST. DIRT ROAD
- ==IRR==: EXIST. IRRIGATION LINE
- —GAS— EXIST. GAS LINE

SHEET TOTALS				
ITEM	EST.	FINAL	UNIT	DESCRIPTION
409	40		EA	CONC. PILE (14 IN)
496	160		CY	REMOVE OLD STRUC. (PIPE)
4003	100		LF	RCLHPP (15 IN)
4971	60		LF	15" STEEL PIPE
420	7.4		CY	CONCRETE CL "C"
43/5	1		EA	PROP. 14" VALVE

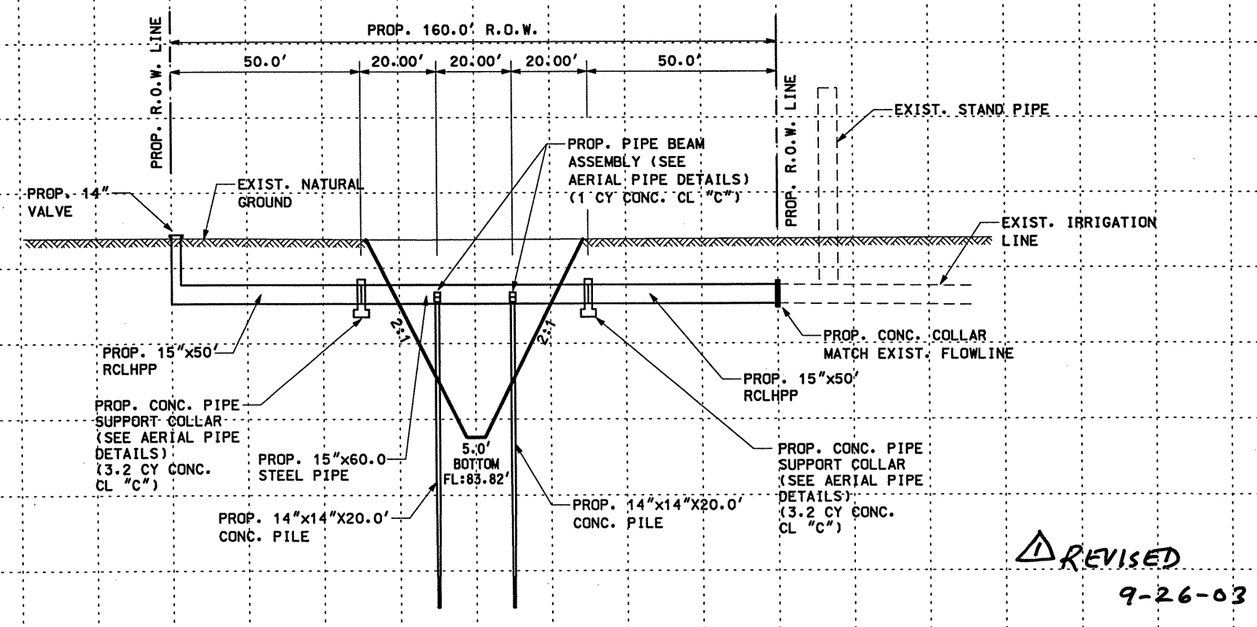

1 REVISED 9-26-03

THE SEAL APPEARING ON THIS DOCUMENT WAS AUTHORIZED BY RAMIRO GUTIERREZ, P.E. 65948

DATE: 8-12-03

ALTERATION OF A SEALED DOCUMENT WITHOUT PROPER NOTIFICATION TO THE RESPONSIBLE ENGINEER IS AN OFFENSE UNDER THE TEXAS ENGINEERING PRATICE LAW.

Parsons Brinckerhoff Quade & Douglas Inc.

Texas Department of Transportation

©2003 by TxDOT

H.C.I.D. No. 2 IRRIGATION LINE AERIAL CROSSING

SHEET 3 OF 7 PLAN 1"= 40' HORIZ PROFILE 1"= 10' VERT

DESIGNED:	FED. RD DIV. No.	STATE	FEDERAL AID PROJECT No.		HIGHWAY No.	
CHECKED:	6	TEXAS			US 281	
DRAWN:	STATE DISTRICT	COUNTY	CONTROL No.	SECTION No.	JOB No.	SHEET No.
CHECKED:	21	HIDALGO	0255	08	091	650

$FILE$

$NAME$

$TIME$

$DATE$

$FILE$

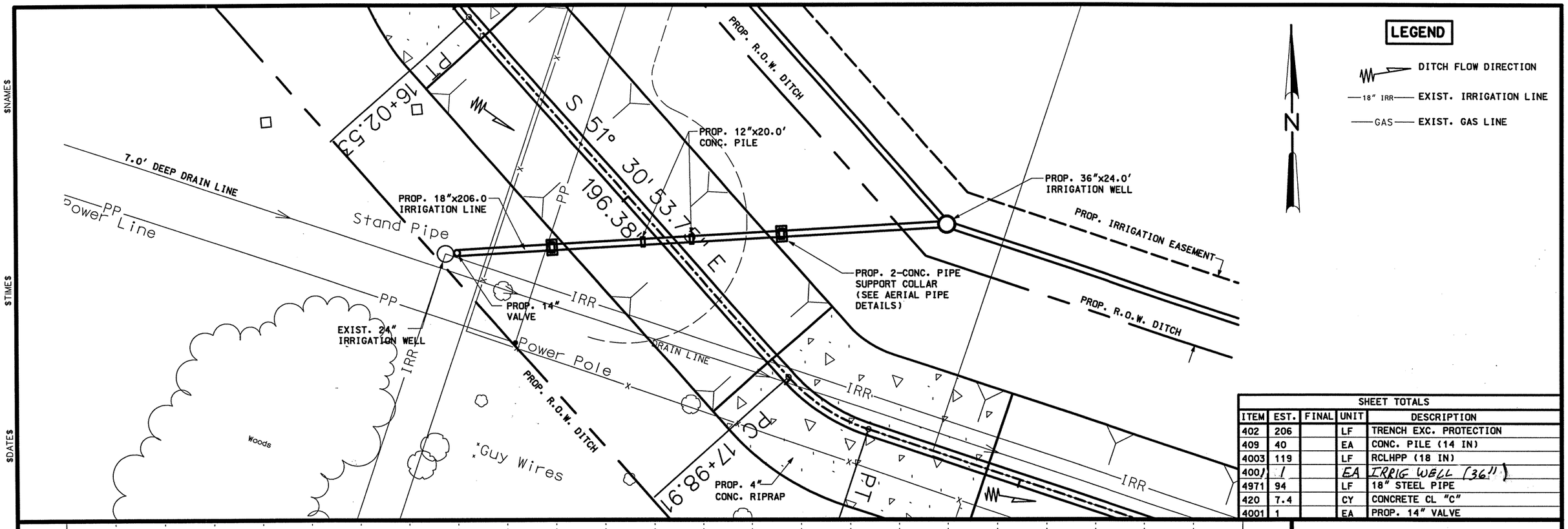

SHEET TOTALS				
ITEM	EST.	FINAL	UNIT	DESCRIPTION
402	206		LF	TRENCH EXC. PROTECTION
409	40		EA	CONC. PILE (14 IN)
4003	119		LF	RCLHPP (18 IN)
4001	1		EA	IRRIG WELL (36")
4971	94		LF	18" STEEL PIPE
420	7.4		CY	CONCRETE CL "C"
4001	1		EA	PROP. 14" VALVE

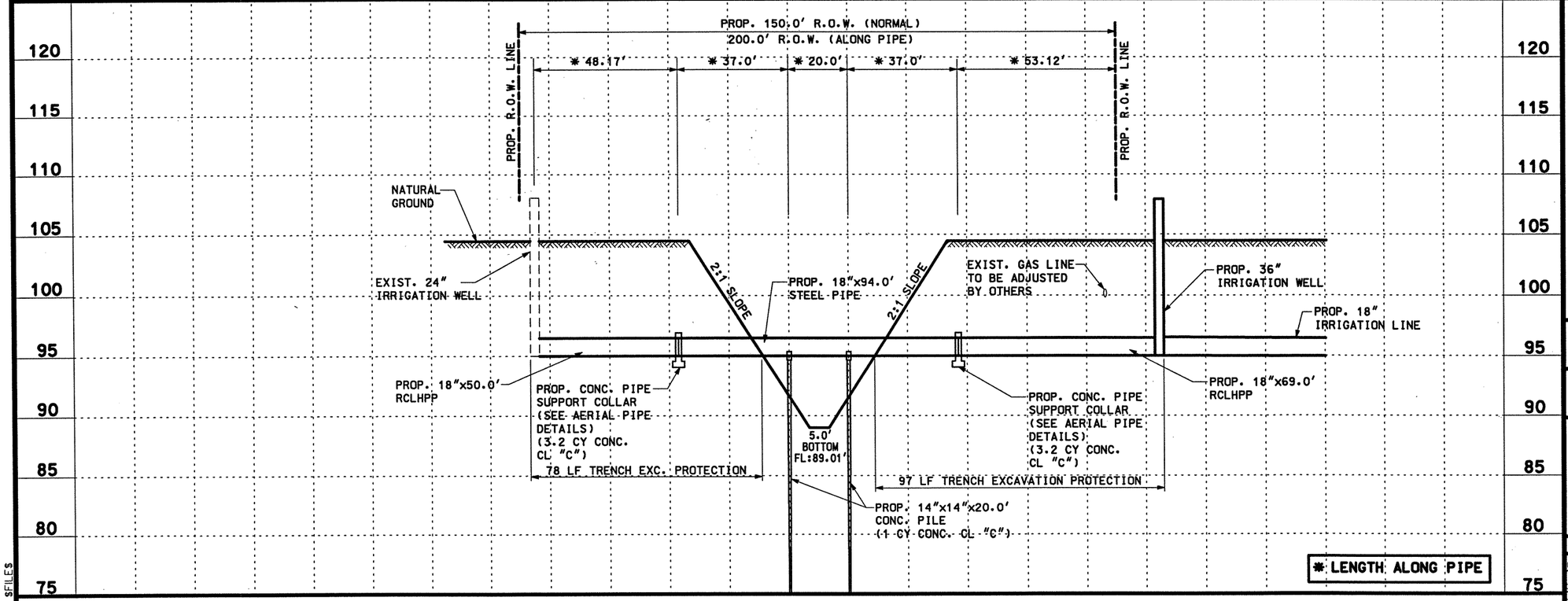

STATE OF TEXAS
RAMIRO GUTIERREZ
65948
REGISTERED PROFESSIONAL ENGINEER

THE SEAL APPEARING ON THIS DOCUMENT WAS AUTHORIZED BY RAMIRO GUTIERREZ, P.E. 65948

DATE: 8-12-03

ALTERATION OF A SEALED DOCUMENT WITHOUT PROPER NOTIFICATION TO THE RESPONSIBLE ENGINEER IS AN OFFENSE UNDER THE TEXAS ENGINEERING PRATICE LAW.

Parsons Brinckerhoff Quade & Douglas Inc.

Texas Department of Transportation

© 2003 by TxDOT

H.C.I.D. No. 2
IRRIGATION LINE AERIAL CROSSING

SHEET 4 OF 7 PLAN 1"= 40' HORIZ PROFILE 1"= 10' VERT

DESIGNED:	FED. RD DIV. No.	STATE	FEDERAL AID PROJECT No.			HIGHWAY No.	
CHECKED:	6	TEXAS				US 281	
DRAWN:	STATE DISTRICT	COUNTY	CONTROL No.	SECTION No.	JOB No.	SHEET No.	
CHECKED:	21	HIDALGO	0255	08	091	651	

$NAME$
$TIME$
$DATE$
$FILE$

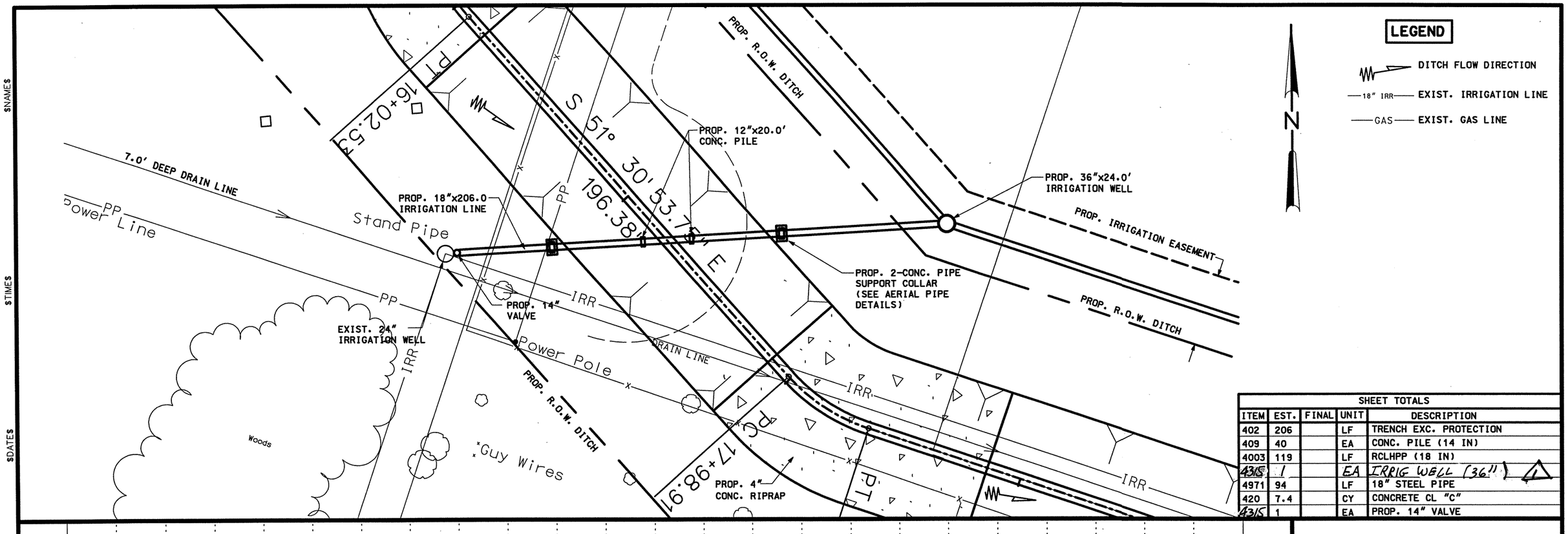

SHEET TOTALS

ITEM	EST.	FINAL	UNIT	DESCRIPTION
402	206		LF	TRENCH EXC. PROTECTION
409	40		EA	CONC. PILE (14 IN)
4003	119		LF	RCLHPP (18 IN)
43/S	1		EA	IRRIG WELL (36") 4
4971	94		LF	18" STEEL PIPE
420	7.4		CY	CONCRETE CL "C"
43/S	1		EA	PROP. 14" VALVE

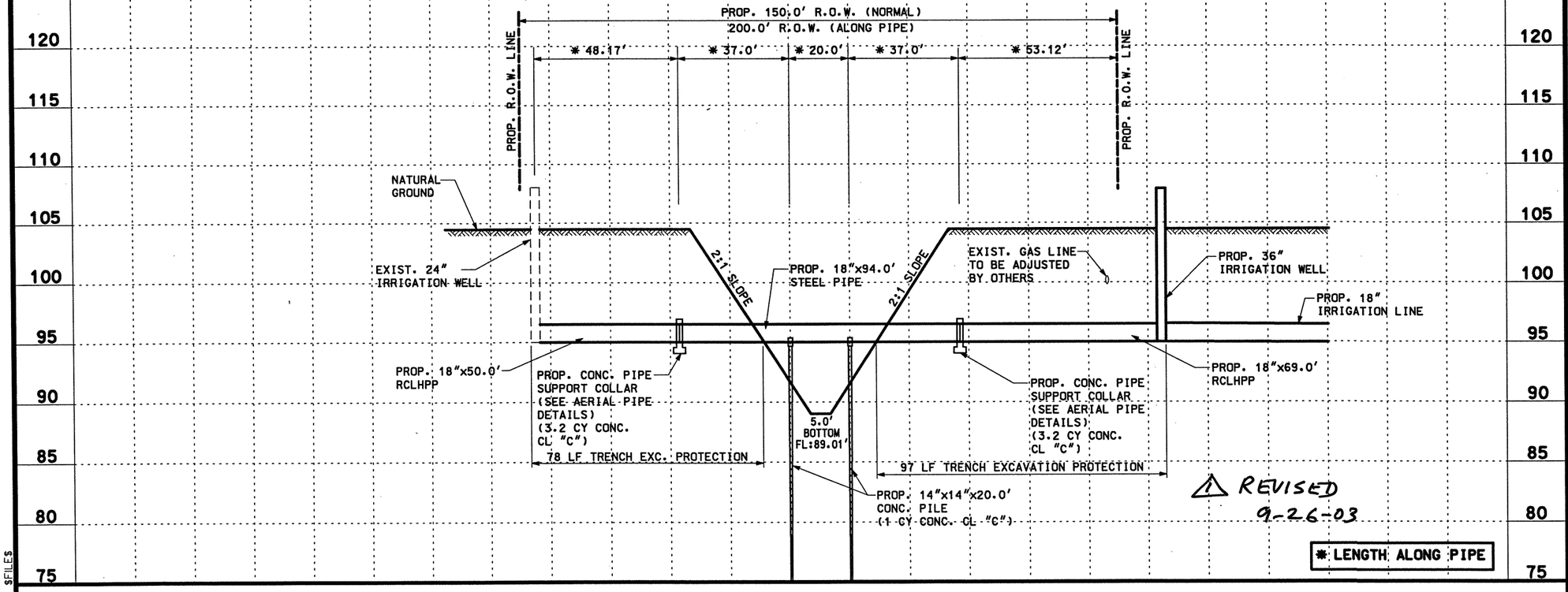

* LENGTH ALONG PIPE

1 REVISED 9-26-03

STATE OF TEXAS
RAMIRO GUTIERREZ
65948
REGISTERED PROFESSIONAL ENGINEER

THE SEAL APPEARING ON THIS DOCUMENT WAS AUTHORIZED BY RAMIRO GUTIERREZ, P.E. 65948

DATE: 8-12-03

ALTERATION OF A SEALED DOCUMENT WITHOUT PROPER NOTIFICATION TO THE RESPONSIBLE ENGINEER IS AN OFFENSE UNDER THE TEXAS ENGINEERING PRATICE LAW.

Parsons Brinckerhoff Quade & Douglas Inc.

Texas Department of Transportation
© 2003 by TxDOT

H.C.I.D. No. 2 IRRIGATION LINE AERIAL CROSSING

SHEET 4 OF 7 PLAN 1"= 40' HORIZ PROFILE 1"= 10' VERT

DESIGNED:	FED. RD DIV. No.	STATE	FEDERAL AID PROJECT No.			HIGHWAY No.
CHECKED:	6	TEXAS				US 281
DRAWN:	STATE DISTRICT	COUNTY	CONTROL No.	SECTION No.	JOB No.	SHEET No.
CHECKED:	21	HIDALGO	0255	08	091	651

$NAME$
$TIME$
$DATE$

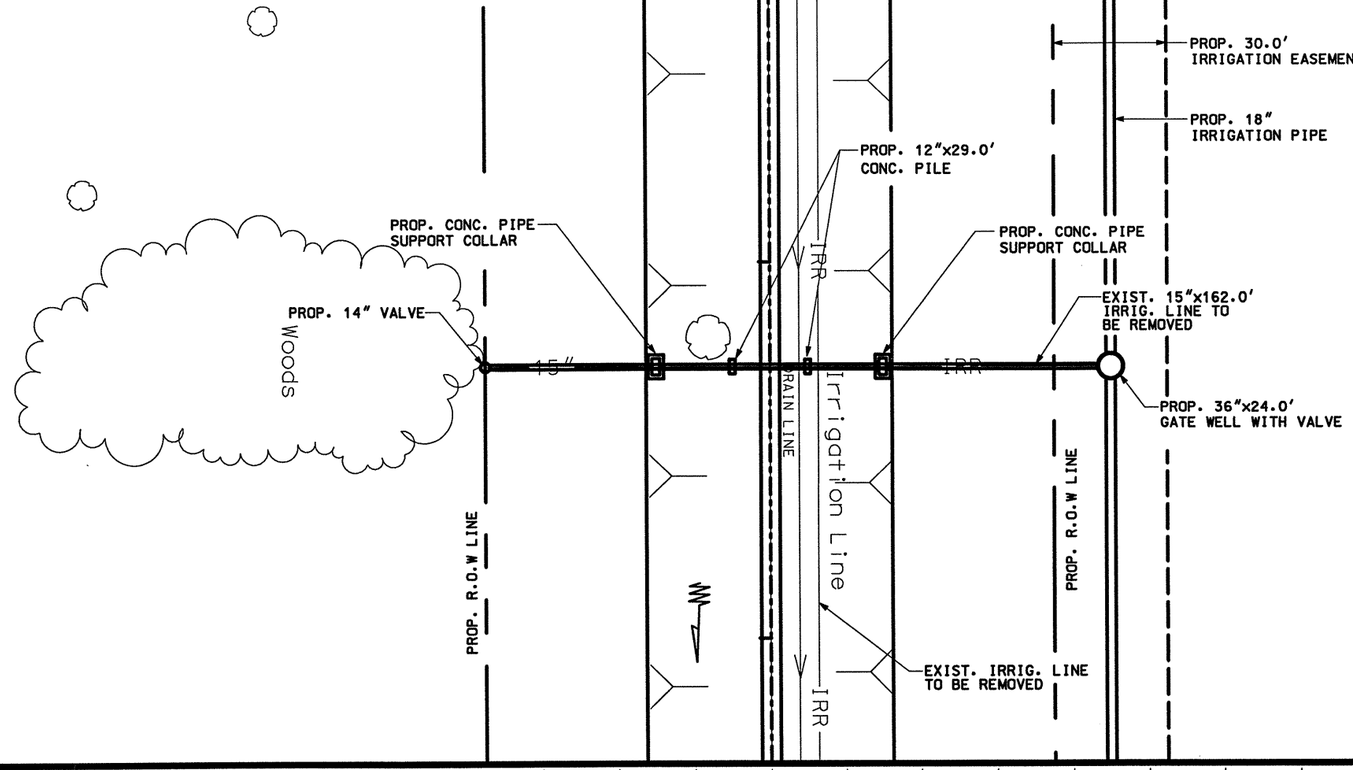

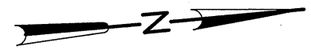

LEGEND

- DITCH FLOW DIRECTION
- EXIST. DIRT ROAD
- ==IRR==: EXIST. IRRIGATION LINE
- ——GAS—— EXIST. GAS LINE

SHEET TOTALS				
ITEM	EST.	FINAL	UNIT	DESCRIPTION
409	40		EA	CONC. PILE (14 IN)
496	162		LF	REMOVE OLD STRUC. (PIPE)
4003	102		LF	RCLHPP (15 IN)
4971	60		LF	15" STEEL PIPE
4001	2		EA	PROP. 14" VALVE
4001	1		EA	PROP. IRRIG WELL (36")
420	7.4		CY	CONCRETE CL "C"

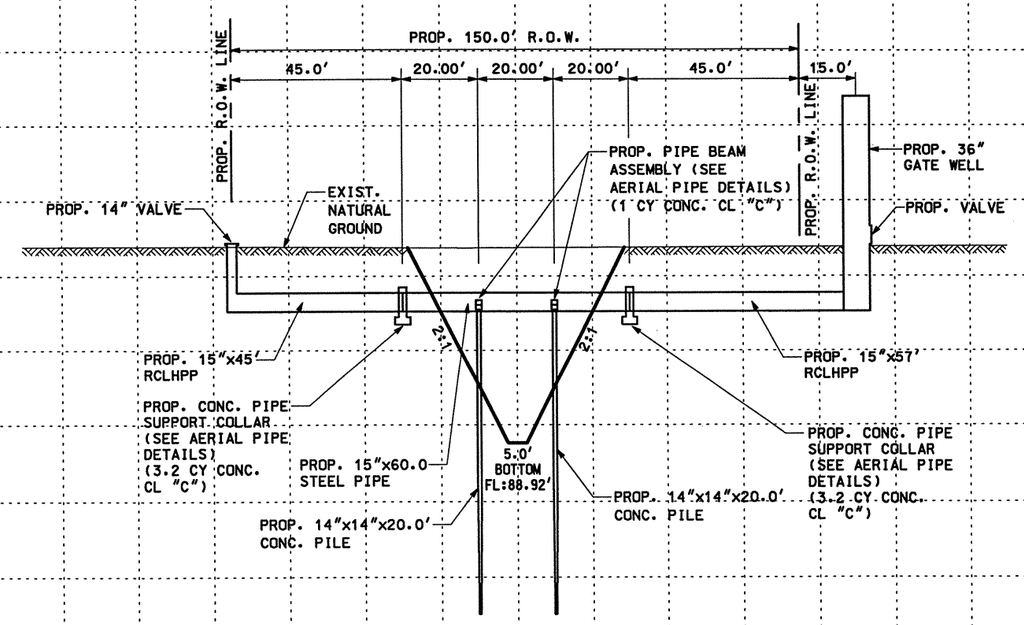

THE SEAL APPEARING ON THIS DOCUMENT WAS AUTHORIZED BY RAMIRO GUTIERREZ, P.E. 65948

DATE: 8-12-03

ALTERATION OF A SEALED DOCUMENT WITHOUT PROPER NOTIFICATION TO THE RESPONSIBLE ENGINEER IS AN OFFENSE UNDER THE TEXAS ENGINEERING PRATICE LAW.

Parsons Brinckerhoff Quade & Douglas Inc.

Texas Department of Transportation

© 2003 by TxDOT

H.C.I.D. No. 2
IRRIGATION LINE
AERIAL CROSSING

SHEET 5 OF 7

PLAN 1"= 40' HORIZ
PROFILE 1"= 10' VERT

DESIGNED:	FED. RD DIV. No.	STATE	FEDERAL AID PROJECT No.			HIGHWAY No.	
CHECKED:	6	TEXAS				US 281	
DRAWN:	STATE DISTRICT	COUNTY	CONTROL No.	SECTION No.	JOB No.	SHEET No.	
CHECKED:	21	HIDALGO	0255	08	091	652	

$FILE$

$NAME$
$TIME$
$DATE$

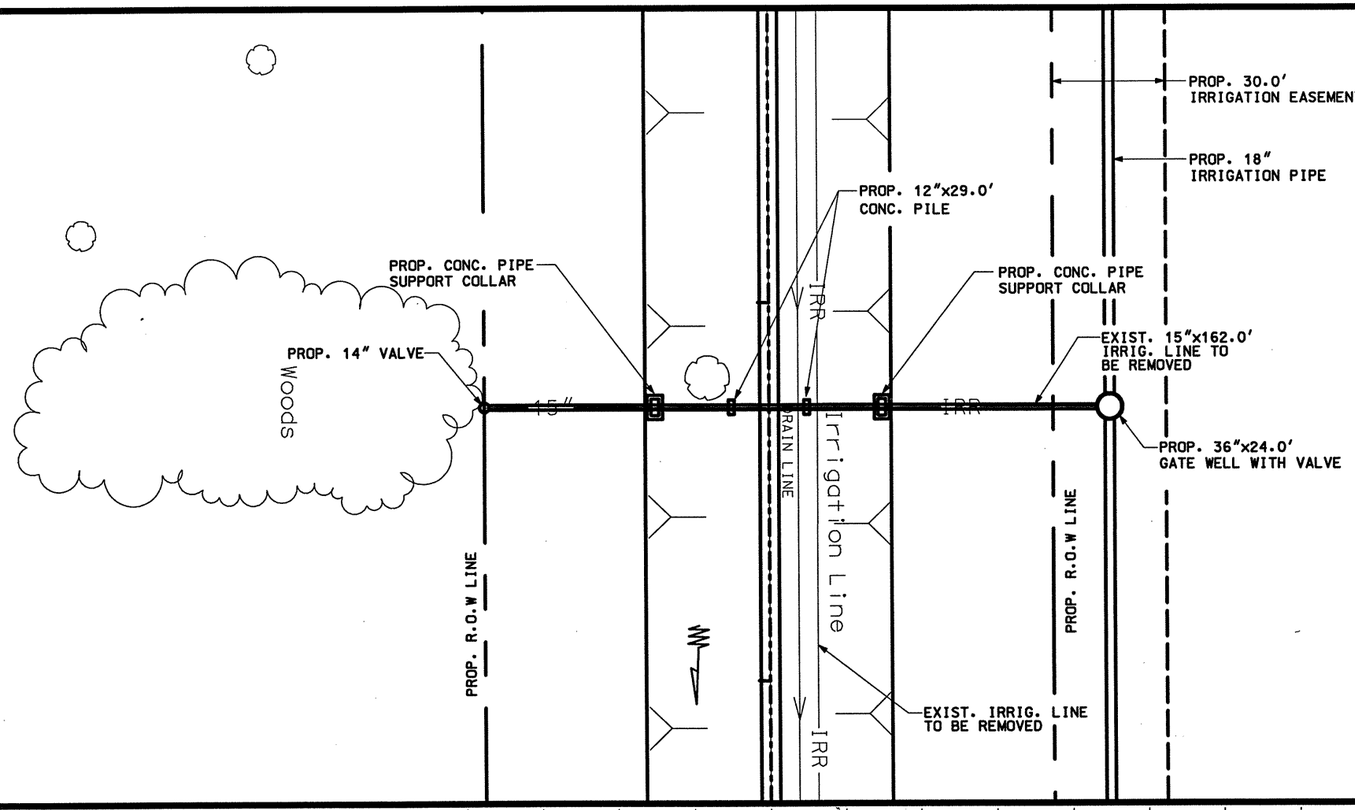

LEGEND

- DITCH FLOW DIRECTION
- EXIST. DIRT ROAD
- ===IRR=== EXIST. IRRIGATION LINE
- ——GAS—— EXIST. GAS LINE

SHEET TOTALS				
ITEM	EST.	FINAL	UNIT	DESCRIPTION
409	40		EA	CONC. PILE (14 IN)
496	162		LF	REMOVE OLD STRUC. (PIPE)
4003	102		LF	RCLHPP (15 IN)
4971	60		LF	15" STEEL PIPE
4315	2		EA	PROP. 14" VALVE
4315	1		EA	PROP. IRRIG WELL (36")
420	7.4		CY	CONCRETE CL "C"

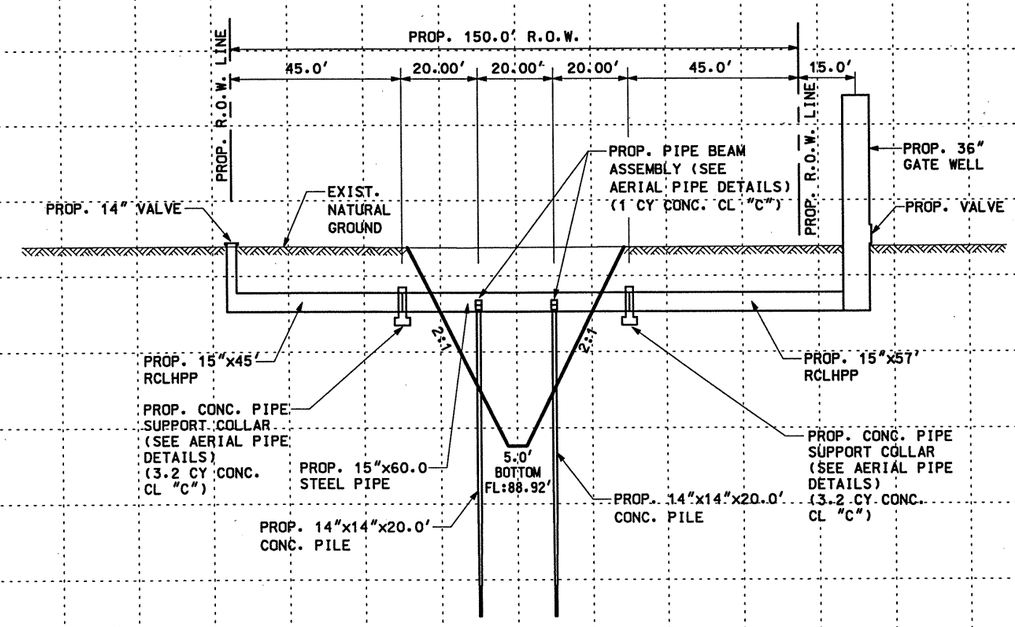

120 115 110 105 100 95 90 85 80 75

1 REVISED 9-26-03

THE SEAL APPEARING ON THIS DOCUMENT WAS AUTHORIZED BY RAMIRO GUTIERREZ, P.E. 65948

DATE: 8-12-03

ALTERATION OF A SEALED DOCUMENT WITHOUT PROPER NOTIFICATION TO THE RESPONSIBLE ENGINEER IS AN OFFENSE UNDER THE TEXAS ENGINEERING PRATICE LAW.

STATE OF TEXAS — RAMIRO GUTIERREZ — 65948 — REGISTERED PROFESSIONAL ENGINEER

Parsons Brinckerhoff Quade & Douglas Inc.

Texas Department of Transportation

© 2003 by TxDOT

H.C.I.D. No. 2
IRRIGATION LINE
AERIAL CROSSING

SHEET 5 OF 7

PLAN 1"= 40' HORIZ
PROFILE 1"= 10' VERT

DESIGNED:	FED. RD DIV. No.	STATE	FEDERAL AID PROJECT No.			HIGHWAY No.	
CHECKED:	6	TEXAS				US 281	
DRAWN:	STATE DISTRICT	COUNTY	CONTROL No.	SECTION No.	JOB No.	SHEET No.	
CHECKED:	21	HIDALGO	0255	08	091	652	

$FILE$

$NAME$
$TIME$
$DATE$

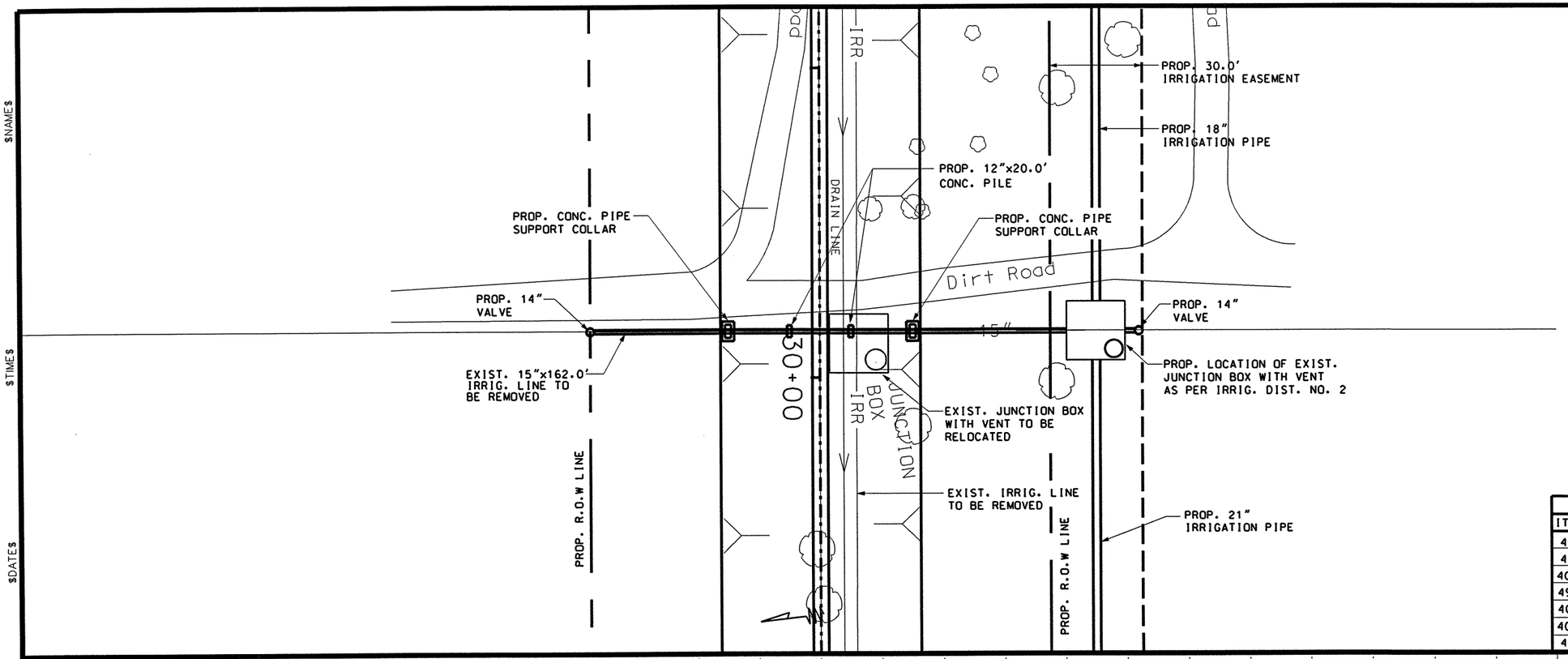

LEGEND

- DITCH FLOW DIRECTION
- EXIST. DIRT ROAD
- =:=IRR=:= EXIST. IRRIGATION LINE
- —GAS— EXIST. GAS LINE

SHEET TOTALS				
ITEM	EST.	FINAL	UNIT	DESCRIPTION
409	40		EA	CONC. PILE (14 IN)
496	176		LF	REMOVE OLD STRUC. (PIPE)
4003	105		LF	RCLHPP (15 IN)
4971	60		LF	15" STEEL PIPE
4001	2		EA	PROP. 14" VALVE
4002	1		EA	RELOCATE WITH APPERTENANCES
420	7.4		CY	CONCRETE CL "C"

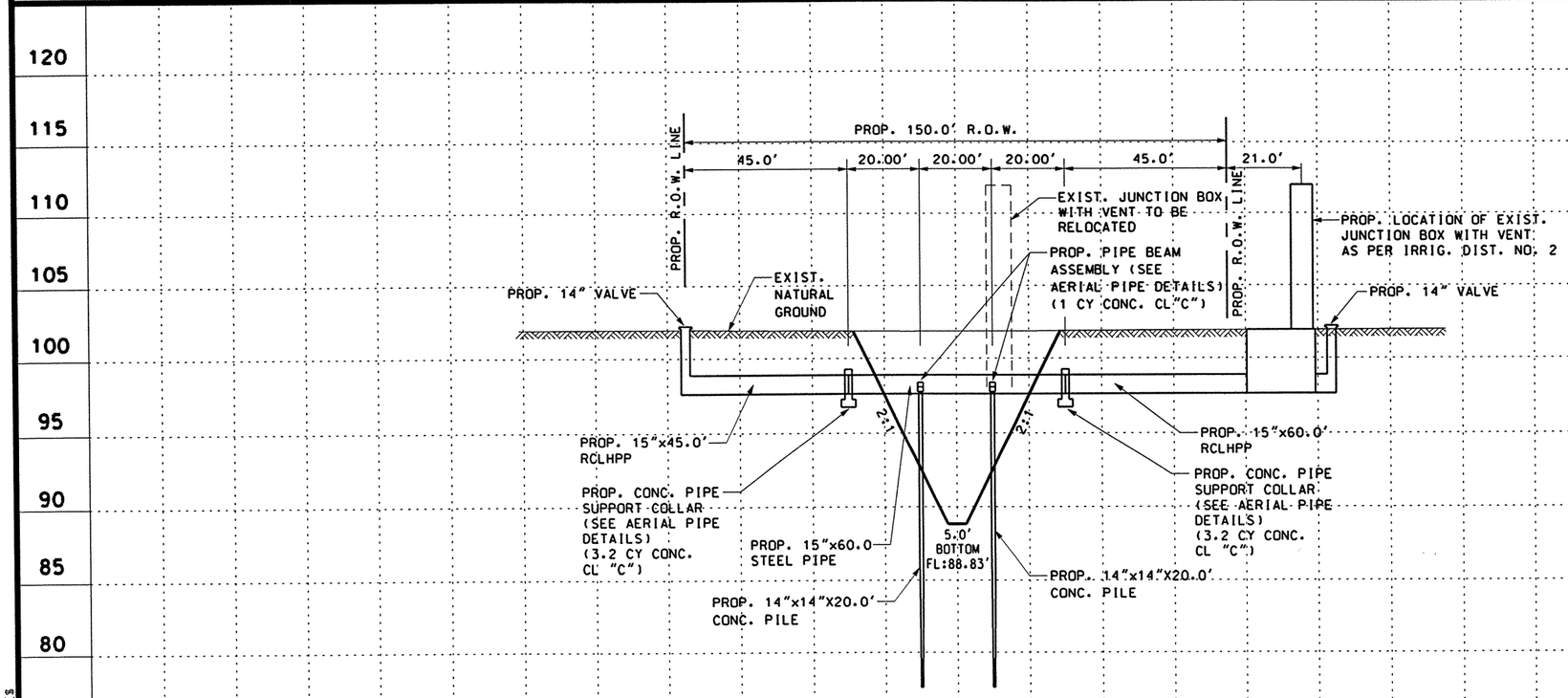

$FILE$

THE SEAL APPEARING ON THIS DOCUMENT WAS AUTHORIZED BY RAMIRO GUTIERREZ, P.E. 65948

DATE: 8-15-03

ALTERATION OF A SEALED DOCUMENT WITHOUT PROPER NOTIFICATION TO THE RESPONSIBLE ENGINEER IS AN OFFENSE UNDER THE TEXAS ENGINEERING PRATICE LAW.

Parsons Brinckerhoff Quade & Douglas Inc.

Texas Department of Transportation

© 2003 by TxDOT

H.C.I.D. No. 2 IRRIGATION LINE AERIAL CROSSING

SHEET 6 OF 7

PLAN 1"= 40' HORIZ
PROFILE 1"= 10' VERT

DESIGNED:	FED. RD DIV. No.	STATE	FEDERAL AID PROJECT No.		HIGHWAY No.	
CHECKED:	6	TEXAS			US 281	
DRAWN:	STATE DISTRICT	COUNTY	CONTROL No.	SECTION No.	JOB No.	SHEET No.
CHECKED:	21	HIDALGO	0255	08	091	653

$NAME$
$TIME$
$DATE$

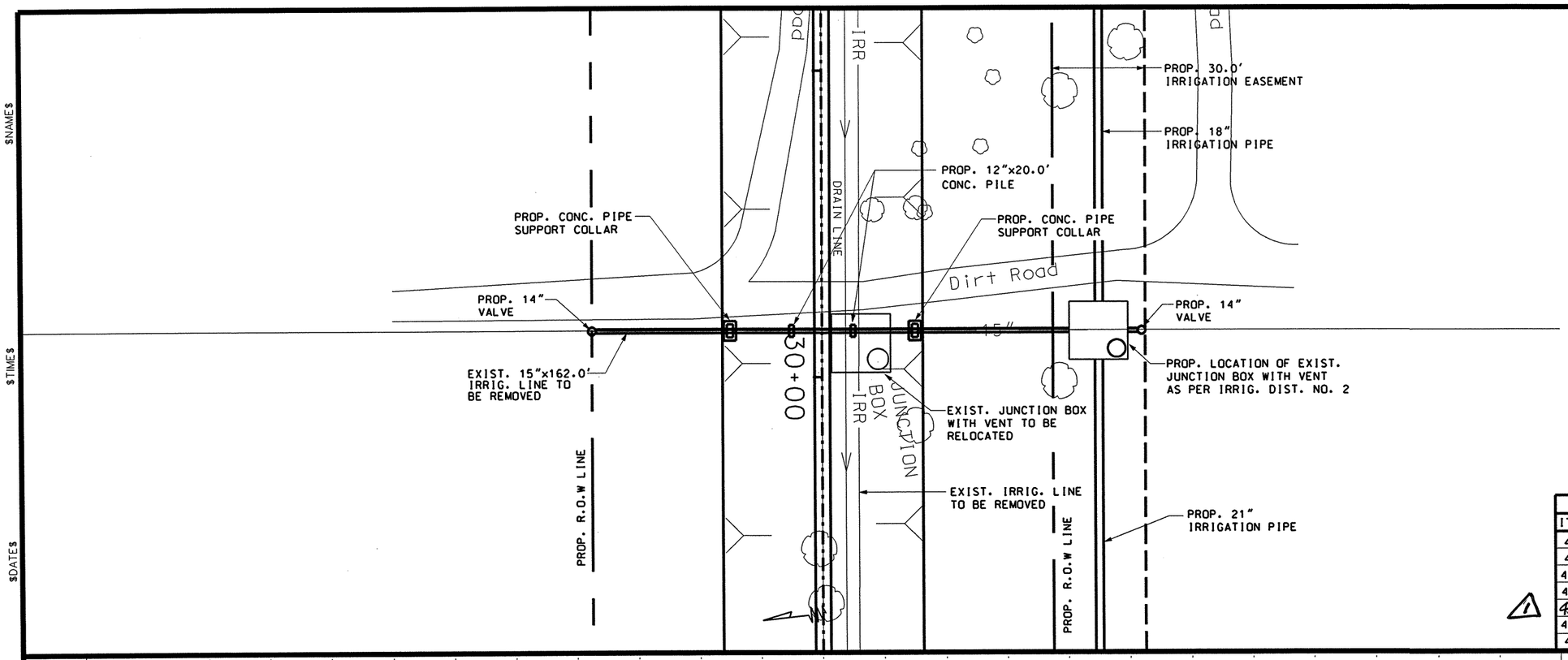

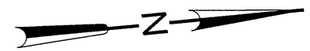

LEGEND

- DITCH FLOW DIRECTION
- EXIST. DIRT ROAD
- ==:IRR=: EXIST. IRRIGATION LINE
- —GAS— EXIST. GAS LINE

SHEET TOTALS

ITEM	EST.	FINAL	UNIT	DESCRIPTION
409	40		EA	CONC. PILE (14 IN)
496	176		LF	REMOVE OLD STRUC. (PIPE)
4003	105		LF	RCLHPP (15 IN)
4971	60		LF	15" STEEL PIPE
4315	2		EA	PROP. 14" VALVE
4002	1		EA	RELOCATE WITH APPERTENANCES
420	7.4		CY	CONCRETE CL "C"

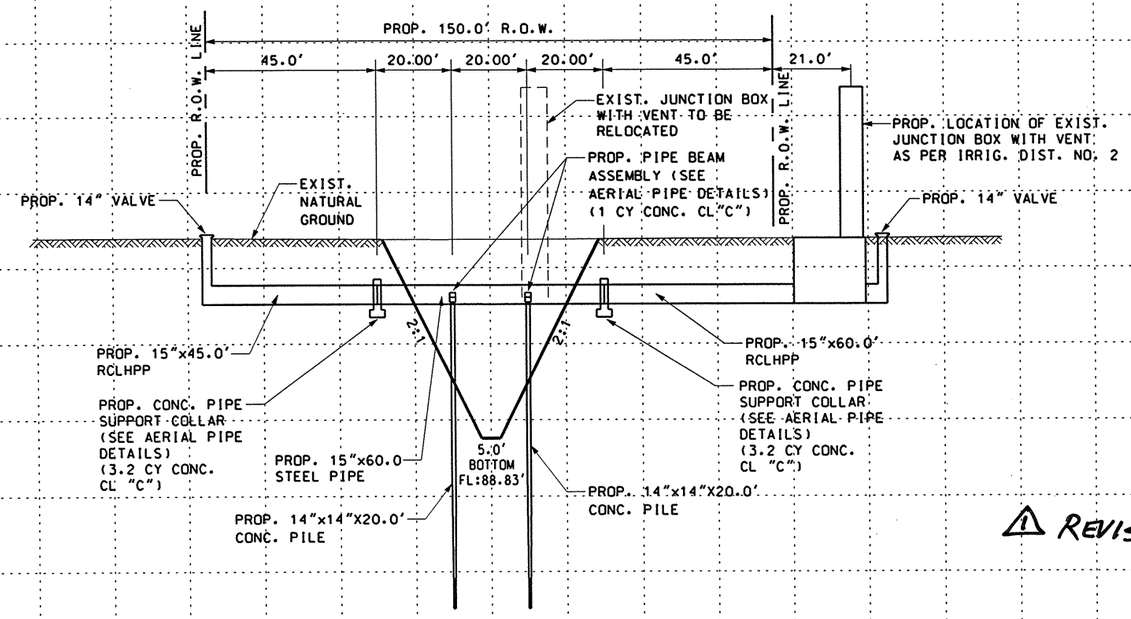

⚠1 REVISED 9-26-03

THE SEAL APPEARING ON THIS DOCUMENT WAS AUTHORIZED BY RAMIRO GUTIERREZ, P.E. 65948

DATE: 8-15-03

ALTERATION OF A SEALED DOCUMENT WITHOUT PROPER NOTIFICATION TO THE RESPONSIBLE ENGINEER IS AN OFFENSE UNDER THE TEXAS ENGINEERING PRATICE LAW.

STATE OF TEXAS — RAMIRO GUTIERREZ — 65948 — REGISTERED PROFESSIONAL ENGINEER

Parsons Brinckerhoff Quade & Douglas Inc.

Texas Department of Transportation

© 2003 by TxDOT

H.C.I.D. No. 2
IRRIGATION LINE AERIAL CROSSING

SHEET 6 OF 7

PLAN 1"= 40' HORIZ
PROFILE 1"= 10' VERT

DESIGNED:	FED. RD DIV. No.	STATE	FEDERAL AID PROJECT No.			HIGHWAY No.
CHECKED:	6	TEXAS				US 281
DRAWN:	STATE DISTRICT	COUNTY	CONTROL No.	SECTION No.	JOB No.	SHEET No.
CHECKED:	21	HIDALGO	0255	08	091	653

$FILE$

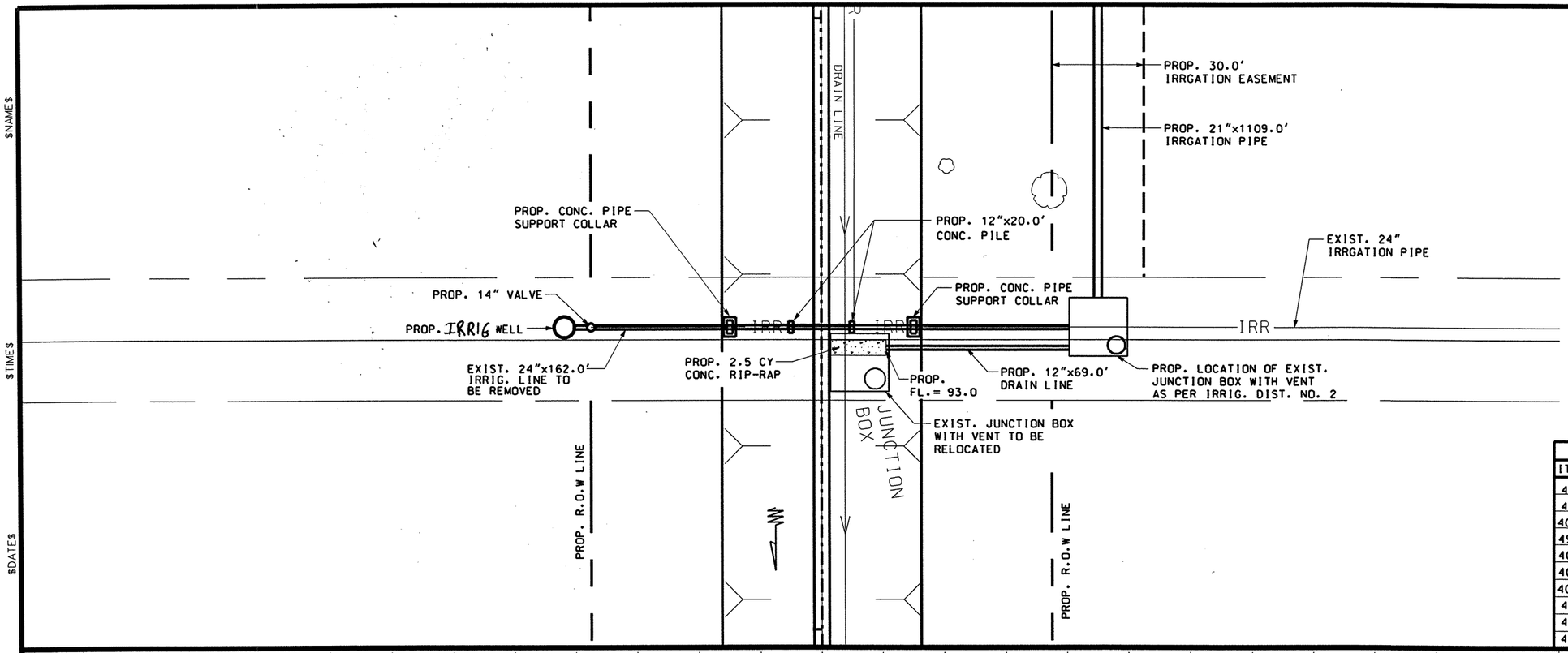

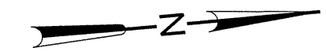

LEGEND

- DITCH FLOW DIRECTION
- EXIST. DIRT ROAD
- ==:IRR=: EXIST. IRRIGATION LINE
- —GAS— EXIST. GAS LINE

SHEET TOTALS

ITEM	EST.	FINAL	UNIT	DESCRIPTION
409	40		EA	CONC. PILE (14 IN)
496	176		LF	REMOVE OLD STRUC. (PIPE)
4003	115		LF	RCLHPP (18 IN)
4971	60		LF	18" STEEL PIPE
4001	1		EA	PROP. 14" VALVE
4001	1		EA	PROP. IRRIG. WELL (42")
4002	1		LS	RELOCATE WITH APPERTENANCES
432	2.5		CY	CONC. RIP-RAP (4")
464	69		LF	PROP. 12" RCP
420	7.4		CY	CONCRETE CL "C"

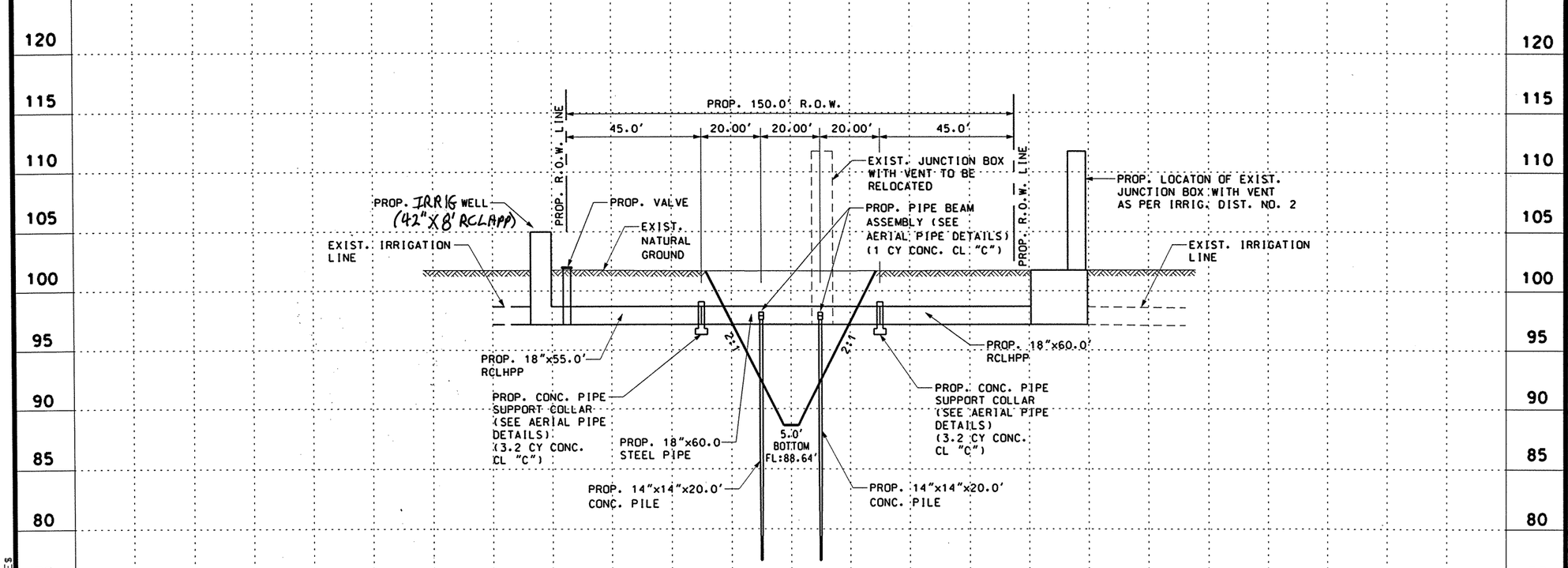

STATE OF TEXAS
RAMIRO GUTIERREZ
65948
REGISTERED PROFESSIONAL ENGINEER

THE SEAL APPEARING ON THIS DOCUMENT WAS AUTHORIZED BY RAMIRO GUTIERREZ, P.E. 65948

DATE: 8-15-03

ALTERATION OF A SEALED DOCUMENT WITHOUT PROPER NOTIFICATION TO THE RESPONSIBLE ENGINEER IS AN OFFENSE UNDER THE TEXAS ENGINEERING PRATICE LAW.

PB Parsons Brinckerhoff Quade & Douglas Inc.

Texas Department of Transportation
©2003 by TxDOT

H.C.I.D. No. 2
IRRIGATION LINE
AERIAL CROSSING

SHEET 7 OF 7

PLAN 1"= 40' HORIZ
PROFILE 1"= 10' VERT

DESIGNED:	FED. RD DIV. No.	STATE	FEDERAL AID PROJECT No.			HIGHWAY No.	
CHECKED:	6	TEXAS				US 281	
DRAWN:	STATE DISTRICT	COUNTY	CONTROL No.	SECTION No.	JOB No.	SHEET No.	
CHECKED:	21	HIDALGO	0255	08	091	654	

$NAME$

$TIME$

$DATE$

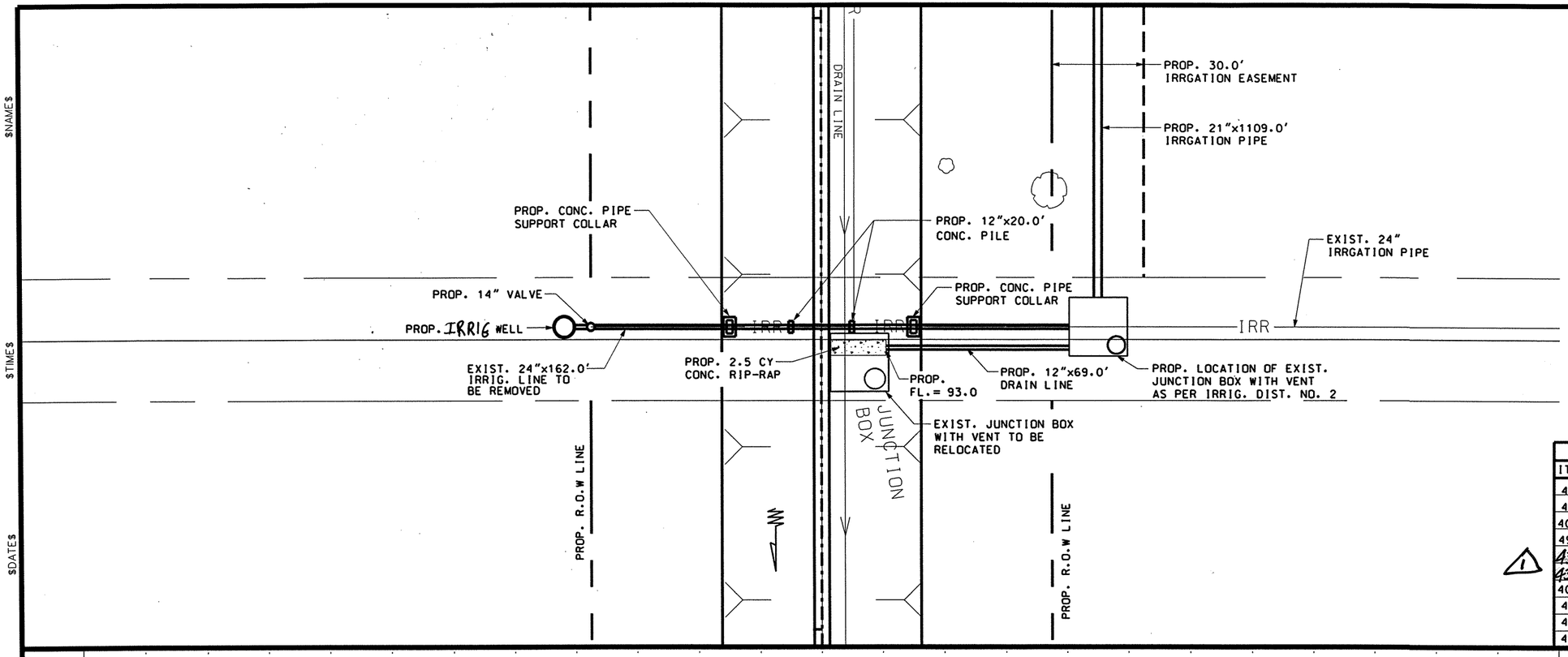

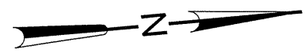

LEGEND

- DITCH FLOW DIRECTION
- EXIST. DIRT ROAD
- ==:IRR=: EXIST. IRRIGATION LINE
- —GAS— EXIST. GAS LINE

SHEET TOTALS				
ITEM	EST.	FINAL	UNIT	DESCRIPTION
409	40		EA	CONC. PILE (14 IN)
496	176		LF	REMOVE OLD STRUC. (PIPE)
4003	115		LF	RCLHPP (18 IN)
4971	60		LF	18" STEEL PIPE
4315	1		EA	PROP. 14" VALVE
4315	1		EA	PROP. IRRIG. WELL (42")
4002	1		LS	RELOCATE WITH APPERTENANCES
432	2.5		CY	CONC. RIP-RAP (4")
464	69		LF	PROP. 12" RCP
420	7.4		CY	CONCRETE CL "C"

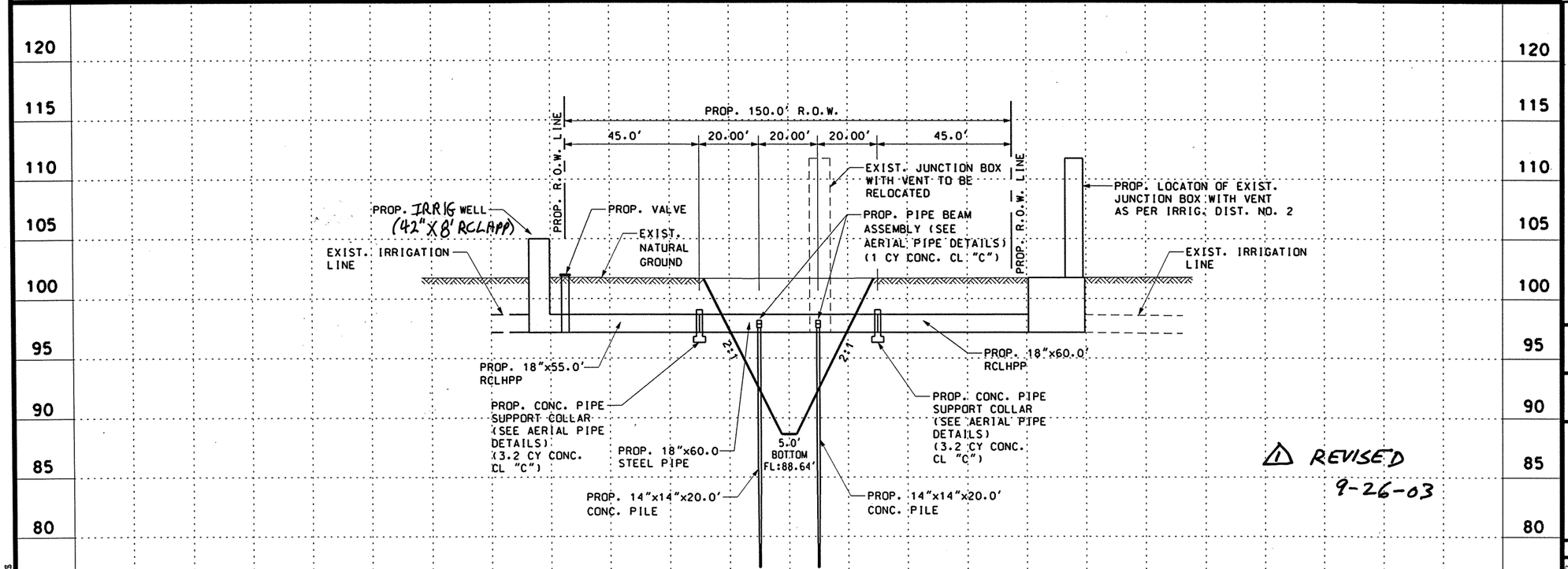

1 REVISED 9-26-03

$FILES$

THE SEAL APPEARING ON THIS DOCUMENT WAS AUTHORIZED BY RAMIRO GUTIERREZ, P.E. 65948

DATE: 8-15-03

ALTERATION OF A SEALED DOCUMENT WITHOUT PROPER NOTIFICATION TO THE RESPONSIBLE ENGINEER IS AN OFFENSE UNDER THE TEXAS ENGINEERING PRATICE LAW.

Parsons Brinckerhoff Quade & Douglas Inc.

Texas Department of Transportation

©2003 by TxDOT

H.C.I.D. No. 2
IRRIGATION LINE
AERIAL CROSSING

SHEET 7 OF 7

PLAN 1"= 40' HORIZ
PROFILE 1"= 10' VERT

DESIGNED:	FED. RD DIV. No.	STATE	FEDERAL AID PROJECT No.		HIGHWAY No.	
CHECKED:	6	TEXAS			US 281	
DRAWN:	STATE DISTRICT	COUNTY	CONTROL No.	SECTION No.	JOB No.	SHEET No.
CHECKED:	21	HIDALGO	0255	08	091	654

NOTE:

1.) ALL UTILITIES SHALL BE THE RESPONSIBITILY OF THE CONTRACTOR TO VERIFY HORIZONTAL & VERTICAL INFORMATION IN THE FIELD.
2.) ALL ABANDONED PIPE TO BE CAPPED, SUBSIDIARY TO ITEM 496.

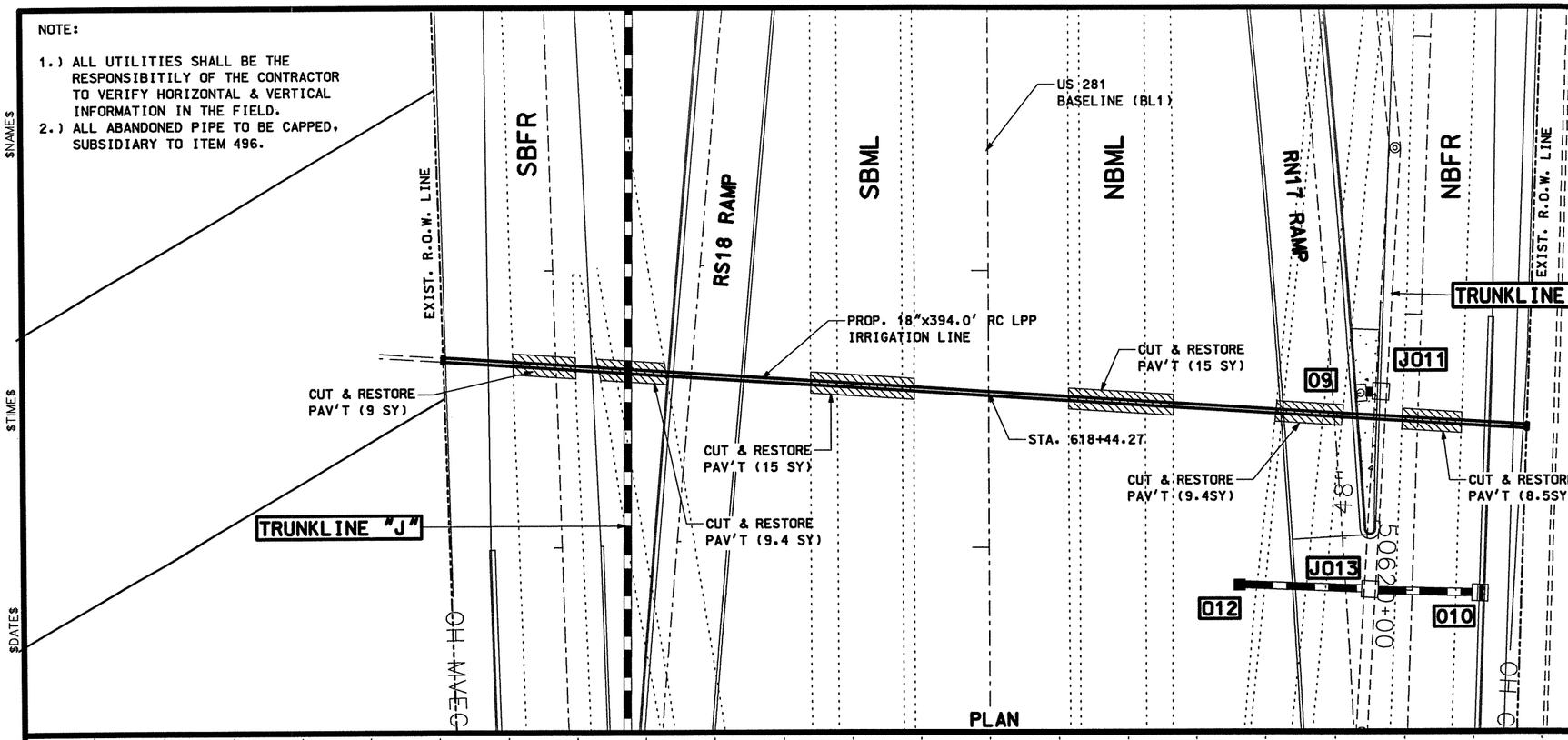

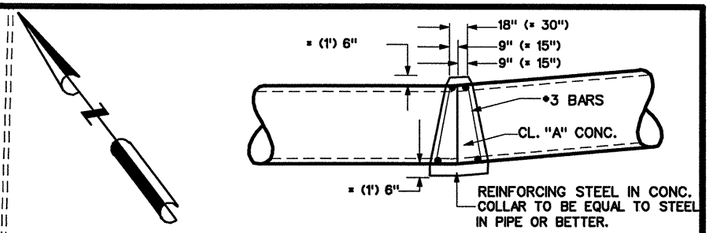

CONCRETE COLLAR DETAIL

CONCRETE COLLAR SHALL BE SUBSIDIARY TO ITEM 4003.

NOTES:
1.)THE CONTRACTOR SHALL COORDINATE WITH HIDALGO COUNTY IRRIGATION DISTRICT NO. 2 FOR THE CONSTRUCTION OF MODIFICATIONS TO THE EXISTING IRRIGATION LINES. THE CONTRACTOR SHALL PROVIDE TWO WEEKS NOTICE TO HIDALGO COUNTY IRRIGATION DISTRICT NO. 2 PRIOR TO THE ANTICIPATED DATE OF CONSTRUCTION OF EACH MODIFICATION.
2.)THE CONTRACTOR SHALL MODIFY THE EXISTING IRRIGATION LINES IN SUCH A MANNER AS TO MINIMIZE THE LOSS OF SERVICE FOR THE MODIFIED IRRIGATION LINES.
3.)ALL REINFORCED CONCRETE LOW-HEAD PRESSURE PIPE SHALL BE C361 CLASS C25 UNLESS NOTED OTHERWISE.
4.) ALL 15 DEGREE AND 30 DEGREE BENDS SHALL BE PRECAST AND SUBSIDIARY TO ITEM 4003.
5.)CONCRETE COLLARS SHALL BE SUBSIDIARY TO ITEM 4003.
6.)LOCATIONS OF EXISTING IRRIGATION LINES WERE DERIVED FROM RECORD PLANS. LIMITS OF MODIFICATIONS OF EXISTING IRRIGATION LINES SHALL BE VERIFIED BY THE CONTRACTOR PRIOR TO CONSTRUCTION.
7.)CONSTRUCTION LIMITS (OFFSETS FROM US 281 BASELINE) AND LOCATIONS OF BENDS AND CONC. COLLARS ARE REFERENCED TO THE CENTERLINE FO THE PROPOSED REINFORCED CONCRETE LOW-HEAD PRESSURE PIPE UNLESS NOTED OTHERWISE.

SHEET TOTALS

ITEM	EST.	FINAL	UNIT	DESCRIPTION
402	394		LF	TRENCH EXCAVATION PROTECTION
400	66		SY	CUT & RESTORE PAV'T
496	394		FT	REMOVE OLD STR. (PIPE)
4003	394		FT	RCLHPP (18")

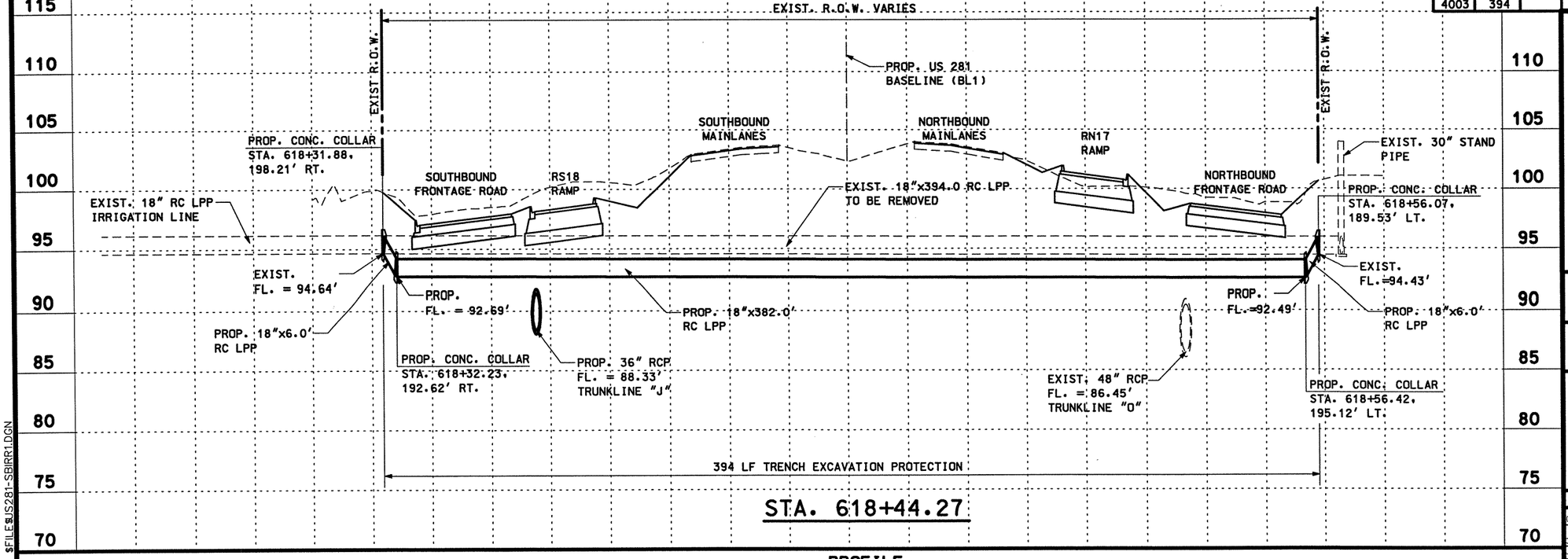

STA. 618+44.27

PROFILE

STATE OF TEXAS
RAMIRO GUTIERREZ
65948
REGISTERED PROFESSIONAL ENGINEER

THE SEAL APPEARING ON THIS DOCUMENT WAS AUTHORIZED BY RAMIRO GUTIERREZ, P.E. 65948

DATE: 8-12-03

ALTERATION OF A SEALED DOCUMENT WITHOUT PROPER NOTIFICATION TO THE RESPONSIBLE ENGINEER IS AN OFFENSE UNDER THE TEXAS ENGINEERING PRATICE LAW.

Parsons Brinckerhoff Quade & Douglas Inc.

Texas Department of Transportation

©2003 by TxDOT

US 281 EXPRESSWAY IRRIGATION LINE MODIFICATIONS

STA. 618+44.27

SHEET 1 OF 10 PLAN 1"= 50' HORIZ PROFILE 1"= 10' VERT

DESIGNED:	FED. RD DIV. No.	STATE	FEDERAL AID PROJECT No.			HIGHWAY No.
CHECKED:	6	TEXAS				US 281
DRAWN:	STATE DISTRICT	COUNTY	CONTROL No.	SECTION No.	JOB No.	SHEET No.
CHECKED:	21	HIDALGO	0255	08	091	655

$FILE$US281-SBIRR1.DGN

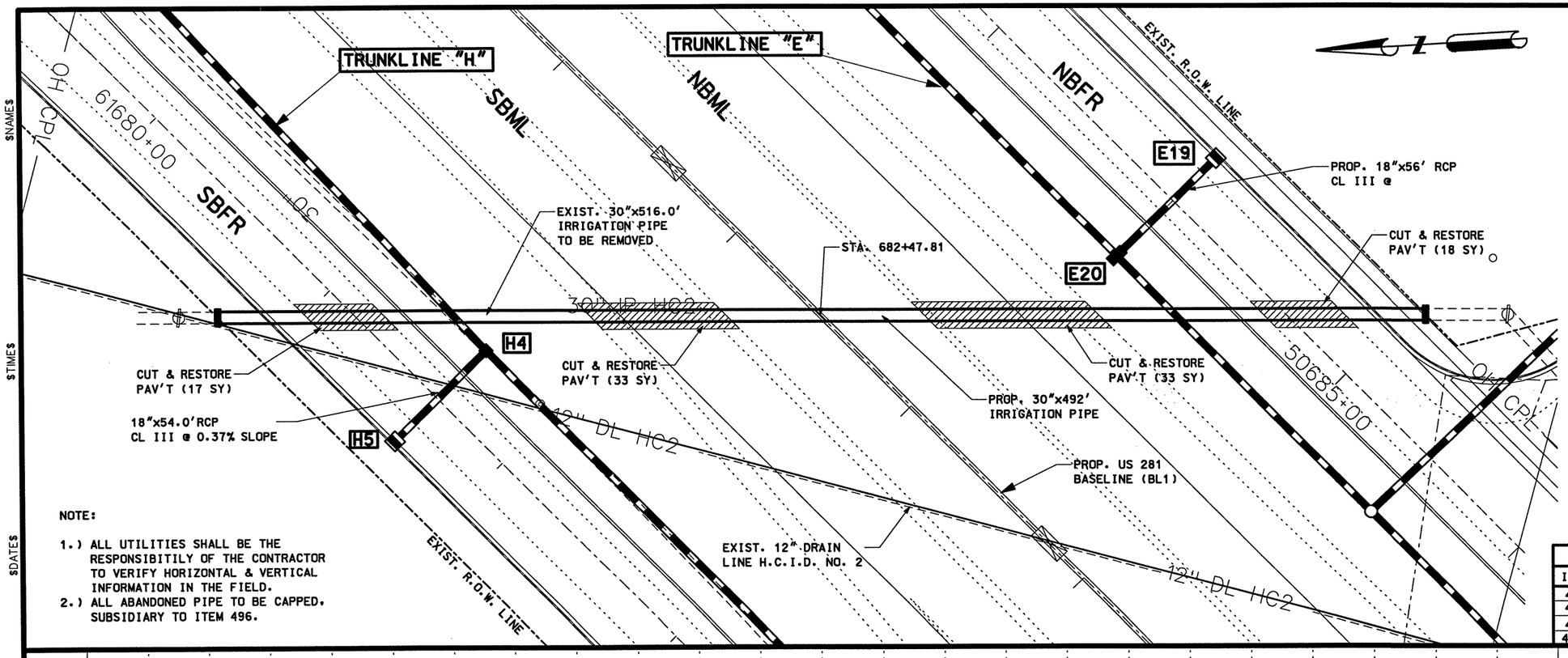

NOTE:

1.) ALL UTILITIES SHALL BE THE RESPONSIBITILY OF THE CONTRACTOR TO VERIFY HORIZONTAL & VERTICAL INFORMATION IN THE FIELD.
2.) ALL ABANDONED PIPE TO BE CAPPED. SUBSIDIARY TO ITEM 496.

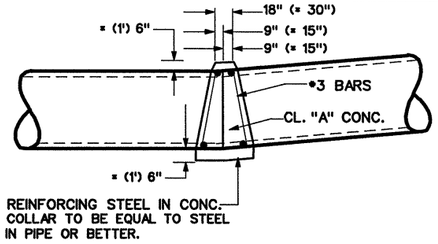

REINFORCING STEEL IN CONC. COLLAR TO BE EQUAL TO STEEL IN PIPE OR BETTER.

CONCRETE COLLAR DETAIL

CONCRETE COLLAR SHALL BE SUBSIDIARY TO ITEM 4003.

NOTE:
1.) SEE SHEET 1 OF 7 IRRIGATION LINE MODIFICATIONS FOR GERNERAL NOTES.

LEGEND

- ⊛ — PROP. CONC. COLLAR
- [A] — EXIST. S.W.B. BURIED CABLE LOWER TO ELEV. 94.09'
- [B] — EXIST. S.W.B. BURIED CABLE LOWER TO ELEV. 94.09'

SHEET TOTALS

ITEM	EST.	FINAL	UNIT	DESCRIPTION
402	492		LF	TRENCH EXCAVATION PROTECTION
400	101		SY	CUT & RESTORE PAV'T
496	492		FT	REMOVE OLD STR. (PIPE)
4003	492		FT	RCLHPP (30")

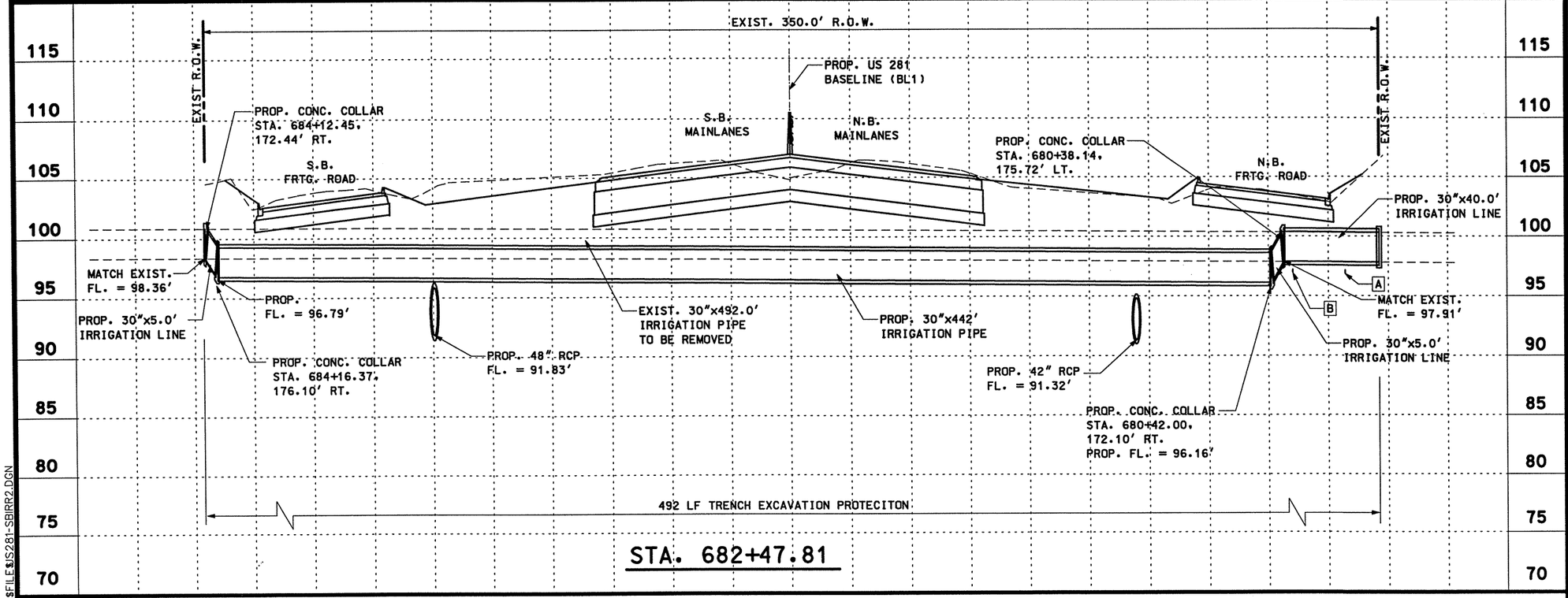

STA. 682+47.81

PROFILE

STATE OF TEXAS
RAMIRO GUTIERREZ
65948
REGISTERED PROFESSIONAL ENGINEER

THE SEAL APPEARING ON THIS DOCUMENT WAS AUTHORIZED BY RAMIRO GUTIERREZ, P.E. 65948

DATE: 8-12-03

ALTERATION OF A SEALED DOCUMENT WITHOUT PROPER NOTIFICATION TO THE RESPONSIBLE ENGINEER IS AN OFFENSE UNDER THE TEXAS ENGINEERING PRATICE LAW.

Parsons Brinckerhoff Quade & Douglas Inc.

Texas Department of Transportation

© 2003 by TxDOT

US 281 EXPRESSWAY IRRIGATION LINE MODIFICATIONS

STA. 682+47.81

SHEET 2 OF 10 — PLAN 1"= 50' HORIZ, PROFILE 1"= 10' VERT

DESIGNED:	FED. RD DIV. No.	STATE	FEDERAL AID PROJECT No.			HIGHWAY No.
CHECKED:	6	TEXAS				US 281
DRAWN:	STATE DISTRICT	COUNTY	CONTROL No.	SECTION No.	JOB No.	SHEET No.
CHECKED:	21	HIDALGO	0255	08	091	656

$NAME$ $TIME$ $DATE$ $FILE$ IS281-SBIRR2.DGN

$NAME$
$TIME$
$DATE$

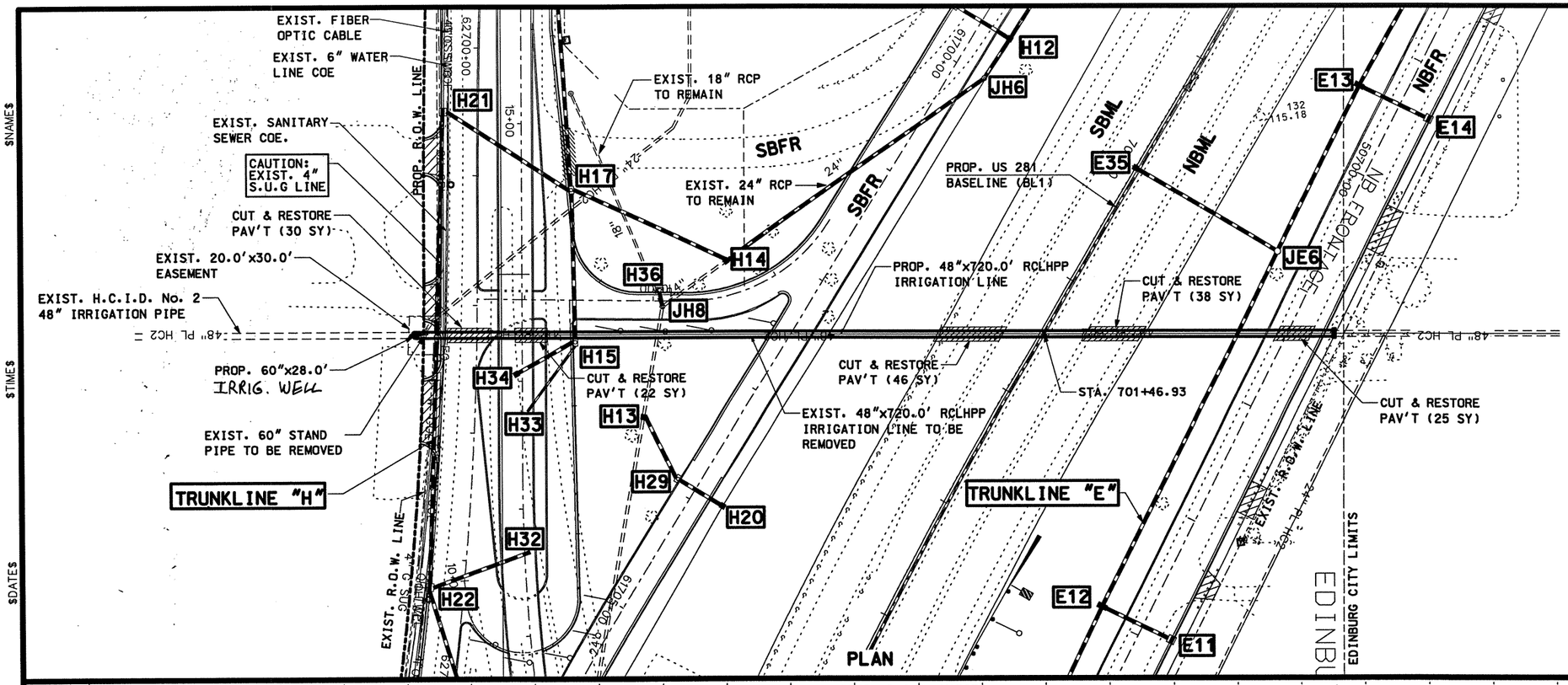

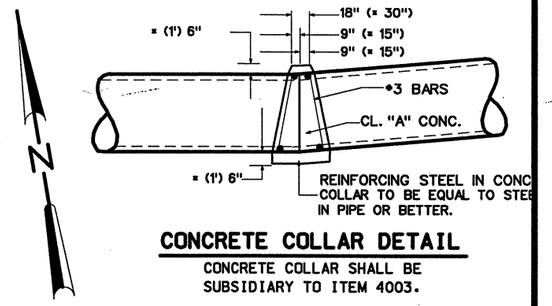

CONCRETE COLLAR DETAIL

CONCRETE COLLAR SHALL BE SUBSIDIARY TO ITEM 4003.

NOTE:

1.) ALL UTILITIES SHALL BE THE RESPONSIBITILY OF THE CONTRACTOR TO VERIFY HORIZONTAL & VERTICAL INFORMATION IN THE FIELD.
2.) ALL ABANDONED PIPE TO BE CAPPED. SUBSIDIARY TO ITEM 496.

SHEET TOTALS				
ITEM	EST.	FINAL	UNIT	DESCRIPTION
400	161		SY	CUT & RESTORE PAV'T
402	720		LF	TRENCH EXCAVATION PROTECTION
496	748		FT	REMOVE OLD STR. (PIPE)
4003	720		FT	RCLHPP (48")
400	1		EA	IRRIG. WELL (60")

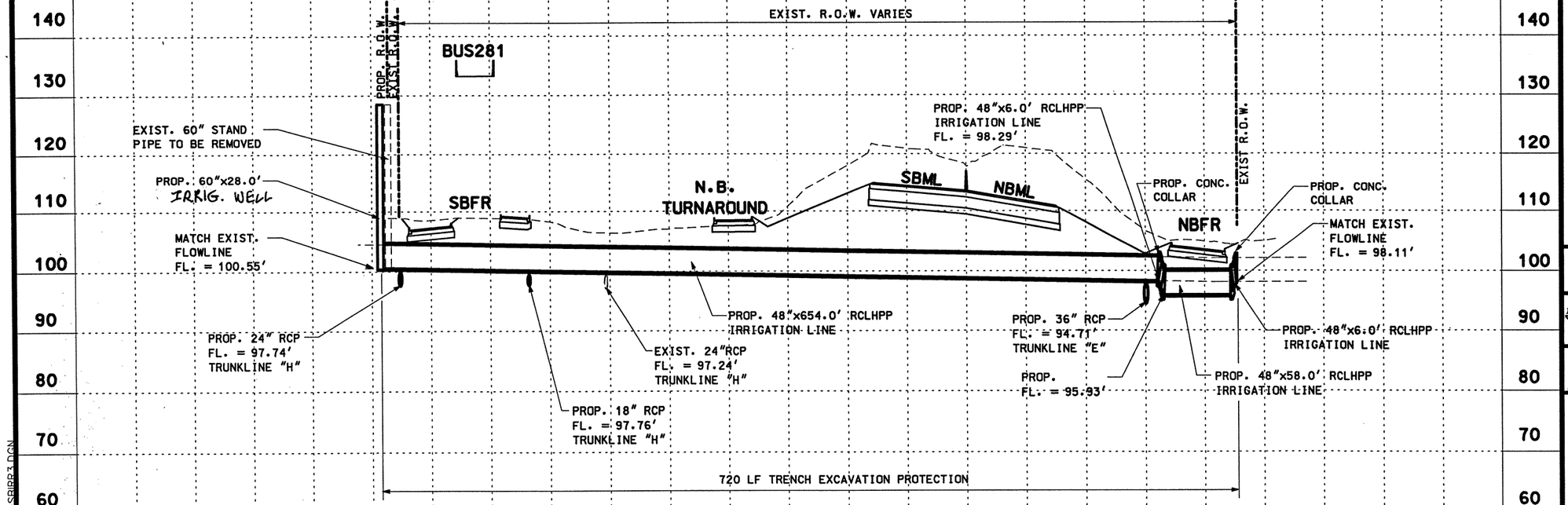

STA. 701+47.00

PROFILE

$FILE$ IS281-SRIRR3.DGN

THE SEAL APPEARING ON THIS DOCUMENT WAS AUTHORIZED BY RAMIRO GUTIERREZ, P.E. 65948

DATE: 8-12-03

ALTERATION OF A SEALED DOCUMENT WITHOUT PROPER NOTIFICATION TO THE RESPONSIBLE ENGINEER IS AN OFFENSE UNDER THE TEXAS ENGINEERING PRATICE LAW.

Parsons Brinckerhoff Quade & Douglas Inc.

R. Gutierrez Engineering Corporation

Texas Department of Transportation

© 2003 by TxDOT

US 281 EXPRESSWAY IRRIGATION LINE MODIFICATIONS

STA. 701+47.00

SHEET 3 OF 10

PLAN 1"= 100' HORIZ
PROFILE 1"= 20' VERT

DESIGNED:	FED. RD DIV. No.	STATE	FEDERAL AID PROJECT No.			HIGHWAY No.	
CHECKED:	6	TEXAS				US 281	
DRAWN:	STATE DISTRICT	COUNTY	CONTROL No.	SECTION No.	JOB No.	SHEET No.	
CHECKED:	21	HIDALGO	0255	08	091	657	

$NAME$
$TIME$
$DATE$

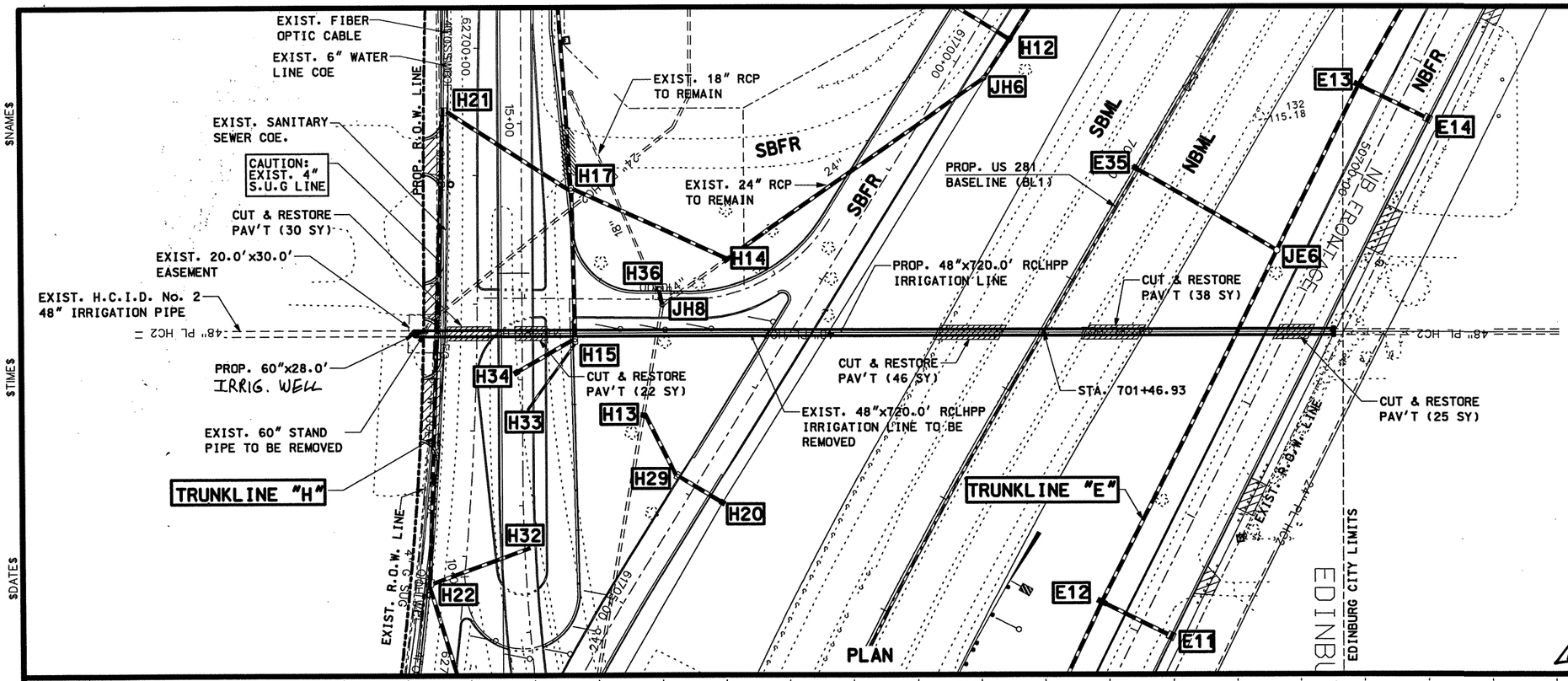

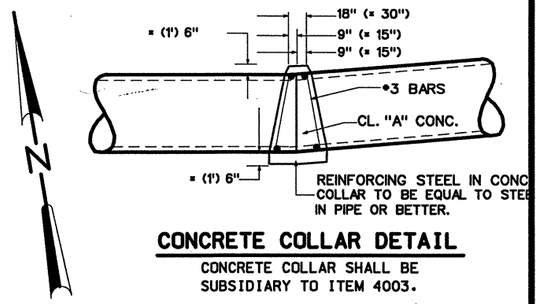

CONCRETE COLLAR DETAIL

CONCRETE COLLAR SHALL BE SUBSIDIARY TO ITEM 4003.

NOTE:

1.) ALL UTILITIES SHALL BE THE RESPONSIBITILY OF THE CONTRACTOR TO VERIFY HORIZONTAL & VERTICAL INFORMATION IN THE FIELD.
2.) ALL ABANDONED PIPE TO BE CAPPED, SUBSIDIARY TO ITEM 496.

SHEET TOTALS

ITEM	EST.	FINAL	UNIT	DESCRIPTION
400	161		SY	CUT & RESTORE PAV'T
402	720		LF	TRENCH EXCAVATION PROTECTION
496	748		FT	REMOVE OLD STR. (PIPE)
4003	720		FT	RCLHPP (48")
4315	1		EA	IRRIG. WELL (60")

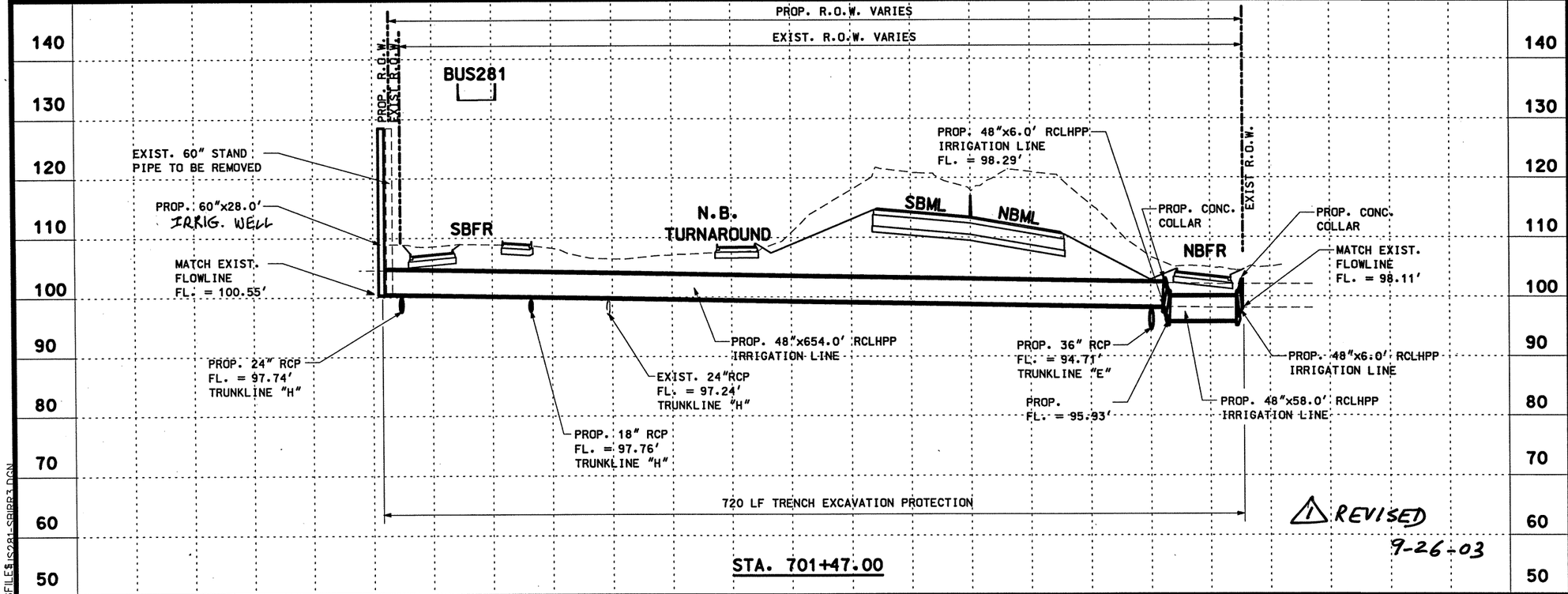

STA. 701+47.00

PROFILE

1 REVISED 9-26-03

$FILE$ IS281SBIRR3.DGN

THE SEAL APPEARING ON THIS DOCUMENT WAS AUTHORIZED BY RAMIRO GUTIERREZ, P.E. 65948

DATE: 8-12-03

ALTERATION OF A SEALED DOCUMENT WITHOUT PROPER NOTIFICATION TO THE RESPONSIBLE ENGINEER IS AN OFFENSE UNDER THE TEXAS ENGINEERING PRATICE LAW.

Parsons Brinckerhoff Quade & Douglas Inc.

R. Gutierrez Engineering Corporation

Texas Department of Transportation

© 2003 by TxDOT

US 281 EXPRESSWAY IRRIGATION LINE MODIFICATIONS

STA. 701+47.00

SHEET 3 OF 10

PLAN 1"= 100' HORIZ
PROFILE 1"= 20' VERT

DESIGNED:	FED. RD DIV. No.	STATE	FEDERAL AID PROJECT No.		HIGHWAY No.	
CHECKED:	6	TEXAS			US 281	
DRAWN:	STATE DISTRICT	COUNTY	CONTROL No.	SECTION No.	JOB No.	SHEET No.
CHECKED:	21	HIDALGO	0255	08	091	657

$NAME$
$TIME$
$DATE$

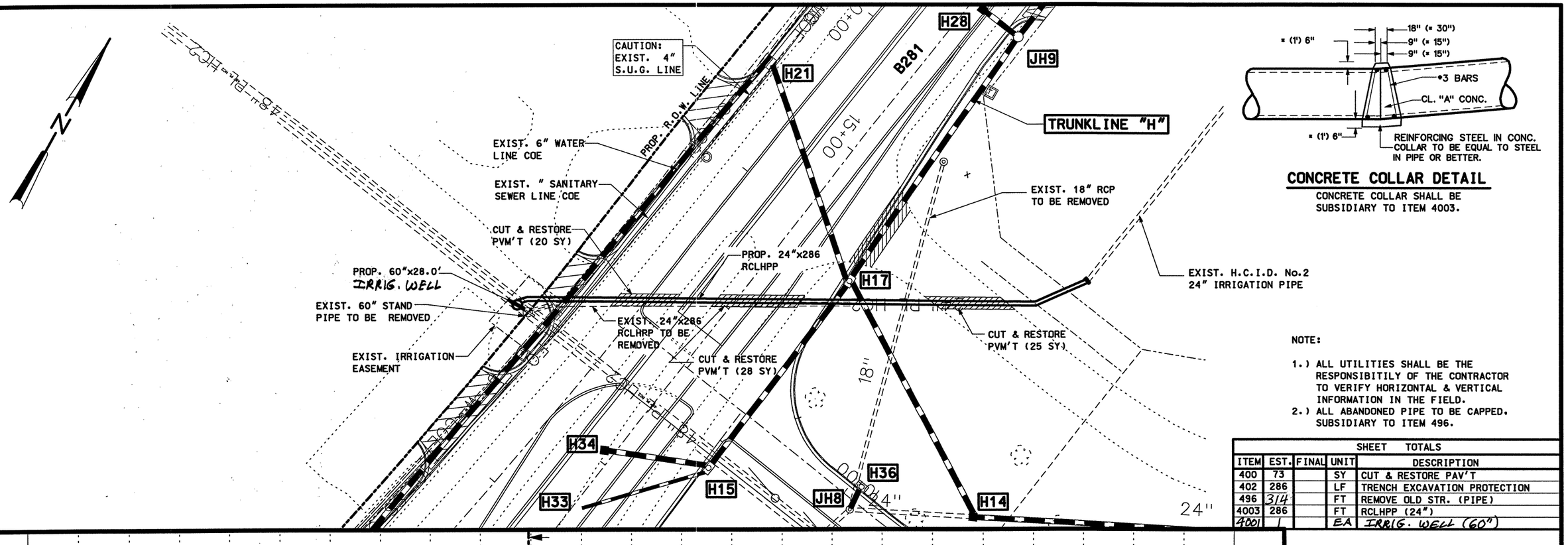

CONCRETE COLLAR DETAIL

CONCRETE COLLAR SHALL BE SUBSIDIARY TO ITEM 4003.

NOTE:

1.) ALL UTILITIES SHALL BE THE RESPONSIBITILY OF THE CONTRACTOR TO VERIFY HORIZONTAL & VERTICAL INFORMATION IN THE FIELD.
2.) ALL ABANDONED PIPE TO BE CAPPED, SUBSIDIARY TO ITEM 496.

SHEET TOTALS

ITEM	EST.	FINAL	UNIT	DESCRIPTION
400	73		SY	CUT & RESTORE PAV'T
402	286		LF	TRENCH EXCAVATION PROTECTION
496	314		FT	REMOVE OLD STR. (PIPE)
4003	286		FT	RCLHPP (24")
4001	1		EA	IRRIG. WELL (60")

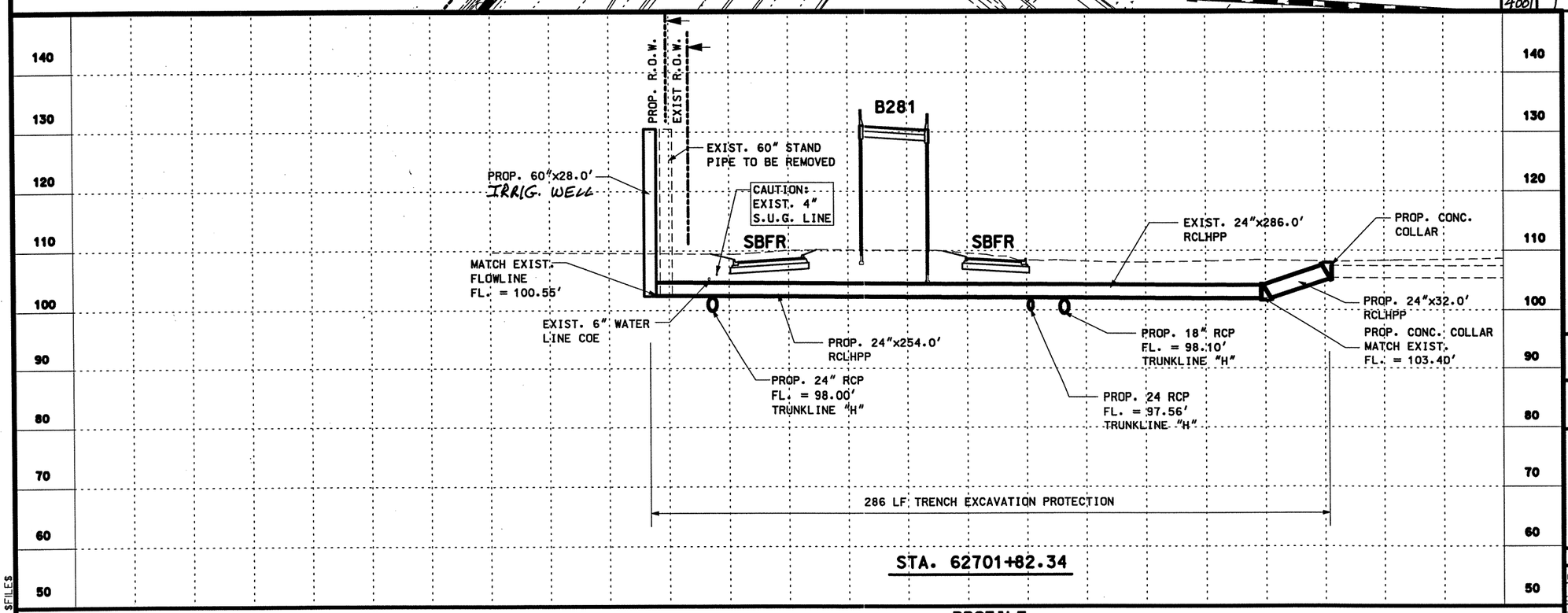

STA. 62701+82.34

PROFILE

$FILE$

STATE OF TEXAS
RAMIRO GUTIERREZ
65948
REGISTERED PROFESSIONAL ENGINEER

THE SEAL APPEARING ON THIS DOCUMENT WAS AUTHORIZED BY RAMIRO GUTIERREZ, P.E. 65948

DATE: 8-12-03

ALTERATION OF A SEALED DOCUMENT WITHOUT PROPER NOTIFICATION TO THE RESPONSIBLE ENGINEER IS AN OFFENSE UNDER THE TEXAS ENGINEERING PRATICE LAW.

Parsons Brinckerhoff Quade & Douglas Inc.

Texas Department of Transportation

© 2003 by TxDOT

US 281 EXPRESSWAY IRRIGATION LINE MODIFICATIONS

STA. 701+47.00

SHEET 4 OF 10

PLAN 1"= 50' HORIZ
PROFILE 1"= 10' VERT

DESIGNED:	FED. RD DIV. No.	STATE	FEDERAL AID PROJECT No.			HIGHWAY No.
CHECKED:	6	TEXAS				US 281
DRAWN:	STATE DISTRICT	COUNTY	CONTROL No.	SECTION No.	JOB No.	SHEET No.
CHECKED:	21	HIDALGO	0255	08	091	58

$NAME$
$TIME$
$DATE$

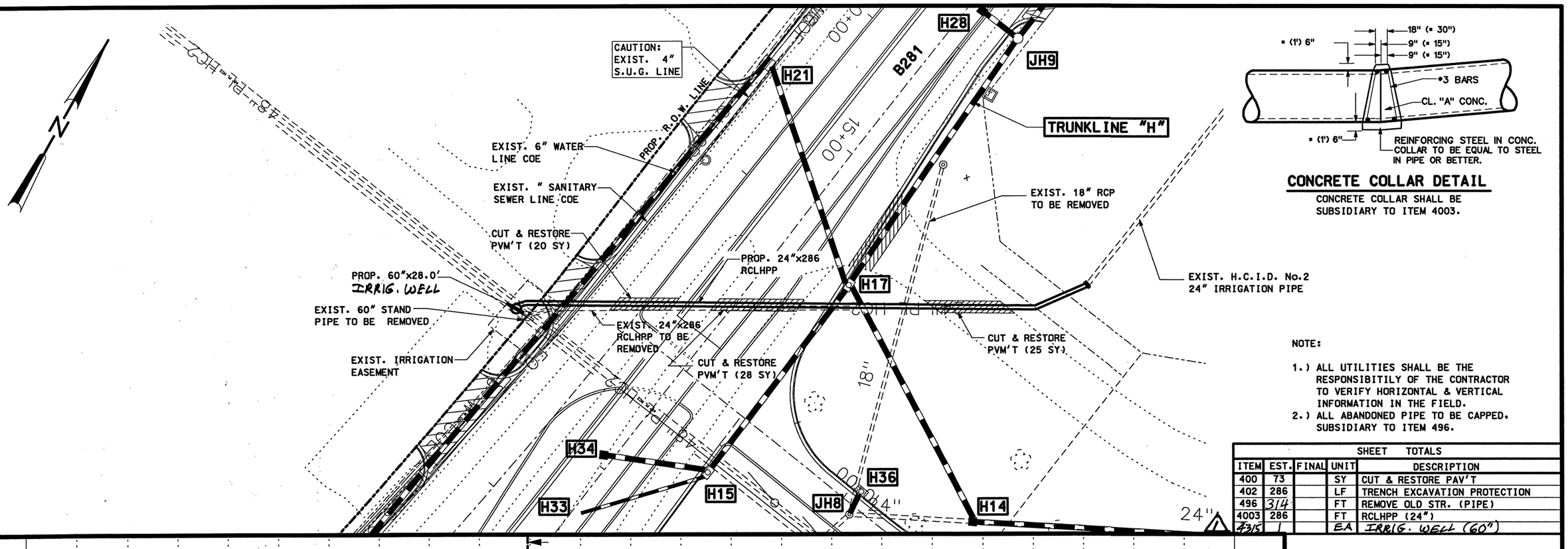

CONCRETE COLLAR DETAIL

CONCRETE COLLAR SHALL BE SUBSIDIARY TO ITEM 4003.

NOTE:

1.) ALL UTILITIES SHALL BE THE RESPONSIBITILY OF THE CONTRACTOR TO VERIFY HORIZONTAL & VERTICAL INFORMATION IN THE FIELD.
2.) ALL ABANDONED PIPE TO BE CAPPED, SUBSIDIARY TO ITEM 496.

SHEET TOTALS

ITEM	EST.	FINAL	UNIT	DESCRIPTION
400	73		SY	CUT & RESTORE PAV'T
402	286		LF	TRENCH EXCAVATION PROTECTION
496	3/4		FT	REMOVE OLD STR. (PIPE)
4003	286		FT	RCLHPP (24")
4315	1		EA	IRRIG. WELL (60")

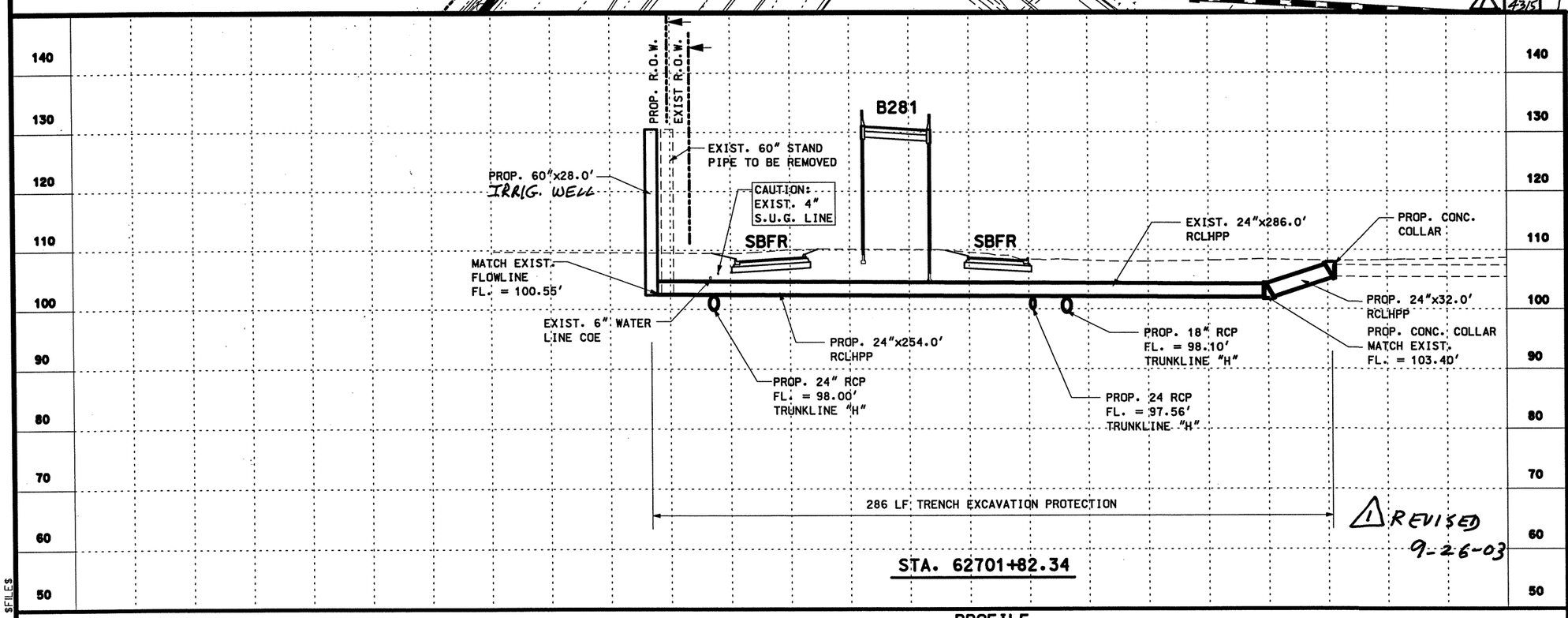

PROFILE

1 REVISED 9-26-03

STATE OF TEXAS
RAMIRO GUTIERREZ
65948
REGISTERED PROFESSIONAL ENGINEER

THE SEAL APPEARING ON THIS DOCUMENT WAS AUTHORIZED BY RAMIRO GUTIERREZ, P.E. 65948

DATE: 8-12-03

ALTERATION OF A SEALED DOCUMENT WITHOUT PROPER NOTIFICATION TO THE RESPONSIBLE ENGINEER IS AN OFFENSE UNDER THE TEXAS ENGINEERING PRATICE LAW.

Parsons Brinckerhoff Quade & Douglas Inc.

Texas Department of Transportation

© 2003 by TxDOT

US 281 EXPRESSWAY IRRIGATION LINE MODIFICATIONS

STA. 701+47.00

SHEET 4 OF 10

PLAN 1"= 50' HORIZ
PROFILE 1"= 10' VERT

DESIGNED:	FED. RD DIV. No.	STATE	FEDERAL AID PROJECT No.			HIGHWAY No.
CHECKED:	6	TEXAS				US 281
DRAWN:	STATE DISTRICT	COUNTY	CONTROL No.	SECTION No.	JOB No.	SHEET No.
CHECKED:	21	HIDALGO	0255	08	091	658

$FILE$

$NAME$
$TIME$
$DATE$

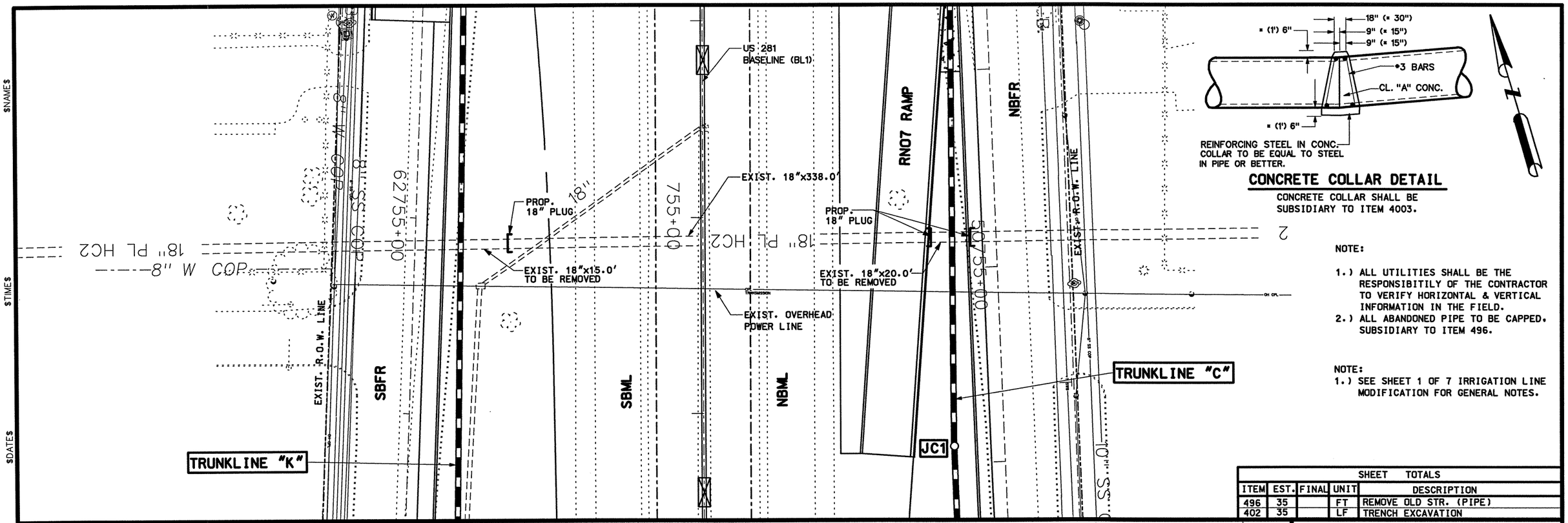

CONCRETE COLLAR DETAIL

CONCRETE COLLAR SHALL BE SUBSIDIARY TO ITEM 4003.

NOTE:

1.) ALL UTILITIES SHALL BE THE RESPONSIBITILY OF THE CONTRACTOR TO VERIFY HORIZONTAL & VERTICAL INFORMATION IN THE FIELD.
2.) ALL ABANDONED PIPE TO BE CAPPED. SUBSIDIARY TO ITEM 496.

NOTE:
1.) SEE SHEET 1 OF 7 IRRIGATION LINE MODIFICATION FOR GENERAL NOTES.

SHEET TOTALS

ITEM	EST.	FINAL	UNIT	DESCRIPTION
496	35		FT	REMOVE OLD STR. (PIPE)
402	35		LF	TRENCH EXCAVATION

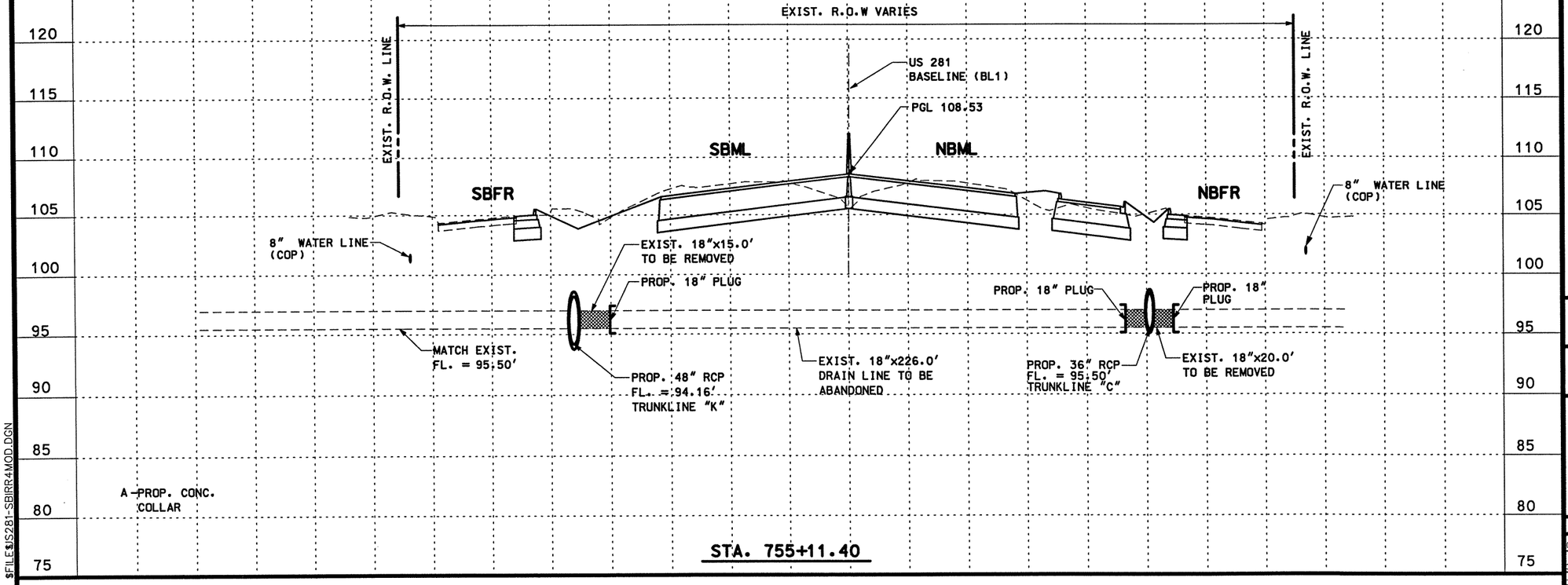

STA. 755+11.40

STATE OF TEXAS
RAMIRO GUTIERREZ
65948
REGISTERED
PROFESSIONAL ENGINEER

THE SEAL APPEARING ON THIS DOCUMENT WAS AUTHORIZED BY RAMIRO GUTIERREZ, P.E. 65948

DATE: 8-12-03

ALTERATION OF A SEALED DOCUMENT WITHOUT PROPER NOTIFICATION TO THE RESPONSIBLE ENGINEER IS AN OFFENSE UNDER THE TEXAS ENGINEERING PRATICE LAW.

Parsons Brinckerhoff
Quade & Douglas Inc.

Texas Department of Transportation

©2003 by TxDOT

US 281 EXPRESSWAY
DRAIN LINE
MODIFICATIONS

STA. 755+11.40

SHEET 5 OF 10

PLAN 1"= 50' HORIZ
PROFILE 1"= 10' VERT

DESIGNED:	FED. RD DIV. No.	STATE	FEDERAL AID PROJECT No.		HIGHWAY No.	
CHECKED:	6	TEXAS			US 281	
DRAWN:	STATE DISTRICT	COUNTY	CONTROL No.	SECTION No.	JOB No.	SHEET No.
CHECKED:	21	HIDALGO	0255	08	091	659

$FILE$US281-SBIRR4MOD.DGN

$NAME$
$TIME$
$DATE$

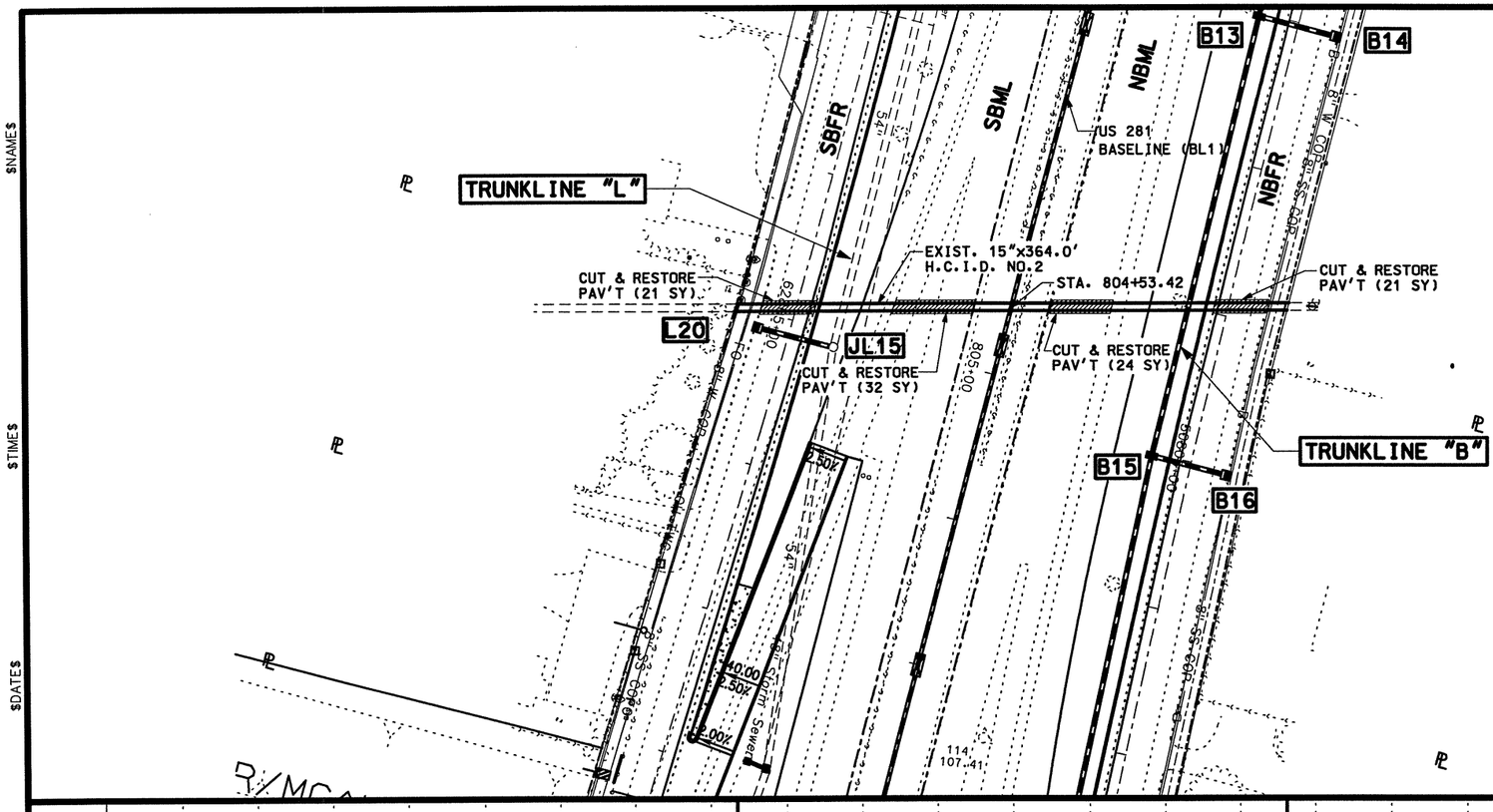

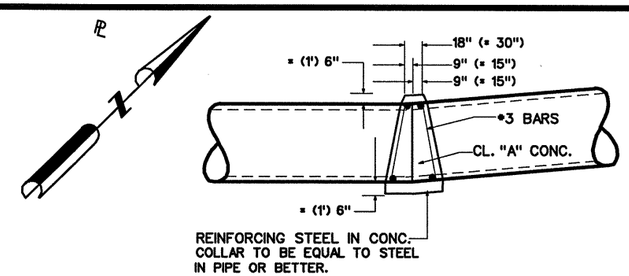

CONCRETE COLLAR DETAIL

CONCRETE COLLAR SHALL BE SUBSIDIARY TO ITEM 4003.

NOTE:
1.) SEE SHEET 1 OF 7 IRRIGATION LINE MODIFICATION FOR GENERAL NOTES.

NOTE:

1.) ALL UTILITIES SHALL BE THE RESPONSIBITILY OF THE CONTRACTOR TO VERIFY HORIZONTAL & VERTICAL INFORMATION IN THE FIELD.
2.) ALL ABANDONED PIPE TO BE CAPPED, SUBSIDIARY TO ITEM 496.

SHEET TOTALS

ITEM	EST.	FINAL	UNIT	DESCRIPTION
400	98		SY	CUT & RESTORE PAV'T
402	364		LF	TRENCH EXCAVATION PROTECTION
496	364		FT	REMOVE OLD STR. (PIPE)
4003	364		FT	RCLHPP PIPE (15")

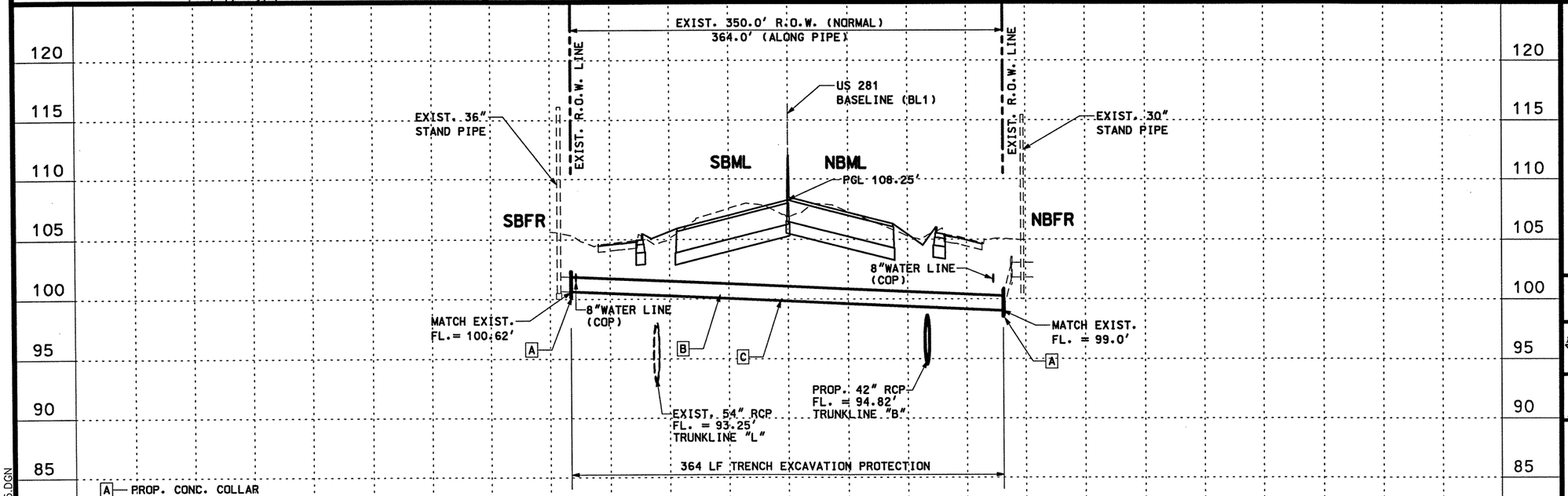

A — PROP. CONC. COLLAR

B — PROP. 15"x582.0' RCHLPP IRRIGATION LINE

C — EXIST. 15"x582.0' H.C.I.D. NO.2 RCHLPP TO BE REMOVED

STA. 804+53.42

PROFILE

$FILE$\S281-SBIRR5.DGN

STATE OF TEXAS
RAMIRO GUTIERREZ
65948
REGISTERED PROFESSIONAL ENGINEER

THE SEAL APPEARING ON THIS DOCUMENT WAS AUTHORIZED BY RAMIRO GUTIERREZ, P.E. 65948

DATE: 8-12-03

ALTERATION OF A SEALED DOCUMENT WITHOUT PROPER NOTIFICATION TO THE RESPONSIBLE ENGINEER IS AN OFFENSE UNDER THE TEXAS ENGINEERING PRATICE LAW.

Parsons Brinckerhoff Quade & Douglas Inc.

R. Gutierrez Engineering Corporation

Texas Department of Transportation

© 2003 by TxDOT

US 281 EXPRESSWAY IRRIGATION LINE MODIFICATIONS

STA. 804+53.42

SHEET 6 OF 10

PLAN 1"= 100' HORIZ
PROFILE 1"= 10' VERT

DESIGNED:	FED. RD DIV. No.	STATE	FEDERAL AID PROJECT No.			HIGHWAY No.	
CHECKED:	6	TEXAS				US 281	
DRAWN:	STATE DISTRICT	COUNTY	CONTROL No.	SECTION No.	JOB No.	SHEET No.	
CHECKED:	21	HIDALGO	0255	08	091	660	

$NAME$
$TIME$
$DATE$

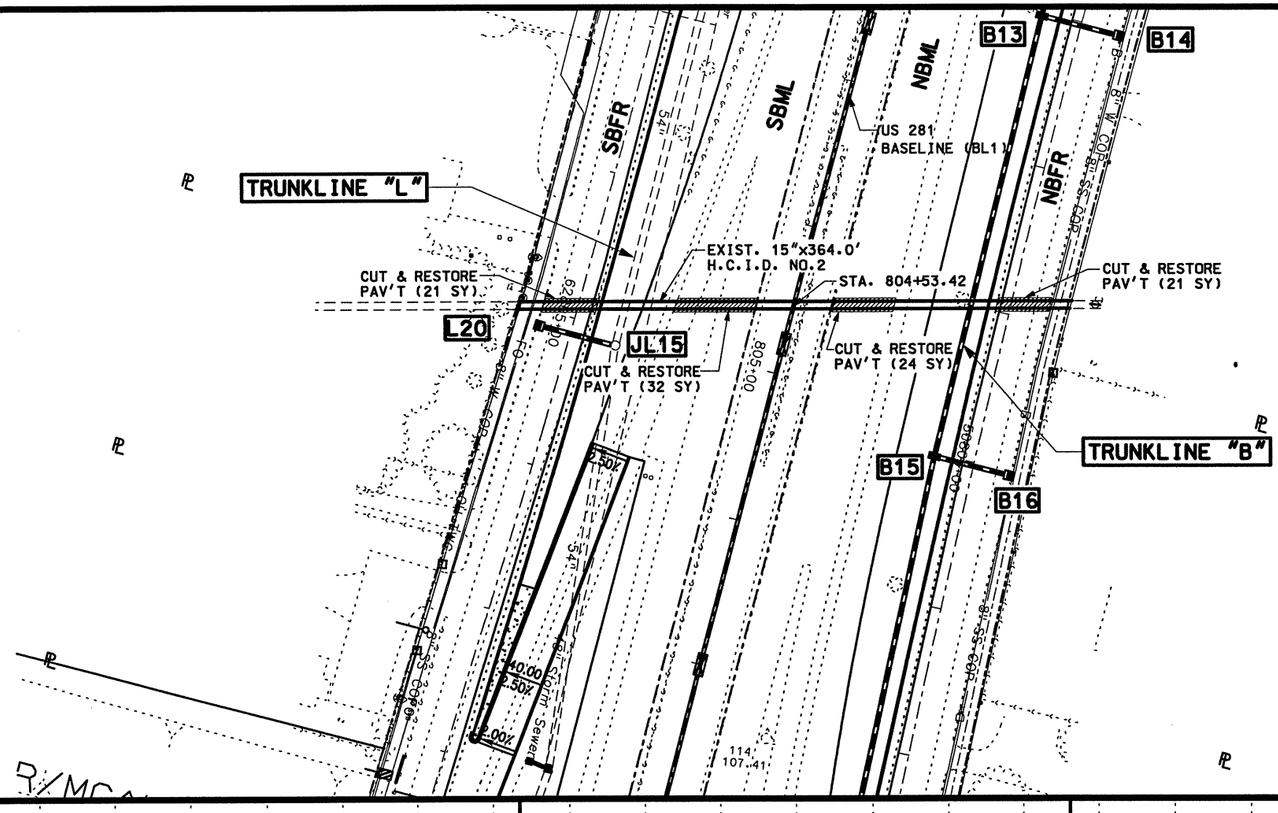

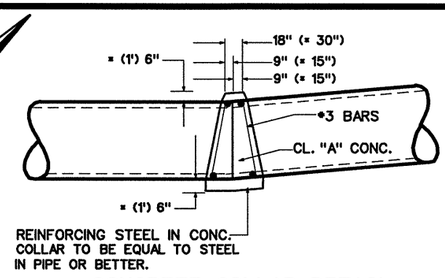

REINFORCING STEEL IN CONC. COLLAR TO BE EQUAL TO STEEL IN PIPE OR BETTER.

CONCRETE COLLAR DETAIL

CONCRETE COLLAR SHALL BE SUBSIDIARY TO ITEM 4003.

NOTE:
1.) SEE SHEET 1 OF 7 IRRIGATION LINE MODIFICATION FOR GENERAL NOTES.

NOTE:

1.) ALL UTILITIES SHALL BE THE RESPONSIBILITIY OF THE CONTRACTOR TO VERIFY HORIZONTAL & VERTICAL INFORMATION IN THE FIELD.
2.) ALL ABANDONED PIPE TO BE CAPPED, SUBSIDIARY TO ITEM 496.

SHEET TOTALS

ITEM	EST.	FINAL	UNIT	DESCRIPTION
400	98		SY	CUT & RESTORE PAV'T
402	364		LF	TRENCH EXCAVATION PROTECTION
496	364		FT	REMOVE OLD STR. (PIPE)
4003	364		FT	RCLHPP PIPE (15")

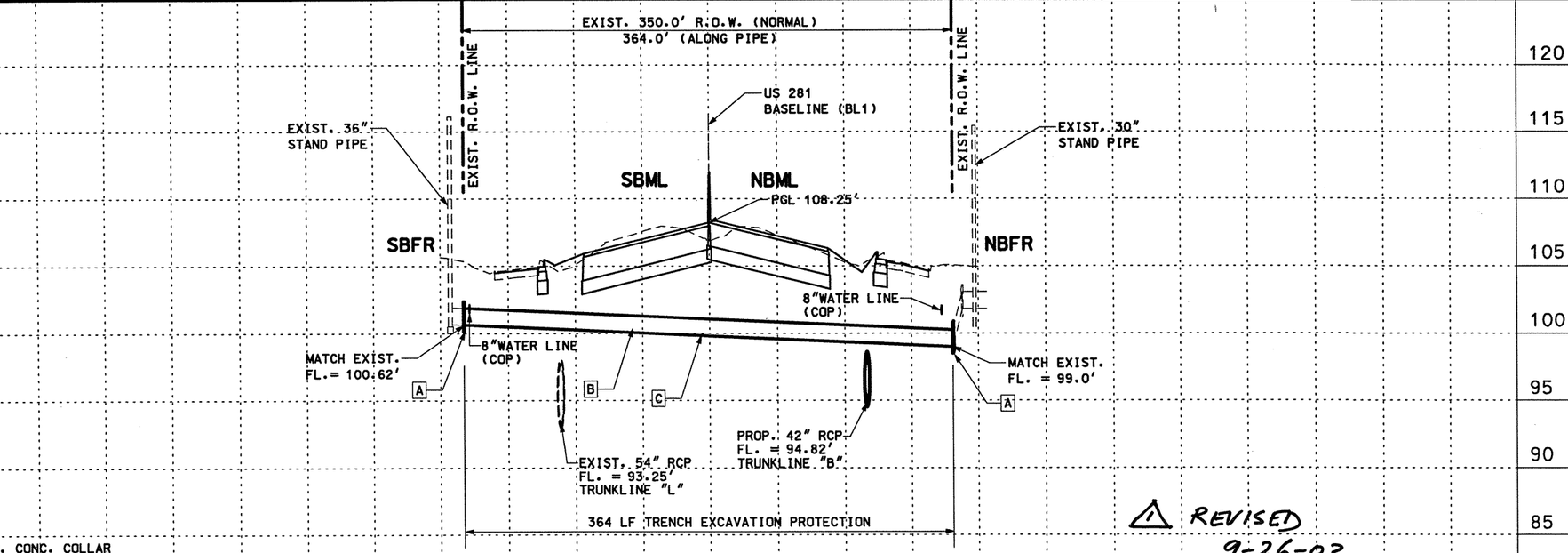

A — PROP. CONC. COLLAR

B — PROP. 15"x364.0' RCHLPP IRRIGATION LINE

C — EXIST. 15"x364.0' H.C.I.D. NO.2 RCHLPP TO BE REMOVED

STA. 804+53.42

PROFILE

1 REVISED 9-26-03

$FILE#$S281-SBIRR5.DGN

STATE OF TEXAS
RAMIRO GUTIERREZ
65948
REGISTERED PROFESSIONAL ENGINEER

THE SEAL APPEARING ON THIS DOCUMENT WAS AUTHORIZED BY RAMIRO GUTIERREZ, P.E. 65948

DATE: 8-12-03

ALTERATION OF A SEALED DOCUMENT WITHOUT PROPER NOTIFICATION TO THE RESPONSIBLE ENGINEER IS AN OFFENSE UNDER THE TEXAS ENGINEERING PRATICE LAW.

Parsons Brinckerhoff Quade & Douglas Inc.

R. Gutierrez Engineering Corporation

Texas Department of Transportation

© 2003 by TxDOT

US 281 EXPRESSWAY IRRIGATION LINE MODIFICATIONS

STA. 804+53.42

SHEET 6 OF 10

PLAN 1"= 100' HORIZ
PROFILE 1"= 10' VERT

DESIGNED:	FED. RD DIV. No.	STATE	FEDERAL AID PROJECT No.				HIGHWAY No.
CHECKED:	6	TEXAS					US 281
DRAWN:	STATE DISTRICT	COUNTY	CONTROL No.	SECTION No.	JOB No.	SHEET No.	
CHECKED:	21	HIDALGO	0255	08	091	660	

$NAME$
$TIME$
$DATE$

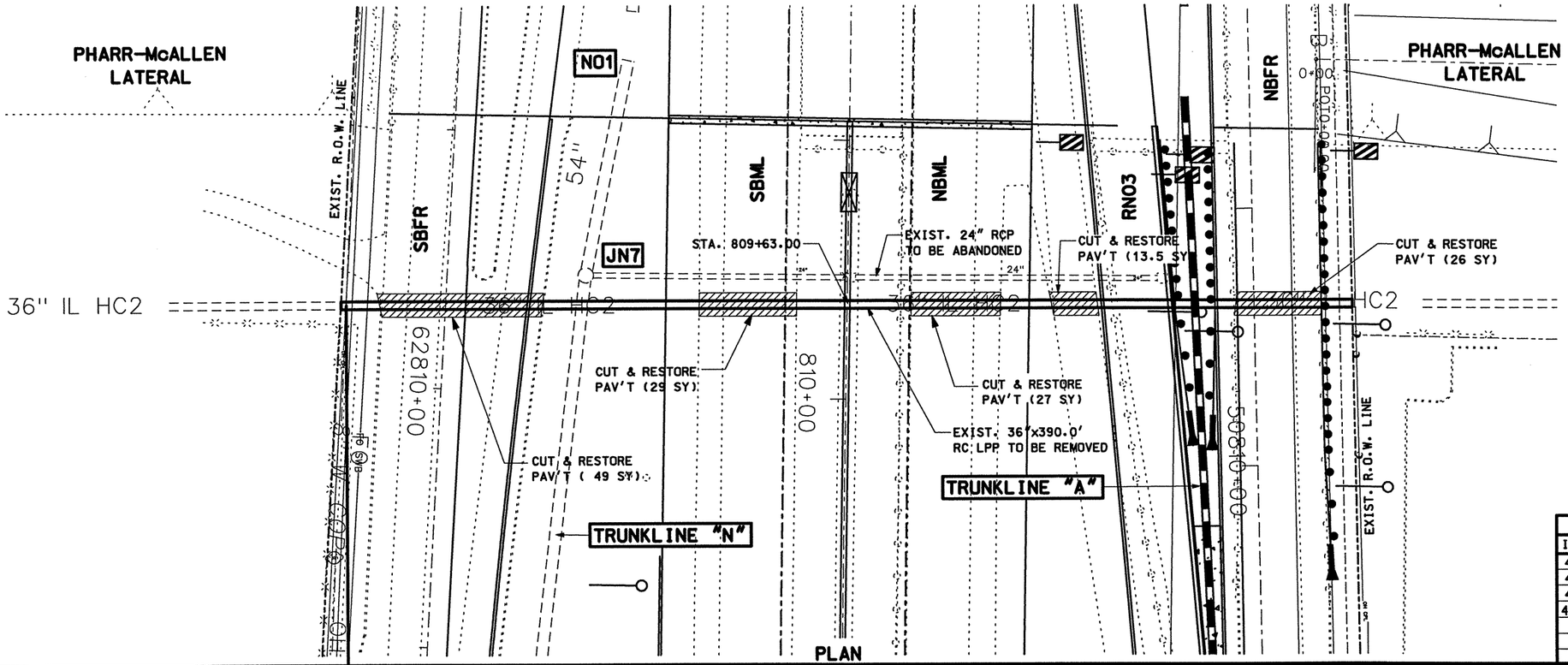

NOTE:

1.) ALL UTILITIES SHALL BE THE RESPONSIBITILY OF THE CONTRACTOR TO VERIFY HORIZONTAL & VERTICAL INFORMATION IN THE FIELD.
2.) ALL ABANDONED PIPE TO BE CAPPED. SUBSIDIARY TO ITEM 496.

NOTE:
1.) SEE SHEET 1 OF 7 IRRIGATION LINE MODIFICATION FOR GENERAL NOTES.

SHEET TOTALS

ITEM	EST.	FINAL	UNIT	DESCRIPTION
400	144.5		SY	CUT & RESTORE PAV'T
402	392		LF	TRENCH EXCAVATION PROTECTION
496	390		FT	REMOVE OLD STR (PIPE)
4003	390		LF	RCLHPP PIPE (36")

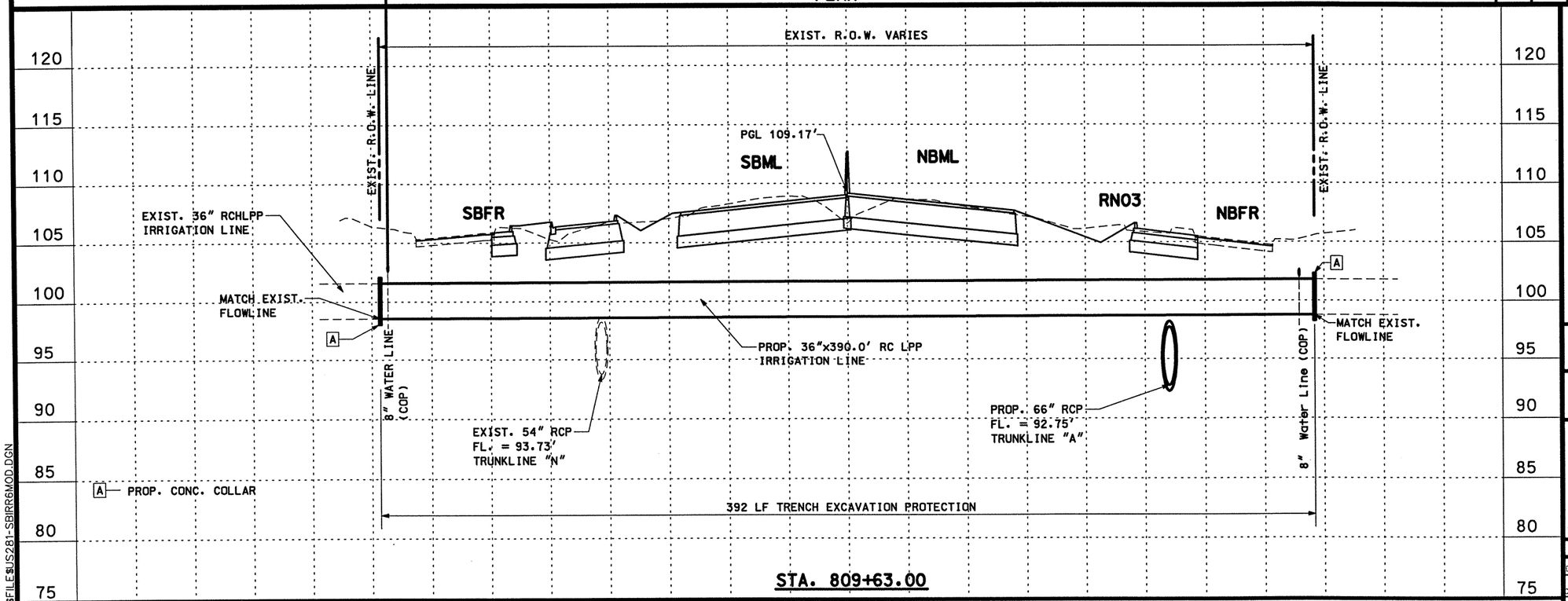

STA. 809+63.00

PROFILE

$FILE$US281-SBIRR6MOD.DGN

STATE OF TEXAS
RAMIRO GUTIERREZ
65948
REGISTERED PROFESSIONAL ENGINEER

THE SEAL APPEARING ON THIS DOCUMENT WAS AUTHORIZED BY RAMIRO GUTIERREZ, P.E. 65948

DATE: 8-12-03

ALTERATION OF A SEALED DOCUMENT WITHOUT PROPER NOTIFICATION TO THE RESPONSIBLE ENGINEER IS AN OFFENSE UNDER THE TEXAS ENGINEERING PRATICE LAW.

Parsons Brinckerhoff Quade & Douglas Inc.

Texas Department of Transportation

© 2003 by TxDOT

US 281 EXPRESSWAY IRRIGATION LINE MODIFICATIONS

STA. 809+63.00

SHEET 7 OF 10

PLAN 1"= 50' HORIZ
PROFILE 1"= 10' VERT

DESIGNED:	FED. RD DIV. No.	STATE	FEDERAL AID PROJECT No.			HIGHWAY No.
CHECKED:	6	TEXAS				US 281
DRAWN:	STATE DISTRICT	COUNTY	CONTROL No.	SECTION No.	JOB No.	SHEET No.
CHECKED:	21	HIDALGO	0255	08	091	661

$NAME$
$TIME$
$DATE$

PROP. 30"x48.0' RC LPP
(H.C.I.D. NO. 2)

PROP. 42"x20.0' IRRIG. WELL
STA. 15+49.38, 84.51' LT.

PROP. 30"x80.0' RC LPP
(H.C.I.D. NO. 2)

CONSTRUCTION LIMITS

PROP. 30"x140.0' RC LPP
(H.C.I.D. NO. 2)

PROP. 30"x204.0' RC LPP
(H.C.I.D. NO. 2)

PROP. CONC. COLLAR

PROP. CONC. COLLAR

PROP. 30.0' IRRIGATION EASEMENT

PROP. IRRIGATION EASEMENT

PROP. 42"x20.0' IRRIG. WELL
STA. 11+26.59, 49.60' LT.

PROP. 30"x12.0' RC LPP
(H.C.I.D. NO. 2)

PROP. CONC. COLLAR
MATCH EXIST. FLOWLINE
FL. = 100.76'

62820+00

SBFR

30"

L01

JN5

PROP. R.O.W. LINE

TRUNKLINE "N"

EXIST. R.O.W. LINE

EXIST. 15" SANITARY SEWER
LINE (CITY OF PHARR)

EXIST. 42" STAND
PIPE TO BE REMOVED

SIOUX ROAD

15" SS COP

EXIST. 8" WATER LINE
(CITY OF PHARR)

PROP. 30"x80.0' RCP
CL III @ .15% SLOPE

PROP. ℄
SIOUX ROAD

8" W COP

EXIST. 30"x474.0' IRRIGATION
LINE TO BE REMOVED

EXIST. R.O.W. LINE

PROP. R.O.W. LINE

L01

PROP. 42"x20.0' IRRIG. WELL
STA. 11+26.16, 34.85' LT.
MATCH EXIST. FLOWLINE
FL. = 102.57'

MATCHLINE STA. 16+75

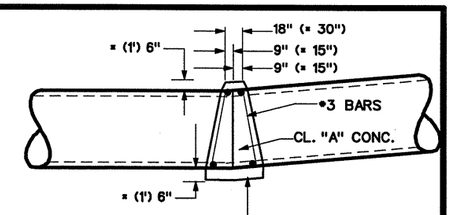

REINFORCING STEEL IN CONC. COLLAR TO BE EQUAL TO STEEL IN PIPE OR BETTER.

CONCRETE COLLAR DETAIL

CONCRETE COLLAR SHALL BE SUBSIDIARY TO ITEM 4003.

NOTE:

1.) ALL UTILITIES SHALL BE THE RESPONSIBITILY OF THE CONTRACTOR TO VERIFY HORIZONTAL & VERTICAL INFORMATION IN THE FIELD.
2.) ALL ABANDONED PIPE TO BE CAPPED. SUBSIDIARY TO ITEM 496.

NOTE:
1.) SEE SHEET 1 OF 8 IRRIGATION LINE MODIFICATION FOR GENERAL NOTES.

SHEET TOTALS

ITEM	EST.	FINAL	UNIT	DESCRIPTION
402	548		LF	TRENCH EXCAVATION PROTECTION
496	766		FT	REMOVE OLD STR. (PIPE)
4003	766		FT	RCLHPP PIPE (30")
4001	3		EA	IRRIG. WELL (42")

120 115 110 105 100 95 90 85 80

PROP. 42"x20.0' IRRIG. WELL

PROP. PGL SIOUX. RD

MATCH EXIST PAVEMENT
STA 11+41.13
ELEV = 106.54

EXIST. 30"x474.0' IRRIGATION LINE TO BE REMOVED

EXIST. NATURAL GROUND

EXIST. 42" STAND PIPE TO BE REMOVED

VPI
STA. = 14+60.00
EL. = 105.23'

PROP. 42"x20.0' IRRIG. WELL

PROP. 30"x282.0' RC LPP IRRIGATION LINE

PROP. 30"x48.0' RC LPP (H.C.I.D. NO. 2)

A

B

(-)0.4093 %

(+)0.5000 %

PROP. 30"x204.0' RC LPP (H.C.I.D. NO. 2)

PROP. CONC. COLLAR

PROP. 30"x140.0' RC LPP (H.C.I.D. NO. 2)

PROP. CONC. COLLAR

PROP. 30"x80.0' RC LPP (H.C.I.D. NO. 2)

PROP. 42" IRRIG. WELL
STA. 15+49.38, 84.51' LT.
FL. = 100.90'

EXIST. 48" RCP
FL. = 95.49'
TRUNKLINE "N"

PROP. CONC. COLLAR
MATCH EXIST. FLOWLINE
FL. = 100.76'

PROP. IRRIG. WELL
STA. 11+26.59, 49.60' LT.
FL. = 102.33'

A EXIST. 8" WATER LINE (CITY OF PHARR) LOWER TO ELEV. 99.25'

B CAUTION: EXIST. S.W.B. FIBER OPTIC CABLE LOWER TO ELEV. 99.25'

548 LF TRENCH EXCAVATION PROTECTION

STA. 62820+70.76

THE SEAL APPEARING ON THIS DOCUMENT WAS AUTHORIZED BY RAMIRO GUTIERREZ P.E. 65948

DATE: 8-12-03

ALTERATION OF A SEALED DOCUMENT WITHOUT PROPER NOTIFICATION TO THE RESPONSIBLE ENGINEER IS AN OFFENSE UNDER THE TEXAS ENGINEERING PRATICE LAW.

Parsons Brinckerhoff Quade & Douglas Inc.

Texas Department of Transportation

© 2003 by TxDOT

US 281 EXPRESSWAY IRRIGATION LINE MODIFICATIONS

STA. 62820+70.76

SHEET 8 OF 10

PLAN 1"= 50' HORIZ
PROFILE 1"= 10' VERT

DESIGNED:	FED. RD DIV. No.	STATE	FEDERAL AID PROJECT No.			HIGHWAY No.
CHECKED:	6	TEXAS				US 281
DRAWN:	STATE DISTRICT	COUNTY	CONTROL No.	SECTION No.	JOB No.	SHEET No.
CHECKED:	21	HIDALGO	0255	08	091	662

$FILE$US281-SBIRR7.DGN

$NAME$
$TIME$
$DATE$

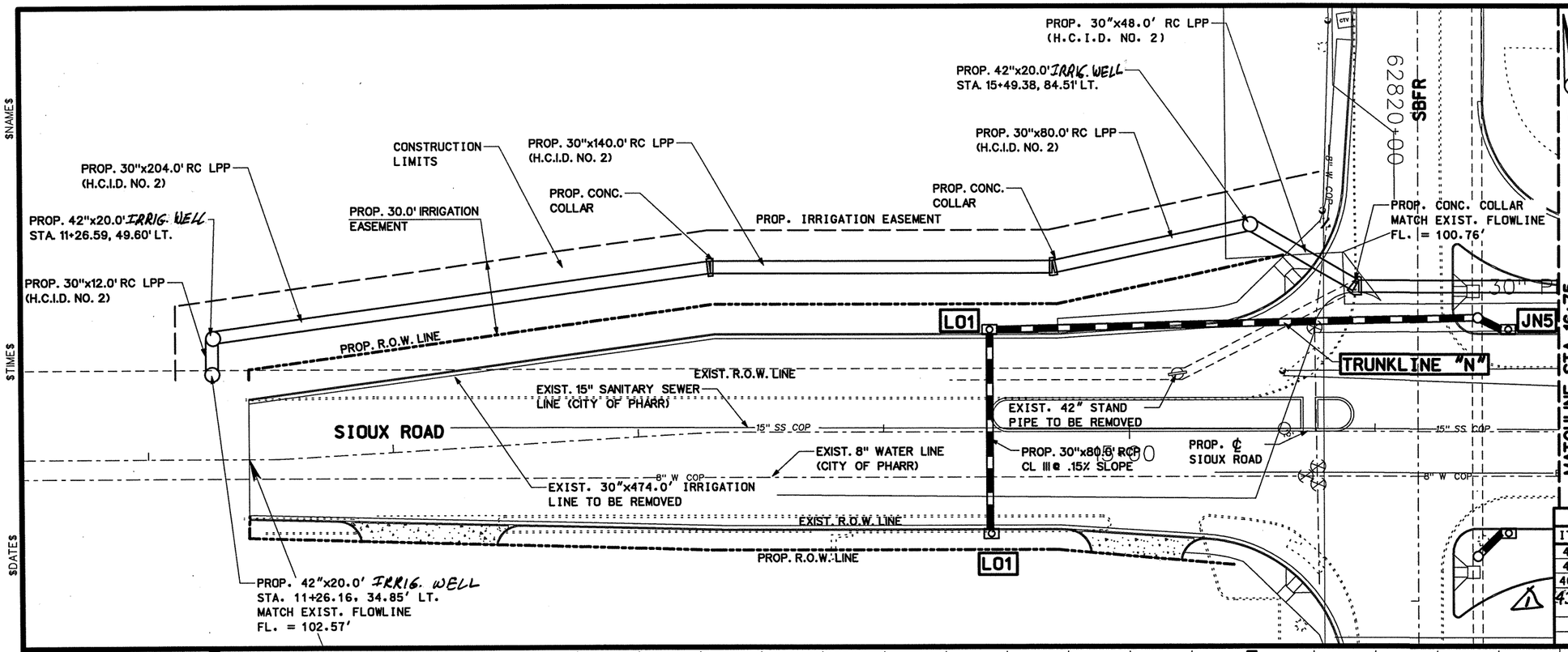

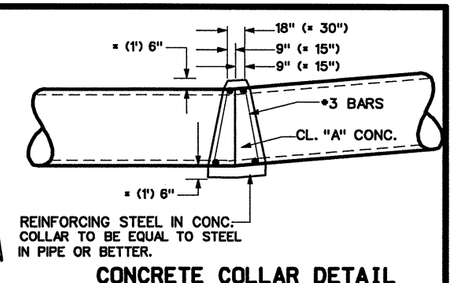

CONCRETE COLLAR DETAIL

CONCRETE COLLAR SHALL BE SUBSIDIARY TO ITEM 4003.

NOTE:

1.) ALL UTILITIES SHALL BE THE RESPONSIBITILY OF THE CONTRACTOR TO VERIFY HORIZONTAL & VERTICAL INFORMATION IN THE FIELD.
2.) ALL ABANDONED PIPE TO BE CAPPED, SUBSIDIARY TO ITEM 496.

NOTE:
1.) SEE SHEET 1 OF 8 IRRIGATION LINE MODIFICATION FOR GENERAL NOTES.

SHEET TOTALS

ITEM	EST.	FINAL	UNIT	DESCRIPTION
402	548		LF	TRENCH EXCAVATION PROTECTION
496	766		FT	REMOVE OLD STR. (PIPE)
4003	766		FT	RCLHPP PIPE (30")
4315	3		EA	IRRIG. WELL (42")

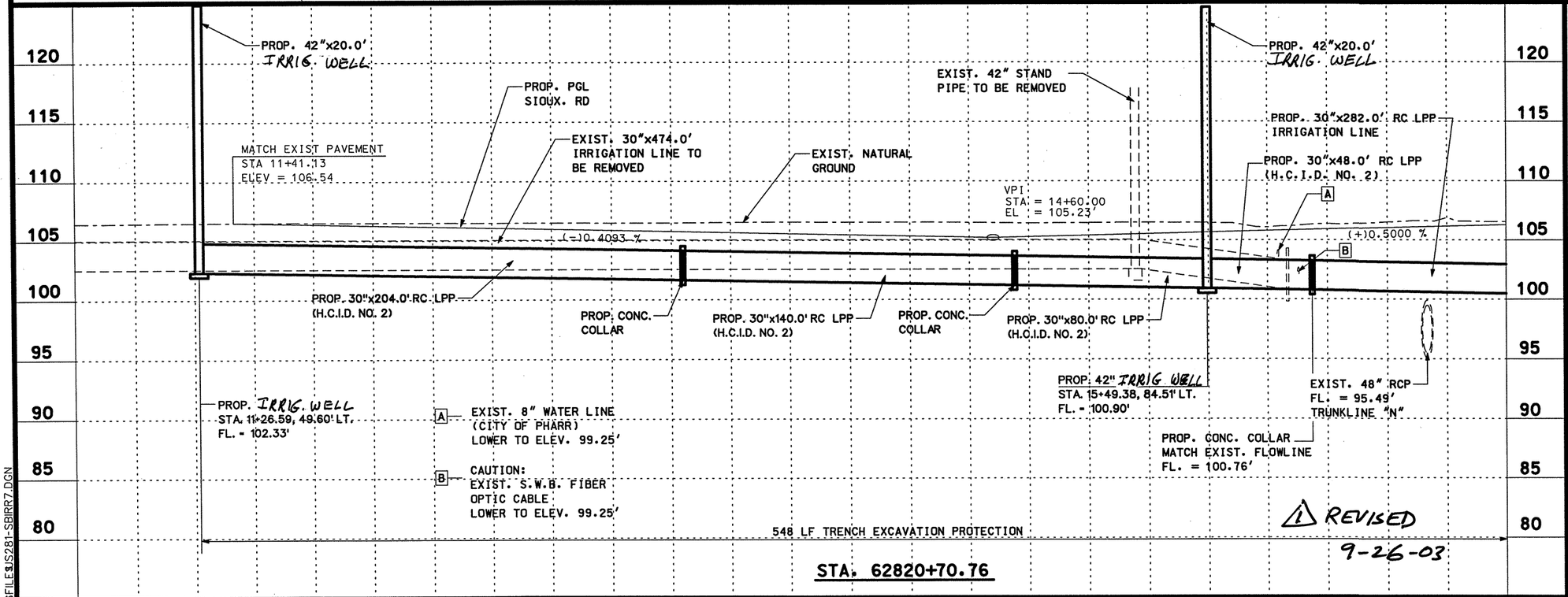

1 REVISED 9-26-03

$FILE#US281-SBIRR7.DGN

THE SEAL APPEARING ON THIS DOCUMENT WAS AUTHORIZED BY RAMIRO GUTIERREZ, P.E. 65948

DATE: 8-12-03

ALTERATION OF A SEALED DOCUMENT WITHOUT PROPER NOTIFICATION TO THE RESPONSIBLE ENGINEER IS AN OFFENSE UNDER THE TEXAS ENGINEERING PRATICE LAW.

Parsons Brinckerhoff Quade & Douglas Inc.

Texas Department of Transportation

©2003 by TxDOT

US 281 EXPRESSWAY IRRIGATION LINE MODIFICATIONS

STA. 62820+70.76

SHEET 8 OF 10

PLAN 1"= 50' HORIZ
PROFILE 1"= 10' VERT

DESIGNED:	FED. RD DIV. No.	STATE	FEDERAL AID PROJECT No.			HIGHWAY No.	
CHECKED:	6	TEXAS				US 281	
DRAWN:	STATE DISTRICT	COUNTY	CONTROL No.	SECTION No.	JOB No.	SHEET No.	
CHECKED:	21	HIDALGO	0255	08	091	662	

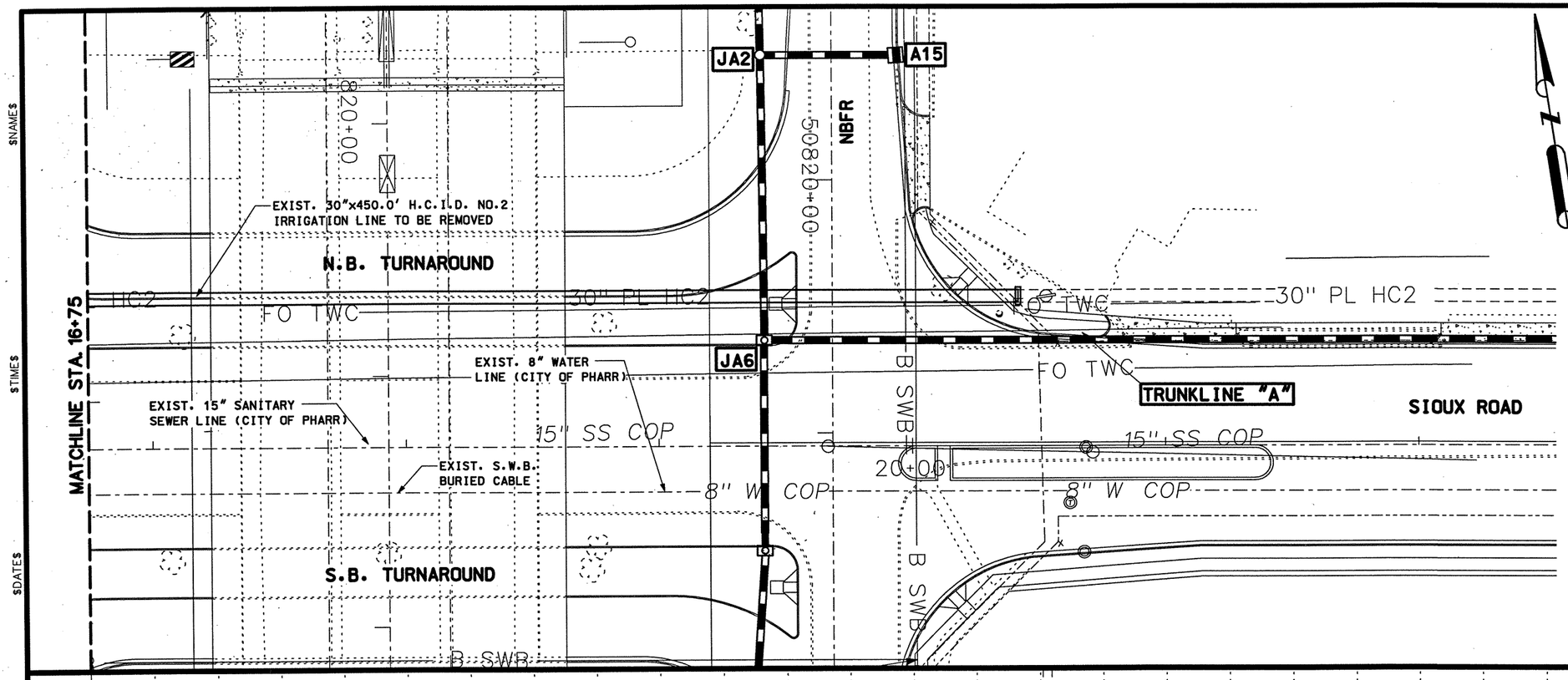

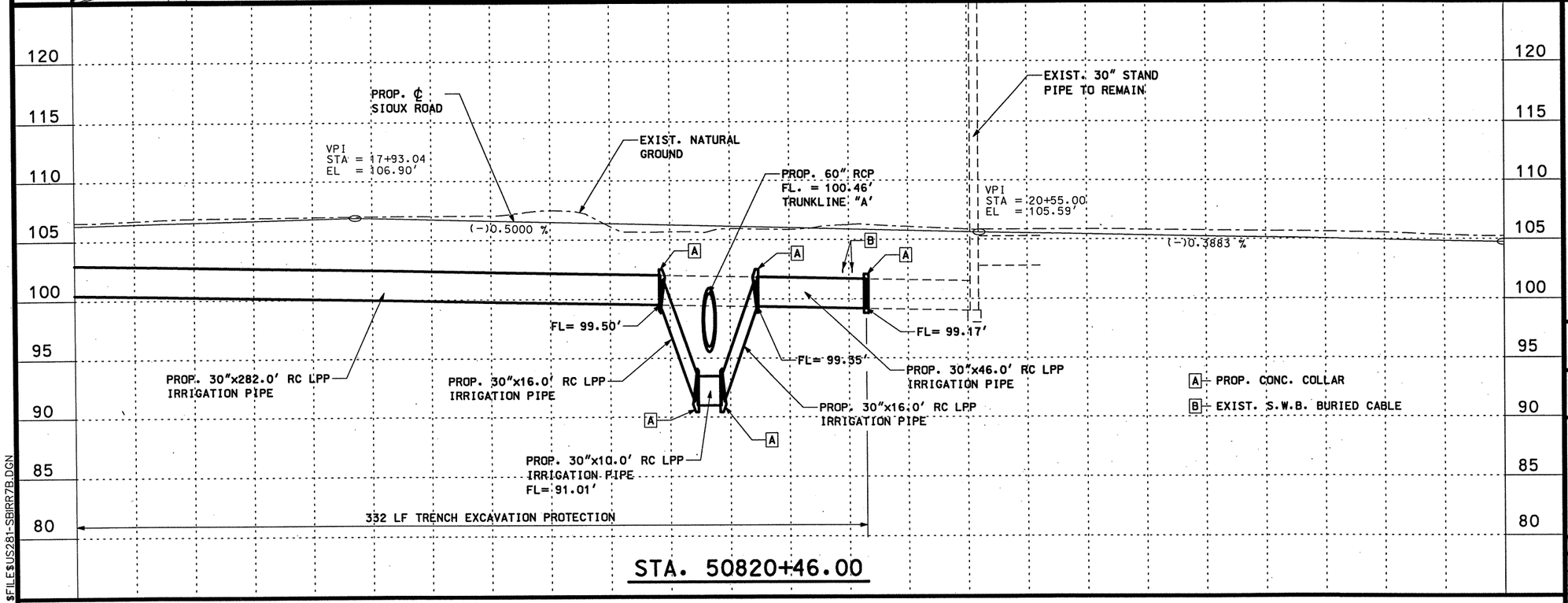

STA. 50820+46.00

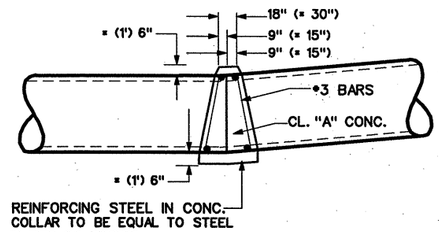

REINFORCING STEEL IN CONC. COLLAR TO BE EQUAL TO STEEL IN PIPE OR BETTER.

CONCRETE COLLAR DETAIL

CONCRETE COLLAR SHALL BE SUBSIDIARY TO ITEM 4003.

NOTE:

1.) ALL UTILITIES SHALL BE THE RESPONSIBITILY OF THE CONTRACTOR TO VERIFY HORIZONTAL & VERTICAL INFORMATION IN THE FIELD.
2.) ALL ABANDONED PIPE TO BE CAPPED. SUBSIDIARY TO ITEM 496.

NOTE:
1.) SEE SHEET 1 OF 8 IRRIGATION LINE MODIFICATION FOR GENERAL NOTES.

SHEET TOTALS

ITEM	EST.	FINAL	UNIT	DESCRIPTION
402	370		LF	TRENCH EXCAVATION PROTECTION
496	80		FT	REMOVE OLD STR. (PIPE)
4003	88		FT	RCLHPP PIPE (30")

STATE OF TEXAS
RAMIRO GUTIERREZ
65948
REGISTERED PROFESSIONAL ENGINEER

THE SEAL APPEARING ON THIS DOCUMENT WAS AUTHORIZED BY RAMIRO GUTIERREZ, P.E. 65948

DATE: 8-12-03

ALTERATION OF A SEALED DOCUMENT WITHOUT PROPER NOTIFICATION TO THE RESPONSIBLE ENGINEER IS AN OFFENSE UNDER THE TEXAS ENGINEERING PRATICE LAW.

Parsons Brinckerhoff Quade & Douglas Inc.

Texas Department of Transportation

© 2003 by TxDOT

US 281 EXPRESSWAY IRRIGATION LINE MODIFICATIONS

STA. 50820+46.00

SHEET 9 OF 10

PLAN 1"= 50' HORIZ
PROFILE 1"= 10' VERT

DESIGNED:	FED. RD DIV. No.	STATE	FEDERAL AID PROJECT No.			HIGHWAY No.	
CHECKED:	6	TEXAS				US 281	
DRAWN:	STATE DISTRICT	COUNTY	CONTROL No.	SECTION No.	JOB No.	SHEET No.	
CHECKED:	21	HIDALGO	0255	08	091	663	

$NAME$
$TIME$
$DATE$
$FILE$US281-SBIRR7B.DGN

$NAME$
$TIME$
$DATE$

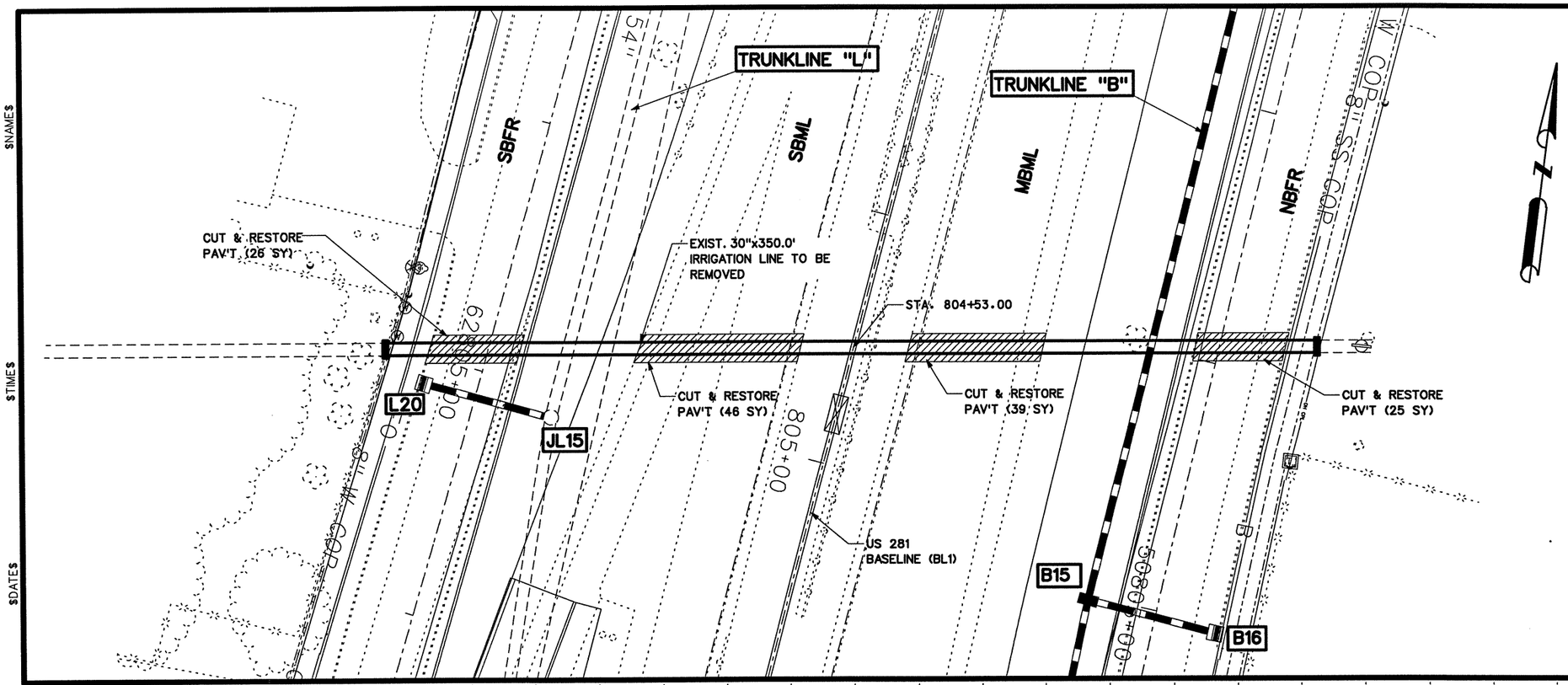

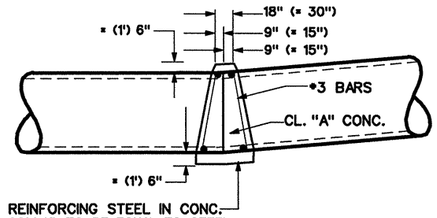

REINFORCING STEEL IN CONC. COLLAR TO BE EQUAL TO STEEL IN PIPE OR BETTER.

CONCRETE COLLAR DETAIL

CONCRETE COLLAR SHALL BE SUBSIDIARY TO ITEM 4003.

NOTE:

1.) ALL UTILITIES SHALL BE THE RESPONSIBITILY OF THE CONTRACTOR TO VERIFY HORIZONTAL & VERTICAL INFORMATION IN THE FIELD.
2.) ALL ABANDONED PIPE TO BE CAPPED, SUBSIDIARY TO ITEM 496.

NOTE:
1.) SEE SHEET 1 OF 7 IRRIGATION LINE MODIFICATION FOR GENERAL NOTES.

SHEET TOTALS

ITEM	EST.	FINAL	UNIT	DESCRIPTION
400	136		SY	CUT & RESTORE PAV'T
402	350		LF	TRENCH EXCAVATION PROTECTION
496	350		FT	REMOVE OLD STR. (PIPE)
4003	350		FT	RCLHPP PIPE (30")

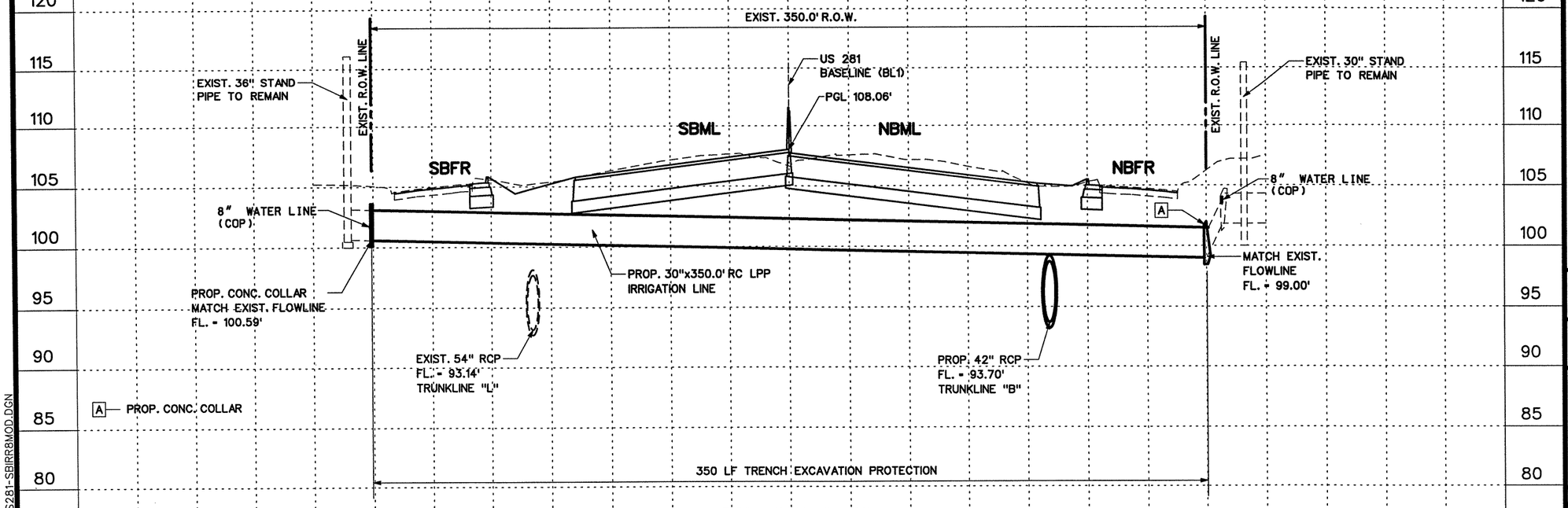

STA. 805+53.00

STATE OF TEXAS
RAMIRO GUTIERREZ
65948
REGISTERED PROFESSIONAL ENGINEER

THE SEAL APPEARING ON THIS DOCUMENT WAS AUTHORIZED BY RAMIRO GUTIERREZ, P.E. 65948

DATE: 8-12-03

ALTERATION OF A SEALED DOCUMENT WITHOUT PROPER NOTIFICATION TO THE RESPONSIBLE ENGINEER IS AN OFFENSE UNDER THE TEXAS ENGINEERING PRATICE LAW.

Parsons Brinckerhoff Quade & Douglas Inc.

Texas Department of Transportation

© 2003 by TxDOT

US 281 EXPRESSWAY IRRIGATION LINE MODIFICATIONS

STA. 804+53.00

SHEET 10 OF 10 — PLAN 1"= 50' HORIZ, PROFILE 1"= 10' VERT

DESIGNED:	FED. RD DIV. No.	STATE	FEDERAL AID PROJECT No.			HIGHWAY No.
CHECKED:	6	TEXAS				US 281
DRAWN:	STATE DISTRICT	COUNTY	CONTROL No.	SECTION No.	JOB No.	SHEET No.
CHECKED:	21	HIDALGO	0255	08	091	664

$FILE$ US281-SBIRR8MOD.DGN

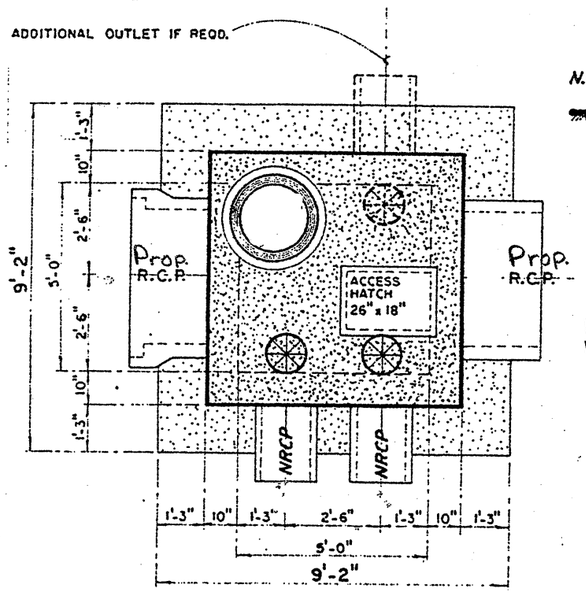

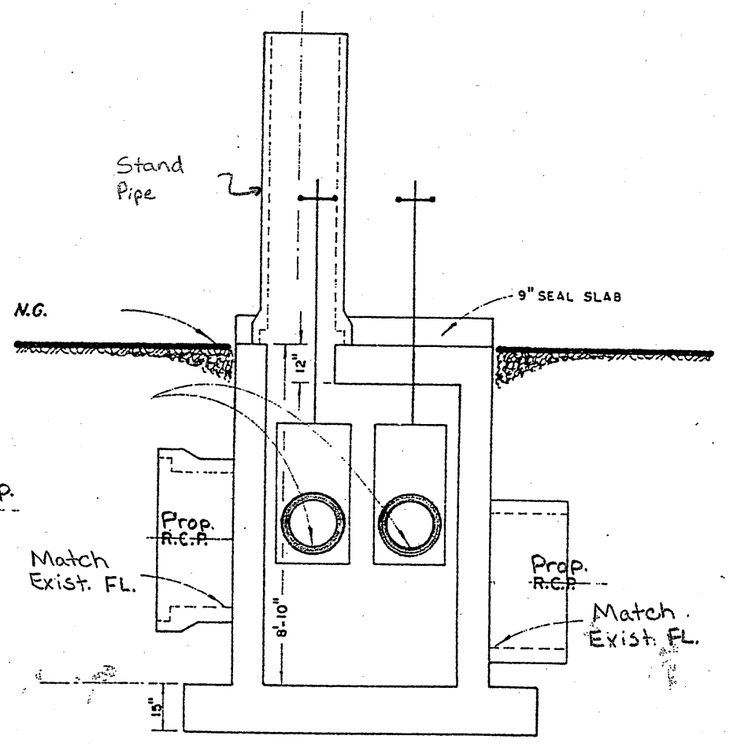

NOTE:
CONTRACTOR TO VERIFY EXISTING IRRIGATION STRUCTURE AND APPURTENANCES PRIOR TO RELOCATION. MATCH EXISTING CONDITIONS. CONTRACTOR TO CORDINATE WITH THE IRRIGATION DISTRICT No. 2 FOR THIS ADJUSTMENTS.

STATE OF TEXAS
RAMIRO GUTIERREZ
65948
REGISTERED PROFESSIONAL ENGINEER

THE SEAL APPEARING ON THIS DOCUMENT WAS AUTHORIZED BY RAMIRO GUTIERREZ, P.E. 65948

DATE: 8-14-03

ALTERATION OF A SEALED DOCUMENT WITHOUT PROPER NOTIFICATION TO THE RESPONSIBLE ENGINEER IS AN OFFENSE UNDER THE TEXAS ENGINEERING PRATICE LAW.

Parsons Brinckerhoff Quade & Douglas Inc.

Texas Department of Transportation

© 2003 by TxDOT

IRRIGATION JUNCTION BOX DETAILS

SCALE: N.T.S.

DESIGNED:	FED. RD DIV. No.	STATE	FEDERAL AID PROJECT No.			HIGHWAY No.	
CHECKED:	6	TEXAS				US 281	
DRAWN:	STATE DISTRICT	COUNTY	CONTROL No.	SECTION No.	JOB No.	SHEET No.	
CHECKED:	21	HIDALGO	0255	08	091	664A	

$NAMES $TIMES $DATES $FILES

$NAME$

$TIME$

$DATE$

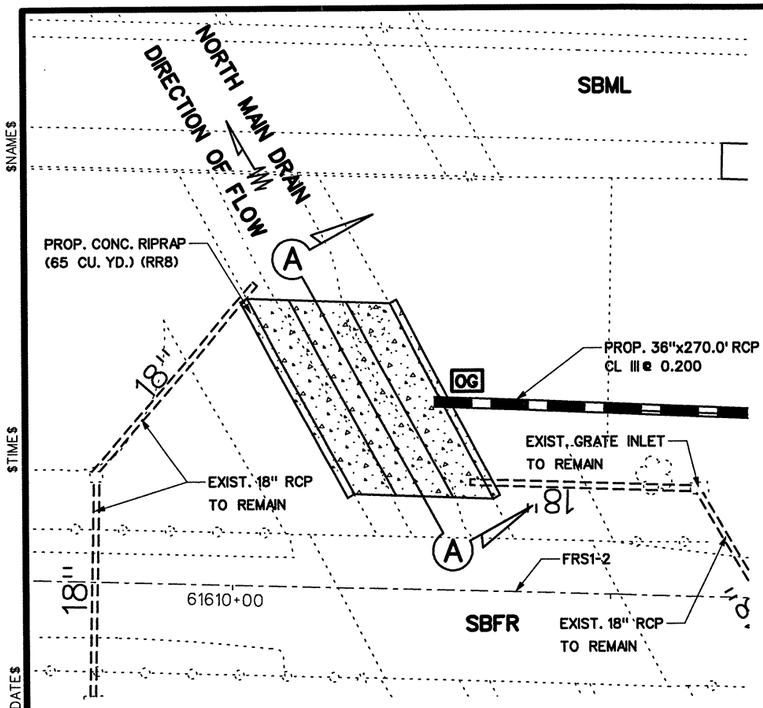

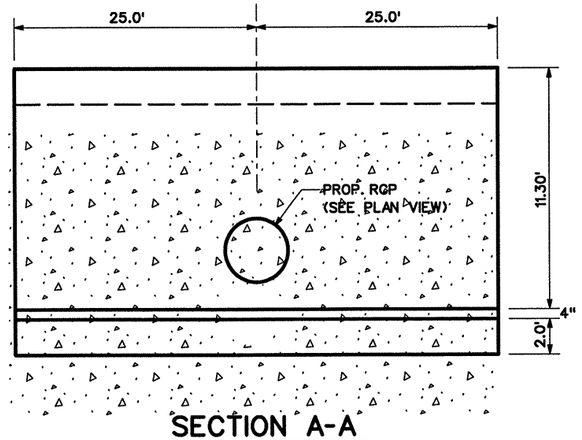

SECTION A-A

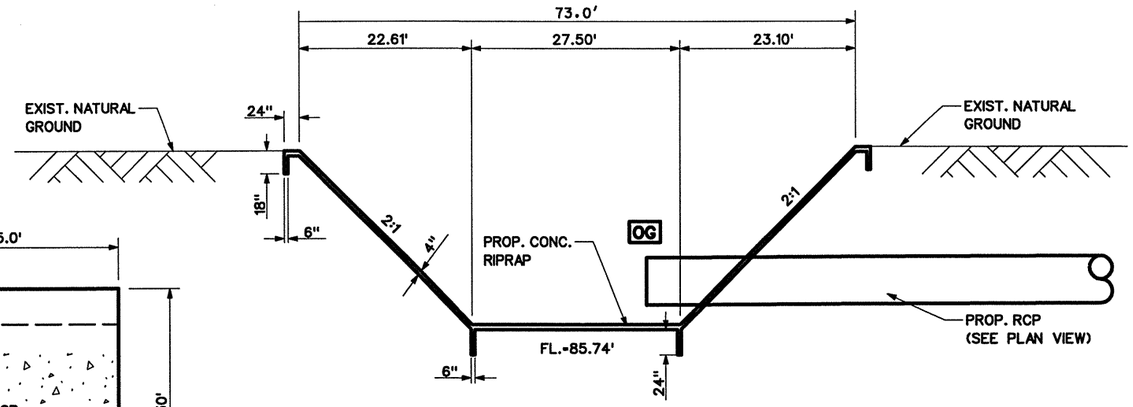

CONC. RIPRAP-CHANNEL SECTION

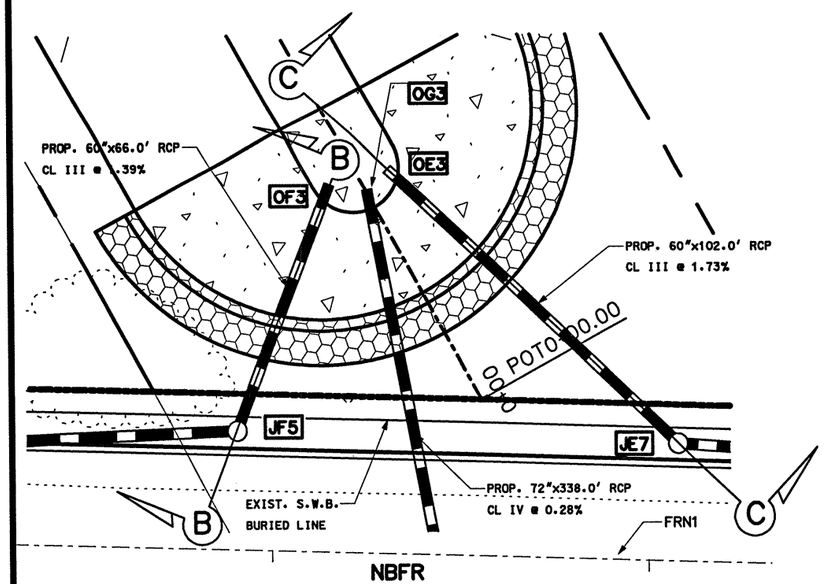

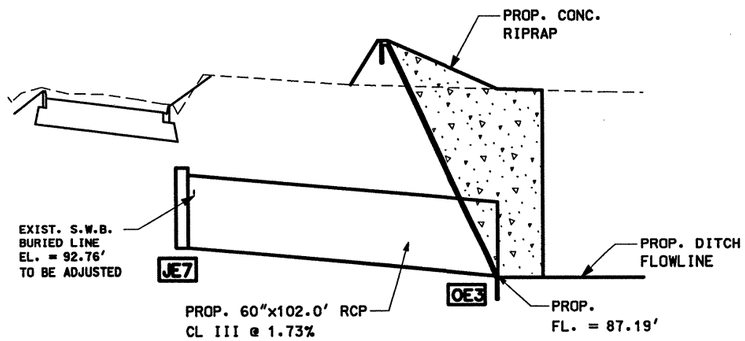

SECTION C-C

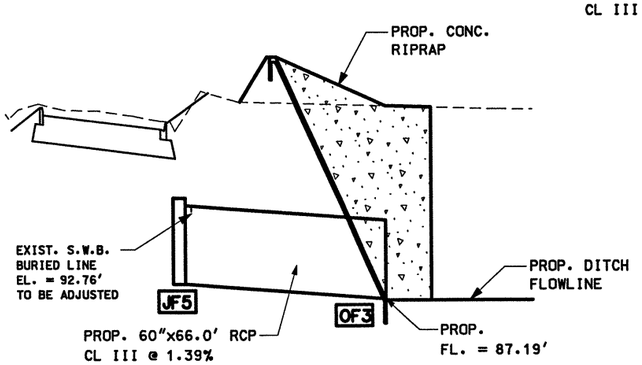

SECTION B-B

$FILE$

STATE OF TEXAS
RAMIRO GUTIERREZ
65948
REGISTERED
PROFESSIONAL ENGINEER

THE SEAL APPEARING ON THIS DOCUMENT WAS AUTHORIZED BY RAMIRO GUTIERREZ, P.E. 65948

DATE: 8-12-03

ALTERATION OF A SEALED DOCUMENT WITHOUT PROPER NOTIFICATION TO THE RESPONSIBLE ENGINEER IS AN OFFENSE UNDER THE TEXAS ENGINEERING PRATICE LAW.

Parsons Brinckerhoff Quade & Douglas Inc.

Texas Department of Transportation

© 2003 by TxDOT

OUTFALL DETAILS US 281 EXPRESSWAY

PLAN 1"= 40' HORIZ
PROFILE 1"= 10' VERT

DESIGNED:	FED. RD DIV. No.	STATE	FEDERAL AID PROJECT No.			HIGHWAY No.	
CHECKED:	6	TEXAS				US 281	
DRAWN:	STATE DISTRICT	COUNTY	CONTROL No.	SECTION No.	JOB No.	SHEET No.	
CHECKED:	21	HIDALGO	0255	08	091	665	

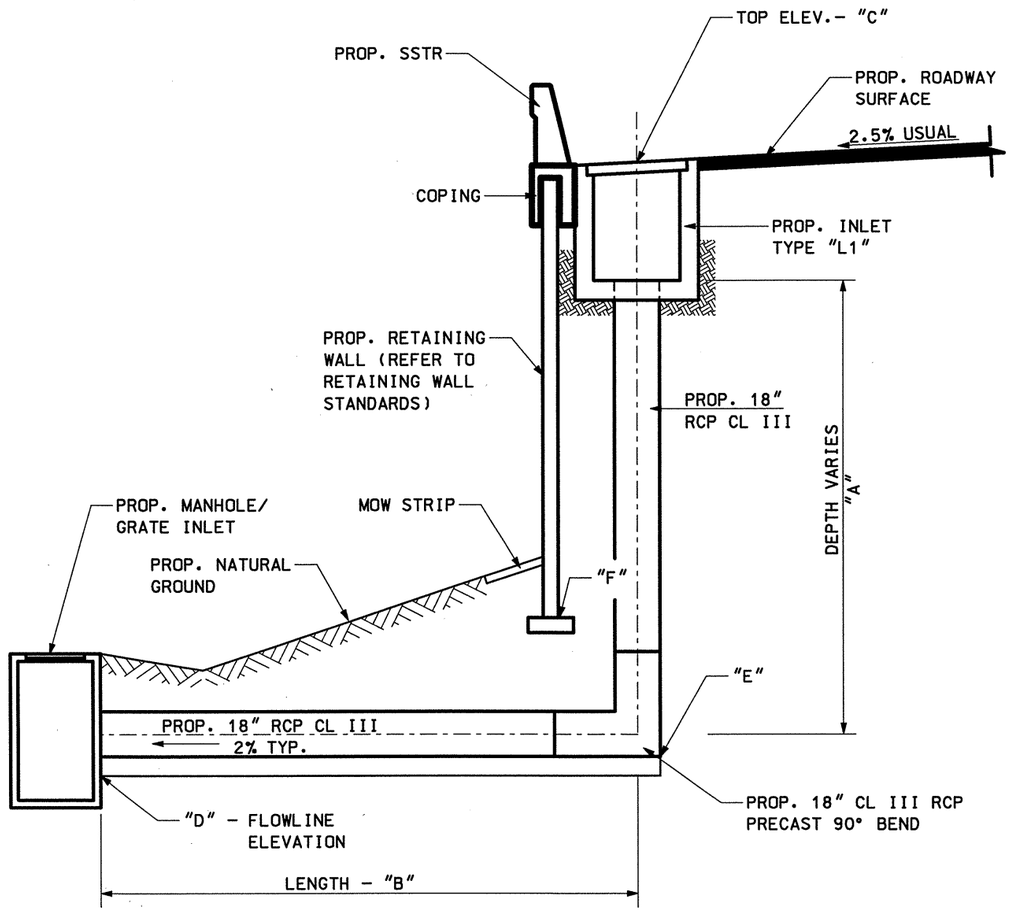

TYPE L-1 DROP INLET DETAIL
N.T.S.

TABLE OF DIMENSIONS FOR TYPE L-1 INLETS (DROP INLETS)

INLET NO.	STA.	A	B	C	D	E	F
F5	649+29.60	24.89′	45.00′	118.53′	93.44′	93.64′	102.00′
F12	660+62.15	22.97′	30.00′	119.33′	92.67′	92.87′	100.22′
F15	665+66.06	20.18′	36.00′	111.88′	91.41′	91.61′	101.00′
F20	645+12.10	14.45′	190.00′	111.92′	94.78′	95.30′	103.82′
G11	649+29.69	24.04′	40.00′	118.54′	94.30′	94.50′	100.75′
G18	660+62.10	24.76′	38.00′	119.26′	94.30′	94.50′	101.44′
G21	665+47.49	18.80′	38.00′	112.30′	93.30′	93.50′	105.25′
G39	644+82.51	17.33′	37.00′	111.63′	94.30′	94.40′	100.75′

NOTE: ALL STATIONS ARE REFERENCED TO US 281 BASELINE (BL1).

STATE OF TEXAS
RAMIRO GUTIERREZ
65948
REGISTERED
PROFESSIONAL ENGINEER

THE SEAL APPEARING ON THIS DOCUMENT WAS AUTHORIZED BY RAMIRO GUTIERREZ, P.E. 65948
DATE: 6-23-03

ALTERATION OF A SEALED DOCUMENT WITHOUT PROPER NOTIFICATION TO THE RESPONSIBLE ENGINEER IS AN OFFENSE UNDER THE TEXAS ENGINEERING PRATICE LAW.

Parsons Brinckerhoff Quade & Douglas Inc.

Texas Department of Transportation

©2003 by TxDOT

US 281 EXPRESSWAY TYPE L-1 DROP INLET DETAILS

DESIGNED:	FED. RD DIV. No.	STATE	FEDERAL AID PROJECT No.			HIGHWAY No.
CHECKED:	6	TEXAS				US 281
DRAWN:	STATE DISTRICT	COUNTY	CONTROL No.	SECTION No.	JOB No.	SHEET No.
CHECKED:	21	HIDALGO	0255	08	091	666

$NAME$
$TIME$
$DATE$
$FILE$

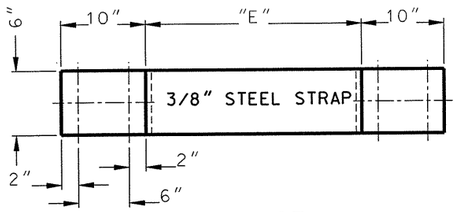

TOP VIEW

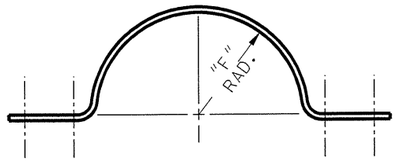

SIDE VIEW

STEEL STRAP DETAIL

STEEL PIPE SIZE	A	B	C	D	E	F	G	H	I	J	K	L
10"	0'-11.5"	8"	8"	0'-11.5"	0'-11.5"	5.75"	1'-4"	4'-8"	18"	5.75"	3"	1'-0"
12"	1'-1.5"	10"	8.5"	0'-11.5"	1'-1.5"	6.75"	1'-6"	4'-8"	18"	6.75"	4"	1'-2"
14"	1'-3.5"	11"	9.125"	0'-11.5"	1'-3.5"	7.75"	1'-8'	4'-8"	18"	7.75"	5"	1'-4"
16"	1'-5.5"	1'-0"	9.75"	0'-11.5"	1'-5.5"	8.75"	1'-10"	4'-8"	18"	8.75"	6"	1'-6"
18"	1'-7.5"	1'-1"	10.25"	0'-11.5"	1'-7.5"	9.75"	2'-0"	4'-8"	18"	9.75"	7"	1'-8"
20"	1'-9.5"	1'-2"	10.75"	0'-11.5"	1'-9.5"	10.75"	2'-2"	4'-8"	18"	10.75"	8"	1'-10"
24"	2'-1.5"	1'-4'	1'-0"	0'-11.5"	2'-1.5"	1'-0.75"	2'-6"	5'-2"	18"	1'-0.75"	10"	2'-2"
30"	2'-7.5"	1'-7"	1'-1.75"	0'-11.5"	2'-7.5"	1'-3.75"	3'-0"	5'-2"	18"	1'-3.75"	13"	2'-8"
36"	3'-1.5"	1'-10"	2'-2.5"	0'-11.5"	3'-1.5"	1'-6.75"	3'-6"	5'-8"	18"	1'-6.75"	16"	3'-2"

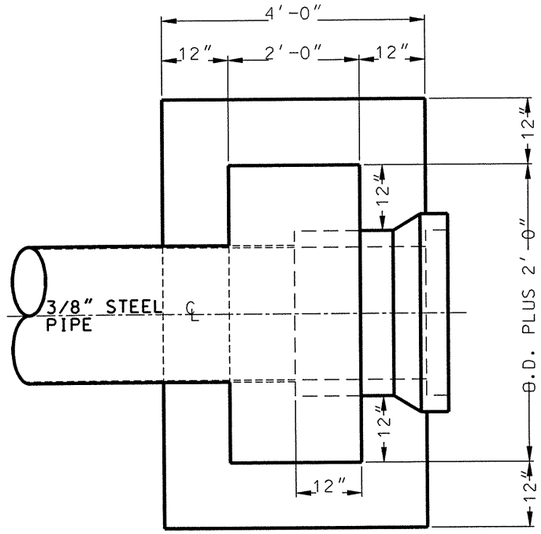

PLAN VIEW

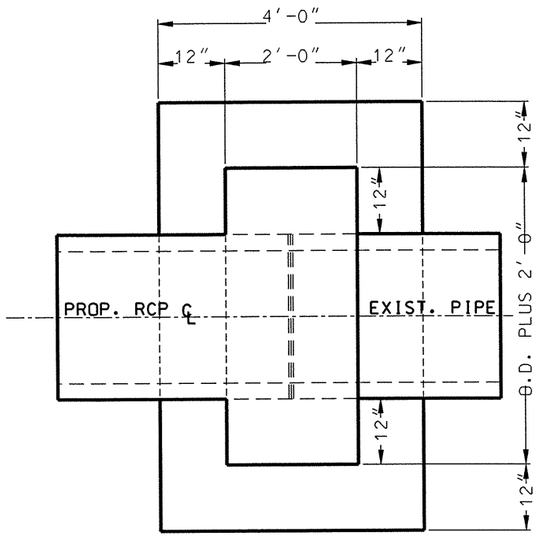

PLAN VIEW

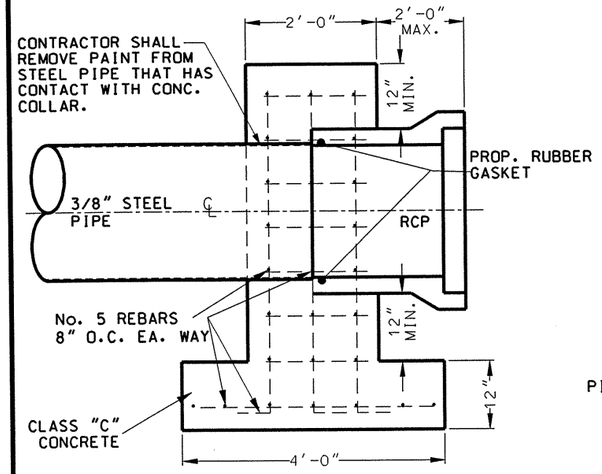

SECTION

CONCRETE PIPE SUPPORT COLLAR DETAILS

NOTE: CONTRACTOR SHALL SET BASE OF CONCRETE COLLAR A MINMUM OF 12" INTO UNDISTURBED SOIL.

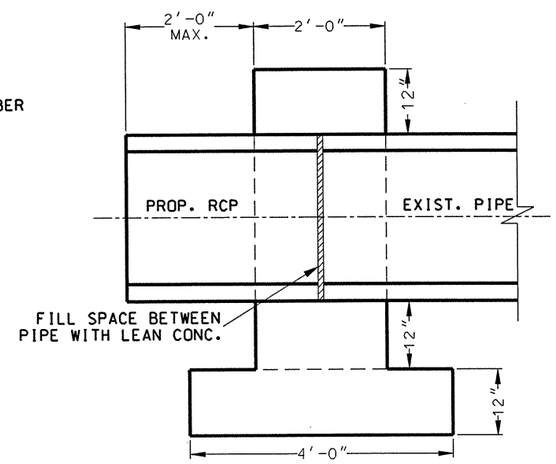

SECTION

CONCRETE COLLAR DETAIL

NOTE: CONTRACTOR SHALL USE THE SAME REBAR DESIGN AS FOR CONCRETE PIPE SUPPORT COLLAR.

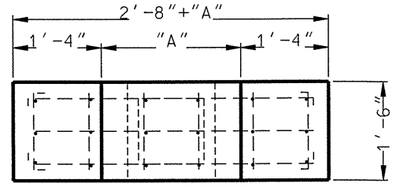

TOP VIEW

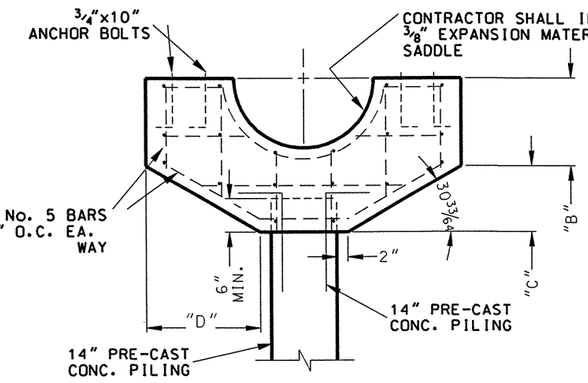

SIDE VIEW

PIPE BEAM DETAILS

CONTRACTOR SHALL BREAK OFF TOP OF CONCRETE PILING AND TIE PILING STEEL TO PIPE BEAM REINFORCING.

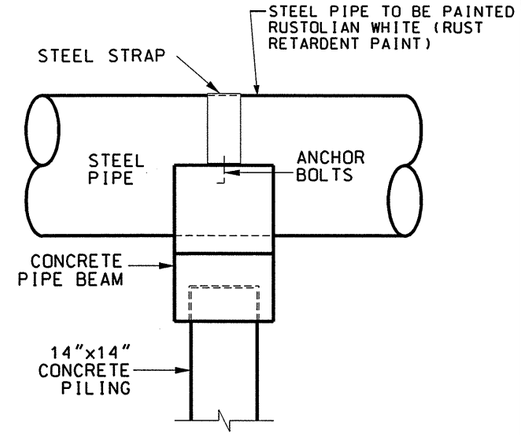

SIDE VIEW

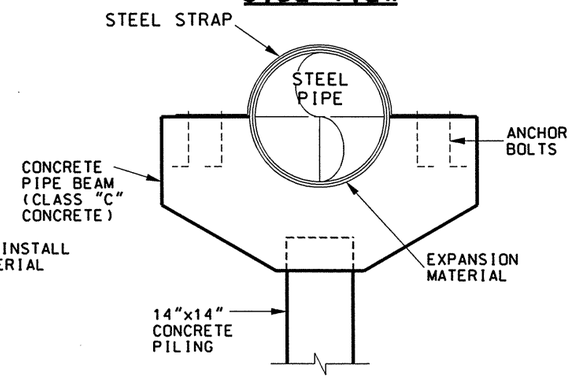

FRONT VIEW

PIPE BEAM ASSEMBLY

NOTES:
1.) ALL CONCRETE SHALL BE CLASS "C".
- CONC. COLLAR - APPROX. 3.4 CY/COLLAR
- CONC. SUPPORT - APPROX. 3.2 CY/SUPPORT
- CONC. BENT - APPROX. .5 CY/BENT
2.) ALL REINFORCING SHALL BE GRADE 60.
3.) STEEL PIPE TO BE PAINTED. RUSTOLIAN WHITE (RUST RETARDANT PAINT) SUBSIDIARY TO PERTINENT BID ITEMS.

STATE OF TEXAS
RAMIRO GUTIERREZ
65948
REGISTERED PROFESSIONAL ENGINEER

THE SEAL APPEARING ON THIS DOCUMENT WAS AUTHORIZED BY RAMIRO GUTIERREZ, P.E. 65948
DATE: 8-19-03
ALTERATION OF A SEALED DOCUMENT WITHOUT PROPER NOTIFICATION TO THE RESPONSIBLE ENGINEER IS AN OFFENSE UNDER THE TEXAS ENGINEERING PRATICE LAW.

Parsons Brinckerhoff Quade & Douglas Inc.

R. Gutierrez Engineering Corporation

Texas Department of Transportation

© 2001 by TxDOT

10" THRU 36" STEEL PIPE BRIDGE DETAIL AND CONC. PIPE SUPPORT COLLAR DETAIL

SCALE: NTS

DESIGNED:	FED. RD DIV. No.	STATE	FEDERAL AID PROJECT No.			HIGHWAY No.	
CHECKED:	6	TEXAS				US 281	
DRAWN:	STATE DISTRICT	COUNTY	CONTROL No.	SECTION No.	JOB No.	SHEET No.	
CHECKED:	21	HIDALGO	0255	08	091	667	

ESTIMATED QUANTITIES FOR
TYPICAL WELL BASE

WELL DIAMETER	BASE DIMENSIONS	REINFORCING STEEL				CLASS "A" CONCRETE
		NO	SIZE	SPACING	WEIGHT	
18"	4 1/2"X4 1/2" X6"	8	4	12" C-C	21 LB	0.38 CY
30"	5'X5'X6"	10	4	12" C-C	30 LB	0.46 CY
36"	5'X5'X6"	10	4	12" C-C	30 LB	0.46 CY
48"	7'X7'X6"	12	4	12" C-C	51 LB	0.91 CY
42"	6'X6'X6'	12	4	12" C-C	41 LB	0.69 CY

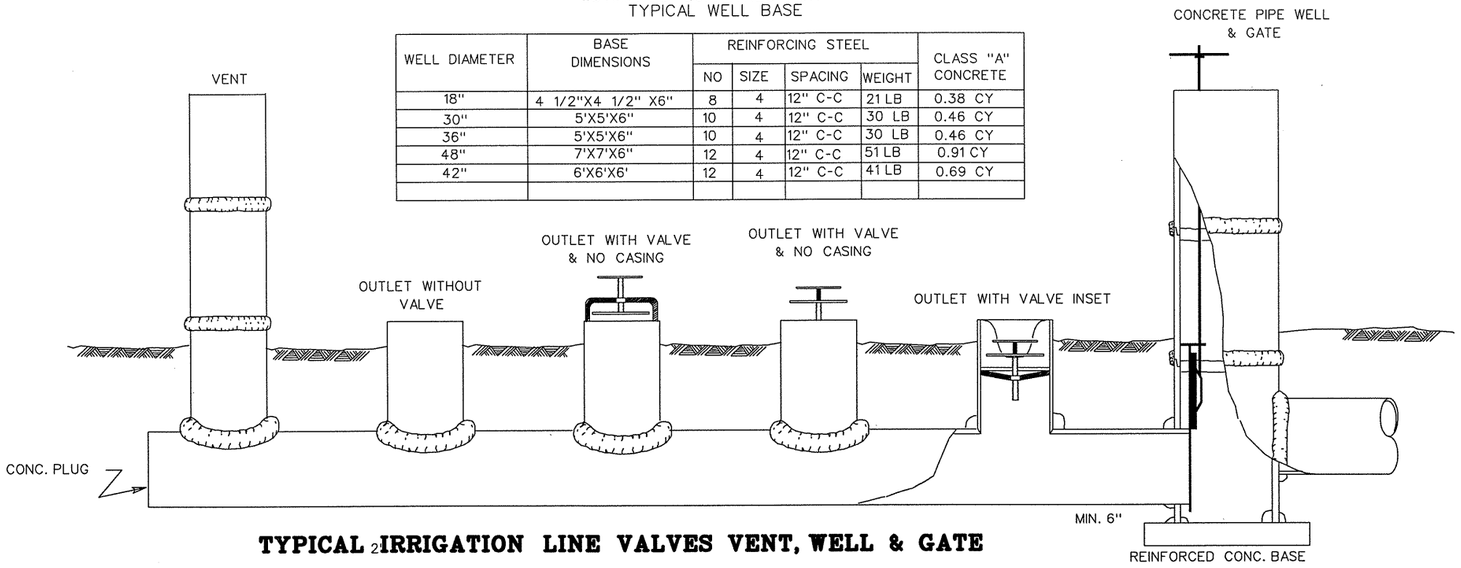

TYPICAL 2 IRRIGATION LINE VALVES VENT, WELL & GATE

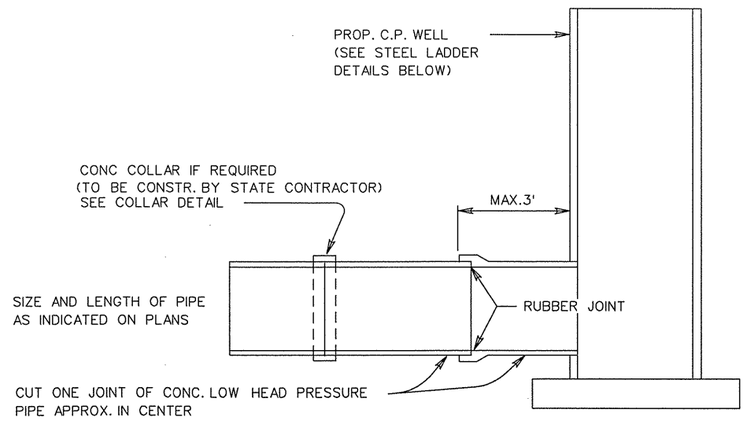

TYPICAL CONC. PIPE WELL DETAILS FOR CONNECTING CONC. LOW HEAD PRESSURE PIPE

GENERAL NOTES

HEIGHT OF RELOCATED WELLS AND VENTS TO BE EQUIVALENT TO THAT OF EXISTING STRUCTURES OR AS REQUIREDFOR PROPER OPERATION

CONCRETE REQUIRED FOR PLUGS OR CAPS WILL NOT BE PAID FOR DIRECTLY BUT SHALL BE CONSIDERED AS SUB-SIDIARY TO THE VARIOUS BID ITEMS OF THIS CONTRACT.

IN GENERAL THE PARTICULAR TYPE OR DESIGN OF THE EXISTING FACILITY TO BE EXTENDED OR RELOCATED SHALL BE DUPLICATED.

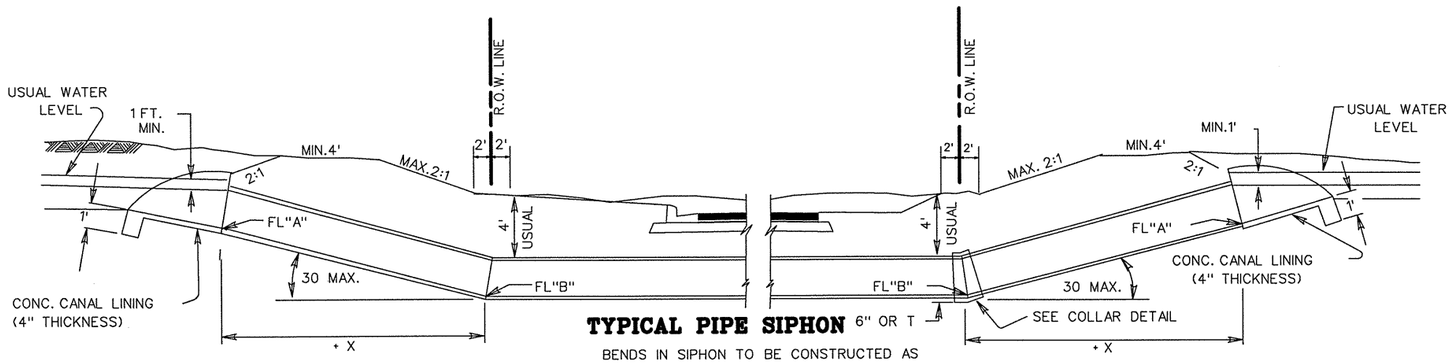

TYPICAL PIPE SIPHON 6" OR T

BENDS IN SIPHON TO BE CONSTRUCTED AS PROVIDED IN SPECIFICATIONS

+X AND FL "A" AS SHOWN ON PLANS ARE NOMINAL DESIGN DIMENSIONS AND MAY BE VARIED IN FIELD TO FIT EXISTING CONDITIONS

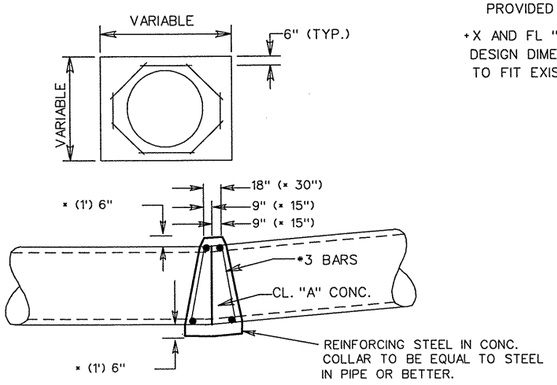

DETAIL FOR CONC. COLLARS DRAINAGE STRUCTURES AND PIPE SIPHONS (HORIZ. & VERT. BENDS)

NOTE: PROP. CONC. COLLAR WILL NOT BE PAID FOR DIRECTLY BUT WILL BE SUBSIDIARY TO THE BIDS ITEMS INVOLVED.

× FOR 42" AND LARGER PIPE

LADDER TO BE CONSTRUCTED OF 3/4" DIA. REINF. STEEL. THE PARALLEL SIDEPIECES SPACED 12" APART TO BE HOOKED OVER TOP OF WELL AND STAND-OFFS WELDED AT TOP RUNG, AT THEIR MID-POINT AND BOTTOM. RUNGS TO BE WELDED TO SIDEPIECES AT 12" INTERVALS THE FIRST RUNG TO BE 2' FROM NATURAL GROUND.

STEEL LADDER TO BE PAID FOR AS SUBSIDIARY TO PRICE OF WELL

NOTE: COMMERCIAL FABRICATED OR CAST METAL STEPS MAY BE USED IF APPROVED BY THE ENGINEER AND/OR THE WATER DISTRICT INVOLVED.

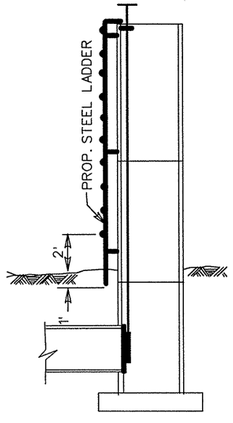

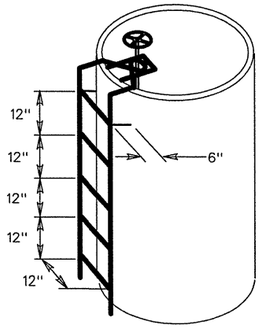

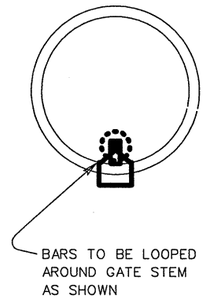

STEEL LADDER DETAILS

TO BE USED ON ALL WELLS WITH GATES WHEN THE DISTANCE FROM NATURAL GROUND TO TOP OF WELL IS 6 FT. OR MORE.

© TXDOT 1999

PHARR DISTRICT

TEXAS DEPARTMENT OF TRANSPORTATION

MISC. DETAILS FOR IRRIG. AND DRAINAGE STRUCTURE

REV. 6/99 IRRIG1.DGN

ED.RD. DIV.NO.	FEDERAL AID PROJECT NO.		FILE NO.			SHEET NO.
6						668
STATE	STATE DIST.NO.	COUNTY	CONT.	SECT.	JOB	HIGHWAY NO.
TEXAS	21	HIDALGO	0255	08	091	US 281

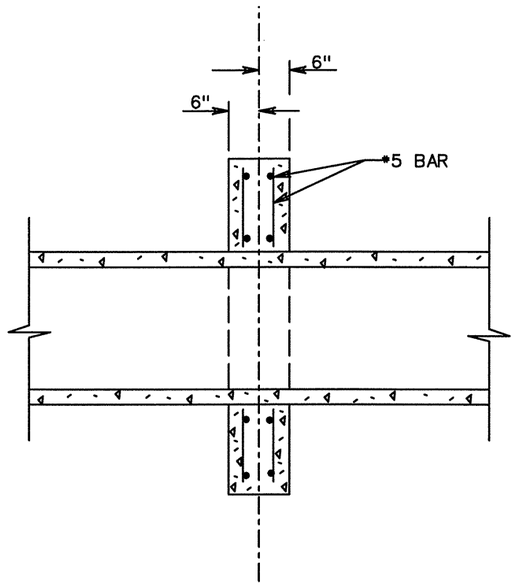

SECTION A-A

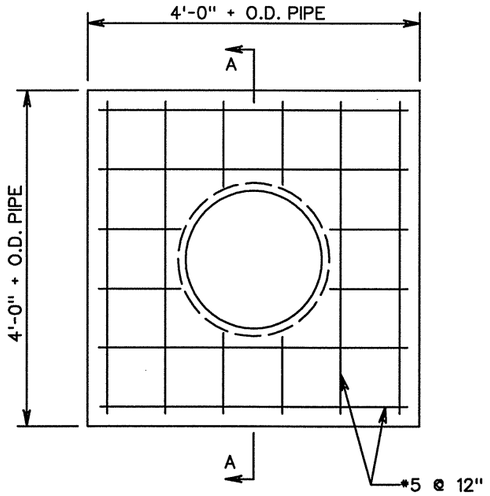

FRONT ELEVATION

CONCRETE PIPE COLLAR

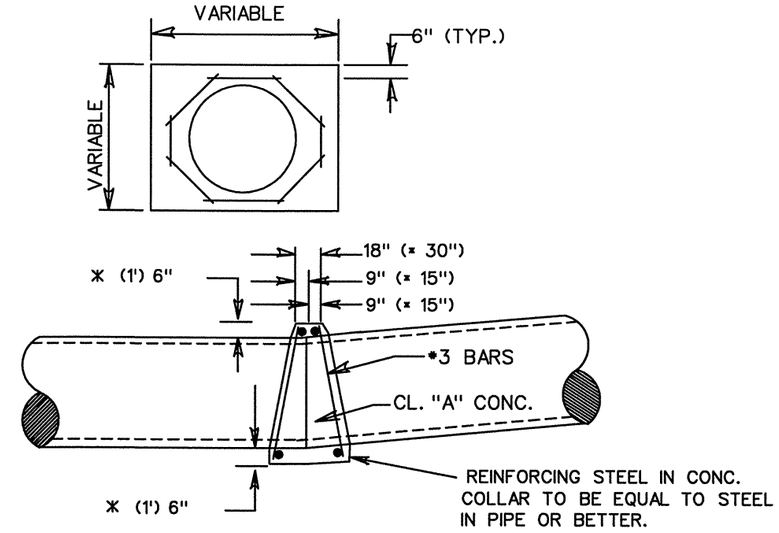

DETAIL FOR CONC. COLLARS DRAINAGE STRUCTURES AND PIPE SIPHONS (HORIZ. & VERT. BENDS)

NOTE: PROP. CONC. COLLAR WILL NOT BE PAID FOR DIRECTLY BUT WILL BE SUBSIDIARY TO THE BIDS ITEMS INVOLVED.

* FOR 42" AND LARGER PIPE

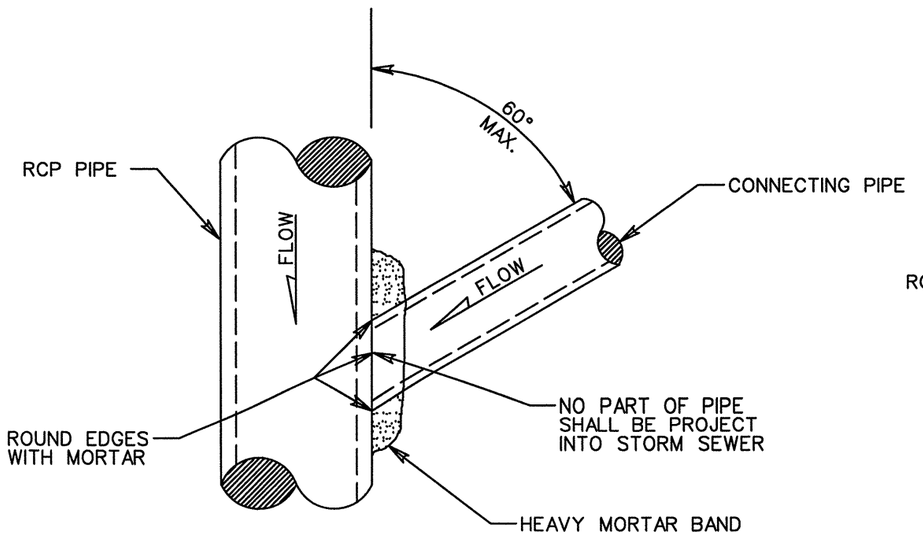

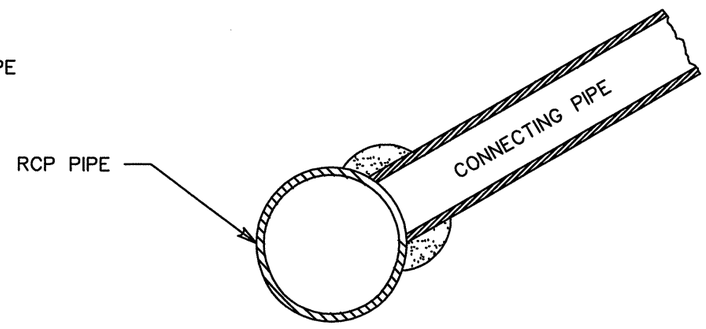

TYPICAL REINFORCED CONC. PIPE CONNECTION WITHOUT MANHOLE

© TxDOT 2002

PHARR DISTRICT STANDARD

TEXAS DEPARTMENT OF TRANSPORTATION

CONCRETE PIPE COLLAR AND CONNECTION DETAIL

REV. 4/02

COLLAR.DGN

FED.RD. DIV.NO.	FEDERAL AID PROJECT NO.		FILE NO.			SHEET NO.
6						669
STATE	STATE DIST.NO.	COUNTY	CONT.	SECT.	JOB	HIGHWAY NO.
TEXAS	21	HIDALGO	0255	08	091	US 281

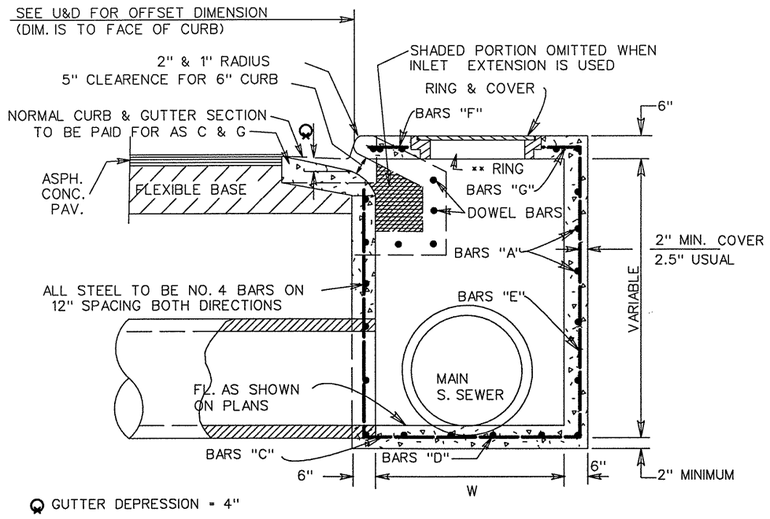

INLET TY "A"
To be used with Curb & Gutter

SECTION A-A

INLET TYPE	W	MAX PIPE SIZE ALLOW (DIA.)
A	3'-0"	24"
A-1	4'-0"	36"
A-2	5'-0"	48"
A-3	6'-0"	60"

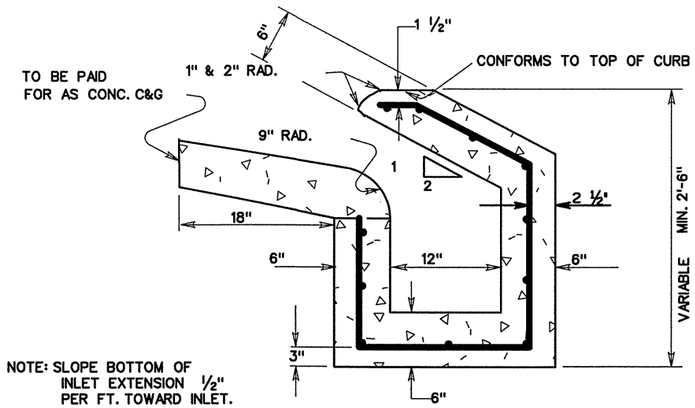

NOTE: SLOPE BOTTOM OF INLET EXTENSION ½" PER FT. TOWARD INLET. ALL STEEL TO BE NO. 4 BARS ON 12" SPACING IN BOTH DIRECTIONS.

SECTION B-B
INLET EXTENSION

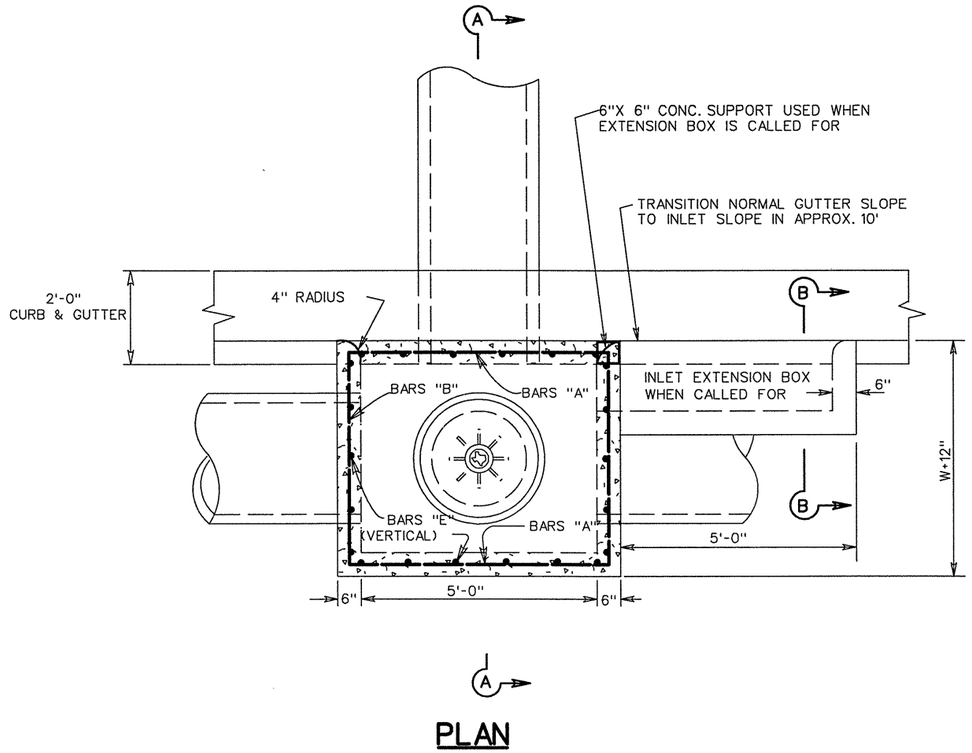

PLAN

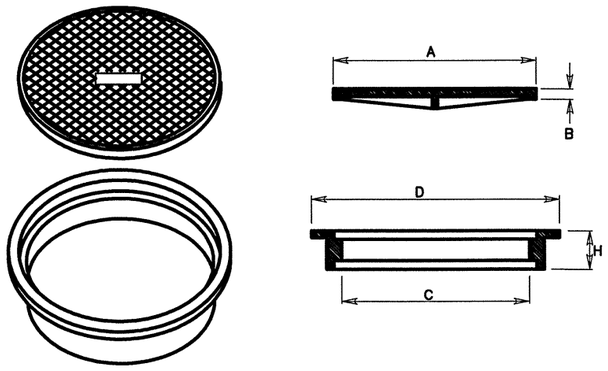

LID			RING				TOTAL WT.
"A"	"B"	WEIGHT	"C"	"D"	"H"	WEIGHT	
25⅝"	1"	125 lbs. (min)	24	32	5	185 lbs.	310 lbs.

RING & COVER DETAILS

NOTE: RINGS AND COVERS OF SLIGHTLY DIFFERENT DIMENSIONS BUT APPROXIMATELY THE SAME WEIGHT MAY BE SUBSTITUTED IF APPROVED BY THE ENGINEER. RING AND COVER TO BE SUBSIDIARY.

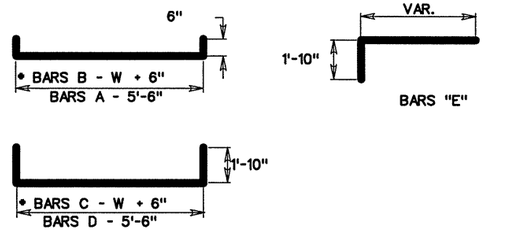

REINFORCING STEEL DETAILS

N.T.S.

© TxDOT 2002 — PHARR DISTRICT STANDARD

TEXAS DEPARTMENT OF TRANSPORTATION

INLET TY "A" DETAIL

REV. 4/02 — INLETA.DGN

FED.RD. DIV.NO.	PROJECT NO.	FILE NO.	SHEET NO.
6			670

STATE	STATE DIST.NO.	COUNTY	CONT.	SECT.	JOB	HIGHWAY NO.
TEXAS	21	HIDALGO	0255	08	091	US 281

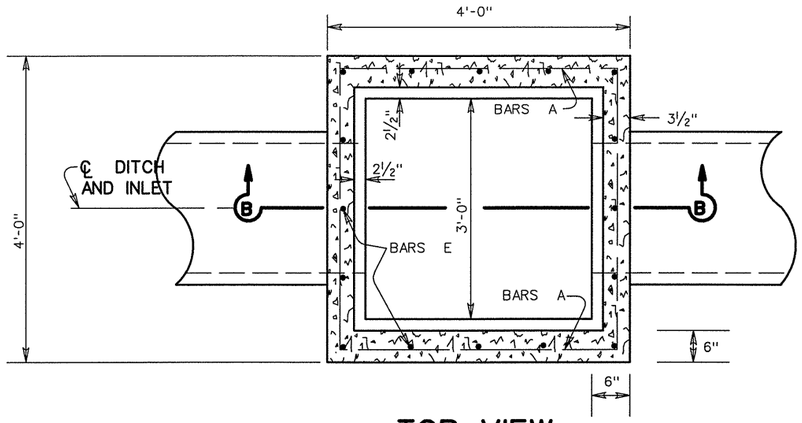

TOP VIEW

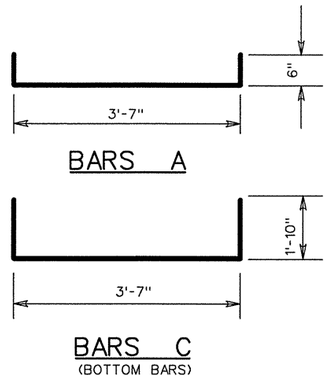

REINFORCING STEEL DETAILS

NOTE: ALL STEEL TO BE NO. 4 BARS ON 12" SPACING IN BOTH DIRECTIONS

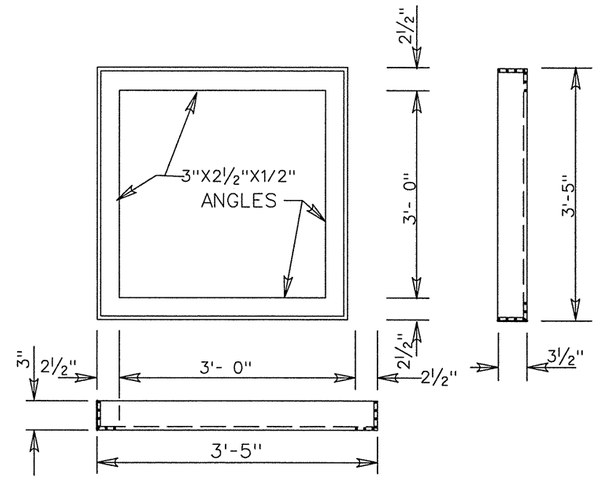

FRAME DETAIL

FRAME INLET GRATE TO BE SUBSIDIARY

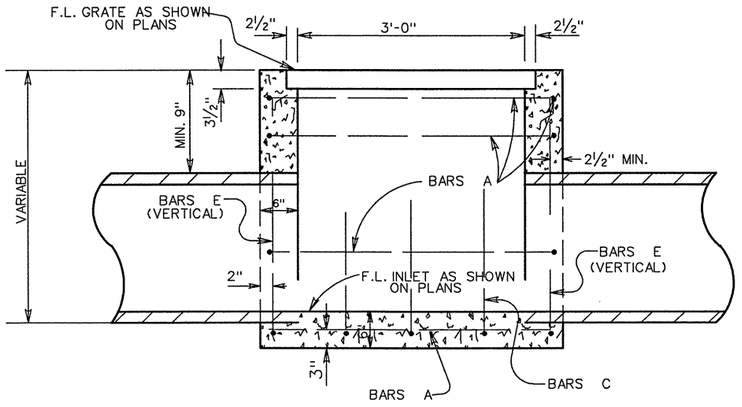

SECTION B-B

INLET TY "C"

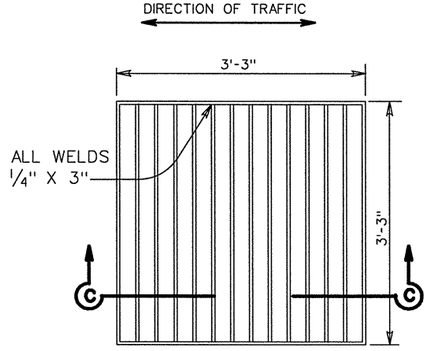

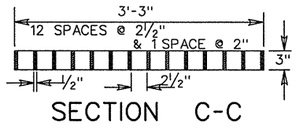

SECTION C-C

WELDED STEEL INLET GRATE

GENERAL NOTES:
TY "C" INLET TO BE USED FOR PIPES LESS OR EQUAL TO 24"

© TxDOT 2002

PHARR DISTRICT STANDARD

TEXAS DEPARTMENT OF TRANSPORTATION

TY "C" INLET DETAILS

REV. 4/02

INLETC.DGN

CD RD DIV.NO.	FEDERAL AID PROJECT NO.		FILE NO.			SHEET NO.
6						671
STATE	STATE DIST.NO.	COUNTY	CONT.	SECT.	JOB	HIGHWAY NO.
TEXAS	21	HIDALGO	0255	08	091	US 281

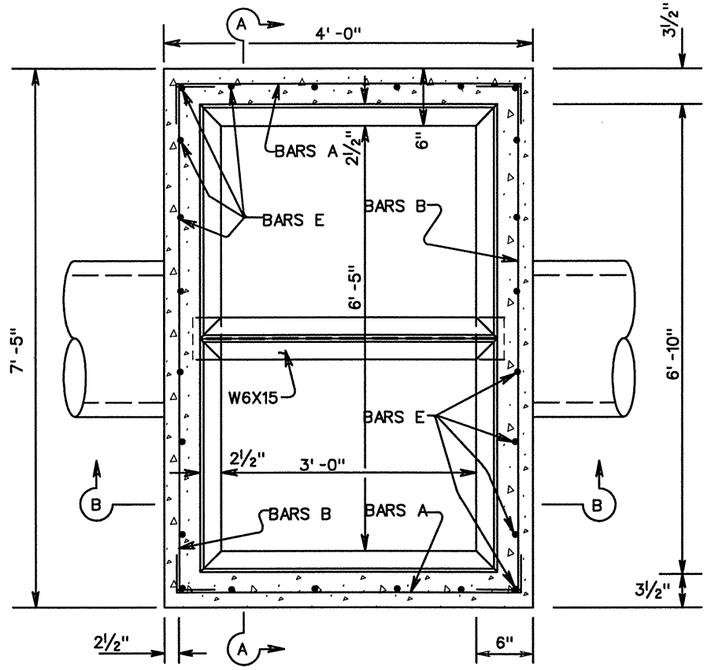

PLAN

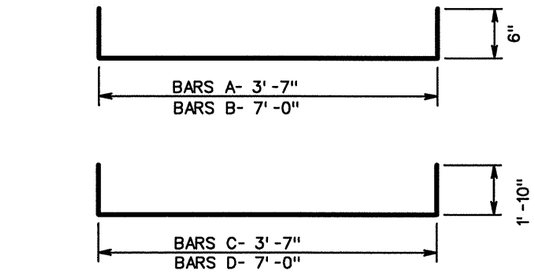

BARS A & B

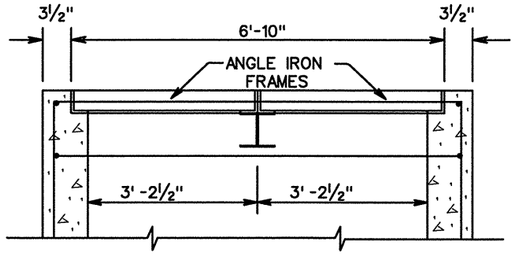

SEC. A-A

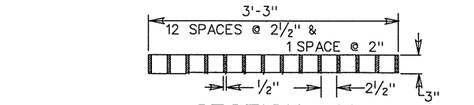

SECTION Y-Y

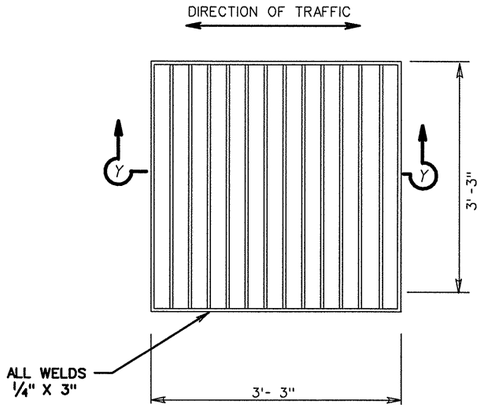

SECTION Y-Y
TWO GRATES PER INLET

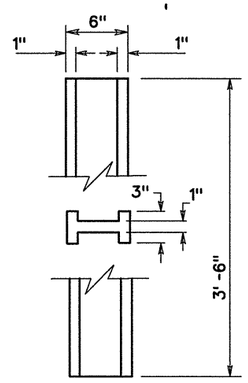

I-BEAM DETAILS
W 6 X 15

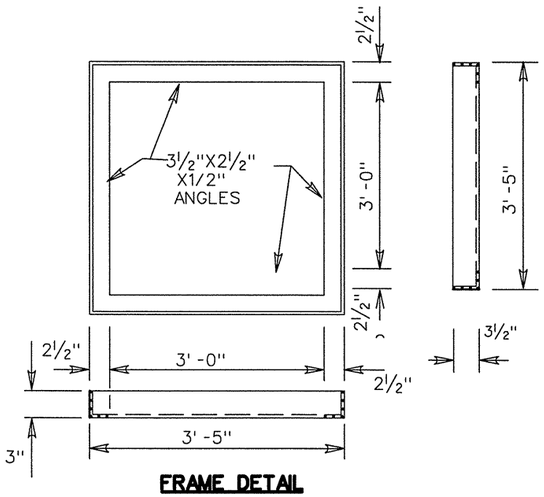

FRAME DETAIL
TWO FRAMES PER INLET
TO BE SUBSIDIARY TO INLET ITEM

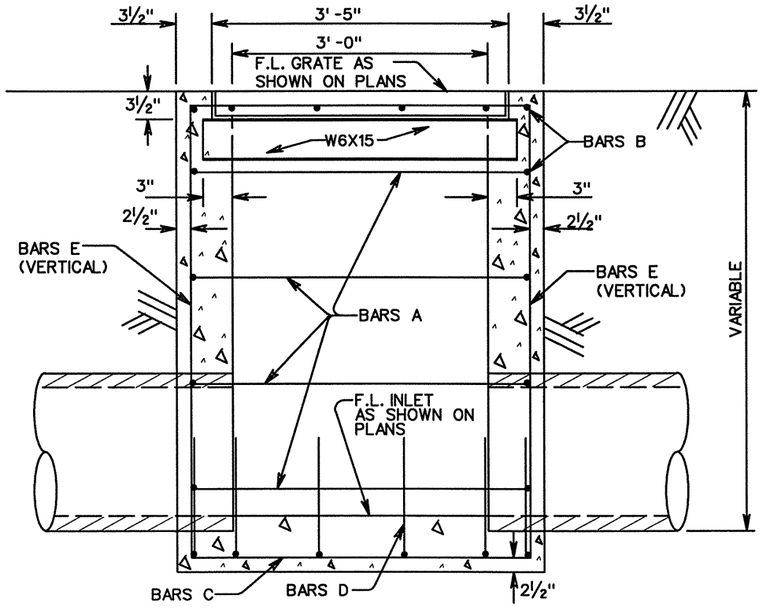

SEC. B-B

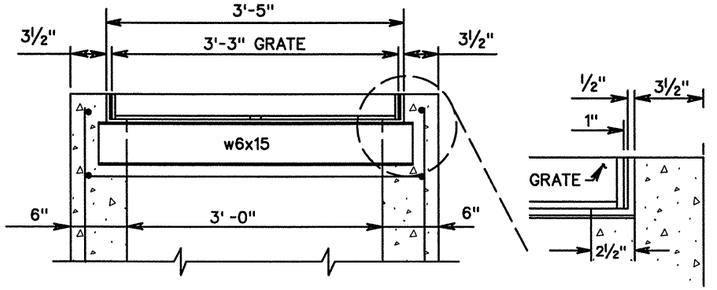

SEC. B-B
(DETAIL W/GRATE)

NOTE: ALL STEEL REINFORCING TO BE NO. 4 BARS ON 1'-0" SPACING IN BOTH DIRECTIONS
ALL STEEL TO BE GR. 60.

© TxDOT 2002

PHARR DISTRICT STANDARD

TEXAS DEPARTMENT OF TRANSPORTATION

INLET TY "CC" DETAIL

REV. 04/02

INLETCC.DGN

FED.RD. DIV.NO.	FILE NO.	PROJECT NO.	SHEET NO.
6			672

STATE	STATE DIST.NO.	COUNTY	CONT.	SECT.	JOB	HIGHWAY NO.
TEXAS	21	HIDALGO	0255	08	091	US 281

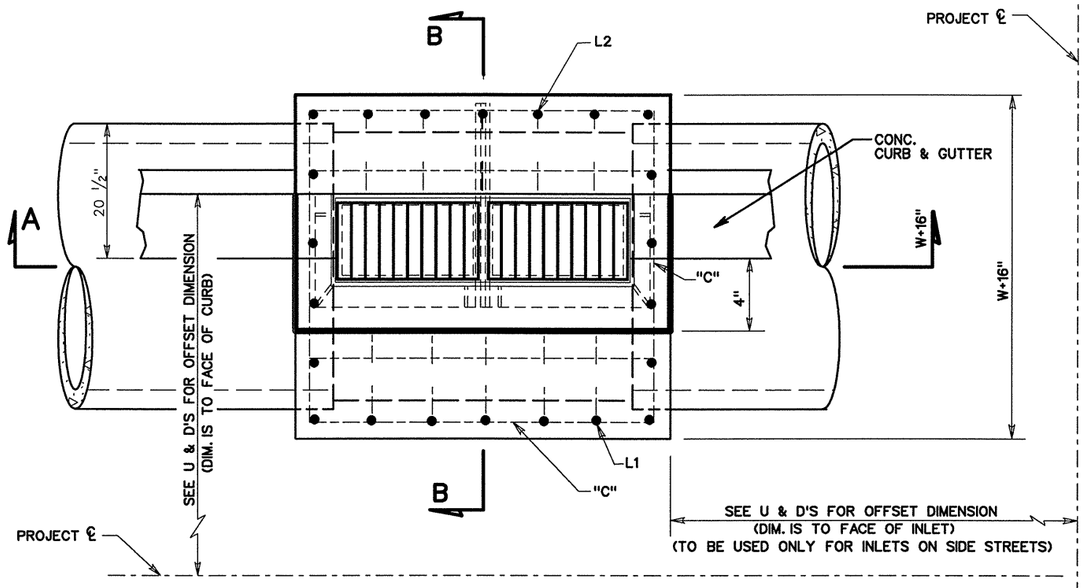

PLAN VIEW

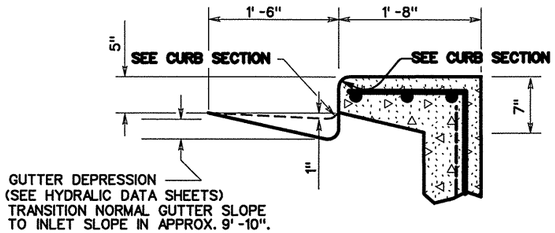

CURB SECTION DETAIL

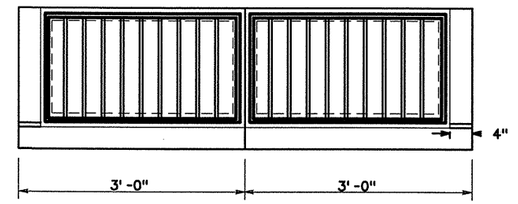

FRAMES AND GRATE TOP VIEW

TO BE SUBSIDIARY TO INLET ITEM

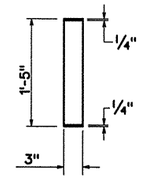

GRATE SECTION

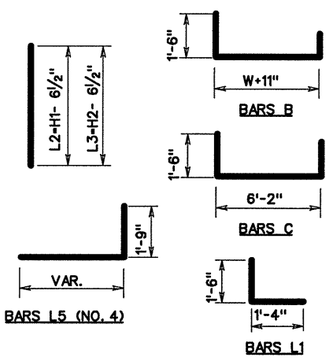

REINFORCING STEEL DETAILS

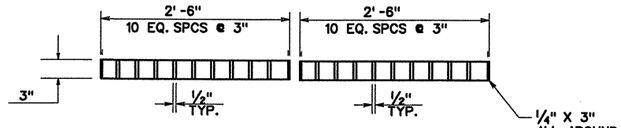

GRATE ELEV. SECTION

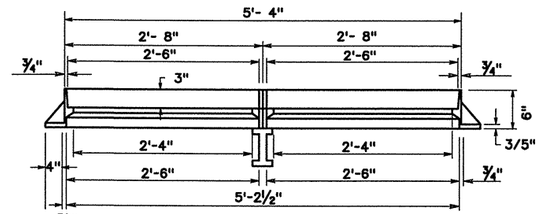

FRAME ELEVATION

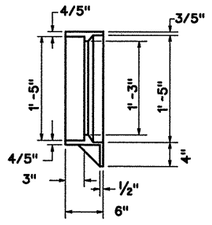

FRAME SECTION

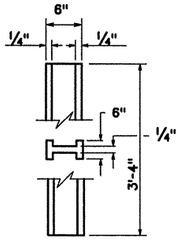

I-BEAM DETAILS
W 6 X 15

NOTE: ALL REINFORCEMENT BARS SHALL BE GRADE 60.

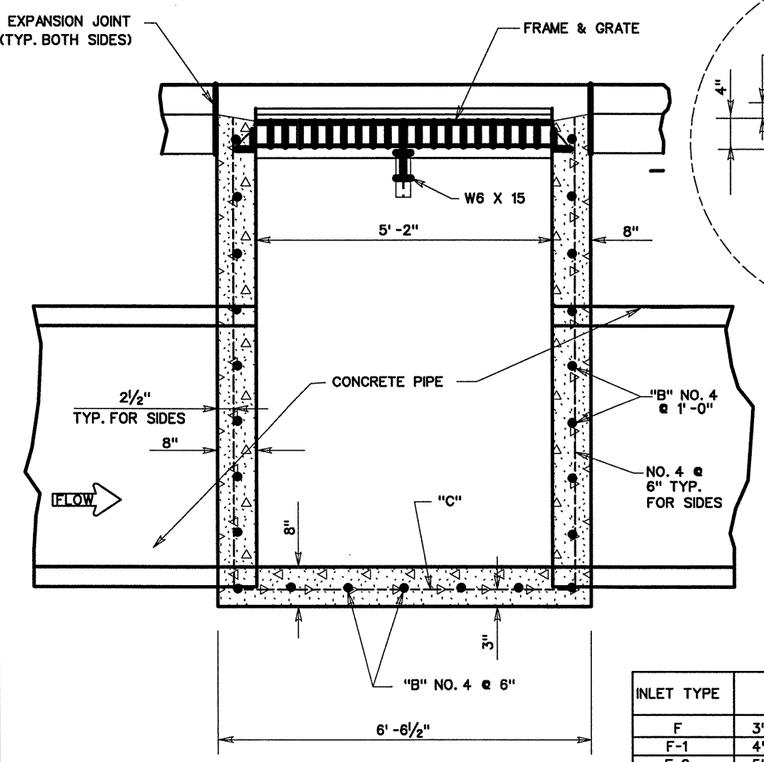

SECTION A-A

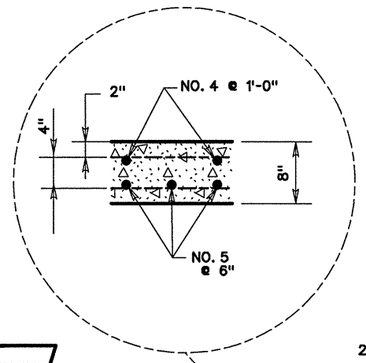

INLET TYPE	W	MAX PIPE SIZE ALLOW (DIA.)
F	3'-0"	24"
F-1	4'-0"	36"
F-2	5'-0"	48"
F-3	6'-0"	60"

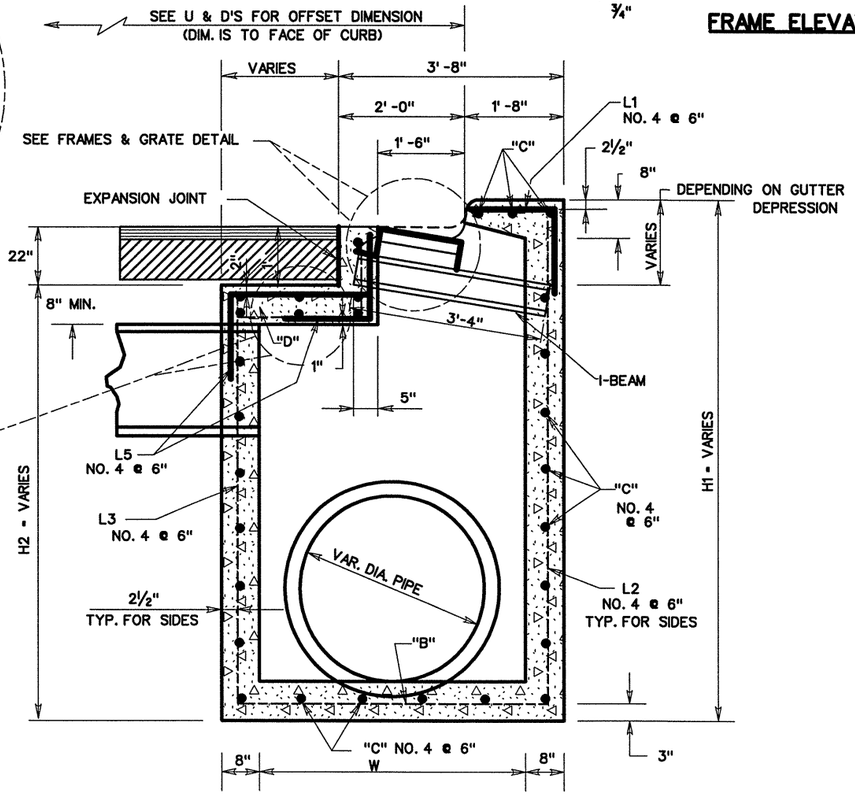

SECTION B-B

©TxDOT 2002

PHARR DISTRICT STANDARD

TEXAS DEPARTMENT OF TRANSPORTATION

TY "F" INLET DETAILS

REV. 4/02

INLETF.DGN

N.T.S.

ED.RD. DIV.NO.	STATE AID PROJECT NO.	FILE NO.	SHEET NO.
6			673

STATE	STATE DIST. NO.	COUNTY	CONT.	SECT.	JOB	HIGHWAY NO.
TEXAS	21	HIDALGO	0255	08	091	US 281

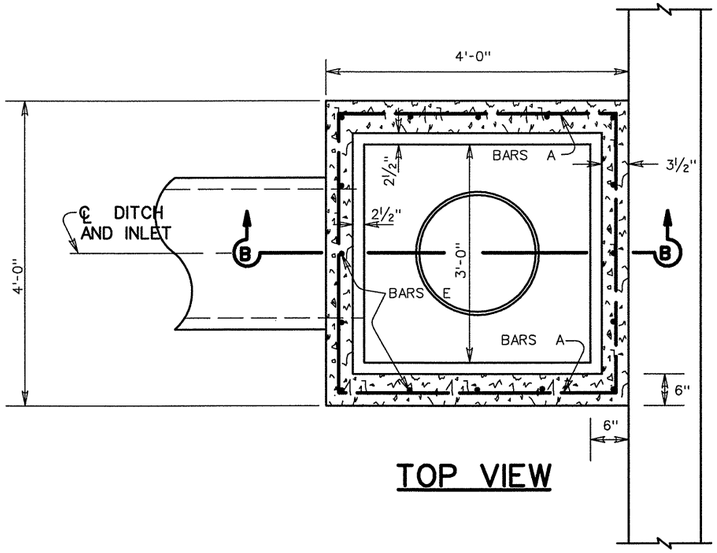

TOP VIEW

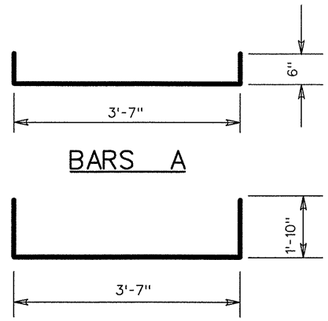

REINFORCING STEEL DETAILS

NOTE: ALL STEEL TO BE NO. 4 BARS ON 12" SPACING IN BOTH DIRECTIONS

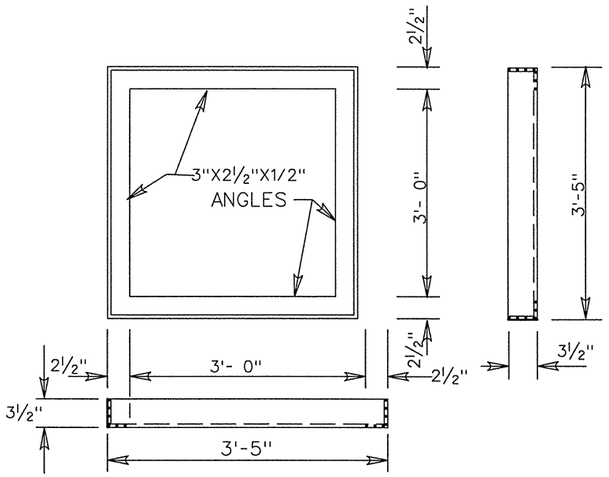

FRAME DETAIL

FRAME INLET GRATE TO BE SUBSIDIARY

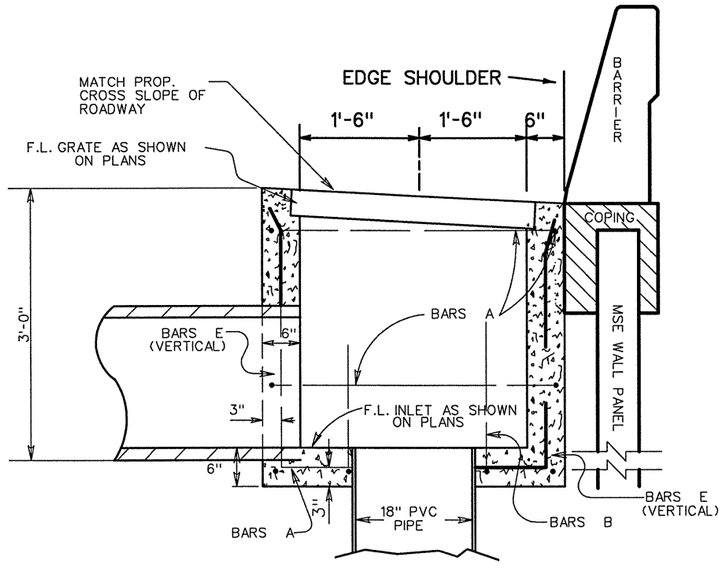

SECTION B-B

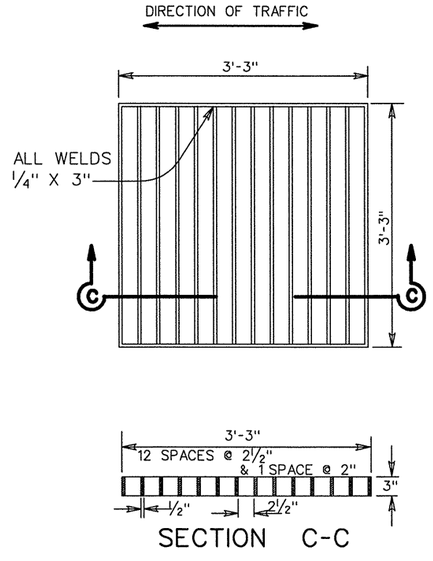

SECTION C-C

WELDED STEEL INLET GRATE

GENERAL NOTES:
TY "L1" INLET TO BE USED FOR CROSS PIPES LESS OR EQUAL TO 24"

© TxDOT 2002

PHARR DISTRICT STANDARD

TEXAS DEPARTMENT OF TRANSPORTATION

INLET TY "L1" GRATED DETAILS

REV. 4/02

INLETL1.DGN

N.T.S.

FED.RD. DIV.NO.	FEDERAL AID PROJECT NO.		FILE NO.			SHEET NO.
6						674
STATE	STATE DIST.NO.	COUNTY	CONT.	SECT.	JOB	HIGHWAY NO.
TEXAS	21	HIDALGO	0255	08	091	US 281

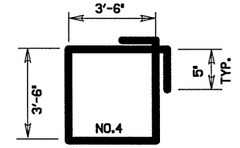

BARS O

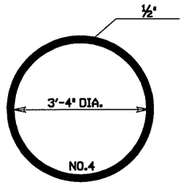

CONCENTRIC BAR

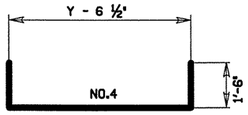

BARS C

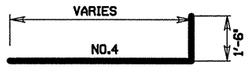

BARS L1

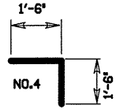

BARS L2

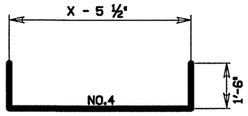

BARS B

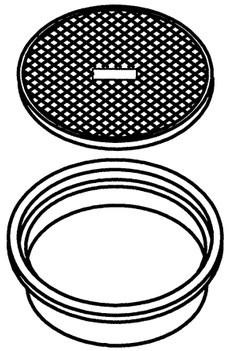

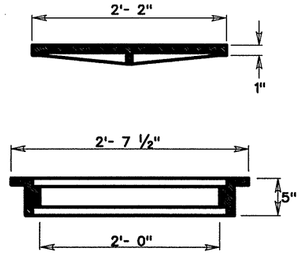

WEIGHT-174 LBS.(MIN.)

RING & COVER DETAILS (STEEL)
(SUBSIDIARY)

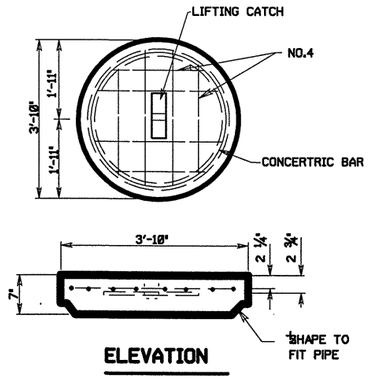

ELEVATION

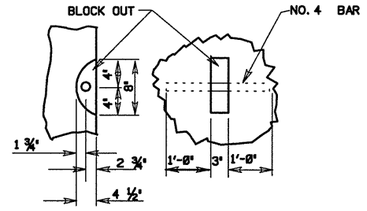

LIFTING CATCH

CONCRETE PIPE RISER COVER
OPTIONAL PRECAST CONCRETE LIFT-OFF COVER
(SUBSIDIARY)

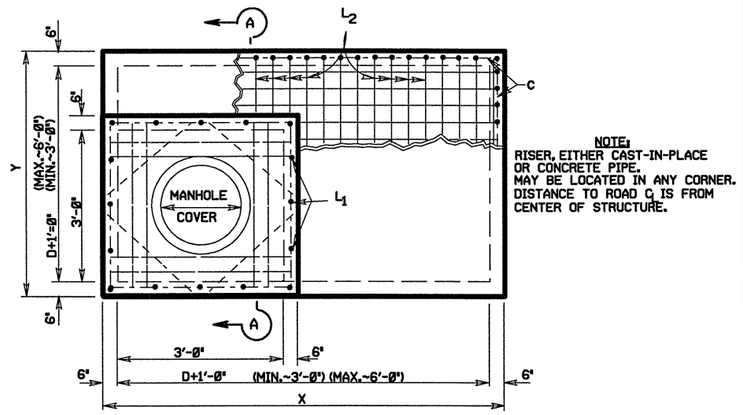

NOTE:
RISER, EITHER CAST-IN-PLACE OR CONCRETE PIPE. MAY BE LOCATED IN ANY CORNER. DISTANCE TO ROAD C IS FROM CENTER OF STRUCTURE.

PLAN

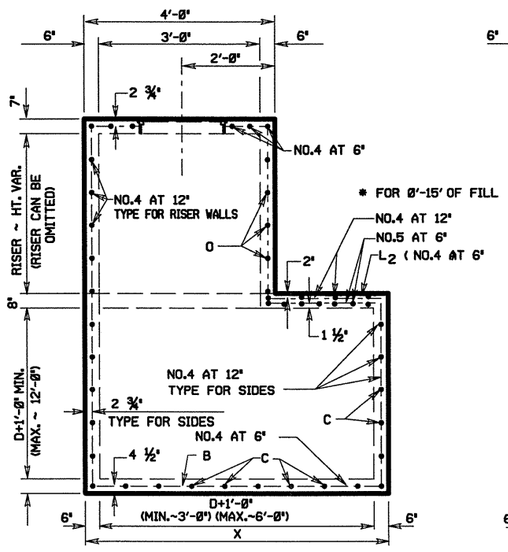

ELEVATION

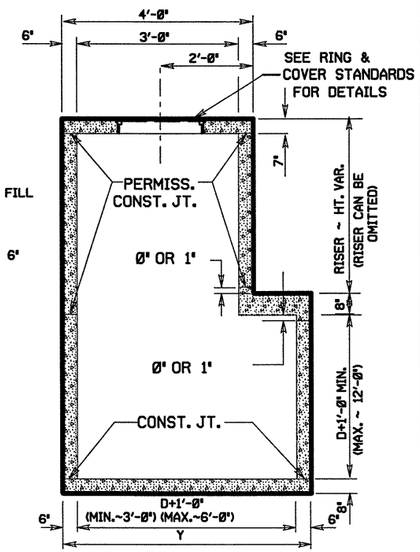

SECTION A-A

MANHOLE WITH CAST-IN-PLACE RISER

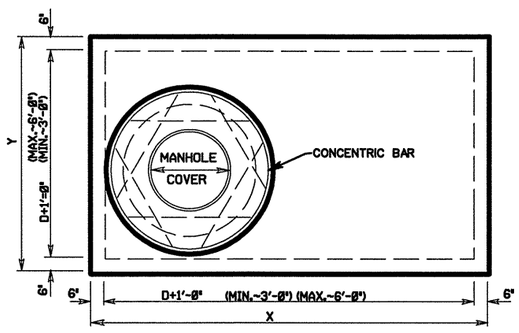

PLAN

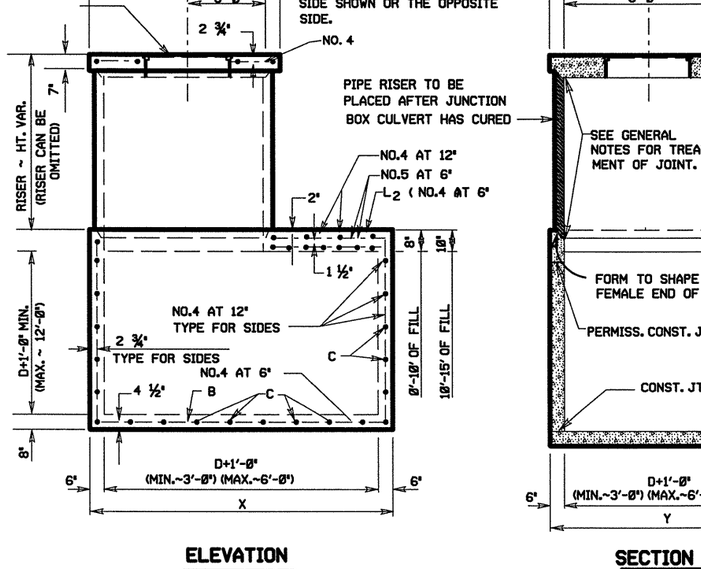

ELEVATION

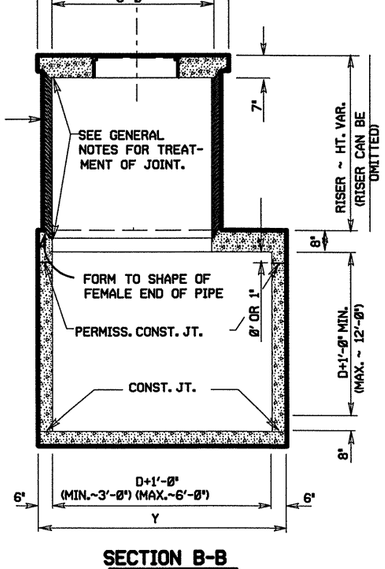

SECTION B-B

OPTIONAL MANHOLE WITH PIPE RISER

GENERAL NOTES

UNLESS OTHERWISE SHOWN IF THE PLANS. PAYMENT WILL BE MADE FOR EACH MANHOLE OF THE TYPE M.

EXPOSED EDGES SHALL BE CHAMFERED 3/4".

ALTERNATE DESIGN DRAWINGS BEARING THE SEAL OF A REGISTERED PROFESSIONAL ENGINEER WILL BE ACCEPLTABLE FOR PRECASTT CONSTRUCTION OF MANHOLES

SHOP DRAWINGS WILL NOT BE REQUIRED.

THE CONTRACTOR MAY WITH THE APPROVAL OF THE ENGINEER FURNISH MANHOLES OF EQUIVALENT STRUCTURAL DESIGN.

IN AREAS OF CONFLICT BETWEEN REINFORCING STEEL. BLOCK-OUTS PIPES, ANCHOR BOLTS OR OTHER REINFORCING STEEL. THE REINFORCEMENT SHALL BE BENT OR ADJUSTED TO CLEAR AS DIRECTED BY THE ENGINEER.

THE RISER MAY BE CONSTRUCTED OF REINFORCED CONCRETE AS SHOWN OR OF REINFORCED CONCRETE PIPE, CLASS III, IN ACCORDANCE WITH ASTM DESIGNATION C-76. IF PIPEIS USED, JOINTS SHALL CONFORM TO THE ITEM "REINFORCED CONCRETE PIPE CULVERTS". PRECAST CONCRETE LIFT OFF COVER MAY BE SUBSTITUTED FOR "RING AND COVER".

CONNETING PIPES SHOULD WITHIN 10 OF NORMAL TO INLET GRATE IF NECESSARY. PIPE ELBOW OR CURBED APPROACH ALIGNMENT SHOULD BE USED TO STAY WITHIN THIS LIMIT.

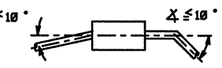

PIPES MAY ENTER OR ALL WALLS. THE MAXIMUM LEGTH OF PIPE THAT CAN BE ACCOMODATED IS 60". MORE THAN ONE PIPE MAY ENTER A SIDE SUBJECT TO THE MAXIMUM BOX DIMENSIONS SHOWN. THE CLEAR DISTANCE BETWEEN ADJACEMENT PIPES SHOULD BE 9" MINIMUM.

© TXDOT 2003

PHARR DISTRICT STANDARD

TEXAS DEPARTMENT OF TRANSPORTATION

TYPE "M" MANHOLE (JUNCTION BOX WITH ACCESS)

REV. 5/03 **MANHOLE2.DGN**

FED.RD. DIV.NO.	PROJECT NO.		FILE NO.			SHEET NO.
6						675
STATE	STATE DIST.NO.	COUNTY	CONT.	SECT.	JOB	HIGHWAY NO.
TEXAS	21	HIDALGO	0255	08	091	US 281

N.T.S.

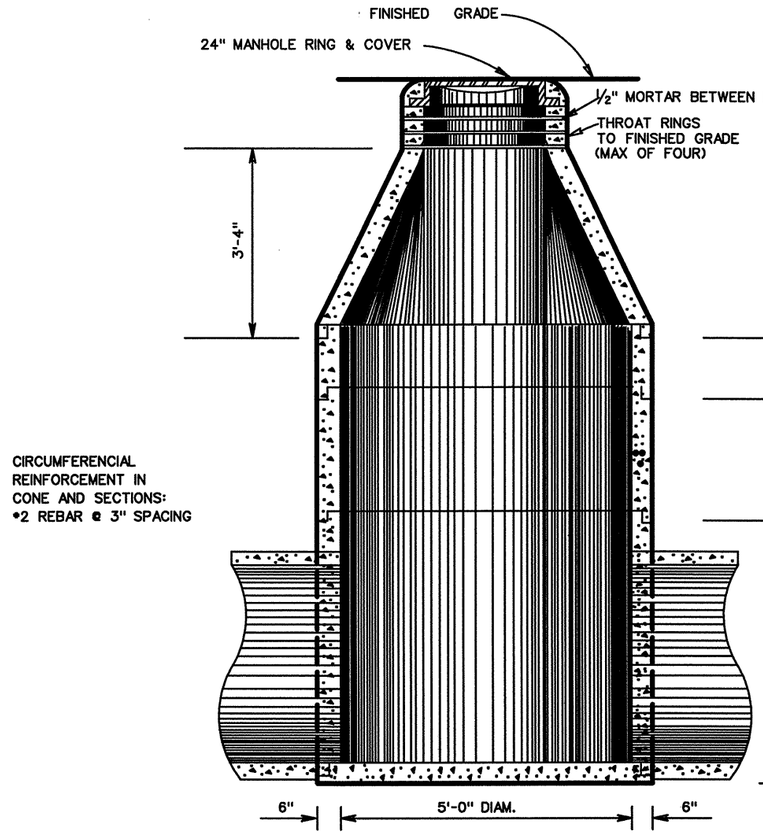

TY "A1"

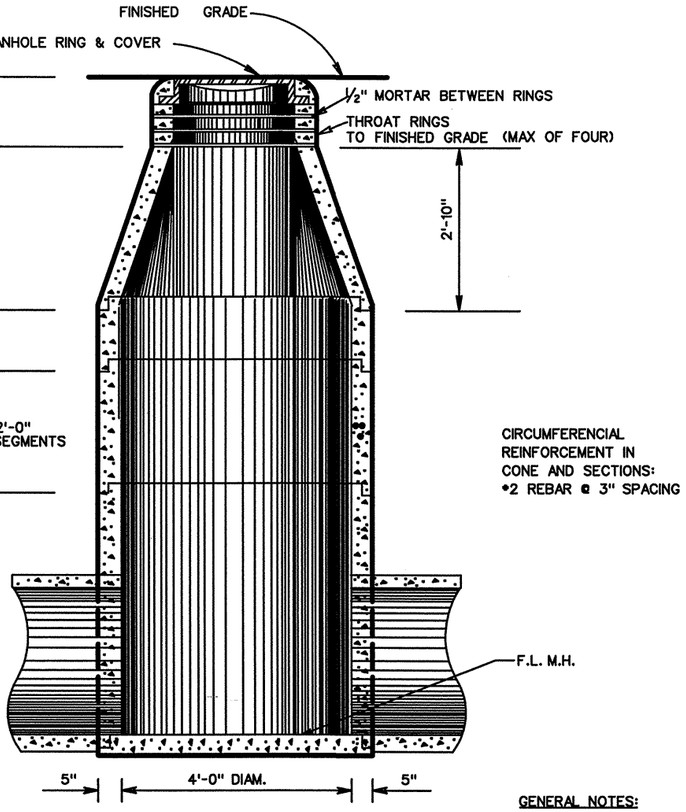

TY "A"

CIRCUMFERENCIAL REINFORCEMENT IN CONE AND SECTIONS: #2 REBAR @ 3" SPACING

VAR.

1'-0"

VAR.

NOTE: CAN USE MULTIPLE 2'-0" PRECAST SEGMENTS

4'-0"

CIRCUMFERENCIAL REINFORCEMENT IN CONE AND SECTIONS: #2 REBAR @ 3" SPACING

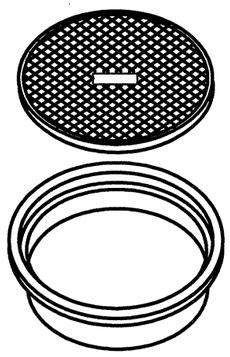

LID			RING		
"A"	"B"	WEIGHT	"C"	"D"	"H"
2'-2"	1"	174 lbs. (min)	2'-0"	2'-7½"	5"

RING & COVER DETAILS
(FOR MANHOLE TY "A" AND "A1")
(SUBSIDIARY)

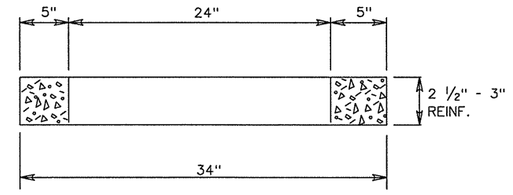

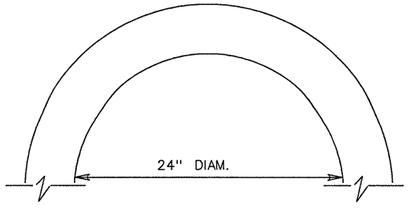

REINF. CONC. THROAT RING

N.T.S.

GENERAL NOTES:

FOR MANHOLES LOCATED WITHIN PAVED PORTIONS OF THE ROADWAY, THE COVER SHALL BE OF A TYPE THAT CAN BE BOLTED TO THE RING.

RINGS AND COVERS OF SLIGHTLY DIFFERENT DIMENSIONS BUT APPROXIMATELY THE SAME WEIGHT MAY BE SUBSTITUTED IF APPROVED BY THE ENGINEER.

CONCRETE STRENGTH: 4,000 P.S.I. MIN.

THE CONTRACTOR MAY WITH THE APPROVAL OF THE ENGINEER FURNISH MANHOLES OF EQUIVALENT STRUCTURAL DESIGN.

ALTERNATE DESIGN DRAWINGS BEARING THE SEAL OF A REGISTERED ENGINEER WILL BE ACCEPTABLE FOR PRECAST CONSTRUCTION OF MANHOLES.

© TxDOT 2003

PHARR DISTRICT STANDARD

TEXAS DEPARTMENT OF TRANSPORTATION

TYPE "A" & TYPE "A1" MANHOLE (COMPLETE)

REV. 4/02

MANHOLE1.DGN

FED.RD. DIV.NO.	PROJECT NO.	FILE NO.				SHEET NO.
6						676
STATE	STATE DIST.NO.	COUNTY	CONT.	SECT.	JOB	HIGHWAY NO.
TEXAS	21	HIDALGO	0255	08	091	US 281

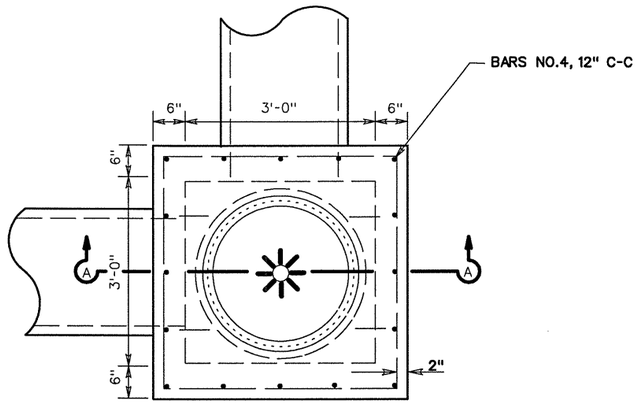

PLAN VIEW

(TO BE PAID UNDER ITEM 479 "ADJUST INLET (JCT BOX)"

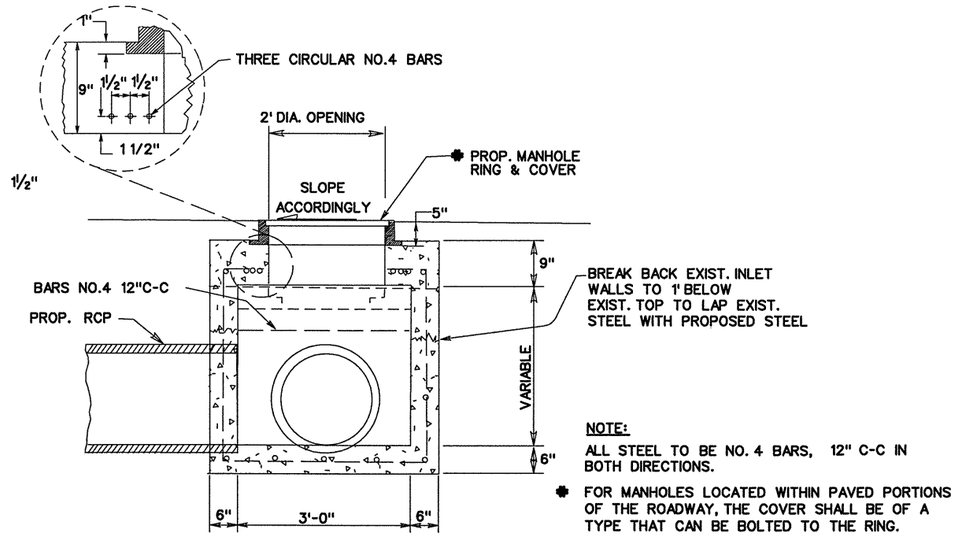

NOTE:

ALL STEEL TO BE NO. 4 BARS, 12" C-C IN BOTH DIRECTIONS.

* FOR MANHOLES LOCATED WITHIN PAVED PORTIONS OF THE ROADWAY, THE COVER SHALL BE OF A TYPE THAT CAN BE BOLTED TO THE RING.

SECTION A-A
ADJUST INLET (JUNCT. BOX)

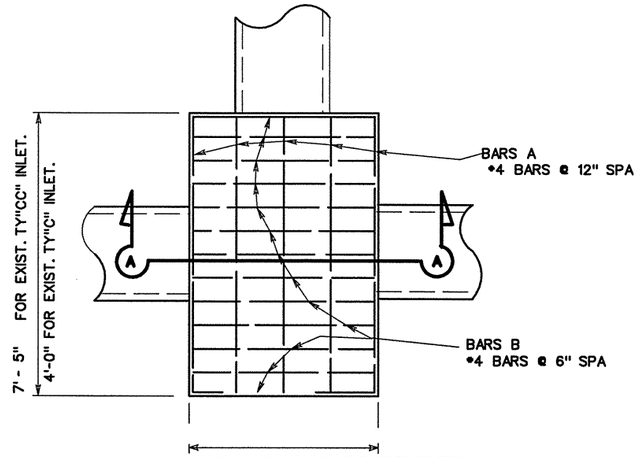

PLAN

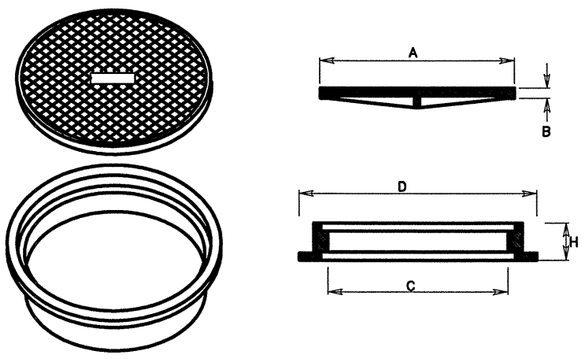

LID			RING		
"A"	"B"	WEIGHT	"C"	"D"	"H"
2'-2"	1"	174 lbs. (min)	2'-0"	2'-7½"	5"

RING & COVER DETAILS
(FOR MANHOLE TY "A" AND "A1")
(NON-PAY)

NOTES: RINGS AND COVERS OF SLIGHTLY DIFFERENT DIMENSIONS BUT APPROXIMATELY THE SAME WEIGHT MAY BE SUBSTITUTED IF APPROVED BY THE ENGINEER.

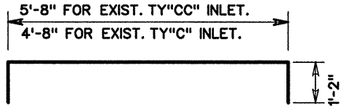

BARS A

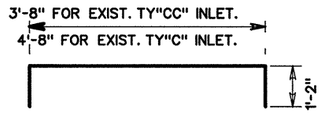

BARS B

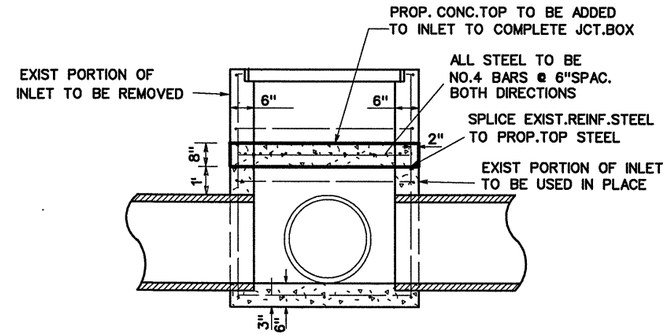

EXIST TY "C" OR TY "CC" INLET TO BE CONVERTED TO JCT. BOX

SECTION A-A
ADJ. INLET (CAP)

© TxDOT 2002

PHARR DISTRICT STANDARD

TEXAS DEPARTMENT OF TRANSPORTATION

INLET AND MANHOLE CAPPING DETAIL

REV. 4/02 CAPDET.DGN

ED.RD. DIV.NO.	FILE NO.		PROJECT NO.			SHEET NO.
6						677
STATE	STATE DIST.NO.	COUNTY	CONT.	SECT.	JOB	HIGHWAY NO.
TEXAS	21	HIDALGO	0255	08	091	US 281

BOX DATA

SECTION DIMENSIONS					Fill Height	M (Min)	REINFORCING (in ²/ft) ②								Lift Weight (Tons) ①	Governing ASTM Standard
S (ft)	H (ft)	T_T (in)	T_B (in)	T_S (in)	(ft)	(in)	A_{S1}	A_{S2}	A_{S3}	A_{S4}	A_{S7}	A_{S8}	A_{S5}	A_{S6}		
7	4	8	8	8	* 2	–	0.32	0.45	0.24	0.19	0.19	0.19	0.19	0.19	10.4	C 850
7	4	8	8	8	2	32	0.30	0.34	0.25	0.19	–	–	–	–	10.4	C 789
7	4	8	8	8	3	27	0.21	0.23	0.21	0.19	–	–	–	–	10.4	C 789
7	4	8	8	8	4	27	0.19	0.20	0.20	0.19	–	–	–	–	10.4	C 789
7	4	8	8	8	5	26	0.19	0.20	0.21	0.19	–	–	–	–	10.4	C 789
7	4	8	8	8	6	26	0.19	0.20	0.21	0.19	–	–	–	–	10.4	C 789
7	4	8	8	8	8	26	0.20	0.22	0.23	0.19	–	–	–	–	10.4	C 789
7	4	8	8	8	10	25	0.23	0.25	0.26	0.19	–	–	–	–	10.4	C 789
7	4	8	8	8	12	25	0.25	0.29	0.29	0.19	–	–	–	–	10.4	C 789
7	4	8	8	8	14	25	0.28	0.32	0.33	0.19	–	–	–	–	10.4	C 789
7	4	8	8	8	16	25	0.31	0.36	0.36	0.19	–	–	–	–	10.4	C 789
7	4	8	8	8	18	25	0.34	0.39	0.40	0.19	–	–	–	–	10.4	C 789
7	5	8	8	8	* 2	–	0.29	0.48	0.27	0.19	0.20	0.19	0.19	0.19	11.2	C 850
7	5	8	8	8	2	32	0.27	0.37	0.28	0.19	–	–	–	–	11.2	C 789
7	5	8	8	8	3	28	0.19	0.26	0.23	0.19	–	–	–	–	11.2	C 789
7	5	8	8	8	6	27	0.19	0.22	0.23	0.19	–	–	–	–	11.2	C 789
7	5	8	8	8	8	26	0.19	0.24	0.25	0.19	–	–	–	–	11.2	C 789
7	5	8	8	8	10	25	0.20	0.27	0.29	0.19	–	–	–	–	11.2	C 789
7	5	8	8	8	12	25	0.22	0.31	0.32	0.19	–	–	–	–	11.2	C 789
7	5	8	8	8	14	25	0.25	0.35	0.36	0.19	–	–	–	–	11.2	C 789
7	5	8	8	8	16	25	0.27	0.38	0.40	0.19	–	–	–	–	11.2	C 789
7	5	8	8	8	18	25	0.30	0.42	0.43	0.19	–	–	–	–	11.2	C 789
7	6	8	8	8	* 2	–	0.27	0.51	0.29	0.19	0.20	0.19	0.20	0.19	12.0	C 850
7	6	8	8	8	2	38	0.24	0.39	0.31	0.19	–	–	–	–	12.0	C 789
7	6	8	8	8	3	31	0.19	0.27	0.26	0.19	–	–	–	–	12.0	C 789
7	6	8	8	8	4	29	0.19	0.24	0.25	0.19	–	–	–	–	12.0	C 789
7	6	8	8	8	5	28	0.19	0.23	0.25	0.19	–	–	–	–	12.0	C 789
7	6	8	8	8	6	27	0.19	0.24	0.25	0.19	–	–	–	–	12.0	C 789
7	6	8	8	8	8	26	0.19	0.26	0.27	0.19	–	–	–	–	12.0	C 789
7	6	8	8	8	10	26	0.19	0.29	0.30	0.19	–	–	–	–	12.0	C 789
7	6	8	8	8	12	26	0.20	0.33	0.34	0.19	–	–	–	–	12.0	C 789
7	6	8	8	8	14	25	0.22	0.36	0.38	0.19	–	–	–	–	12.0	C 789
7	6	8	8	8	16	25	0.25	0.40	0.42	0.19	–	–	–	–	12.0	C 789
7	6	8	8	8	18	25	0.27	0.44	0.46	0.19	–	–	–	–	12.0	C 789
7	7	8	8	8	* 2	–	0.25	0.53	0.32	0.19	0.23	0.19	0.21	0.19	12.8	C 850
7	7	8	8	8	2	55	0.22	0.42	0.33	0.19	–	–	–	–	12.8	C 789
7	7	8	8	8	3	38	0.19	0.29	0.27	0.19	–	–	–	–	12.8	C 789
7	7	8	8	8	6	33	0.19	0.25	0.27	0.19	–	–	–	–	12.8	C 789
7	7	8	8	8	8	28	0.19	0.27	0.29	0.19	–	–	–	–	12.8	C 789
7	7	8	8	8	10	27	0.19	0.30	0.32	0.19	–	–	–	–	12.8	C 789
7	7	8	8	8	12	27	0.19	0.34	0.36	0.19	–	–	–	–	12.8	C 789
7	7	8	8	8	14	27	0.21	0.37	0.39	0.19	–	–	–	–	12.8	C 789
7	7	8	8	8	16	27	0.23	0.41	0.43	0.19	–	–	–	–	12.8	C 789
7	3	8	7	7	* 2	–	0.35	0.43	0.28	0.17	0.19	0.17	0.19	0.19	8.6	C 850
7	3	8	8	8	18	23	0.37	0.27	0.28	0.19	–	–	–	–	9.6	C 789

⑤

Note: ASTM C850 design shall be used for all direct traffic culverts.

① For Box Length = 8'-0"

② A_{S1} thru A_{S4}, A_{S7} and A_{S8} are minimum required areas of reinforcement per linear foot of box length. A_{S6} and A_{S5} are minimum required areas of reinforcement per linear foot of box width.

⑤ These designs were created by TxDOT and are not shown in the ASTM Specifications.

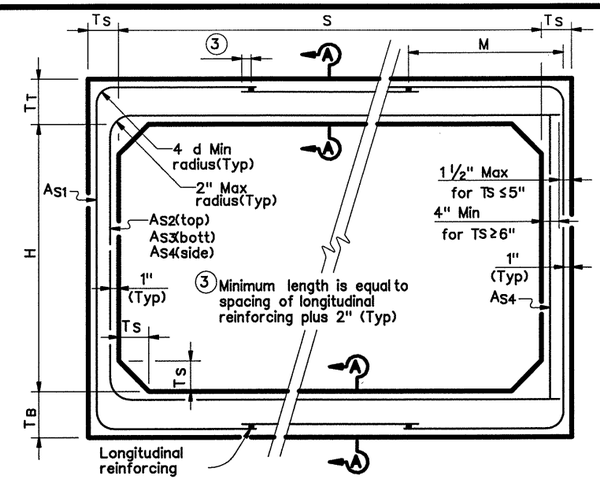

C789 CORNER OPTION "A"

C789 CORNER OPTION "B"

ASTM C789 STANDARD

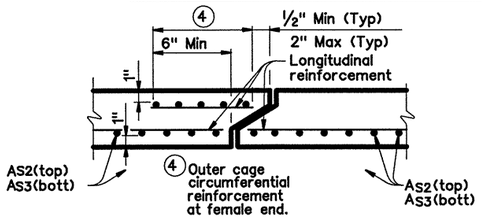

SECTION A-A

(TOP AND BOTTOM SLAB JOINT REINFORCEMENT)

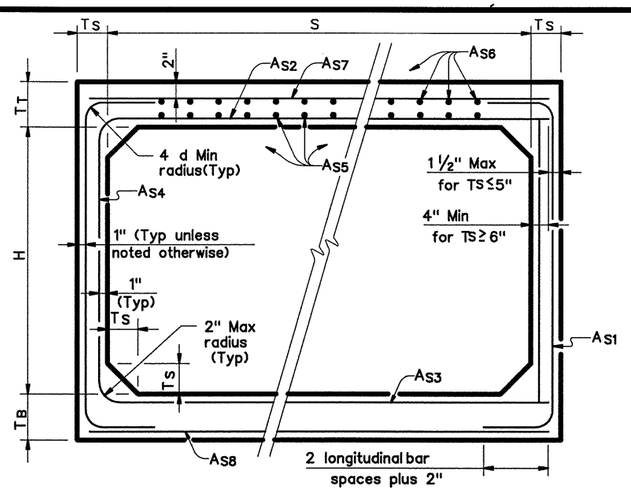

C850 CORNER OPTION "A"

C850 CORNER OPTION "B"

ASTM C850 STANDARD

GENERAL NOTES:

Designs shown conform to ASTM C789 or ASTM C850. Refer to ASTM C789 or ASTM C850 for information or details not shown.

For ASTM C789 designs, all reinforcing steel shall have a minimum specified yield stress of 65 ksi.

For ASTM C850 designs, all reinforcing steel shall have a minimum specified yield stress of 60 ksi.

All concrete shall be Class "H" Concrete with a minimum 28 day compressive strength of 5,000 psi.

See SCP-MD standard sheet for miscellaneous details and notes not shown.

Designed for HS20 loading and to the maximum fill height shown.

In lieu of furnishing the designs shown on this sheet, the contractor may furnish an alternate design that is equal to or exceeds the box design for the design fill height in the table. Shop plans for alternate designs shall be submitted in accordance with Item "Precast Concrete Structures".

HS20 LOADING

Texas Department of Transportation
Bridge Division

SINGLE BOX CULVERTS PRECAST
7'-0" SPAN

SCP-7

FILE: scp07ste.dgn	DN: GAF	CK: LMW	DW: BWH	CK: LDS
© TxDOT September 2000	DISTRICT	FEDERAL AID PROJECT		SHEET
REVISIONS	21			678
	COUNTY	CONTROL	SECT	JOB	HIGHWAY
	HIDALGO	0255	08	091	US 281

BOX DATA

SECTION DIMENSIONS					Fill Height	M (Min)	REINFORCING (in ²/ft) ②								Lift Weight (Tons) ①	Governing ASTM Standard
S (ft)	H (ft)	T_T (in)	T_B (in)	T_S (in)	(ft)	(in)	A_{S1}	A_{S2}	A_{S3}	A_{S4}	A_{S7}	A_{S8}	A_{S5}	A_{S6}		
5	3	8	7	6	* 2	–	0.22	0.41	0.22	0.14	0.19	0.17	0.19	0.19	6.6	C 850
5	3	6	6	6	2	23	0.26	0.28	0.23	0.14	–	–	–	–	5.7	C 789
5	3	6	6	6	3	21	0.17	0.18	0.18	0.14	–	–	–	–	5.7	C 789
5	3	6	6	6	4	21	0.14	0.15	0.15	0.14	–	–	–	–	5.7	C 789
5	3	6	6	6	5	20	0.14	0.14	0.15	0.14	–	–	–	–	5.7	C 789
5	3	6	6	6	6	20	0.14	0.15	0.15	0.14	–	–	–	–	5.7	C 789
5	3	6	6	6	8	20	0.14	0.16	0.16	0.14	–	–	–	–	5.7	C 789
5	3	6	6	6	10	20	0.15	0.18	0.19	0.14	–	–	–	–	5.7	C 789
5	3	6	6	6	12	20	0.17	0.20	0.21	0.14	–	–	–	–	5.7	C 789
5	3	6	6	6	14	20	0.19	0.23	0.23	0.14	–	–	–	–	5.7	C 789
5	3	6	6	6	16	19	0.21	0.26	0.26	0.14	–	–	–	–	5.7	C 789
5	3	6	6	6	18	19	0.23	0.28	0.29	0.14	–	–	–	–	5.7	C 789
5	4	8	7	6	* 2	–	0.19	0.44	0.24	0.14	0.19	0.17	0.21	0.19	7.2	C 850
5	4	6	6	6	2	28	0.23	0.32	0.27	0.14	–	–	–	–	6.3	C 789
5	4	6	6	6	3	23	0.15	0.20	0.21	0.14	–	–	–	–	6.3	C 789
5	4	6	6	6	6	22	0.14	0.16	0.17	0.14	–	–	–	–	6.3	C 789
5	4	6	6	6	8	20	0.14	0.17	0.18	0.14	–	–	–	–	6.3	C 789
5	4	6	6	6	10	20	0.14	0.20	0.21	0.14	–	–	–	–	6.3	C 789
5	4	6	6	6	12	20	0.14	0.22	0.23	0.14	–	–	–	–	6.3	C 789
5	4	6	6	6	14	20	0.16	0.25	0.26	0.14	–	–	–	–	6.3	C 789
5	4	6	6	6	16	19	0.18	0.28	0.29	0.14	–	–	–	–	6.3	C 789
5	4	6	6	6	18	19	0.20	0.31	0.31	0.14	–	–	–	–	6.3	C 789
5	5	8	7	6	* 2	–	0.16	0.46	0.26	0.14	0.19	0.17	0.22	0.19	7.8	C 850
5	5	6	6	6	2	41	0.20	0.35	0.29	0.14	–	–	–	–	6.9	C 789
5	5	6	6	6	3	29	0.14	0.22	0.23	0.14	–	–	–	–	6.9	C 789
5	5	6	6	6	4	25	0.14	0.18	0.19	0.14	–	–	–	–	6.9	C 789
5	5	6	6	6	5	24	0.14	0.17	0.18	0.14	–	–	–	–	6.9	C 789
5	5	6	6	6	6	22	0.14	0.17	0.18	0.14	–	–	–	–	6.9	C 789
5	5	6	6	6	8	22	0.14	0.18	0.19	0.14	–	–	–	–	6.9	C 789
5	5	6	6	6	10	21	0.14	0.21	0.22	0.14	–	–	–	–	6.9	C 789
5	5	6	6	6	12	21	0.14	0.23	0.24	0.14	–	–	–	–	6.9	C 789
5	5	6	6	6	14	21	0.14	0.26	0.27	0.14	–	–	–	–	6.9	C 789
5	5	6	6	6	16	21	0.16	0.29	0.30	0.14	–	–	–	–	6.9	C 789
5	5	6	6	6	18	20	0.17	0.32	0.33	0.14	–	–	–	–	6.9	C 789
5	2	8	7	6	* 2	–	0.24	0.33	0.25	0.14	0.19	0.17	0.19	0.19	6.0	C 850 ⑤
5	2	6	6	6	18	23	0.27	0.19	0.19	0.14	–	–	–	–	5.1	C 789 ⑤

Note: ASTM C850 design shall be used for all direct traffic culverts.

① For Box Length = 8'-0"

② A_{S1} thru A_{S4}, A_{S7} and A_{S8} are minimum required areas of reinforcement per linear foot of box length. A_{S6} and A_{S5} are minimum required areas of reinforcement per linear foot of box width.

⑤ These designs were created by TxDOT and are not shown in the ASTM Specifications.

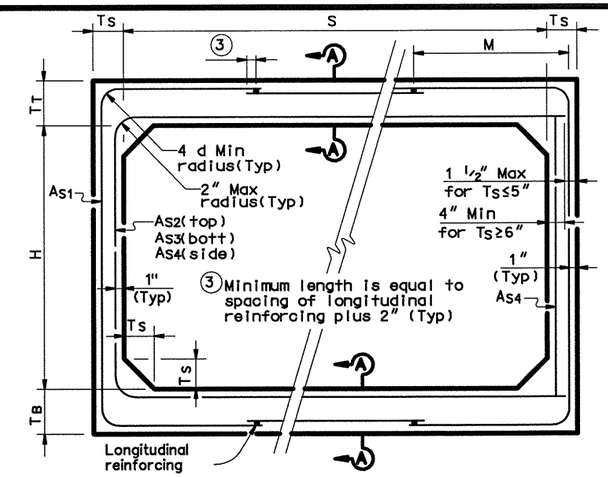

C789 CORNER OPTION "A"

C789 CORNER OPTION "B"

ASTM C789 STANDARD

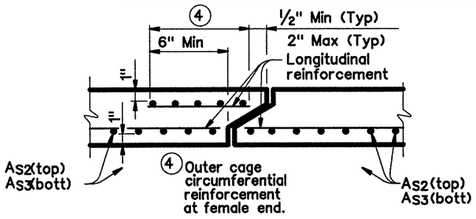

SECTION A-A

(TOP AND BOTTOM SLAB JOINT REINFORCEMENT)

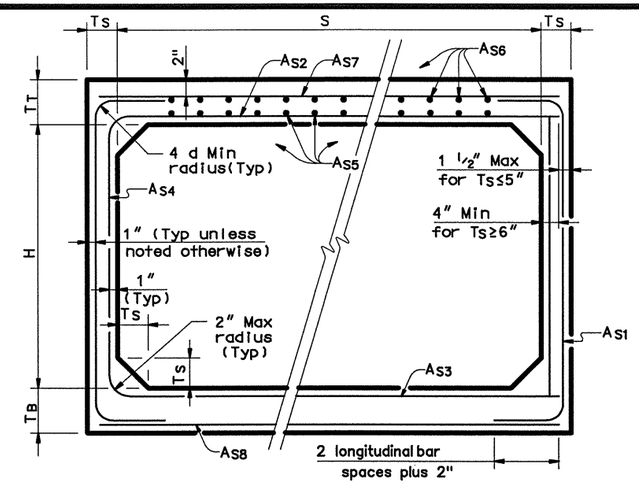

C850 CORNER OPTION "A"

C850 CORNER OPTION "B"

ASTM C850 STANDARD

GENERAL NOTES:

Designs shown conform to ASTM C789 or ASTM C850. Refer to ASTM C789 or ASTM C850 for information or details not shown.

For ASTM C789 designs, all reinforcing steel shall have a minimum specified yield stress of 65 ksi.

For ASTM C850 designs, all reinforcing steel shall have a minimum specified yield stress of 60 ksi.

All concrete shall be Class "H" Concrete with a minimum 28 day compressive strength of 5,000 psi.

See SCP-MD standard sheet for miscellaneous details and notes not shown.

Designed for HS20 loading and to the maximum fill height shown.

In lieu of furnishing the designs shown on this sheet, the contractor may furnish an alternate design that is equal to or exceeds the box design for the design fill height in the table. Shop plans for alternate designs shall be submitted in accordance with Item "Precast Concrete Structures".

HS20 LOADING

Texas Department of Transportation
Bridge Division

SINGLE BOX CULVERTS PRECAST 5'-0" SPAN

SCP-5

FILE: scp05ste.dgn	DN: GAF	CK: LMW	DW: BWH	CK: LDS
©TxDOT September 2000	DISTRICT	FEDERAL AID PROJECT		SHEET
REVISIONS	21			679
	COUNTY	CONTROL	SECT	JOB	HIGHWAY
	HIDALGO	0255	08	091	US 281

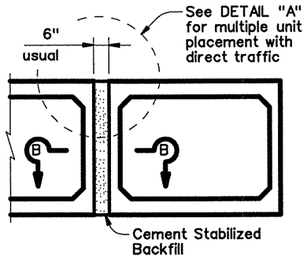

MULTIPLE UNIT PLACEMENT

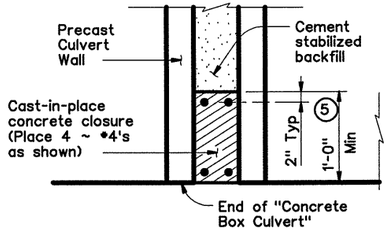

SECTION B-B

(Wall closure detail for interior walls that are cast full length)

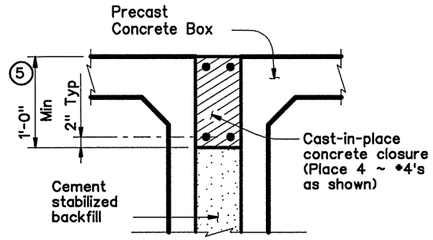

DETAIL "A"

(Wall closure detail for multiple units subject to direct traffic)

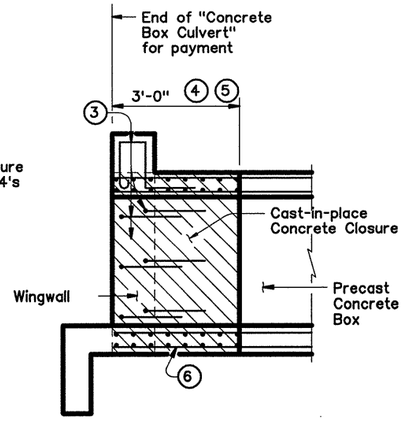

WINGWALL CONNECTION

(Also applies to Safety End Treatment)

1. 0" min to 5'-0" max. For T6 or C6 Rail, see T6-CM standard for additional details. For curbs without rail and greater than 1'-0" high, see ECD standard for additional details.
2. For curbs less than 1'-0" high, tilt Bars K or reduce bar height as necessary to maintain cover. For curbs less than 3" high, Bars K may be omitted.
3. Curb, Wingwall or Safety End Treatment reinforcing shall extend into concrete closure. Any reinforcing that does not fit into the closure shall be bent or trimmed as necessary.
4. Cast-in-place concrete closure shall be 3'-0" min. Boxes shall be cast short or broken back in the field. All reinforcing in the closure shall be the same size and spacing as in the precast box section. Except where shown otherwise, the cast-in-place closure shall be flush with the inside and outside faces of the precast box section.
5. For multiple unit placements the length of the closure for the interior walls may be adjusted as necessary. The length of the top slab, bottom slab, and exterior wall closure shall not be less than 3'-0". See Section B-B detail when interior walls are cast full length.
6. Precast box reinforcing shall extend a minimum of 2'-9" into concrete closure (Typ).
7. Bands matching the inside and outside face reinforcing shall be placed in the gaps of the top and bottom slabs. A band matching the outside face reinforcing of the wall shall be placed in the gaps of the walls (placed in the outside face only). The bands shall be tack welded to the exposed reinforcing at each point of contact.
8. For vehicle safety, curb heights shall be reduced, if necessary, to provide a maximum 3" projection above finished grade. No changes will be made in quantities and no additional compensation will be allowed for this work.

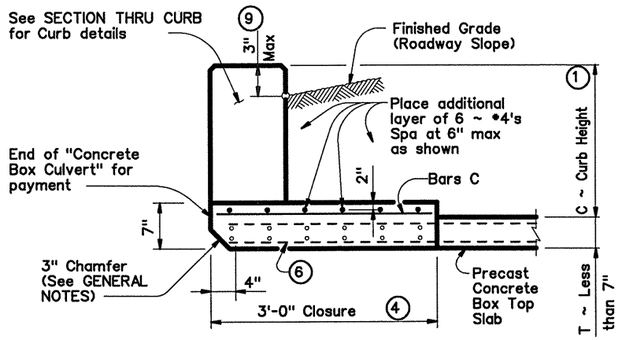

SECTION THRU TOP SLABS LESS THAN 7"

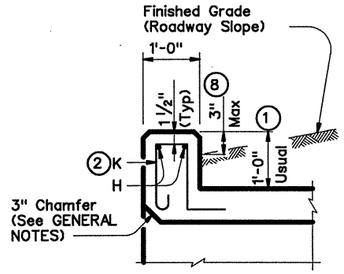

SECTION THRU CURB

QUANTITIES PER FOOT OF CURB	
Reinforcing Steel	4.18 Lb
Concrete	0.037 CY

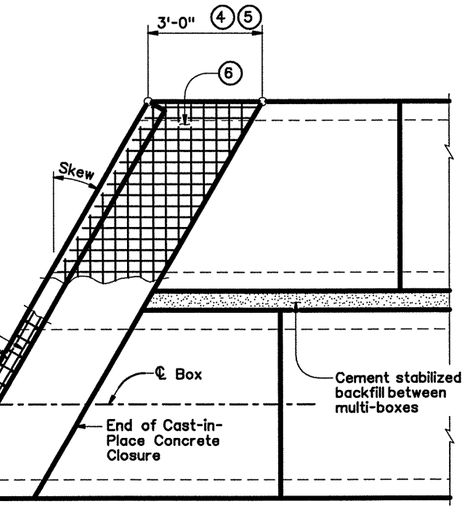

PLAN OF SKEWED ENDS

(Showing multi-box placement)

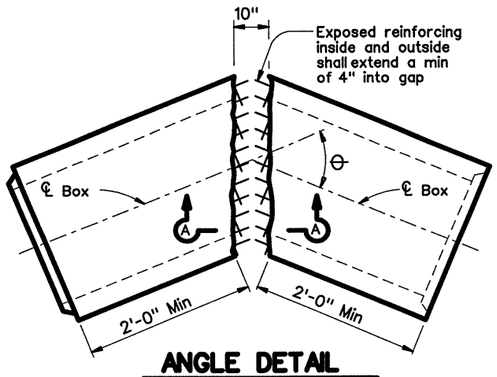

ANGLE DETAIL

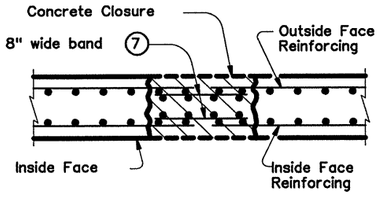

SECTION A-A

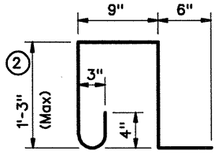

BARS K ~ #4
(Spa = 1'-0" Max)
(Length = 4'-3")

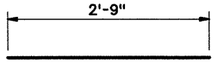

BARS C ~ #4
(Spa = 1'-0" Max)

GENERAL NOTES:

Designed according to current AASHTO Standard and Interim Specifications.
Designed for HS20 loading.
All closure concrete shall meet the specified 28 day compressive strength of the box and shall be placed according to the Item, "Concrete Structures".
All closures shall be flush with the inside and outside faces except where shown otherwise.
Any additional concrete required for the closures shall be considered as subsidiary to the Concrete Box Culvert.
Refer to the Single Box Culverts Precast standard for details not shown.
The bottom edge of the top slab closure shall be chamfered 3 inches at the entrance.
All curb concrete and reinforcing is considered part of the Box Culvert for payment.

HS20 LOADING

Texas Department of Transportation
Bridge Division

SINGLE BOX CULVERTS PRECAST MISCELLANEOUS DETAILS

SCP-MD

FILE: scpmdste.dgn	DN: GAF	CK: LMW	DW: BWH/TxDOT	CK: LDS
©TxDOT September 2000	DISTRICT	FEDERAL AID PROJECT		SHEET
REVISIONS	21			680
	COUNTY	CONTROL	SECT	JOB	HIGHWAY
	HIDALGO	0255	08	091	US 281

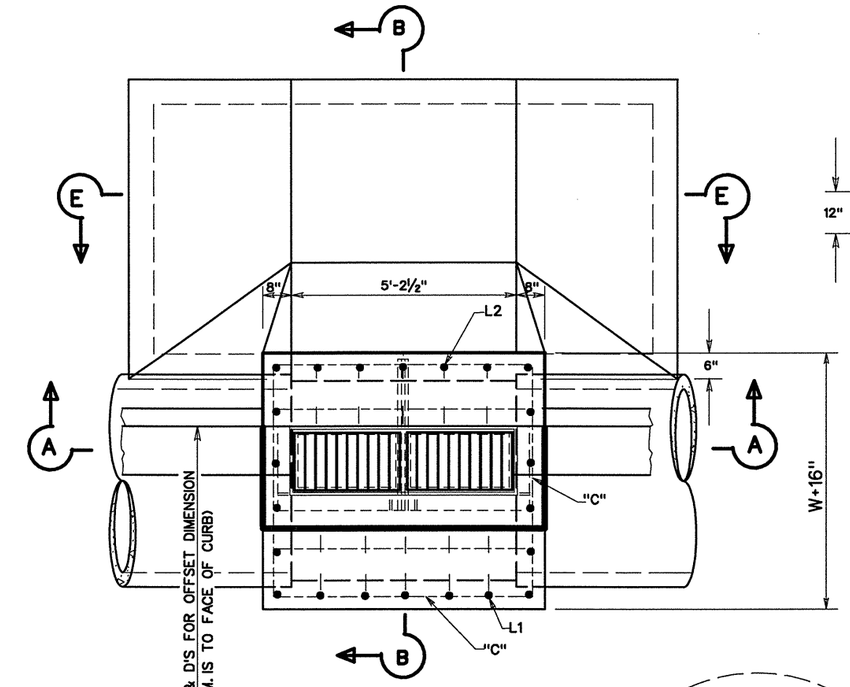

PLAN VIEW

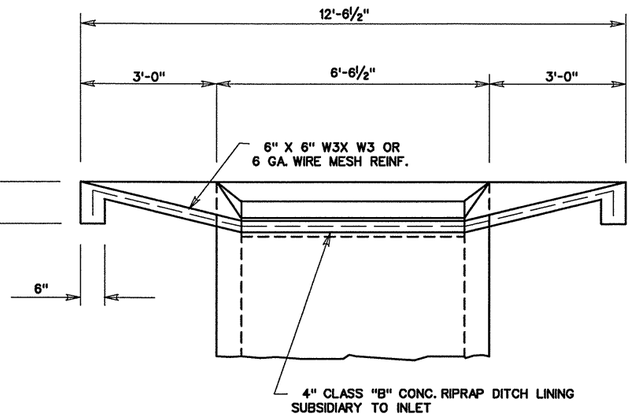

SECTION E-E

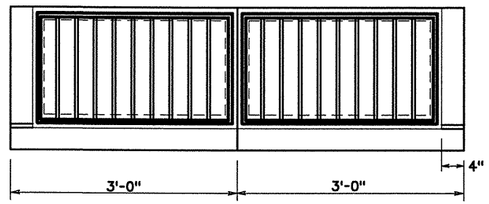

FRAMES AND GRATE TOP VIEW
TO BE SUBSIDIARY TO INLET ITEM

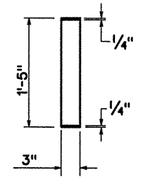

GRATE SECTION

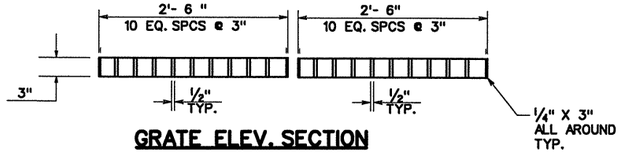

GRATE ELEV. SECTION

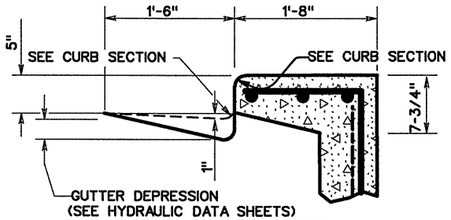

GUTTER DEPRESSION
(SEE HYDRAULIC DATA SHEETS)
TRANSITION NORMAL GUTTER SLOPE
TO INLET SLOPE IN APPROX. 10'.

CURB SECTION DETAIL

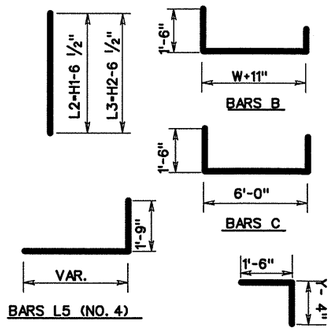

REINFORCING STEEL DETAILS

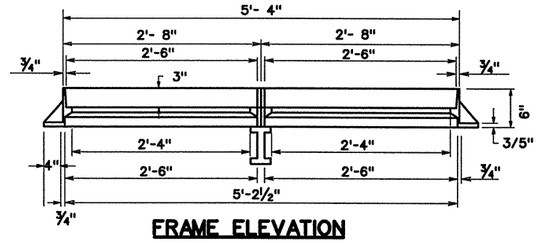

FRAME ELEVATION

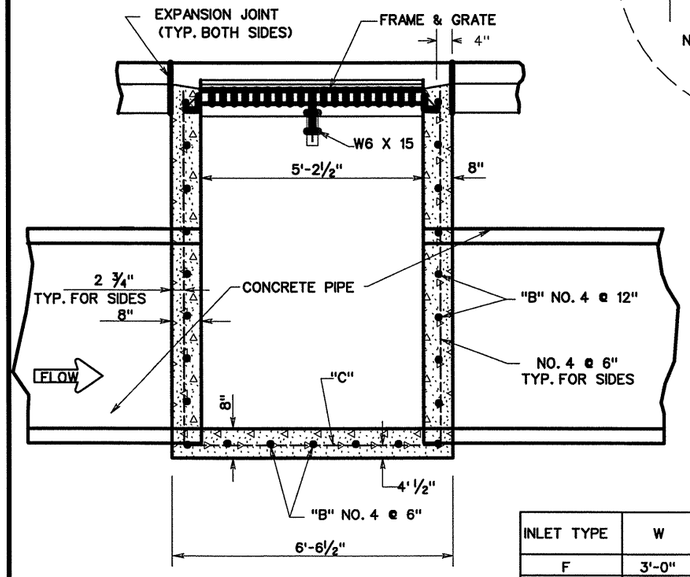

SECTION A-A

INLET TYPE	W	MAX PIPE SIZE ALLOW (DIA.)
F	3'-0"	24"
F-1	4'-0"	36"
F-2	5'-0"	48"
F-3	6'-0"	60"

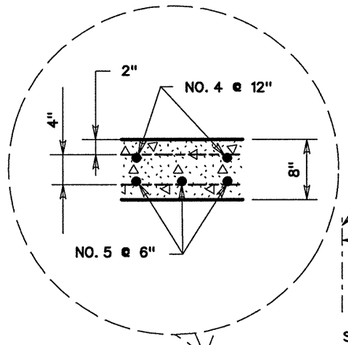

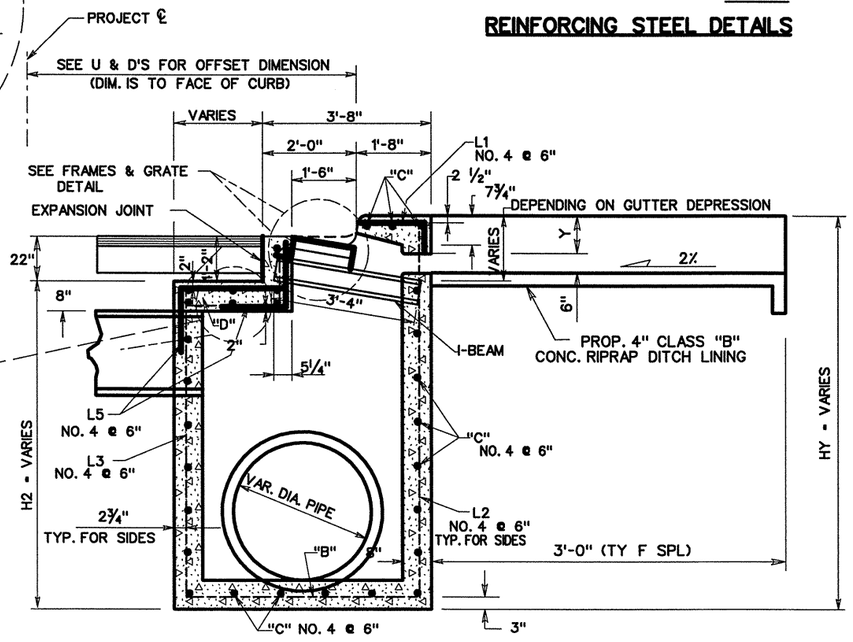

SECTION B-B

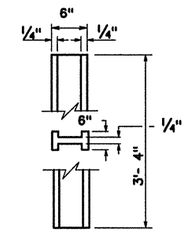

I-BEAM DETAILS
W 6 X 15

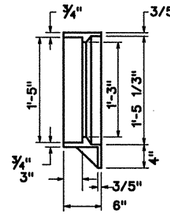

FRAME SECTION

NOTE: ALL REINFORCEMENT
BARS SHALL BE
GRADE 60.

© TxDOT 2002

PHARR DISTRICT STANDARD

TEXAS DEPARTMENT OF TRANSPORTATION

TY "F" INLET (SPL-1) DETAILS

REV. 4/02

INLETFSPL1.DGN

FED.RD. DIV.NO.	STATE AID PROJECT NO.		FILE NO.			SHEET NO.
6						681
STATE	STATE DIST.NO.	COUNTY	CONT.	SECT.	JOB	HIGHWAY NO.
TEXAS	21	HIDALGO	0255	08	091	US 281

N.T.S.

NOTE: RISER MAY BE LOCATED IN ANY CORNER ADJACENT TO BARRIER.

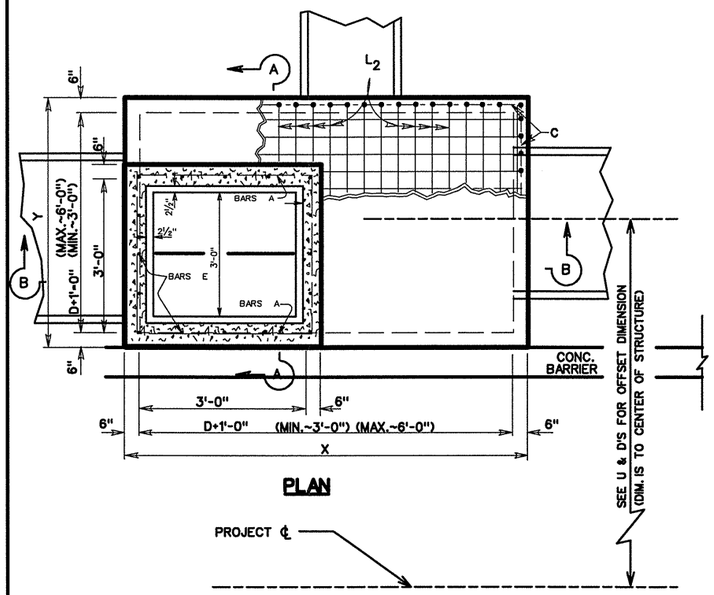

PLAN

PROJECT ℄

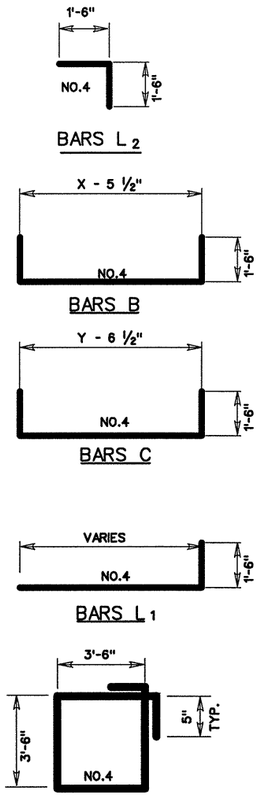

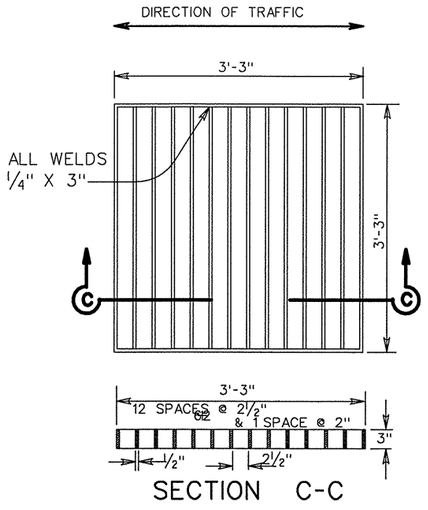

SECTION C-C

WELDED STEEL INLET GRATE

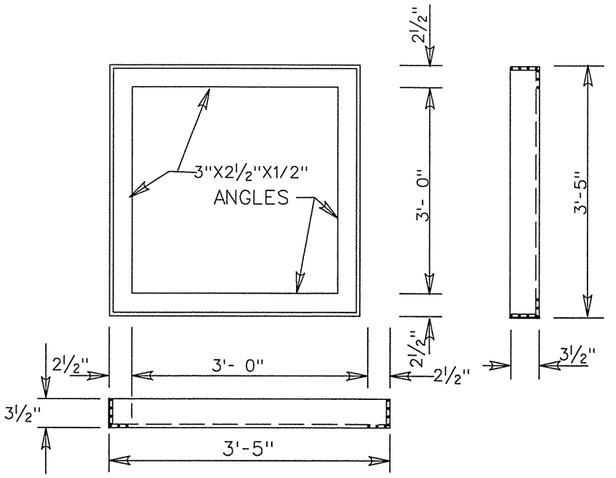

FRAME DETAIL

FRAME INLET GRATE TO BE SUBSIDIARY

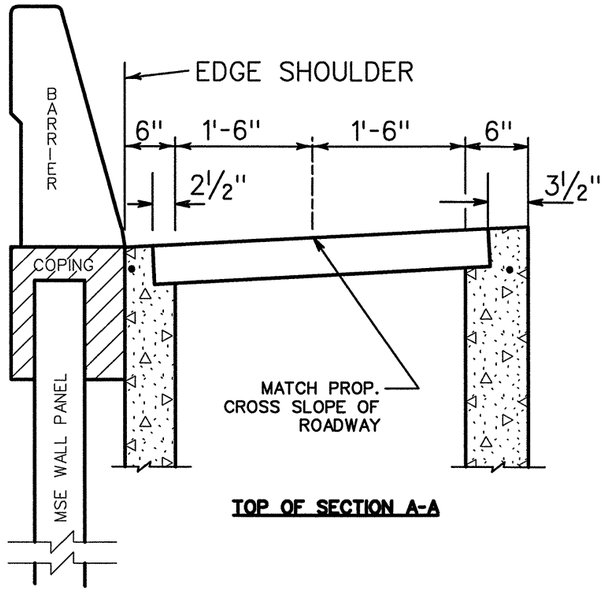

TOP OF SECTION A-A

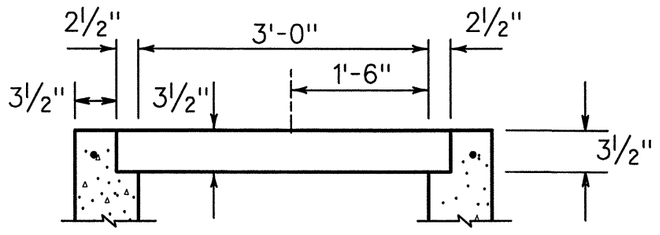

TOP OF SECTION B-B

GENERAL NOTES

UNLESS OTHERWISE SHOWN IN THE PLANS. PAYMENT WILL BE MADE FOR EACH TYPE "M" MANHOLE.
EXPOSED EDGES SHALL BE CHAMFERED 3/4".
ALTERNATE DESIGN DRAWINGS BEARING THE SEAL OF A REGISTERED PROFESSIONAL ENGINEER WILL BE ACCEPLTABLE FOR PRECAST CONSTRUCTION OF MANHOLES.

SHOP DRAWINGS WILL NOT BE REQUIRED.

THE CONTRACTOR MAY WITH THE APPROVAL OF THE ENGINEER FURNISH MANHOLES OF EQUIVALENT STRUCTURAL DESIGN.

IN AREAS OF CONFLICT BETWEEN REINFORCING STEEL AND BLOCK-OUTS, PIPES, ANCHOR BOLTS OR OTHER REINFORCING STEEL. THE REINFORCEMENT SHALL BE BENT OR ADJUSTED TO CLEAR THE CONFLICT AS DIRECTED BY THE ENGINEER.

THE RISER MAY BE CONSTRUCTED OF REINFORCED CONCRETE AS SHOWN OR OF REINFORCED CONCRETE PIPE, CLASS III, IN ACCORDANCE WITH ASTM DESIGNATION C-76. IF PIPE IS USED, JOINTS SHALL CONFORM TO THE ITEM "REINFORCED CONCRETE PIPE REQUIREMENTS AND SPECIFICATIONS". PRECAST CONCRETE LIFT OFF COVER MAY BE SUBSTITUTED FOR "RING AND COVER".

CONNECTING PIPES SHOULD ALIGN WITHIN 10° OF NORMAL TO INLET GRATE IF NECESSARY. PIPE ELBOW OR CURBED APPROACH ALIGNMENT SHOULD BE USED TO STAY WITHIN THIS LIMIT.

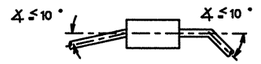

PIPES MAY ENTER ALL WALLS. THE MAXIMUM LENGTH OF PIPE THAT CAN BE ACCOMODATED IS 60". MORE THAN ONE PIPE MAY ENTER A SIDE, SUBJECT TO THE MAXIMUM BOX DIMENSIONS SHOWN. THE CLEAR DISTANCE BETWEEN ADJACENT PIPES SHOULD BE 9" MINIMUM.

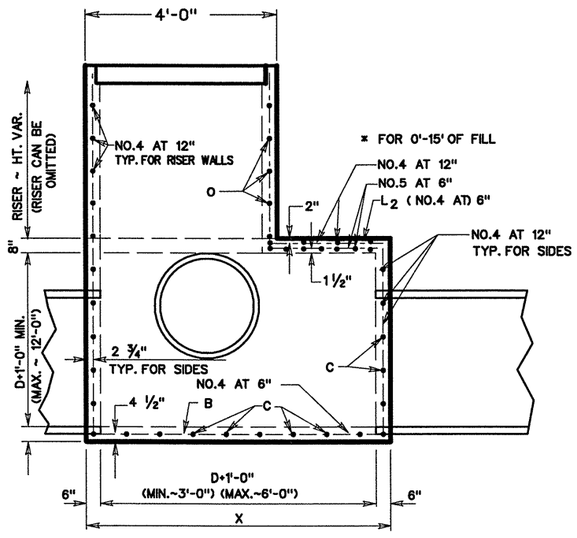

SECTION B-B

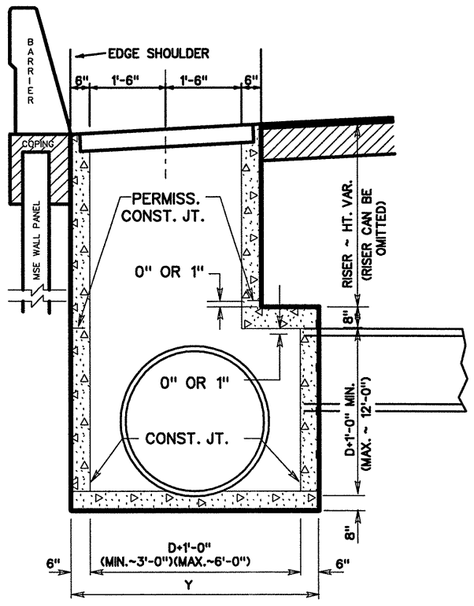

SECTION A-A

© TxDOT 2002

PHARR DISTRICT STANDARD

TEXAS DEPARTMENT OF TRANSPORTATION

INLET TYPE "L2" GRATED DETAILS

REV. 4/02

INLETL2.DGN

DIST.	COUNTY	SHEET NO.
21	HIDALGO	682

STATE	STATE DIST.NO.	COUNTY	CONT.	SECT.	JOB	HIGHWAY NO.
TEXAS	21	HIDALGO	0255	08	091	US 281

N.T.S.

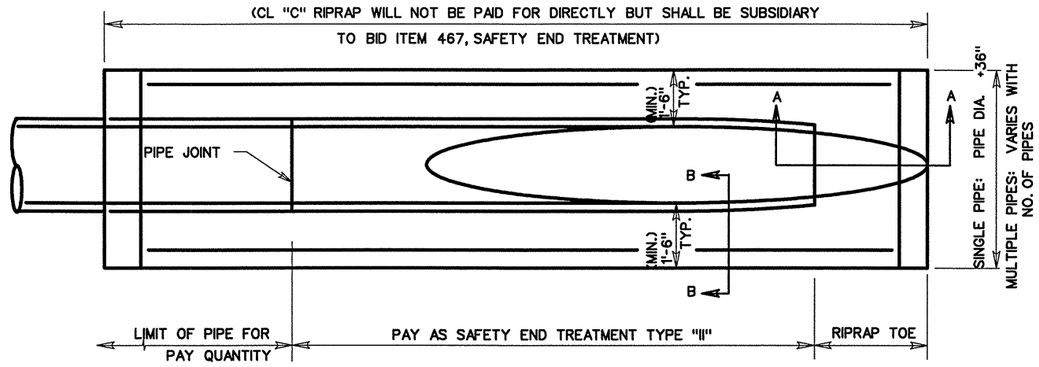

PLAN VIEW

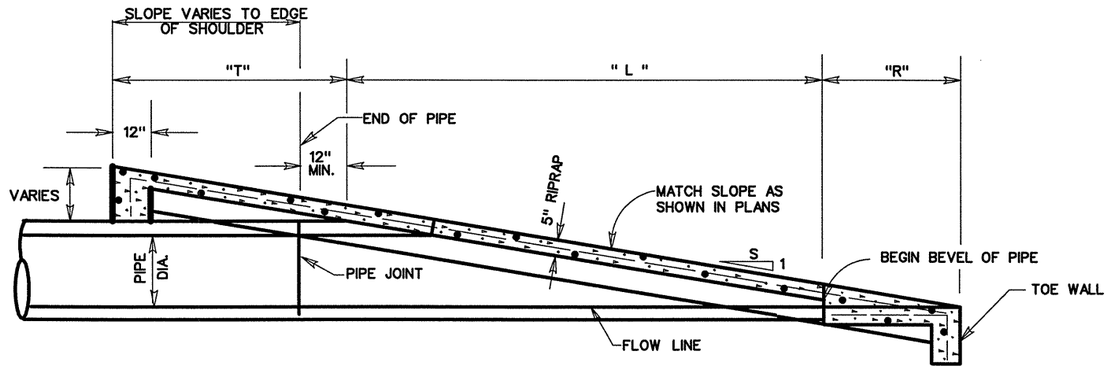

ELEVATION
SAFETY END TREATMENT

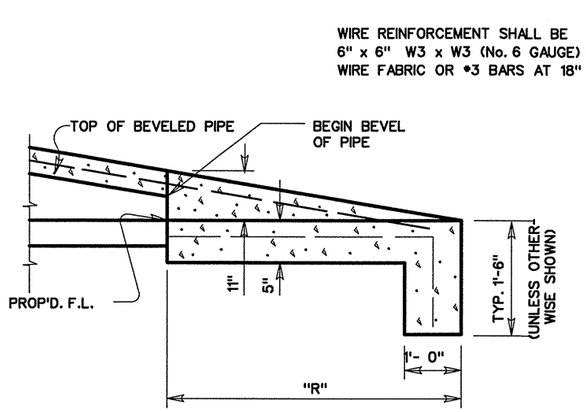

SEC. A-A

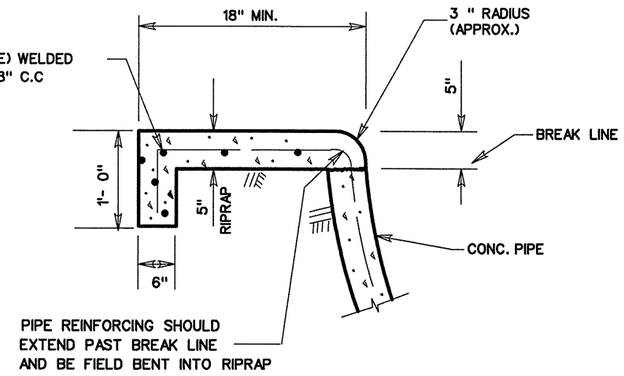

SEC. B-B

SAFETY END TREATMENT PIPE LENGTHS

PIPE DIA. (IN.)	"L" 3:1	4:1	5:1	6:1
12	2'-0"	2'-8"	3'-4"	4'-0"
15	2'-9"	3'-8"	4'-7"	5'-6"
18	3'-6"	4'-8"	5'-10"	7'-0"
24	5'-1½"	6'-10"	8'-6½"	10'-3"
30	6'-9"	9-0"	11'-3"	13'-6"
36	8'-6"	11'-4"	14'-2"	17'-0"
42	10'-1½"	13'-6"	16'-10½"	20'-3"
48	11'-9"	15'-8"	19'-7"	23'-6"

RIPRAP TOE LENGTHS

SLOPE	" R "	"T"
3:1	2'-9"	1'-9"
4:1	3'-8"	2'-4"
5:1	4'-7"	2'-11"
6:1	5'-6"	3'-6"

ESTIMATED RIPRAP CL "C" VOLUME (CY)

PIPE DIA. (IN.)	3:1	4:1	5:1	6:1
12	.9	1.1	1.3	1.6
15	1.0	1.2	1.5	1.8
18	1.1	1.4	1.6	1.9
24	1.3	1.6	2.0	2.3
30	1.5	1.9	2.3	2.7
36	1.7	2.2	2.7	3.2
42	2.0	2.5	3.1	3.6
48	2.2	2.8	3.4	4.1

* FOR CONTRACTORS INFORMATION ONLY (SINGLE PIPE)

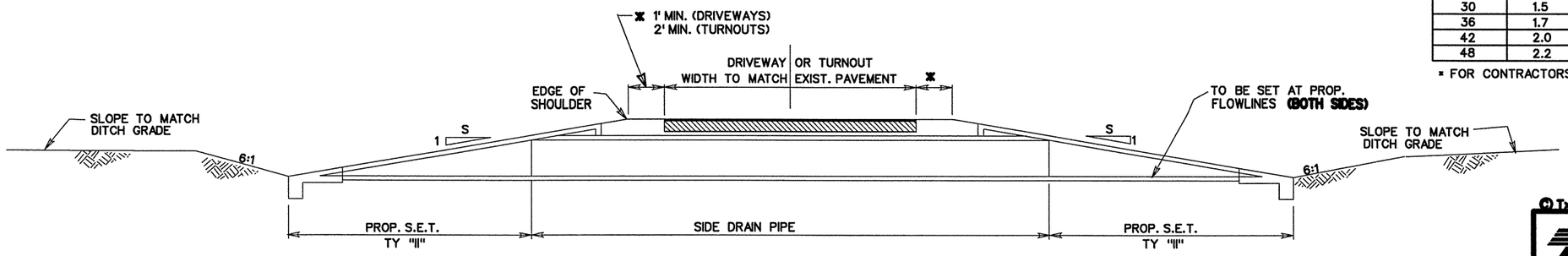

TYPICAL SIDEDRAIN SECTION

NOTE:

ALL EXCAVATION AND BACKFILL REQUIRED AT ALL PIPE SIDE DRAIN CONNECTIONS, ADJUSTMENTS AND/OR EXTENSIONS WILL NOT BE PAID FOR DIRECTLY BUT SHALL BE SUBSIDIARY TO THE BID ITEMS INVOLVED AND IN ACCORDANCE WITH ITEM 400 "STRUCTURAL EXCAVATION".

© TxDOT 2002

PHARR DISTRICT STANDARDS

TEXAS DEPARTMENT OF TRANSPORTATION

SAFETY END TREATMENT DETAILS

REV. 4/02

SET.DGN

CO.RD. DIV.NO.	STATE AID PROJECT NO.		FILE NO.			SHEET NO.
6						683
STATE	STATE DIST.NO.	COUNTY	CONT.	SECT.	JOB	HIGHWAY NO.
TEXAS	21	HIDALGO	0255	08	091	US 281

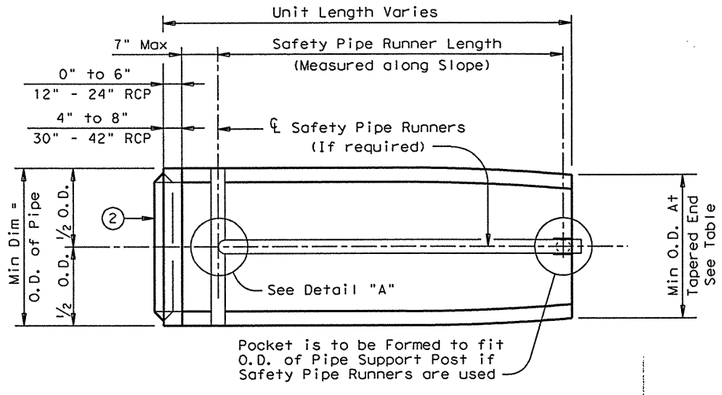

PLAN VIEW

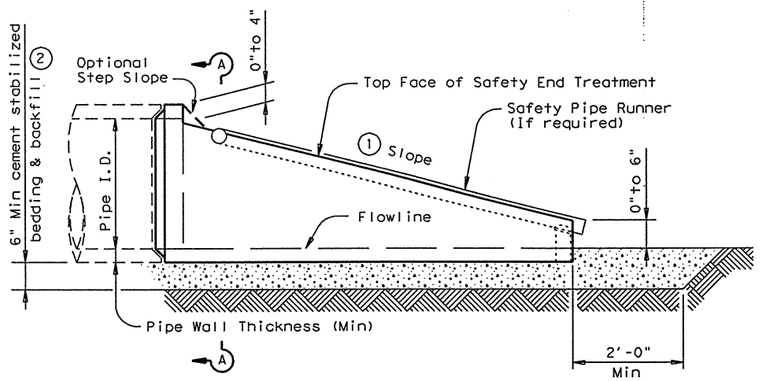

LONGITUDINAL ELEVATION

Maximum Safety Pipe Runner Lengths & Required Safety Pipe Runner Sizes			
Maximum Safety Pipe Runner Length	Required Pipe Runner Size		
	Pipe Size	Pipe O.D.	Pipe I.D.
11'- 2"	3" STD	3.500"	3.068"
15'- 6"	3 ½" STD	4.000"	3.548"
20'-10"	4" STD	4.500"	4.026"
35'- 4"	5" STD	5.563"	5.047"

(1) Slope as shown elsewhere in the plans. Slope of 3:1 or flatter is required for vehicle safety.

(2) Cement stabilized bedding and backfill shall be in accordance with the Item, "Excavation and Backfill for Structures". Bedding and backfill shall be considered subsidiary to the Item "Safety End Treatment". When concrete riprap is specified around the Safety End Treatment backfill shall be as directed by Engineer.

(3) The top 4" of void between Precast End Treatments shall be filled with concrete Riprap and shall be considered subsidiary to Safety End Treatment.

(4) Clear distance between pipes shall be adjusted to provide for the minimum distance between safety end treatments.

PIPE I.D.	MINIMUM WALL THICKNESS	MINIMUM O.D.	MIN O.D. AT TAPERED END	MIN REINF REQUIREMENTS (Sq in/ft of pipe)	SLOPE	MINIMUM LENGTH OF UNIT	SINGLE PIPE		MULTIPLE PIPE	
							SKEW	PIPE RUNNERS REQUIRED	SKEW	PIPE RUNNERS REQUIRED
12"	2"	16"	16"	0.07 CIRC.	3:1	2'-0"	<=45 deg	No	<=45 deg	No
					4:1	2'-8"				
					6:1	4'-0"				
15"	2 ¼"	19 ½"	19"	0.07 CIRC.	3:1	2'-10"	<=45 deg	No	<=45 deg	No
					4:1	3'-9"				
					6:1	5'-8"				
18"	2 ½"	23"	21 ½"	0.07 CIRC.	3:1	3'-8"	<=45 deg	No	<=45 deg	No
					4:1	4'-10"				
					6:1	7'-3"				
24"	3"	30"	27"	0.07 CIRC.	3:1	5'-3"	<=45 deg	No	<=30 deg	No
					4:1	7'-0"				
					6:1	10'-6"			>30 deg	Yes
30"	3 ½"	37"	31"	0.18 CIRC.	3:1	6'-3"	<=15 deg	No	<=15 deg	No
					4:1	8'-2"				
					6:1	12'-1"	>15 deg	Yes	>15 deg	Yes
36"	4"	44"	36"	0.19 ELIP.	3:1	7'-10"	=0 deg	No	=>0 deg	Yes
					4:1	10'-4"				
					6:1	15'-4"	>0 deg	Yes		
42"	4 ½"	51"	41 ½"	0.23 ELIP.	3:1	9'-6"	=>0 deg	Yes	=>0 deg	Yes
					4:1	12'-6"				
					6:1	18'-7"				

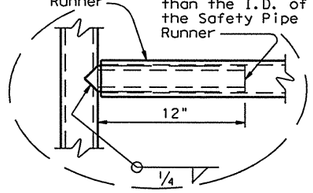

OPTION A

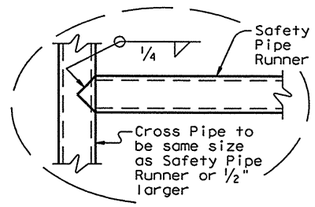

OPTION B

DETAIL A

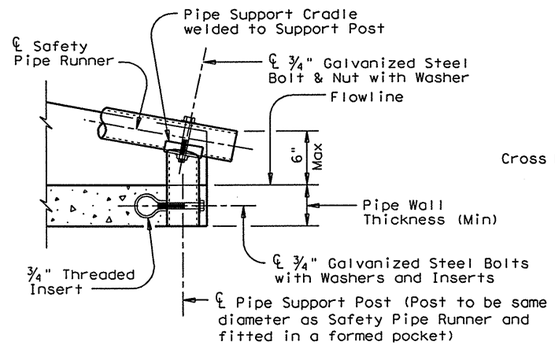

END DETAIL FOR INSTALLATION OF SAFETY PIPE RUNNERS

(If required)

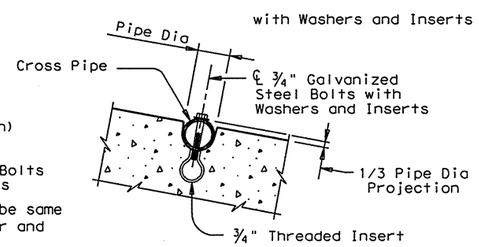

INSTALLATION DETAIL FOR SAFETY PIPE RUNNERS

(If required)

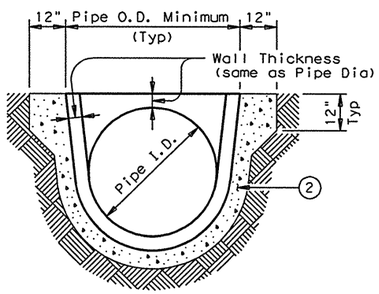

SECTION A-A

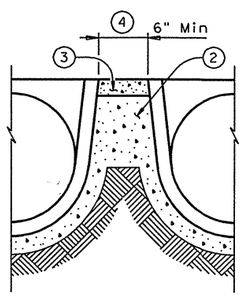

MULTIPLE PIPE INSTALLATION

GENERAL NOTES:

Precast safety end treatment for reinforced concrete pipe may be used for TYPE II end treatment as specified in Item "Safety End Treatment".

When Precast Safety End Treatment is used as a Contractor's alternate to mitered RCP, Riprap will not be required unless noted otherwise on the plans.

All precast concrete end sections shall be manufactured in accordance with Item "Reinforced Concrete Pipe Culverts" and in accordance with ASTM Specification C-76, Class III, Wall B for circular pipe.

Precast concrete end sections shall be provided with a spigot or bell end for compatibility to upstream or downstream end conditions with sufficient annular space to allow for mortar, cold applied asphalt joint compound or pre-formed plastic gasket material.

Methods of lifting shall be provided by the manufacturer for ease of loading, unloading and installation.

Pipe Runners are designed for a traversing load of 1,800 Lbs at yield as recommended by Research Report 280-1, "Safety Treatment of Roadside Cross-Drainage Structures", Texas Transportation Institute, March 1981.

Safety Pipe Runners, Cross Pipes, Pipe Support Posts, and Pipe Stubs shall conform to the requirements of ASTM A53 (Type E or S, Grade B), ASTM A500 (Grade B), or API 5LX52.

All steel components except reinforcing, shall be galvanized after fabrication. Galvanizing damaged during transport or construction shall be repaired in accordance with the specifications.

DISCLAIMER:
The use of this standard is governed by the "Texas Engineering Practice Act". No warranty of any kind is made by TxDOT for any purpose whatsoever. TxDOT assumes no responsibility for the conversion of this standard to other formats or for incorrect results or damages resulting from its use.

ACC:

LEVELS DISPLAYED

1

Texas Department of Transportation
Bridge Division

PRECAST SAFETY END TREATMENT

TYPE II ~ CROSS DRAINAGE

PSET-RC

FILE: psetrcse.dgn	DN: RLW	CK: KLR	DW: JTR	CK: GAF
©TxDOT September 2000	DISTRICT	FEDERAL AID PROJECT		SHEET
REVISIONS	PHARR			684
Nov 2001- Added General Note about Riprap.	COUNTY	CONTROL	SECT	JOB	HIGHWAY
	HIDALGO	0255	08	091	US 281

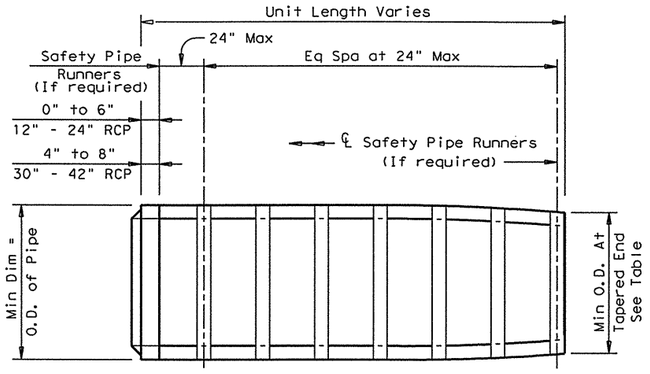

PLAN VIEW - 12" THRU 24"

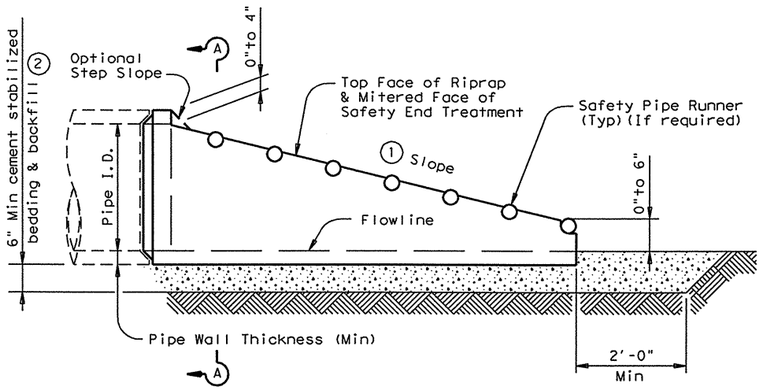

LONGITUDINAL ELEVATION - 12" THRU 24"

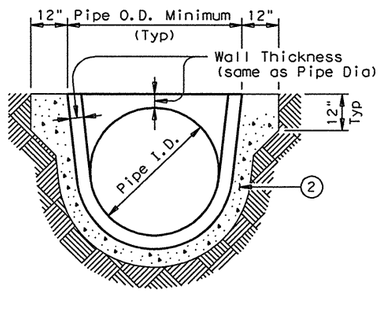

SECTION A-A

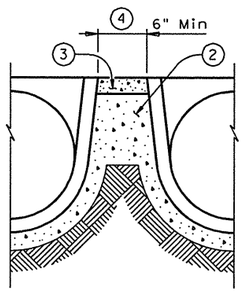

MULTIPLE PIPE INSTALLATION

1. Slope as shown elsewhere in the plans. Slope of 6:1 or flatter is required for vehicle safety.
2. Cement stabilized bedding and backfill shall be in accordance with the Item, "Excavation and Backfill for Structures". Bedding and backfill shall be considered subsidiary to the Item "Safety End Treatment". When concrete riprap is specified around the Safety End Treatment backfill shall be as directed by Engineer.
3. The top 4" of void between Precast End Treatments shall be filled with concrete Riprap and shall be considered subsidiary to Safety End Treatment.
4. Clear distance between pipes shall be adjusted to provide for the minimum distance between safety end treatments.

PIPE I.D.	MINIMUM WALL THICKNESS	MINIMUM O.D.	MIN O.D. AT TAPERED END	MIN REINF REQUIREMENTS (Sq in/ft of pipe)	MAXIMUM SLOPE	MINIMUM LENGTH OF UNIT	PIPE RUNNERS REQUIRED		REQUIRED PIPE RUNNER SIZES		
							SINGLE PIPE	MULTIPLE PIPE	NOMINAL DIA.	O.D.	I.D.
12"	2"	16"	16"	0.07 CIRC.	6:1	4'-0"	No	Yes, for >2 pipes	3" STD	3.500"	3.068"
15"	2 ¼"	19 ½"	19"	0.07 CIRC.	6:1	5'-8"	No	Yes, for >2 pipes	3" STD	3.500"	3.068"
18"	2 ½"	23"	21 ½"	0.07 CIRC.	6:1	7'-3"	No	Yes, for >2 pipes	3" STD	3.500"	3.068"
24"	3"	30"	27"	0.07 CIRC.	6:1	10'-6"	No	Yes, for >2 pipes	3" STD	3.500"	3.068"
30"	3 ½"	37"	31"	0.18 CIRC.	6:1	12'-1"	No	Yes	4" STD	4.500"	4.026"
36"	4"	44"	36"	0.19 ELIP.	6:1	15'-4"	Yes	Yes	4" STD	4.500"	4.026"
42"	4 ½"	51"	41 ½"	0.23 ELIP.	6:1	18'-7"	Yes	Yes	4" STD	4.500"	4.026"

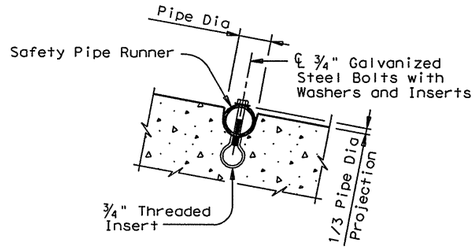

INSTALLATION DETAIL FOR SAFETY PIPE RUNNERS

(If required)

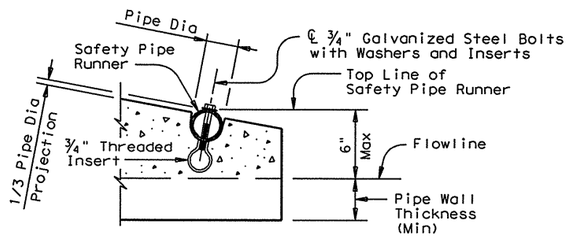

OPTION A

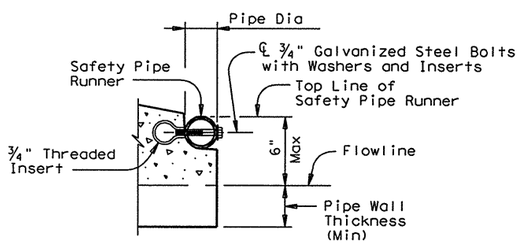

OPTION B

END DETAILS FOR INSTALLATION OF SAFETY PIPE RUNNERS

(If required)

GENERAL NOTES:

Precast safety end treatment for reinforced concrete pipe may be used for TYPE II end treatment as specified in Item "Safety End Treatment".

When Precast Safety End Treatment is used as a Contractor's alternate to mitered RCP, Riprap will not be required unless noted otherwise on the plans.

All precast concrete end sections shall be manufactured in accordance with Item "Reinforced Concrete Pipe Culverts" and in accordance with ASTM Specification C-76, Class III, Wall B for circular pipe.

Precast concrete end sections shall be provided with a spigot or bell end for compatibility to upstream or downstream end conditions with sufficient annular space to allow for mortar, cold applied asphalt joint compound or pre-formed plastic gasket material.

Methods of lifting shall be provided by the manufacturer for ease of loading, unloading and installation.

Pipe Runners are designed for a traversing load of 10,000 Lbs at yield as recommended by Research Report 280-2F, "Safety Treatment of Roadside Parallel-Drainage Structures", Texas Transportation Institute, March 1981.

Pipe Runners shall conform to the requirements of ASTM A53 (Type E or S, Grade B), ASTM A500 (Grade B), or API 5LX52.

All steel components except reinforcing, shall be galvanized after fabrication. Galvanizing damaged during transport or construction shall be repaired in accordance with the specifications.

DISCLAIMER:
The use of this standard is governed by the "Texas Engineering Practice Act". No warranty of any kind is made by TxDOT for any purpose whatsoever. TxDOT assumes no responsibility for the conversion of this standard to other formats or for incorrect results or damages resulting from its use.

LEVELS DISPLAYED

ACC:

Texas Department of Transportation
Bridge Division

PRECAST SAFETY END TREATMENT

TYPE II ~ PARALLEL DRAINAGE

PSET-RP

FILE: psetrpse.dgn	DN: RLW	CK: KLR	DW: JTR	CK: GAF
©TxDOT September 2000	DISTRICT	FEDERAL AID PROJECT		SHEET
REVISIONS Nov 2001- Added General Note about Riprap.	PHARR			685
	COUNTY	CONTROL	SECT	JOB	HIGHWAY
	HIDALGO	0255	08	091	US 281

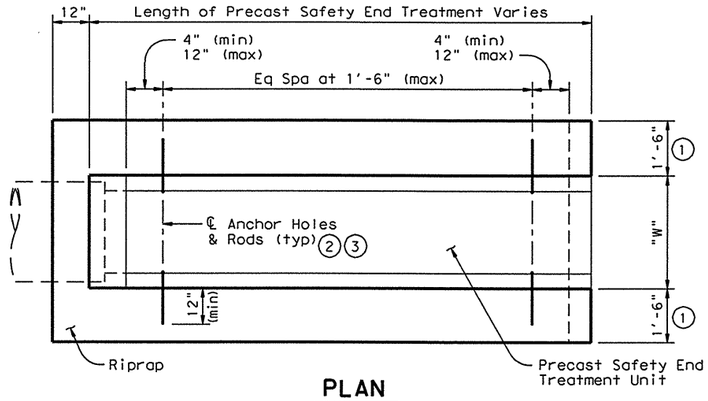

PLAN

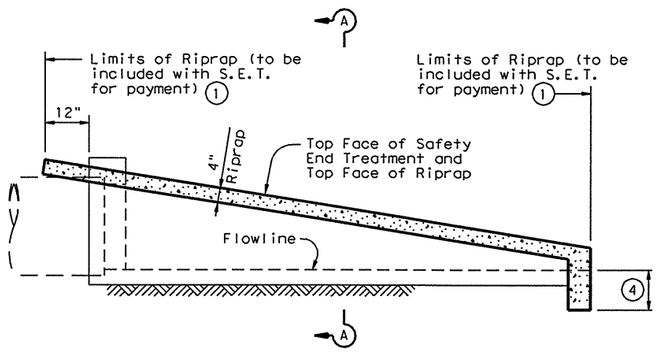

LONGITUDINAL ELEVATION

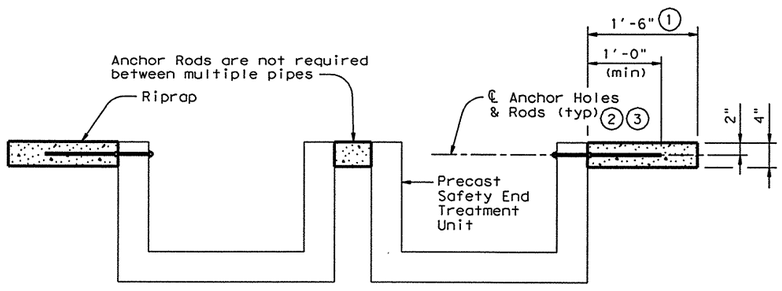

MULTIPLE PIPE INSTALLATION

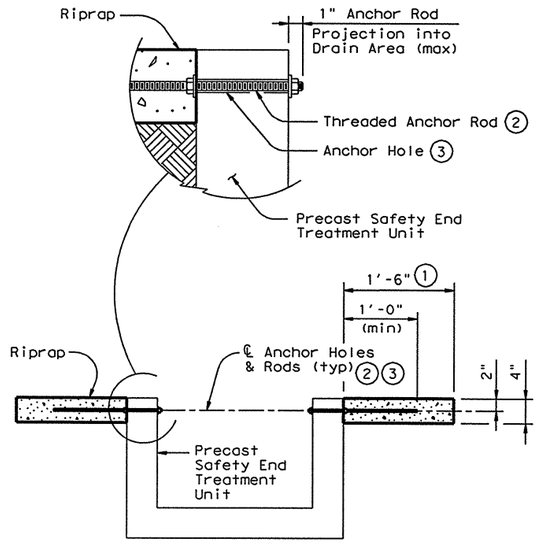

SINGLE PIPE INSTALLATION

SECTION A-A

⑤ ESTIMATED CONCRETE RIPRAP QUANTITIES (CY)								
Nominal Culvert (Pipe) I.D.	PSET-SC & PSET-SP Standards				PSET-RC & PSET-RP Standards			
	Unit Width "W"	Side Slope			Unit Width "W"	Side Slope		
		3:1	4:1	6:1		3:1	4:1	6:1
12"	23.0"	0.2	0.3	0.3	16.0"	0.2	0.2	0.3
15"	26.5"	0.3	0.3	0.4	19.5"	0.2	0.3	0.3
18"	30.0"	0.3	0.3	0.4	23.0"	0.3	0.3	0.4
24"	37.0"	0.4	0.4	0.6	30.0"	0.3	0.4	0.5
30"	44.5"	0.4	0.5	0.7	37.0"	0.4	0.4	0.6
36"	51.5"	0.5	0.6	0.8	44.0"	0.4	0.5	0.7
42"	58.5"	0.6	0.7	0.9	51.0"	0.5	0.6	0.8

① Riprap placed beyond the limits shown will be paid as Concrete Riprap in accordance with Item 432, "Riprap".

② ½" Diam A321 threaded Anchor Rod w/ 2 nuts & 2 washers. All components shall be galvanized in accordance with Item 445, "Galvanizing". Galvanizing that is damaged during transport or construction shall be repaired in accordance with the specifications.

③ ¾" through holes in walls of Safety End Treatment for Riprap Anchor Rods may be drilled with rotary (coring or masonry) type drilling equipment or may be formed. Percussive (star) type drilling equipment shall not be used. If holes are drilled, spalls in the inside face of the wall exceeding ½" from the holes shall be patched.

④ Provide Riprap Toe Wall when dimension is shown elsewhere in the plans or when field conditions require a Toe Wall.

⑤ Quantities shown are for one end of one reinforced concrete pipe culvert. For multiple pipe culverts, quantities will need to be adjusted. Riprap quantities are for Contractor's information only. Quantities are based on the minimum unit lengths shown on the Precast S.E.T. standards.

GENERAL NOTES:

Precast Safety End Treatment for reinforced concrete pipe may be used for TYPE II end treatment as specified in Item 467, "Safety End Treatment".

Riprap shall be Class "B" Riprap in accordance with Item 432, "Riprap".

Payment for Riprap and Toewalls is included in the Price Bid for each Safety End Treatment.

Refer to PSET-SC or PSET-SP standard sheets for details of square Safety End Treatments not shown. Refer to PSET-RC or PSET-RP standard sheets for details of round Safety End Treatments not shown.

These details are only to be included on projects where, in the judgement of the Engineer, site conditions warrant the use of Riprap with Precast Safety End Treatments. When such conditions are identified, notes which require Riprap to be placed when using Precast Safety End Treatments must be shown elsewhere on the plans.

ACC:
LEVELS DISPLAYED
1

Texas Department of Transportation
Bridge Division

PRECAST SAFETY END TREATMENT
TYPE II
RIPRAP DETAILS

PSET-RR

FILE: psetrrse.dgn	DN: GAF	CK: TxDOT	DW: JRP	CK: GAF	
©TxDOT OCTOBER 2001	DISTRICT	FEDERAL AID PROJECT			SHEET
REVISIONS	PHARR				686
	COUNTY		CONTROL	SECT	JOB	HIGHWAY
	HIDALGO		0255	08	091	US 281

PIPE I.D.	PIPE WALL "B" THICKNESS	(1) "D"	SLOPE	MINIMUM LENGTH OF UNIT	SINGLE PIPE		MULTIPLE PIPE	
					SKEW	PIPE RUNNERS REQUIRED	SKEW	PIPE RUNNERS REQUIRED
12"	2"	17"	3:1	2'-11"	<=45 deg	No	<=45 deg	No
			4:1	3'-6"				
			6:1	4'-9"				
15"	2 1/4"	20 1/2"	3:1	3'-8"	<=45 deg	No	<=45 deg	No
			4:1	4'-7"				
			6:1	6'-5"				
18"	2 1/2"	24"	3:1	4'-6"	<=45 deg	No	<=45 deg	No
			4:1	5'-8"				
			6:1	8'-0"				
24"	3"	31"	3:1	6'-2"	<=45 deg	No	<=30 deg	No
			4:1	7'-10"			>30 deg	Yes
			6:1	11'-3"				
30"	3 1/2"	38 1/2"	3:1	7'-10"	<=15 deg	No	<=15 deg	No
			4:1	10'-1"	>15 deg	Yes	>15 deg	Yes
			6:1	14'-8"				
36"	4"	45 1/2"	3:1	9'-5"	=0 deg	No	=>0 deg	Yes
			4:1	12'-3"				
			6:1	17'-11"	>0 deg	Yes		
42"	4 1/2"	52 1/2"	3:1	11'-1"	=>0 deg	Yes	=>0 deg	Yes
			4:1	14'-5"				
			6:1	21'-2"				

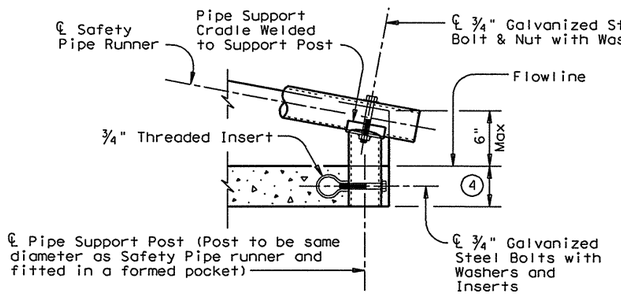

END DETAIL FOR INSTALLATION OF SAFETY PIPE RUNNERS

(If required)

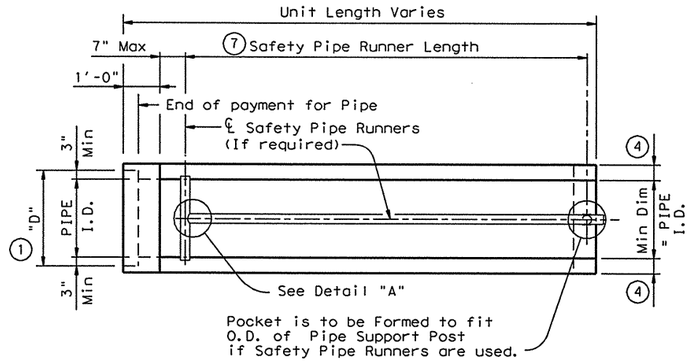

PLAN

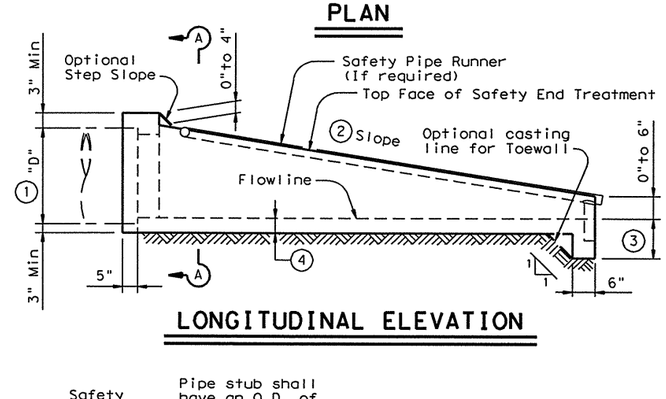

LONGITUDINAL ELEVATION

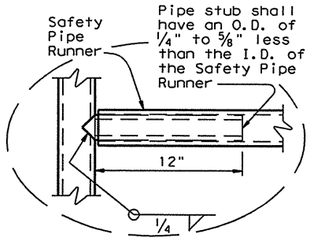

OPTION A

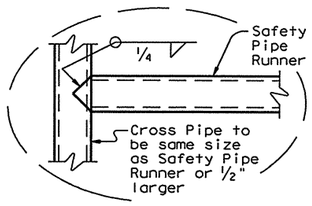

OPTION B

DETAIL A

(If required)

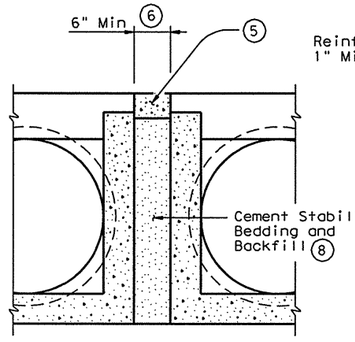

MULTIPLE PIPE INSTALLATION

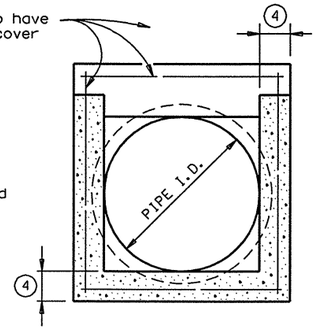

OPTION WITH SQUARE BOTTOM

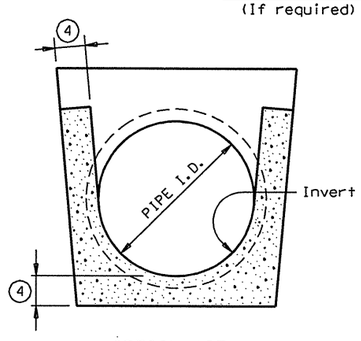

OPTION WITH INVERT BOTTOM

SECTION A-A

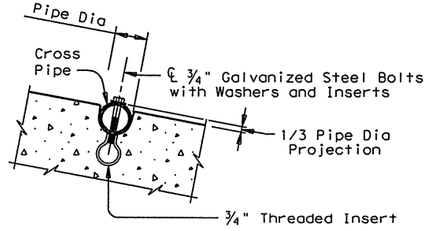

INSTALLATION DETAIL FOR SAFETY PIPE RUNNERS

(If required)

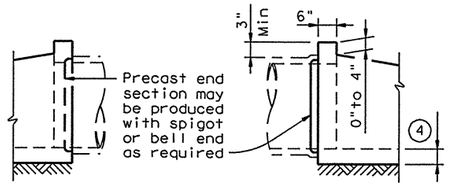

OPTIONAL JOINT

(Showing joint between RCP and Precast Safety End Treatment)

Maximum Safety Pipe Runner Length	Required Pipe Runner Size		
	Pipe Size	Pipe O.D.	Pipe I.D.
11'- 2"	3" STD	3.500"	3.068"
15'- 6"	3 1/2" STD	4.000"	3.548"
20'-10"	4" STD	4.500"	4.026"
35'- 4"	5" STD	5.563"	5.047"

(1) Dimension "D" is based on ASTM C-76, Class III, Wall thickness "B". If any other wall thickness is used, dimension "D" must be adjusted accordingly.

(2) Slope as shown elsewhere in plans. Slope of 3:1 or flatter is required for vehicle safety.

(3) Toewall to be used only when dimension is shown elsewhere in the plans.

(4) Side Walls and Slab thickness shall be Pipe Wall thickness plus 3" (5" minimum total thickness).

(5) The top 4" of void between precast end treatments shall be filled with concrete riprap and shall be considered subsidiary to Safety End Treatment.

(6) Clear distance between pipes shall be adjusted to provide for the minimum distance between safety end treatments.

(7) Measured along Slope.

(8) Cement stabilized bedding and backfill shall be in accordance with the Item, "Excavation and Backfill for Structures". Bedding and backfill shall be considered subsidiary to the Item "Safety End Treatment". When concrete riprap is specified around the safety end treatment backfill shall be as directed by Engineer.

GENERAL NOTES:

Precast safety end treatment for reinforced concrete pipe may be used for TYPE II end treatment as specified in Item "Safety End Treatment".

When Precast Safety End Treatment is used as a Contractor's alternate to mitered RCP, Riprap will not be required unless noted otherwise on the plans.

Manufacture of this product shall conform to requirements of Item "Safety End Treatment" except as noted below :

A. Minimum reinforcing shall be #4 at 6" (Grade 40) or #4 at 9" (Grade 60) each way or 6 x 6 - W12 x W12 or 5 x 5 - W10 x W10 welded wire fabric.

B. Concrete for precast (steel formed) sections shall be Class "C".

At the option and expense of the Contractor the next larger size of Safety End Treatment may be furnished; as long as the "D" dimension cast is that of the required size of pipe.

Pipe Runners are designed for a traversing load of 1,800 Lbs at yield as recommended by Research Report 280-1, "Safety Treatment of Roadside Cross-Drainage Structures", Texas Transportation Institute, March 1981.

Safety Pipe Runners, Cross Pipes, Pipe Support Posts, and Pipe Stubs shall conform to the requirements of ASTM A53 (Type E or S, Grade B), ASTM A500 (Grade B), or API 5LX52.

All steel components except reinforcing, shall be galvanized after fabrication. Galvanizing damaged during transport or construction shall be repaired in accordance with the specifications.

DISCLAIMER:
The use of this standard is governed by the "Texas Engineering Practice Act". No warranty of any kind is made by TxDOT for any purpose whatsoever. TxDOT assumes no responsibility for the conversion of this standard to other formats or for incorrect results or damages resulting from its use.

LEVELS DISPLAYED
ACC:
1

Texas Department of Transportation
Bridge Division

PRECAST SAFETY END TREATMENT
TYPE II ~ CROSS DRAINAGE

PSET-SC

FILE: psetscse.dgn	DN: RLW	CK: KLR	DW: JTR	CK: GAF
©TxDOT September 2000	DISTRICT	FEDERAL AID PROJECT		SHEET
REVISIONS Nov 2001- Added Option w/Invert Bottom, added Optional Joint Detail & added Gen Note about riprap.	PHARR			687
	COUNTY	CONTROL	SECT	JOB	HIGHWAY
	HIDALGO	0255	08	091	US 281

DISCLAIMER:
The use of this standard is governed by the "Texas Engineering Practice Act". No warranty of any kind is made by TxDOT for any purpose whatsoever. TxDOT assumes no responsibility for the conversion of this standard to other formats or for incorrect results or damages resulting from its use.

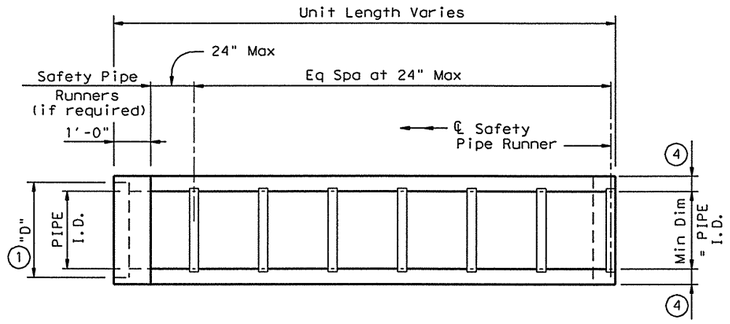

PLAN

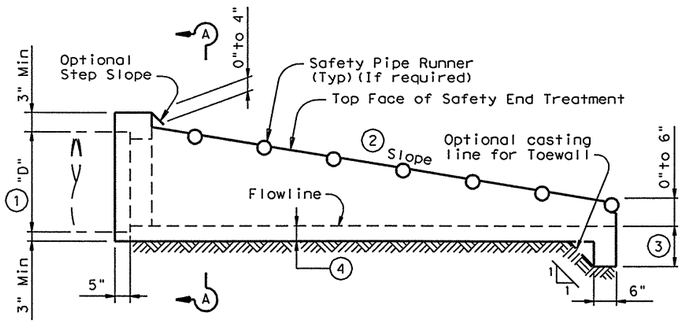

LONGITUDINAL ELEVATION

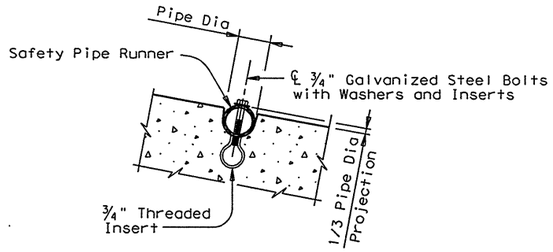

INSTALLATION DETAIL FOR SAFETY PIPE RUNNERS

(If required)

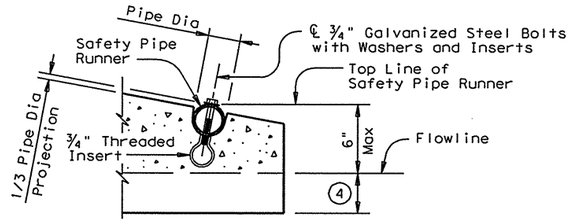

OPTION A

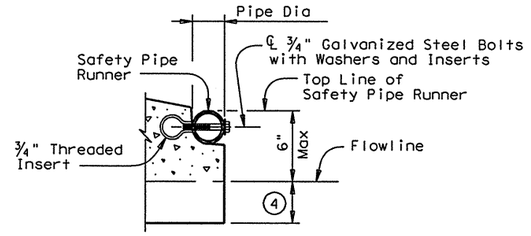

OPTION B

END DETAILS FOR INSTALLATION OF SAFETY PIPE RUNNERS

(If required)

PIPE I.D.	PIPE WALL "B" THICKNESS	"D" (1)	MAXIMUM SLOPE	MINIMUM LENGTH OF UNIT	PIPE RUNNERS REQUIRED		REQUIRED PIPE RUNNER SIZES		
					SINGLE PIPE	MULTIPLE PIPE	NOMINAL DIA.	O.D.	I.D.
12"	2"	17"	6:1	4'-9"	No	Yes, for >2 pipes	3" STD	3.500"	3.068"
15"	2 ¼"	20 ½"	6:1	6'-5"	No	Yes, for >2 pipes	3" STD	3.500"	3.068"
18"	2 ½"	24"	6:1	8'-0"	No	Yes, for >2 pipes	3" STD	3.500"	3.068"
24"	3"	31"	6:1	11'-3"	No	Yes, for >2 pipes	3" STD	3.500"	3.068"
30"	3 ½"	38 ½"	6:1	14'-8"	No	Yes	4" STD	4.500"	4.026"
36"	4"	45 ½"	6:1	17'-11"	Yes	Yes	4" STD	4.500"	4.026"
42"	4 ½"	52 ½"	6:1	21'-2"	Yes	Yes	4" STD	4.500"	4.026"

(1) Dimension "D" is based on ASTM C-76, Class III, Wall "B" thickness. If any other wall thickness is used, dimension "D" must be adjusted accordingly.

(2) Slope as shown elsewhere in the plans. Slope of 6:1 or flatter is required for vehicle safety.

(3) Toewall to be used only when dimension is shown elsewhere in the plans.

(4) Side Walls and Slab thickness shall be Pipe Wall thickness plus 3" (5" minimum total thickness).

(5) The top 4" of void between Precast End Treatments shall be filled with concrete Riprap and shall be considered subsidiary to Safety End Treatment.

(6) Clear distance between pipes shall be adjusted to provide for the minimum distance between safety end treatments.

(7) Cement stabilized bedding and backfill shall be in accordance with the Item, "Excavation and Backfill for Structures". Bedding and backfill shall be considered subsidiary to the Item "Safety End Treatment". When concrete riprap is specified around the safety end treatment backfill shall be as directed by Engineer.

GENERAL NOTES:

Precast safety end treatment for reinforced concrete pipe may be used for TYPE II end treatment as specified in Item "Safety End Treatment".

When Precast Safety End Treatment is used as a Contractor's alternate to mitered RCP, Riprap will not be required unless noted otherwise on the plans.

Manufacture of this product shall conform to requirements of Item "Safety End Treatment" except as noted below :

A. Minimum reinforcing shall be #4 at 6" (Grade 40) or #4 at 9" (Grade 60) each way or 6 x 6 - W12 x W12 or 5 x 5 - W10 x W10 welded wire fabric.
B. Concrete for precast (steel formed) sections shall be Class "C".

At the option and expense of the Contractor the next larger size of Safety End Treatment may be furnished; as long as the "D" dimension cast is that of the required size of pipe.

Pipe Runners are designed for a traversing load of 10,000 Lbs at yield as recommended by Research Report 280-2F, "Safety Treatment of Roadside Parallel-Drainage Structures", Texas Transportation Institute, March 1981.

Pipe Runners shall conform to the requirements of ASTM A53 (Type E or S, Grade B), ASTM A500 (Grade B), or API 5LX52.

All steel components except reinforcing, shall be galvanized after fabrication. Galvanizing damaged during transport or construction shall be repaired in accordance with the specifications.

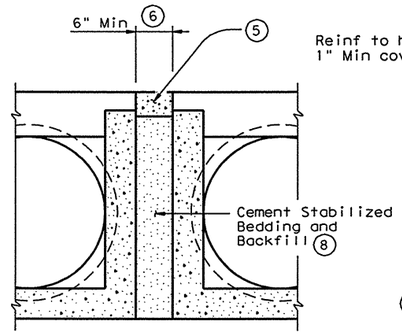

MULTIPLE PIPE INSTALLATION

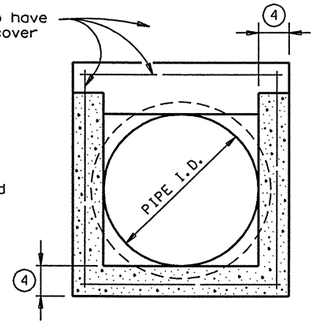

OPTION WITH SQUARE BOTTOM

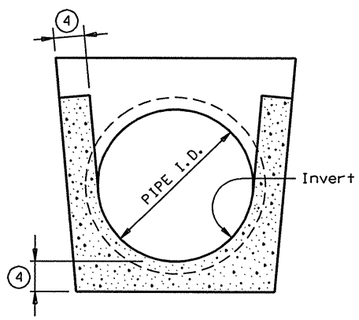

OPTION WITH INVERT BOTTOM

SECTION A-A

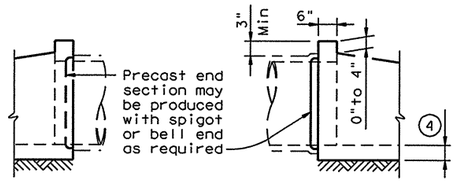

OPTIONAL JOINT

(Showing joint between RCP and Precast Safety End Treatment)

Texas Department of Transportation
Bridge Division

PRECAST SAFETY END TREATMENT
TYPE II ~ PARALLEL DRAINAGE

PSET-SP

FILE: psetspse.dgn	DN: RLW	CK: KLR	DW: JTR	CK: GAF
©TxDOT September 2000	DISTRICT	FEDERAL AID PROJECT		SHEET
REVISIONS Nov 2001- Added Option w/Invert Bottom, added Optional Joint Detail & added Gen Note about riprap.	PHARR			688
	COUNTY	CONTROL	SECT	JOB	HIGHWAY
	HIDALGO	0255	08	091	US 281

LEVELS DISPLAYED
ACC:
1

LEGEND

- PROPOSED LOOP DETECTOR SIZE AS NOTED
- PROPOSED MAST ARM ASSEMBLY WITH PROPOSED SIGNAL HEADS
- PROPOSED 250 WATT SODIUM VAPOR LUMINAIRE
- PROPOSED PEDESTRIAN PUSH BUTTON
- PROPOSED PEDESTRIAN SIGNAL ARM
- PROPOSED GROUND BOX
- PROPOSED CONDUIT (SIZE AND TYPE AS SPECIFIED)
- PROPOSED FULL TRAFFIC ACTUATED GROUND-MOUNTED CONTROLLER

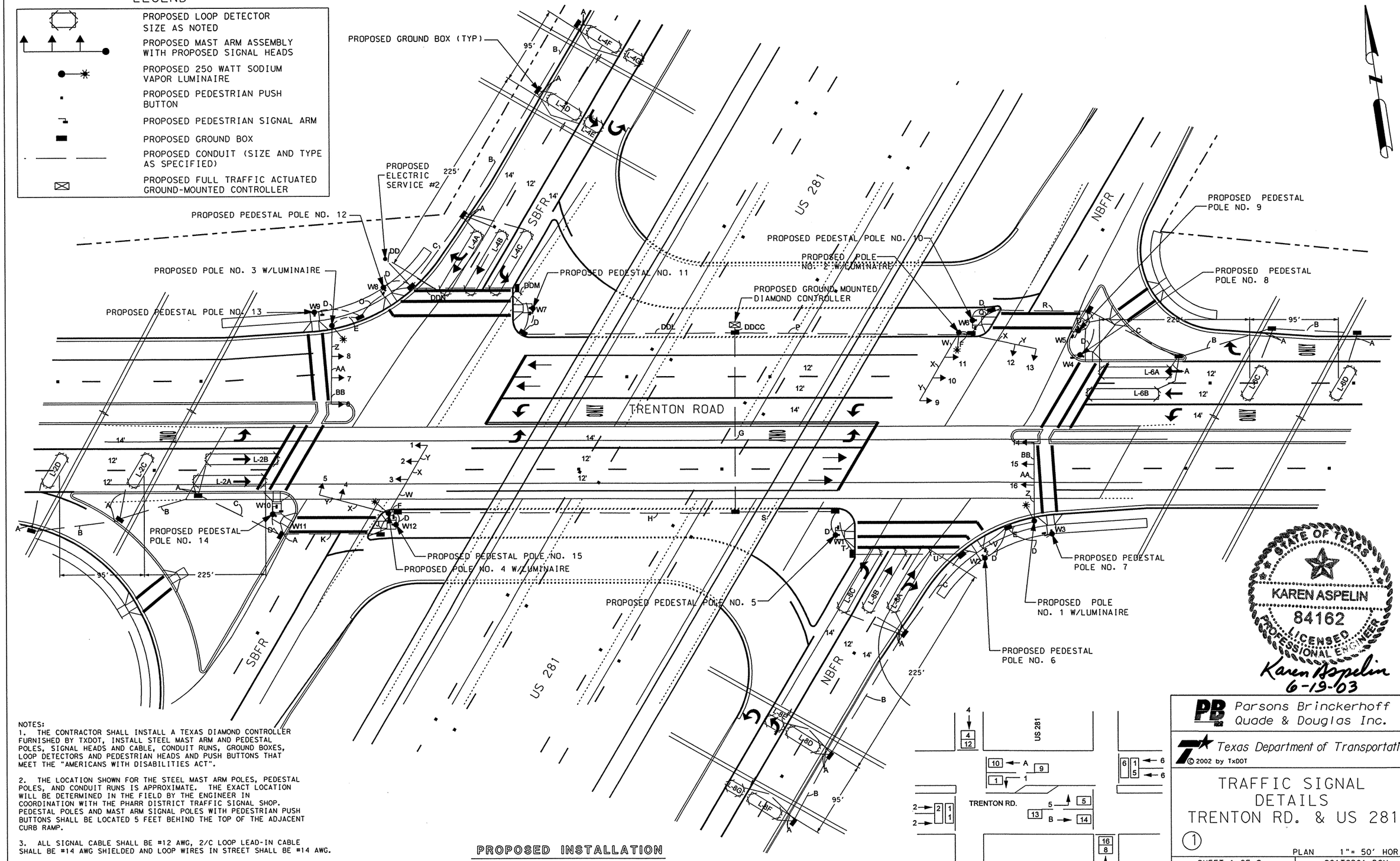

NOTES:

1. THE CONTRACTOR SHALL INSTALL A TEXAS DIAMOND CONTROLLER FURNISHED BY TXDOT, INSTALL STEEL MAST ARM AND PEDESTAL POLES, SIGNAL HEADS AND CABLE, CONDUIT RUNS, GROUND BOXES, LOOP DETECTORS AND PEDESTRIAN HEADS AND PUSH BUTTONS THAT MEET THE "AMERICANS WITH DISABILITIES ACT".

2. THE LOCATION SHOWN FOR THE STEEL MAST ARM POLES, PEDESTAL POLES, AND CONDUIT RUNS IS APPROXIMATE. THE EXACT LOCATION WILL BE DETERMINED IN THE FIELD BY THE ENGINEER IN COORDINATION WITH THE PHARR DISTRICT TRAFFIC SIGNAL SHOP. PEDESTAL POLES AND MAST ARM SIGNAL POLES WITH PEDESTRIAN PUSH BUTTONS SHALL BE LOCATED 5 FEET BEHIND THE TOP OF THE ADJACENT CURB RAMP.

3. ALL SIGNAL CABLE SHALL BE #12 AWG, 2/C LOOP LEAD-IN CABLE SHALL BE #14 AWG SHIELDED AND LOOP WIRES IN STREET SHALL BE #14 AWG.

4. THE CONTRACTOR SHALL FURNISH NEW LONG LIFE 135 WATT TRAFFIC SIGNAL LAMPS FOR ALL TRAFFIC SIGNAL HEADS.

5. THE LUMINAIRES AND HORIZONTAL SIGN LIGHTS SHALL BE OPERATED UNDER PHOTO-ELECTRIC CONTROL.

6. SIGNAL HEADS FACING EAST AND WEST SHALL HAVE BACKPLATES.

PROPOSED INSTALLATION

INTERSECTION OF
TRENTON RD. & US 281
IN HIDALGO COUNTY
CSJ: 0255 08 091

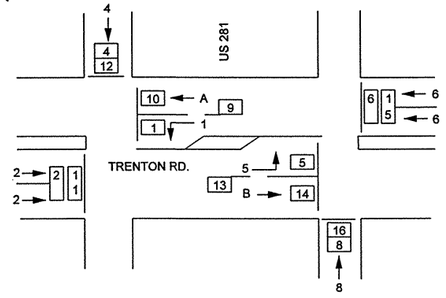

PHASING DIAGRAM
NTS

STATE OF TEXAS
KAREN ASPELIN
84162
LICENSED PROFESSIONAL ENGINEER
Karen Aspelin
6-19-03

Parsons Brinckerhoff Quade & Douglas Inc.

Texas Department of Transportation
© 2002 by TxDOT

TRAFFIC SIGNAL DETAILS TRENTON RD. & US 281

(1)

PLAN 1"= 50' HORIZ

SHEET 1 OF 2 | 281TSD01.DGN

DESIGNED: MVJ	FED. RD DIV. No.	STATE	FEDERAL AID PROJECT No.		HIGHWAY No.	
CHECKED: KEA	6	TEXAS			US 281	
DRAWN: MVJ	STATE DISTRICT	COUNTY	CONTROL No.	SECTION No.	JOB No.	SHEET No.
CHECKED: KEA	PHARR	HIDALGO	0255	08	091	700

ELECTRICAL CHART

ITEM	TOTAL QTY.	RUN NUMBER / RUN LENGTH (FT.)	A 150	B 1150	C 215	D 160	E 30	F 20	G 100	H 190	J 15	K 55	L 120	M 25	N 60	O 35	P 135	Q 20	R 60	S 55	T 25	U 60	V 30	W 46	X 70	Y 48	Z 52	AA 24	BB 24	CC 5	DD 230
SIGNAL WIRE SIZE TYPE	230	#6 BARE																													1
	460	#6 XHHW INSUL																													2
	1,200	#8 BARE				1	1	1	1	1	1	1	1	1	1	1	1	1	1	1	1	1	1							1	
	2,230	#8 XHHW INSUL					2	2	2	2			2	2	2	2	2			2	2	2	2								2
	4,989	5/C #12				1	1	3	9	5	1	1	3	3	3	3	6	3	2	4	3	3	3	3	2	1	2	1		18	
	650	7/C #12					1		1				1	1	1	1				1	1	1	1				1	1	1	2	
LOOP LEAD	300	#14 LOOP WIRE	2																												
	3,660	2/C L.L. SHIELDED		1	2				4	2	2	2	2	2	2		2	2	2	2	2	2								8	
CONDUIT	150	1" PVC	1																												
	2,190	2" PVC		1	1	1	1	1			1	1		1	1	1		1	1		1	1	1								1
	710	4" PVC							2	1			1				1			1										2	

TOTAL QUANTITY SHOWN INCLUDES QUANTITY IN SERVICE POLE, SIGNAL POLES, AND/OR LUMINAIRE ARMS

LOOP DETECTOR CHART

LOOP	SIZE	WIRE LENGTH	SAW CUT	AMPLIFIER NO.	SETTING	FUNCTION	DELAY TIMING
L-2A&B	(2) 6' x 40'	390	195	1	PRESENCE	CALL & EXTEND Ø2	
L-2C&D	(2) 6' x 20'	300	150	2	PULSE	CALL & EXTEND Ø2	
L-4A,B&C	(3) 6' x 40'	670	335	3	PRESENCE	CALL & EXTEND Ø4	
L-4D&F	(2) 6' x 20'	230	115	4	PULSE	CALL & EXTEND Ø4	
L-4E&G	(2) 6' x 10'	230	115	5	PULSE	CALL & EXTEND Ø4	
L-6A&B	(2) 6' x 40'	420	210	6	PRESENCE	CALL & EXTEND Ø6	
L-6C&D	(2) 6' x 20'	280	140	7	PULSE	CALL & EXTEND Ø6	
L-8A,B&C	(3) 6' x 40'	660	330	8	PRESENCE	CALL & EXTEND Ø8	
L-8D&F	(2) 6' x 20'	230	115	9	PULSE	CALL & EXTEND Ø8	
L-8E&G	(2) 6' x 10'	230	115	10	PULSE	CALL & EXTEND Ø8	
TOTAL:		3,640	1,820				

PHASING

PHASE	1	2	4	5	6	8	9	10	13	14
STREET	TRENTON		US 281 FR	TRENTON		US 281 FR	TRENTON	TRENTON	TRENTON	TRENTON
MOVEMENT	WBLT	EB	SB	EBLT	WB	NB	WB	WB	EB	EB
MIN. GREEN	10	20	12	10	20	12				
EXTENSION	2	2	2	2	2	2				
MAX. 1	20	40	24	30	40	24				
YELLOW	4	4	4	4	4	4				
ALL RED	1	1	1	1	1	1				
WALK		7	7		7	7				
PED CLEAR		16	27		16	27				
RECALL	OFF	ON	OFF	OFF	OFF	OFF				
MEMORY	OFF	OFF	OFF	OFF	ON	OFF				
OFFSET							3.5	7	3.5	7

TRAFFIC SIGNAL POLES

POLE NUMBER	QUANTITY	SIGNAL POLE DESIGNATION	MAST ARM DESIGNATION	FOUNDATION TYPE/DEPTH
1	1	44L-100	44III-100	36-B/15.2'
2	1	4444L-100	44III-100, 44II-100	48-A/21.9'
3	1	44L-100	44III-100	36-B/15.2'
4	1	4440L-100	44III-100, 40II-100	48-A/21.9'
5	1	PEDESTAL POLE		24-A/5.7'
6	1	PEDESTAL POLE		24-A/5.7'
7	1	PEDESTAL POLE		24-A/5.7'
8	1	PEDESTAL POLE		24-A/5.7'
9	1	PEDESTAL POLE		24-A/5.7'
10	1	PEDESTAL POLE		24-A/5.7'
11	1	PEDESTAL POLE		24-A/5.7'
12	1	PEDESTAL POLE		24-A/5.7'
13	1	PEDESTAL POLE		24-A/5.7'
14	1	PEDESTAL POLE		24-A/5.7'
15	1	PEDESTAL POLE		24-A/5.7'

INSTALL

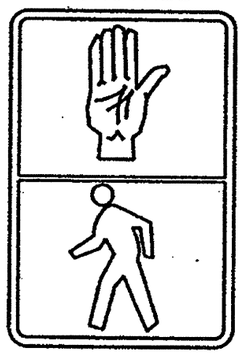

12" PEDESTRIAN SIGNAL HEADS (W1 THRU W12)

INSTALL

R10-4B SIGN WITH PEDESTRIAN PUSH BUTTON INSTALLED ON SIGNAL POLES FOR W1 THRU W12

INSTALL 12" HORIZONTAL

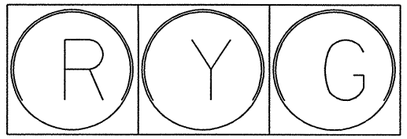

SIGNALS NO.
1, 2, 3, 4, 5, 7, 8, 9,
10, 11, 12, 13, 15, 16

INSTALL 12" HORIZONTAL

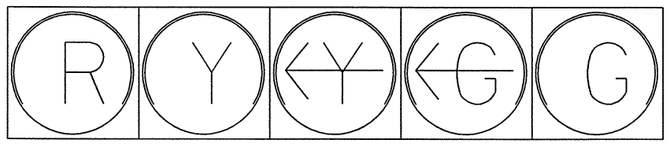

PROTECTED LEFT ON GREEN ARROW

SIGNALS NO. 6, 14
WITH SIGN & LIGHT

Parsons Brinckerhoff Quade & Douglas Inc.

Texas Department of Transportation

© 2002 by TxDOT

TRAFFIC SIGNAL DETAILS TRENTON RD. & US 281

(1)

SHEET 2 OF 2				281TSD11.DGN			
DESIGNED: KEA	FED. RD DIV. No.	STATE	FEDERAL AID PROJECT No.		HIGHWAY No.		
CHECKED: KEA	6	TEXAS			US 281		
DRAWN: MVJ	STATE DISTRICT	COUNTY	CONTROL No.	SECTION No.	JOB No.	SHEET No.	
CHECKED: KEA	PHARR	HIDALGO	0255	08	091	701	

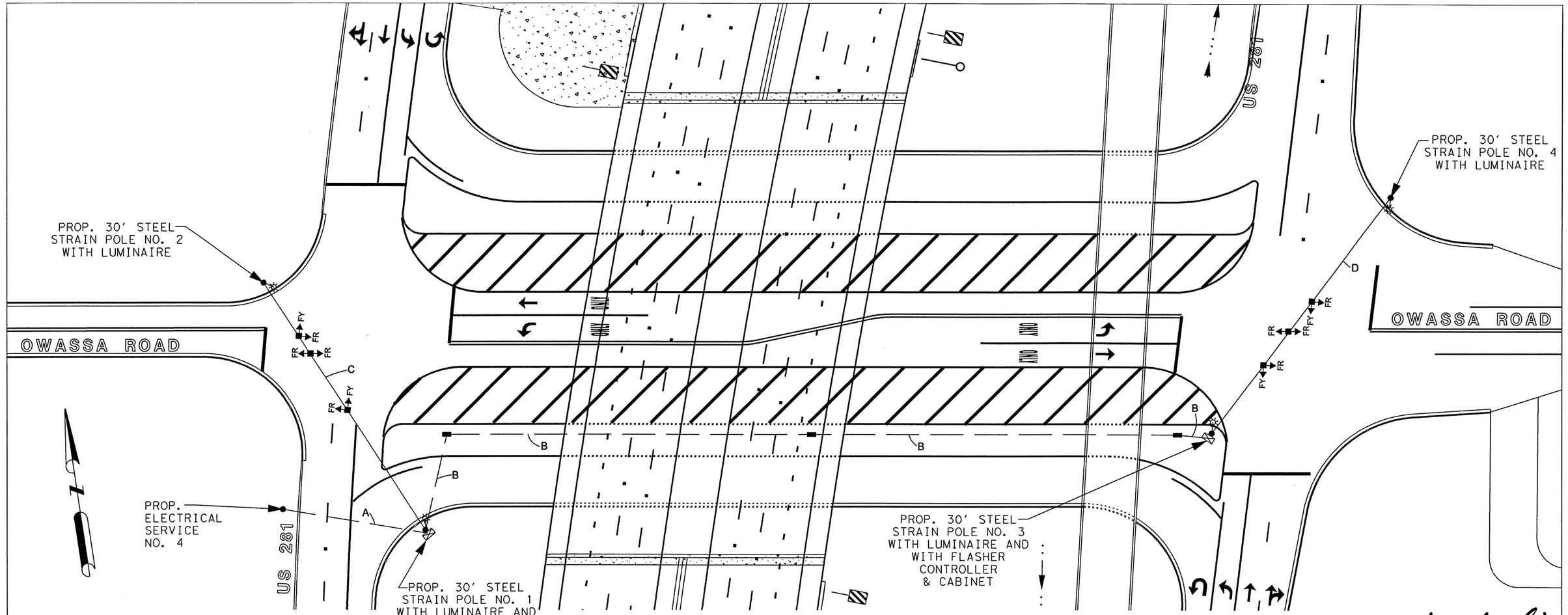

NOTES: (EXISTING CONDITIONS)
1. THE EXISTING TRAFFIC CONTROL SIGNS SHALL REMAIN IN PLACE DURING CONSTRUCTION OF THE PROPOSED FLASHING BEACON INSTALLATION.
2. THE CONTRACTOR SHALL REMOVE THE EXISTING INAPPLICABLE TRAFFIC CONTROL SIGNS WHEN THE NEW INSTALLATION IS IN PLACE AND OPERATIONAL. ALL SALVAGEABLE SIGNS SHALL BE DELIVERED TO THE TXDOT SIGNAL SHOP LOCATED AT THE PHARR, TEXAS DISTRICT OFFICE COMPLEX.
3. THE REMOVAL AND DELIVERY OF EXISTING SIGNS WILL NOT BE PAID FOR DIRECTLY, BUT BE CONSIDERED SUBSIDIARY TO THE VARIOUS BID ITEMS OF THIS PROJECT.

NOTES: (PROPOSED INSTALLATION)
1. THE CONTRACTOR SHALL INSTALL A TWO CIRCUIT SOLID STATE FLASHERS CONTROLLER & CABINET, STEEL STRAIN POLES, LUMINARES, FLASHING BEACON HEADS, SIGNAL CABLES, SPAN WIRE, AND ELECTRICAL SERVICE AS SHOWN.
2. THE LOCATIONS SHOWN FOR THE ELECTRICAL SERVICE AND STEEL STRAIN POLES ARE APPROXIMATE. THEIR EXACT LOCATION WILL BE DETERMINED IN THE FIELD BY THE ENGINEER IN COORDINATION WITH THE PHARR DISTRICT SIGNAL SHOP.
3. THE EXACT LOCATION OF ALL KNOWN UNDERGROUND UTILITIES IS NOT CERTAIN. THE CONTRACTOR SHALL VERIFY THE LOCATION OF ANY UNDERGROUND UTILITIES BEFORE DRILLING FOR STEEL POLE FOUNDATIONS AND SERVICE POLES.
4. SIGNAL CABLE SHALL BE #12 AWG AND SERVICE CABLE SHALL BE #6 AWG.
5. THE CONTRACTOR SHALL FURNISH NEW LONG LIFE 135 WATT TRAFFIC SIGNAL LAMPS FOR ALL FLASHING BEACON HEADS.

PROPOSED INSTALLATION

INTERSECTION OF
OWASSA RD. & US 281
IN HIDALGO COUNTY
CSJ: 0255-08-091

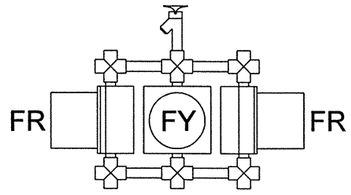

DETAIL

4-WAY-1 SEC.
12" FLASHING BEACON HEAD
(OR AS SHOWN)

STEEL STRAIN POLES				
POLE NUMBER	QUANTITY	POLE DESIGNATION	FOUNDATION TYPE	FOUNDATION DEPTH
1	1	SPL 30 B-100	36-A	12.0
2	1	SPL 30 B-100	36-A	12.0
3	1	SPL 30 B-100	36-A	12.0
4	1	SPL 30 B-100	36-A	12.0
TOTALS	4			48.0

ELECTRICAL CHART							
ITEM	TOTAL QUANTITY	RUN NUMBER	A	B	C	D
		RUN LENGTH (FT)	80	440	180	180
WIRE SIZE TYPE	1040	#6 XHHW INSUL.	2	2		
	520	#6 BARE	1	1		
		#8 XHHW INSUL.				
		#8 BARE				
	360	5/C #12			1	1
CONDUIT	520	2" PVC	1	1		

QUANTITIES SHOWN INCLUDE QUANTITIES IN POLES & SPAN WIRE.

Karen Aspelin 6-30-03
STATE OF TEXAS
KAREN ASPELIN
84162
LICENSED PROFESSIONAL ENGINEER

Parsons Brinckerhoff Quade & Douglas Inc.

Texas Department of Transportation

© 2002 by TxDOT

TRAFFIC SIGNAL DETAILS
OWASSA RD. & US 281
⑤

PLAN 1"= 50' HORIZ

SHEET 1 OF 1			281TSD13.DGN				
DESIGNED: ALQ	FED. RD DIV. No.	STATE	FEDERAL AID PROJECT No.		HIGHWAY No.		
CHECKED: KEA	6	TEXAS			US 281		
DRAWN: ALQ	STATE DISTRICT	COUNTY	CONTROL No.	SECTION No.	JOB No.	SHEET No.	
CHECKED: KEA	PHARR	HIDALGO	0255	08	091	702	

EXISTING TIMING CHART

PHASE	1	2	4	5	6	8	OLA	OLB
STREET	NOLANA LOOP		US 281 FTG.	NOLANA LOOP		US 281 FTG.	NOLANA LOOP	
MOVEMENT	WBLT	EB	NB	EBLT	WB	SB	WB	EB
MIN. GREEN	8	8	8	8	8	8		
PASSAGE	3	2	3	3	2	2		
MAX. I	32	34	35	32	34	34		
YELLOW	3	4	4	3	4	4		
ALL RED		1	1		1	1		
WALK		7	7		7	7		
PED CLEAR		8	15		8	15		
RECALL	OFF	OFF	OFF	OFF	OFF	OFF	OFF	OFF
MEMORY	OFF	OFF	OFF	OFF	OFF	OFF	OFF	OFF

LEGEND

- EXISTING LOOP DETECTOR SIZE AS NOTED
- EXISTING MAST ARM ASSEMBLY WITH EXISTING SIGNAL HEADS
- EXISTING 250 WATT SODIUM VAPOR LUMINAIRE
- EXISTING PEDESTRIAN PUSH BUTTON
- EXISTING PEDESTRIAN SIGNAL ARM
- EXISTING GROUND BOX
- EXISTING CONDUIT (SIZE AND TYPE AS SPECIFIED)
- EXISTING FULL TRAFFIC ACTUATED GROUND-MOUNTED CONTROLLER

EXIST. LOOP DETECTORS TO BE REMOVED (TYP.)
EXISTING WD. POLE W/SERVICE AND DISCONNECT
EXIST. MAST ARM AND STEEL POLE W/LUMINAIRE TO BE REMOVED AND SALVAGED
EXIST. SIGNAL HEADS TO BE REMOVED AND SALVAGED (TYP.)
EXIST. STEEL POLE TO BE REMOVED AND SALVAGED
EXIST. LOOP DETECTORS TO BE REMOVED (TYP.)
EXISTING CONTROLLER TO BE REMOVED AND SALVAGED
EXIST. SIGNAL HEADS TO BE REMOVED AND SALVAGED (TYP.)
EXIST. DUAL MAST ARMS AND STEEL POLE TO BE REMOVED AND SALVAGED
EXIST. STEEL POLE W/LUMINAIRE TO BE REMOVED AND SALVAGED
EXIST. LOOP DETECTORS TO BE REMOVED (TYP.)
EXIST. SIGNAL HEADS TO BE REMOVED AND SALVAGED (TYP.)
EXIST. MAST ARM AND STEEL POLE TO BE REMOVED AND SALVAGED
EXIST. LOOP DETECTORS TO BE REMOVED (TYP.)
EXIST. STEEL POLE TO BE REMOVED AND SALVAGED
EXIST. SIGNAL HEADS TO BE REMOVED AND SALVAGED (TYP.)
EXIST. DUAL MAST ARM AND STEEL POLE W/LUMINAIRE TO BE REMOVED AND SALVAGED
EXIST. SIGNAL HEADS TO BE REMOVED AND SALVAGED (TYP.)
EXIST. LOOP DETECTORS TO BE REMOVED (TYP.)
EXIST. SIGNAL HEADS TO BE REMOVED AND SALVAGED (TYP.)
EXIST. STEEL POLE W/LUMINAIRE TO BE REMOVED AND SALVAGED
EXIST. LOOP DETECTORS TO BE REMOVED (TYP.)

SBFR
US 281
NBFR
NOLANA LOOP
80' (TYP.)
60' (TYP.)
80' TO STOP BAR

NOTES:

1. THE EXISTING TRAFFIC SIGNALS SHALL REMAIN IN OPERATION AT ALL TIMES DURING ROADWAY CONSTRUCTION AND THE CONSTRUCTION OF THE PROPOSED TRAFFIC SIGNALS. THE EXISTING TRAFFIC SIGNAL WILL REQUIRE ADJUSTMENT DURING THE VARIOUS PHASES OF CONSTRUCTION. THE CONTRACTOR MAY USE A TEMPORARY WOOD POLE - SPAN WIRE TYPE INSTALLATION TO POSITION SIGNAL HEADS TO PROVIDE FOR THEIR BEST VISIBILITY TO TRAFFIC.

2. THE CONTRACTOR SHALL REMOVE THE EXISTING TRAFFIC SIGNAL INSTALLATION WHEN THE NEW INSTALLATION IS IN PLACE AND OPERATIONAL. ALL SALVAGEABLE TRAFFIC SIGNAL MATERIAL SHALL BE DELIVERED TO THE TXDOT SIGNAL SHOP LOCATED AT THE PHARR, TEXAS DISTRICT OFFICE COMPLEX.

STATE OF TEXAS
KAREN ASPELIN
84162
LICENSED PROFESSIONAL ENGINEER
Karen Aspelin
6-19-03

CONDITION DIAGRAM

INTERSECTION OF
NOLANA LOOP & US 281
IN HIDALGO COUNTY
CSJ: 0255-08-091

NOTE: ALL EXIST. PEDESTRIAN SIGNALS AND PUSH BUTTONS TO BE REMOVED AND SALVAGED; ALL EXIST. CONDUIT AND PULL BOXES TO BE REMOVED.

Parsons Brinckerhoff Quade & Douglas Inc.

Texas Department of Transportation

© 2002 by TxDOT

TRAFFIC SIGNAL DETAILS NOLANA LOOP & US 281

(2)

PLAN 1"= 50' HORIZ

SHEET 1 OF 3 — 281TSD04.DGN

DESIGNED: MVJ	FED. RD DIV. No.	STATE	FEDERAL AID PROJECT No.			HIGHWAY No.
CHECKED: KEA	6	TEXAS				US 281
DRAWN: MVJ	STATE DISTRICT	COUNTY	CONTROL No.	SECTION No.	JOB No.	SHEET No.
CHECKED: KEA	PHARR	HIDALGO	0255	08	091	703

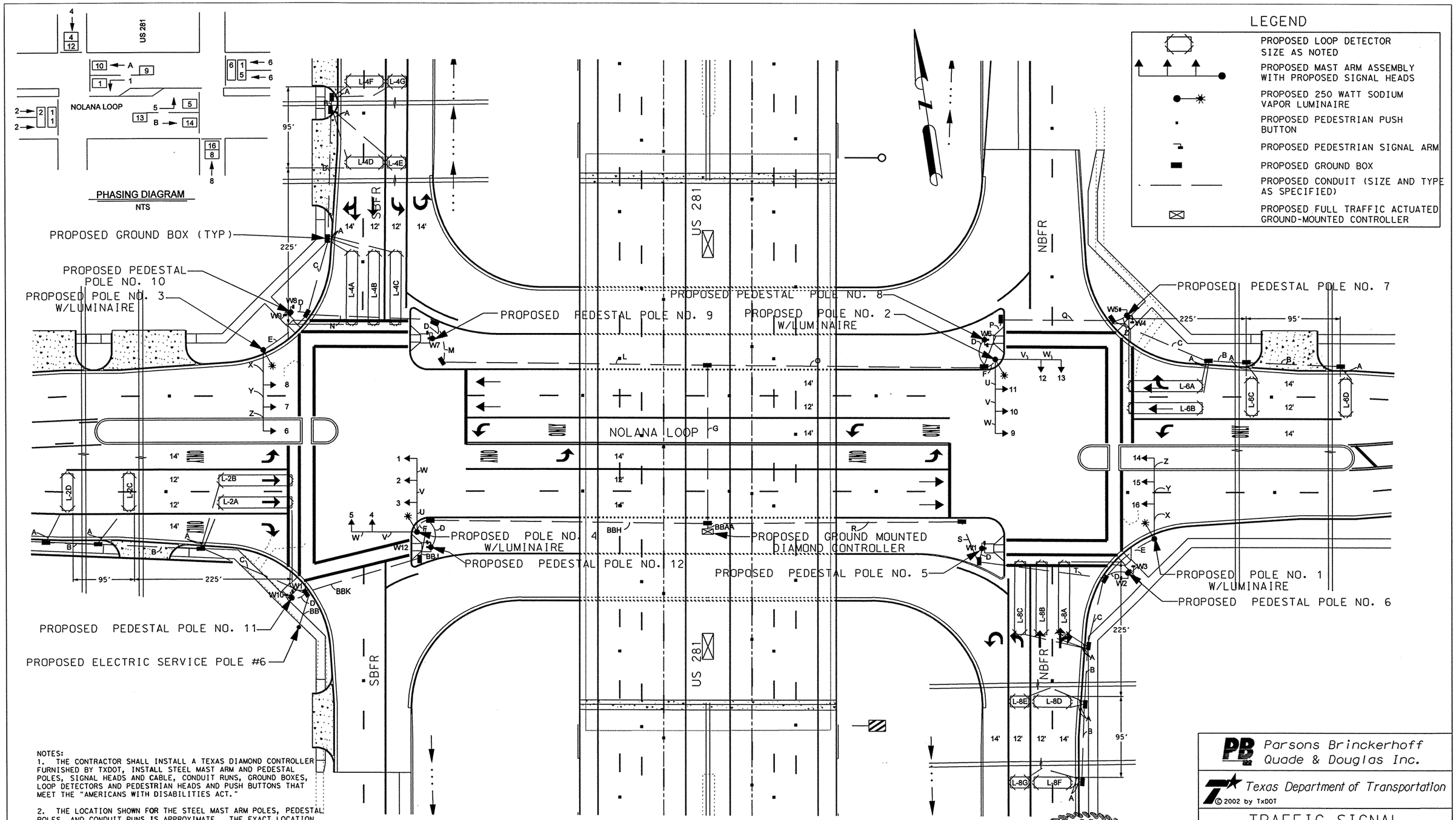

NOTES:
1. THE CONTRACTOR SHALL INSTALL A TEXAS DIAMOND CONTROLLER FURNISHED BY TXDOT, INSTALL STEEL MAST ARM AND PEDESTAL POLES, SIGNAL HEADS AND CABLE, CONDUIT RUNS, GROUND BOXES, LOOP DETECTORS AND PEDESTRIAN HEADS AND PUSH BUTTONS THAT MEET THE "AMERICANS WITH DISABILITIES ACT."

2. THE LOCATION SHOWN FOR THE STEEL MAST ARM POLES, PEDESTAL POLES, AND CONDUIT RUNS IS APPROXIMATE. THE EXACT LOCATION WILL BE DETERMINED IN THE FIELD BY THE ENGINEER IN COORDINATION WITH THE PHARR DISTRICT TRAFFIC SIGNAL SHOP. PEDESTAL POLES AND MAST ARM SIGNAL POLES WITH PEDESTRIAN PUSH BUTTONS SHALL BE LOCATED 5 FEET BEHIND THE TOP OF THE ADJACENT CURB RAMP.

3. ALL SIGNAL CABLE SHALL BE #12 AWG, 2/C LOOP LEAD-IN CABLE SHALL BE #14 AWG SHIELDED AND LOOP WIRES IN STREET SHALL BE #14 AWG.

4. THE CONTRACTOR SHALL FURNISH NEW LONG LIFE 135 WATT TRAFFIC SIGNAL LAMPS FOR ALL TRAFFIC SIGNAL HEADS.

5. THE LUMINAIRES AND HORIZONTAL SIGN LIGHTS SHALL BE OPERATED UNDER PHOTO-ELECTRIC CONTROL.

6. SIGNAL HEADS FACING EAST AND WEST SHALL HAVE BACKPLATES.

PROPOSED INSTALLATION

INTERSECTION OF
NOLANA LOOP & US 281
IN HIDALGO COUNTY
CSJ: 0255-08-091

STATE OF TEXAS
KAREN ASPELIN
84162
LICENSED
PROFESSIONAL ENGINEER
Karen Aspelin
6-19-03

Parsons Brinckerhoff Quade & Douglas Inc.

Texas Department of Transportation

© 2002 by TxDOT

TRAFFIC SIGNAL DETAILS
NOLANA LOOP & US 281
②

PLAN 1"= 50' HORIZ

SHEET 2 OF 3			281TSD03.DGN				
DESIGNED: MVJ	FED. RD DIV. NO.	STATE	FEDERAL AID PROJECT NO.		HIGHWAY NO.		
CHECKED: KEA	6	TEXAS			US 281		
DRAWN: MVJ	STATE DISTRICT	COUNTY	CONTROL NO.	SECTION NO.	JOB NO.	SHEET NO.	
CHECKED: KEA	PHARR	HIDALGO	0255	08	091	704	

ELECTRICAL CHART

ITEM	TOTAL QTY.	RUN NUMBER / RUN LENGTH (FT.)	A 165	B 1150	C 210	D 120	E 45	F 15	G 85	H 150	J 30	K 60	L 145	M 30	N 75	O 150	P 30	Q 60	R 140	S 30	T 70	U 16	V 15	W 15	X 26	Y 12	Z 12	AA 5	BB 230
SIGNAL WIRE SIZE TYPE	230	#6 BARE																											1
	460	#6 XHHW INSUL																											2
	1,240	#8 BARE				1	1	1	1	1	1	1	1	1	1	1	1	1	1	1	1							1	
	2,330	#8 XHHW INSUL					2	2	2	2			2	2	2	2			2	2	2								2
	3,722	5/C #12				1	1	2	7	4	1	1	3	3	2	4	1	1	3	3	2	3	2	1	2	1		14	
	680	7/C #12					1		1				1	1	1				1	1	1				1	1	1	2	
LOOP LEAD	330	#14 LOOP WIRE	2																										
	3,890	2/C L.L. SHIELDED		1	2				4	2	2	2	2	2	2	2	2	2	2	2	2							8	
CONDUIT	165	1" PVC	1																										
	2,155	2" PVC		1	1	1	1	1			1	1		1	1		1	1		1	1								1
	765	4" PVC							2	1			1			1			1									2	

TOTAL QUANTITY SHOWN INCLUDES QUANTITY IN SERVICE POLE, SIGNAL POLES, AND/OR LUMINAIRE ARMS

PHASING

PHASE	1	2	4	5	6	8	9	10	13	14
STREET	NOLANA		US 281 FR	NOLANA		US 281 FR	NOLANA	NOLANA	NOLANA	NOLANA
MOVEMENT	WBLT	EB	SB	EBLT	WB	NB	WB	WB	EB	EB
MIN. GREEN	10	20	12	10	20	12				
EXTENSION	2	2	2	2	2	2				
MAX. 1	20	40	24	30	40	24				
YELLOW	4	4	4	4	4	4				
ALL RED	1	1	1	1	1	1				
WALK		7	7		7	7				
PED CLEAR		16	27		16	27				
RECALL	OFF	ON	OFF	OFF	OFF	OFF				
MEMORY	OFF	OFF	OFF	OFF	ON	OFF				
OFFSET							3.5	7	3.5	7

LOOP DETECTOR CHART

LOOP	SIZE	WIRE LENGTH	SAW CUT	AMPLIFIER NO.	SETTING	FUNCTION	DELAY TIMING
L-2A&B	(2) 6' x 40'	480	240	1	PRESENCE	CALL & EXTEND Ø2	
L-2C&D	(2) 6' x 20'	290	145	2	PULSE	CALL & EXTEND Ø2	
L-4A,B,C&D	(4) 6' x 40'	720	360	3	PRESENCE	CALL & EXTEND Ø4	
L-4E&G	(2) 6' x 30'	230	115	4	PULSE	CALL & EXTEND Ø4	
L-4F&H	(2) 6' x 10'	290	145	5	PULSE	CALL & EXTEND Ø4	
L-6A&B	(2) 6' x 40'	430	215	6	PRESENCE	CALL & EXTEND Ø6	
L-6C&D	(2) 6' x 20'	230	115	7	PULSE	CALL & EXTEND Ø6	
L-8A,B&C	(3) 6' x 40'	720	360	8	PRESENCE	CALL & EXTEND Ø8	
L-8D&F	(2) 6' x 20'	290	145	9	PULSE	CALL & EXTEND Ø8	
L-8E&G	(2) 6' x 10'	290	145	10	PULSE	CALL & EXTEND Ø8	
TOTAL:		3,970	1,985				

TRAFFIC SIGNAL POLES

POLE NUMBER	QUANTITY	SIGNAL POLE DESIGNATION	MAST ARM DESIGNATION	FOUNDATION TYPE/DEPTH
1	1	44L-100	44III-100	36-B/15.2'
2	1	4036L-100	40III-100, 36III-100	42-A/17.4'
3	1	44L-100	44III-100	36-B/15.2'
4	1	4036L-100	40III-100, 36III-100	42-A/17.4'
5	1	PEDESTAL POLE		24-A/5.7'
6	1	PEDESTAL POLE		24-A/5.7'
7	1	PEDESTAL POLE		24-A/5.7'
8	1	PEDESTAL POLE		24-A/5.7'
9	1	PEDESTAL POLE		24-A/5.7'
10	1	PEDESTAL POLE		24-A/5.7'
11	1	PEDESTAL POLE		24-A/5.7'
12	1	PEDESTAL POLE		24-A/5.7'

INSTALL

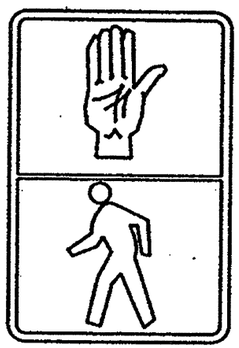

12" PEDESTRIAN SIGNAL HEADS (W1 THRU W12)

INSTALL

R10-4B SIGN WITH PEDESTRIAN PUSH BUTTON INSTALLED ON SIGNAL POLES FOR W1 THRU W12

INSTALL 12" HORIZONTAL

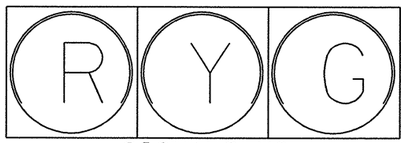

SIGNALS NO.
1, 2, 3, 4, 5, 7, 8, 9,
10, 11, 12, 13, 15, 16

INSTALL 12" HORIZONTAL

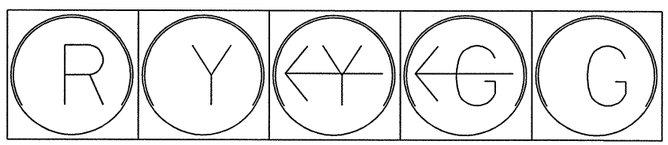

PROTECTED LEFT ON GREEN ARROW

SIGNALS NO. 6, 14
WITH SIGN & LIGHT

Parsons Brinckerhoff Quade & Douglas Inc.

Texas Department of Transportation

© 2002 by TxDOT

TRAFFIC SIGNAL DETAILS
NOLANA LOOP & US 281

②

SHEET 3 OF 3				281TSD10.DGN			
DESIGNED: KEA	FED. RD DIV. No.	STATE	FEDERAL AID PROJECT No.			HIGHWAY No.	
CHECKED: KEA	6	TEXAS				US 281	
DRAWN: MVJ	STATE DISTRICT	COUNTY	CONTROL No.	SECTION No.	JOB No.	SHEET No.	
CHECKED: KEA	PHARR	HIDALGO	0255	08	091	705	

LEGEND

EXIST. FLASHING BEACON

EXIST. FLASHER CONTROLLER

NOTE: ALL EXIST. CONDUIT AND PULL BOXES TO BE REMOVED.

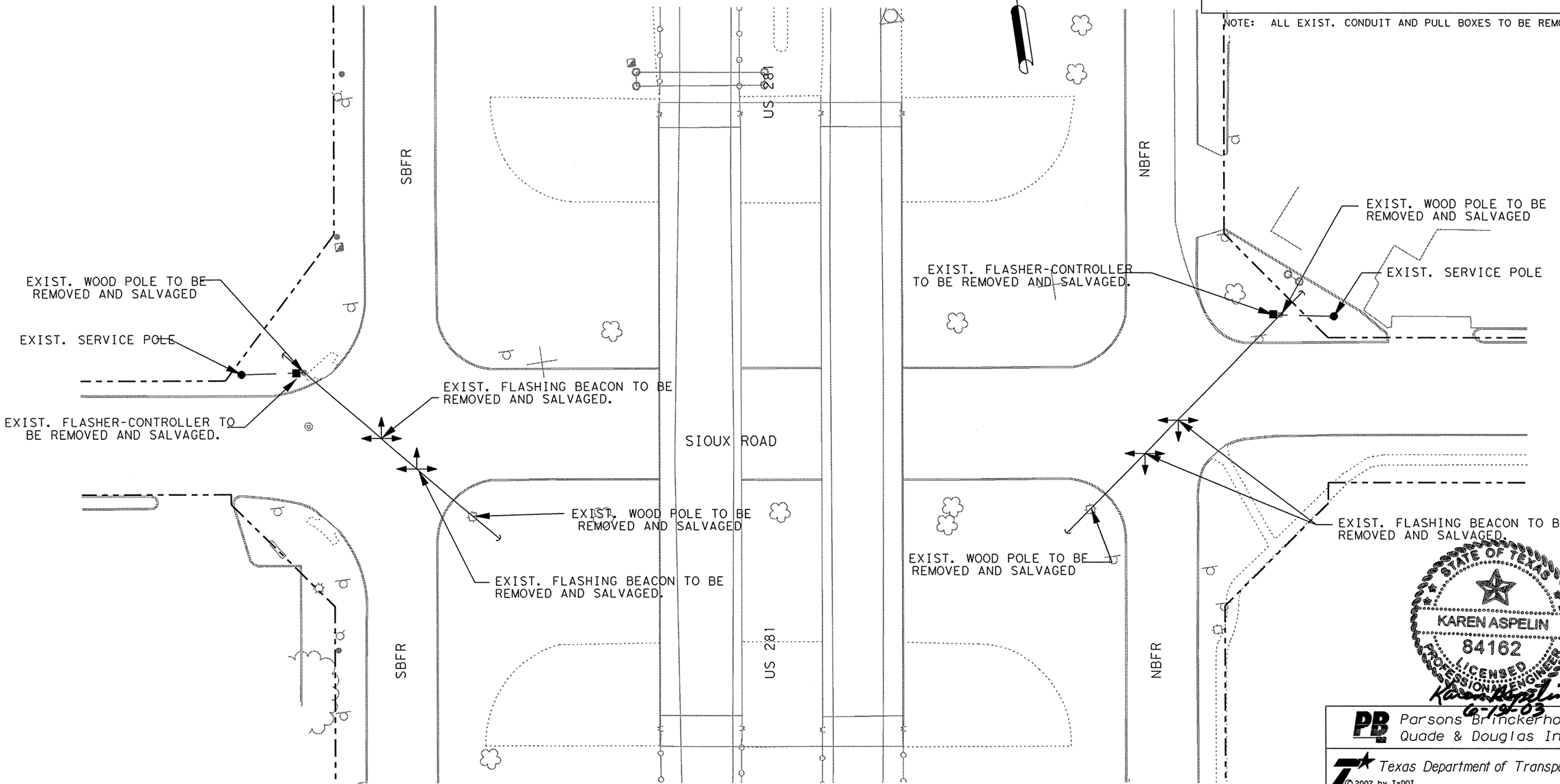

CONDITION DIAGRAM

INTERSECTION OF
SIOUX RD. & US 281
IN HIDALGO COUNTY
CSJ: 0255-08-091

NOTES:

1. THE EXISTING TRAFFIC SIGNALS SHALL REMAIN IN OPERATION AT ALL TIMES DURING ROADWAY CONSTRUCTION AND THE CONSTRUCTION OF THE PROPOSED TRAFFIC SIGNALS. THE EXISTING TRAFFIC SIGNAL WILL REQUIRE ADJUSTMENT DURING THE VARIOUS PHASES OF CONSTRUCTION. THE CONTRACTOR MAY USE A TEMPORARY WOOD POLE - SPAN WIRE TYPE INSTALLATION TO POSITION SIGNAL HEADS TO PROVIDE FOR THEIR BEST VISIBILITY TO TRAFFIC.

2. THE CONTRACTOR SHALL REMOVE THE EXISTING TRAFFIC SIGNAL INSTALLATION WHEN THE NEW INSTALLATION IS IN PLACE AND OPERATIONAL. ALL SALVAGEABLE TRAFFIC SIGNAL MATERIAL SHALL BE DELIVERED TO THE TXDOT SIGNAL SHOP LOCATED AT THE PHARR, TEXAS DISTRICT OFFICE COMPLEX.

STATE OF TEXAS
KAREN ASPELIN
84162
LICENSED
PROFESSIONAL ENGINEER
6-19-03

Parsons Brinckerhoff Quade & Douglas Inc.

Texas Department of Transportation

© 2002 by TxDOT

TRAFFIC SIGNAL DETAILS SIOUX RD. & US 281

(3)

PLAN 1"= 50' HORIZ

SHEET 1 OF 3 — 281TSD02.DGN

DESIGNED: MVJ	FED. RD DIV. No.	STATE	FEDERAL AID PROJECT No.	HIGHWAY No.
CHECKED: KEA	6	TEXAS		US 281

DRAWN: MVJ	STATE DISTRICT	COUNTY	CONTROL No.	SECTION No.	JOB No.	SHEET No.
CHECKED: KEA	PHARR	HIDALGO	0255	08	091	706

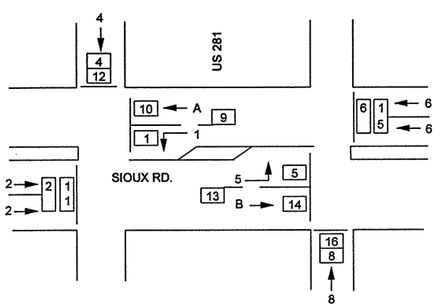

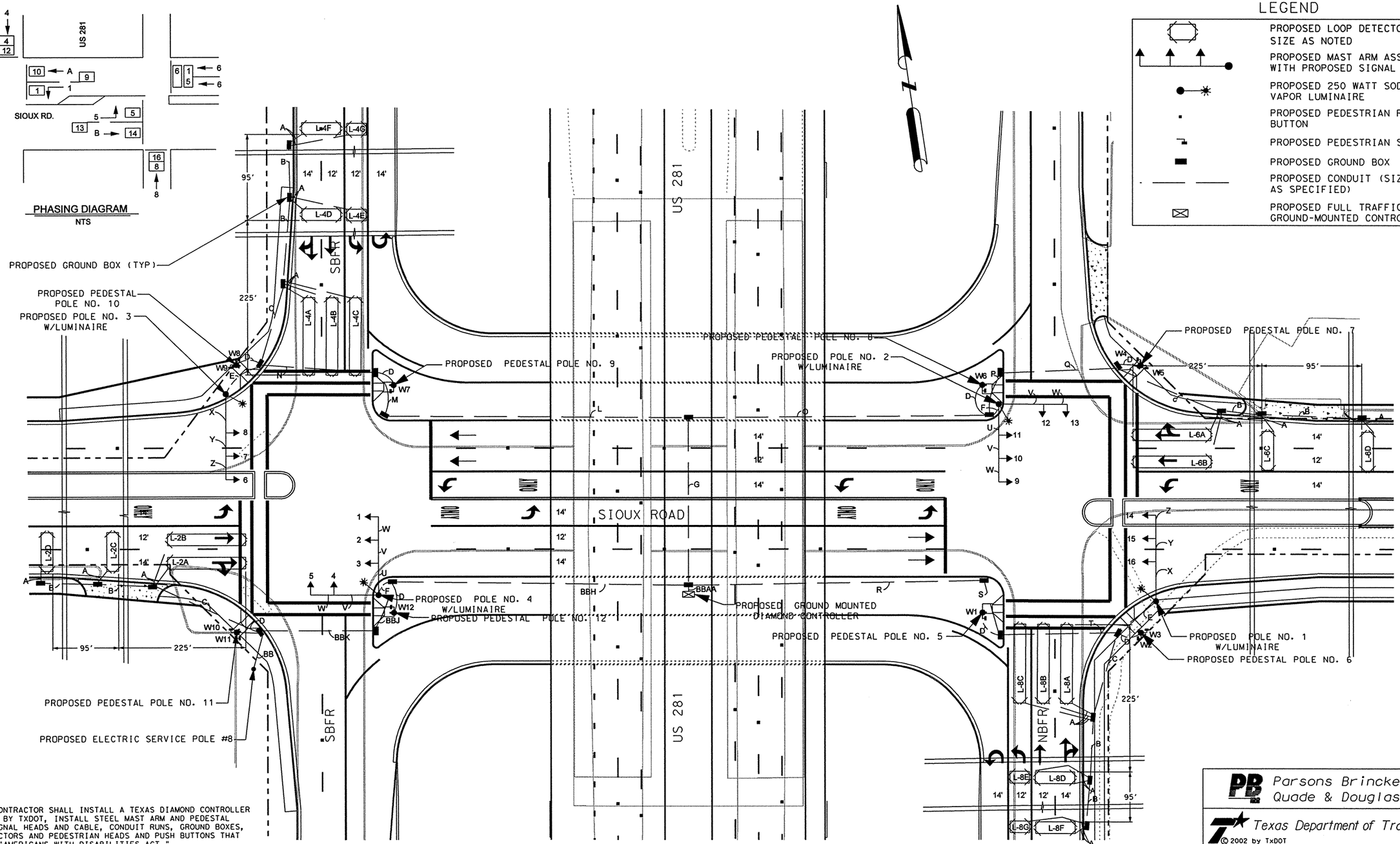

LEGEND

- PROPOSED LOOP DETECTOR SIZE AS NOTED
- PROPOSED MAST ARM ASSEMBLY WITH PROPOSED SIGNAL HEADS
- PROPOSED 250 WATT SODIUM VAPOR LUMINAIRE
- PROPOSED PEDESTRIAN PUSH BUTTON
- PROPOSED PEDESTRIAN SIGNAL ARM
- PROPOSED GROUND BOX
- PROPOSED CONDUIT (SIZE AND TYPE AS SPECIFIED)
- PROPOSED FULL TRAFFIC ACTUATED GROUND-MOUNTED CONTROLLER

NOTES:

1. THE CONTRACTOR SHALL INSTALL A TEXAS DIAMOND CONTROLLER FURNISHED BY TXDOT, INSTALL STEEL MAST ARM AND PEDESTAL POLES, SIGNAL HEADS AND CABLE, CONDUIT RUNS, GROUND BOXES, LOOP DETECTORS AND PEDESTRIAN HEADS AND PUSH BUTTONS THAT MEET THE "AMERICANS WITH DISABILITIES ACT."

2. THE LOCATION SHOWN FOR THE STEEL MAST ARM POLES, PEDESTAL POLES, AND CONDUIT RUNS IS APPROXIMATE. THE EXACT LOCATION WILL BE DETERMINED IN THE FIELD BY THE ENGINEER IN COORDINATION WITH THE PHARR DISTRICT TRAFFIC SIGNAL SHOP. PEDESTAL POLES AND MAST ARM SIGNAL POLES WITH PEDESTRIAN PUSH BUTTONS SHALL BE LOCATED 5 FEET BEHIND THE TOP OF THE ADJACENT CURB RAMP.

3. ALL SIGNAL CABLE SHALL BE #12 AWG, 2/C LOOP LEAD-IN CABLE SHALL BE #14 AWG SHIELDED AND LOOP WIRES IN STREET SHALL BE #14 AWG.

4. THE CONTRACTOR SHALL FURNISH NEW LONG LIFE 135 WATT TRAFFIC SIGNAL LAMPS FOR ALL TRAFFIC SIGNAL HEADS.

5. THE LUMINAIRES AND HORIZONTAL SIGN LIGHTS SHALL BE OPERATED UNDER PHOTO-ELECTRIC CONTROL.

6. SIGNAL HEADS FACING EAST AND WEST SHALL HAVE BACKPLATES.

PROPOSED INSTALLATION

INTERSECTION OF
SIOUX RD. & US 281
IN HIDALGO COUNTY
CSJ: 0255-08-091

STATE OF TEXAS
KAREN ASPELIN
84162
LICENSED
PROFESSIONAL ENGINEER
6-13-03

Parsons Brinckerhoff Quade & Douglas Inc.

Texas Department of Transportation

© 2002 by TxDOT

TRAFFIC SIGNAL DETAILS SIOUX RD. & US 281

③

PLAN 1"= 50' HORIZ

SHEET 2 OF 3 — 281TSD05.DGN

DESIGNED: MVJ	FED. RD DIV. NO.	STATE	FEDERAL AID PROJECT NO.			HIGHWAY NO.
CHECKED: KEA	6	TEXAS				US 281
DRAWN: MVJ	STATE DISTRICT	COUNTY	CONTROL NO.	SECTION NO.	JOB NO.	SHEET NO.
CHECKED: KEA	PHARR	HIDALGO	0255	08	091	707

ELECTRICAL CHART

ITEM	TOTAL QTY.	RUN NUMBER / RUN LENGTH (FT.)	A 145	B 1150	C 210	D 125	E 40	F 20	G 85	H 150	J 25	K 60	L 155	M 20	N 60	O 155	P 20	Q 60	R 155	S 25	T 60	U 16	V 24	W 12	X 26	Y 12	Z 12	AA 5	BB 230
SIGNAL WIRE SIZE TYPE	230	#6 BARE																											1
	460	#6 XHHW INSUL																											2
	1,220	#8 BARE				1	1	1	1	1	1	1	1	1	1	1	1	1	1	1	1							1	
	2,310	#8 XHHW INSUL					2	2	2	2			2	2	2	2			2	2	2								2
	3,732	5/C #12				1	1	2	7	4	1	1	3	3	2	4	1	1	3	3	2	3	2	1	2	1		14	
	660	7/C #12					1		1				1	1	1				1	1	1				1	1	1	2	
LOOP LEAD	290	#14 LOOP WIRE	2																										
	3,840	2/C L.L. SHIELDED		1	2				4	2	2	2	2	2	2	2	2	2	2	2	2							8	
CONDUIT	145	1" PVC	1																										
	2,105	2" PVC		1	1	1	1	1			1	1		1	1		1	1		1	1								1
	795	4" PVC							2	1			1			1			1									2	

TOTAL QUANTITY SHOWN INCLUDES QUANTITY IN SERVICE POLE, SIGNAL POLES, AND/OR LUMINAIRE ARMS

PHASING

PHASE	1	2	4	5	6	8	9	10	13	14
STREET	SIOUX		US 281 FR	SIOUX		US 281 FR	SIOUX	SIOUX	SIOUX	SIOUX
MOVEMENT	WBLT	EB	SB	EBLT	WB	NB	WB	WB	EB	EB
MIN. GREEN	10	20	12	10	20	12				
EXTENSION	2	2	2	2	2	2				
MAX. 1	20	40	24	30	40	24				
YELLOW	4	4	4	4	4	4				
ALL RED	1	1	1	1	1	1				
WALK		7	7		7	7				
PED CLEAR		16	27		16	27				
RECALL	OFF	ON	OFF	OFF	OFF	OFF				
MEMORY	OFF	OFF	OFF	OFF	ON	OFF				
OFFSET							3.5	7	3.5	7

LOOP DETECTOR CHART

LOOP	SIZE	WIRE LENGTH	SAW CUT	AMPLIFIER NO.	SETTING	FUNCTION	DELAY TIMING
L-2A&B	(2) 6' x 40'	430	215	1	PRESENCE	CALL & EXTEND Ø2	
L-2C&D	(2) 6' x 20'	230	115	2	PULSE	CALL & EXTEND Ø2	
L-4A,B&C	(3) 6' x 40'	690	345	3	PRESENCE	CALL & EXTEND Ø4	
L-4D&F	(2) 6' x 20'	230	115	4	PULSE	CALL & EXTEND Ø4	
L-4E&G	(2) 6' x 10'	270	135	5	PULSE	CALL & EXTEND Ø4	
L-6A&B	(2) 6' x 40'	420	210	6	PRESENCE	CALL & EXTEND Ø6	
L-6C&D	(2) 6' x 20'	240	120	7	PULSE	CALL & EXTEND Ø6	
L-8A,B&C	(3) 6' x 40'	690	345	8	PRESENCE	CALL & EXTEND Ø8	
L-8D&F	(2) 6' x 20'	230	115	9	PULSE	CALL & EXTEND Ø8	
L-8E&G	(2) 6' x 10'	250	125	10	PULSE	CALL & EXTEND Ø8	
TOTAL:		3,680	1,840				

TRAFFIC SIGNAL POLES

POLE NUMBER	QUANTITY	SIGNAL POLE DESIGNATION	MAST ARM DESIGNATION	FOUNDATION TYPE/DEPTH
1	1	44L-100	44III-100	36-B/15.2'
2	1	4036L-100	40III-100, 36II-100	42-A/17.4'
3	1	44L-100	44III-100	36-B/15.2'
4	1	4036L-100	40III-100, 36II-100	42-A/17.4'
5	1	PEDESTAL POLE		24-A/5.7'
6	1	PEDESTAL POLE		24-A/5.7'
7	1	PEDESTAL POLE		24-A/5.7'
8	1	PEDESTAL POLE		24-A/5.7'
9	1	PEDESTAL POLE		24-A/5.7'
10	1	PEDESTAL POLE		24-A/5.7'
11	1	PEDESTAL POLE		24-A/5.7'
12	1	PEDESTAL POLE		24-A/5.7'

INSTALL

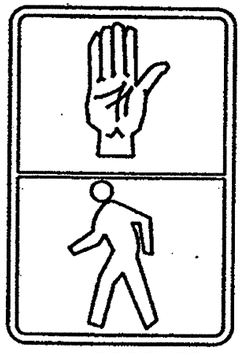

12" PEDESTRIAN SIGNAL HEADS (W1 THRU W12)

INSTALL

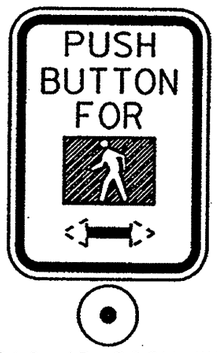

R10-4B SIGN WITH PEDESTRIAN PUSH BUTTON INSTALLED ON SIGNAL POLES FOR W1 THRU W12

INSTALL 12" HORIZONTAL

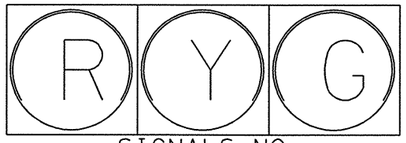

SIGNALS NO.
1, 2, 3, 4, 5, 7, 8, 9,
10, 11, 12, 13, 15, 16

INSTALL 12" HORIZONTAL

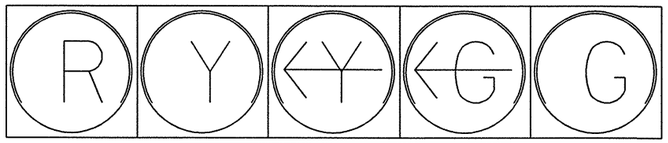

PROTECTED LEFT ON GREEN ARROW

SIGNALS NO. 6, 14
WITH SIGN & LIGHT

Parsons Brinckerhoff Quade & Douglas Inc.

Texas Department of Transportation

© 2002 by TxDOT

TRAFFIC SIGNAL DETAILS SIOUX RD. & US 281

(3)

SHEET 3 OF 3				281TSD09.DGN			
DESIGNED: KEA	FED. RD DIV. No.	STATE	FEDERAL AID PROJECT No.			HIGHWAY No.	
CHECKED: KEA	6	TEXAS				US 281	
DRAWN: MVJ	STATE DISTRICT	COUNTY	CONTROL No.	SECTION No.	JOB No.	SHEET No.	
CHECKED: KEA	PHARR	HIDALGO	0255	08	091	708	

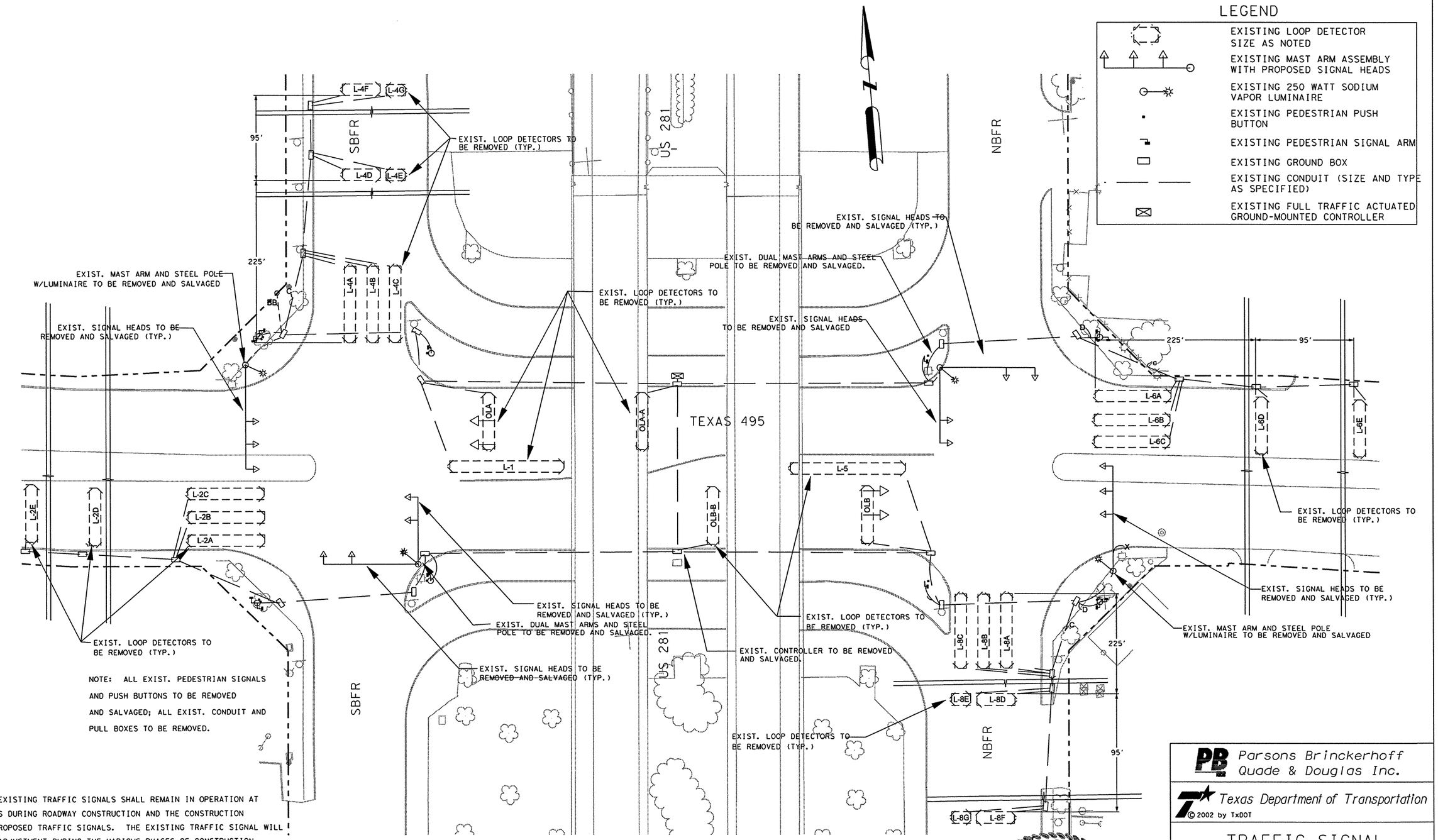

NOTE: ALL EXIST. PEDESTRIAN SIGNALS AND PUSH BUTTONS TO BE REMOVED AND SALVAGED; ALL EXIST. CONDUIT AND PULL BOXES TO BE REMOVED.

NOTES:

1. THE EXISTING TRAFFIC SIGNALS SHALL REMAIN IN OPERATION AT ALL TIMES DURING ROADWAY CONSTRUCTION AND THE CONSTRUCTION OF THE PROPOSED TRAFFIC SIGNALS. THE EXISTING TRAFFIC SIGNAL WILL REQUIRE ADJUSTMENT DURING THE VARIOUS PHASES OF CONSTRUCTION. THE CONTRACTOR MAY USE A TEMPORARY WOOD POLE - SPAN WIRE TYPE INSTALLATION TO POSITION SIGNAL HEADS TO PROVIDE FOR THEIR BEST VISIBILITY TO TRAFFIC.

2. THE CONTRACTOR SHALL REMOVE THE EXISTING TRAFFIC SIGNAL INSTALLATION WHEN THE NEW INSTALLATION IS IN PLACE AND OPERATIONAL. ALL SALVAGEABLE TRAFFIC SIGNAL MATERIAL SHALL BE DELIVERED TO THE TXDOT SIGNAL SHOP LOCATED AT THE PHARR, TEXAS DISTRICT OFFICE COMPLEX.

CONDITION DIAGRAM

INTERSECTION OF
TEXAS 495 & US 281
IN HIDALGO COUNTY
CSJ: 0255-08-091

STATE OF TEXAS
KAREN ASPELIN
84162
LICENSED
PROFESSIONAL ENGINEER
6-15-03

Parsons Brinckerhoff Quade & Douglas Inc.

Texas Department of Transportation

© 2002 by TxDOT

TRAFFIC SIGNAL DETAILS TEXAS 495 & US 281

④

PLAN 1"= 50' HORIZ

SHEET 1 OF 3 — 281TSD07.DGN

DESIGNED: MVJ	FED. RD DIV. No.	STATE	FEDERAL AID PROJECT No.			HIGHWAY No.	
CHECKED: KEA	6	TEXAS				US 281	
DRAWN: MVJ	STATE DISTRICT	COUNTY	CONTROL No.	SECTION No.	JOB No.	SHEET No.	
CHECKED: KEA	PHARR	HIDALGO	0255	08	091	709	

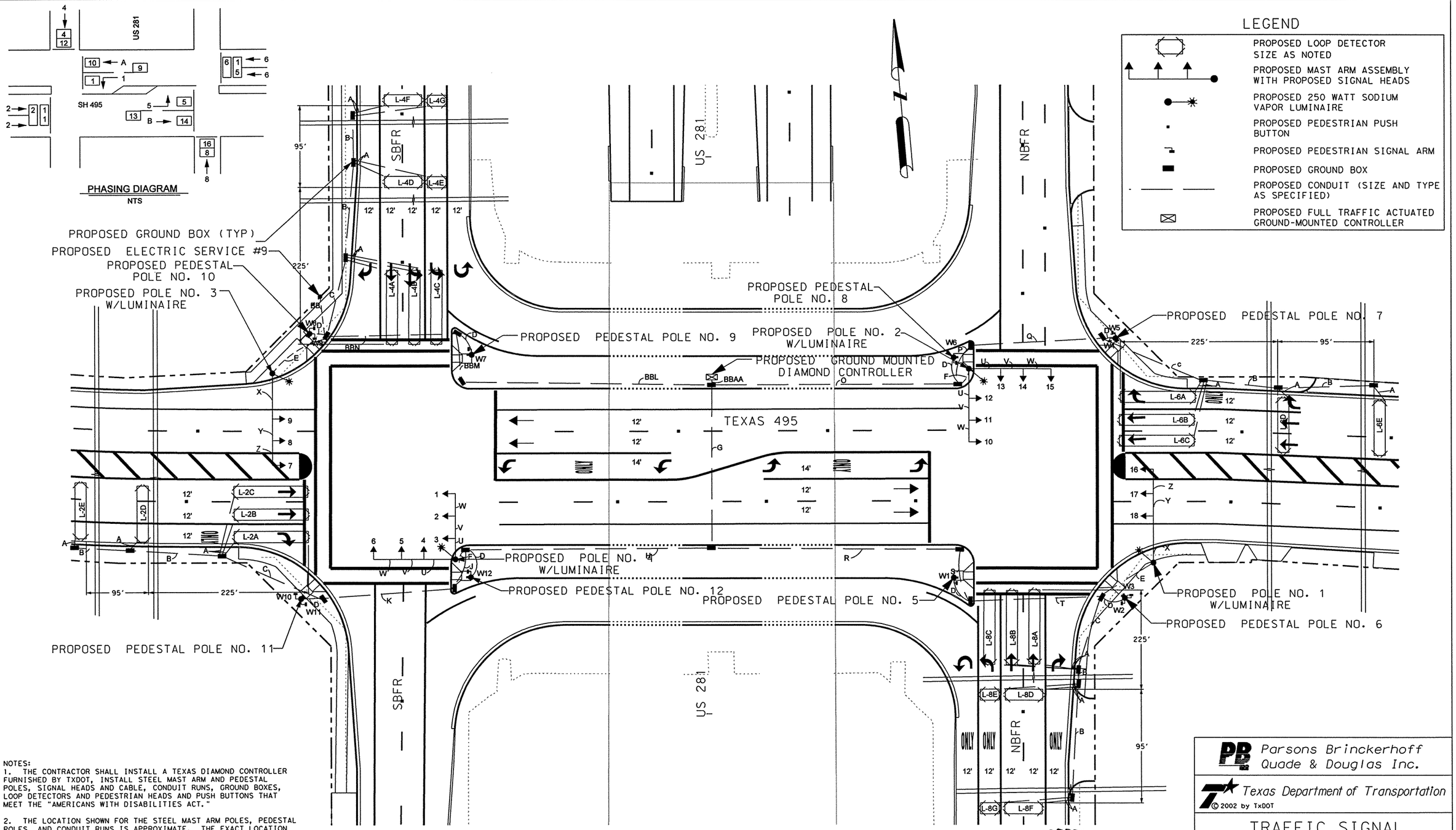

NOTES:
1. THE CONTRACTOR SHALL INSTALL A TEXAS DIAMOND CONTROLLER FURNISHED BY TXDOT, INSTALL STEEL MAST ARM AND PEDESTAL POLES, SIGNAL HEADS AND CABLE, CONDUIT RUNS, GROUND BOXES, LOOP DETECTORS AND PEDESTRIAN HEADS AND PUSH BUTTONS THAT MEET THE "AMERICANS WITH DISABILITIES ACT."

2. THE LOCATION SHOWN FOR THE STEEL MAST ARM POLES, PEDESTAL POLES, AND CONDUIT RUNS IS APPROXIMATE. THE EXACT LOCATION WILL BE DETERMINED IN THE FIELD BY THE ENGINEER IN COORDINATION WITH THE PHARR DISTRICT TRAFFIC SIGNAL SHOP. PEDESTAL POLES AND MAST ARM SIGNAL POLES WITH PEDESTRIAN PUSH BUTTONS SHALL BE LOCATED 5 FEET BEHIND THE TOP OF THE ADJACENT CURB RAMP.

3. ALL SIGNAL CABLE SHALL BE #12 AWG, 2/C LOOP LEAD-IN CABLE SHALL BE #14 AWG SHIELDED AND LOOP WIRES IN STREET SHALL BE #14 AWG.

4. THE CONTRACTOR SHALL FURNISH NEW LONG LIFE 135 WATT TRAFFIC SIGNAL LAMPS FOR ALL TRAFFIC SIGNAL HEADS.

5. THE LUMINAIRES AND HORIZONTAL SIGN LIGHTS SHALL BE OPERATED UNDER PHOTO-ELECTRIC CONTROL.

6. SIGNAL HEADS FACING EAST AND WEST SHALL HAVE BACKPLATES.

PROPOSED INSTALLATION

INTERSECTION OF
TEXAS 495 & US 281
IN HIDALGO COUNTY
CSJ: 0255-08-091

STATE OF TEXAS
KAREN ASPELIN
84162
REGISTERED PROFESSIONAL ENGINEER

Parsons Brinckerhoff Quade & Douglas Inc.

Texas Department of Transportation

© 2002 by TxDOT

TRAFFIC SIGNAL DETAILS
TEXAS 495 & US 281

④

PLAN 1" = 50' HORIZ

SHEET 2 OF 3 — 281TSD06.DGN

DESIGNED: MVJ	FED. RD DIV. NO.	STATE	FEDERAL AID PROJECT NO.	HIGHWAY NO.
CHECKED: KEA	6	TEXAS		US 281

DRAWN: MVJ	STATE DISTRICT	COUNTY	CONTROL NO.	SECTION NO.	JOB NO.	SHEET NO.
CHECKED: KEA	PHARR	HIDALGO	0255	08	091	710

ELECTRICAL CHART

ITEM	TOTAL QTY.	RUN NUMBER / RUN LENGTH (FT.)	A 160	B 1150	C 205	D 115	E 50	F 20	G 90	H 135	J 25	K 75	L 135	M 30	N 75	O 135	P 25	Q 70	R 135	S 30	T 70	U 16	V 12	W 12	X 31	Y 12	Z 12	AA 5	BB 230
SIGNAL WIRE SIZE TYPE	230	#6 BARE																											1
	460	#6 XHHW INSUL																											2
	1,220	#8 BARE				1	1	1	1	1	1	1	1	1	1	1	1	1	1	1								1	
	2,270	#8 XHHW INSUL					2	2	2	2			2	2	2	2			2	2	2								2
	3,618	5/C #12				1	1	2	7	4	1	1	3	3	2	4	1	1	3	3	2	3	2	1	2	1		14	
	680	7/C #12					1		1				1	1	1				1	1	1				1	1	1	2	
LOOP LEAD	320	#14 LOOP WIRE	2																										
	3,840	2/C L.L. SHIELDED		1	2				4	2	2	2	2	2	2	2	2	2	2	2	2							8	
CONDUIT	160	1" PVC	1																										
	2,170	2" PVC		1	1	1	1	1			1	1		1	1		1	1		1	1								1
	730	4" PVC							2	1			1			1			1									2	

TOTAL QUANTITY SHOWN INCLUDES QUANTITY IN SERVICE POLE, SIGNAL POLES, AND/OR LUMINAIRE ARMS

PHASING

PHASE	1	2	4	5	6	8	9	10	13	14
STREET	TEXAS 495		US 281 FR	TEXAS 495		US 281 FR	TEXAS 495	TEXAS 495	TEXAS 495	TEXAS 495
MOVEMENT	WBLT	EB	SB	EBLT	WB	NB	WB	WB	EB	EB
MIN. GREEN	10	20	12	10	20	12				
EXTENSION	2	2	2	2	2	2				
MAX. 1	20	40	24	30	40	24				
YELLOW	4	4	4	4	4	4				
ALL RED	1	1	1	1	1	1				
WALK		7	7		7	7				
PED CLEAR		16	27		16	27				
RECALL	OFF	ON	OFF	OFF	OFF	OFF				
MEMORY	OFF	OFF	OFF	OFF	ON	OFF				
OFFSET							3.5	7	3.5	7

LOOP DETECTOR CHART

LOOP	SIZE	WIRE LENGTH	SAW CUT	AMPLIFIER NO.	SETTING	FUNCTION	DELAY TIMING
L-2A,B&C	(3) 6' x 40'	660	330	1	PRESENCE	CALL & EXTEND Ø2	
L-2D&E	(2) 6' x 40'	310	155	2	PULSE	CALL & EXTEND Ø2	
L-4A,B&C	(3) 6' x 30'	750	375	3	PRESENCE	CALL & EXTEND Ø4	
L-4D&F	(2) 6' x 20'	280	140	4	PULSE	CALL & EXTEND Ø4	
L-4E&G	(2) 6' x 10'	280	140	5	PULSE	CALL & EXTEND Ø4	
L-6A,B&C	(3) 6' x 40'	660	330	6	PRESENCE	CALL & EXTEND Ø6	
L-6D&E	(2) 6' x 30'	310	155	7	PULSE	CALL & EXTEND Ø6	
L-8A,B&C	(3) 6' x 40'	740	370	8	PRESENCE	CALL & EXTEND Ø8	
L-8D&F	(2) 6' x 20'	270	135	9	PULSE	CALL & EXTEND Ø8	
L-8E&G	(2) 6' x 10'	280	140	10	PULSE	CALL & EXTEND Ø8	
TOTAL:		4,540	2,270				

TRAFFIC SIGNAL POLES

POLE NUMBER	QUANTITY	SIGNAL POLE DESIGNATION	MAST ARM DESIGNATION	FOUNDATION TYPE/DEPTH
1	1	50L-100	50III-100	48-A/21.9'
2	1	4440L-100	44III-100, 40III-100	48-A/21.9'
3	1	50L-100	50III-100	48-A/21.9'
4	1	4436L-100	44III-100, 36III-100	48-A/21.9'
5	1	PEDESTAL POLE		24-A/5.7'
6	1	PEDESTAL POLE		24-A/5.7'
7	1	PEDESTAL POLE		24-A/5.7'
8	1	PEDESTAL POLE		24-A/5.7'
9	1	PEDESTAL POLE		24-A/5.7'
10	1	PEDESTAL POLE		24-A/5.7'
11	1	PEDESTAL POLE		24-A/5.7'
12	1	PEDESTAL POLE		24-A/5.7'

INSTALL

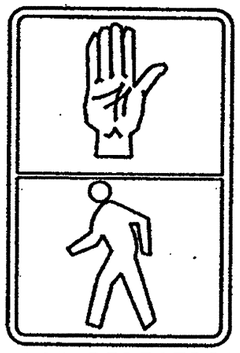

12" PEDESTRIAN SIGNAL HEADS (W1 THRU W12)

INSTALL

R10-4B SIGN WITH PEDESTRIAN PUSH BUTTON INSTALLED ON SIGNAL POLES FOR W1 THRU W12

INSTALL 12" HORIZONTAL

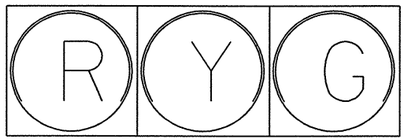

SIGNALS NO.
1, 2, 3, 4, 5, 6, 8, 9, 10, 11,
12, 13, 14, 15, 17, 18

INSTALL 12" HORIZONTAL

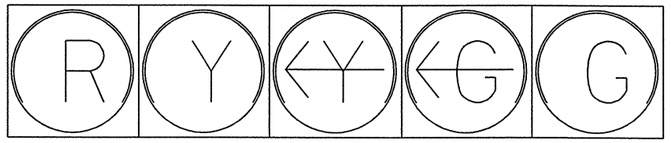

PROTECTED LEFT ON GREEN ARROW

SIGNALS NO. 7 & 16
WITH SIGN & LIGHT.

Parsons Brinckerhoff Quade & Douglas Inc.

Texas Department of Transportation

© 2002 by TxDOT

TRAFFIC SIGNAL DETAILS TEXAS 495 & US 291

④

SHEET 3 OF 3				281TSD08.DGN			
DESIGNED: KEA	FED. RD DIV. No.	STATE	FEDERAL AID PROJECT No.			HIGHWAY No.	
CHECKED: KEA	6	TEXAS				US 281	
DRAWN: MVJ	STATE DISTRICT	COUNTY	CONTROL No.	SECTION No.	JOB No.	SHEET No.	
CHECKED: KEA	PHARR	HIDALGO	0255	08	091	711	

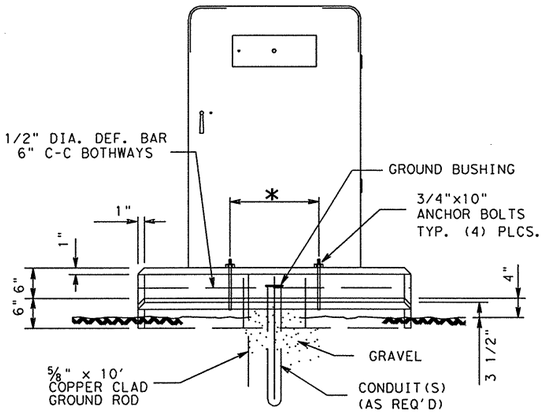

FRONT VIEW

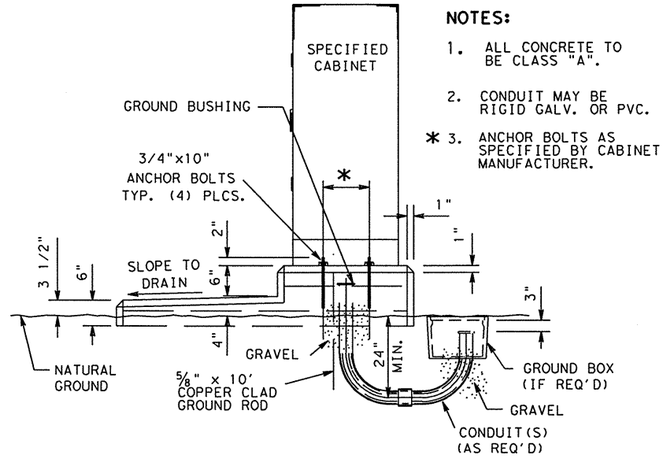

NOTES:

1. ALL CONCRETE TO BE CLASS "A".
2. CONDUIT MAY BE RIGID GALV. OR PVC.
* 3. ANCHOR BOLTS AS SPECIFIED BY CABINET MANUFACTURER.

SIDE VIEW

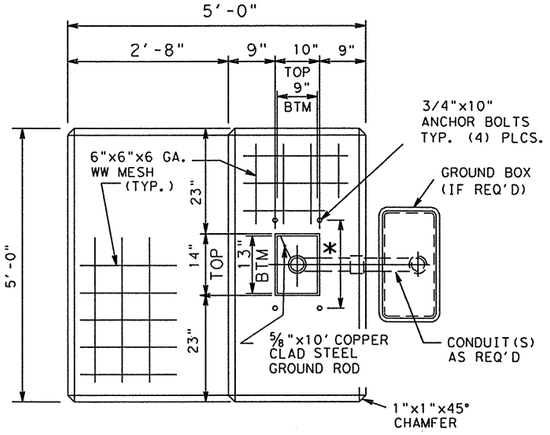

TOP VIEW

DETAIL OF BASE MOUNT CABINET FOUNDATION

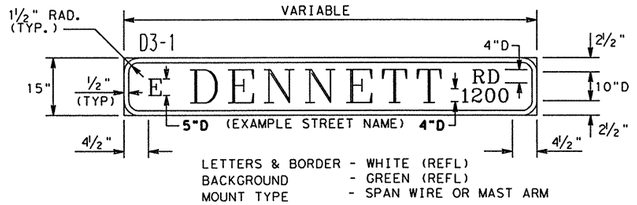

LETTERS & BORDER - WHITE (REFL)
BACKGROUND - GREEN (REFL)
MOUNT TYPE - SPAN WIRE OR MAST ARM

STREET NAME SIGN

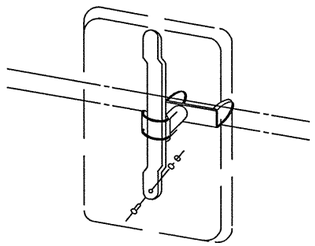

SIGN BRACKET

NOTE: THESE BRACKETS, USED IN PAIRS FOR LONGER SIGN, OR IN SINGLE UNITS FOR SMALLER SIGNS.

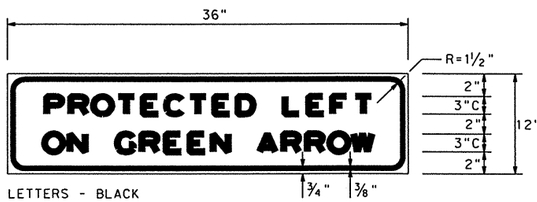

LETTERS - BLACK
BORDER - BLACK
BACKGROUND - WHITE REFLECTIVE
MOUNT - SPAN WIRE , MAST ARM
OR SIGNAL HEAD

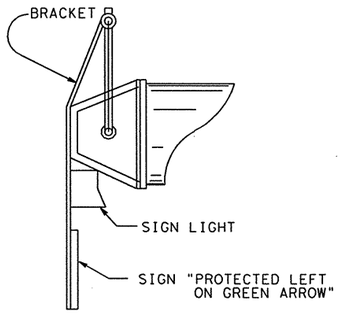

DETAIL-SIGN LIGHT

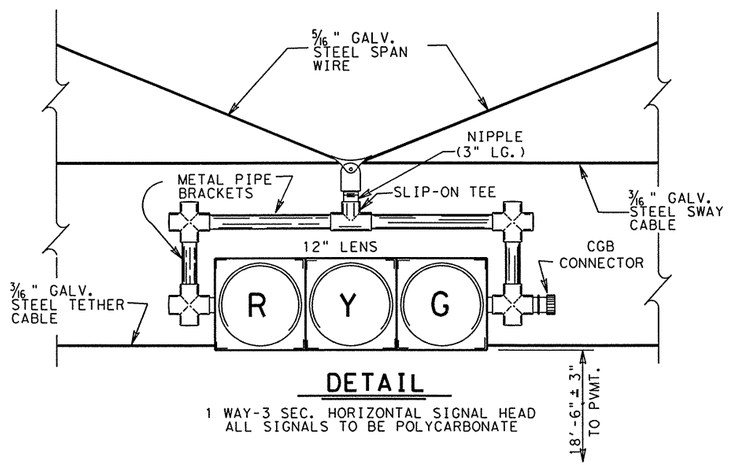

DETAIL

1 WAY-3 SEC. HORIZONTAL SIGNAL HEAD
ALL SIGNALS TO BE POLYCARBONATE

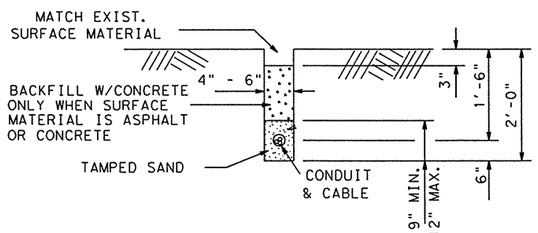

DETAIL - TRENCH LAY CONDUIT

DISTRICT STANDARD PLANS
TEXAS DEPARTMENT OF TRANSPORTATION
PHARR DISTRICT

TRAFFIC SIGNAL CONSTRUCTION DETAILS

CONTROLLER FOUNDATON & MISCELLANEOUS DETAILS

© 1999 TxDOT RGARZA2, FILE d:\engdata\beto\tsstd.dgn | SHEET 1 OF 2

DN: RDG	DRAWING	DATE	FED.RD. DIV.NO.	STATE	PROJECT NO.				SHEET NO.
CK DN:	ORIGINAL	AUG. 1996							
DW: RDG	REV. MAR, 1999		PHARR	TEXAS					712
CK DW:			STATE DIST. NO.	COUNTY	CONTROL NO.	SECTION NO.	JOB NO.		HIGHWAY NO.
			6	HIDALGO	0255	08	091		US281

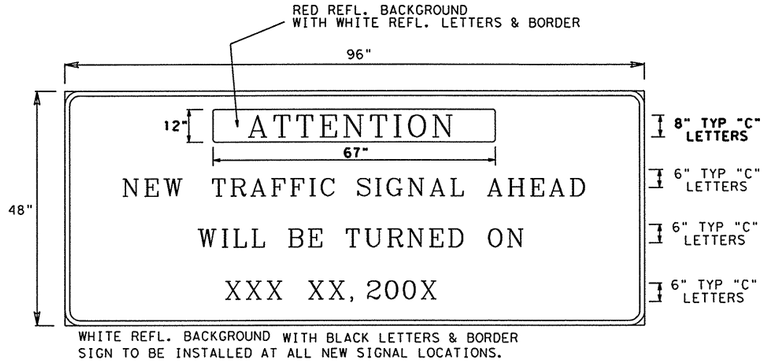

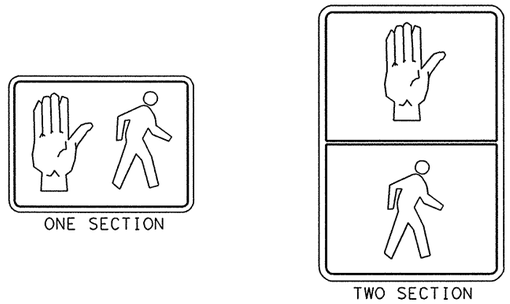

PEDESTRIAN SIGNAL HEAD

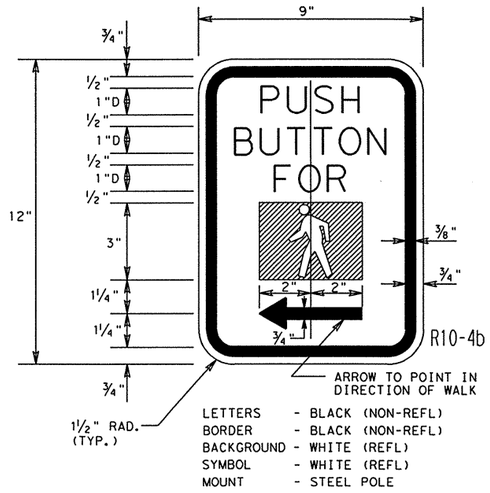

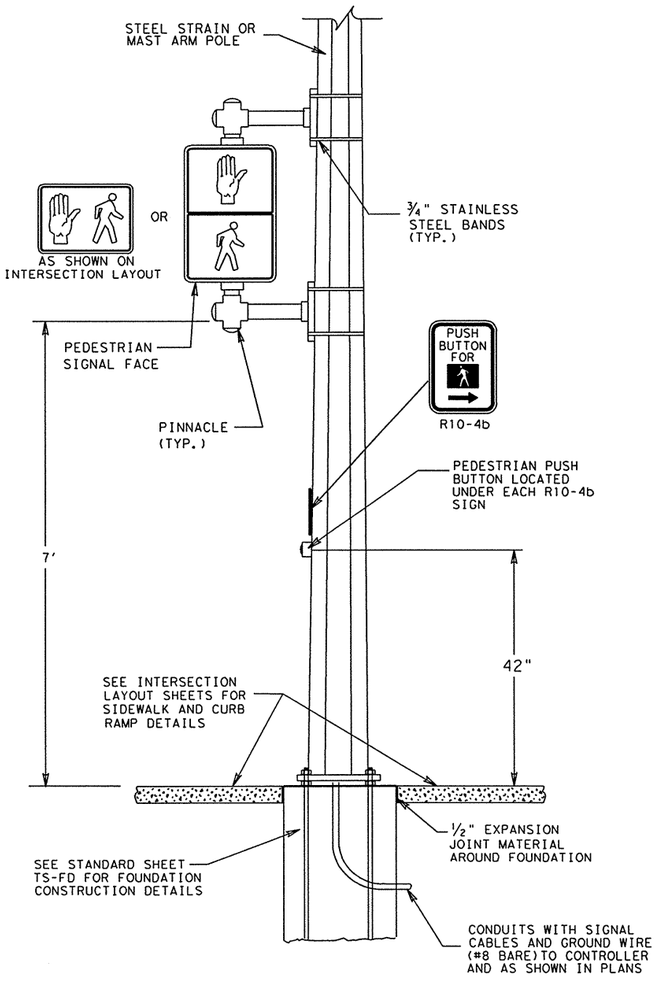

DETAIL-PEDESTRIAN SIGNALS

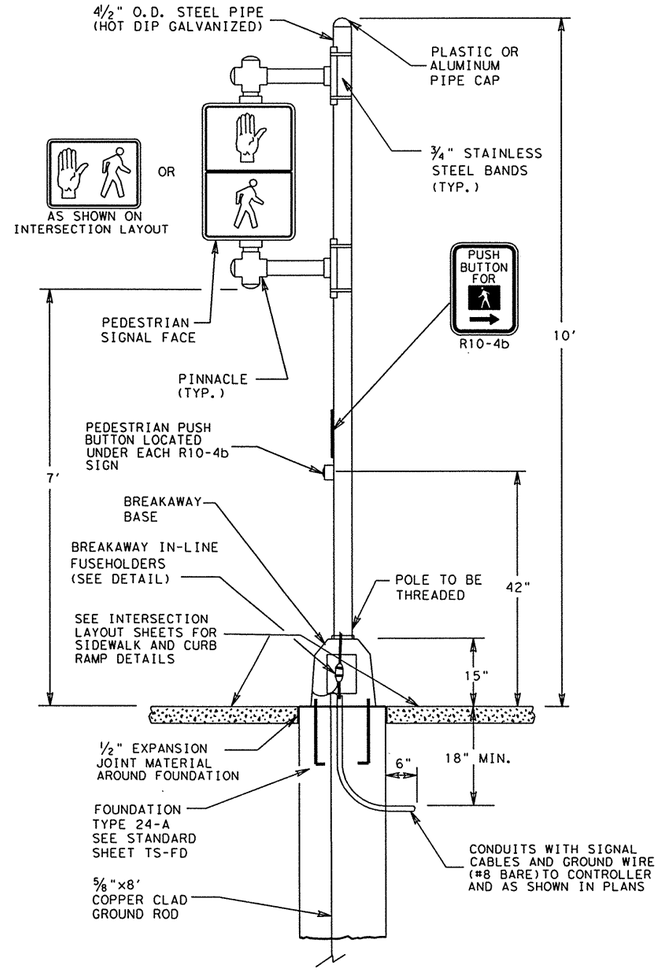

PEDESTAL POLE DETAIL

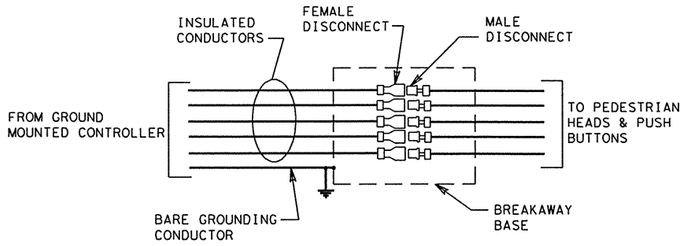

BREAKAWAY IN-LINE FUSEHOLDERS

NOTES:

1. BREAKAWAY ELECTRICAL QUICK-DISCONNECTS SHALL BE WATERTIGHT BUSSMANN HEB SERIES, HOMAC FLOODSEAL SERIES, GOULD GEB SERIES OR EQUAL.
2. DRILL POLE FOR WIRE ENTRY. USE BUSHING OR RUBBER GROMMET TO PROTECT CONDUCTORS.
3. POLE SHAFT SHALL BE STEEL PIPE, ASTM A-53 GRADE A OR B, OR SCHEDULE 40 UL APPROVED RIGID STEEL ELECTRICAL CONDUIT. SHAFT MATERIAL SHALL BE HOT-DIPPED GALVANIZED INSIDE AND OUT IN ACCORDANCE WITH ASTM A-123.

DISTRICT STANDARD PLANS

TEXAS DEPARTMENT OF TRANSPORTATION

PHARR DISTRICT

TRAFFIC SIGNAL CONSTRUCTION DETAILS

PEDESTAL POLE, PEDESTRIAN HEADS & MISCELLANEOUS DETAILS

© 1999 TxDOT

RGARZA2, FILE d:\engdata\beto\tsstd.dgn					SHEET 2 OF 2
DN: RDG	DRAWING	DATE	FED.RD. DIV.NO.	STATE	PROJECT NO.	SHEET NO.
CK DN:	ORIGINAL	AUG. 1996	6	PHARR TEXAS		713
DW: RDG	REV. MAR, 1999 REV. JAN, 2000		STATE DIST. NO.	COUNTY	CONTROL NO. / SECTION NO. / JOB NO.	HIGHWAY NO.
CK DW:			6	HIDALGO	0255 / 08 / 091	US281

Arm Length	ROUND POLES					POLYGONAL POLES					Foundation Type
	D_B	D_{19}	D_{24}	D_{30}	① thk	D_B	D_{19}	D_{24}	D_{30}	① thk	
ft.	in.	in.	in.	in.	in.	in.	in.	in.	in.	in.	
⚠1 20	12.0	9.3	8.6	7.8	.239	12.5	9.5	8.7	7.8	.239	36-A
⚠1 24	12.0	9.3	8.6	7.8	.239	13.0	10.0	9.2	8.3	.239	36-A
28	12.0	9.3	8.6	7.8	.239	13.5	10.5	9.7	8.8	.239	36-A
32	13.0	10.3	9.6	8.8	.239	14.0	11.0	10.2	9.3	.239	36-A
36	13.5	10.8	10.1	9.3	.239	15.0	12.0	11.2	10.3	.239	36-A
40	14.0	11.3	10.6	9.8	.239	16.0	13.0	12.2	11.3	.239	36-B
44	14.5	11.8	11.1	10.3	.239	16.5	13.5	12.7	11.8	.239	36-B

Arm Length	ROUND ARMS					POLYGONAL ARMS				
	L_1	D_1	D_2	① thk	Rise	L_1	D_1	② D_2	① thk	Rise
ft.	ft.	in.	in.	in.		ft.	in.	in.	in.	
20	19.1	8.0	5.3	.179	1'-8"	19.1	8.0	3.5	.179	1'-7"
24	23.1	9.0	5.8	.179	1'-9"	23.1	9.0	3.5	.179	1'-8"
28	27.1	9.5	5.7	.179	1'-10"	27.1	10.0	3.5	.179	1'-9"
32	31.0	9.5	5.2	.239	1'-11"	31.0	9.5	3.5	.239	1'-10"
36	35.0	10.0	5.1	.239	2'-0"	35.0	10.0	3.5	.239	1'-11"
40	39.0	10.5	5.1	.239	2'-3"	39.0	11.0	3.5	.239	2'-1"
44	43.0	11.0	5.1	.239	2'-8"	43.0	11.5	4.0	.239	2'-3"

D_B = Pole Base O.D.
D_{19} = Pole Top O.D. with no Luminaire and no ILSN
D_{24} = Pole Top O.D. with ILSN w/out Luminaire
D_{30} = Pole Top O.D. with Luminaire
D_1 = Arm Base O.D.
D_2 = Arm End O.D.
L_1 = Shaft Length
L = Nominal Arm Length

① Thickness shown are minimums, thicker materials may be used.

② D_2 may be increased by up to 1" for polygonal arms.

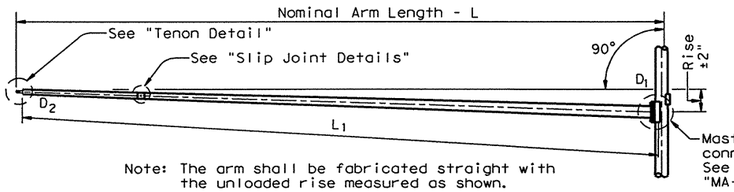

Note: The arm shall be fabricated straight with the unloaded rise measured as shown.

TRAFFIC SIGNAL ARM

(Fixed Mount)

VIBRATION WARNING

Mast Arms of approximately 40' or longer are subject to possible harmonic vertical vibrations in light wind conditions due to unusual combinations of signal numbers, weights or positions, arm-wind orientation, and arm-pole stiffness. Arms shall be visually inspected in 5 to 20 mph wind conditions after signal head installation and, if vertical movements with a total excursion (max positive to max negative) of more than approximately 8" are observed at arm tip, damping devices or other means shall be fitted to the arm(s). The necessary damping device(s) or other remedial measures shall be as recommended by the fabricator. Excessive vibrations shall not be allowed to continue for more than two days.

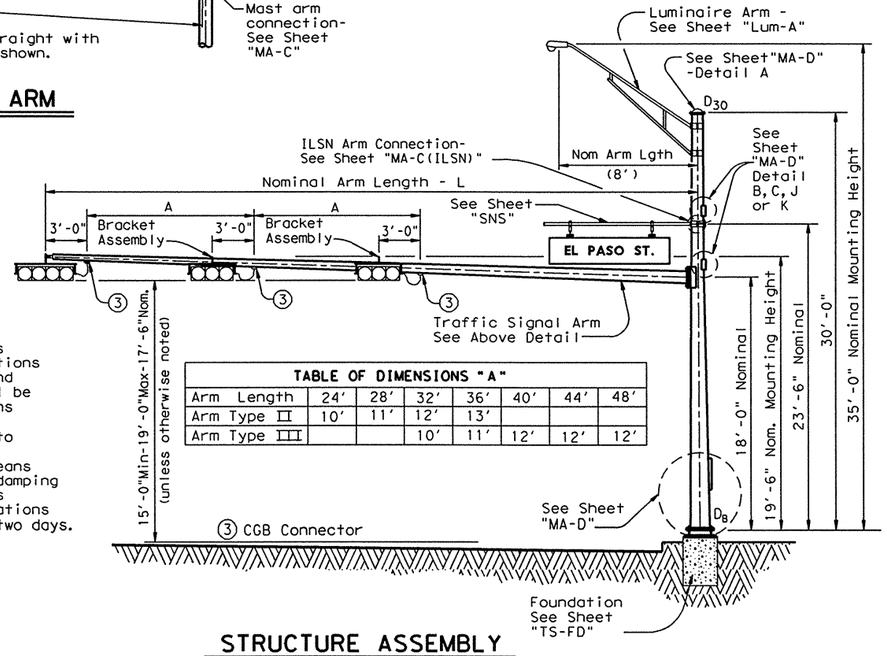

TABLE OF DIMENSIONS "A"							
Arm Length	24'	28'	32'	36'	40'	44'	48'
Arm Type II	10'	11'	12'	13'			
Arm Type III			10'	11'	12'	12'	12'

STRUCTURE ASSEMBLY

SHIPPING PARTS LIST

Ship each pole with the following attached: enlarged hand hole, pole cap, fixed-arm connection bolts and washers and any additional hardware listed in the table.

Nominal Arm Length	30' Poles With Luminaire		24' Poles With ILSN		19' Poles With No Luminaire and No ILSN	
	Above hardware plus: One (or two if ILSN attached) small hand hole, clamp-on simplex		Above hardware plus one small hand hole		See note above	
ft	Designation	Quantity	Designation	Quantity	Designation	Quantity
20	20L-100		20S-100		20-100	
24	24L-100		24S-100		24-100	
28	28L-100		28S-100		28-100	
32	32L-100		32S-100		32-100	
36	36L-100		36S-100		36-100	
40	40L-100		40S-100		40-100	
44	44L-100		44S-100		44-100	

Traffic Signal Arms (1 per pole) Ship each arm with the listed equipment attached

Nominal Arm Length	Type I Arm (1 Signal)		Type II Arm (2 Signals)		Type III Arm (3 Signals)	
	1 CGB connector		1 Bracket Assembly and 2 CGB Connectors ④		2 Bracket Assemblies and 3 CGB Connectors ④	
ft	Designation	Quantity	Designation	Quantity	Designation	Quantity
20	20I-100					
24	24I-100		24II-100			
28	28I-100		28II-100			
32			32II-100		32III-100	
36			36II-100		36III-100	
40					40III-100	
44					44III-100	

Luminaire Arms (1 per 30' pole)

Nominal Arm Length	Quantity
8' Arm	

④ Supply Option "A" unless otherwise noted

ILSN Arm (Max. 2 per pole) Ship with clamps, bolts and washers

Nominal Arm Length	Quantity
7' Arm	
9' Arm	

Anchor Bolt Assemblies (1 per pole)

Anchor Bolt Diameter	Anchor Bolt Length	Quantity
1 ½"	3'-4"	
1 ¾"	3'-10"	
2"	4'-3"	

Each anchor bolt assembly consists of the following: Top and Bottom templates, 4 anchor bolts, 8 nuts, 8 flat washers, 4 lock washers and 4 nut anchor devices (Type 2) per Standard Drawing "TS-FD".

Templates may be removed for shipment.

11/99 Revision

⚠1 Changed to Facilitate new terminal strip enclosure

Texas Department of Transportation
Traffic Operations Division

TRAFFIC SIGNAL SUPPORT STRUCTURES

SINGLE MAST ARM ASSEMBLY

(100 MPH WIND ZONE)

SMA-100(1)-99

FILE: SMA-100.DGN	DN: MS	CK: JSY	DW: MMF	CK: JSY
©TxDOT August 1995	DIST	FED REG	FEDERAL AID PROJECT •	SHEET
REVISIONS	PHARR	6		714
5-96	COUNTY		CONTROL	SECT	JOB	HIGHWAY
11-99	HIDALGO		0255	08	091	US 281

DISCLAIMER:
The use of this standard is governed by the "Texas Engineering Practice Act". No warranty of any kind is made by TxDOT for any purpose whatsoever. TxDOT assumes no responsibility for the conversion of this standard to other formats or for incorrect results or damages resulting from its use.

LEVELS DISPLAYED
1 2 3 4 5 6 7 8 9 10 11 12 13 14 15 16
17 18 19 20 21 22 32 42 52 62 72 82 92 103 113 123
33 43 53 63 73 83 94 104 114 124 134 144 154 164 174 184
49 50 51 52 53 54 55 56 57 58 59 60 61 62 63

ACC: d48hplq:/usr/d482517
LV=1,2 for English 1,3 for Metric

DISCLAIMER:
The use of this standard is governed by the "Texas Engineering Practice Act". No warranty of any kind is made by TxDOT for any purpose whatsoever. TxDOT assumes no responsibility for the conversion of this standard to other formats or for incorrect results or damages resulting from its use.

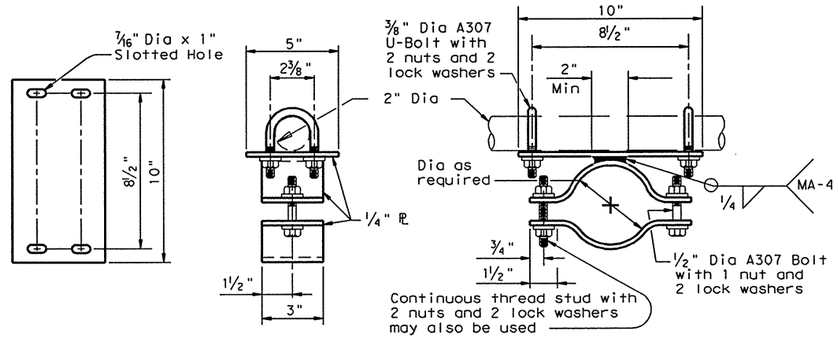

BRACKET ASSEMBLY DETAILS OPTION A

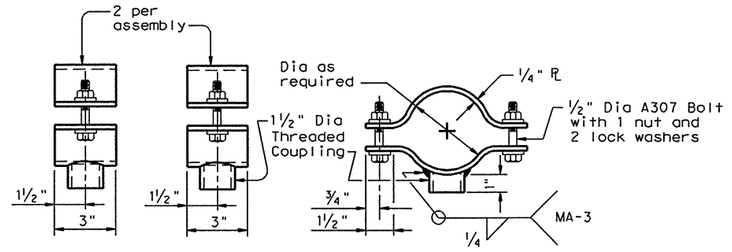

BRACKET ASSEMBLY DETAILS OPTION B

Stainless steel bands and cast bracket as in "Astro-Brac" with 1½" Dia Threaded Coupling.

BRACKET ASSEMBLY OPTION C

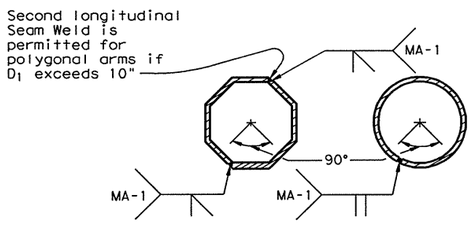

ARM WELD DETAIL

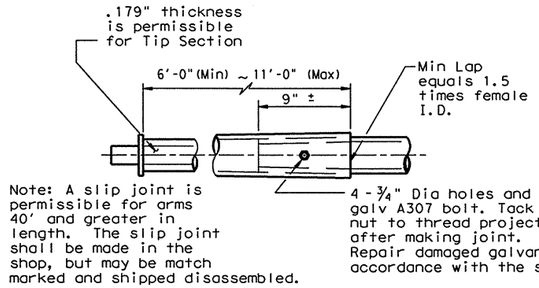

SLIP JOINT DETAIL

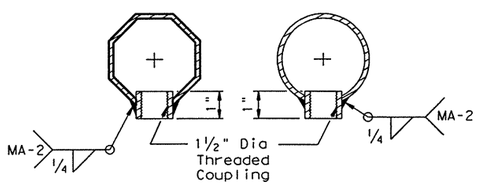

COUPLING DETAILS

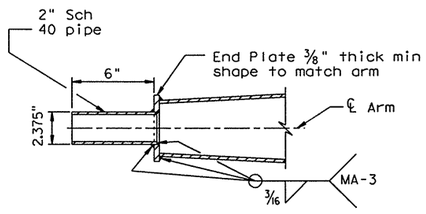

TENON DETAIL

GENERAL NOTES:

Design conforms to 1994 AASHTO Standard Specifications for Structural Supports for Highway Signs, Luminaires, and Traffic Signals and Interim Specifications thereto. Design Wind Speed equals 100 mph plus a 1.3 gust factor.

Poles are designed to support one 8'-0" luminaire arm, one 9'-0" internally lighted street name sign and one traffic signal arm with a length as tabulated. The specified luminaire load applied at the end of the luminaire arm equals 75 lbs vertical dead load plus the horizontal wind load on an effective projected area of 1.5 sq ft. The specified internally lighted street name sign load applied 4.5 ft from the centerline of the pole equals 85 lbs vertical dead load plus horizontal wind load on an effective projected area of 11.5 sq ft. The specified signal load applied at the end of the traffic signal arm equals 180 lbs vertical dead load plus the horizontal wind load on an effective projected area of 32.4 sq ft (actual area times drag coefficient).

See Standard Sheet "MA-D" for pole details, "MA-C" for traffic signal arm connection details, "MA-C (ILSN)" for internally lighted street name sign arm connection details, "LUM-A" for luminaire arm and connection details, "SNS" for internally lighted street name sign details, and "TS-FD" for anchor bolt and foundation details. See "MA-C" for material specifications.

Fabrication shall be in accordance with the Specifications and with the details, dimensions, and weld procedures shown herein. Weld references call for preapproved weld procedures which the Fabricator must obtain prior to fabrication. Miscellaneous welds which do not call for preapproved weld procedures are nevertheless subject to rejection for poor workmanship. Materials, fabrication tolerances, and shipping practices shall meet the requirements of this sheet and the Specifications.

Unless otherwise noted, all parts shall be galvanized in accordance with the Specifications.

Special design require submission of shop drawings in accordance with the item "Steel Structures".

Texas Department of Transportation
Traffic Operations Division

TRAFFIC SIGNAL SUPPORT STRUCTURES

SINGLE MAST ARM ASSEMBLY

(100 MPH WIND ZONE)

SMA-100(2)-96

FILE: SMA-100.DGN	DN: MS	CK: JSY	DW: MMF	CK: JSY
©TxDOT August 1995	DIST	FED REG	FEDERAL AID PROJECT #	SHEET
REVISIONS	PHARR	6		715
5-96	COUNTY		CONTROL	SECT	JOB	HIGHWAY
	HIDALGO		0255	08	091	US 281

LEVELS DISPLAYED
1 2 3 4 5 6 7 8 9 10 11 12 13 14 15 16 17 18 19 20 21 22 23 24 25 26 27 28 29 30 31 32 33 34 35 36 37 38 39 40 41 42 43 44 45 46 47 48 49 50 51 52 53 54 55 56 57 58 59 60 61 62 63
ACC: d48hplq:/usr/d482517
LV=1,2 for English 1,3 for Metric

DISCLAIMER:
The use of this standard is governed by the "Texas Engineering Practice Act". No warranty of any kind is made by TxDOT for any purpose whatsoever. TxDOT assumes no responsibility for the conversion of this standard to other formats or for incorrect results or damages resulting from its use.

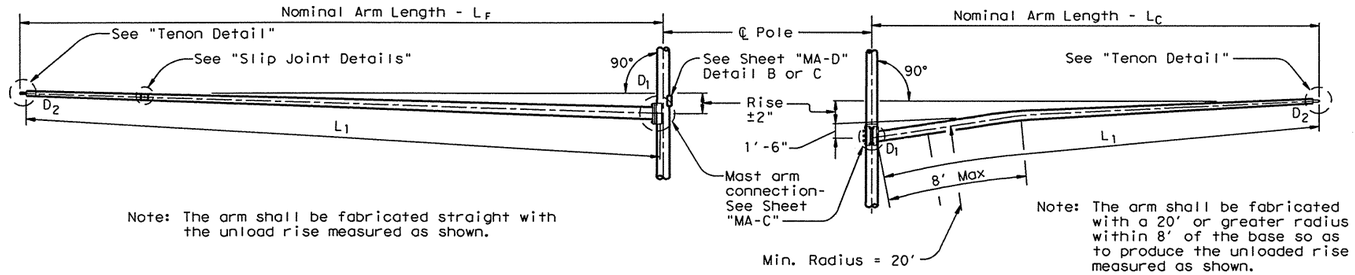

FIXED MOUNT TRAFFIC SIGNAL ARM

CLAMP-ON TRAFFIC SIGNAL ARM

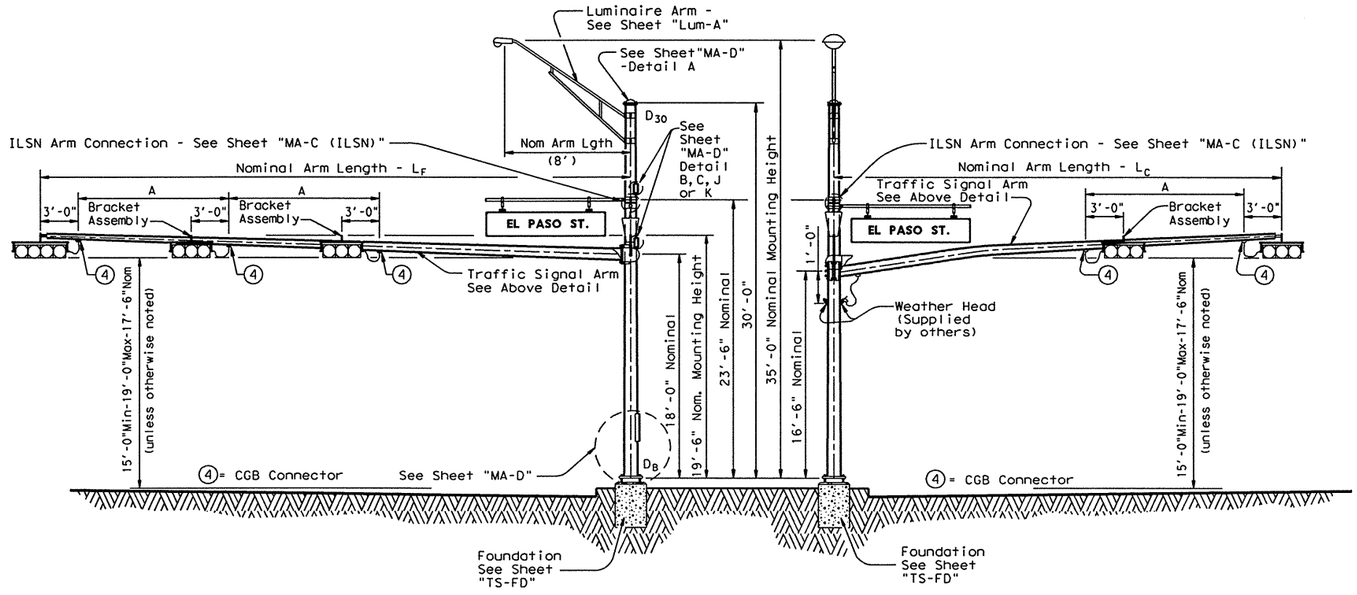

ELEVATION
(Showing fixed mount arm)

STRUCTURE ASSEMBLY

ELEVATION
(Showing clamp mount arm)

TABLE OF DIMENSIONS "A"						
Arm Length	24'	28'	32'	36'	40'	44'
Arm Type II	10'	11'	12'	13'		
Arm Type III			10'	11'	12'	12'

VIBRATION WARNING:

Mast Arms of approximately 40'-0" or longer are subject to possible harmonic vertical vibrations in light wind conditions due to unusual combinations of signal numbers, weights or positions, arm-wind orientation, and arm-pole stiffness.

Arms shall be visually inspected in 5 to 20 mph wind conditions after signal head installation and, if vertical movements with a total excursion (max positive to max negative) of more than approximately 8" are observed at arm tip, damping devices or other means shall be fitted to the arm(s).

The necessary damping device(s) or other remedial measures shall be as recommended by the fabricator. Excessive vibrations shall not be allowed to continue for more than two days.

GENERAL NOTES:

Design conforms to 1994 AASHTO Standard Specifications for Structural Supports for Highway Signs, Luminaires and Traffic Signals and Interim Specifications thereto. Design Wind Speed equals 100 mph plus a 1.3 gust factor. Designs are based on an arm included angle of 90 degrees or more. Angles of less than approximately 75 degrees will require a special design.

Poles are designed to support one 8'-0" luminaire arm, two 9'-0" internally lighted street name signs and two traffic signal arms with length combinations as tabulated. The specified luminaire load applied at the end of luminaire arm equals 75 lbs vertical dead load plus the horizontal wind load on an effective projected area of 1.5 sq ft. The specified internally lighted street name sign applied 4'-6" from the centerline of the pole equals 85 lbs vertical dead load plus the horizontal wind load on an effective projected area of 11.5 sq ft. The specified signal load applied at the end of the traffic signal arm equals 180 lbs vertical dead load plus the horizontal wind load on an effective projected area of 32.4 sq ft (actual area times drag coefficient).

See Standard Sheet "MA-D" for pole details, "MA-C" for traffic signal arm connection details, "MA-C (ILSN)" for internally lighted street name sign arm connection details, "LUM-A" for luminaire arm and connection details, "SNS" for internally lighted street name sign details, and "TS-FD" for anchor bolt and foundation details. See "MA-C" for material specifications.

Fabrication shall be in accordance with the Specifications and with the details, dimensions, and weld procedures shown herein. Weld references call for preapproved weld procedures which the Fabricator must obtain prior to fabrication. Miscellaneous welds which do not call for preapproved weld procedures are nevertheless subject to rejection for poor workmanship. Material, fabrication tolerances, and shipping practices shall meet the requirements of this sheet and the Specifications.

Unless otherwise noted, all parts shall be galvanized in accordance with the Specifications.

Special designs require submission of shop drawings in accordance with the item "Steel Structures".

Texas Department of Transportation
Traffic Operations Division

TRAFFIC SIGNAL SUPPORT STRUCTURES
DUAL MAST ARM ASSEMBLY
(100 MPH WIND ZONE)
DMA-100 (1)-96

FILE: DMA-100.DGN	DN: MS	CK: JSY	DW: MMF	CK: JSY			
©TxDOT August 1995	DIST	FED REG	FEDERAL AID PROJECT •				SHEET
REVISIONS 5-96	PHARR	6					716
	COUNTY			CONTROL	SECT	JOB	HIGHWAY
	HIDALGO			0255	08	091	

LEVELS DISPLAYED
1 2 3 4 5 6 7 8 9 10 11 21 31 41 51 61
17 61 91 92 02 12 22 32 42 52 62 72 82 92 93 03 13 23
33 43 45 46 53 63 73 83 94 04 14 24 34 44 54 64 74 84
95 05 15 25 35 45 55 65 75 85 95 06 16 26 36 46 56 63
ACC: d48hplq:/usr/d482517
LV•1,2 for English 1,3 for Metric

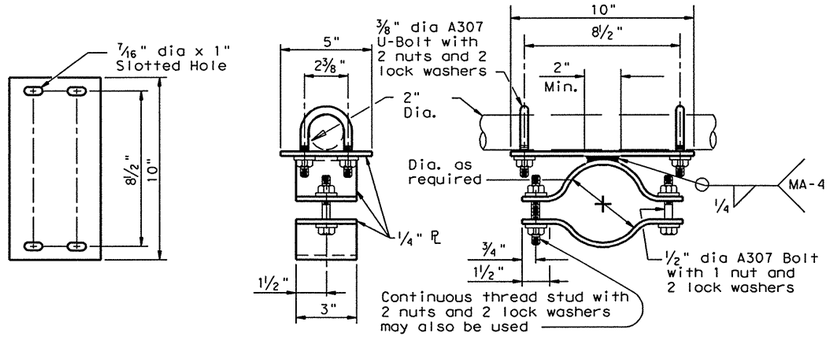

BRACKET ASSEMBLY DETAILS OPTION A

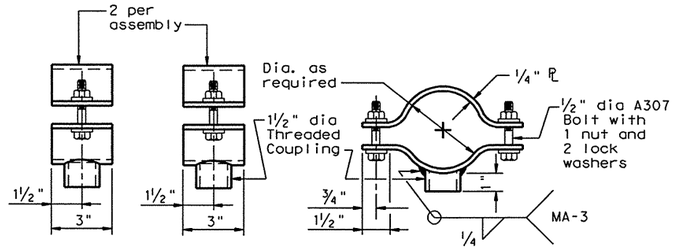

BRACKET ASSEMBLY DETAILS OPTION B

Stainless steel bands and cast bracket as in "Astro-Brac" with 1½" dia Threaded Coupling.

BRACKET ASSEMBLY DETAILS OPTION C

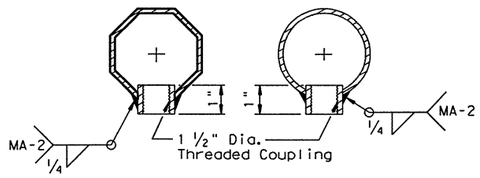

COUPLING DETAILS

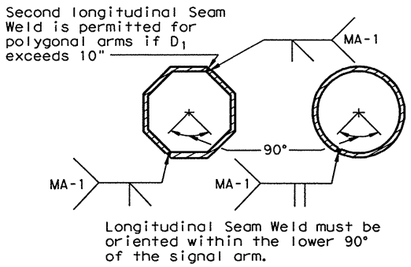

ARM WELD DETAIL

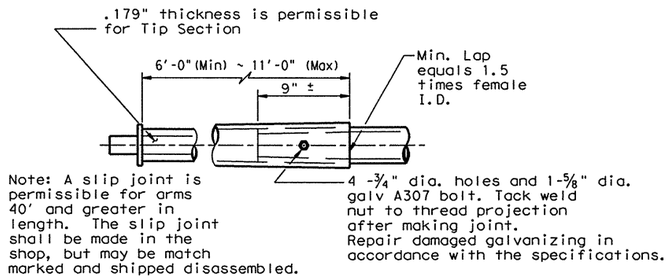

SLIP JOINT DETAIL

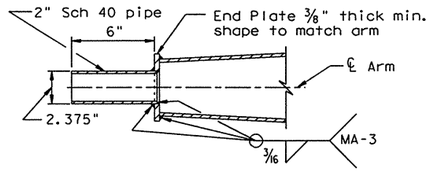

TENON DETAIL

SHEET 2 OF 3

Texas Department of Transportation
Traffic Operations Division

TRAFFIC SIGNAL SUPPORT STRUCTURES
DUAL MAST ARM ASSEMBLY
(100 MPH WIND ZONE)
DMA-100 (2)-96

FILE: DMA-100.DGN	DN: MS	CK: JSY	DW: MMF	CK: JSY
©TxDOT August 1995	DIST	FED REG	FEDERAL AID PROJECT •	SHEET
REVISIONS	PHARR	6		717
5-96	COUNTY		CONTROL SECT JOB	HIGHWAY
	HIDALGO		0255 08 091	US 281

LEVELS DISPLAYED
1 2 3 4 5 6 7 8 9 10 11 12 13 14 15 16
17 18 19 20 21 22 23 24 25 26 27 28 29 30 31 32
33 34 35 36 37 38 39 40 41 42 43 44 45 46 47 48
49 50 51 52 53 54 55 56 57 58 59 60 61 62 63

ACC: d48hplqr/usr/d482517

LV=1,2 for English 1,3 for Metric

DISCLAIMER:
The use of this standard is governed by the "Texas Engineering Practice Act". No warranty of any kind is made by TxDOT for any purpose whatsoever. TxDOT assumes no responsibility for the conversion of this standard to other formats or for incorrect results or damages resulting from its use.

DISCLAIMER:
The use of this standard is governed by the "Texas Engineering Practice Act". No warranty of any kind is made by TxDOT for any purpose whatsoever. TxDOT assumes no responsibility for the conversion of this standard to other formats or for incorrect results or damages resulting from its use.

LEVELS DISPLAYED
1 2 3 4 5 6 7 8 9 10 11 12 13 14 15 16
17 18 19 20 21 22 23 24 25 26 27 28 29 30 31 32
33 34 35 36 37 38 39 40 41 42 43 44 45 46 47 48
49 50 51 52 53 54 55 56 57 58 59 60 61 62 63

ACC: d48hp1a:/usr/d482517

LV=1,2 for English 1,3 for Metric

SHIPPING PARTS LIST

Ship each pole with the following attached: enlarged hand hole, pole cap, fixed arm connection bolts and washers and any additional hardware listed in the table.

Nominal Arm Length		30' Poles With Luminaire		24' Poles With ILSN		19' Poles With no Luminaire and no ILSN	
		See note above plus: one (or two if ILSN attached) small hand hole, clamp-on simplex		See note above plus one small hand hole		See note above	
LF	Lc	Designation	Quantity	Designation	Quantity	Designation	Quantity
ft.	ft.						
20	20	2020L-100		2020S-100		2020-100	
24	20	2420L-100		2420S-100		2420-100	
	24	2424L-100		2424S-100		2424-100	
28	20	2820L-100		2820S-100		2820-100	
	24	2824L-100		2824S-100		2824-100	
	28	2828L-100		2828S-100		2828-100	
32	20	3220L-100		3220S-100		3220-100	
	24	3224L-100		3224S-100		3224-100	
	28	3228L-100		3228S-100		3228-100	
	32	3232L-100		3232S-100		3232-100	
36	20	3620L-100		3620S-100		3620-100	
	24	3624L-100		3624S-100		3624-100	
	28	3628L-100		3628S-100		3628-100	
	32	3632L-100		3632S-100		3632-100	
	36	3636L-100		3636S-100		3636-100	
40	20	4020L-100		4020S-100		4020-100	
	24	4024L-100		4024S-100		4024-100	
	28	4028L-100		4028S-100		4028-100	
	32	4032L-100		4032S-100		4032-100	
	36	4036L-100		4036S-100		4036-100	
44	20	4420L-100		4420S-100		4420-100	
	24	4424L-100		4424S-100		4424-100	
	28	4428L-100		4428S-100		4428-100	
	32	4432L-100		4432S-100		4432-100	
	36	4436L-100		4436S-100		4436-100	

Traffic Signal Arms (Fixed Mount) (1 per pole) Ship each arm w/ the listed equipment attached

Nominal Arm Length	Type I Arm (1 Signal) 1 CGB connector		Type II Arm (2 Signals) 1 Bracket Assembly (1) and 2 CGB Connectors		Type III Arm (3 Signals) 2 Bracket Assemblies (1) and 3 CGB Connectors	
ft.	Designation	Quantity	Designation	Quantity	Designation	Quantity
20	20I-100					
24	24I-100		24II-100			
28	28I-100		28II-100			
32			32II-100		32III-100	
36			36II-100		36III-100	
40					40III-100	
44					44III-100	

Traffic Signal Arms (Clamp-On Mount) (1 per pole) Ship each arm w/ the listed equipment attached

Nominal Arm Length	Type I Arm (1 Signal) 2 CGB connector and 1 clamp w/bolts and washers		Type II Arm (2 Signals) 1 Bracket Assembly (1), 3 CGB Connectors, and 1 clamp w/bolts and washers		Type III Arm (3 Signals) 2 Bracket Assembly (1), 4 CGB Connectors, and 1 clamp w/bolts and washers	
ft.	Designation	Quantity	Designation	Quantity	Designation	Quantity
20	20I-100					
24	24I-100		24II-100			
28	28I-100		28II-100			
32			32II-100		40III-100	
36			36II-100		44III-100	

Luminaire Arms (1 per 30' pole)

Nominal Arm Length	Quantity
8' Arm	

ILSN Arm (1 or 2 per pole) ship with clamps, bolts and washers

Nominal Arm Length	Quantity
7' Arm	
9' Arm	

Anchor Bolt Assemblies (1 per pole)

Anchor Bolt Diameter	Anchor Bolt Length	Quantity
1 ¾"	3'-10"	
2"	4'-3"	
2 ¼"	4'-9"	

Each anchor bolt assembly consists of the following: Top and Bottom templates, 4 anchor bolts, 8 nuts, 8 flat washers, 4 lock washers and 4 nut anchor devices (Type 2) per Standard Drawing "TS-FD".

Templates may be removed for shipment.

(1) Supply Option "A" unless otherwise noted

ARMS		ROUND POLES					POLYGONAL POLES					Foundation Type
LF	Lc	D_B	D_{19}	D_{24}	D_{30}	(2) thk	D_B	D_{19}	D_{24}	D_{30}	(2) thk	
ft.	ft.	in.	in.	in.	in.	in.	in.	in.	in.	in.	in.	
20	20	12.0	9.3	8.6	7.8	.239	13.5	10.5	9.7	8.8	.239	36-A
24	20	12.5	9.8	9.1	8.3	.239	13.5	10.5	9.7	8.8	.239	36-A
	24	12.5	9.8	9.1	8.3	.239	14.0	11.0	10.2	9.3	.239	36-A
28	20	13.0	10.3	9.6	8.8	.239	14.5	11.5	10.7	9.8	.239	36-A
	24	13.0	10.3	9.6	8.8	.239	15.0	12.0	11.2	10.3	.239	36-A
	28	13.5	10.8	10.1	9.3	.239	15.0	12.0	11.2	10.3	.239	36-A
32	20	13.5	10.8	10.1	9.3	.239	15.0	12.0	11.2	10.3	.239	36-A
	24	13.5	10.8	10.1	9.3	.239	15.0	12.0	11.2	10.3	.239	36-A
	28	14.0	11.3	10.6	9.8	.239	15.5	12.5	11.7	10.8	.239	36-B
	32	14.0	11.3	10.6	9.8	.239	15.5	12.5	11.7	10.8	.239	36-B
36	20	14.0	11.3	10.6	9.8	.239	15.5	12.5	11.7	10.8	.239	36-B
	24	14.0	11.3	10.6	9.8	.239	16.0	13.0	12.2	11.3	.239	36-B
	28	14.5	11.8	11.1	10.3	.239	16.0	13.0	12.2	11.3	.239	36-B
	32	14.5	11.8	11.1	10.3	.239	16.0	13.0	12.2	11.3	.239	36-B
	36	14.5	11.8	11.1	10.3	.239	16.5	13.5	12.7	11.8	.239	36-B
40	20	14.5	11.8	11.1	10.3	.239	16.5	13.5	12.7	11.8	.239	36-B
	24	15.0	12.3	11.6	10.8	.239	16.5	13.5	12.7	11.8	.239	36-B
	28	15.0	12.3	11.6	10.8	.239	17.0	14.0	13.2	12.3	.239	42-A
	32	15.0	12.3	11.6	10.8	.239	17.0	14.0	13.2	12.3	.239	42-A
	36	15.5	12.8	12.1	11.3	.239	17.5	14.5	13.7	12.8	.239	42-A
44	20	15.5	12.8	12.1	11.3	.239	17.5	14.5	13.7	12.8	.239	42-A
	24	15.5	12.8	12.1	11.3	.239	17.5	14.5	13.7	12.8	.239	42-A
	28	16.0	13.3	12.6	11.8	.239	18.0	15.0	14.2	13.3	.239	42-A
	32	16.0	13.3	12.6	11.8	.239	18.0	15.0	14.2	13.3	.239	42-A
	36	16.0	13.3	12.6	11.8	.239	18.0	15.0	14.2	13.3	.239	42-A

Arm LF or Lc	ROUND ARMS					POLYGONAL ARMS				
	L_1	D_1	D_2	(2) thk	Rise	L_1	D_1	(3) D_2	(2) thk	Rise
ft.	ft.	in.	in.	in.		ft.	in.	in.	in.	
20	19.1	8.0	5.3	.179	1'-8"	19.1	8.0	3.5	.179	1'-7"
24	23.1	9.0	5.8	.179	1'-9"	23.1	9.0	3.5	.179	1'-8"
28	27.1	9.5	5.7	.179	1'-10"	27.1	10.0	3.5	.179	1'-9"
32	31.0	9.5	5.2	.239	1'-11"	31.0	9.5	3.5	.239	1'-10"
36	35.0	10.0	5.1	.239	2'-0"	35.0	10.0	3.5	.239	1'-11"
40	39.0	10.5	5.1	.239	2'-3"	39.0	11.0	3.5	.239	2'-1"
44	43.0	11.0	5.1	.239	2'-8"	43.0	11.5	4.0	.239	2'-3"

D_B = Pole Base O.D.
D_{19} = Pole Top O.D. with no Luminaire and no ILSN
D_{24} = Pole Top O.D. with ILSN w/out Luminaire
D_{30} = Pole Top O.D. with Luminaire

D_1 = Arm Base O.D.
D_2 = Arm End O.D.
L_1 = Shaft Length
L_F = Fixed Arm Length
L_C = Clamp-on Arm Length (36' Max)

(2) Thickness shown are minimums, thicker materials may be used.

(3) D_2 may be increased by up to 1.0" for polygonal arms.

Texas Department of Transportation
Traffic Operations Division

TRAFFIC SIGNAL SUPPORT STRUCTURES
DUAL MAST ARM ASSEMBLY
(100 MPH WIND ZONE)
DMA-100 (3)-96

FILE: DMA-100.DGN	DN: MS	CK: JSY	DW: MMF	CK: JSY
© TxDOT August 1995	DIST	FED REG	FEDERAL AID PROJECT •	SHEET
REVISIONS 5-96	PHARR	6		718
	COUNTY		CONTROL SECT JOB	HIGHWAY
	HIDALGO		0255 08 091	US 281

125C

ARM SIZE D_1	ARM SIZE ϕ	A	B	C	D	E	CONN BOLT DIA
in.	in.	in.	in.	in.	in.	in.	in.
6.5	.179	12	9	9	6	1	1
7.5	.179	13	9	10	6	1	1
8.0	.179	14	10	11	7	1 ¼	1 ¼
9.0	.179	16	11	13	8	1 ¼	1 ¼
9.5	.179	17	12	14	9	1 ¼	1 ¼
9.5	.239	18	12	15	9	1 ¼	1 ¼
10.0	.239	18	12	15	9	1 ¼	1 ¼
10.5	.239	18	13	15	10	1 ½	1 ½
11.0	.239	18	13	15	10	1 ½	1 ½

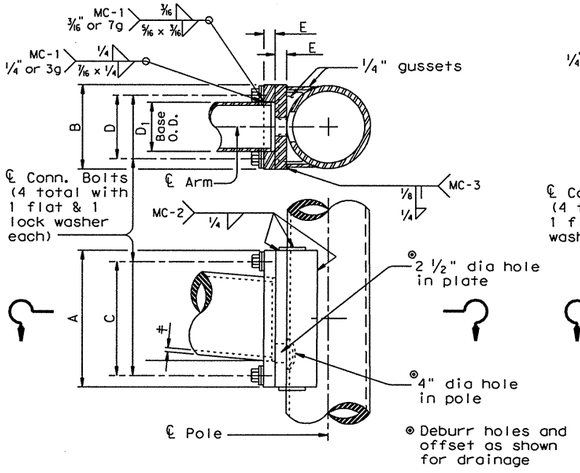

FIXED MOUNT DETAIL 1

ARM SIZE D_1	ARM SIZE ϕ	A	F	CONN. BOLTS No.	CONN. BOLTS Dia	PIN BOLTS No.	PIN BOLTS Dia
in.	in.	in.	in.	ea.	in.	ea.	in.
6.5	.179	12	8	4	* ⅞	2	⅝
7.5	.179	14	8	4	1	2	⅝
8.0	.179	14	8	4	1	2	⅝
9.0	.179	16	10	4	1	2	⅝
9.5	.179	18	12	4	1 ¼	3	⅝
9.5	.239	18	12	4	1 ¼	3	⅝
10.0	.239	18	12	4	1 ¼	3	⅝

*1" Dia connection bolts are permissible

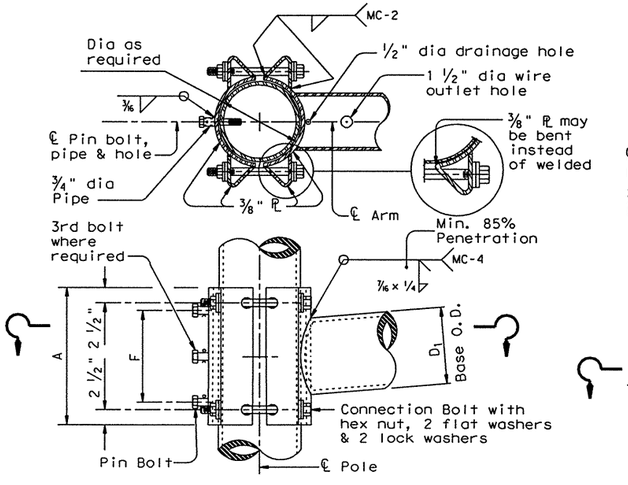

CLAMP-ON DETAIL 1

ARM SIZE D_1	ARM SIZE ϕ	A	F	T	CONN. BOLTS No.	CONN. BOLTS Dia	PIN BOLTS No.	PIN BOLTS Dia
in.	in.	in.	in.	in.	ea.	in.	ea.	in.
7.0	.179	12	8	¾	4	¾	2	⅝
7.5	.179	14	8	¾	4	¾	2	⅝
8.0	.179	14	8	¾	4	¾	2	⅝
9.0	.179	16	10	⅞	4	1	2	⅝
10.0	.179	18	10	⅞	4	1	2	⅞
9.5	.239	18	10	1	6	1	3	⅝
10.0	.239	18	10	1	6	1	3	⅝

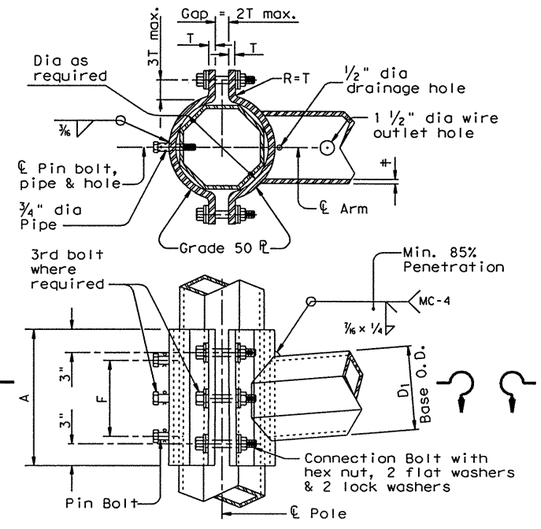

CLAMP-ON DETAIL 2

ARM SIZE D_1	ARM SIZE ϕ	A	F	CONN. BOLTS No.	CONN. BOLTS Dia	PIN BOLTS No.	PIN BOLTS Dia
in.	in.	in.	in.	ea.	in.	ea.	in.
6.5	.179	12	8	4	1	2	⅝
7.5	.179	14	8	4	1	2	⅝
8.0	.179	14	8	4	1	2	⅝
9.0	.179	16	10	4	1	2	⅝
9.5	.179	18	12	6	1	3	⅝
9.5	.239	18	12	6	1	3	⅝
10.0	.239	18	12	6	1	3	⅝

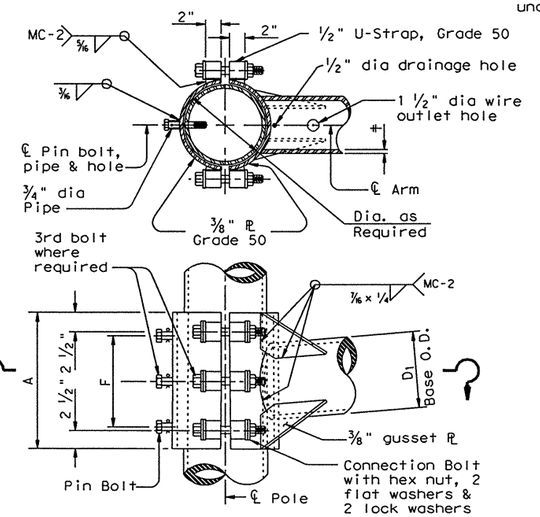

CLAMP-ON DETAIL 3

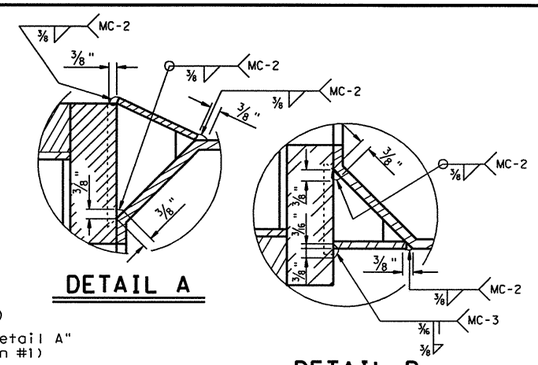

DETAIL A

DETAIL B

MATERIALS	
Round Shafts or Polygonal Shafts	ASTM A595 GR A, ASTM A570 GR 50, ASTM A607 GR 50, ASTM A572 GR 50 or A36M50
Plates (1)	ASTM A36 OR A572 GR 50 or A595(2) or A36M50
Connection Bolts	ASTM A325 except where noted
Pin Bolts	ASTM A325
Pipe	ASTM A53 GR A or B, or A501
Misc. Hardware	Galvanized steel or stainless steel or as noted

(1) Any of the materials listed for plates may be used where the drawings do not specify a particular Grade designation.

(2) If A595 material is used, it need not be cold worked to A595 requirments, but material must have 40 ksi minimum yield prior to fabrication.

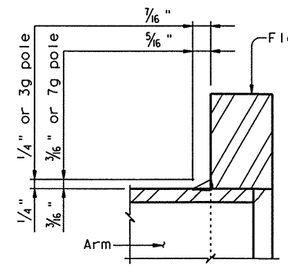

FIXED MOUNT ARM

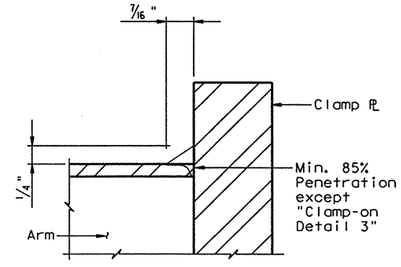

CLAMP-ON ARM

ARM BASE WELD DETAILS

GENERAL NOTES:

Clamp-on details are used for the second arm on dual mast arm assemblies. A Maximum 1 ½" wide vertical slotted hole may be cut in the front clamp plate to facilitate drainage during galvanizing. The slot shall be centered behind the arm and shall be no longer than the arm diameter minus 1"

Fixed mount details are used for single mast arm assemblies and for the first arm on dual mast arm assemblies.

Where duplicate parts occur on a detail, welds shown for one part shall apply to all similar parts on the detail.

Pin bolts are required to prevent rotation of clamp-on arms under design wind forces.

NOTE:

Pin bolts shall be A325 with threads excluded from the shear plane. Pin bolt and ¾" dia pipe shall have ⅜" dia holes for a ⅛" dia galvanized cotter pin. Back clamp plate shall be furnished with a ¾" dia hole for each pin bolt. An 11/16" dia hole for each pin bolt shall be field drilled through the pole after arm orientations have been approved by the Engineer.

Texas Department of Transportation
Traffic Operations Division

STANDARD ASSEMBLY FOR TRAFFIC SIGNAL SUPPORT STRUCTURES

MAST ARM CONNECTIONS

MA-C-96

FILE: MA-C.DGN	DN: MS	CK: JSY	DW: MMF	CK: JSY
©TxDOT August 1995	DIST	FED REG	FEDERAL AID PROJECT #	SHEET
REVISIONS 5-96	PHARR	6		719
	COUNTY		CONTROL SECT JOB	HIGHWAY
	HIDALGO		0255 08 091	US 281

DISCLAIMER:
The use of this standard is governed by the "Texas Engineering Practice Act". No warranty of any kind is made by TxDOT for any purpose whatsoever. TxDOT assumes no responsibility for the conversion of this standard to other formats or for incorrect results or damages resulting from its use.

LEVELS DISPLAYED
1 2 3 4 5 6 7 8 9 10 11 12 13 14 15 16
17 18 19 20 21 22 23 24 25 26 27 28 29 30 31 32
33 34 35 36 37 38 39 40 41 42 43 44 45 46 47 48
49 50 51 52 53 54 55 56 57 58 59 60 61 62 63

ACC: d48hp1a: /usr/d482517

LV=1,2 for English 1,3 for Metric

DISCLAIMER
The use of this standard is governed by the "Texas Engineering Practice Act". No warranty of any kind is made by TxDOT for any purpose whatsoever. TxDOT assumes no responsibility for the conversion of this standard to other formats or for incorrect results or damages resulting from its use.

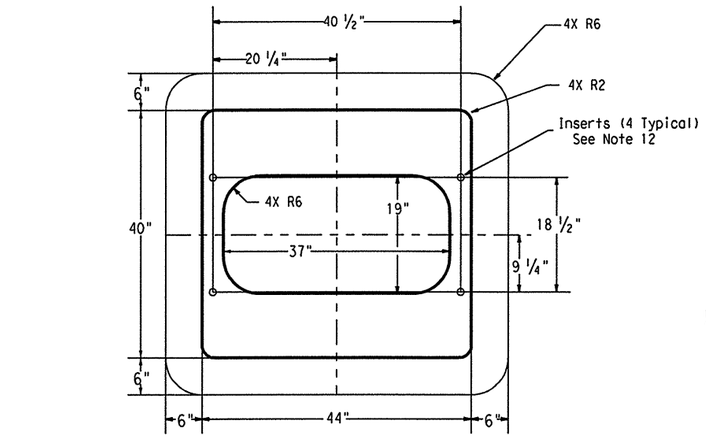

TOP VIEW
(Base Only)

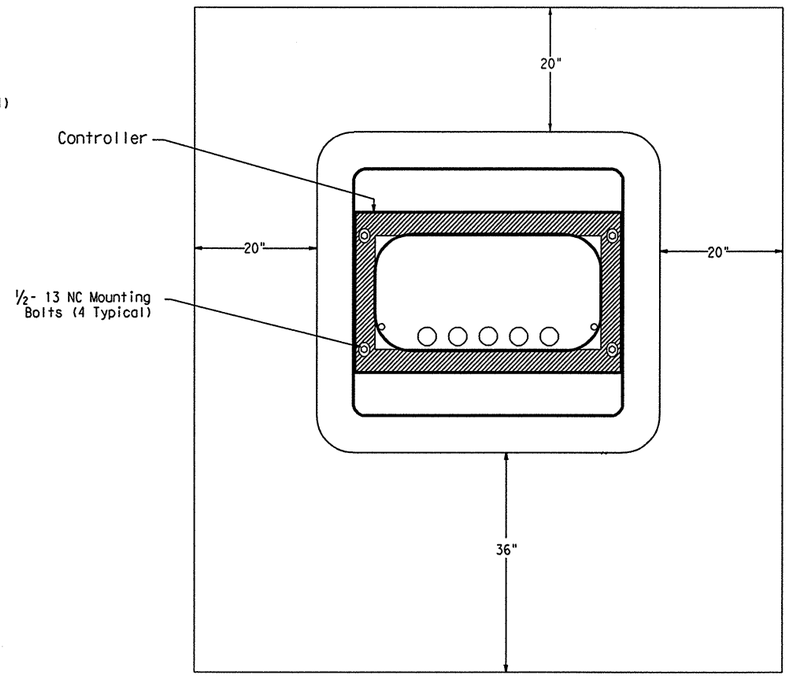

TOP VIEW
(Slab & Base)

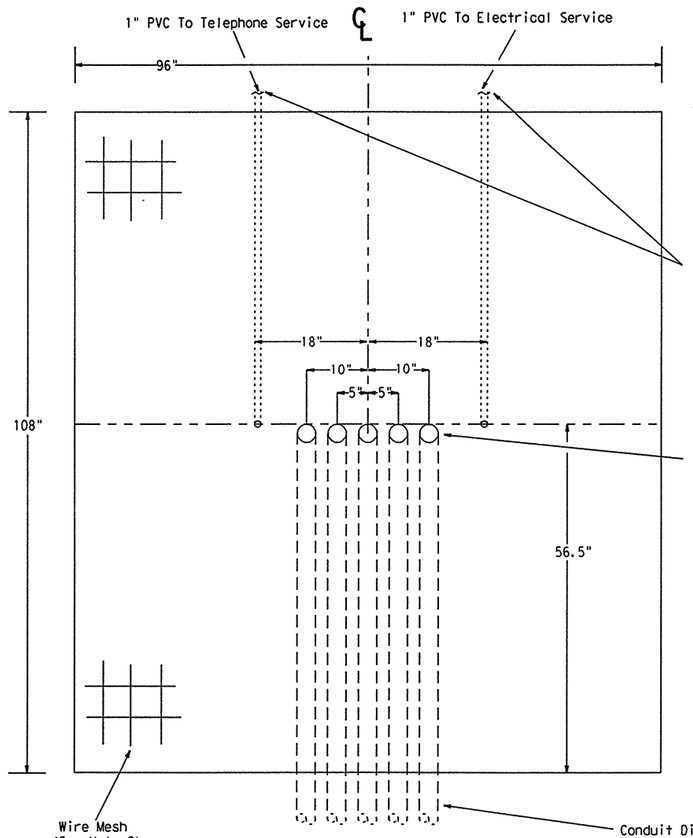

Conduit Direction Leaving Foundation Are Diagramatic Only And May Be Adjusted As Shown On Layouts.

Number of Conduits To Be As Shown on Layouts Plus Two For Future Use.

Conduit Direction Leaving Foundation Are Diagramatic Only And May Be Adjusted As Shown On Layouts.

TOP VIEW
(Slab Only)

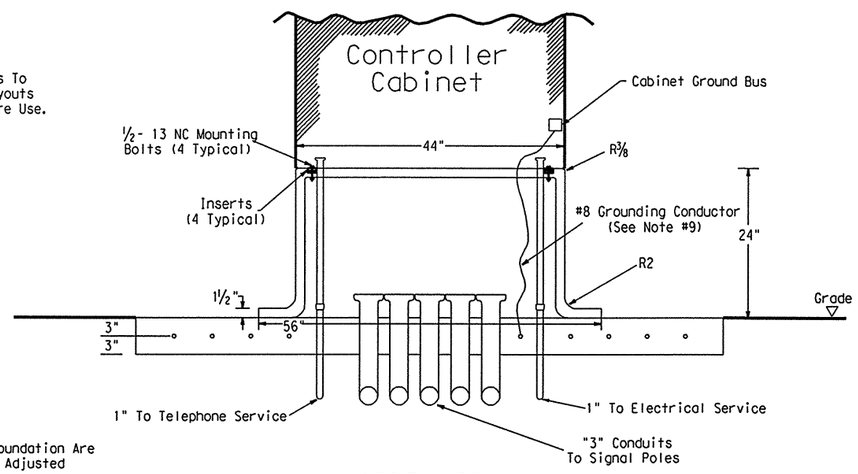

SIDE VIEW
(Slab & Base)

GENERAL NOTES

CONCRETE:
1. Concrete shall be class B minimum in accordance with Item 421. Slab shall be constructed in accordance with Item 531.

2. Reinforcement shall be welded wire mesh 6X6-W2.9 X W2.9. Joints and splices in the mesh shall have a minimum 6-inch overlap.

3. Mesh shall have a minimum 3 inch cover on the edges and shall be centered between top and bottom.

CONDUITS:
4. 3-inch conduits shall be stubbed up through the slab and run to the various traffic signal poles and ground boxes as shown on the layouts. Contractor shall install the number of conduits as shown on layouts plus two additional 3 inch conduits for future use. Conduits shall be terminated with a bushing between 2 and 4-inches above the slab.

5. Future use conduits shall be extended at least 18-inches from the edge of the slab, shall be terminated underground with a coupling, and shall be capped and sealed so that the seal can be removed without damaging the coupling.

6. Two separate 1-inch conduits shall be stubbed up through the slab from the electrical and telephone services. The conduit for the electrical feed shall be run directly to the electrical service enclosure.

7. The conduit for the telephone line shall be run directly to the telephone service, usually located on the same pole as the electrical service. Telephone shall not under any circumstance share a conduit with any other function. Telephone conduit not used at this time shall be capped and sealed, the same as the 3" future use conduits.

8. Electric and telephone conduits shall terminate above the slab with a coupling. After the base is installed, the conduits shall be extended above the top of the base and shall be secured to the base using a steel one-hole strap or similar suitable substitute.

9. A #8 AWG copper ground wire shall be bonded to the reinforcing mesh by a suitable clamp UL Listed for encasement in concrete and terminated to the cabinet grounding bus for the purpose of providing a local ground for the electrical grounding conductor. The electrical grounding conductor specified in Item 680-4(4) is still required and shall be terminated to the cabinet ground bus.

BASE:
10. The base shall be constructed of reinforced polymer concrete reinforced with continuous strands of borosilicate fiberglass cloth. Concrete shall be made from catalyzed polyester resin and aggregate, and shall have a minimum comprehensive strength of 11,000 psi. Polymer concrete containing chopped fiber or fiber reinforced plastic shall not be acceptable.

11. The base shall be permanently marked either by impress or by permanent ink with the manufacturer's model number and name or logo.

12. The base shall conform to the dimensions shown. Four (4) 1/2-13 NC stainless steel self cleaning inserts shall be provided to secure the controller to the base. Inserts shall withstand a minimum torque of 50 ft-lb and a minimum straight pull out strength of 750 lbs. The base, secured to the concrete slab per the manufacturer's instructions and with a controller cabinet attached, shall withstand a minimum wind load of 125 mph. Manufacturer shall supply certification sealed by a Texas Licensed Professional Engineer.

13. The base shall be sealed to the concrete with a silicone caulk bead and fastened to the slab per manufacturer's instructions.

CONTROLLER CABINET:
14. The controller cabinet shall be anchored to the base using four 1/2-13 NC bolts.

15. The silicone caulk bead specified in Item 680.5 shall be RTV 133.

PAYMENT:
16. TS-CF shall be bid as Item 656.

LEVELS DISPLAYED
1 2 3 4 5 6 7 8 9 10 11 12 13 14 15 16
17 18 19 20 21 22 23 24 25 26 27 28 29 30 31 32
33 34 35 36 37 38 39 40 41 42 43 44 45 46 47 48
49 50 51 52 53 54 55 56 57 58 59 60 61 62 63

ACC:

STANDARD PLANS
Texas Department of Transportation
Traffic Operations Division

TRAFFIC SIGNAL CONTROLLER SLAB AND BASE

TS-CF

© TxDOT October 2000

DN: JM	CK: JM	DW: FC	CK: CAL

REVISIONS	STATE DISTRICT	FEDERAL REGION	FEDERAL AID PROJECT	SHEET
	PHARR	6		720

COUNTY	CONTROL	SECTION	JOB	HIGHWAY
HIDALGO	0255	08	091	US 281

DISCLAIMER
The use of this standard is governed by the "Texas Engineering Practice Act". No warranty of any kind is made by TxDOT for any purpose whatsoever. TxDOT assumes no responsibility for the conversion of this standard to other formats or for incorrect results or damages resulting from its use.

1. The cover shall be one piece formed from ABS plastic, shall be a pearl gray color, and shall be suitable for exposure to harsh sunlight and extreme weather. Cover shall latch with two screw latches and shall fit tightly to the enclosure ring to create a rainproof seal. Latch screws shall be 1/4-20 stainless flat socket head screws with tamper proof feature.
2. The pole manufacturer shall provide with each pole a separate kit consisting of: one cover with two latching assemblies, two terminal strips (Marathon #985GP12CU or approved equal), four #10-32 x 1 1/4" self tapping type "F" stainless steel pan head screws, and one ground connector (Blackburn TTC, Burndy KC22J12T13, or Ilsco SSS-5). The traffic signal contractor shall install the kit items in the field.
3. The screw hole spacing on the enclosure back plate shall be for two Marathon #985GP12 terminal strips, one Marathon #985GP06CU terminal strip, and one Littelfuse #L60030M-2SQ fuse block. Arrangement of the items shall be as shown in the Access Compartment detail.

Anchor Bolt Diameter	Bolt Hole Diameter	Slot Length	Bolt Circle Diameter	Base ℞ Dim. L x T	Adjust. Range
1 1/2"	1 3/4"	3 1/2"	17"	18" x 1 1/2"	13.4°
1 3/4"	2"	4"	19"	20" x 1 3/4"	13.5°
2"	2 1/4"	4 1/2"	21"	22" x 2"	13.6°
2 1/4"	2 1/2"	5"	23"	24" x 2 1/4"	13.7°

STANDARD PLANS
Texas Department of Transportation
Traffic Operations Division

TRAFFIC SIGNAL SUPPORT STRUCTURES MAST ARM POLE DETAILS

MA-D-00

©TxDOT August 1995	DN: MS	CK: JSY	DW: FDN	CK: CAL	
REVISIONS	STATE DISTRICT	FEDERAL REGION	FEDERAL AID PROJECT		SHEET
7-96 8-99 10-00	PHARR	6			721
	COUNTY		CONTROL	SECTION / JOB	HIGHWAY
	HIDALGO		0255	08 / 091	US 281

LEVELS DISPLAYED
ACC:

FOUNDATION DESIGN TABLE

FDN TYPE	DRILLED SHAFT DIA	REINFORCING STEEL		DRILLED SHAFT LENGTH-ft ④, ⑤, ⑥			ANCHOR BOLT DESIGN ①				FOUNDATION DESIGN LOAD ②		TYPICAL APPLICATION
		VERT BARS	SPIRAL & PITCH	TEXAS CONE PENETROMETER N blows/ft 10	15	40	ANCHOR BOLT DIA	Fy (Ksi)	BOLT CIR DIA	ANCHOR TYPE	MOMENT K-ft	SHEAR Kips	
24-A	24"	4- #5	#2 at 12"	5.7	5.3	4.5	¾"	36	12 ¾"	1	10	1	Pedestal pole, pedestal mounted controller.
30-A	30"	8- #9	#3 at 6"	11.3	10.3	8.0	1 ½"	55	17"	2	87	3	Mast arm assembly. (see Selection Table)
36-A	36"	10- #9	#3 at 6"	13.2	12.0	9.4	1 ¾"	55	19"	2	131	5	Mast arm assembly. (see Selection Table) 30' strain pole with or without luminaire.
36-B	36"	12- #9	#3 at 6"	15.2	13.6	10.4	2"	55	21"	2	190	7	Mast arm assembly. (see Selection Table) Strain pole taller than 30' & strain pole with mast arm
42-A	42"	14- #9	#3 at 6"	17.4	15.6	11.9	2 ¼"	55	23"	2	271	9	Mast arm assembly. (see Selection Table)

FOUNDATION SELECTION TABLE FOR STANDARD MAST ARM PLUS ILSN SUPPORT ASSEMBLIES (ft)

		FDN 30-A	FDN 36-A	FDN 36-B	FDN 42-A
80 MPH DESIGN WIND SPEED	MAX SINGLE ARM LENGTH	32' ⚠1	48'		
	MAXIMUM DOUBLE ARM LENGTH COMBINATIONS	24' X 24'			
		28' X 28'			
		32' X 28'	32' X 32'		
			36' X 36'		
			40' X 36'		
			44' X 28'	44' X 36'	
100 MPH DESIGN WIND SPEED	MAX SINGLE ARM LENGTH	⚠1	36'	44'	
	MAXIMUM DOUBLE ARM LENGTH COMBINATIONS		24' X 24'		
			28' X 28'		
			32' X 24'	32' X 32'	
				36' X 36'	
				40' x24'	40' X 36'
					44' x 36'

EXAMPLE:
1. For 80mph design wind speed, foundation 30-A can support up to a 32' arm with another arm up to 28'
2. For 100mph design wind speed, foundation 36-A can support a single 36' mast arm.

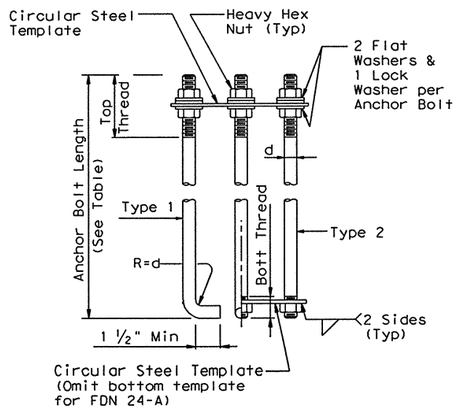

HOOKED ANCHOR (TYPE 1) NUT ANCHOR (TYPE 2)

ANCHOR BOLT ASSEMBLY

INSTALLATION PROCEDURE:
Threads of anchor bolts shall be coated with pipe joint compound prior to installation of upper nuts when erecting pole. After pole is plumbed and in permanent alignment, the exposed threads of painted bolts shall be cleaned and an additional coating of zinc-rich paint applied to seal the bolt thread-nut joint.

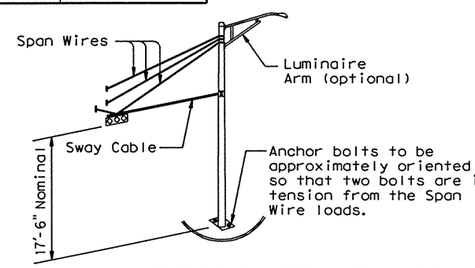

TYPICAL STRAIN POLE ASSEMBLY

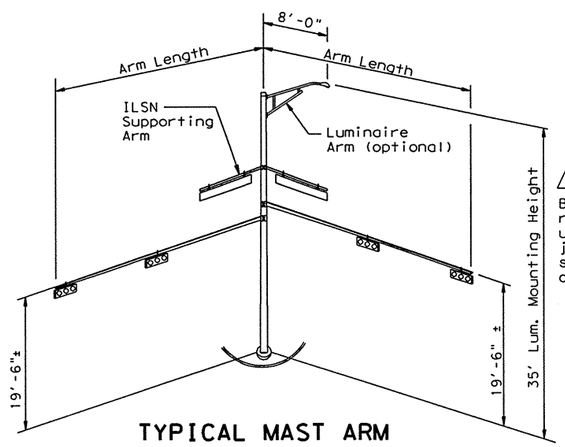

TYPICAL MAST ARM ASSEMBLY

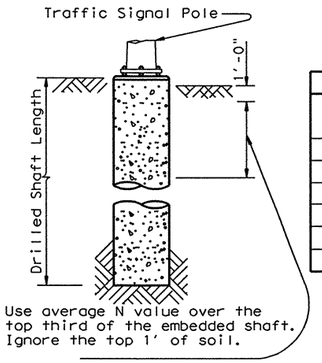

NOTES:

① Anchor bolt design develops the foundation capacity given under Foundation Design Loads.

② Foundation Design Loads are the allowable moments and shears at the base of the structure.

③ Foundations may be listed seperately or grouped according to similarity of location and type. Quantities are for the Contractor's information only.

④ Field Penetrometer readings at a depth of approximately 3 to 5 feet may be used to adjust shaft lengths.

⑤ If rock is encountered, the Drilled Shaft shall extend a minimum of two diameters into solid rock.

⑥ Decimal lengths in Design Table are to allow interpolation for other penetrometer values. Round to nearest foot for entry into Summary Table.

ANCHOR BOLT & TEMPLATE SIZES

BOLT DIA IN.	⑦ BOLT LENGTH	TOP THREAD	BOTT THREAD	BOLT CIRCLE	R2	R1
¾"	1'-6"	3"	—	12 ¾"	7 ⅛"	5 ⅝"
1 ½"	3'-4"	6"	2"	17"	10"	7"
1 ¾"	3'-10"	7"	2 ¼"	19"	11 ¼"	7 ¾"
2"	4'-3"	8"	2 ½"	21"	12 ½"	8 ½"
2 ¼"	4'-9"	9"	3"	23"	13 ¾"	9 ¼"

⑦ Min dimensions given, longer bolts are acceptable.

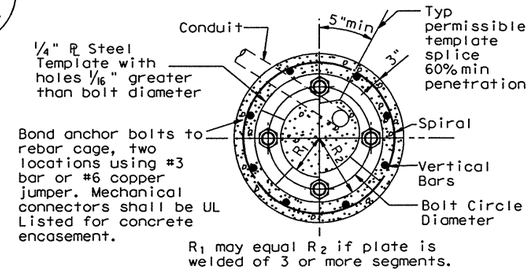

TOP VIEW

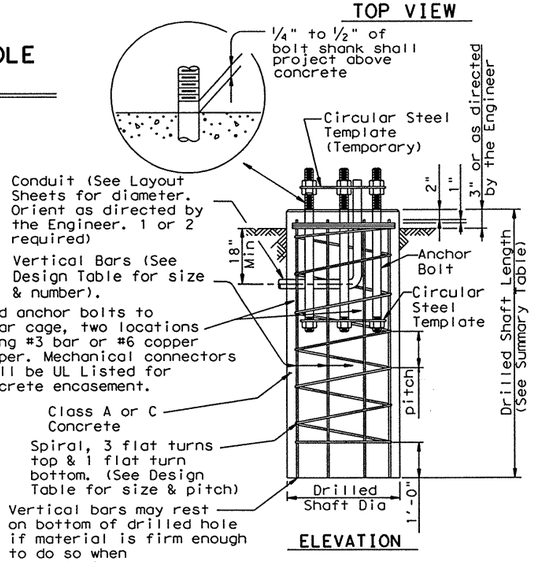

ELEVATION

FOUNDATION DETAILS

FOUNDATION SUMMARY TABLE ③

LOCATION IDENTIFICATION	AVG. N BLOW /ft.	FDN TYPE	NO. EA	DRILLED SHAFT LENGTH ⑥ (FEET) 24-A	30-A	36-A	36-B	42-A
TOTAL DRILLED SHAFT LENGTHS								

GENERAL NOTES:

Design conforms to 1994 AASHTO Standard Specifications for Structural Supports for Highway Signs, Luminaires and Traffic Signals and interim revisions thereto.

Reinforcing steel shall conform to Item 440.

Concrete shall be Class A or C.

Threads for anchor bolts and nuts shall be rolled or cut threads of unified national coarse thread series except for A193B7 bolts which shall have 8 pitch thread series. Bolts and nuts shall have Class 2A and 2B fit tolerances. Galvanized nuts shall be tapped after galvanizing.

Anchor bolts that are 1" in diameter or less shall conform to ASTM A36. Anchor bolts larger than 1" in diameter shall conform to A36M55 in accordance with the Item, "Anchor Bolts" or ASTM A193B7 or A687. Galvanize or coat with zinc-rich paint a minimum of the upper 14 inches of all anchor bolts unless otherwise noted. Exposed nuts shall be galvanized or coated with zinc-rich paint. Washers shall be galvanized. Templates and embeded nuts need not be galvanized.

11/99 Revision

⚠1 Changed to Facilitate new terminal strip enclosure

⚠2 Changed from ground rod to UFER ground

STANDARD PLANS
Texas Department of Transportation
Traffic Operations Division

TRAFFIC SIGNAL POLE FOUNDATION

TS-FD-99

©TxDOT August 1995	DN: MS	CK: JSY	DW: MAO/WMF	CK: JSY/TEB
REVISIONS 5-96 11-99	STATE DISTRICT	FEDERAL REGION	FEDERAL AID PROJECT	SHEET
	PHARR	6		722
	COUNTY	CONTROL	SECTION	JOB	HIGHWAY
	HIDALGO	0255	08	091	US 281

DISCLAIMER:
The use of this standard is governed by the "Texas Engineering Practice Act". No warranty of any kind is made by TxDOT for any purpose whatsoever. TxDOT assumes no responsibility for the conversion of this standard to other formats or for incorrect results or damages resulting from its use.

ACC: d48hplqi /usr/d482517

LEVELS DISPLAYED
1 2 3 4 5 6 7 8 9 10 11 12 13 14 15 16
17 18 19 20 21 22 23 24 25 26 27 28 29 30 31 32
33 34 35 36 37 38 39 40 41 42 43 44 45 46 47 48
49 50 51 52 53 54 55 56 57 58 59 60 61 62 63

LV=1,2 for English 1,3 for Metric

DISCLAIMER:
The use of this standard is governed by the "Texas Engineering Practice Act". No warranty of any kind is made by TxDOT for any purpose whatsoever. TxDOT assumes no responsibility for the conversion of this standard to other formats or for incorrect results or damages resulting from its use.

LEVELS DISPLAYED																ACC:
1	2	3	4	5	6	7	8	9	10	11	12	13	14	15	16	
17	18	19	20	21	22	23	24	25	26	27	28	29	30	31	32	
33	34	35	36	37	38	39	40	41	42	43	44	45	46	47	48	
49	50	51	52	53	54	55	56	57	58	59	60	61	62	63		

(LV=1,2 for English; 1,3 for Metric)

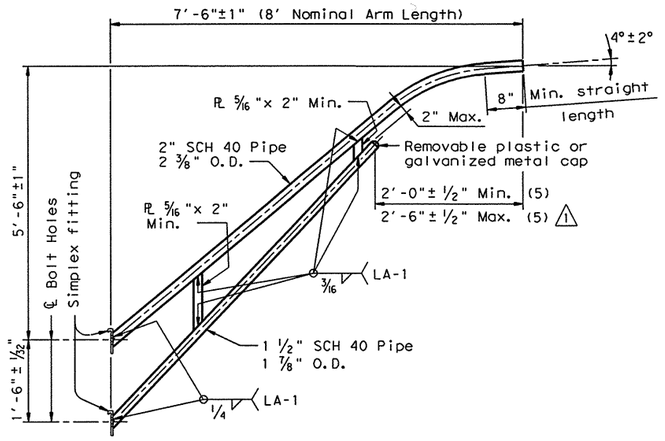

8-FOOT LUMINAIRE ARM

CLAMP ATTACHMENT DETAIL NO. 1 (HALF SECTION)

CLAMP ATTACHMENT DETAIL NO. 2 (HALF SECTION)

CLAMP ATTACHMENT DETAIL NO. 3 (HALF SECTION)

CLAMP ATTACHMENT DETAIL NO. 4 (HALF SECTION)

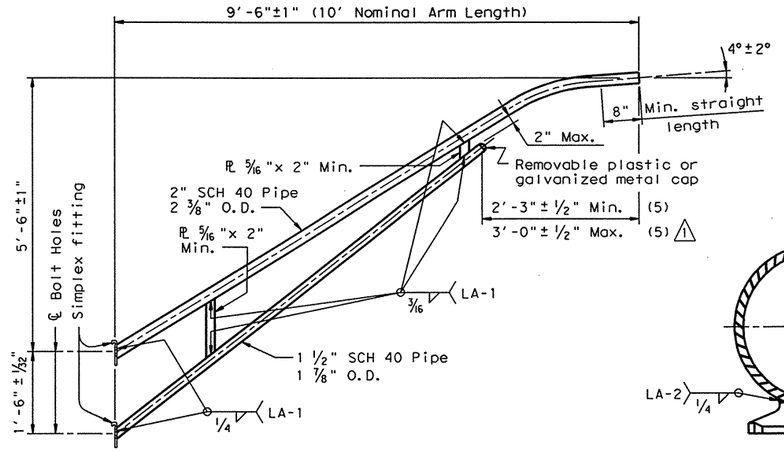

10-FOOT LUMINAIRE ARM

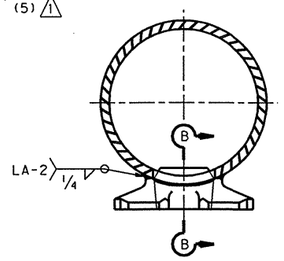

DIRECT ATTACHMENT DETAIL

MATERIALS	
Pole or Arm Simplex	ASTM A27 GR 65-35 or A148 GR 80-50 or A576 GR 1021 (4) or A36 (Arm only)
Arm Pipes	ASTM A53 GR A or B or A500 GR B or A501 or A595 (2) or A715 GR 50
Arm Plates (3)	ASTM A36 or A572 GR50 (1) or A595 GR A or A588
Misc.	ASTM designations as noted

(1) ASTM A36M50 steel as described in Item 442 "Metal for Structures" may be used in lieu of A 572 GR 50.

(2) If A595 GR A material is used, arm need not be cold worked to A595 requiremants, but material must have 40 ksi minimum yield prior to fabrication.

(3) Either of the materials listed for pates may be used where the drawings do not specify a particular ASTM designation.

(4) A576 must be suitable for forging and also meet minimum tensile strength of 65 ksi, minimum yield of 35 ksi, and elongation in 2 inches of 22 percent.

(5) Dimensional limits are given to show acceptable variation in design. All of a Fabricator's production of a particular arm length shall have the same dimensions within specified tolerances.

GENERAL NOTES:

Design conforms to 1994 AASHTO Standard Specifications for Structural Supports for Highway Signs, Luminaires, and Traffic Signals and Interim Revisions thereto. Design Wind Speed equals 90 mph plus a 1.3 gust factor. Arms are designed to support a 75 lb. luminaire having an effective projected area (actual area times drag coefficient) of 1.5 sq. ft.

Materials and fabrication shall be in accordance with the Specificatons and with the details, dimensions, and weld procedures shown herein. Weld references call for preapproved weld procedures which the Fabricator must obtain prior to fabrication. In the absense of specified Fabricaton tolerances, dimensions shall be within the tolerances generally obtainable in normal fabrication practice.

Unless otherwise noted, all parts shall be galvanized after fabrication in accordance with the Specifications.

Special designs require submission of shop drawings in accordance with the item "Steel Structures".

Each pole simplex fitting shall be supplied with 2 A325 bolts and 2 lock washers of the size specified. The bolts and lock washers shall be secured to the pole with the other hardware items called for in the plans. When clamp attachment is specified, the Fabricator shall ship the clamp assembly securely attached to the pole at the location shown on the plans.

If clamp assemblies are ordered without poles, the Fabricator shall ship one upper and one lower clamp assembly together in a single package, including all nuts and washers required for the clamps and simplex fittings.

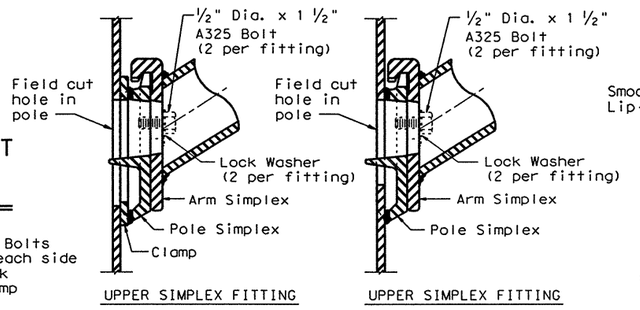

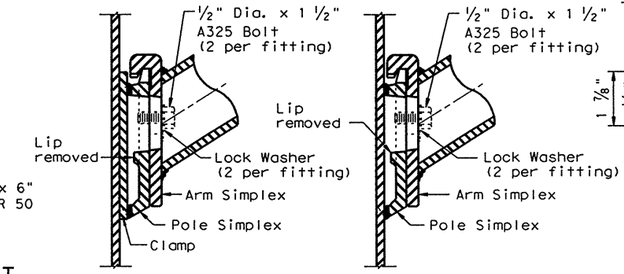

SECTON A-A

SECTON B-B

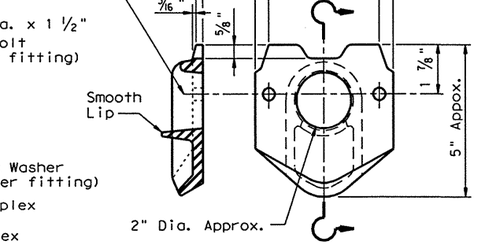

POLE SIMPLEX DETAIL

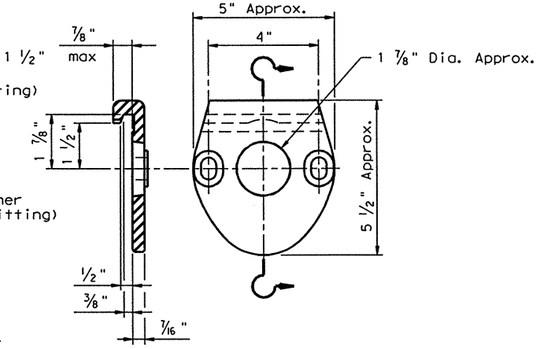

ARM SIMPLEX DETAIL

⚠1 1-99 - minor typo correction

Texas Department of Transportation
Traffic Operations Division

STANDARD ASSEMBLY DRAWINGS FOR LUMINAIRE SUPPORT STRUCTURES

ARM DETAILS

LUM-A-99

FILE: lum-a.dgn	DN: LEH	CK: JSY	DW: LTT	CK: TEB	STD:	
©TxDOT August 1995	DIST	FED REG	FEDERAL AID PROJECT #			SHEET
REVISIONS	PHARR	6				723
5-96	COUNTY		CONTROL	SECT	JOB	HIGHWAY
1-99	HIDALGO		0255	08	091	US 281

DISCLAIMER
The use of this standard is governed by the "Texas Engineering Practice Act". No warranty of any kind is made by TxDOT for any purpose whatsoever. TxDOT assumes no responsibility for the conversion of this standard to other formats or for incorrect results or damages resulting from its use.

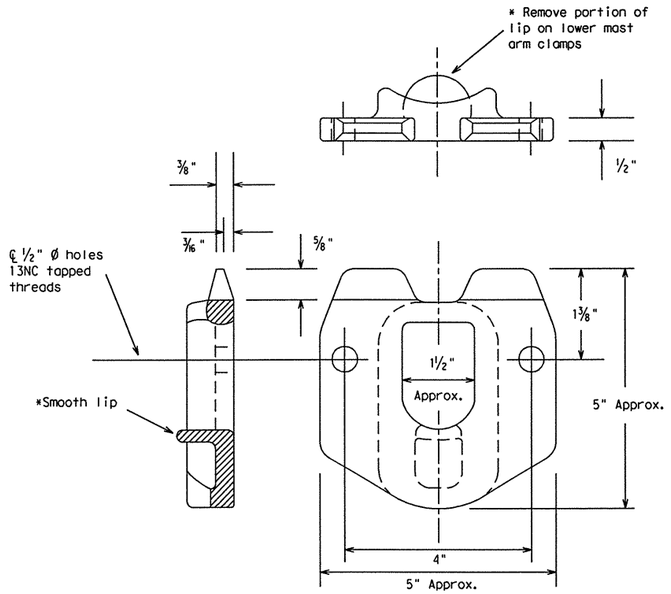

POLE SIMPLEX DETAILS

OTHER MATERIALS:

1. Pole simplex shall be ASTM A27 GR65-35 or A148 GR80-50 or A576 GR1021. ASTM A576 must be suitable for forging and also meet minimum tensile of 65ksi, minimum yield of 35ksi, and elongation in 2 inches of 22 percent.
2. A36M50 steel may be used in lieu of ASTM A572 GR50.
3. Welded tabs and backplates shall be ASTM A-36 steel or better.
4. Nylon insert locknuts shall conform to ASTM A563.

GENERAL NOTES:

1. Materials and fabrication shall be in accordance with the Specifications and with the details, dimensions, and weld procedures shown herein. Weld references call for preapproved weld procedures which the Fabricator must obtain prior to fabrication. In the absense of specified fabrication tolerances, dimensions shall be within the tolerances generally obtainable in normal fabrication practice.
2. All parts shall be galvanized after fabrication in accordance with ASTM 153 or 123. The throat of the Simplex shall be made free of all rough or sharp edges resulting from the galvanizing process.
3. Each simplex fitting shall be supplied with 2 ASTM A325 bolts, 1/2 in. X 1 1/2 in. and 2 lock washers. The bolts and lock washers shall be secured to the clamp with the other hardware items. The Fabricator shall ship clamp assembly together in a single package, including all bolts, nuts, and washers required for the clamp and simplex fitting.
4. Design conforms to 1985 AASHTO "Standard Specifications for Structural Supports for Highway Signs, Luminaires, and Traffic Signals" and interim revisions thereto. Design Wind Speed equals 80 mph plus a 1.3 gust factor. Clamps are designed to support a 75 lb. luminaire having an effective projected area (actual area times drag coefficient) of 1.4 sq.ft., 12 ft. maximum arm length.
5. Each assembly shall consist of one upper piece simplex fitting having a smooth lip and one lower piece simplex fitting with the lip removed.
6. Approximately 2 in. diameter hole in upper mast arm clamp.

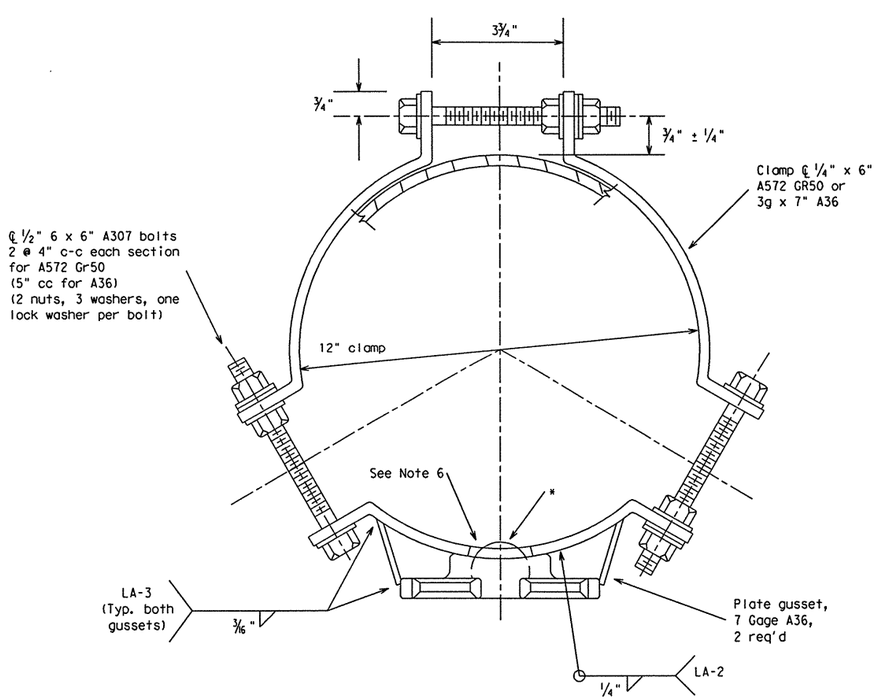

CLAMP DETAIL

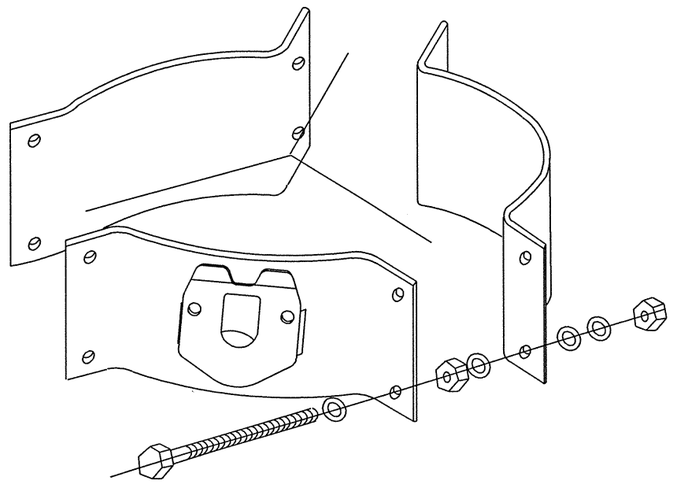

PROJECTION

For 8.9 - 12 inch diameter Signal Poles
(Two req'd for each mast arm)

LEVELS DISPLAYED

	1	2	3	4	5	6	7	8	9	10	11	12	13	14	15	16
17	18	19	20	21	22	23	24	25	26	27	28	29	30	31	32	
33	34	35	36	37	38	39	40	41	42	43	44	45	46	47	48	
49	50	51	52	53	54	55	56	57	58	59	60	61	62	63		

ACC:

STANDARD PLANS
Texas Department of Transportation
Traffic Operations Division

CLAMP ON FITTING ASSEMBLY FOR LUMINAIRE MAST ARM

CFA-99

©TxDOT

DW: KAB	CK: RES	DW: FDN	CK: CAL

REVISIONS	STATE DISTRICT	FEDERAL REGION	FEDERAL AID PROJECT	SHEET
11-99	PHARR	6		724

COUNTY	CONTROL	SECTION	JOB	HIGHWAY
HIDALGO	0255	08	091	US 281

D-18-6100.001
November 99

DISCLAIMER
The use of this standard is governed by the "Texas Engineering Practice Act". No warranty of any kind is made by TxDOT for any purpose whatsoever. TxDOT assumes no responsibility for the conversion of this standard to other formats or for incorrect results or damages resulting from its use.

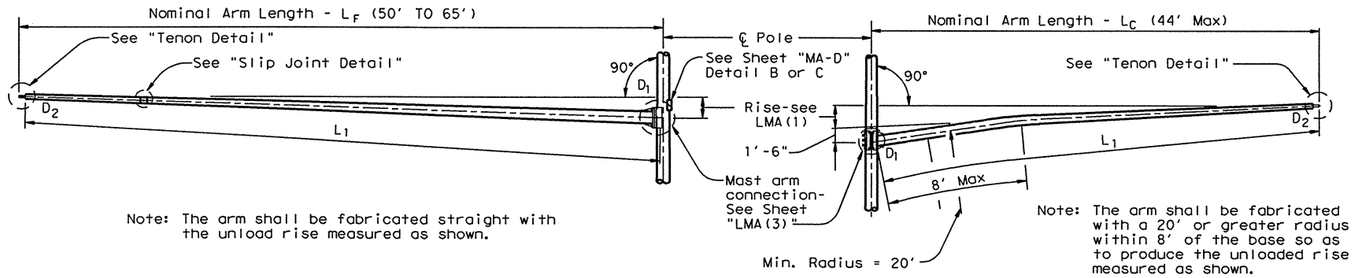

Note: The arm shall be fabricated straight with the unload rise measured as shown.

Note: The arm shall be fabricated with a 20' or greater radius within 8' of the base so as to produce the unloaded rise measured as shown.

FIXED MOUNT TRAFFIC SIGNAL ARM

CLAMP-ON TRAFFIC SIGNAL ARM

(If required, See DMA-80 or DMA-100 Standard Sheets for Clamp-on Arm Details)

Design also conforms to NCHRP Report 412 for fatigue resistance except that there are no stiffeners at the base plate. TxDOT is conducting tests to determine if stiffeners at the base plate will or will not result in optimal performance; depending upon the results of the tests, poles may need a retrofit to ensure optimal fatigue performance.

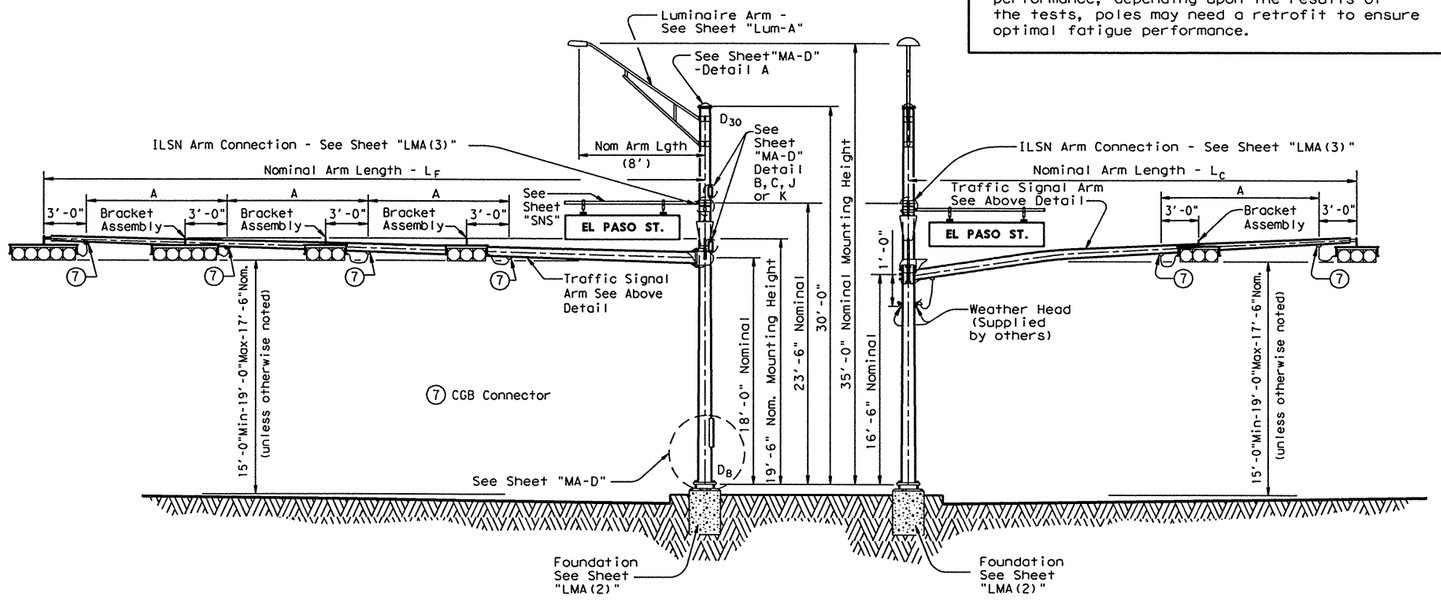

ELEVATION (Showing fixed mount arm)

STRUCTURE ASSEMBLY

ELEVATION (Showing clamp mount arm)

TABLE OF DIMENSIONS "A"										
Arm Length	24'	28'	32'	36'	40'	44'	50'	55'	60'	65'
Arm Type II	10'	11'	12'	13'						
Arm Type III			10'	11'	12'	12'				
Arm Type IV							12'	12'	12'	12'

VIBRATION WARNING

Mast Arms of approximately 40'-0" or longer are subject to possible harmonic vertical vibrations in light wind conditions due to unusual combinations of signal numbers, weights or positions, arm-wind orientation, and arm-pole stiffness.

Arms shall be visually inspected in 5 to 20 mph wind conditions after signal head installation and, if vertical movements with a total excursion (max positive to max negative) of more than approximately 8" are observed at arm tip, damping devices or other means shall be fitted to the arm(s).

The necessary damping device(s) or other remedial measures shall be as recommended by the fabricator. Excessive vibrations shall not be allowed to continue for more than two days.

If damping plate is used, the size shall be 16" x 66". The plate must be installed directly above traffic light located nearest the free end.

GENERAL NOTES:

Design conforms to 1994 AASHTO Standard Specifications for Structural Supports for Highway Signs, Luminaires, and Traffic Signals and Interim Specifications thereto. Design Wind Speed can be either 100 mph or 80 mph plus a 1.3 gust factor. If clamp-on traffic signal is required, designs are based on an arm included angle of 90 degrees or more. Angles of less than approximately 75 degrees will require a special design.

Poles are designed to support one 8'-0" luminaire arm, two 9'-0" internally lighted street name signs and two traffic signal arms with limited length combinations. The specified luminaire load applied at the end of luminaire arm equals 75 lbs vertical dead load plus the horizontal wind load on an effective projected area of 1.5 sq ft. The specified internally lighted street name sign applied 4'-6" from the centerline of the pole equals 85 lbs vertical dead load plus the horizontal wind load on an effective projected area of 11.5 sq ft. For 50 ft. to 65 ft. fixed-mount mast arm the specified signal load applied at the end of the traffic signal arm equals 310 lbs vertical dead load plus the horizontal wind load on an effective projected area of 52.0 sq ft. (actual area times drag coefficient). For clamp-on mast arm, the specified signal load applied at the end of the traffic signal arms equals 180 lbs vertical dead load plus the horizontal wind load on an effective projected area of 32.4 sq ft. (actual area times drag cofficient).

Except as noted in sheets 1 thru 3 of 3, also refer to Standard Sheet "MA-D" for pole details, "LUM-A for luminaire arm and connection details, "SNS" for internally lighted street name sign details, and "TS-FD" for anchor bolt and foundation details.

Fabrication shall be in accordance with the Specifications and with the details, dimensions, and weld procedures shown herein. Weld references call for preapproved weld procedures which the Fabricator must obtain prior to fabrication. Miscellaneous welds which do not call for preapproved weld procedures are nevertheless subject to rejection for poor workmanship. Material, fabrication tolerances, and shipping practices shall meet the requirements of this sheet and the Specifications.

Unless otherwise noted, all parts shall be galvanized in accordance with the Specifications.

Special designs require submission of shop drawings in accordance with the item "Steel Structures".

LEVELS DISPLAYED
1 2 3 4 5 6 7 8 9 10 11 12 13 14 15 16
17 18 19 20 21 22 23 24 25 26 27 28 29 30 31 32
33 34 35 36 37 38 39 40 41 42 43 44 45 46 47 48
49 50 51 52 53 54 55 56 57 58 59 60 61 62 63 64
ACC:

STANDARD PLANS
Texas Department of Transportation
Traffic Operations Division

TRAFFIC SIGNAL SUPPORT STRUCTURES
LONG MAST ARM ASSEMBLY (50 TO 65 FT) (80 AND 100 MPH WIND ZONE)

Sheet 1 of 4 LMA(1)-01

© TxDOT July 2000 DN: JSY CK: ARC DW: TGG CK: JSY

REVISIONS	STATE DISTRICT	FEDERAL REGION	FEDERAL AID PROJECT	SHEET
4-20-01	PHARR	6		725

COUNTY	CONTROL	SECTION	JOB	HIGHWAY
HIDALGO	0255	08	091	US 281

DISCLAIMER
The use of this standard is governed by the "Texas Engineering Practice Act". No warranty of any kind is made by TxDOT for any purpose whatsoever. TxDOT assumes no responsibility for the conversion of this standard to other formats or for incorrect results or damages resulting from its use.

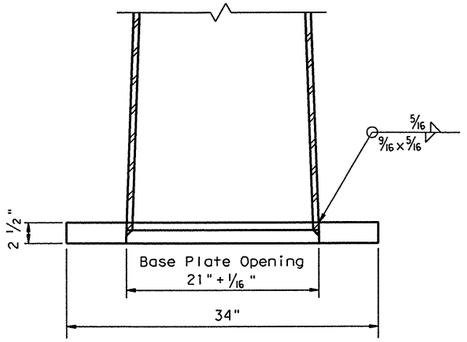

POLE CONNECTION TO BASE PLATE

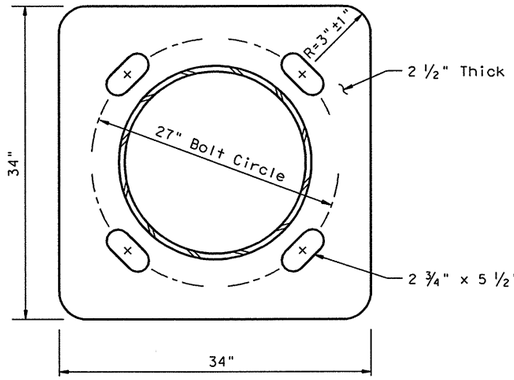

BASE PLATE

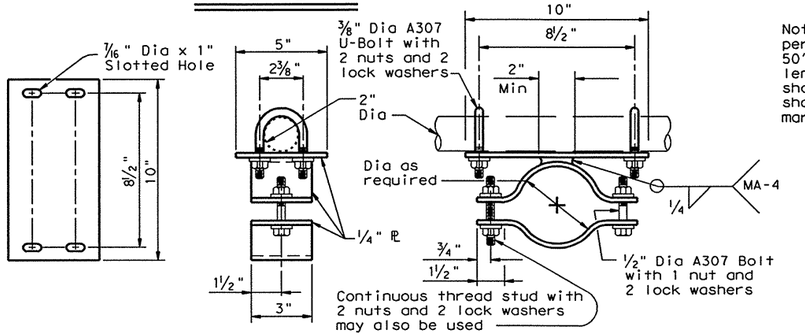

BRACKET ASSEMBLY DETAILS OPTION A

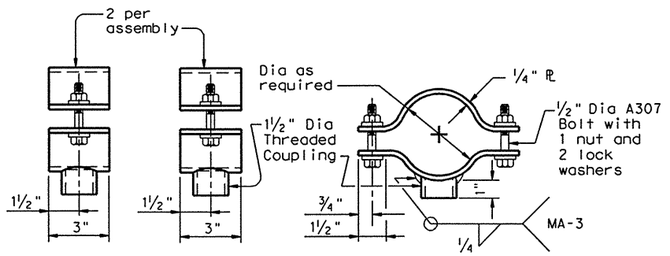

BRACKET ASSEMBLY DETAILS OPTION B

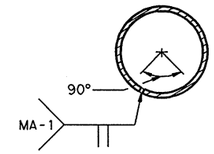

Longitudinal Seam Weld must be oriented within the lower 90° of the signal arm.

ARM WELD DETAIL

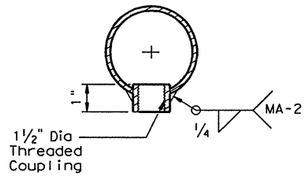

COUPLING DETAIL

Arm Length	ROUND POLES					Foundation Type
	D_B	D_{19}	D_{24}	D_{30}	① thk	
ft.	in.	in.	in.	in.	in.	
50', 55' 60', 65'	21.0	18.3	17.6	16.8	.3125	48-A

Arm Length	ROUND ARMS				
	L_1	D_1	D_2	① thk	Rise (±2")
ft.	ft.	in.	in.	in.	
50	49	18.5	11.7	.3125	3'- 3"
55	54	18.5	11.0	.3125	3'- 7"
60	59	18.5	10.3	.3125	3'-11"
65	64	18.5	9.6	.3125	4'- 4"

D_B = Pole Base O.D.
D_{19} = Pole Top O.D. with no Luminaire and no ILSN
D_{24} = Pole Top O.D. with ILSN w/out Luminaire
D_{30} = Pole Top O.D. with Luminaire
D_1 = Arm Base O.D.
D_2 = Arm End O.D.
L_1 = Shaft Length
L = Nominal Arm Length

① Thickness shown is minimum, thicker materials may be used.

ANCHOR BOLT & TEMPLATE SIZE						
Bolt Dia in	Length ‡	Top Thread	Bottom Thread	Bolt Circle	R_2	R_1
2 1/2"	5'-3"	10"	3"	27"	16"	11"

‡ Min dimension given, longer bolts are acceptable.

① Anchor bolt design develops the foundation capacity given under Foundation Design Loads.

② Foundation Design Loads are the allowable moments and shears at the base of the structure.

③ Field Penetrometer readings at a depth of approximately 3 to 5 feet may be used to adjust shaft lengths.

④ If rock is encountered, the Drilled Shaft shall extend a minimum of two diameters into solid rock.

⑤ Decimal lengths in Design Table are to allow interpolation for other penetrometer values. Round to nearest foot for entry into Summary Table.

FOUNDATION DESIGN TABLE

FDN TYPE	DRILLED SHAFT DIA	REINFORCING STEEL		DRILLED SHAFT LENGTH-ft ③, ④, ⑤			ANCHOR BOLT DESIGN ①				FOUNDATION DESIGN LOAD ②		TYPICAL APPLICATION
		VERT BARS	SPIRAL & PITCH	TEXAS CONE PENETROMETER N blows/ft			ANCHOR BOLT DIA	Fy (ksi)	BOLT CIR DIA	ANCHOR TYPE	MOMENT K-ft	SHEAR Kips	
				10	15	40							
48-A	48"	20 #9	#4 at 6"	21.9	19.5	14.7	2 1/2"	55	27"	2	490	10	Mast arm assembly.

SEE SHEET "TS-FD" FOR ADDITIONAL DETAILS.

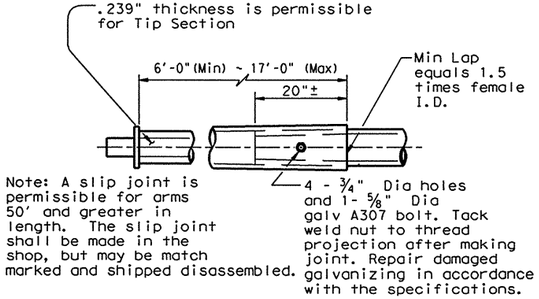

Note: A slip joint is permissible for arms 50' and greater in length. The slip joint shall be made in the shop, but may be match marked and shipped disassembled.

SLIP JOINT DETAIL

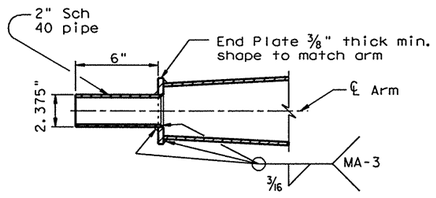

TENON DETAIL

Stainless steel bands and cast bracket as in "Astro-Brac" with 1 1/2" Dia Threaded Coupling.

BRACKET ASSEMBLY OPTION C

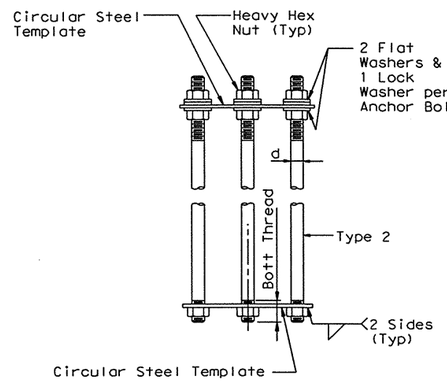

NUT ANCHOR (TYPE 2)

ANCHOR BOLT ASSEMBLY

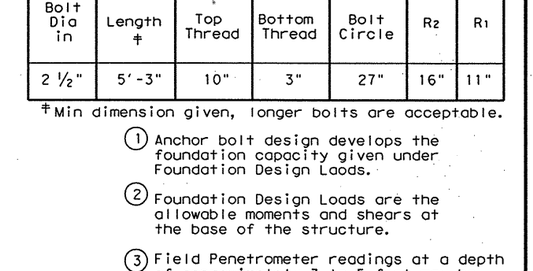

R_1 may equal R_2 if plate is welded of 3 or more segments.

TEMPLATE DETAIL

LEVELS DISPLAYED
1 2 3 4 5 6 7 8 9 10 11 12 31 41 51 61
71 81 92 02 12 22 32 42 52 62 72 82 93 03 13 23
33 43 53 63 73 83 94 04 14 24 34 44 54 64 74 84
95 05 15 26 35 45 55 65 75 85 96 06 16 26 36

ACC:

STANDARD PLANS
Texas Department of Transportation
Traffic Operations Division

TRAFFIC SIGNAL SUPPORT STRUCTURES
LONG MAST ARM ASSEMBLY (50 TO 65 FT) (80 AND 100 MPH WIND ZONE)

Sheet 2 of 4 — LMA(2)-01

©TxDOT July 2000	DN: JSY	CK: ARC	DW: TGC	CK: JSY
REVISIONS 4-20-01	STATE DISTRICT: PHARR	FEDERAL REGION: 6	FEDERAL AID PROJECT	SHEET: 726
COUNTY: HIDALGO	CONTROL: 0255	SECTION: 08	JOB: 091	HIGHWAY: US 281

DISCLAIMER
The use of this standard is governed by the "Texas Engineering Practice Act". No warranty of any kind is made by TxDOT for any purpose whatsoever. TxDOT assumes no responsibility for the conversion of this standard to other formats or for incorrect results or damages resulting from its use.

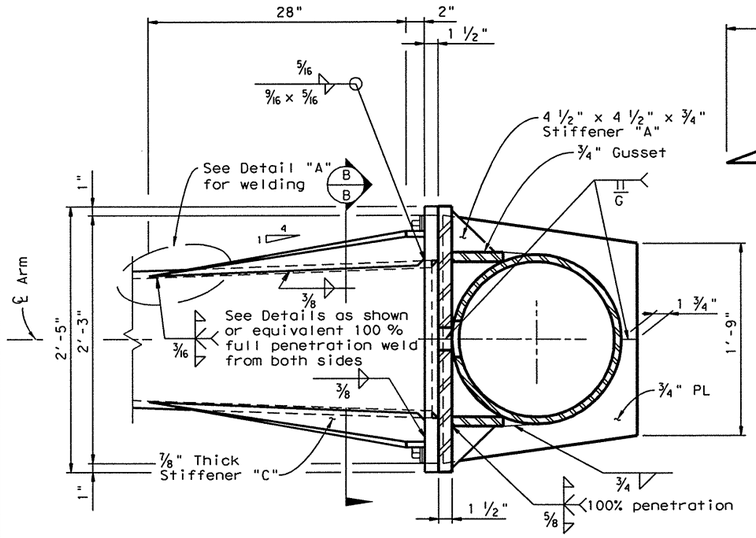

SECTION A-A

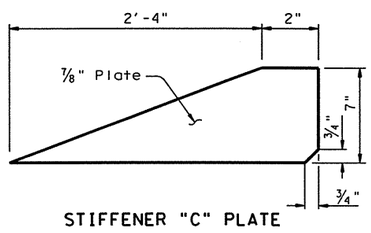

STIFFENER "C" PLATE

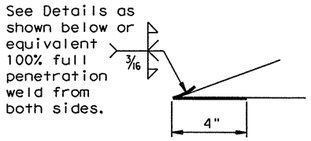

Only 4" length at tip of Stiffener "C" requires full penetration weld. Smooth weld radius to connect Stiffener . Others only require fillet weld.

DETAIL "A"

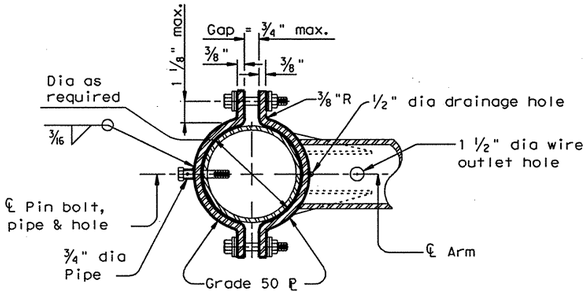

SECTION C-C

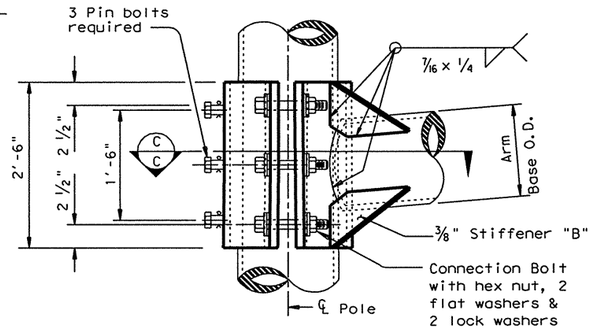

ELEVATION

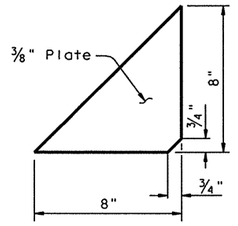

STIFFENER "B" PLATE

MATERIALS	
Round Shafts or Polygonal Shafts	ASTM A595 GR A, ASTM A570 GR 50, ASTM A607 GR 50, ASTM A572 GR 50 or A36M50
Plates [1]	ASTM A36 OR A572 GR 50 or A595[2] or A36M50
Connection Bolts	ASTM A325 except where noted
Pin Bolts	ASTM A325
Pipe	ASTM A53 GR A or B, or A501
Misc. Hardware	Galvanized steel or stainless steel or as noted

[1] Any of the materials listed for plates may be used where the drawings do not specify a particular Grade designation.

[2] If A595 material is used, it need not be cold worked to A595 requirments, but material must have 40 ksi minimum yield prior to fabrication.

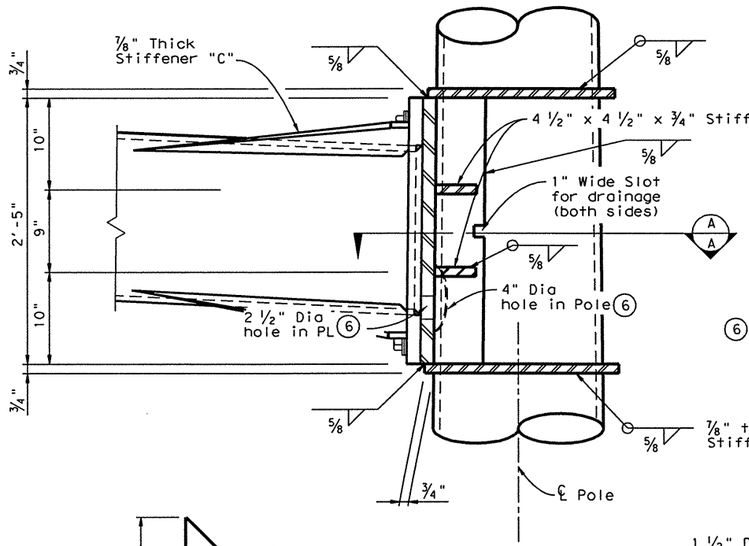

6 Deburr holes and offset as shown for drainage

ELEVATION

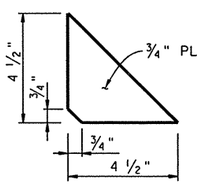

STIFFENER "A" PLATE

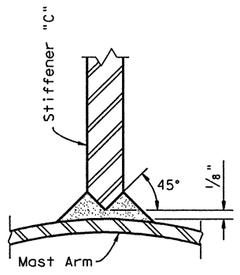

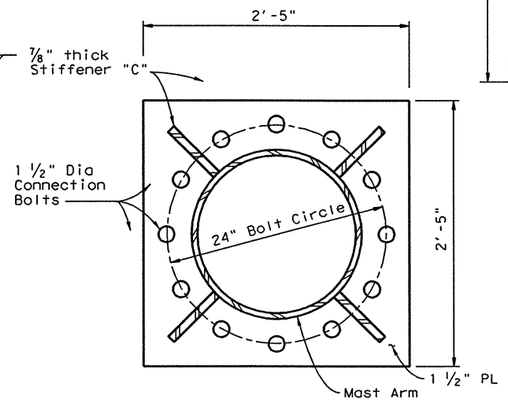

SECTION B-B

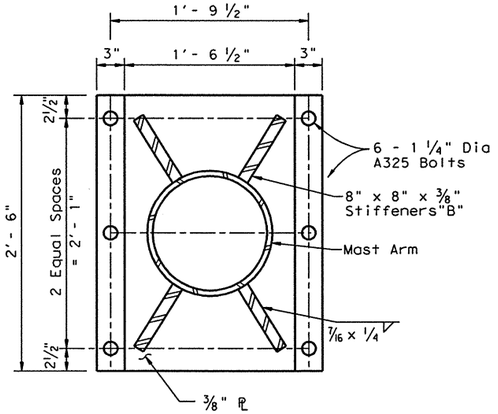

MAST ARM AND ILSN ARM TO POLE

CLAMP-ON DETAIL

GENERAL NOTES:

Clamp-on details are used for the second arm on dual mast arm assemblies. A Maximum 1 ½" wide vertical slotted hole may be cut in the front clamp plate to facilitate drainage during galvanizing. THe slot shall be centered behind the arm and shall be no longer than the arm diameter minus 1".

Fixed mount details are used for single mast arm assemblies and for the first arm on dual mast assemblies.

Where duplicate parts occur on a detail, welds shown for one part shall apply to all similar parts on the detail.

Pin bolts are required to prevent rotation of clamp-on arms under design wind forces.

LEVELS DISPLAYED																ACC:
1	2	3	4	5	6	7	8	9	10	11	12	13	14	15	16	
17	18	19	20	21	22	23	24	25	26	27	28	29	30	31	32	
33	34	35	36	37	38	39	40	41	42	43	44	45	46	47	48	
49	50	51	52	53	54	55	56	57	58	59	60	61	62	63		

STANDARD PLANS
Texas Department of Transportation
Traffic Operations Division

TRAFFIC SIGNAL SUPPORT STRUCTURES
LONG MAST ARM ASSEMBLY (50 TO 65 FT) (80 AND 100 MPH WIND ZONE)

Sheet 3 of 4 LMA(3)-01

©TxDOT July 2000

DW: JSY	CK: ARC	DW: TGG	CK: JSY

REVISIONS	STATE DISTRICT	FEDERAL REGION	FEDERAL AID PROJECT	SHEET
4-20-01	PHARR	6		727

COUNTY	CONTROL	SECTION	JOB	HIGHWAY
HIDALGO	0255	08	091	US 281

DISCLAIMER
The use of this standard is governed by the "Texas Engineering Practice Act". No warranty of any kind is made by TxDOT for any purpose whatsoever. TxDOT assumes no responsibility for the conversion of this standard to other formats or for incorrect results or damages resulting from its use.

LEVELS DISPLAYED
1 2 3 4 5 6 7 8 9 10 11 12 13 14 15 16
1 7 8 1 9 2 0 2 1 2 2 2 3 2 4 2 5 2 6 2 7 2 8 2 9 3 0 3 1 3 2
1 7 8 1 9 2 0 2 1 2 2 2 3 2 4 2 5 2 6 2 7 2 8 2 9 3 0 3 1 3 2
3 3 4 3 5 3 6 3 7 3 8 3 9 4 0 4 1 4 2 4 3 4 4 4 5 4 6 4 7 4 8
0 9 5 0 5 1 5 2 5 3 5 4 5 5 5 6 5 7 6 0 6 5 9 6 0 6 1 6 2 6 3

ACC:

Shipping Parts List

Ship each pole with the following attached: enlarged hand hole, pole cap, fixed arm connection bolts and washers, and any additional hardware listed in the table.

Nominal Arm Length	30' Poles with Luminaire: See note above plus: one (or two if ILSN attached) small hand hole, clamp-on simplex		24' Poles with ILSN: See note above plus one small hand hole		19' Poles with no Luminaire and no ILSN: See note above	
Single Mast Arm						
Lf ft.	Designation	Quantity	Designation	Quantity	Designation	Quantity
50	50L		50S		50	
55	55L		55S		55	
60	60L		60S		60	
65	65L		65S		65	
Dual Mast Arm						
Lf ft. / Lc ft.	Designation	Quantity	Designation	Quantity	Designation	Quantity
50 / 20	5020L		5020S		5020	
24	5024L		5024S		5024	
28	5028L		5028S		5028	
32	5032L		5032S		5032	
36	5036L		5036S		5036	
40	5040L		5040S		5040	
44	5044L		5044S		5044	
55 / 20	5520L		5520S		5520	
24	5524L		5524S		5524	
28	5528L		5528S		5528	
32	5532L		5532S		5532	
36	5536L		5536S		5536	
40	5540L		5540S		5540	
44	5544L		5544S		5544	
60 / 20	6020L		6020S		6020	
24	6024L		6024S		6024	
28	6028L		6028S		6028	
32	6032L		6032S		6032	
36	6036L		6036S		6036	
40	6040L		6040S		6040	
44	6044L		6044S		6044	
65 / 20	6520L		6520S		6520	
24	6524L		6524S		6524	
28	6528L		6528S		6528	
32	6532L		6532S		6532	
36	6536L		6536S		6536	
40	6540L		6540S		6540	
44	6544L		6544S		6544	

Foundation Summary Table **

Location Ident.	Avg. N Blow/ft.	No. Each	Drill Shaft *** Length (feet) 48-A
Total Drill Shaft Length			

Shipping Parts List

Traffic Signal Arms (Fixed Mount) (1 per pole)
Ship each arm with listed equipment attached

Nominal Arm Length	Type IV Arm (4 Signals) * 3 Bracket Assembly * and 4 CGB Connectors	
ft.	Designation	Quantity
50	50IV	
55	55IV	
60	60IV	
65	65IV	

Luminaire Arms (1 per 30' pole)

Nominal Arm Length	Quantity
8' Arm	

ILSN Arm (Max. 2 per pole) Ship with clamps, bolts and washers

Nominal Arm Length	Quantity
7' Arm	
9' Arm	

Traffic Signal Arms (80 MPH Clamp-On Mount) (1 per pole) Ship each arm with listed equipment attached

Nominal Arm Length	Type I Arm (1 Signal) 2 CGB connector and 1 clamp w/bolts and washers		Type II Arm (2 Signals) * 1 Bracket Assembly * and 3 CGB connectors, and 1 clamp w/bolts and washers		Type III Arm (3 Signals) * 2 Bracket Assembly * and 4 CGB connectors, and 1 clamp w/bolts and washers	
ft.	Designation	Quantity	Designation	Quantity	Designation	Quantity
20	20I-80					
24	24I-80		24II-80			
28	28I-80		28II-80			
32			32II-80		32III-80	
36			36II-80		36III-80	
40					40III-80	
44					44III-80	

Traffic Signal Arms (100 MPH Clamp-On Mount) (1 per pole) Ship each arm with listed equipment attached

Nominal Arm Length	Type I Arm (1 Signal) 2 CGB connector and 1 clamp w/bolts and washers		Type II Arm (2 Signals) * 1 Bracket Assembly * and 3 CGB connectors, and 1 clamp w/bolts and washers		Type III Arm (3 Signals) * 2 Bracket Assembly * and 4 CGB connectors, and 1 clamp w/bolts and washers	
ft.	Designation	Quantity	Designation	Quantity	Designation	Quantity
20	20I-100					
24	24I-100		24II-100			
28	28I-100		28II-100			
32			32II-100		32III-100	
36			36II-100		36III-100	
40					40III-100	
44					44III-100	

Anchor Bolt Assemblies (1 per pole)

Anchor Bolt Diameter	Anchor Bolt Length	Quantity
2 1/2 "	5' - 3"	

Each anchor bolt assembly consists of the following: Top and bottom templates, 4 anchor bolts, 8 nuts, 8 flat washers, 4 lock washers and 4 nut anchor devices (type 2) per Standard Drawing "TS-FD".
Templates may be removed for shipment.

Notes
* Supply Option "A" unless otherwise noted
** Foundations may be listed separately or grouped according to similarity of location and type. Quantities are for the Contractor's information only.
*** Decimal lengths in Design Table are to allow interpolation for other penetrometer values. Round to nearest foot for entry into Summary Table.

Abbreviations
Lf= Fixed Arm Length
Lc= Clamp-on Arm Length (44' Max.)

STANDARD PLANS
Texas Department of Transportation
Traffic Operations Division

LONG MAST ARM ASSEMBLY PARTS LIST

Sheet 4 of 4 LMA(4)-01

© TxDOT November 2000 DN: JK CK: GRB DW: FDN CK: CAL

REVISIONS	STATE DISTRICT	FEDERAL REGION	FEDERAL AID PROJECT	SHEET
4-20-01	PHARR	6		728

COUNTY	CONTROL	SECTION	JOB	HIGHWAY
HIDALGO	0255	08	091	US 281

DISCLAIMER
The use of this standard is governed by the "Texas Engineering Practice Act". No warranty of any kind is made by TxDOT for any purpose whatsoever. TxDOT assumes no responsibility for the conversion of this standard to other formats or for incorrect results or damages resulting from its use.

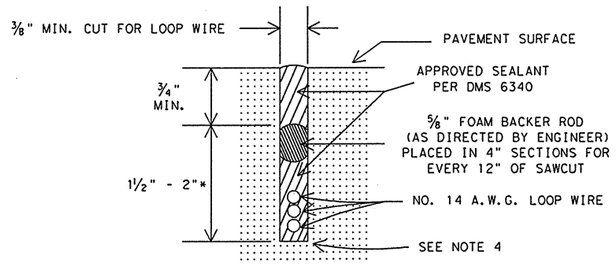

LOOP SAW CUT CROSS-SECTION

* SAWCUTS IN BRIDGE DECKS ARE TYPICALLY 1" DEPTH MAXIMUM
SAWCUTS IN BRIDGE DECKS AND ACROSS EXPANSION JOINTS
SHALL BE AS APPROVED BY ENGINEER

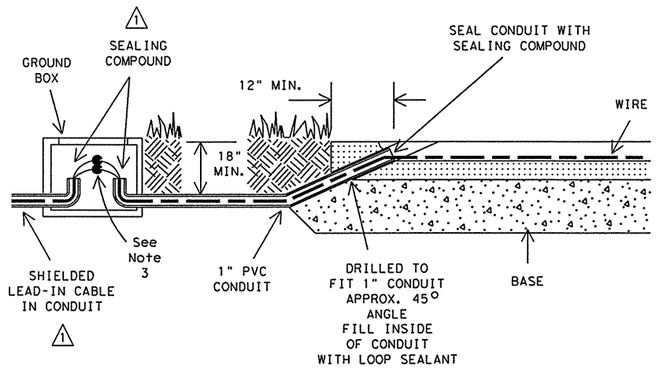

TYPICAL LEAD IN CONFIGURATION (WITHOUT CURBING)

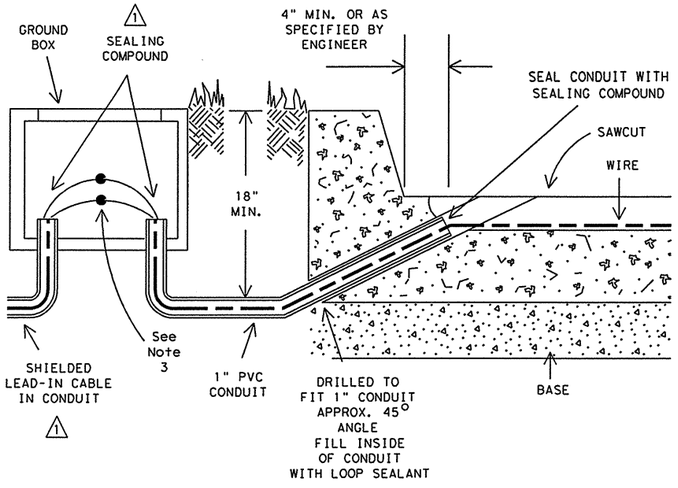

TYPICAL LEAD IN CONFIGURATION (WITH CURBING)

TYPICAL LOOP DETECTOR LAYOUTS

(AS SPECIFIED IN PLANS)

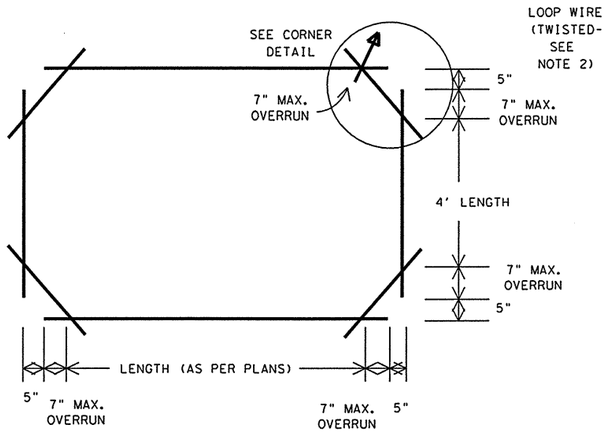

RECTANGULAR

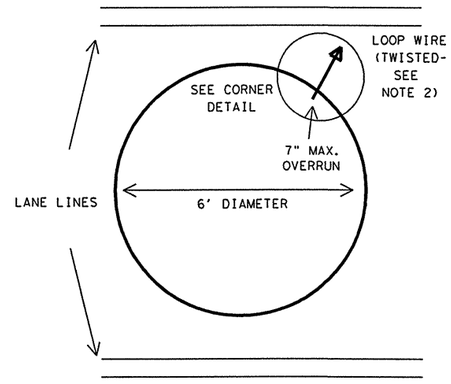

CIRCULAR

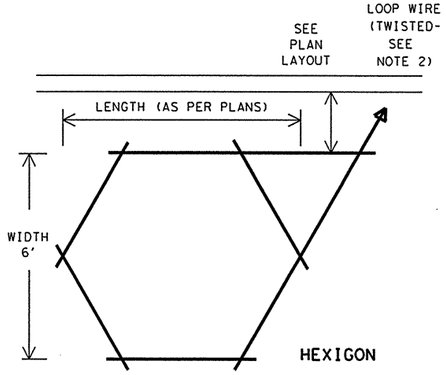

HEXIGON

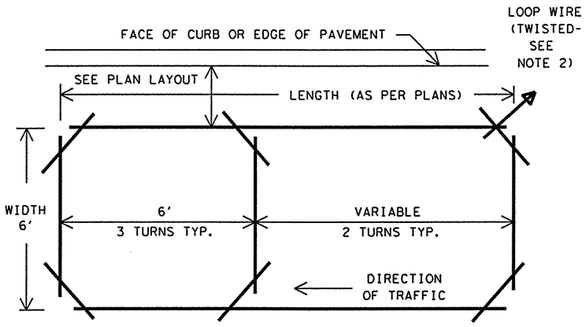

POWER HEADER

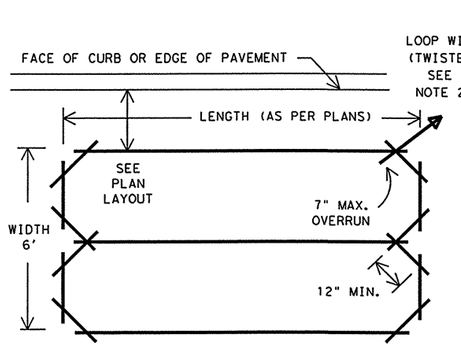

QUADRAPOLE

GENERAL NOTES:

1. The pavement cut is to be made with a concrete saw to neat lines and loose material removed. The cut shall be clean and dry when the wire and sealing compound is placed.
2. Loop wire shall be 14 AWG Stranded Type XHHW. Wire from the loop to the ground box shall be twisted a minimum of 5 turns per foot. No splices shall be permitted in the loop or in the run to the ground box.
3. The home run cable from the pull box to the controller shall be IMSA 50-2 shielded cable and shall be soldered to the loop wire. The solder joints shall be sealed with Scotchcast or other method acceptable to the Engineer. The shield shall be grounded only at the controller end. Loop home run cable shall be two conductor 14 AWG shielded, Type XHHW.
4. All wire placed in the saw cut shall be sealed by fully encapsulating it in a sealant acceptable to the Engineer. Sealing compound shall be in accordance with DMS 6340.
5. The loop location, confirguration and number of turns shall be as indicated on the plans or as directed by the Engineer.

Recommended Number of Turns for Loop Detectors

LOOP PERIMETER SIZE (FT.)	NUMBER OF TURNS	APPROXIMATE LOOP SIZES INCLUDED
24' or Less	3 or 4	5' x 5', 6' x 6'
25' - 110'	2 or 3	6' x 10', 6' x 45'
110' or More	1 or 2	6' x 50' or Longer

6. A separate saw cut shall be made from each loop to the edge of pavement or as specified by the Engineer.
7. Splices between the loop lead-in cable and loop detector shall be made only in the ground box near the loop it is serving.
8. Circular loops may use prewound loops encased in continuous pvc tubing. Sawcut width may be adjusted to accommodate tubing.
9. The lead-in wire in the circular loop shall be coiled at the 3 inch drilled corner to reduce bending stress.
10. Loop duct may be used as specified by Engineer.

For additiohnal information refer to "Texas Traffic Signal Detector" manual, TTI Report 1163-1.

TYPICAL CORNER DETAILS

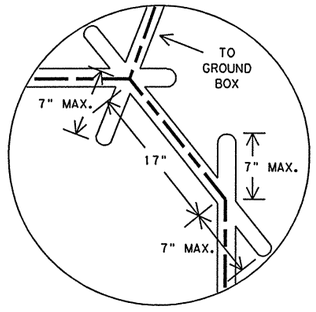

RECTANGULAR & HEXIGON LOOP
SAWCUT CORNER DETAIL

7" OVERRUN BASED ON 24" DIAMETER SAW BLADE

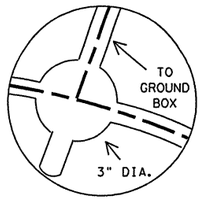

CIRCULAR LOOP
DRILLED CORNER DETAIL

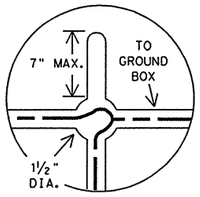

RECTANGULAR & HEXIGON LOOP (ALT.)
DRILLED CORNER DETAIL

STANDARD PLANS
Texas Department of Transportation
Traffic Operations Division

LOOP DETECTOR INSTALLATION DETAILS

LD(1)-03

© TxDOT December 1998	DN: CR	CK: GRB	DW: FDN	CK: CAL
REVISIONS 2-99 1-03	STATE DISTRICT: PHARR	FEDERAL REGION: 6	FEDERAL AID PROJECT	SHEET: 730
COUNTY: HIDALGO	CONTROL: 0255	SECTION: 08	JOB: 091	HIGHWAY: US 281

730

LEVELS DISPLAYED
1 2 3 4 5 6 7 8 9 10 11 12 13 14 15 16
17 18 19 20 21 22 23 24 25 26 27 28 29 30 31 32
33 34 35 36 37 38 39 40 41 42 43 44 45 46 47 48
49 50 51 52 53 54 55 56 57 58 59 60 61 62 63

ACC:

STRAIN POLE DESCRIPTION	Pole Type	Foundation Type	Maximum Permissible Span Wire Load (lbs.)
26' Pole	A	36-A	4900
30' Pole	B	36-A	4300
30' Pole with Lum.	B	36-A	4000
30' Pole with 20' Mast Arm	C	36-B	4400
30' Pole with 24' Mast Arm	C	36-B	4000
30' Pole with 28' Mast Arm	C	36-B	3600
30' Pole with 32' Mast Arm	C	36-B	3300
30' Pole with 36' Mast Arm	C	36-B	2900
30' Pole with 20' Mast Arm & Lum.	C	36-B	4100
30' Pole with 24' Mast Arm & Lum.	C	36-B	3800
30' Pole with 28' Mast Arm & Lum.	C	36-B	3400
30' Pole with 32' Mast Arm & Lum.	C	36-B	3000
30' Pole with 36' Mast Arm & Lum.	C	36-B	2500
34' Pole	D	36-B	5200
34' Pole with Lum.	D	36-B	4900

② Numbers on charts indicate the number of signal heads on the span. The total span wire design load is based on one 5-section head and one or more additional 3-section head(s). Design wind pressures on cables are assumed as 1.6 lb/ft. Weight of span wire cables (one per signal head) is assumed as 0.65 lb/ft which includes an allowance for conductor cables and miscellaneous hardware. The effect of the sway cable on load distribution is ignored as it is assumed to break at design wind conditions. When a pole supports 2 spans, the span wire design loads for both spans should be added vectorially to determine the design load for that pole.

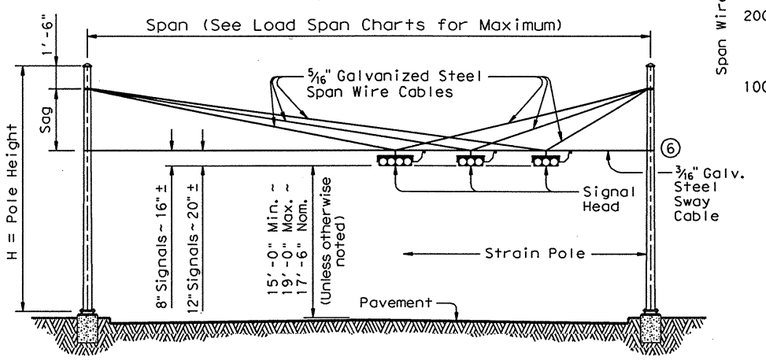

STRAIN POLE ELEVATIONS HORIZONTAL SIGNALS

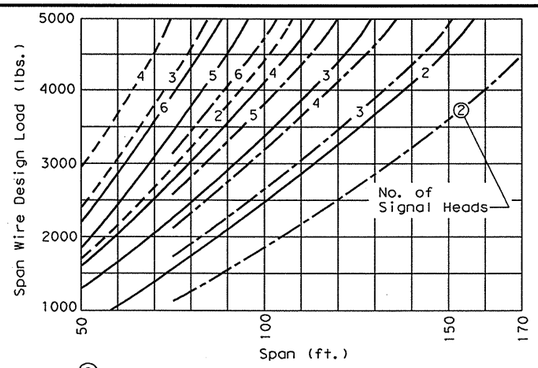

② SIGNALS WITH 12-INCH LENS

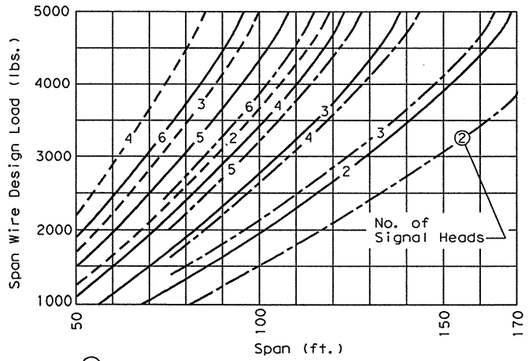

② SIGNALS WITH 8-INCH LENS

Signal Head Type	Wt. Per Head	Wind Area ◆
5-Section, 12" Lens	125 lbs	9.6 sq. ft.
5-Section, 8" Lens	70 lbs	4.8 sq. ft.
3-Section, 12" Lens	75 lbs	5.64 sq. ft.
3-Section, 8" Lens	45 lbs	3.0 sq. ft.

◆ Effective projected design wind area (actual area times drag coefficient)

——— Sag = 4'-6" (26' or 30' Pole)
——— Sag = 8'-0" (30' or 34' Pole)
——— Sag = 11'-6" (34' Pole)

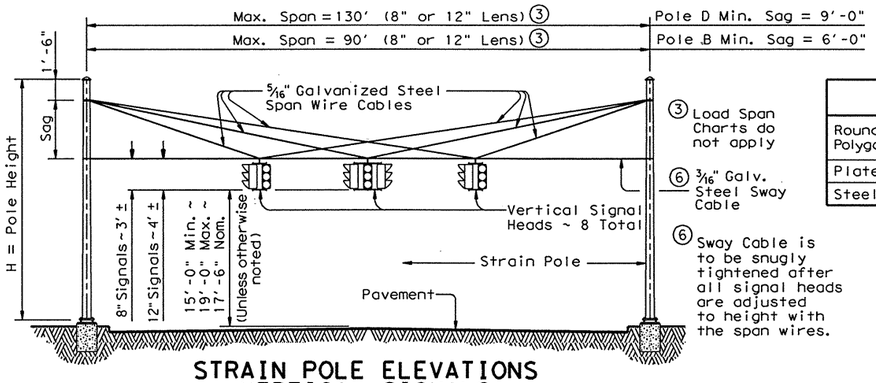

STRAIN POLE ELEVATIONS VERTICAL SIGNALS

(Mast arms are not used with vertical signals)

SHIPPING PARTS LIST

Poles (Without Traffic Signal Arm)

Pole Type	Strain poles with Luminaire: Ship each pole with the following hardware attached: handhole at base, pole cap, 2 clamp-on simplex and 1 pipe plug.			Strain poles without Luminaire: Ship each pole with the following hardware attached: handhole at base, pole cap and 1 pipe plug.		
	Description	Designation	Quantity	Description	Designation	Quantity
A				26' Strain Pole	SP 26 A-100	
B	30' Strain Pole	SPL 30 B-100		30' Strain Pole	SP 30 B-100	
D	34' Strain Pole	SPL 34 D-100		34' Strain Pole	SP 34 D-100	

Poles (With Traffic Signal Arm)

Pole Type	Strain poles with Luminaire: Ship each pole with the following hardware attached: handhole at base, pole cap, clamp-on simplex and 3 pipe plugs.			Strain poles without Luminaire: Ship each pole with the following hardware attached: handhole at base, pole cap and 3 pipe plugs.		
	Description	Designation	Quantity	Description	Designation	Quantity
C	30' SPw/TS Arm	SPL 30 C-100		30' SPw/TS Arm	SP 30 C-100	

Traffic Signal Arms (For Type C poles)

Nominal Arm Length	Type I Arm (1 Signal): Ship each Type I Arm with the following hardware attached: 2 CGB Connectors, 1 clamp with bolts and washers		Type II Arm (2 Signals): Ship each Type II Arm with the following hardware attached: 1 Bracket Assembly ①, 3 CGB Connectors and 1 clamp with bolts and washers		Type III Arm (3 Signals): Ship each Type III Arm with the following hardware attached: 2 Bracket Assemblies ①, 4 CGB Connectors and 1 clamp with bolts and washers	
ft.	Designation	Quantity	Designation	Quantity	Designation	Quantity
20	20I-100					
24	24I-100		24 II -100			
28	28I-100		28 II -100			
32			32 II -100		32 III -100	
36			36 II -100		36 III -100	

Anchor Bolt Assemblies (1 per pole)

Anchor Bolt Diameter	Anchor Bolt Length	Templates may be removed for shipment. Quantity
1 3/4"	3'-10"	
2"	4'-3"	

Each Anchor Bolt Assembly consists of the following: Top and Bottom templates, 4 anchor bolts, 8 nuts, 8 flat washers, 4 lock washers and 4 nut anchor devices (Type 2) per Standard Drawing "TS-FD".

Luminaire Arms

Nominal Arm Length	Quantity
8' Arm	

① Supply Option "A" unless otherwise noted. See Sheet "DMA-100"

MATERIALS	
Round Shafts or Polygonal Shafts	ASTM A595 GR A, ASTM A570 GR50, ASTM A607 GR50, ASTM A572 GR50 or A36M50
Plates ⑦	ASTM A36 OR A572 GR50 OR A595 GR A OR A36M50
Steel Cable	ASTM A475, 7 Wire, Utilities Grade

⑦ Any of the materials listed for plates may be used where the drawings do not specify a particular ASTM designation.

Pole Type	ROUND POLES D_B in.	D_T in.	⑤thk in.	H ft.	POLYGONAL POLES D_B in.	D_T in.	⑤thk in.	H ft.
A	12.5	8.9	.239	26	13.0	9.0	.239	26
B	13.5	9.3	.239	30	14.0	9.0	.239	30
C	15.5	11.3	.239	30	16.0	11.0	.239	30
D	15.5	10.7	.239	34	16.0	11.0	.239	34

⑤ Thickness shown are minimum, thicker materials may be used.

D_B = Pole Base O.D. D_T = Pole Top O.D. H = Pole Height

SHEET 1 OF 2

Texas Department of Transportation
Traffic Operations Division

TRAFFIC SIGNAL SUPPORT STRUCTURES STRAIN POLE ASSEMBLIES

(100 MPH WIND ZONE)

SP-100(1)-96

FILE: SP-100.DGN	DN: MS	CK: JSY	DW: BR	CK: JSY	NEG:	
©TxDOT March 1996	DIST	FED REG	FEDERAL AID PROJECT ◆			SHEET
REVISIONS 6-96	PHARR	6				731
	COUNTY		CONTROL	SECT	JOB	HIGHWAY
	HIDALGO		0255	08	091	US281

121A

DISCLAIMER:
The use of this standard is governed by the "Texas Engineering Practice Act". No warranty of any kind is made by TxDOT for any purpose whatsoever. TxDOT assumes no responsibility for the conversion of this standard to other formats or for incorrect results or damages resulting from its use.

LEVELS DISPLAYED
1 2 3 4 5 6 7 8 9 10 11 12 13 14 15 16
17 18 19 20 21 22 23 24 25 26 27 28 29 30 31 32
33 34 35 36 37 38 39 40 41 42 43 44 45 46 47 48
49 50 51 52 53 54 55 56 57 58 59 60 61 62 63

DISCLAIMER:
The use of this standard is governed by the "Texas Engineering Practice Act". No warranty of any kind is made by TxDOT for any purpose whatsoever. TxDOT assumes no responsibility for the conversion of this standard to other formats or for incorrect results or damages resulting from its use.

LEVELS DISPLAYED															
1	2	3	4	5	6	7	8	9	10	11	12	13	14	15	16
17	18	19	20	21	22	23	24	25	26	27	28	29	30	31	32
33	34	35	36	37	38	39	40	41	42	43	44	45	46	47	48
49	50	51	52	53	54	55	56	57	58	59	60	61	62	63	

DETAIL A

DETAIL B

DETAIL C

POLE ELEVATION

SECTION B-B

ALTERNATE POLE CAP DETAIL

TABLE OF DIMENSIONS "A"				
Arm Length	24'	28'	32'	36'
Arm Type II	10'	11'	12'	13'
Arm Type III			10'	11'

STRUCTURE ASSEMBLY

DETAIL E

SECTION A-A

DETAIL D

BASE PLATE PLAN

Foundation Type	Anchor Bolt Diameter	Bolt Hole Diameter	Bolt Circle Diameter	Base ℄ Dim. L x T
36-A	1 3/4"	2"	19"	19" x 1 3/4"
36-B	2"	2 1/4"	21"	21" x 2"

GENERAL NOTES:

Design conforms to 1994 AASHTO Standard Specifications for Structural Supports for Highway Signs, Luminaires, and Traffic Signals and Interim Specifications thereto. Design Wind Speed equals 100 mph plus a 1.3 gust factor. The maximum permissible span wire design loads tabulated are calculated at a stress load of 1.4 times the basic allowable stress. A simultaneous wind on the pole, mast arm, and luminaire is also included.

See standard sheet "DMA-100" for details of clamp-on traffic signal arms, sheet "MA-C" for traffic signal arm connection details, sheet "LUM-A" for luminaire arm and connection details, and sheet "TS-FD" for anchor bolt and foundation details.

Fabrication shall be in accordance with the Specifications and with the details, dimensions, and weld procedures shown herein. Weld references call for preapproved weld procedures which the Fabricator must obtain prior to fabrication. Materials, fabrication tolerances, and shipping practices shall meet the requirements of this sheet and the Specifications.

Unless otherwise noted, all parts shall be galvanized in accordance with the Specifications.

Special design require submission of shop drawings in accordance with the item "Steel Structures".

Texas Department of Transportation
Traffic Operations Division

TRAFFIC SIGNAL SUPPORT STRUCTURES STRAIN POLE ASSEMBLIES

(100 MPH WIND ZONE)

SP-100(2)-96

FILE: SP-100.DGN	DN: MS	CK: JSY	DW: BR	CK: JSY	NEG:
© TxDOT March 1996	DIST	FED REG	FEDERAL AID PROJECT •		SHEET
REVISIONS 6-96	PHARR	6			732
	COUNTY		CONTROL	SECT / JOB	HIGHWAY
	HIDALGO		0255	08 / 091	US281

121B

mohapp
03:35:24 PM
08/06/2003
y:\22322A *Texas*US281\20DC\Dwgs\Elec\Output\281-E00.dgn

ELECTRICAL SERVICE DATA

SERVICE POLE NO.	LOCATION NO.	ELECTRICAL SERVICE DESCRIPTION (SEE ED (3)-98)	SERVICE CONDUIT SIZE	SERVICE CONDUCTORS SIZE	SAFETY SWITCH SIZE	MAIN DISCONNECT		TWO-POLE CONDUCTORS AMPS	PANELBOARD LOADCENTER AMP RATING (MIN.)	CIRCUIT NO.	BRANCH CKT. BKR. POLE/AMP	BRANCH CIRCUIT AMPS	KVA LOAD
						SWITCH AMP/FUSE	CKT. BKR. POLE/AMP						
1	1	ELEC SERV TYA(240/480) 100 (NS) AL (T) TP (O)	2 "	3#2	N/A	N/A	2P/100	100	N/A	A	2P/30	18.0	20.9
										B	2P/30	18.0	
										C	2P/15	1.5	
										UP	2P/15	6.0	
2	2	ELEC SERV TYD(120/240) 070 (NS) GS (T) TP (O)	1½"	3#4	N/A	N/A	2P/70	100	N/A	TS	1P/50	40.0	6.2
										LUM	1P/15	12.0	
3	3	ELEC SERV TYA(240/480) 200 (NS) AL (T) TP (O)	3"	3#3/0	N/A	N/A	2P/200	200	N/A	D	2P/30	19.5	37.0
										E	2P/35	26.5	
										F	2P/35	26.5	
										UP	2P/15	4.5	
4	4	ELEC SERV TYD(120/240) 070 (NS) GS (T) TP (O)	1½"	3#4	N/A	N/A	2P/70	100	N/A	TS	1P/50	40.0	6.2
										LUM	1P/15	12.0	
5	5	ELEC SERV TYA(240/480) 100 (NS) AL (T) TP (O)	2"	3#2	N/A	N/A	2P/100	100	N/A	H	2P/30	39.0	31.7
										J	2P/30	19.5	
										K	2P/15	1.5	
										UP	2P/15	6.0	
6	6	ELEC SERV TYD(120/240) 070 (NS) GS (T) TP (O)	1½"	3#4	N/A	N/A	2P/70	100	N/A	TS	1P/50	40.0	6.2
										LUM	1P/15	12.0	
7	7	ELEC SERV TYA(240/480) 60 (NS) AL (T) TP (O)	1½"	3#6	N/A	N/A	2P/60	60	N/A	L	2P/30	19.5	21.6
										M	2P/30	18.0	
										N	2P/15	1.5	
										UP	2P/15	6.0	
8	8	ELEC SERV TYD(120/240) 070 (NS) GS (T) TP (O)	1½"	3#4	N/A	N/A	2P/70	100	N/A	TS	1P/50	40.0	6.2
										LUM	1P/15	12.0	
9	9	ELEC SERV TYD(120/240) 070 (NS) GS (T) TP (O)	1½"	3#4	N/A	N/A	2P/70	100	N/A	TS	1P/50	40.0	6.2
										LUM	1P/15	12.0	
10	10	ELEC SERV TYA(240/480) 060 (NS) AL (T) TP (O)	1½"	3#6	N/A	N/A	2P/60	60	N/A	P	2P/15	2.3	3.0
										UP	2P/15	4.0	

CIRCUITS A-N = ROADWAY LIGHTING
CIRCUIT UP = UNDERPASS LIGHTING
CIRCUIT TS = TRAFFIC SIGNALS
CIRCUIT LUM = LUMINAIRES ON TRAFFIC SIGNALS POLES

SUMMARY OF ILLUMINATION QUANTITIES
(SHEET TOTALS)

ITEM	DESCRIPTION	UNIT	QUANTITY
610	RDWY. ILLUM ASSEM. (SP40S-10-10)(0.25 KW)S	EA	83
610	RDWY. ILLUM ASSEM. (SP40S-10)(0.25 KW)S	EA	4
610	RDWY. ILLUM ASSEM. (SA40T-10)(0.25 KW)S	EA	25
610	UNDERPASS ILLUM ASSEM. (SPL-CO)(0.25 KW)S(TY1)	EA	56
613	HIGH MAST ILLUM POLE 150 FT. (100 MPH)	EA	4
614	HIGH MAST ILLUM ASM (12-400 WATT) (TY B)	EA	4
618	CONDUIT (RMC) (1 IN.)	LF	1,375
618	CONDUIT (PVC) (SCH 40) (2 IN.)	LF	25,023
618	CONDUIT (PVC) (SCH 80) (2 IN.) (BORED)	LF	3,528
620	ELEC. CONDUCTOR (#8 BARE)	LF	26,081
620	ELEC. CONDUCTOR (#6 BARE)	LF	3,900
620	ELEC. CONDUCTOR (#10 TY XHHW))	LF	2,750
620	ELEC. CONDUCTOR (#8 TY XHHW)	LF	60,022
620	ELEC. CONDUCTOR (#6 TY XHHW))	LF	8,080
624	GROUND BOX (RPM) (TY A) (122311) APRON	EA	56
628	ELEC. SERVICE (TY A) (240/480) 060(NS) AL(T) TP(O)	EA	2
628	ELEC. SERVICE (TY A) (240/480) 100(NS) AL(T) TP(O)	EA	2
628	ELEC. SERVICE (TY A) (240/480) 200(NS) AL(T) TP(O)	EA	1
628	ELEC. SERVICE (TY D) (120/240) 070(NS) GS(T) TP(O)	EA	5
656	FND FOR RDWY ILL. ASM. (TY A) (30 IN. DR SH)	LF	522

STATE OF TEXAS
JOHN D. CRAD
95351
REGISTERED
PROFESSIONAL ENGINEER
8-4-03

Parsons Brinckerhoff Quade & Douglas Inc.

Texas Department of Transportation

© 2002 by TxDOT

SUMMARY QUANTITIES & ELECTRICAL SERVICE DATA SHEET

SHEET 1 OF 1

DESIGNED: DPL	FED. RD DIV. NO.	STATE	FEDERAL AID PROJECT NO.	HIGHWAY NO.
CHECKED: GTC	6	TEXAS	XXXXXXXX	US 281

DRAWN: JTM	STATE DISTRICT	COUNTY	CONTROL NO.	SECTION NO.	JOB NO.	SHEET NO.
CHECKED:	PHARR	HIDALGO	0255	08	091	733

mohapp
04:25:58 PM
09/24/2003
Y:\22322A *Texas*US281\20DC\Dwgs\Elec\Output\281-E00.dgn

ELECTRICAL SERVICE DATA

SERVICE POLE NO.	LOCATION NO.	ELECTRICAL SERVICE DESCRIPTION (SEE ED (3)-98)	SERVICE CONDUIT SIZE	SERVICE CONDUCTORS SIZE	SAFETY SWITCH SIZE	MAIN DISCONNECT		TWO-POLE CONDUCTORS AMPS	PANELBOARD LOADCENTER AMP RATING (MIN.)	CIRCUIT NO.	BRANCH CKT. BKR. POLE/AMP	BRANCH CIRCUIT AMPS	KVA LOAD
						SWITCH AMP/FUSE	CKT. BKR. POLE/AMP						
1	1	ELEC SERV TYA(240/480) 100 (NS) AL (T) TP (O)	2 "	3#2	N/A	N/A	2P/100	100	N/A	A	2P/30	18.0	20.9
										B	2P/30	18.0	
										C	2P/15	1.5	
										UP	2P/15	6.0	
2	2	ELEC SERV TYD(120/240) 070 (NS) GS (T) TP (O)	1½"	3#4	N/A	N/A	2P/70	100	N/A	TS	1P/50	40.0	6.2
										LUM	1P/15	12.0	
3	3	ELEC SERV TYA(240/480) 200 (NS) AL (T) TP (O)	3"	3#3/0	N/A	N/A	2P/200	200	N/A	D	2P/30	19.5	37.0
										E	2P/35	26.5	
										F	2P/35	26.5	
										UP	2P/15	4.5	
4	4	ELEC SERV TYD(120/240) 070 (NS) GS (T) TP (O)	1½"	3#4	N/A	N/A	2P/70	100	N/A	TS	1P/50	40.0	6.2
										LUM	1P/15	12.0	
5	5	ELEC SERV TYA(240/480) 100 (NS) AL (T) TP (O)	2"	3#2	N/A	N/A	2P/100	100	N/A	H	2P/30	39.0	31.7
										J	2P/30	19.5	
										K	2P/15	1.5	
										UP	2P/15	6.0	
6	6	ELEC SERV TYD(120/240) 070 (NS) GS (T) TP (O)	1½"	3#4	N/A	N/A	2P/70	100	N/A	TS	1P/50	40.0	6.2
										LUM	1P/15	12.0	
7	7	ELEC SERV TYA(240/480) 60 (NS) AL (T) TP (O)	1½"	3#6	N/A	N/A	2P/60	60	N/A	L	2P/30	19.5	21.6
										M	2P/30	18.0	
										N	2P/15	1.5	
										UP	2P/15	6.0	
8	8	ELEC SERV TYD(120/240) 070 (NS) GS (T) TP (O)	1½"	3#4	N/A	N/A	2P/70	100	N/A	TS	1P/50	40.0	6.2
										LUM	1P/15	12.0	
9	9	ELEC SERV TYD(120/240) 070 (NS) GS (T) TP (O)	1½"	3#4	N/A	N/A	2P/70	100	N/A	TS	1P/50	40.0	6.2
										LUM	1P/15	12.0	
10	10	ELEC SERV TYA(240/480) 060 (NS) AL (T) TP (O)	1½"	3#6	N/A	N/A	2P/60	60	N/A	P	2P/15	2.3	3.0
										UP	2P/15	4.0	

CIRCUITS A-N = ROADWAY LIGHTING
CIRCUIT UP = UNDERPASS LIGHTING
CIRCUIT TS = TRAFFIC SIGNALS
CIRCUIT LUM = LUMINAIRES ON TRAFFIC SIGNALS POLES

SUMMARY OF ILLUMINATION QUANTITIES
(SHEET TOTALS)

ITEM	DESCRIPTION	UNIT	QUANTITY
416	FND FOR HI MAST ASSY (60 IN DR SH)	LF	140
432	RIPRAP	CY	10.24
610	RDWY. ILLUM ASSEM. (SP40S-10-10)(0.25 KW)S	EA	83
610	RDWY. ILLUM ASSEM. (SP40S-10)(0.25 KW)S	EA	4
610	RDWY. ILLUM ASSEM. (SA40T-10)(0.25 KW)S	EA	25
610	UNDERPASS ILLUM ASSEM. (SPL-CO)(0.25 KW)S(TY1)	EA	56
613	HIGH MAST ILLUM POLE 150 FT. (100 MPH)	EA	4
614	HIGH MAST ILLUM ASM (12-400 WATT) (TY B)	EA	4
618	CONDUIT (RMC) (1 IN.)	LF	1,375
618	CONDUIT (PVC) (SCH 40) (2 IN.)	LF	25,023
618	CONDUIT (PVC) (SCH 80) (2 IN.) (BORED)	LF	3,528
620	ELEC. CONDUCTOR (#8 BARE)	LF	26,081
620	ELEC. CONDUCTOR (#6 BARE)	LF	3,900
620	ELEC. CONDUCTOR (#10 TY XHHW))	LF	2,750
620	ELEC. CONDUCTOR (#8 TY XHHW)	LF	60,022
620	ELEC. CONDUCTOR (#6 TY XHHW))	LF	8,080
624	GROUND BOX (RPM) (TY A) (122311) APRON	EA	56
628	ELEC. SERVICE (TY A) (240/480) 060(NS) AL(T) TP(O)	EA	2
628	ELEC. SERVICE (TY A) (240/480) 100(NS) AL(T) TP(O)	EA	2
628	ELEC. SERVICE (TY A) (240/480) 200(NS) AL(T) TP(O)	EA	1
628	ELEC. SERVICE (TY D) (120/240) 070(NS) GS(T) TP(O)	EA	5
656	FND FOR RDWY ILL. ASM. (TY A) (30 IN. DR SH)	LF	150

STATE OF TEXAS
JOHN D. COAD, JR
58521
REGISTERED
PROFESSIONAL ENGINEER

REVISED
9-26-03

Parsons Brinckerhoff Quade & Douglas Inc.

Texas Department of Transportation

© 2002 by TxDOT

SUMMARY QUANTITIES & ELECTRICAL SERVICE DATA SHEET

SHEET 1 OF 1

DESIGNED: DPL	FED. RD. DIV. NO.	STATE	FEDERAL AID PROJECT No.		HIGHWAY No.	
CHECKED: GTC	6	TEXAS	XXXXXXXX		US 281	
DRAWN: JTM	STATE DISTRICT	COUNTY	CONTROL No.	SECTION No.	JOB No.	SHEET No.
CHECKED:	PHARR	HIDALGO	0255	08	091	733

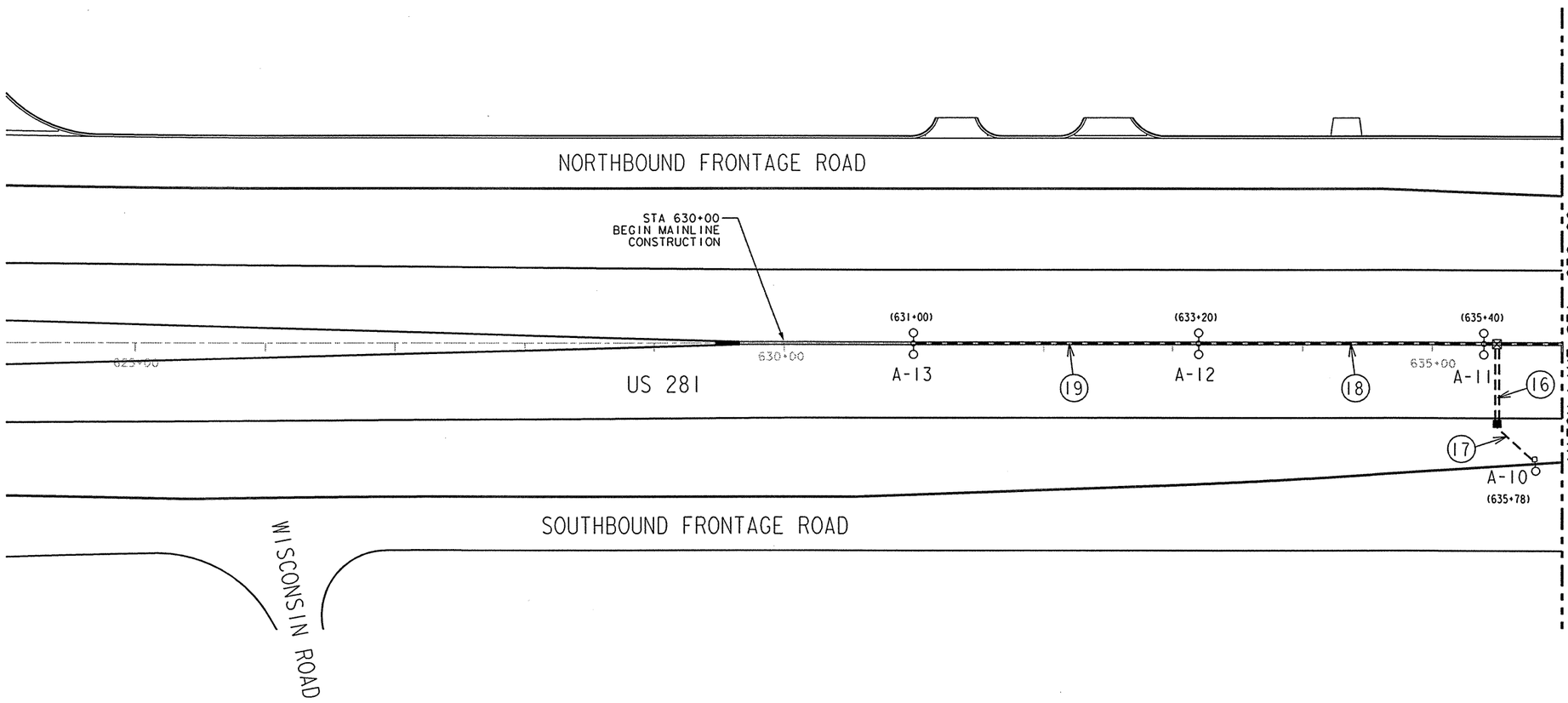

NOTES:

1. ALL STATION NUMBERS IN LUMINAIRE LOCATION SCHEDULE ARE REFERENCED FROM THE CENTER LINE.
2. ALL INDICATED LENGTHS IN CONDUIT AND CONDUCTOR RUNS ARE HORIZONTAL ONLY. ADD ADDITIONAL LENGTH FOR SPLICING AND VERTICAL RUN.
3. SEE STANDARD PLANS, RID(1)-98 THRU RID(4)-98 FOR MAST ARM AND LUMINAIRE POLE, CONDUIT AND JUNCTION BOX INSTALLATION DETAILS ON CAST-IN-PLACE AND SINGLE SLOPE CONCRETE BARRIER (TYPE 4).
4. SEE STANDARD PLANS, ED(1)-03 THRU ED(12)-03 FOR ELECTRICAL MATERIALS AND METHODS, WIRE MANAGEMENT, ELECTRICAL SERVICE AND DISTRIBUTION, AND PHOTOCELL INSTALLATIONS.
5. SEE STANDARD PLANS, HMID(1)-03 THRU HMID(9)-03 FOR HIGH MAST ILLUMINATION DETAILS, HMIP(1)-98 THRU HMIP(2)-98 FOR HIGH MAST ILLUMINATION POLES, AND HMIF(1)-98 THRU HMIF(2)-98 FOR HIGH MAST ILLUMINATION POLE FOUNDATIONS.

CONDUCTORS & CONDUIT RUNS

RUN NO.	GROUND SIZE & LENGTH (FEET)		CONDUCTOR SIZE & LENGTH (FEET)		CONDUIT SIZE & LENGTH (FEET)	
	#8 BARE	#6 BARE	#8 XHHW	#6 XHHW	2" PVC (SCH 40)	2" PVC (SCH 80) BORED
16	65		130			65
17	40		80		40	
18	220		440		220	
19	220		440		220	

SUMMARY OF ILLUMINATION QUANTITIES
(SHEET TOTALS)

ITEM	DESCRIPTION	UNIT	QUANTITY
610	RDWY. ILLUM ASSEM. (SP40S-10-10)(0.25 KW)S	EA	3
610	RDWY. ILLUM ASSEM. (SP40S-10)(0.25 KW)S	EA	
610	RDWY. ILLUM ASSEM. (SA40T-10)(0.25 KW)S	EA	1
610	UNDERPASS ILLUM ASSEM. (SPL-CO)(0.15 KW)S(TY1)	EA	
618	CONDUIT (RMC) (1 IN.)	LF	
618	CONDUIT (PVC) (SCH 40) (2 IN.)	LF	480
618	CONDUIT (PVC) (SCH 80) (2 IN.) (BORED)	LF	65
620	ELEC. CONDUCTOR (#8 BARE)	LF	545
620	ELEC. CONDUCTOR (#6 BARE)	LF	
620	ELEC. CONDUCTOR (#10 TY XHHW)	LF	
620	ELEC. CONDUCTOR (#8 TY XHHW)	LF	1,090
620	ELEC. CONDUCTOR (#6 TY XHHW)	LF	
624	GROUND BOX (RPM) (TY A) (12231I) APRON	EA	1
628	ELEC. SERVICE (TY A) (240/480) 100(NS) AL(T) TP(O)	EA	
656	FND FOR RDWY ILL. ASM. (TY A) (30 IN. DR SH)	LF	18

LUMINAIRE LOCATIONS

LUM. NO.	STATION	OFFSET TO BASE	DESCRIPTION
A-13	631+00	0'	(SP40S-10-10)(0.25KW)S
A-12	633+20	0'	(SP40S-10-10)(0.25KW)S
A-11	635+40	0'	(SP40S-10-10)(0.25KW)S
A-10	635+78	90'RT.	(SA40T-10)(0.25KW)S

LEGEND

- CONCRETE BARRIER FIXTURE TYPE (SP40S-10-10)(0.25 KW)S
- ROADWAY FIXTURE TYPE (SA40T-10)(0.25KW)S
- 2" SCHEDULE 40 PVC CONDUIT
- 2" SCHEDULE 80 PVC CONDUIT BORED
- CONDUIT RUN NUMBER
- JUNCTION BOX
- GROUND BOX

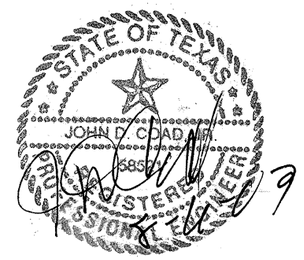

Parsons Brinckerhoff Quade & Douglas Inc.

Texas Department of Transportation

© 2002 by TxDOT

US 281
ILLUMINATION LAYOUTS

STA. 624+00 "BL1" TO
STA. 636+00 "BL1"

PLAN 1"= 100' HORIZ

SHEET 1 OF 19

DESIGNED: DPL	FED. RD DIV. No.	STATE	FEDERAL AID PROJECT No.		HIGHWAY No.	
CHECKED: GTC	6	TEXAS	XXXXXXX		US 281	
DRAWN: JTM	STATE DISTRICT	COUNTY	CONTROL No.	SECTION No.	JOB No.	SHEET No.
CHECKED:	PHARR	HIDALGO	0255	08	091	734

mahapp
03:35:56 PM
08/06/2003
y:\22322A *Texas*US281\20DCV\Dwgs\Elec\Output\281-E01.dgn

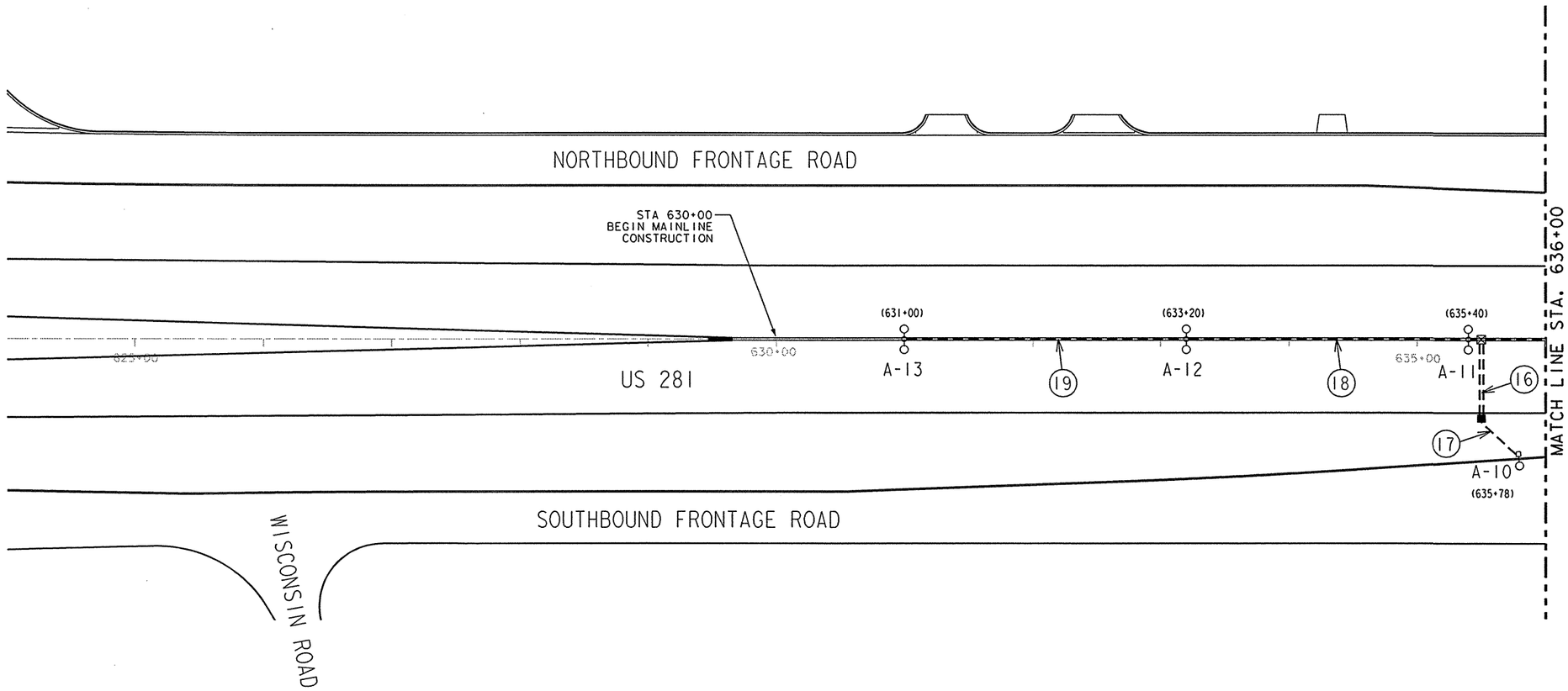

NOTES:

1. ALL STATION NUMBERS IN LUMINAIRE LOCATION SCHEDULE ARE REFERENCED FROM THE CENTER LINE.
2. ALL INDICATED LENGTHS IN CONDUIT AND CONDUCTOR RUNS ARE HORIZONTAL ONLY, ADD ADDITIONAL LENGTH FOR SPLICING AND VERTICAL RUN.
3. SEE STANDARD PLANS, RID(1)-98 THRU RID(4)-98 FOR MAST ARM AND LUMINAIRE POLE, CONDUIT AND JUNCTION BOX INSTALLATION DETAILS ON CAST-IN-PLACE AND SINGLE SLOPE CONCRETE BARRIER (TYPE 4).
4. SEE STANDARD PLANS, ED(1)-03 THRU ED(12)-03 FOR ELECTRICAL MATERIALS AND METHODS, WIRE MANAGEMENT, ELECTRICAL SERVICE AND DISTRIBUTION, AND PHOTOCELL INSTALLATIONS.
5. SEE STANDARD PLANS, HMID(1)-03 THRU HMID(9)-03 FOR HIGH MAST ILLUMINATION DETAILS, HMIP(1)-98 THRU HMIP(2)-98 FOR HIGH MAST ILLUMINATION POLES, AND HMIF(1)-98 THRU HMIF(2)-98 FOR HIGH MAST ILLUMINATION POLE FOUNDATIONS.

CONDUCTORS & CONDUIT RUNS

RUN NO.	GROUND SIZE & LENGTH (FEET)		CONDUCTOR SIZE & LENGTH (FEET)		CONDUIT SIZE & LENGTH (FEET)	
	#8 BARE	#6 BARE	#8 XHHW	#6 XHHW	2" PVC (SCH 40)	2" PVC (SCH 80) BORED
16	65		130			65
17	40		80		40	
18	220		440		220	
19	220		440		220	

SUMMARY OF ILLUMINATION QUANTITIES
(SHEET TOTALS)

ITEM	DESCRIPTION	UNIT	QUANTITY
610	RDWY. ILLUM ASSEM. (SP40S-10-10)(0.25 KW)S	EA	3
610	RDWY. ILLUM ASSEM. (SP40S-10)(0.25 KW)S	EA	
610	RDWY. ILLUM ASSEM. (SA40T-10)(0.25 KW)S	EA	1
610	UNDERPASS ILLUM ASSEM. (SPL-CO)(0.15 KW)S(TY1)	EA	
618	CONDUIT (RMC) (1 IN.)	LF	
618	CONDUIT (PVC) (SCH 40) (2 IN.)	LF	480
618	CONDUIT (PVC) (SCH 80) (2 IN.) (BORED)	LF	65
620	ELEC. CONDUCTOR (#8 BARE)	LF	545
620	ELEC. CONDUCTOR (#6 BARE)	LF	
620	ELEC. CONDUCTOR (#10 TY XHHW)	LF	
620	ELEC. CONDUCTOR (#8 TY XHHW)	LF	1,090
620	ELEC. CONDUCTOR (#6 TY XHHW)	LF	
624	GROUND BOX (RPM) (TY A) (122311) APRON	EA	1
628	ELEC. SERVICE (TY A) (240/480) 100(NS) AL(T) TP(O)	EA	
656	FND FOR RDWY ILL. ASM. (TY A) (30 IN. DR SH)	LF	6

LUMINAIRE LOCATIONS

LUM. NO.	STATION	OFFSET TO BASE	DESCRIPTION
A-13	631+00	0'	(SP40S-10-10)(0.25KW)S
A-12	633+20	0'	(SP40S-10-10)(0.25KW)S
A-11	635+40	0'	(SP40S-10-10)(0.25KW)S
A-10	635+78	90°RT.	(SA40T-10)(0.25KW)S

LEGEND

- ○-○-○ CONCRETE BARRIER FIXTURE TYPE (SP40S-10-10)(0.25 KW)S
- □-○ ROADWAY FIXTURE TYPE (SA40T-10)(0.25KW)S
- — — 2" SCHEDULE 40 PVC CONDUIT
- ═ ═ 2" SCHEDULE 80 PVC CONDUIT BORED
- ◯ CONDUIT RUN NUMBER
- ⊠ JUNCTION BOX
- ■ GROUND BOX

⚠1 REVISED 9-26-03

STATE OF TEXAS
JOHN D. CROAD
68852
REGISTERED PROFESSIONAL ENGINEER

Parsons Brinckerhoff Quade & Douglas Inc.

Texas Department of Transportation

© 2002 by TxDOT

US 281
ILLUMINATION LAYOUTS

STA. 624+00 "BL1" TO
STA. 636+00 "BL1"

PLAN 1"= 100' HORIZ

SHEET 1 OF 19

DESIGNED: DPL	FED. RD DIV. No.	STATE	FEDERAL AID PROJECT No.	HIGHWAY No.
CHECKED: GTG	6	TEXAS	XXXXXXXX	US 281

DRAWN: JTM	STATE DISTRICT	COUNTY	CONTROL No.	SECTION No.	JOB No.	SHEET No.
CHECKED:	PHARR	HIDALGO	0255	08	091	734

mohapp
03:35:56 PM
08/06/2003
y:\22322A *Texas*US281\20DC\Dwgs\Elec\Output\281-E01.dgn

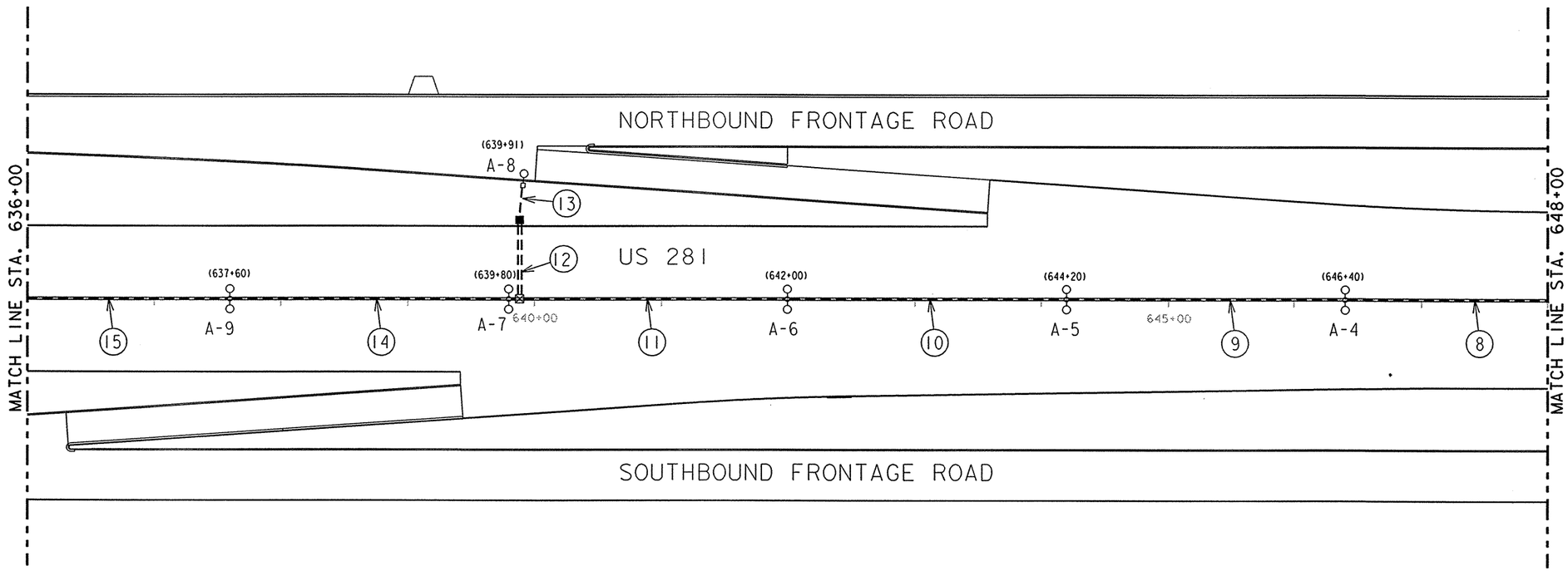

NOTES:

1. ALL STATION NUMBERS IN LUMINAIRE LOCATION SCHEDULE ARE REFERENCED FROM THE CENTER LINE.
2. ALL INDICATED LENGTHS IN CONDUIT AND CONDUCTOR RUNS ARE HORIZONTAL ONLY. ADD ADDITIONAL LENGTH FOR SPLICING AND VERTICAL RUN.
3. SEE STANDARD PLANS, RID(1)-98 THRU RID(4)-98 FOR MAST ARM AND LUMINAIRE POLE, CONDUIT AND JUNCTION BOX INSTALLATION DETAILS ON CAST-IN-PLACE AND SINGLE SLOPE CONCRETE BARRIER (TYPE 4).
4. SEE STANDARD PLANS, ED(1)-03 THRU ED(12)-03 FOR ELECTRICAL MATERIALS AND METHODS, WIRE MANAGEMENT, ELECTRICAL SERVICE AND DISTRIBUTION, AND PHOTOCELL INSTALLATIONS.
5. SEE STANDARD PLANS, HMID(1)-03 THRU HMID(9)-03 FOR HIGH MAST ILLUMINATION DETAILS, HMIP(1)-98 THRU HMIP(2)-98 FOR HIGH MAST ILLUMINATION POLES, AND HMIF(1)-98 THRU HMIF(2)-98 FOR HIGH MAST ILLUMINATION POLE FOUNDATIONS.

CONDUCTORS & CONDUIT RUNS

RUN NO.	GROUND SIZE & LENGTH (FEET)		CONDUCTOR SIZE & LENGTH (FEET)		CONDUIT SIZE & LENGTH (FEET)	
	#8 BARE	#6 BARE	#8 XHHW	#6 XHHW	2" PVC (SCH 40)	2" PVC (SCH 80) BORED
15	220		440		220	
14	220		440		220	
13	50		100		50	
12	65		130			65
11	220		440		220	
10	220		440		220	
9	220		440		220	
8	220		440		220	

SUMMARY OF ILLUMINATION QUANTITIES
(SHEET TOTALS)

ITEM	DESCRIPTION	UNIT	QUANTITY
610	RDWY. ILLUM ASSEM. (SP40S-10-10)(0.25 KW)S	EA	5
610	RDWY. ILLUM ASSEM. (SP40S-10)(0.25 KW)S	EA	
610	RDWY. ILLUM ASSEM. (SA40T-10)(0.25 KW)S	EA	1
610	UNDERPASS ILLUM ASSEM. (SPL-CO)(0.15 KW)S(TY1)	EA	
618	CONDUIT (RMC) (1 IN.)	LF	
618	CONDUIT (PVC) (SCH 40) (2 IN.)	LF	1,370
618	CONDUIT (PVC) (SCH 80) (2 IN.) (BORED)	LF	65
620	ELEC. CONDUCTOR (#8 BARE)	LF	1,435
620	ELEC. CONDUCTOR (#6 BARE)	LF	
620	ELEC. CONDUCTOR (#10 TY XHHW)	LF	
620	ELEC. CONDUCTOR (#8 TY XHHW)	LF	2,870
620	ELEC. CONDUCTOR (#6 TY XHHW)	LF	
624	GROUND BOX (RPM) (TY A) (12231I) APRON	EA	1
628	ELEC. SERVICE (TY A) (240/480) 100(NS) AL(T) TP(O)	EA	
656	FND FOR RDWY ILL. ASM. (TY A) (30 IN. DR SH)	LF	30

LUMINAIRE LOCATIONS

LUM. NO.	STATION	OFFSET TO BASE	DESCRIPTION
A-9	637+60	0'	(SP40S-10-10)(0.25 KW)S
A-8	639+91	92'LT.	(SA40T-10)(0.25 KW)S
A-7	639+80	0'	(SP40S-10-10)(0.25 KW)S
A-6	642+00	0'	(SP40S-10-10)(0.25 KW)S
A-5	644+20	0'	(SP40S-10-10)(0.25 KW)S
A-4	646+40	0'	(SP40S-10-10)(0.25 KW)S

LEGEND

- ○-○-○ CONCRETE BARRIER FIXTURE TYPE (SP40S-10-10)(0.25 KW)S
- ▫-○ ROADWAY FIXTURE TYPE (SA40T-10)(0.25KW)S
- — — 2" SCHEDULE 40 PVC CONDUIT
- ═ ═ 2" SCHEDULE 80 PVC CONDUIT BORED
- ◯ CONDUIT RUN NUMBER
- ⊠ JUNCTION BOX
- ■ GROUND BOX

STATE OF TEXAS
JOHN D. CHADWICK
85241
PROFESSIONAL ENGINEER
6-6-03

Parsons Brinckerhoff Quade & Douglas Inc.

Texas Department of Transportation

© 2002 by TxDOT

US 281
ILLUMINATION LAYOUTS

STA. 636+00 "BLI" TO
STA. 648+00 "BLI"

PLAN 1"= 100' HORIZ

SHEET 2 OF 19

DESIGNED: DPL	FED. RD DIV. NO.	STATE	FEDERAL AID PROJECT No.		HIGHWAY No.
CHECKED: GTC	6	TEXAS	XXXXXXXX		US 281
DRAWN: JTM	STATE DISTRICT	COUNTY	CONTROL No.	SECTION No.	JOB No.	SHEET No.
CHECKED:	PHARR	HIDALGO	0255	08	091	735

mohapp
03:36:12 PM
08/06/2003
y:\22322A *Texas*US281\20DC\Dwgs\Elec\Output\281-E02.dgn

mohapp
03:36:12 PM
08/06/2003
y:\22322A *Texas*US281%20DC\Dwgs\Elec\Output\281-E02.dgn

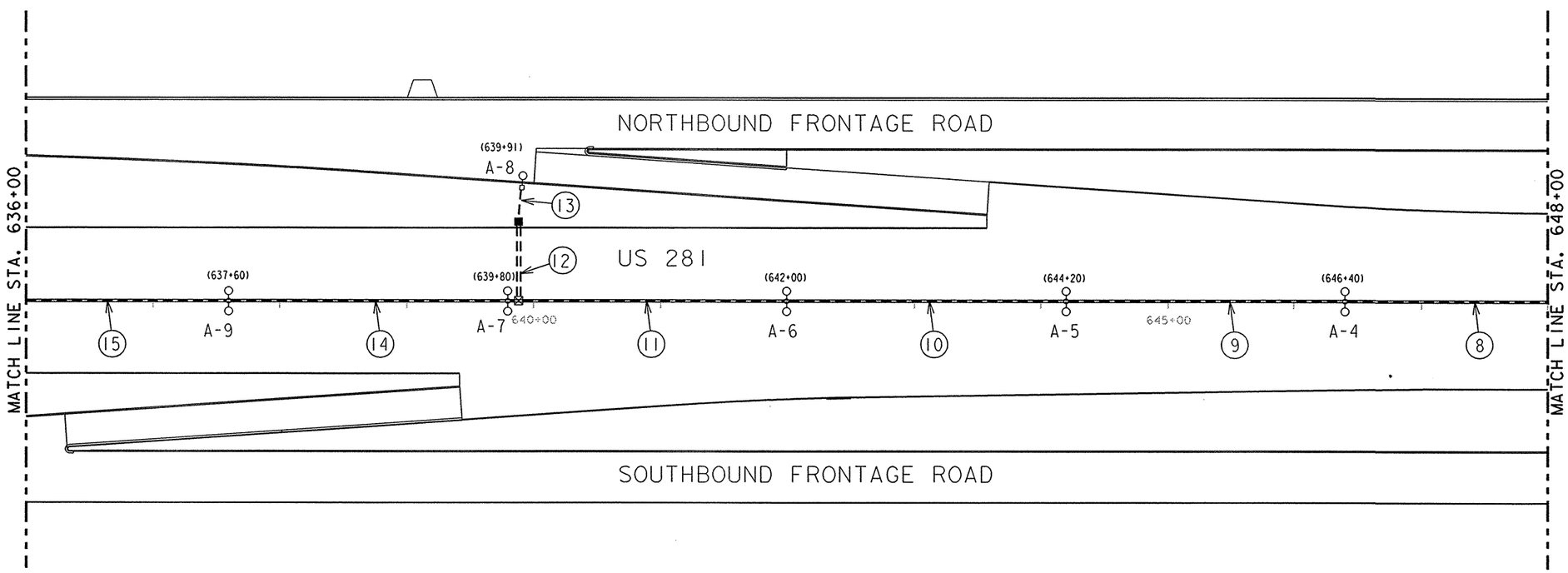

NOTES:

1. ALL STATION NUMBERS IN LUMINAIRE LOCATION SCHEDULE ARE REFERENCED FROM THE CENTER LINE.
2. ALL INDICATED LENGTHS IN CONDUIT AND CONDUCTOR RUNS ARE HORIZONTAL ONLY, ADD ADDITIONAL LENGTH FOR SPLICING AND VERTICAL RUN.
3. SEE STANDARD PLANS, RID(1)-98 THRU RID(4)-98 FOR MAST ARM AND LUMINAIRE POLE, CONDUIT AND JUNCTION BOX INSTALLATION DETAILS ON CAST-IN-PLACE AND SINGLE SLOPE CONCRETE BARRIER (TYPE 4).
4. SEE STANDARD PLANS, ED(1)-03 THRU ED(12)-03 FOR ELECTRICAL MATERIALS AND METHODS, WIRE MANAGEMENT, ELECTRICAL SERVICE AND DISTRIBUTION, AND PHOTOCELL INSTALLATIONS.
5. SEE STANDARD PLANS, HMID(1)-03 THRU HMID(9)-03 FOR HIGH MAST ILLUMINATION DETAILS, HMIP(1)-98 THRU HMIP(2)-98 FOR HIGH MAST ILLUMINATION POLES, AND HMIF(1)-98 THRU HMIF(2)-98 FOR HIGH MAST ILLUMINATION POLE FOUNDATIONS.

CONDUCTORS & CONDUIT RUNS

RUN NO.	GROUND SIZE & LENGTH (FEET)		CONDUCTOR SIZE & LENGTH (FEET)		CONDUIT SIZE & LENGTH (FEET)	
	#8 BARE	#6 BARE	#8 XHHW	#6 XHHW	2" PVC (SCH 40)	2" PVC (SCH 80) BORED
15	220		440		220	
14	220		440		220	
13	50		100		50	
12	65		130			65
11	220		440		220	
10	220		440		220	
9	220		440		220	
8	220		440		220	

SUMMARY OF ILLUMINATION QUANTITIES
(SHEET TOTALS)

ITEM	DESCRIPTION	UNIT	QUANTITY
610	RDWY. ILLUM ASSEM. (SP40S-10-10)(0.25 KW)S	EA	5
610	RDWY. ILLUM ASSEM. (SP40S-10)(0.25 KW)S	EA	
610	RDWY. ILLUM ASSEM. (SA40T-10)(0.25 KW)S	EA	1
610	UNDERPASS ILLUM ASSEM. (SPL-CO)(0.15 KW)S(TY1)	EA	
618	CONDUIT (RMC) (1 IN.)	LF	
618	CONDUIT (PVC) (SCH 40) (2 IN.)	LF	1,370
618	CONDUIT (PVC) (SCH 80) (2 IN.) (BORED)	LF	65
620	ELEC. CONDUCTOR (#8 BARE)	LF	1,435
620	ELEC. CONDUCTOR (#6 BARE)	LF	
620	ELEC. CONDUCTOR (#10 TY XHHW)	LF	
620	ELEC. CONDUCTOR (#8 TY XHHW)	LF	2,870
620	ELEC. CONDUCTOR (#6 TY XHHW)	LF	
624	GROUND BOX (RPM) (TY A) (1'22'11) APRON	EA	1
628	ELEC. SERVICE (TY A) (240/480) 100(NS) AL(T) TP(O)	EA	
656	FND FOR RDWY ILL. ASM. (TY A) (30 IN. DR SH)	LF	6

1

LUMINAIRE LOCATIONS

LUM. NO.	STATION	OFFSET TO BASE	DESCRIPTION
A-9	637+60	0'	(SP40S-10-10)(0.25 KW)S
A-8	639+91	92'LT.	(SA40T-10)(0.25 KW)S
A-7	639+80	0'	(SP40S-10-10)(0.25 KW)S
A-6	642+00	0'	(SP40S-10-10)(0.25 KW)S
A-5	644+20	0'	(SP40S-10-10)(0.25 KW)S
A-4	646+40	0'	(SP40S-10-10)(0.25 KW)S

LEGEND

- CONCRETE BARRIER FIXTURE TYPE (SP40S-10-10)(0.25 KW)S
- ROADWAY FIXTURE TYPE (SA40T-10)(0.25KW)S
- 2" SCHEDULE 40 PVC CONDUIT
- 2" SCHEDULE 80 PVC CONDUIT BORED
- CONDUIT RUN NUMBER
- JUNCTION BOX
- GROUND BOX

1 REVISED 9-26-03

STATE OF TEXAS
JOHN D. CHADWICK
85th
PROFESSIONAL ENGINEER
8-6-03

Parsons Brinckerhoff Quade & Douglas Inc.

Texas Department of Transportation

© 2002 by TxDOT

US 281
ILLUMINATION LAYOUTS

STA. 636+00 "BLI" TO
STA. 648+00 "BLI"

PLAN 1"= 100' HORIZ

SHEET 2 OF 19

DESIGNED: DPL	FED. RD DIV. No.	STATE	FEDERAL AID PROJECT No.		HIGHWAY No.	
CHECKED: GTC	6	TEXAS	XXXXXXX		US 281	
DRAWN: JTM	STATE DISTRICT	COUNTY	CONTROL No.	SECTION No.	JOB No.	SHEET No.
CHECKED:	PHARR	HIDALGO	0255	08	091	735

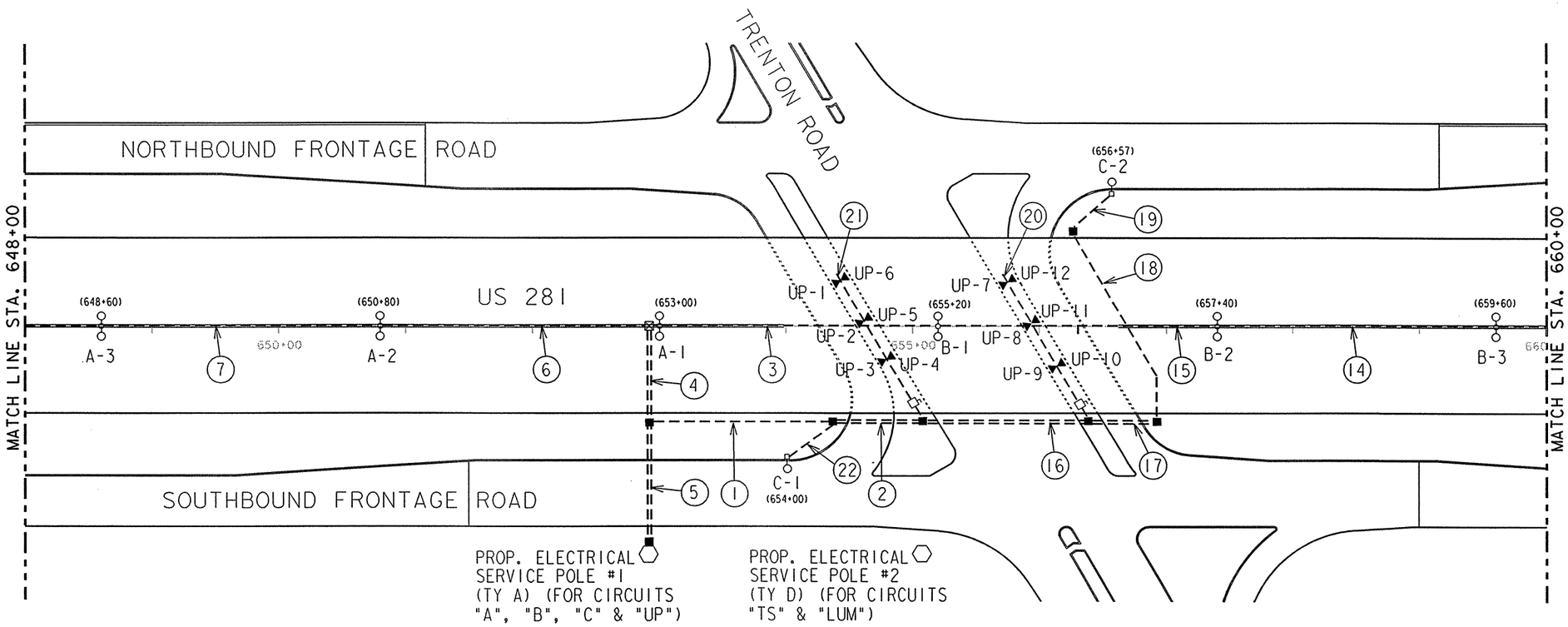

NOTES:

1. ALL STATION NUMBERS IN LUMINAIRE LOCATION SCHEDULE ARE REFERENCED FROM THE CENTER LINE.
2. ALL INDICATED LENGTHS IN CONDUIT AND CONDUCTOR RUNS ARE HORIZONTAL ONLY. ADD ADDITIONAL LENGTH FOR SPLICING AND VERTICAL RUN.
3. SEE STANDARD PLANS, RID(1)-98 THRU RID(4)-98 FOR MAST ARM AND LUMINAIRE POLE, CONDUIT AND JUNCTION BOX INSTALLATION DETAILS ON CAST-IN-PLACE AND SINGLE SLOPE CONCRETE BARRIER (TYPE 4).
4. SEE STANDARD PLANS, ED(1)-03 THRU ED(12)-03 FOR ELECTRICAL MATERIALS AND METHODS, WIRE MANAGEMENT, ELECTRICAL SERVICE AND DISTRIBUTION, AND PHOTOCELL INSTALLATIONS.
5. SEE STANDARD PLANS, HMID(1)-03 THRU HMID(9)-03 FOR HIGH MAST ILLUMINATION DETAILS, HMIP(1)-98 THRU HMIP(2)-98 FOR HIGH MAST ILLUMINATION POLES, AND HMIF(1)-98 THRU HMIF(2)-98 FOR HIGH MAST ILLUMINATION POLE FOUNDATIONS.

CONDUCTORS & CONDUIT RUNS

RUN NO.	GROUND SIZE & LENGTH (FEET)		CONDUCTOR SIZE & LENGTH (FEET)			CONDUIT SIZE & LENGTH (FEET)		
	#8 BARE	#6 BARE	#10 XHHW	#8 XHHW	#6 XHHW	1" RMC	2" PVC (SCH 40)	2" PVC (SCH 80) BORED
7	220			440			220	
6	220			440			220	
5	96			768				96
4	79			316				79
3	220			880			220	
2	70			280				70
1	145			580			145	
22	43			86			43	
21	137		274			137		
20	137		274			137		
19	40			80			40	
18	175			350			175	
17	52			104				52
16	133			532				133
15	220			440			220	
14	220			440			220	

SUMMARY OF ILLUMINATION QUANTITIES
(SHEET TOTALS)

ITEM	DESCRIPTION	UNIT	QUANTITY
610	RDWY. ILLUM ASSEM. (SP40S-10-10)(0.25 KW)S	EA	6
610	RDWY. ILLUM ASSEM. (SP40S-10)(0.25 KW)S	EA	
610	RDWY. ILLUM ASSEM. (SA40T-10)(0.25 KW)S	EA	2
610	UNDERPASS ILLUM ASSEM. (SPL-CO)(0.15 KW)S(TY1)	EA	12
618	CONDUIT (RMC) (1 IN.)	LF	274
618	CONDUIT (PVC) (SCH 40) (2 IN.)	LF	1,503
618	CONDUIT (PVC) (SCH 80) (2 IN.) (BORED)	LF	430
620	ELEC. CONDUCTOR (#8 BARE)	LF	2,207
620	ELEC. CONDUCTOR (#6 BARE)	LF	
620	ELEC. CONDUCTOR (#10 TY XHHW)	LF	548
620	ELEC. CONDUCTOR (#8 TY XHHW)	LF	5,736
620	ELEC. CONDUCTOR (#6 TY XHHW)	LF	
624	GROUND BOX (RPM) (TY A) (12231I) APRON	EA	7
628	ELEC. SERVICE (TY A) (240/480) 100(NS) AL(T) TP(O)	EA	1
628	ELEC. SERVICE (TY D) (120/240) 070(NS) GS(T) TP(O)	EA	1
656	FND FOR RDWY ILL. ASM. (TY A) (30 IN. DR SH)	LF	36

LEGEND

- CONCRETE BARRIER FIXTURE TYPE (SP40S-10-10)(0.25 KW)S
- ROADWAY FIXTURE TYPE (SA40T-10)(0.25KW)S
- UNDERPASS FIXTURE TYPE U/P(SPL-CO)(0.15KW)S(TY1)
- 2" SCHEDULE 40 PVC CONDUIT
- 2" SCHEDULE 80 PVC CONDUIT BORED
- CONDUIT RUN NUMBER
- SERVICE POLE
- JUNCTION BOX
- GROUND BOX
- UNDERPASS LIGHTING DISCONNECT SWITCH

LUMINAIRE LOCATIONS

LUM. NO.	STATION	OFFSET TO BASE	DESCRIPTION
A-3	648+60	0'	(SP40S-10-10)(0.25 KW)S
A-2	650+80	0'	(SP40S-10-10)(0.25 KW)S
A-1	653+00	0'	(SP40S-10-10)(0.25 KW)S
B-1	655+20	0'	(SP40S-10-10)(0.25 KW)S
B-2	657+40	0'	(SP40S-10-10)(0.25 KW)S
B-3	659+60	0'	(SP40S-10-10)(0.25 KW)S
C-1	654+00	105'RT.	(SA40T-10)(0.25 KW)S
C-2	656+57	105'LT.	(SA40T-10)(0.25 KW)S
UP-1			U/P(SPL-CO)(0.15 KW)S(TY1)
UP-2			U/P(SPL-CO)(0.15 KW)S(TY1)
UP-3			U/P(SPL-CO)(0.15 KW)S(TY1)
UP-4			U/P(SPL-CO)(0.15 KW)S(TY1)
UP-5			U/P(SPL-CO)(0.15 KW)S(TY1)
UP-6			U/P(SPL-CO)(0.15 KW)S(TY1)
UP-7			U/P(SPL-CO)(0.15 KW)S(TY1)
UP-8			U/P(SPL-CO)(0.15 KW)S(TY1)
UP-9			U/P(SPL-CO)(0.15 KW)S(TY1)
UP-10			U/P(SPL-CO)(0.15 KW)S(TY1)
UP-11			U/P(SPL-CO)(0.15 KW)S(TY1)
UP-12			U/P(SPL-CO)(0.15 KW)S(TY1)

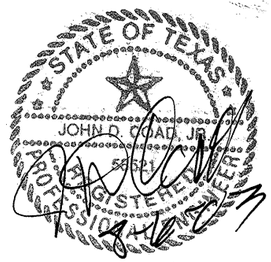

Parsons Brinckerhoff Quade & Douglas Inc.

Texas Department of Transportation

© 2002 by TxDOT

US 281
ILLUMINATION LAYOUTS

STA. 648+00 "BL1" TO
STA. 660+00 "BL1"

PLAN 1"= 100' HORIZ

SHEET 3 OF 19

DESIGNED: DPL	FED. RD DIV. No.	STATE	FEDERAL AID PROJECT No.	HIGHWAY No.
CHECKED: GTC	6	TEXAS	XXXXXXX	US 281

DRAWN: JTM	STATE DISTRICT	COUNTY	CONTROL No.	SECTION No.	JOB No.	SHEET No.
CHECKED:	PHARR	HIDALGO	0255	08	091	736

mohapp
03:36:39 PM
08/06/2003
y:\22322A *Texas*US281\20DC\Dwgs\Elec\Output\281-E03.dgn

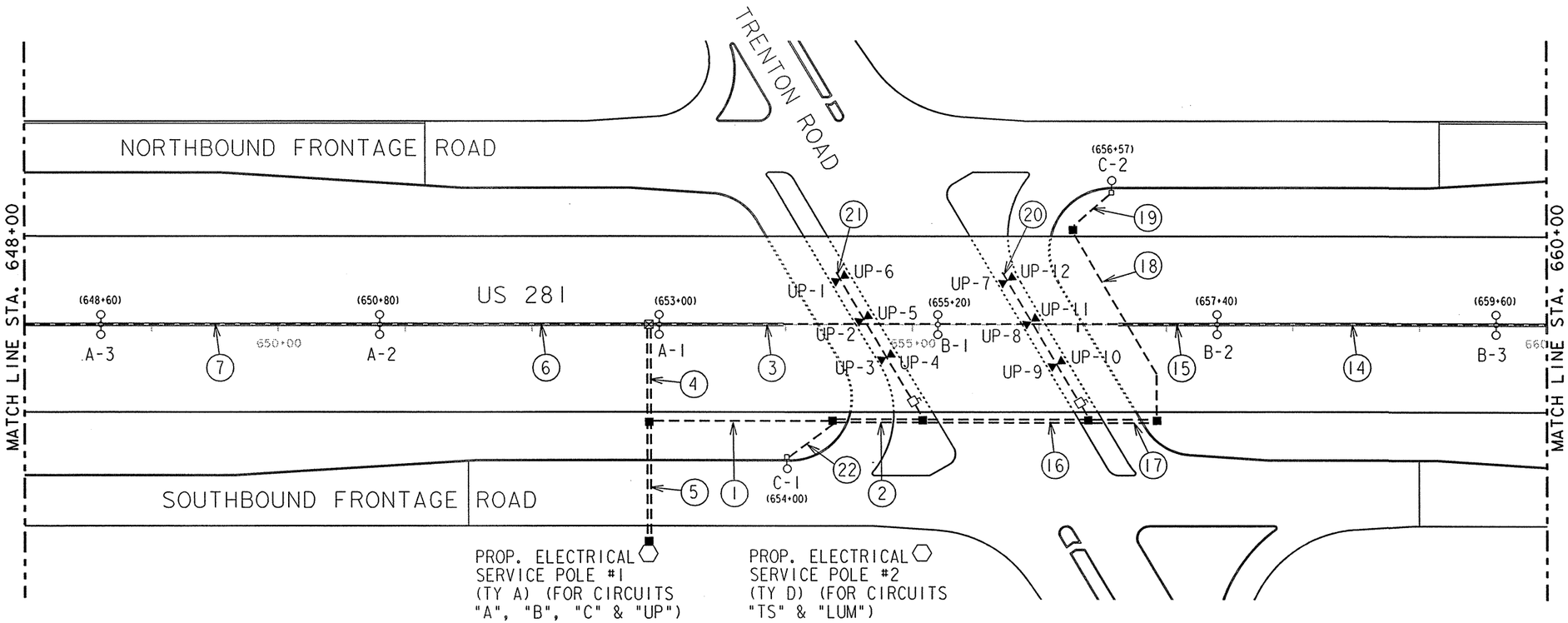

NOTES:

1. ALL STATION NUMBERS IN LUMINAIRE LOCATION SCHEDULE ARE REFERENCED FROM THE CENTER LINE.
2. ALL INDICATED LENGTHS IN CONDUIT AND CONDUCTOR RUNS ARE HORIZONTAL ONLY, ADD ADDITIONAL LENGTH FOR SPLICING AND VERTICAL RUN.
3. SEE STANDARD PLANS, RID(1)-98 THRU RID(4)-98 FOR MAST ARM AND LUMINAIRE POLE, CONDUIT AND JUNCTION BOX INSTALLATION DETAILS ON CAST-IN-PLACE AND SINGLE SLOPE CONCRETE BARRIER (TYPE 4).
4. SEE STANDARD PLANS, ED(1)-03 THRU ED(12)-03 FOR ELECTRICAL MATERIALS AND METHODS, WIRE MANAGEMENT, ELECTRICAL SERVICE AND DISTRIBUTION, AND PHOTOCELL INSTALLATIONS.
5. SEE STANDARD PLANS, HMID(1)-03 THRU HMID(9)-03 FOR HIGH MAST ILLUMINATION DETAILS, HMIP(1)-98 THRU HMIP(2)-98 FOR HIGH MAST ILLUMINATION POLES, AND HMIF(1)-98 THRU HMIF(2)-98 FOR HIGH MAST ILLUMINATION POLE FOUNDATIONS.

CONDUCTORS & CONDUIT RUNS

RUN NO.	GROUND SIZE & LENGTH (FEET)		CONDUCTOR SIZE & LENGTH (FEET)			CONDUIT SIZE & LENGTH (FEET)		
	#8 BARE	#6 BARE	#10 XHHW	#8 XHHW	#6 XHHW	1" RMC	2" PVC (SCH 40)	2" PVC (SCH 80) BORED
7	220			440			220	
6	220			440			220	
5	96			768				96
4	79			316				79
3	220			880			220	
2	70			280				70
1	145			580			145	
22	43			86			43	
21	137		274			137		
20	137		274			137		
19	40			80			40	
18	175			350			175	
17	52			104				52
16	133			532				133
15	220			440			220	
14	220			440			220	

SUMMARY OF ILLUMINATION QUANTITIES
(SHEET TOTALS)

ITEM	DESCRIPTION	UNIT	QUANTITY
610	RDWY. ILLUM ASSEM. (SP40S-10-10)(0.25 KW)S	EA	6
610	RDWY. ILLUM ASSEM. (SP40S-10)(0.25 KW)S	EA	
610	RDWY. ILLUM ASSEM. (SA40T-10)(0.25 KW)S	EA	2
610	UNDERPASS ILLUM ASSEM. (SPL-CO)(0.15 KW)S(TY1)	EA	12
618	CONDUIT (RMC) (1 IN.)	LF	274
618	CONDUIT (PVC) (SCH 40) (2 IN.)	LF	1,503
618	CONDUIT (PVC) (SCH 80) (2 IN.) (BORED)	LF	430
620	ELEC. CONDUCTOR (#8 BARE)	LF	2,207
620	ELEC. CONDUCTOR (#6 BARE)	LF	
620	ELEC. CONDUCTOR (#10 TY XHHW)	LF	548
620	ELEC. CONDUCTOR (#8 TY XHHW)	LF	5,736
620	ELEC. CONDUCTOR (#6 TY XHHW)	LF	
624	GROUND BOX (RPW) (TY A) (122311) APRON	EA	7
628	ELEC. SERVICE (TY A) (240/480) 100(NS) AL(T) TP(O)	EA	1
628	ELEC. SERVICE (TY D) (120/240) 070(NS) GS(T) TP(O)	EA	1
656	FND FOR RDWY ILL. ASM. (TY A) (30 IN. DR SH)	LF	12 Δ

LEGEND

- CONCRETE BARRIER FIXTURE TYPE (SP40S-10-10)(0.25 KW)S
- ROADWAY FIXTURE TYPE (SA40T-10)(0.25KW)S
- UNDERPASS FIXTURE TYPE U/P(SPL-CO)(0.15KW)S(TY1)
- 2" SCHEDULE 40 PVC CONDUIT
- 2" SCHEDULE 80 PVC CONDUIT BORED
- CONDUIT RUN NUMBER
- SERVICE POLE
- JUNCTION BOX
- GROUND BOX
- UNDERPASS LIGHTING DISCONNECT SWITCH

LUMINAIRE LOCATIONS

LUM. NO.	STATION	OFFSET TO BASE	DESCRIPTION
A-3	648+60	0'	(SP40S-10-10)(0.25 KW)S
A-2	650+80	0'	(SP40S-10-10)(0.25 KW)S
A-1	653+00	0'	(SP40S-10-10)(0.25 KW)S
B-1	655+20	0'	(SP40S-10-10)(0.25 KW)S
B-2	657+40	0'	(SP40S-10-10)(0.25 KW)S
B-3	659+60	0'	(SP40S-10-10)(0.25 KW)S
C-1	654+00	105'RT.	(SA40T-10)(0.25 KW)S
C-2	656+57	105'LT.	(SA40T-10)(0.25 KW)S
UP-1			U/P(SPL-CO)(0.15 KW)S(TY1)
UP-2			U/P(SPL-CO)(0.15 KW)S(TY1)
UP-3			U/P(SPL-CO)(0.15 KW)S(TY1)
UP-4			U/P(SPL-CO)(0.15 KW)S(TY1)
UP-5			U/P(SPL-CO)(0.15 KW)S(TY1)
UP-6			U/P(SPL-CO)(0.15 KW)S(TY1)
UP-7			U/P(SPL-CO)(0.15 KW)S(TY1)
UP-8			U/P(SPL-CO)(0.15 KW)S(TY1)
UP-9			U/P(SPL-CO)(0.15 KW)S(TY1)
UP-10			U/P(SPL-CO)(0.15 KW)S(TY1)
UP-11			U/P(SPL-CO)(0.15 KW)S(TY1)
UP-12			U/P(SPL-CO)(0.15 KW)S(TY1)

Δ Revised 9/26/03

STATE OF TEXAS
JOHN D. CHAD, JR.
86521
REGISTERED PROFESSIONAL ENGINEER

Parsons Brinckerhoff Quade & Douglas Inc.

Texas Department of Transportation

© 2002 by TxDOT

US 281
ILLUMINATION LAYOUTS

STA. 648+00 "BL1" TO
STA. 660+00 "BL1"

PLAN 1"= 100' HORIZ

SHEET 3 OF 19

DESIGNED: DPL	FED. RD DIV. No.	STATE	FEDERAL AID PROJECT No.	HIGHWAY No.
CHECKED: GTC	6	TEXAS	XXXXXXX	US 281

DRAWN: JTM	STATE DISTRICT	COUNTY	CONTROL No.	SECTION No.	JOB No.	SHEET No.
CHECKED:	PHARR	HIDALGO	0255	08	091	736

mohapp
03:36:39 PM
08/06/2003
y:\22322A *Texas*US281\20DC\Dwgs\Elec\Output\281-E03.dgn

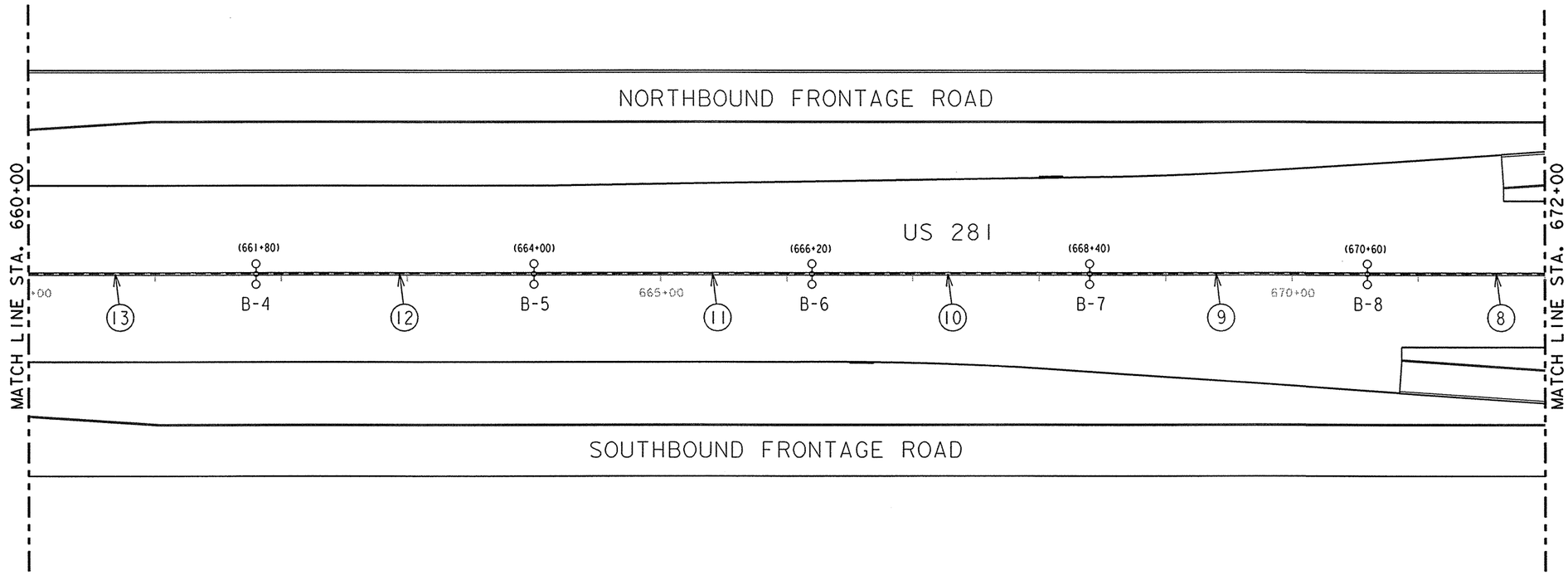

NOTES:

1. ALL STATION NUMBERS IN LUMINAIRE LOCATION SCHEDULE ARE REFERENCED FROM THE CENTER LINE.
2. ALL INDICATED LENGTHS IN CONDUIT AND CONDUCTOR RUNS ARE HORIZONTAL ONLY, ADD ADDITIONAL LENGTH FOR SPLICING AND VERTICAL RUN.
3. SEE STANDARD PLANS, RID(1)-98 THRU RID(4)-98 FOR MAST ARM AND LUMINAIRE POLE, CONDUIT AND JUNCTION BOX INSTALLATION DETAILS ON CAST-IN-PLACE AND SINGLE SLOPE CONCRETE BARRIER (TYPE 4).
4. SEE STANDARD PLANS, ED(1)-03 THRU ED(12)-03 FOR ELECTRICAL MATERIALS AND METHODS, WIRE MANAGEMENT, ELECTRICAL SERVICE AND DISTRIBUTION, AND PHOTOCELL INSTALLATIONS.
5. SEE STANDARD PLANS, HMID(1)-03 THRU HMID(9)-03 FOR HIGH MAST ILLUMINATION DETAILS, HMIP(1)-98 THRU HMIP(2)-98 FOR HIGH MAST ILLUMINATION POLES, AND HMIF(1)-98 THRU HMIF(2)-98 FOR HIGH MAST ILLUMINATION POLE FOUNDATIONS.

CONDUCTORS & CONDUIT RUNS

RUN NO.	GROUND SIZE & LENGTH (FEET)		CONDUCTOR SIZE & LENGTH (FEET)		CONDUIT SIZE & LENGTH (FEET)	
	#8 BARE	#6 BARE	#8 XHHW	#6 XHHW	2" PVC (SCH 40)	2" PVC (SCH 80) BORED
13	220		440		220	
12	220		440		220	
11	220		440		220	
10	220		440		220	
9	220		440		220	
8	220		440		220	

SUMMARY OF ILLUMINATION QUANTITIES
(SHEET TOTALS)

ITEM	DESCRIPTION	UNIT	QUANTITY
610	RDWY. ILLUM ASSEM. (SP40S-10-10)(0.25 KW)S	EA	5
610	RDWY. ILLUM ASSEM. (SP40S-10)(0.25 KW)S	EA	
610	RDWY. ILLUM ASSEM. (SA40T-10)(0.25 KW)S	EA	
610	UNDERPASS ILLUM ASSEM. (SPL-CO)(0.15 KW)S(TY1)	EA	
618	CONDUIT (RMC) (1 IN.)	LF	
618	CONDUIT (PVC) (SCH 40) (2 IN.)	LF	1,320
618	CONDUIT (PVC) (SCH 80) (2 IN.) (BORED)	LF	
620	ELEC. CONDUCTOR (#8 BARE)	LF	1,320
620	ELEC. CONDUCTOR (#6 BARE)	LF	
620	ELEC. CONDUCTOR (#10 TY XHHW)	LF	
620	ELEC. CONDUCTOR (#8 TY XHHW)	LF	2,640
620	ELEC. CONDUCTOR (#6 TY XHHW)	LF	
624	GROUND BOX (RPM) (TY A) (122311) APRON	EA	
628	ELEC. SERVICE (TY A) (240/480) 100(NS) AL(T) TP(O)	EA	
656	FND FOR RDWY ILL. ASM. (TY A) (30 IN. DR SH)	LF	30

LUMINAIRE LOCATIONS

LUM. NO.	STATION	OFFSET TO BASE	DESCRIPTION
B-4	661+80	0'	(SP40S-10-10)(0.25 KW)S
B-5	664+00	0'	(SP40S-10-10)(0.25 KW)S
B-6	666+20	0'	(SP40S-10-10)(0.25 KW)S
B-7	668+40	0'	(SP40S-10-10)(0.25 KW)S
B-8	670+60	0'	(SP40S-10-10)(0.25 KW)S

LEGEND

- ○-○-○ CONCRETE BARRIER FIXTURE TYPE (SP40S-10-10)(0.25 KW)S
- — — 2" SCHEDULE 40 PVC CONDUIT
- ◯ CONDUIT RUN NUMBER

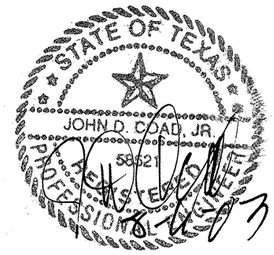

Parsons Brinckerhoff Quade & Douglas Inc.

Texas Department of Transportation

© 2002 by TxDOT

US 281
ILLUMINATION LAYOUTS

STA. 660+00 "BLI" TO
STA. 672+00 "BLI"

PLAN 1"= 100' HORIZ

SHEET 4 OF 19

DESIGNED: DPL	FED. RD DIV. NO.	STATE	FEDERAL AID PROJECT NO.			HIGHWAY NO.	
CHECKED: GTC	6	TEXAS	XXXXXXXX			US 281	
DRAWN: JTM	STATE DISTRICT	COUNTY	CONTROL NO.	SECTION NO.	JOB NO.	SHEET NO.	
CHECKED:	PHARR	HIDALGO	0255	08	091	737	

mohapp
03:36:51 PM
08/06/2003
y:\22322A *Texas*US281\200C\Dwgs\Elec\Output\281-E04.dgn

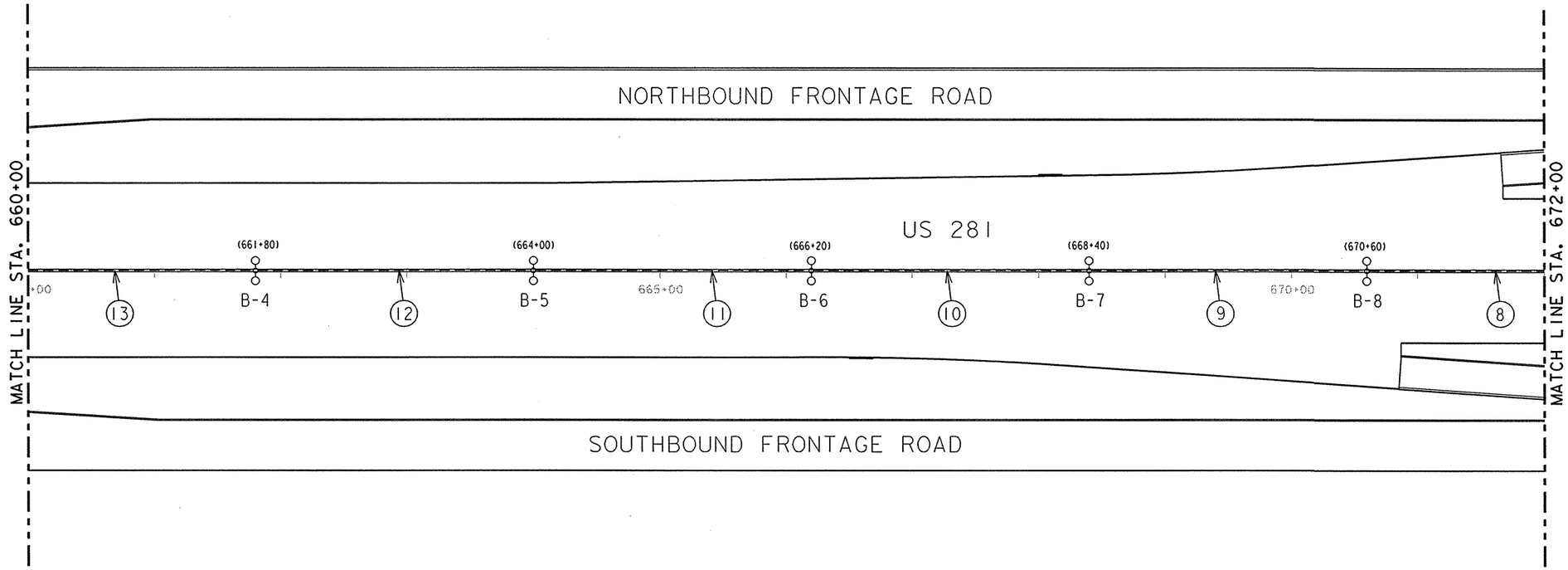

NOTES:

1. ALL STATION NUMBERS IN LUMINAIRE LOCATION SCHEDULE ARE REFERENCED FROM THE CENTER LINE.
2. ALL INDICATED LENGTHS IN CONDUIT AND CONDUCTOR RUNS ARE HORIZONTAL ONLY, ADD ADDITIONAL LENGTH FOR SPLICING AND VERTICAL RUN.
3. SEE STANDARD PLANS, RID(1)-98 THRU RID(4)-98 FOR MAST ARM AND LUMINAIRE POLE, CONDUIT AND JUNCTION BOX INSTALLATION DETAILS ON CAST-IN-PLACE AND SINGLE SLOPE CONCRETE BARRIER (TYPE 4).
4. SEE STANDARD PLANS, ED(1)-03 THRU ED(12)-03 FOR ELECTRICAL MATERIALS AND METHODS, WIRE MANAGEMENT, ELECTRICAL SERVICE AND DISTRIBUTION, AND PHOTOCELL INSTALLATIONS.
5. SEE STANDARD PLANS, HMID(1)-03 THRU HMID(9)-03 FOR HIGH MAST ILLUMINATION DETAILS, HMIP(1)-98 THRU HMIP(2)-98 FOR HIGH MAST ILLUMINATION POLES, AND HMIF(1)-98 THRU HMIF(2)-98 FOR HIGH MAST ILLUMINATION POLE FOUNDATIONS.

CONDUCTORS & CONDUIT RUNS

RUN NO.	GROUND SIZE & LENGTH (FEET)		CONDUCTOR SIZE & LENGTH (FEET)		CONDUIT SIZE & LENGTH (FEET)	
	#8 BARE	#6 BARE	#8 XHHW	#6 XHHW	2" PVC (SCH 40)	2" PVC (SCH 80) BORED
13	220		440		220	
12	220		440		220	
11	220		440		220	
10	220		440		220	
9	220		440		220	
8	220		440		220	

SUMMARY OF ILLUMINATION QUANTITIES
(SHEET TOTALS)

ITEM	DESCRIPTION	UNIT	QUANTITY
610	RDWY. ILLUM ASSEM. (SP40S-10-10)(0.25 KW)S	EA	5
610	RDWY. ILLUM ASSEM. (SP40S-10)(0.25 KW)S	EA	
610	RDWY. ILLUM ASSEM. (SA40T-10)(0.25 KW)S	EA	
610	UNDERPASS ILLUM ASSEM. (SPL-CO)(0.15 KW)S(TY1)	EA	
618	CONDUIT (RMC) (1 IN.)	LF	
618	CONDUIT (PVC) (SCH 40) (2 IN.)	LF	1,320
618	CONDUIT (PVC) (SCH 80) (2 IN.) (BORED)	LF	
620	ELEC. CONDUCTOR (#8 BARE)	LF	1,320
620	ELEC. CONDUCTOR (#6 BARE)	LF	
620	ELEC. CONDUCTOR (#10 TY XHHW)	LF	
620	ELEC. CONDUCTOR (#8 TY XHHW)	LF	2,640
620	ELEC. CONDUCTOR (#6 TY XHHW)	LF	
624	GROUND BOX (RPM) (TY A) (122311) APRON	EA	
628	ELEC. SERVICE (TY A) (240/480) 100(NS) AL(T) TP(O)	EA	
656	FND FOR RDWY ILL. ASM. (TY A) (30 IN. DR SH)	LF	0' Δ

LUMINAIRE LOCATIONS

LUM. NO.	STATION	OFFSET TO BASE	DESCRIPTION
B-4	661+80	0'	(SP40S-10-10)(0.25 KW)S
B-5	664+00	0'	(SP40S-10-10)(0.25 KW)S
B-6	666+20	0'	(SP40S-10-10)(0.25 KW)S
B-7	668+40	0'	(SP40S-10-10)(0.25 KW)S
B-8	670+60	0'	(SP40S-10-10)(0.25 KW)S

LEGEND

- ○-○-○ CONCRETE BARRIER FIXTURE TYPE (SP40S-10-10)(0.25 KW)S
- — — 2" SCHEDULE 40 PVC CONDUIT
- ◯ CONDUIT RUN NUMBER

Δ Revised 9/26/03

STATE OF TEXAS
JOHN D. COAD, JR.
58621
REGISTERED PROFESSIONAL ENGINEER

Parsons Brinckerhoff Quade & Douglas Inc.

Texas Department of Transportation

© 2002 by TxDOT

US 281
ILLUMINATION LAYOUTS

STA. 660+00 "BLI" TO
STA. 672+00 "BLI"

PLAN 1"= 100' HORIZ

SHEET 4 OF 19

DESIGNED: DPL	FED. RD DIV. NO.	STATE	FEDERAL AID PROJECT NO.			HIGHWAY NO.
CHECKED: GTC	6	TEXAS	XXXXXXXX			US 281
DRAWN: JTM	STATE DISTRICT	COUNTY	CONTROL NO.	SECTION NO.	JOB NO.	SHEET NO.
CHECKED:	PHARR	HIDALGO	0255	08	091	737

mohapp
03:36:51 PM
08/06/2003
y:\22322A *Texas*US281\20DC\Dwgs\Elec\Output\281-E04.dgn

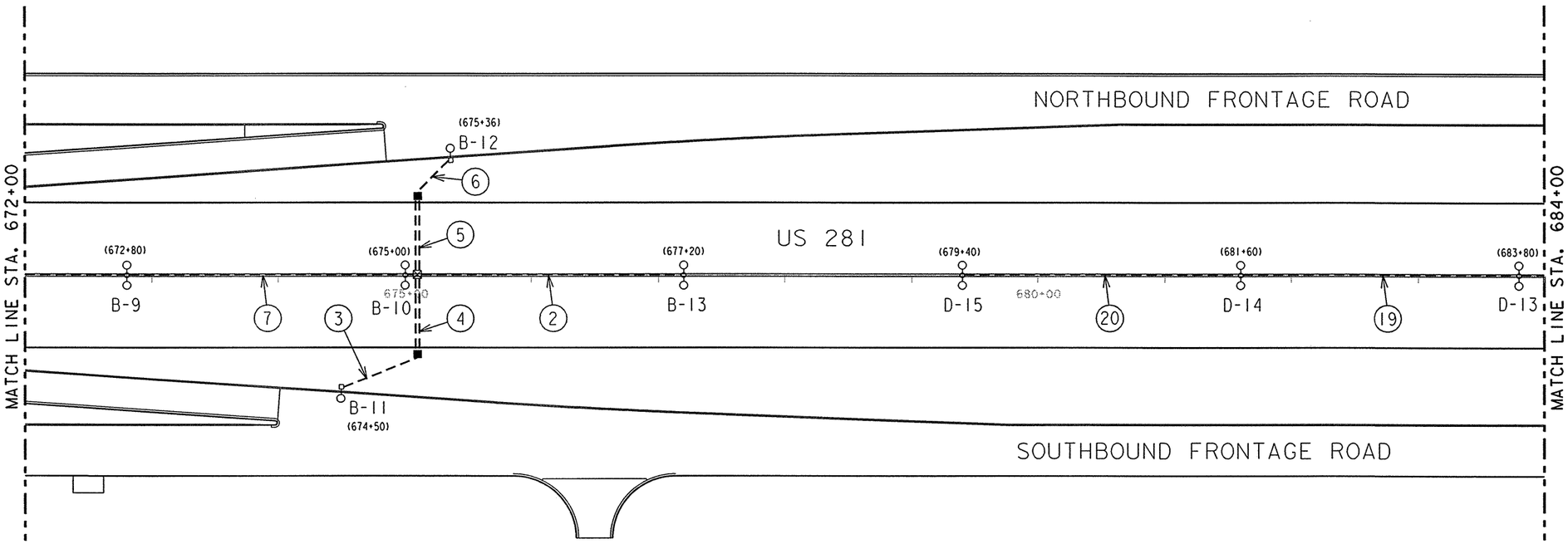

NOTES:

1. ALL STATION NUMBERS IN LUMINAIRE LOCATION SCHEDULE ARE REFERENCED FROM THE CENTER LINE.
2. ALL INDICATED LENGTHS IN CONDUIT AND CONDUCTOR RUNS ARE HORIZONTAL ONLY. ADD ADDITIONAL LENGTH FOR SPLICING AND VERTICAL RUN.
3. SEE STANDARD PLANS, RID(1)-98 THRU RID(4)-98 FOR MAST ARM AND LUMINAIRE POLE, CONDUIT AND JUNCTION BOX INSTALLATION DETAILS ON CAST-IN-PLACE AND SINGLE SLOPE CONCRETE BARRIER (TYPE 4).
4. SEE STANDARD PLANS, ED(1)-03 THRU ED(12)-03 FOR ELECTRICAL MATERIALS AND METHODS, WIRE MANAGEMENT, ELECTRICAL SERVICE AND DISTRIBUTION, AND PHOTOCELL INSTALLATIONS.
5. SEE STANDARD PLANS, HMID(1)-03 THRU HMID(9)-03 FOR HIGH MAST ILLUMINATION DETAILS, HMIP(1)-98 THRU HMIP(2)-98 FOR HIGH MAST ILLUMINATION POLES, AND HMIF(1)-98 THRU HMIF(2)-98 FOR HIGH MAST ILLUMINATION POLE FOUNDATIONS.

CONDUCTORS & CONDUIT RUNS

RUN NO.	GROUND SIZE & LENGTH (FEET)		CONDUCTOR SIZE & LENGTH (FEET)		CONDUIT SIZE & LENGTH (FEET)	
	#8 BARE	#6 BARE	#8 XHHW	#6 XHHW	2" PVC (SCH 40)	2" PVC (SCH 80) BORED
7	220		440		220	
6	38		76		38	
5	63		126			63
4	63		126			63
3	63		126		63	
2	220		440		220	
20	220		440		220	
19	220		440		220	

SUMMARY OF ILLUMINATION QUANTITIES
(SHEET TOTALS)

ITEM	DESCRIPTION	UNIT	QUANTITY
610	RDWY. ILLUM ASSEM. (SP40S-10-10)(0.25 KW)S	EA	6
610	RDWY. ILLUM ASSEM. (SP40S-10)(0.25 KW)S	EA	
610	RDWY. ILLUM ASSEM. (SA40T-10)(0.25 KW)S	EA	2
610	UNDERPASS ILLUM ASSEM. (SPL-CO)(0.15 KW)S(TY1)	EA	
618	CONDUIT (RMC) (1 IN.)	LF	
618	CONDUIT (PVC) (SCH 40) (2 IN.)	LF	981
618	CONDUIT (PVC) (SCH 80) (2 IN.) (BORED)	LF	126
620	ELEC. CONDUCTOR (#8 BARE)	LF	1,107
620	ELEC. CONDUCTOR (#6 BARE)	LF	
620	ELEC. CONDUCTOR (#10 TY XHHW)	LF	
620	ELEC. CONDUCTOR (#8 TY XHHW)	LF	2,214
620	ELEC. CONDUCTOR (#6 TY XHHW)	LF	
624	GROUND BOX (RPM) (TY A) (122311) APRON	EA	2
628	ELEC. SERVICE (TY A) (240/480) 100(NS) AL(T) TP(O)	EA	
656	FND FOR RDWY ILL. ASM. (TY A) (30 IN. DR SH)	LF	36

LUMINAIRE LOCATIONS

LUM. NO.	STATION	OFFSET TO BASE	DESCRIPTION
B-9	672+80	0'	(SP40S-10-10)(0.25 KW)S
B-10	675+00	0'	(SP40S-10-10)(0.25 KW)S
B-11	674+50	91'RT.	(SA40T-10)(0.25 KW)S
B-12	675+36	92'LT.	(SA40T-10)(0.25 KW)S
B-13	677+20	0'	(SP40S-10-10)(0.25 KW)S
D-15	679+40	0'	(SP40S-10-10)(0.25 KW)S
D-14	681+60	0'	(SP40S-10-10)(0.25 KW)S
D-13	683+80	0'	(SP40S-10-10)(0.25 KW)S

LEGEND

- CONCRETE BARRIER FIXTURE TYPE (SP40S-10-10)(0.25 KW)S
- ROADWAY FIXTURE TYPE (SA40T-10)(0.25KW)S
- 2" SCHEDULE 40 PVC CONDUIT
- 2" SCHEDULE 80 PVC CONDUIT BORED
- CONDUIT RUN NUMBER
- JUNCTION BOX
- GROUND BOX

STATE OF TEXAS
JOHN D. COAP, JR.
58521
REGISTERED
PROFESSIONAL ENGINEER

Parsons Brinckerhoff Quade & Douglas Inc.

Texas Department of Transportation

© 2002 by TxDOT

US 281
ILLUMINATION LAYOUTS

STA. 672+00 "BL1" TO
STA. 684+00 "BL1"

PLAN 1"= 100' HORIZ

SHEET 5 OF 19

DESIGNED: DPL	FED. RD DIV. NO.	STATE	FEDERAL AID PROJECT No.	HIGHWAY No.
CHECKED: GTC	6	TEXAS	XXXXXXX	US 281

DRAWN: JTM	STATE DISTRICT	COUNTY	CONTROL No.	SECTION No.	JOB No.	SHEET No.
CHECKED:	PHARR	HIDALGO	0255	08	091	738

mohapp
03:37:06 PM
08/06/2003
y:\223222A *Texas*US281\20DC\Dwgs\Elec\Output\281-E05.dgn

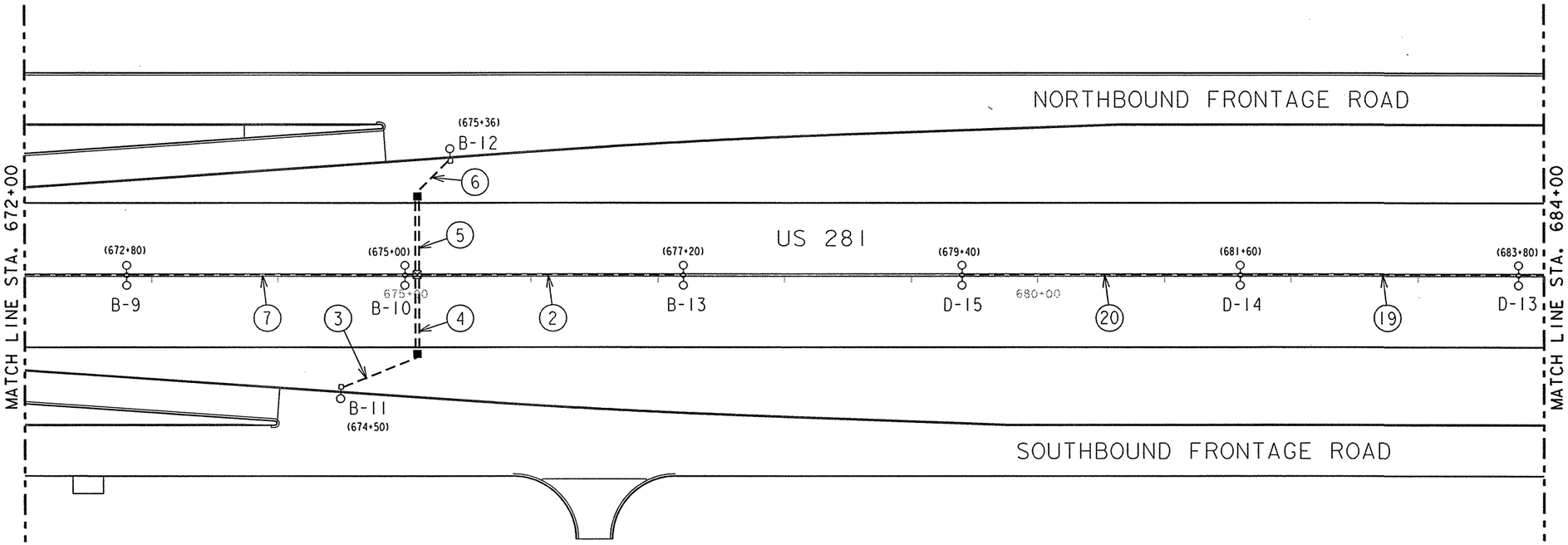

NOTES:

1. ALL STATION NUMBERS IN LUMINAIRE LOCATION SCHEDULE ARE REFERENCED FROM THE CENTER LINE.
2. ALL INDICATED LENGTHS IN CONDUIT AND CONDUCTOR RUNS ARE HORIZONTAL ONLY, ADD ADDITIONAL LENGTH FOR SPLICING AND VERTICAL RUN.
3. SEE STANDARD PLANS, RID(1)-98 THRU RID(4)-98 FOR MAST ARM AND LUMINAIRE POLE, CONDUIT AND JUNCTION BOX INSTALLATION DETAILS ON CAST-IN-PLACE AND SINGLE SLOPE CONCRETE BARRIER (TYPE 4).
4. SEE STANDARD PLANS, ED(1)-03 THRU ED(12)-03 FOR ELECTRICAL MATERIALS AND METHODS, WIRE MANAGEMENT, ELECTRICAL SERVICE AND DISTRIBUTION, AND PHOTOCELL INSTALLATIONS.
5. SEE STANDARD PLANS, HMID(1)-03 THRU HMID(9)-03 FOR HIGH MAST ILLUMINATION DETAILS, HMIP(1)-98 THRU HMIP(2)-98 FOR HIGH MAST ILLUMINATION POLES, AND HMIF(1)-98 THRU HMIF(2)-98 FOR HIGH MAST ILLUMINATION POLE FOUNDATIONS.

CONDUCTORS & CONDUIT RUNS

RUN NO.	GROUND SIZE & LENGTH (FEET)		CONDUCTOR SIZE & LENGTH (FEET)		CONDUIT SIZE & LENGTH (FEET)	
	#8 BARE	#6 BARE	#8 XHHW	#6 XHHW	2" PVC (SCH 40)	2" PVC (SCH 80) BORED
7	220		440		220	
6	38		76		38	
5	63		126			63
4	63		126			63
3	63		126		63	
2	220		440		220	
20	220		440		220	
19	220		440		220	

SUMMARY OF ILLUMINATION QUANTITIES
(SHEET TOTALS)

ITEM	DESCRIPTION	UNIT	QUANTITY
610	RDWY. ILLUM ASSEM. (SP40S-10-10)(0.25 KW)S	EA	6
610	RDWY. ILLUM ASSEM. (SP40S-10)(0.25 KW)S	EA	
610	RDWY. ILLUM ASSEM. (SA40T-10)(0.25 KW)S	EA	2
610	UNDERPASS ILLUM ASSEM. (SPL-CO)(0.15 KW)S(TYI)	EA	
618	CONDUIT (RMC) (1 IN.)	LF	
618	CONDUIT (PVC) (SCH 40) (2 IN.)	LF	981
618	CONDUIT (PVC) (SCH 80) (2 IN.) (BORED)	LF	126
620	ELEC. CONDUCTOR (#8 BARE)	LF	1,107
620	ELEC. CONDUCTOR (#6 BARE)	LF	
620	ELEC. CONDUCTOR (#10 TY XHHW)	LF	
620	ELEC. CONDUCTOR (#8 TY XHHW)	LF	2,214
620	ELEC. CONDUCTOR (#6 TY XHHW)	LF	
624	GROUND BOX (RPM) (TY A) (122311) APRON	EA	2
628	ELEC. SERVICE (TY A) (240/480) 100(NS) AL(T) TP(O)	EA	
656	FND FOR RDWY ILL. ASM. (TY A) (30 IN. DR SH)	LF	12 Δ

LUMINAIRE LOCATIONS

LUM. NO.	STATION	OFFSET TO BASE	DESCRIPTION
B-9	672+80	0'	(SP40S-10-10)(0.25 KW)S
B-10	675+00	0'	(SP40S-10-10)(0.25 KW)S
B-11	674+50	91'RT.	(SA40T-10)(0.25 KW)S
B-12	675+36	92'LT.	(SA40T-10)(0.25 KW)S
B-13	677+20	0'	(SP40S-10-10)(0.25 KW)S
D-15	679+40	0'	(SP40S-10-10)(0.25 KW)S
D-14	681+60	0'	(SP40S-10-10)(0.25 KW)S
D-13	683+80	0'	(SP40S-10-10)(0.25 KW)S

LEGEND

- ○-○-○ CONCRETE BARRIER FIXTURE TYPE (SP40S-10-10)(0.25 KW)S
- □-○ ROADWAY FIXTURE TYPE (SA40T-10)(0.25KW)S
- — — 2" SCHEDULE 40 PVC CONDUIT
- = = 2" SCHEDULE 80 PVC CONDUIT BORED
- ◯ CONDUIT RUN NUMBER
- ⊠ JUNCTION BOX
- ■ GROUND BOX

Δ Revised 9/26/03

STATE OF TEXAS
JOHN D. COAD, JR.
58321
REGISTERED PROFESSIONAL ENGINEER

PB Parsons Brinckerhoff Quade & Douglas Inc.

Texas Department of Transportation

© 2002 by TxDOT

US 281
ILLUMINATION LAYOUTS

STA. 672+00 "BL1" TO
STA. 684+00 "BL1"

PLAN 1"= 100' HORIZ

SHEET 5 OF 19

DESIGNED: DPL	FED. DIV. NO.	STATE	FEDERAL AID PROJECT No.		HIGHWAY No.
CHECKED: GTC	6	TEXAS	XXXXXXX		US 281
DRAWN: JTM	STATE DISTRICT	COUNTY	CONTROL No.	SECTION No.	JOB No.	SHEET No.
CHECKED:	PHARR	HIDALGO	0255	08	091	738

mohapp 03:37:06 PM 08/06/2003
y:\22322A *Texas*US281\20DC\Dwgs\Elec\Output\281-E05.dgn

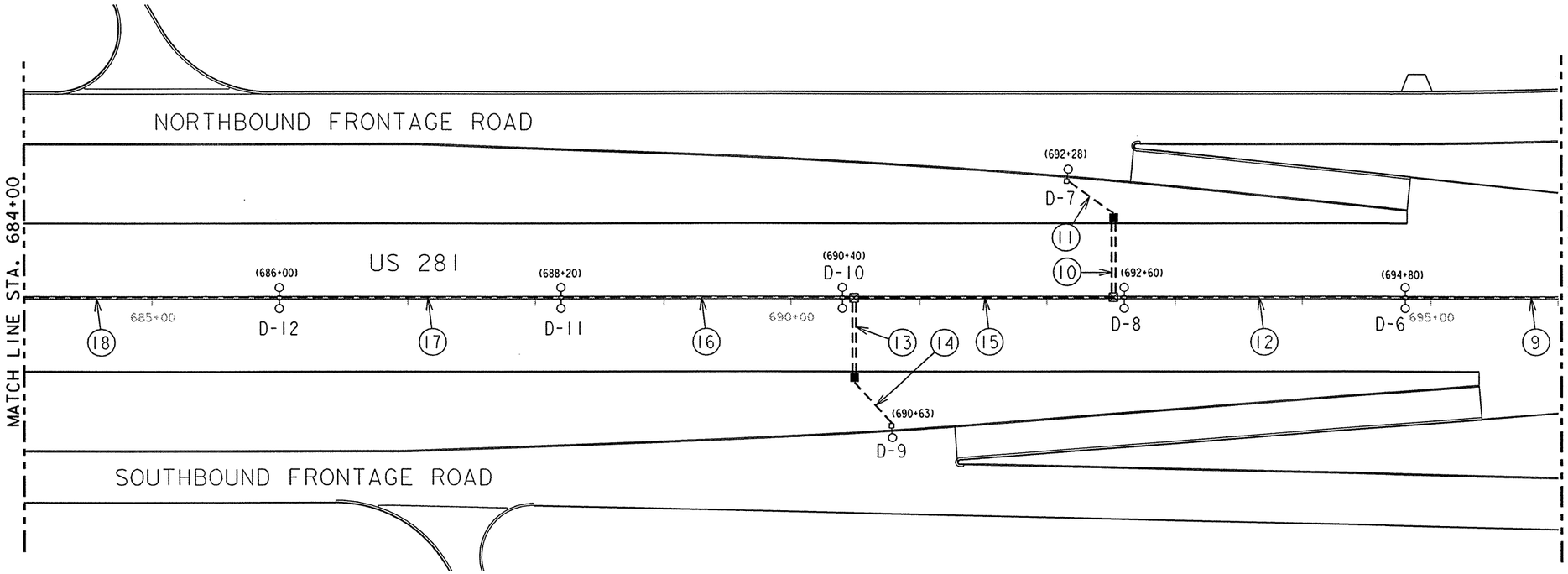

NOTES:

1. ALL STATION NUMBERS IN LUMINAIRE LOCATION SCHEDULE ARE REFERENCED FROM THE CENTER LINE.
2. ALL INDICATED LENGTHS IN CONDUIT AND CONDUCTOR RUNS ARE HORIZONTAL ONLY, ADD ADDITIONAL LENGTH FOR SPLICING AND VERTICAL RUN.
3. SEE STANDARD PLANS, RID(1)-98 THRU RID(4)-98 FOR MAST ARM AND LUMINAIRE POLE, CONDUIT AND JUNCTION BOX INSTALLATION DETAILS ON CAST-IN-PLACE AND SINGLE SLOPE CONCRETE BARRIER (TYPE 4).
4. SEE STANDARD PLANS, ED(1)-03 THRU ED(12)-03 FOR ELECTRICAL MATERIALS AND METHODS, WIRE MANAGEMENT, ELECTRICAL SERVICE AND DISTRIBUTION, AND PHOTOCELL INSTALLATIONS.
5. SEE STANDARD PLANS, HMID(1)-03 THRU HMID(9)-03 FOR HIGH MAST ILLUMINATION DETAILS, HMIP(1)-98 THRU HMIP(2)-98 FOR HIGH MAST ILLUMINATION POLES, AND HMIF(1)-98 THRU HMIF(2)-98 FOR HIGH MAST ILLUMINATION POLE FOUNDATIONS.

CONDUCTORS & CONDUIT RUNS

RUN NO.	GROUND SIZE & LENGTH (FEET)		CONDUCTOR SIZE & LENGTH (FEET)		CONDUIT SIZE & LENGTH (FEET)	
	#8 BARE	#6 BARE	#8 XHHW	#6 XHHW	2" PVC (SCH 40)	2" PVC (SCH 80) BORED
18	220		440		220	
17	220		440		220	
16	220		440		220	
15	220		440		220	
14	47		94		47	
13	63		126			63
12	220		440		220	
11	47		94		47	
10	63		126			63
9	220		440		220	

SUMMARY OF ILLUMINATION QUANTITIES
(SHEET TOTALS)

ITEM	DESCRIPTION	UNIT	QUANTITY
610	RDWY. ILLUM ASSEM. (SP40S-10-10)(0.25 KW)S	EA	5
610	RDWY. ILLUM ASSEM. (SP40S-10)(0.25 KW)S	EA	
610	RDWY. ILLUM ASSEM. (SA40T-10)(0.25 KW)S	EA	2
610	UNDERPASS ILLUM ASSEM. (SPL-CO)(0.15 KW)S(TY1)	EA	
618	CONDUIT (RMC) (1 IN.)	LF	
618	CONDUIT (PVC) (SCH 40) (2 IN.)	LF	1,414
618	CONDUIT (PVC) (SCH 80) (2 IN.) (BORED)	LF	126
620	ELEC. CONDUCTOR (#8 BARE)	LF	1,540
620	ELEC. CONDUCTOR (#6 BARE)	LF	
620	ELEC. CONDUCTOR (#10 TY XHHW)	LF	
620	ELEC. CONDUCTOR (#8 TY XHHW)	LF	3,080
620	ELEC. CONDUCTOR (#6 TY XHHW)	LF	
624	GROUND BOX (RPM) (TY A) (122311) APRON	EA	2
628	ELEC. SERVICE (TY A) (240/480) 060(NS) AL(T) TP(O)	EA	
656	FND FOR RDWY ILL. ASM. (TY A) (30 IN. DR SH)	LF	30

LUMINAIRE LOCATIONS

LUM. NO.	STATION	OFFSET TO BASE	DESCRIPTION
D-12	686+00	0'	(SP40S-10-10)(0.25 KW)S
D-11	688+20	0'	(SP40S-10-10)(0.25 KW)S
D-10	690+40	0'	(SP40S-10-10)(0.25 KW)S
D-9	690+63	101'RT.	(SA40T-10)(0.25 KW)S
D-8	692+60	0'	(SP40S-10-10)(0.25 KW)S
D-7	692+28	92'LT.	(SA40T-10)(0.25 KW)S
D-6	694+80	0'	(SP40S-10-10)(0.25 KW)S

LEGEND

- ○-○-○ CONCRETE BARRIER FIXTURE TYPE (SP40S-10-10)(0.25 KW)S
- □-○ ROADWAY FIXTURE TYPE (SA40T-10)(0.25KW)S
- — — 2" SCHEDULE 40 PVC CONDUIT
- ═ ═ 2" SCHEDULE 80 PVC CONDUIT BORED
- ◯ CONDUIT RUN NUMBER
- ⊠ JUNCTION BOX
- ■ GROUND BOX

STATE OF TEXAS
JOHN D. COAD
58823
LICENSED PROFESSIONAL ENGINEER

Parsons Brinckerhoff Quade & Douglas Inc.

Texas Department of Transportation

© 2002 by TxDOT

US 281
ILLUMINATION LAYOUTS

STA. 684+00 "BLI" TO
STA. 696+00 "BLI"

PLAN 1"= 100' HORIZ

SHEET 6 OF 19

DESIGNED: DPL	FED. RD DIV. No.	STATE	FEDERAL AID PROJECT No.		HIGHWAY No.	
CHECKED: GTC	6	TEXAS	XXXXXXX		US 281	
DRAWN: JTM	STATE DISTRICT	COUNTY	CONTROL No.	SECTION No.	JOB No.	SHEET No.
CHECKED:	PHARR	HIDALGO	0255	08	091	739

mohapp
03:37:22 PM
08/06/2003
y:\22322A *Texas*US281\20DC\Dwgs\Elec\Output\281-E06.dgn

mohapp
03:37:22 PM
08/06/2003
y:\22322A *Texas*US281\200DC\Dwgs\Elec\Output\281-E06.dgn

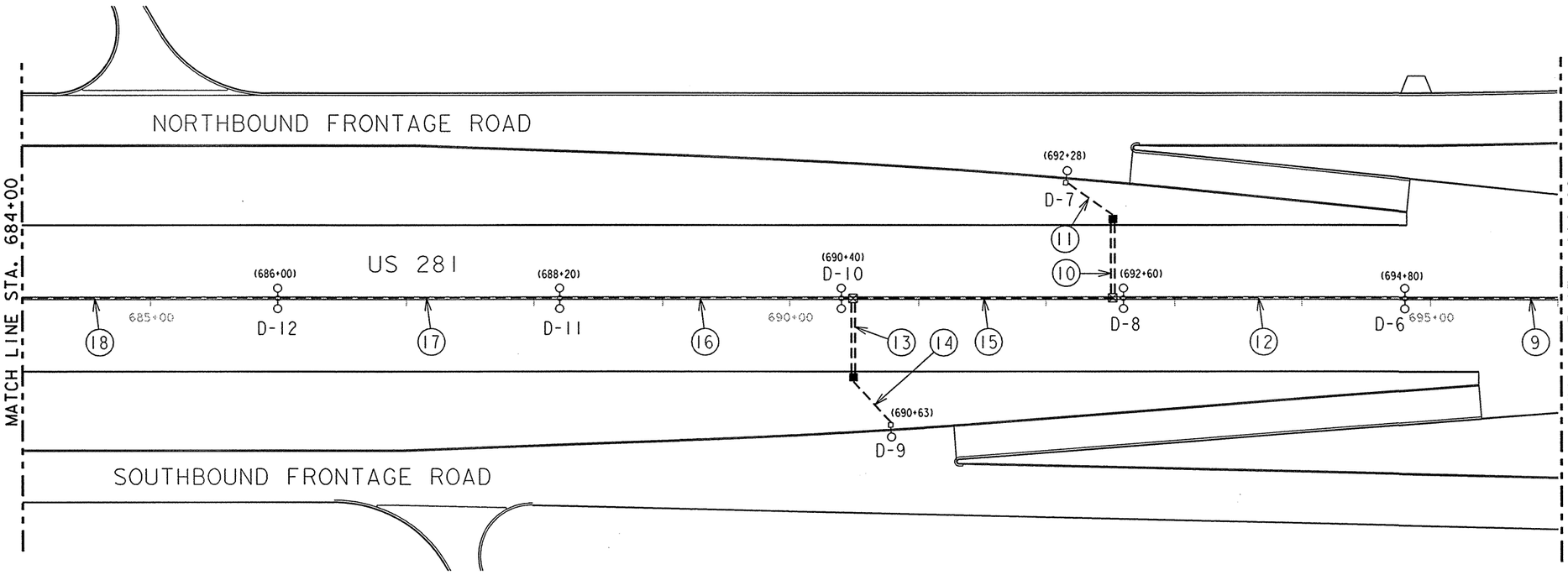

NOTES:

1. ALL STATION NUMBERS IN LUMINAIRE LOCATION SCHEDULE ARE REFERENCED FROM THE CENTER LINE.
2. ALL INDICATED LENGTHS IN CONDUIT AND CONDUCTOR RUNS ARE HORIZONTAL ONLY, ADD ADDITIONAL LENGTH FOR SPLICING AND VERTICAL RUN.
3. SEE STANDARD PLANS, RID(1)-98 THRU RID(4)-98 FOR MAST ARM AND LUMINAIRE POLE, CONDUIT AND JUNCTION BOX INSTALLATION DETAILS ON CAST-IN-PLACE AND SINGLE SLOPE CONCRETE BARRIER (TYPE 4).
4. SEE STANDARD PLANS, ED(1)-03 THRU ED(12)-03 FOR ELECTRICAL MATERIALS AND METHODS, WIRE MANAGEMENT, ELECTRICAL SERVICE AND DISTRIBUTION, AND PHOTOCELL INSTALLATIONS.
5. SEE STANDARD PLANS, HMID(1)-03 THRU HMID(9)-03 FOR HIGH MAST ILLUMINATION DETAILS, HMIP(1)-98 THRU HMIP(2)-98 FOR HIGH MAST ILLUMINATION POLES, AND HMIF(1)-98 THRU HMIF(2)-98 FOR HIGH MAST ILLUMINATION POLE FOUNDATIONS.

CONDUCTORS & CONDUIT RUNS

RUN NO.	GROUND SIZE & LENGTH (FEET)		CONDUCTOR SIZE & LENGTH (FEET)		CONDUIT SIZE & LENGTH (FEET)	
	#8 BARE	#6 BARE	#8 XHHW	#6 XHHW	2" PVC (SCH 40)	2" PVC (SCH 80) BORED
18	220		440		220	
17	220		440		220	
16	220		440		220	
15	220		440		220	
14	47		94		47	
13	63		126			63
12	220		440		220	
11	47		94		47	
10	63		126			63
9	220		440		220	

SUMMARY OF ILLUMINATION QUANTITIES
(SHEET TOTALS)

ITEM	DESCRIPTION	UNIT	QUANTITY
610	RDWY. ILLUM ASSEM. (SP40S-10-10)(0.25 KW)S	EA	5
610	RDWY. ILLUM ASSEM. (SP40S-10)(0.25 KW)S	EA	
610	RDWY. ILLUM ASSEM. (SA40T-10)(0.25 KW)S	EA	2
610	UNDERPASS ILLUM ASSEM. (SPL-CO)(0.15 KW)S(TY1)	EA	
618	CONDUIT (RMC) (1 IN.)	LF	
618	CONDUIT (PVC) (SCH 40) (2 IN.)	LF	1,414
618	CONDUIT (PVC) (SCH 80) (2 IN.) (BORED)	LF	126
620	ELEC. CONDUCTOR (#8 BARE)	LF	1,540
620	ELEC. CONDUCTOR (#6 BARE)	LF	
620	ELEC. CONDUCTOR (#10 TY XHHW)	LF	
620	ELEC. CONDUCTOR (#8 TY XHHW)	LF	3,080
620	ELEC. CONDUCTOR (#6 TY XHHW)	LF	
624	GROUND BOX (RPM) (TY A) (12231) APRON	EA	2
628	ELEC. SERVICE (TY A) (240/480) 060(NS) AL(T) TP(O)	EA	
656	FND FOR RDWY ILL. ASM. (TY A) (30 IN. DR SH)	LF	12 A

LUMINAIRE LOCATIONS

LUM. NO.	STATION	OFFSET TO BASE	DESCRIPTION
D-12	686+00	0'	(SP40S-10-10)(0.25 KW)S
D-11	688+20	0'	(SP40S-10-10)(0.25 KW)S
D-10	690+40	0'	(SP40S-10-10)(0.25 KW)S
D-9	690+63	101'RT.	(SA40T-10)(0.25 KW)S
D-8	692+60	0'	(SP40S-10-10)(0.25 KW)S
D-7	692+28	92'LT.	(SA40T-10)(0.25 KW)S
D-6	694+80	0'	(SP40S-10-10)(0.25 KW)S

LEGEND

- ○-○-○ CONCRETE BARRIER FIXTURE TYPE (SP40S-10-10)(0.25 KW)S
- □-○ ROADWAY FIXTURE TYPE (SA40T-10)(0.25KW)S
- — — 2" SCHEDULE 40 PVC CONDUIT
- ═ ═ 2" SCHEDULE 80 PVC CONDUIT BORED
- ◯ CONDUIT RUN NUMBER
- ⊠ JUNCTION BOX
- ■ GROUND BOX

A Revised 9/26/03

STATE OF TEXAS
JOHN D. COAD IV
LICENSED
PROFESSIONAL ENGINEER
9/26/03

PB Parsons Brinckerhoff Quade & Douglas Inc.

Texas Department of Transportation

© 2002 by TxDOT

US 281
ILLUMINATION LAYOUTS

STA. 684+00 "BLI" TO
STA. 696+00 "BLI"

PLAN 1"= 100' HORIZ

SHEET 6 OF 19

DESIGNED: DPL	FED. RD DIV. No.	STATE	FEDERAL AID PROJECT No.		HIGHWAY No.
CHECKED: GTC	6	TEXAS	XXXXXXXX		US 281
DRAWN: JTM	STATE DISTRICT	COUNTY	CONTROL No.	SECTION No.	JOB No.	SHEET No.
CHECKED:	PHARR	HIDALGO	0255	08	091	739

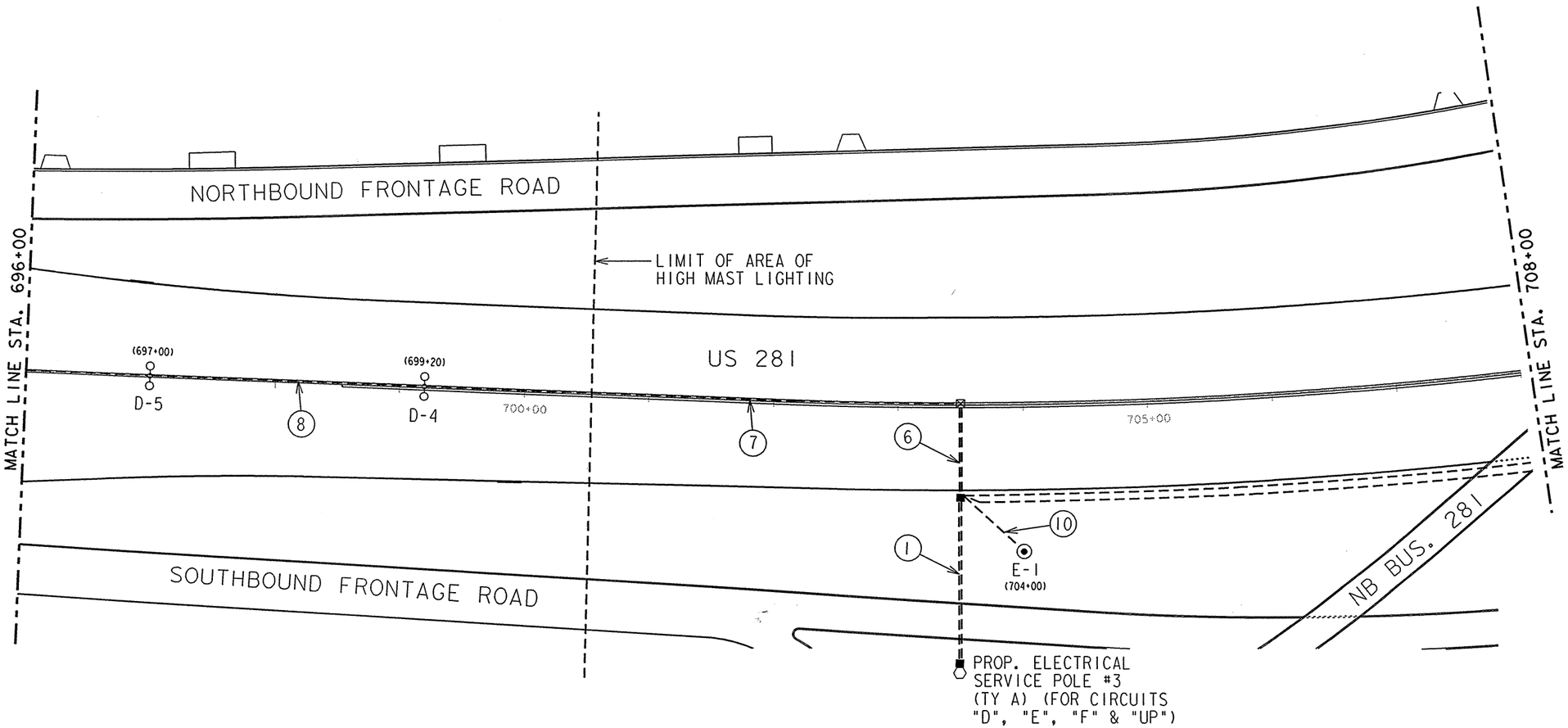

NOTES:

1. ALL STATION NUMBERS IN LUMINAIRE LOCATION SCHEDULE ARE REFERENCED FROM THE CENTER LINE.
2. ALL INDICATED LENGTHS IN CONDUIT AND CONDUCTOR RUNS ARE HORIZONTAL ONLY. ADD ADDITIONAL LENGTH FOR SPLICING AND VERTICAL RUN.
3. SEE STANDARD PLANS, RID(1)-98 THRU RID(4)-98 FOR MAST ARM AND LUMINAIRE POLE, CONDUIT AND JUNCTION BOX INSTALLATION DETAILS ON CAST-IN-PLACE AND SINGLE SLOPE CONCRETE BARRIER (TYPE 4).
4. SEE STANDARD PLANS, ED(1)-03 THRU ED(12)-03 FOR ELECTRICAL MATERIALS AND METHODS, WIRE MANAGEMENT, ELECTRICAL SERVICE AND DISTRIBUTION, AND PHOTOCELL INSTALLATIONS.
5. SEE STANDARD PLANS, HMID(1)-03 THRU HMID(9)-03 FOR HIGH MAST ILLUMINATION DETAILS, HMIP(1)-98 THRU HMIP(2)-98 FOR HIGH MAST ILLUMINATION POLES, AND HMIF(1)-98 THRU HMIF(2)-98 FOR HIGH MAST ILLUMINATION POLE FOUNDATIONS.

CONDUCTORS & CONDUIT RUNS

RUN NO.	GROUND SIZE & LENGTH (FEET)		CONDUCTOR SIZE & LENGTH (FEET)		CONDUIT SIZE & LENGTH (FEET)	
	#8 BARE	#6 BARE	#8 XHHW	#6 XHHW	2" PVC (SCH 40)	2" PVC (SCH 80) BORED
10		45		90	45	
8	220		440		220	
7	430		860		430	
6	75		150			75
1	140	140	560	560		140

SUMMARY OF ILLUMINATION QUANTITIES
(SHEET TOTALS)

ITEM	DESCRIPTION	UNIT	QUANTITY
610	RDWY. ILLUM ASSEM. (SP40S-10-10)(0.25 KW)S	EA	2
610	RDWY. ILLUM ASSEM. (SP40S-10)(0.25 KW)S	EA	
610	RDWY. ILLUM ASSEM. (SA40T-10)(0.25 KW)S	EA	
610	UNDERPASS ILLUM ASSEM. (SPL-CO)(0.15 KW)S(TY1)	EA	
613	HIGH MAST ILLUM POLE 150 FT. (100 MPH)	EA	1
614	HIGH MAST ILLUM ASM (12-400 WATT) (TY B)	EA	1
618	CONDUIT (RMC) (1 IN.)	LF	
618	CONDUIT (PVC) (SCH 40) (2 IN.)	LF	695
618	CONDUIT (PVC) (SCH 80) (2 IN.) (BORED)	LF	215
620	ELEC. CONDUCTOR (#8 BARE)	LF	865
620	ELEC. CONDUCTOR (#6 BARE)	LF	185
620	ELEC. CONDUCTOR (#10 TY XHHW)	LF	
620	ELEC. CONDUCTOR (#8 TY XHHW)	LF	2,010
620	ELEC. CONDUCTOR (#6 TY XHHW)	LF	640
624	GROUND BOX (RPM) (TY A) (122311) APRON	EA	2
628	ELEC. SERVICE (TY A) (240/480) 200(NS) AL(T) TP(O)	EA	1
656	FND FOR RDWY ILL. ASM. (TY A) (30 IN. DR SH)	LF	12

LUMINAIRE LOCATIONS

LUM. NO.	STATION	OFFSET TO BASE	DESCRIPTION
D-5	697+00	0'	(SP40S-10-10)(0.25 KW)S
D-4	699+20	0'	(SP40S-10-10)(0.25 KW)S
E-1	704+00	120'RT.	(HMIA)(12-400WATT)(TY B)

LEGEND

- CONCRETE BARRIER FIXTURE TYPE (SP40S-10-10)(0.25 KW)S
- HIGH MAST ILLUM POLE TYPE (B)(12-400WATT)
- 2" SCHEDULE 40 PVC CONDUIT
- 2" SCHEDULE 80 PVC CONDUIT BORED
- CONDUIT RUN NUMBER
- JUNCTION BOX
- GROUND BOX
- SERVICE POLE

STATE OF TEXAS
JOHN T. COAD, JR.
86521
REGISTERED
PROFESSIONAL
ENGINEER

Parsons Brinckerhoff Quade & Douglas Inc.

Texas Department of Transportation

© 2002 by TxDOT

US 281
ILLUMINATION LAYOUTS

STA. 696+00 "BL1" TO
STA. 708+00 "BL1"

PLAN 1"= 100' HORIZ

SHEET 7 OF 19

DESIGNED: DPL	FED. RD DIV. NO.	STATE	FEDERAL AID PROJECT NO.	HIGHWAY NO.
CHECKED: GTC	6	TEXAS	XXXXXXXX	US 281

DRAWN: JTM	STATE DISTRICT	COUNTY	CONTROL No.	SECTION No.	JOB No.	SHEET No.
CHECKED:	PHARR	HIDALGO	0255	08	091	740

mohapp
03:59:56 PM
08/06/2003
y:\22322A *Texas*US281\20DC\Dwgs\Elec\Output\281-E07.dgn

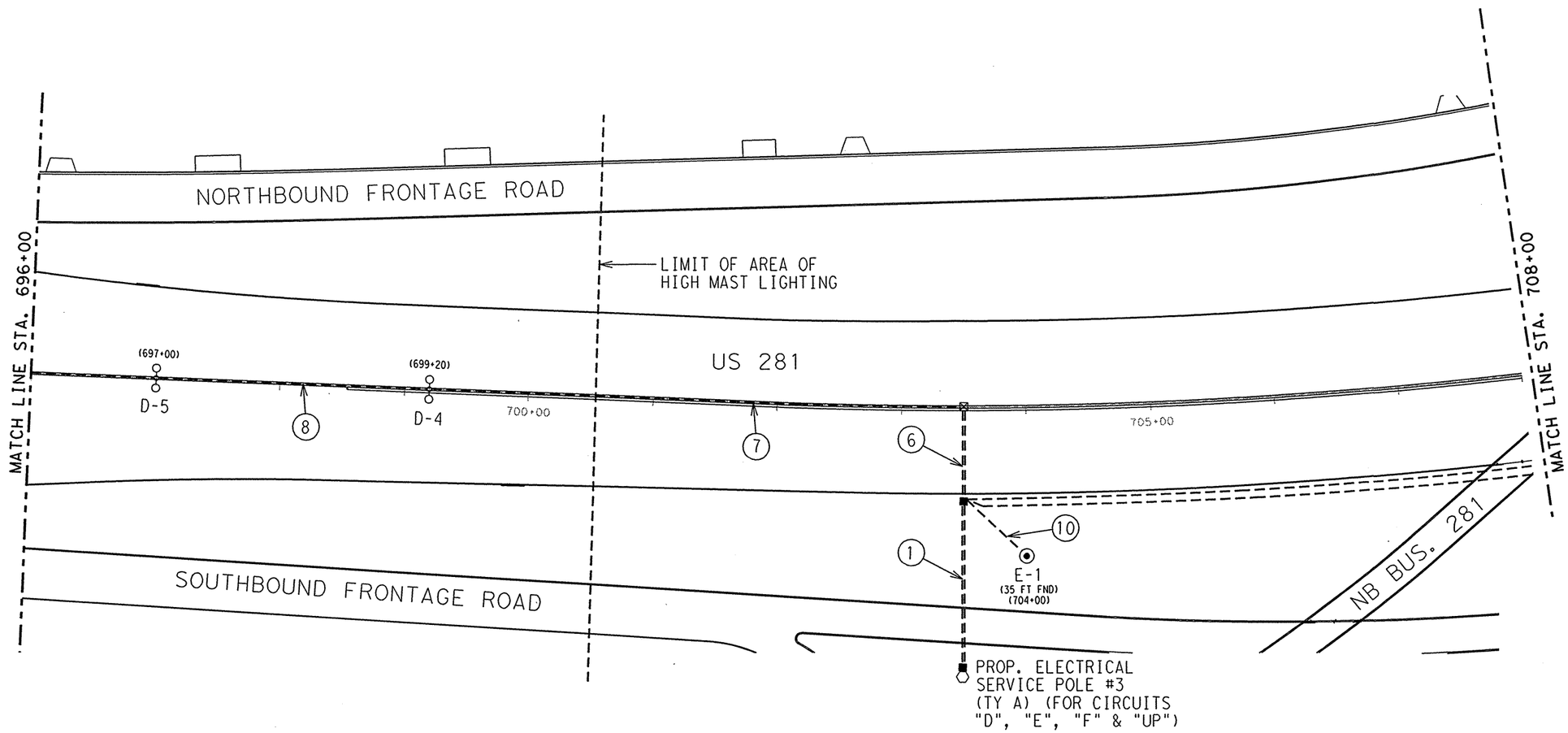

NOTES:

1. ALL STATION NUMBERS IN LUMINAIRE LOCATION SCHEDULE ARE REFERENCED FROM THE CENTER LINE.
2. ALL INDICATED LENGTHS IN CONDUIT AND CONDUCTOR RUNS ARE HORIZONTAL ONLY, ADD ADDITIONAL LENGTH FOR SPLICING AND VERTICAL RUN.
3. SEE STANDARD PLANS, RID(1)-98 THRU RID(4)-98 FOR MAST ARM AND LUMINAIRE POLE, CONDUIT AND JUNCTION BOX INSTALLATION DETAILS ON CAST-IN-PLACE AND SINGLE SLOPE CONCRETE BARRIER (TYPE 4).
4. SEE STANDARD PLANS, ED(1)-03 THRU ED(12)-03 FOR ELECTRICAL MATERIALS AND METHODS, WIRE MANAGEMENT, ELECTRICAL SERVICE AND DISTRIBUTION, AND PHOTOCELL INSTALLATIONS.
5. SEE STANDARD PLANS, HMID(1)-03 THRU HMID(9)-03 FOR HIGH MAST ILLUMINATION DETAILS, HMIP(1)-98 THRU HMIP(2)-98 FOR HIGH MAST ILLUMINATION POLES, AND HMIF(1)-98 THRU HMIF(2)-98 FOR HIGH MAST ILLUMINATION POLE FOUNDATIONS.

CONDUCTORS & CONDUIT RUNS

RUN NO.	GROUND SIZE & LENGTH (FEET)		CONDUCTOR SIZE & LENGTH (FEET)		CONDUIT SIZE & LENGTH (FEET)	
	#8 BARE	#6 BARE	#8 XHHW	#6 XHHW	2" PVC (SCH 40)	2" PVC (SCH 80) BORED
10		45		90	45	
8	220		440		220	
7	430		860		430	
6	75		150			75
1	140	140	560	560		140

SUMMARY OF ILLUMINATION QUANTITIES
(SHEET TOTALS)

ITEM	DESCRIPTION	UNIT	QUANTITY
416	FND FOR HI MAST ASSY (60 INDR SH)	LF	35
432	RIPRAP	CY	2.56
610	RDWY. ILLUM ASSEM. (SP40S-10-10)(0.25 KW)S	EA	2
610	RDWY. ILLUM ASSEM. (SP40S-10)(0.25 KW)S	EA	
610	RDWY. ILLUM ASSEM. (SA40T-10)(0.25 KW)S	EA	
610	UNDERPASS ILLUM ASSEM. (SPL-CO)(0.15 KW)S(TY1)	EA	
613	HIGH MAST ILLUM POLE 150 FT. (100 MPH)	EA	1
614	HIGH MAST ILLUM ASM (12-400 WATT) (TY B)	EA	1
618	CONDUIT (RMC) (1 IN.)	LF	
618	CONDUIT (PVC) (SCH 40) (2 IN.)	LF	695
618	CONDUIT (PVC) (SCH 80) (2 IN.) (BORED)	LF	215
620	ELEC. CONDUCTOR (#8 BARE)	LF	865
620	ELEC. CONDUCTOR (#6 BARE)	LF	185
620	ELEC. CONDUCTOR (#10 TY XHHW)	LF	
620	ELEC. CONDUCTOR (#8 TY XHHW)	LF	2,010
620	ELEC. CONDUCTOR (#6 TY XHHW)	LF	640
624	GROUND BOX (RPM) (TY A) (122311) APRON	EA	2
628	ELEC. SERVICE (TY A) (240/480) 200(NS) AL(T) TP(O)	EA	1
656	FND FOR RDWY ILL. ASM. (TY A) (30 IN. DR SH)	LF	

LUMINAIRE LOCATIONS

LUM. NO.	STATION	OFFSET TO BASE	DESCRIPTION
D-5	697+00	0'	(SP40S-10-10)(0.25 KW)S
D-4	699+20	0'	(SP40S-10-10)(0.25 KW)S
E-1	704+00	120'RT.	(HMIA)(12-400WATT)(TY B)

LEGEND

- CONCRETE BARRIER FIXTURE TYPE (SP40S-10-10)(0.25 KW)S
- HIGH MAST ILLUM POLE TYPE (B)(12-400WATT)
- 2" SCHEDULE 40 PVC CONDUIT
- 2" SCHEDULE 80 PVC CONDUIT BORED
- CONDUIT RUN NUMBER
- JUNCTION BOX
- GROUND BOX
- SERVICE POLE

REVISED 9-26-03

STATE OF TEXAS JOHN D. COAD 98521 REGISTERED PROFESSIONAL ENGINEER 9-24-03

Parsons Brinckerhoff Quade & Douglas Inc.

Texas Department of Transportation

© 2002 by TxDOT

US 281
ILLUMINATION LAYOUTS

STA. 696+00 "BL1" TO
STA. 708+00 "BL1"

PLAN 1"= 100' HORIZ

SHEET 7 OF 19

DESIGNED: DPL	FED. RD DIV. NO.	STATE	FEDERAL AID PROJECT No.		HIGHWAY No.
CHECKED: GTC	6	TEXAS	XXXXXXXX		US 281
DRAWN: JTM	STATE DISTRICT	COUNTY	CONTROL No.	SECTION No.	JOB No.	SHEET No.
CHECKED:	PHARR	HIDALGO	0255	08	091	740

mohapp 04:27:42 PM 09/24/2003
Y:\22322A *Texas*US281\20DC\Dwgs\Elec\Output\281-E07.dgn

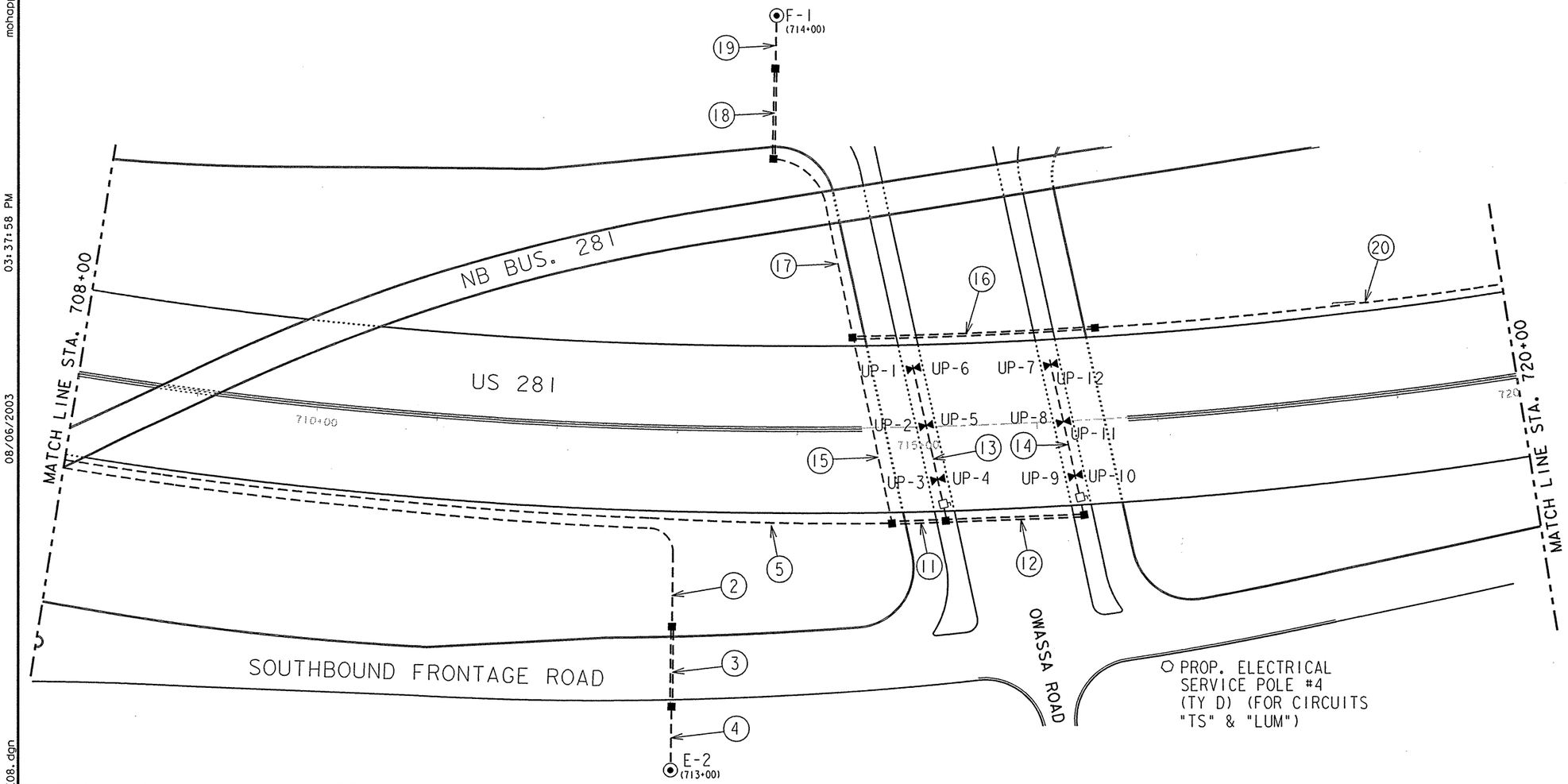

NOTES:

1. ALL STATION NUMBERS IN LUMINAIRE LOCATION SCHEDULE ARE REFERENCED FROM THE CENTER LINE.
2. ALL INDICATED LENGTHS IN CONDUIT AND CONDUCTOR RUNS ARE HORIZONTAL ONLY, ADD ADDITIONAL LENGTH FOR SPLICING AND VERTICAL RUN.
3. SEE STANDARD PLANS, RID(1)-98 THRU RID(4)-98 FOR MAST ARM AND LUMINAIRE POLE, CONDUIT AND JUNCTION BOX INSTALLATION DETAILS ON CAST-IN-PLACE AND SINGLE SLOPE CONCRETE BARRIER (TYPE 4).
4. SEE STANDARD PLANS, ED(1)-03 THRU ED(12)-03 FOR ELECTRICAL MATERIALS AND METHODS, WIRE MANAGEMENT, ELECTRICAL SERVICE AND DISTRIBUTION, AND PHOTOCELL INSTALLATIONS.
5. SEE STANDARD PLANS, HMID(1)-03 THRU HMID(9)-03 FOR HIGH MAST ILLUMINATION DETAILS, HMIP(1)-98 THRU HMIP(2)-98 FOR HIGH MAST ILLUMINATION POLES, AND HMIF(1)-98 THRU HMIF(2)-98 FOR HIGH MAST ILLUMINATION POLE FOUNDATIONS.

CONDUCTORS & CONDUIT RUNS

RUN NO.	GROUND SIZE & LENGTH (FEET)		CONDUCTOR SIZE & LENGTH (FEET)			CONDUIT SIZE & LENGTH (FEET)		
	#8 BARE	#6 BARE	#10 XHHW	#8 XHHW	#6 XHHW	1" RMC	2" PVC (SCH 40)	2" PVC (SCH 80) BORED
2		1,050			2,100		1,050	
3		70			140			70
4		60			120		60	
5		1,150		2,300	2,300		1,150	
11	45			90				45
12	115			230				115
13	135		270			135		
14	135		270			135		
15		160			320		160	
16		205			410			205
17		175			350		175	
18		75			150			75
19		45			90		45	
20		800			1,600		800	

SUMMARY OF ILLUMINATION QUANTITIES
(SHEET TOTALS)

ITEM	DESCRIPTION	UNIT	QUANTITY
610	RDWY. ILLUM ASSEM. (SP40S-10-10)(0.25 KW)S	EA	
610	RDWY. ILLUM ASSEM. (SP40S-10)(0.25 KW)S	EA	
610	RDWY. ILLUM ASSEM. (SA40T-10)(0.25 KW)S	EA	
610	UNDERPASS ILLUM ASSEM. (SPL-CO)(0.15 KW)S(TY1)	EA	12
613	HIGH MAST ILLUM POLE 150 FT. (100 MPH)	EA	2
614	HIGH MAST ILLUM ASM (12-400 WATT) (TY B)	EA	2
618	CONDUIT (RMC) (1 IN.)	LF	270
618	CONDUIT (PVC) (SCH 40) (2 IN.)	LF	3,440
618	CONDUIT (PVC) (SCH 80) (2 IN.) (BORED)	LF	510
620	ELEC. CONDUCTOR (#8 BARE)	LF	430
620	ELEC. CONDUCTOR (#6 BARE)	LF	3,790
620	ELEC. CONDUCTOR (#10 TY XHHW)	LF	540
620	ELEC. CONDUCTOR (#8 TY XHHW)	LF	2,620
620	ELEC. CONDUCTOR (#6 TY XHHW))	LF	7,580
624	GROUND BOX (RPM) (TY A) (122311) APRON	EA	9
628	ELEC. SERVICE (TY D) (120/240) 070(NS) AL(T) TP(O)	EA	1
656	FND FOR RDWY ILL. ASM. (TY A) (30 IN. DR SH)	LF	

LUMINAIRE LOCATIONS

LUM. NO.	STATION	OFFSET TO BASE	DESCRIPTION
E-2	713+00	285'RT.	(12)(0.25 KW)
F-1	713+75	340'LF.	(12)(0.25 KW)
UP-1			U/P(SPL-CO)(0.15 KW)S(TY1)
UP-2			U/P(SPL-CO)(0.15 KW)S(TY1)
UP-3			U/P(SPL-CO)(0.15 KW)S(TY1)
UP-4			U/P(SPL-CO)(0.15 KW)S(TY1)
UP-5			U/P(SPL-CO)(0.15 KW)S(TY1)
UP-6			U/P(SPL-CO)(0.15 KW)S(TY1)
UP-7			U/P(SPL-CO)(0.15 KW)S(TY1)
UP-8			U/P(SPL-CO)(0.15 KW)S(TY1)
UP-9			U/P(SPL-CO)(0.15 KW)S(TY1)
UP-10			U/P(SPL-CO)(0.15 KW)S(TY1)
UP-11			U/P(SPL-CO)(0.15 KW)S(TY1)
UP-12			U/P(SPL-CO)(0.15 KW)S(TY1)

LEGEND

- ▶ UNDERPASS FIXTURE TYPE U/P(SPL-CO)(0.15KW)S(TY1)
- ◉ HIGH MAST ILLUM POLE TYPE (B)(12-400 WATT)
- — — 2" SCHEDULE 40 PVC CONDUIT
- ◯ CONDUIT RUN NUMBER
- ■ GROUND BOX
- ⬡ SERVICE POLE
- ⊏ UNDERPASS LIGHTING DISCONNECT SWITCH

STATE OF TEXAS
JOHN D. COAD, JR.
85821
LICENSED PROFESSIONAL ENGINEER
4-1-03

PB Parsons Brinckerhoff Quade & Douglas Inc.

Texas Department of Transportation

© 2002 by TxDOT

US 281
ILLUMINATION LAYOUTS

STA. 708+00 "BL1" TO
STA. 720+00 "BL1"

PLAN 1"= 100' HORIZ

SHEET 8 OF 19

DESIGNED: DPL	FED. RD DIV. NO.	STATE	FEDERAL AID PROJECT No.		HIGHWAY No.	
CHECKED: GTC	6	TEXAS	XXXXXXXX		US 281	
DRAWN: JTM	STATE DISTRICT	COUNTY	CONTROL No.	SECTION No.	JOB No.	SHEET No.
CHECKED:	PHARR	HIDALGO	0255	08	091	741

mohapp
03:37:58 PM
08/06/2003
w:\22322A *Texas*US281\200\Dwgs\Elec\Output\281_F08.dgn

mohapp
04:29:13 PM
09/24/2003
Y:\22322A *Texas*US281\20DC\Dwgs\Elec\Output\281-E08.dgn

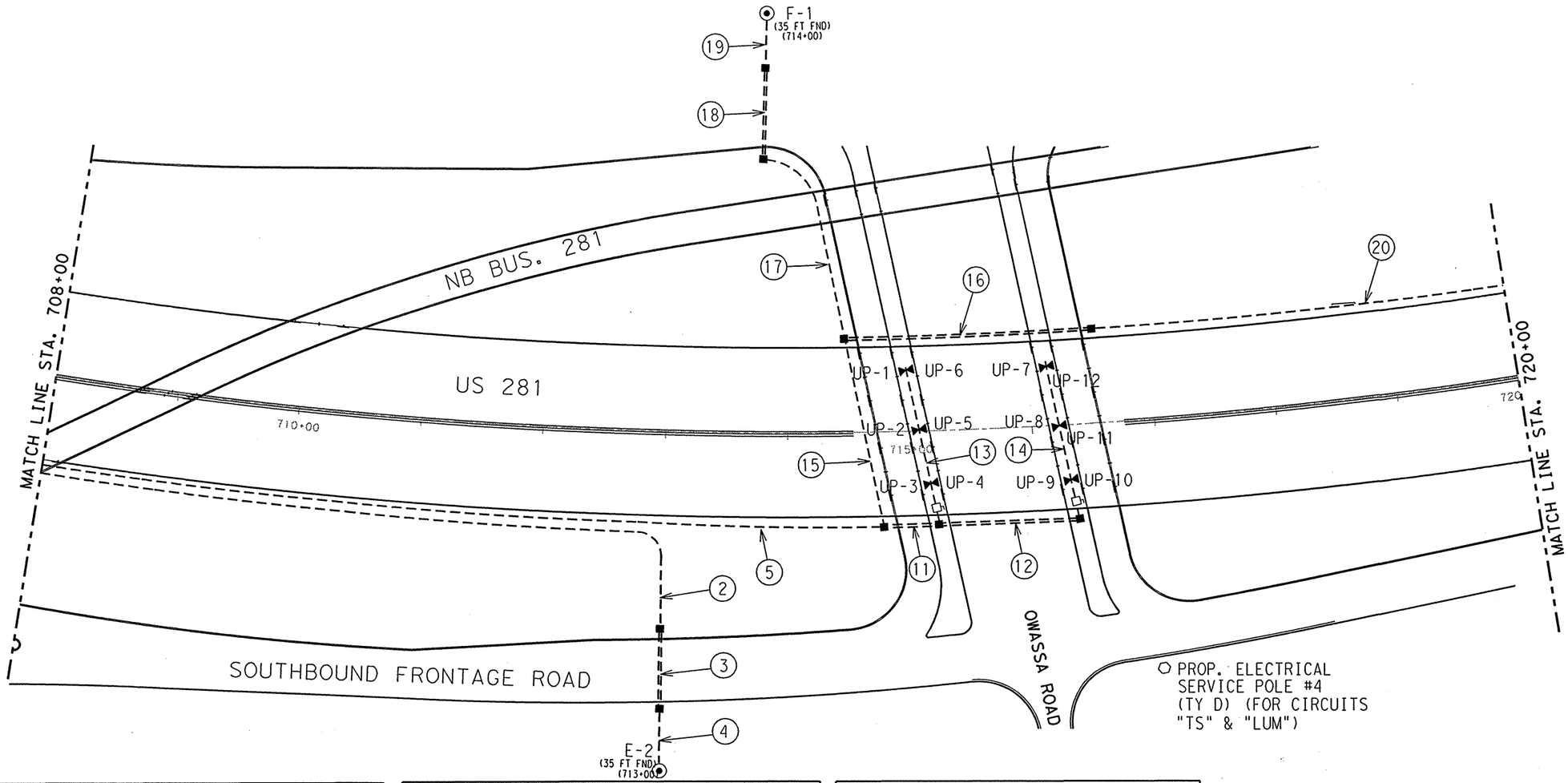

NOTES:

1. ALL STATION NUMBERS IN LUMINAIRE LOCATION SCHEDULE ARE REFERENCED FROM THE CENTER LINE.
2. ALL INDICATED LENGTHS IN CONDUIT AND CONDUCTOR RUNS ARE HORIZONTAL ONLY, ADD ADDITIONAL LENGTH FOR SPLICING AND VERTICAL RUN.
3. SEE STANDARD PLANS, RID(1)-98 THRU RID(4)-98 FOR MAST ARM AND LUMINAIRE POLE, CONDUIT AND JUNCTION BOX INSTALLATION DETAILS ON CAST-IN-PLACE AND SINGLE SLOPE CONCRETE BARRIER (TYPE 4).
4. SEE STANDARD PLANS, ED(1)-03 THRU ED(12)-03 FOR ELECTRICAL MATERIALS AND METHODS, WIRE MANAGEMENT, ELECTRICAL SERVICE AND DISTRIBUTION, AND PHOTOCELL INSTALLATIONS.
5. SEE STANDARD PLANS, HMID(1)-03 THRU HMID(9)-03 FOR HIGH MAST ILLUMINATION DETAILS, HMIP(1)-98 THRU HMIP(2)-98 FOR HIGH MAST ILLUMINATION POLES, AND HMIF(1)-98 THRU HMIF(2)-98 FOR HIGH MAST ILLUMINATION POLE FOUNDATIONS.

CONDUCTORS & CONDUIT RUNS

RUN NO.	GROUND SIZE & LENGTH (FEET)		CONDUCTOR SIZE & LENGTH (FEET)			CONDUIT SIZE & LENGTH (FEET)		
	#8 BARE	#6 BARE	#10 XHHW	#8 XHHW	#6 XHHW	1" RMC	2" PVC (SCH 40)	2" PVC (SCH 80) BORED
2		1,050			2,100		1,050	
3		70			140			70
4		60			120		60	
5		1,150		2,300	2,300		1,150	
11	45			90				45
12	115			230				115
13	135		270			135		
14	135		270			135		
15		160			320		160	
16		205			410			205
17		175			350		175	
18		75			150			75
19		45			90		45	
20		800			1,600		800	

SUMMARY OF ILLUMINATION QUANTITIES
(SHEET TOTALS)

ITEM	DESCRIPTION	UNIT	QUANTITY
416	FND FOR HI MAST ASSY (60 IN DR SH)	LF	70
432	RIPRAP	CY	5.12
610	RDWY. ILLUM ASSEM. (SP40S-10-10)(0.25 KW)S	EA	
610	RDWY. ILLUM ASSEM. (SP40S-10)(0.25 KW)S	EA	
610	RDWY. ILLUM ASSEM. (SA40T-10)(0.25 KW)S	EA	
610	UNDERPASS ILLUM ASSEM. (SPL-CO)(0.15 KW)S(TY1)	EA	12
613	HIGH MAST ILLUM POLE 150 FT. (100 MPH)	EA	2
614	HIGH MAST ILLUM ASM (12-400 WATT) (TY B)	EA	2
618	CONDUIT (RMC) (1 IN.)	LF	270
618	CONDUIT (PVC) (SCH 40) (2 IN.)	LF	3,440
618	CONDUIT (PVC) (SCH 80) (2 IN.) (BORED)	LF	510
620	ELEC. CONDUCTOR (#8 BARE)	LF	430
620	ELEC. CONDUCTOR (#6 BARE)	LF	3,790
620	ELEC. CONDUCTOR (#10 TY XHHW)	LF	540
620	ELEC. CONDUCTOR (#8 TY XHHW)	LF	2,620
620	ELEC. CONDUCTOR (#6 TY XHHW))	LF	7,580
624	GROUND BOX (RPM) (TY A) (122311) APRON	EA	9
628	ELEC. SERVICE (TY D) (120/240) 070(NS) AL(T) TP(O)	EA	1
656	FND FOR RDWY ILL. ASM. (TY A) (30 IN. DR SH)	LF	

LUMINAIRE LOCATIONS

LUM. NO.	STATION	OFFSET TO BASE	DESCRIPTION
E-2	713+00	285'RT.	(HMIA)(12-400WATT)(TY B)
F-1	713+75	340'LF.	(HMIA)(12-400WATT)(TY B)
UP-1			U/P(SPL-CO)(0.15 KW)S(TY1)
UP-2			U/P(SPL-CO)(0.15 KW)S(TY1)
UP-3			U/P(SPL-CO)(0.15 KW)S(TY1)
UP-4			U/P(SPL-CO)(0.15 KW)S(TY1)
UP-5			U/P(SPL-CO)(0.15 KW)S(TY1)
UP-6			U/P(SPL-CO)(0.15 KW)S(TY1)
UP-7			U/P(SPL-CO)(0.15 KW)S(TY1)
UP-8			U/P(SPL-CO)(0.15 KW)S(TY1)
UP-9			U/P(SPL-CO)(0.15 KW)S(TY1)
UP-10			U/P(SPL-CO)(0.15 KW)S(TY1)
UP-11			U/P(SPL-CO)(0.15 KW)S(TY1)
UP-12			U/P(SPL-CO)(0.15 KW)S(TY1)

LEGEND

- ▶ UNDERPASS FIXTURE TYPE U/P(SPL-CO)(0.15KW)S(TY1)
- ◉ HIGH MAST ILLUM POLE TYPE (B)(12-400 WATT)
- — — 2" SCHEDULE 40 PVC CONDUIT
- ○ CONDUIT RUN NUMBER
- ■ GROUND BOX
- ⬡ SERVICE POLE
- ⊏ UNDERPASS LIGHTING DISCONNECT SWITCH

REVISED
9-26-03

STATE OF TEXAS
JOHN D. QUADE
83321
REGISTERED
PROFESSIONAL ENGINEER
9-26-03

PB Parsons Brinckerhoff Quade & Douglas Inc.

Texas Department of Transportation

© 2002 by TxDOT

US 281
ILLUMINATION LAYOUTS

STA. 708+00 "BL1" TO
STA. 720+00 "BL1"

PLAN 1"= 100' HORIZ

SHEET 8 OF 19

DESIGNED: DPL	FED. RD DIV. NO.	STATE	FEDERAL AID PROJECT No.		HIGHWAY No.	
CHECKED: GTC	6	TEXAS	XXXXXXXX		US 281	
DRAWN: JTM	STATE DISTRICT	COUNTY	CONTROL No.	SECTION No.	JOB No.	SHEET No.
CHECKED:	PHARR	HIDALGO	0255	08	091	741

mohapp
03:38:17 PM
08/06/2003
y:\22322A *Texas*US281\20DC\Dwgs\Elec\Output\281-E09.dgn

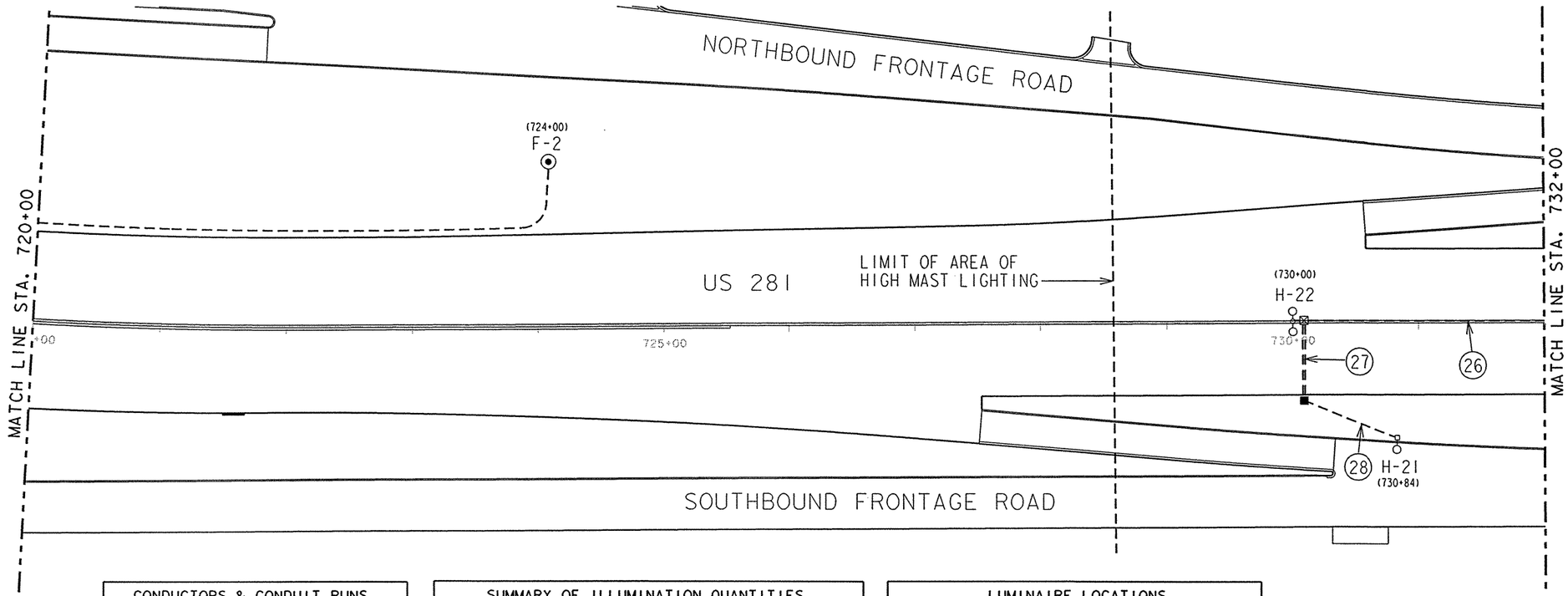

NOTES:

1. ALL STATION NUMBERS IN LUMINAIRE LOCATION SCHEDULE ARE REFERENCED FROM THE CENTER LINE.
2. ALL INDICATED LENGTHS IN CONDUIT AND CONDUCTOR RUNS ARE HORIZONTAL ONLY, ADD ADDITIONAL LENGTH FOR SPLICING AND VERTICAL RUN.
3. SEE STANDARD PLANS, RID(1)-98 THRU RID(4)-98 FOR MAST ARM AND LUMINAIRE POLE, CONDUIT AND JUNCTION BOX INSTALLATION DETAILS ON CAST-IN-PLACE AND SINGLE SLOPE CONCRETE BARRIER (TYPE 4).
4. SEE STANDARD PLANS, ED(1)-03 THRU ED(12)-03 FOR ELECTRICAL MATERIALS AND METHODS, WIRE MANAGEMENT, ELECTRICAL SERVICE AND DISTRIBUTION, AND PHOTOCELL INSTALLATIONS.
5. SEE STANDARD PLANS, HMID(1)-03 THRU HMID(9)-03 FOR HIGH MAST ILLUMINATION DETAILS, HMIP(1)-98 THRU HMIP(2)-98 FOR HIGH MAST ILLUMINATION POLES, AND HMIF(1)-98 THRU HMIF(2)-98 FOR HIGH MAST ILLUMINATION POLE FOUNDATIONS.

CONDUCTORS & CONDUIT RUNS

RUN NO.	GROUND SIZE & LENGTH (FEET)		CONDUCTOR SIZE & LENGTH (FEET)		CONDUIT SIZE & LENGTH (FEET)	
	#8 BARE	#6 BARE	#8 XHHW	#6 XHHW	2" PVC (SCH 40)	2" PVC (SCH 80) BORED
28	80		160		80	
27	63		126			63
26	220		440		220	

SUMMARY OF ILLUMINATION QUANTITIES
(SHEET TOTALS)

ITEM	DESCRIPTION	UNIT	QUANTITY
610	RDWY. ILLUM ASSEM. (SP40S-10-10) (0.25 KW)S	EA	1
610	RDWY. ILLUM ASSEM. (SP40S-10) (0.25 KW)S	EA	
610	RDWY. ILLUM ASSEM. (SA40T-10) (0.25 KW)S	EA	1
610	UNDERPASS ILLUM ASSEM. (SPL-CO) (0.15 KW)S(TY1)	EA	
613	HIGH MAST ILLUM POLE 150 FT. (100 MPH)	EA	1
614	HIGH MAST ILLUM ASM (12-400 WATT) (TY B)	EA	1
618	CONDUIT (RMC) (1 IN.)	LF	
618	CONDUIT (PVC) (SCH 40) (2 IN.)	LF	300
618	CONDUIT (PVC) (SCH 80) (2 IN.) (BORED)	LF	63
620	ELEC. CONDUCTOR (#8 BARE)	LF	363
620	ELEC. CONDUCTOR (#6 BARE)	LF	
620	ELEC. CONDUCTOR (#10 TY XHHW)	LF	
620	ELEC. CONDUCTOR (#8 TY XHHW)	LF	726
620	ELEC. CONDUCTOR (#6 TY XHHW)	LF	
624	GROUND BOX (RPM) (TY A) (1223II) APRON	EA	1
628	ELEC. SERVICE (TY A) (240/480) 100(NS) AL(T) TP(O)	EA	
656	FND FOR RDWY ILL. ASM. (TY A) (30 IN. DR SH)	LF	6

LUMINAIRE LOCATIONS

LUM. NO.	STATION	OFFSET TO BASE	DESCRIPTION
F-2	724+00	130'LF.	(12) (0.25 KW)
H-22	730+00	0'	(SP40S-10-10) (0.25 KW)S
H-21	730+84	92'RT.	(SA40T-10) (0.25 KW)S

LEGEND

- CONCRETE BARRIER FIXTURE TYPE (SP40S-10-10) (0.25 KW)S
- ROADWAY FIXTURE TYPE (SA40T-10) (0.25KW)S
- HIGH MAST ILLUM POLE TYPE (B) (12-400WATT)
- 2" SCHEDULE 40 PVC CONDUIT
- 2" SCHEDULE 80 PVC CONDUIT BORED
- CONDUIT RUN NUMBER
- JUNCTION BOX
- GROUND BOX

STATE OF TEXAS
JOHN D. COAD, JR.
68521
LICENSED PROFESSIONAL ENGINEER
8-14-03

Parsons Brinckerhoff Quade & Douglas Inc.

Texas Department of Transportation

© 2002 by TxDOT

US 281
ILLUMINATION LAYOUTS

STA. 720+00 "BLI" TO
STA. 732+00 "BLI"

PLAN 1"= 100' HORIZ

SHEET 9 OF 19

DESIGNED: DPL	FED. RD DIV. NO.	STATE	FEDERAL AID PROJECT No.		HIGHWAY No.	
CHECKED: GTC	6	TEXAS	XXXXXXXX		US 281	
DRAWN: JTM	STATE DISTRICT	COUNTY	CONTROL No.	SECTION No.	JOB No.	SHEET No.
CHECKED:	PHARR	HIDALGO	0255	08	091	742

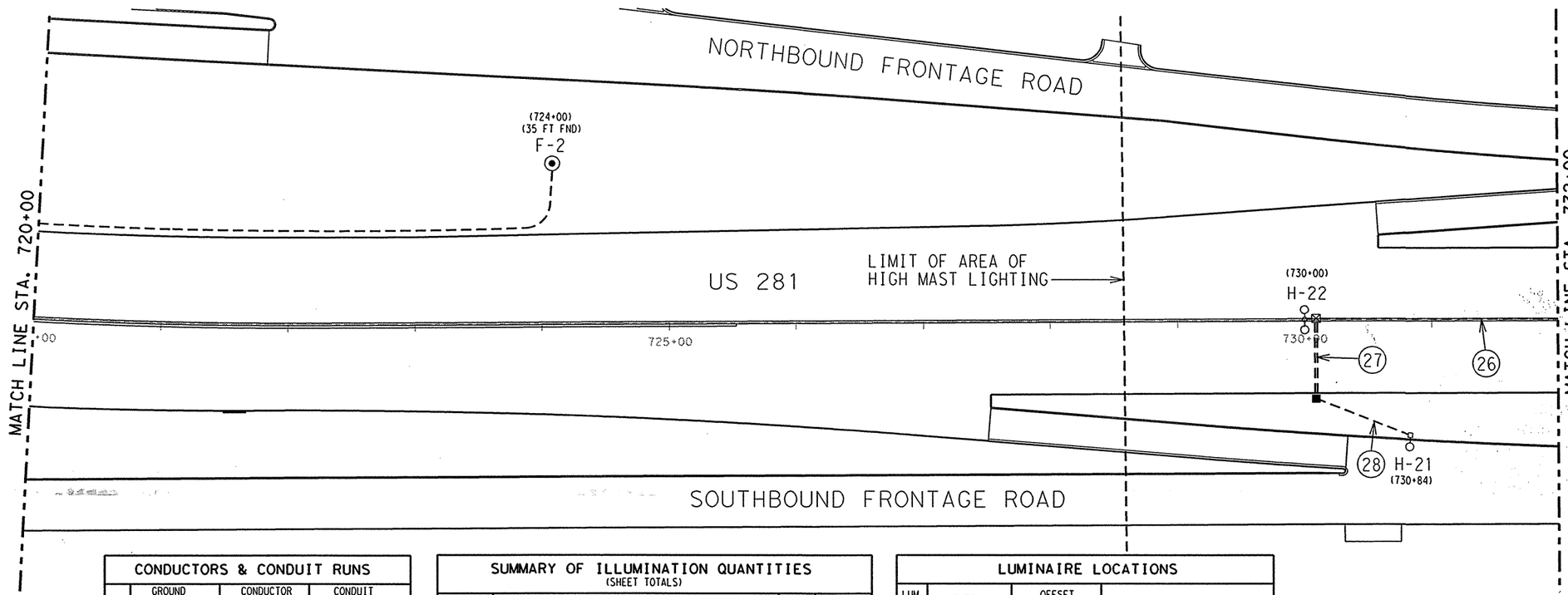

NOTES:

1. ALL STATION NUMBERS IN LUMINAIRE LOCATION SCHEDULE ARE REFERENCED FROM THE CENTER LINE.
2. ALL INDICATED LENGTHS IN CONDUIT AND CONDUCTOR RUNS ARE HORIZONTAL ONLY, ADD ADDITIONAL LENGTH FOR SPLICING AND VERTICAL RUN.
3. SEE STANDARD PLANS, RID(1)-98 THRU RID(4)-98 FOR MAST ARM AND LUMINAIRE POLE, CONDUIT AND JUNCTION BOX INSTALLATION DETAILS ON CAST-IN-PLACE AND SINGLE SLOPE CONCRETE BARRIER (TYPE 4).
4. SEE STANDARD PLANS, ED(1)-03 THRU ED(12)-03 FOR ELECTRICAL MATERIALS AND METHODS, WIRE MANAGEMENT, ELECTRICAL SERVICE AND DISTRIBUTION, AND PHOTOCELL INSTALLATIONS.
5. SEE STANDARD PLANS, HMID(1)-03 THRU HMID(9)-03 FOR HIGH MAST ILLUMINATION DETAILS, HMIP(1)-98 THRU HMIP(2)-98 FOR HIGH MAST ILLUMINATION POLES, AND HMIF(1)-98 THRU HMIF(2)-98 FOR HIGH MAST ILLUMINATION POLE FOUNDATIONS.

CONDUCTORS & CONDUIT RUNS

RUN NO.	GROUND SIZE & LENGTH (FEET)		CONDUCTOR SIZE & LENGTH (FEET)		CONDUIT SIZE & LENGTH (FEET)	
	#8 BARE	#6 BARE	#8 XHHW	#6 XHHW	2" PVC (SCH 40)	2" PVC (SCH 80) BORED
28	80		160		80	
27	63		126			63
26	220		440		220	

SUMMARY OF ILLUMINATION QUANTITIES
(SHEET TOTALS)

ITEM	DESCRIPTION	UNIT	QUANTITY
416	FND FOR HI MAST ASSY (60 IN DR SH)	LF	35
432	RIPRAP	CY	2.56
610	RDWY. ILLUM ASSEM. (SP40S-10-10)(0.25 KW)S	EA	1
610	RDWY. ILLUM ASSEM. (SP40S-10)(0.25 KW)S	EA	
610	RDWY. ILLUM ASSEM. (SA40T-10)(0.25 KW)S	EA	1
610	UNDERPASS ILLUM ASSEM. (SPL-CO)(0.15 KW)S(TY1)	EA	
613	HIGH MAST ILLUM POLE 150 FT. (100 MPH)	EA	1
614	HIGH MAST ILLUM ASM (12-400 WATT) (TY B)	EA	1
618	CONDUIT (RMC) (1 IN.)	LF	
618	CONDUIT (PVC) (SCH 40) (2 IN.)	LF	300
618	CONDUIT (PVC) (SCH 80) (2 IN.) (BORED)	LF	63
620	ELEC. CONDUCTOR (#8 BARE)	LF	363
620	ELEC. CONDUCTOR (#6 BARE)	LF	
620	ELEC. CONDUCTOR (#10 TY XHHW)	LF	
620	ELEC. CONDUCTOR (#8 TY XHHW)	LF	726
620	ELEC. CONDUCTOR (#6 TY XHHW)	LF	
624	GROUND BOX (RPM) (TY A) (122311) APRON	EA	1
628	ELEC. SERVICE (TY A) (240/480) 100(NS) AL(T) TP(O)	EA	
656	FND FOR RDWY ILL. ASM. (TY A) (30 IN. DR SH)	LF	6

LUMINAIRE LOCATIONS

LUM. NO.	STATION	OFFSET TO BASE	DESCRIPTION
F-2	724+00	130'LF.	(HMIA)(12-400WATT)(TY B)
H-22	730+00	0'	(SP40S-10-10)(0.25 KW)S
H-21	730+84	92'RT.	(SA40T-10)(0.25 KW)S

LEGEND

- CONCRETE BARRIER FIXTURE TYPE (SP40S-10-10)(0.25 KW)S
- ROADWAY FIXTURE TYPE (SA40T-10)(0.25KW)S
- HIGH MAST ILLUM POLE TYPE (B)(12-400WATT)
- 2" SCHEDULE 40 PVC CONDUIT
- 2" SCHEDULE 80 PVC CONDUIT BORED
- CONDUIT RUN NUMBER
- JUNCTION BOX
- GROUND BOX

REVISED
9-26-03

STATE OF TEXAS
JOHN D. COAD JR.
58521
REGISTERED
PROFESSIONAL ENGINEER
9-24-03

Parsons Brinckerhoff Quade & Douglas Inc.

Texas Department of Transportation

© 2002 by TxDOT

US 281
ILLUMINATION LAYOUTS

STA. 720+00 "BL1" TO
STA. 732+00 "BL1"

PLAN 1" = 100' HORIZ

SHEET 9 OF 19

DESIGNED: DPL	FED. RD DIV. NO.	STATE	FEDERAL AID PROJECT No.		HIGHWAY No.
CHECKED: GTC	6	TEXAS	XXXXXXXX		US 281
DRAWN: JTM	STATE DISTRICT	COUNTY	CONTROL No.	SECTION No.	JOB No.	SHEET No.
CHECKED:	PHARR	HIDALGO	0255	08	091	742

mohapp 04:30:47 PM 09/24/2003
Y:\22322A *Texas*US281\20DC\Dwgs\Elec\Output\281-E09.dgn

mohapp
03:58:27 PM
08/06/2003
y:\22322A *Texas*US281\20DC\DwgsElec\Output\281-E10.dgn

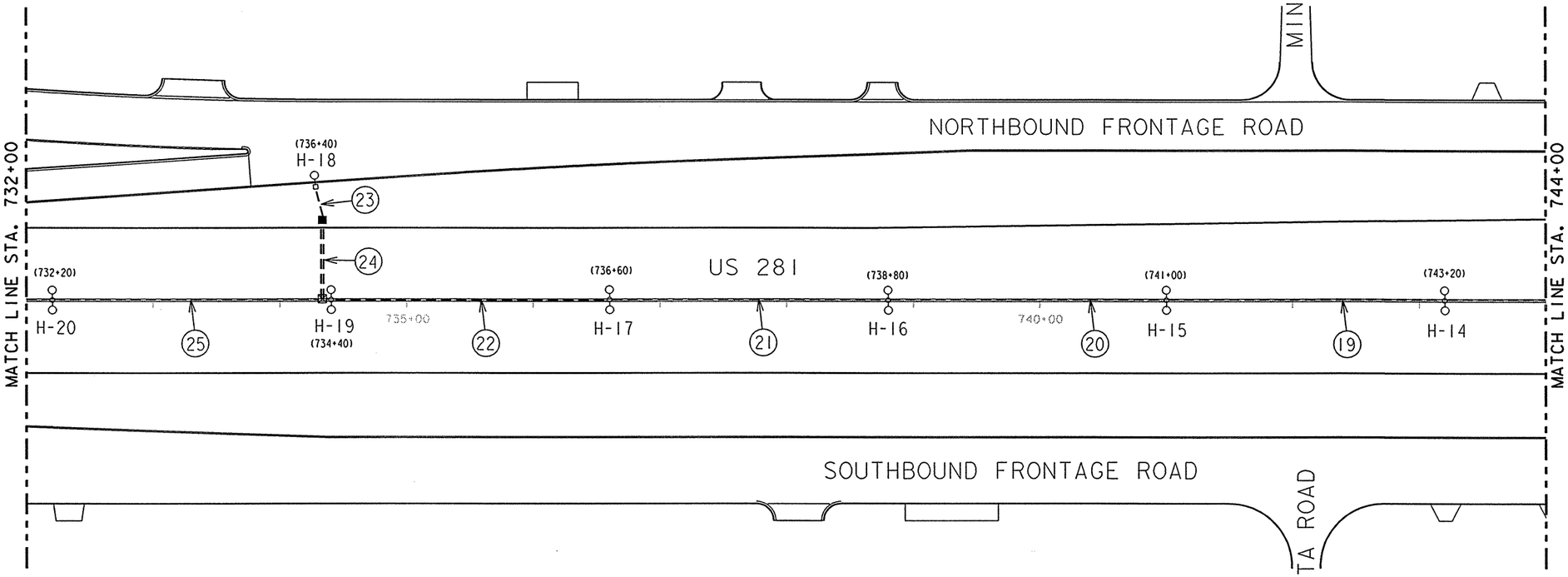

NOTES:

1. ALL STATION NUMBERS IN LUMINAIRE LOCATION SCHEDULE ARE REFERENCED FROM THE CENTER LINE.
2. ALL INDICATED LENGTHS IN CONDUIT AND CONDUCTOR RUNS ARE HORIZONTAL ONLY, ADD ADDITIONAL LENGTH FOR SPLICING AND VERTICAL RUN.
3. SEE STANDARD PLANS, RID(1)-98 THRU RID(4)-98 FOR MAST ARM AND LUMINAIRE POLE, CONDUIT AND JUNCTION BOX INSTALLATION DETAILS ON CAST-IN-PLACE AND SINGLE SLOPE CONCRETE BARRIER (TYPE 4).
4. SEE STANDARD PLANS, ED(1)-03 THRU ED(12)-03 FOR ELECTRICAL MATERIALS AND METHODS, WIRE MANAGEMENT, ELECTRICAL SERVICE AND DISTRIBUTION, AND PHOTOCELL INSTALLATIONS.
5. SEE STANDARD PLANS, HMID(1)-03 THRU HMID(9)-03 FOR HIGH MAST ILLUMINATION DETAILS, HMIP(1)-98 THRU HMIP(2)-98 FOR HIGH MAST ILLUMINATION POLES, AND HMIF(1)-98 THRU HMIF(2)-98 FOR HIGH MAST ILLUMINATION POLE FOUNDATIONS.

CONDUCTORS & CONDUIT RUNS

RUN NO.	GROUND SIZE & LENGTH (FEET)		CONDUCTOR SIZE & LENGTH (FEET)		CONDUIT SIZE & LENGTH (FEET)	
	#8 BARE	#6 BARE	#8 XHHW	#6 XHHW	2" PVC (SCH 40)	2" PVC (SCH 80) BORED
25	220		440		220	
24	63		126			63
23	27		54		27	
22	220		440		220	
21	220		440		220	
20	220		440		220	
19	220		440		220	

SUMMARY OF ILLUMINATION QUANTITIES
(SHEET TOTALS)

ITEM	DESCRIPTION	UNIT	QUANTITY
610	RDWY. ILLUM ASSEM. (SP40S-10-10)(0.25 KW)S	EA	6
610	RDWY. ILLUM ASSEM. (SP40S-10)(0.25 KW)S	EA	
610	RDWY. ILLUM ASSEM. (SA40T-10)(0.25 KW)S	EA	1
610	UNDERPASS ILLUM ASSEM. (SPL-CO)(0.15 KW)S(TY1)	EA	
618	CONDUIT (RMC) (1 IN.)	LF	
618	CONDUIT (PVC) (SCH 40) (2 IN.)	LF	1,127
618	CONDUIT (PVC) (SCH 80) (2 IN.) (BORED)	LF	63
620	ELEC. CONDUCTOR (#8 BARE)	LF	1,190
620	ELEC. CONDUCTOR (#6 BARE)	LF	
620	ELEC. CONDUCTOR (#10 TY XHHW)	LF	
620	ELEC. CONDUCTOR (#8 TY XHHW)	LF	2,380
620	ELEC. CONDUCTOR (#6 TY XHHW)	LF	
624	GROUND BOX (RPM) (TY A) (122311) APRON	EA	1
628	ELEC. SERVICE (TY A) (240/480) 100(NS) AL(T) TP(O)	EA	
656	FND FOR RDWY ILL. ASM. (TY A) (30 IN. DR SH)	LF	36

LUMINAIRE LOCATIONS

LUM. NO.	STATION	OFFSET TO BASE	DESCRIPTION
H-20	732+20	0'	(SP40S-10-10)(0.25 KW)S
H-19	734+40	0'	(SP40S-10-10)(0.25 KW)S
H-18	736+40	90'LT.	(SA40T-10)(0.25 KW)S
H-17	736+60	0'	(SP40S-10-10)(0.25 KW)S
H-16	738+80	0'	(SP40S-10-10)(0.25 KW)S
H-15	741+00	0'	(SP40S-10-10)(0.25 KW)S
H-14	743+20	0'	(SP40S-10-10)(0.25 KW)S

LEGEND

- CONCRETE BARRIER FIXTURE TYPE (SP40S-10-10)(0.25 KW)S
- ROADWAY FIXTURE TYPE (SA40T-10)(0.25KW)S
- 2" SCHEDULE 40 PVC CONDUIT
- 2" SCHEDULE 80 PVC CONDUIT BORED
- CONDUIT RUN NUMBER
- JUNCTION BOX
- GROUND BOX

STATE OF TEXAS
JOHN D. COAD JR.
58021
REGISTERED
PROFESSIONAL ENGINEER
6-13

Parsons Brinckerhoff Quade & Douglas Inc.

Texas Department of Transportation

© 2002 by TxDOT

US 281
ILLUMINATION LAYOUTS

STA. 732+00 "BL1" TO
STA. 744+00 "BL1"

PLAN 1"= 100' HORIZ

SHEET 10 OF 19

DESIGNED: DPL	FED. RD DIV. NO.	STATE	FEDERAL AID PROJECT NO.	HIGHWAY NO.
CHECKED: GTC	6	TEXAS	XXXXXXXX	US 281

DRAWN: JTM	STATE DISTRICT	COUNTY	CONTROL NO.	SECTION NO.	JOB NO.	SHEET NO.
CHECKED:	PHARR	HIDALGO	0255	08	091	743

mohapp
03:58:27 PM
08/06/2003
y:\22322A *Texas*US281\20DC\Dwgs\Elec\Output\281-E10.dgn

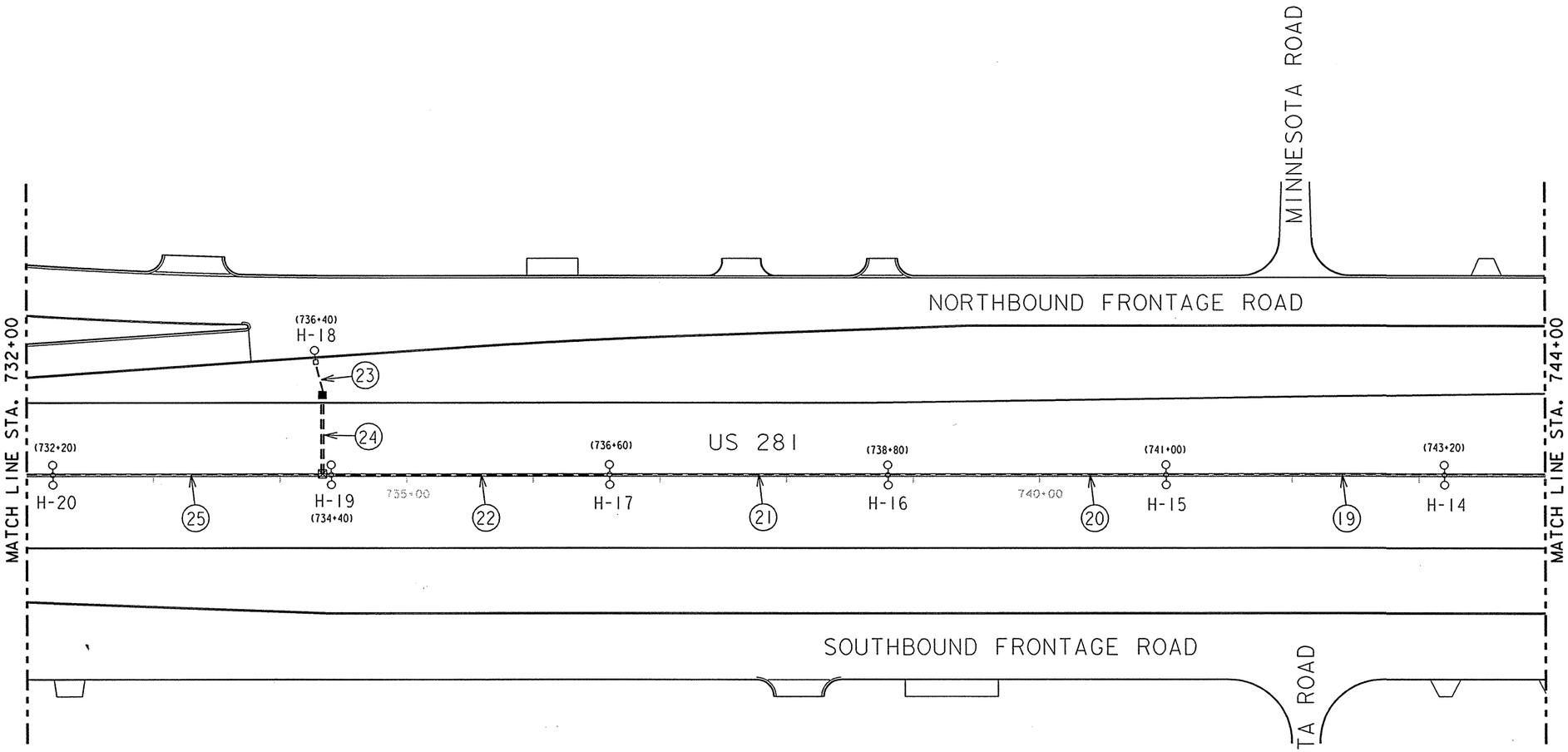

NOTES:

1. ALL STATION NUMBERS IN LUMINAIRE LOCATION SCHEDULE ARE REFERENCED FROM THE CENTER LINE.
2. ALL INDICATED LENGTHS IN CONDUIT AND CONDUCTOR RUNS ARE HORIZONTAL ONLY, ADD ADDITIONAL LENGTH FOR SPLICING AND VERTICAL RUN.
3. SEE STANDARD PLANS, RID(1)-98 THRU RID(4)-98 FOR MAST ARM AND LUMINAIRE POLE, CONDUIT AND JUNCTION BOX INSTALLATION DETAILS ON CAST-IN-PLACE AND SINGLE SLOPE CONCRETE BARRIER (TYPE 4).
4. SEE STANDARD PLANS, ED(1)-03 THRU ED(12)-03 FOR ELECTRICAL MATERIALS AND METHODS, WIRE MANAGEMENT, ELECTRICAL SERVICE AND DISTRIBUTION, AND PHOTOCELL INSTALLATIONS.
5. SEE STANDARD PLANS, HMID(1)-03 THRU HMID(9)-03 FOR HIGH MAST ILLUMINATION DETAILS, HMIP(1)-98 THRU HMIP(2)-98 FOR HIGH MAST ILLUMINATION POLES, AND HMIF(1)-98 THRU HMIF(2)-98 FOR HIGH MAST ILLUMINATION POLE FOUNDATIONS.

CONDUCTORS & CONDUIT RUNS

RUN NO.	GROUND SIZE & LENGTH (FEET)		CONDUCTOR SIZE & LENGTH (FEET)		CONDUIT SIZE & LENGTH (FEET)	
	#8 BARE	#6 BARE	#8 XHHW	#6 XHHW	2" PVC (SCH 40)	2" PVC (SCH 80) BORED
25	220		440		220	
24	63		126			63
23	27		54		27	
22	220		440		220	
21	220		440		220	
20	220		440		220	
19	220		440		220	

SUMMARY OF ILLUMINATION QUANTITIES
(SHEET TOTALS)

ITEM	DESCRIPTION	UNIT	QUANTITY
610	RDWY. ILLUM ASSEM. (SP40S-10-10)(0.25 KW)S	EA	6
610	RDWY. ILLUM ASSEM. (SP40S-10)(0.25 KW)S	EA	
610	RDWY. ILLUM ASSEM. (SA40T-10)(0.25 KW)S	EA	1
610	UNDERPASS ILLUM ASSEM. (SPL-CO)(0.15 KW)S(TY1)	EA	
618	CONDUIT (RMC) (1 IN.)	LF	
618	CONDUIT (PVC) (SCH 40) (2 IN.)	LF	1,127
618	CONDUIT (PVC) (SCH 80) (2 IN.) (BORED)	LF	63
620	ELEC. CONDUCTOR (#8 BARE)	LF	1,190
620	ELEC. CONDUCTOR (#6 BARE)	LF	
620	ELEC. CONDUCTOR (#10 TY XHHW)	LF	
620	ELEC. CONDUCTOR (#8 TY XHHW)	LF	2,380
620	ELEC. CONDUCTOR (#6 TY XHHW)	LF	
624	GROUND BOX (RPM) (TY A) (122311) APRON	EA	1
628	ELEC. SERVICE (TY A) (240/480) 100(NS) AL(T) TP(O)	EA	
656	FND FOR RDWY ILL. ASM. (TY A) (30 IN. DR SH)	LF	60 A

LUMINAIRE LOCATIONS

LUM. NO.	STATION	OFFSET TO BASE	DESCRIPTION
H-20	732+20	0'	(SP40S-10-10)(0.25 KW)S
H-19	734+40	0'	(SP40S-10-10)(0.25 KW)S
H-18	736+40	90'LT.	(SA40T-10)(0.25 KW)S
H-17	736+60	0'	(SP40S-10-10)(0.25 KW)S
H-16	738+80	0'	(SP40S-10-10)(0.25 KW)S
H-15	741+00	0'	(SP40S-10-10)(0.25 KW)S
H-14	743+20	0'	(SP40S-10-10)(0.25 KW)S

LEGEND

- CONCRETE BARRIER FIXTURE TYPE (SP40S-10-10)(0.25 KW)S
- ROADWAY FIXTURE TYPE (SA40T-10)(0.25KW)S
- 2" SCHEDULE 40 PVC CONDUIT
- 2" SCHEDULE 80 PVC CONDUIT BORED
- CONDUIT RUN NUMBER
- JUNCTION BOX
- GROUND BOX

A Revised 9/26/03

STATE OF TEXAS
JOHN D. COAD JR.
58021
REGISTERED
PROFESSIONAL ENGINEER
7-1-03

Parsons Brinckerhoff Quade & Douglas Inc.

Texas Department of Transportation

© 2002 by TxDOT

US 281
ILLUMINATION LAYOUTS

STA. 732+00 "BL1" TO
STA. 744+00 "BL1"

PLAN 1"= 100' HORIZ

SHEET 10 OF 19

DESIGNED: DPL	FED. RD DIV. NO.	STATE	FEDERAL AID PROJECT NO.		HIGHWAY NO.
CHECKED: GTC	6	TEXAS	XXXXXXXX		US 281
DRAWN: JTM	STATE DISTRICT	COUNTY	CONTROL NO.	SECTION NO.	JOB NO.	SHEET NO.
CHECKED:	PHARR	HIDALGO	0255	08	091	743

mohapp
04:12:41 PM
08/06/2003
y:\22322A *Texas*US281\20DC\Dwgs\Elec\Output\281-E11.dgn

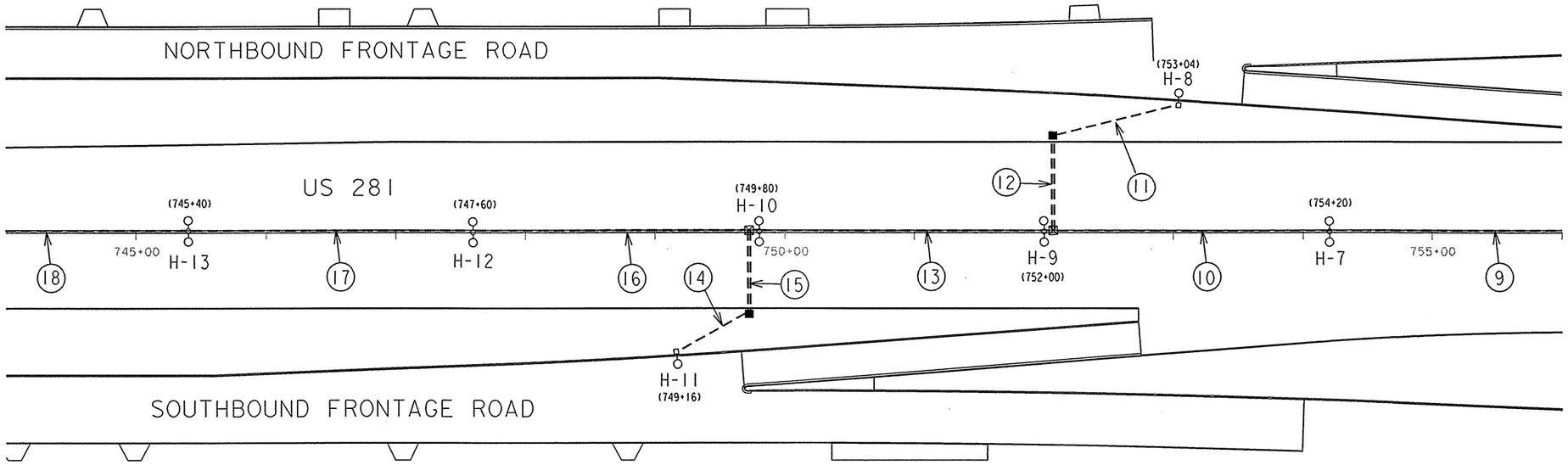

NOTES:

1. ALL STATION NUMBERS IN LUMINAIRE LOCATION SCHEDULE ARE REFERENCED FROM THE CENTER LINE.
2. ALL INDICATED LENGTHS IN CONDUIT AND CONDUCTOR RUNS ARE HORIZONTAL ONLY. ADD ADDITIONAL LENGTH FOR SPLICING AND VERTICAL RUN.
3. SEE STANDARD PLANS, RID(1)-98 THRU RID(4)-98 FOR MAST ARM AND LUMINAIRE POLE, CONDUIT AND JUNCTION BOX INSTALLATION DETAILS ON CAST-IN-PLACE AND SINGLE SLOPE CONCRETE BARRIER (TYPE 4).
4. SEE STANDARD PLANS, ED(1)-03 THRU ED(12)-03 FOR ELECTRICAL MATERIALS AND METHODS, WIRE MANAGEMENT, ELECTRICAL SERVICE AND DISTRIBUTION, AND PHOTOCELL INSTALLATIONS.
5. SEE STANDARD PLANS, HMID(1)-03 THRU HMID(9)-03 FOR HIGH MAST ILLUMINATION DETAILS, HMIP(1)-98 THRU HMIP(2)-98 FOR HIGH MAST ILLUMINATION POLES, AND HMIF(1)-98 THRU HMIF(2)-98 FOR HIGH MAST ILLUMINATION POLE FOUNDATIONS.

CONDUCTORS & CONDUIT RUNS

RUN NO.	GROUND SIZE & LENGTH (FEET)		CONDUCTOR SIZE & LENGTH (FEET)		CONDUIT SIZE & LENGTH (FEET)	
	#8 BARE	#6 BARE	#8 XHHW	#6 XHHW	2" PVC (SCH 40)	2" PVC (SCH 80) BORED
18	220		440		220	
17	220		440		220	
16	220		440		220	
15	63		126			63
14	63		126		63	
13	220		440		220	
12	63		126			63
11	100		200		100	
10	220		440		220	
9	220		440		220	

SUMMARY OF ILLUMINATION QUANTITIES
(SHEET TOTALS)

ITEM	DESCRIPTION	UNIT	QUANTITY
610	RDWY. ILLUM ASSEM. (SP40S-10-10)(0.25 KW)S	EA	5
610	RDWY. ILLUM ASSEM. (SP40S-10)(0.25 KW)S	EA	
610	RDWY. ILLUM ASSEM. (SA40T-10)(0.25 KW)S	EA	2
610	UNDERPASS ILLUM ASSEM. (SPL-CO)(0.15 KW)S(TY1)	EA	
618	CONDUIT (RMC) (1 IN.)	LF	
618	CONDUIT (PVC) (SCH 40) (2 IN.)	LF	1,483
618	CONDUIT (PVC) (SCH 80) (2 IN.) (BORED)	LF	126
620	ELEC. CONDUCTOR (#8 BARE)	LF	1,609
620	ELEC. CONDUCTOR (#6 BARE)	LF	
620	ELEC. CONDUCTOR (#10 TY XHHW)	LF	
620	ELEC. CONDUCTOR (#8 TY XHHW)	LF	3,218
620	ELEC. CONDUCTOR (#6 TY XHHW)	LF	
624	GROUND BOX (RPM) (TY A) (12"X24") APRON	EA	2
628	ELEC. SERVICE (TY A) (240/480) 100(NS) AL(T) TP(O)	EA	
656	FND FOR RDWY ILL. ASM. (TY A) (30 IN. DR SH)	LF	30

LUMINAIRE LOCATIONS

LUM. NO.	STATION	OFFSET TO BASE	DESCRIPTION
H-13	745+40	0'	(SP40S-10-10)(0.25 KW)S
H-12	747+60	0'	(SP40S-10-10)(0.25 KW)S
H-11	749+16	92'RT.	(SA40T-10)(0.25 KW)S
H-10	749+80	0'	(SP40S-10-10)(0.25 KW)S
H-9	752+00	0'	(SP40S-10-10)(0.25 KW)S
H-8	753+04	100'LT.	(SA40T-10)(0.25 KW)S
H-7	754+20	0'	(SP40S-10-10)(0.25 KW)S

LEGEND

- CONCRETE BARRIER FIXTURE TYPE (SP40S-10-10)(0.25 KW)S
- ROADWAY FIXTURE TYPE (SA40T-10)(0.25KW)S
- 2" SCHEDULE 40 PVC CONDUIT
- 2" SCHEDULE 80 PVC CONDUIT BORED
- CONDUIT RUN NUMBER
- JUNCTION BOX
- GROUND BOX

STATE OF TEXAS
JOHN D. COAD, JR.
58521
PROFESSIONAL ENGINEER
8/2003

Parsons Brinckerhoff Quade & Douglas Inc.

Texas Department of Transportation

© 2002 by TxDOT

US 281
ILLUMINATION LAYOUTS

STA. 732+00 "BL1" TO
STA. 744+00 "BL1"

PLAN 1"= 100' HORIZ

SHEET 11 OF 19

DESIGNED: DPL	FED. RD DIV. No.	STATE	FEDERAL AID PROJECT No.	HIGHWAY No.
CHECKED: GTC	6	TEXAS	XXXXXXXX	US 281

DRAWN: JTM	STATE DISTRICT	COUNTY	CONTROL No.	SECTION No.	JOB No.	SHEET No.
CHECKED:	PHARR	HIDALGO	0255	08	091	744

mohapp
04:12:41 PM
08/06/2003
y:\22322A *Texas*US281\20DC\Dwgs\Elec\Output\281-E11.dgn

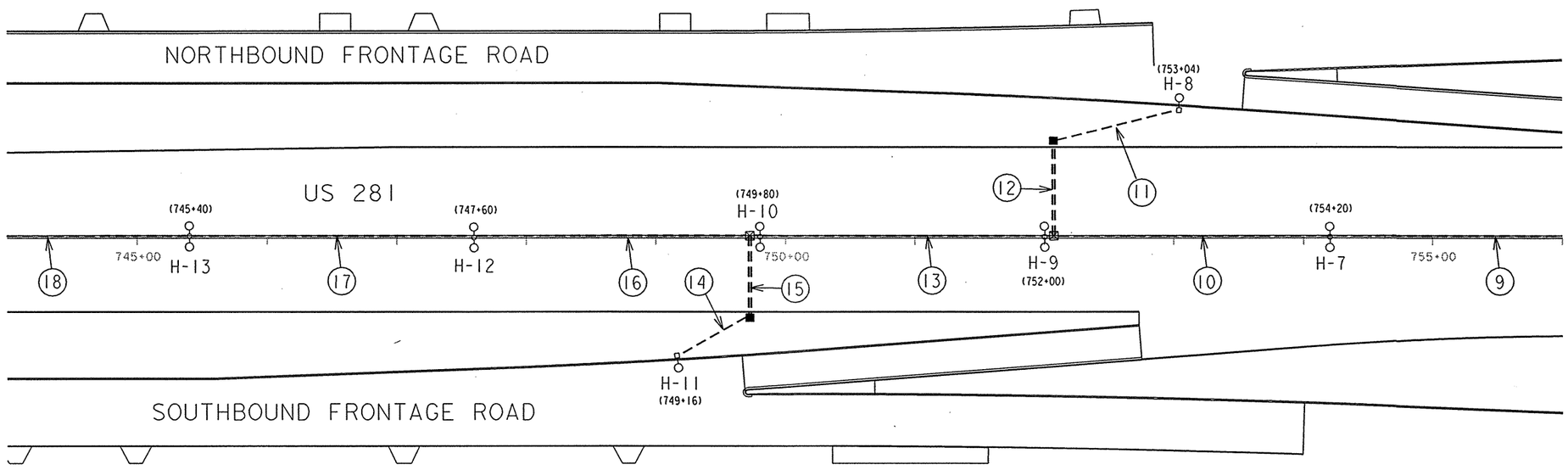

NOTES:

1. ALL STATION NUMBERS IN LUMINAIRE LOCATION SCHEDULE ARE REFERENCED FROM THE CENTER LINE.
2. ALL INDICATED LENGTHS IN CONDUIT AND CONDUCTOR RUNS ARE HORIZONTAL ONLY. ADD ADDITIONAL LENGTH FOR SPLICING AND VERTICAL RUN.
3. SEE STANDARD PLANS, RID(1)-98 THRU RID(4)-98 FOR MAST ARM AND LUMINAIRE POLE, CONDUIT AND JUNCTION BOX INSTALLATION DETAILS ON CAST-IN-PLACE AND SINGLE SLOPE CONCRETE BARRIER (TYPE 4).
4. SEE STANDARD PLANS, ED(1)-03 THRU ED(12)-03 FOR ELECTRICAL MATERIALS AND METHODS, WIRE MANAGEMENT, ELECTRICAL SERVICE AND DISTRIBUTION, AND PHOTOCELL INSTALLATIONS.
5. SEE STANDARD PLANS, HMID(1)-03 THRU HMID(9)-03 FOR HIGH MAST ILLUMINATION DETAILS, HMIP(1)-98 THRU HMIP(2)-98 FOR HIGH MAST ILLUMINATION POLES, AND HMIF(1)-98 THRU HMIF(2)-98 FOR HIGH MAST ILLUMINATION POLE FOUNDATIONS.

CONDUCTORS & CONDUIT RUNS

RUN NO.	GROUND SIZE & LENGTH (FEET)		CONDUCTOR SIZE & LENGTH (FEET)		CONDUIT SIZE & LENGTH (FEET)	
	#8 BARE	#6 BARE	#8 XHHW	#6 XHHW	2" PVC (SCH 40)	2" PVC (SCH 80) BORED
18	220		440		220	
17	220		440		220	
16	220		440		220	
15	63		126			63
14	63		126		63	
13	220		440		220	
12	63		126			63
11	100		200		100	
10	220		440		220	
9	220		440		220	

SUMMARY OF ILLUMINATION QUANTITIES
(SHEET TOTALS)

ITEM	DESCRIPTION	UNIT	QUANTITY
610	RDWY. ILLUM ASSEM. (SP40S-10-10)(0.25 KW)S	EA	5
610	RDWY. ILLUM ASSEM. (SP40S-10)(0.25 KW)S	EA	
610	RDWY. ILLUM ASSEM. (SA40T-10)(0.25 KW)S	EA	2
610	UNDERPASS ILLUM ASSEM. (SPL-CO)(0.15 KW)S(TY1)	EA	
618	CONDUIT (RMC) (1 IN.)	LF	
618	CONDUIT (PVC) (SCH 40) (2 IN.)	LF	1,483
618	CONDUIT (PVC) (SCH 80) (2 IN.) (BORED)	LF	126
620	ELEC. CONDUCTOR (#8 BARE)	LF	1,609
620	ELEC. CONDUCTOR (#6 BARE)	LF	
620	ELEC. CONDUCTOR (#10 TY XHHW)	LF	
620	ELEC. CONDUCTOR (#8 TY XHHW)	LF	3,218
620	ELEC. CONDUCTOR (#6 TY XHHW)	LF	
624	GROUND BOX (RPM) (TY A) (122311) APRON	EA	2
628	ELEC. SERVICE (TY A) (240/480) 100(NS) AL(T) TP(O)	EA	
656	FND FOR RDWY ILL. ASM. (TY A) (30 IN. DR SH)	LF	12 Δ

LUMINAIRE LOCATIONS

LUM. NO.	STATION	OFFSET TO BASE	DESCRIPTION
H-13	745+40	0'	(SP40S-10-10)(0.25 KW)S
H-12	747+60	0'	(SP40S-10-10)(0.25 KW)S
H-11	749+16	92'RT.	(SA40T-10)(0.25 KW)S
H-10	749+80	0'	(SP40S-10-10)(0.25 KW)S
H-9	752+00	0'	(SP40S-10-10)(0.25 KW)S
H-8	753+04	100'LT.	(SA40T-10)(0.25 KW)S
H-7	754+20	0'	(SP40S-10-10)(0.25 KW)S

LEGEND

- CONCRETE BARRIER FIXTURE TYPE (SP40S-10-10)(0.25 KW)S
- ROADWAY FIXTURE TYPE (SA40T-10)(0.25KW)S
- 2" SCHEDULE 40 PVC CONDUIT
- 2" SCHEDULE 80 PVC CONDUIT BORED
- CONDUIT RUN NUMBER
- JUNCTION BOX
- GROUND BOX

Δ REVISED 9/26/03

STATE OF TEXAS
JOHN D. COAD, JR.
58621
PROFESSIONAL ENGINEER
8/6/03

Parsons Brinckerhoff Quade & Douglas Inc.

Texas Department of Transportation
© 2002 by TxDOT

US 281
ILLUMINATION LAYOUTS

STA. 732+00 "BL1" TO
STA. 744+00 "BL1"

PLAN 1"= 100' HORIZ

SHEET 11 OF 19

DESIGNED: DPL	FED. RD DIV. NO.	STATE	FEDERAL AID PROJECT No.		HIGHWAY No.	
CHECKED: GTC	6	TEXAS	XXXXXXX		US 281	
DRAWN: JTM	STATE DISTRICT	COUNTY	CONTROL No.	SECTION No.	JOB No.	SHEET No.
CHECKED:	PHARR	HIDALGO	0255	08	091	744

mahapp
03:39:11 PM
08/06/2003
y:\22322A *Texas*US281\20DC\Dwgs\Elec\Output\281-E12.dgn

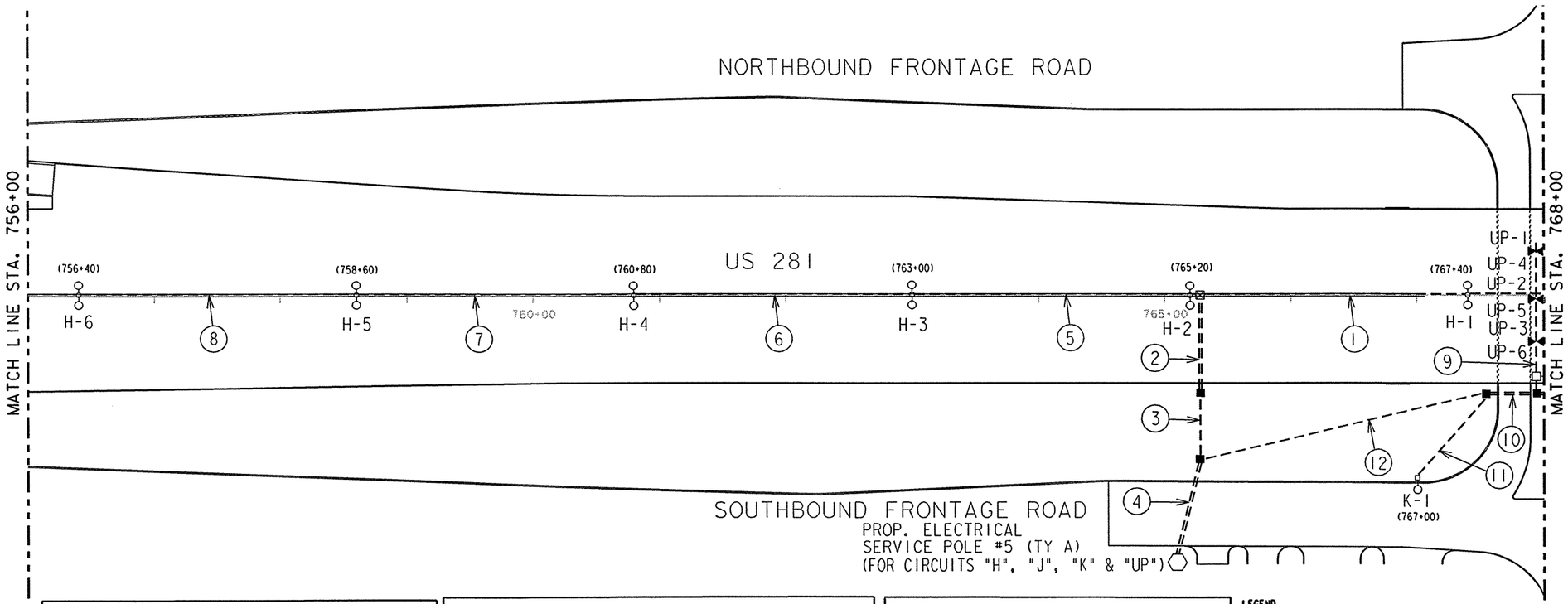

NOTES:

1. ALL STATION NUMBERS IN LUMINAIRE LOCATION SCHEDULE ARE REFERENCED FROM THE CENTER LINE.
2. ALL INDICATED LENGTHS IN CONDUIT AND CONDUCTOR RUNS ARE HORIZONTAL ONLY, ADD ADDITIONAL LENGTH FOR SPLICING AND VERTICAL RUN.
3. SEE STANDARD PLANS, RID(1)-98 THRU RID(4)-98 FOR MAST ARM AND LUMINAIRE POLE, CONDUIT AND JUNCTION BOX INSTALLATION DETAILS ON CAST-IN-PLACE AND SINGLE SLOPE CONCRETE BARRIER (TYPE 4).
4. SEE STANDARD PLANS, ED(1)-03 THRU ED(12)-03 FOR ELECTRICAL MATERIALS AND METHODS, WIRE MANAGEMENT, ELECTRICAL SERVICE AND DISTRIBUTION, AND PHOTOCELL INSTALLATIONS.
5. SEE STANDARD PLANS, HMID(1)-03 THRU HMID(9)-03 FOR HIGH MAST ILLUMINATION DETAILS, HMIP(1)-98 THRU HMIP(2)-98 FOR HIGH MAST ILLUMINATION POLES, AND HMIF(1)-98 THRU HMIF(2)-98 FOR HIGH MAST ILLUMINATION POLE FOUNDATIONS.

CONDUCTORS & CONDUIT RUNS

RUN NO.	GROUND SIZE & LENGTH (FEET)		CONDUCTOR SIZE & LENGTH (FEET)			CONDUIT SIZE & LENGTH (FEET)		
	#8 BARE	#6 BARE	#10 XHHW	#8 XHHW	#6 XHHW	1" RMC	2" PVC (SCH 40)	2" PVC (SCH 80) BORED
12	232			928			232	
11	83			166			83	
10	45			90				45
9	115		230			115		
8	220			440			220	
7	220			440			220	
6	220			440			220	
5	220			440			220	
4	80			640				80
3	53			212			53	
2	78			312				78
1	220			880			220	

SUMMARY OF ILLUMINATION QUANTITIES
(SHEET TOTALS)

ITEM	DESCRIPTION	UNIT	QUANTITY
610	RDWY. ILLUM ASSEM. (SP40S-10-10)(0.25 KW)S	EA	6
610	RDWY. ILLUM ASSEM. (SP40S-10)(0.25 KW)S	EA	
610	RDWY. ILLUM ASSEM. (SA40T-10)(0.25 KW)S	EA	1
610	UNDERPASS ILLUM ASSEM. (SPL-CO)(0.15 KW)S(TY1)	EA	6
618	CONDUIT (RMC) (1 IN.)	LF	115
618	CONDUIT (PVC) (SCH 40) (2 IN.)	LF	1,468
618	CONDUIT (PVC) (SCH 80) (2 IN.) (BORED)	LF	203
620	ELEC. CONDUCTOR (#8 BARE)	LF	1,786
620	ELEC. CONDUCTOR (#6 BARE)	LF	
620	ELEC. CONDUCTOR (#10 TY XHHW)	LF	230
620	ELEC. CONDUCTOR (#8 TY XHHW)	LF	4,524
620	ELEC. CONDUCTOR (#6 TY XHHW))	LF	
624	GROUND BOX (RPM) (TY A) (1223II) APRON	EA	4
628	ELEC. SERVICE (TY A) (240/480) 100(NS) AL(T) TP(O)	EA	1
656	FND FOR RDWY ILL. ASM. (TY A) (30 IN. DR SH)	LF	36

LUMINAIRE LOCATIONS

LUM. NO.	STATION	OFFSET TO BASE	DESCRIPTION
H-6	756+40	0'	(SP40S-10-10)(0.25 KW)S
H-5	758+60	0'	(SP40S-10-10)(0.25 KW)S
H-4	760+80	0'	(SP40S-10-10)(0.25 KW)S
H-3	763+00	0'	(SP40S-10-10)(0.25 KW)S
H-2	765+20	0'	(SP40S-10-10)(0.25 KW)S
H-1	767+40	0'	(SP40S-10-10)(0.25 KW)S
K-1	767+00	145'RT.	(SA40T-10)(0.25KW)S
UP-1			(SPL-CO)(0.15KW)S(TY1)
UP-2			(SPL-CO)(0.15KW)S(TY1)
UP-3			(SPL-CO)(0.15KW)S(TY1)
UP-4			(SPL-CO)(0.15KW)S(TY1)
UP-5			(SPL-CO)(0.15KW)S(TY1)
UP-6			(SPL-CO)(0.15KW)S(TY1)

LEGEND

- CONCRETE BARRIER FIXTURE TYPE (SP40S-10-10)(0.25 KW)S
- ROADWAY FIXTURE TYPE (SA40T-10)(0.25KW)S
- UNDERPASS FIXTURE TYPE U/P(SPL-CO)(0.15KW)S(TY1)
- 4" SCHEDULE 40 PVC CONDUIT
- 4" SCHEDULE 80 PVC CONDUIT BORED
- CONDUIT RUN NUMBER
- JUNCTION BOX
- GROUND BOX
- UNDERPASS LIGHTING DISCONNECT SWITCH

STATE OF TEXAS
JOHN D. COAD
58[illegible]
LICENSED PROFESSIONAL ENGINEER

Parsons Brinckerhoff Quade & Douglas Inc.

Texas Department of Transportation

© 2002 by TxDOT

US 281
ILLUMINATION LAYOUTS

STA. 756+00 "BL1" TO
STA. 768+00 "BL1"

PLAN 1"= 100' HORIZ

SHEET 12 OF 19

DESIGNED: DPL	FED. RD DIV. No.	STATE	FEDERAL AID PROJECT No.			HIGHWAY No.
CHECKED: GTC	6	TEXAS	XXXXXXXX			US 281
DRAWN: JTM	STATE DISTRICT	COUNTY	CONTROL No.	SECTION No.	JOB No.	SHEET No.
CHECKED:	PHARR	HIDALGO	0255	08	091	745

mohapp
03:39:11 PM
08/06/2003
y:\22322A *Texas*US281\200C\DwgsElec\Output\281-E12.dgn

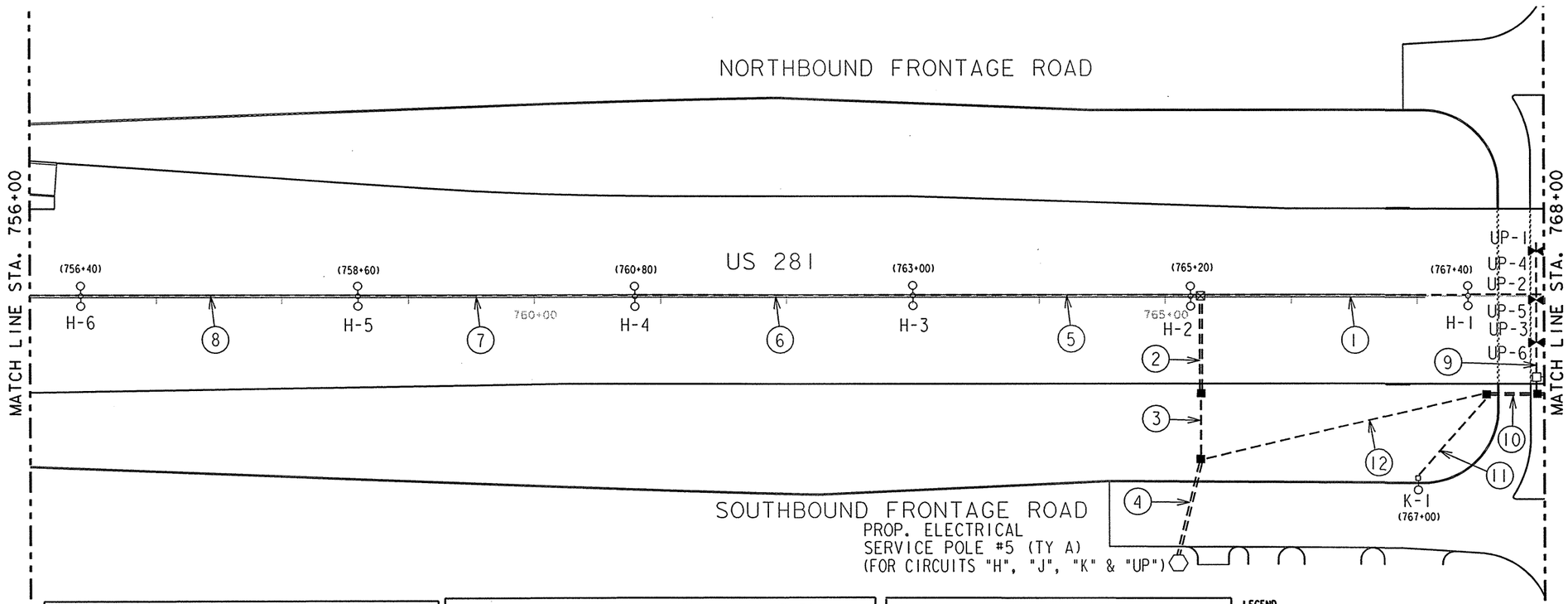

NOTES:

1. ALL STATION NUMBERS IN LUMINAIRE LOCATION SCHEDULE ARE REFERENCED FROM THE CENTER LINE.
2. ALL INDICATED LENGTHS IN CONDUIT AND CONDUCTOR RUNS ARE HORIZONTAL ONLY, ADD ADDITIONAL LENGTH FOR SPLICING AND VERTICAL RUN.
3. SEE STANDARD PLANS, RID(1)-98 THRU RID(4)-98 FOR MAST ARM AND LUMINAIRE POLE, CONDUIT AND JUNCTION BOX INSTALLATION DETAILS ON CAST-IN-PLACE AND SINGLE SLOPE CONCRETE BARRIER (TYPE 4).
4. SEE STANDARD PLANS, ED(1)-03 THRU ED(12)-03 FOR ELECTRICAL MATERIALS AND METHODS, WIRE MANAGEMENT, ELECTRICAL SERVICE AND DISTRIBUTION, AND PHOTOCELL INSTALLATIONS.
5. SEE STANDARD PLANS, HMID(1)-03 THRU HMID(9)-03 FOR HIGH MAST ILLUMINATION DETAILS, HMIP(1)-98 THRU HMIP(2)-98 FOR HIGH MAST ILLUMINATION POLES, AND HMIF(1)-98 THRU HMIF(2)-98 FOR HIGH MAST ILLUMINATION POLE FOUNDATIONS.

CONDUCTORS & CONDUIT RUNS

RUN NO.	GROUND SIZE & LENGTH (FEET)		CONDUCTOR SIZE & LENGTH (FEET)			CONDUIT SIZE & LENGTH (FEET)		
	#8 BARE	#6 BARE	#10 XHHW	#8 XHHW	#6 XHHW	1" RMC	2" PVC (SCH 40)	2" PVC (SCH 80) BORED
12	232			928			232	
11	83			166			83	
10	45			90				45
9	115		230			115		
8	220			440			220	
7	220			440			220	
6	220			440			220	
5	220			440			220	
4	80			640				80
3	53			212			53	
2	78			312				78
1	220			880			220	

SUMMARY OF ILLUMINATION QUANTITIES
(SHEET TOTALS)

ITEM	DESCRIPTION	UNIT	QUANTITY
610	RDWY. ILLUM ASSEM. (SP40S-10-10)(0.25 KW)S	EA	6
610	RDWY. ILLUM ASSEM. (SP40S-10)(0.25 KW)S	EA	
610	RDWY. ILLUM ASSEM. (SA40T-10)(0.25 KW)S	EA	1
610	UNDERPASS ILLUM ASSEM. (SPL-CO)(0.15 KW)S(TY1)	EA	6
618	CONDUIT (RMC) (1 IN.)	LF	115
618	CONDUIT (PVC) (SCH 40) (2 IN.)	LF	1,468
618	CONDUIT (PVC) (SCH 80) (2 IN.) (BORED)	LF	203
620	ELEC. CONDUCTOR (#8 BARE)	LF	1,786
620	ELEC. CONDUCTOR (#6 BARE)	LF	
620	ELEC. CONDUCTOR (#10 TY XHHW)	LF	230
620	ELEC. CONDUCTOR (#8 TY XHHW)	LF	4,524
620	ELEC. CONDUCTOR (#6 TY XHHW))	LF	
624	GROUND BOX (RPM) (TY A) (122311) APRON	EA	4
628	ELEC. SERVICE (TY A) (240/480) 100(NS) AL(T) TP(O)	EA	1
656	FND FOR RDWY ILL. ASM. (TY A) (30 IN. DR SH)	LF	6

A

LUMINAIRE LOCATIONS

LUM. NO.	STATION	OFFSET TO BASE	DESCRIPTION
H-6	756+40	0'	(SP40S-10-10)(0.25 KW)S
H-5	758+60	0'	(SP40S-10-10)(0.25 KW)S
H-4	760+80	0'	(SP40S-10-10)(0.25 KW)S
H-3	763+00	0'	(SP40S-10-10)(0.25 KW)S
H-2	765+20	0'	(SP40S-10-10)(0.25 KW)S
H-1	767+40	0'	(SP40S-10-10)(0.25 KW)S
K-1	767+00	145'RT.	(SA40T-10)(0.25KW)S
UP-1			(SPL-CO)(0.15KW)S(TY1)
UP-2			(SPL-CO)(0.15KW)S(TY1)
UP-3			(SPL-CO)(0.15KW)S(TY1)
UP-4			(SPL-CO)(0.15KW)S(TY1)
UP-5			(SPL-CO)(0.15KW)S(TY1)
UP-6			(SPL-CO)(0.15KW)S(TY1)

LEGEND

- CONCRETE BARRIER FIXTURE TYPE (SP40S-10-10)(0.25 KW)S
- ROADWAY FIXTURE TYPE (SA40T-10)(0.25KW)S
- UNDERPASS FIXTURE TYPE U/P(SPL-CO)(0.15KW)S(TY1)
- 4" SCHEDULE 40 PVC CONDUIT
- 4" SCHEDULE 80 PVC CONDUIT BORED
- CONDUIT RUN NUMBER
- JUNCTION BOX
- GROUND BOX
- UNDERPASS LIGHTING DISCONNECT SWITCH

A REVISED 9/26/03

STATE OF TEXAS
JOHN D. COAD
58932
REGISTERED
PROFESSIONAL ENGINEER

Parsons Brinckerhoff Quade & Douglas Inc.

Texas Department of Transportation

© 2002 by TxDOT

US 281
ILLUMINATION LAYOUTS

STA. 756+00 "BL1" TO
STA. 768+00 "BL1"

PLAN 1"= 100' HORIZ

SHEET 12 OF 19

DESIGNED: DPL	FED. RD DIV. NO.	STATE	FEDERAL AID PROJECT NO.	HIGHWAY NO.
CHECKED: GTC	6	TEXAS	XXXXXXXX	US 281

DRAWN: JTM	STATE DISTRICT	COUNTY	CONTROL NO.	SECTION NO.	JOB NO.	SHEET NO.
CHECKED:	PHARR	HIDALGO	0255	08	091	745

mahapp
03:39:28 PM
08/06/2003
y:\22322A *Texas*US281\200C\DwgsElec\Output\281-E13.dgn

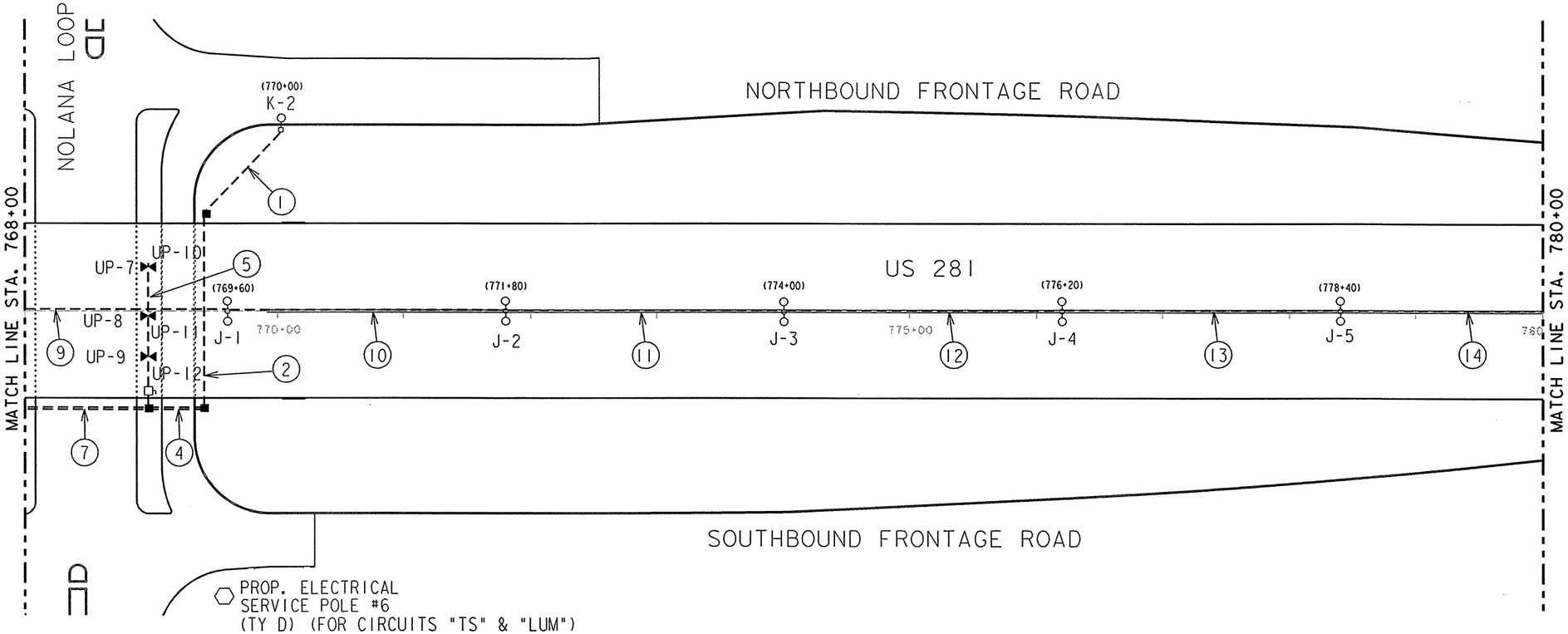

NOTES:

1. ALL STATION NUMBERS IN LUMINAIRE LOCATION SCHEDULE ARE REFERENCED FROM THE CENTER LINE.
2. ALL INDICATED LENGTHS IN CONDUIT AND CONDUCTOR RUNS ARE HORIZONTAL ONLY. ADD ADDITIONAL LENGTH FOR SPLICING AND VERTICAL RUN.
3. SEE STANDARD PLANS, RID(1)-98 THRU RID(4)-98 FOR MAST ARM AND LUMINAIRE POLE, CONDUIT AND JUNCTION BOX INSTALLATION DETAILS ON CAST-IN-PLACE AND SINGLE SLOPE CONCRETE BARRIER (TYPE 4).
4. SEE STANDARD PLANS, ED(1)-03 THRU ED(12)-03 FOR ELECTRICAL MATERIALS AND METHODS, WIRE MANAGEMENT, ELECTRICAL SERVICE AND DISTRIBUTION, AND PHOTOCELL INSTALLATIONS.
5. SEE STANDARD PLANS, HMID(1)-03 THRU HMID(9)-03 FOR HIGH MAST ILLUMINATION DETAILS, HMIP(1)-98 THRU HMIP(2)-98 FOR HIGH MAST ILLUMINATION POLES, AND HMIF(1)-98 THRU HMIF(2)-98 FOR HIGH MAST ILLUMINATION POLE FOUNDATIONS.

CONDUCTORS & CONDUIT RUNS

RUN NO.	GROUND SIZE & LENGTH (FEET)		CONDUCTOR SIZE & LENGTH (FEET)			CONDUIT SIZE & LENGTH (FEET)		
	#8 BARE	#6 BARE	#10 XHHW	#8 XHHW	#6 XHHW	1" RMC	2" PVC (SCH 40)	2" PVC (SCH 80) BORED
1	90			332			90	
2	156			312			156	
4	40			160				40
5	115		230			115		
7	105			420				105
9	220			440			220	
10	220			440			220	
11	220			440			220	
12	220			440			220	
13	220			440			220	
14	220			440			220	

SUMMARY OF ILLUMINATION QUANTITIES
(SHEET TOTALS)

ITEM	DESCRIPTION	UNIT	QUANTITY
610	RDWY. ILLUM ASSEM. (SP40S-10-10)(0.25 KW)S	EA	5
610	RDWY. ILLUM ASSEM. (SP40S-10)(0.25 KW)S	EA	
610	RDWY. ILLUM ASSEM. (SA40T-10)(0.25 KW)S	EA	1
610	UNDERPASS ILLUM ASSEM. (SPL-CO)(0.15 KW)S(TY1)	EA	6
618	CONDUIT (RMC) (1 IN.)	LF	115
618	CONDUIT (PVC) (SCH 40) (2 IN.)	LF	3,137
618	CONDUIT (PVC) (SCH 80) (2 IN.) (BORED)	LF	145
620	ELEC. CONDUCTOR (#8 BARE)	LF	3,397
620	ELEC. CONDUCTOR (#6 BARE)	LF	
620	ELEC. CONDUCTOR (#10 TY XHHW)	LF	230
620	ELEC. CONDUCTOR (#8 TY XHHW)	LF	8,854
620	ELEC. CONDUCTOR (#6 TY XHHW)	LF	
624	GROUND BOX (RPM) (TY A) (122311) APRON	EA	3
628	ELEC. SERVICE (TY D) (120/240) 070(NS) GS(T) TP(O)	EA	1
656	FND FOR RDWY ILL. ASM. (TY A) (30 IN. DR SH)	LF	30

LUMINAIRE LOCATIONS

LUM. NO.	STATION	OFFSET TO BASE	DESCRIPTION
UP-7			(SPL-CO)(0.15KW)S(TY1)
UP-8			(SPL-CO)(0.15KW)S(TY1)
UP-9			(SPL-CO)(0.15KW)S(TY1)
UP-10			(SPL-CO)(0.15KW)S(TY1)
UP-11			(SPL-CO)(0.15KW)S(TY1)
UP-12			(SPL-CO)(0.15KW)S(TY1)
K-2	770+00	145'LT.	(SA40T-10)(0.25KW)S
J-1	769+60	0'	(SP40S-10-10)(0.25 KW)S
J-2	771+80	0'	(SP40S-10-10)(0.25 KW)S
J-3	774+00	0'	(SP40S-10-10)(0.25 KW)S
J-4	776+20	0'	(SP40S-10-10)(0.25 KW)S
J-5	778+40	0'	(SP40S-10-10)(0.25 KW)S
J-6	779+40	116'RT.	(SA40T-10)(0.25KW)S

LEGEND

- CONCRETE BARRIER FIXTURE TYPE (SP40S-10-10)(0.25 KW)S
- ROADWAY FIXTURE TYPE (SA40T-10)(0.25KW)S
- UNDERPASS FIXTURE TYPE U/P(SPL-CO)(0.15KW)S(TY1)
- 2" SCHEDULE 40 PVC CONDUIT
- 2" SCHEDULE 80 PVC CONDUIT BORED
- CONDUIT RUN NUMBER
- JUNCTION BOX
- GROUND BOX
- SERVICE POLE
- UNDERPASS LIGHTING DISCONNECT SWITCH

STATE OF TEXAS
JOHN D. COAD, JR.
58621
REGISTERED PROFESSIONAL ENGINEER
12-12-09

Parsons Brinckerhoff Quade & Douglas Inc.

Texas Department of Transportation

© 2002 by TxDOT

US 281
ILLUMINATION LAYOUTS

STA. 768+00 "BL1" TO
STA. 780+00 "BL1"

PLAN 1"= 100' HORIZ

SHEET 13 OF 19

DESIGNED: DPL	FED. RD DIV. NO.	STATE	FEDERAL AID PROJECT No.			HIGHWAY No.	
CHECKED: GTC	6	TEXAS	XXXXXXXX			US 281	
DRAWN: JTM	STATE DISTRICT	COUNTY	CONTROL No.	SECTION No.	JOB No.	SHEET No.	
CHECKED:	PHARR	HIDALGO	0255	08	091	746	

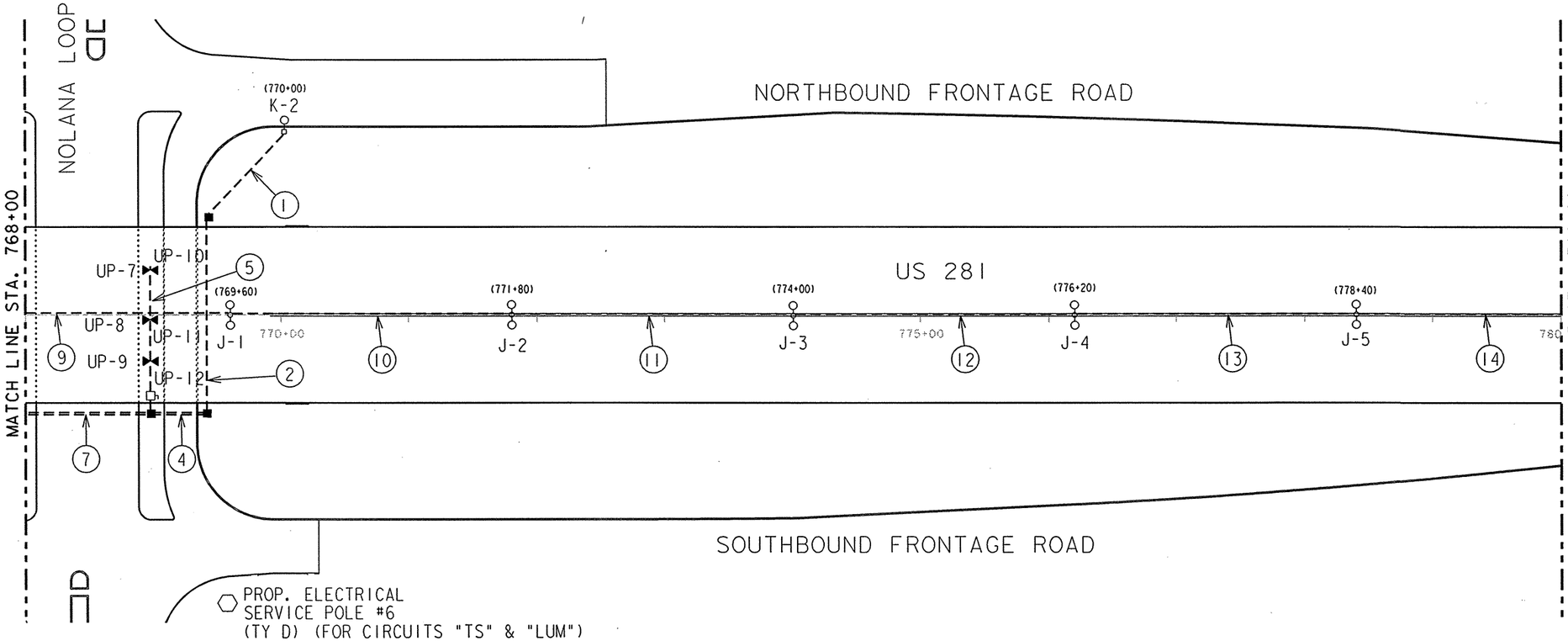

NOTES:

1. ALL STATION NUMBERS IN LUMINAIRE LOCATION SCHEDULE ARE REFERENCED FROM THE CENTER LINE.
2. ALL INDICATED LENGTHS IN CONDUIT AND CONDUCTOR RUNS ARE HORIZONTAL ONLY. ADD ADDITIONAL LENGTH FOR SPLICING AND VERTICAL RUN.
3. SEE STANDARD PLANS, RID(1)-98 THRU RID(4)-98 FOR MAST ARM AND LUMINAIRE POLE, CONDUIT AND JUNCTION BOX INSTALLATION DETAILS ON CAST-IN-PLACE AND SINGLE SLOPE CONCRETE BARRIER (TYPE 4).
4. SEE STANDARD PLANS, ED(1)-03 THRU ED(12)-03 FOR ELECTRICAL MATERIALS AND METHODS, WIRE MANAGEMENT, ELECTRICAL SERVICE AND DISTRIBUTION, AND PHOTOCELL INSTALLATIONS.
5. SEE STANDARD PLANS, HMID(1)-03 THRU HMID(9)-03 FOR HIGH MAST ILLUMINATION DETAILS, HMIP(1)-98 THRU HMIP(2)-98 FOR HIGH MAST ILLUMINATION POLES, AND HMIF(1)-98 THRU HMIF(2)-98 FOR HIGH MAST ILLUMINATION POLE FOUNDATIONS.

CONDUCTORS & CONDUIT RUNS

RUN NO.	GROUND SIZE & LENGTH (FEET)		CONDUCTOR SIZE & LENGTH (FEET)			CONDUIT SIZE & LENGTH (FEET)		
	#8 BARE	#6 BARE	#10 XHHW	#8 XHHW	#6 XHHW	1" RMC	2" PVC (SCH 40)	2" PVC (SCH 80) BORED
1	90			332			90	
2	156			312			156	
4	40			160				40
5	115		230			115		
7	105			420				105
9	220			440			220	
10	220			440			220	
11	220			440			220	
12	220			440			220	
13	220			440			220	
14	220			440			220	

SUMMARY OF ILLUMINATION QUANTITIES
(SHEET TOTALS)

ITEM	DESCRIPTION	UNIT	QUANTITY
610	RDWY. ILLUM ASSEM. (SP40S-10-10)(0.25 KW)S	EA	5
610	RDWY. ILLUM ASSEM. (SP40S-10)(0.25 KW)S	EA	
610	RDWY. ILLUM ASSEM. (SA40T-10)(0.25 KW)S	EA	1
610	UNDERPASS ILLUM ASSEM. (SPL-CO)(0.15 KW)S(TY1)	EA	6
618	CONDUIT (RMC) (1 IN.)	LF	115
618	CONDUIT (PVC) (SCH 40) (2 IN.)	LF	3,137
618	CONDUIT (PVC) (SCH 80) (2 IN.) (BORED)	LF	145
620	ELEC. CONDUCTOR (#8 BARE)	LF	3,397
620	ELEC. CONDUCTOR (#6 BARE)	LF	
620	ELEC. CONDUCTOR (#10 TY XHHW)	LF	230
620	ELEC. CONDUCTOR (#8 TY XHHW)	LF	8,854
620	ELEC. CONDUCTOR (#6 TY XHHW)	LF	
624	GROUND BOX (RPM) (TY A) (122311) APRON	EA	3
628	ELEC. SERVICE (TY D) (120/240) 070(NS) GS(T) TP(O)	EA	1
656	FND FOR RDWY ILL. ASM. (TY A) (30 IN. DR SH)	LF	16 Δ

LUMINAIRE LOCATIONS

LUM. NO.	STATION	OFFSET TO BASE	DESCRIPTION
UP-7			(SPL-CO)(0.15KW)S(TY1)
UP-8			(SPL-CO)(0.15KW)S(TY1)
UP-9			(SPL-CO)(0.15KW)S(TY1)
UP-10			(SPL-CO)(0.15KW)S(TY1)
UP-11			(SPL-CO)(0.15KW)S(TY1)
UP-12			(SPL-CO)(0.15KW)S(TY1)
K-2	770+00	145'LT.	(SA40T-10)(0.25KW)S
J-1	769+60	0'	(SP40S-10-10)(0.25 KW)S
J-2	771+80	0'	(SP40S-10-10)(0.25 KW)S
J-3	774+00	0'	(SP40S-10-10)(0.25 KW)S
J-4	776+20	0'	(SP40S-10-10)(0.25 KW)S
J-5	778+40	0'	(SP40S-10-10)(0.25 KW)S
J-6	779+40	116'RT.	(SA40T-10)(0.25KW)S

LEGEND

- CONCRETE BARRIER FIXTURE TYPE (SP40S-10-10)(0.25 KW)S
- ROADWAY FIXTURE TYPE (SA40T-10)(0.25KW)S
- UNDERPASS FIXTURE TYPE U/P(SPL-CO)(0.15KW)S(TY1)
- 2" SCHEDULE 40 PVC CONDUIT
- 2" SCHEDULE 80 PVC CONDUIT BORED
- CONDUIT RUN NUMBER
- JUNCTION BOX
- GROUND BOX
- SERVICE POLE
- UNDERPASS LIGHTING DISCONNECT SWITCH

Δ REVISED 9/26/03

STATE OF TEXAS
JOHN D. CROAD, JR.
58621
REGISTERED PROFESSIONAL ENGINEER
9/26/03

Parsons Brinckerhoff Quade & Douglas Inc.

Texas Department of Transportation

© 2002 by TxDOT

US 281
ILLUMINATION LAYOUTS

STA. 768+00 "BLI" TO
STA. 780+00 "BLI"

PLAN 1"= 100' HORIZ

SHEET 13 OF 19

DESIGNED: DPL	FED. RD DIV. No.	STATE	FEDERAL AID PROJECT No.	HIGHWAY No.
CHECKED: GTC	6	TEXAS	XXXXXXXX	US 281

DRAWN: JTM	STATE DISTRICT	COUNTY	CONTROL No.	SECTION No.	JOB No.	SHEET No.
CHECKED:	PHARR	HIDALGO	0255	08	091	746

mohapp
03:39:28 PM
08/06/2003
y:\22322A *Texas*US281\20DC\Dwgs\Elec\Output\281-E13.dgn

mohapp
03:39:39 PM
08/06/2003
y:\22322A *Texas*US281\20DC\Dwgs\Elec\Output\281-E14.dgn

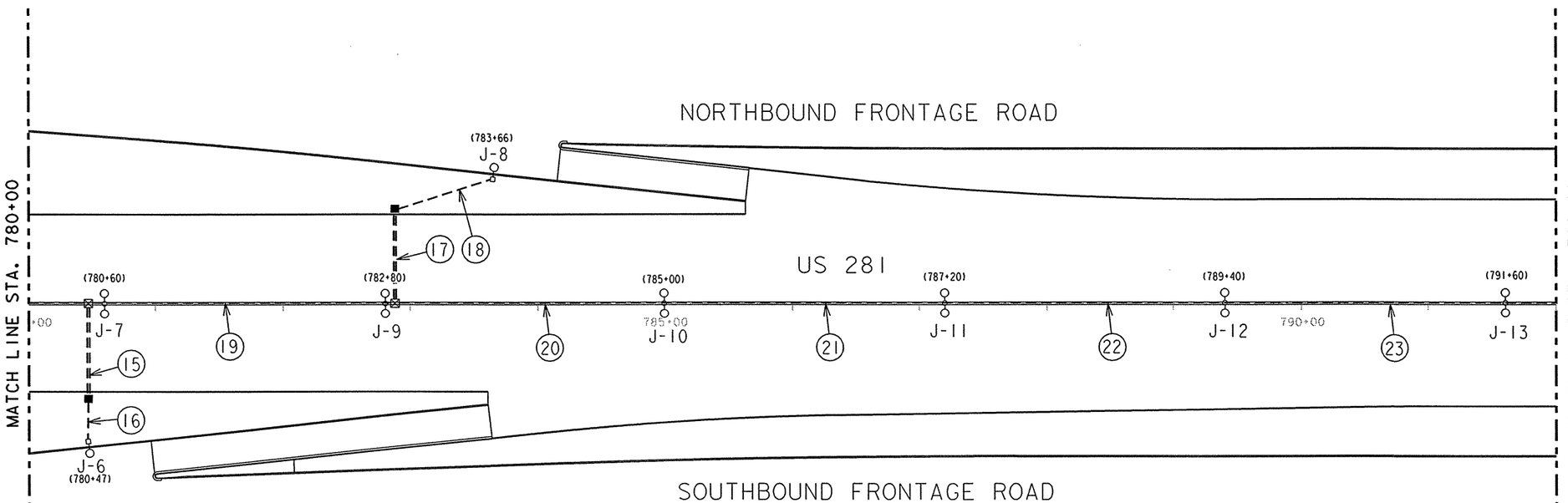

NOTES:

1. ALL STATION NUMBERS IN LUMINAIRE LOCATION SCHEDULE ARE REFERENCED FROM THE CENTER LINE.
2. ALL INDICATED LENGTHS IN CONDUIT AND CONDUCTOR RUNS ARE HORIZONTAL ONLY, ADD ADDITIONAL LENGTH FOR SPLICING AND VERTICAL RUN.
3. SEE STANDARD PLANS, RID(1)-98 THRU RID(4)-98 FOR MAST ARM AND LUMINAIRE POLE, CONDUIT AND JUNCTION BOX INSTALLATION DETAILS ON CAST-IN-PLACE AND SINGLE SLOPE CONCRETE BARRIER (TYPE 4).
4. SEE STANDARD PLANS, ED(1)-03 THRU ED(12)-03 FOR ELECTRICAL MATERIALS AND METHODS, WIRE MANAGEMENT, ELECTRICAL SERVICE AND DISTRIBUTION, AND PHOTOCELL INSTALLATIONS.
5. SEE STANDARD PLANS, HMID(1)-03 THRU HMID(9)-03 FOR HIGH MAST ILLUMINATION DETAILS, HMIP(1)-98 THRU HMIP(2)-98 FOR HIGH MAST ILLUMINATION POLES, AND HMIF(1)-98 THRU HMIF(2)-98 FOR HIGH MAST ILLUMINATION POLE FOUNDATIONS.

CONDUCTORS & CONDUIT RUNS

RUN NO.	GROUND SIZE & LENGTH (FEET)		CONDUCTOR SIZE & LENGTH (FEET)		CONDUIT SIZE & LENGTH (FEET)	
	#8 BARE	#6 BARE	#8 XHHW	#6 XHHW	2" PVC (SCH 40)	2" PVC (SCH 80) BORED
15	63		126			63
16	100		200		100	
17	75		150			75
18	80		160		80	
19	220		440		220	
20	220		440		220	
21	220		440		220	
22	220		440		220	
23	220		440		220	

SUMMARY OF ILLUMINATION QUANTITIES
(SHEET TOTALS)

ITEM	DESCRIPTION	UNIT	QUANTITY
610	RDWY. ILLUM ASSEM. (SP40S-10-10)(0.25 KW)S	EA	6
610	RDWY. ILLUM ASSEM. (SP40S-10)(0.25 KW)S	EA	
610	RDWY. ILLUM ASSEM. (SA40T-10)(0.25 KW)S	EA	2
610	UNDERPASS ILLUM ASSEM. (SPL-CO)(0.15 KW)S(TY1)	EA	
618	CONDUIT (RMC) (1 IN.)	LF	
618	CONDUIT (PVC) (SCH 40) (2 IN.)	LF	1,280
618	CONDUIT (PVC) (SCH 80) (2 IN.) (BORED)	LF	138
620	ELEC. CONDUCTOR (#8 BARE)	LF	1,418
620	ELEC. CONDUCTOR (#6 BARE)	LF	
620	ELEC. CONDUCTOR (#10 TY XHHW)	LF	
620	ELEC. CONDUCTOR (#8 TY XHHW)	LF	2,836
620	ELEC. CONDUCTOR (#6 TY XHHW)	LF	
624	GROUND BOX (RPM) (TY A) (122311) APRON	EA	1
628	ELEC. SERVICE (TY A) (240/480) 100(NS) AL(T) TP(O)	EA	
656	FND FOR RDWY ILL. ASM. (TY A) (30 IN. DR SH)	LF	36

LUMINAIRE LOCATIONS

LUM. NO.	STATION	OFFSET TO BASE	DESCRIPTION
J-6	780+47	111'RT.	(SA40T-10)(0.25KW)S
J-7	780+60	0'	(SP40S-10-10)(0.25 KW)S
J-8	783+66	97'LT.	(SA40T-10)(0.25KW)S
J-9	782+80	0'	(SP40S-10-10)(0.25 KW)S
J-10	785+00	0'	(SP40S-10-10)(0.25 KW)S
J-11	787+20	0'	(SP40S-10-10)(0.25 KW)S
J-12	789+40	0'	(SP40S-10-10)(0.25 KW)S
J-13	791+60	0'	(SP40S-10-10)(0.25 KW)S

LEGEND

- CONCRETE BARRIER FIXTURE TYPE (SP40S-10-10)(0.25 KW)S
- ROADWAY FIXTURE TYPE (SA40T-10)(0.25KW)S
- 2" SCHEDULE 40 PVC CONDUIT
- 2" SCHEDULE 80 PVC CONDUIT BORED
- CONDUIT RUN NUMBER
- JUNCTION BOX
- GROUND BOX

STATE OF TEXAS
JOHN D. COAD, JR.
68521
REGISTERED
PROFESSIONAL
ENGINEER
8-6-03

Parsons Brinckerhoff Quade & Douglas Inc.

Texas Department of Transportation

© 2002 by TxDOT

US 281
ILLUMINATION LAYOUTS

STA. 780+00 "BL1" TO
STA. 792+00 "BL1"

PLAN 1"= 100' HORIZ

SHEET 14 OF 19

DESIGNED: DPL	FED. RD DIV. No.	STATE	FEDERAL AID PROJECT No.		HIGHWAY No.
CHECKED: GTC	6	TEXAS	XXXXXXXX		US 281
DRAWN: JTM	STATE DISTRICT	COUNTY	CONTROL No.	SECTION No.	JOB No.	SHEET No.
CHECKED:	PHARR	HIDALGO	0255	08	091	747

mohapp
03:39:39 PM
08/06/2003
y:\22322A *Texas*US281\20DC\Dwgs\Elec\Output\281-E14.dgn

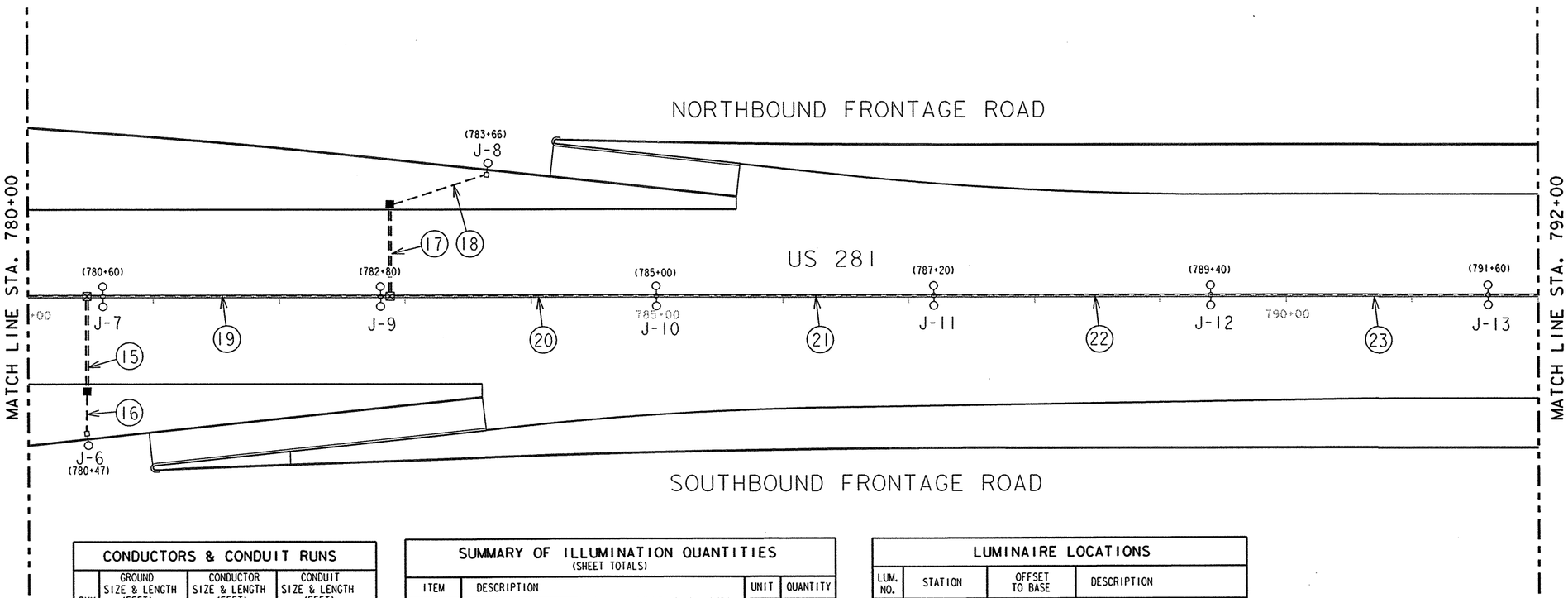

NOTES:

1. ALL STATION NUMBERS IN LUMINAIRE LOCATION SCHEDULE ARE REFERENCED FROM THE CENTER LINE.
2. ALL INDICATED LENGTHS IN CONDUIT AND CONDUCTOR RUNS ARE HORIZONTAL ONLY, ADD ADDITIONAL LENGTH FOR SPLICING AND VERTICAL RUN.
3. SEE STANDARD PLANS, RID(1)-98 THRU RID(4)-98 FOR MAST ARM AND LUMINAIRE POLE, CONDUIT AND JUNCTION BOX INSTALLATION DETAILS ON CAST-IN-PLACE AND SINGLE SLOPE CONCRETE BARRIER (TYPE 4).
4. SEE STANDARD PLANS, ED(1)-03 THRU ED(12)-03 FOR ELECTRICAL MATERIALS AND METHODS, WIRE MANAGEMENT, ELECTRICAL SERVICE AND DISTRIBUTION, AND PHOTOCELL INSTALLATIONS.
5. SEE STANDARD PLANS, HMID(1)-03 THRU HMID(9)-03 FOR HIGH MAST ILLUMINATION DETAILS, HMIP(1)-98 THRU HMIP(2)-98 FOR HIGH MAST ILLUMINATION POLES, AND HMIF(1)-98 THRU HMIF(2)-98 FOR HIGH MAST ILLUMINATION POLE FOUNDATIONS.

CONDUCTORS & CONDUIT RUNS

RUN NO.	GROUND SIZE & LENGTH (FEET)		CONDUCTOR SIZE & LENGTH (FEET)		CONDUIT SIZE & LENGTH (FEET)	
	#8 BARE	#6 BARE	#8 XHHW	#6 XHHW	2" PVC (SCH 40)	2" PVC (SCH 80) BORED
15	63		126			63
16	100		200		100	
17	75		150			75
18	80		160		80	
19	220		440		220	
20	220		440		220	
21	220		440		220	
22	220		440		220	
23	220		440		220	

SUMMARY OF ILLUMINATION QUANTITIES
(SHEET TOTALS)

ITEM	DESCRIPTION	UNIT	QUANTITY
610	RDWY. ILLUM ASSEM. (SP40S-10-10)(0.25 KW)S	EA	6
610	RDWY. ILLUM ASSEM. (SP40S-10)(0.25 KW)S	EA	
610	RDWY. ILLUM ASSEM. (SA40T-10)(0.25 KW)S	EA	2
610	UNDERPASS ILLUM ASSEM. (SPL-CO)(0.15 KW)S(TY1)	EA	
618	CONDUIT (RMC) (1 IN.)	LF	
618	CONDUIT (PVC) (SCH 40) (2 IN.)	LF	1,280
618	CONDUIT (PVC) (SCH 80) (2 IN.) (BORED)	LF	138
620	ELEC. CONDUCTOR (#8 BARE)	LF	1,418
620	ELEC. CONDUCTOR (#6 BARE)	LF	
620	ELEC. CONDUCTOR (#10 TY XHHW)	LF	
620	ELEC. CONDUCTOR (#8 TY XHHW)	LF	2,836
620	ELEC. CONDUCTOR (#6 TY XHHW)	LF	
624	GROUND BOX (RPM) (TY A) (122311) APRON	EA	1
628	ELEC. SERVICE (TY A) (240/480) 100(NS) AL(T) TP(O)	EA	
656	FND FOR RDWY ILL. ASM. (TY A) (30 IN. DR SH)	LF	12 Δ

LUMINAIRE LOCATIONS

LUM. NO.	STATION	OFFSET TO BASE	DESCRIPTION
J-6	780+47	111'RT.	(SA40T-10)(0.25KW)S
J-7	780+60	0'	(SP40S-10-10)(0.25 KW)S
J-8	783+66	97'LT.	(SA40T-10)(0.25KW)S
J-9	782+80	0'	(SP40S-10-10)(0.25 KW)S
J-10	785+00	0'	(SP40S-10-10)(0.25 KW)S
J-11	787+20	0'	(SP40S-10-10)(0.25 KW)S
J-12	789+40	0'	(SP40S-10-10)(0.25 KW)S
J-13	791+60	0'	(SP40S-10-10)(0.25 KW)S

LEGEND

- CONCRETE BARRIER FIXTURE TYPE (SP40S-10-10)(0.25 KW)S
- ROADWAY FIXTURE TYPE (SA40T-10)(0.25KW)S
- 2" SCHEDULE 40 PVC CONDUIT
- 2" SCHEDULE 80 PVC CONDUIT BORED
- CONDUIT RUN NUMBER
- JUNCTION BOX
- GROUND BOX

Δ REVISED 9/26/03

STATE OF TEXAS
JOHN D. CROAD, JR.
98521
REGISTERED PROFESSIONAL ENGINEER
8-26-03

Parsons Brinckerhoff Quade & Douglas Inc.

Texas Department of Transportation

© 2002 by TxDOT

US 281
ILLUMINATION LAYOUTS

STA. 780+00 "BL1" TO
STA. 792+00 "BL1"

PLAN 1"= 100' HORIZ

SHEET 14 OF 19

DESIGNED: DPL	FED. RD DIV. NO.	STATE	FEDERAL AID PROJECT NO.			HIGHWAY NO.
CHECKED: GTC	6	TEXAS	XXXXXXXX			US 281
DRAWN: JTM	STATE DISTRICT	COUNTY	CONTROL No.	SECTION No.	JOB No.	SHEET No.
CHECKED:	PHARR	HIDALGO	0255	08	091	747

mohapp
03:39:53 PM
08/06/2003
y:\22322A *Texas*US281\20DC\Dwgs\Elec\Output\281-E15.dgn

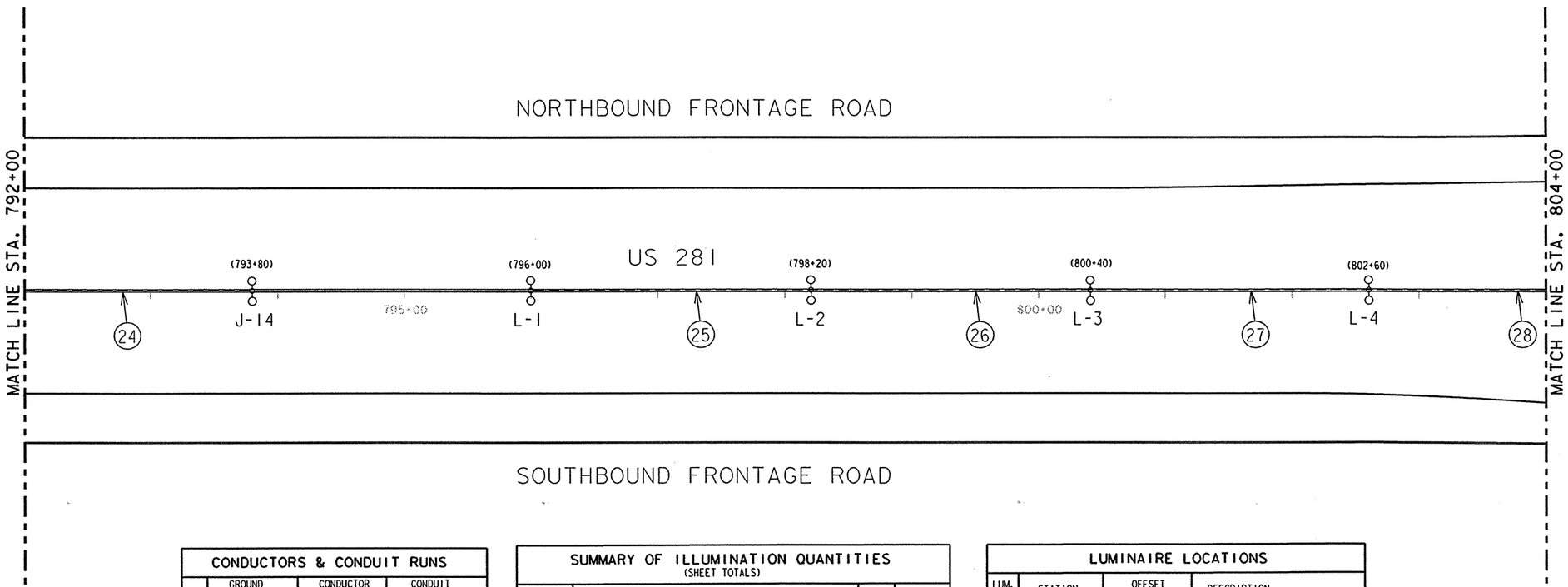

NOTES:

1. ALL STATION NUMBERS IN LUMINAIRE LOCATION SCHEDULE ARE REFERENCED FROM THE CENTER LINE.
2. ALL INDICATED LENGTHS IN CONDUIT AND CONDUCTOR RUNS ARE HORIZONTAL ONLY, ADD ADDITIONAL LENGTH FOR SPLICING AND VERTICAL RUN.
3. SEE STANDARD PLANS, RID(1)-98 THRU RID(4)-98 FOR MAST ARM AND LUMINAIRE POLE, CONDUIT AND JUNCTION BOX INSTALLATION DETAILS ON CAST-IN-PLACE AND SINGLE SLOPE CONCRETE BARRIER (TYPE 4).
4. SEE STANDARD PLANS, ED(1)-03 THRU ED(12)-03 FOR ELECTRICAL MATERIALS AND METHODS, WIRE MANAGEMENT, ELECTRICAL SERVICE AND DISTRIBUTION, AND PHOTOCELL INSTALLATIONS.
5. SEE STANDARD PLANS, HMID(1)-03 THRU HMID(9)-03 FOR HIGH MAST ILLUMINATION DETAILS, HMIP(1)-98 THRU HMIP(2)-98 FOR HIGH MAST ILLUMINATION POLES, AND HMIF(1)-98 THRU HMIF(2)-98 FOR HIGH MAST ILLUMINATION POLE FOUNDATIONS.

CONDUCTORS & CONDUIT RUNS

RUN NO.	GROUND SIZE & LENGTH (FEET)		CONDUCTOR SIZE & LENGTH (FEET)		CONDUIT SIZE & LENGTH (FEET)	
	#8 BARE	#6 BARE	#8 XHHW	#6 XHHW	2" PVC (SCH 40)	2" PVC (SCH 80) BORED
24	220		440		220	
25	220		440		220	
26	220		440		220	
27	220		440		220	
28	220		440		220	

SUMMARY OF ILLUMINATION QUANTITIES
(SHEET TOTALS)

ITEM	DESCRIPTION	UNIT	QUANTITY
610	RDWY. ILLUM ASSEM. (SP40S-10-10)(0.25 KW)S	EA	5
610	RDWY. ILLUM ASSEM. (SP40S-10)(0.25 KW)S	EA	
610	RDWY. ILLUM ASSEM. (SA40T-10)(0.25 KW)S	EA	
610	UNDERPASS ILLUM ASSEM. (SPL-CO)(0.15 KW)S(TY1)	EA	
618	CONDUIT (RMC) (1 IN.)	LF	
618	CONDUIT (PVC) (SCH 40) (2 IN.)	LF	1,100
618	CONDUIT (PVC) (SCH 80) (2 IN.) (BORED)	LF	
620	ELEC. CONDUCTOR (#8 BARE)	LF	1,100
620	ELEC. CONDUCTOR (#6 BARE)	LF	
620	ELEC. CONDUCTOR (#10 TY XHHW)	LF	
620	ELEC. CONDUCTOR (#8 TY XHHW)	LF	2,200
620	ELEC. CONDUCTOR (#6 TY XHHW))	LF	
624	GROUND BOX (RPM) (TY A) (122311) APRON	EA	
628	ELEC. SERVICE (TY A) (240/480) 100(NS) AL(T) TP(O)	EA	
656	FND FOR RDWY ILL. ASM. (TY A) (30 IN. DR SH)	LF	30

LUMINAIRE LOCATIONS

LUM. NO.	STATION	OFFSET TO BASE	DESCRIPTION
J-14	793+80	0'	(SP40S-10-10)(0.25 KW)S
L-1	796+00	0'	(SP40S-10-10)(0.25 KW)S
L-2	798+20	0'	(SP40S-10-10)(0.25 KW)S
L-3	800+40	0'	(SP40S-10-10)(0.25 KW)S
L-4	802+60	0'	(SP40S-10-10)(0.25 KW)S

LEGEND

- ○○○ CONCRETE BARRIER FIXTURE TYPE (SP40S-10-10)(0.25 KW)S
- — — 2" SCHEDULE 40 PVC CONDUIT
- ═ ═ 2" SCHEDULE 80 PVC CONDUIT BORED
- ◯ CONDUIT RUN NUMBER

STATE OF TEXAS
JOHN D. CRAD, JR.
85241
REGISTERED
PROFESSIONAL ENGINEER

Parsons Brinckerhoff Quade & Douglas Inc.

Texas Department of Transportation

© 2002 by TxDOT

US 281
ILLUMINATION LAYOUTS

STA. 792+00 "BL1" TO
STA. 804+00 "BL1"

PLAN 1"= 100' HORIZ

SHEET 15 OF 19

DESIGNED: DPL	FED. RD DIV. NO.	STATE	FEDERAL AID PROJECT No.	HIGHWAY No.
CHECKED: GTC	6	TEXAS	XXXXXXXX	US 281

DRAWN: JTM	STATE DISTRICT	COUNTY	CONTROL No.	SECTION No.	JOB No.	SHEET No.
CHECKED:	PHARR	HIDALGO	0255	08	091	748

mohapp
03:39:53 PM
08/06/2003
y:\22322A *Texas*US281\200C\Dwgs\Elec\Output\281-E15.dgn

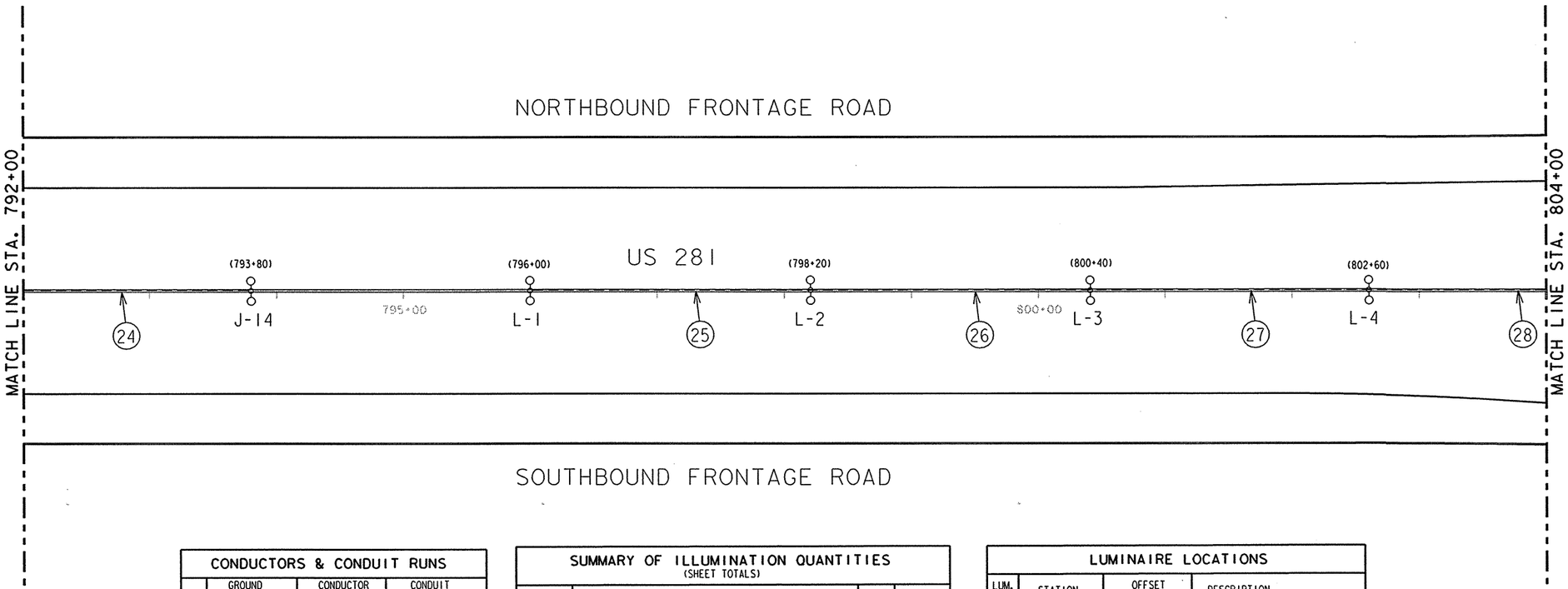

NOTES:

1. ALL STATION NUMBERS IN LUMINAIRE LOCATION SCHEDULE ARE REFERENCED FROM THE CENTER LINE.
2. ALL INDICATED LENGTHS IN CONDUIT AND CONDUCTOR RUNS ARE HORIZONTAL ONLY, ADD ADDITIONAL LENGTH FOR SPLICING AND VERTICAL RUN.
3. SEE STANDARD PLANS, RID(1)-98 THRU RID(4)-98 FOR MAST ARM AND LUMINAIRE POLE, CONDUIT AND JUNCTION BOX INSTALLATION DETAILS ON CAST-IN-PLACE AND SINGLE SLOPE CONCRETE BARRIER (TYPE 4).
4. SEE STANDARD PLANS, ED(1)-03 THRU ED(12)-03 FOR ELECTRICAL MATERIALS AND METHODS, WIRE MANAGEMENT, ELECTRICAL SERVICE AND DISTRIBUTION, AND PHOTOCELL INSTALLATIONS.
5. SEE STANDARD PLANS, HMID(1)-03 THRU HMID(9)-03 FOR HIGH MAST ILLUMINATION DETAILS, HMIP(1)-98 THRU HMIP(2)-98 FOR HIGH MAST ILLUMINATION POLES, AND HMIF(1)-98 THRU HMIF(2)-98 FOR HIGH MAST ILLUMINATION POLE FOUNDATIONS.

CONDUCTORS & CONDUIT RUNS

RUN NO.	GROUND SIZE & LENGTH (FEET)		CONDUCTOR SIZE & LENGTH (FEET)		CONDUIT SIZE & LENGTH (FEET)	
	#8 BARE	#6 BARE	#8 XHHW	#6 XHHW	2" PVC (SCH 40)	2" PVC (SCH 80) BORED
24	220		440		220	
25	220		440		220	
26	220		440		220	
27	220		440		220	
28	220		440		220	

SUMMARY OF ILLUMINATION QUANTITIES
(SHEET TOTALS)

ITEM	DESCRIPTION	UNIT	QUANTITY
610	RDWY. ILLUM ASSEM. (SP40S-10-10)(0.25 KW)S	EA	5
610	RDWY. ILLUM ASSEM. (SP40S-10)(0.25 KW)S	EA	
610	RDWY. ILLUM ASSEM. (SA40T-10)(0.25 KW)S	EA	
610	UNDERPASS ILLUM ASSEM. (SPL-CO)(0.15 KW)S(TY1)	EA	
618	CONDUIT (RMC) (1 IN.)	LF	
618	CONDUIT (PVC) (SCH 40) (2 IN.)	LF	1,100
618	CONDUIT (PVC) (SCH 80) (2 IN.) (BORED)	LF	
620	ELEC. CONDUCTOR (#8 BARE)	LF	1,100
620	ELEC. CONDUCTOR (#6 BARE)	LF	
620	ELEC. CONDUCTOR (#10 TY XHHW)	LF	
620	ELEC. CONDUCTOR (#8 TY XHHW)	LF	2,200
620	ELEC. CONDUCTOR (#6 TY XHHW)	LF	
624	GROUND BOX (RPM) (TY A) (122311) APRON	EA	
628	ELEC. SERVICE (TY A) (240/480) 100(NS) AL(T) TP(O)	EA	
656	FND FOR RDWY ILL. ASM. (TY A) (30 IN. DR SH)	LF	0 A

LUMINAIRE LOCATIONS

LUM. NO.	STATION	OFFSET TO BASE	DESCRIPTION
J-14	793+80	0'	(SP40S-10-10)(0.25 KW)S
L-1	796+00	0'	(SP40S-10-10)(0.25 KW)S
L-2	798+20	0'	(SP40S-10-10)(0.25 KW)S
L-3	800+40	0'	(SP40S-10-10)(0.25 KW)S
L-4	802+60	0'	(SP40S-10-10)(0.25 KW)S

LEGEND

- ○-○-○ CONCRETE BARRIER FIXTURE TYPE (SP40S-10-10)(0.25 KW)S
- — — 2" SCHEDULE 40 PVC CONDUIT
- ═ ═ 2" SCHEDULE 80 PVC CONDUIT BORED
- ◯ CONDUIT RUN NUMBER

A REVISED 9/26/03

STATE OF TEXAS
JOHN D. ROAD, JR.
85241
REGISTERED
ASSISTANT

PB Parsons Brinckerhoff Quade & Douglas Inc.

Texas Department of Transportation

© 2002 by TxDOT

US 281
ILLUMINATION LAYOUTS

STA. 792+00 "BL1" TO
STA. 804+00 "BL1"

PLAN 1"= 100' HORIZ

SHEET 15 OF 19

DESIGNED: DPL	FED. RD DIV. NO.	STATE	FEDERAL AID PROJECT NO.	HIGHWAY NO.
CHECKED: GTC	6	TEXAS	XXXXXXXX	US 281

DRAWN: JTM	STATE DISTRICT	COUNTY	CONTROL NO.	SECTION NO.	JOB NO.	SHEET NO.
CHECKED:	PHARR	HIDALGO	0255	08	091	748

mohapp
03:40:13 PM
08/06/2003
y:\22322A *Texas*US281\20DC\Dwgs\Elec\Output\281-E16.dgn

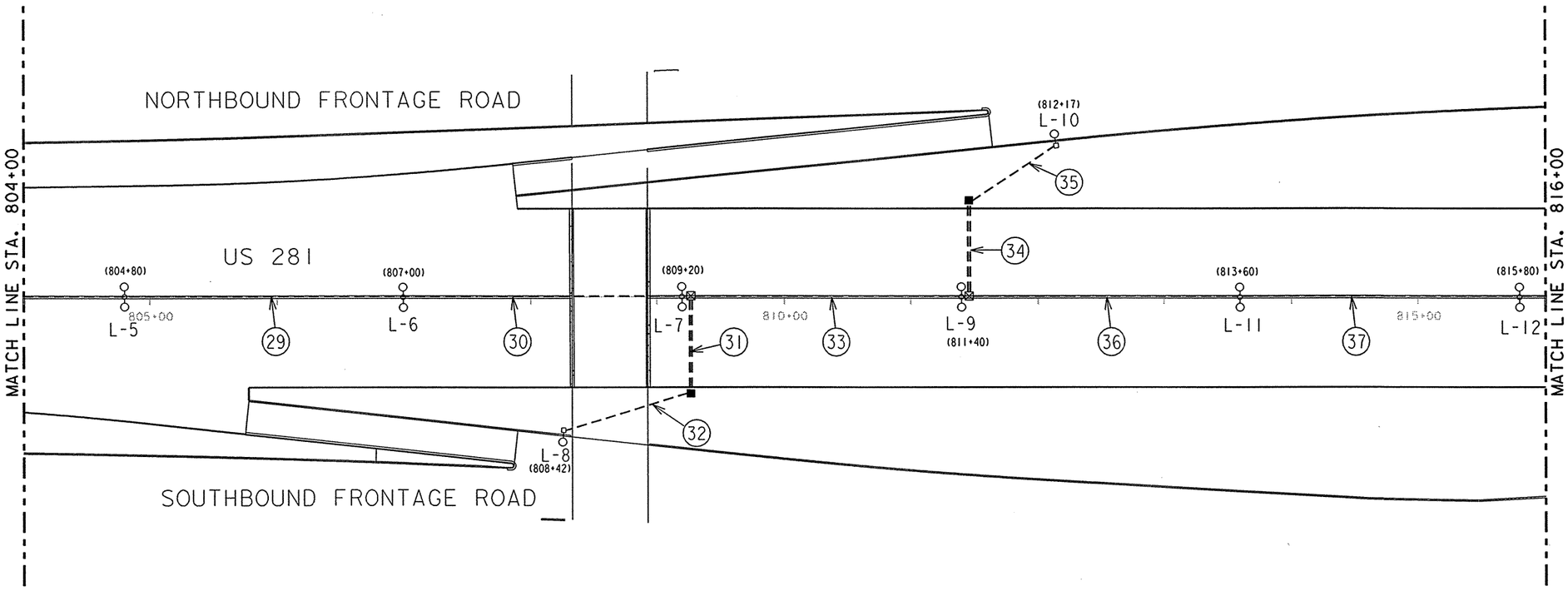

NOTES:

1. ALL STATION NUMBERS IN LUMINAIRE LOCATION SCHEDULE ARE REFERENCED FROM THE CENTER LINE.
2. ALL INDICATED LENGTHS IN CONDUIT AND CONDUCTOR RUNS ARE HORIZONTAL ONLY, ADD ADDITIONAL LENGTH FOR SPLICING AND VERTICAL RUN.
3. SEE STANDARD PLANS, RID(1)-98 THRU RID(4)-98 FOR MAST ARM AND LUMINAIRE POLE, CONDUIT AND JUNCTION BOX INSTALLATION DETAILS ON CAST-IN-PLACE AND SINGLE SLOPE CONCRETE BARRIER (TYPE 4).
4. SEE STANDARD PLANS, ED(1)-03 THRU ED(12)-03 FOR ELECTRICAL MATERIALS AND METHODS, WIRE MANAGEMENT, ELECTRICAL SERVICE AND DISTRIBUTION, AND PHOTOCELL INSTALLATIONS.
5. SEE STANDARD PLANS, HMID(1)-03 THRU HMID(9)-03 FOR HIGH MAST ILLUMINATION DETAILS, HMIP(1)-98 THRU HMIP(2)-98 FOR HIGH MAST ILLUMINATION POLES, AND HMIF(1)-98 THRU HMIF(2)-98 FOR HIGH MAST ILLUMINATION POLE FOUNDATIONS.

CONDUCTORS & CONDUIT RUNS

RUN NO.	GROUND SIZE & LENGTH (FEET)		CONDUCTOR SIZE & LENGTH (FEET)		CONDUIT SIZE & LENGTH (FEET)	
	#8 BARE	#6 BARE	#8 XHHW	#6 XHHW	2" PVC (SCH 40)	2" PVC (SCH 80) BORED
29	220		440		220	
30	220		440		220	
31	75		150			75
32	103		206		103	
33	220		440		220	
34	75		150			75
35	82		164		82	
36	220		440		220	
37	220		440		220	

SUMMARY OF ILLUMINATION QUANTITIES
(SHEET TOTALS)

ITEM	DESCRIPTION	UNIT	QUANTITY
610	RDWY. ILLUM ASSEM. (SP40S-10-10)(0.25 KW)S	EA	6
610	RDWY. ILLUM ASSEM. (SP40S-10)(0.25 KW)S	EA	
610	RDWY. ILLUM ASSEM. (SA40T-10)(0.25 KW)S	EA	2
610	UNDERPASS ILLUM ASSEM. (SPL-CO)(0.15 KW)S(TY1)	EA	
618	CONDUIT (RMC) (1 IN.)	LF	
618	CONDUIT (PVC) (SCH 40) (2 IN.)	LF	1,275
618	CONDUIT (PVC) (SCH 80) (2 IN.) (BORED)	LF	150
620	ELEC. CONDUCTOR (#8 BARE)	LF	1,425
620	ELEC. CONDUCTOR (#6 BARE)	LF	
620	ELEC. CONDUCTOR (#10 TY XHHW)	LF	
620	ELEC. CONDUCTOR (#8 TY XHHW)	LF	2,850
620	ELEC. CONDUCTOR (#6 TY XHHW)	LF	
624	GROUND BOX (RPM) (TY A) (122311) APRON	EA	2
628	ELEC. SERVICE (TY A) (240/480) 100(NS) AL(T) TP(O)	EA	
656	FND FOR RDWY ILL. ASM. (TY A) (30 IN. DR SH)	LF	36

LUMINAIRE LOCATIONS

LUM. NO.	STATION	OFFSET TO BASE	DESCRIPTION
L-5	804+80	0'	(SP40S-10-10)(0.25 KW)S
L-6	807+00	0'	(SP40S-10-10)(0.25 KW)S
L-7	809+20	0'	(SP40S-10-10)(0.25 KW)S
L-8	808+25	104'RT.	(SA40T-10)(0.25KW)S
L-9	811+40	0'	(SP40S-10-10)(0.25 KW)S
L-10	812+17	121'LT.	(SA40T-10)(0.25KW)S
L-11	813+60	0'	(SP40S-10-10)(0.25 KW)S
L-12	815+80	0'	(SP40S-10-10)(0.25 KW)S

LEGEND

- CONCRETE BARRIER FIXTURE TYPE (SP40S-10-10)(0.25 KW)S
- ROADWAY FIXTURE TYPE (SA40T-10)(0.25KW)S
- 2" SCHEDULE 40 PVC CONDUIT
- 2" SCHEDULE 80 PVC CONDUIT BORED
- CONDUIT RUN NUMBER
- JUNCTION BOX
- GROUND BOX

STATE OF TEXAS
JOHN D. COAD, JR.
58921
LICENSED PROFESSIONAL ENGINEER

Parsons Brinckerhoff Quade & Douglas Inc.

Texas Department of Transportation

© 2002 by TxDOT

US 281
ILLUMINATION LAYOUTS

STA. 804+00 "BL1" TO
STA. 816+00 "BL1"

PLAN 1"= 100' HORIZ

SHEET 16 OF 19

DESIGNED: DPL	FED. RD DIV. NO.	STATE	FEDERAL AID PROJECT No.	HIGHWAY No.
CHECKED: GTC	6	TEXAS	XXXXXXXX	US 281

DRAWN: JTM	STATE DISTRICT	COUNTY	CONTROL No.	SECTION No.	JOB No.	SHEET No.
CHECKED:	PHARR	HIDALGO	0255	08	091	749

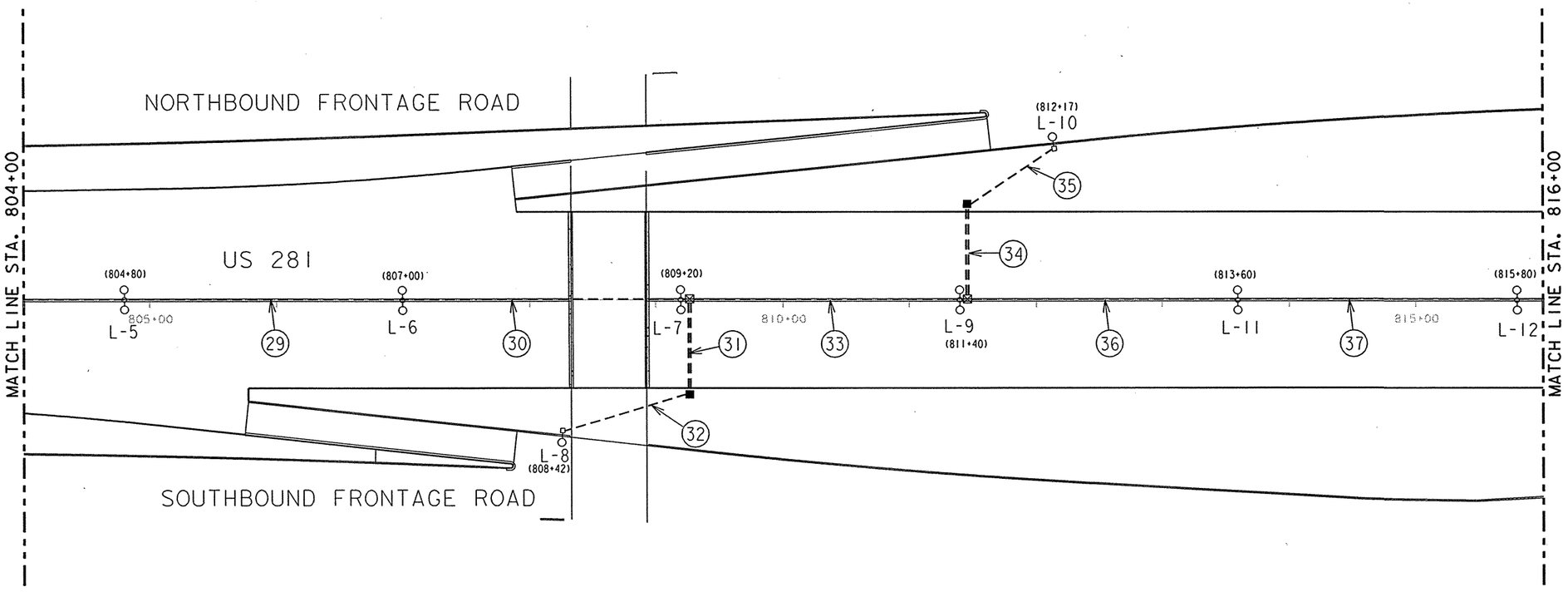

NOTES:

1. ALL STATION NUMBERS IN LUMINAIRE LOCATION SCHEDULE ARE REFERENCED FROM THE CENTER LINE.
2. ALL INDICATED LENGTHS IN CONDUIT AND CONDUCTOR RUNS ARE HORIZONTAL ONLY. ADD ADDITIONAL LENGTH FOR SPLICING AND VERTICAL RUN.
3. SEE STANDARD PLANS, RID(1)-98 THRU RID(4)-98 FOR MAST ARM AND LUMINAIRE POLE, CONDUIT AND JUNCTION BOX INSTALLATION DETAILS ON CAST-IN-PLACE AND SINGLE SLOPE CONCRETE BARRIER (TYPE 4).
4. SEE STANDARD PLANS, ED(1)-03 THRU ED(12)-03 FOR ELECTRICAL MATERIALS AND METHODS, WIRE MANAGEMENT, ELECTRICAL SERVICE AND DISTRIBUTION, AND PHOTOCELL INSTALLATIONS.
5. SEE STANDARD PLANS, HMID(1)-03 THRU HMID(9)-03 FOR HIGH MAST ILLUMINATION DETAILS, HMIP(1)-98 THRU HMIP(2)-98 FOR HIGH MAST ILLUMINATION POLES, AND HMIF(1)-98 THRU HMIF(2)-98 FOR HIGH MAST ILLUMINATION POLE FOUNDATIONS.

CONDUCTORS & CONDUIT RUNS

RUN NO.	GROUND SIZE & LENGTH (FEET)		CONDUCTOR SIZE & LENGTH (FEET)		CONDUIT SIZE & LENGTH (FEET)	
	#8 BARE	#6 BARE	#8 XHHW	#6 XHHW	2" PVC (SCH 40)	2" PVC (SCH 80) BORED
29	220		440		220	
30	220		440		220	
31	75		150			75
32	103		206		103	
33	220		440		220	
34	75		150			75
35	82		164		82	
36	220		440		220	
37	220		440		220	

SUMMARY OF ILLUMINATION QUANTITIES
(SHEET TOTALS)

ITEM	DESCRIPTION	UNIT	QUANTITY
610	RDWY. ILLUM ASSEM. (SP40S-10-10)(0.25 KW)S	EA	6
610	RDWY. ILLUM ASSEM. (SP40S-10)(0.25 KW)S	EA	
610	RDWY. ILLUM ASSEM. (SA40T-10)(0.25 KW)S	EA	2
610	UNDERPASS ILLUM ASSEM. (SPL-CO)(0.15 KW)S(TY1)	EA	
618	CONDUIT (RMC) (1 IN.)	LF	
618	CONDUIT (PVC) (SCH 40) (2 IN.)	LF	1,275
618	CONDUIT (PVC) (SCH 80) (2 IN.) (BORED)	LF	150
620	ELEC. CONDUCTOR (#8 BARE)	LF	1,425
620	ELEC. CONDUCTOR (#6 BARE)	LF	
620	ELEC. CONDUCTOR (#10 TY XHHW)	LF	
620	ELEC. CONDUCTOR (#8 TY XHHW)	LF	2,850
620	ELEC. CONDUCTOR (#6 TY XHHW))	LF	
624	GROUND BOX (RPM) (TY A) (122311) APRON	EA	2
628	ELEC. SERVICE (TY A) (240/480) 100(NS) AL(T) TP(O)	EA	
656	FND FOR RDWY ILL. ASM. (TY A) (30 IN. DR SH)	LF	12 A

LUMINAIRE LOCATIONS

LUM. NO.	STATION	OFFSET TO BASE	DESCRIPTION
L-5	804+80	0'	(SP40S-10-10)(0.25 KW)S
L-6	807+00	0'	(SP40S-10-10)(0.25 KW)S
L-7	809+20	0'	(SP40S-10-10)(0.25 KW)S
L-8	808+25	104'RT.	(SA40T-10)(0.25KW)S
L-9	811+40	0'	(SP40S-10-10)(0.25 KW)S
L-10	812+17	121'LT.	(SA40T-10)(0.25KW)S
L-11	813+60	0'	(SP40S-10-10)(0.25 KW)S
L-12	815+80	0'	(SP40S-10-10)(0.25 KW)S

LEGEND

- CONCRETE BARRIER FIXTURE TYPE (SP40S-10-10)(0.25 KW)S
- ROADWAY FIXTURE TYPE (SA40T-10)(0.25KW)S
- 2" SCHEDULE 40 PVC CONDUIT
- 2" SCHEDULE 80 PVC CONDUIT BORED
- CONDUIT RUN NUMBER
- JUNCTION BOX
- GROUND BOX

A REVISED 9/26/03

STATE OF TEXAS
JOHN D. COAD, JR.
58921
LICENSED PROFESSIONAL ENGINEER

Parsons Brinckerhoff Quade & Douglas Inc.

Texas Department of Transportation

© 2002 by TxDOT

US 281
ILLUMINATION LAYOUTS

STA. 804+00 "BL1" TO
STA. 816+00 "BL1"

PLAN 1"= 100' HORIZ

SHEET 16 OF 19

DESIGNED: DPL	FED. RD DIV. NO.	STATE	FEDERAL AID PROJECT No.		HIGHWAY No.	
CHECKED: GTC	6	TEXAS	XXXXXXXX		US 281	
DRAWN: JTM	STATE DISTRICT	COUNTY	CONTROL No.	SECTION No.	JOB No.	SHEET No.
CHECKED:	PHARR	HIDALGO	0255	08	091	749

mohapp
03:40:13 PM
08/06/2003
y:\22322A *Texas*US281\20DC\Dwgs\Elec\Output\281-E16.dgn

mohapp
03:40:25 PM
08/06/2003
y:\22322A *Texas*US281\20DC\DwgsElec\Output\281-E17.dgn

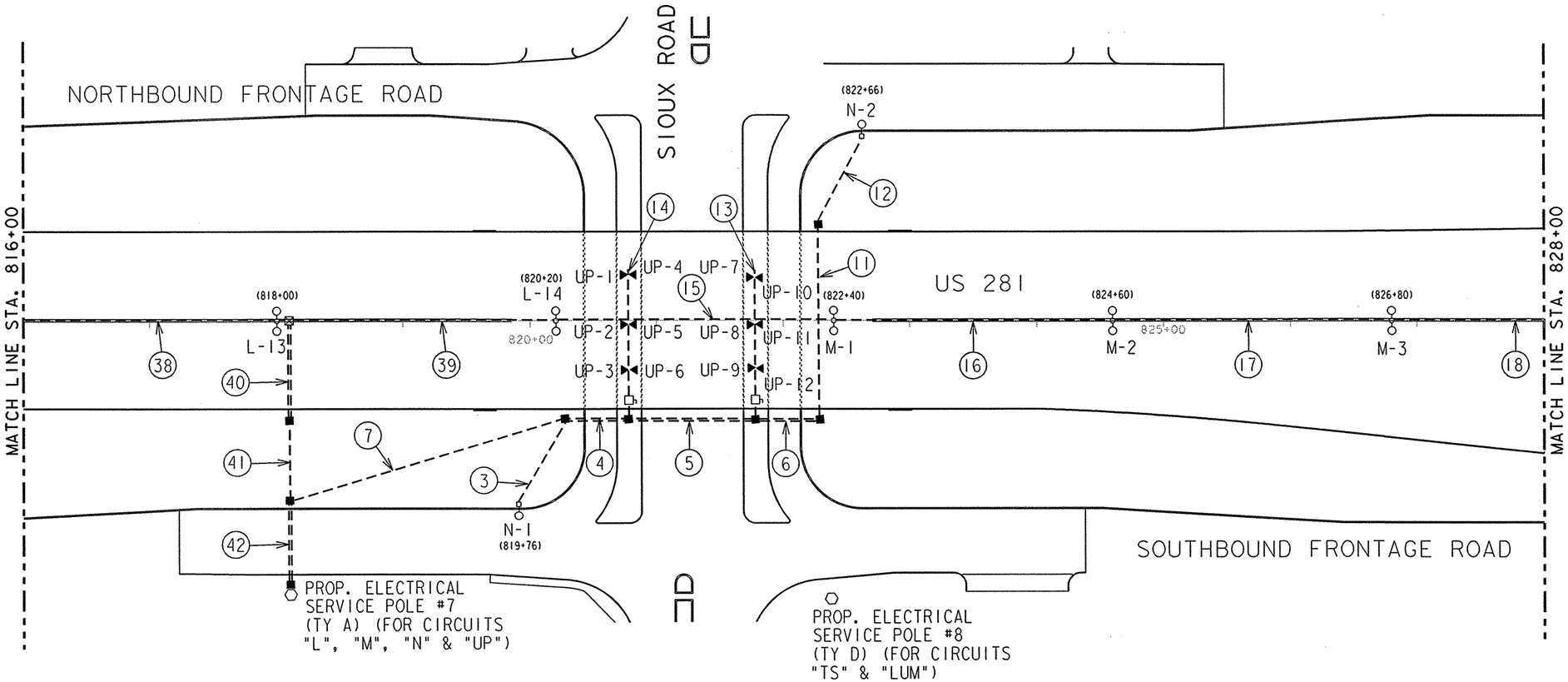

NOTES:

1. ALL STATION NUMBERS IN LUMINAIRE LOCATION SCHEDULE ARE REFERENCED FROM THE CENTER LINE.
2. ALL INDICATED LENGTHS IN CONDUIT AND CONDUCTOR RUNS ARE HORIZONTAL ONLY. ADD ADDITIONAL LENGTH FOR SPLICING AND VERTICAL RUN.
3. SEE STANDARD PLANS, RID(1)-98 THRU RID(4)-98 FOR MAST ARM AND LUMINAIRE POLE, CONDUIT AND JUNCTION BOX INSTALLATION DETAILS ON CAST-IN-PLACE AND SINGLE SLOPE CONCRETE BARRIER (TYPE 4).
4. SEE STANDARD PLANS, ED(1)-03 THRU ED(12)-03 FOR ELECTRICAL MATERIALS AND METHODS, WIRE MANAGEMENT, ELECTRICAL SERVICE AND DISTRIBUTION, AND PHOTOCELL INSTALLATIONS.
5. SEE STANDARD PLANS, HMID(1)-03 THRU HMID(9)-03 FOR HIGH MAST ILLUMINATION DETAILS, HMIP(1)-98 THRU HMIP(2)-98 FOR HIGH MAST ILLUMINATION POLES, AND HMIF(1)-98 THRU HMIF(2)-98 FOR HIGH MAST ILLUMINATION POLE FOUNDATIONS.

CONDUCTORS & CONDUIT RUNS

RUN NO.	GROUND SIZE & LENGTH (FEET)		CONDUCTOR SIZE & LENGTH (FEET)			CONDUIT SIZE & LENGTH (FEET)		
	#8 BARE	#6 BARE	#10 XHHW	#8 XHHW	#6 XHHW	1" RMC	2" PVC (SCH 40)	2" PVC (SCH 80) BORED
38	220			440			220	
39	220			880			220	
40	78			312				78
41	64			256			64	
42	69			552				69
3	78			156			78	
4	50			200				50
5	100			400				100
6	50			100				50
7	227			908			227	
11	155			310			155	
12	78			156			78	
13	115		230			115		
14	115		230			115		
15	220			440			220	
16	220			440			220	
17	220			440			220	
18	220			440			220	

LUMINAIRE LOCATIONS

LUM. NO.	STATION	OFFSET TO BASE	DESCRIPTION
UP-1			(SPL-CO) (0.15KW)S(TYI)
UP-2			(SPL-CO) (0.15KW)S(TYI)
UP-3			(SPL-CO) (0.15KW)S(TYI)
UP-4			(SPL-CO) (0.15KW)S(TYI)
UP-5			(SPL-CO) (0.15KW)S(TYI)
UP-6			(SPL-CO) (0.15KW)S(TYI)
UP-7			(SPL-CO) (0.15KW)S(TYI)
UP-8			(SPL-CO) (0.15KW)S(TYI)
UP-9			(SPL-CO) (0.15KW)S(TYI)
UP-10			(SPL-CO) (0.15KW)S(TYI)
UP-11			(SPL-CO) (0.15KW)S(TYI)
UP-12			(SPL-CO) (0.15KW)S(TYI)
L-13	818+00	0'	(SP40S-10-10) (0.25 KW)S
L-14	820+20	0'	(SP40S-10-10) (0.25 KW)S
M-1	822+40	0'	(SP40S-10-10) (0.25 KW)S
M-2	824+60	0'	(SP40S-10-10) (0.25 KW)S
M-3	826+80	0'	(SP40S-10-10) (0.25 KW)S
N-1	819+76	145'RT.	(SA40T-10) (0.25KW)S
N-2	822+66	146'LT.	(SA40T-10) (0.25KW)S

SUMMARY OF ILLUMINATION QUANTITIES
(SHEET TOTALS)

ITEM	DESCRIPTION	UNIT	QUANTITY
610	RDWY. ILLUM ASSEM. (SP40S-10-10) (0.25 KW)S	EA	5
610	RDWY. ILLUM ASSEM. (SP40S-10) (0.25 KW)S	EA	
610	RDWY. ILLUM ASSEM. (SA40T-10) (0.25 KW)S	EA	2
610	UNDERPASS ILLUM ASSEM. (SPL-CO) (0.15 KW)S(TYI)	EA	12
618	CONDUIT (RMC) (1 IN.)	LF	230
618	CONDUIT (PVC) (SCH 40) (2 IN.)	LF	1,952
618	CONDUIT (PVC) (SCH 80) (2 IN.) (BORED)	LF	354
620	ELEC. CONDUCTOR (#8 BARE)	LF	2,499
620	ELEC. CONDUCTOR (#6 BARE)	LF	
620	ELEC. CONDUCTOR (#10 TY XHHW)	LF	460
620	ELEC. CONDUCTOR (#8 TY XHHW)	LF	6,430
620	ELEC. CONDUCTOR (#6 TY XHHW)	LF	
624	GROUND BOX (RPM) (TY A) (122311) APRON	EA	8
628	ELEC. SERVICE (TY A) (240/480) 060(NS) AL(T) TP(O)	EA	1
628	ELEC. SERVICE (TY D) (120/240) 070(NS) GS(T) TP(O)	EA	1
656	FND FOR RDWY ILL. ASM. (TY A) (30 IN. DR SH)	LF	30

LEGEND

- CONCRETE BARRIER FIXTURE TYPE (SP40S-10-10) (0.25 KW)S
- ROADWAY FIXTURE TYPE (SA40T-10) (0.25KW)S
- UNDERPASS FIXTURE TYPE U/P(SPL-CO) (0.15KW)S(TYI)
- 2" SCHEDULE 40 PVC CONDUIT
- 2" SCHEDULE 80 PVC CONDUIT BORED
- CONDUIT RUN NUMBER
- JUNCTION BOX
- GROUND BOX
- SERVICE POLE
- UNDERPASS LIGHTING DISCONNECT SWITCH

Parsons Brinckerhoff Quade & Douglas Inc.

Texas Department of Transportation

© 2002 by TxDOT

US 281
ILLUMINATION LAYOUTS

STA. 816+00 "BL1" TO
STA. 828+00 "BL1"

PLAN 1"= 100' HORIZ

SHEET 17 OF 19

DESIGNED: DPL	FED. RD DIV. NO.	STATE	FEDERAL AID PROJECT No.		HIGHWAY No.	
CHECKED: GTC	6	TEXAS	XXXXXXXX		US 281	
DRAWN: JTM	STATE DISTRICT	COUNTY	CONTROL No.	SECTION No.	JOB No.	SHEET No.
CHECKED:	PHARR	HIDALGO	0255	08	091	750

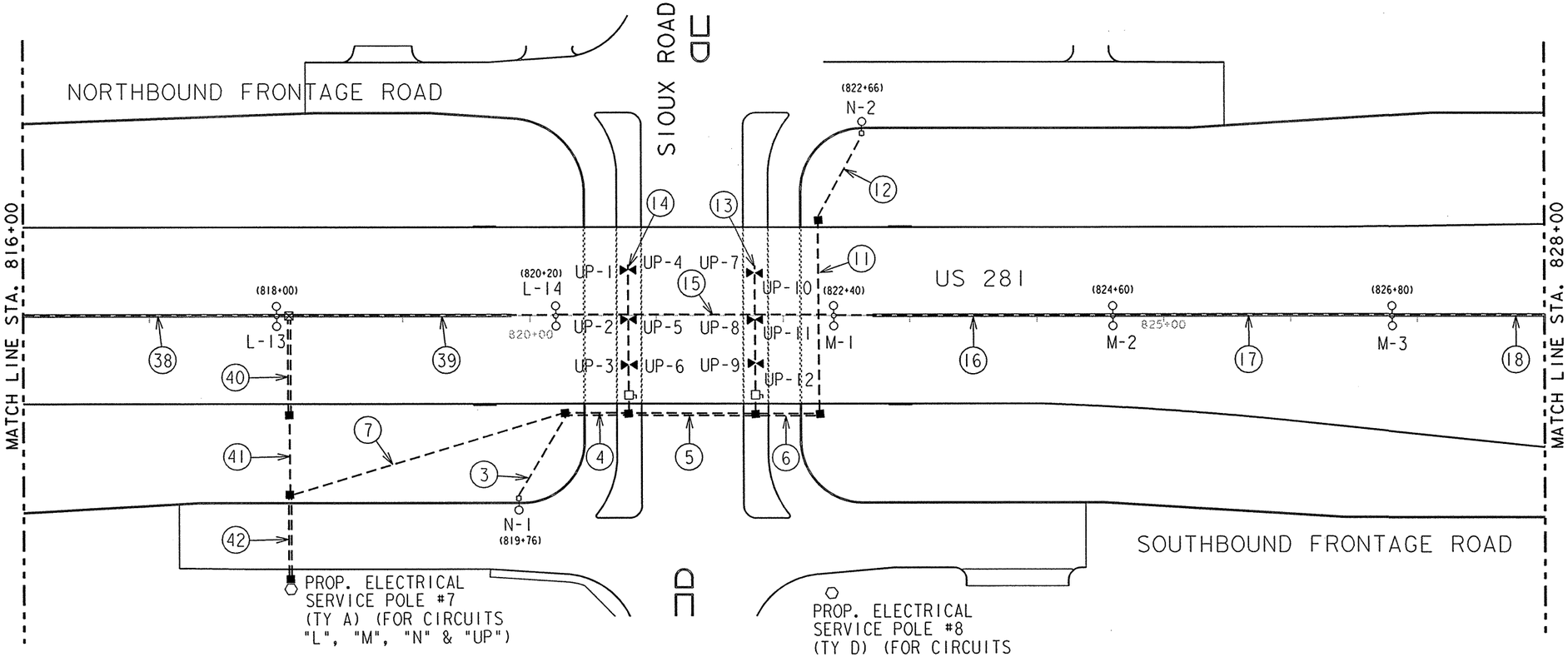

NOTES:

1. ALL STATION NUMBERS IN LUMINAIRE LOCATION SCHEDULE ARE REFERENCED FROM THE CENTER LINE.
2. ALL INDICATED LENGTHS IN CONDUIT AND CONDUCTOR RUNS ARE HORIZONTAL ONLY, ADD ADDITIONAL LENGTH FOR SPLICING AND VERTICAL RUN.
3. SEE STANDARD PLANS, RID(1)-98 THRU RID(4)-98 FOR MAST ARM AND LUMINAIRE POLE, CONDUIT AND JUNCTION BOX INSTALLATION DETAILS ON CAST-IN-PLACE AND SINGLE SLOPE CONCRETE BARRIER (TYPE 4).
4. SEE STANDARD PLANS, ED(1)-03 THRU ED(12)-03 FOR ELECTRICAL MATERIALS AND METHODS, WIRE MANAGEMENT, ELECTRICAL SERVICE AND DISTRIBUTION, AND PHOTOCELL INSTALLATIONS.
5. SEE STANDARD PLANS, HMID(1)-03 THRU HMID(9)-03 FOR HIGH MAST ILLUMINATION DETAILS, HMIP(1)-98 THRU HMIP(2)-98 FOR HIGH MAST ILLUMINATION POLES, AND HMIF(1)-98 THRU HMIF(2)-98 FOR HIGH MAST ILLUMINATION POLE FOUNDATIONS.

CONDUCTORS & CONDUIT RUNS

RUN NO.	GROUND SIZE & LENGTH (FEET)		CONDUCTOR SIZE & LENGTH (FEET)			CONDUIT SIZE & LENGTH (FEET)		
	#8 BARE	#6 BARE	#10 XHHW	#8 XHHW	#6 XHHW	1" RMC	2" PVC (SCH 40)	2" PVC (SCH 80) BORED
38	220			440			220	
39	220			880			220	
40	78			312				78
41	64			256			64	
42	69			552				69
3	78			156			78	
4	50			200				50
5	100			400				100
6	50			100				50
7	227			908			227	
11	155			310			155	
12	78			156			78	
13	115		230			115		
14	115		230			115		
15	220			440			220	
16	220			440			220	
17	220			440			220	
18	220			440			220	

LUMINAIRE LOCATIONS

LUM. NO.	STATION	OFFSET TO BASE	DESCRIPTION
UP-1			(SPL-CO)(0.15KW)S(TY1)
UP-2			(SPL-CO)(0.15KW)S(TY1)
UP-3			(SPL-CO)(0.15KW)S(TY1)
UP-4			(SPL-CO)(0.15KW)S(TY1)
UP-5			(SPL-CO)(0.15KW)S(TY1)
UP-6			(SPL-CO)(0.15KW)S(TY1)
UP-7			(SPL-CO)(0.15KW)S(TY1)
UP-8			(SPL-CO)(0.15KW)S(TY1)
UP-9			(SPL-CO)(0.15KW)S(TY1)
UP-10			(SPL-CO)(0.15KW)S(TY1)
UP-11			(SPL-CO)(0.15KW)S(TY1)
UP-12			(SPL-CO)(0.15KW)S(TY1)
L-13	818+00	0'	(SP40S-10-10)(0.25 KW)S
L-14	820+20	0'	(SP40S-10-10)(0.25 KW)S
M-1	822+40	0'	(SP40S-10-10)(0.25 KW)S
M-2	824+60	0'	(SP40S-10-10)(0.25 KW)S
M-3	826+80	0'	(SP40S-10-10)(0.25 KW)S
N-1	819+76	145'RT.	(SA40T-10)(0.25KW)S
N-2	822+66	146'LT.	(SA40T-10)(0.25KW)S

SUMMARY OF ILLUMINATION QUANTITIES
(SHEET TOTALS)

ITEM	DESCRIPTION	UNIT	QUANTITY
610	RDWY. ILLUM ASSEM. (SP40S-10-10)(0.25 KW)S	EA	5
610	RDWY. ILLUM ASSEM. (SP40S-10)(0.25 KW)S	EA	
610	RDWY. ILLUM ASSEM. (SA40T-10)(0.25 KW)S	EA	2
610	UNDERPASS ILLUM ASSEM. (SPL-CO)(0.15 KW)S(TY1)	EA	12
618	CONDUIT (RMC) (1 IN.)	LF	230
618	CONDUIT (PVC) (SCH 40) (2 IN.)	LF	1,952
618	CONDUIT (PVC) (SCH 80) (2 IN.) (BORED)	LF	354
620	ELEC. CONDUCTOR (#8 BARE)	LF	2,499
620	ELEC. CONDUCTOR (#6 BARE)	LF	
620	ELEC. CONDUCTOR (#10 TY XHHW)	LF	460
620	ELEC. CONDUCTOR (#8 TY XHHW)	LF	6,430
620	ELEC. CONDUCTOR (#6 TY XHHW)	LF	
624	GROUND BOX (RPM) (TY A) (122311) APRON	EA	8
628	ELEC. SERVICE (TY A) (240/480) 060(NS) AL(T) TP(O)	EA	1
628	ELEC. SERVICE (TY D) (120/240) 070(NS) GS(T) TP(O)	EA	1
656	FND FOR RDWY ILL. ASM. (TY A) (30 IN. DR SH)	LF	12 Δ

LEGEND

- CONCRETE BARRIER FIXTURE TYPE (SP40S-10-10)(0.25 KW)S
- ROADWAY FIXTURE TYPE (SA40T-10)(0.25KW)S
- UNDERPASS FIXTURE TYPE U/P(SPL-CO)(0.15KW)S(TY1)
- 2" SCHEDULE 40 PVC CONDUIT
- 2" SCHEDULE 80 PVC CONDUIT BORED
- CONDUIT RUN NUMBER
- JUNCTION BOX
- GROUND BOX
- SERVICE POLE
- UNDERPASS LIGHTING DISCONNECT SWITCH

Δ REVISED 9/26/03

STATE OF TEXAS
JOHN D. CRAIG JR.
58021
REGISTERED PROFESSIONAL ENGINEER

Parsons Brinckerhoff Quade & Douglas Inc.

Texas Department of Transportation

© 2002 by TxDOT

US 281
ILLUMINATION LAYOUTS

STA. 816+00 "BL1" TO
STA. 828+00 "BL1"

PLAN 1"= 100' HORIZ

SHEET 17 OF 19

DESIGNED: DPL	FED. RD DIV. No.	STATE	FEDERAL AID PROJECT No.	HIGHWAY No.
CHECKED: GTC	6	TEXAS	XXXXXXXX	US 281

DRAWN: JTM	STATE DISTRICT	COUNTY	CONTROL No.	SECTION No.	JOB No.	SHEET No.
CHECKED:	PHARR	HIDALGO	0255	08	091	750

mohapp
03:40:25 PM
08/06/2003
y:\22322A *Texas*US281\20DC\Dwgs\Elec\Output\281-E17.dgn

mohapp
03:40:38 PM
08/06/2003
y:\22322A *Texas*US281\20DC\Dwgs\Elec\Output\281-E18.dgn

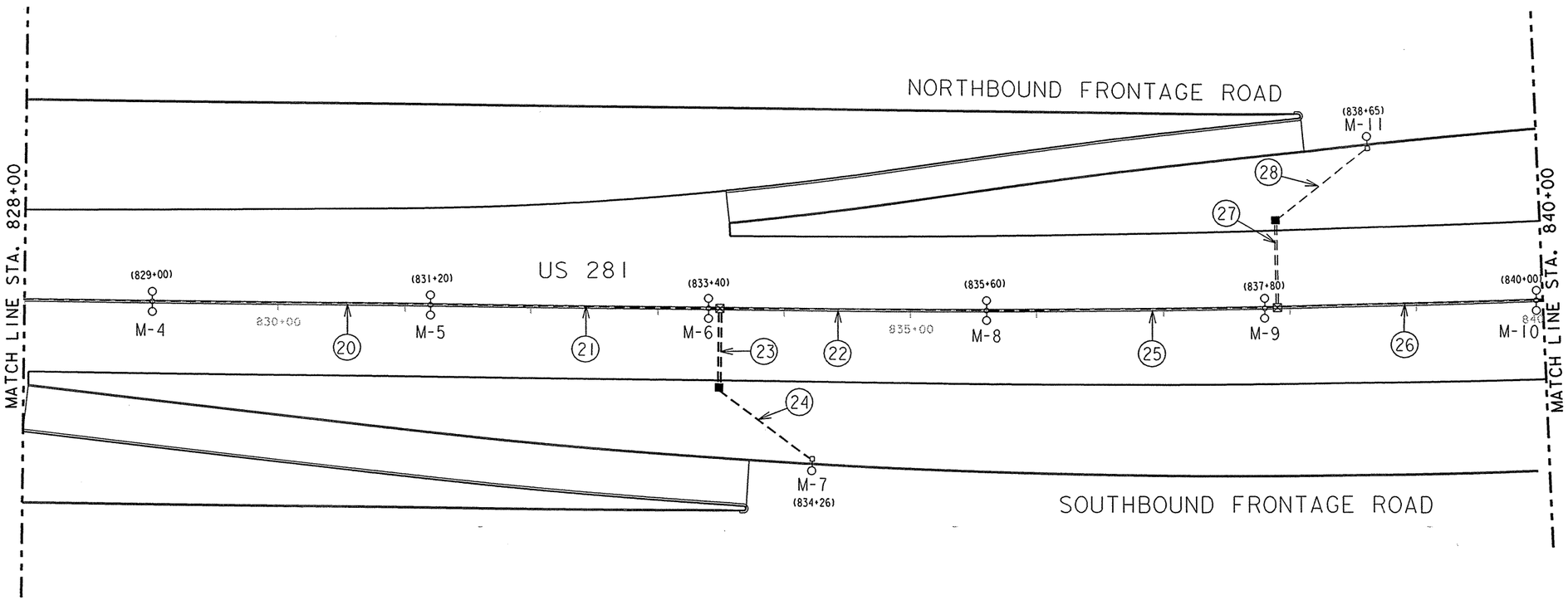

NOTES:

1. ALL STATION NUMBERS IN LUMINAIRE LOCATION SCHEDULE ARE REFERENCED FROM THE CENTER LINE.
2. ALL INDICATED LENGTHS IN CONDUIT AND CONDUCTOR RUNS ARE HORIZONTAL ONLY, ADD ADDITIONAL LENGTH FOR SPLICING AND VERTICAL RUN.
3. SEE STANDARD PLANS, RID(1)-98 THRU RID(4)-98 FOR MAST ARM AND LUMINAIRE POLE, CONDUIT AND JUNCTION BOX INSTALLATION DETAILS ON CAST-IN-PLACE AND SINGLE SLOPE CONCRETE BARRIER (TYPE 4).
4. SEE STANDARD PLANS, ED(1)-03 THRU ED(12)-03 FOR ELECTRICAL MATERIALS AND METHODS, WIRE MANAGEMENT, ELECTRICAL SERVICE AND DISTRIBUTION, AND PHOTOCELL INSTALLATIONS.
5. SEE STANDARD PLANS, HMID(1)-03 THRU HMID(9)-03 FOR HIGH MAST ILLUMINATION DETAILS, HMIP(1)-98 THRU HMIP(2)-98 FOR HIGH MAST ILLUMINATION POLES, AND HMIF(1)-98 THRU HMIF(2)-98 FOR HIGH MAST ILLUMINATION POLE FOUNDATIONS.

CONDUCTORS & CONDUIT RUNS

RUN NO.	GROUND SIZE & LENGTH (FEET)		CONDUCTOR SIZE & LENGTH (FEET)		CONDUIT SIZE & LENGTH (FEET)	
	#8 BARE	#6 BARE	#8 XHHW	#6 XHHW	2" PVC (SCH 40)	2" PVC (SCH 80) BORED
20	220		440		220	
21	220		440		220	
22	220		440		220	
23	64		128			64
24	93		186		93	
25	220		440		220	
26	220		440		220	
27	62		124			62
28	93		186		93	

SUMMARY OF ILLUMINATION QUANTITIES
(SHEET TOTALS)

ITEM	DESCRIPTION	UNIT	QUANTITY
610	RDWY. ILLUM ASSEM. (SP40S-10-10)(0.25 KW)S	EA	6
610	RDWY. ILLUM ASSEM. (SP40S-10)(0.25 KW)S	EA	
610	RDWY. ILLUM ASSEM. (SA40T-10)(0.25 KW)S	EA	2
610	UNDERPASS ILLUM ASSEM. (SPL-CO)(0.15 KW)S(TY1)	EA	
618	CONDUIT (RMC) (1 IN.)	LF	
618	CONDUIT (PVC) (SCH 40) (2 IN.)	LF	1,286
618	CONDUIT (PVC) (SCH 80) (2 IN.) (BORED)	LF	126
620	ELEC. CONDUCTOR (#8 BARE)	LF	1,412
620	ELEC. CONDUCTOR (#6 BARE)	LF	
620	ELEC. CONDUCTOR (#10 TY XHHW)	LF	
620	ELEC. CONDUCTOR (#8 TY XHHW)	LF	2,824
620	ELEC. CONDUCTOR (#6 TY XHHW)	LF	
624	GROUND BOX (RPM) (TY A) (122311) APRON	EA	2
628	ELEC. SERVICE (TY A) (240/480) 100(NS) GS(T) TP(O)	EA	
656	FND FOR RDWY ILL. ASM. (TY A) (30 IN. DR SH)	LF	36

LUMINAIRE LOCATIONS

LUM. NO.	STATION	OFFSET TO BASE	DESCRIPTION
M-4	829+00	0'	(SP40S-10-10)(0.25 KW)S
M-5	831+20	0'	(SP40S-10-10)(0.25 KW)S
M-6	833+40	0'	(SP40S-10-10)(0.25 KW)S
M-7	834+26	95'RT.	(SA40T-10)(0.25KW)S
M-8	835+60	0'	(SP40S-10-10)(0.25 KW)S
M-9	837+80	0'	(SP40S-10-10)(0.25 KW)S
M-10	840+00	0'	(SP40S-10-10)(0.25 KW)S
M-11	838+65	125'LT.	(SA40T-10)(0.25KW)S

LEGEND

- CONCRETE BARRIER FIXTURE TYPE (SP40S-10-10)(0.25 KW)S
- ROADWAY FIXTURE TYPE (SA40T-10)(0.25KW)S
- 2" SCHEDULE 40 PVC CONDUIT
- 2" SCHEDULE 80 PVC CONDUIT BORED
- CONDUIT RUN NUMBER
- JUNCTION BOX
- GROUND BOX

STATE OF TEXAS
JOHN D. COAD JR.
REGISTERED
PROFESSIONAL
ENGINEER
48674

Parsons Brinckerhoff Quade & Douglas Inc.

Texas Department of Transportation

© 2002 by TxDOT

US 281
ILLUMINATION LAYOUTS

STA. 828+00 "BLI" TO
STA. 840+00 "BLI"

PLAN 1"= 100' HORIZ

SHEET 18 OF 19

DESIGNED: DPL	FED. RD DIV. NO.	STATE	FEDERAL AID PROJECT NO.		HIGHWAY NO.	
CHECKED: GTC	6	TEXAS	XXXXXXXX		US 281	
DRAWN: JTM	STATE DISTRICT	COUNTY	CONTROL NO.	SECTION NO.	JOB NO.	SHEET NO.
CHECKED:	PHARR	HIDALGO	0255	08	091	751

mohapp
03:40:38 PM
08/06/2003
y:\22322A *Texas*US281\200C\Dwgs\Elec\Output\281-E18.dgn

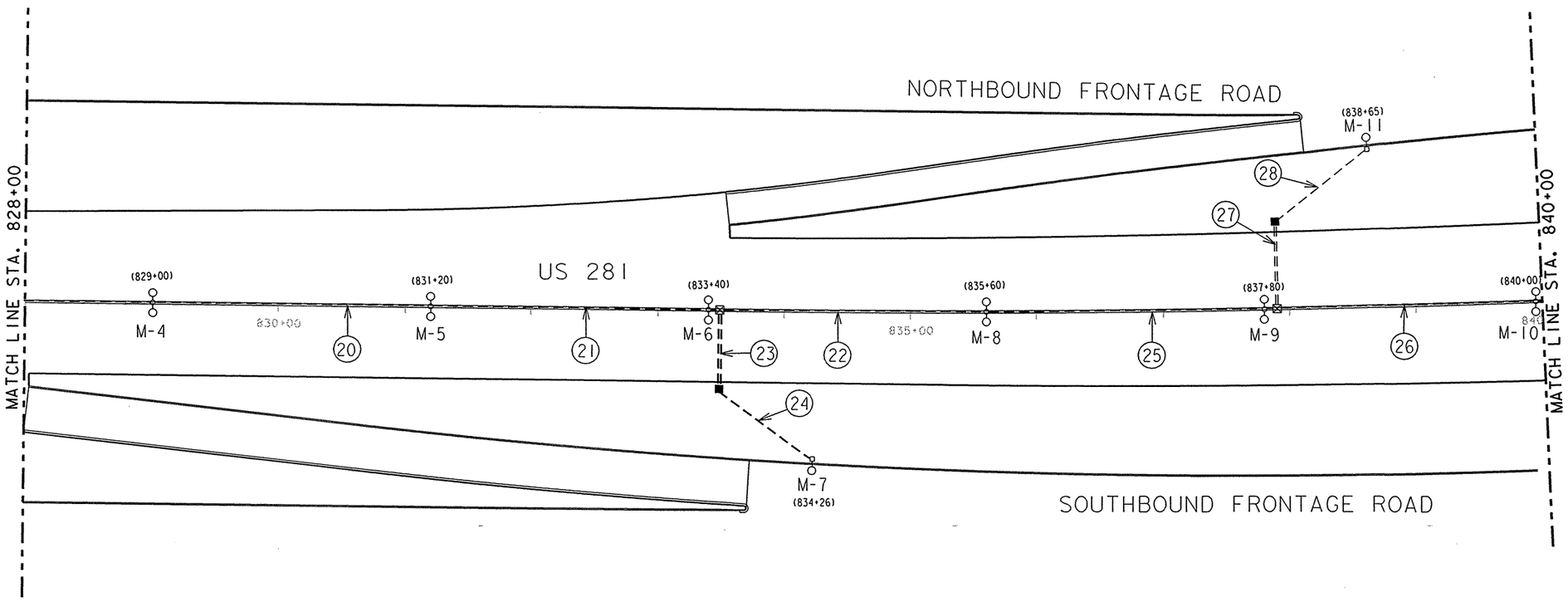

NOTES:

1. ALL STATION NUMBERS IN LUMINAIRE LOCATION SCHEDULE ARE REFERENCED FROM THE CENTER LINE.
2. ALL INDICATED LENGTHS IN CONDUIT AND CONDUCTOR RUNS ARE HORIZONTAL ONLY, ADD ADDITIONAL LENGTH FOR SPLICING AND VERTICAL RUN.
3. SEE STANDARD PLANS, RID(1)-98 THRU RID(4)-98 FOR MAST ARM AND LUMINAIRE POLE, CONDUIT AND JUNCTION BOX INSTALLATION DETAILS ON CAST-IN-PLACE AND SINGLE SLOPE CONCRETE BARRIER (TYPE 4).
4. SEE STANDARD PLANS, ED(1)-03 THRU ED(12)-03 FOR ELECTRICAL MATERIALS AND METHODS, WIRE MANAGEMENT, ELECTRICAL SERVICE AND DISTRIBUTION, AND PHOTOCELL INSTALLATIONS.
5. SEE STANDARD PLANS, HMID(1)-03 THRU HMID(9)-03 FOR HIGH MAST ILLUMINATION DETAILS, HMIP(1)-98 THRU HMIP(2)-98 FOR HIGH MAST ILLUMINATION POLES, AND HMIF(1)-98 THRU HMIF(2)-98 FOR HIGH MAST ILLUMINATION POLE FOUNDATIONS.

CONDUCTORS & CONDUIT RUNS

RUN NO.	GROUND SIZE & LENGTH (FEET)		CONDUCTOR SIZE & LENGTH (FEET)		CONDUIT SIZE & LENGTH (FEET)	
	#8 BARE	#6 BARE	#8 XHHW	#6 XHHW	2" PVC (SCH 40)	2" PVC (SCH 80) BORED
20	220		440		220	
21	220		440		220	
22	220		440		220	
23	64		128			64
24	93		186		93	
25	220		440		220	
26	220		440		220	
27	62		124			62
28	93		186		93	

SUMMARY OF ILLUMINATION QUANTITIES
(SHEET TOTALS)

ITEM	DESCRIPTION	UNIT	QUANTITY
610	RDWY. ILLUM ASSEM. (SP40S-10-10)(0.25 KW)S	EA	6
610	RDWY. ILLUM ASSEM. (SP40S-10)(0.25 KW)S	EA	
610	RDWY. ILLUM ASSEM. (SA40T-10)(0.25 KW)S	EA	2
610	UNDERPASS ILLUM ASSEM. (SPL-CO)(0.15 KW)S(TY1)	EA	
618	CONDUIT (RMC) (1 IN.)	LF	
618	CONDUIT (PVC) (SCH 40) (2 IN.)	LF	1,286
618	CONDUIT (PVC) (SCH 80) (2 IN.) (BORED)	LF	126
620	ELEC. CONDUCTOR (#8 BARE)	LF	1,412
620	ELEC. CONDUCTOR (#6 BARE)	LF	
620	ELEC. CONDUCTOR (#10 TY XHHW)	LF	
620	ELEC. CONDUCTOR (#8 TY XHHW)	LF	2,824
620	ELEC. CONDUCTOR (#6 TY XHHW)	LF	
624	GROUND BOX (RPM) (TY A) (122311) APRON	EA	2
628	ELEC. SERVICE (TY A) (240/480) 100(NS) GS(T) TP(O)	EA	
656	FND FOR RDWY ILL. ASM. (TY A) (30 IN. DR SH)	LF	12

LUMINAIRE LOCATIONS

LUM. NO.	STATION	OFFSET TO BASE	DESCRIPTION
M-4	829+00	0'	(SP40S-10-10)(0.25 KW)S
M-5	831+20	0'	(SP40S-10-10)(0.25 KW)S
M-6	833+40	0'	(SP40S-10-10)(0.25 KW)S
M-7	834+26	95'RT.	(SA40T-10)(0.25KW)S
M-8	835+60	0'	(SP40S-10-10)(0.25 KW)S
M-9	837+80	0'	(SP40S-10-10)(0.25 KW)S
M-10	840+00	0'	(SP40S-10-10)(0.25 KW)S
M-11	838+65	125'LT.	(SA40T-10)(0.25KW)S

LEGEND

- CONCRETE BARRIER FIXTURE TYPE (SP40S-10-10)(0.25 KW)S
- ROADWAY FIXTURE TYPE (SA40T-10)(0.25KW)S
- 2" SCHEDULE 40 PVC CONDUIT
- 2" SCHEDULE 80 PVC CONDUIT BORED
- CONDUIT RUN NUMBER
- JUNCTION BOX
- GROUND BOX

A REVISED 9/26/03

STATE OF TEXAS
JOHN D. CROAD JR.
REGISTERED
PROFESSIONAL ENGINEER
8/07/03

Parsons Brinckerhoff Quade & Douglas Inc.

Texas Department of Transportation

© 2002 by TxDOT

US 281
ILLUMINATION LAYOUTS

STA. 828+00 "BL1" TO
STA. 840+00 "BL1"

PLAN 1"= 100' HORIZ

SHEET 18 OF 19

DESIGNED: DPL	FED. RD DIV. No.	STATE	FEDERAL AID PROJECT No.	HIGHWAY No.
CHECKED: GTC	6	TEXAS	XXXXXXX	US 281

DRAWN: JTM	STATE DISTRICT	COUNTY	CONTROL No.	SECTION No.	JOB No.	SHEET No.
CHECKED:	PHARR	HIDALGO	0255	08	091	751

mohapp
03:40:51 PM
08/06/2003
y:\22322A *Texas*US281\20DC\Dwgs\Elec\Output\281-E19.dgn

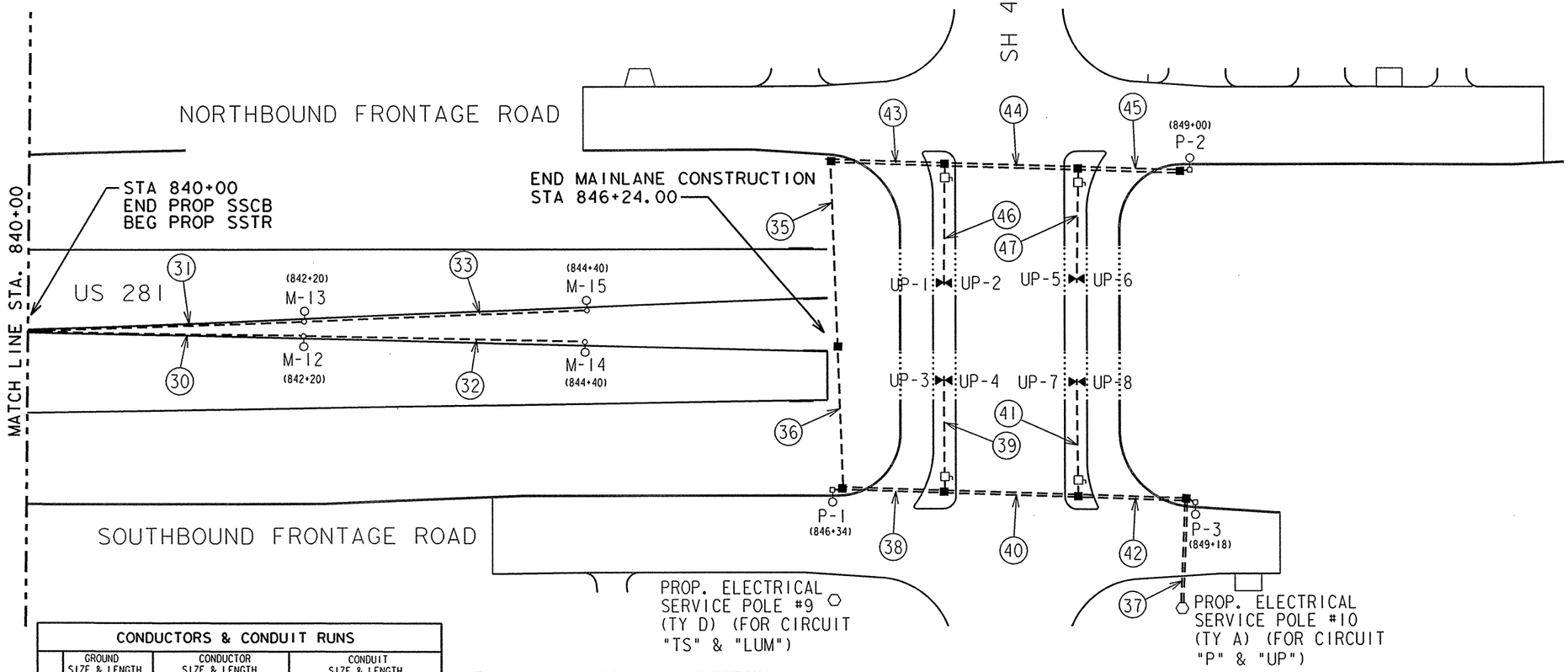

NOTES:

1. ALL STATION NUMBERS IN LUMINAIRE LOCATION SCHEDULE ARE REFERENCED FROM THE CENTER LINE.
2. ALL INDICATED LENGTHS IN CONDUIT AND CONDUCTOR RUNS ARE HORIZONTAL ONLY. ADD ADDITIONAL LENGTH FOR SPLICING AND VERTICAL RUN.
3. SEE STANDARD PLANS, RID(1)-98 THRU RID(4)-98 FOR MAST ARM AND LUMINAIRE POLE, CONDUIT AND JUNCTION BOX INSTALLATION DETAILS ON CAST-IN-PLACE AND SINGLE SLOPE CONCRETE BARRIER (TYPE 4).
4. SEE STANDARD PLANS, ED(1)-03 THRU ED(12)-03 FOR ELECTRICAL MATERIALS AND METHODS, WIRE MANAGEMENT, ELECTRICAL SERVICE AND DISTRIBUTION, AND PHOTOCELL INSTALLATIONS.
5. SEE STANDARD PLANS, HMID(1)-03 THRU HMID(9)-03 FOR HIGH MAST ILLUMINATION DETAILS, HMIP(1)-98 THRU HMIP(2)-98 FOR HIGH MAST ILLUMINATION POLES, AND HMIF(1)-98 THRU HMIF(2)-98 FOR HIGH MAST ILLUMINATION POLE FOUNDATIONS.

CONDUCTORS & CONDUIT RUNS

RUN NO.	GROUND SIZE & LENGTH (FEET)		CONDUCTOR SIZE & LENGTH (FEET)			CONDUIT SIZE & LENGTH (FEET)		
	#8 BARE	#6 BARE	#10 XHHW	#8 XHHW	#6 XHHW	1" RMC	2" PVC (SCH 40)	2" PVC (SCH 80) BORED
30	220			440			220	
31	220			440			220	
32	220			440			220	
33	220			440			220	
34								
35	150			600			150	
36	107			428			107	
37	87			348				87
38	79			316				79
39	92		184			92		
40	105			420				105
41	92		184			92		
42	86			344				86
43	89			356				89
44	103			412				103
45	81			162				81
46	97		194			97		
47	90		180			90		

SUMMARY OF ILLUMINATION QUANTITIES
(SHEET TOTALS)

ITEM	DESCRIPTION	UNIT	QUANTITY
610	RDWY. ILLUM ASSEM. (SP40S-10-10)(0.25 KW)S	EA	
610	RDWY. ILLUM ASSEM. (SP40S-10)(0.25 KW)S	EA	4
610	RDWY. ILLUM ASSEM. (SA40T-10)(0.25 KW)S	EA	3
610	UNDERPASS ILLUM ASSEM. (SPL-CO)(0.15 KW)S(TY1)	EA	8
618	CONDUIT (RMC) (1 IN.)	LF	371
618	CONDUIT (PVC) (SCH 40) (2 IN.)	LF	1,137
618	CONDUIT (PVC) (SCH 80) (2 IN.) (BORED)	LF	630
620	ELEC. CONDUCTOR (#8 BARE)	LF	2,138
620	ELEC. CONDUCTOR (#6 BARE)	LF	
620	ELEC. CONDUCTOR (#10 TY XHHW)	LF	742
620	ELEC. CONDUCTOR (#8 TY XHHW)	LF	5,126
620	ELEC. CONDUCTOR (#6 TY XHHW))	LF	
624	GROUND BOX (RPM) (TY A) (122311) APRON	EA	9
628	ELEC. SERVICE (TY A) (240/480) 060(NS) AL(T) TP(O)	EA	1
628	ELEC. SERVICE (TY D) (120/240) 070(NS) GS(T) TP(O)	EA	1
656	FND FOR RDWY ILL. ASM. (TY A) (30 IN. DR SH)	LF	24

LUMINAIRE LOCATIONS

LUM. NO.	STATION	OFFSET TO BASE	DESCRIPTION
M-12	842+20	9'RT.	(SP40S-10)(0.25KW)S
M-13	842+20	11'LT.	(SP40S-10)(0.25KW)S
M-14	844+40	14'RT.	(SP40S-10)(0.25KW)S
M-15	844+40	20'LT.	(SP40S-10)(0.25KW)S
P-1	846+34	126'RT.	(SA40T-10)(0.25KW)S
P-2	849+00	135'LT.	(SA40T-10)(0.25KW)S
P-3	849+18	135'RT.	(SA40T-10)(0.25KW)S
UP-1			(SPL-CO)(0.15KW)S(TY1)
UP-2			(SPL-CO)(0.15KW)S(TY1)
UP-3			(SPL-CO)(0.15KW)S(TY1)
UP-4			(SPL-CO)(0.15KW)S(TY1)
UP-5			(SPL-CO)(0.15KW)S(TY1)
UP-6			(SPL-CO)(0.15KW)S(TY1)
UP-7			(SPL-CO)(0.15KW)S(TY1)
UP-8			(SPL-CO)(0.15KW)S(TY1)

LEGEND

- ROADWAY FIXTURE TYPE (SP40S-10)(0.25KW)S
- ROADWAY FIXTURE TYPE (SA40T-10)(0.25KW)S
- UNDERPASS FIXTURE TYPE U/P(SPL-CO)(0.15KW)S(TY1)
- 2" SCHEDULE 40 PVC CONDUIT
- 2" SCHEDULE 80 PVC CONDUIT BORED
- CONDUIT RUN NUMBER
- JUNCTION BOX
- GROUND BOX
- SERVICE POLE
- UNDERPASS LIGHTING DISCONNECT SWITCH

STATE OF TEXAS
JOHN D. QUAD, JR.
58[illegible]
PROFESSIONAL ENGINEER

Parsons Brinckerhoff Quade & Douglas Inc.

Texas Department of Transportation

© 2002 by TxDOT

US 281
ILLUMINATION LAYOUTS

STA. 840+00 "BL1" TO END

PLAN 1"= 100' HORIZ

SHEET 19 OF 19

DESIGNED: DPL	FED. RD DIV. No.	STATE	FEDERAL AID PROJECT No.	HIGHWAY No.
CHECKED: GTC	6	TEXAS	XXXXXXXX	US 281

DRAWN: JTM	STATE DISTRICT	COUNTY	CONTROL No.	SECTION No.	JOB No.	SHEET No.
CHECKED:	PHARR	HIDALGO	0255	08	091	752

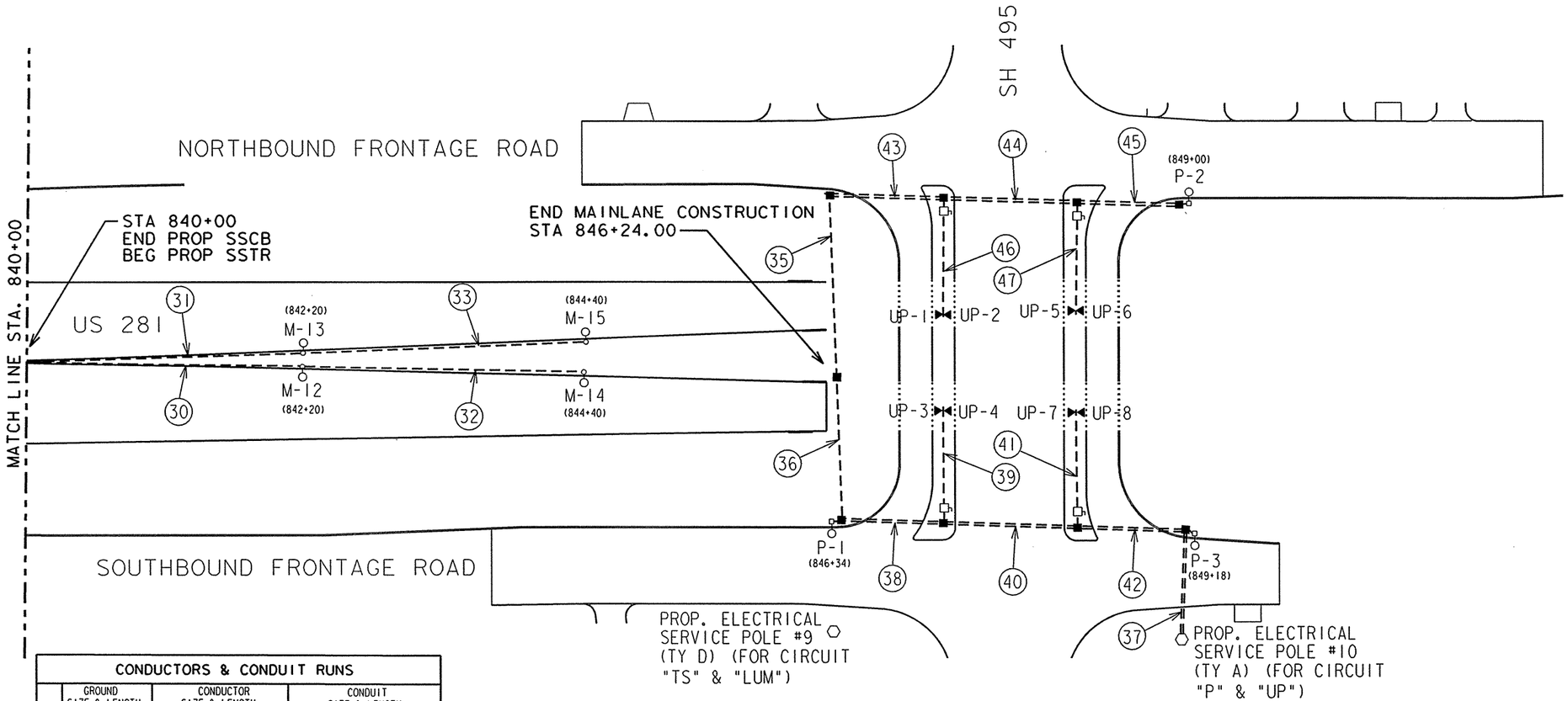

NOTES:

1. ALL STATION NUMBERS IN LUMINAIRE LOCATION SCHEDULE ARE REFERENCED FROM THE CENTER LINE.
2. ALL INDICATED LENGTHS IN CONDUIT AND CONDUCTOR RUNS ARE HORIZONTAL ONLY, ADD ADDITIONAL LENGTH FOR SPLICING AND VERTICAL RUN.
3. SEE STANDARD PLANS, RID(1)-98 THRU RID(4)-98 FOR MAST ARM AND LUMINAIRE POLE, CONDUIT AND JUNCTION BOX INSTALLATION DETAILS ON CAST-IN-PLACE AND SINGLE SLOPE CONCRETE BARRIER (TYPE 4).
4. SEE STANDARD PLANS, ED(1)-03 THRU ED(12)-03 FOR ELECTRICAL MATERIALS AND METHODS, WIRE MANAGEMENT, ELECTRICAL SERVICE AND DISTRIBUTION, AND PHOTOCELL INSTALLATIONS.
5. SEE STANDARD PLANS, HMID(1)-03 THRU HMID(9)-03 FOR HIGH MAST ILLUMINATION DETAILS, HMIP(1)-98 THRU HMIP(2)-98 FOR HIGH MAST ILLUMINATION POLES, AND HMIF(1)-98 THRU HMIF(2)-98 FOR HIGH MAST ILLUMINATION POLE FOUNDATIONS.

CONDUCTORS & CONDUIT RUNS

RUN NO.	GROUND SIZE & LENGTH (FEET)		CONDUCTOR SIZE & LENGTH (FEET)			CONDUIT SIZE & LENGTH (FEET)		
	#8 BARE	#6 BARE	#10 XHHW	#8 XHHW	#6 XHHW	1" RMC	2" PVC (SCH 40)	2" PVC (SCH 80) BORED
30	220			440			220	
31	220			440			220	
32	220			440			220	
33	220			440			220	
34								
35	150			600			150	
36	107			428			107	
37	87			348				87
38	79			316				79
39	92		184			92		
40	105			420				105
41	92		184			92		
42	86			344				86
43	89			356				89
44	103			412				103
45	81			162				81
46	97		194			97		
47	90		180			90		

SUMMARY OF ILLUMINATION QUANTITIES
(SHEET TOTALS)

ITEM	DESCRIPTION	UNIT	QUANTITY
610	RDWY. ILLUM ASSEM. (SP40S-10-10)(0.25 KW)S	EA	
610	RDWY. ILLUM ASSEM. (SP40S-10)(0.25 KW)S	EA	4
610	RDWY. ILLUM ASSEM. (SA40T-10)(0.25 KW)S	EA	3
610	UNDERPASS ILLUM ASSEM. (SPL-CO)(0.15 KW)S(TY1)	EA	8
618	CONDUIT (RMC) (1 IN.)	LF	371
618	CONDUIT (PVC) (SCH 40) (2 IN.)	LF	1,137
618	CONDUIT (PVC) (SCH 80) (2 IN.) (BORED)	LF	630
620	ELEC. CONDUCTOR (#8 BARE)	LF	2,138
620	ELEC. CONDUCTOR (#6 BARE)	LF	
620	ELEC. CONDUCTOR (#10 TY XHHW)	LF	742
620	ELEC. CONDUCTOR (#8 TY XHHW)	LF	5,126
620	ELEC. CONDUCTOR (#6 TY XHHW))	LF	
624	GROUND BOX (RPM) (TY A) (122311) APRON	EA	9
628	ELEC. SERVICE (TY A) (240/480) 060(NS) AL(T) TP(O)	EA	1
628	ELEC. SERVICE (TY D) (120/240) 070(NS) GS(T) TP(O)	EA	1
656	FND FOR RDWY ILL. ASM. (TY A) (30 IN. DR SH)	LF	18

LUMINAIRE LOCATIONS

LUM. NO.	STATION	OFFSET TO BASE	DESCRIPTION
M-12	842+20	9'RT.	(SP40S-10)(0.25KW)S
M-13	842+20	11'LT.	(SP40S-10)(0.25KW)S
M-14	844+40	14'RT.	(SP40S-10)(0.25KW)S
M-15	844+40	20'LT.	(SP40S-10)(0.25KW)S
P-1	846+34	126'RT.	(SA40T-10)(0.25KW)S
P-2	849+00	135'LT.	(SA40T-10)(0.25KW)S
P-3	849+18	135'RT.	(SA40T-10)(0.25KW)S
UP-1			(SPL-CO)(0.15KW)S(TY1)
UP-2			(SPL-CO)(0.15KW)S(TY1)
UP-3			(SPL-CO)(0.15KW)S(TY1)
UP-4			(SPL-CO)(0.15KW)S(TY1)
UP-5			(SPL-CO)(0.15KW)S(TY1)
UP-6			(SPL-CO)(0.15KW)S(TY1)
UP-7			(SPL-CO)(0.15KW)S(TY1)
UP-8			(SPL-CO)(0.15KW)S(TY1)

LEGEND

- ROADWAY FIXTURE TYPE (SP40S-10)(0.25KW)S
- ROADWAY FIXTURE TYPE (SA40T-10)(0.25KW)S
- UNDERPASS FIXTURE TYPE U/P(SPL-CO)(0.15KW)S(TY1)
- 2" SCHEDULE 40 PVC CONDUIT
- 2" SCHEDULE 80 PVC CONDUIT BORED
- CONDUIT RUN NUMBER
- JUNCTION BOX
- GROUND BOX
- SERVICE POLE
- UNDERPASS LIGHTING DISCONNECT SWITCH

STATE OF TEXAS
JOHN D. QUADE, JR.
58811
REGISTERED PROFESSIONAL ENGINEER

Parsons Brinckerhoff Quade & Douglas Inc.

Texas Department of Transportation

© 2002 by TxDOT

US 281
ILLUMINATION LAYOUTS

STA. 840+00 "BL1" TO END

PLAN 1"= 100' HORIZ

SHEET 19 OF 19

DESIGNED: DPL	FED. RD DIV. No.	STATE	FEDERAL AID PROJECT No.	HIGHWAY No.
CHECKED: GTC	6	TEXAS	XXXXXXX	US 281
DRAWN: JTM	STATE DISTRICT	COUNTY	CONTROL No.	SECTION No.	JOB No.	SHEET No.
CHECKED:	PHARR	HIDALGO	0255	08	091	752

REVISED 9/26/03

mohapp
03:40:51 PM
08/06/2003
y:\22322A *Texas*US281\20DC\Dwgs\Elec\Output\281-E19.dgn

DISCLAIMER
The use of this standard is governed by the "Texas Engineering Practice Act". No warranty of any kind is made by TxDOT for any purpose whatsoever. TxDOT assumes no responsibility for the conversion of this standard to other formats or for incorrect results or damages resulting from its use.

I. GENERAL REQUIREMENTS FOR ALL ELECTRICAL WORK

The location of all conductors, conduits, junction boxes, ground boxes, and electrical services is diagrammatic only and may be shifted by the Engineer to accommodate local conditions.

Materials shall be new and unused. Materials and installation shall comply with the applicable provisions of the National Electrical Code (NEC), National Electrical Manufacturers Association (NEMA) standards, and shall be Underwriters Laboratories (UL) Listed unless otherwise shown on the plans or specifications or approved by the Engineer in writing. Faulty fabrication or poor workmanship in any material, equipment, or installation shall be justification for rejection. When reference is made to UL, it can be considered to mean a Nationally Recognized Independent Testing Lab (NRTL). Comparable standards of Canadian Standard Association, Electrical Testing Laboratories or Factory Mutual can be equal to the referenced UL standard. Where reference is made to NEMA listed devices, IEC listed devices shall not be considered to be an acceptable equal to a NEMA listed device. Acceptable devices may have both a NEMA and IEC listing.

With the exception of high strength bolts, miscellaneous nuts, bolts and hardware may be stainless steel when plans specify galvanized, provided that bolts are 1/2 inch or less in diameter. The Contractor shall provide the following electrical test instruments as required by the Engineer to confirm compliance with the contract and the NEC. Those test instruments are voltmeter, amp probe, megger (1000 volt DC) and torque wrenches. All meters shall have been properly calibrated within one year. Calibration certification shall be provided to the Engineer upon request. Calibration certification tag shall also be applied to the meter. The Contractor shall operate meters during inspection as requested by the Engineer. Grounding shall be as shown on the plans and in accordance with the NEC. Metallic conduit, light poles, luminaires on bridge structures, and all metal enclosures shall be bonded to the system-grounding conductor. The ground rod in each ground box or junction box at the bridge ends, and in each ground box installed for underpass lighting will also be bonded to the system grounding conductor. The grounding conductor shall be bare or, if insulated, shall be green. Ground rods, connectors, and bonding jumpers will not be paid for separately, but will be subsidiary to the various bid items.

SUBMITTALS:

The contractor shall submit for approval six (6) copies of catalog cut sheets for each of the following three (3) categories.
Category 1. Electrical services including photocell.
Catagory 2. Breakaway disconnects, heat shrink tubing, heat shrink filler tape, GelCaps and ground boxes which will include loading capacity certification.
Category 3. Highmast assembly kits, when applicable. See Item 614 "Highmast Illumination Assemblies". Submittals shall be legible and shall be marked to indicate which product on a cut sheet is to be supplied. Where manufacturers provide warranties and guarantees as a customary trade practice, the Contractor shall furnish to the State such warranties and guarantees.
Any deviation from plans or specifications, including deviations due to plan error should be prominently displayed on the submittal. Any changes not prominently noted in submittal and incorporated into the work without proper authorization will constitute grounds for rejection of that portion of the work.

II. CONDUIT

A. MATERIALS

1. Conduit and fittings shall be UL listed for the intended use shown on plan sheets.
2. Conduit shall be the type shown by descriptive code or shown elsewhere on the plans. Substitution of the various types of conduits will not be permitted. All flexible conduit in rigid metallic conduit (RMC) systems shall be Liquidtight Flexible Metal (LFMC) conduit. All flexible conduit in PVC systems shall be Liquidtight Flexible Non-metallic conduit (LFNC).
3. All exposed conduits shall be RMC, unless otherwise specifically shown on the plans. All metal conduit shall be properly grounded.
4. Couplings, connectors, conduit bodies, grounding bushings, and offset nipples for RMC shall be electro-zinc plated steel or hot dipped galvanized malleable iron, threaded or threadless compression type, rain-tight and shall be UL listed for the intended use.
5. Expansion joints for metal conduit shall be provided with an internal or external bonding jumper and shall be UL listed.
6. Unless otherwise shown on the plans, junction box minimum sizes shall be in accordance with the following table which applies to the greatest number of conductors entering the box through one conduit with no more than four conduits per box. When a mixture of conductor sizes are present, the conductors shall be counted as if all are of the larger size. Situations not applicable to the table shall be sized in accordance with NEC 370-28.

AWG	3 CONDUCTORS	5 CONDUCTORS	7 CONDUCTORS
#1	10" x 10" x 4"	12" x 12" x 4"	16" x 16" x 4"
#2	8" x 8" x 4"	10" x 10" x 4"	12" x 12" x 4"
#4	8" x 8" x 4"	10" x 10" x 4"	10" x 10" x 4"
#6	8" x 8" x 4"	8" x 8" x 4"	10" x 10" x 4"
#8	8" x 8" x 4"	8" x 8" x 4"	8" x 8" x 4"

7. RMC system junction boxes equal to or smaller, in any dimension, than 12 x 12 x 6 (HxWxD), surface mounted and containing conductors #8 or larger, shall be hot dipped galvanized cast iron with minimum wall thickness of 3/16 inch, shall have external mounting lugs, and shall be UL listed Crouse-Hinds Type WAB, OZ/Gedney Type YS or approved equal. Unless otherwise shown elsewhere on the plans, RMC system junction boxes larger than the aforementioned boxes but equal to or smaller, in any dimension, than 18 x 18 x 6 (HxWxD) shall be 14-ga. stainless steel; RMC system junction boxes larger than 18 x 18 x 6 (HxWxD) shall be 12-ga. stainless steel. All metal junction boxes shall be equipped with a threaded hole or lug for grounding. Stainless steel boxes 12 x 12 x 6 and larger need not be UL Listed but shall meet the other requirements of the NEC and shall have ribs, stiffeners, or thicker metal and shall have external mounting feet. Junction boxes with an internal volume of more than 100 cu. in. may be supported by connection of two or more rigid metal conduits, where specifically shown on the plans or where approved by the Engineer.
8. Junction boxes containing only #10 or #12 AWG conductors shall be Crouse Hinds Type GRFX, Appleton Type JBOX, two-gang FD, or similar approved cast iron box. Boxes shall be sized according to NEC Table 370-16(a).
9. IMC and EMT conduit shall not be used unless specifically required by the plan layout sheets. Junction boxes in EMT conduit systems shall be made from galvanized sheeting and shall be UL listed and approved for outdoor use, unless otherwise noted on the plans. Sheet metal junction boxes shall be sized in accordance with the NEC. Junction boxes for IMC conduit systems shall meet the requirements of boxes used with RMC systems.
10. Junction boxes in PVC conduit systems shall be PVC, intended for outdoor use, unless otherwise noted on the plans.
11. Elbows in PVC conduit systems one inch and larger shall be rigid metal, with the exception of traffic signal systems which may have PVC elbows instead of rigid. If any part of the rigid metal elbow is buried less than 18 inches underground the elbow and rigid metal extension shall be grounded. Grounding shall be accomplished by means of a grounding bushing installed on the extension. Unless specifically shown on the plans, rigid metal elbows containing, or entering ground boxes containing only communications conductors, loop detectors, or other low voltage power limited circuits need not be grounded unless a ground wire is present in the conduit or ground box. The rigid metal elbows located in concrete foundations may be extended with PVC conduit and need not be grounded provided that the end of the elbow nearest the end of the conduit run exiting the foundation is at least 2 inches below the concrete. RMC elbows will not be eliminated. RMC elbows will not be paid for directly, but will be subsidiary to various bid items.
12. High-Density Polyethylene (HDPE) conduit shall meet the requirements of Item 622, Duct Cable, except that the HDPE conduit, when bid under Item 618, Conduit, shall not contain factory installed conductors. Fittings for HDPE conduit shall be UL listed as an electrical conduit connector or shall be thermally fused using an electrically heated wound wire resistance welding method. HDPE conduit may be substituted for bored schedule 40 or schedule 80 PVC conduit. When such substitution is made, bored HDPE shall be schedule 40 of the size PVC being replaced. The HDPE conduit shall transition to PVC (or RMC elbow when required) at the bore pit. Size and schedule shall be as shown on the plans. Substituted conduit may not be extended to ground boxes or foundations; RMC elbows shall be installed at ground boxes and foundations. RMC elbows will not be eliminated.
13. All conduit support hardware including straps, nuts, bolts, screws, retaining anchors and washers shall be hot dipped galvanized or stainless steel. Strut type conduit straps shall be stainless steel or hot dipped galvanized. Strut type straps need not be made of malleable type material. Stamped-cadmium plated straps will not be allowed. Straps having only one mounting hole shall not be allowed for use on conduits 2 inches and larger with the exception of electrical service poles where stainless steel standoff straps will be allowed. Two piece conduit straps designed to be used with a mounting shoe shall be installed only with the correctly sized shoe.

B. CONSTRUCTION METHODS

1. Conduit in structures shall have expansion fittings at structure expansion joints. All straight runs of RMC conduit exposed on structures such as bridges shall have expansion joints installed at maximum intervals of 150 feet. Expansion joints shall be installed so they allow for movement of the conduit. Installation of the joint in such a manner that will not allow for movement shall be repaired at no expense to the state. The method of determining the final setting length of the expansion joint shall be provided to the Engineer upon request.
2. Conduit supports shall be spaced at maximum intervals of 5 feet. Conduit spacers shall be used with metal conduit placed on surfaces of concrete structures (See conduit mounting options).
3. Conduit supports shall not be attached directly to prestressed concrete beams except as shown specifically in the plans and approved by the Engineer.
4. Unless otherwise shown on the plans, conduit placed beneath existing roadways, driveways, or sidewalks, or after the base or surfacing operation has begun, shall be accomplished by jacking or boring. The Contractor shall back fill and compact the bore pits to the bottom of the conduit prior to installing connecting conduit or duct cable to prevent bending of the connection.
5. Conduit trenched in the subgrade of new roadways shall be backfilled with excavated material, unless otherwise noted on the plans. Conduit trenched in the sub-base of new roadways shall be backfilled with cement-stabilized base.
6. Open ends of all conduit and raceways shall be fitted with temporary caps or plugs to prevent entry of dirt, debris and rodents during construction. The temporary cap may be constructed of duct tape, but in all cases shall be tightly fixed to the conduit and shall be durable. The contractor shall clean out the conduit and prove it clear in accordance with Standard Specifications Item 618.3 prior to installing any conductors.
7. Conduit entry into the top of enclosures such as safety switches, meter cans, service enclosures, auxiliary enclosures and junction boxes shall be made weatherproof using conduit sealing hubs, or threaded bosses.
8. A bonding jumper shall be installed from each grounding bushing to the nearest grounding rod, grounding lug, and/or equipment grounding conductor. All jumpers shall be the same size as equipment grounding conductor. Conduit used as casing under roadways for duct cable need not be grounded if duct extends full length through the casing. At electrical services, grounding electrode conductor shall be a solid Copper #6 AWG.
9. Metal junction boxes shall be bonded to the grounding conductor in accordance with the NEC.
10. Conduits entering ground boxes shall be placed so that the conduit ends shall be not less than 3 inches nor more than 6 inches from bottom of box (See ground box detail on sheet ED(3).
11. Conduit ends shall be sealed with heat shrink boots with waterproof sealant, urethane foam, or by other methods approved by the Engineer. Sealing shall be done after completion of any required pull tests. Duct tape shall not be used as a permanent conduit sealant. Silicone caulking shall not be used as a sealant.
12. All strut mounting material and hardware shall be hot-dip galvanized or shall be stainless steel. The cut ends of strut and non-galvanized rigid metal conduit threads shall be coated with a zinc rich paint (90% or more zinc content). Zinc rich paint may only be used to touch up galvanized material as allowed under Item 445.6 galvanizing. The painting of non-galvanized material with a zinc rich paint shall not be considered as an approved alternative for galvanized materials.
13. All PVC conduit terminations shall be fitted with bushings or bell ends. All metal conduit terminations shall be fitted with a grounding type bushing.

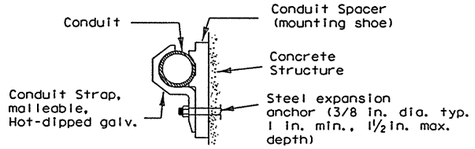

CONDUIT MOUNTING OPTIONS

(Attachment to concrete surfaces)
(See para. II.B.2)

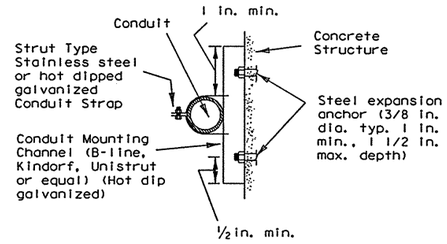

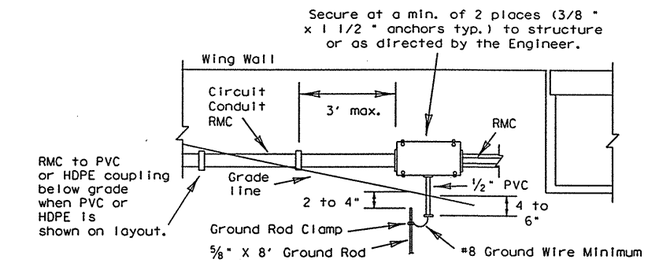

TYPICAL CONDUIT ENTRY TO BRIDGE STRUCTURE DETAIL

NOTES

1.) Ground rod clamp to be Blackburn GG 5/8H, Weaver W5/8 or equal.
2.) For conduit placed in structure, use flush-mounted box.
3.) Bond junction box and metal conduits to equipment grounding conductor and grounding electrode conductor using listed connector.
4.) Seal all conduits entering the junction box from underground.
5.) Install bell end or bushing on 1/2 " PVC conduit both ends.
6.) Ground rod to be driven within 8 inches of 1/2 inch PVC conduit end.

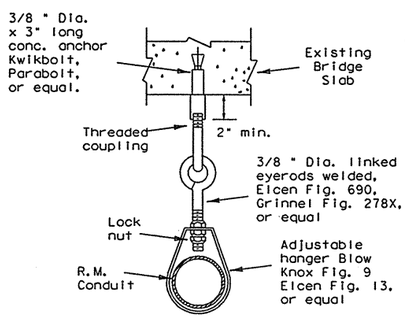

CONDUIT HANGER DETAIL

(Attachment to horizontal surfaces)
Hangers need not be UL listed for electrical use
ie: plumber pipe hangers are acceptable

STANDARD PLANS
TEXAS DEPARTMENT OF TRANSPORTATION
Traffic Operations Division

ELECTRICAL DETAILS- CONDUIT

ED(1)-03

©TxDOT January 1992	DN: KB	CK: JW	DW: DN	CK: GC	MSG NO.:
REVISIONS 10-93 4-98 12-00 3-03	STATE DISTRICT	FEDERAL REGION	FEDERAL AID PROJECT		SHEET
	TEXAS	6			753
	COUNTY		CONTROL	SECTION	JOB	HIGHWAY
	HIDALGO		0255	08	091	US 281

DN:
CK:
DW:
CK:

DATE:
ACC:
FILE:

LEVELS DISPLAYED
1 2 3 4 5 6 7 8 9 10 11 12 13 14 15 16
7 8 9 20 21 22 23 24 25 26 27 28 29 30 31 32
33 34 35 36 37 38 39 40 41 42 43 44 45 46 47 48
49 50 51 52 53 54 55 56 57 58 59 60 61 62 63

DISCLAIMER
The use of this standard is governed by the "Texas Engineering Practice Act". No warranty of any kind is made by TxDOT for any purpose whatsoever. TxDOT assumes no responsibility for the conversion of this standard to other formats or for incorrect results or damages resulting from its use.

I. ELECTRICAL CONDUCTORS

A. MATERIALS

1. Insulated conductors shall be NEC Type XHHW. Insulated conductors shall be color coded in accordance with the NEC, articles 200, 250, and 310; i.e. insulation of grounded conductors (neutrals) shall be white. Grounding conductors (ground wires) shall be bare or insulation shall be green. Insulation of ungrounded conductors (hots) shall be any color except green, white, or gray. Identification of conductors #6 American Wire Guage (AWG) and smaller shall be by continuous jacket color. Color coding of electrical conductors #4 AWG and larger shall be either by continuous color jacket or by colored tape. Colored tape marker shall consist of a half-lap of tape covering a 6-inch length of conductor.
2. Where two or more circuits are present in one conduit or enclosure, the conductors of each circuit shall be identified by a permanent non-metallic tag at each accessible location. The tag shall be fastened to the conductors by two plastic straps. Each tag shall indicate circuit number, letter, or other identification shown in the plans.
3. Grounding electrode conductor #6 AWG for bonding to ground rod at electrical service, shall be solid. Connection of conductor to ground rod shall be made using UL Listed connectors designed for such purposes.
4. Heat Shrink Tape filler shall be used to seal the ends of heat shrink tubing around two or more conductors that are insulated with heat shrink tubing. Tape material shall have a minimum dielectric strength of 225 volts per mil and shall be cross-linked butyl rubber. Tape shall be supplied in rolls and shall have a backing (release paper) to prevent the tape from sticking to itself.
5. Heat shrink tubing shall be heavy wall, UL listed for 600 volts or greater and shall have factory applied internal sealant.
6. GelCaps shall be UL listed for 600-volt applications. GelCap shall have see-through elastomer molded cover. Cover shall be filled with high dielectric insulating gel silicone sealant to provide waterseal. Cover shall be held in place by snap-lock, molded clamp made of UV stable polypropylene.
7. Splicing materials, insulating materials, breakaway disconnects, GelCaps and fuse holders will not be paid for directly but shall be subsidiary to various bid items.

B. CONSTRUCTION METHODS

1. After conductors have been installed in conduit, a pull test shall be made on conductors. When any length of conductor cannot be freely pulled, the Contractor shall make any needed alterations or repairs at no expense to the State.
2. The Contractor shall perform insulation resistance tests in accordance with Item 620, "Electrical Conductors." The Contractor shall coordinate with the Engineer to witness the tests.
3. A sufficient length of conductor for making up connections shall be left in ground boxes (2 feet minimum, 3 feet maximum, to point of splice, 3 feet minimum, 4 feet maximum, when conductor is pulled through with no splice), enclosures, weatherheads and pole bases (1 foot minimum, 1.5 feet maximum).
4. Splices shall be made only in junction boxes, ground boxes, pole bases, or electrical enclosures and shall be made with listed compression or screw type pressure connectors, terminal blocks, bolted lugs, or split bolt connectors. Splices shall be insulated with heavy wall heat shrink tubing or GelCaps and shall be made so as to provide a watertight splice. Heat shrink sleeve shall overlap conductor insulation a minimum of 2 inches on both sides of the splice. Where heat shrink tubing may not shrink sufficiently to provide a watertight seal around the individual conductors, prior to heating the tubing, the Contractor shall increase the diameter of the conductors insulation using heat shrink filler tape to provide a watertight seal between the individual conductors and the heat shrink tubing. Tape shall be visible after completion of all splices. Where filler tape is used but not visible, the Engineer shall approve each individual splice by conducting a physical inspection of each splice. When it appears the tubing has been burned, or overheated the tubing shall be considered to be defective and shall be replaced.
5. GelCaps when used in place of heat shrink method of splicing, shall be sized and installed according to manufacturer's specifications. (Raychem GelCap and GelCap SL or equal.)
6. Wire nuts may be used for #8 AWG or smaller conductors in above-ground junction boxes, but not in pole bases or ground boxes. Wire nuts shall be positioned upright to prevent the accumulation of water. Wire nuts used at these locations shall have factory applied waterproof sealant.
7. Conductors in illumination poles shall be supported by a J-hook in the top of the pole.
8. All conductors bid under Item 620 "Electrical Conductors" shall have breakaway electrical disconnects installed anytime conductors pass through a break-away support device.
9. For terminating the conductors, insulation-jacketing material shall be removed in such a manner as to not nick any of the individual strands of the conductor. When individual conductor strands are removed, the conductor shall be considered to be damaged.
10. When a conductor or cable has been damaged, or fails to pass an insulation resistance test, the conductor shall be replaced.
11. Duct tape, black electrical tape, or wire nuts shall not be used in the repair of a damaged conductor.
12. For terminations, no more than one wire may be installed under a single pressure connector, unless the device is listed for more than one wire.
13. Conductors connected to break-away in line fuse holders must be installed in accordance with the specific manufacturer's installation instructions. Where threaded connections are made, they shall be properly torqued. Where crimp type connections are made, crimps shall be made using properly sized crimping pliers. Proper conductor terminations are critical to the safe operation of break-away devices.
14. Waterproofing boots shall be properly trimmed to fit snugly around the conductor so as to provide a water proof connection. No more than one wire may enter a single opening in any one boot. Water proofing boots must provide the correct number of openings. Where only one wire is to be connected to a boot, the boot may not be a two wire type.

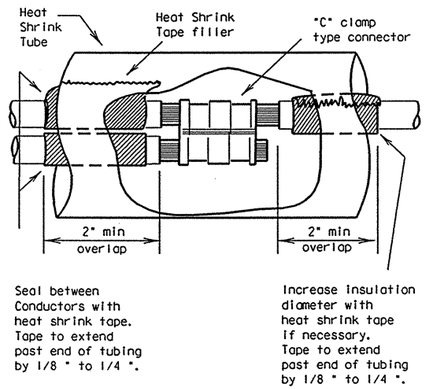

SPLICE OPTION 1

C-CLAMP

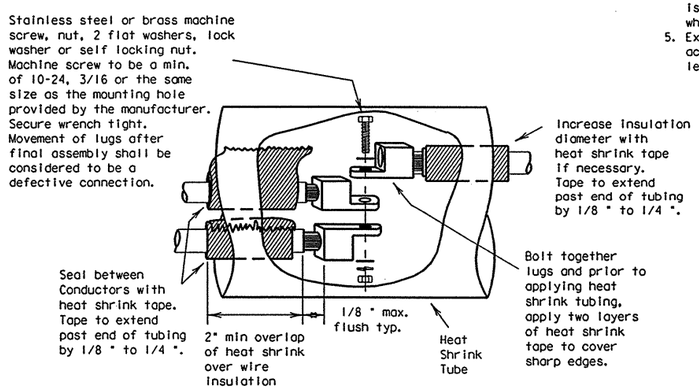

SPLICE OPTION 2

BOLTED WIRE LUGS

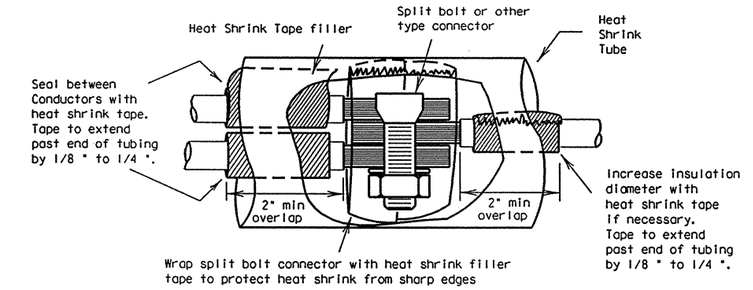

SPLICE OPTION 3

SPLIT BOLT

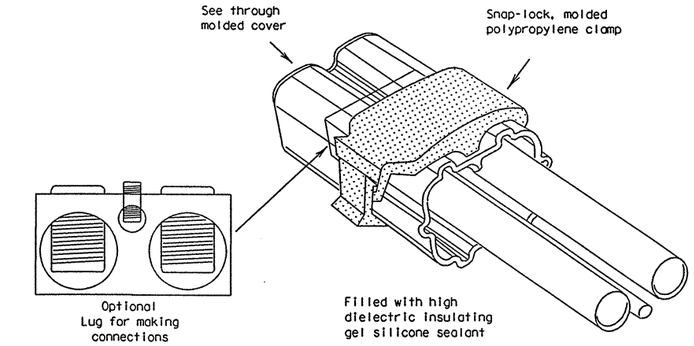

SPLICE OPTION 4

GELCAP

GelCap shall be sized and installed according to manufacturers specifications

15. All conduits that contain circuit wiring of 50 volts or more shall contain an equipment grounding conductor (EGC). Conduit for traffic signals shall have an EGC, with a minimum size of #8 AWG stranded. Unless otherwise shown on the plans, the EGC for all other conduits shall be the same AWG size as the largest current carrying conductor contained in that conduit. The EGC shall be paid for item 620-Electrical Conductors.

C. TEMPORARY WIRING

1. Temporary conductors and electrical equipment to provide power for utilization equipment, shall be installed in accordance with the NEC article 305. All temporary wiring materials and methods shall comply with the standard sheets. All power outlets for portable electrical equipment, power tools, ice machines, ice storage bins and refrigerators located outdoors at grade, supplied from a utility power source, shall be provided with a ground fault circuit interrupter.
2. Residual current protective devices (GFCI) may be any one of the following: molded cord and plug set, receptacle, or circuit breaker type.
3. Where wire nuts are approved for temporary wiring, they shall be of the self-sealing type.
4. All conductor splices must be contained within a listed enclosure, ground box or the splices will be more than ten feet above grade vertically and more than five feet horizontally from any metal structure. Where temporary conductors are installed in any area that is likely to be subjected to vehicle traffic, or mobile construction equipment, the vertical clearance to ground shall be at least 18 feet when measured at the lowest point. Where power conductors are to be supported by a span wire, the span wire shall be properly grounded.
5. Existing conduit containing service conductors uncovered during the construction process shall be repaired in a timely manner in accordance with the NEC. Existing non-metallic conduit exposed during construction shall not be left exposed above grade, or with less than eighteen inches of cover, without protective methods approved by the Engineer.

DN: CK: DW: CK:

DATE: ACC: FILE:

LEVELS DISPLAYED
1 2 3 4 5 6 7 8 9 10 11 12 13 14 15 16 17 18 19 20 21 22 23 24 25 26 27 28 29 30 31 32 33 34 35 36 37 38 39 40 41 42 43 44 45 46 47 48 49 50 51 52 53 54 55 56 57 58 59 60 61 62 63

STANDARD PLANS
TEXAS DEPARTMENT OF TRANSPORTATION
Traffic Operations Division

ELECTRICAL DETAILS-CONDUCTORS

ED(2)-03

©TxDOT January 1992

DN: KB	CK: JW	DW: DN	CK: GC	MSG NO.:

REVISIONS	STATE DISTRICT	FEDERAL REGION	FEDERAL AID PROJECT			SHEET
10-93 4-98 12-00 3-03	TEXAS	6				754
	COUNTY		CONTROL	SECTION	JOB	HIGHWAY
	HIDALGO		0255	08	091	US 281

DISCLAIMER
The use of this standard is governed by the "Texas Engineering Practice Act". No warranty of any kind is made by TxDOT for any purpose whatsoever. TxDOT assumes no responsibility for the conversion of this standard to other formats or for incorrect results or damages resulting from its use.

DN: CK: DW: CK: DATE: ACC: FILE:

LEVELS DISPLAYED
1 2 3 4 5 6 7 8 9 10 11 12 13 14 15 16
17 18 19 20 21 22 23 24 25 26 27 28 29 30 31 32
33 34 35 36 37 38 39 40 41 42 43 44 45 46 47 48
49 50 51 52 53 54 55 56 57 58 59 60 61 62 63

II. GROUND RODS

A. MATERIALS

1. All ground rods installed at electrical services, including supplemental lightning protection ground rods specified by the plans in other locations such as pole bases, shall be copper clad and UL listed. Rods shall be a minimum diameter of 5/8 inch. The length shall be a minimum of 8 feet. Larger diameter or longer length rods may be called for in some specific locations, see the individual plans sheets.
2. Ground rod clamps shall be listed to be in direct contact with the soil. Where concrete encasement is required, the clamp shall be listed for concrete encasement.

B. CONSTRUCTION METHODS

1. Ground rods installed in locations such as pole bases, to provide supplemental lightning protection need not be totally in contact with the soil. Where called for in the plans, rods may be encased in soil or concrete or any combination of soil and concrete. When concrete encased, the connection of the conductor to the rod shall be readily accessible for inspection or repairs. When driven into the soil the upper end shall be between 2 to 4 inches below finished grade. Ground rods shall not be placed in the same drilled hole as a timber pole.
2. Ground rods shall be installed such that the end imprinted with the rod's part number is installed as being the upper end.
3. Non-conductive coatings such as concrete splatter shall be removed from the rod at the clamp location.
4. Routing of lightning protection ground rod wires shall be run as short and straight as possible. Where bends are required they shall have a minimum radius of four inches.
5. Unless specifically called for by the plans, conduits used for ground rod wires shall be non-metallic. Where metal conduits are specified, a grounding bushing and properly sized bonding jumper shall be provided and properly installed on each end.
6. Where rocky soil or a solid rock bottom is encountered when driving a ground rod and the horizontal trench placement method is the only viable solution, written authorization from the Engineer must be obtained.

III. GROUND BOX

A. MATERIALS

1. Ground boxes 16x30x24 inches (WxLxD) or smaller shall be polymer concrete of the type required by the descriptive code shown elsewhere. Larger ground boxes shall be as shown elsewhere in the plans.
2. All ground boxes and covers shall be permanently marked either by impress or by permanent ink, with manufacturer's model number and manufacturer's name or logo.
3. Covers shall be bolted down, and bolt holes in the box shall be arranged to drain dirt.
4. Ground box Types A, B, C, D & E shall meet the following requirements:
   a. Ground boxes and covers be manufactured from polymer concrete reinforced with continuous strands of woven or stitched borosilicate fiberglass cloth. The polymer concrete shall be made from catalyzed polyester resin, sand and aggregate, and shall have a minimum compressive strength of 11,000 psi. Polymer concrete containing chopped fiberglass or fiber-glass reinforced plastic is not acceptable.
   b. Minimum inside dimensions shall be as follows (width x length x depth):
      Type A shall be 11.5 inches x 21 inches x 10 inches, (122311)
      Type B shall be 11.5 inches x 21 inches x 20 inches, (122322)
      Type C shall be 15.25 inches x 28.25 inches x 10 inches, (162911)
      Type D shall be 15.25 inches x 28.25 inches x 20 inches, (162922)
      Type E shall be 11.5 inches x 21 inches x 16 inches, (122317)
   c. Bottom edge of box or extension shall be footed with a minimum 1 1/4 inch flange.
   d. Ground boxes shall withstand 600 lbs. per sq. ft. applied over the entire sidewall with less than 1/4 inch deflection per foot length of box. Ground boxes and covers shall withstand a test loading of 20,000 lbs. over a 10 inch by 10 inch area centered on the cover with less than 1/2 inch deflection. Ground boxes and covers shall meet Western Underground Standards 3.6. Manufacturer shall supply certification by an independent laboratory or sealed by a Texas-Licensed Professional Engineer.
   e. Covers shall be 2 inch (nominal) thick polymer concrete. All hardware shall be stainless steel. Cover shall be secured with two 1/2 inch stainless steel bolts. Bolts shall be self-retaining and shall withstand a minimum of 70 ft-lbs. torque and shall have a minimum 750 lbs. straight pull out strength. Nuts shall be floating and shall provide a minimum of 1/2 inch movement from the center of the nut. Covers shall be skid resistant, minimum 0.5 coefficient of friction. Covers shall be interchangeable between manufacturers and shall conform to the dimensions shown herein. Unless otherwise approved by the Engineer, cover shall be legibly imprinted with the following words in minimum 1 inch letters:
      Ground Boxes containing wiring for traffic signals shall be labeled, Danger High Voltage Traffic Signal.
      Ground boxes containing wiring for illumination systems shall be labeled, Danger High Voltage Illumination.
      Ground boxes containing wiring for traffic management systems shall be labeled, Danger High Voltage Traffic Management.
      Ground boxes containing wiring for sign illumination systems shall be labeled, Danger High Voltage Sign Illumination.
      Ground boxes containing wiring for traffic signals that also contain illumination, powered by the signal electrical service, shall be labeled, Danger High Voltage Traffic Signal.

B. CONSTRUCTION METHODS

1. Ground boxes shall be set on a 9 inch (minimum) bed of coarse No. 1 aggregate as defined by Item 421. Gravel shall be in place prior to setting box and conduits shall be capped. Any gravel or dirt in conduit shall be removed.
2. When required by Item descriptive code, construction of an apron encasing a ground box including concrete and reinforcing steel shall not be paid for directly but shall be subsidiary to the ground box. Reinforcing steel may be field bent. Concrete for aprons shall be considered miscellaneous concrete for testing purposes. Aprons shall be cast in place.
3. Conduit holes may be cut in the walls of type B & D boxes at least 18 inches beneath the cover.
4. If, within the limits of this project, the Contractor must utilize an existing ground box equipped with a metal cover, the Contractor shall bond the cover to the grounding conductor with a 3 foot long flexible stranded jumper the same size as the grounding conductor. Connection of bonding jumper to metal ground cover shall not be paid for directly but shall be subsidiary to various bid items. The box(es) must be clearly shown on the plans with plan notes fully describing the work required.
5. If there are other ground boxes with metal Covers within the project limits but not involved in the contract, the Engineer may direct the Contractor to ground the covers, designating and identifying the specific boxes in writing. This work will be paid for separately.
6. Termination to metal ground box covers shall be made using a tank ground type lug.

PLAN VIEW

SECTION A - A

APRON FOR GROUND BOXES

(Where required)

(1) Final position of end of conduit shall not exceed one-half the distance to the side of box opposite the conduit entry.
(2) Place gravel "under" the box, not "in" the box. Gravel should not encroach on the interior volume of the box.
(3) Install bushing on the upper end of all ells.
(4) Where a ground rod is present in the ground box, connect it to any and all equipment grounding conductors using a listed connector.
(5) Maintain sufficient space between all conduits so as to allow for proper installation of bushings.
(6) All conduits shall be installed in a neat and workmanlike manner.
(7) All conduits installed in the ground box shall be sealed after completion of conductor installation and any required pull tests. Silicone shall not be used as sealant.

PLAN VIEW

END

SIDE

GROUND BOX COVER

GROUND BOX COVER DIMENSIONS								
BOX	DIMENSIONS (INCHES)							
SIZE	H	I	J	K	L	M	N	P
A, B & E	23 1/4	23	13 3/4	13 1/2	9 7/8	5 1/8	1 3/8	2
C & D	30 1/2	30 1/4	17 1/2	17 1/4	13 1/4	6 3/4	1 3/8	2

STANDARD PLANS
TEXAS DEPARTMENT OF TRANSPORTATION
Traffic Operations Division

ELECTRICAL DETAILS-GROUND BOXES

ED(3)-03

©TxDOT January 1992 DN: KB CK: JW DW: DN CK: GC NEG NO.:

REVISIONS	STATE DISTRICT	FEDERAL REGION	FEDERAL AID PROJECT			SHEET
10-93 4-98 12-00 3-03	TEXAS	6				755
	COUNTY		CONTROL	SECTION	JOB	HIGHWAY
	HIDALGO		0255	08	091	US 281

DISCLAIMER
The use of this standard is governed by the "Texas Engineering Practice Act". No warranty of any kind is made by TxDOT for any purpose whatsoever. TxDOT assumes no responsibility for the conversion of this standard to other formats or for incorrect results or damages resulting from its use.

ELECTRICAL SERVICES NOTES

All work, materials, services, and incidentals, whether or not specifically shown on the plans, which may be necessary for a complete and proper electrical service installation as specified in the plans to obtain electrical power shall be paid for, performed, furnished and installed by the Contractor. The Contractor shall contact the Utility for metering and shall comply with all Utility requirements.

Primary line extensions, connection charges, meter charges, and other charges by the Utility company to provide power to the location shown, when required, shall be paid for under force account work. The costs associated with these charges shall be approved by the Engineer prior to engaging the Utility company to do the work. The Contractor shall consult with the appropriate Utility to determine costs and requirements, and shall coordinate the Utility's work as approved by the Engineer. The Contractor shall be reimbursed only the amount billed by the Utility. No additional amount for supervision of the Utility's work will be paid.

Materials shall be new and unused, materials and installation shall comply with the applicable provisions of the National Electrical Code (NEC) and National Electrical Manufacturers Association (NEMA) standards and shall be Underwriters Laboratories (UL) Listed. Electrical Service conduits, conductors, disconnects, contactors, circuit breaker panel sizes, and branch circuit breakers, shall be as shown in the Electrical Service Data elsewhere in the plans. Faulty fabrication or poor workmanship in any material, equipment, or installation shall be justification for rejection.

The Contractor shall submit for approval no less than six (6) copies of catalog cut sheets on electrical service materials. Submittals shall be legible and shall be marked to indicate which product on a cut-sheet is to be supplied. Where manufacturers provide warranties and guarantees as a customary trade practice, Contractor shall furnish to the State such warranties or guarantees.

The Contractor shall provide locks keyed with Master #2195 for all lockable electrical enclosures. Keys and locks become property of the State. Unless otherwise approved by the Engineer, enclosures shall not be energized until locks are provided and all bolts are installed.

Circuit directories, where provided, shall be filled out. All breakers and components in shop built panels and enclosures shall be labeled with duo-colored plastic labels. Letters shall be a minimum 3/8 " in height.

Enclosures with external disconnects that de-energize all equipment inside the enclosure, need not have dead front trim, except that incoming line terminations shall be protected from incidental contact.

When galvanized is specified for nuts, screws, bolts or miscellaneous hardware, stainless steel may be used. All wiring and components shall be rated for 75 degrees C. Minimum size for service entrance conductors shall be #6 XHHW.

I. Safety Switch. A safety switch, placed ahead of the meter, shall only be used when specified by the Utility and when shown on the Electrical Service Data. The switch shall be UL Listed, heavy duty type, 600 volt, unfused, with a UL type 3R enclosure and equipped with a solid neutral (s/n) assembly. The switch shall be padlockable in the "on" position.

II. Service Type. Electrical service types A, C, D, and T shall be as schematically detailed on ED(4) or ED(5). Other service types shall be as detailed elsewhere on the plans.

III. Branch Circuit Breakers. Circuit breakers shall be thermal magnetic and have a minimum interrupting capacity of 10,000 amps and a voltage rating compatible with their use. Circuit breakers shall be sized as shown in the electrical service data. Circuit breakers in panelboards and load centers shall be full size and designed exclusively for the panelboard or load center in use. Tandem and half-width breakers shall not be used. All circuit breakers shall be permanently and clearly marked identifying the circuit or device supplied. Circuit breakers shall be UL Listed to UL489.

IV. Circuit Breaker Panelboard. Panelboards shall be UL Listed. Panelboards shall have copper busses, a minimum of 6 one-pole spaces or as required in the electrical service data, and when required will be rated for service equipment. Enclosure shall meet or exceed UL type 3R classification. Panelboards shall have a threaded hub conduit entry for conduit entering the top of the enclosure. Circuit breakers shall be bolt-in type only.

V. Circuit Breaker Load Center. Load centers shall be UL Listed.
Load centers for type T services may have copper or aluminum busses, all other load centers will be copper bus only. Load center will have a minimum of 4 one-pole spaces, and shall be rated for service equipment. Enclosure shall meet UL type 3R classification. Load centers shall have a threaded hub conduit entry for conduit entering the top of the enclosure. Circuit breakers shall be plug-in type only. Load centers for type T services shall accomodate a maximum of 6 one-pole breakers.

VI. Separate or Auxiliary Enclosure. Separate enclosures for HOA, photocell and lighting contactors for types D & T Services shall be a UL Listed assembly with outer door. Interior shall have dead front trim. HOA switch operator shall extend through the dead front trim. Photocell shall be mounted inside the enclosure as described in paragraph XIII when required by descriptive code. Separate enclosures shall meet the construction requirements of paragraph VIII. E, except that separate enclosure shall not have external operating handle, need not have a data pocket and door may latch at only one point. All equipment may be located in one enclosure instead of two, when approved by the Engineer.

VII. Where a Type D or T service is provided, laminated "as built" drawings are required as shown on ED(5) VIII E; shall be delivered before completion of the work, to the Engineer in lieu of placement within these smaller enclosures. Conduit may not enter the back wall of a service enclosure penetrating the equipment mounting panel. Provide grounding bushings on all metal conduits, terminate bonding jumper to grounding bus. Grounding bushing is not required when the end of the metal conduit is fitted with a conduit sealing hub or threaded boss such as a meter base.

EXPLANATION OF ELECTRICAL SERVICE DESCRIPTIVE CODE

ELEC SERV TY X (XXX/XXX) XXX (XX) XX (X) XX (X)

Example: ELEC SERV TY A(240/480)100(NS)SS(E)GC(O)

Schematic Type

Service Voltage (V / V)

Disconnect Amp Rating
(000 indicates main lug only)

SS= Safety switch ahead of meter
NS= No switch ahead of meter and/or no meter required

Enclosure Type
GS= Galvanized steel (see ED(5)VIII,D)
SS= Stainless steel
AL= Aluminum

Photocell Mounting Location
T= Top of pole
E= Inside service/separate enclosure
L= Luminaire mounted
N= None

Service Support Type
GC= Granite concrete
OC= Other concrete
TP= Timber pole
SP= Steel pole
SF= Steel frame
OT= Pole by others or paid for separately
EX= Existing pole
TS= Switch gear to be placed on traffic signal pole
RT= Rectangular structural tubing
PS= Pedestal Service (see ED(5)VIII,G)

O= Overhead service
U= Underground service

TOP MOUNTED PHOTOCELL

Conduit support spacing 3 feet from enclosure; 5 feet max.

ENCLOSURE MOUNTED PHOTOCELL

For photocell specifications see ED(5), XIII.

1 - Class 5 pole, height as required
2 - Service drop from utility company (attached below weatherhead)
3 - Service conduit and service entrance conductors (RMC) (See Electrical Service Data)
4 - Safety switch (when required)
5 - Meter (when required)
6 - Service enclosure
7 - No. 6 bare grounding electrode conductor in 1/2 " PVC to ground rod - extend 1/2 " PVC 6" underground.
8 - 5/8 " x 8' Copper clad ground rod - drive ground rod completely underground unless otherwise approved by the Engineer.
9 - RM conduit - same size as branch circuit conduit.
10 - Photocell and conduit - if top mounted. (See Electrical Service Data)
11 - When required by the serving utility provide bare #6 awg copper conductor. Run wire from pole top to butt wrap or copper butt plate. Protect conductor to a height of 8 ft above finish grade.

LIQUIDTIGHT FLEXIBLE METAL CONDUIT (LFMC)
(If applicable)

- Liquidtight flexible metal conduit, may be used when meter and service enclosure are mounted 90 to 180 degrees to each other. Size shall be same as service entrance conduit.
- LFMC shall not exceed 3 ft. and shall be securely supported within one ft. of each end. No strap required for LFMC shorter then 12"
- Each end of LFMC must have a grounding bushing or be terminated with a grounding fitting.
- A neutral conductor must be installed within the LFMC.
- Bend in liquidtight flexible metal conduit shall not exceed 180 degrees.
- A pull test is required on all installed conductors, at least six inches of free conductor movement shall be demonstrated to the satisfaction of the Engineer.

SERVICE SUPPORT TYPE TP (O)

(timber pole, overhead service, typical arrangement)

TIMBER POLE NOTES

1. Conduit and electrical conductors attached to the electrical service pole and underground within 12 inches of service pole shall not be paid for directly but shall be subsidiary to the service pole.
2. Pole top mounted photocell. Install on north side of pole or in service enclosure as required. See Electrical Service Data.
3. Attach meter and service equipment with stainless steel or galvanized channel (Unistrut, Kindorf, or equal). Gain pole as required to provide flat surfaces for each strut. Paint ends of galvanized channel with zinc rich paint. Gain depth 5/8" max. Gain height 1 7/8" max. Strut to be 1" max. deep, and 1 5/8" wide max. Secure each strut section to timber pole with two galvanized or SS lag bolts, 1/4" diameter min. by 1 1/2" length min. Place flat cut galvanized or SS washer on each lag bolt. Gain pole in a neat and workmanlike manner.
4. Embedment depth shall be as required in Item 627 Treated Timber Poles.
5. Poles trimmed for excess length shall be trimmed from the top end only.

SCHEMATIC TYPE T
120/240 VOLTS - THREE WIRE

Install photocell and lighting contactor when shown on Electrical Service Data.

SCHEMATIC LEGEND

1 - omitted
2 - Meter (when required)
3 - Service Assembly Enclosure
4 - Main Disconnect Breaker (Not Used)
5 - Omit
6 - Circuit Breaker, 15 Amp typical for control circuit wiring
7 - Auxiliary Enclosure
8 - Control Station ("H-O-A" Switch)
9 - Photo Electric Control (enclosure-mounted shown)
10 - Lighting Contactor
11 - Power Distribution Terminal Blocks (Not Used)
12 - Neutral Bus required when 120 v. lights are controlled by lighting contactor
13 - Branch Circuit Breaker (See Electrical Service Data)
14 - Circuit Breaker Panelboard (Not Used)
15 - Load Center
16 - Ground Bus

——— Power Wiring
– – – – Control Wiring
—N— Neutral Conductor (when required-to serve 120 v. loads only)
—G— Equipment grounding conductor-always required

STANDARD PLANS
TEXAS DEPARTMENT OF TRANSPORTATION
Traffic Operations Division

ELECTRICAL DETAILS- SERVICE SCHEMATICS AND SUPPORT-TYPE TP (OVERHEAD)

ED(4)-03

©TxDOT April 1998 DN: KB | CK: JW | DW: DN | CK: GC | NEG NO.:

REVISIONS	STATE DISTRICT	FEDERAL REGION	FEDERAL AID PROJECT			SHEET
12-00	TEXAS	6				756
3-03	COUNTY		CONTROL	SECTION	JOB	HIGHWAY
	HIDALGO		0255	08	091	US 281

DN:
CK:
DW:
CK:
DATE:
ACC:
FILE:

LEVELS DISPLAYED															
1	2	3	4	5	6	7	8	9	10	11	12	13	14	15	16
17	18	19	20	21	22	23	24	25	26	27	28	29	30	31	32
33	34	35	36	37	38	39	40	41	42	43	44	45	46	47	48
49	50	51	52	53	54	55	56	57	58	59	60	61	62	63	

DISCLAIMER
The use of this standard is governed by the "Texas Engineering Practice Act". No warranty of any kind is made by TxDOT for any purpose whatsoever. TxDOT assumes no responsibility for the conversion of this standard to other formats or for incorrect results or damages resulting from its use.

LEVELS DISPLAYED

1	2	3	4	5	6	7	8	9	10	11	12	13	14	15	16
17	18	19	20	21	22	23	24	25	26	27	28	29	30	31	32
33	34	35	36	37	38	39	40	41	42	43	44	45	46	47	48
49	50	51	52	53	54	55	56	57	58	59	60	61	62	63	

DATE:
ACC:
FILE:

DN:
CK:
DW:
CK:

SERVICE ENCLOSURE NOTES

VIII. Service Assembly Enclosures. All service assemblies and enclosures shall be UL Listed for the intended purpose.

A. Shop built or shop assembled service assemblies (all types except Type T and Type D without lighting contactor or enclosure mounted photo cell) and all auxilliary equipment enclosures mounted with service equipment and paid for as part of Item 628, "Electrical Services", shall be built or assembled by a UL Listed Industrial Control Panel shop and shall have a unique serial numbered UL Label with the words "LISTED ENCLOSED INDUSTRIAL CONTROL PANEL". The same or an additional label shall have the name, location, and phone number of the shop, the UL file number of the shop, the shop order or drawing number, date of manufacture or assembly, and the line voltage. The service assembly enclosure shall also be labeled "SUITABLE ONLY FOR USE AS SERVICE EQUIPMENT".

B. Conduit entries into the top of enclosures shall have threaded hub. Conduit entries through the equipment mounting back plate will not be allowed.

C. All service enclosure front doors shall be permanently labeled "DANGER HIGH VOLTAGE". Label shall be a self sticking type, intended for outdoor installation. Lettering style, layout and colors of red, black and white shall be as required by OSHA. Label letters shall be 1 to 1 1/2 inches high or as high as the enclosure door width will permit for smaller services. Separate or auxiliary lighting enclosures need not be OSHA labeled when mounted in the same viewing plane as the service enclosure front door. Where only one type of load is served by the service, the service door shall be marked using duo-colored plastic labels or self adhesive vinyl weather resistant labels, minimum of 1 inch high, applied in a neat and workmanlike manner. On the label will be the service number shown on the plans as well as identifying the load served specifically (i.e. lighting, landscaping, signals, traffic management or other wording as directed by the Engineer). Safety switches need not be OSHA labeled unless specifically required by the serving utility.

D. Type GS enclosures will only be allowed for service Types D and T without an enclosure mounted photocell and/or lighting contactor and the Type C panelboard. This spec will allow an "off the shelf" product meeting these specifications to be used. Type GS enclosures shall be made from pre-galvanized steel sheeting, hot dipped galvanized steel, or powder coat painted steel unless shown differently on the plans. Steel enclosures shall be painted inside and outside; galvanized enclosures may be painted. Unless otherwise approved by the Engineer, painted enclosures shall be gray, beige, white or light green. Panelboard/loadcenter enclosures shall meet UL type 3R requirements, shall have a dead front trim, and an outer padlockable door preventing unauthorized persons from operating contained equipment. Galvanized steel is no longer allowed for Types A,C,or custom-built D or T enclosures. If GS is shown in the descriptive code for any of these, an AL shall be provided.

E. Type AL enclosures for service Types A and C shall meet UL type 3R requirements and shall also meet additional requirements of this paragraph. The enclosure shall have both a main disconnect remote operator handle and a door latch handle. Die-cast handles are not acceptable. The main disconnect remote operator shall be flange-mounted, shall interlock the door when in the "on" position, and shall be padlockable in both the "on" or "off" positions. Door latch shall latch at two or more points, operate by a handle separate from disconnect switch and be capable of being locked. Door closure clamps will not be allowed. Lock must be keyed to Master #2195. All the enclosures shall have either a continuous stainless steel piano hinge with stainless steel pin or enclosures less than 30 inches may have two heavy duty hinges, those over 30 inches must have three. Heavy duty two and three point hinges shall have a 0.185 inch minimum diameter electro-zinc plated steel pin or a stainless steel pin. Two point hinged doors shall be rated for 56 lbs of loading. Three point hinged doors shall be rated for 70 lbs of loading. The door shall have an attached data pocket constructed of either thermoplastic or metal. Pocket shall be 12" x 12", unless that size will not fit in enclosure. The pocket shall then be as large as possible, as approved by the Engineer, and mechanically attached with stainless steel nuts and bolts, or stainless steel or aluminum rivets. Enclosure shall include an equipment mounting panel installed inside the enclosure on collar studs or tapped bosses, and constructed of a minimum 12 guage galvanized steel. Equipment mounting panels shall not be painted. Enclosure shall have factory installed external mounting feet. Enclosure door shall be capable of opening at least 130 degrees, with arm or other approved means to hold the door open. Only the enclosure exterior will be primed and painted. Paint color shall be beige or gray and shall be powder coat paint as shown below. Condensation drainage shall be provided in the bottom of the enclosure before leaving the factory. The Contractor shall prepare and submit a schematic drawing unique to an individual service. The approved drawing shall be laminated and placed in the document pocket of the service at the time of shipment to the job site. All applicable wiring diagrams and plan sheet layouts for all equipment and branch breaker circuits supplied by that service shall also be laminated and placed in the document pocket prior to shipping. Type AL enclosures for Type D and T services with enclosure mounted photocell and/or lighting contactor shall have the loadcenter interior mounted in an enclosure with properly adapted dead front trim. Types D and T shall not have a loadcenter exterior "can" mounted inside another enclosure meeting these specifications. (Do not put one enclosure inside another enclosure). Types D and T with enclosure mounted photocell and/or lighting contactor shall meet the additional requirements of this paragraph except that remote-operating handle will not be provided.

F. Type SS enclosures for Type A and C shall meet all the requirements above for their respective type AL. Type SS enclosures for D and T shall meet all the requirements above for their respective type AL. Stainless Steel shall not be painted.

G. PS enclosure shall be as detailed and specified on ED(8). Galvanized steel will not be allowed for any pedestal service. If GS is shown in the descriptive code an AL will be provided.

IX. Powder Coat Paint. Powder coating shall be either a polyester thermosetting resin, a zinc rich primer with a TGIC (triglycidyl isocyanurate) powder overcoating, or a zinc-rich epoxy powder, applied by either electrostatic spray or fluidized bed immersion, high temperature oven cured, high density, low gloss, 4 mil thick (minimum), coating. Adhesion shall meet the 5A or 5B classifications of ASTM D3359. Finish shall be uniform in appearance and free of scratches.

X. Main Disconnect. Main disconnect device shall be a circuit breaker, as specified in the Electrical Service Data, shall be two or three pole, and rated for the voltage and amperage specified. Circuit breaker shall be an UL Listed thermal-magnetic circuit breaker controlled by flange-mounted remote operator in the service assembly enclosure when required. Circuit breakers shall have a minimum interrupting rating of 10,000 Amps. When the utility company provides a transformer larger than 50 KVA, Contractor shall verify that the available fault current is less than the circuit breaker amps interrupting capacity (AIC) rating and shall provide documentation from the Utility to the Engineer. Documentation shall be submitted at the same time as other electrical submittals. Circuit breaker shall be UL Listed to UL489. No backfed breakers will be allowed for use as a main disconnect.

XI. Control Circuit. Control circuit protection shall be 15 amp circuit breaker.

XII. Control Station ("H-O-A" Switch). Control station shall be a maintained-contact, three position selector switch in an UL type enclosure. Switch shall be rated 600 volts and shall be fitted with "Hand-Off-Auto" legend.

XIII. Photo Electric Control. Photo electric control shall consist of a photocell, internal lightning arrester, and relay or bimetallic switch mounted inside a weatherproof enclosure with standard 3-prong twist lock photocell plug and receptacle. The enclosure shall be made of poly-acrylic with clear acrylic window. Enclosure chassis shall be molded thermosetting plastic. The photocell shall have a polyethylene gasket, and shall have a hermetically sealed cadmium sulfide cell. The arrester shall have an enclosed type expulsion arrester rated 2.0 kV sparkover with 5,000 amps follow-through. Relay or switch shall be time delay type with normally closed contacts. Photo electric control shall be rated a minimum of 1800 VA, voltage as required. Enclosure mounted photocells shall be the same as above except that the photocell shall be mounted inside the enclosure. The enclosure shall have two acrylic paned windows, or other material approved by the Engineer, one on each side of the enclosure. Each window shall be rectangular approximately one inch by two inches, round 2 inch diameter, or as otherwise approved by the Engineer. Bracket and photocell's receptacle will be mounted inside enclosure next to each window. Except for window side, 2" of clearance is required on all sides of photocell for ease of replacement. The photocell's receptacle is held in place by two mounting screws on bracket and located next to each window of the enclosure. The 3-prong twist lock photocell shall be mounted in a position to receive light from the window closest to the photocell. The photocell shall be mounted in a position to receive light from one window. Top of pole mounted photocells shall be mounted as shown on ED(4). The Contractor shall be responsible for proper operation of the photo-electric control. The Contractor shall move and/or adjust or shield the photocell from stray or ambient nighttime light or shall make any other adjustments required for proper operation. The photocell shall face North when practicable. Unless otherwise shown on the plans, the photocell shall turn on the illumination system at 1.0 +(-) 0.5 footcandle and turn off the illumination system at two footcandles higher than turn on.

XIV. Lighting Contactor. Lighting contactor shall be a UL Listed NEMA rated lighting contactor, two-pole or multipole as required, electrically held type designed to control high pressure sodium lighting loads, with silver alloy double break contacts rated at 240 volts, 480 volts or 600 volts as required. Lighting contactor shall not be the DIN rail mounted type.

XV. Power Distribution Terminal Blocks. Power distribution terminal blocks shall be rated for 600 volts and shall be used for line side connections to branch circuit breakers where more than one circuit breaker is required. Lugs on blocks shall be properly sized for conductors being used. Only one conductor shall be placed under each lug.

XVI. Neutral/Ground Bus. Neutral/ground bus shall be a factory made bus permanently bonded to the enclosure with properly sized lugs for grounding and neutral conductors.

SCHEMATIC LEGEND

1 - Safety Switch (when required)
2 - Meter (when required)
3 - Service Assembly Enclosure
4 - Main Disconnect Breaker (See Electrical Service Data)
5 - Omit
6 - Circuit Breaker, 15Amp
7 - Auxiliary Enclosure
8 - Control Station ("H-O-A" Switch)
9 - Photo Electric Control (enclosure-mounted shown)
10 - Lighting Contactor
11 - Power Distribution Terminal Blocks
12 - Neutral/Ground Bus
13 - Branch Circuit Breaker (See Electrical Service Data)
14 - Circuit Breaker Panelboard (See Electrical Service Data)
(If Type C is shown as AL or SS on descriptive code, this is the service assembly enclosure only. Panelboard enclosure is GS unless otherwise noted.
15 - Load Center

———— Power Wiring
– – – – Control Wiring
——N—— Neutral Conductor (when required) serve 120 v. loads only)
——G—— Equipment grounding conductor-always required

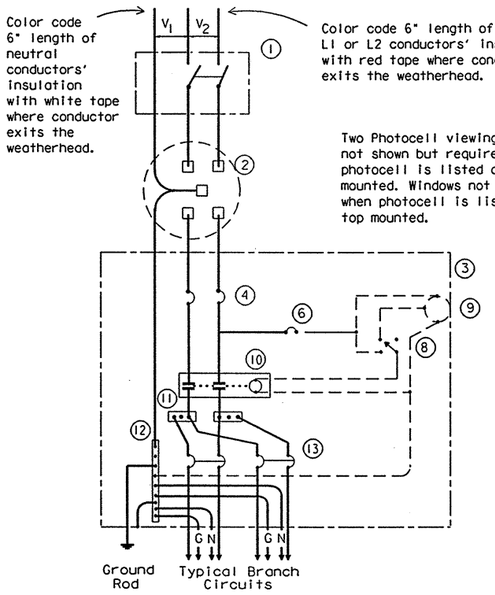

SCHEMATIC TYPE A
THREE WIRE

[Maximum feeder circuit size (High Mast Poles): 100 amps for two pole 480V, 125 amps for one or two pole 120V or 240V. Maximum branch circuit size: 50 amps.]

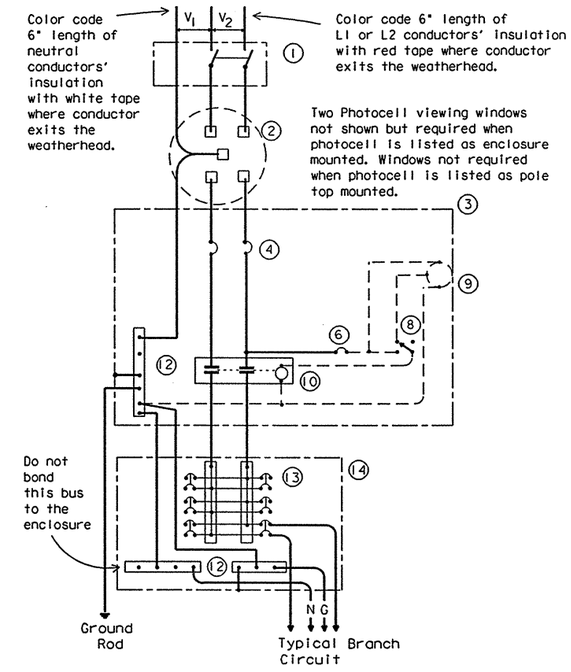

SCHEMATIC TYPE C
THREE WIRE

[Maximum feeder circuit size (High Mast Poles): 100 amps for two pole 480V, 125 amps for one or two pole 120V or 240V. Maximum branch circuit size: 50 amps.]

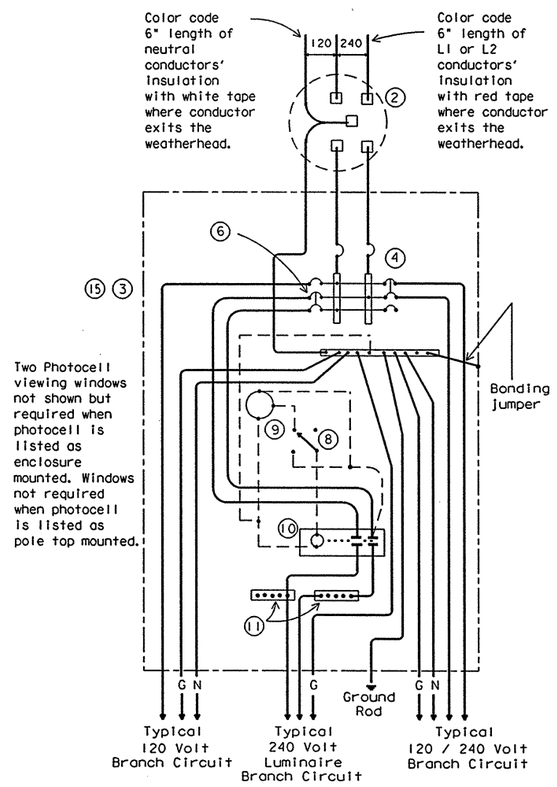

SCHEMATIC TYPE D
120/240 VOLTS - THREE WIRE

[Install photocell and lighting contactor when shown on Electrical Service Data. See Type D service notes.]

TYPE D SERVICE NOTES

Photocell and lighting contactor shall be located either in the same UL type 3R enclosure with load center or, if approved by Engineer, in separate enclosure. There shall be a window on each side of enclosure to allow operation of photocell. Both photocell contactor and breaker area shall have dead front trim. Enclosure, except for RT and PS supports, shall not exceed 36 inches in height or 16 inches in width unless approved by the Engineer. Ty D load center with lighting controls or TY D separate lighting control enclosure shall have power distribution blocks for a minimum of 4, #8 conductors per phase.

STANDARD PLANS
TEXAS DEPARTMENT OF TRANSPORTATION
Traffic Operations Division

ELECTRICAL DETAILS- SERVICE ENCLOSURE & NOTES

ED(5)-03

©TxDOT April 1998			DN: KB	CK: JW	DW: DN	CK: GC	REG NO.:
REVISIONS 12-00 3-03	STATE DISTRICT	FEDERAL REGION	FEDERAL AID PROJECT				SHEET
	TEXAS	6					756A
	COUNTY		CONTROL	SECTION	JOB		HIGHWAY
	HIDALGO		0255	08	091		US 281

DISCLAIMER
The use of this standard is governed by the "Texas Engineering Practice Act". No warranty of any kind is made by TxDOT for any purpose whatsoever. TxDOT assumes no responsibility for the conversion of this standard to other formats or for incorrect results or damages resulting from its use.

TOP OF POLE
TYPE SF & SP

BOTTOM OF POLE
TYPE SF & SP

SERVICE SUPPORT
TYPE SP (U)
UNDERGROUND SERVICE
WITH SAFETY SWITCH

Provide grounding bushings on all metal conduits, terminate bonding jumpers(min. #6 AWG. Copper) to grounding bus. Grounding bushing not required when conduit end is fitted with a conduit sealing hub or a threaded type of boss such as a meter hub.

SERVICE SUPPORT
TYPE SP (O)
OVERHEAD SERVICE
WITH SAFETY SWITCH

UNDERGROUND RISER
AT UTILITY POLE
(for underground service)

NOTES:

1. Support Type SP and SF: Fabricated from 4" x 4" x 3/16 " square structural tubing, ASTM A500 Grade A or G or equal. Base plate shall be 3/4 " plate, ASTM A36 or equal. All equipment and conduit shall be mounted on galvanized channel strut, 1 1/2 " x 1 5/8 " x 12 guage galvanized steel channel (Unistrut, Kindorf, B-line or equal) clamped with channel hardware, bolted or welded to vertical member as approved by the Engineer.
2. Paint field cut ends of all channels with zinc-rich paint.
3. All Steel Poles (SP and SF) shall be hot-dip galvanized after fabrication. Poles for overhead service shall be fitted with eyebolt or similar fitting, as approved by the utility company, for attachment of sevice drop to the pole.
4. All conduit and conductors attached to the electrical service and within 12 inches of the electrical service will not be paid for directly, but shall be subsidiary to the electrical service. All conduit and conductors from the utility company pole to the point 12 inches from the electrical service, including conduit and conductors required for the utility pole riser when furnished by the Contractor, will be paid for separately.
5. All mounting hardware and installation details of services shall be in accordance with utility company specifications.
6. Anchor bolts for underground service supports shall be 3/4" x 18" x 4" (dia. x length x hook length). Anchor bolts for overhead services shall be 3/4" x 56" x 4". Anchor bolts shall be provided with leveling nuts.
7. Conduit for grounding electrode conductor (ground rod wire) shall be 1/2" PVC. All other conduit on electrical services shall be rigid metal conduit. Service entrance conduit size shall be as shown elsewhere. Conduit for branch circuit entry to enclosure shall be the same size as that shown on the layout sheets for branch circuit conduit. Rigid metal conduit shall extend to the rigid metal elbow and then be coupled to the type conduit shown on the layout for that particular branch circuit. RMC shall have grounding bushings in enclosures.
8. If pole is painted, each separate painted piece shall have a bonding jumper attached to a tapped hole.
9. Sheet metal screws are not allowed for bonding. Provide 1/4-20 machine screws. Remove all non-conductive material at contact points. Terminate bonding jumper using listed device. Bonding jumper min. #6 AWG Copper. Make up all threaded bonding connections wrench tight.
10. Conduits entering enclosure from underground shall be sealed at both ends. Silicone sealant will not be allowed.
11. Ground rod clamp to be Blackburn GG 5/8H, Weaver w5/8 or equal.
12. Service entrance conductors shall exit separately bushed non-metallic openings in weatherhead.
13. Free conductor at weatherhead to be 12 in. min., 18 in. max., or as required by utility. Color code grounded-neutral conductor with white tape covering 6 in. of conductor. Color code LI or L2 Hot un-grounded conductor with red tape covering 6 in. of conductor. Service drop and service entrance conductors must not contact metal pole in such a manner as to result in abrasion of insulated conductors.
14. Conduit support spacing to be max. 3 ft. from ends, and max. 5 ft. in between.
15. Shop drawings are not required for service support structure unless specifically stated elsewhere or as directed by the Engineer.
16. Service enclosure to be labeled as specified on ED(5) VIII C.
17. Liquidtight flexible metal conduit (LFMC) may be used between the meter and service enclosure when they are mounted 90 to 180 degrees to each other. LFMC shall be the same size as service entrance conduit. LFMC shall not exceed 3 ft. and shall be securely supported within one foot of each end. LFMC shorter then 12" need not be strapped. Each end of LFMC must have a grounding bushing or be terminated with a grounding fitting. A neutral conductor must be installed within the LFMC. Bend in LFMC shall not exceed 180 degrees.
A pull test is required on all installed conductors, at least six inches of free conductor movement shall be demonstrated to the satisfaction of the Engineer.

SERVICE SUPPORT TYPE SF (U)
UNDERGROUND SERVICE
WITH SAFETY SWITCH
(Typical Arrangement)

SERVICE SUPPORT TYPE SF (U)
UNDERGROUND SERVICE
WITHOUT SAFETY SWITCH

SERVICE SUPPORT TYPE SF (O)
OVERHEAD SERVICE

SERVICE SUPPORT TY SF (O) & SF (U)
TOP VIEW

BASE PLATE DETAIL
TYPE SF & SP

STANDARD PLANS
TEXAS DEPARTMENT OF TRANSPORTATION
Traffic Operations Division

ELECTRICAL DETAILS- SERVICE SUPPORT TYPES SF & SP

ED(6)-03

©TxDOT January 1992	DN: KB	CK: JW	DW: DN	CK: GC	NEG NO.:
REVISIONS	STATE DISTRICT	FEDERAL REGION	FEDERAL AID PROJECT		SHEET
10-93 4-98	TEXAS	6			756B
12-00 3-03	COUNTY: HIDALGO	CONTROL: 0255	SECTION: 08	JOB: 091	HIGHWAY: US 281

DN: LR
CK: CW
DW: DN
CK: MT

DATE:
ACC: d58hplc/usr/d580504
FILE:

LEVELS DISPLAYED

1	2	3	4	5	6	7	8	9	10	11	12	13	14	15	16
17	18	19	20	21	22	23	24	25	26	27	28	29	30	31	32
33	34	35	36	37	38	39	40	41	42	43	44	45	46	47	48
49	50	51	52	53	54	55	56	57	58	59	60	61	62	63	

DISCLAIMER
The use of this standard is governed by the "Texas Engineering Practice Act". No warranty of any kind is made by TxDOT for any purpose whatsoever. TxDOT assumes no responsibility for the conversion of this standard to other formats or for incorrect results or damages resulting from its use.

NOTES:

1. Luminaire conductors shall not be looped through controller cabinet.
2. Electrical system to include an equipment grounding conductor noted here as "G". All exposed metal parts are to be bonded to grounding conductor.
3. Photocell, when required, shall be mounted at top of pole or in enclosure as shown on ED(4) and ED(5) and as required by descriptive code.
4. Roadway lighting fixtures, when required, shall be in accordance with the material and construction methods of the Item, "Roadway Illumination Assemblies" except for the test period for proper operation of the luminaires. Installed roadway lighting luminaires and internally lighted street name signs shall be tested for proper operation as a part of the associated traffic signal system.
5. Internally lighted street name signs (ILSN), when required, shall be in accordance with the Item "Internally Lighted Street Name Signs". Because of the electrical isolation of ILSN hinges, a #12 green grounding conductor shall be run to the ILSN fixture.
6. Install ground rod at alternate location when directed by the Engineer. Maintain a minimum of 8 ft in contact with the earth.
7. Liquidtight flexible metal conduit (LFMC), may be used when meter and service enclosure are mounted 90 to 180 degrees to each other. LFMC shall be same size as service entrance conduit. LFMC shall not exceed 3 ft. and shall be securely supported within one foot of each end. No strap required for a LFMC shorter than 12". Each end of LFMC must have a grounding bushing or be terminated with a grounding fitting. A neutral conductor must be installed within the LFMC. Bend in liquidtight flexible metal conduit shall not exceed 180 degrees.
8. Minimum embedment depth as per Item 627 Treated Timber Poles.
9. Pole to be set plumb.
10. Back fill thoroughly tamped in 6 in. lifts. Place 6 inches additional backfill above grade around pole base to allow for settling, as per Item 627.
11. Excess pole length shall be trimmed from the top at a slope to aid water run off.
12. Gain pole two places for each meter, service, separate or auxiliary enclosure. See ED(4) for details.
13. All illumination and power conductors to be pull tested and megged. Do not meg traffic signal cable.
14. Enclosures are to be locked, and ground box covers are to be bolted before power is applied to the circuit.
15. Conduits entering top of enclosures to be fitted with conduit sealing hub or threaded boss, such as meter hub. Off-set nipple, when required, shall not be zinc-die-pressure cast. All metal conduits not connected to conduit sealing hub, or threaded boss must have a grounding bushing. Terminate bonding jumper to ground bus. All conduits entering enclosures shall be sealed. Silicone shall not be allowed.

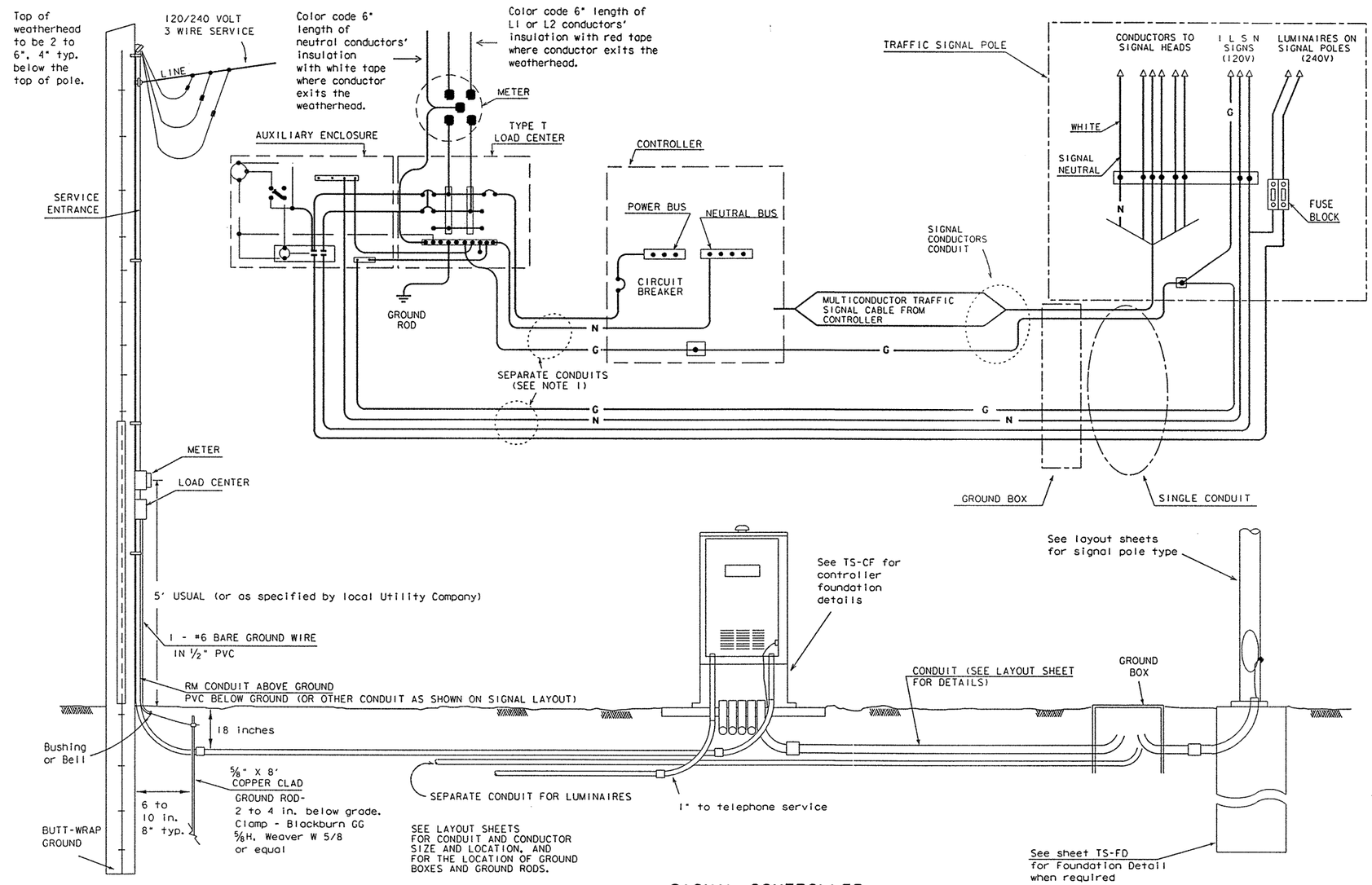

ELECTRICAL SERVICE

(TYPE T TIMBER POLE SHOWN AS EXAMPLE. SEE ELECTRICAL DETAILS, LAYOUT SHEETS, AND ELECTRICAL SERVICE DATA SHEET FOR SERVICE REQUIRED AND FOR DETAILS.)

SIGNAL CONTROLLER

SIGNAL POLE

Unless shown elsewhere in the plans, electrical service data for Types D and T shall be as follows.

ELECTRICAL SERVICE DATA

ELECTRICAL SERVICE DESCRIPTION (SEE ED(4))	SERVICE CONDUIT SIZE (RMC)	SERVICE CONDUCTORS NO./SIZE	SAFETY SWITCH AMPS	MAIN DISCONNECT CKT. BRK. POLE/AMP	TWO-POLE CONTACTOR AMPS ***	PANELBD./ LOADCENTER AMP RATING (MIN)	CIRCUIT NO.	BRANCH CKT. BRK. POLE/AMPS	KVA LOAD
TY D (120/240)070(NS)AL(E)**(*)	1½	3/#4	N/A	2P/70	30	100	T.S. Lighting	1P/50 2P/15	<7.1
TY T (120/240)000(NS)GS(E)**(*)	1½	3/#4	N/A	None	30	70	T.S. Lighting	1P/50 2P/15	<7.1

*** Eliminate photocell, contactor and seperate enclosure if lighting, or internally lighted signs are not required by plans
** See descriptive code in estimate for service support type.
* See descriptive code in estimate for overhead or underground service.

LEVELS DISPLAYED
1 2 3 4 5 6 7 8 9 10 11 12 13 14 15 16 17 18 19 20 21 22 23 24 25 26 27 28 29 30 31 32 33 34 35 36 37 38 39 40 41 42 43 44 45 46 47 48 49 50 51 52 53 54 55 56 57 58 59 60 61 62 63

DATE:
ACC: d58hplc/usr/d580504
FILE:

DN: LR
CK: CW
DW: DN
CK: MT

STANDARD PLANS
TEXAS DEPARTMENT OF TRANSPORTATION
Traffic Operations Division

ELECTRICAL DETAILS- TYPICAL TRAFFIC SIGNAL SYSTEM DETAILS

ED(7)-03

©TxDOT January 1992

DN: KB	CK: JW	DW: DN	CK: GC	MEG NO.:

REVISIONS	STATE DISTRICT	FEDERAL REGION	FEDERAL AID PROJECT	SHEET
10-93	TEXAS	6		757
4-98				
12-00	COUNTY	CONTROL	SECTION	JOB	HIGHWAY
3-03	HIDALGO	0255	08	091	US 281

DISCLAIMER
The use of this standard is governed by the "Texas Engineering Practice Act". No warranty of any kind is made by TxDOT for any purpose whatsoever. TxDOT assumes no responsibility for the conversion of this standard to other formats or for incorrect results or damages resulting from its use.

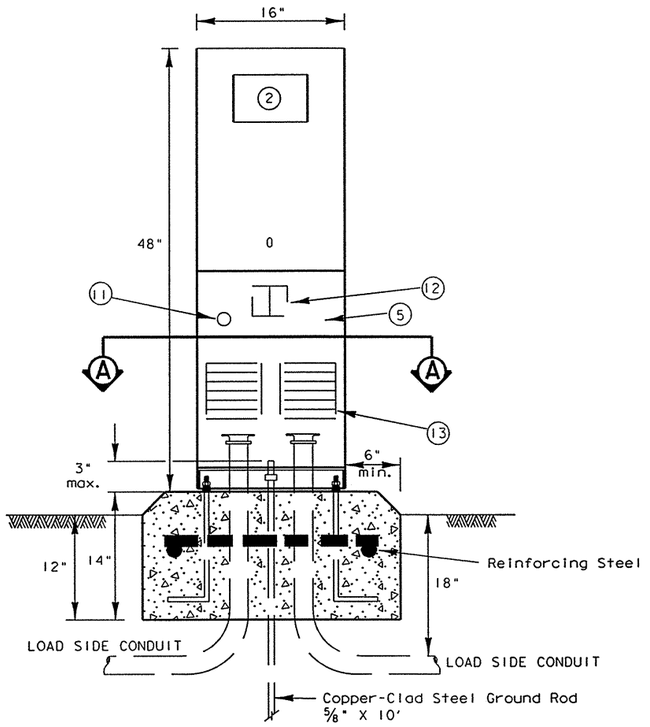

Note: Ells in foundation are rigid metal, size called for on the plans. Extension conduits from these ells may be PVC, provided ends of rigid metal conduits are more than 2 in. below top of concrete foundation. Where extension conduits are metal, grounding bushing must be installed and a bonding jumper properly terminated.

FRONT VIEW

Ty C shown. Ty A similar except that Ty A shall have individual circuit breakers mounted on a equipment mounting panel. CB Handles shall protrude through hinged deadfront trim.

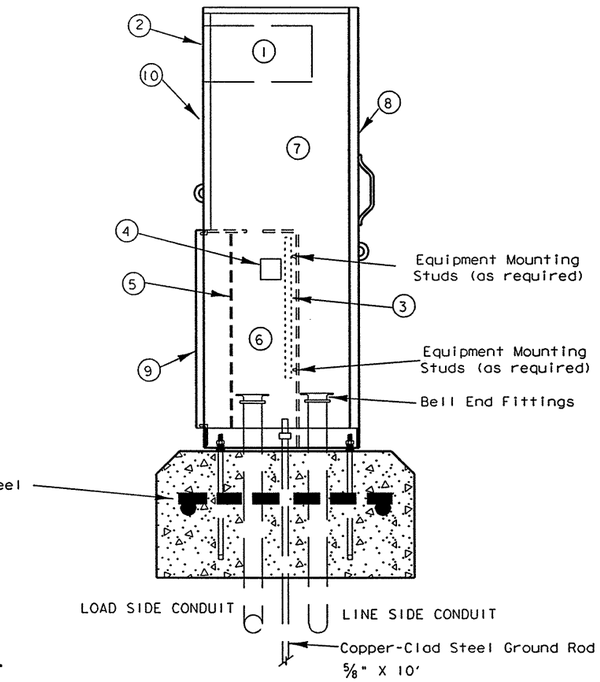

SIDE VIEW

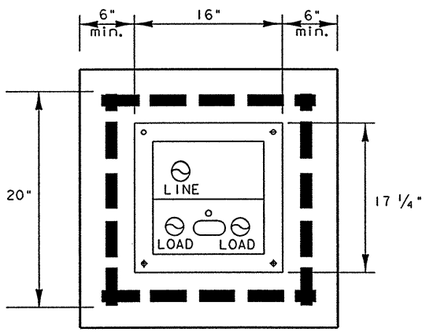

SECTION A-A

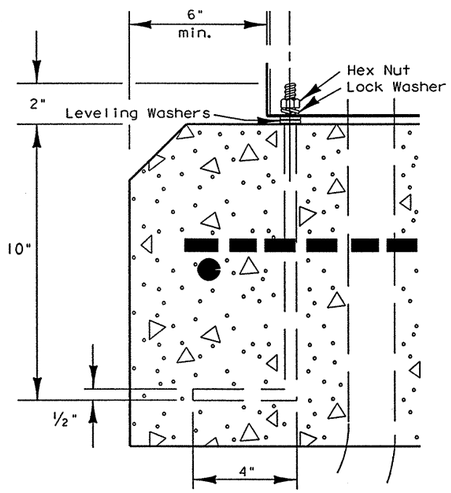

ANCHOR BOLT DETAIL

GENERAL NOTES

1. The pedestal service shall be UL type 3R, and shall be constructed of a minimum of 12 guage stainless steel or aluminum as required by descriptive code. Stainless steel shall not be painted. For aluminum, the finish shall be an electrostatic applied polyurethane baked on powder, light green in color, or color as shown elsewhere and as approved by the Engineer. The front of the interior dead front trim shall be permanently labeled, "Danger High Voltage" with OSHA style label. The exterior of the pedestal service door shall be permanently labeled with a placard as to its use (i.e. Roadway Lighting, Traffic Signals, etc.). Placard shall be neat and professional in appearance. Lettering shall be 1" minimum height.
2. Utility Access Door shall have stainless steel piano hinge and provisions for padlocking.
3. Pedestal door shall have stainless steel piano hinge and stainless steel latch with provisions for padlocking.
4. Meter Access shall be hinged and capable of padlocking.
5. All mounting hardware and installation details of services shall be in accordance with utility company specifications. The Contractor is responsible for contacting the local utility company and obtaining their approval of pedestal details prior to making submittal to the Department and prior to constructing the electrical pedestal service. Any changes required by the utility company shall be noted on the submittals.
6. Meter Socket shall be a minimum of 100 amp rating and shall comply with the local utility requirements.
7. Photoelectric Control shall meet the requirements as shown on ED(5). Shield to control stray light is allowable. The Contractor shall be responsible for proper operation of the photo-electric control. The Contractor shall move and/or adjust or shield the photocell from stray or ambient nighttime light or shall make any other adjustments required for proper operation. The photocell shall face North when practicable. Unless otherwise shown on the plans, the photocell shall turn on the illumination system at 1.0 +(-) 0.5 footcandle and turn off the illumination system at two footcandles higher than turn on.
8. The Control Station (H-O-A Switch) shall be as shown on ED(5) except that H-O-A Switch operating handle shall protrude through hinged deadfront trim and NEMA 1 enclosure will not be required.
9. Concrete for pedestal service foundation shall be class A or C and shall be in accordance with Item 420, "CONCRETE STRUCTURES", except that concrete will not be paid for directly but shall be considered subsidiary to Item 628, "ELECTRICAL SERVICES".
10. Reinforcing steel shall be #4 rebar in accordance with Item 440, "REINFORCING STEEL".
11. Anchor bolts shall be A36M55 in accordance with Item 449, "ANCHOR BOLTS". Anchor bolts shall be 1/2 inch x 12 inches x 4 inches (dia. x length x hook length).
12. All conduit and conductors attached to the pedestal service and within 12 inches of the pedestal service will not be paid for directly, but shall be subsidiary to the pedestal service. All service conduit and conductors from the utility company transformer to a point 12 inches from the pedestal service shall be paid for separately. Service conduit shall be the size and type as shown in the Electrical Service Data.
13. Dimensions may vary to accomodate required equipment, utility company requirements, or manufacturer's standard equipment dimensions. The Contractor shall submit to the Engineer for approval, six (6) copies of brochures and/or drawings of the pedestal service to be supplied, including actual dimensions, and a paint color sample.
14. A separate enclosure as shown on ED(4) or ED(5) for photocell shall not be used for pedestal services. Photocell shall be installed as shown here.
15. The pedestal door shall have a mechanically attached data pocket on the inside. Pocket shall be either metal or thermoplastic and shall measure at least 12 inches by 12 inches. The Contractor shall prepare and submit a schematic drawing unique to an individual service. The approved drawing shall be laminated and placed in the document pocket of the service at the time of shipment to the job site. All applicable wiring diagrams and plan sheet layouts for all equipment and branch breaker circuits supplied by that service shall also be laminated and placed in the document pocket prior to shipping.
16. Ground rod clamp to be Blackburn GG 5/8h, Weaver W 5/8 or equal. All non-conductive coating to be removed from ground rod at clamp location. Ground rod wire to be #6 AWG solid copper. Metal conduit ells to have grounding bushing and bonding jumpers correctly installed.
17. All conduits entering enclosures from underground must be sealed. Silicone shall not be allowed.
18. All conductors shall be megged and pull tested. Traffic signal cable not to be megged after connection, as electronics will be damaged.
19. Top of concrete foundation to be finished in a neat and workman like manner. If leveling washers are used, no more than 1/8 in. height shall be used at any one corner. Maximum dip or rise in foundation is not to exceed 1/8 in per foot. When properly installed, top of service enclosure shall read level front to back and side to side within 1/4 in. Rocking or movement of the service enclosure shall be repaired by the contractor at no cost to the state.
20. Liquidtight flexible metal conduit shall not be allowed on PS type services.

LEGEND

1. METER SOCKET, (when required)
2. METER SOCKET WINDOW, (when required)
3. EQUIPMENT MOUNTING PANEL
4. PHOTO ELECTRIC CONTROL WINDOW, (when required)
5. HINGED DEADFRONT TRIM
6. LOAD SIDE CONDUIT AREA
7. LINE SIDE CONDUIT AREA
8. UTILITY ACCESS DOOR, with handle
9. PEDESTAL DOOR
10. HINGED METER ACCESS
11. CONTROL STATION (H-O-A Switch)
12. MAIN DISCONNECT
13. BRANCH CIRCUIT BREAKERS

LEVELS DISPLAYED
1 2 3 4 5 6 7 8 9 10 11 12 13 14 15 16 17 18 19 20 21 22 23 24 25 26 27 28 29 30 31 32 33 34 35 36 37 38 39 40 41 42 43 44 45 46 47 48 49 50 51 52 53 54 55 56 57 58 59 60 61 62 63

DATE:
ACC:
FILE:
DN:
CK:
DW:
CK:

STANDARD PLANS
TEXAS DEPARTMENT OF TRANSPORTATION
Traffic Operations Division

ELECTRICAL DETAILS
ELECTRICAL SERVICE SUPPORT
PEDESTAL SERVICE TYPE PS

ED(8)-03

©TxDOT April 1998

DN: KB	CK: JW	DW: DN	CK: GC	REQ NO.:

REVISIONS	STATE DISTRICT	FEDERAL REGION	FEDERAL AID PROJECT	SHEET
12-00 3-03	TEXAS	6		757A

COUNTY	CONTROL	SECTION	JOB	HIGHWAY
HIDALGO	0255	08	091	US 281

DISCLAIMER
The use of this standard is governed by the "Texas Engineering Practice Act". No warranty of any kind is made by TxDOT for any purpose whatsoever. TxDOT assumes no responsibility for the conversion of this standard to other formats or for incorrect results or damages resulting from its use.

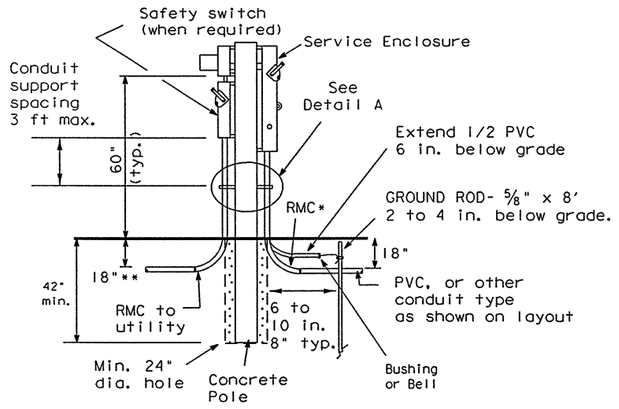

CONCRETE SERVICE SUPPORT

(Underground)

Color code grounded - neutral conductor with white tape covering 6 in. of conductor length. Color code L1 or L2 Hot conductor with red tape covering 6 in. of conductor length. Where conductors exit weatherhead, conductors free length shall be 12 in. min., 18 in. max.

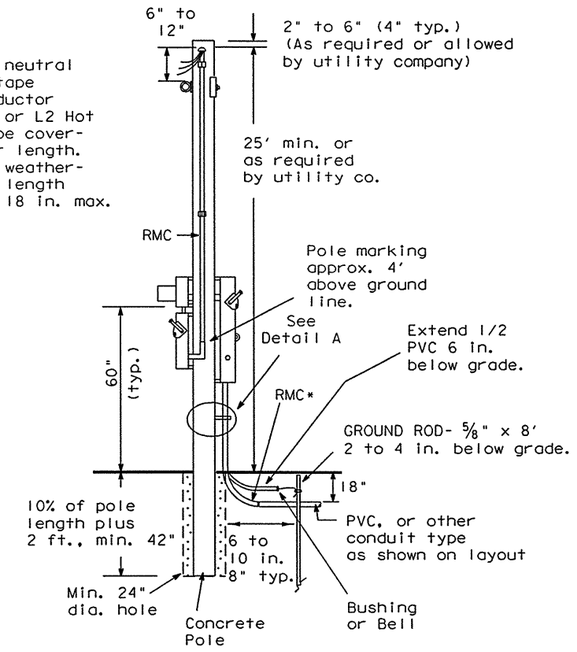

CONCRETE SERVICE SUPPORT

(Overhead)

*same size as branch circuit conduit shown on layout sheets.
** or as required by utility company.

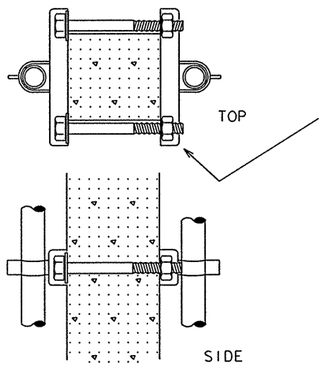

File sharp edges and paint end of channel with zinc rich paint. Do not allow paint to splatter on or over the concrete pole.

DETAIL A

Channel bracket or other arrangement approved by the Engineer. (Kindorf, Unistrut, B-line or equal)

Note: Attach channels with stainless steel concrete anchors (max. 1" depth), square U-bolts or back to back channel with long bolts, or other secure mounting as approved by the Engineer. Bolts galvanized in accordance with ASTM A153. Channel shall be galvanized.

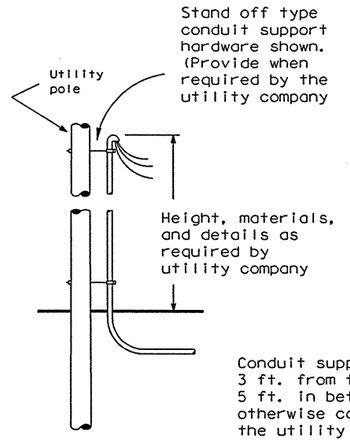

UTILITY POLE CONNECTIONS

(When underground service is required by descriptive code and utility is overhead.)

NOTES:

Electrical service support structures bid as type GC or OC shall be concrete poles and shall meet the following specifications.

1. Poles shall be prestressed concrete and suitable for direct embedment into the ground without special foundations.
2. Poles bid as type "GC" shall be a granite concrete mixture consisting of gray Portland cement with exposed pink granite aggregate. Poles bid as type "OC" shall be other concrete mixture as shown elsewhere on the plans or as directed by the Engineer.
3. Poles greater than 10 ' shall be square in cross-section, with chamfered corners, and shall have a standard taper of 0.162 inch per foot. Cross sectional dimensions shall not deviate by more than 3/8 inch. Poles 10' or less may be tapered .162"/ft or may be non-tapered. The allowable tolerance shall be plus 3 inches and -2 inches in the overall length. The width of the bottom face of the pole as it is cast may be less than the top face. All small cavities shall be cleaned, saturated with water and then filled with mortar. A small cavity is defined as one larger than 1/4 inch but smaller than 3/4 inch in diameter, and less than 3/8 inch deep. Larger non-structural cavities and spalls shall be repaired by opening side of the damaged area on a 1 to 1 slope using a mechanical grinder, cleaning thoroughly and filling with a high-strength non-shrink concrete repair material. Poles with other defects may be repaired only upon authorization of and using the method prescribed by the Engineer.
4. The end of each steel reinforcing strand in the tip and butt shall be burned back to a minimum depth of 1/2 inch. The holes left by the removal of the strand shall be thoroughly cleaned of any loose residue. The holes shall then be completely filled with non-shrink grout and smoothed evenly with tip or butt surface.
5. Prestressing strands shall have a minimum concrete cover of 1 1/4 inch.
6. A straight line joining the edge of the pole at the butt and the edge of the pole at the top shall not be distant from the surface of the pole at any point by more than 3/8 inch for each 10 feet of length.
7. The chloride content of the concrete mix, including all ingredients shall be 0.4 pounds per cubic yard, or less.
8. Concrete used in poles shall have a compressive strength at transfer of not less than 4,000 PSI, and a 28-day compressive strength of not less than 7,000 PSI.
9. Materials shall comply with the latest version of the following standards:
   a) Portland Cement - ASTM C105
   b) Admixtures - ASTM C494
   c) Aggregates - ASTM C33 or C330
   d) Reinforcing Bars - ASTM A615
   e) Cold-Drawn Spiral Wire - ASTM A82
   f) Prestressing Strand, 270K - ASTM A416
10. Poles greater than 10' shall have a 4 inch tip and 3/8 inch strands. Poles 10' or less shall have a 5 inch min. tip and 3/8 inch strands. Pole shall have a load capacity of greater than 1188 lbs. applied 2 ft. below tip.
11. Poles shall be capable of withstanding single point pick up from the horizontal position when lifting from a point 30% of the overall length down from the tip.
12. All poles shall be marked by imprinting on one face. Marking shall indicate manufacturer's name, year of manufacture, length and name or type of pole. Marking shall be located approximately 4 ft. above ground line.
13. Dunnage points, two-point pickup locations for handling pole in horizontal position, and one-point pickup locations for use in raising the pole to a vertical position and handling in setting operation shall be marked on the pole with durable ink or paint or cast into the pole. These marks shall be small but conspicuous.
14. Poles shall be embedded 42 inches or 10% of length plus 2 ft. into the ground whichever is greater.
15. When required by utility company for overhead services, poles longer than 10 feet shall have a #6 solid ground wire running the entire length exiting within 6 inches from the top and bottom of the pole. The Contractor shall connect the bottom to a butt wrap or butt plate grounding device.
16. All conduit and conductors attached to the service support and within 12 inches of the service support will not be paid for directly, but shall be subsidiary to the electrical service. All conduit and conductors from the utility company pole to a point 12 inches from the service support, including conduit and conductors required for the utility pole riser when furnished by the Contractor, will be paid for separately.
17. All mounting hardware and installation details of services shall be in accordance with utility company specifications.
18. All conduit on service supports shall be rigid metal conduit except the conduit for grounding electrode conductor (ground rod wire) shall be 1/2 inch PVC. Service entrance conduit size shall be as shown elsewhere. Conduit for branch circuit entry to enclosure shall be the same size as that shown on the layout sheets for branch circuit conduit. Rigid metal conduit shall extend a minimum of six inches underground and then coupled to the type conduit shown on the layout for that particular branch circuit. RMC shall have grounding bushings in enclosures.
19. Backfill shall be in accordance with Item 400 except for measurement and payment. Backfilling will not be paid for directly but shall be subsidiary to the various bid items.
20. Liquid tight flexible metal conduit (LFMC), may be used when meter and service enclosure are mounted 90 to 180 degrees to each other. LFMC shall not exceed 3 ft. and shall be securely supported within one ft. of each end. Each end of LFMC must have a grounding bushing or be terminated with a grounding fitting. A neutral conductor must be installed within the LFMC. Bend in LFMC shall not exceed 180 degrees. LFMC may not be installed on utility company owned poles. A pull test is required on all installed conductors, at least six inches of free conductor movement shall be demonstrated to the satisfaction of the Engineer.
21. Contractor may order concrete service support structures with 3/4" hole near top of pole for eye bolt type bracket. Eye bolt bracket may be installed as means of overhead service drop anchoring point by utility. Pole may also be center drilled in the field for installation of eye bolt bracket. When used, install bracket 6" to 12" below weatherhead.

LEVELS DISPLAYED
1 2 3 4 5 6 7 8 9 10 11 12 13 14 15 16 17 18 19 20 21 22 23 24 25 26 27 28 29 30 31 32 33 34 35 36 37 38 39 40 41 42 43 44 45 46 47 48 49 50 51 52 53 54 55 56 57 58 59 60 61 62 63

DATE:
ACC:
FILE:
DN:
CK:
DW:
CK:

STANDARD PLANS
TEXAS DEPARTMENT OF TRANSPORTATION
Traffic Operations Division

ELECTRICAL DETAILS- SERVICE SUPPORT TYPES GC AND OC

ED(9)-03

©TxDOT April 1998	DN: KB	CK: JW	DW: DN	CK: GC	MSG NO.:
REVISIONS 12-00 3-03	STATE DISTRICT: TEXAS	FEDERAL REGION: 6	FEDERAL AID PROJECT		SHEET: 757B
COUNTY: HIDALGO	CONTROL: 0255	SECTION: 08	JOB: 091	HIGHWAY: US 281	

71J

DISCLAIMER
The use of this standard is governed by the "Texas Engineering Practice Act". No warranty of any kind is made by TxDOT for any purpose whatsoever. TxDOT assumes no responsibility for the conversion of this standard to other formats or for incorrect results or damages resulting from its use.

I. DUCT CABLE

A. Duct cable shall be placed by the open trench method at a minimum depth of 18 inches. Bends in duct cable shall be made in the manner recommended by the manufacturer; minimum bending radius shall be 20 inches for 1 1/2 inch duct and 26 inches for 2 inch duct. Unless otherwise approved by the Engineer in writing, duct cable shall be 2 inch diameter. Handling of duct cable reels and installation of duct shall be as recommended by the manufacturer. Duct for duct cable is designed as a conduit system and shall be considered as such in NEC interpretations. Conductors shall not be spliced within a duct. Duct entering a ground box or foundation shall be coupled to a RMC elbow.
B. Duct cable shall have factory installed conductors. AWG size of electrical conductors shall be as called for in the plans or as required by the National Electrical Code. Conduit bid as High Density Polyethylene (HDPE) conduit shall meet the requirements of duct cable except that the conduit shall be supplied without factory installed conductors. HDPE conduit may be substituted for duct cable. After HDPE conduit is installed, conductors shall be installed. AWG size of electrical conductors shall be as called for in the plans.
C. Duct cable shall be extended through conduit casings in one continuous length without connection to the casing.
D. After duct cable has been installed, a pull test will be made on conductors. If conductors cannot be freely pulled, Contractor shall replace or otherwise adjust installation to free up the conductors. Duct cable ends shall be sealed with foam electrical conduit sealant or with heat-shrinking material after pull test is completed.
E. Sufficient clearance shall be left between each conduit ell so the bonding bushings may be correctly installed. Conduit cover is shown as 18 inches minimum, where run under a road, the minimum cover requirement is 24 inches.
F. All duct splices shall be by means of UL listed fittings, threaded duct with PVC threaded connector or UL listed tiewrap fitting or central Fusamatic electrically heated fusing conduit coupling installed in accordance with the manufacturer's instructions and approved by the Engineer. Glue on connectors, water pipefittings and heat shrink tubing splices will not be allowed.

When the upper end of an RMC Ell does not enter the ground box, it may be extended with a Sch-40 PVC conduit nipple and bell end, provided there is 18" of cover over all parts of the elbow. If not, a rigid extension and ground bushing is required.

Gravel bed is to be a min. of 9 inches deep, placed under and not in the ground box. Gravel shall not encroach into the interior of the box.

Duct Cable to Conduit Adapter - Duct cable - HDPE conduit and couplings shall comply with the material specification as shown on ED(1) 11 Conduit A. Materials 12.

DUCT CABLE AT GROUND BOX

Central Fuseamatic

Electrically Heated Fusing
Conduit Coupling

EXAMPLES OF PROPER CONNECTIONS

Ground rods are not shown on this standard sheet, but may be required else where in plans.

See ED(1), 11,11

DUCT CABLE AT FOUNDATION

BORE PIT DETAIL

LEVELS DISPLAYED

1	2	3	4	5	6	7	8	9	10	11	12	13	14	15	16
17	18	19	20	21	22	23	24	25	26	27	28	29	30	31	32
33	34	35	36	37	38	39	40	41	42	43	44	45	46	47	48
49	50	51	52	53	54	55	56	57	58	59	60	61	62	63	

DATE:
ACC:
FILE:
DN:
CK:
DW:
CK:

STANDARD PLANS
TEXAS DEPARTMENT OF TRANSPORTATION
Traffic Operations Division

ELECTRICAL DETAILS- DUCT CABLE

ED(10)-03

©TxDOT April 1998	DN: KB	CK: JW	DW: DN	CK: GC	NEG NO.:

REVISIONS	STATE DISTRICT	FEDERAL REGION	FEDERAL AID PROJECT		SHEET
12-00 3-03	TEXAS	6			758
	COUNTY		CONTROL	SECTION	JOB	HIGHWAY
	HIDALGO		0255	08	091	US 281

DISCLAIMER
The use of this standard is governed by the "Texas Engineering Practice Act". No warranty of any kind is made by TxDOT for any purpose whatsoever. TxDOT assumes no responsibility for the conversion of this standard to other formats or for incorrect results or damages resulting from its use.

LEVELS DISPLAYED
ACC:

1	2	3	4	5	6	7	8	9	10	11	12	21	31	41	51	61
17	18	19	20	22	23	24	25	26	27	28	29	50	3	13	2	
33	34	35	36	37	38	39	40	41	42	43	44	45	46	47	48	
49	50	51	52	53	54	55	56	65	75	85	96	106	116	263		

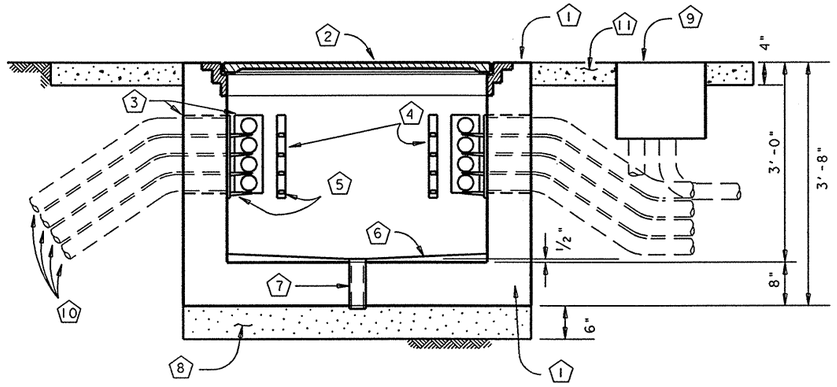

TYPICAL VERTICAL SECTION

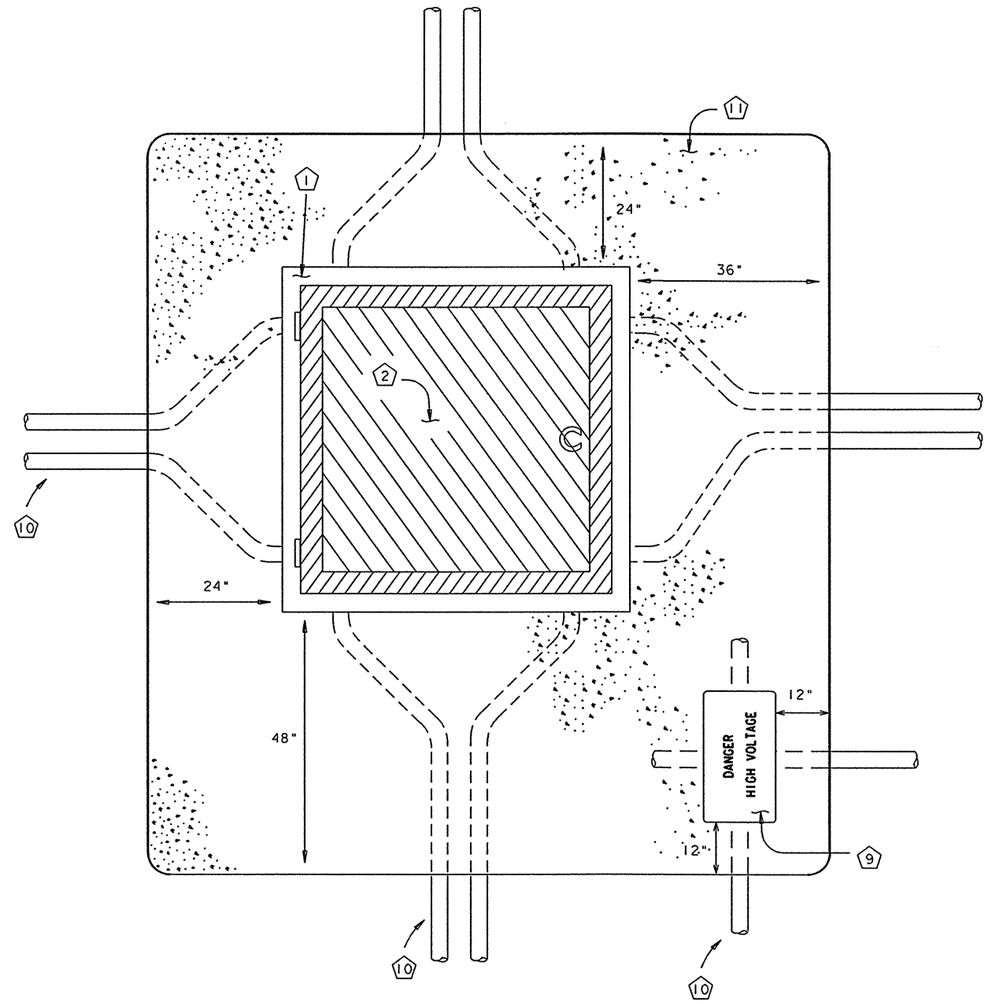

TYPICAL PLAN VIEW

1. Concrete ground box Type J - shall be 48" by 48" inside dimension and shall have AASHTO HS 20 wheel loading structural design. Fabricator shall submit shop drawings sealed by a Texas Licensed Structural Engineer. Shop drawings and calculations shall be for the box and lid as a unit.
2. Lid and ring shall be cast from Gray Iron in accordance with AASHTO M306, and shall be suitable for HS 20 loading or better. Proof-load testing certification in accordance with AASHTO M 306 shall be submitted. Lid shall have type T hinges and type G handles, and shall have a safety device to prevent accidental closing once the lid has been opened. Lid shall be cast with "TxDOT CONNUMICATIONS" in one inch lettering on top. Lid and ring shall be supplied together, and shall have no sharp edges. Shop drawings shall be submitted. (Neenah Foundry R-6662-TH, or equal.)
3. 18" by 9" knockout in concrete
4. Cable rack - Joslyn J5124, Chance C203-1124 or equivalent
5. Cable rach hooks - Joslyn J5131A, Chance C203-1131 or equivalent
6. Concrete drain invert, ½" pitch from center to walls
7. 3" drain
8. Filter material - Grade 3 aggregate or finer. See ITEM 302
9. RPM ground box, as called for in layouts, for electrical power conductors and traffic signal cables. See ED(3) for ground box details
10. Conduits (See layouts for number, details, specifications, and sizes)
11. Concrete riprap apron, Bid as ITEM 432. 1 cubic yard minimum

GENERAL NOTES

1) Illumination, traffic signal and other conductors carrying full voltages (50 volts or greater) shall not enter the communications ground box, but shall be run into an adjacent RPM ground box, as shown in the detail.

2) Conductors in the Type J ground box shall be laid on the racks and secured in place with plastic ties. At no time shall any conductor be run through the center of the box. Contractor shall arrange conduit runs so cables shall enter and exit the box without violating the required bend radius or running throught the center of the box.

3) Riprap shown is the minimum required. Riprap shall extend to protect all conduits with less than the minimum allowed ground cover.
4) Conduits shall not extend inside the box more than 1", including the required bell end fitting or bushing. Conduits shall be securely grounted in place with Portland cement completely filling the knockout window around the conduits.
5) Rigrap and boxes shall be cast flat with a maximum slope of 0.25% (3" over 10').
6) Payment - concrete ground box Type J shall be bid as ITEM 628. RPM ground box and riprap shall be bid separately.

Texas Department of Transportation
Traffic Operations Division

CONCRETE GROUND BOX (TYPE J) FOR TRAFFIC MANAGEMENT SYSTEMS

ED(11)-03

©TxDOT July 2000	DN: JM	CK:	DW: DN	CK: JM	REQ NO.:
REVISIONS 9-00 12-00 3-03	STATE DISTRICT: TEXAS	FEDERAL REGION: 6	FEDERAL AID PROJECT		SHEET: 758A
COUNTY: HIDALGO	CONTROL: 0255	SECTION: 08	JOB: 091	HIGHWAY: US 281	

7IL

DISCLAIMER
The use of this standard is governed by the "Texas Engineering Practice Act". No warranty of any kind is made by TxDOT for any purpose whatsoever. TxDOT assumes no responsibility for the conversion of this standard to other formats or for incorrect results or damages resulting from its use.

BACK ELEVATION VIEW

FRONT ELEVATION VIEW

SECTION A-A

PLAN VIEW

FRONT **RIGHT SIDE**

ENCLOSURE

GENERAL NOTES:

1. Structure shall be designed in accordance with latest issue of AASHTO "STANDARD SPECIFICATIONS FOR STRUCTURAL SUPPORTS FOR HIGHWAY SIGNS, LUMINAIRES AND TRAFFIC SIGNALS." Structures shall be designed for 80 mph wind load with 1.3 gust factor. Shop drawings shall include ASTM material designations. Shop drawings shall be submitted for the electrical service support in accordance with Item 441, "STEEL STRUCTURES." Catalog cut sheets shall be submitted for the enclosure and equipment.
2. The structure shall be galvanized. Twelve gauge sheet covers and enclosure may be made from pre-galvanized sheeting. When shown elsewhere on the plans, structure and outside of enclosure may be painted in lieu of galvanizing.
3. Structure mounting dimensions may vary to match enclosure provided.
4. All conduit and conductors attached to the electrical service and within 12" of the electrical service will not be paid for directly, but shall be subsidiary to the electrical service. All conduit and conductors from the utility company pole to a point 12" from the electrical service, including conduit and conductors required for the utility pole riser, when furnished by the Contractor, will be paid for separately.
5. All conduits entering enclosures from underground to be sealed. Silicone will not be allowed.
6. All PVC conduits to be fitted with a bell end or bushing.
7. Support structure to be bonded to the ground rod using a #6 AWG Copper Bonding jumper to be terminated with a listed eyelet type connector connected to a 1/4-20 SS machine screw-bolt. Sheet metal screws will not be allowed for bonding. All threaded bonding connections shall be made up wrench tight. All non- conductive materials to be removed from contact surfaces.
8. Service enclosures to be labeled and steciled see ED(5) VIII C.
9. Ground rod clamp to be Blackburn GG 5/8H, Weaver w 5/8 or equal.
10. Photo cell viewing window location on each side of the service enclosure to be clear of obstructure and provide a clear line of sight view and allow for the proper light level sensing by the photo cell.
11. Liquidtight flexible metal conduit may not be used on type RT(U) service supports.

STRUCTURE DATA	
TUBULAR POLE MEMBER SIZE	ANCHOR BOLTS DIA.X LENGTH X HOOK
8" X 3"X 3/16"	5/8" X 16" X 4"

COMPONENT	ASTM
TUBING MEMBERS	A500 GRADE A
BASE PLATES	A36
ANCHOR BOLTS	A307 or A36

BASE PLAN VIEW

BOTTOM OF POLE

PLAN VIEW **ELEVATION** **DETAIL A**

FOUNDATION

STANDARD PLANS
TEXAS DEPARTMENT OF TRANSPORTATION
Traffic Operations Division

ELECTRICAL DETAILS-ELECTRICAL SERVICE SUPPORT TYPE RT (U)

ED(12)-03

©TxDOT January 1992	DN: KB	CK: JW	DW: DN	CK: GC	NEG NO.:
REVISIONS 10-93 4-98 12-00 3-03	STATE DISTRICT: TEXAS	FEDERAL REGION: 6	FEDERAL AID PROJECT		SHEET: 758B
	COUNTY: HIDALGO	CONTROL: 0255	SECTION: 08	JOB: 091	HIGHWAY: US 281

71M

DN: LR CK: CW DW: DN CK: MT
DATE:
ACC: d58hplc/usr/d580504
FILE:
LEVELS DISPLAYED

GENERAL:

I. SCOPE

Details herein apply to roadway lighting installations bid under the following Specification items: Roadway Illumination Assemblies, Relocate Roadway Illumination Assemblies, Foundations for Signs, Traffic Signals and Roadway Illumination Assemblies, and Special Specifications relating to roadway lighting. All work, materials and services not shown on the plans which may be necessary for complete and proper construction shall be performed, furnished and installed by the Contractor. Faulty fabrication or poor workmanship in any material, equipment or installation will be considered justification for rejection. Material and installation shall comply with the applicable provisions of the National Electrical Code, National Electrical Manufacturers Association and, when required, Underwriters Laboratories standards. Where manufacturer's provide warranties or guarantees as a customary trade practice, Contractor shall furnish to the State such warranties or guarantees. ⚠1

The location of poles and fixtures are diagrammatic only and may be shifted by the Engineer to accommodate local conditions. Erection and/or removal of poles and luminaires located near overhead electrical lines shall be accomplished using established industry and utility safety practices and in accordance with laws governing such work. The Contractor shall consult with the appropriate utility company prior to beginning such work.

II. ROADWAY ILLUMINATION ASSEMBLIES

A. General

1. Structural Support Design for Luminaires. Lighting standards shall be designed in accordance with the latest issue of the AASHTO "Standard Specifications for Structural Supports for Highway Signs, Luminaires and Traffic Signals." All poles shall be designed for 80 mph wind loads. An additional 1.3 gust factor shall be applied to the wind loads. For transformer base poles, fabricator shall include transformer base and connecting hardware in design calculations and shop drawing submittals. Manufacturer's shop drawings shall include the ASTM designations for all material to be used. See paragraph II. B. for additional requirements for the transformer base.

2. Slip Joint Poles. Poles may be fabricated in two sections and field-assembled by the lap-joint method. The two sections shall telescope together with a lap length of not less than 1-1/2 times the shaft diameter at the lap joint. The longitudinal seam weld on the outer shaft at the slip joint end shall be a full penetration weld for a minimum of the slip joint length plus 6 inches.

3. Mast Arm Attachments. All poles and attachments shall be structurally designed to support two 12-foot mast arms and luminaires. Poles shall be supplied with mast arm combinations as shown in the plans. All mast arms shall be designed for a 55-pound luminaire having an effective projected area of 1.4 square feet.

4. Minor Damage Repair. The finished pole shall have a smooth, uniform finish free of pits, blisters, or other defects. Scratched, chipped, or damaged areas on galvanized poles and mast arms shall be thoroughly cleaned by wire brushing. The cleaned area shall be painted with two coats of zinc rich paint containing a minimum of 84% metallic zinc.

5. Pole Bonding Means. All shoe base poles, including poles on concrete traffic barriers, shall have a grounding lug with 1/2-13 NC female threads inside the pole near the hand hole, minimum of 3 full threads.

6. Hand Holes. All shoe base poles shall have hand holes with reinforcing frames and covers. The openings on all poles shall be approximately 4 inches x 10 inches located approximately 10 inches from the bottom of the pole and, except for poles mounted on concrete traffic barrier, shall be placed 90 degrees to mast arm unless otherwise noted on the plans. For poles mounted on concrete median barrier, all hand holes shall be on the same side of the median.

7. CTB Poles. Poles installed on concrete traffic barrier shall also meet the requirements of CTB details.

8. J-Hooks. All poles shall be equipped with a J-hook inside the pole, near the top for supporting vertical conductors.

9. Base Plate Bolt Circle. Bolt circles for poles mounted on CTB, see CTBI (4) or SSCB (4). Poles placed on existing bridge brackets or existing foundations, bolt circle shall be coordinated with anchor bolts in place. For other bolt circles, See RID (3).

10. Steel Poles.

a. Steel poles shall be fabricated in accordance with the item "Steel Structures." Longitudinal seam welds for pole sections shall have 60% minimum penetration, except that weld shall be full penetration within 6 inches of circumferential base plate welds. All welding shall be in accordance with the ANSI/AWS Structural Code D1.1. Two-section poles joined by circumferential welds will not be permitted, unless otherwise shown on the plans. Unless otherwise shown on the plans, poles and hardware shall be galvanized in accordance with item 445, "Galvanizing".

b. Pole components shall be constructed using the following materials:

Shaft: ASTM A-572 Grade 50 or ASTM A-595 Grade A (50 KSI min. yield) or ASTM A36M50.

Base Plate: ASTM A-27 Grade 65-35 or ASTM A-36.

Mast Arm Connector: ASTM A-27 Grade 65-35.

Mast Arms: Steel pipe ASTM A-53 Grade A or B or ASTM A-501 with 20% elongation in 2 inches or A-513 TY 1 with minimum 30 KSI yield and 15% elongation in 2 inches.

Pole Cap: Pole cap shall be zinc die-cast, aluminum, or galvanized metal, secured by three stainless steel or galvanized screws.

Pole Hardware: All bolts except mast arm connection bolts shall be stainless steel or standard steel galvanized ASTM A-153 Class C or D, or B-695 Class 50. Mast arm connection bolts shall be ASTM A-325, ASTM A-321 or ASTM A-193 Grade B-7, galvanized as above. Nuts and washers shall be compatible with the bolts and shall be stainless steel or steel, galvanized as above. Lock washers shall be provided on all bolted connections.

11. Aluminum Poles.

a. Aluminum poles shall be fabricated in accordance with "Structural Welding, Aluminum" ANSI/AWS D1.2.

b. Pole components shall be constructed using the following material:

Shaft: ASTM B-221 or B-241 Alloy 6063-T6, ASTM B-209 Alloy 5086-H34, ASTM B-221 Alloy 6005-T5.

Base Flange: ASTM B-26 Alloy 356.0-T6 or ASTM B-108 Alloy A356.0-T6 (Structural strength test required).

Mast Arm Fitting: ASTM B-209 Alloy 6061-T6 or ASTM B-221 Alloy 6005-T5.

Mast Arms: ASTM B-241 Alloy 6061-T6 or Alloy 6063-T6.

Pole Cap: ASTM B-209 Alloy 5086-H32 or ASTM B-108 or B-26 Alloy 356.0-T6.

Bolts: Stainless Steel AISI 300. Bolts threading into aluminum threads shall be treated with anti-seize compound, Never-Seez Compound, Permatex 133K or equal.

12. Alternate material equal to or better than material specified may be substituted with the approval of the Engineer.

13. Installation of high strength bolts. The tightening of nuts on high strength bolts shall be in accordance with the item "Structural Bolting."

14. Roadway Illumination Assembly poles shall be erected plumb and true. Top of foundation shall be struck level so the pole will be plumb. Shoe base poles may use leveling nuts to plumb pole. Shims and leveling nuts shall not be used under transformer bases. Grout shall not be placed between base plate or flange and the foundation. ⚠1

15. In each pole, continuous color-coded stranded No. 12 AWG copper Type XHHW or other approved XLP conductors shall be connected to the line side of each ballast.

16. Acorn nuts will not be allowed for attaching pole to transformer base or foundation. Nut covers will not be allowed.

17. Fabrication tolerances shall be as shown on Fabrication Tolerances Table.

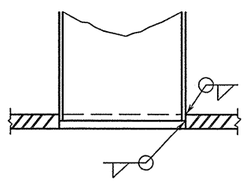

SECTION
POLE SHAFT TO BASE PLATE

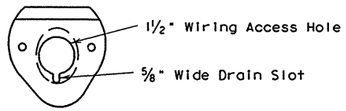

MAST ARM CONNECTOR

Steel Poles Only
Aluminum Pole Connector
Shall Be Clamp-on Type

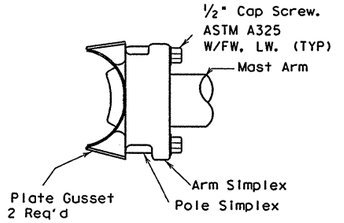

MAST ARM TO POLE
SHAFT CONNECTION

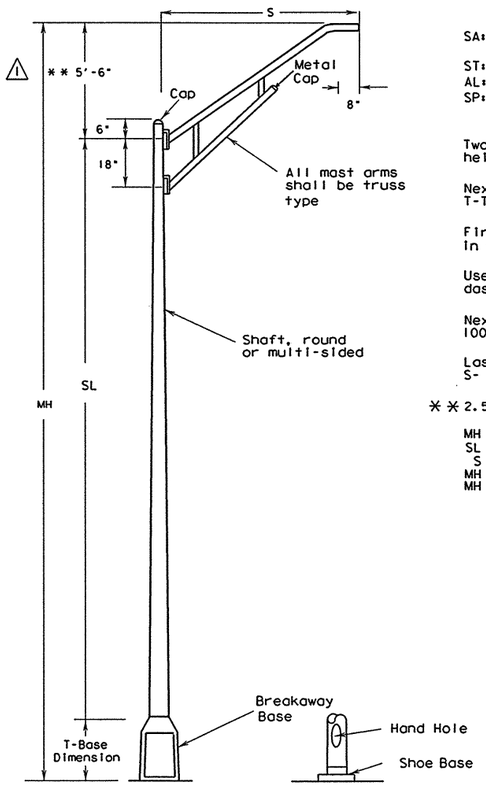

ROADWAY ILLUMINATION ASSEMBLY

EXPLANATION OF ROADWAY ILLUMINAION
ASSEMBLY DESIGNATIONS

(TYPE SA 50 T - 8 - 8) (.4KW) S

SA: Pole and mast arm may be steel or aluminum.
ST: Pole and mast arm must be steel.
AL: Pole and mast arm must be aluminum.
SP: Special (ovalized) steel pole for installing on CTB. See standard sheet CTBI (4).

Two numerical digits denote mounting height in feet.

Next letter denotes type of base, (S- Shoe Base, T-Transformer Base or X-Base, B-Shoe Base Bridge Mount)

First number denotes length of mast arm in feet.

Use of second mast arm is indicated by second dashed number which denotes length in feet.

Next three figures indicate luminaire rating (1 KW= 1000 watts, .4 KW= 400 watts, etc.)

Last letter indicates the type of lamp (M- Mercury, S- High Pressure Sodium, L- Low Pressure Sodium).

** 2.5' for poles with 4' mast arms.

MH = Mounting Height
SL = Shaft Length
S = Spread (Mast arm length)
MH = SL + 5' + (T-Base dimension)
MH = SL + 5' (Shoe Base)

⚠1 10-98: change mast arm rise, rearrange notes; shims not allowed under T-base

STANDARD PLANS
TEXAS DEPARTMENT OF TRANSPORTATION
Traffic Operations Division

ROADWAY ILLUMINATION DETAILS

RID(1)-98

©TxDOT January 1992

DN: RS	CK: KB	DW: FDN	CK: RS	MSG NO.:

REVISIONS: 5-93, 10-93, 10-98

STATE DISTRICT	FEDERAL REGION	FEDERAL AID PROJECT	SHEET
PHAR	6		759

COUNTY	CONTROL	SECTION	JOB	HIGHWAY
HIDALGO	0255	08	DY	US281

72A

II. ROADWAY ILLUMINATION ASSEMBLIES (cont.)

B. Transformer Base

1. Transformer base shall be cast from aluminum, ASTM B-108 or B-26 Alloy 356.0-T6, or other material approved by the Engineer, and shall be furnished with eight 1/2 inch flat washers as recommended by the manufacturer. Transformer base bolt circles (Top and Bottom) shall match bolt circles for poles and foundations shown on RID (3).

2. Transformer base shall be approximately 15-20 inches high and shall have a door approximately 13 inches x 8 inches x 9 1/4 inches or as otherwise approved by the Engineer. Screw or bolts for attachment of door to base shall be stainless steel. Four machine bolts with four nuts, eight 1/2 inch flat washers and four lock washer, galvanized ASTM A-153 Class C or D, or B-695 Class 50, shall be provided with each transformer base for connecting the pole. Bolts shall be ASTM A325 or approved equal. Nuts shall be ASTM A-563 grade DH galvanized. A 1/2-13 NC female threaded grounding lug shall be provided inside the transformer base near the bottom.

3. The X-base shall be made from extruded aluminum channel and aluminum plate. The base breakaway features shall rely on bolt shear and not on bolt torque. Bolt shall have torque controlled break-off hex-head. Bolt shall be Aluminum Association type 2024-T4 aluminum. X-base channel shall be connected with aluminum bolts. Bolt shall be left hand thread and shall not be interchangeable with any other bolt not designed specifically for use with the X-base.

4. All breakaway bases shall meet the breakaway requirements of the AASTHO "Standard Specifications for Structural Supports for Highway Signs, Luminaires and Traffic Signals," latest edition, and shall have been tested by FHWA-approved methods. All bases shall have been structurally tested to meet or exceed the full designed plastic moment capacity of the pole. Certification of the plastic moment load test and FHWA breakaway requirement test of the model of base being furnished shall be submitted with shop drawings. Shop drawings shall show breakaway base model number and manufacturer's name or logo.

5. Bases shall be stamped, incised or by other approved permanent means, marked to show fabricator's name or logo, and model number. Such information shall be placed in a readily seen location, inside or outside the base, but shall not be placed on the door.

6. Doors for transformer bases shall be made of plastic, fiberglass or other non-aluminum material approved by the Engineer. Transformer bases shall be cleaned by grit blast cleaning after heat treatment. Certification by the manufacturer of heat treatment shall be furnished with transformer bases. The certification shall show the metal alloy and temper and that the base meets those requirements, chemical and physical. The certification shall also show the material ASTM specification. Transformer bases shall be cast with a removable tab bar for material testing. Some bars may have been removed by the manufacturer for testing.

C. All Luminaires.

1. The luminaire housing shall be cast or drown from a non-ferrous alloy and shall be free of cracks and excessive porosity. All nuts, screws, clips, washers and attaching hardware shall be made of stainless steel; steel electro-zinc-plated, minimum thickness 0.0002 inches with olive green drab or yellow chromate conversion coating; steel coated with an acidic chromate-phosphate-binder system primer, top coated with a polytetrafluoroethylene modified silicon primer, bright metallic in color, meeting the requirements of General Motors automotive specification GM 164M, or other approved conversion coatings except that brackets may be made from pre-galvanized steel. All threaded surfaces used in the housing shall be lubricated with a silicone grease.

2. The slipfitter shall securely clamp the luminaire to the mast arm. A positive means of vertical adjustments shall be provided. The refractor or lens shall be clear glass. The optic assembly shall be provided with resilient gaskets and so constructed that a positive seal against weather and other contaminants will be maintained. The latch shall provide a positive means of maintaining closure of the luminaire. The socket shell shall be nickel plated and shall be rigidly attached to a high grade porcelain mogul base which shall extend and enclose the metal shell. A locking means shall be incorporated in the shell of the socket to positively resist the removal of the lamp. Reflectors shall be polished aluminum with Alzak or equal coating and shall not be painted.

3. Mast-arm mounted luminaires shall be provided with a leveling indicator which is clearly visible from the ground. Leveling indicator shall be sensitive to one (1) degree (maximum) changes in position at any point within five (5) degrees (minimum) level position. Unless otherwise directed by the Engineer, mast-arm mounted luminaires will be installed in the level position.

4. Underpass luminaires shall be fused internally. Fuses shall be 10 amp time-delay type.

⚠ 5. The Contractor may be responsible for fixture testing costs. See Materials and Tests Section test method TEX-1110-T.

6. The Contractor shall furnish six (6) sets of submittals of the luminaire fixture to the Engineer at the project address. These submittals shall be approved by the Engineer before the Contractor begins work.

⚠ D. High Pressure Sodium Vapor Luminaires

1. Photometrics

a. The U/P (SPL-CO) (.15KW)S (TY 1) and (TY 2) underpass luminaires shall be 150 watt high pressure sodium, IES TYPE M-C with flat tempered glass lens. The fixtures shall provide a minimum measured intensity of 0.2 footcandle in a rectangular area measuring 120 feet x 30 feet, when mounted 20 feet above the midpoint of either long side of the surface area.

The maximum to minimum horizontal illuminance uniformity ratio shall not exceed 25:1 within the above mentioned rectangular area.

b. The 250-watt mast arm mounted luminaire shall be IES Type full cutoff and, when mounted 40 feet above the midpoint of either long side of a rectangular area 190 feet by 45 feet, shall provide a measured minimum intensity of 0.2 footcandle at any point on the surface of this area. Light intensities measured in footcandles along a line parallel to and 20 feet in from the long side of the previously defined rectangular area above which the luminaire is mounted shall decrease at a rate not to exceed 0.5 footcandle in any 10 foot interval along the aforementioned line from 10 to 90 feet on both sides of the luminaire and shall not be less than 0.3 footcandle at any point along such line.

The maximum to minimum horizontal illuminance uniformity ratio shall not exceed 15:1 within the above mentioned rectangular area.

c. The 400-watt mast arm mounted luminaire shall be IES Type full cutoff and, when mounted 50 foot above the midpoint of either long side of a rectangular area 220 feet by 60 feet, shall provide a measured minimum intensity of 0.2 footcandle at any point on the surface of this area. Light intensities measured in footcandles along a line parallel to and 30 feet in from the long side of the previously defined rectangular area above which the luminaire is mounted shall decrease at a rate not to exceed 0.5 footcandle in any 10 foot interval along the aforementioned line from 10 to 90 feet on both sides of the luminaire and shall not be less than 0.3 footcandle at any point along such line.

The maximum to minimum horizontal illuminance uniformity ratio shall not exceed 15:1 within the above mentioned rectangular area.

d. The luminaires shall meet the photometric requirements shown above, when energized at 100 percent of rated line voltage. Test will be run with the fixture in the level position as indicated on leveling indicator.

Fabrication Tolerances Table

Part	Dimension	Tolerance
Pole Asssembly	Shaft length	± 1"
	I.D. of outside piece of slip fitting pieces	+ 1/8 " - 1/16 "
	O.D. of inside piece of slip fitting pieces	+ 1/32 " - 1/8 "
	Shaft diameter: other	+ 3/16 "
	Out of "round"	1/4 "
	Straightness of shaft	± 1/4 " in 10 ft
	Twist in shaft	4° in 50 ft
	Perpendicular to baseplate	1/8 " in 24"
	Pole centered on baseplate	± 1/4 "
	Location of Attachments	± 1/4 "
Arm Assembly	Arm Length	± 3"
	Arm Rise	± 1 3/4 " in 10 ft
	Arm Diameter	± 3/16 "
	Overall length or width	± 1/4 "
	Thickness	+ 1/4 " - 1/16 "
	Deviation from flat	1/8 " in 12"
	Spacing between holes	± 3/32 "
	Anchor bolt hole size	± 1/16 "
Anchor Bolt	Length	+ 1" - 1/4 "
	Threaded length	+ 1 1/2 " - 1/8 "
	Galvanized length (if required)	+ 8" - 1/4 "
Miscellaneous	Bolt hole spacing	± 1/16 "
	Strut location in truss arms	± 1 1/2 "

⚠

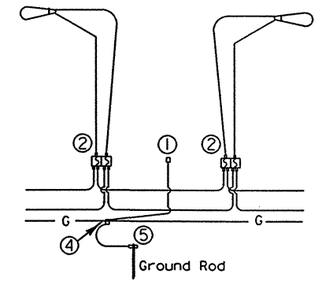

FOR THREE-WIRE CIRCUIT-CENTER GROUNDED
LUMINAIRES SERVED AT 480V ON 240/480 VOLT SERVICE OR LUMINAIRES SERVED AT 240V FOR FOR 120/240 VOLT SERVICE.

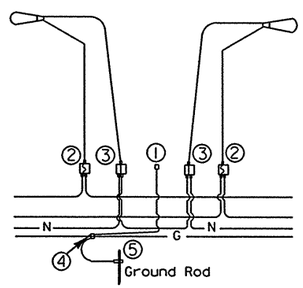

FOUR-WIRE CIRCUIT-CENTER GROUNDED
LUMINAIRES SERVED AT 240V (240/480 VOLT SERVICE)

NOTES:

(1) Pole Bonding Connector Blackburn TTC3 or Weaver TGC3 or equal.
(2) Fused Connector-All electrical connectors for breakaway poles shall be watertight and shall be designed as breakaway (Buchannan 65U, Bussmann HEBW, Littelfuse LEB or equal). All fuses shall be time-delay types. 10 Amp (Littelfuse FLQ, Bussman FNQ or equal).
* (3) Un-fused Connector-All electrical connections for neutrals shall be watertight. For breakaway poles, connections shall be designed as breakaway, shall have a white color marking, and shall have a permanently installed solid neutral (Buchannan 20U, Bussmann HET, Littelfuse LET or equal). Dummy/Neutral fuse shall be Bussman NTS-R-3 or equal.
(4) Split Bolt or other connector.
(5) Ground Rod Clamp - Blackburn GG58H, Burndy GKP635, or equal.

*For Transformer Base Poles. On Shoe Base Poles omit un-fused connector for neutral conductor.

⚠ 10-98: clarified T-base washers; mod. fixture requirements; removed two wire diagram; revised breakaway connectors requirements

STANDARD PLANS
TEXAS DEPARTMENT OF TRANSPORTATION
Traffic Operations Division

ROADWAY ILLUMINATION DETAILS

RID(2)-98

©TxDOT January 1992

DN: RS	CK: KB	DW: FDN	CK: RS	REG NO.:

REVISIONS
5-93
10-93
10-98

STATE DISTRICT	FEDERAL REGION	FEDERAL AID PROJECT	SHEET
PHARR	6		760

COUNTY	CONTROL	SECTION	JOB	HIGHWAY
HIDALGO	0255	08	091	US 281

72B

II. ROADWAY ILLUMINATION ASSEMBLIES (cont.)

D. High pressure Sodium Vapor Luminaires (cont.)

2. Ballasts

a. All ballasts shall be isolated-winding lag-type magnetic regulators designed to operate high pressure sodium lamps unless otherwise shown on the plans.

b. When the circuit voltage indicated on the plans is applied, the ballast input wattage during fluctuations of the test voltage of +10 and -10 percent shall not exceed the following:

Nominal Lamp Rating, Watts	Maximum Wattage Input
150	220
250	440
400	552

c. During fluctuation of the test voltage of +10 and -10 percent, the lamp wattage fluctuation shall no exceed a total of 20 percent and ballast shall maintain lamp wattage within the following limits:

Nominal Lamp Watts	Minimum Lamp Watts	Maximum Lamp Watts
150	110	180
250	175	370
400	280	475

d. The power factor of any ballast when tested at the circuit voltage indicated in the plans shall be not less than 90 percent.

e. The electronic starting aid shall provide a starting pulse with an amplitude of 2500 volts minimum, 4000 volts maximum. The pulse width shall be a minimum of 0.8 microseconds at 2250 volts. The pulse shall occur when the open-circuit voltage is equal to or greater than 90 percent of peak open-circuit voltage. Pulse repetition rate shall be a minimum of one per cycle and pulse current shall be a minimum of 0.18 amperes. Electronic starting aids for mast-arm mounted poles shall be replaceable without the use of tools. The starting aid shall discontinue to pulse when the lamp starts.

f. Luminaires will be tested for satisfactory operation of the starter board under open-circuit (lamp-out) condition for a minimum of 72 hours. Any failures of starter boards will be considered grounds for rejection of the model starter board being supplied.

g. Ballasts shall permanently and clearly indicate the following: lamp type, catalog number, voltage rating, connection diagram, and manufacturer. Capacitors in all luminaires shall be non-PCB type.

3. Lamps

a. All lamps shall be new and shall be of recent manufacture.

b. 150 watt lamps shall be rated for 55 volts.

c. High pressure sodium lamps shall meet ANSI C78 requirements and shall be the type that extinguishes at the end of usable lamp life and remains extinguished without cycling. 400 watt lamps shall contain less than 4.0 mg of mercury. 250 watt lamps shall contain less than 3.0 mg of mercury. Lamps shall be lead free and shall pass the Federal Toxic Characteristic Leachate Procedure (TCLP).

4. Testing

a. Ballasts and luminaires will be tested using a lamp furnished for the same project.

b. Luminaires, ballasts, and lamps will be sampled and tested in accordance with the TXDOT Materials and Test Section's Manual of Testing Procedures.

III. ROADWAY ILLUMINATION ASSEMBLY FOUNDATIONS

A. Foundations will be paid for under the item "Foundations for Signs, Traffic Signals and Roadway Illumination Assemblies", unless otherwise shown on the plans. Top 6 inches of foundation shall be formed and struck level.

B. Anchor bolts for all poles, except CTB-mounted poles, shall be A-36M55 Anchor Bolts. Anchor bolts for CTB mounted poles shall be steel, ASTM A-325 or A-321 threaded rod. Nuts for CTB anchor bolts shall be ASTM A-563 Grade D heavy hex, galvanized. The top 8 inches of all anchor bolts shall be galvanized per ASTM A-153. Anchor bolts in foundations shall be 1 1/4 inches x 30 inches for mounting heights 40 feet and greater, 1 inch x 30 inches for mounting heights less than 40 feet.* Anchor bolts shall have top end threaded not less than 5 inches and furnished with galvanized hex nuts, 1/2 inch flat washers (T-base), lock washers (shoe base) and template. The lower end of the bolt shall be threaded and furnished with nut and template. When bolts with rolled threads are furnished, bolt body need not be full size. See CTB and SSCB details for anchor bolts in concrete traffic barriers. Anchor bolts and nuts shall have Class 2A and 2B fit. Nuts shall be tapped and chased after galvanizing.

C. Concrete shall be Class A or C.

D. A minimum of two conduits shall be installed in each foundation. See lighting layout sheets for locations of foundations with more than two conduits. Any unused conduits in foundations shall be capped on both ends.

E. Unless otherwise dimensioned on the plans, breakaway roadway illumination assemblies should be located as shown in the placement table. Non-breakaway illumination assemblies should be protected from vehicular impact (i.e. 2 feet behind guard rail or mounted atop traffic barrier) or located outside the clear zone, except that 2.5 feet from curb face is minimum desired for light poles on city streets, 45 mph or less, see design guidelines for further information.

F. Anchor bolt template shall not be supplied with flat washers. Transformer base shall be held with 1/2 inch thick washers and nuts supplied with base. No washers or shims shall be used under transformer base.

G. Riprap shall be placed around the foundtion when called for elsewhere in the plans.

H. Conduit location in foundation is critical for new style breakaway devices. Conduits shall be placed 2 inches apart on centerline as shown in foundation details.

* Except that anchor bolts shall be 1 inch x 30 inches for all X-base poles.

Breakaway Pole Placement, see Para. III. E.	
Roadway Functional Classification	** Pole Offset (distance to transformer base, tolerance + 6in. -0in.)
Freeway mainlanes (roadways with full control of access)	15 ft (minimum and typical) from lane edge
All curbed, 45 mph or less design speed	2.5 ft minimum (15 ft desirable) from curb face
All others	10 ft minimum* (15 ft desirable) from lane edge

*or as close to ROW line as is practicable

**all breakaway poles should have 2/5 of the luminaire mounting height behind the pole for "falling area" to prevent encroachment on other travel lanes. See design guidelines.

PAY QUANTITY OF RIPRAP PER FOUNDATION		
FOUNDATION DIAMETER	RIPRAP DIAMETER	RIPRAP (CONC) (CL A)
30 in.	78 in.	0.35 CY

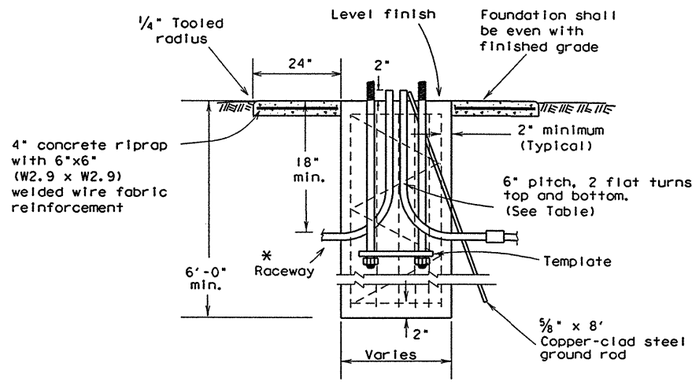

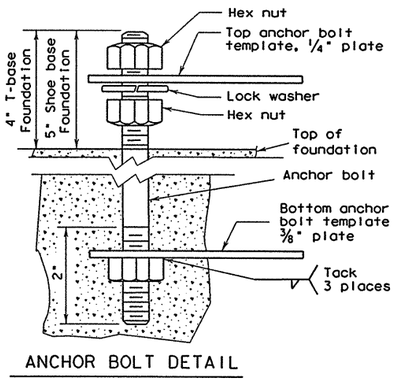

ANCHOR BOLT DETAIL

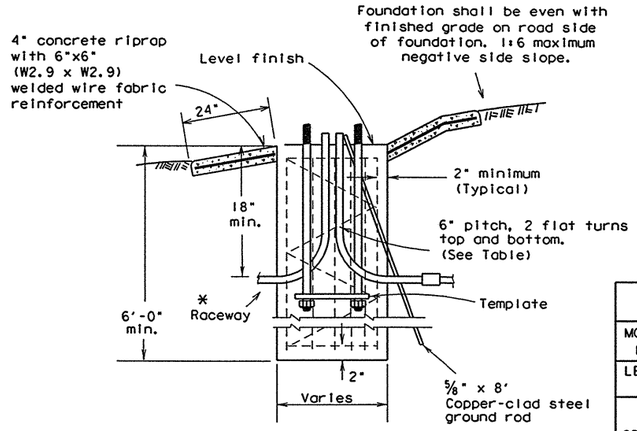

SECTION A-A

FOUNDATIONS				
FND. TYPE	DRILL SHAFT DIA.	DRILL SHAFT LENGTH	REINFORCING BAR	REINFORCING SPIRAL
A	30 in	6 ft	6-#4	#2
B	30 in	8 ft	6-#5	#2
C	30 in	10 ft	6-#6	#3

BOLT CIRCLES AND ANCHOR BOLTS				
MOUNTING HEIGHT	POLE BASE PLATE	BOLT CIRCLE SHOE BASE	BOLT CIRCLE *T-BASE	BOLT SIZE
LESS THAN 40 ft	13 in	13 in	14 in	1 in. X 30 in.
40 ft OR GREATER	15 in	15 in	17 1/4 in	** 1 1/4 in. X 30 in.

* AND X-BASE
** 1" FOR X-BASE

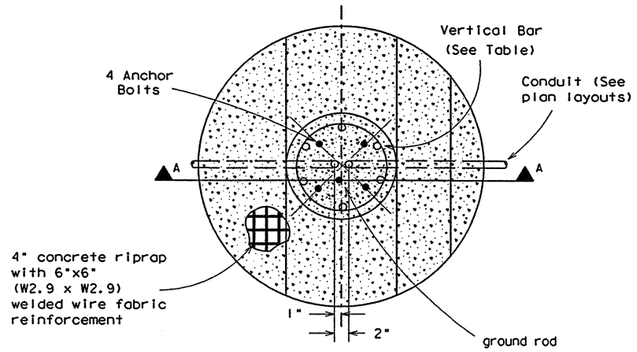

FOUNDATION DETAIL

* For duct cable, match duct size, see ED(10). For conductor in conduit system, same size as system conduit with standard radius bends.

STANDARD PLANS
TEXAS DEPARTMENT OF TRANSPORTATION
Traffic Operations Division

ROADWAY ILLUMINATION DETAILS

RID(3)-98

©TxDOT January 1992

DN: RS	CK: KB	DW: FDN	CK: RS	MEG NO.:

REVISIONS	STATE DISTRICT	FEDERAL REGION	FEDERAL AID PROJECT	SHEET
5-93	PHARR	6		761
10-93	COUNTY		CONTROL SECTION JOB	HIGHWAY
2-94	HIDALGO		0255 08 091	US281
10-98				72C

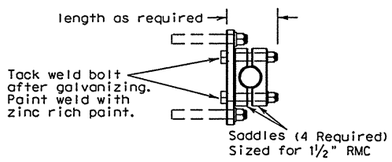

SECTION A-A

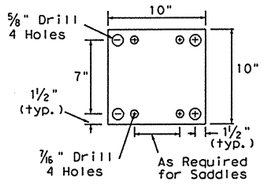

MOUNTING PLATE

Make from ⅜" Plate Galv. after fabrication

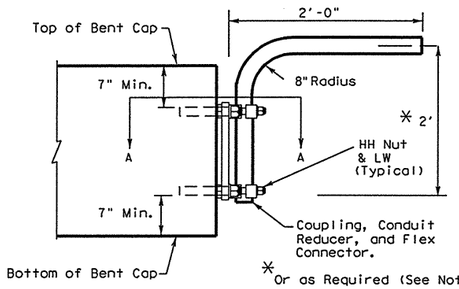

PROFILE VIEW

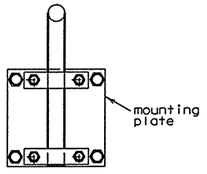

END VIEW

UNDERPASS LIGHTING ARM TYPE 1

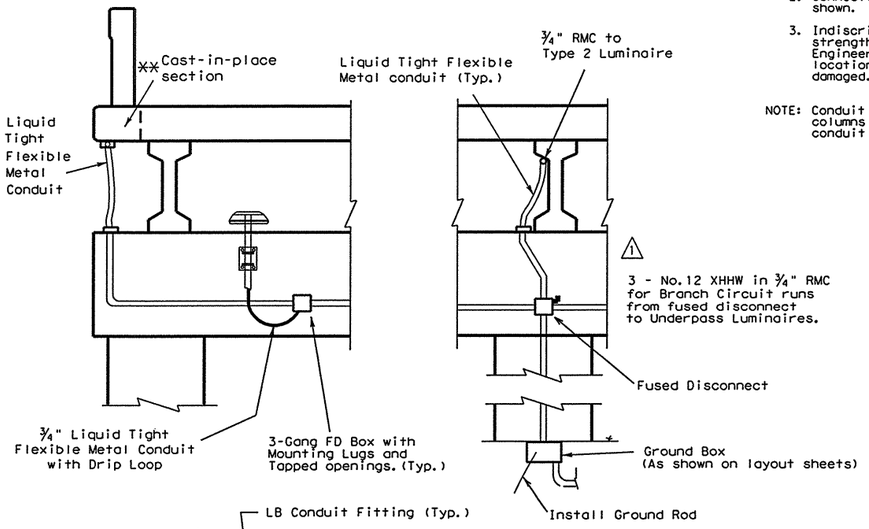

** If bridge has pre-cast panels under deck, run circuit under deck edge. See detail at left.

U/P (SPL-CO)(.15 KW)S(TYPE 1)

NOTES:

A. ALL LUMINAIRES

1. Luminaire locations, conduit and conductor sizes and routing are typical and diagrammatic only. See project layout sheets for specific details.
2. All conductors and conduit will be paid for under the items "Conduit" and "Electrical Conductor", unless otherwise shown on the plans. See lighting layout sheets.
3. A ground rod shall be installed and attached to the equipment grounding conductor in all ground boxes containing conduit that extends above grade six inches or more. All RMC in these boxes shall have grounding bushings and shall be properly bonded.
4. Adjust conduit in saddles to place fixture height and orientation as required. See fixture orientation detail and layout sheet. Where practicable place luminaires so the bottom of luminaire is above the bottom of the beam, maximum of 3 inches. (See detail.)
5. All bolts, nuts and washers shall be galvanized, ASTM A-153.
6. Fabrication of brackets and support arms will not be paid for directly but shall be subsidiary to Item 610, "Roadway Illumination Assemblies."
7. A Heavy Duty, 480 volt or 600 volt, 30 amp fused disconnect switch in NEMA 3R enclosure shall be installed in circuits to switch underpass luminaires. Switch shall be mounted 10 feet (minimum) above grade on columns or bent caps as approved by the Engineer. Contractor shall modify switch to allow padlocking in the "ON" and in the "OFF" positions. 20 amp fuses shall be installed. Furnishing and installing disconnect switches for underpass lighting fixtures shall not be paid for separately but shall be subsidiary to the various bid items of the contract.

B. TYPE 1

1. Type 1 arm shaft shall be 1 1/2 inch rigid metal conduit (1.90" O.D., 0.145" wall).
2. Anchor bolts for Type 1 luminaire shall be 3/8 inch bolt or stud expansion anchors with minimum pull out of 3000 lb each, with 4 inch minimum embedment, and lock washers.
3. Attach conduit to plate with 4 saddles, four 3/8" (min.) bolts, HHN & LW.

C. TYPE 2

1. Type 2 arm shaft shall be 2 inch rigid metal conduit (2.375" O.D., 0.154" wall). Reduce conduit length for Type C concrete beams. Field cutting and threading will be permitted. Paint cut and threaded areas with zinc rich paint after conduit is connected to adjacent fitting.
2. Connecting conduit may be strapped to tapered section only of precast beams as shown. Anchor as approved by the Engineer. Maximum anchor depth is 1 inch.
3. Indiscriminate drilling into precast concrete beams may result in reduced beam strength. Drilling location and method shall be only as directed by the Engineer. See location of underpass lighting mounting bracket detail. The locations given in the table are such that reinforcing strands will not be damaged.

NOTE: Conduit on Columns, Caps, and Slab is shown surface mounted. For all new columns and caps, Contractor shall embed conduit in concrete. Embedded conduit shall be PVC. Metal junction boxes and conduit shall be grounded.

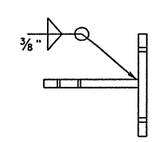

PLAN VIEW

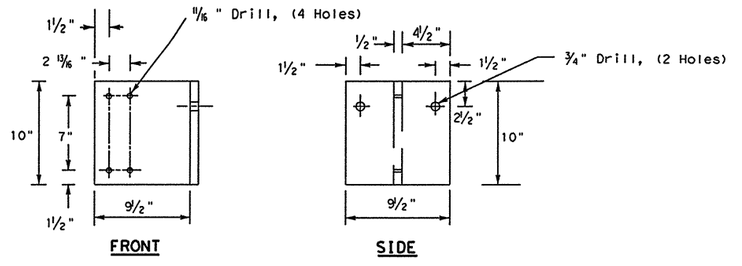

BRACKET DETAIL

Make From ½" Plate (ASTM A-36)
Galvanize after fabrication, ASTM A-123

U/P (SPL-CO)(.15 KW)S(TYPE 2)

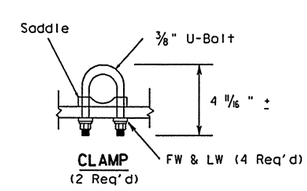

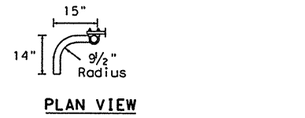

PLAN VIEW

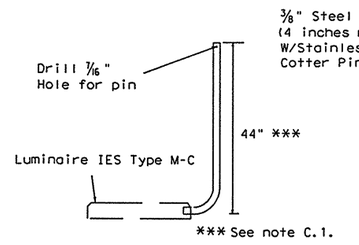

SIDE

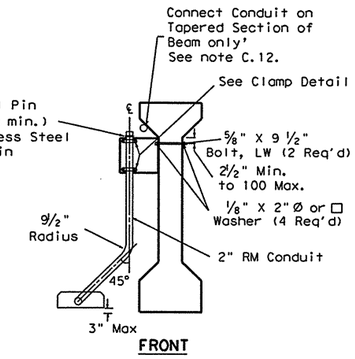

FRONT

UNDERPASS LIGHTING ARM TYPE 2

Bridge Span Length	Minimum Distance From Bent Cap to Fixture Mounting Arm
≤ 50'	10'
50'-70'	15'
70'-90'	20'
>90'	25'

See detail below.

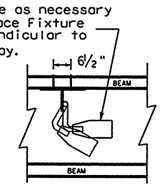

FIXTURE ORIENTATION

PLAN VIEW

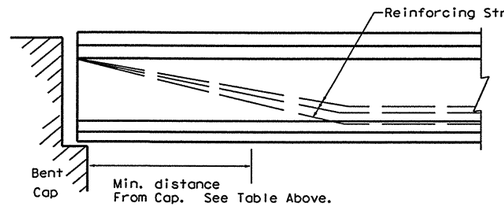

LOCATION OF UNDERPASS LIGHT MOUNTING BRACKET

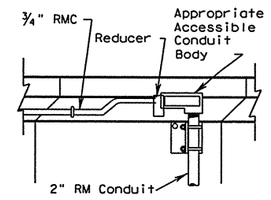

CONDUIT CONNECTION PROFILE

(TYPICAL)

⚠1 10-98: modified conduit arrangement

STANDARD PLANS
TEXAS DEPARTMENT OF TRANSPORTATION
Traffic Operations Division

ROADWAY ILLUMINATION DETAILS

RID(4)-98

©TxDOT January 1992	Dn: RS	Ck: KB	Dw: FDN	Ck: RS	REC NO.:

REVISIONS	STATE DISTRICT	FEDERAL REGION	FEDERAL AID PROJECT	SHEET
5-93	PHARR	6		761A
10-93	COUNTY		CONTROL SECTION JOB	HIGHWAY
10-98	HIDALGO		0265 08 091	1627
				72D

DISCLAIMER
The use of this standard is governed by the "Texas Engineering Practice Act". No warranty of any kind is made by TxDOT for any purpose whatsoever. TxDOT assumes no responsibility for the conversion of this standard to other formats or for incorrect results or damages resulting from its use.

NOTES:

1. Pole, Ring, and Ring Support shall be assembled and erected so that Reference Line is parallel to center line of roadway or as shown on "Lighting Layouts" sheets.
2. Fixture Placement on ring shall provide a min. Clearance of 7" between Fixtures.

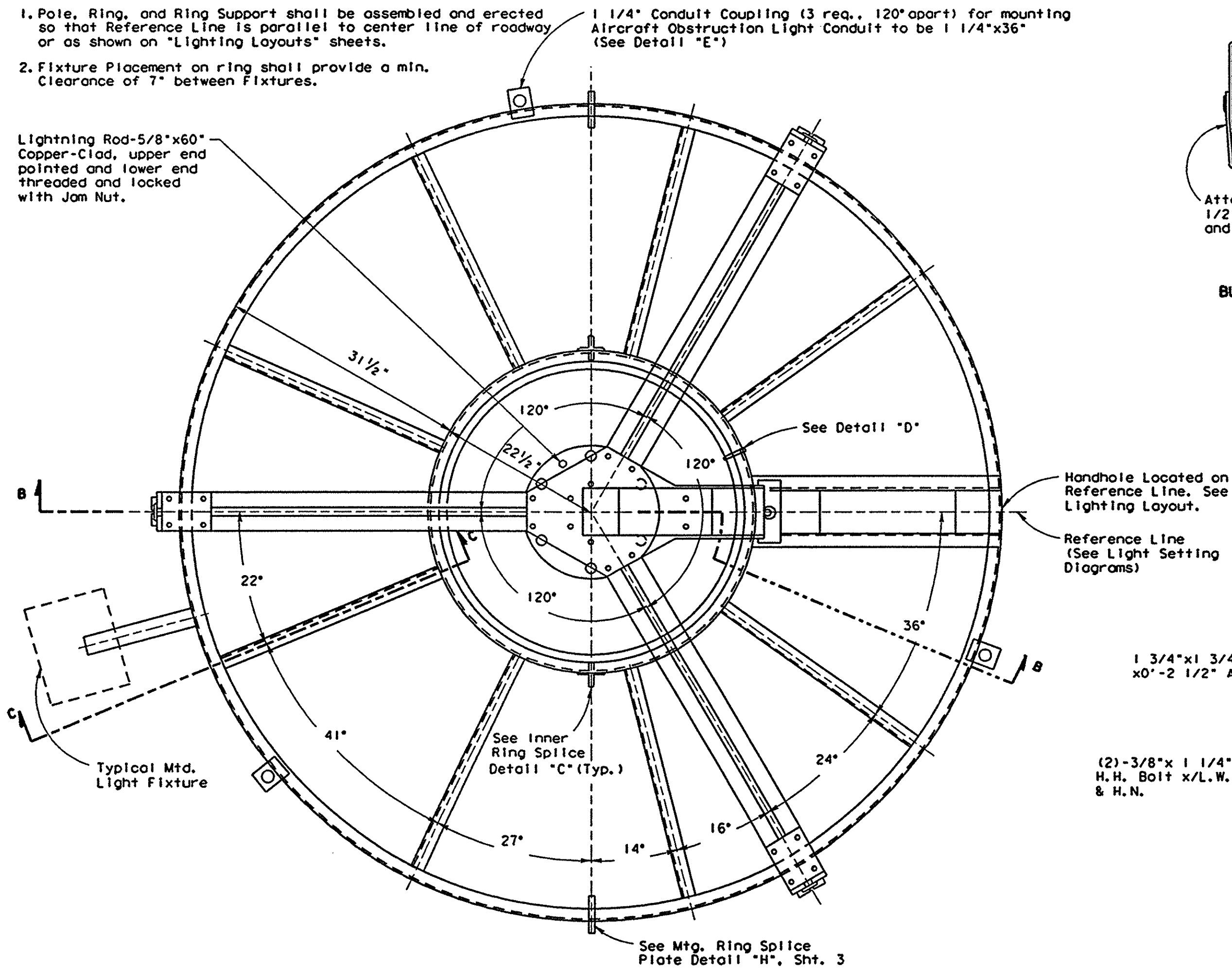

LIGHT MOUNTING RING & SUPPORT ASSEMBLY

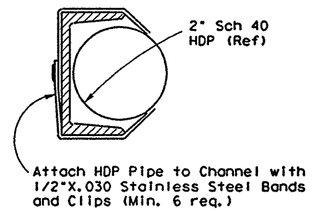

DETAIL "D"
BUMPER RING ATTACHMENT

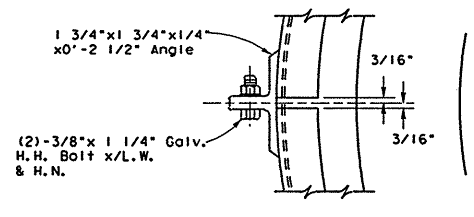

PLAN

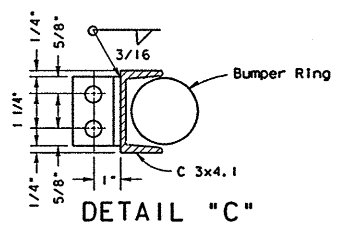

DETAIL "C"
INNER RING SPLICE

* As required by Trunnion Adapter supplied.

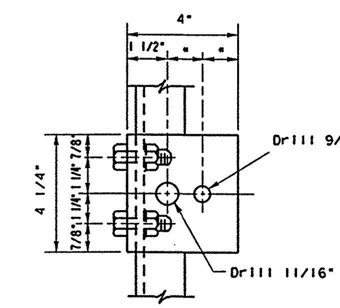

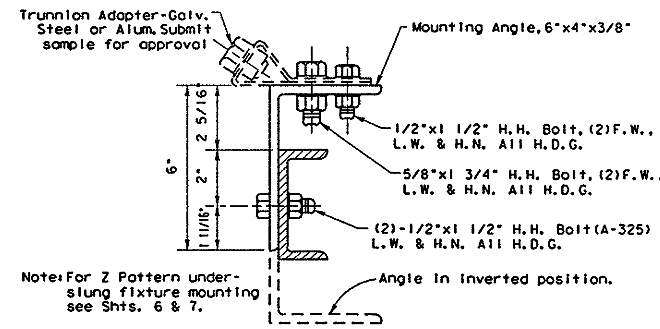

Note: For Z Pattern under-slung fixture mounting see Shts. 6 & 7.

Note: Aiming capabilities may be by method shown or by Steel Mounting-Aiming Device as approved by the Engineer. Mark position of fixture with center punch or drill after fixture has been aligned to the right position on the roadway, as directed by the Engineer.

SECTION C-C
(FOR TRUNNION MOUNT)

NOTE: Provide S.S. or glav. cable safety lanyard for Light Fixture when Trunnion Mount is used.

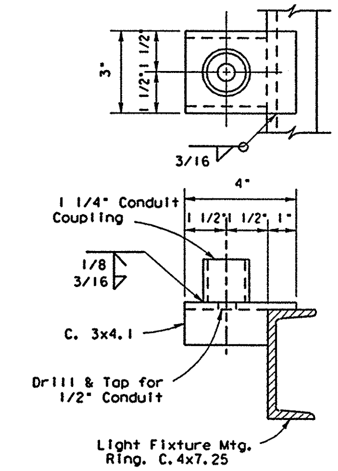

DETAIL "E"
(CONDUIT ATTACHMENT FOR OBSTRUCTION LIGHTS. TYPICAL (3) PLACES)

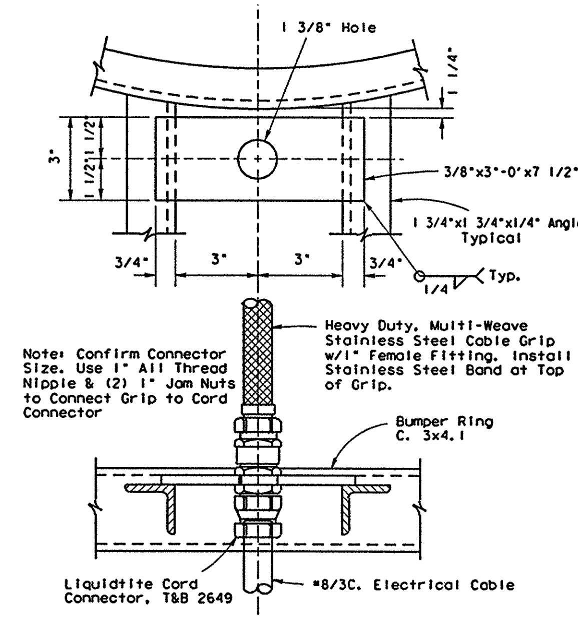

SECTION D-D

NOTE: COVER CORD WITH HEAT SHRINK TUBING FROM CABLE GRIP TO WITHIN ONE INCH OF GRIP TO CONNECTOR TRANSITION PRIOR TO INSTALLING CABLE GRIP.

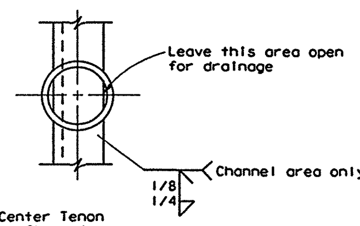

Note: Center Tenon on Channel

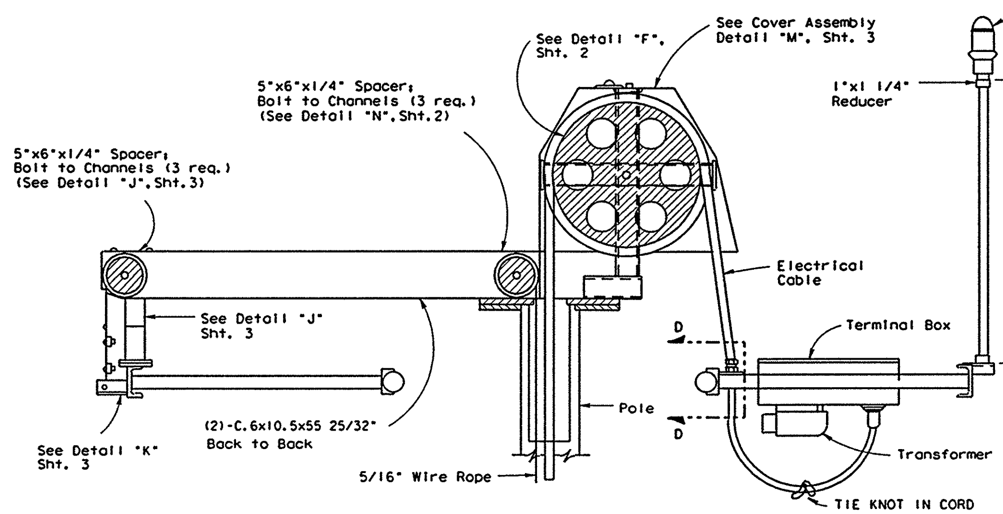

SECTION B-B

* Note: Tenon Length to be Determined by Fixture Used and Required Clearance.

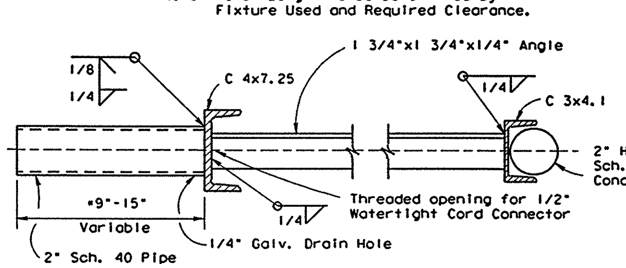

SECTION C-C
(FOR AREALIGHTS)

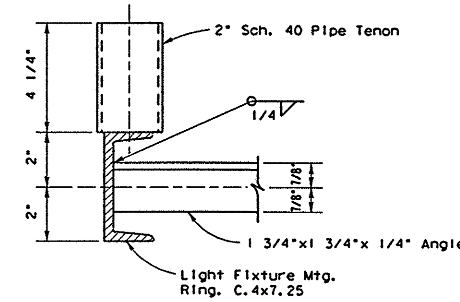

SECTION C-C
(FOR FLOODLIGHTS)

LEVELS DISPLAYED															
1	2	3	4	5	6	7	8	9	10	11	12	13	14	15	16
17	18	19	20	21	22	23	24	25	26	27	28	29	30	31	32
33	34	35	36	37	38	39	40	41	42	43	44	45	46	47	48
49	50	51	52	53	54	55	56	57	58	59	60	61	62	63	

DATE:
ACC: d58hplc/usr/d580504
FILE:

DN: LR
CK: CW
DW: DN
CK: MT

STANDARD PLANS
TEXAS DEPARTMENT OF TRANSPORTATION
Traffic Operations Division

HIGH MAST ILLUMINATION DETAILS

HMID(1)-03

©TxDOT January 1986

DN: -	CK: -	DW: -	CK: -	NEG NO.:

REVISIONS: 5-86, 4-87, 5-87, 10-1-87, 10-14-87, 4-96

STATE DISTRICT	FEDERAL REGION	FEDERAL AID PROJECT	SHEET
PHARR	6		762

COUNTY	CONTROL	SECTION	JOB	HIGHWAY
HIDALGO	0255	08	091	US281

76A

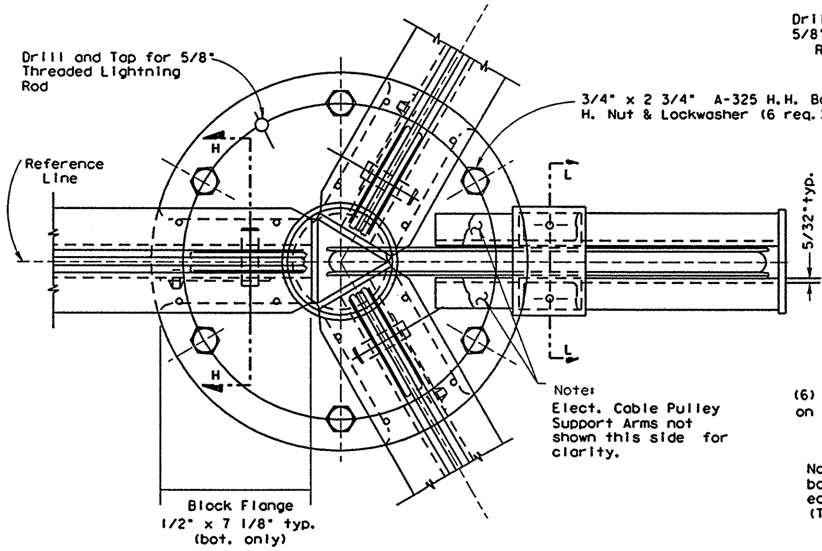

PLAN VIEW

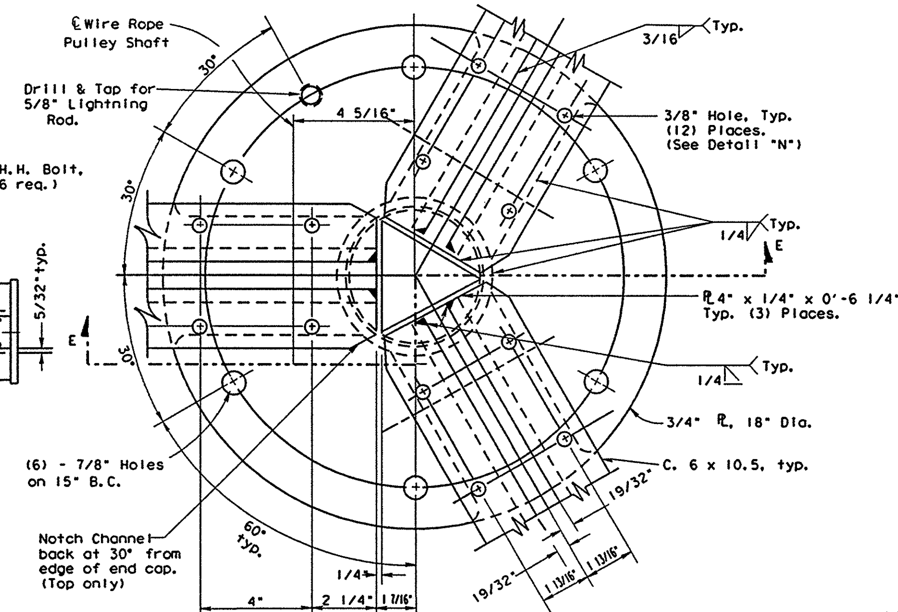

DETAIL "G"

TOP PLATE CONNECTION

(LESS ELECT. CABLE PULLEY SUPPORT)
(SEE DETAIL "L")

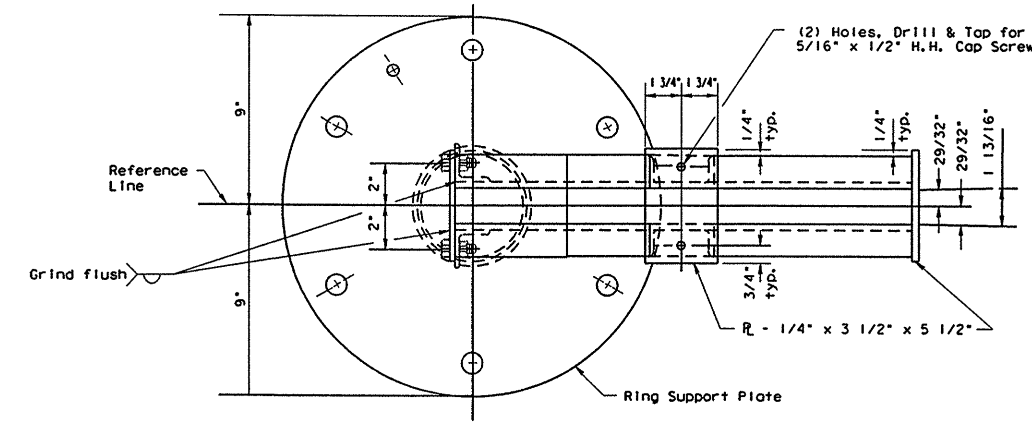

PLAN VIEW

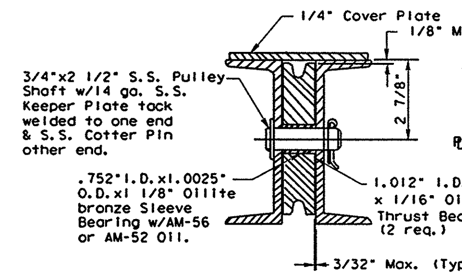

SECTION "H-H"

PULLEY MOUNTING FOR RING SUPPORT ARMS

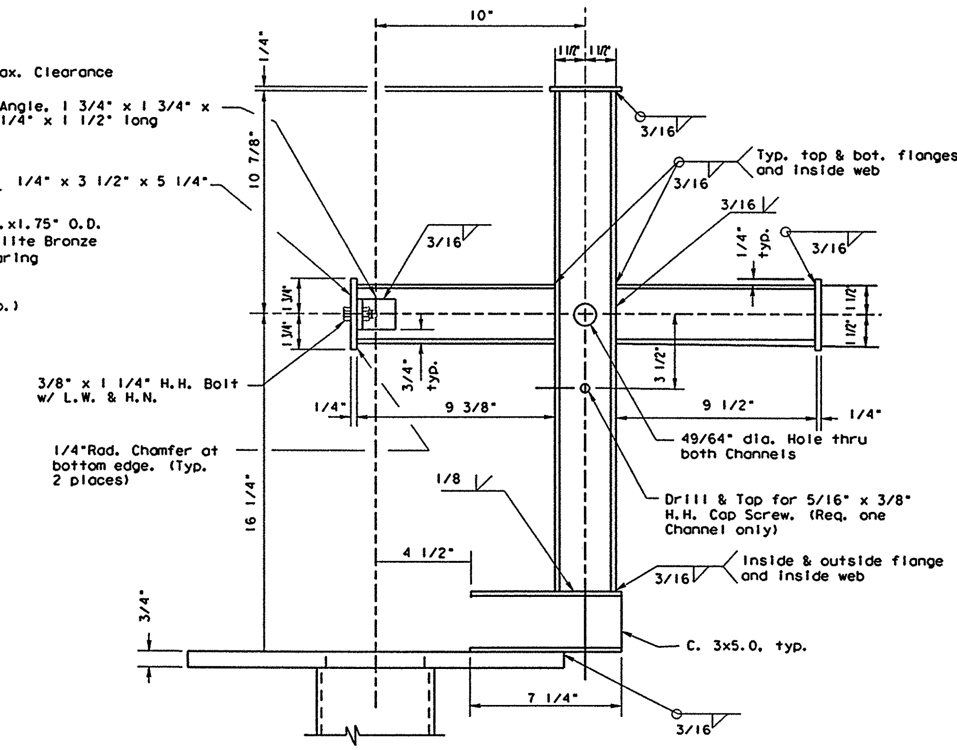

DETAIL "L"

ELECT. CABLE PULLEY SUPPORT

(RING SUPPORT ARMS NOT SHOWN FOR CLARITY)

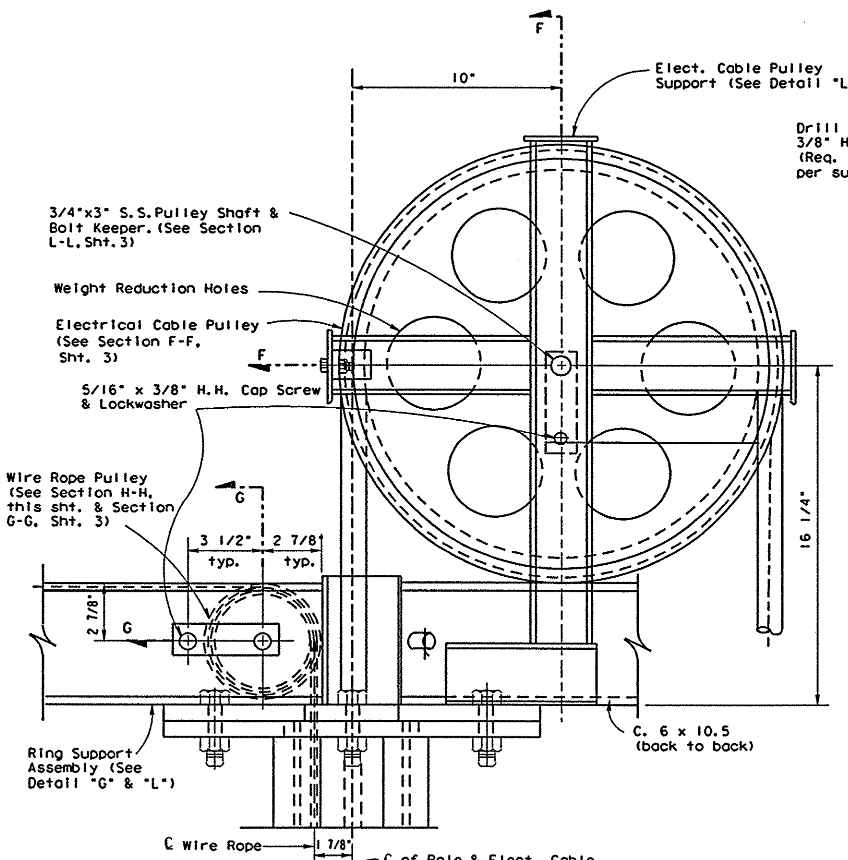

DETAIL "F"

RING SUPPORT ASSEMBLY

(NEAR SIDE SUPPORT ARM & ELECT. CABLE PULLEY COVER NOT SHOWN FOR CLARITY)

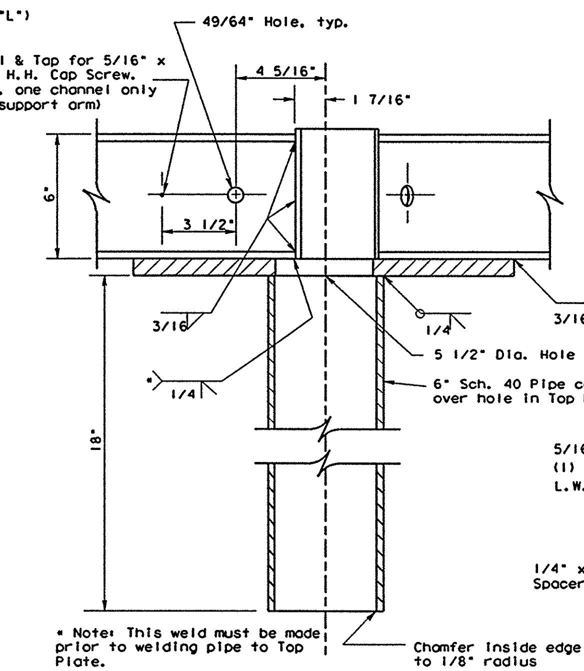

SECTION "E - E"

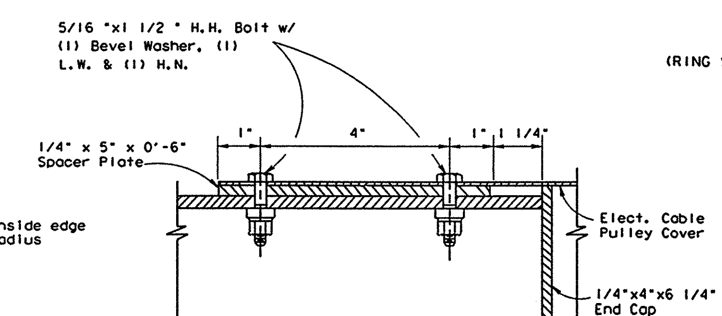

DETAIL "N"

DISCLAIMER
The use of this standard is governed by the "Texas Engineering Practice Act". No warranty of any kind is made by TxDOT for any purpose whatsoever. TxDOT assumes no responsibility for the conversion of this standard to other formats or for incorrect results or damages resulting from its use.

LEVELS DISPLAYED																DATE:	DN: LR
1	2	3	4	5	6	7	8	9	10	11	12	13	14	15	16	ACC: d58hplc/usr/d580504	CK: CW
17	18	19	20	21	22	23	24	25	26	27	28	29	30	31	32	FILE:	DW: DN
33	34	35	36	37	38	39	40	41	42	43	44	45	46	47	48		CK: MT
49	50	51	52	53	54	55	56	57	58	59	60	61	62	63			

STANDARD PLANS
TEXAS DEPARTMENT OF TRANSPORTATION
Traffic Operations Division

HIGH MAST ILLUMINATION DETAILS

HMID(2)-03

©TxDOT January 1986

DN:	CK:	DW:	CK:	NEG NO.:

REVISIONS	STATE DISTRICT	FEDERAL REGION	FEDERAL AID PROJECT			SHEET
4-86 4-96 5-86 5-87 12-87	PHARR	6				763
	COUNTY		CONTROL	SECTION	JOB	HIGHWAY
	HIDALGO		0255	08	091	US281

76B

DISCLAIMER
The use of this standard is governed by the "Texas Engineering Practice Act". No warranty of any kind is made by TxDOT for any purpose whatsoever. TxDOT assumes no responsibility for the conversion of this standard to other formats or for incorrect results or damages resulting from its use.

DETAIL "J"

PLAN

DETAIL "K'

MOUNTING RING CONNECTION & STABILIZER

* EXTRA 2'-0" of wire cable to be attached to ring with SS Bonds as directed by Engineer.

DETAIL "V"

WINCH MOUNTING PLATE

NOTE: Dimensions may vary-Verify with winch manufacturer.

PLAN

NOTE: Cover to be 14 ga. galv. sht. metal or 0.10" anodized aluminum sheet.

DETAIL "M"

COVER CAP ASSEMBLY

NOTE: Adjust chain length such that it does not relieve tension on cable, 4" max. slack.

SAFETY LANYARD DETAIL

SECTION L-L

ELECTRICAL CABLE PULLEY MOUNTING

SECTION F-F

ELECTRICAL CABLE PULLEY

(Pulley material to be aluminum alloy, Type 356-T6 or equal)

SECTION G-G

WIRE ROPE PULLEY

(Pulley material to be plated steel or Stainless Steel)

PLAN

DETAIL "H"

MOUNTING RING SPLICE PLATE

STANDARD PLANS
TEXAS DEPARTMENT OF TRANSPORTATION
Traffic Operations Division

HIGH MAST ILLUMINATION DETAILS

HMID(3)-03

©TxDOT January 1986	DN: -	CK: -	DW: -	CK: -	NEG NO.:

REVISIONS	STATE DISTRICT	FEDERAL REGION	FEDERAL AID PROJECT	SHEET
5-5-86 4-96 5-10-86 10-87 10-88	PHARR	6		764

COUNTY	CONTROL	SECTION	JOB	HIGHWAY
HIDALGO	0255	08	091	US281

76C

LEVELS DISPLAYED																DATE:	DN: LR
1	2	3	4	5	6	7	8	9	10	11	12	13	14	15	16	ACC: d58hplc/usr/d580504	CK: CW
17	18	19	20	21	22	23	24	25	26	27	28	29	30	31	32	FILE:	DW: DN
33	34	35	36	37	38	39	40	41	42	43	44	45	46	47	48		CK: MT
49	50	51	52	53	54	55	56	57	58	59	60	61	62	63			

DISCLAIMER
The use of this standard is governed by the "Texas Engineering Practice Act". No warranty of any kind is made by TxDOT for any purpose whatsoever. TxDOT assumes no responsibility for the conversion of this standard to other formats or for incorrect results or damages resulting from its use.

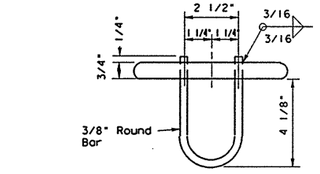

VIEW "M-M"

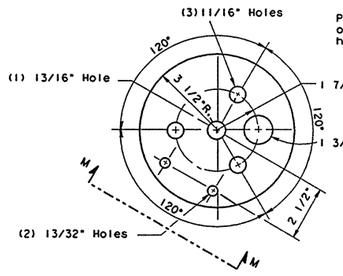

PLAN VIEW

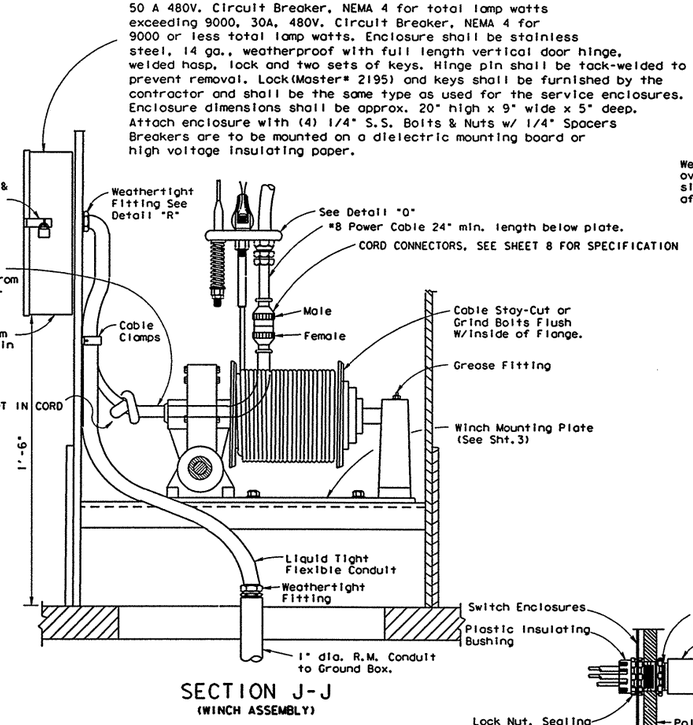

SECTION J-J
(WINCH ASSEMBLY)

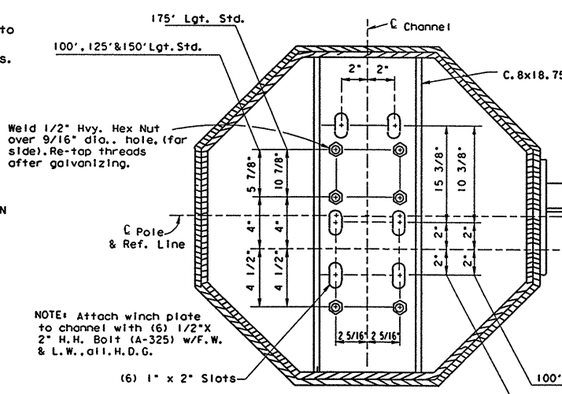

DETAIL "P"
(WINCH MOUNTING CHANNEL)
Dimensions may vary-Verify with winch manufacturer.

NOTE:
The drive train of the Power Drive Assembly between the driving motor and the winch shall be within two degrees of perfect alignment.

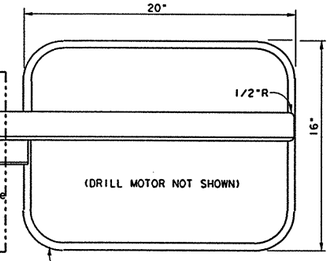

TABLE OF "U" DIMENSIONS

Pole Ht. Ft.	8 Sided 80 MPH	8 Sided 100 MPH	12 Sided 80 MPH	12 Sided 100 MPH
100	3 1/2"	3 1/2"	2 1/2"	2 1/2"
125	3 1/2"	3 1/2"	2 1/2"	2 1/2"
150	3 1/2"	3 1/2"	2 1/2"	2 1/2"
175	4 1/2"	4 1/2"	3 1/2"	3 1/2"

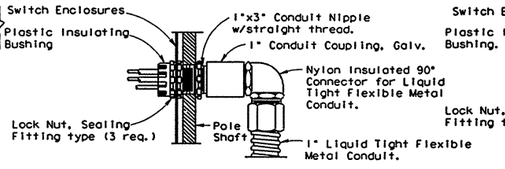

(POWER FEED FROM GROUND BOX)

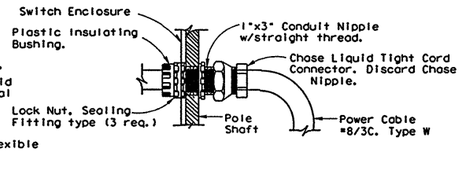

(POWER OUT TO LIGHT RING)

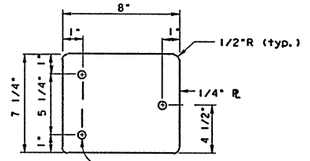

DETAIL "S"
(WINCH DRIVE ACCESS COVER)

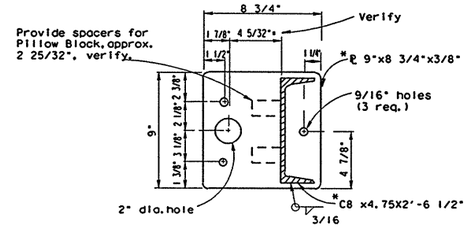

SECTION K-K
(DRILL MOTOR MOUNTING PLATE)
* Make from 6061-T6 Aluminum

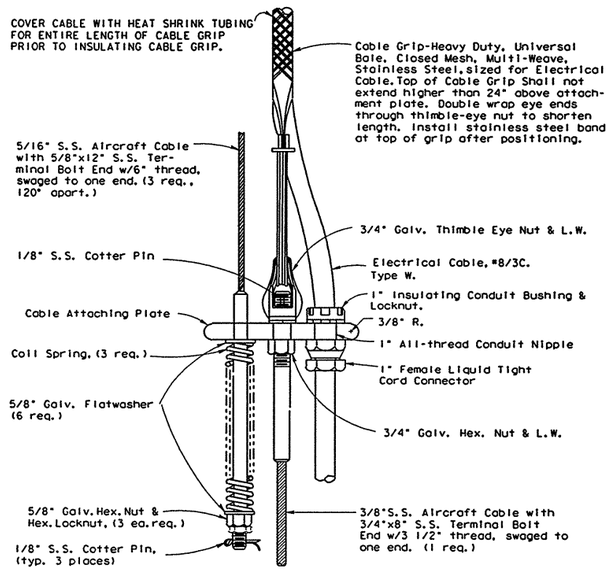

DETAIL "Q"
(CABLE ATTACHING PLATE)

NOTE: 3/8"Cable for this Project shall be 19x7 Rotation Resistant per Sheet 9.

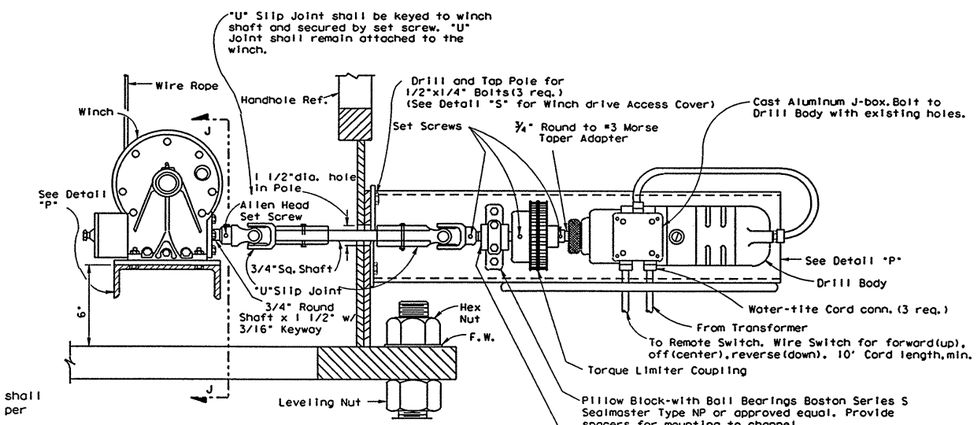

POWER DRIVE ASSEMBLY

DETAIL "R"
ENCLOSURE ENTRANCES

STANDARD PLANS
TEXAS DEPARTMENT OF TRANSPORTATION
Traffic Operations Division

HIGH MAST ILLUMINATION DETAILS

HMID(4)-03

©TxDOT January 1986

DN:	CK:	DW:	CK:	MEG NO.:

REVISIONS
4-86 12-87
5-86 4-89
12-3-86 10-93
12-8-86 4-96

STATE DISTRICT	FEDERAL REGION	FEDERAL AID PROJECT	SHEET
PHARR	6		765

COUNTY	CONTROL	SECTION	JOB	HIGHWAY
HIDALGO	0255	09	091	US281

760D

LEVELS DISPLAYED
1 2 3 4 5 6 7 8 9 10 11 12 13 14 15 16
17 18 19 20 21 22 23 24 25 26 27 28 29 30 31 32
33 34 35 36 37 38 39 40 41 42 43 44 45 46 47 48
49 50 51 52 53 54 55 56 57 58 59 60 61 62 63

DATE:
ACC: d58hplc/usr/d580504
FILE:

DN: LR
CK: CW
DW: DN
CK: MT

DISCLAIMER
The use of this standard is governed by the "Texas Engineering Practice Act". No warranty of any kind is made by TxDOT for any purpose whatsoever. TxDOT assumes no responsibility for the conversion of this standard to other formats or for incorrect results or damages resulting from its use.

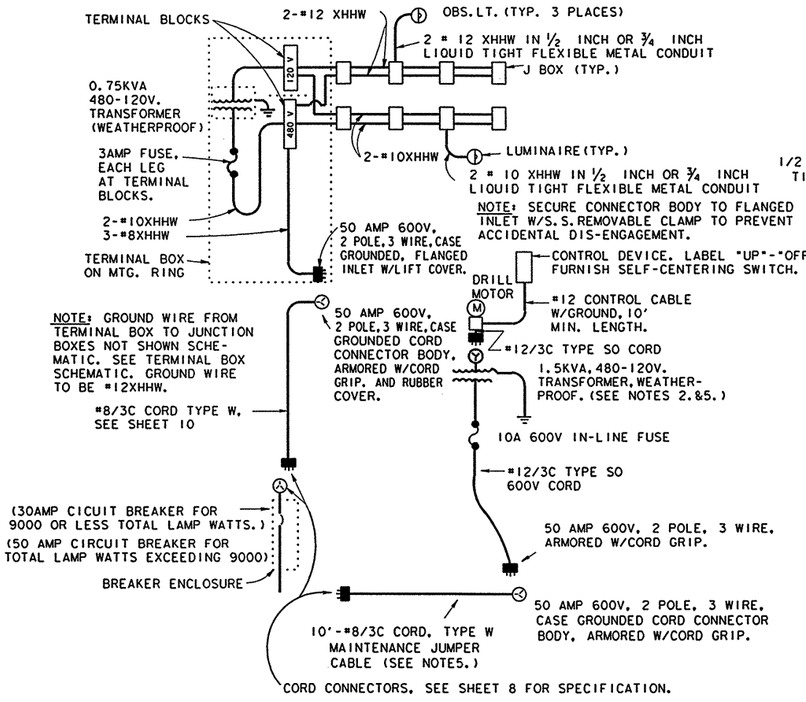

ONE-LINE SCHEMATIC

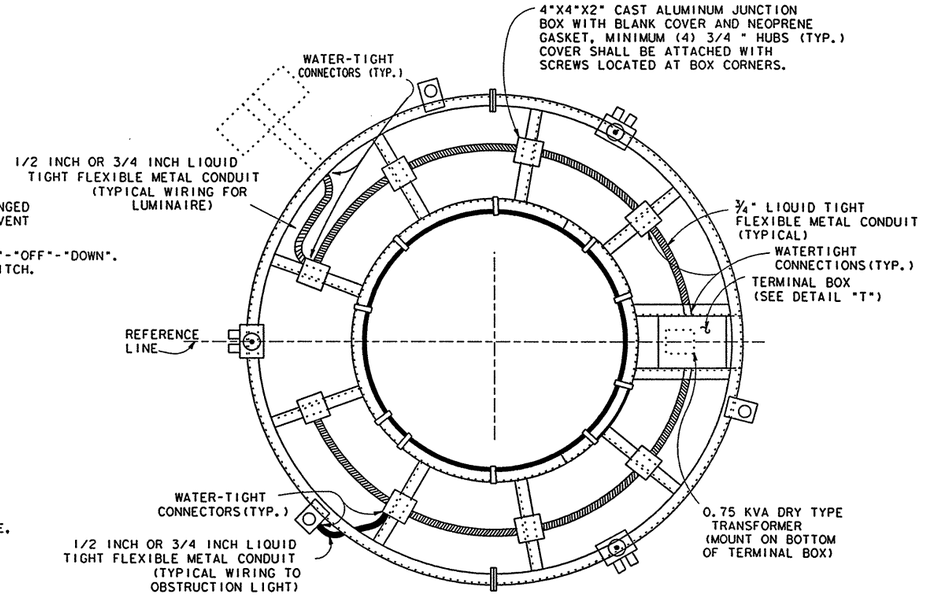

LIGHT MOUNTING RING

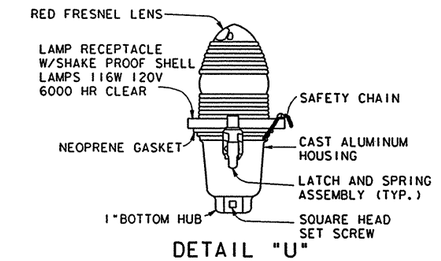

DETAIL "U"
(OBSTRUCTION LIGHT)

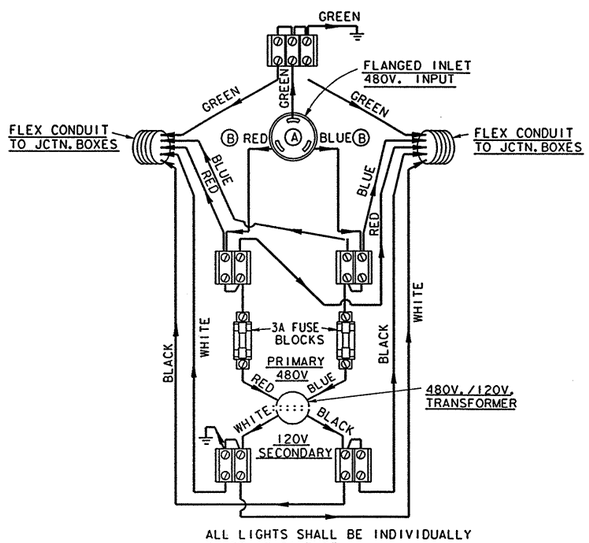

TERMINAL BOX SCHEMATIC

NOTES:
1. OBSTRUCTION LIGHTS COLOR CODE: FROM SECONDARY SIDE OF TRANSFORMER THROUGH-OUT-CIRCUIT TO SOCKET, WHITE-NEUTRAL, BLACK-LOAD.
2. POWER SUPPLY CORD TO FLANGED INLET: GREEN-GROUND, WHITE LINE, BLACK LINE. FROM FLANGED INLET Ⓐ TO TERMINAL BLOCKS: GREEN-GROUND, RED LINE, BLUE-LINE. FROM THERE ON ALL 480V. CIRCUIT WIRES TO BE RED AND BLUE TO JUNCTION BOXES.
3. WIRE SIZE FROM POWER SUPPLY TO TERMINAL BLOCKS SHALL BE #8 AWG-SEE Ⓑ.
4. WIRE SIZE FROM TERMINAL BLOCKS TO JUNCTION BOXES SHALL BE #12 AWG.
5. MOUNT TERMINAL BLOCKS ON 3/4" EXTERIOR GRADE PLYWOOD.
6. FOR 2-WIRE, 480V. SERVICE, OMIT FUSE IN GROUNDED CONDUCTOR IN LEADS TO TRANSFORMER.

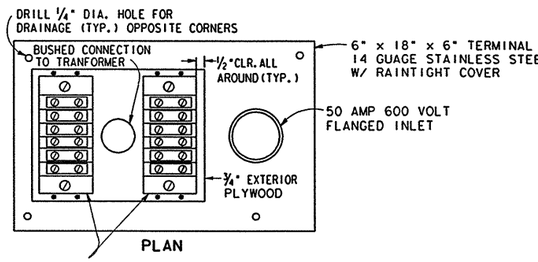

PLAN
600 VOLT TERMINAL BLOCKS

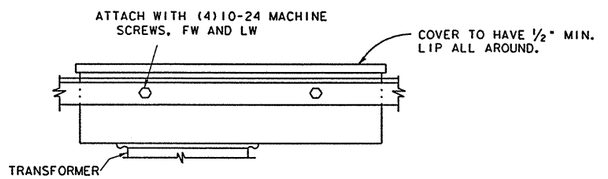

DETAIL "T"
(TERMINAL BOX)

NOTES:

1. PLUGS, CONNECTOR BODIES AND FLANGED INLETS AT CORD TO RING CONNECTION SHALL BE "TWIST LOCK" TYPE, 3-PRONG, RATED 50 AMPS AT 600V, AND 20 AMPS FOR 120 V. 50 AMP CONNECTORS SHALL BE 3 WIRE CASE GROUNDED, ARMORED, WITH CORD GRIP, 20 AMP CONNECTOR SHALL BE 3 WIRE GROUNDING WITH CORD GRIP, NEMA TYPE L5-20.
2. PROVIDE HANDLE ON 1.5KVA TRANSFORMER FOR PORTABILITY. (SEE ONE-LINE SCHEMATIC)
3. CIRCUIT BREAKERS SHALL BE ITE #E43B030 OR #E43B050, SQUARE "D" #FAL24030 S/N OR #FAL24050 S/N, OR EQUAL.
4. CONDUIT ENTRIES INTO TERMINAL BOX SHALL BE INTO THE SIDE OF THE BOX.
5. A MINIMUM OF ONE (1) MAINTENANCE JUMPER CABLE SHALL BE SUPPLIED FOR EACH PROJECT. SUPPLY ONE (1) PORTABLE TRANSFORMER FOR EACH POWER DRIVE UNIT REQUIRED FOR PROJECT.

DN: LR
CK: CW
DW: DN
CK: MT

LEVELS DISPLAYED
1 2 3 4 5 6 7 8 9 10 11 12 13 14 15 16
17 18 19 20 21 22 23 24 25 26 27 28 29 30 31 32
33 34 35 36 37 38 39 40 41 42 43 44 45 46 47 48
49 50 51 52 53 54 55 56 57 58 59 60 61 62 63

DATE:
ACC: d58hplc/usr/d580504
FILE:

STANDARD PLANS
TEXAS DEPARTMENT OF TRANSPORTATION
Traffic Operations Division

HIGH MAST ILLUMINATION DETAILS

HMID(5)-03

©TxDOT January 1986

DN:	CK:	DN:	CK:	MSG NO.:

REVISIONS	STATE DISTRICT	FEDERAL REGION	FEDERAL AID PROJECT	SHEET
6-87 4-96 11-87 10-88 10-93	PHARR	6		766
	COUNTY	CONTROL	SECTION	JOB	HIGHWAY
	HIDALGO	0265	08	091	US281
					76E

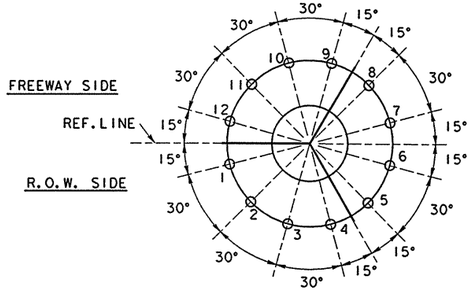

12-LIGHT SETTING

LUMINAIRE LOCATIONS

NOTE: AIRCRAFT OBSTRUCTION LIGHT LOCATIONS NOT SHOWN. THREE ARE REQUIRED LOCATED APPROX. 120° APART. LOCATIONS WILL VARY DEPENDENT ON THE LIGHT SETTING USED.

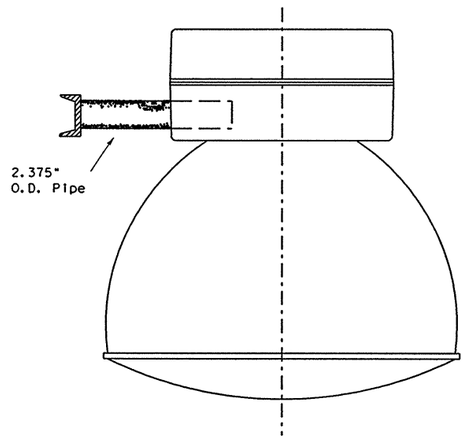

AREALIGHT MOUNTING ASSEMBLY
(SYMMETRIC AND ASYMMETRIC)

NOTES: IF ASYMMETRIC FIXTURES ARE USED, THE REFRACTORS SHALL BE ORIENTED TO PROPERLY ILLUMINATE THE ADJACENT ROADWAYS. ORIENTION SHALL BE AS SHOWN IN PLANS.

NOTE: MIN. SWAGE LENGTH = 2.06
MAX. SWAGE LENGTH = 2.94

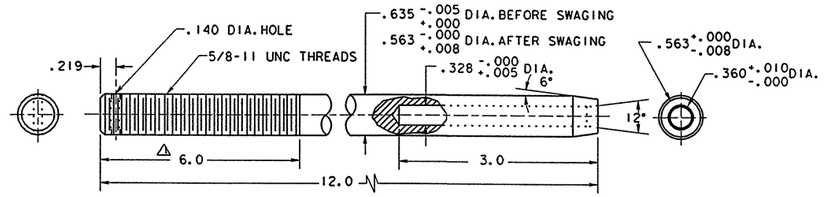

TERMINAL FOR 5/16" WIRE ROPE
MATERIAL: STAINLESS STEEL, TYPE 303SE OR 304
WITH 115,000 P.S.I. MAX. ULTIMATE TENSILE STRENGH.

NOTE: MIN. SWAGE LENGTH = 3.12
MAX. SWAGE LENGTH = 3.44

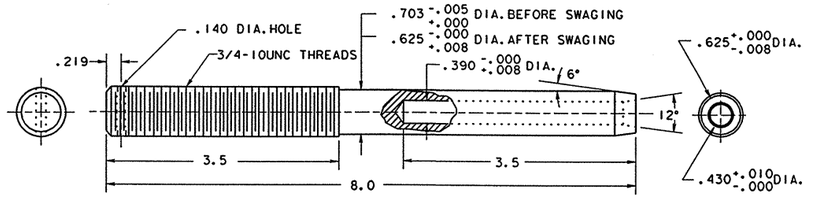

TERMINAL FOR 3/8" WIRE ROPE
MATERIAL: STAINLESS STEEL, TYPE 303SE OR 304
WITH 115,000 P.S.I. MAX. ULTIMATE TENSILE STRENGH.

GENERAL NOTES:

1. AFTER FINAL AIMING HAS BEEN COMPLETED AND APPROVED BY THE ENGINEER, FIXTURES MUST BE LOCKED IN POSITION. CONTRACTOR MUST SUBMIT PROPOSED LOCKING SCHEME WITH THE FIXTURE SUBMITTAL. (FLOODLIGHTS ONLY).

3/03 Revision

⚠ Removed obsolete diagrams and updated drawings.

STANDARD PLANS
Texas Department of Transportation
Traffic Operations Division

HIGH MAST ILLUMINATION DETAILS

HMID(6)-03

DISCLAIMER
The use of this standard is governed by the "Texas Engineering Practice Act". No warranty of any kind is made by TxDOT for any purpose whatsoever. TxDOT assumes no responsibility for the conversion of this standard to other formats or for incorrect results or damages resulting from its use.

LEVELS DISPLAYED
1 2 3 4 5 6 7 8 9 10 11 12 13 14 15 16
17 18 19 20 21 22 23 24 25 26 27 28 29 30 31 32 33 34 35 36 37 38 39 40 41 42 43 44 45 46 47 48
49 50 51 52 53 54 55 56 57 58 59 60 61 62 63

DATE:
ACC: d58hplc/usr/d580504
FILE:

DN: LR
CK: CW
DW: DN
CK: MT

© TxDOT 1986

DW: CJ	CK: KB	DW: FDN	CK: CAL

REVISIONS	STATE DISTRICT	FEDERAL REGION	FEDERAL AID PROJECT	SHEET
10-93	PHARR	6		767
10-95				
4-96	COUNTY	CONTROL	SECTION	JOB	HIGHWAY
3-03	HIDALGO	0255	08	091	US 281

76F

DISCLAIMER
The use of this standard is governed by the "Texas Engineering Practice Act". No warranty of any kind is made by TxDOT for any purpose whatsoever. TxDOT assumes no responsibility for the conversion of this standard to other formats or for incorrect results or damages resulting from its use.

LEVELS DISPLAYED

	1	2	3	4	5	6
1	1	2	3	4	5	6
2	7	8	9	10	11	12
3	13	14	15	16	17	18
4	19	20	21	22	23	24
5	25	26	27	28	29	30
6	31	32	33	34	35	36

ACCT

⚠ 1. AREA LIGHTING (Bid under Item 614, "High Mast Illumination Assemblies")

A. Area lighting shall be symmetric or asymmetric, as shown on the descriptive code. The number and wattage of the fixtures on each pole shall be as shown on the lighting layouts. The lighting pattern for symmetric fixtures shall be IES Type V; for asymmetric fixtures, it shall be IES Type II, III, or IV.

B. All luminaires shall be pre-qualified before installation. A sample of each type of luminaire to be considered for pre-qualification shall be submitted to TXDOT's Traffic Operations Division - Traffic Engineering Section (TRF-TE).

Traffic Operations Division - TE
Texas Department of Transportation
125 East 11th Street
Austin, TX 78701-2483

Sample luminaires are non-returnable. A list of pre-qualified luminaires may be obtained by contacting TRF-TE. In addition, luminaires will be sampled and tested in accordance with Item 614. Luminaires that inconsistently pass testing or that are inconsistent with published photometric information will be removed from the pre-qualified list at the discretion of the Engineer. Once a fixture has been approved, no changes shall be made in any material or manufacturing methods without prior approval of the Department. Unapproved changes will result in rejection of all fixtures.

C. Symmetric and Asymmetric fixtures shall meet the following requirements unless otherwise approved by the Engineer:

1. Luminaire Construction

a) The luminaire housing shall be formed, cast or drawn from low copper aluminum and shall be free of cracks and excessive porosity. Formed aluminum shall have a minimum thickness of 0.090, and shall have all seams welded. The minimum thickness of cast parts shall be as approved by the Engineer. Nuts, screws, and washers shall be made of Type 316 stainless steel. The housing shall be marked with minimum 2" letters to indicate the photometric type as being either A, B, C, or S as specified. Marking shall be permanent and shall be by stencil or stick on labels similar to "wattage" label on cobra heads. Wattage label will not be required on high mast fixtures. The fixture housing shall be constructed separate from the fixture reflector.

b) Fixtures shall be natural aluminum in color or shall be painted gray.

c) The slipfitter shall securely attach the luminaire to the tenon on the ring assembly with a minimum of 2 bolts and clamp. A positive means of vertical adjustment shall be provided.

d) For optical assemblies with lenses, reflectors shall be polished aluminum with Alzak or equal coating and shall not be painted. The optic assembly shall be sealed. The lens shall be tempered glass or prismatic glass, either flat or sag. The optic assembly shall be provided with a resilient seamless or sonically welded silicone rubber gasket, and constructed so that a positive seal against weather and other contaminants will be maintained. The latches shall be stainless steel, spring loaded, and hand operated (2 latches minimum, 3 attachment points), and shall provide a positive means of maintaining closure of the luminaire.

e) For optical assemblies without lenses, optical assembly shall consist of an open ventilated borosilicate glass reflector. The reflecting prisms shall be protected from dirt depreciation by a spun on hermetically sealed aluminum cover. There shall be no glass lens/refractor on this optical assembly.

f) Asymmetric fixtures shall have field rotatable optics with accurate degree of rotation markings. Reflector shall have "house side" and "street side" markings.

g) The socket shell shall be nickel plated and shall be rigidly attached to a high grade porcelain mogul base, which shall extend and enclose the metal shell. A locking means shall be incorporated in the shell of the socket to positively resist the removal of the lamp. This locking means shall be a spring loaded center tip. Lamp socket shall be non-adjustable and shall be riveted, welded, or otherwise permanently installed. Lamps shall be held securely in the proper position with a lamp support.

h) The terminal block shall use nickel plated brass connectors.

i) Fixture weight including ballast shall not exceed 80 pounds, and effective projected area (EPA) shall not exceed 2.62 square feet.

j) The Contractor may be responsible for fixture testing costs. See TXDOT's "Manual of Testing Procedures," Chapter 11 - "Traffic Systems and Illumination," TEX-1110-T - "Sampling Lighting Assemblies," at http://manuals.dot.state.tx.us/dynaweb/.

2. Photometrics

a) The Contractor shall submit a computer generated light level array of the area to be lighted by high mast poles. All computer generated arrays shall have 400 watt fixtures derated to 40,000 lumens per lamp.

b) The Type "A" 400 watt asymmetric fixture shall be IES cutoff. The Department will use the measured photometric data of sampled fixtures to run the following tests on a computer simulation:

(1) When mounted in the level position, 50 ft. above the midpoint and 20 ft outside of either long side of a rectangular area measuring 340 ft. by 50 ft., the fixture shall pass the following tests:

(a) The fixture shall provide a measured minimum intensity of 0.15 horizontal foot-candles at any point on the surface of this area.

(b) The fixture shall provide a measured maximum to minimum light ratio, based on horizontal foot-candles, of less than 25.

(c) The fixture shall provide an average measured intensity of 0.6 horizontal foot-candles on the surface area.

(2) When mounted in the level position, 50 ft. above the midpoint and 20 ft outside of either long side of a rectangular area measuring 260 ft. by 30 ft., the fixture shall provide a measured minimum intensity of 0.30 horizontal foot-candles at any point on the surface of this area.

c) The Type "B" 400 watt asymmetric fixture shall be IES cutoff. The Department will use the measured photometric data of sampled fixtures to run the following tests on a computer simulation:

(1) When mounted in the level position, 50 ft. above the midpoint and 20 ft outside of either long side of a rectangular area measuring 260 ft. by 65 ft., the fixture shall pass the following tests:

(a) The fixture shall provide a measured minimum intensity of 0.15 horizontal foot-candles at any point on the surface of this area.

(b) The fixture shall provide a measured maximum to minimum light ratio, based on horizontal foot-candles, of less than 25.

(c) The fixture shall provide an average measured intensity of 0.6 horizontal foot-candles on the surface area.

(2) When mounted in the level position, 50 ft. above the midpoint and 20 ft outside of either long side of a rectangular area measuring 200 ft. by 40 ft., the fixture shall provide a measured minimum intensity of 0.30 horizontal foot-candles at any point on the surface of this area.

d) The Type "C" 400 watt asymmetric fixture shall be IES cutoff. The Department will use the measured photometric data of sampled fixtures to run the following tests on a computer simulation:

(1) When mounted in the level position, 50 ft. above the midpoint and 20 ft. outside of either long side of a rectangular area measuring 220 ft. by 80 ft., the fixture shall pass the following tests:

(a) The fixture shall provide a measured minimum intensity of 0.15 horizontal foot-candles at any point on the surface of this area.

(b) The fixture shall provide a measured maximum to minimum light ratio, based on horizontal foot-candles, of less than 25.

(c) The fixture shall provide an average measured intensity of 0.6 horizontal foot-candles on the surface area.

(2) When mounted in the level position, 50 ft. above the midpoint and 20 ft. outside of either long side of a rectangular area measuring 160 ft. by 50 ft., the fixture shall provide a measured minimum intensity of 0.30 horizontal foot-candles at any point on the surface of this area.

e) The Type "S" 400 watt Symmetric fixture shall be IES cutoff. The Department will use the measured photometric data of sampled fixtures to run the following tests on a computer simulation:

(1) When mounted in the level position at 50 foot mounting height, the fixture shall provide the minimum light levels as shown below:

(a) 0.15 horizontal foot-candles within a 130 foot radius.

(b) 0.30 horizontal foot-candles within a 100 foot radius.

(c) 0.50 horizontal foot-candles within a 60 foot radius.

3. Ballasts

a) All ballasts shall be isolated-winding lag-type magnetic regulators designed to operate 400 watt high pressure sodium lamps rated 480 volts. Ballasts shall be capable of starting lamps at an ambient temperature of -20 degrees F. Ballast wiring shall include a grounding terminal bonded to metal housing. Ballasts shall be fused with a 5 amp time-delay fuse in an insulated fuse holder. Fuse holders shall be internal to the housing. Ballast wiring to the terminal board shall be through a quick-disconnect plug. Windings shall be made from copper wire.

b) When the circuit voltage indicated on the plans is applied, the ballast input wattage during fluctuations of the test voltage of +10% and -10% shall not exceed 552 watts for a 400 watt HPS lamp.

3/03 Revision

⚠ Revised Area Lighting Requirements

STANDARD PLANS
Texas Department of Transportation
Traffic Operations Division

HIGH MAST ILLUMINATION DETAILS

HMID(7)-03

©TxDOT 1986			DN: GJ	CK: KB	DW: FDN	CK: CAL
REVISIONS 9-91 10-93 4-96 3-03	STATE DISTRICT	FEDERAL REGION	FEDERAL AID PROJECT			SHEET
	PHARR	6				768
	COUNTY		CONTROL	SECTION	JOB	HIGHWAY
	HIDALGO		0265	08	091	US 281

76G

DISCLAIMER
The use of this standard is governed by the "Texas Engineering Practice Act". No warranty of any kind is made by TxDOT for any purpose whatsoever. TxDOT assumes no responsibility for the conversion of this standard to other formats or for incorrect results or damages resulting from its use.

c) During fluctuation of the line voltage of +10% or -10%, the lamp wattage fluctuation shall not exceed a total of 20%. Ballast shall maintain lamp wattage between 280 and 475 watts for a 400 watt HPS lamp.

d) The power factor of any ballast when tested at the circuit voltage indicated in the plans shall not be less than 90% at any point in life. Ballast factor shall be between .95 and 1.0.

e) The electronic starting aid shall provide a starting pulse with an amplitude of 2500 volts minimum, 4000 volts maximum. The pulse width shall be a minimum of 0.8 microseconds at 2250 volts. The pulse shall occur when the open-circuit voltage is equal to or greater than 90 percent of peak open-circuit voltage. Pulse repetition rate shall be a minimum of one per cycle and pulse current shall be a minimum of 0.18 amperes. Electronic starting aids shall be replaceable without the use of tools. The starting aid shall discontinue to pulse when the lamp starts. Starter shall sense an inoperative or missing HPS lamp and automatically shut down luminaire to protect ballast after 10 minutes.

f) Ballasts shall permanently and clearly indicate the following: lamp type, catalog number, voltage rating, connection diagram, and manufacturer. Capacitors in all luminaires shall be non-PCB type.

4. Lamps

a) All lamps shall be new and of recent manufacture.

b) Lamps shall be high pressure sodium and shall meet ANSI C78 requirements. Lamps shall be the type that extinguish at the end of usable lamp life and remain extinguished without cycling. 400 watt lamps shall contain less than 4.0 mg of mercury. Lamps shall be lead free and shall pass the Federal Toxic Characteristic Leachate Procedure (TCLP). Lamp shall be Osram-Sylvania LU400/Eco Plus. No alternatives will be approved.

c) 400 watt high pressure sodium lamps shall have average initial lumens of 50000 and average rated life of 24000 hours.

⚠1 2. GENERAL

A. All material shall be in accordance with the applicable sections of the NEC. All conduit and conductors shall be in accordance with the materials and construction methods requirements of Items 618 and 620. Heat shrink tubing for use with cable grips and cable splicing shall meet the requirements of Item 620.

B. Where stainless steel bands are called for on the HMID sheets, stainless steel hose clamps may be provided. Stainless steel bands and stainless steel hose clamps shall be provided with stainless steel clips or stainless steel screws.

C. Obstruction Lights

1. When obstruction lights are required by layout sheets, summary sheets or general notes, the entire high mast assembly shall be controlled by an FAA approved photocell mounted inside the service enclosure. Ring mounted luminaires shall be controlled by up to 4 additional ring mounted photocells, with each photocell controlling up to 3 fixtures. Photocells shall meet the following requirements:

a) All photocells shall consist of a photoelectric cell, an internal lightning arrestor, and a relay or bimetallic switch mounted inside a weather proof enclosure with standard 3-prong twist lock photocell plug and receptacle. The enclosure shall be made of poly-acrylic with clear acrylic window. Enclosure chassis shall be molded thermosetting plastic. The photocell shall have an arrestor rated 2.0kV sparkover with 5000 amps follow-through. Relay or switch shall be time delay type with normally closed contacts. Photocell shall be rated a minimum of 1800 VA.

b) Service enclosure mounted photocell (FAA photocell) shall turn on at light levels below 35 foot-candles and off at levels above 58 foot-candles, in accordance with FAA requirements. This photocell shall be rated for operation at 240 volts. A permanent placard shall be installed on the inside of the service enclosure door to indicate that an FAA approved photocell is required.

c) High mast assembly ring mounted photocells (one foot-candle photocells) shall turn on at light levels below 1.0 (plus or minus 0.5) foot-candle, and shall turn off at 2 foot-candles higher than this level. These photocells shall be rated for operation at 480 volts. Photocells shall be mounted upright on the terminal box or on various junction boxes around the ring as approved by the Engineer. Conduit entries shall not be made into the top of the terminal box or junction boxes. The Contractor shall submit mounting details to the Engineer for approval.

2. When obstruction lights are not required, eliminate the 3 obstruction light fixtures, 3 mounting posts, 480/120 volt transformer, 120 volt wiring, and 3 mounting post support connections shown on detail "E", sheet 1.

D. The male cord connector on the lower end of the Type W cord running up the pole, the female cord connector for the Type W cord running to the circuit breaker enclosure and the male connector on the maintenance jumper shall meet the following or approved equal specifications:

1. Arrow Hart pin and sleeve watertight connectors UL listed, catalog numbers AH330C7W and AH330P6W.

2. Bryant watertight pin and sleeve connectors UL listed, catalog numbers 330C6W and 330P6W.

3. Hubble pin and sleeve connectors UL listed, catalog numbers HBL330C7W and HBL 330P7W.

4. The male connector for use with the Type W maintenance jumper shall be a pin and sleeve connector of one of the above types. The Contractor shall attach a 50 amp twist lock receptacle to the opposite end of the maintenance jumper to match the flange mounted plug on the ring and the portable transformer.

5. The Contractor shall make a brochure submittal on the cord connectors.

E. When shown on the plans, spill light shall be restricted to less than 0.15 horizontal footcandles.

F. The Contractor shall provide shop drawings for high mast illumination assemblies in accordance with this item and Item 441. An Engineer licensed in the State of Texas shall seal the shop drawings.

3. TESTING

A. Fixtures, lamps and ballasts will be sampled and tested in accordance with the Department "Manual of Testing Procedures" except as noted in these specifications.

B. Ballasts and fixtures will be tested using a reference lamp.

C. The Department will bear the cost of all testing of equipment that complies with the specification requirements. However, the source of supply of fixtures and ballasts must be approved as required in Article 6.1 of the Standard Specifications. Such approval will be contingent on the supplier agreeing to bear the cost of testing any equipment that fails to comply with the specification requirements listed in this specification.

D. All other equipment will be tested in accordance with Item 614 of the Standard Specifications and Materials and Test Division Test Standards.

E. After High Mast Assembly has been completely assembled, the Engineer may require Contractor to fully lower and raise each high mast ring one time to demonstrate proper operation of the lowering mechanism, or may require the ring to be lowered for ring or fixture inspection. If any malfunction occurs, the problem shall be corrected at the Contractor's expense and the lowering test will be repeated.

4. MOUNTING RING AND SUPPORT ASSEMBLY

A. Ring and support assembly shall be fabricated from steel having a minimum yield strength of 36 KSI.

B. Cover assemblies, fittings and miscellaneous parts shall be as outlined on the plans.

C. All hardware shall be hot-dipped galvanized per ASTM A153 or shall be stainless steel, unless noted otherwise on the plans.

5. WINCH

A. Housing shall be high tensile strength die-cast silicon aluminum. Cable drum shall be fabricated from seamless steel tubing with stamped steel flanges and shall be hot-dipped galvanized. Drum shall have a minimum diameter of 4.5 inches. Drum shall be keyed to drum shaft. Drum and flanges shall be sized so that, when the fixture mounting ring is in the raised position, the cable including one full layer will fill the drum to no more than two-thirds of full capacity. Drum shaft shall be ground from stainless steel and mounted on lubricated bronze bearings with seals. Wormgear shall be made of nickel-bronze and worm shaft shall be high-strength stress-proofed steel, ground and polished and supported by tapered roller bearings.

B. Gear ratio shall be 36:1 with safe hoisting capacity of not less than 4000 pounds.

C. Winch shall incorporate adjustable automatic brake to assure positive load suspension. Brake shall be multiple disc with friction plates running in oil bath and one-direction clutch which operates only when load is suspended or lowered. Winch shall not have throw-out clutch.

D. Any winch that is operated without oil shall be considered damaged and shall be replace by the contractor at the contractor's expense.

⚠2 6. WIRE ROPE AND TERMINALS

A. 5/16 and 3/8 wire rope shall be 19x7 Rotation Resistant IWRC stainless steel. 19x7 rotation resistant wire rope shall meet the construction requirements of Fed. Spec. RR-W-410D, Type IV, class 2, modified for stainless steel with a nominal breaking strength of 11,100 lbs. All wire rope shall be pre-formed and factory lubricated. Wire rope shall meet the requirements of the applicable specification except where modified by this specification. Quality Assurance testing shall be the responsibility of the manufacturer and shall meet recognized wire rope industry standards. No special tensile or torsion testing will be required. Mill Test Reports shall be furnished.

B. Winch cable shall be of sufficient length to leave a minimum of one full layer of cable on the drum when the fixture mounting ring is in the full down position.

C. Wire rope terminals shall be stainless steel, solid stud type as shown on Sheet 7. All terminals shall be drilled for cotter pin. Material to be 303 SE or 304 stainless steel with a maximum tensile strength of 115,000 p.s.i. Mill Test Reports shall be furnished.

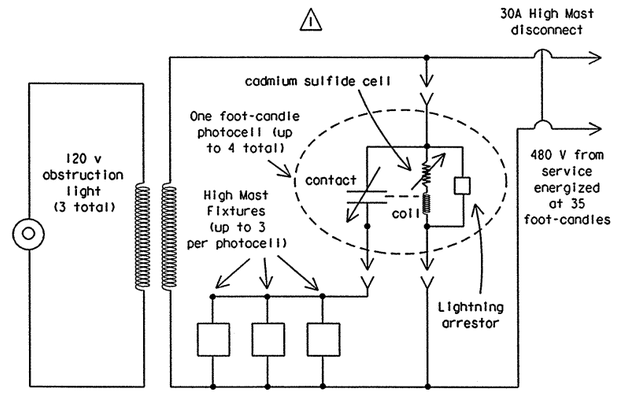

One foot-candle photocell keeps High Mast fixtures off when FAA photocell energizes circuit at 35 foot-candles. Fixtures come on when sun goes down at 1 foot-candle.

One Foot-candle Photocell Schematic

Use on ring when obstruction lights are installed and FAA photocell is installed in electrical service.

3/03 Revision

⚠1 Revised General requirements; add diagram

⚠2 Revised Wire Rope and Terminals

LEVELS DISPLAYED

1	2	3	4	5	6	7	8	9	10	11	12	13	14	15	16
17	18	19	20	21	22	23	24	25	26	27	28	29	30	31	32
33	34	35	36	37	38	39	40	41	42	43	44	45	46	47	48
49	50	51	52	53	54	55	56	57	58	59	60	61	62	63	64
65	66	67	68	69	70	71	72	73	74	75	76	77	78	79	80
81	82	83	84	85	86	87	88	89	90	91	92	93	94	95	96
97	98	99	100	101	102	103	104	105	106	107	108	109	110	111	112
113	114	115	116	117	118	119	120	121	122	123	124	125	126	127	128

STANDARD PLANS
Texas Department of Transportation
Traffic Operations Division

HIGH MAST ILLUMINATION DETAILS

HMID(8)-03

©TxDOT 1986

DN: GJ	CK: KB	DW: FDN	CK: CAL

REVISIONS	STATE DISTRICT	FEDERAL REGION	FEDERAL AID PROJECT	SHEET
4-89				
10-93	PHARR	6		769
4-96				
3-03				

COUNTY	CONTROL	SECTION	JOB	HIGHWAY
HIDALGO	0255	08	091	US 281

76H

DISCLAIMER
The use of this standard is governed by the "Texas Engineering Practice Act". No warranty of any kind is made by TxDOT for any purpose whatsoever. TxDOT assumes no responsibility for the conversion of this standard to other formats or for incorrect results or damages resulting from its use.

D. All terminals shall be proof-tested by the manufacturer to 40% of rated strength of the wire rope. Each terminal shall be identified by manufacturer's logo permanently incised on terminal. Manufacturer shall furnish certification of tests. Contractor shall also furnish one sample of each size of terminal with 5 ft. of wire rope for load tests by the State. Samples tested must withstand test load not less than 100% of rated breaking strength of wire rope. If sample fails test, all terminals of same size will be rejected.

E. Wire rope shall be delivered from the manufacturer on a reel.

7. SPRINGS

A. Provide three steel springs as shown on plans.

B. Springs shall have an uncompressed length of approximately 8 inches and shall compress 3 inches under 700-pound load.

C. Springs shall contain approximately 19 total coils with ID of 0.875 and OD of 1.375 inches. Ends shall be closed and ground. Springs shall be zinc-plated.

D. Springs shall be made from 1/4" diameter oil-tempered MB Steel treated for overstress. Springs shall not develop permanent set from 3-inch compression.

8. ELECTRICAL POWER CABLE

A. Power cable shall be No. 8 AWG three-conductor round Type W, rated 90 degrees C, 600 volt or 2000 volt. Each conductor shall be tinned copper and shall consist of 133 strands. Insulation shall be ethylene propylene rubber. Jacket shall be chlorosulfonated polyethylene (CSPE), with glass fiber or nylon reinforcing mesh between two layers of CSPE. Nominal diameter shall be 0.91". Filler shall be rubber compound or other approved non-hygroscopic compound. Jacket shall be Hypalon Power Flex 90, with no substitutions allowed.

9. POWER DRIVE ASSEMBLY (ONE ONLY THIS CONTRACT UNLESS OTHERWISE SHOWN ELSEWHERE ON THE PLANS)

A. Drive Motor

1. Drive motor shall be 1-1/4" heavy-duty reversible portable electric drill modified as shown on plans.

2. Shall have a minimum of 6 radial ball bearings, one thrust bearing, and one needle bearing.

3. Shall have No. 3 Morse Taper socket.

4. Shall be designed for 115 volt 60 Hertz single phase operation 250 RPM at no load.

5. Shall be designed for continuous rated duty of 160 RPM and 15 amperes at 115 volts with delivery of 33-pound-feet of torque. Drill motor to be operated only at low speed range. (i.e. 150 to 160 RPM)

6. Shall develop 240 pound-feet of torque at stalled rotor condition.

B. Torque Limiter Coupling

1. Torque limiter coupling shall consist of standard torque limiter with Type A sprocket center member coupled to a Type B sprocket by an ASA double strand roller chain. Type A sprocket shall be chrome-plated.

2. Coupling shall have torque capacity minimum of 15 pound-feet and a maximum of 55 pound-feet.

3. Limiter section of coupling shall consist of integral hub and pressure plate, two friction facings, sintered iron bushing, pilot plate, disk spring, lock washer and hex adjustment nut. All major components except spring and friction facings shall be cadmium-plated with dichromate treatment.

4. Type A center sprocket shall have ground face (63 micro-inch) and shall be run-in for 4 minutes at approximately 60 RPM at a torque setting 70% to 80% of spring rating. Contractor shall provide written certification that run-in has been accomplished.

5. The torque limiter coupling shall, after run-in, be set to a torque limit of 35 pound-feet or as directed by the Engineer. The proper setting of the coupling shall be demonstrated to the Engineer.

C. Universal Joints

1. Shall be slip-type with 4-inch barrel. A grease fitting shall be so located in the spider that all caps and needle bearings may be adequately serviced. The assembly shall be disassembled and zinc-plated, then reassembled and properly lubricated.

2. Shall have a minimum torque rating of 1270 inch-pounds at 200 RPM.

3. Shall have set screw and keyed coupling as shown on plans.

⚠ 10. CONSTRUCTION METHODS

A. Fabrication

1. Fabrication and welding shall be in accordance with Item 441, "Steel Structures".

2. All holes supporting pulley shafts shall be drilled (not punched) prior to galvanizing.

3. All component parts shall be galvanized where galvanizing is applicable, after fabrication.

4. Galvanizing on all parts which have become scratched, chipped or otherwise damaged shall be thoroughly cleaned and the cleaned area painted with two coats of zinc dust-zinc oxide paint conforming to the requirements of repair compounds meeting Federal Specification TT-P-641 b.

5. Mounting rings and ring support assemblies shall be fabricated with the use of jigs that have been inspected and approved by Material and Test Division personnel prior to their usage.

6. The fabricator shall submit his proposed welding procedures in accordance with Item 441, "Steel Structures".

B. Installing Wire Rope

1. Extreme care shall be used to prevent wire rope from kinking, nicking, or from sustaining other damage during installation. Rope shall not be installed by pulling from flat coil, but shall be carefully unrolled its full length or placed on a horizontal axis and unreeled according to wire rope industry standards.

2. For right lay rope, the rope shall be attached to the drum on the end opposite the winch gear train, and wound on drum so that the free end of the rope comes off the backside of the drum during normal operation of the winch. Rope must be unreeled carefully as stated above. Care must be taken to insure that all layers lay full and tight on drum.

3. Installation of all wire rope shall be accomplished only under direct supervision of the Engineer or his authorized representative. Contractor shall not remove wire rope from manufacturer's reel until authorized by the Engineer. Installation of wire rope on winch shall be in accordance with the above and accepted industry practice. Installation of the three hoist cables shall be made from the top end of the pole and as directed by the Engineer or his representative.

C. Installing Wire Rope Clips

1. Turn back approx. 2' 3" of rope, measured from the top of thimble. Apply seizing to pigtail end of wire rope prior to cutting to length. See detail "K", Sheet 3. Apply first clip approx. 3" from the dead end of the wire rope with U-bolt over dead end and live end in clip saddle. Tighten nuts evenly to 30 pound-feet of torque, or as recommended by manufacturer.

2. Install second clip as near loop as possible, take out slack and torque nuts evenly to 30 pound-feet or as recommended by manufacturer.

3. After final erection and assembly of the pole and high mast assembly, retighten nuts to required torque.

D. Installing Light Ring and Luminaires

1. Prior to mounting luminaires to the light ring, Contractor shall ensure the ring is level. Luminaires shall be mounted level on the light ring. Luminaires shall be oriented as shown on plans.

LEVELS DISPLAYED
1 2 3 4 5 6 7 8 9 10 11 12 13 14 15 16
1 2 17 18 19 20 21 22 23 24 25 26 27 28 29 30 31 32
33 34 35 36 37 38 39 40 41 42 43 44 45 46 47 48
49 50 51 52 53 54 55 56 57 58 59 60 61 62 63 64

3/03 Revision

⚠ Revised Construction Methods.

STANDARD PLANS
Texas Department of Transportation
Traffic Operations Division

HIGH MAST ILLUMINATION DETAILS

HMID(9)-03

©TxDOT 1986			DN: GJ	CK: KB	DW: FDN	CK: CAL
REVISIONS	STATE DISTRICT	FEDERAL REGION	FEDERAL AID PROJECT			SHEET
10-93						
10-95	PHARR	6				770
4-96	COUNTY		CONTROL	SECTION	JOB	HIGHWAY
3-03	HIDALGO		0255	08	091	45281

761

DISCLAIMER:
The use of this standard is governed by the "Texas Engineering Practice Act". No warranty of any kind is made by TxDOT for any purpose whatsoever. TxDOT assumes no responsibility for the conversion of this standard to other formats or for incorrect results or damages resulting from its use.

LEVELS DISPLAYED
1 2 3 4 5 6 7 8 9 10 11 12 13 14 15 16
17 18 19 20 21 22 23 24 25 26 27 28 29 30 31 32
33 34 35 36 37 38 39 40 41 42 43 44 45 46 47 48
49 50 51 52 53 54 55 56 57 58 59 60 61 62 63

ACC: (LV=1.2 for English; 1.3 for Metric)

℄ 4 Permissible 1" Dia assembly holes 180° apart. (Typ each splice)

4 additional 1" Dia holes are permissable 12" from assembly holes

6" Min
12" Max

12"

12"

SPLICE DETAIL

⅞" Dia Holes equally spaced on 15" Dia Bolt Circle

85 Percent Minimum Penetration

¾"

⅜

HM-6

7 ¼" Dia

Match Mark

Reference Line

VIEW C

8"

¼" Plate

5 ¼"

1"

3 ½"

7 ¼"

1"

6"

1"

Provide 3~ ½" Dia x1 ¼" bolts

WINCH DRIVE ACCESS COVER

Reference Line

O.D. of Base Plate

Match marks

C 8x18.75 for mounting winch (See Detail)

VIEW E (2 opposite corners)

℄ 2 ~ 1 ⅜" Dia holes 24" above Base Plate

2 ¾" Dia Bolt Holes equally spaced on Bolt circle

℄ Pole

2"

2"

I.D. Base Plate

T

Galvanizing drain slots are not permitted in base plate. Drain to small end.

SECTION A-A

℄ Winch Drive

Reference Line

U

Cut channel to fit for 100' & 125' 12 Sided Poles

4 ½" 4" 5 ⅞" 100',125' & 150' Poles

10 ⅞" 175' Pole

6 ~ ½" Heavy Hex Nuts welded under ⅜" Dia holes. Tap nuts after galvanizing.

2 ⅝"

2 ⅝"

℄ Channel

2"x2"

6 ~ 1"x2" Slots 2"2" 10 ⅜" 100',125' & 150' Poles

15 ⅜" 175' Pole

WINCH MOUNTING CHANNEL

Reference Line

U

6 ~ ⅝"x1 ¼" Slots 4 ½" 4" 5 ⅞" 100',125' & 150' Poles

10 ⅞" 175' Pole

2 ½"

1 ¼"

2"2"2"

2 ½"

1 ¼"

1 11/16"

8"

4 5/8"

1 11/16"

2"

4"

2"

½" Plate

6 ~ ⅝" Dia holes 2"2" 10 ⅜" 100',125' & 150' Poles

15 ⅜" 175' Pole

WINCH MOUNTING PLATE

G

HM-9

G

S

A bent and welded handhole frame is permissable. Heating, bending, and finish grinding must be approved with the HM-9 weld procedure.

OPTIONAL HANDHOLE FRAME

Nominal Pole Height

Taper 0.1600 in/ft (for 80 MPH) and 0.1900 in/ft (for 100 MPH)

Splice Length

A
B
C
D
E
F

8 SIDED

VIEW C

Taper 0.1750 in/ft (for 80 MPH) and 0.1850 in/ft (for 100 MPH)

Section Length

A
B
C
D

12 SIDED

POLE ELEVATIONS

(Showing 175 Ft Poles)

T

½"

Handhole Frame

HM-3

¼

¾x ⅜

¼

HM-7

Winch Drive Access Cover

Tang

Channel

8"

6"

VIEW F

VIEW D

HM-8

⅜

½"x2 ½"x3 ¾" Tang, A36 Min, 1 ¼ R, 1 ¼" Dia chamfered hole. Place Tang on flat adjacent to handhole.

SECTION B-B

1'-0"

B

Access Cover to be ¼" Plate

Drill and tap for ½"x1" cap screw (4 req'd)

A

A

Ground Sleeve

¼" Typ

R=3"

1'-6"

S

Drill and Tap for 3 ½" bolts.

1 ½" Dia Hole

5 ¼"

5 ⅝"

3"3"

8 ⅛"

8 ⅛"

1'-0"

1'-7"

See HMIF for Anchor Bolt Detail

⅜"

U

6"

VIEW G

B

ELEV OF POLE BASE

⅜"

¼

HM-1

t x ⅜

t

STANDARD WELD

¼

Chip & Grind

OPTIONAL WELD STEP 1
(a) Prepare Shaft and ground sleeve.
(b) Weld shaft to base plate, chip and grind flush (1/8 " max radius.)

⅜"

¼

HM-2

t x ⅜

t

OPTIONAL WELD STEP 2
(c) Position ground sleeve.
(d) Weld to base plate with tapered reinforcement.

⅜"

¼

2t x ⅜

2t

NO GROUND SLEEVE
(Testing required)

85% Minimum penetration

HM-5

Ground sleeve to be same thickness as lower pole section, except shall not be less than 0.375 inch

Provide 100% penetration in outer sections at splices and at base plates for 1.5 pole diameters plus 6". Also provide 100% penetration for ground sleeve seam welds.

VIEW E

VIEWS D

t

HM-4

7/8xt

⅞"

VIEW F

℄ Winch Drive

1 ⅜" Min

G

Provide welded and ground filler or cover plate where winch drive conflicts with bend line in ground sleeve for the 8 sided, 80 mph, 100' pole, the 12 sided, 100 mph, 100' pole, and the 12 sided, 80 mph, 175', 125' and 100' poles.

VIEW G

STANDARD PLANS
TEXAS DEPARTMENT OF TRANSPORTATION
Traffic Operations Division

HIGH MAST ILLUMINATION POLES
100' - 125' - 150' - 175'

SHEET 1 OF 2 HMIP(1)-98

©TxDOT August 1995

DN: TxDOT	CK: TxDOT	DW: TxDOT	CK: TxDOT	MSG NO.:

REVISIONS	STATE DISTRICT	FEDERAL REGION	FEDERAL AID PROJECT	SHEET
11-97	PHR	6		771
5-98 ~ Anchor Bolt Circle Dia	COUNTY	CONTROL	SECTION	JOB	HIGHWAY
	HIDALGO	0255	08	091	4528

77A

DISCLAIMER:
The use of this standard is governed by the "Texas Engineering Practice Act". No warranty of any kind is made by TxDOT for any purpose whatsoever. TxDOT assumes no responsibility for the conversion of this standard to other formats or for incorrect results or damages resulting from its use.

TABLE OF VARIABLE POLE DIMENSIONS

	Ht (ft)	Section	8 SIDED POLE Diameter (Inches) Bottom	Top	Thickness (Inches)	Length (feet)	Splice (Inches)	12 SIDED POLE Diameter (Inches) Bottom	Top	Thickness (Inches)	Length (feet)	Splice (Inches)
80 MPH DESIGNS	175	A	13.083	7.750	.250	33.33	19	16.792	7.750	.250	51.67	24
		B	17.792	12.205	.375	34.92	25	24.858	15.817	.313	51.67	36
		C	22.250	16.583	.375	35.42	32	32.625	23.583	.313	51.67	48
		D	25.375	20.948	.438	27.67	36	36.250	31.175	.375	29.00	~
		E	28.375	23.895	.500	28.00	41					
		F	31.250	26.703	.500	28.42	~					
	150	A	13.083	7.750	.250	33.33	19	16.792	7.750	.250	51.67	24
		B	17.792	12.205	.375	34.92	25	24.858	15.817	.313	51.67	36
		C	22.250	16.583	.375	35.42	32	32.625	23.583	.313	51.67	~
		D	25.375	20.948	.438	27.67	36					
		E	28.375	23.895	.500	28.00	~					
	125	A	13.083	7.750	.250	33.33	19	16.792	7.750	.250	51.67	24
		B	17.792	12.205	.375	34.92	25	24.858	15.817	.313	51.67	36
		C	22.250	16.583	.375	35.67	32	28.250	23.583	.313	26.67	~
		D	25.375	20.948	.438	27.67	~					
	100	A	13.083	7.750	.250	33.33	19	16.792	7.750	.250	51.67	24
		B	17.792	12.205	.375	34.67	25	24.625	15.817	.313	50.33	~
		C	22.250	16.583	.375	35.67	~					
100 MPH DESIGNS	175	A	14.208	7.875	.313	33.33	20	17.433	7.875	.375	51.67	25
		B	19.792	13.142	.375	35.00	28	25.747	16.173	.438	51.75	37
		C	25.250	18.473	.438	35.67	36	33.750	24.176	.438	51.75	49
		D	29.000	23.680	.500	28.00	42	37.375	31.995	.500	29.08	~
		E	32.625	27.210	.563	28.50	47					
		F	36.125	30.631	.563	28.92	~					
	150	A	14.208	7.875	.313	33.33	20	17.433	7.875	.375	51.67	25
		B	19.792	13.142	.375	35.00	28	25.747	16.173	.438	51.75	37
		C	25.250	18.473	.438	35.67	36	33.750	24.176	.438	51.75	~
		D	29.00	23.680	.500	28.00	42					
		E	32.625	27.210	.563	28.50	~					
	125	A	14.208	7.785	.313	33.33	20	17.433	7.875	.375	51.67	25
		B	19.792	13.142	.375	35.00	28	25.747	16.173	.438	51.75	37
		C	25.250	18.473	.438	35.67	36	29.125	24.176	.438	26.75	~
		D	29.00	23.680	.500	28.00	~					
	100	A	14.208	7.875	.313	33.33	20	17.433	7.875	.375	51.67	25
		B	19.792	13.142	.375	35.00	28	25.500	16.173	.375	50.42	~
		C	25.250	18.473	.438	35.67	~					

Diameters are measured across the flats.

TABLE OF VARIABLE BASE DIMENSIONS

	Ht (ft)	O.D. (Inches)	I.D. (Inches)	Bolt Clr (Inches)	No. Bolts	S (Inches)	T (Inches)	U (Inches)
	8 SIDED POLE							
80 MPH DESIGNS	175'	47	22	41	16	2.00	3.75	4.50
	150'	44	18	38	12	2.00	4.00	3.50
	125'	41	16	35	8	2.00	4.50	3.50
	100'	37	14	31	6	2.00	5.00	3.50
	12 SIDED POLE							
	175'	50	24	44	12	1.75	3.50	3.50
	150'	47	22	41	10	1.75	3.50	2.50
	125'	42	18	36	8	1.75	3.75	2.50
	100'	38	13	32	6	1.75	4.00	2.50
	8 SIDED POLE							
100 MPH DESIGNS	175'	52	27	46	20	1.75	3.50	4.50
	150'	49	23	43	16	1.75	4.00	3.50
	125'	45	21	39	12	1.75	4.50	3.50
	100'	40	17	34	10	1.75	4.50	3.50
	12 SIDED POLE							
	175'	52	27	46	16	1.75	3.25	3.50
	150'	50	25	44	12	1.75	3.50	2.50
	125'	46	22	40	10	1.75	3.75	2.50
	100'	42	19	36	6	1.75	4.00	2.50

NOTE: Base Plate may be round or with 8 or 12 equal segments matching the pole.

GENERAL NOTES:

Design conforms to AASHTO Standard Specifications for Structural Supports for Highway Signs, Luminaries, and Traffic Signals and Interim Revisions thereto. The Design Wind Speed is 80 mph or 100 mph.

The required design height and wind speed shall be as shown elsewhere in the plans.

Each pole section, top flange plate and base plate shall be permanently marked on the reference line. The required mark locations are shown on the baseplate, top plate, and foundation plan details. These marks shall be used in pole assembly and erection alignment. The reference line and anchor bolt orientation shall be parallel to roadway centerline unless otherwise shown on Lighting Layouts.

LEVELS DISPLAYED
1 2 3 4 5 6 7 8 9 10 11 12 13 14 15 16
17 18 19 20 21 22 23 24 25 26 27 28 29 30 31 32
33 34 35 36 37 38 39 40 41 42 43 44 45 46 47 48
49 50 51 52 53 54 55 56 57 58 59 60 61 62 63

ACC:

(LV=1.2 for English, 1.3 for Metric)

STANDARD PLANS
TEXAS DEPARTMENT OF TRANSPORTATION
Traffic Operations Division

HIGH MAST ILLUMINATION POLES 100' - 125' - 150' - 175'

SHEET 2 OF 2 HMIP(2)-98

© TxDOT August 1995

DN: TxDOT	CK: TxDOT	DW: TxDOT	CK: TxDOT	REG NO.:

REVISIONS	STATE DISTRICT	FEDERAL REGION	FEDERAL AID PROJECT	SHEET
5-98 - Anchor Bolt Circle Dia	PHR	6		772

COUNTY	CONTROL	SECTION	JOB	HIGHWAY
HIDALGO	0255	08	091	4528

778

DISCLAIMER:
The use of this standard is governed by the "Texas Engineering Practice Act". No warranty of any kind is made by TxDOT for any purpose whatsoever. TxDOT assumes no responsibility for the conversion of this standard to other formats or for incorrect results or damages resulting from its use.

ACC:

LEVELS DISPLAYED 1 2 3

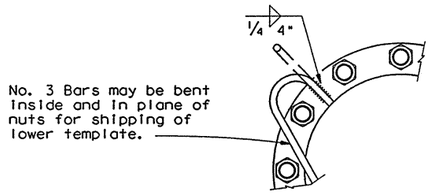

VIEW F

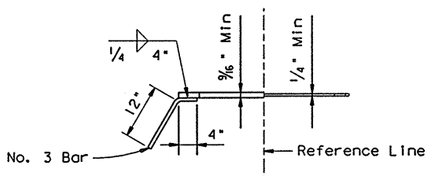

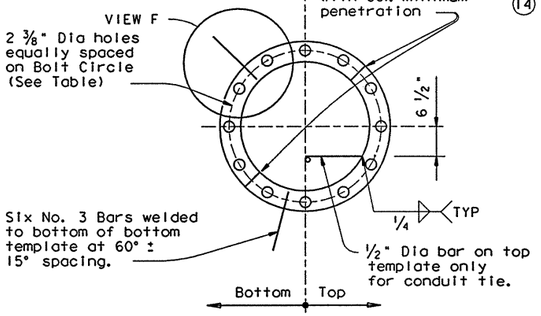

ANCHOR BOLT TEMPLATES

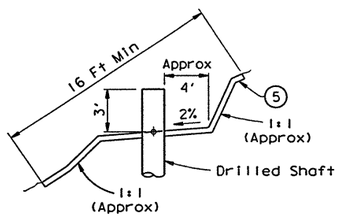

RIPRAP ON SLOPES

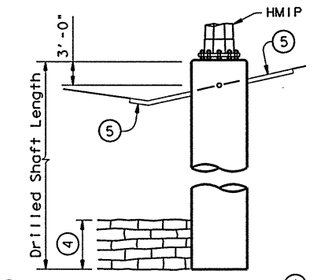

(5) Match slope of finished ground if slope is less than approx 4 to 1. For steeper slopes, bench to provide work area with approx 2 % slope around pole base. Other configurations may be shown elsewhere on the plans.

(4) If rock is encountered, the Drilled Shaft shall extend a minimum of two diameters into solid rock.

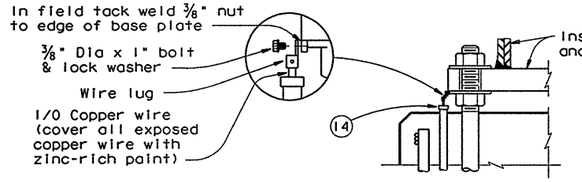

(12) Wire 1" Dia PVC to top and bottom templates

(13) Bond anchor bolts to rebar with 1/0 jumper and two mechanical connectors or by bending No. 3 bar on bottom template as shown and wire tightly with ten turns of No. 10 wire or one mechanical connector. Mechanical connectors shall be UL listed for concrete encasement.

(14) Cut PVC approximately 1" above concrete and install bell and/or bushing. Align conduit as close as possible to point of attachment to base plate to minimize bends in 1/0 wire.

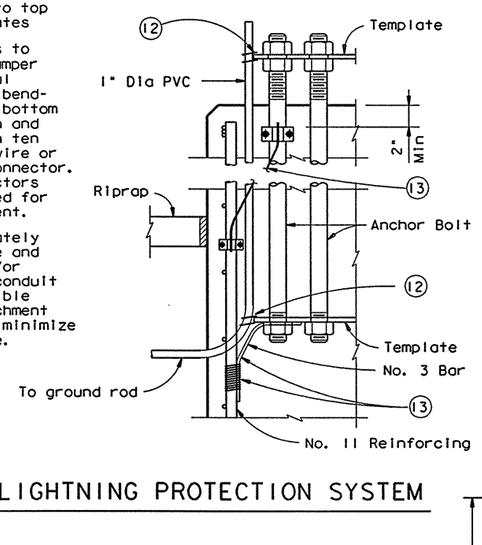

LIGHTNING PROTECTION SYSTEM

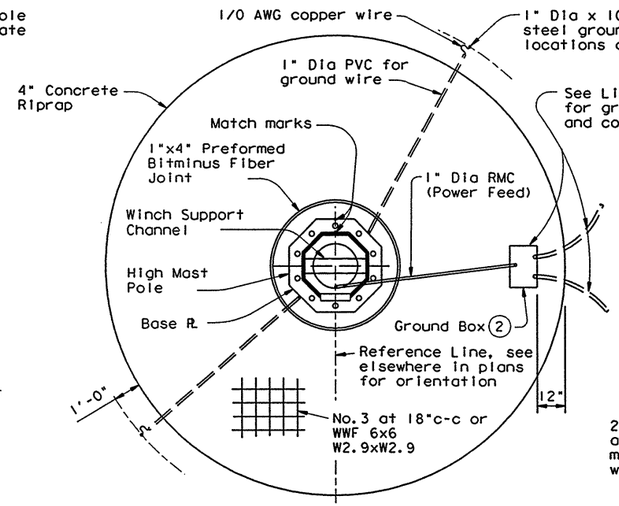

(2) Place ground box cover flush with riprap.

(10) If, due to tolerances in fabrication, the anchor bolt hole to ground sleeve weld is less than approx 7/8", clipped 1/2" thick washers shall be supplied at those

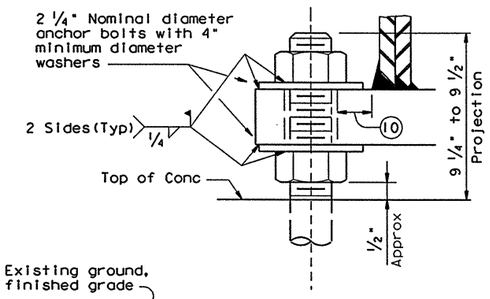

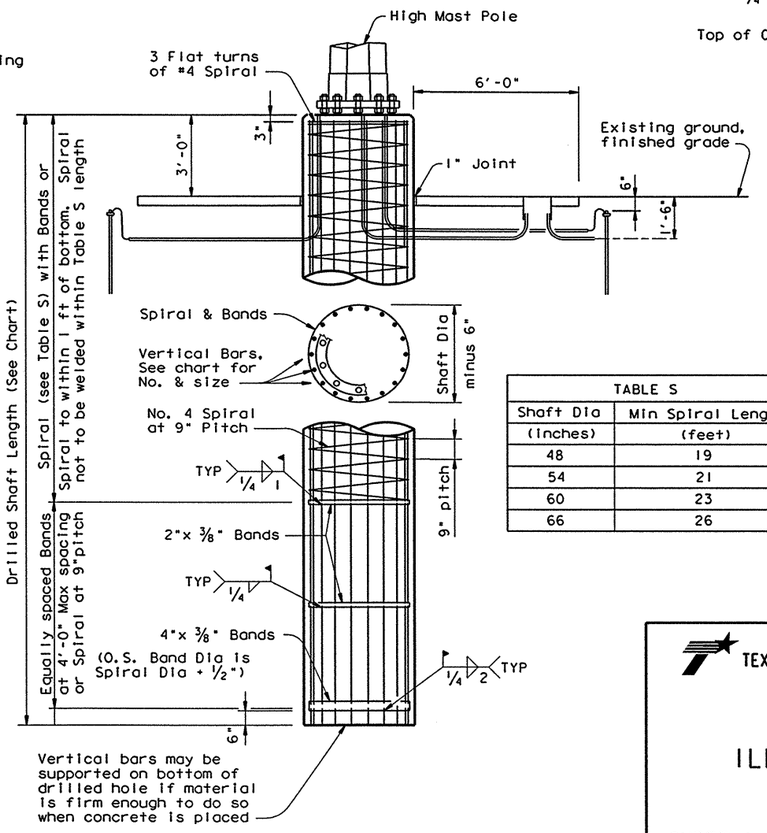

DRILLED SHAFT FOUNDATION DETAIL

TABLE S	
Shaft Dia (inches)	Min Spiral Length (feet)
48	19
54	21
60	23
66	26

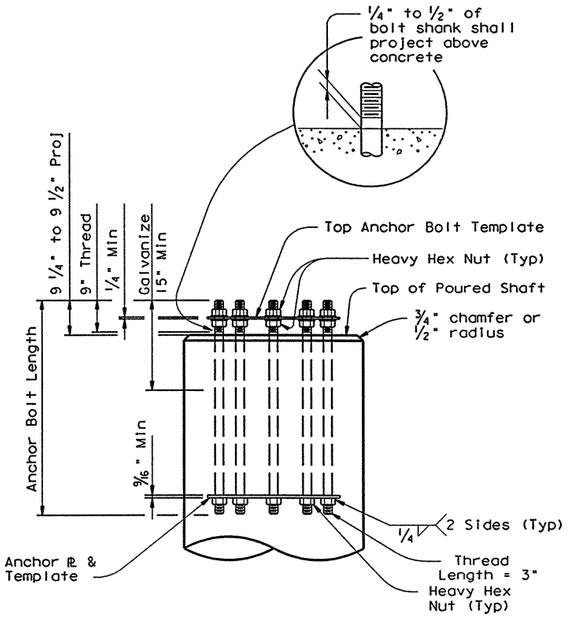

ANCHOR BOLT ASSEMBLY

(See Anchor Bolt Table for number of bolts required)

STANDARD PLANS
TEXAS DEPARTMENT OF TRANSPORTATION
Traffic Operations Division

HIGH MAST ILLUMINATION POLE FOUNDATIONS

SHEET 1 OF 2 HMIF(1)-98

©TxDOT August 1995

DN: TxDOT	CK: TxDOT	DW: TxDOT	CK: TxDOT	NEG NO.:

REVISIONS	STATE DISTRICT	FEDERAL REGION	FEDERAL AID PROJECT	SHEET
11-97	PHR	6		773
5-98 - Anchor Bolt Circle Dia	COUNTY	CONTROL	SECTION	JOB	HIGHWAY
	HIDALGO	0755	08	091	45281

78A

DISCLAIMER:
The use of this standard is governed by the "Texas Engineering Practice Act". No warranty of any kind is made by TxDOT for any purpose whatsoever. TxDOT assumes no responsibility for the conversion of this standard to other formats or for incorrect results or damages resulting from its use.

LEVELS DISPLAYED

																ACC:
1	2	3	4	5	6	7	8	9	10	11	12	13	14	15	16	
17	18	19	20	21	22	23	24	25	26	27	28	29	30	31	32	
33	34	35	36	37	38	39	40	41	42	43	44	45	46	47	48	
49	50	51	52	53	54	55	56	57	58	59	60	61	62	63		

⑥ Includes normal 3 Ft exposure. Shafts with more than 3 Ft exposure must have additional length.

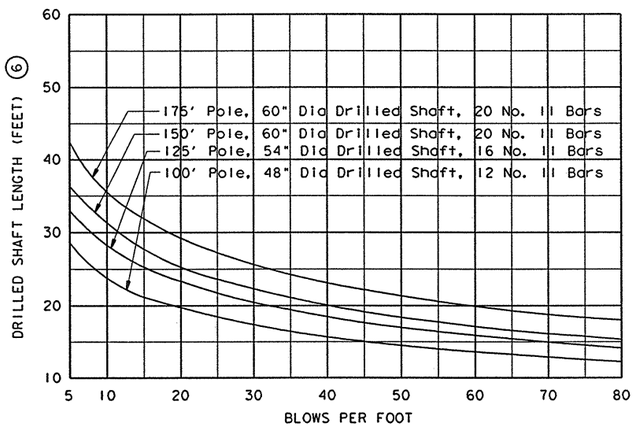

80 MPH POLES

Do not extrapolate below 5 Blows/Ft. A special design will be required for soil less than 5 Blows/Ft.

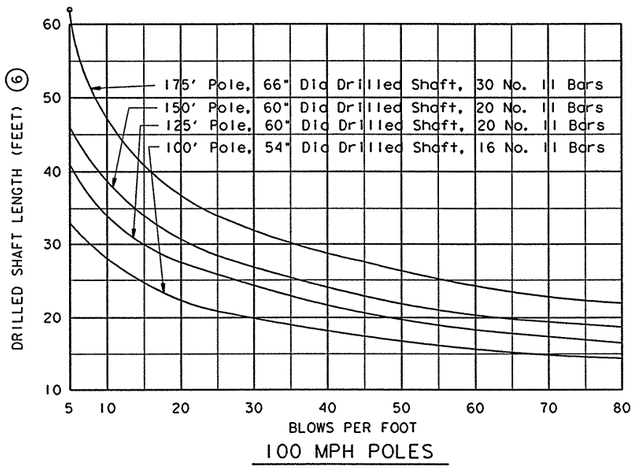

100 MPH POLES

Do not extrapolate below 5 Blows/Ft. A special design will be required for soil less than 5 Blows/Ft.

TEXAS CONE PENETROMETER TEST TABLES

NOTE: Use average "N" value over the top third of the embedded shaft. Ignore the top 2' of soil.

ANCHOR BOLT TABLE

	Pole Height (feet)	Bolt Diameter (inches)	Bolt Length (feet)	Bolt Templates O D (inches)	Bolt Templates I D (inches)	No. of Bolts ~	Bolt Cir Dia (inches)
80 MPH DESIGNS	8 SIDED POLE						
	175	2.25	4.83	45.5	36.5	16	41
	150	2.25	4.83	42.5	33.5	12	38
	125	2.25	4.83	39.5	30.5	8	35
	100	2.25	4.83	35.5	26.5	6	31
	12 SIDED POLE						
	175	2.25	4.83	48.5	39.5	12	44
	150	2.25	4.83	45.5	36.5	10	41
	125	2.25	4.83	40.5	31.5	8	36
	100	2.25	4.83	36.5	27.5	6	32
100 MPH DESIGNS	8 SIDED POLE						
	175	2.25	4.83	50.5	41.5	20	46
	150	2.25	4.83	47.5	38.5	16	43
	125	2.25	4.83	43.5	34.5	12	39
	100	2.25	4.83	38.5	29.5	10	34
	12 SIDED POLE						
	175	2.25	4.83	50.5	41.5	16	46
	150	2.25	4.83	48.5	39.5	12	44
	125	2.25	4.83	44.5	35.5	10	40
	100	2.25	4.83	40.5	31.5	6	36

MISCELLANEOUS QUANTITIES - ONE HMIF

Shaft Diameter	(in) ⑦	48	54	60
Concrete Riprap	(CY)	2.33	2.44	2.56
Reinforcing	(Lbs) ⑧	94	99	103
Ground Box	(ea)	1	1	1
R O W Marker	(ea) ⑨	1	1	1

⑦ See elsewhere on plans for length of Drilled Shaft required.
⑧ For Contractors information only.
⑨ Designated elsewhere on plans if required.

GENERAL NOTES:

Unless otherwise noted, the welded steel bands may be replaced with spiral as shown on the foundation details.

Anchor bolts shall be placed in foundation so there are always two bolts on reference line.

Drilled shaft lengths as determined from the foundation design chart or other acceptable methods are to be as shown elsewhere on the plans.

ODSR may not be used for HMIF drilled shafts.

Concrete for drilled shafts shall be Class C.

Repair welded areas with zinc-rich paint.

All Anchor Bolts, Nuts and Washers shall be galvanized in accordance with Item 445, "Galvanizing".

STANDARD PLANS
TEXAS DEPARTMENT OF TRANSPORTATION
Traffic Operations Division

HIGH MAST ILLUMINATION POLE FOUNDATIONS

SHEET 2 OF 2 HMIF(2)-98

©TxDOT August 1995

DN: TxDOT	CK: TxDOT	DW: TxDOT	CK: TxDOT	REG NO.:

REVISIONS
5-98 - Anchor Bolt Circle Dia

STATE DISTRICT	FEDERAL REGION	FEDERAL AID PROJECT	SHEET
PHR	6		774

COUNTY	CONTROL	SECTION	JOB	HIGHWAY
HIDALGO	0255	08	091	4528

78B

NAME

01:29:16 PM

07/21/2003

i:\223220\cadd\sheets\traffic\its\281its01.dgn

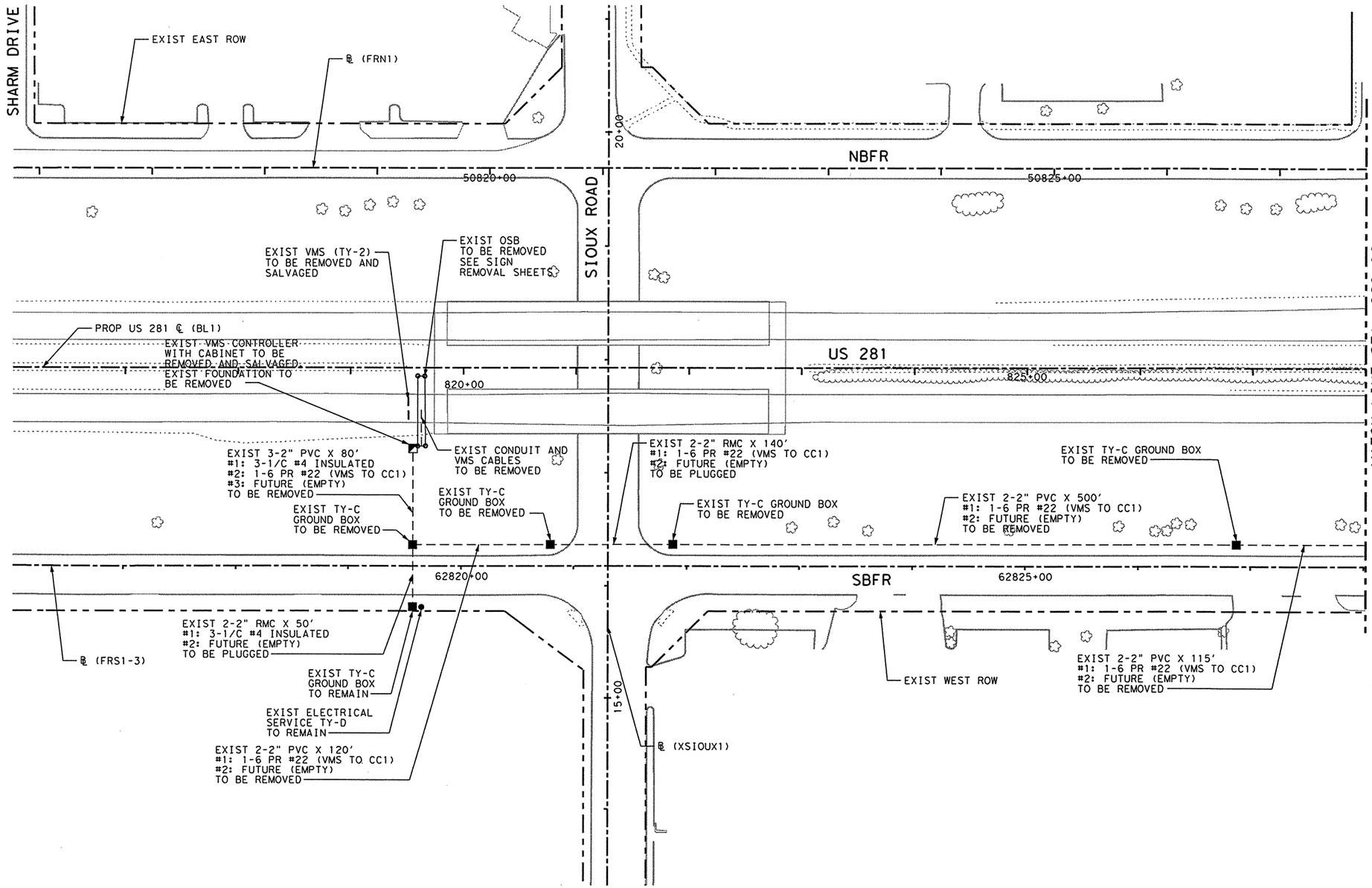

1

LEGEND:

- ■ TY-C GROUND BOX
- – – – CONDUIT
- ◩ VMS CONTROLLER, CABINET & FOUNDATION
- ⊠ FIBER HUB
- □ TY-2 COMM CABINET & FOUNDATION

NOTES:

1. REMOVAL OF ITS CONDUIT, CONDUCTORS, BOXES, ETC IS SUBSIDIARY TO ITEM 100 "PREP ROW".
2. EXISTING ITS SYSTEM IS BASED ON FINAL PLANS FOR TRAFFIC MANAGEMENT SYSTEM US 83/US 281 CSJ: 0039-17-129.

THE SEAL APPEARING ON THIS DOCUMENT WAS AUTHORIZED BY JOHN M PEREZ, P.E. 66425 ON 07/21/2003.

STATE OF TEXAS · JOHN M. PEREZ · 66425 · REGISTERED PROFESSIONAL ENGINEER

7/21/03

Parsons Brinckerhoff Quade & Douglas Inc.

Texas Department of Transportation

© 2003 by TxDOT

US 281
ITS
EXISTING LAYOUT

PLAN 1"= 100' HORIZ

SHEET 1 OF 4 | 281ITS01.DGN

DESIGNED: TT	FED. RD DIV. No.	STATE	FEDERAL AID PROJECT No.	HIGHWAY No.
CHECKED: DM	6	TEXAS		US 281

DRAWN:	STATE DISTRICT	COUNTY	CONTROL No.	SECTION No.	JOB No.	SHEET No.
CHECKED: DM	PHARR	HIDALGO	0255	08	091	775

NAME

01:29:20 PM

07/21/2003

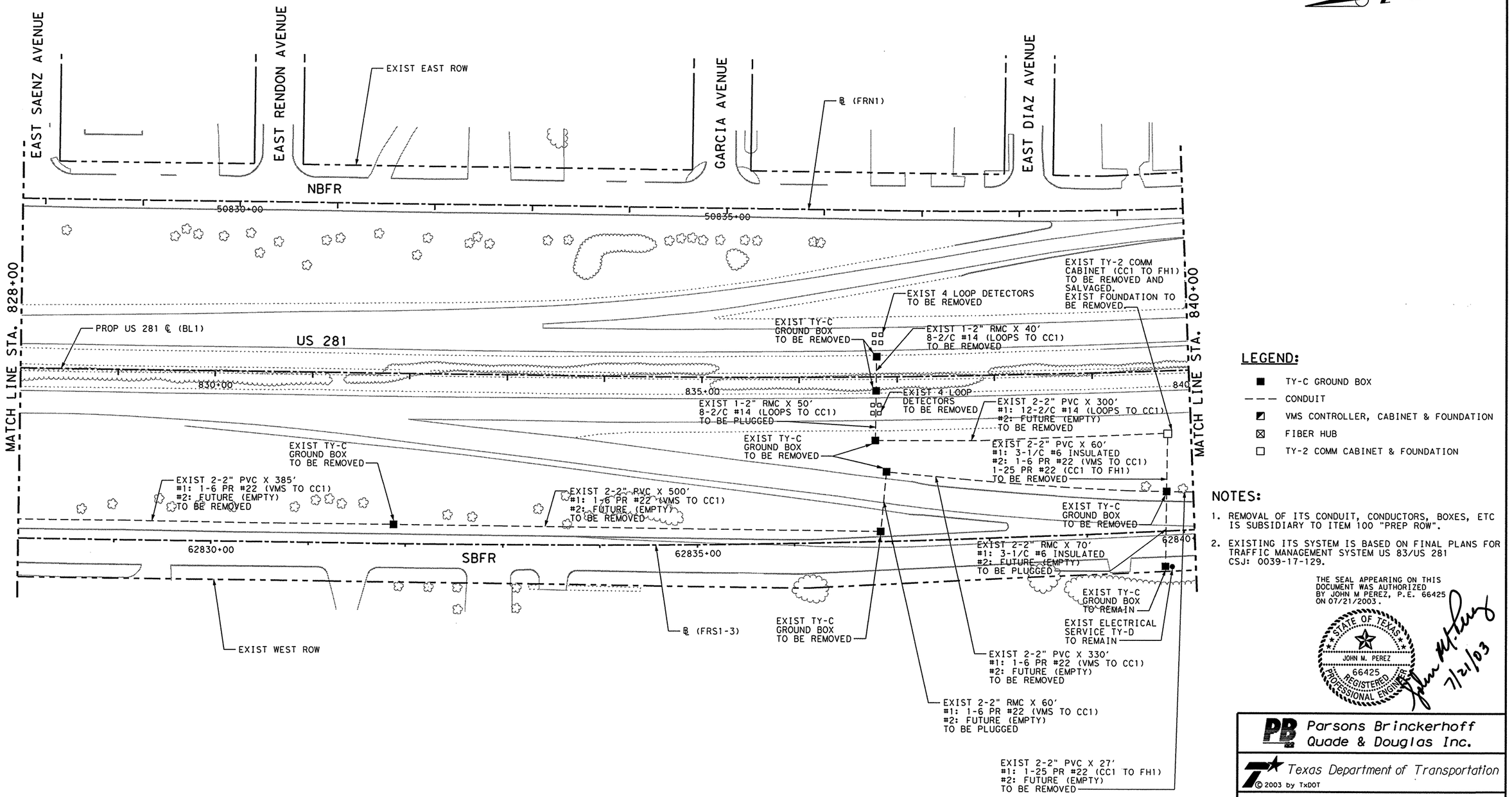

LEGEND:

- ■ TY-C GROUND BOX
- – – – CONDUIT
- ◩ VMS CONTROLLER, CABINET & FOUNDATION
- ⊠ FIBER HUB
- □ TY-2 COMM CABINET & FOUNDATION

NOTES:

1. REMOVAL OF ITS CONDUIT, CONDUCTORS, BOXES, ETC IS SUBSIDIARY TO ITEM 100 "PREP ROW".
2. EXISTING ITS SYSTEM IS BASED ON FINAL PLANS FOR TRAFFIC MANAGEMENT SYSTEM US 83/US 281 CSJ: 0039-17-129.

THE SEAL APPEARING ON THIS DOCUMENT WAS AUTHORIZED BY JOHN M PEREZ, P.E. 66425 ON 07/21/2003.

STATE OF TEXAS · JOHN M. PEREZ · 66425 · REGISTERED PROFESSIONAL ENGINEER

7/21/03

Parsons Brinckerhoff Quade & Douglas Inc.

Texas Department of Transportation

© 2003 by TxDOT

US 281

ITS EXISTING LAYOUT

PLAN 1"= 100' HORIZ

SHEET 2 OF 4 | 281ITS02.DGN

DESIGNED: TT	FED. RD DIV. No.	STATE	FEDERAL AID PROJECT No.	HIGHWAY No.
CHECKED: DM	6	TEXAS		US 281

DRAWN:	STATE DISTRICT	COUNTY	CONTROL No.	SECTION No.	JOB No.	SHEET No.
CHECKED: DM	PHARR	HIDALGO	0255	08	091	776

i:\22322a\cadd\sheets\traffic\its\281its02.dgn

NAME
03:23:13 PM
07/16/2003

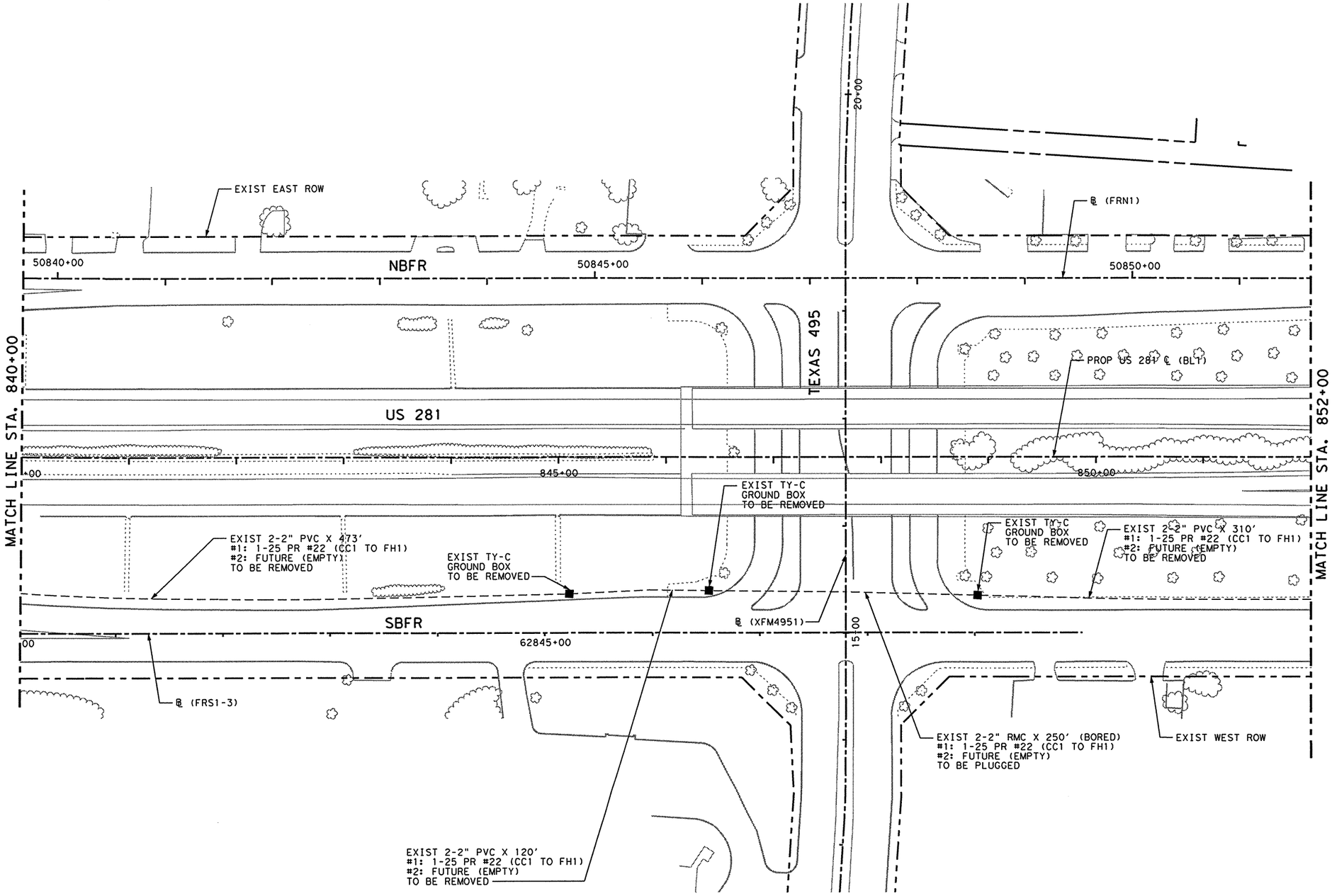

LEGEND:

- ■ TY-C GROUND BOX
- – – – CONDUIT
- ◩ VMS CONTROLLER, CABINET & FOUNDATION
- ⊠ FIBER HUB
- □ TY-2 COMM CABINET & FOUNDATION

NOTES:

1. REMOVAL OF ITS CONDUIT, CONDUCTORS, BOXES, ETC IS SUBSIDIARY TO ITEM 100 "PREP ROW".
2. EXISTING ITS SYSTEM IS BASED ON FINAL PLANS FOR TRAFFIC MANAGEMENT SYSTEM US 83/US 281 CSJ: 0039-17-129.

THE SEAL APPEARING ON THIS DOCUMENT WAS AUTHORIZED BY JOHN M PEREZ, P.E. 66425 ON 07/16/2003.

STATE OF TEXAS
JOHN M. PEREZ
66425
REGISTERED PROFESSIONAL ENGINEER
7/21/03

Parsons Brinckerhoff Quade & Douglas Inc.

Texas Department of Transportation

© 2003 by TxDOT

US 281

ITS EXISTING LAYOUT

PLAN 1"= 100' HORIZ

SHEET 3 OF 4 | 281ITS03.DGN

DESIGNED: TT	FED. RD DIV. No.	STATE	FEDERAL AID PROJECT No.		HIGHWAY No.	
CHECKED: DM	6	TEXAS			US 281	
DRAWN:	STATE DISTRICT	COUNTY	CONTROL No.	SECTION No.	JOB No.	SHEET No.
CHECKED: DM	PHARR	HIDALGO	0255	08	091	777

i:\223220\cadd\sheets\traffic\its\281its03.dgn

NAME
09:47:00 AM
06/24/2003
i:\22322a\cadd\sheets\traffic\its\281its04.dgn

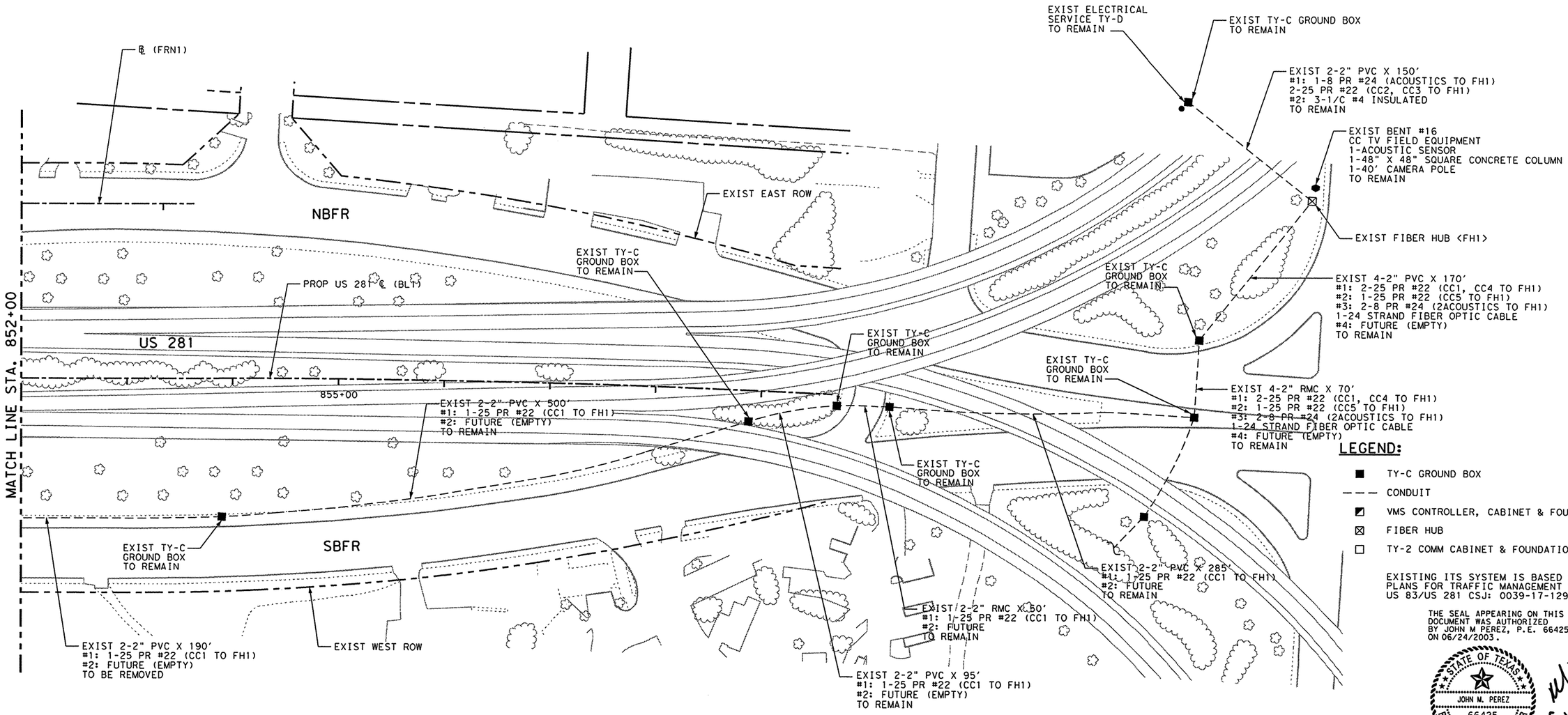

LEGEND:

- ■ TY-C GROUND BOX
- – – – CONDUIT
- ◩ VMS CONTROLLER, CABINET & FOUNDATION
- ⊠ FIBER HUB
- □ TY-2 COMM CABINET & FOUNDATION

EXISTING ITS SYSTEM IS BASED ON FINAL PLANS FOR TRAFFIC MANAGEMENT SYSTEM US 83/US 281 CSJ: 0039-17-129

THE SEAL APPEARING ON THIS DOCUMENT WAS AUTHORIZED BY JOHN M PEREZ, P.E. 66425 ON 06/24/2003.

STATE OF TEXAS
JOHN M. PEREZ
66425
REGISTERED PROFESSIONAL ENGINEER
6/24/03

LEGEND:

- ■ TY-C GROUND BOX
- – – – CONDUIT
- ◩ VMS CONTROLLER, CABINET & FOUNDATION
- ⊠ FIBER HUB
- □ TY-2 COMM CABINET & FOUNDATION

NOTES:

1. REMOVAL OF ITS CONDUIT, CONDUCTORS, BOXES, ETC IS SUBSIDIARY TO ITEM 100 "PREP ROW".
2. EXISTING ITS SYSTEM IS BASED ON FINAL PLANS FOR TRAFFIC MANAGEMENT SYSTEM US 83/US 281 CSJ: 0039-17-129.

THE US 281/US 83 INTERCHANGE IS AN INTENSELY LANDSCAPED AREA WITH SPRINKLERS. IT IS THE RESPONSIBILITY OF THE CONTRACTOR TO ENSURE THAT THIS AREA REMAIN IN ITS ORIGINAL CONDITION. IN ORDER TO MINIMIZE DAMAGE TO THE LANDSCAPING, LOCATIONS OF TRAFFIC MANAGEMENT EQUIPMENT MAY HAVE TO BE SLIGHTLY ADJUSTED, BUT ONLY WITH PRIOR WRITTEN APPROVAL OF THE ENGINEER. ANY PLANTS, SHRUBS, ETC. DAMAGED DURING CONSTRUCTION SHALL BE REPLACED BY THE CONTRACTOR AT NO COST TO THE DEPARTMENT. DAMAGED LANDSCAPED AREAS SHALL BE STORED TO THEIR ORIGINAL CONDITION.

Parsons Brinckerhoff Quade & Douglas Inc.

Texas Department of Transportation

© 2003 by TxDOT

US 281

ITS EXISTING LAYOUT

PLAN 1"= 100' HORIZ

SHEET 4 OF 4 | 281ITS04.DGN

DESIGNED: TT	FED. RD DIV. No.	STATE	FEDERAL AID PROJECT No.	HIGHWAY No.
CHECKED: DM	6	TEXAS		US 281

DRAWN:	STATE DISTRICT	COUNTY	CONTROL No.	SECTION No.	JOB No.	SHEET No.
CHECKED: DM	PHARR	HIDALGO	0255	08	091	778

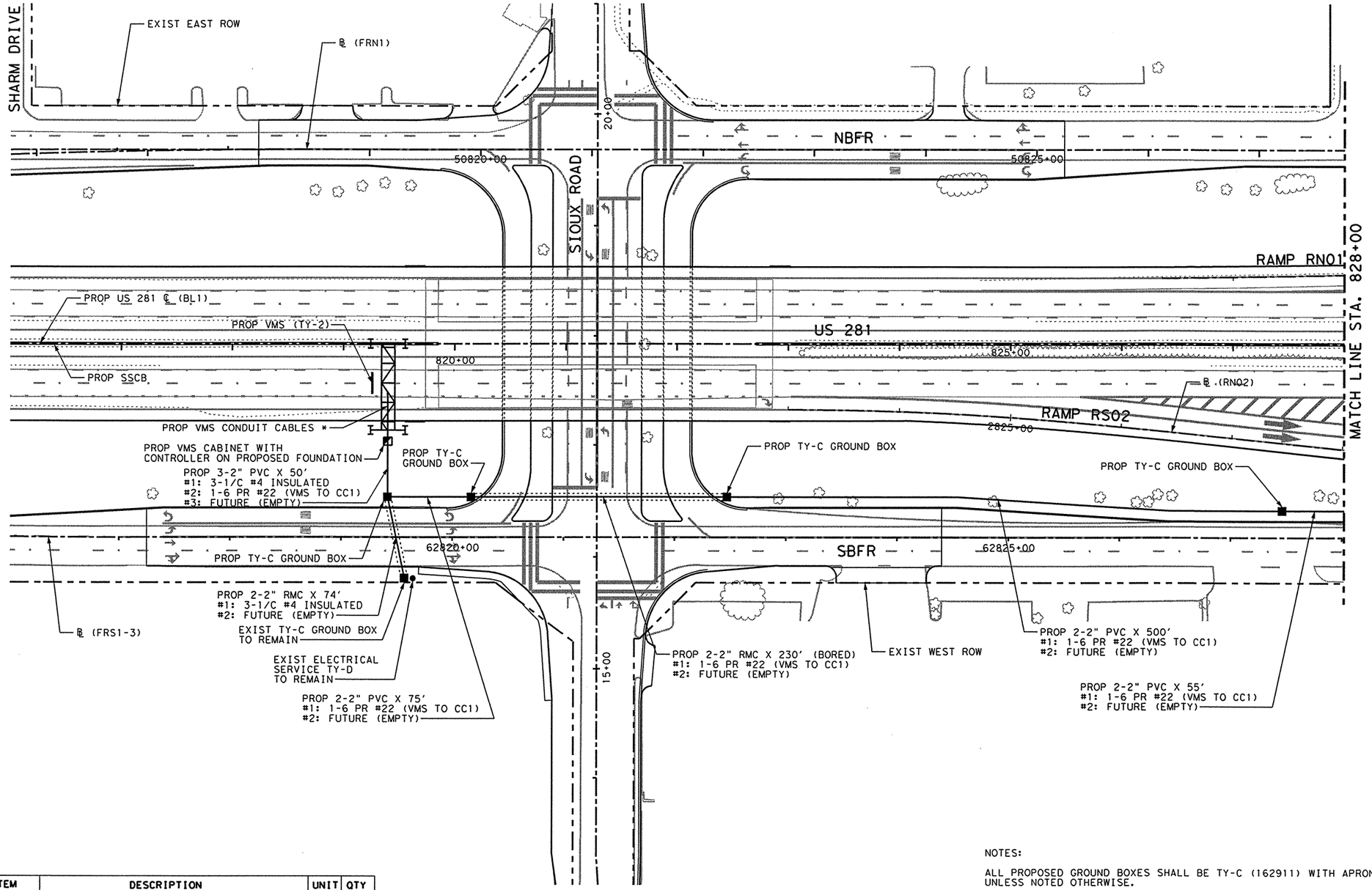

LEGEND:

- ■ TY-C GROUND BOX
- —— PROP. CONDUIT
- ◩ VMS CONTROLLER, CABINET & FOUNDATION
- ⊠ FIBER HUB
- □ TY-2 COMM CABINET & FOUNDATION
- ::::::: PROP RMC BORED

ITEM	DESCRIPTION	UNIT	QTY
618-0511	CONDUIT (PVC) (SCHD 40) (2 ")	LF	1410
618-0526	CONDUIT (RM) (2 ") (PUSH-BORE)	LF	608
620-0511	ELEC CONDUCTOR (NO. 4) INSULATED	LF	392
6031-0502	COMMUN CABLE (6 PAIR) (22 AWG)	LF	935
6204-0503	GROUND BOX TY C (162911) W/APRON	EA	4
1248-****	LED DYNAMIC MESSAGE SIGN SYSTEM	EA	1
$ 6022-****	REMOVE EXIST VAR MESSAGE SIGN SYSTEM	EA	1

$ SALVAGED VMS SYSTEM SHALL BE DELIVERED TO THE PHARR DISTRICT SIGNAL SHOP APPROX. 1 MILE SOUTH OF THE PROJECT.

NOTES:

ALL PROPOSED GROUND BOXES SHALL BE TY-C (162911) WITH APRON UNLESS NOTED OTHERWISE.

SEE MOUNTING DETAILS FOR ADDITIONAL INFORMATION

SEE OVERHEAD SIGN BRIDGE DETAIL FOR ADDITIONAL INFORMATION

CONDUIT & CABLES SIGNIFIED BY (*) ARE SUBSIDIARY TO OTHER ITEMS AND QUANTITY IS NOT CALCULATED. THE SIZE IS DEPENDENT ON THE MANUFACTURER AND IS THE RESPONSIBILITY OF THE CONTRACTOR TO VERIFY.

ALL CONDUIT INSTALLED IN ROADWAY SHALL BE ENCASED IN CLASS "A" CONCRETE WITH NO. 8 AGGREGATE.

VMS CONTROLLER CABINET FOUNDATIONS INCLUDE A TY-C GROUND BOX. THE TY-C GROUND BOX IS NOT SHOWN AND IS NOT INCLUDED IN THE QUANTITIES.

CONTRACTOR SHALL REMOVE THE EXISTING TY-2 VMS AT STA 819+65 AND INSTALL ON PROPOSED OSB AT STA 819+40

THE SEAL APPEARING ON THIS DOCUMENT WAS AUTHORIZED BY JOHN M PEREZ, P.E. 66425 ON 07/21/2003.

STATE OF TEXAS
JOHN M. PEREZ
66425
REGISTERED PROFESSIONAL ENGINEER

7/21/03

Parsons Brinckerhoff Quade & Douglas Inc.

Texas Department of Transportation

© 2003 by TxDOT

US 281

ITS
PROPOSED LAYOUT

PLAN 1"= 100' HORIZ

SHEET 1 OF 4 | 281ITS05.DGN

DESIGNED: TT	FED. RD DIV. No.	STATE	FEDERAL AID PROJECT No.	HIGHWAY No.
CHECKED: DM	6	TEXAS		US 281

DRAWN:	STATE DISTRICT	COUNTY	CONTROL No.	SECTION No.	JOB No.	SHEET No.
CHECKED: DM	PHARR	HIDALGO	0255	08	091	779

NAME
01:29:27 PM
07/21/2003
i:\22322a\cadd\sheets\traffic\its\281its05.dgn

NAME
01:29:34 PM
07/21/2003
i:\22322o\cadd\sheets\traffic\its\281its06.dgn

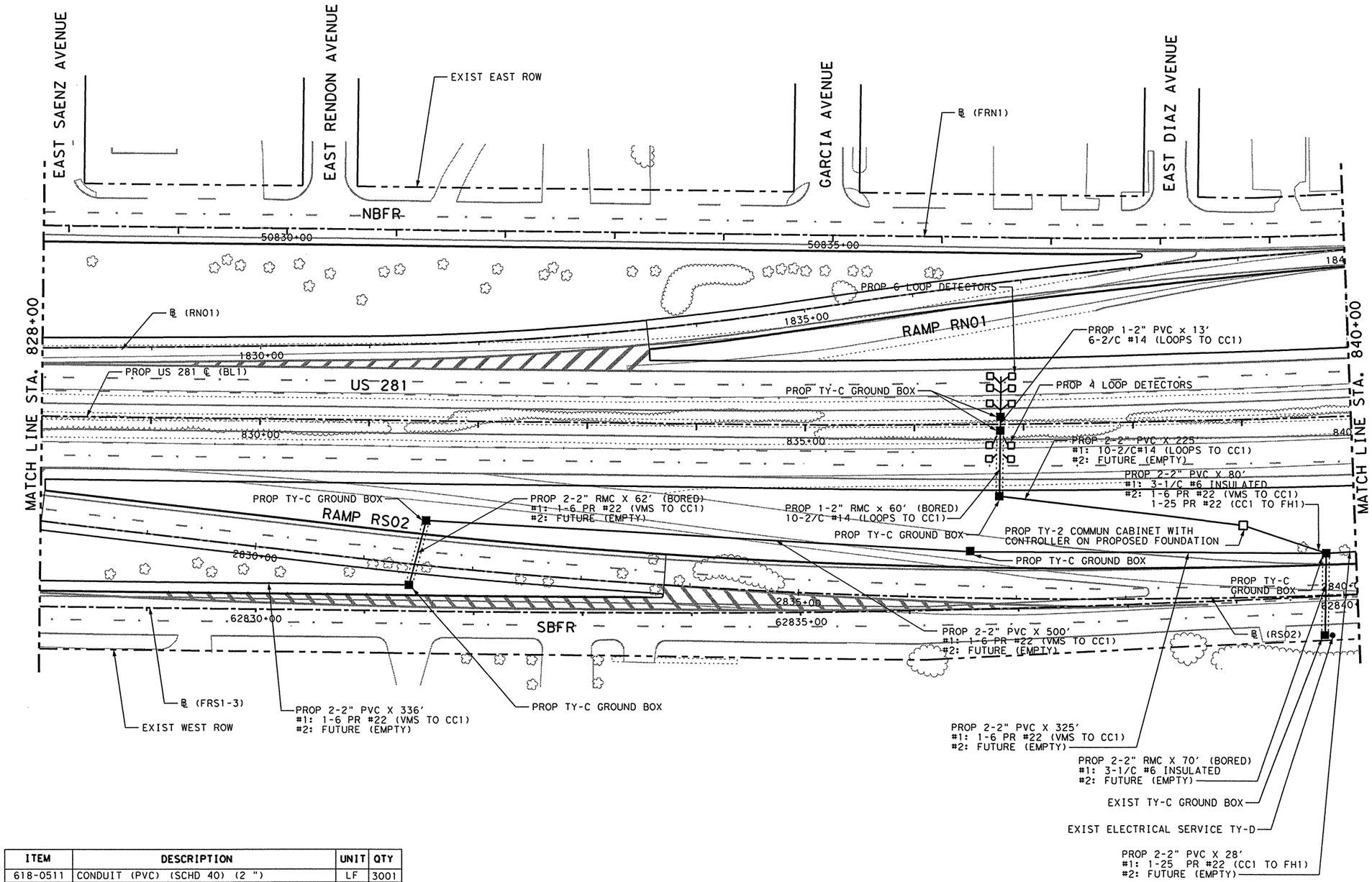

LEGEND:

- ■ TY-C GROUND BOX
- —— PROP. CONDUIT
- ◩ VMS CONTROLLER, CABINET & FOUNDATION
- ⊠ FIBER HUB
- □ TY-2 COMM CABINET & FOUNDATION
- ⋯⋯ PROP RMC BORED

ITEM	DESCRIPTION	UNIT	QTY
618-0511	CONDUIT (PVC) (SCHD 40) (2 ")	LF	3001
618-0526	CONDUIT (RM) (2 ") (PUSH-BORE)	LF	324
620-0510	ELEC CONDUCTOR (NO. 6) INSULATED	LF	480
684-0544	TRAF SIG CBL (TY C) (2 CONDR) (14 AWG)	LF	3138
6031-0502	COMMUN CABLE (6 PAIR) (22 AWG)	LF	1323
6031-0506	COMMUN CABLE (25 PAIR) (22 AWG)	LF	118
6204-0503	GROUND BOX TY C (162911) W/APRON	EA	7
688-0512	VEH LOOP DETECTORS	EA	10

NOTE:

QUANTITY FOR REMOVAL OF EXISTING VARIABLE MESSAGE SIGN SYSTEM AND INSTALLATION OF LED DYANMIC MESSAGE SIGN SYSTEM ARE FOUND ON SHEET 779.

THE SEAL APPEARING ON THIS DOCUMENT WAS AUTHORIZED BY JOHN M PEREZ, P.E. 66425 ON 07/21/2003.

STATE OF TEXAS · JOHN M. PEREZ · 66425 · REGISTERED PROFESSIONAL ENGINEER

7/21/03

Parsons Brinckerhoff Quade & Douglas Inc.

Texas Department of Transportation

© 2003 by TxDOT

US 281

ITS
PROPOSED LAYOUT

PLAN 1"= 100' HORIZ

SHEET 2 OF 4				281ITS06.DGN			
DESIGNED: TT	FED. RD DIV. No.	STATE	FEDERAL AID PROJECT No.			HIGHWAY No.	
CHECKED: DM	6	TEXAS				US 281	
DRAWN:	STATE DISTRICT	COUNTY	CONTROL No.	SECTION No.	JOB No.	SHEET No.	
CHECKED: DM	PHARR	HIDALGO	0255	08	091	780	

NAME
03:22:56 PM
07/16/2003
i:\223220\cadd\sheets\traffic\its\281its07.dgn

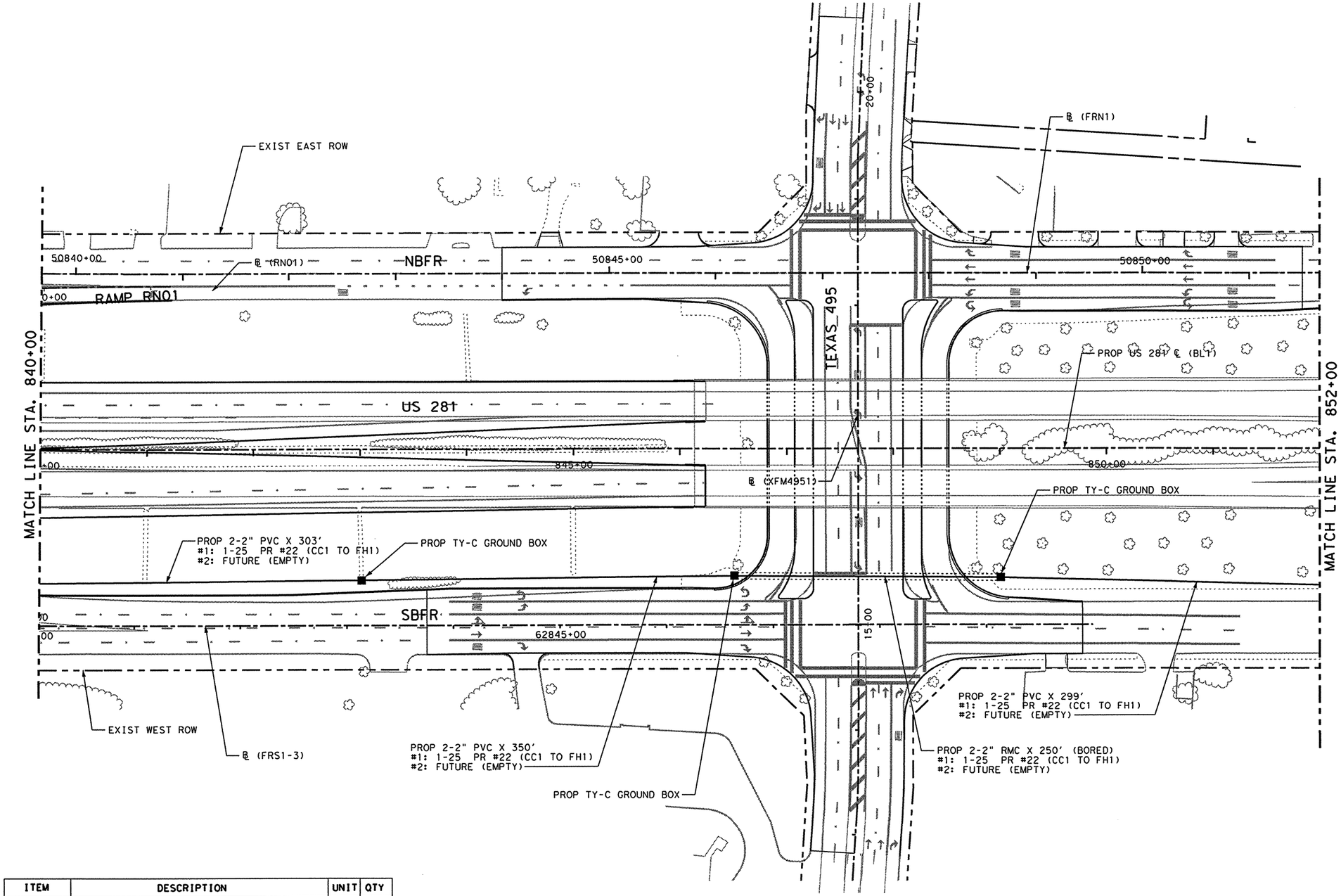

ITEM	DESCRIPTION	UNIT	QTY
618-0511	CONDUIT (PVC) (SCHD 40) (2 ")	LF	1904
618-0526	CONDUIT (RM) (2 ") (PUSH-BORE)	LF	500
6031-0506	COMMUN CABLE (25 PAIR) (22 AWG)	LF	1217
6204-0503	GROUND BOX TY C (162911) W/APRON	EA	3

NOTE:

CONTRACTOR SHALL CONTACT THE DISTRICT SIGNAL SHOP AT (210)702-6224 48 HRS PRIOR TO CONSTRUCTION FOR TRAFFIC SIGNAL LOCATE. ANY TRAFFIC SIGNAL EQUIPMENT DAMAGED (INCLUDING LOOP DETECTORS) SHALL BE REPLACED IN THEIR ENTIRETY.

LEGEND:

- ■ TY-C GROUND BOX
- —— PROP. CONDUIT
- ◪ VMS CONTROLLER, CABINET & FOUNDATION
- ⊠ FIBER HUB
- □ TY-2 COMM CABINET & FOUNDATION
- ⦙⦙⦙ PROP RMC BORED

THE SEAL APPEARING ON THIS DOCUMENT WAS AUTHORIZED BY JOHN M PEREZ, P.E. 66425 ON 07/16/2003.

STATE OF TEXAS · JOHN M. PEREZ · 66425 · REGISTERED PROFESSIONAL ENGINEER

7/21/03

Parsons Brinckerhoff Quade & Douglas Inc.

Texas Department of Transportation

© 2003 by TxDOT

US 281

ITS
PROPOSED LAYOUT

PLAN 1"= 100' HORIZ

SHEET 3 OF 4 | 281ITS07.DGN

DESIGNED: TT	FED. RD DIV. No.	STATE	FEDERAL AID PROJECT No.			HIGHWAY No.	
CHECKED: DM	6	TEXAS				US 281	
DRAWN:	STATE DISTRICT	COUNTY	CONTROL No.	SECTION No.	JOB No.	SHEET No.	
CHECKED: DM	PHARR	HIDALGO	0255	08	091	781	

NAME
07/16/2003 03:23:06 PM
i:\22322a\cadd\sheets\traffic\its\281its08.dgn

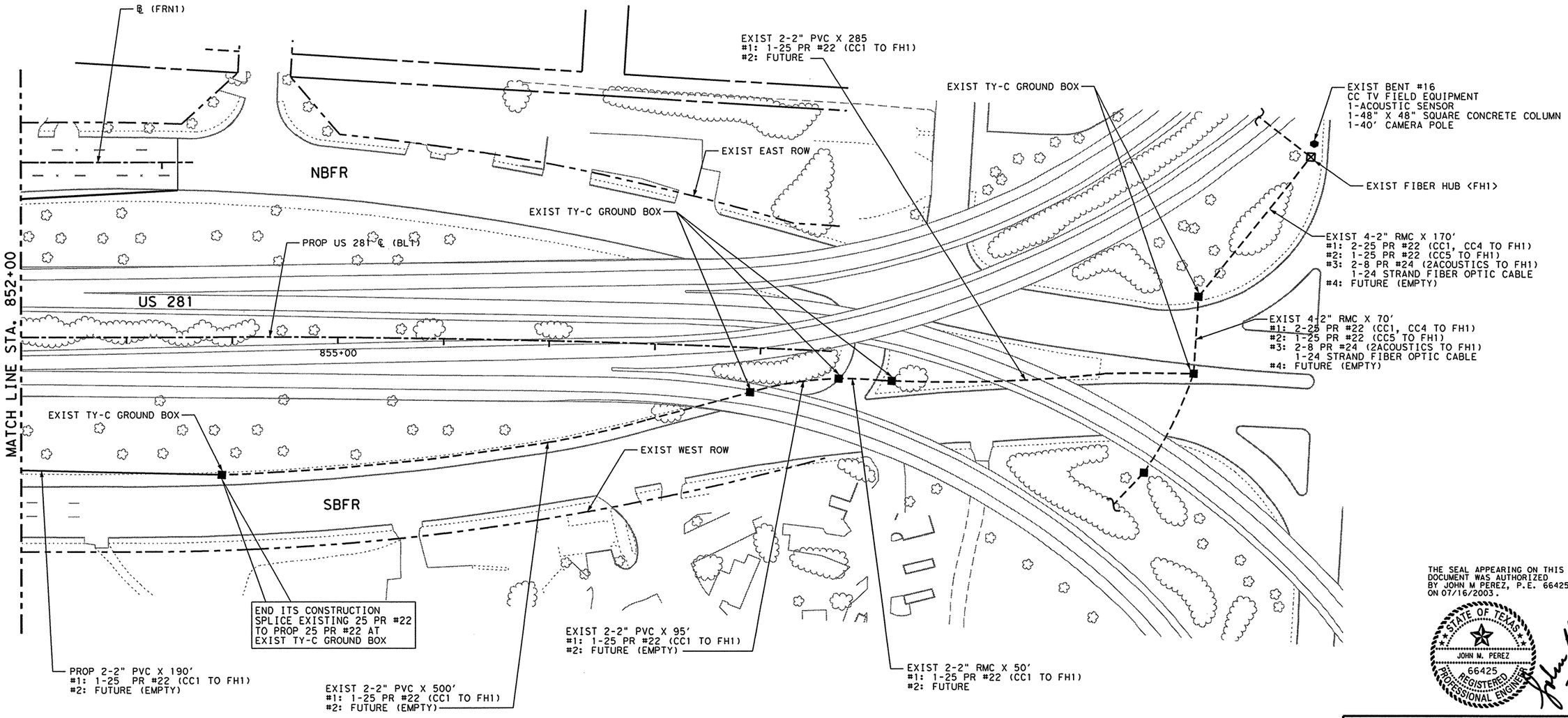

ITEM	DESCRIPTION	UNIT	QTY
618-0511	CONDUIT (PVC) (SCHD 40) (2 ")	LF	380
6031-0506	COMMUN CABLE (25 PAIR) (22 AWG)	LF	195

LEGEND:

- ■ TY-C GROUND BOX
- – – – EXIST CONDUIT
- ——— PROP. CONDUIT
- ◩ VMS CONTROLLER, CABINET & FOUNDATION
- ⊠ FIBER HUB
- □ TY-2 COMM CABINET & FOUNDATION
- ⋯⋯ PROP RMC BORED

THE SEAL APPEARING ON THIS DOCUMENT WAS AUTHORIZED BY JOHN M PEREZ, P.E. 66425 ON 07/16/2003.

STATE OF TEXAS · JOHN M. PEREZ · 66425 · REGISTERED PROFESSIONAL ENGINEER

7/16/03

Parsons Brinckerhoff Quade & Douglas Inc.

Texas Department of Transportation

© 2003 by TxDOT

US 281

ITS PROPOSED LAYOUT

PLAN 1"= 100' HORIZ

SHEET 4 OF 4 | 281ITS08.DGN

DESIGNED: TT	FED. RD DIV. NO.	STATE	FEDERAL AID PROJECT No.	HIGHWAY No.
CHECKED: DM	6	TEXAS		US 281

DRAWN:	STATE DISTRICT	COUNTY	CONTROL No.	SECTION No.	JOB No.	SHEET No.
CHECKED: DM	PHARR	HIDALGO	0255	08	091	782

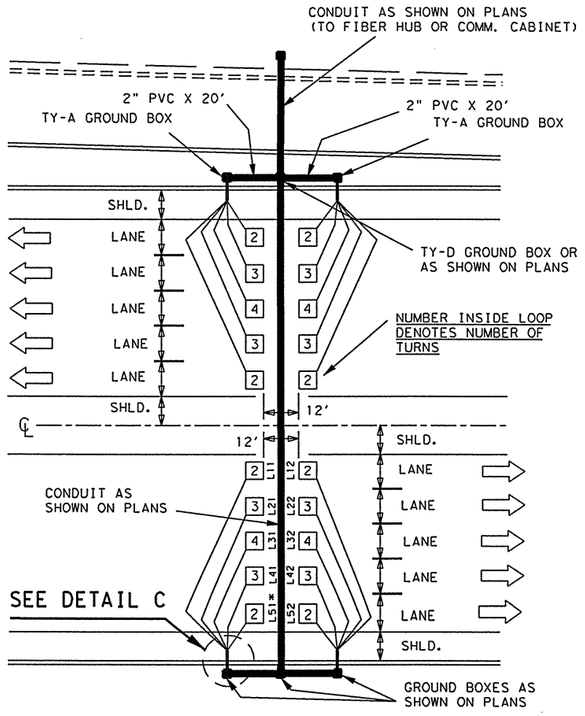

TYPICAL MAINLANE DETAIL
(3 OR MORE LANES)

* = LOOP ADDRESS

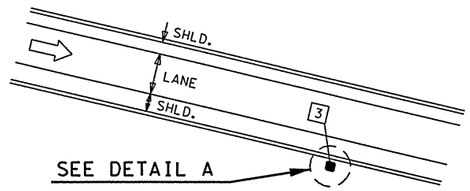

TYPICAL RAMP DETAIL
(1 LANE)

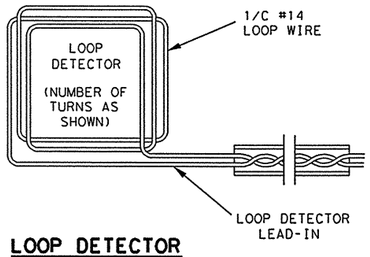

LOOP DETECTOR TURNS

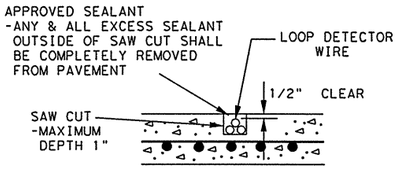

LOOP DETECTOR IN CONC. PAVEMENT

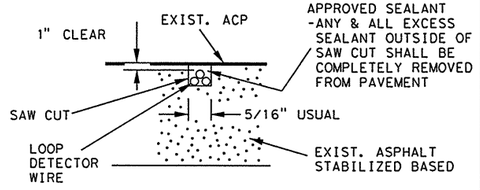

LOOP DETECTOR IN ASPHALT

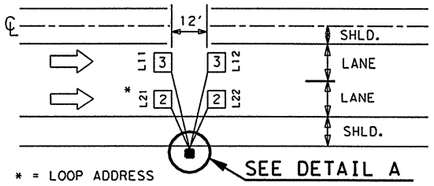

* = LOOP ADDRESS

TYPICAL MAINLANE OR CONNECTOR DETAIL
(2 LANES OR LESS)

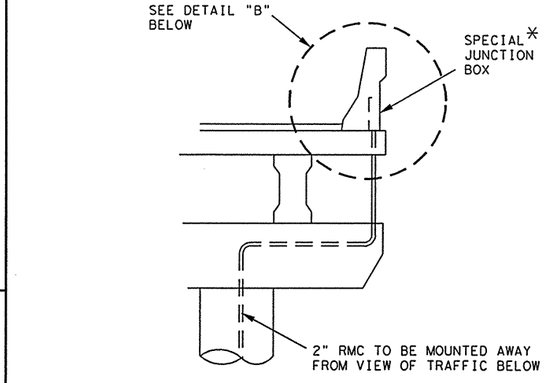

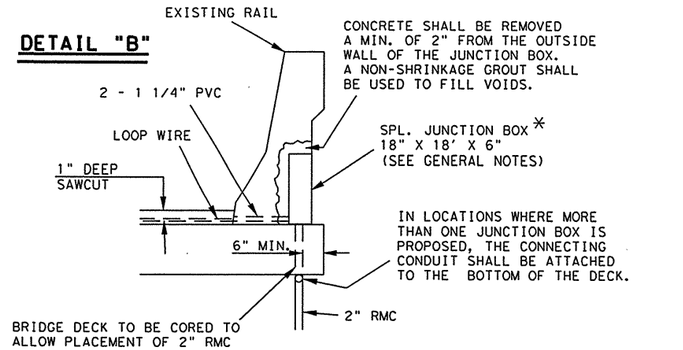

* SPECIAL JUNCTION BOX AND 1 1/4" PVC SHALL BE PLACED IN EXIST. RAIL. ALL VOIDS SHALL BE SEALED WITH CONCRETE GROUT. ALL LABOR AND MATERIALS SHALL BE SUBSIDIARY TO THE VARIOUS BID ITEMS.

LOOP DETECTOR IN BRIDGE DECK

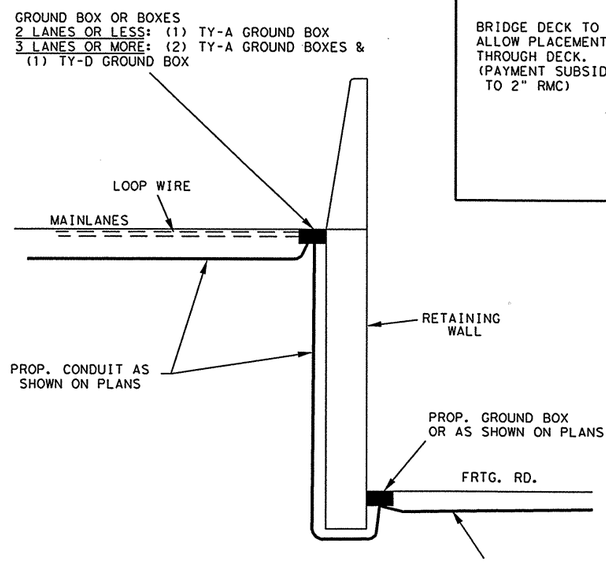

LOOP DETECTOR NEAR RETAINING WALL

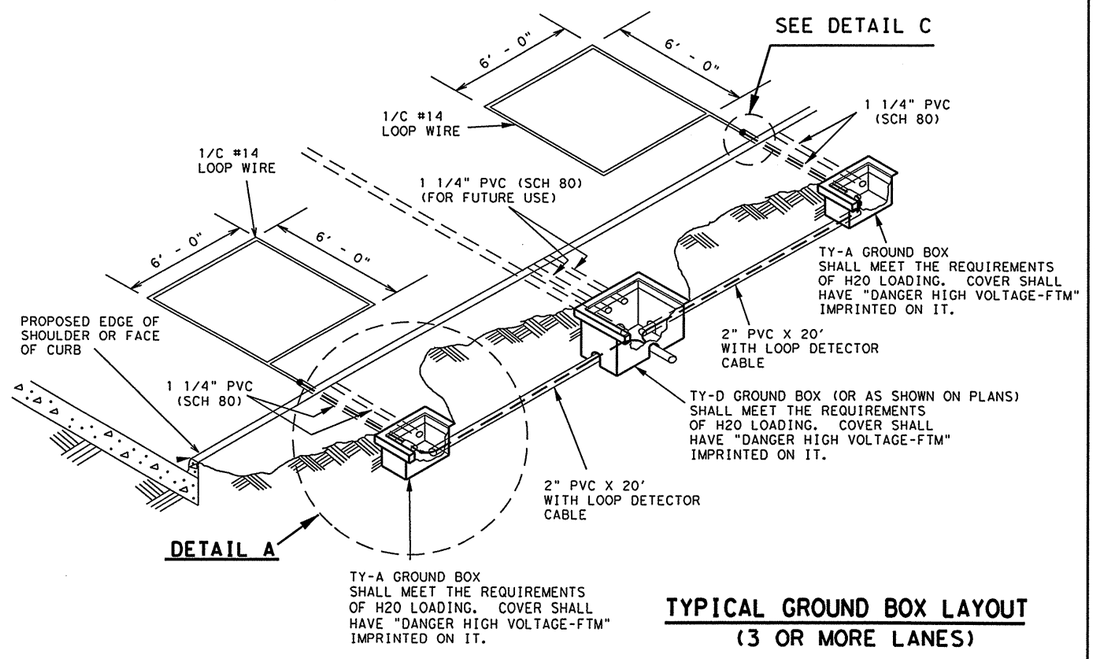

TYPICAL GROUND BOX LAYOUT
(3 OR MORE LANES)

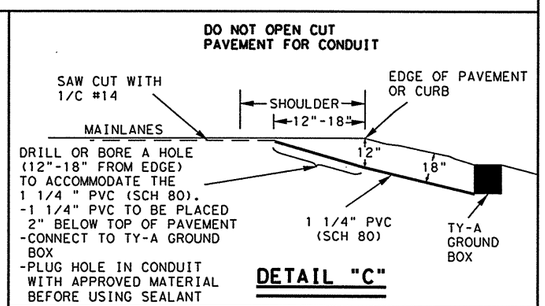

DETAIL "C"

SURVEILLANCE LOOP DETECTOR INSTALLATION DETAILS

© 2003 Texas Department of Transportation

SHEET 1 OF 2

	FED. RD. DIV. NO.	FEDERAL AID PROJECT NO.		SHEET NO.
2-13-02	6			783
3-12-01	STATE	DIST.	COUNTY	
10-21-99	TEXAS	PHARR	HIDALGO	
7-29-99	CONT.	SECT.	JOB	HIGHWAY NO.
10-13-98	0255	08	091	US 281
REV. 8-6-98				

PLAN

LEVELS DISPLAYED
1 2 3 4 5 6 7 8 9 10 11 12 31 41 51 61
71 81 92 02 12 22 32 42 52 62 72 82 92 03 13 23
33 43 53 63 73 83 94 04 14 24 34 44 54 64 74 84
95 05 15 25 35 45 55 65 75 85 96 06 16 26 36

ACC:

FILE: .DGN

09:55:44 AM
06/24/2003
I:\22322o\CADD\Standards\ITS from Pharr\loopseng2.dgn

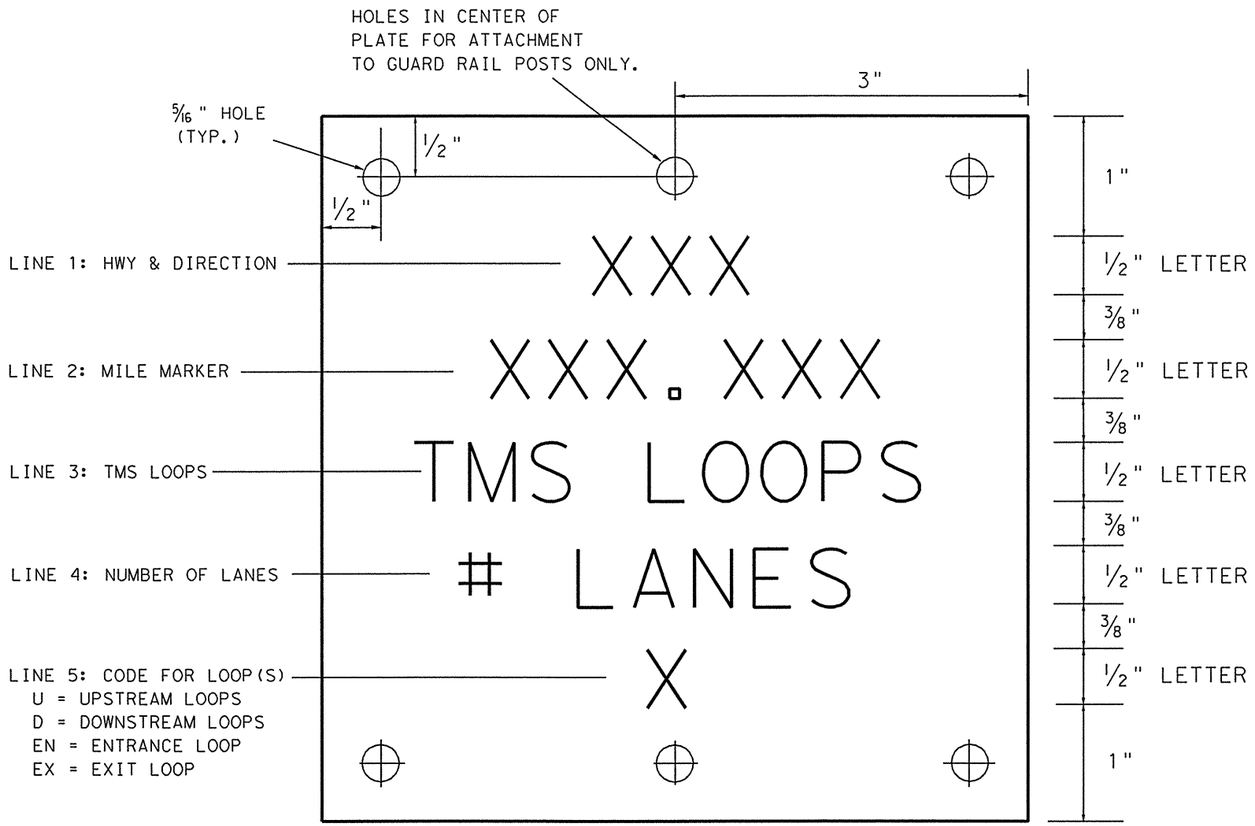

PLATE DETAILS

6" X 6" X 1/8" THICK UNPAINTED POLISHED ALUMINUM PLATE WITH LETTERS AND NUMBERS STAMPED INTO PLATE. FINISH SHALL BE SMOOTH AND FREE OF FLAWS, BURRS, OR SHARP EDGES.

EXAMPLE:

37S
568.054
TMS LOOPS
3 LANES
U

EXPLANATION:
UPSTREAM TMS LOOPS
ON IH 37 SBND
WITH 3 LANES
AT MILE MARKER
568.054

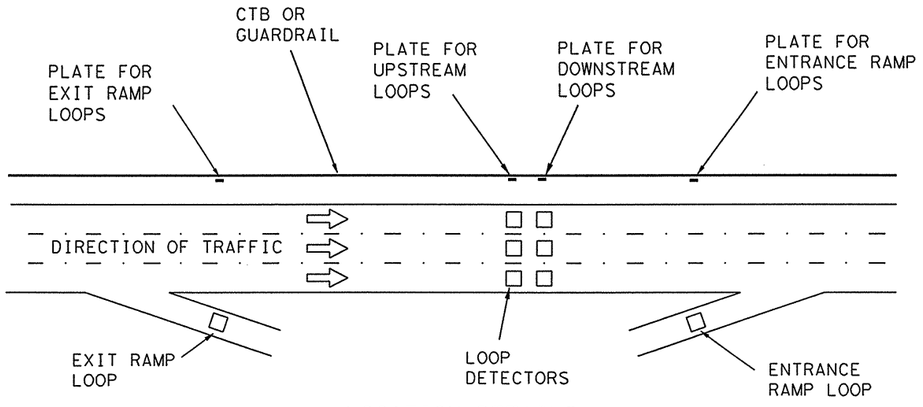

LOCATION DETAILS

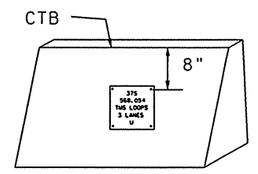

ATTACH USING 4
OUTSIDE HOLES

PLATE MOUNTED TO CTB

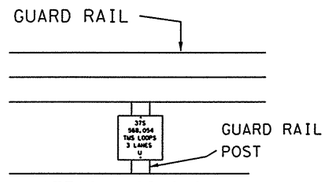

ATTACH USING 2
INSIDE HOLES

PLATE MOUNTED TO GUARD RAIL

LOOP INSTALLATION NOTES:

1. THE PAVEMENT CUT IS TO BE MADE WITH AN APPROVED SAW TO NEAT LINES AND LOOSE MATERIAL REMOVED. THE CUT SHALL BE CLEAN AND DRY WHEN THE WIRE AND LOOP SEALANT IS PLACED.
2. WHERE MORE THAN ONE LOOP IS PLACED, THE LOOP DETECTOR WIRE FROM LOOP TO GROUND BOX SHALL NOT BE PLACED IN A SAW CUT WITH WIRE FROM OTHER LOOPS UNLESS OTHERWISE SHOWN IN THE PLANS.
3. THE LOOP WIRE SHALL BE TWISTED A MINIMUM OF FIVE TURNS PER FOOT FROM THE EDGE OF THE ROAD TO THE GROUND BOX AND NO SPLICES SHALL BE PERMITTED IN THE LOOP OR IN THE RUN TO THE GROUND BOX.
4. THE 1/C #14 LOOP WIRE SHALL BE SINGLE CONDUCTOR CROSSLINKED POLYETHYLENE (0.045) INSULATED WIRE, TYPE: RHH, RHW, USE, 14 AWG STRANDED COPPER RATED AT 600 VOLTS.
5. THE 2/C #14 LOOP CABLE SHALL BE TWO CONDUCTOR SHIELDED CABLE, 14 AWG, 19 X 27 STRANDED, 600 VOLT TINNED COPPER, POLYETHYLENE INSULATED, TWISTED PAIR, TWISTED A MINIMUM OF THREE TWISTS PER FOOT, ALUMINUM - POLYESTER SHIELD, 16 AWG STRANDED TINNED COPPER DRAIN WIRE, 100% SHIELD COVERAGE. THE LOOP CABLE SHALL BE CONTINUOUS WITHOUT SPLICES.
6. THE LOOP WIRE SHALL BE SPLICED TO THE LOOP CABLE BY SOLDERING CONDUCTORS, SECURING WITH A WIRE NUT AND FULLY ENCAPSULATING INTO A WATERTIGHT COMMERCIAL SPLICING KIT.
7. ALL LOOP WIRE PLACED IN A SAWCUT SHALL BE SEALED BY FULLY ENCAPSULATING IT WITH LOOP WIRE SEALANT AS APPROVED BY THE ENGINEER.
8. ALL LOOP DETECTORS SHALL BE 6' X 6' CENTERED BETWEEN THE ULTIMATE LANE LINES.
9. LOOP DETECTOR WIRE AND LOOP DETECTOR CABLE SHALL BE LABELLED IN THE FIRST GROUND BOX AND CABINET TO IDENTIFY IN WHICH LANE THE LOOP IS LOCATED IN ACCORDANCE WITH THE EQUIPMENT ADDRESS INDEX SHEET.
10. LOOP DETECTOR WIRE AND LOOP DETECTOR CABLE SHALL BE TESTED IN THE PRESENCE OF THE ENGINEER USING A MEGOHMETER AND CONTINUITY TESTER. THE RESISTANCE BETWEEN GROUND AND EACH SIDE OF THE LOOP DETECTOR WIRE OR LOOP DETECTOR CABLE SHALL BE TESTED. ANY LOOP HAVING LESS THAN 50 MEG-OHMS TO GROUND SHALL BE REPLACED BY THE CONTRACTOR. THE TEST SHALL BE PERFORMED BEFORE, AFTER THE RUBBER SEAL, AND AFTER THE ACP OVERLAY.
11. ANY JUNCTION BOXES PLACED IN RAIL SHALL BE 18" X 18" X 6" CAST IRON, HOT DIP GALV. WATERTIGHT (NEMA - 4) SIMILAR TO OZ/GEDNEY CAT. YU-181806. ALL CONDUIT ENTERING THE BOX SHALL ENTER THROUGH DRILLED AND SEALED HOLES. IT WILL BE THE RESPONSIBILITY OF THE CONTRACTOR TO FURNISH THE FABRICATOR THE HOLE LOCATIONS. THE CONTRACTOR SHALL FURNISH A CATALOG SUBMITTAL TO THE ENGINEER FOR APPROVAL.
12. SURVEILLANCE LOOP DETECTORS SHALL BE PAID FOR AS EACH LOOP DETECTOR WHICH SHALL BE PAYMENT FOR ALL MATERIAL AND LABOR FROM THE LOOP DETECTOR TO BUT NOT INCLUDING THE GROUND BOXES.
13. LOOPS SHALL BE INSTALLED PRIOR TO FINAL ACP MAT.

PLATE INSTALLATION NOTES:

1. PLATE SHALL BE ATTACHED TO CTB WITH 1/4 " X 3/4 " LONG GALVANIZED LAG BOLTS & FLAT WASHERS WITH LEAD ANCHORS DRILLED INTO CTB.
2. PLATE SHALL BE ATTACHED TO METAL GUARD RAIL POSTS USING HILTI GUN WITH APPROPRIATE ANCHORS.
3. PLATE SHALL BE ATTACHED TO WOOD GUARD RAIL POSTS WITH 1/4 " GALVANIZED LAG BOLTS AND WASHERS.
4. CONTACT TXDOT AT (210)731-5140 TO REQUEST INFORMATION TO BE STAMPED ON PLATE AT EACH LOOP LOCATION (MILE MARKER, ETC). 48 HRS NOTICE REQUIRED.
5. ALL MATERIALS AND LABOR SHALL BE CONSIDERED SUBSIDIARY TO THE ITEM "SURVEILLANCE LOOP DETECTOR" AND NO DIRECT PAYMENT SHALL BE MADE.

SURVEILLANCE LOOP DETECTOR INSTALLATION DETAILS

© 2003 Texas Department of Transportation

SHEET 2 OF 2

FED. RD. DIV. NO.	FEDERAL AID PROJECT NO.		SHEET NO.
6			784

ORIGINAL DRAWING DATE: 3-18-99	STATE	DIST.	COUNTY	
REVISIONS 7-29-99	TEXAS	PHARR	HIDALGO	
	CONT.	SECT.	JOB	HIGHWAY NO.
	0255	08	091	US 281

LEVELS DISPLAYED
1 2 3 4 5 6 7 8 9 10 11 12 13 14 15 16
17 18 19 20 21 22 23 24 25 26 27 28 29 30 31 32
33 34 35 36 37 38 39 40 41 42 43 44 45 46 47 48
49 50 51 52 53 54 55 56 57 58 59 60 61 62 63
ACC:
FILE: .DGN
09:55:56 AM
06/24/2003
I:\22322a\CADD\Standards\ITS from Pharr\loopseng2.dgn
PLAN

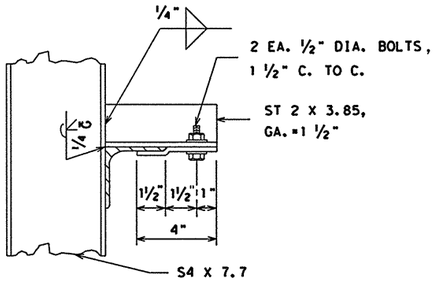

TOP CHORD

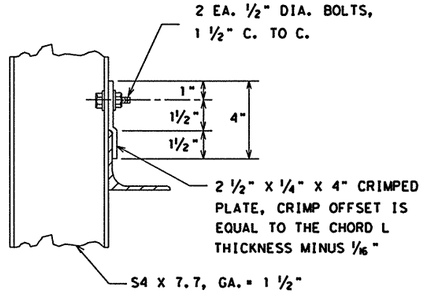

BOTTOM CHORD

SUPPORT TO TRUSS CONNECTION

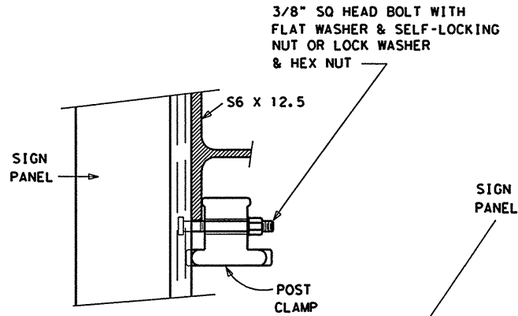

SECTION B-B

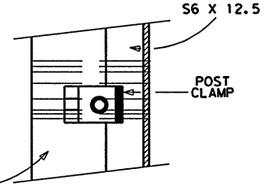

SECTION A-A

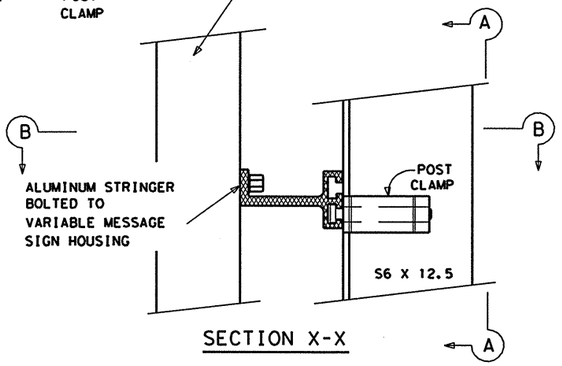

SECTION X-X

PANEL CONNECTION DETAILS

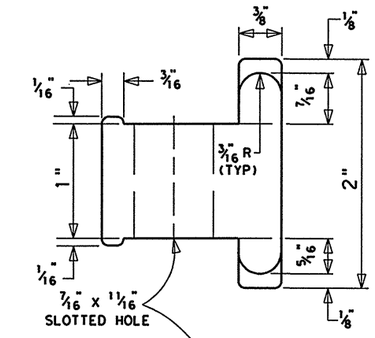

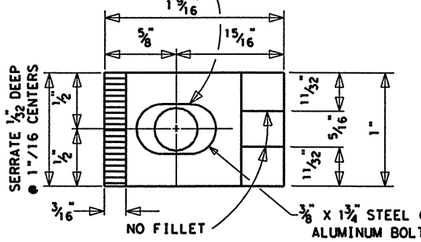

POST CLAMP DETAILS

POST CLAMP TO BE CAST ALUMINUM
(173 LBS. EACH, ALLOY 356-T6)

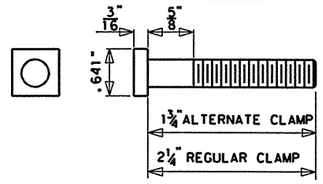

POST CLAMP BOLT DETAIL

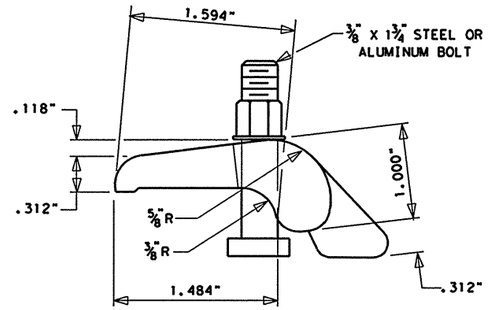

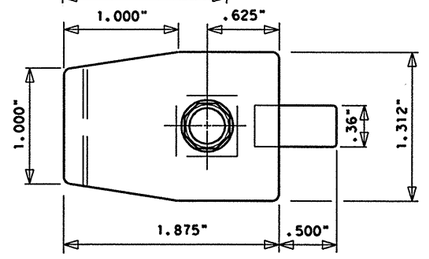

DIMENSIONS ARE APPROXIMATE

ALTERNATE POST CLAMP DETAILS

GENERAL NOTES:
MATERIALS, FABRICATION, CONSTRUCTION AND ERECTION SHALL CONFORM WITH THE REQUIREMENTS OF THE DEPARTMENT'S STANDARD SPECIFICATIONS.
ALL STRUCTURAL STEEL, BOLTS, NUTS AND WASHERS SHALL BE GALVANIZED AFTER FABRICATION.
STRUCTURAL STEEL SHALL CONFORM WITH A.S.T.M. SPECIFICATION A-36. CLAMP BOLTS SHALL HAVE SQUARE HEADS AND HEXAGON NUTS AND CONFORM WITH A.S.T.M. SPECIFICATION A-307. DIMENSIONS SHALL BE IN ACCORDANCE WITH A.N.S.I. B 18.2.1
ALUMINUM POST CLAMPS SHALL BE CAST ALUMINUM ALLOY 356-T6. ALUMINUM BOLTS SHALL BE ALLOY 2024-T4.

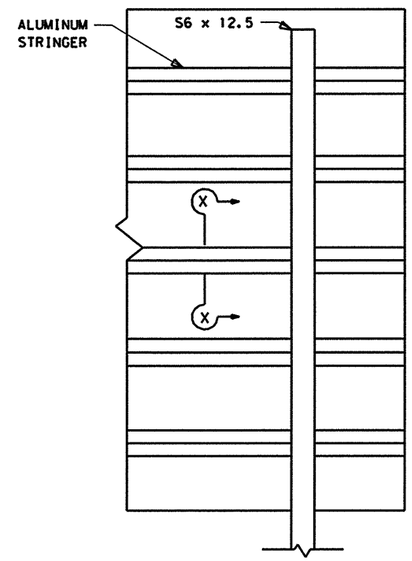

REAR VIEW

PARTIAL SECTION

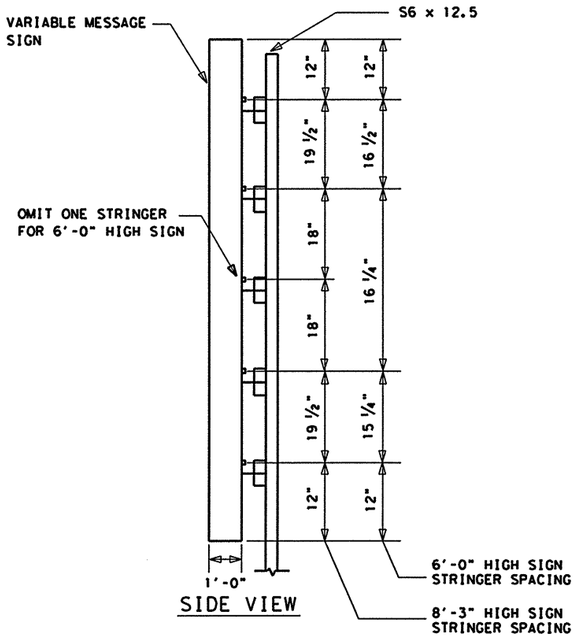

SIDE VIEW

VARIABLE MESSAGE SIGN

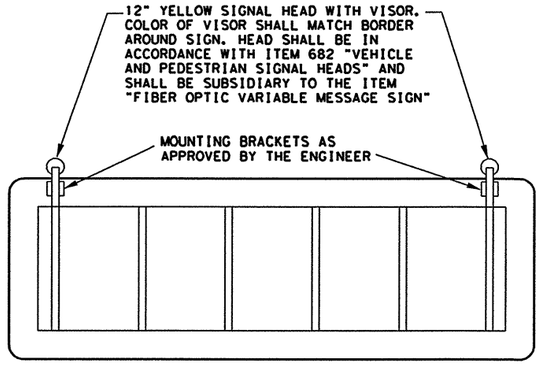

FLASHING BEACON LOCATIONS

(VIEW OF BACK OF SIGN)

VARIABLE MESSAGE SIGNS
TYPE 1 & 2
MOUNTING DETAILS

© 2003 Texas Department of Transportation

FED.RD. DIV.NO.	FEDERAL AID PROJECT NO.		SHEET NO.
6			785
STATE	DIST.	COUNTY	
TEXAS	PHARR	HIDALGO	
CONT.	SECT.	JOB	HIGHWAY NO.
0255	08	091	US 281

REV. 1-20-00

I:\22322a\CADD\Standards\ITS from Pharr\CMSMOUNT.DGN
09:56:31 AM
06/24/2003
FILE: .DGN
ACC:
LEVELS DISPLAYED
1 2 3 5 6 7 8 9 10 11 21 31 41 51
18 19 20 21 22 23 24 25 26 27 28 29 30 31 32
33 34 55 63 75 83 94 04 1 43 44 45 46 47 48
69 60 61 62 53 64 55 65 75 85 9 63
PLAN

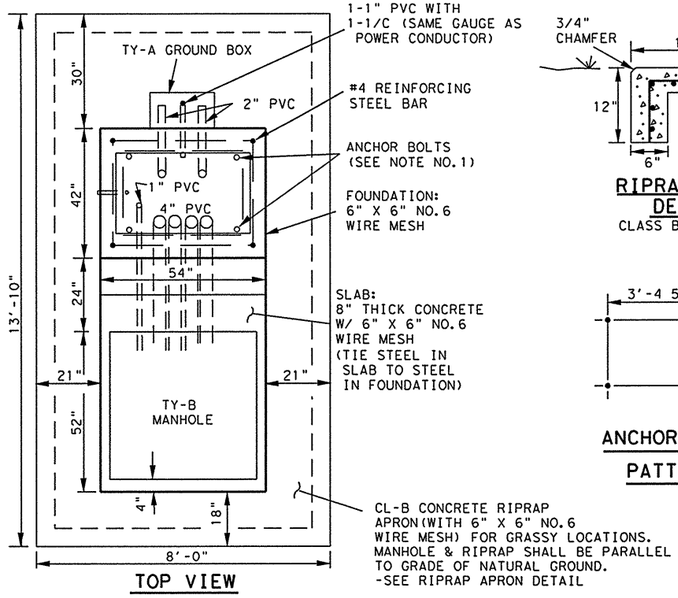

TOP VIEW

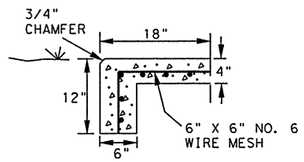

RIPRAP APRON DETAIL

CLASS B CONCRETE

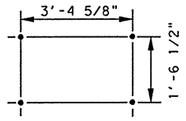

ANCHOR BOLT PATTERN

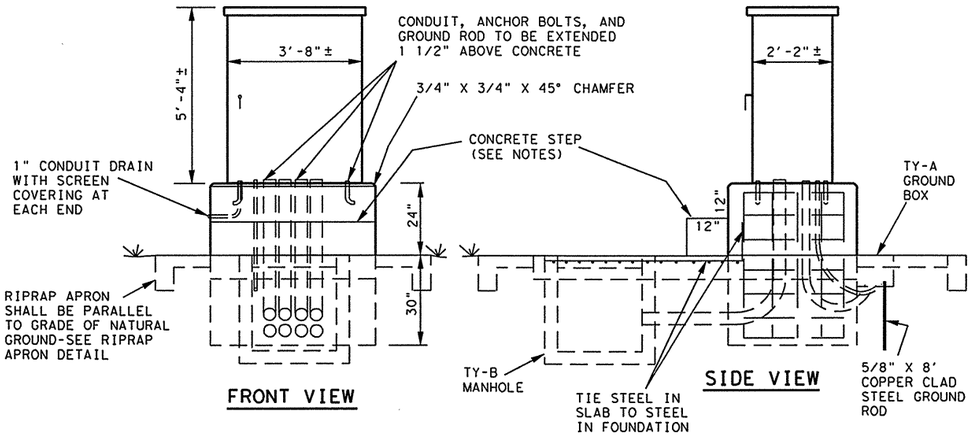

FRONT VIEW

SIDE VIEW

PLAN

TYPICAL COMMUNICATION CABINET

(NOT TO SCALE)

1. DETAILS OF ANCHOR BOLT LOCATION TO BE FURNISHED BY THE CABINET MANUFACTURER.
2. DIMENSIONS SHOWN FOR CONCRETE BASE SHALL BE SUBJECT TO MODIFICATION TO FIT REQUIRED CABINET TYPE AS DIRECTED BY THE ENGINEER.
3. ALL CONCRETE TO BE CLASS "A" EXCEPT CONCRETE RIPRAP APRON.
4. THE CONTRACTOR SHALL FURNISH ANY ADDITIONAL CONCRETE WHICH MAY BE NECESSARY TO STABILIZE FOUNDATION AT UNUSUAL LOCATIONS.
5. CONCRETE PAD, RIPRAP APRON, CONCRETE STEP, AND CONDUIT FROM MANHOLE TO CABINET SHALL BE PAID FOR UNDER ITEM "TY-2 COMMUNICATION CABINET - TY-2 CABINET FOUNDATION"
6. TY-A GROUND BOX SHALL BE PAID FOR UNDER ITEM 624 "GROUND BOXES".
7. TY-B MANHOLE SHALL BE PAID FOR UNDER ITEM 465 "MANHOLES AND INLETS".
8. CABINETS SHALL NOT BE PLACED IN DITCHES, LOW AREAS, ETC. WHERE WATER MAY ENTER STRUCTURE.
9. FOR CABINETS WITH FRONT AND REAR DOORS, A CONCRETE STEP AS SHOWN ABOVE SHALL BE FABRICATED AT REAR DOOR SIDE ALSO. TY-A GROUND BOX SHALL BE MOVED AND RIPRAP EXTENDED FOR ADDITIONAL STEP.

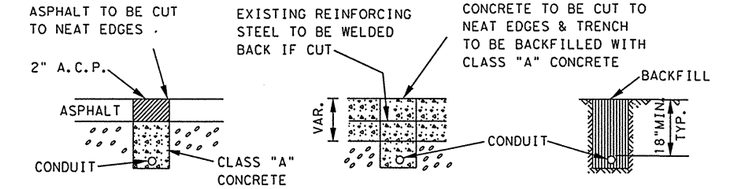

ASPHALT PAVEMENT

CONDUIT SHALL BE SURROUNDED BY MINIMUM 2" OF CONCRETE

CONCRETE PAVEMENT

CONDUIT SHALL BE SURROUNDED BY MINIMUM 2" OF CONCRETE

NATURAL GROUND

CONCRETE TO BE TESTED AS MISCELLANEOUS CONCRETE.
WIDTH OF TRENCH SHALL BE 8" FOR SINGLE CONDUIT AND 12" FOR 2 OR MORE 2" CONDUITS

TRENCH DETAILS

(LATERALS)

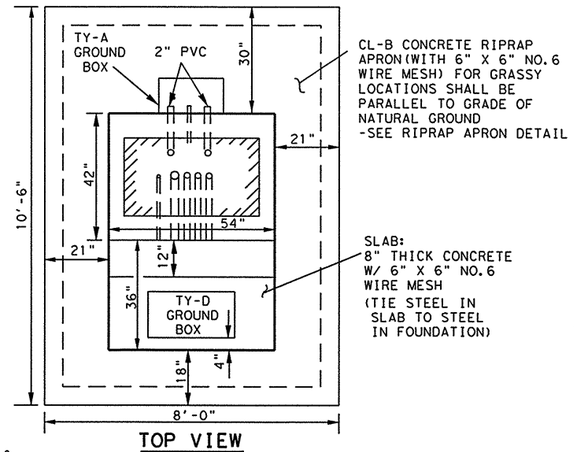

TOP VIEW

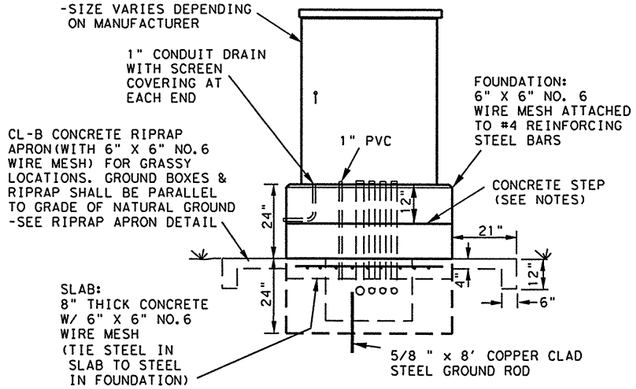

FRONT VIEW

VMS AND LCS CONTROLLER DETAILS

(NOT TO SCALE)

1. CONCRETE PAD, RIPRAP APRON, CONCRETE STEP, AND CONDUIT TO VMS OR LCS CONTROLLER SHALL BE PAID FOR UNDER ITEM "FIBER OPTIC VARIABLE MESSAGE SIGN SYSTEM - VMS CABINET FOUNDATION" OR "LANE CONTROL SYSTEM - LCS CABINET FOUNDATION".
2. TY-A AND TY-D GROUND BOXES SHALL BE PAID FOR UNDER ITEM 624 "GROUND BOXES".
3. CABINETS SHALL NOT BE PLACED IN DITCHES, LOW AREAS, ETC. WHERE WATER MAY ENTER STRUCTURE.
4. FOR CABINETS WITH FRONT AND REAR DOORS, A CONCRETE STEP AS SHOWN ABOVE SHALL BE FABRICATED AT REAR DOOR SIDE ALSO. TY-A GROUND BOX SHALL BE MOVED AND RIPRAP EXTENDED FOR ADDITIONAL STEP.

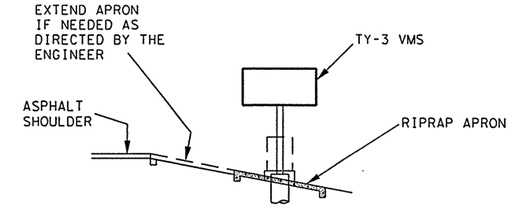

TYPICAL ELEVATION

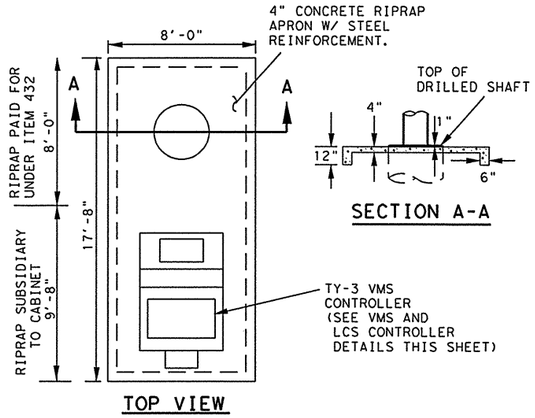

TOP VIEW

SECTION A-A

NOTE:
TY-3 CONTROLLER CABINET RIPRAP APRON SHALL BE EXTENDED TO INCLUDE AN 8' X 8' PORTION (EST. AT 1.25 CU YDS) SURROUNDING THE TY-3 VMS POLE. PORTION SURROUNDING THE TY-3 POLE SHALL BE PAID FOR UNDER ITEM 432 "RIPRAP".

TY-3 VMS RIPRAP APRON DETAIL

1. CLASS "B" CONCRETE RIPRAP TO BE PLACED AS SHOWN IN DETAILS AND APPROVED BY THE ENGINEER. RIPRAP SHALL BE PAID FOR UNDER ITEM 432 "RIPRAP"
2. APRON SHALL BE INSTALLED AT GRASSY LOCATIONS.

NOTES:

1. AT LOCATIONS WHERE 2 OR MORE CONTROLLER FOUNDATIONS ARE IN CLOSE PROXIMITY, ONE COMMON RIPRAP APRON SHALL SURROUND ALL FOUNDATIONS.
2. AT LOCATIONS WHERE CONTROLLER FOUNDATIONS ARE PLACED NEXT TO AN OVERHEAD SIGN BRIDGE LEG FOUNDATION, ONE COMMON RIPRAP APRON SHALL SURROUND ALL FOUNDATIONS.
3. IF DOUBLE DOOR (FRONT & REAR) CABINET IS APPROVED BY TXDOT, THEN CONTRACTOR SHALL BE RESPONSIBLE FOR ADDING STEP ON BOTH SIDES OF FOUNDATION AT NO ADDITIONAL COST.

CABINET FOUNDATION DETAILS

© 2003 Texas Department of Transportation

7-26-01
6-22-01
8-23-00
10-22-99
4-14-99
2-25-99
2-19-99

FED.RD. DIV.NO.	FEDERAL AID PROJECT NO.		SHEET NO.
6			786
STATE	DIST.	COUNTY	
TEXAS	PHARR	HIDALGO	
CONT.	SECT.	JOB	HIGHWAY NO.
0255	08	091	US 281

I:\223220\CADD\Standards\ITS from Pharr\cabfoundation.dgn
09:56:56 AM
06/24/2003
LEVELS DISPLAYED
ACC:
FILE: .DGN

Phaisarn C.
11:47:30 AM
06/26/2003

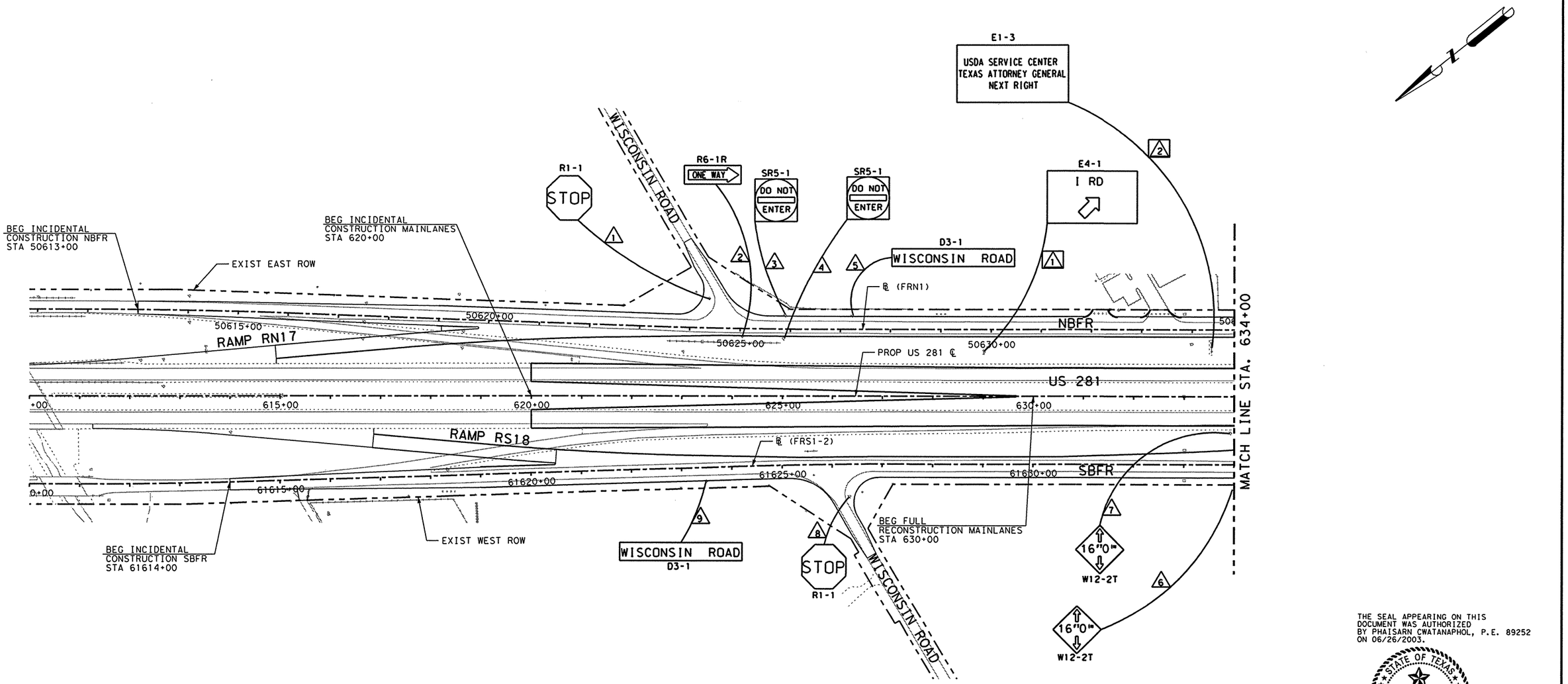

LEGEND:

- EXISTING LARGE SIGN TO BE REMOVED
- SIGNS TO BE REMOVED (ITEM 649)
- SIGNS TO REMAIN IN PLACE
- EXISTING STREET NAME SIGNS TO BE RELOCATED BY OTHERS
- SIGN TO BE RELOCATED (ITEM 649)

THE SEAL APPEARING ON THIS DOCUMENT WAS AUTHORIZED BY PHAISARN CWATANAPHOL, P.E. 89252 ON 06/26/2003.

STATE OF TEXAS
PHAISARN CWATANAPHOL
89252
REGISTERED
PROFESSIONAL ENGINEER

Parsons Brinckerhoff Quade & Douglas Inc.

Texas Department of Transportation

© 2003 by TxDOT

US 281
SIGNING DETAILS
REMOVALS

"BEGIN PROJECT" TO
STA. 634+00 "BL1"

PLAN 1"= 200' HORIZ

SHEET 1 OF 10 | 281SDR01.DGN

DESIGNED: DM	FED. RD DIV. No.	STATE	FEDERAL AID PROJECT No.	HIGHWAY No.
CHECKED: JP	6	TEXAS		US 281

DRAWN: JT	STATE DISTRICT	COUNTY	CONTROL No.	SECTION No.	JOB No.	SHEET No.
CHECKED: DM	PHARR	HIDALGO	0255	08	091	787

i:\22320\cadd\sheets\traffic\signing\281sdr01.dgn

Phaisarn C.
11:47:35 AM
06/26/2003

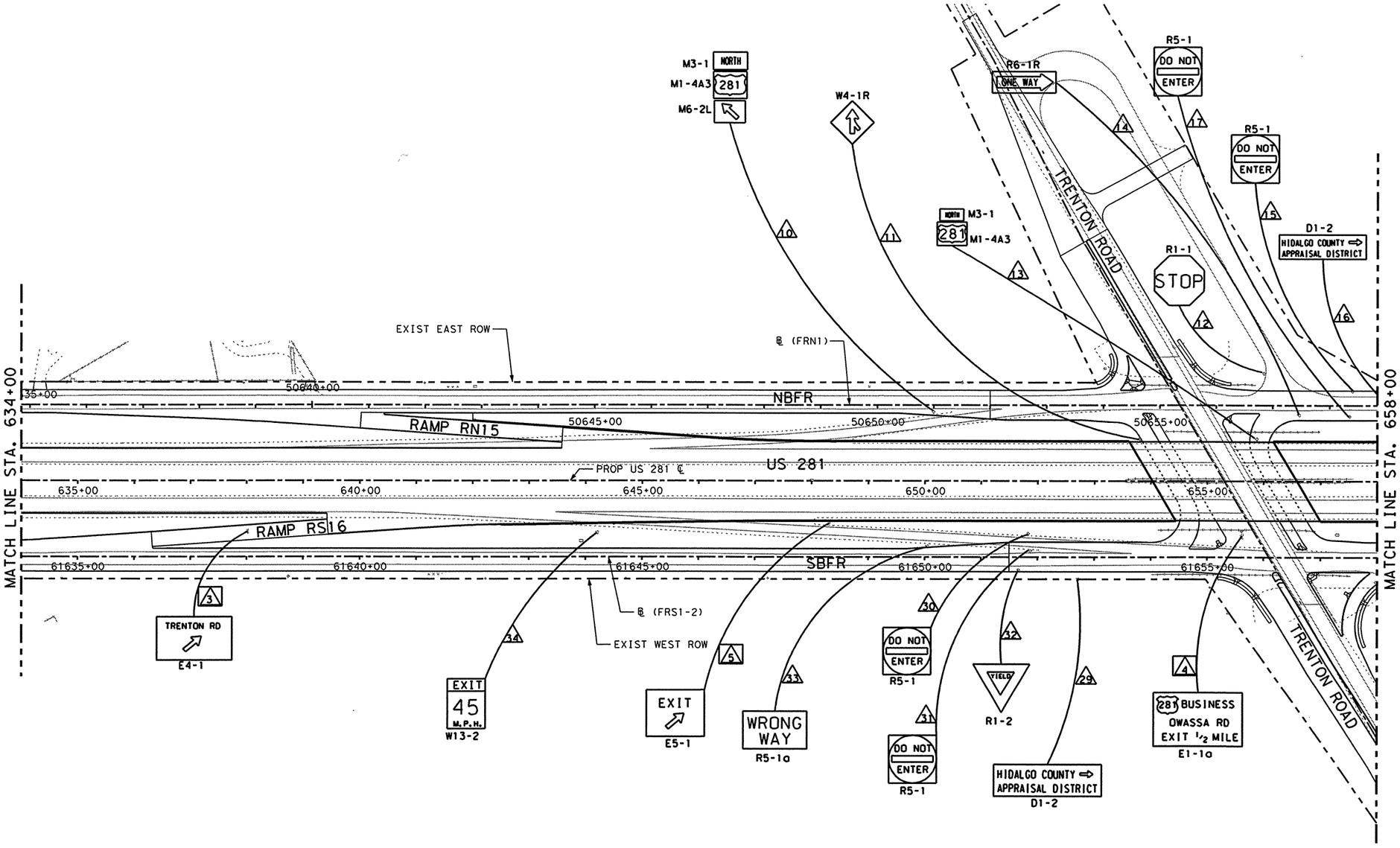

LEGEND:

- EXISTING LARGE SIGN TO BE REMOVED
- SIGNS TO BE REMOVED (ITEM 649)
- SIGNS TO REMAIN IN PLACE
- EXISTING STREET NAME SIGNS TO BE RELOCATED BY OTHERS
- SIGN TO BE RELOCATED (ITEM 649)

THE SEAL APPEARING ON THIS DOCUMENT WAS AUTHORIZED BY PHAISARN CWATANAPHOL, P.E. 89252 ON 06/26/2003.

STATE OF TEXAS
PHAISARN CWATANAPHOL
89252
REGISTERED PROFESSIONAL ENGINEER

Parsons Brinckerhoff Quade & Douglas Inc.

Texas Department of Transportation

© 2003 by TxDOT

US 281
SIGNING DETAILS
REMOVALS

STA. 634+00 "BL1" TO
STA. 658+00 "BL1"

PLAN 1"= 200' HORIZ

SHEET 2 OF 10 | 281SDR02.DGN

DESIGNED: DM	FED. RD DIV. NO.	STATE	FEDERAL AID PROJECT No.	HIGHWAY No.
CHECKED: JP	6	TEXAS		US 281

DRAWN: JT	STATE DISTRICT	COUNTY	CONTROL No.	SECTION No.	JOB No.	SHEET No.
CHECKED: DM	PHARR	HIDALGO	0255	08	091	788

i:\22322a\cadd\sheets\traffic\signing\281sdr02.dgn

Phaisarn C.
06/26/2003 11:47:39 AM
i:\22322a\cadd\sheets\traffic\signing\281sdr03.dgn

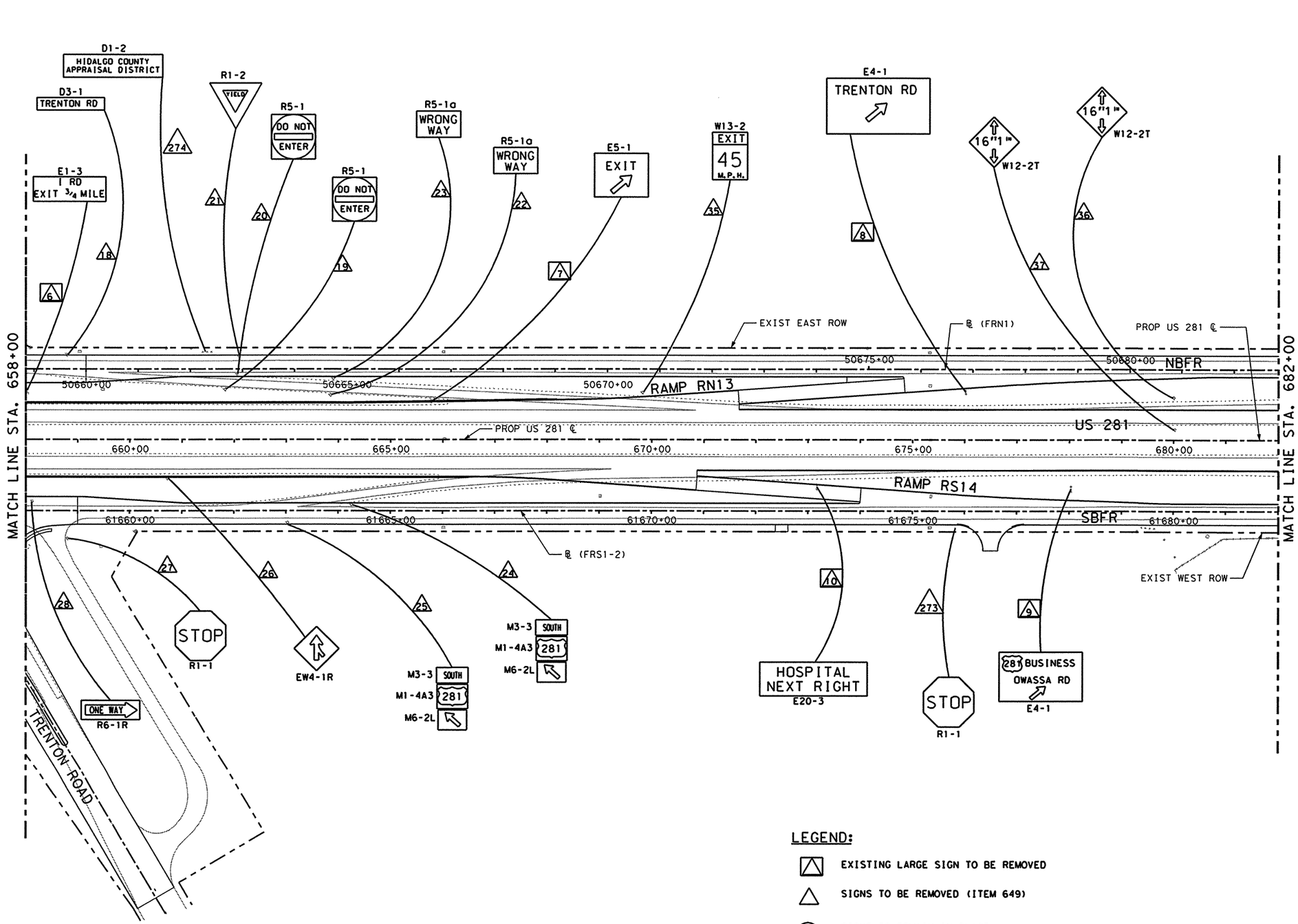

LEGEND:

- EXISTING LARGE SIGN TO BE REMOVED
- SIGNS TO BE REMOVED (ITEM 649)
- SIGNS TO REMAIN IN PLACE
- EXISTING STREET NAME SIGNS TO BE RELOCATED BY OTHERS
- SIGN TO BE RELOCATED (ITEM 649)

THE SEAL APPEARING ON THIS DOCUMENT WAS AUTHORIZED BY PHAISARN CWATANAPHOL, P.E. 89252 ON 06/26/2003.

STATE OF TEXAS
PHAISARN CWATANAPHOL
89252
REGISTERED PROFESSIONAL ENGINEER

Parsons Brinckerhoff Quade & Douglas Inc.

Texas Department of Transportation

© 2003 by TxDOT

US 281
SIGNING DETAILS
REMOVALS

STA. 658+00 "BL1" TO
STA. 682+00 "BL1"

PLAN 1"= 200' HORIZ

SHEET 3 OF 10						281SDR03.DGN	
DESIGNED: DM	FED. RD DIV. No.	STATE	FEDERAL AID PROJECT No.			HIGHWAY No.	
CHECKED: JP	6	TEXAS				US 281	
DRAWN: JT	STATE DISTRICT	COUNTY	CONTROL No.	SECTION No.	JOB No.	SHEET No.	
CHECKED: DM	PHARR	HIDALGO	0255	08	091	789	

Phaisarn C.
11:47:44 AM
06/26/2003
i:\22322a\cadd\sheets\traffic\signing\281sdr04.dgn

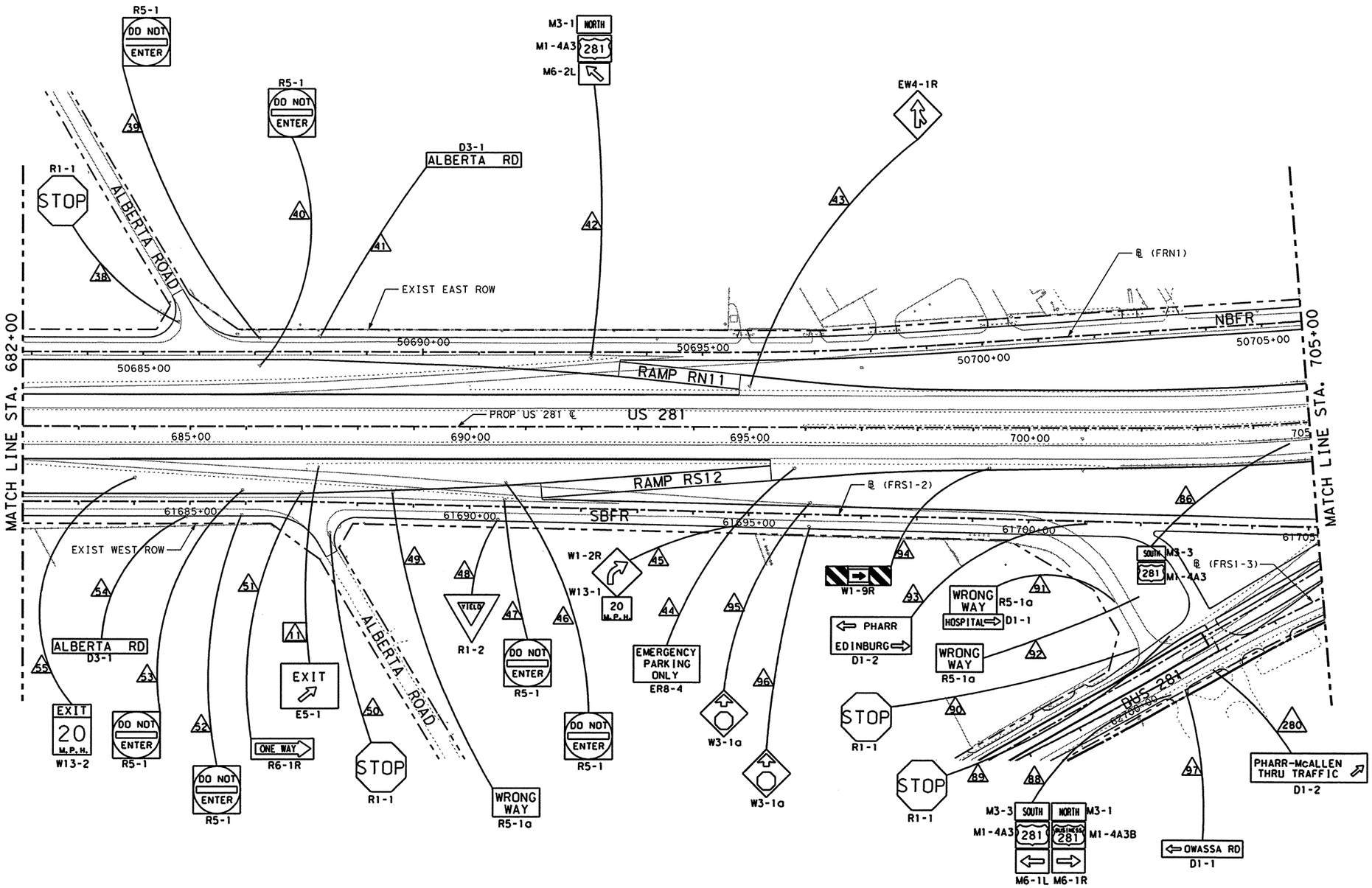

LEGEND:

- EXISTING LARGE SIGN TO BE REMOVED
- SIGNS TO BE REMOVED (ITEM 649)
- SIGNS TO REMAIN IN PLACE
- EXISTING STREET NAME SIGNS TO BE RELOCATED BY OTHERS
- SIGN TO BE RELOCATED (ITEM 649)

THE SEAL APPEARING ON THIS DOCUMENT WAS AUTHORIZED BY PHAISARN CWATANAPHOL, P.E. 89252 ON 06/26/2003.

STATE OF TEXAS
PHAISARN CWATANAPHOL
89252
REGISTERED PROFESSIONAL ENGINEER

Parsons Brinckerhoff Quade & Douglas Inc.

Texas Department of Transportation

© 2003 by TxDOT

US 281
SIGNING DETAILS
REMOVALS

STA. 682+00 "BL1" TO
STA. 705+00 "BL1"

PLAN 1"= 200' HORIZ

SHEET 4 OF 10				281SDR04.DGN			
DESIGNED: DM	FED. RD DIV. NO.	STATE	FEDERAL AID PROJECT No.			HIGHWAY No.	
CHECKED: JP	6	TEXAS				US 281	
DRAWN: JT	STATE DISTRICT	COUNTY	CONTROL No.	SECTION No.	JOB No.	SHEET No.	
CHECKED: DM	PHARR	HIDALGO	0255	08	091	790	

Phaisarn C.
11:47:49 AM
06/26/2003
i:\2232a\cadd\sheets\traffic\signing\281sdr05.dgn

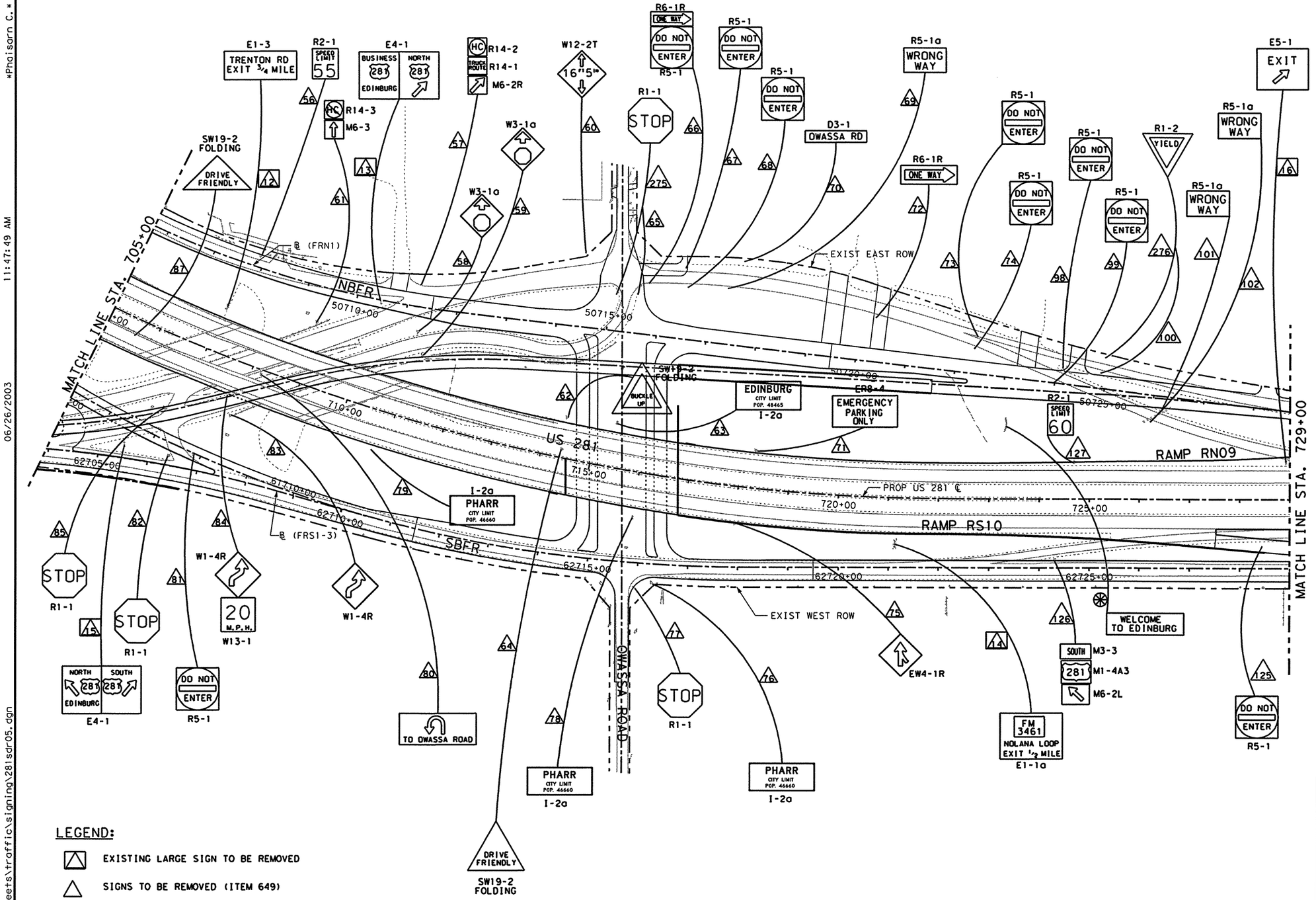

LEGEND:

- EXISTING LARGE SIGN TO BE REMOVED
- SIGNS TO BE REMOVED (ITEM 649)
- SIGNS TO REMAIN IN PLACE
- EXISTING STREET NAME SIGNS TO BE RELOCATED BY OTHERS
- SIGN TO BE RELOCATED (ITEM 649)

THE SEAL APPEARING ON THIS DOCUMENT WAS AUTHORIZED BY PHAISARN CWATANAPHOL, P.E. 89252 ON 06/26/2003.

STATE OF TEXAS
PHAISARN CWATANAPHOL
89252
REGISTERED
PROFESSIONAL ENGINEER

Parsons Brinckerhoff Quade & Douglas Inc.

Texas Department of Transportation

© 2003 by TxDOT

US 281
SIGNING DETAILS
REMOVALS

STA. 705+00 "BL1" TO
STA. 729+00 "BL1"

PLAN 1"= 200' HORIZ

SHEET 5 OF 10 | 281SDR05.DGN

DESIGNED: DM	FED. RD DIV. No.	STATE	FEDERAL AID PROJECT No.			HIGHWAY No.	
CHECKED: JP	6	TEXAS				US 281	
DRAWN: JT	STATE DISTRICT	COUNTY	CONTROL No.	SECTION No.	JOB No.	SHEET No.	
CHECKED: DM	PHARR	HIDALGO	0255	08	091	791	

Phaisarn C.
11:47:55 AM
06/26/2003
i:\22322a\cadd\sheets\traffic\signing\281sdr06.dgn

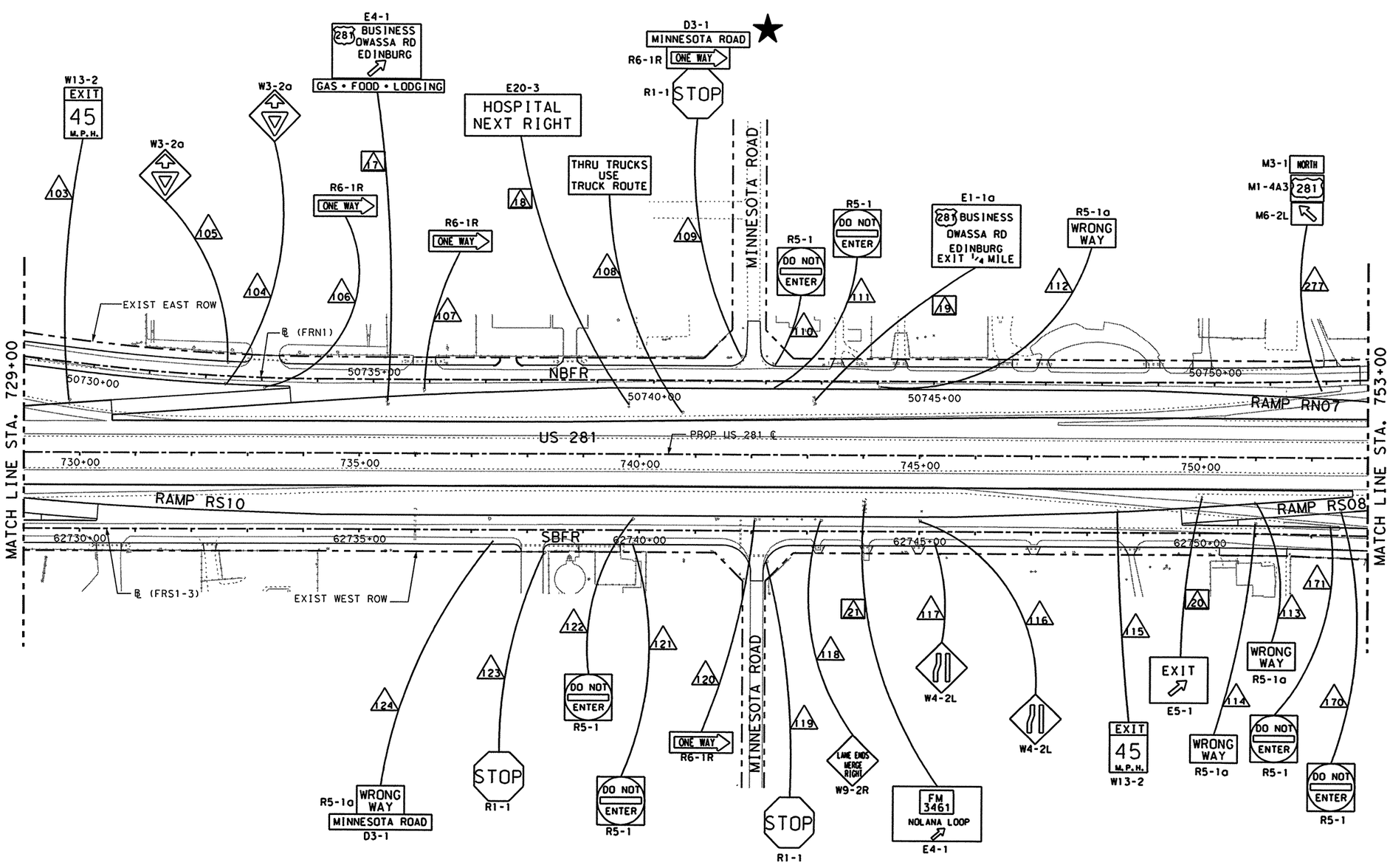

LEGEND:

- EXISTING LARGE SIGN TO BE REMOVED
- SIGNS TO BE REMOVED (ITEM 649)
- SIGNS TO REMAIN IN PLACE
- EXISTING STREET NAME SIGNS TO BE RELOCATED BY OTHERS
- SIGN TO BE RELOCATED (ITEM 649)

THE SEAL APPEARING ON THIS DOCUMENT WAS AUTHORIZED BY PHAISARN CWATANAPHOL, P.E. 89252 ON 06/26/2003.

STATE OF TEXAS
PHAISARN CWATANAPHOL
89252
REGISTERED
PROFESSIONAL ENGINEER

Parsons Brinckerhoff
Quade & Douglas Inc.

Texas Department of Transportation

© 2003 by TxDOT

US 281
SIGNING DETAILS
REMOVALS

STA. 729+00 "BL1" TO
STA. 753+00 "BL1"

PLAN 1"= 200' HORIZ

SHEET 6 OF 10 | 281SDR06.DGN

DESIGNED: DM	FED. RD DIV. No.	STATE	FEDERAL AID PROJECT No.	HIGHWAY No.
CHECKED: JP	6	TEXAS		US 281

DRAWN: JT	STATE DISTRICT	COUNTY	CONTROL No.	SECTION No.	JOB No.	SHEET No.
CHECKED: DM	PHARR	HIDALGO	0255	08	091	792

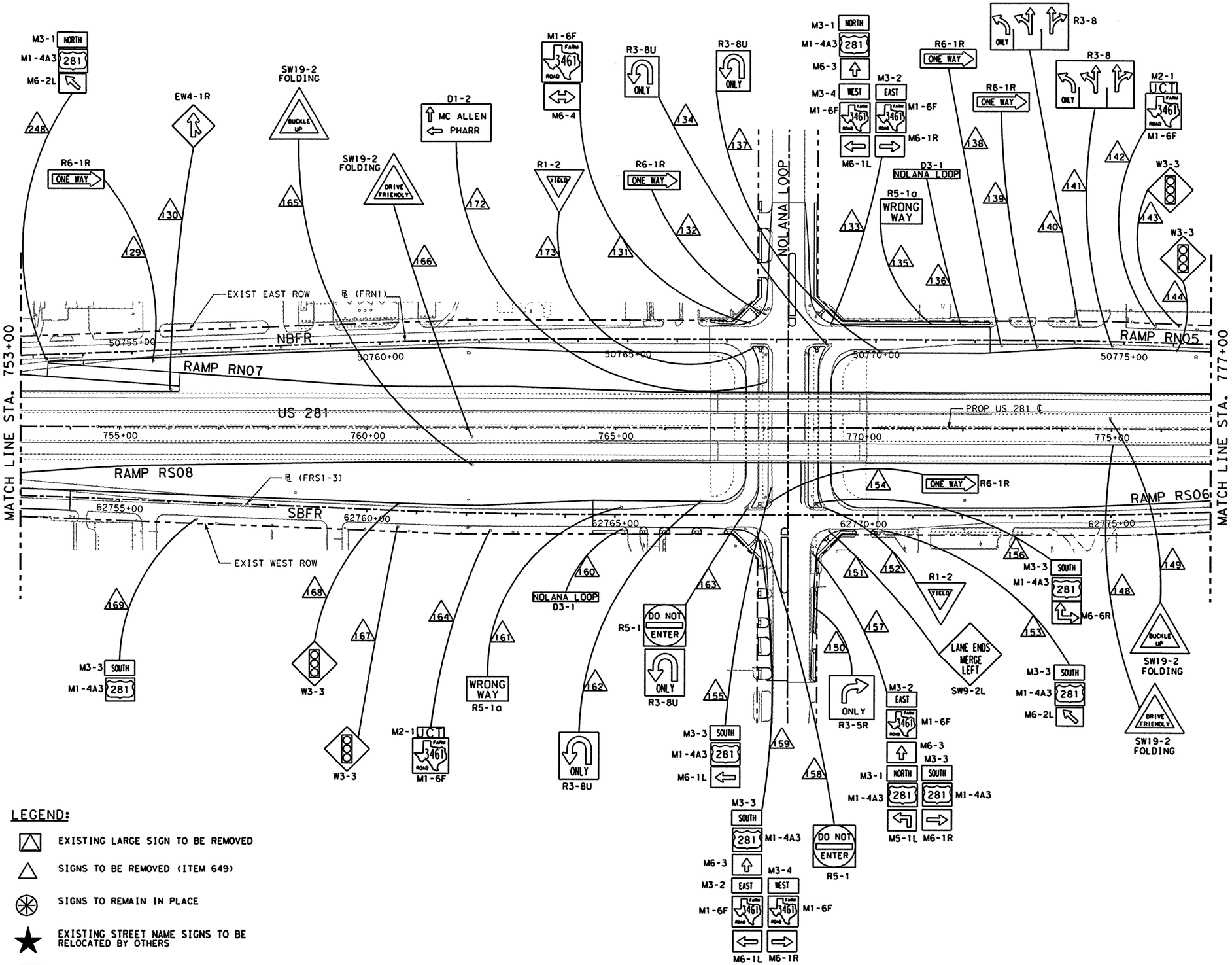

LEGEND:

- EXISTING LARGE SIGN TO BE REMOVED
- SIGNS TO BE REMOVED (ITEM 649)
- SIGNS TO REMAIN IN PLACE
- EXISTING STREET NAME SIGNS TO BE RELOCATED BY OTHERS
- SIGN TO BE RELOCATED (ITEM 649)

THE SEAL APPEARING ON THIS DOCUMENT WAS AUTHORIZED BY PHAISARN CWATANAPHOL, P.E. 89252 ON 06/26/2003.

STATE OF TEXAS
PHAISARN CWATANAPHOL
89252
REGISTERED PROFESSIONAL ENGINEER

PB Parsons Brinckerhoff Quade & Douglas Inc.

Texas Department of Transportation

© 2003 by TxDOT

US 281 SIGNING DETAILS
REMOVALS

STA. 753+00 "BL1" TO
STA. 777+00 "BL1"

PLAN 1"= 200' HORIZ

SHEET 7 OF 10 | 281SDR07.DGN

DESIGNED: DM	FED. RD DIV. No.	STATE	FEDERAL AID PROJECT No.	HIGHWAY No.
CHECKED: JP	6	TEXAS		US 281

DRAWN: JT	STATE DISTRICT	COUNTY	CONTROL No.	SECTION No.	JOB No.	SHEET No.
CHECKED: DM	PHARR	HIDALGO	0255	08	091	793

Phaisarn C.
11:48:00 AM
06/26/2003
i:\22322a\cadd\sheets\traffic\signing\281sdr07.dgn

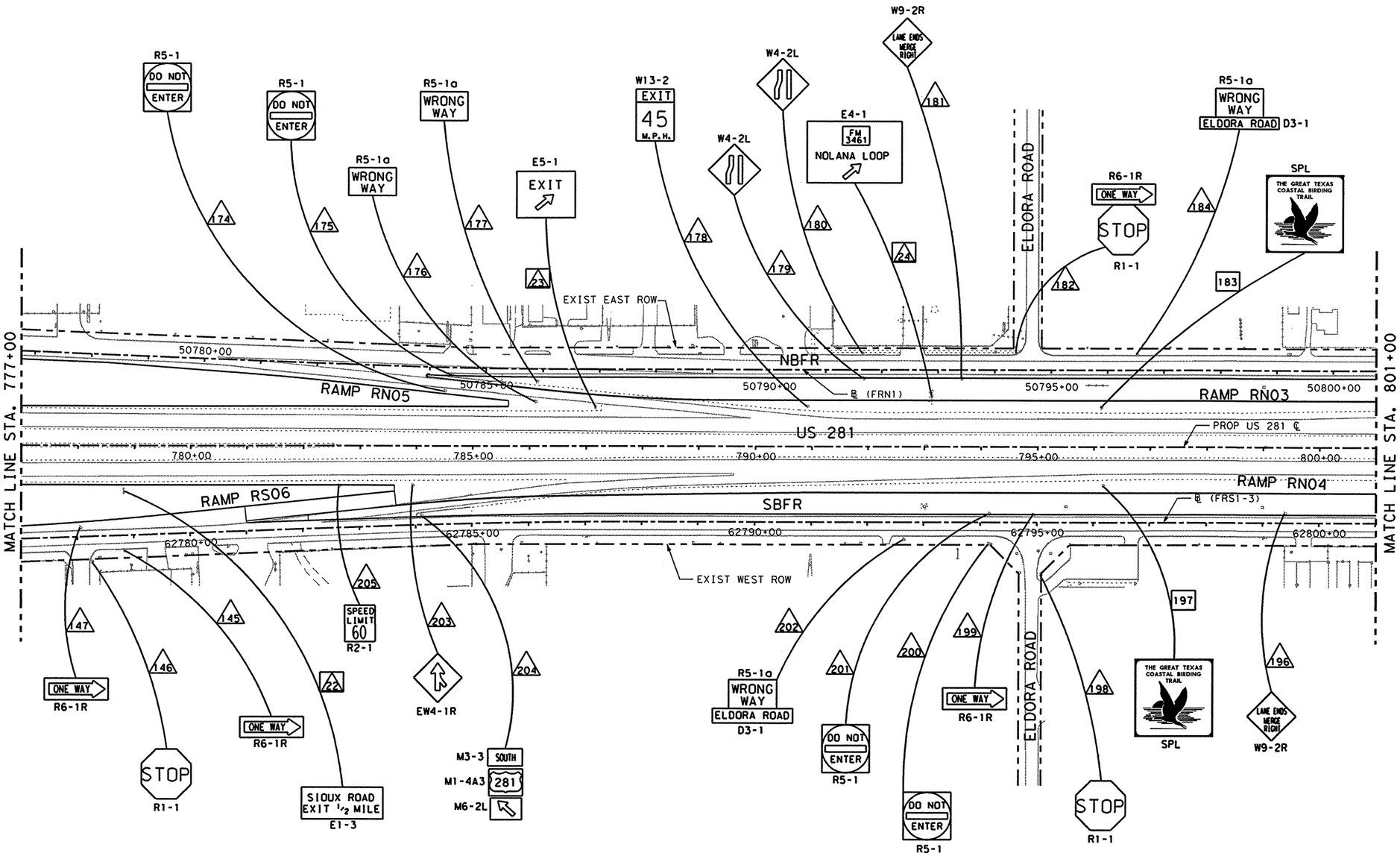

LEGEND:

- EXISTING LARGE SIGN TO BE REMOVED
- SIGNS TO BE REMOVED (ITEM 649)
- SIGNS TO REMAIN IN PLACE
- EXISTING STREET NAME SIGNS TO BE RELOCATED BY OTHERS
- SIGN TO BE RELOCATED (ITEM 649)

THE SEAL APPEARING ON THIS DOCUMENT WAS AUTHORIZED BY PHAISARN CWATANAPHOL, P.E. 89252 ON 06/26/2003.

STATE OF TEXAS
PHAISARN CWATANAPHOL
89252
REGISTERED PROFESSIONAL ENGINEER

Parsons Brinckerhoff Quade & Douglas Inc.

Texas Department of Transportation

© 2003 by TxDOT

US 281
SIGNING DETAILS
REMOVALS

STA. 777+00 "BL1" TO
STA. 801+00 "BL1"

PLAN 1"= 200' HORIZ

SHEET 8 OF 10			281SDR08.DGN				
DESIGNED: DM	FED. RD DIV. NO.	STATE	FEDERAL AID PROJECT No.			HIGHWAY No.	
CHECKED: JP	6	TEXAS				US 281	
DRAWN: JT	STATE DISTRICT	COUNTY	CONTROL No.	SECTION No.	JOB No.	SHEET No.	
CHECKED: DM	PHARR	HIDALGO	0255	08	091	794	

Phaisarn C.
11:48:05 AM
06/26/2003
i:\22322a\cadd\sheets\traffic\signing\281sdr08.dgn

Phaisarn C.
11:48:11 AM
06/26/2003
i:\22322o\cadd\sheets\traffic\signing\281sdr09.dgn

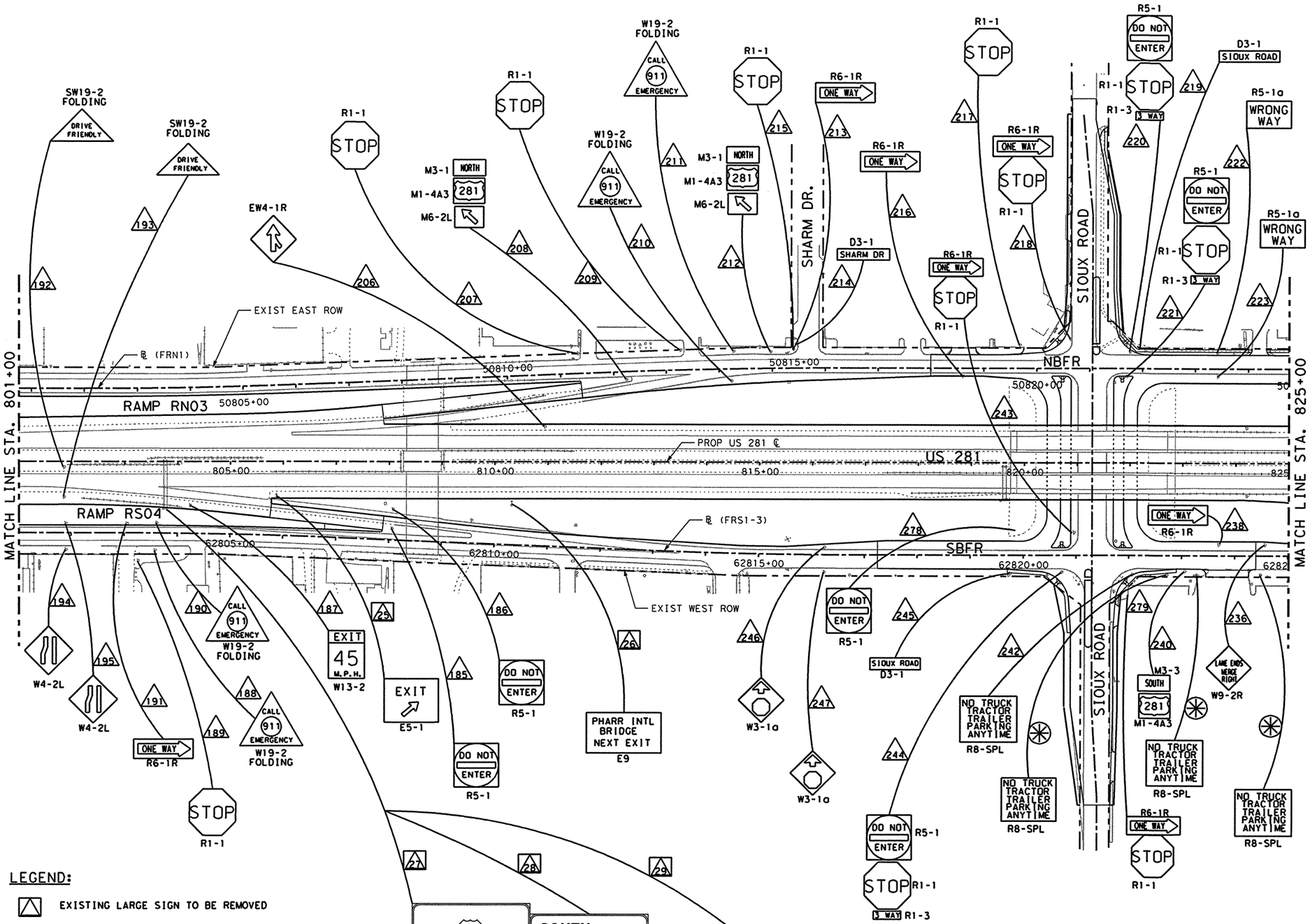

THE SEAL APPEARING ON THIS DOCUMENT WAS AUTHORIZED BY PHAISARN CWATANAPHOL, P.E. 89252 ON 06/26/2003.

STATE OF TEXAS
PHAISARN CWATANAPHOL
89252
REGISTERED PROFESSIONAL ENGINEER

Parsons Brinckerhoff Quade & Douglas Inc.

Texas Department of Transportation

© 2003 by TxDOT

US 281
SIGNING DETAILS
REMOVALS

STA. 801+00 "BL1" TO
STA. 825+00 "BL1"

PLAN 1"= 200' HORIZ

SHEET 9 OF 10 | 281SDR09.DGN

DESIGNED: DM	FED. RD DIV. No.	STATE	FEDERAL AID PROJECT No.			HIGHWAY No.
CHECKED: JP	6	TEXAS				US 281
DRAWN: JT	STATE DISTRICT	COUNTY	CONTROL No.	SECTION No.	JOB No.	SHEET No.
CHECKED: DM	PHARR	HIDALGO	0255	08	091	795

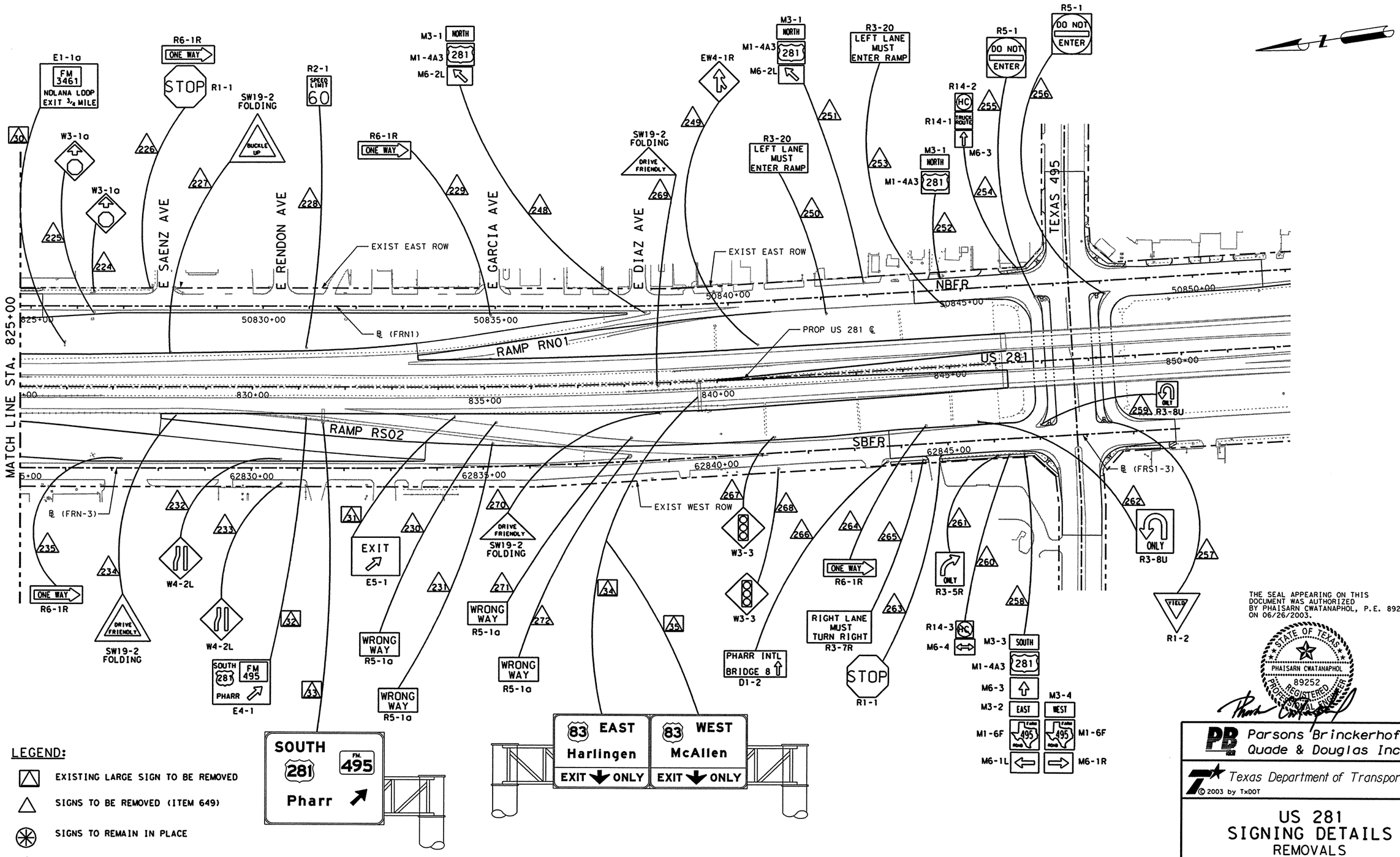

LEGEND:

- EXISTING LARGE SIGN TO BE REMOVED
- SIGNS TO BE REMOVED (ITEM 649)
- SIGNS TO REMAIN IN PLACE
- EXISTING STREET NAME SIGNS TO BE RELOCATED BY OTHERS
- SIGN TO BE RELOCATED (ITEM 649)

THE SEAL APPEARING ON THIS DOCUMENT WAS AUTHORIZED BY PHAISARN CWATANAPHOL, P.E. 89252 ON 06/26/2003.

STATE OF TEXAS
PHAISARN CWATANAPHOL
89252
REGISTERED PROFESSIONAL ENGINEER

Parsons Brinckerhoff Quade & Douglas Inc.

Texas Department of Transportation

© 2003 by TxDOT

US 281 SIGNING DETAILS
REMOVALS

STA. 825+00 "BL1" TO END OF PROJECT

PLAN 1"= 200' HORIZ

SHEET 10 OF 10 | 281SDR10.DGN

DESIGNED: DM	FED. RD DIV. No.	STATE	FEDERAL AID PROJECT No.	HIGHWAY No.
CHECKED: JP	6	TEXAS		US 281

DRAWN: JT	STATE DISTRICT	COUNTY	CONTROL No.	SECTION No.	JOB No.	SHEET No.
CHECKED: DM	PHARR	HIDALGO	0255	08	091	796

Phaisarn C.
11:48:17 AM
06/26/2003
i:\22322a\cadd\sheets\traffic\signing\281sdr10.dgn

Phaisarn C.
11:46:25 AM
06/26/2003
I:\22322o\CADD\Sheets\Traffic\Signing\281sdi01.dgn

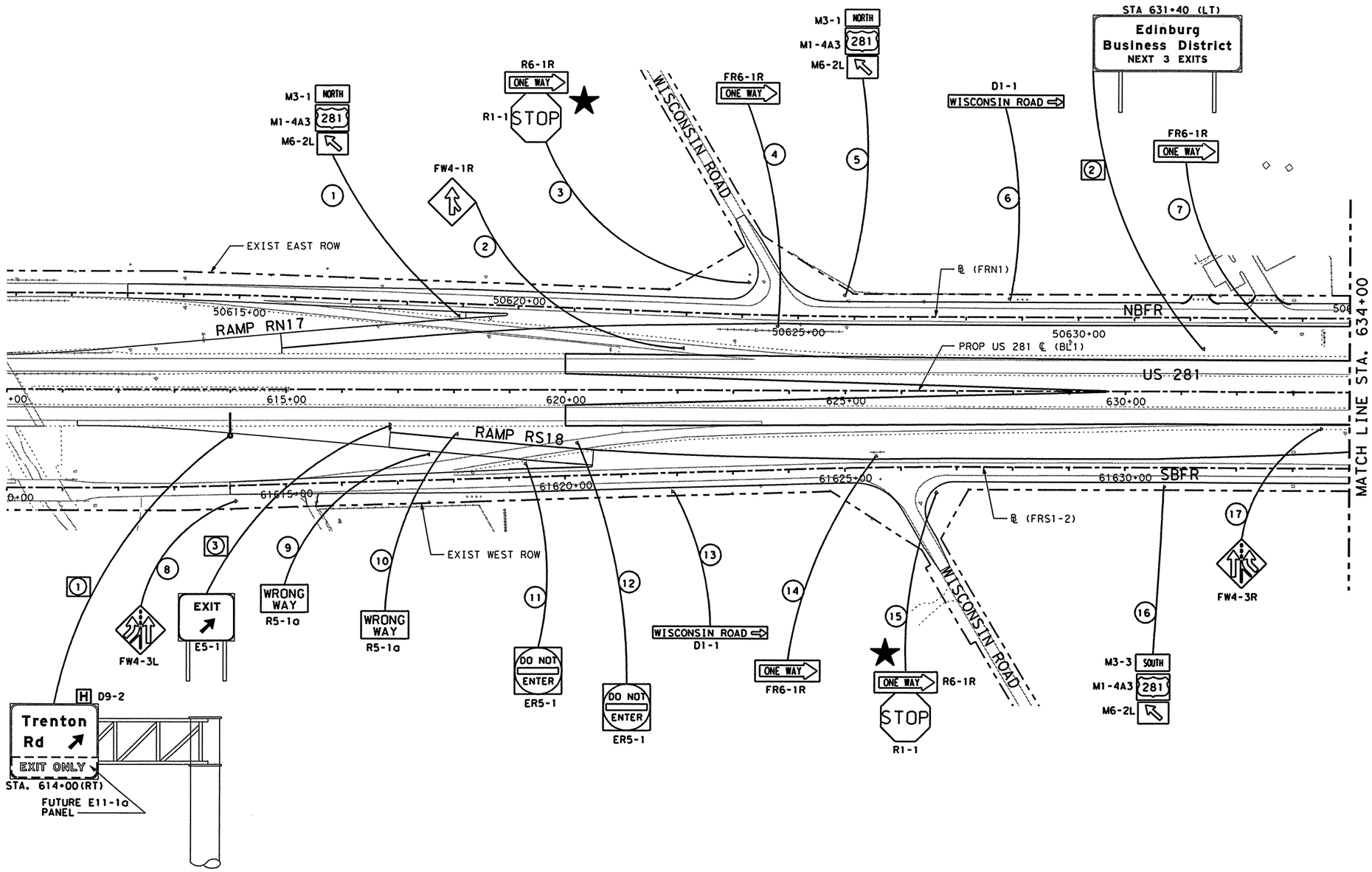

LEGEND:

- PROPOSED LARGE SIGN TO BE INSTALLED
- SIGNS TO BE INSTALLED (ITEM 644)
- SIGNS TO REMAIN IN PLACE
- EXISTING STREET NAME SIGNS TO BE RELOCATED BY OTHERS

THE SEAL APPEARING ON THIS DOCUMENT WAS AUTHORIZED BY PHAISARN CWATANAPHOL, P.E. 89252 ON 06/26/2003.

STATE OF TEXAS
PHAISARN CWATANAPHOL
89252
REGISTERED PROFESSIONAL ENGINEER

Parsons Brinckerhoff Quade & Douglas Inc.

Texas Department of Transportation

© 2003 by TxDOT

US 281
SIGNING DETAILS
INSTALLATIONS

STA. 610+00 "BL1" TO
STA. 634+00 "BL1"

PLAN 1"= 200' HORIZ

SHEET 1 OF 10 | 281SDI01.DGN

DESIGNED: DM	FED. RD DIV. No.	STATE	FEDERAL AID PROJECT No.			HIGHWAY No.
CHECKED: JP	6	TEXAS				US 281
DRAWN: JT	STATE DISTRICT	COUNTY	CONTROL No.	SECTION No.	JOB No.	SHEET No.
CHECKED: DM	PHARR	HIDALGO	0255	08	091	797

Phaisarn C.
11:46:32 AM
06/26/2003
i:\22322a\cadd\sheets\traffic\signing\281sdi02.dgn

MATCH LINE STA. 634+00

MATCH LINE STA. 658+00

EXIST EAST ROW

EXIST WEST ROW

RAMP RN15

RAMP RS16

NBFR

SBFR

℄ (FRN1)

℄ (FRS1-2)

PROP US 281 ℄ (BL1) US 281

RET WALL "A"

RET WALL "C"

RET WALL "D"

TRENTON ROAD

TRENTON ROAD

635+00 640+00 645+00 650+00 655+00

35+00 50640+00 50645+00 50650+00 50655+00

61635+00 61640+00 61645+00 61650+00 61655+00

1 FR6-1R ONE WAY

2 FR6-1R ONE WAY

3 ER5-1 DO NOT ENTER

4 ER5-1 DO NOT ENTER

5 R5-1a WRONG WAY

6 R5-1a WRONG WAY

7 E5-1 EXIT

8 W4-2L

9 R2-1 SPEED LIMIT 50

10 M3-1 NORTH 281 M1-4A3

11 W9-2R LANE ENDS MERGE RIGHT

12 ER5-1 DO NOT ENTER

13 ER5-1 DO NOT ENTER

14 M3-3 SOUTH 281 M1-4A3 M6-2L

15 FW19-2 FOLDING WATCH FOR ICE ON BRIDGE

16 W3-3

17 R5-1a WRONG WAY BACK TO BACK SPL-02 ONLY ONLY

18 R5-1a WRONG WAY BACK TO BACK SPL-02 ONLY ONLY

19 D1-2 HIDALGO COUNTY ⇨ APPRAISAL DISTRICT

20 R3-8U ONLY

21 ER5-1 DO NOT ENTER

22 R3-8U BACK TO BACK ONLY ER5-1 DO NOT ENTER

23 FW4-2L

24 FW9-2R LANE ENDS MERGE RIGHT

25 W4-2L

26 R1-2 YIELD

27 R3-5R ONLY

28 R1-2 YIELD

29 M3-3 SOUTH 281 M1-4A3 M5-1L M3-1 NORTH 281 M1-4A3 M6-1R

30 W4-2L

31 M3-3 SOUTH 281 M1-4A3 M6-1L

32 M3-3 SOUTH 281 M1-4A3 M6-3

33 M3-1 NORTH 281 M1-4A3 M5-1L M3-3 SOUTH 281 M1-4A3 M6-1R

34 W12-3 XX FT XX IN

35 W12-3 XX FT XX IN

36 W12-3 XX FT XX IN

37 W12-3 XX FT XX IN

M3-1 NORTH 281 M1-4A3 M6-1L BACK TO BACK DO NOT ENTER ER5-1 R3-8U ONLY

STA 637+00 (RT) 281 BUSINESS Owassa Rd EXIT ½ MILE

STA 647+40 (LT) Canton Rd I Rd EXIT ONLY

STA 650+00 (RT) 281 BUSINESS Owassa Road EXIT ONLY

STA 658+00 (LT) Canton Rd I Rd EXIT ONLY

MOUNTED ON SSCB RAIL

MOUNTED ON SSCB RAIL

LEGEND:

- PROPOSED LARGE SIGN TO BE INSTALLED
- SIGNS TO BE INSTALLED (ITEM 644)
- SIGNS TO REMAIN IN PLACE
- EXISTING STREET NAME SIGNS TO BE RELOCATED BY OTHERS

THE SEAL APPEARING ON THIS DOCUMENT WAS AUTHORIZED BY PHAISARN CWATANAPHOL, P.E. 89252 ON 06/26/2003.

STATE OF TEXAS PHAISARN CWATANAPHOL 89252 REGISTERED PROFESSIONAL ENGINEER

Parsons Brinckerhoff Quade & Douglas Inc.

Texas Department of Transportation

© 2003 by TxDOT

US 281
SIGNING DETAILS
INSTALLATIONS

STA. 634+00 "BL1" TO
STA. 658+00 "BL1"

PLAN 1"= 200' HORIZ

SHEET 2 OF 10				281SDI02.DGN			
DESIGNED: DM	FED. RD DIV. No.	STATE	FEDERAL AID PROJECT No.			HIGHWAY No.	
CHECKED: JP	6	TEXAS				US 281	
DRAWN: JT	STATE DISTRICT	COUNTY	CONTROL No.	SECTION No.	JOB No.	SHEET No.	
CHECKED: DM	PHARR	HIDALGO	0255	08	091	798	

Phaisarn C.

11:46:38 AM

06/26/2003

i:\22322\cadd\sheets\traffic\signing\281sdi03.dgn

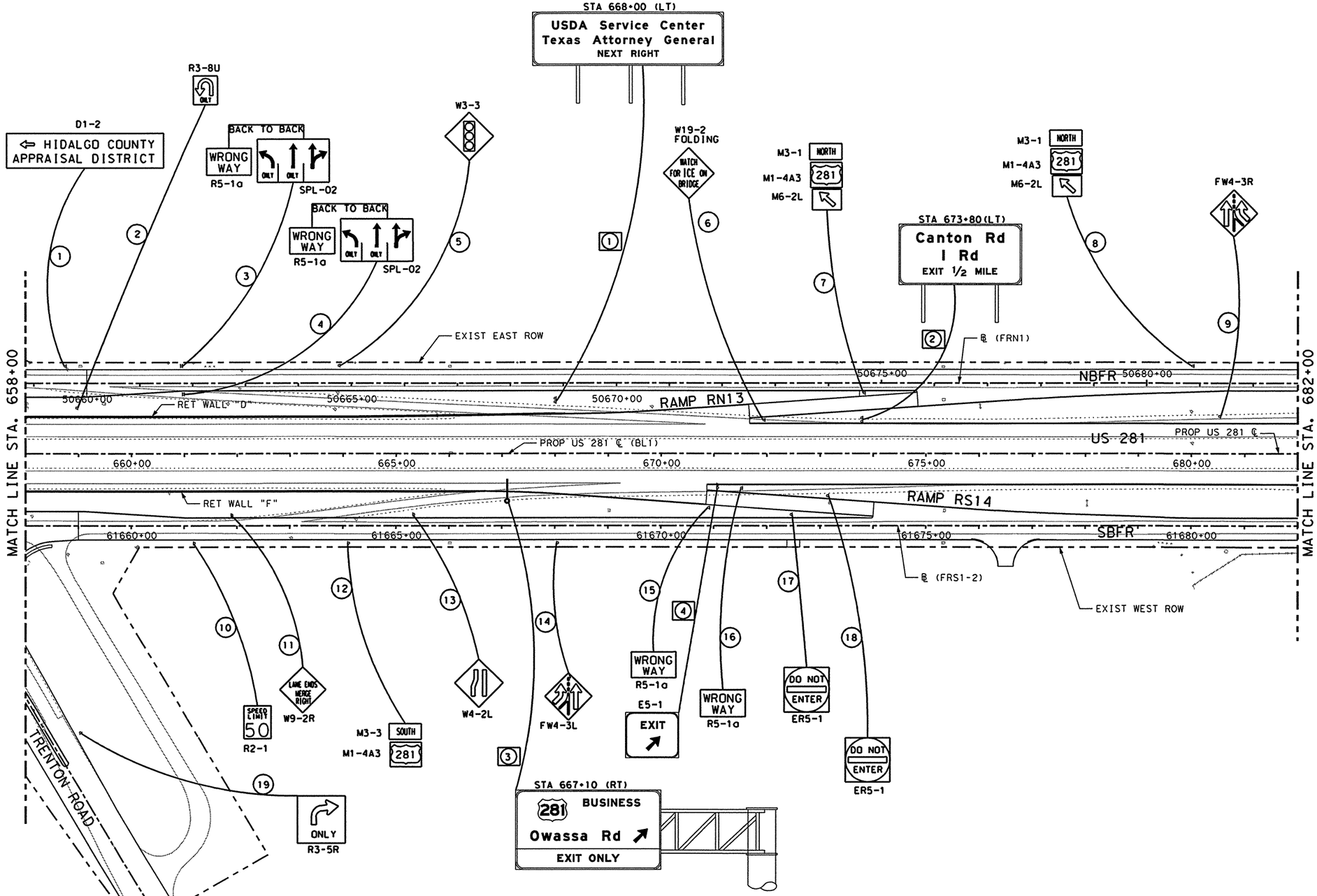

LEGEND:

- PROPOSED LARGE SIGN TO BE INSTALLED
- SIGNS TO BE INSTALLED (ITEM 644)
- SIGNS TO REMAIN IN PLACE
- EXISTING STREET NAME SIGNS TO BE RELOCATED BY OTHERS

THE SEAL APPEARING ON THIS DOCUMENT WAS AUTHORIZED BY PHAISARN CWATANAPHOL, P.E. 89252 ON 06/26/2003.

STATE OF TEXAS
PHAISARN CWATANAPHOL
89252
REGISTERED
PROFESSIONAL ENGINEER

Parsons Brinckerhoff Quade & Douglas Inc.

Texas Department of Transportation

© 2003 by TxDOT

US 281
SIGNING DETAILS
INSTALLATIONS

STA. 658+00 "BL1" TO
STA. 682+00 "BL1"

PLAN 1"= 200' HORIZ

SHEET 3 OF 10 | 281SDI03.DGN

DESIGNED: DM	FED. RD DIV. No.	STATE	FEDERAL AID PROJECT No.			HIGHWAY No.	
CHECKED: JP	6	TEXAS				US 281	
DRAWN: JT	STATE DISTRICT	COUNTY	CONTROL No.	SECTION No.	JOB No.	SHEET No.	
CHECKED: DM	PHARR	HIDALGO	0255	08	091	799	

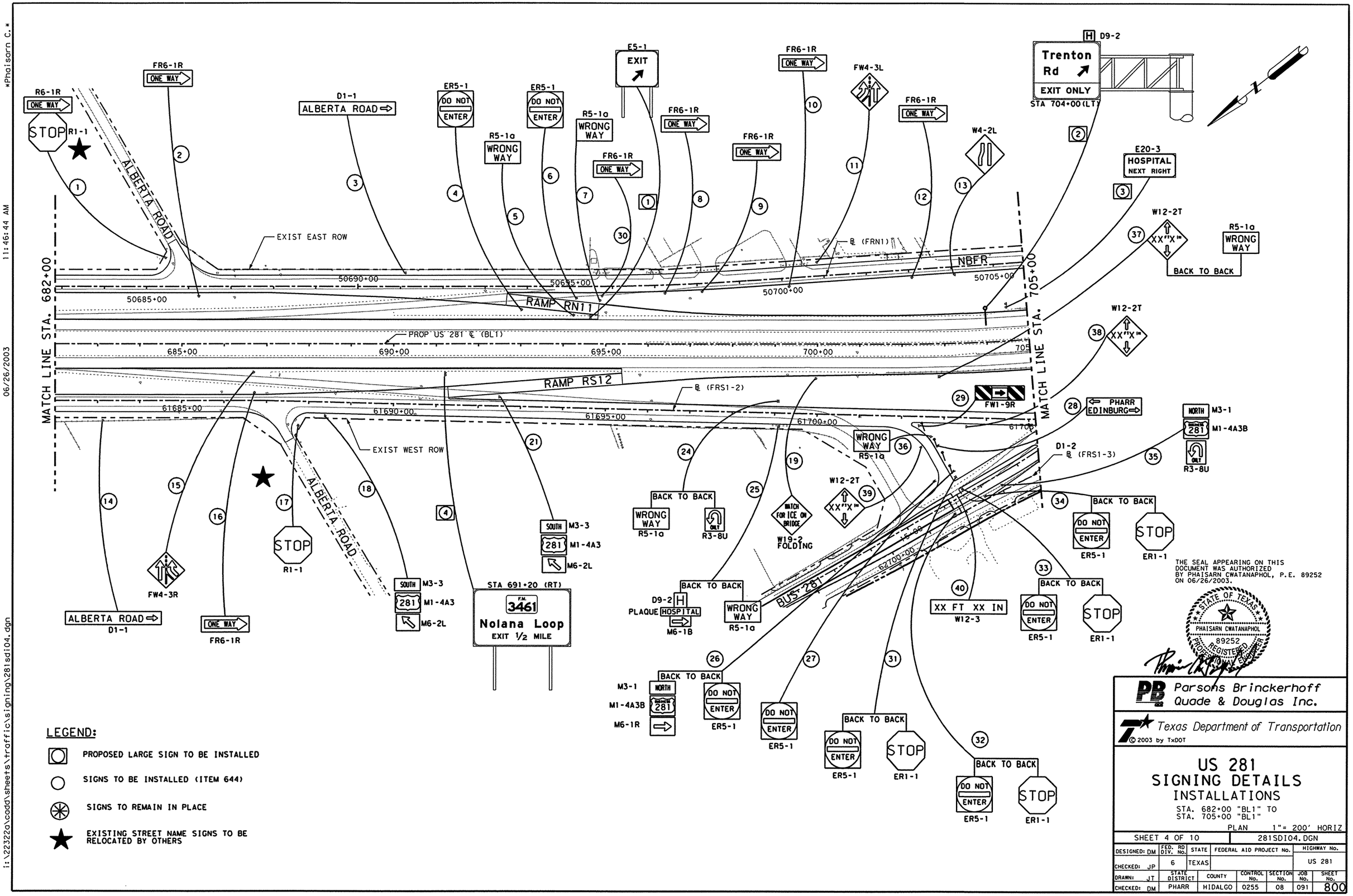

THE SEAL APPEARING ON THIS DOCUMENT WAS AUTHORIZED BY PHAISARN CWATANAPHOL, P.E. 89252 ON 06/26/2003.

STATE OF TEXAS
PHAISARN CWATANAPHOL
89252
REGISTERED PROFESSIONAL ENGINEER

LEGEND:

- PROPOSED LARGE SIGN TO BE INSTALLED
- SIGNS TO BE INSTALLED (ITEM 644)
- SIGNS TO REMAIN IN PLACE
- EXISTING STREET NAME SIGNS TO BE RELOCATED BY OTHERS

Parsons Brinckerhoff Quade & Douglas Inc.

Texas Department of Transportation

© 2003 by TxDOT

US 281 SIGNING DETAILS INSTALLATIONS

STA. 682+00 "BL1" TO
STA. 705+00 "BL1"

PLAN 1"= 200' HORIZ

SHEET 4 OF 10 | 281SDI04.DGN

DESIGNED: DM	FED. RD DIV. No.	STATE	FEDERAL AID PROJECT No.	HIGHWAY No.
CHECKED: JP	6	TEXAS		US 281

DRAWN: JT	STATE DISTRICT	COUNTY	CONTROL No.	SECTION No.	JOB No.	SHEET No.
CHECKED: DM	PHARR	HIDALGO	0255	08	091	800

Phaisarn C.
11:46:44 AM
06/26/2003
i:\22322a\cadd\sheets\traffic\signing\281sdi04.dgn

Phaisarn C.
11:46:51 AM
06/26/2003
i:\22322a\cadd\sheets\traffic\signing\281sdi05.dgn

Trenton Road
EXIT ONLY
STA 714+00 (LT)
H D9-2

STA 728+20 (LT)
281 BUSINESS
H D9-2

STA 711+00 (RT)
FM 3461
Nolana Loop
EXIT ONLY

FM 3461
Nolana Loop
EXIT ONLY
STA 723+40 (RT)

MATCH LINE STA. 705+00
MATCH LINE STA. 729+00

NBFR
SBFR
US 281
RAMP RS10
PROP US 281 ℄ (BL1)
℄ (FRN1)
℄ (FRS1-3)
EXIST EAST ROW
EXIST WEST ROW
OWASSA ROAD
MOUNTED ON SSTR
PHARR CITY LIMIT POP. 46660 I-2a
EDINBURG CITY LIMIT POP. 48465 I-2a
OWASSA ROAD D1-1
XX FT XX IN W12-3
SPEED LIMIT 35 R2-1
SPEED LIMIT 50 R2-1
W12-2T XX'XX"
STOP R1-1
ONE WAY R6-1R
FR6-1R ONE WAY
DO NOT ENTER ER5-1
BACK TO BACK
WRONG WAY R5-1a
SPL-02
R3-8U ONLY
M3-1 NORTH 281 M1-4A3
M3-3 SOUTH 281 M1-4A3
M5-1L M6-1R
M6-1L
W9-2R LANE ENDS MERGE RIGHT
W4-2L LANE ENDS MERGE RIGHT
W1-4R
W13-1 40 M.P.H.
W19-2 FOLDING WATCH FOR ICE ON BRIDGE
D9-2 H PLAQUE HOSPITAL M6-2BL
R14-3 HC M6-3
R14-2 HC TRUCK ROUTE R14-1 M6-2R
E5-1 EXIT
FW4-3L

LEGEND:

- PROPOSED LARGE SIGN TO BE INSTALLED
- SIGNS TO BE INSTALLED (ITEM 644)
- SIGNS TO REMAIN IN PLACE
- EXISTING STREET NAME SIGNS TO BE RELOCATED BY OTHERS

THE SEAL APPEARING ON THIS DOCUMENT WAS AUTHORIZED BY PHAISARN CWATANAPHOL, P.E. 89252 ON 06/26/2003.

STATE OF TEXAS
PHAISARN CWATANAPHOL
89252
REGISTERED
PROFESSIONAL ENGINEER

PB Parsons Brinckerhoff Quade & Douglas Inc.

Texas Department of Transportation

© 2003 by TxDOT

US 281
SIGNING DETAILS
INSTALLATIONS

STA. 705+00 "BL1" TO
STA. 729+00 "BL1"

PLAN 1"= 200' HORIZ

SHEET 5 OF 10				281SDI05.DGN			
DESIGNED: DM	FED. RD DIV. No.	STATE	FEDERAL AID PROJECT No.			HIGHWAY No.	
CHECKED: JP	6	TEXAS				US 281	
DRAWN: JT	STATE DISTRICT	COUNTY	CONTROL No.	SECTION No.	JOB No.	SHEET No.	
CHECKED: DM	PHARR	HIDALGO	0255	08	091	801	

Phaisarn C.
11:46:58 AM
06/26/2003
i:\22322o\cadd\sheets\traffic\signing\281sdi06.dgn

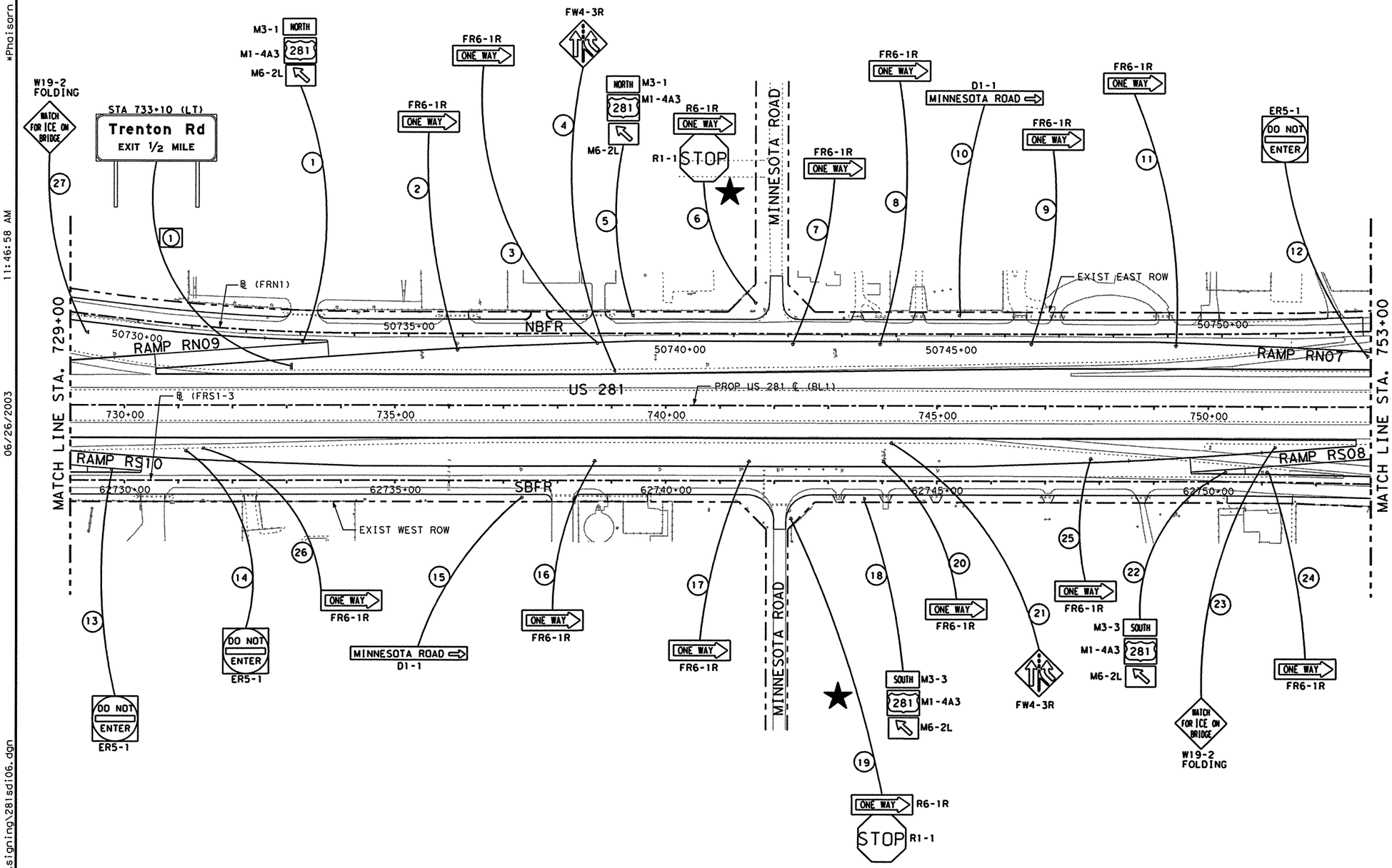

LEGEND:

- PROPOSED LARGE SIGN TO BE INSTALLED
- SIGNS TO BE INSTALLED (ITEM 644)
- SIGNS TO REMAIN IN PLACE
- EXISTING STREET NAME SIGNS TO BE RELOCATED BY OTHERS

THE SEAL APPEARING ON THIS DOCUMENT WAS AUTHORIZED BY PHAISARN CHATANAPHOL, P.E. 89252 ON 06/26/2003.

STATE OF TEXAS
PHAISARN CHATANAPHOL
89252
PROFESSIONAL REGISTERED ENGINEER

Parsons Brinckerhoff Quade & Douglas Inc.

Texas Department of Transportation

© 2003 by TxDOT

US 281
SIGNING DETAILS
INSTALLATIONS

STA. 729+00 "BL1" TO
STA. 753+00 "BL1"

PLAN 1"= 200' HORIZ

SHEET 6 OF 10 | 281SDI06.DGN

DESIGNED: DM	FED. RD DIV. No.	STATE	FEDERAL AID PROJECT No.			HIGHWAY No.	
CHECKED: JP	6	TEXAS				US 281	
DRAWN: JT	STATE DISTRICT	COUNTY	CONTROL No.	SECTION No.	JOB No.	SHEET No.	
CHECKED: DM	PHARR	HIDALGO	0255	08	091	802	

*Phaisarn C. *
11:47:05 AM
06/26/2003
i:\22322a\cadd\sheets\traffic\signing\281sdi07.dgn

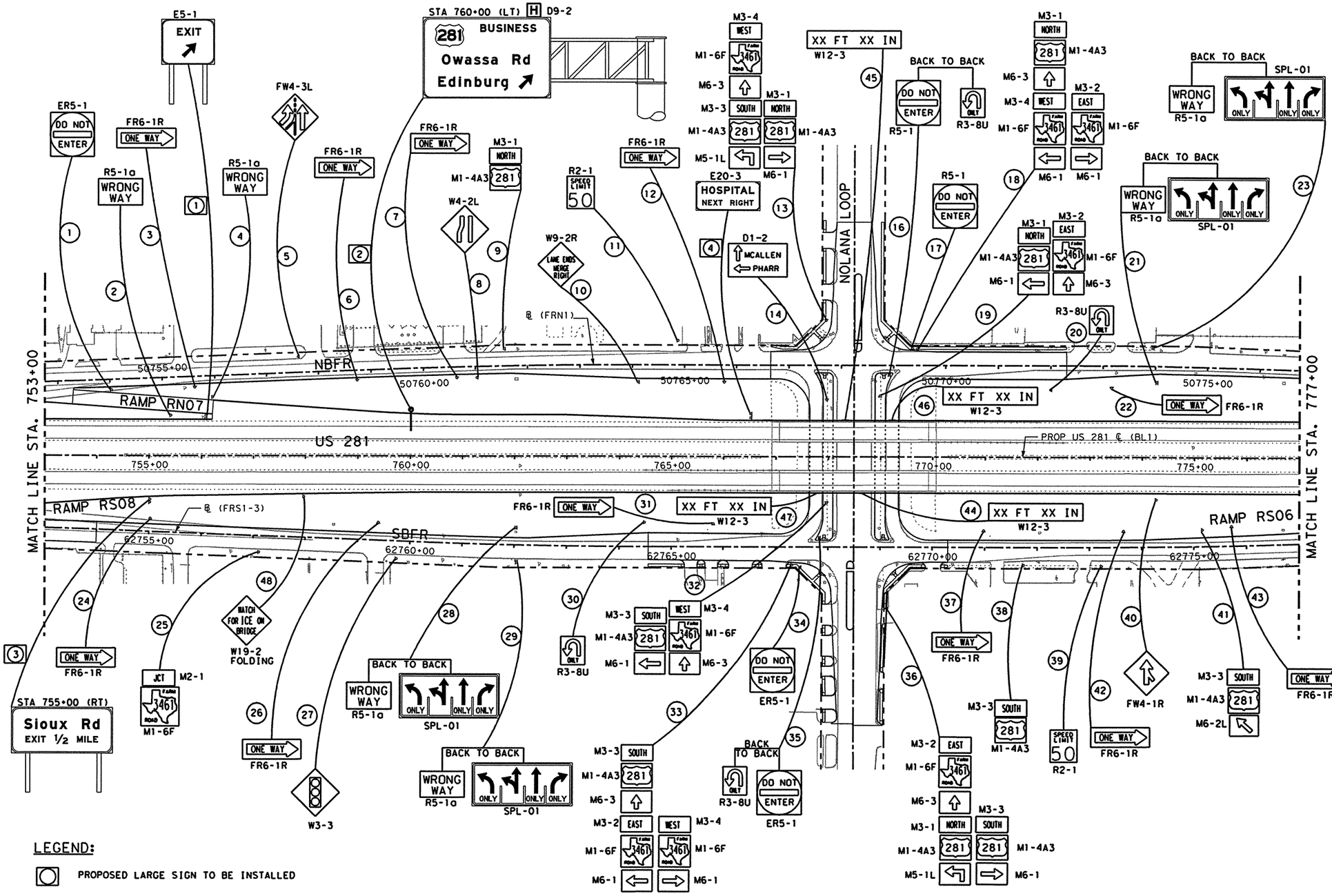

LEGEND:

- PROPOSED LARGE SIGN TO BE INSTALLED
- SIGNS TO BE INSTALLED (ITEM 644)
- SIGNS TO REMAIN IN PLACE
- EXISTING STREET NAME SIGNS TO BE RELOCATED BY OTHERS

THE SEAL APPEARING ON THIS DOCUMENT WAS AUTHORIZED BY PHAISARN CWATANAPHOL, P.E. 89252 ON 06/26/2003.

STATE OF TEXAS
PHAISARN CWATANAPHOL
89252
PROFESSIONAL REGISTERED ENGINEER

PB Parsons Brinckerhoff Quade & Douglas Inc.

Texas Department of Transportation

© 2003 by TxDOT

US 281
SIGNING DETAILS
INSTALLATIONS

STA. 753+00 "BL1" TO
STA. 777+00 "BL1"

PLAN 1"= 200' HORIZ

SHEET 7 OF 10				281SDI07.DGN			
DESIGNED: DM	FED. RD DIV. No.	STATE	FEDERAL AID PROJECT No.				HIGHWAY No.
CHECKED: JP	6	TEXAS					US 281
DRAWN: JT	STATE DISTRICT	COUNTY		CONTROL No.	SECTION No.	JOB No.	SHEET No.
CHECKED: DM	PHARR	HIDALGO		0255	08	091	803

Phaisarn C.
06/26/2003 11:47:11 AM
i:\22322a\cadd\sheets\traffic\signing\281sdi08.dgn

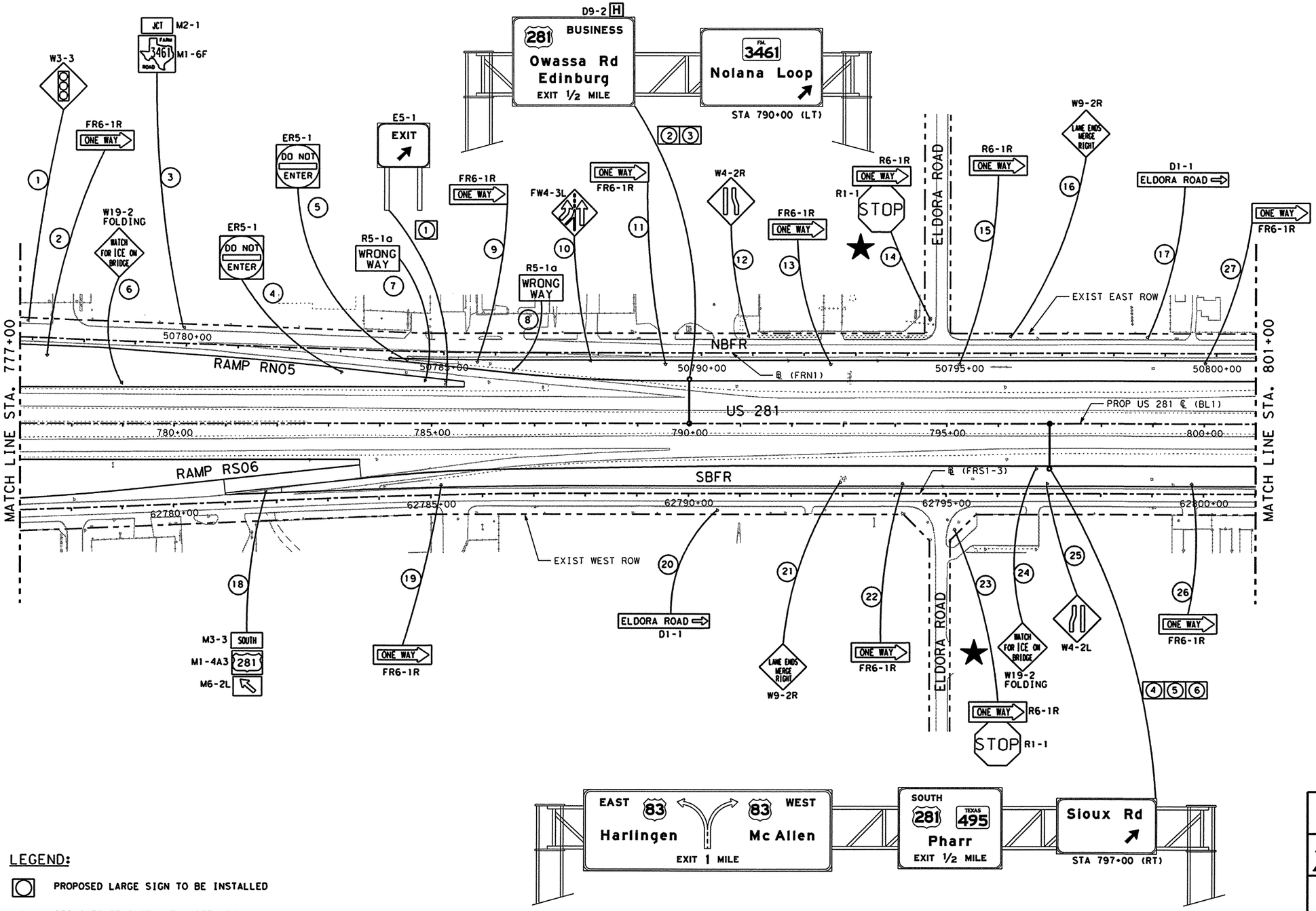

LEGEND:

- PROPOSED LARGE SIGN TO BE INSTALLED
- SIGNS TO BE INSTALLED (ITEM 644)
- SIGNS TO REMAIN IN PLACE
- EXISTING STREET NAME SIGNS TO BE RELOCATED BY OTHERS

THE SEAL APPEARING ON THIS DOCUMENT WAS AUTHORIZED BY PHAISARN CWATANAPHOL, P.E. 89252 ON 06/26/2003.

STATE OF TEXAS
PHAISARN CWATANAPHOL
89252
REGISTERED
PROFESSIONAL ENGINEER

Parsons Brinckerhoff Quade & Douglas Inc.

Texas Department of Transportation

© 2003 by TxDOT

US 281
SIGNING DETAILS
INSTALLATIONS

STA. 777+00 "BL1" TO
STA. 801+00 "BL1"

PLAN 1"= 200' HORIZ

SHEET 8 OF 10 | 281SDI08.DGN

DESIGNED: DM	FED. RD DIV. No.	STATE	FEDERAL AID PROJECT No.	HIGHWAY No.
CHECKED: JP	6	TEXAS		US 281

DRAWN: JT	STATE DISTRICT	COUNTY	CONTROL No.	SECTION No.	JOB No.	SHEET No.
CHECKED: DM	PHARR	HIDALGO	0255	08	091	804

Phaisarn C.
11:47:18 AM
06/26/2003
i:\22322o\cadd\sheets\traffic\signing\281sdi09.dgn

STA 816+40 (LT)
F.M. 3461
Nolana Loop
EXIT 1/2 MILE

SHARM DR.
SIOUX ROAD
EXIST EAST ROW
EXIST WEST ROW
℄ (FRN1)
℄ (FRS1-3)
PROP US 281 ℄ (BL1)
RAMP RN03
RAMP RS04
NBFR
SBFR
US 281
MATCH LINE STA. 801+00
MATCH LINE STA. 825+00
50805+00
50810+00
50815+00
50820+00
805+00
810+00
815+00
820+00
825
62805+00
62810+00
62815+00
62820+00
6282

1 FR6-1R ONE WAY
2 M3-1 NORTH / M1-4A3 281 / M6-2L
3 FW4-1R
4 W19-2 FOLDING WATCH FOR ICE ON BRIDGE
5 R6-1R ONE WAY / R1-1 STOP
6 FR6-1R ONE WAY
7 M3-1 NORTH / M1-4A3 281 / M6-2L
8 R2-1 SPEED LIMIT 50
9 M3-1 NORTH / M1-4A3 281
10 W19-2 FOLDING WATCH FOR ICE ON BRIDGE
11 R3-8U ONLY
12 ER5-1 DO NOT ENTER
13 FR6-1R ONE WAY
14 R3-8U ONLY
15 FW4-3L
16 FR6-1R ONE WAY
17 R5-1a WRONG WAY
18 R5-1a WRONG WAY
19 W19-2 FOLDING WATCH FOR ICE ON BRIDGE
20 ER5-1 DO NOT ENTER
21 ER5-1 DO NOT ENTER
22 W3-3
23 FR6-1R ONE WAY
24 R5-1a WRONG WAY
25 SPL-02 BACK TO BACK ONLY ONLY
26 R3-8U ONLY
27 R5-1 DO NOT ENTER
28 R3-8U ONLY / ER5-1 DO NOT ENTER BACK TO BACK
29 W9-2R LANE ENDS MERGE RIGHT
30 FR6-1R ONE WAY
31 FR6-1R ONE WAY
32 W12-3 XX FT XX IN
33 M3-1 NORTH / M3-3 SOUTH / M1-4A3 281 / M5-1L / M6-1R
34 M3-3 SOUTH / M1-4A3 281 / M6-3
35 M3-3 SOUTH / M1-4A3 281 / M6-1L
36 W12-3 XX FT XX IN
37 M3-3 SOUTH / M3-1 NORTH / M1-4A3 281 / M5-1L / M6-1R
38 M3-1 NORTH / M1-4A3 281 / M6-1L
39 W12-3 XX FT XX IN
40 VMS (SEE SHEET NUMBER 842 FOR DETAILS)

EXIT E5-1
Pharr Intl Bridge NEXT EXIT STA 808+00 (RT)
EAST 83 Harlingen / WEST 83 Mc Allen EXIT 3/4 MILE
SOUTH 281 TEXAS 495 Pharr EXIT ONLY
STA 811+40 (RT)

LEGEND:

- PROPOSED LARGE SIGN TO BE INSTALLED
- SIGNS TO BE INSTALLED (ITEM 644)
- SIGNS TO REMAIN IN PLACE
- EXISTING STREET NAME SIGNS TO BE RELOCATED BY OTHERS

THE SEAL APPEARING ON THIS DOCUMENT WAS AUTHORIZED BY PHAISARN CWATANAPHOL, P.E. 89252 ON 06/26/2003.

STATE OF TEXAS
PHAISARN CWATANAPHOL
89252
REGISTERED PROFESSIONAL ENGINEER

Parsons Brinckerhoff Quade & Douglas Inc.

Texas Department of Transportation

© 2003 by TxDOT

US 281
SIGNING DETAILS
INSTALLATIONS

STA. 801+00 "BL1" TO
STA. 825+00 "BL1"

PLAN 1"= 200' HORIZ

SHEET 9 OF 10 | 281SDI09.DGN

DESIGNED: DM	FED. RD DIV. No.	STATE	FEDERAL AID PROJECT No.	HIGHWAY No.
CHECKED: JP	6	TEXAS		US 281

DRAWN: JT	STATE DISTRICT	COUNTY	CONTROL No.	SECTION No.	JOB No.	SHEET No.
CHECKED: DM	PHARR	HIDALGO	0255	08	091	805

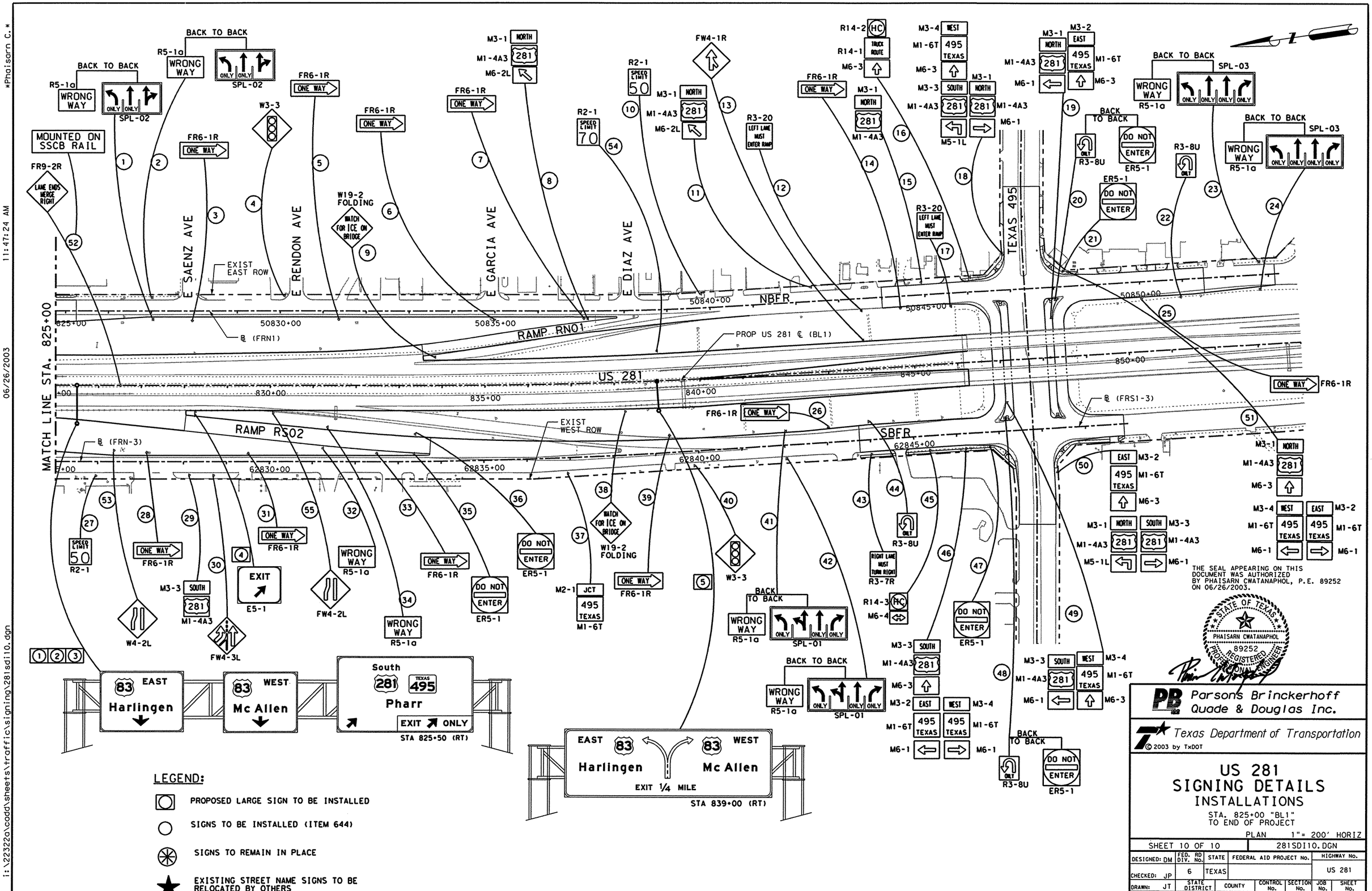

THE SEAL APPEARING ON THIS DOCUMENT WAS AUTHORIZED BY PHAISARN CWATANAPHOL, P.E. 89252 ON 06/26/2003.

STATE OF TEXAS
PHAISARN CWATANAPHOL
89252
REGISTERED PROFESSIONAL ENGINEER

Parsons Brinckerhoff Quade & Douglas Inc.

Texas Department of Transportation

© 2003 by TxDOT

US 281 SIGNING DETAILS INSTALLATIONS

STA. 825+00 "BL1" TO END OF PROJECT

PLAN 1"= 200' HORIZ

SHEET 10 OF 10 | 281SDI10.DGN

DESIGNED: DM	FED. RD DIV. No.	STATE	FEDERAL AID PROJECT No.	HIGHWAY No.
CHECKED: JP	6	TEXAS		US 281

DRAWN: JT	STATE DISTRICT	COUNTY	CONTROL No.	SECTION No.	JOB No.	SHEET No.
CHECKED: DM	PHARR	HIDALGO	0255	08	091	806

Phaisarn C.

11:47:24 AM

06/26/2003

i:\22322a\cadd\sheets\traffic\signing\281sdi10.dgn

Phaisarn C.
06/26/2003 03:40:12 PM
i:\22322a\cadd\sheets\traffic\signing\lg sign details\281sgn01.dgn

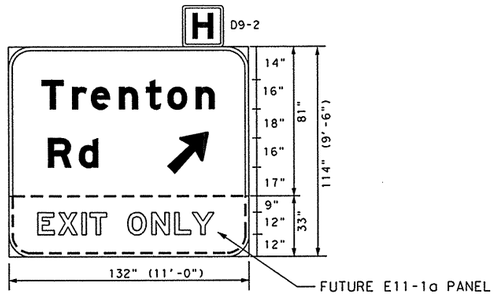

SIGN NO. 1 MOUNT TYPE: COSS
SHEET NO. 1/10 BACKGROUND: GREEN
STA. 614+00 RT. RADIUS: 12"

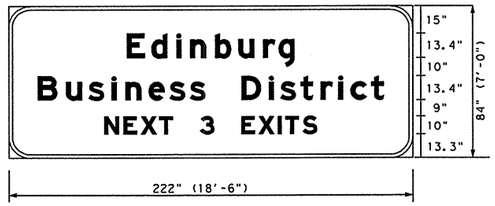

SIGN NO. 2 MOUNT TYPE: GROUND
SHEET NO. 1/10 BACKGROUND: GREEN
STA. 631+40 LT. RADIUS: 12"

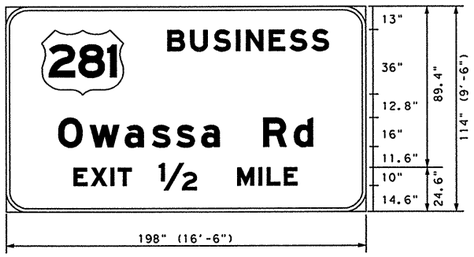

SIGN NO. 1 MOUNT TYPE: GROUND
SHEET NO. 2/10 BACKGROUND: GREEN
STA. 637+00 RT. RADIUS: 12"

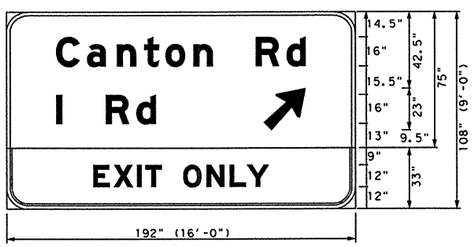

SIGN NO. 3 MOUNT TYPE: COSS
SHEET NO. 2/10 BACKGROUND: GREEN
STA. 647+40 LT. RADIUS: 12"

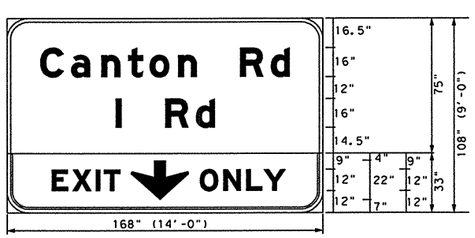

SIGN NO. 4 MOUNT TYPE: COSS
SHEET NO. 2/10 BACKGROUND: GREEN
STA. 658+00 LT. RADIUS: 12"

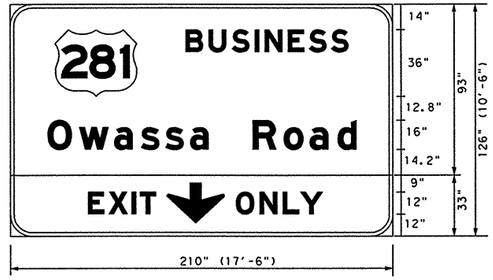

SIGN NO. 5 MOUNT TYPE: COSS
SHEET NO. 2/10 BACKGROUND: GREEN
STA. 650+00 RT. RADIUS: 12"

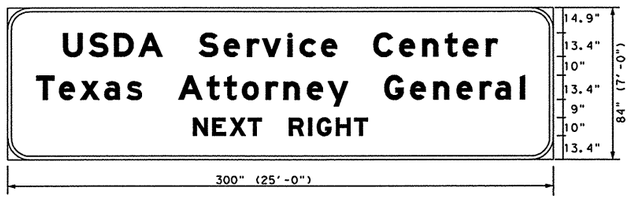

SIGN NO. 1 MOUNT TYPE: GROUND
SHEET NO. 3/10 BACKGROUND: GREEN
STA. 668+00 LT. RADIUS: 12"

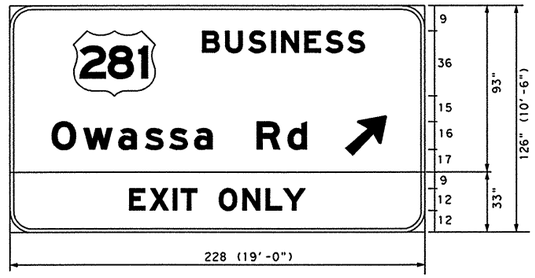

SIGN NO. 3 MOUNT TYPE: COSS
SHEET NO. 3/10 BACKGROUND: GREEN
STA. 667+10 RT. RADIUS: 12"

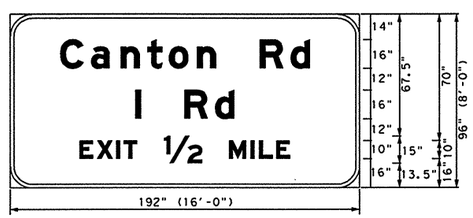

SIGN NO. 2 MOUNT TYPE: GROUND
SHEET NO. 3/10 BACKGROUND: GREEN
STA. 673+80 LT. RADIUS: 9"

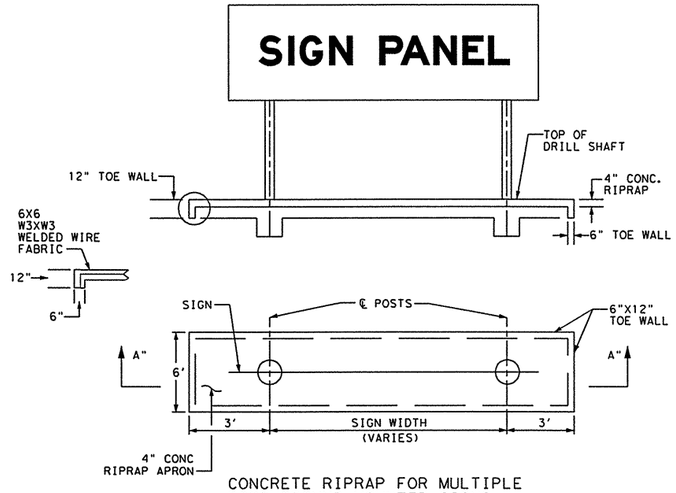

CONCRETE RIPRAP FOR MULTIPLE POST GROUND MOUNTED SIGNS

NOTE:
CONCRETE FOR RIPRAP SHALL BE CLASS "B" AND SHALL BE REINFORCED AS SPECIFIED IN GENERAL NOTES FOR ITEM 432 "RIPRAP".

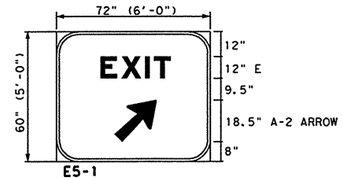

SIGN NO. 3 SIGN NO. 1
SHEET NO. 1/10 SHEET NO. 7/10

SIGN NO. 2 SIGN NO. 1
SHEET NO. 2/10 SHEET NO. 8/10

SIGN NO. 4 SIGN NO. 2
SHEET NO. 3/10 SHEET NO. 9/10

SIGN NO. 1 SIGN NO. 4
SHEET NO. 4/10 SHEET NO. 10/10

SIGN NO. 5
SHEET NO. 5/10

MOUNT TYPE: GROUND
BACKGROUND: GREEN
RADIUS: 6"

THE SEAL APPEARING ON THIS DOCUMENT WAS AUTHORIZED BY PHAISARN CWATANAPHOL, P.E. 89252 ON 06/26/2003.

Parsons Brinckerhoff Quade & Douglas Inc.

Texas Department of Transportation

© 2003 by TxDOT

SIGNING DETAILS (INSTALLATIONS) LARGE SIGNS

SHEET 1 OF 4							281SGN01.DGN	
DESIGNED: TT	FED. RD DIV. NO.	STATE	FEDERAL AID PROJECT No.				HIGHWAY No.	
CHECKED: DM	6	TEXAS					US 281	
DRAWN: JT	STATE DISTRICT	COUNTY	CONTROL No.	SECTION No.	JOB No.	SHEET No.		
CHECKED: DM	PHARR	HIDALGO	0255	08	091	807		

Phaisarn C.
03:40:15 PM
06/26/2003
i:\22322a\cadd\sheets\traffic\signing\lg sign details\281sgn02.dgn

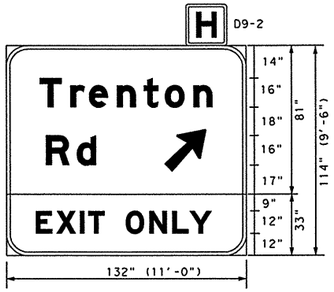

SIGN NO. 2 — MOUNT TYPE: COSS
SHEET NO. 4/10 — BACKGROUND: GREEN
STA. 704+00 LT. — RADIUS: 12"

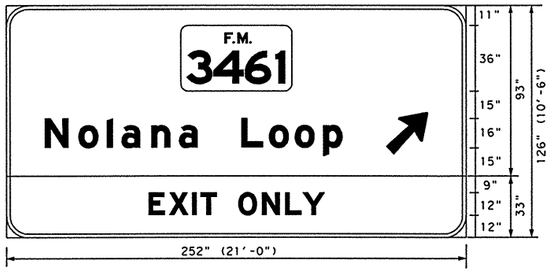

SIGN NO. 3 — MOUNT TYPE: COSS
SHEET NO. 5/10 — BACKGROUND: GREEN
STA. 723+40 RT. — RADIUS: 12"

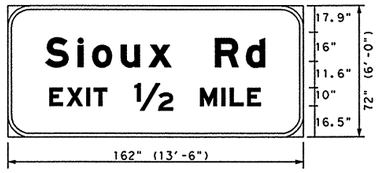

SIGN NO. 3 — MOUNT TYPE: GROUND
SHEET NO. 7/10 — BACKGROUND: GREEN
STA. 755+00 RT. — RADIUS: 9"

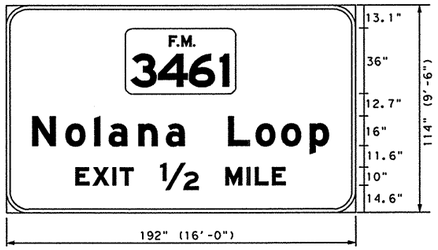

SIGN NO. 4 — SIGN NO. 1
SHEET NO. 4/10 — SHEET NO. 9/10
STA. 691+20 RT. — STA. 816+40 LT.

MOUNT TYPE: GROUND
BACKGROUND: GREEN
RADIUS: 12"

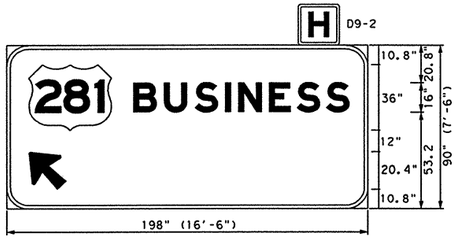

SIGN NO. 4 — MOUNT TYPE: GROUND
SHEET NO. 5/10 — BACKGROUND: GREEN
STA. 728+20 LT. — RADIUS: 12"

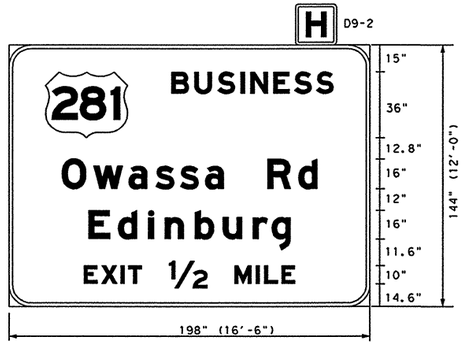

SIGN NO. 2 — MOUNT TYPE: OSB
SHEET NO. 8/10 — BACKGROUND: GREEN
STA. 790+00 LT. — RADIUS: 12"

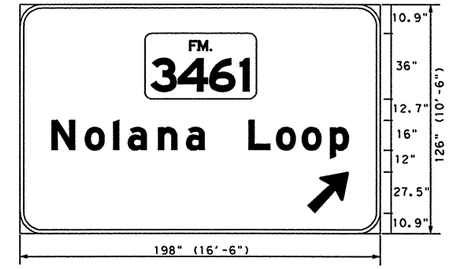

SIGN NO. 3 — MOUNT TYPE: OSB
SHEET NO. 8/10 — BACKGROUND: GREEN
STA. 790+00 LT. — RADIUS: 12"

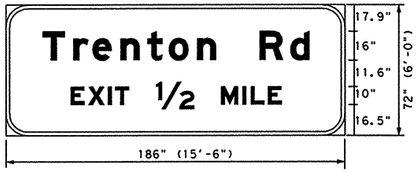

SIGN NO. 1 — MOUNT TYPE: GROUND
SHEET NO. 6/10 — BACKGROUND: GREEN
STA. 733+10 LT. — RADIUS: 9"

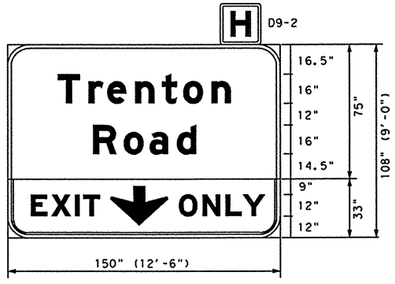

SIGN NO. 1 — MOUNT TYPE: COSS
SHEET NO. 5/10 — BACKGROUND: GREEN
STA. 714+00 LT. — RADIUS: 12"

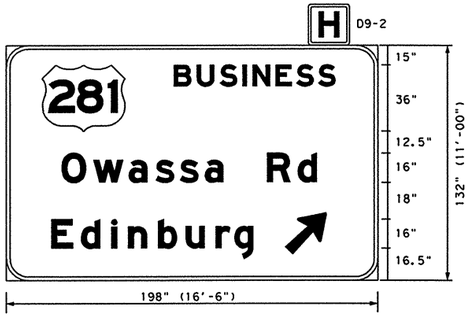

SIGN NO. 2 — MOUNT TYPE: COSS
SHEET NO. 7/10 — BACKGROUND: GREEN
STA. 760+00 LT. — RADIUS: 12"

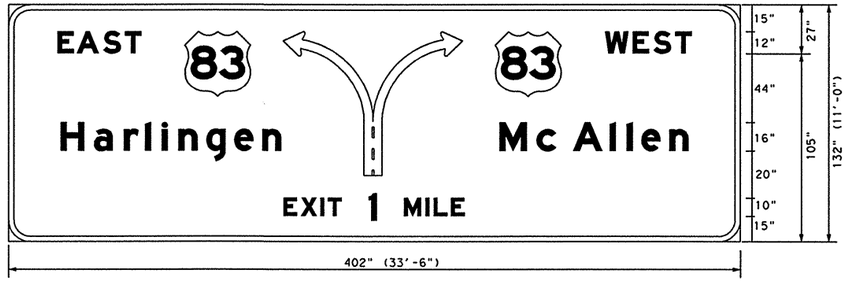

SIGN NO. 4 — MOUNT TYPE: OSB
SHEET NO. 8/10 — BACKGROUND: GREEN
STA. 797+00 RT. — RADIUS: 12"

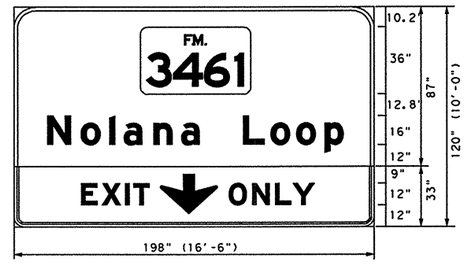

SIGN NO. 2 — MOUNT TYPE: COSS
SHEET NO. 5/10 — BACKGROUND: GREEN
STA. 711+00 RT. — RADIUS: 12"

THE SEAL APPEARING ON THIS DOCUMENT WAS AUTHORIZED BY PHAISARN CWATANAPHOL, P.E. 89252 ON 06/26/2003.

Parsons Brinckerhoff Quade & Douglas Inc.

Texas Department of Transportation

© 2003 by TxDOT

SIGNING DETAILS (INSTALLATIONS) LARGE SIGNS

SHEET 2 OF 4				281SGN02.DGN			
DESIGNED: TT	FED. RD. DIV. NO.	STATE	FEDERAL AID PROJECT No.			HIGHWAY No.	
CHECKED: DM	6	TEXAS				US 281	
DRAWN: JT	STATE DISTRICT	COUNTY	CONTROL No.	SECTION No.	JOB No.	SHEET No.	
CHECKED: DM	PHARR	HIDALGO	0255	08	091	808	

Phaisarn C.
03:40:17 PM
06/26/2003
i:\22322a\cadd\sheets\traffic\signing\lg sign details\281sgn03.dgn

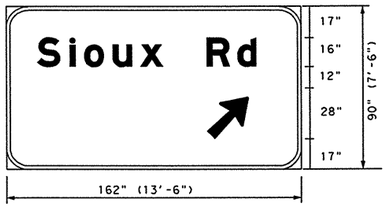

SIGN NO. 6
SHEET NO. 8/10
STA. 797+00 RT.

MOUNT TYPE: OSB
BACKGROUND: GREEN
RADIUS: 12"

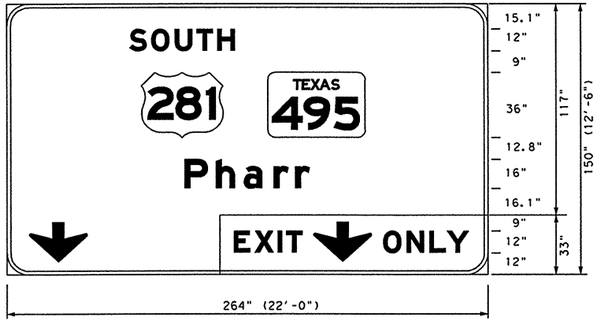

SIGN NO. 5
SHEET NO. 9/10
STA. 811+40 RT.

MOUNT TYPE: OSB
BACKGROUND: GREEN
RADIUS: 12"

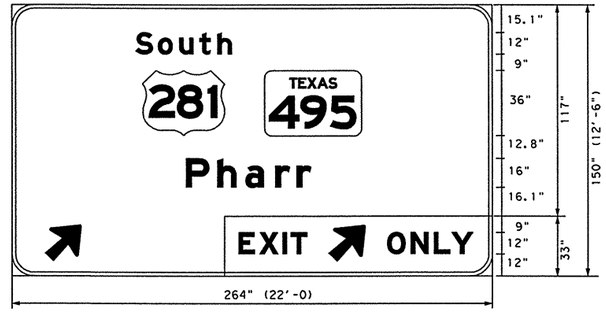

SIGN NO. 3
SHEET NO. 10/10
STA. 825+50 RT.

MOUNT TYPE: OSB
BACKGROUND: GREEN
RADIUS: 12"

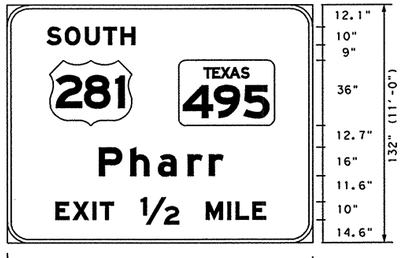

SIGN NO. 5
SHEET NO. 8/10
STA. 797+00 RT.

MOUNT TYPE: OSB
BACKGROUND: GREEN
RADIUS: 12"

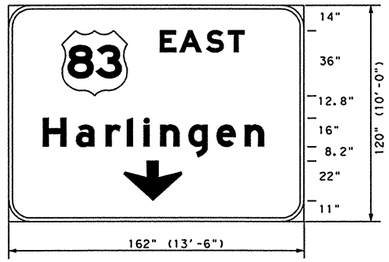

SIGN NO. 1
SHEET NO. 10/10
STA. 825+50 RT.

MOUNT TYPE: OSB
BACKGROUND: GREEN
RADIUS: 12"

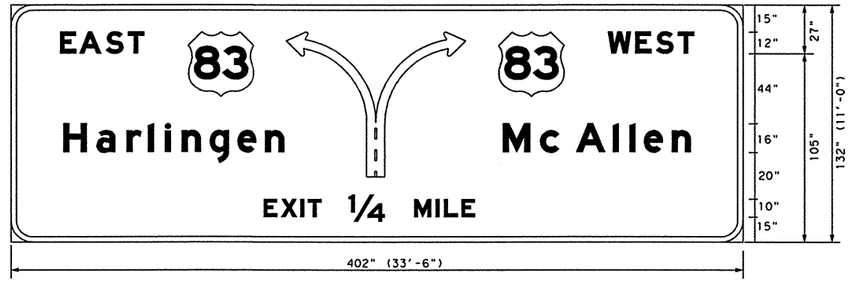

SIGN NO. 5
SHEET NO. 10/10
STA. 839+00 RT.

MOUNT TYPE: OSB
BACKGROUND: GREEN
RADIUS: 12"

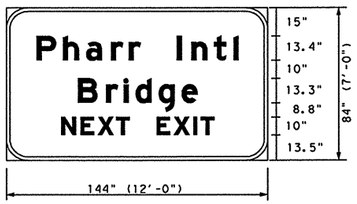

SIGN NO. 3
SHEET NO. 9/10
STA. 808+00 RT

MOUNT TYPE: GROUND
BACKGROUND: GREEN
RADIUS: 12"

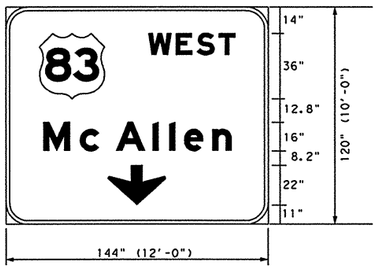

SIGN NO. 2
SHEET NO. 10/10
STA. 825+50 RT.

MOUNT TYPE: OSB
BACKGROUND: GREEN
RADIUS: 12"

SIGN NO. 3
SHEET NO. 4/10
STA. 704+52 LT.

SIGN NO. 4
SHEET NO. 7/10
STA. 766+60 LT.

MOUNT TYPE: GROUND
BACKGROUND: BLUE
RADIUS: 9"

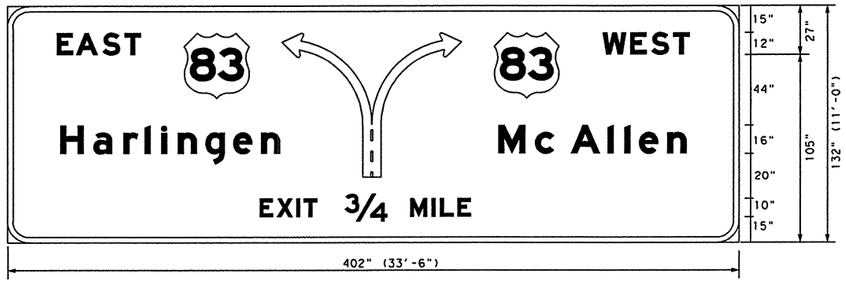

SIGN NO. 4
SHEET NO. 9/10
STA. 811+40 RT

MOUNT TYPE: OSB
BACKGROUND: GREEN
RADIUS: 12"

THE SEAL APPEARING ON THIS DOCUMENT WAS AUTHORIZED BY PHAISARN CWATANAPHOL, P.E. 89252 ON 06/26/2003.

STATE OF TEXAS
PHAISARN CWATANAPHOL
89252
REGISTERED PROFESSIONAL ENGINEER

Parsons Brinckerhoff Quade & Douglas Inc.

Texas Department of Transportation

© 2003 by TxDOT

SIGNING DETAILS (INSTALLATIONS) LARGE SIGNS

SHEET 3 OF 4 | 281SGN03.DGN

DESIGNED: TT	FED. RD DIV. No.	STATE	FEDERAL AID PROJECT No.			HIGHWAY No.	
CHECKED: DM	6	TEXAS				US 281	
DRAWN: JT	STATE DISTRICT	COUNTY	CONTROL No.	SECTION No.	JOB No.	SHEET No.	
CHECKED: DM	PHARR	HIDALGO	0255	08	091	809	

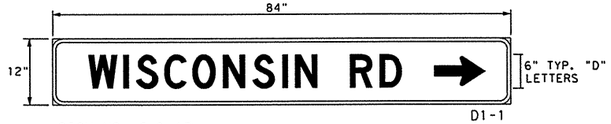

SIGN NO. 6 & 13
SHEET NO. 1/10
GREEN REFL. BACKGROUND
WITH WHITE REFL. LETTERS & BORDER

SIGN NO. 10 & 19
SHEET NO. 5/10
GREEN REFL. BACKGROUND
WITH WHITE REFL. LETTERS & BORDER

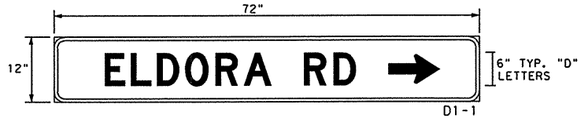

SIGN NO. 17 & 20
SHEET NO. 8/10
GREEN REFL. BACKGROUND
WITH WHITE REFL. LETTERS & BORDER

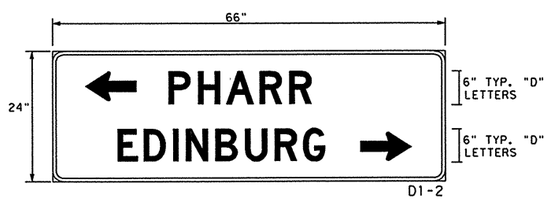

SIGN NO. 28
SHEET NO. 4/10
GREEN REFL. BACKGROUND
WITH WHITE REFL. LETTERS & BORDER

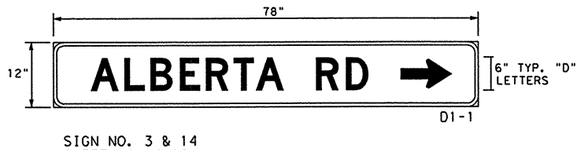

SIGN NO. 3 & 14
SHEET NO. 4/10
GREEN REFL. BACKGROUND
WITH WHITE REFL. LETTERS & BORDER

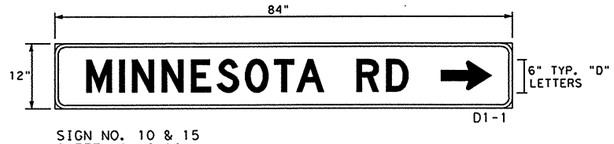

SIGN NO. 10 & 15
SHEET NO. 6/10
GREEN REFL. BACKGROUND
WITH WHITE REFL. LETTERS & BORDER

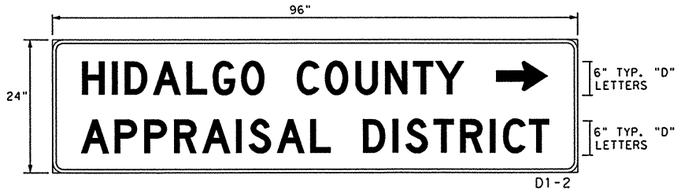

SIGN NO. 19
SHEET NO. 2/10
GREEN REFL. BACKGROUND
WITH WHITE REFL. LETTERS & BORDER

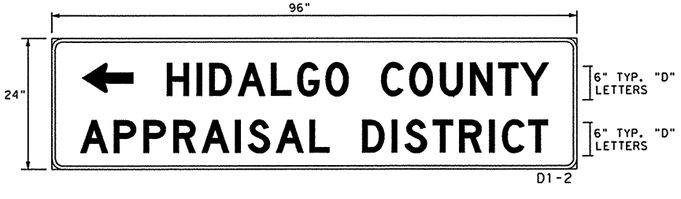

SIGN NO. 1
SHEET NO. 3/10
GREEN REFL. BACKGROUND
WITH WHITE REFL. LETTERS & BORDER

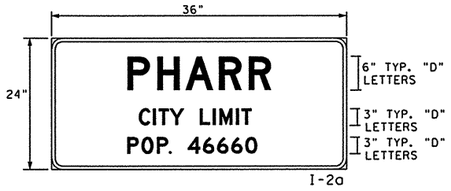

SIGN NO. 22 & 28
SHEET NO. 5/10

GREEN REFL. BACKGROUND
WITH WHITE REFL. LETTERS & BORDER

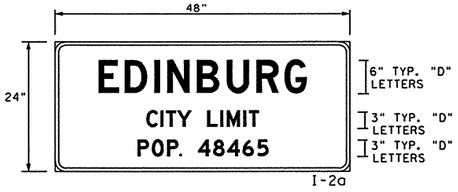

SIGN NO. 8 & 14
SHEET NO. 5/10
GREEN REFL. BACKGROUND
WITH WHITE REFL. LETTERS & BORDER

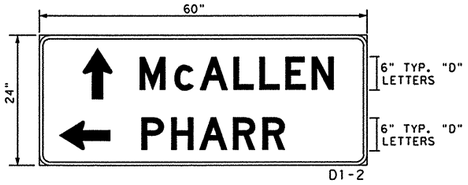

SIGN NO. 14
SHEET NO. 7/10
GREEN REFL. BACKGROUND
WITH WHITE REFL. LETTERS & BORDER

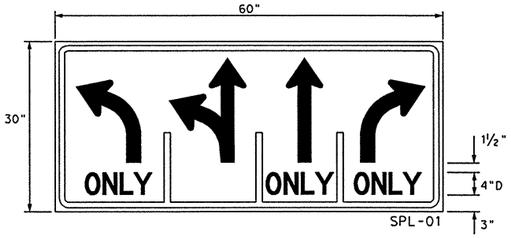

SIGN NO. 21, 23, 28 & 29
SHEET NO. 7/10

SIGN NO. 41 & 42
SHEET NO.10/10

WHITE REFL. BACKGROUND
WITH BLACK LETTERS & BORDER

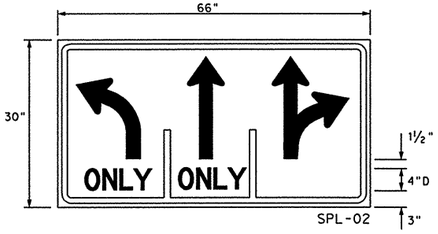

SIGN NO. 17 & 18
SHEET NO. 2/10

SIGN NO. 24 & 25
SHEET NO. 9/10

SIGN NO. 3 & 4
SHEET NO. 3/10

SIGN NO. 1 & 2
SHEET NO. 10/10

WHITE REFL. BACKGROUND
WITH BLACK LETTERS & BORDER

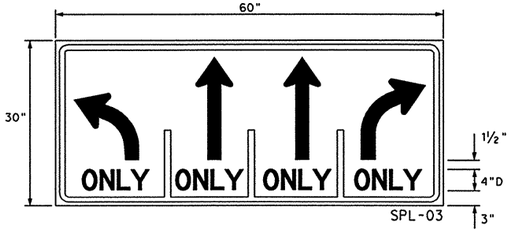

SIGN NO. 23 & 24
SHEET NO.10/10

WHITE REFL. BACKGROUND
WITH BLACK LETTERS & BORDER

THE SEAL APPEARING ON THIS DOCUMENT WAS AUTHORIZED BY PHAISARN CWATANAPHOL, P.E. 89252 ON 06/26/2003.

Parsons Brinckerhoff Quade & Douglas Inc.

Texas Department of Transportation

© 2003 by TxDOT

SIGNING DETAILS (INSTALLATIONS) SMALL SIGNS

SHEET 4 OF 4					281SGN04.DGN	
DESIGNED: TT	FED. RD DIV. No.	STATE	FEDERAL AID PROJECT No.			HIGHWAY No.
CHECKED: DM	6	TEXAS				US 281
DRAWN: JT	STATE DISTRICT	COUNTY	CONTROL No.	SECTION No.	JOB No.	SHEET No.
CHECKED: DM	PHARR	HIDALGO	0255	08	091	810

Phaisarn C.
03:40:20 PM
06/26/2003
i:\22322a\cadd\sheets\traffic\signing\lg sign details\281sgn04.dgn

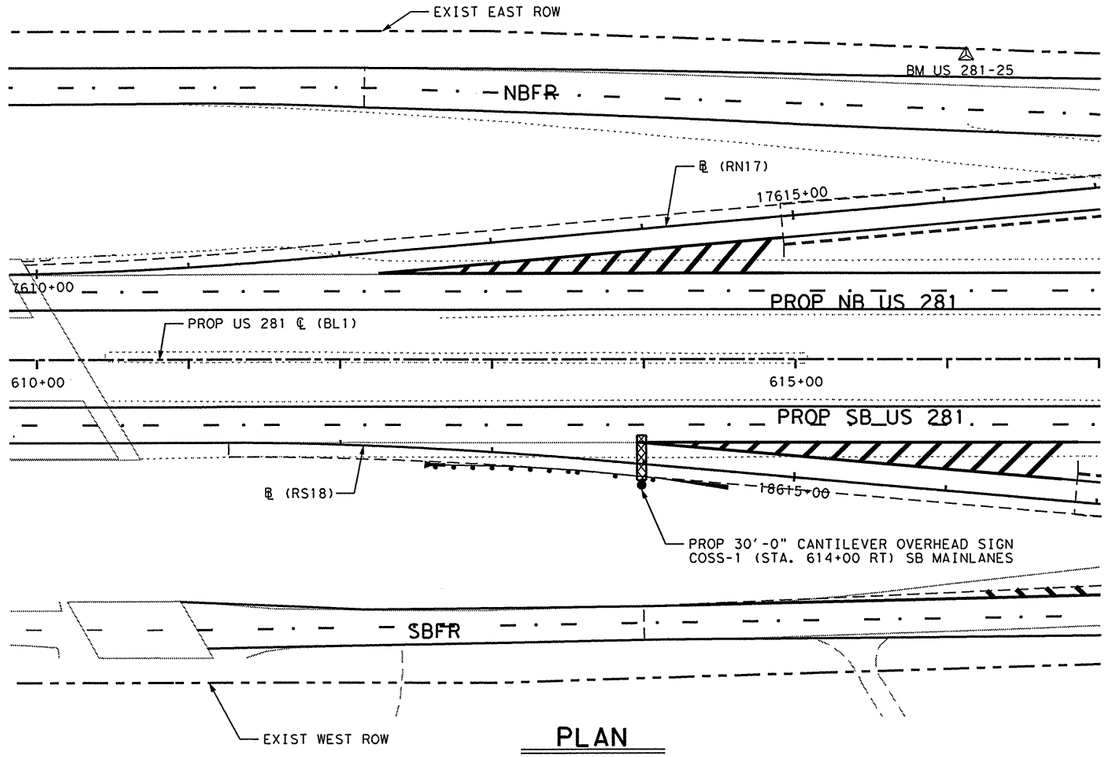

PLAN

STA. 614+00 (RT)
SCALE: 1" = 100'

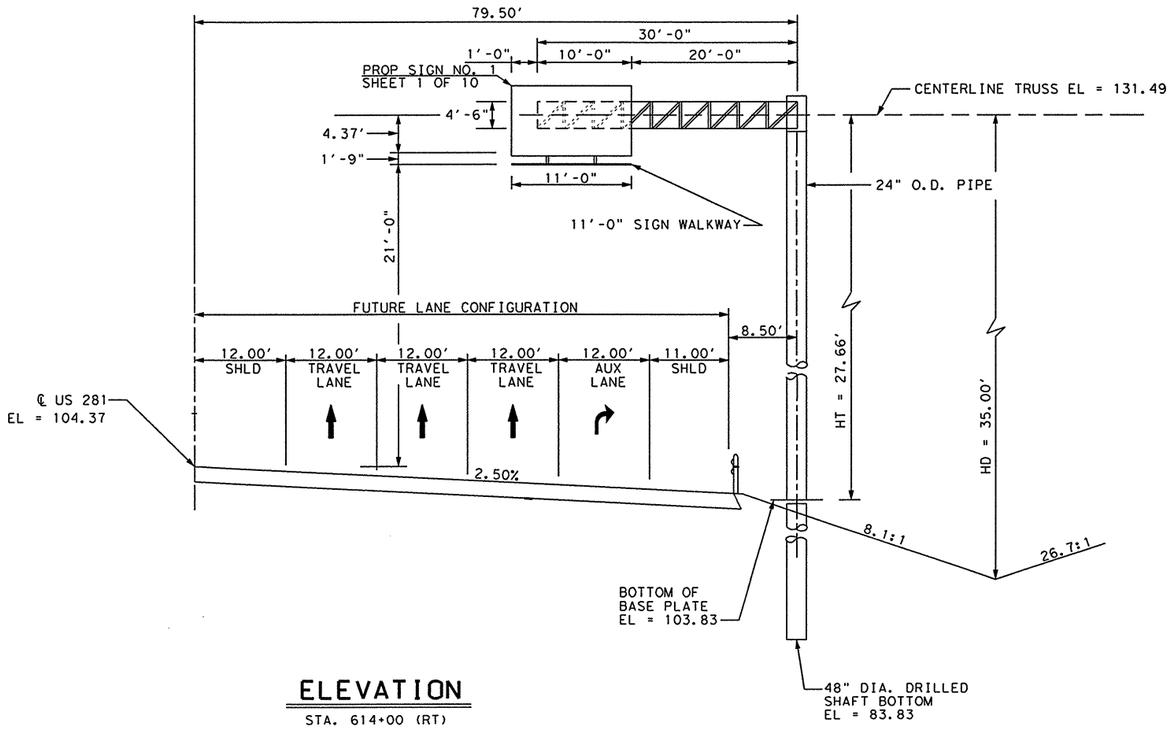

ELEVATION

STA. 614+00 (RT)
N.T.S.

DESIGN PARAMETERS:

CANTILEVER SPAN = 30 FT
DESIGN HEIGHT, Hd = 35.00 FT
COLUMN HEIGHT, Ht = 27.66 FT
AVG PEN. VALUE = 36 BLOWS/FT
WIND ZONE 4 - 70 MPH (HIDALGO COUNTY)
BELOW ICE ZONE (100 MPH USED)
FOR DESIGN, USE STANDARDS: HCOSS-Z1, COSS-FD & COSSF

NOTES:

INSTALL NEW OVERHEAD SIGNS, WALKWAY AND SUPPORT BRACKETS AS SHOWN ON STANDARDS SL(1)-95, SWW(1) & SB(SWL-1).

ITEM	DESCRIPTION	UNIT	QTY
416 0508	DRILL SHAFT (SIGN MTS) (48")	LF	20
650 0602	OVERHEAD SIGN SUPT (30 FT CANT) (21 FT 0 IN HT)	EA	1
654 0502	SIGN WALKWAY W/HANDRAIL (36")	LF	11.0

BM & HORIZONTAL DATA
BM=US 281-25
EL=98.54
STA=616+12.65, 199.63 LT
3 1/4" TXDOT ALUMINUM DISK

THE SEAL APPEARING ON THIS DOCUMENT WAS AUTHORIZED BY PHAISARN CWATANAPHOL, P.E. 89252 ON 06/26/2003.

STATE OF TEXAS
PHAISARN CWATANAPHOL
89252
REGISTERED PROFESSIONAL ENGINEER

Parsons Brinckerhoff Quade & Douglas Inc.

Texas Department of Transportation

© 2003 by TxDOT

US 281 OVERHEAD SIGN DETAIL

SHEET 1 OF 16				2810HS01.DGN			
DESIGNED: TT	FED. RD DIV. No.	STATE	FEDERAL AID PROJECT No.			HIGHWAY No.	
CHECKED: DM	6	TEXAS				US 281	
DRAWN: JT	STATE DISTRICT	COUNTY	CONTROL No.	SECTION No.	JOB No.	SHEET No.	
CHECKED: DM	PHARR	HIDALGO	0255	08	091	811	

Phaisarn C.
03:38:21 PM
06/26/2003
i:\22320\cadd\sheets\traffic\signing\lg sign details\2810hs01.dgn

NAME
06:42:56 PM
08/06/2003
T:\22322a\CADD\Sheets\Traffic\Signing\LG SIGN DETAILS\281ohs02.dgn

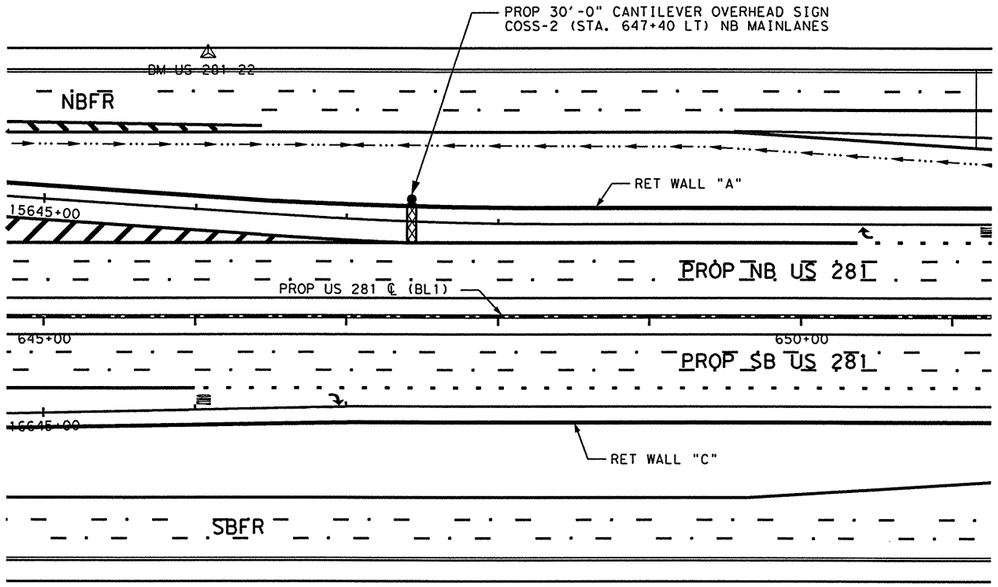

PLAN

STA. 647+40 (LT)
SCALE : 1" = 100'

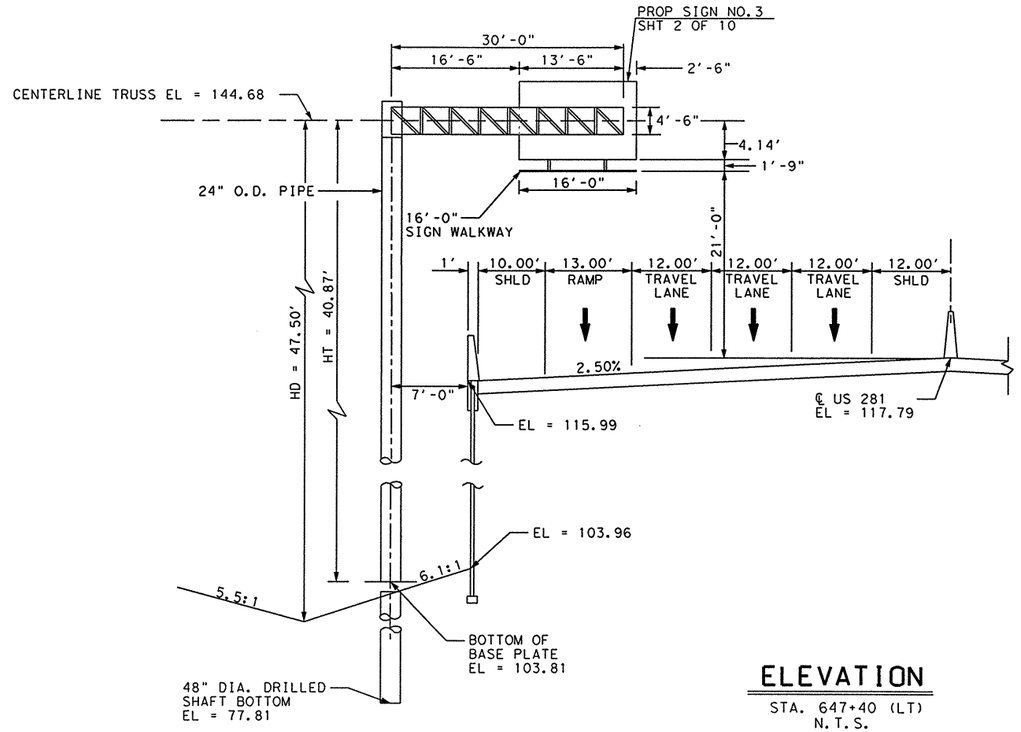

ELEVATION

STA. 647+40 (LT)
N.T.S.

DESIGN PARAMETERS:

CANTILEVER SPAN = 30 FT
DESIGN HEIGHT, Hd = 47.50 FT
COLUMN HEIGHT, Ht = 40.87 FT
AVG PEN. VALUE = 18 BLOWS/FT
WIND ZONE 4 - 70 MPH (HIDALGO COUNTY)
BELOW ICE ZONE (100 MPH USED)
FOR DESIGN, USE STANDARDS: HCOSS-Z1, COSS-FD & COSSF

NOTES:

DRILL SHAFTS FOR THE OVERHEAD SIGN STRUCTURE SHALL BE INSTALLED PRIOR TO THE CONSTRUCTION OF THE MSE WALLS, OR THE UPPER 10 FT OF THE SHAFT SHALL BE CASED, WITH CASING TO BE REMOVED.

CASING SHALL BE APPROVED PRIOR TO CONSTRUCTION BY THE ENGINEER. CASING SHALL BE SUBSIDARY TO THE CONSTRUCTION OF THE OVERHEAD SIGN STRUCTURE.

INSTALL NEW OVERHEAD SIGNS, WALKWAY AND SUPPORT BRACKETS AS SHOWN ON STANDARDS SL(1)-95, SWW(1) & SB(SWL-1).

ITEM	DESCRIPTION	UNIT	QTY
416 0508	DRILL SHAFT (SIGN MTS) (48")	LF	26
650 0602	OVERHEAD SIGN SUPT (30 FT CANT) (21 FT 0 IN HT)	EA	1
654 0502	SIGN WALKWAY W/HANDRAIL (36")	LF	16

△BM & HORIZONTAL DATA
BM=US 281-22
EL=98.53
STA=646+08.07, 171.87 LT
3 1/4" TXDOT ALUMINUM DISK

THE SEAL APPEARING ON THIS DOCUMENT WAS AUTHORIZED BY PHAISARN CWATANAPHOL, P.E. 89252 ON 08/06/2003.

STATE OF TEXAS
PHAISARN CWATANAPHOL
89252
REGISTERED PROFESSIONAL ENGINEER

Parsons Brinckerhoff Quade & Douglas Inc.

Texas Department of Transportation

© 2003 by TxDOT

US 281 OVERHEAD SIGN DETAIL

SCALE : AS SHOWN

SHEET 2 OF 16					2810HS02.DGN	
DESIGNED: TT	FED. RD DIV. No.	STATE	FEDERAL AID PROJECT No.		HIGHWAY No.	
CHECKED: DM	6	TEXAS			US 281	
DRAWN: JT	STATE DISTRICT	COUNTY	CONTROL No.	SECTION No.	JOB No.	SHEET No.
CHECKED: DM	PHARR	HIDALGO	0255	08	091	812

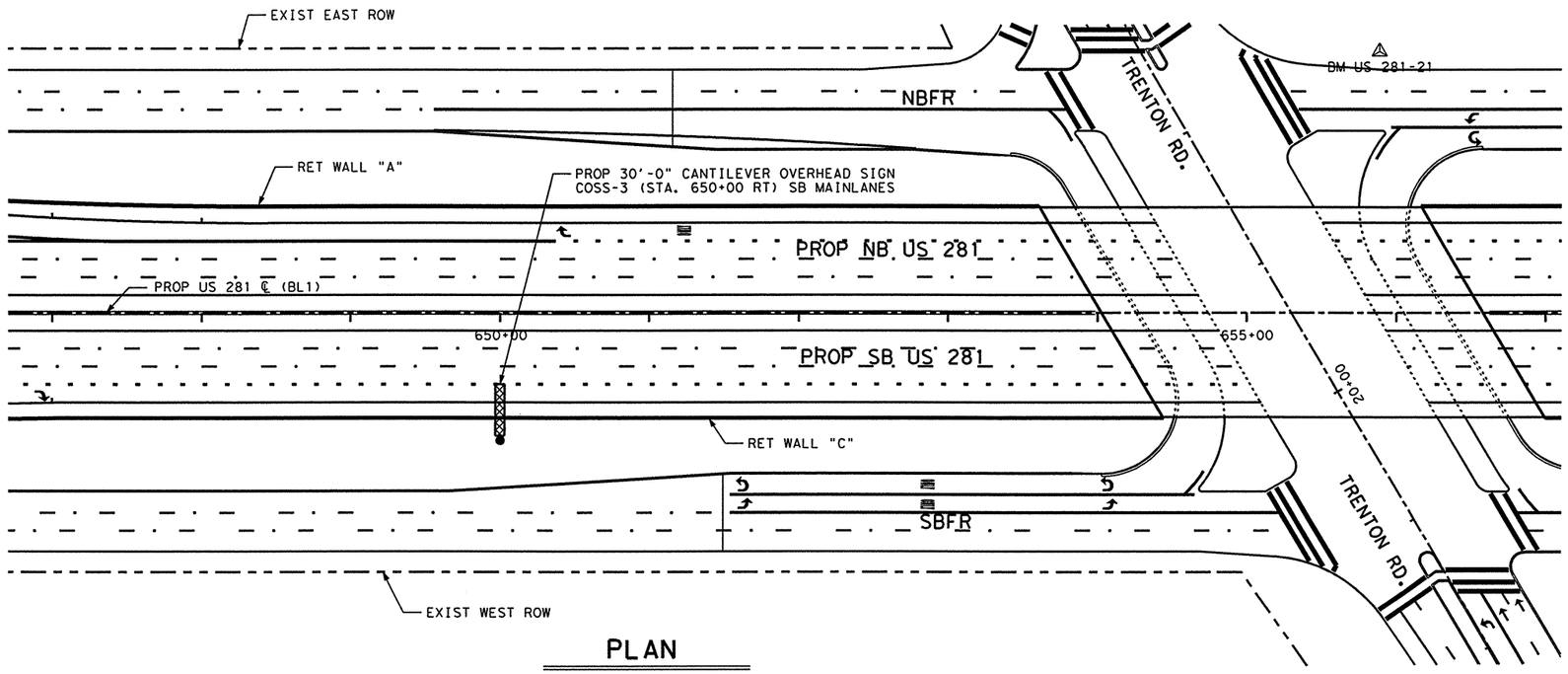

PLAN

STA. 650+00 (RT)
SCALE : 1" = 100'

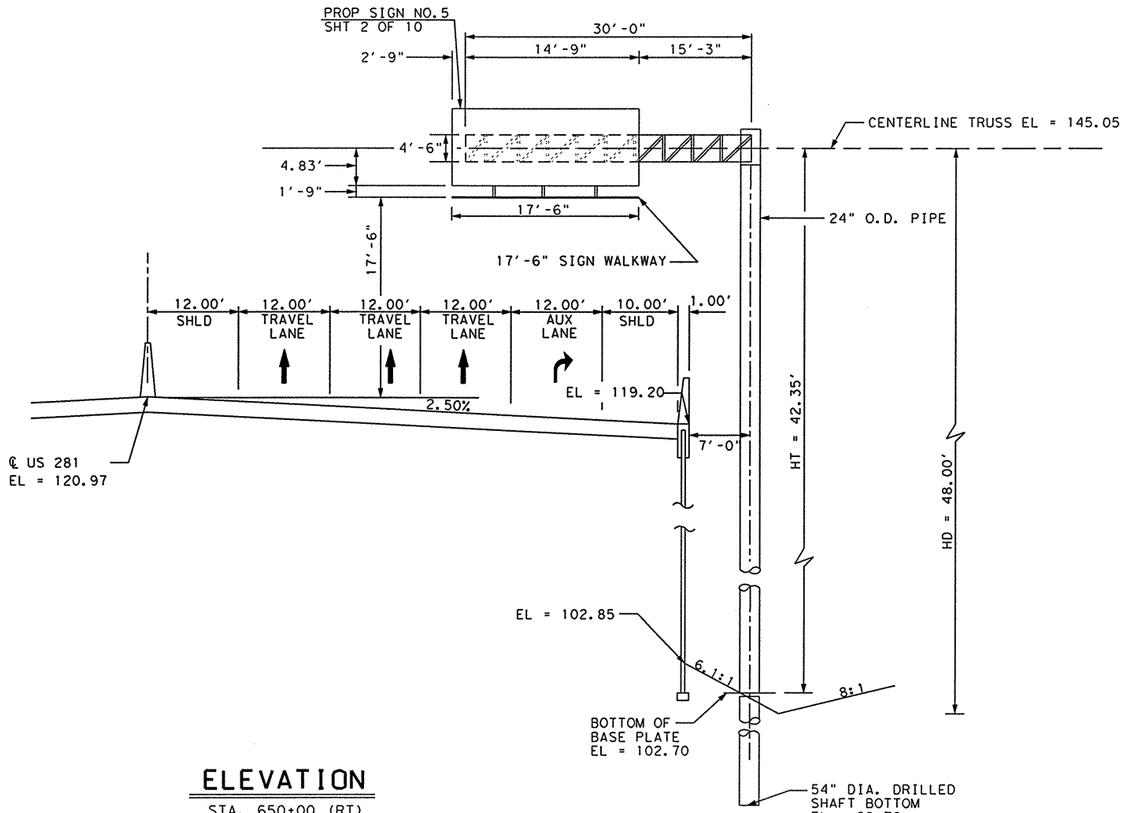

ELEVATION

STA. 650+00 (RT)
N.T.S.

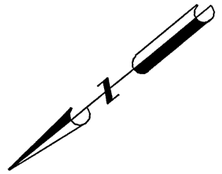

DESIGN PARAMETERS:

CANTILEVER SPAN = 30 FT
DESIGN HEIGHT, Hd = 48.00 FT
COLUMN HEIGHT, Ht = 42.35 FT
AVG PEN. VALUE = 28 BLOWS/FT
WIND ZONE 4 - 70 MPH (HIDALGO COUNTY)
BELOW ICE ZONE (100 MPH USED)
FOR DESIGN, USE STANDARDS: HCOSS-Z1, COSS-FD & COSSF

NOTES:

DRILL SHAFTS FOR THE OVERHEAD SIGN STRUCTURE SHALL BE INSTALLED PRIOR TO THE CONSTRUCTION OF THE MSE WALLS, OR THE UPPER 10 FT OF THE SHAFT SHALL BE CASED, WITH CASING TO BE REMOVED.

CASING SHALL BE APPROVED PRIOR TO CONSTRUCTION BY THE ENGINEER. CASING SHALL BE SUBSIDARY TO THE CONSTRUCTION OF THE OVERHEAD SIGN STRUCTURE.

INSTALL NEW OVERHEAD SIGNS, WALKWAY AND SUPPORT BRACKETS AS SHOWN ON STANDARDS SL(1)-95, SWW(1) & SB(SWL-1).

ITEM	DESCRIPTION	UNIT	QTY
416 0509	DRILL SHAFT (SIGN MTS) (54")	LF	22
650 0593	OVERHEAD SIGN SUPT (30 FT CANT) (17 FT 6 IN HT)	EA	1
654 0502	SIGN WALKWAY W/HANDRAIL (36")	LF	17.5

⚠BM & HORIZONTAL DATA
BM=US 281-21
EL=98.66
STA=655+88.78, 173.20 LT
3 1/4" TXDOT ALUMINUM DISK

THE SEAL APPEARING ON THIS DOCUMENT WAS AUTHORIZED BY PHAISARN CWATANAPHOL, P.E. 89252 ON 08/06/2003.

STATE OF TEXAS
PHAISARN CWATANAPHOL
89252
REGISTERED PROFESSIONAL ENGINEER

Parsons Brinckerhoff Quade & Douglas Inc.

Texas Department of Transportation

© 2003 by TxDOT

US 281 OVERHEAD SIGN DETAIL

SCALE : AS SHOWN

SHEET 3 OF 16				281OHS03.DGN			
DESIGNED: TT	FED. RD DIV. NO.	STATE	FEDERAL AID PROJECT No.			HIGHWAY No.	
CHECKED: DM	6	TEXAS				US 281	
DRAWN: JT	STATE DISTRICT	COUNTY	CONTROL No.	SECTION No.	JOB No.	SHEET No.	
CHECKED: DM	PHARR	HIDALGO	0255	08	091	813	

NAME
06:41:24 PM
08/06/2003
T:\22322o\CADD\Sheets\Traffic\Signing\LG SIGN DETAILS\281ohs03.dgn

NAME
06:43:37 PM
08/06/2003
T:\22322o\CADD\Sheets\Traffic\Signing\LG SIGN DETAILS\281ohs04.dgn

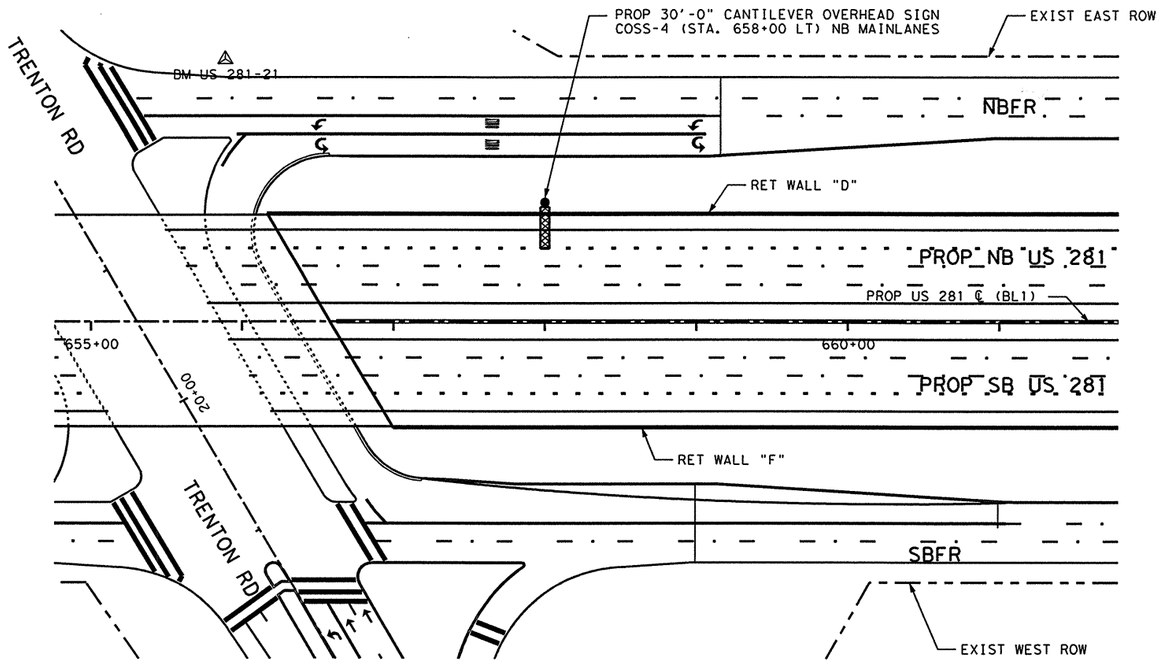

PLAN

STA. 658+00 (LT)
SCALE : 1" = 100'

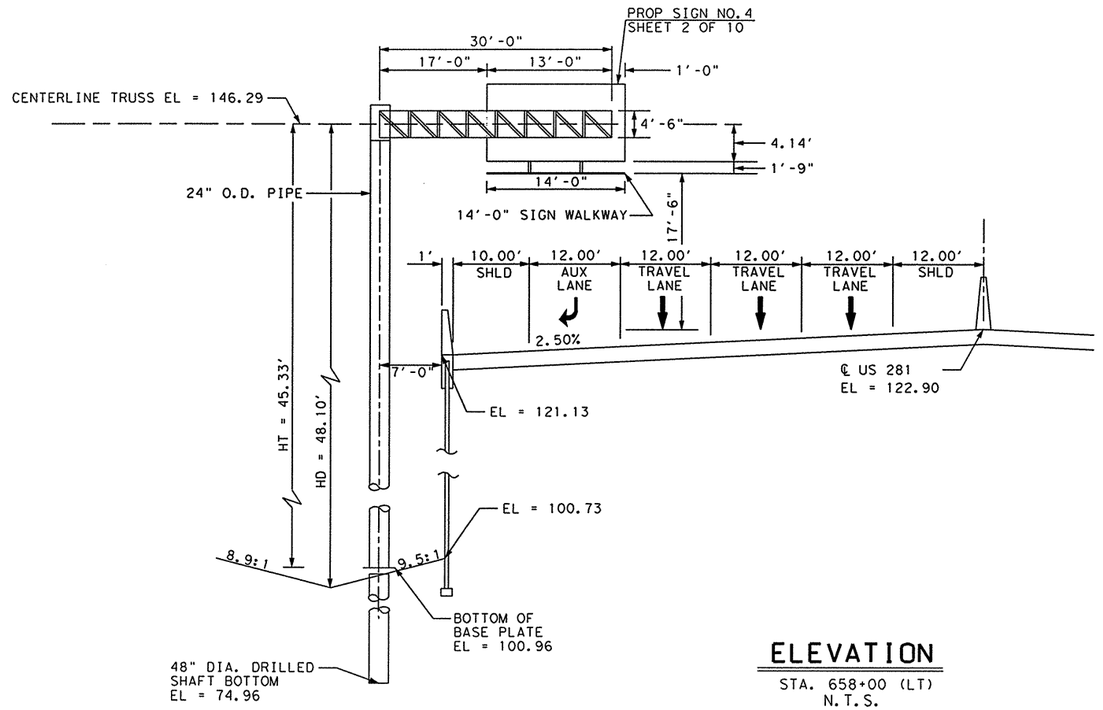

ELEVATION

STA. 658+00 (LT)
N.T.S.

DESIGN PARAMETERS:

CANTILEVER SPAN = 30 FT
DESIGN HEIGHT, Hd = 48.10 FT
COLUMN HEIGHT, Ht = 43.96 FT
AVG PEN. VALUE = 21 BLOWS/FT
WIND ZONE 4 - 70 MPH (HIDALGO COUNTY)
BELOW ICE ZONE (100 MPH USED)
FOR DESIGN, USE STANDARDS: HCOSS-Z1, COSS-FD & COSSF

NOTES:

DRILL SHAFTS FOR THE OVERHEAD SIGN STRUCTURE SHALL BE INSTALLED PRIOR TO THE CONSTRUCTION OF THE MSE WALLS, OR THE UPPER 10 FT OF THE SHAFT SHALL BE CASED, WITH CASING TO BE REMOVED.

CASING SHALL BE APPROVED PRIOR TO CONSTRUCTION BY THE ENGINEER. CASING SHALL BE SUBSIDARY TO THE CONSTRUCTION OF THE OVERHEAD SIGN STRUCTURE.

INSTALL NEW OVERHEAD SIGNS, WALKWAY AND SUPPORT BRACKETS AS SHOWN ON STANDARDS SL(1)-95, SWW(1) & SB(SWL-1).

ITEM	DESCRIPTION	UNIT	QTY
416 0508	DRILL SHAFT (SIGN MTS) (48")	LF	26
650 0593	OVERHEAD SIGN SUPT (30 FT CANT) (17 FT 6 IN HT)	EA	1
654 0502	SIGN WALKWAY W/HANDRAIL (36")	LF	14

△BM & HORIZONTAL DATA
BM=US 281-21
EL=98.66
STA=655+88.78, 173.20 LT
3 1/4" TXDOT ALUMINUM DISK

THE SEAL APPEARING ON THIS DOCUMENT WAS AUTHORIZED BY PHAISARN CWATANAPHOL, P.E. 89252 ON 08/06/2003.

STATE OF TEXAS
PHAISARN CWATANAPHOL
89252
REGISTERED PROFESSIONAL ENGINEER

Parsons Brinckerhoff Quade & Douglas Inc.

Texas Department of Transportation

© 2003 by TxDOT

US 281 OVERHEAD SIGN DETAIL

SCALE : AS SHOWN

SHEET 4 OF 16						281OHS04.DGN	
DESIGNED: TT	FED. RD DIV. NO.	STATE	FEDERAL AID PROJECT No.			HIGHWAY No.	
CHECKED: DM	6	TEXAS				US 281	
DRAWN: JT	STATE DISTRICT	COUNTY	CONTROL No.	SECTION No.	JOB No.	SHEET No.	
CHECKED: DM	PHARR	HIDALGO	0255	08	091	814	

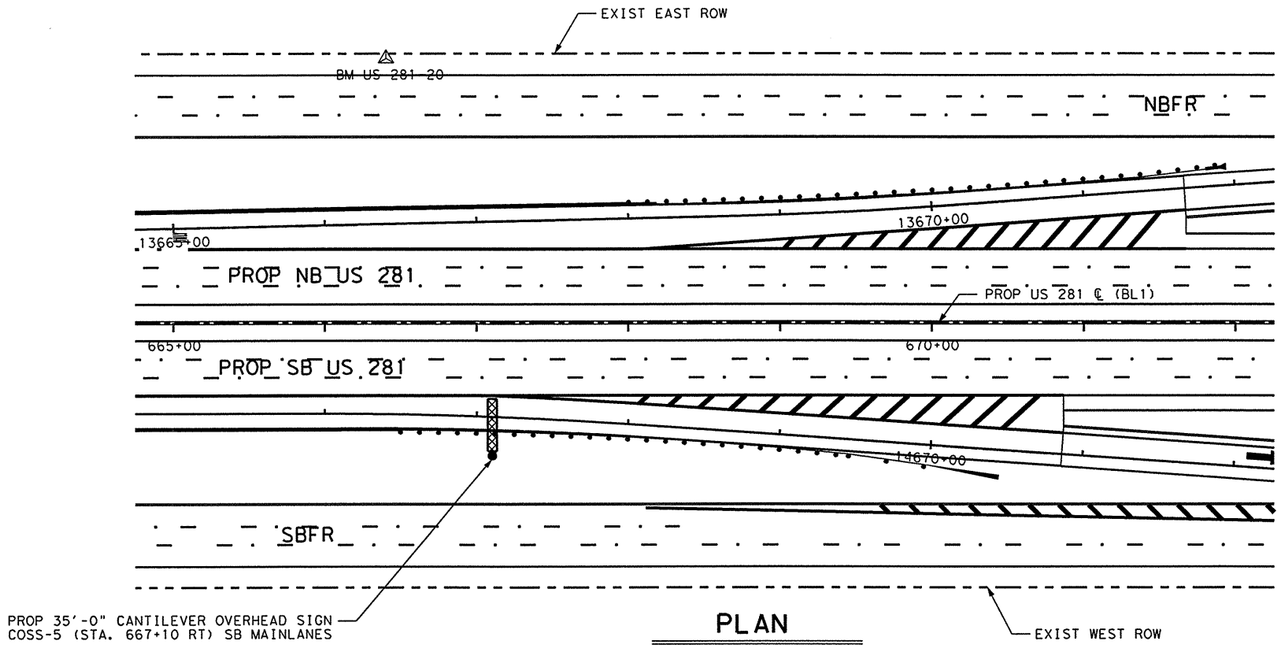

PLAN

STA. 667+10 (RT)
SCALE : 1" = 100'

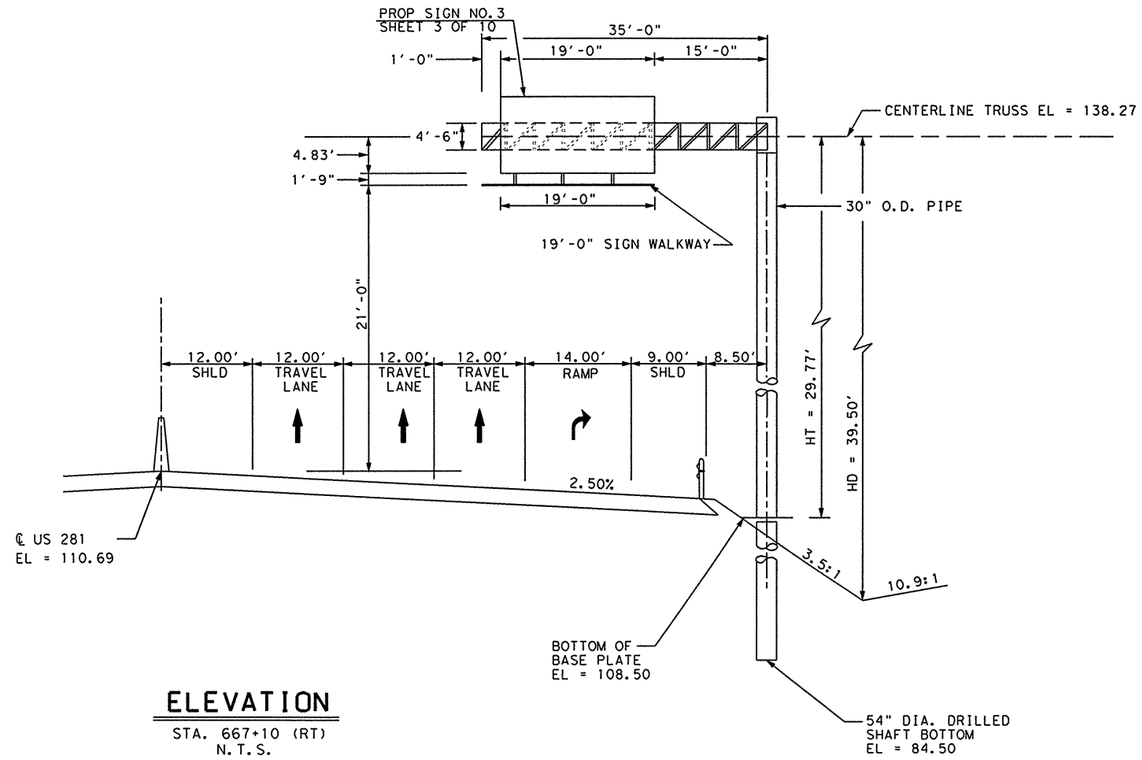

ELEVATION

STA. 667+10 (RT)
N.T.S.

DESIGN PARAMETERS:

CANTILEVER SPAN = 35 FT
DESIGN HEIGHT, Hd = 39.50 FT
COLUMN HEIGHT, Ht = 29.77 FT
AVG PEN. VALUE = 19 BLOWS/FT
WIND ZONE 4 - 70 MPH (HIDALGO COUNTY)
BELOW ICE ZONE (100 MPH USED)
FOR DESIGN, USE STANDARDS: HCOSS-Z1, COSS-FD & COSSF

NOTES:

INSTALL NEW OVERHEAD SIGNS, WALKWAY AND SUPPORT BRACKETS AS SHOWN ON STANDARDS SL(1)-95, SWW(1) & SB(SWL-1).

ITEM	DESCRIPTION	UNIT	QTY
416 0509	DRILL SHAFT (SIGN MTS) (54")	LF	23
650 0603	OVERHEAD SIGN SUPT (35 FT CANT) (21 FT 0 IN HT)	EA	1
654 0502	SIGN WALKWAY W/HANDRAIL (36")	LF	19.0

△BM & HORIZONTAL DATA
BM=US 281-20
EL=98.51
STA=666+40.54, 172.14 LT
3 1/4" TXDOT ALUMINUM DISK

THE SEAL APPEARING ON THIS DOCUMENT WAS AUTHORIZED BY PHAISARN CWATANAPHOL, P.E. 89252 ON 06/26/2003.

STATE OF TEXAS
PHAISARN CWATANAPHOL
89252
REGISTERED PROFESSIONAL ENGINEER

Parsons Brinckerhoff Quade & Douglas Inc.

Texas Department of Transportation

© 2003 by TxDOT

US 281 OVERHEAD SIGN DETAIL

SCALE : AS SHOWN

SHEET 5 OF 16 | 281OHS06.DGN

DESIGNED: TT	FED. RD DIV. No.	STATE	FEDERAL AID PROJECT No.			HIGHWAY No.
CHECKED: DM	6	TEXAS				US 281
DRAWN: JT	STATE DISTRICT	COUNTY	CONTROL No.	SECTION No.	JOB No.	SHEET No.
CHECKED: DM	PHARR	HIDALGO	0255	08	091	815

Phaisarn C.
03:38:51 PM
06/26/2003
i:\22322a\cadd\sheets\traffic\signing\lg sign details\281ohs06.dgn

Phaisarn C.
03:38:57 PM
06/26/2003
i:\22322a\cadd\sheets\traffic\signing\lg sign details\281ohs07.dgn

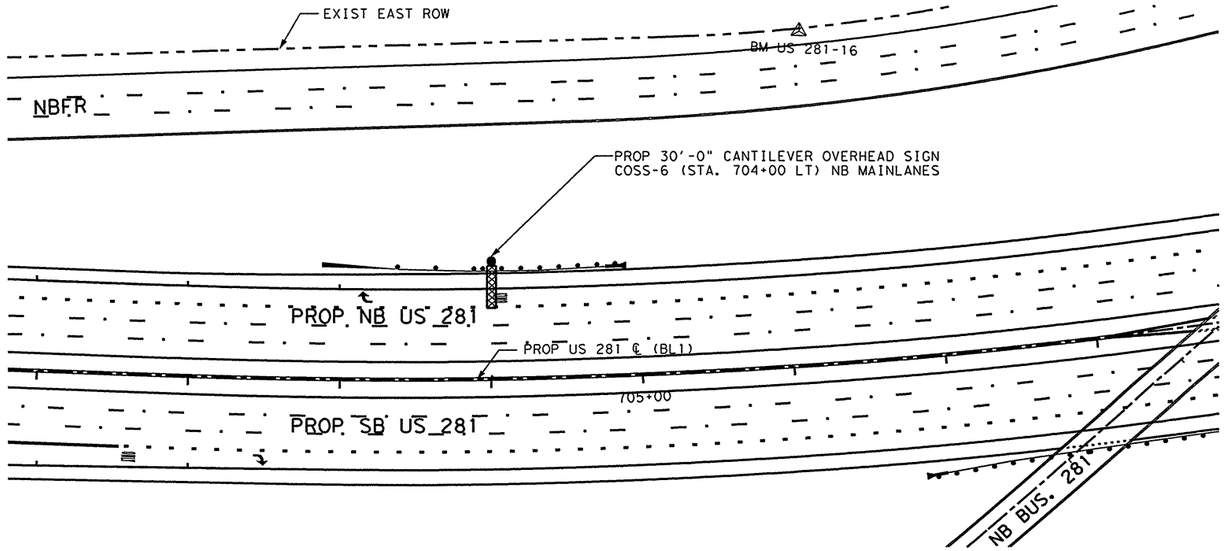

PLAN

STA. 704+00 (LT)
SCALE : 1" = 100'

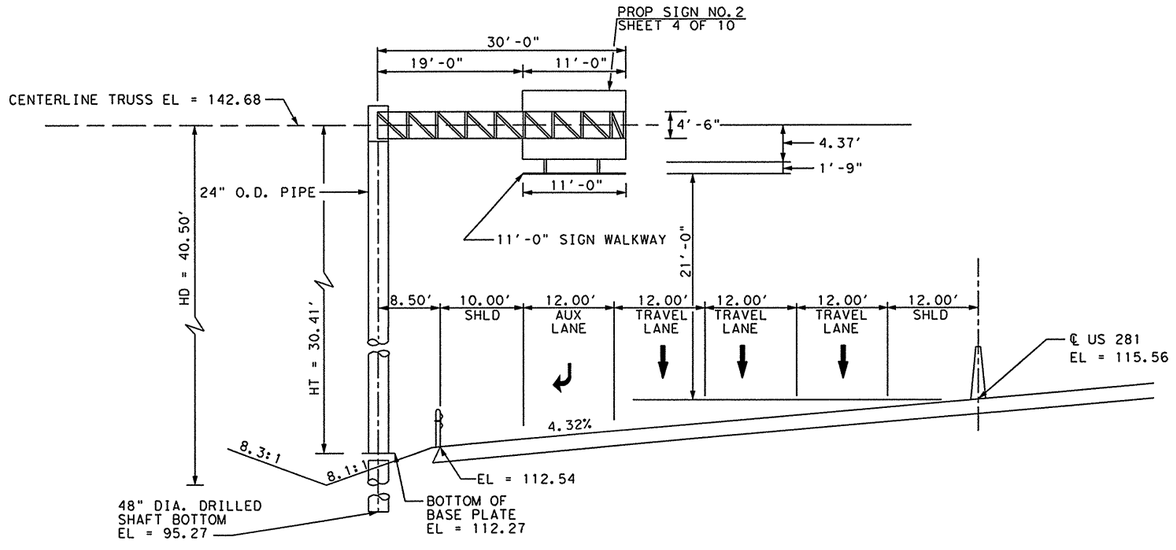

ELEVATION

STA. 704+00 (LT)
N.T.S.

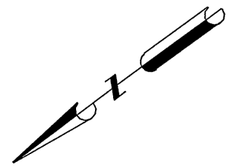

DESIGN PARAMETERS:

CANTILEVER SPAN = 30 FT
DESIGN HEIGHT, Hd = 40.50 FT
COLUMN HEIGHT, H† = 30.41 FT
AVG PEN. VALUE = 29 BLOWS/FT
WIND ZONE 4 - 70 MPH (HIDALGO COUNTY)
BELOW ICE ZONE (100 MPH USED)
FOR DESIGN, USE STANDARDS: HCOSS-Z1, COSS-FD & COSSF

NOTES:

INSTALL NEW OVERHEAD SIGNS, WALKWAY AND SUPPORT BRACKETS AS SHOWN ON STANDARDS SL(1)-95, SWW(1) & SB(SWL-1).

ITEM	DESCRIPTION	UNIT	QTY
416 0508	DRILL SHAFT (SIGN MTS) (48")	LF	17
650 0602	OVERHEAD SIGN SUPT (30 FT CANT) (21 FT 0 IN HT)	EA	1
654 0502	SIGN WALKWAY W/HANDRAIL (36")	LF	11.0

△BM & HORIZONTAL DATA
BM=US 281-16
EL=103.83
STA=706+19.13, 220.37 LT
3 1/4" TXDOT ALUMINUM DISK

THE SEAL APPEARING ON THIS DOCUMENT WAS AUTHORIZED BY PHAISARN CWATANAPHOL, P.E. 89252 ON 06/26/2003.

STATE OF TEXAS
PHAISARN CWATANAPHOL
89252
REGISTERED PROFESSIONAL ENGINEER

Parsons Brinckerhoff Quade & Douglas Inc.

Texas Department of Transportation

© 2003 by TxDOT

US 281 OVERHEAD SIGN DETAIL

SCALE : AS SHOWN

SHEET 6 OF 16 | 281OHS07.DGN

DESIGNED: TT	FED. RD DIV. NO.	STATE	FEDERAL AID PROJECT No.			HIGHWAY No.	
CHECKED: DM	6	TEXAS				US 281	
DRAWN: JT	STATE DISTRICT	COUNTY	CONTROL No.	SECTION No.	JOB No.	SHEET No.	
CHECKED: DM	PHARR	HIDALGO	0255	08	091	816	

Phaisarn C.
03:39:03 PM
06/26/2003
i:\223220\cadd\sheets\traffic\signing\lg sign details\281ohs08.dgn

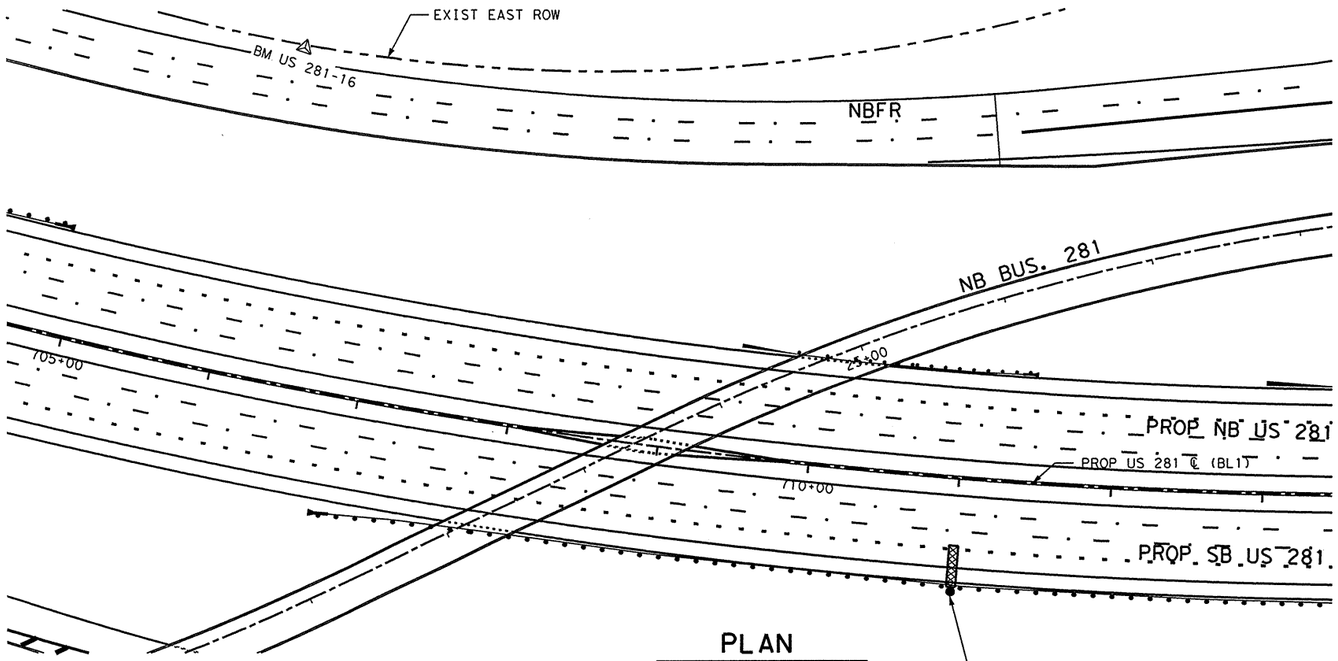

PLAN

STA. 711+00 (RT)
SCALE : 1" = 100'

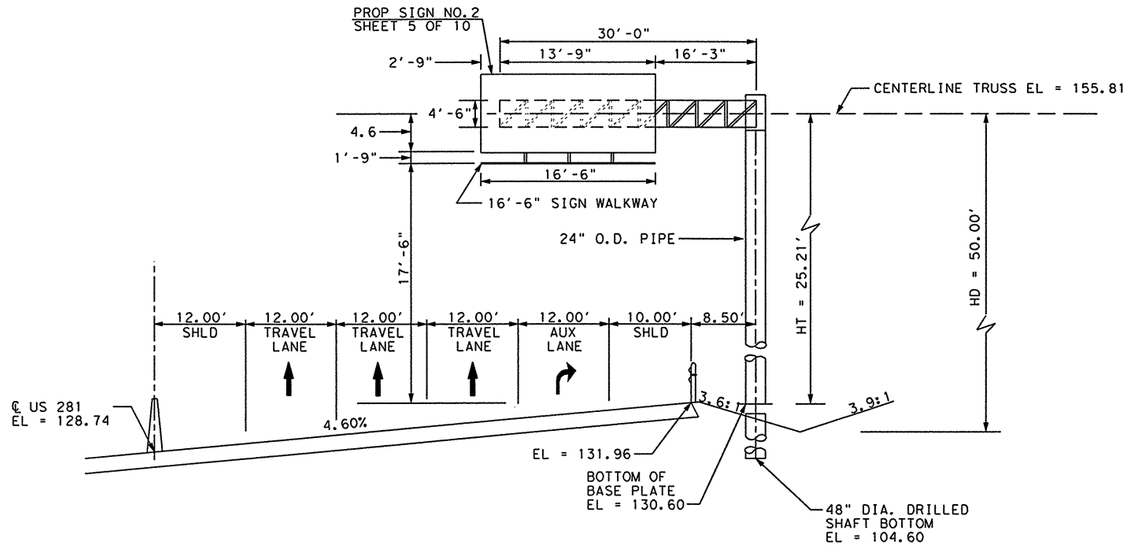

ELEVATION

STA. 711+00 (RT)
N.T.S.

DESIGN PARAMETERS:

CANTILEVER SPAN = 30 FT
DESIGN HEIGHT, Hd = 45.00 FT
COLUMN HEIGHT, Ht = 21.12 FT
AVG PEN. VALUE = 30 BLOWS/FT
WIND ZONE 4 - 70 MPH (HIDALGO COUNTY)
BELOW ICE ZONE (100 MPH USED)
FOR DESIGN, USE STANDARDS: HCOSS-Z1, COSS-FD & COSSF

NOTES:

INSTALL NEW OVERHEAD SIGNS, WALKWAY AND SUPPORT BRACKETS AS SHOWN ON STANDARDS SL(1)-95, SWW(1) & SB(SWL-1).

ITEM	DESCRIPTION	UNIT	QTY
416 0508	DRILL SHAFT (SIGN MTS) (48")	LF	26
650 0593	OVERHEAD SIGN SUPT (30 FT CANT) (17 FT 6 IN HT)	EA	1
654 0502	SIGN WALKWAY W/HANDRAIL (36")	LF	16.5

BM & HORIZONTAL DATA
BM=US 281-16
EL=103.83
STA=706+19.13, 220.37 LT
3 1/4" TXDOT ALUMINUM DISK

THE SEAL APPEARING ON THIS DOCUMENT WAS AUTHORIZED BY PHAISARN CWATANAPHOL, P.E. 89252 ON 06/26/2003.

STATE OF TEXAS
PHAISARN CWATANAPHOL
89252
REGISTERED PROFESSIONAL ENGINEER

Parsons Brinckerhoff Quade & Douglas Inc.

Texas Department of Transportation

© 2003 by TxDOT

US 281 OVERHEAD SIGN DETAIL

SCALE : AS SHOWN

SHEET 7 OF 16					281OHS08.DGN		
DESIGNED: TT	FED. RD DIV. No.	STATE	FEDERAL AID PROJECT No.		HIGHWAY No.		
CHECKED: DM	6	TEXAS			US 281		
DRAWN: JT	STATE DISTRICT	COUNTY	CONTROL No.	SECTION No.	JOB No.	SHEET No.	
CHECKED: DM	PHARR	HIDALGO	0255	08	091	817	

Phaisarn C.
03:39:09 PM
06/26/2003
i:\22322a\cadd\sheets\traffic\signing\lg sign details\281ohs09.dgn

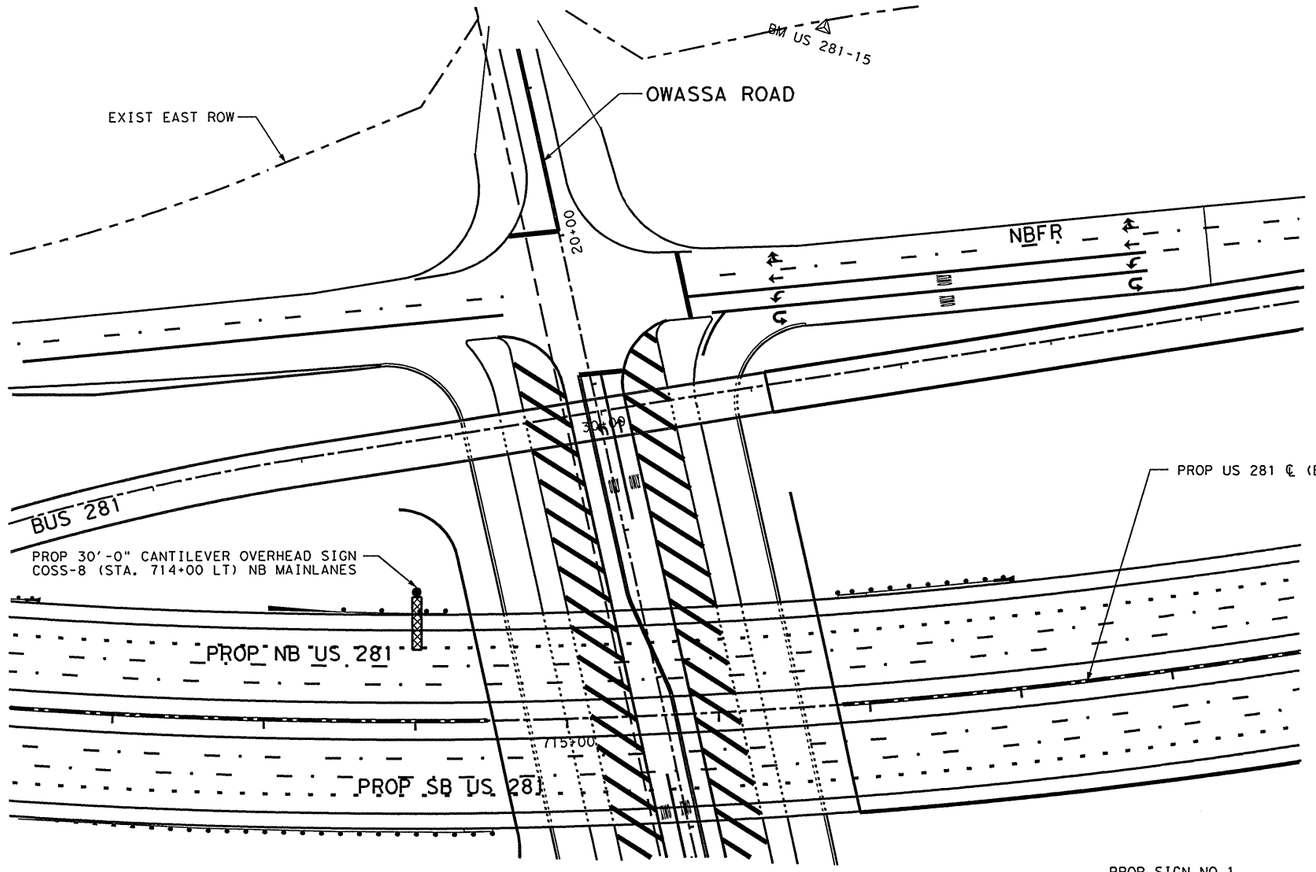

PLAN

STA. 714+00 (LT)
SCALE : 1" = 100'

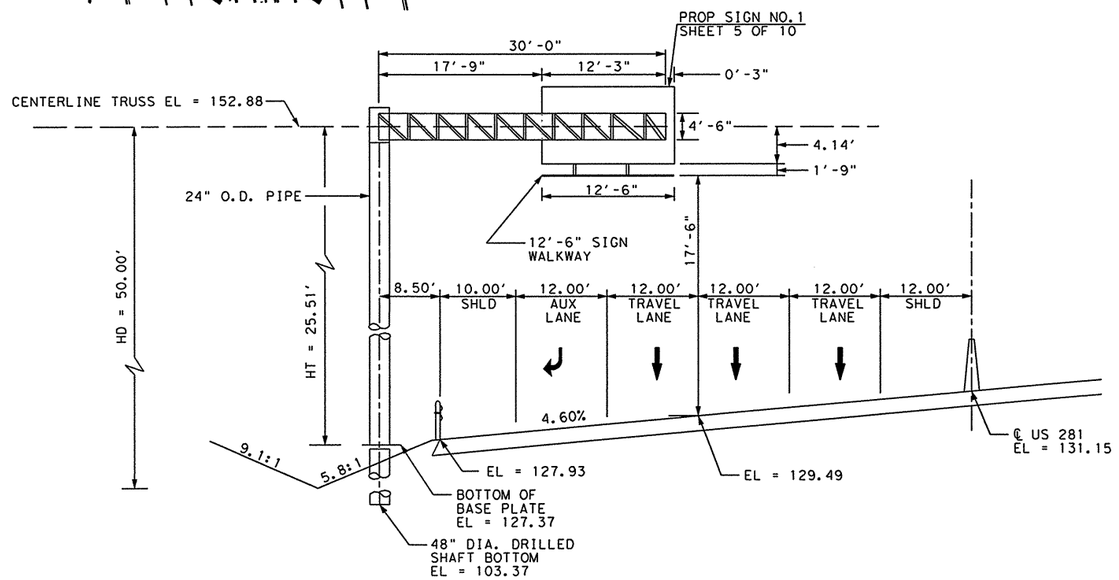

ELEVATION

STA. 714+00 (LT)
N.T.S.

DESIGN PARAMETERS:

CANTILEVER SPAN = 30 FT
DESIGN HEIGHT, Hd = 50.00 FT
COLUMN HEIGHT, Ht = 25.51 FT
AVG PEN. VALUE = 17 BLOWS/FT
WIND ZONE 4 - 70 MPH (HIDALGO COUNTY)
BELOW ICE ZONE (100 MPH USED)
FOR DESIGN, USE STANDARDS: HCOSS-Z1, COSS-FD & COSSF

NOTES:

INSTALL NEW OVERHEAD SIGNS, WALKWAY AND SUPPORT BRACKETS AS SHOWN ON STANDARDS SL(1)-95, SWW(1) & SB(SWL-1).

ITEM	DESCRIPTION	UNIT	QTY
416 0508	DRILL SHAFT (SIGN MTS) (48")	LF	24
650 0593	OVERHEAD SIGN SUPT (30 FT CANT) (17 FT 6 IN HT)	EA	1
654 0502	SIGN WALKWAY W/HANDRAIL (36")	LF	12.5

BM & HORIZONTAL DATA
BM=US 281-15
EL=103.73
STA=717+06.49, 448.89 LT
3 1/4" TXDOT ALUMINUM DISK

THE SEAL APPEARING ON THIS DOCUMENT WAS AUTHORIZED BY PHAISARN CWATANAPHOL, P.E. 89252 ON 06/26/2003.

STATE OF TEXAS
PHAISARN CWATANAPHOL
89252
REGISTERED
PROFESSIONAL ENGINEER

Parsons Brinckerhoff Quade & Douglas Inc.

Texas Department of Transportation

© 2003 by TxDOT

US 281 OVERHEAD SIGN DETAIL

SCALE : AS SHOWN

SHEET 8 OF 16				281OHS09.DGN			
DESIGNED: TT	FED. RD DIV. No.	STATE	FEDERAL AID PROJECT No.			HIGHWAY No.	
CHECKED: DM	6	TEXAS				US 281	
DRAWN: JT	STATE DISTRICT	COUNTY	CONTROL No.	SECTION No.	JOB No.	SHEET No.	
CHECKED: DM	PHARR	HIDALGO	0255	08	091	818	

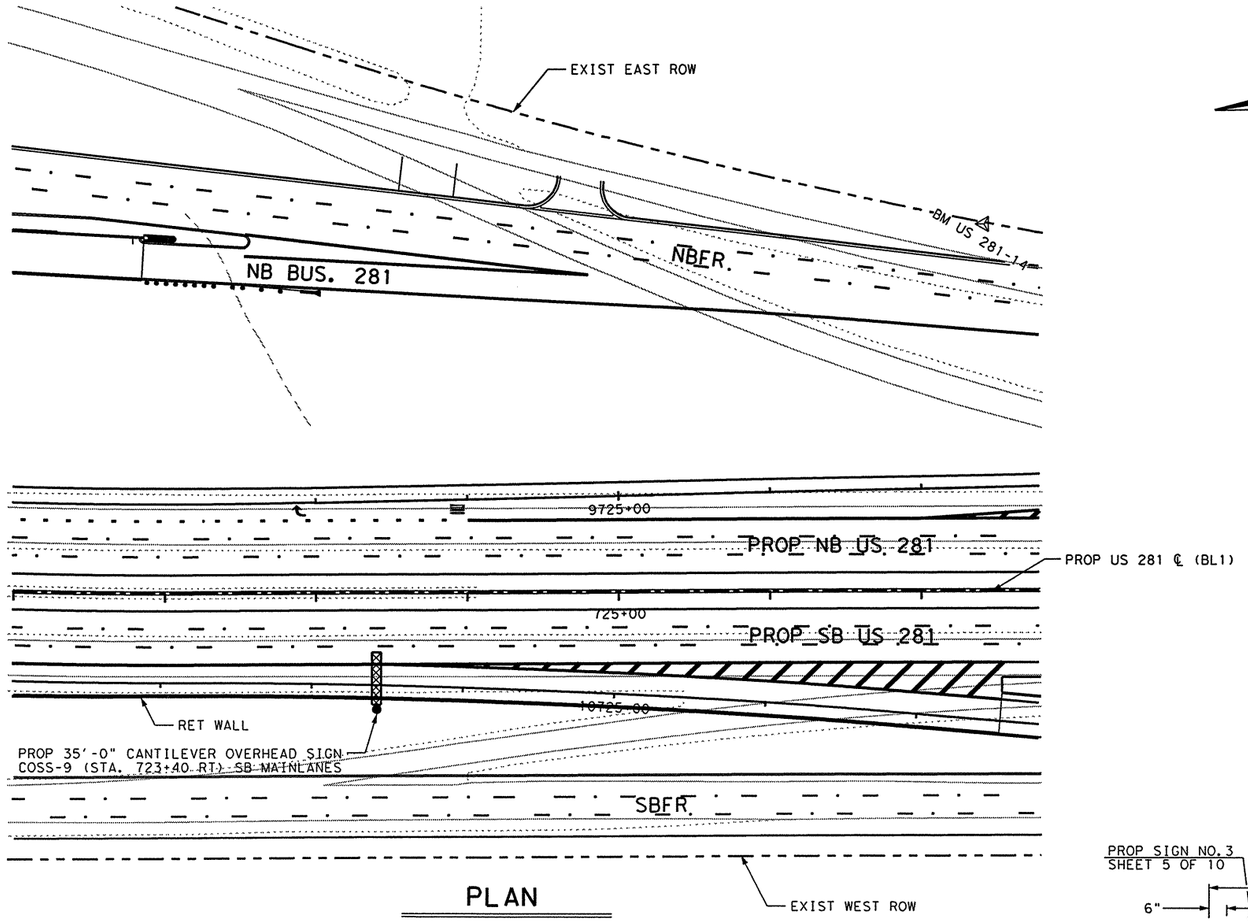

PLAN

STA. 723+40 (RT)
SCALE : 1" = 100'

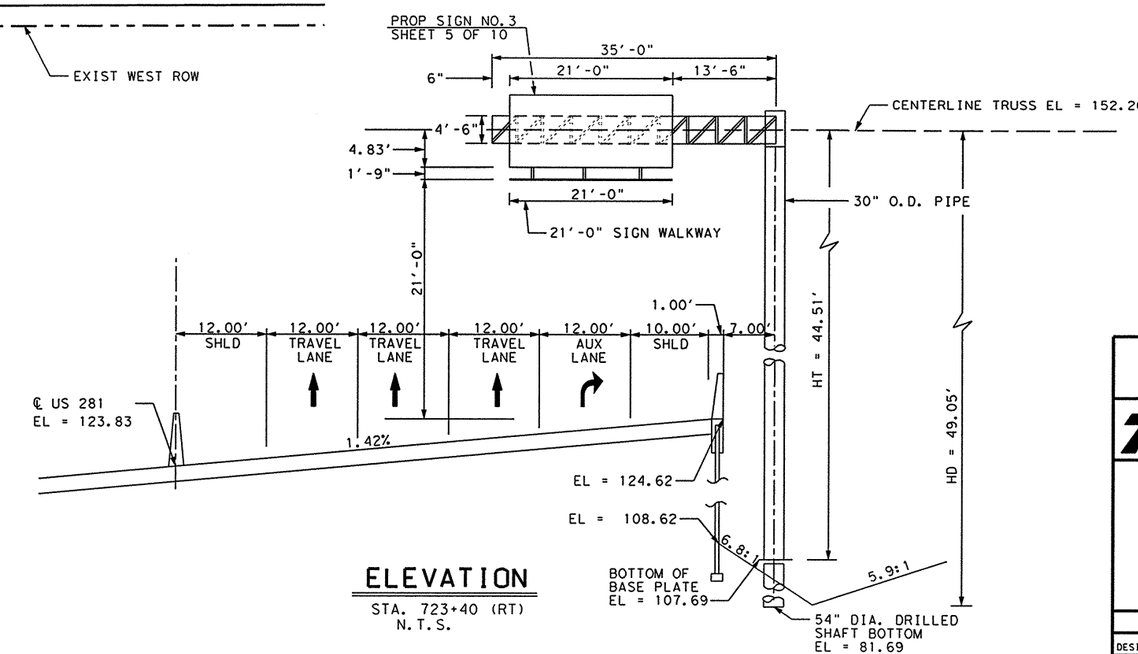

ELEVATION

STA. 723+40 (RT)
N.T.S.

DESIGN PARAMETERS:

CANTILEVER SPAN = 35 FT
DESIGN HEIGHT, Hd = 49.05 FT
COLUMN HEIGHT, Ht = 44.51 FT
AVG PEN. VALUE = 17 BLOWS/FT
WIND ZONE 4 - 70 MPH (HIDALGO COUNTY)
BELOW ICE ZONE (100 MPH USED)
FOR DESIGN, USE STANDARDS: HCOSS-Z1, COSS-FD & COSSF

NOTES:
DRILL SHAFTS FOR THE OVERHEAD SIGN STRUCTURE SHALL BE INSTALLED PRIOR TO THE CONSTRUCTION OF THE MSE WALLS, OR THE UPPER 10 FT OF THE SHAFT SHALL BE CASED, WITH CASING TO BE REMOVED.

CASING SHALL BE APPROVED PRIOR TO CONSTRUCTION BY THE ENGINEER. CASING SHALL BE SUBSIDARY TO THE CONSTRUCTION OF THE OVERHEAD SIGN STRUCTURE.

INSTALL NEW OVERHEAD SIGNS, WALKWAY AND SUPPORT BRACKETS AS SHOWN ON STANDARDS SL(1)-95, SWW(1) & SB(SWL-1).

ITEM	DESCRIPTION	UNIT	QTY
416 0509	DRILL SHAFT (SIGN MTS) (54")	LF	26
650 0603	OVERHEAD SIGN SUPT (35 FT CANT) (21 FT 0 IN HT)	EA	1
654 0502	SIGN WALKWAY W/HANDRAIL (36")	LF	21

BM & HORIZONTAL DATA
BM=US 281-14
EL=103.90
STA=727+41.86, 241.71 LT
3 1/4" TXDOT ALUMINUM DISK

THE SEAL APPEARING ON THIS DOCUMENT WAS AUTHORIZED BY PHAISARN CWATANAPHOL, P.E. 89252 ON 08/06/2003.

STATE OF TEXAS
PHAISARN CWATANAPHOL
89252
REGISTERED PROFESSIONAL ENGINEER

Parsons Brinckerhoff Quade & Douglas Inc.

Texas Department of Transportation

© 2003 by TxDOT

US 281 OVERHEAD SIGN DETAIL

SCALE : AS SHOWN

SHEET 9 OF 16						281OHS10.DGN	
DESIGNED: TT	FED. RD DIV. NO.	STATE	FEDERAL AID PROJECT No.			HIGHWAY No.	
CHECKED: DM	6	TEXAS				US 281	
DRAWN: JT	STATE DISTRICT	COUNTY	CONTROL No.	SECTION No.	JOB No.	SHEET No.	
CHECKED: DM	PHARR	HIDALGO	0255	08	091	819	

NAME
06:45:25 PM
08/06/2003
T:\22322a\CADD\Sheets\Traffic\Signing\LG SIGN DETAILS\281ohs10.dgn

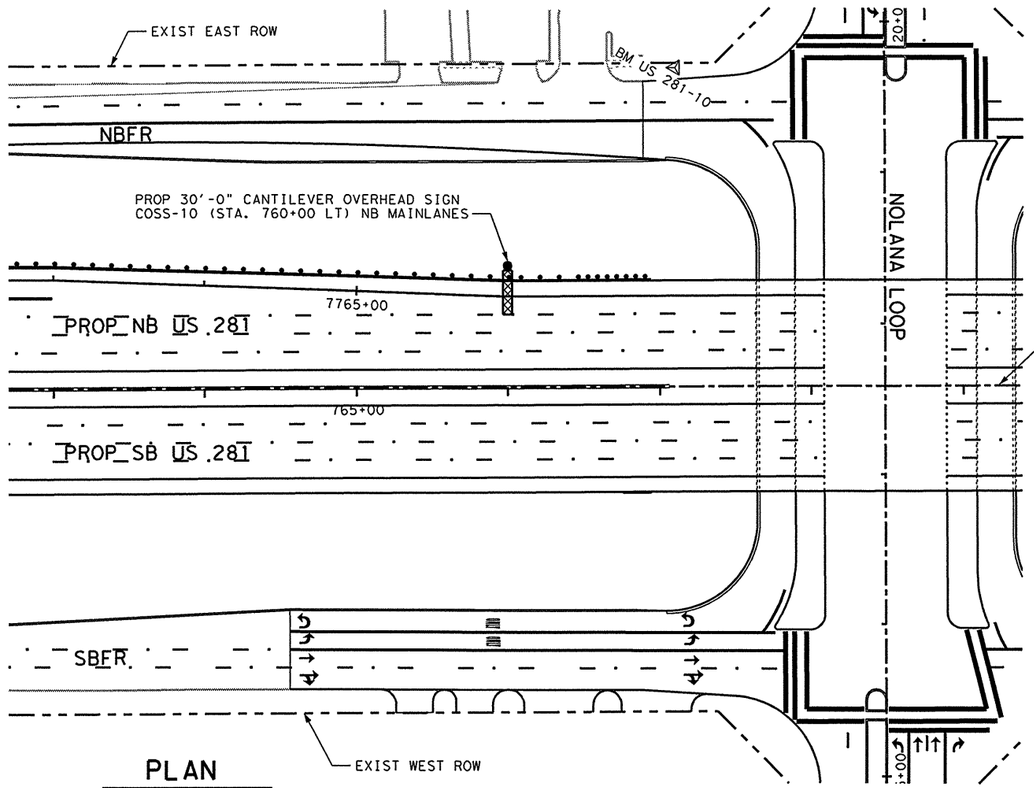

PLAN

STA. 760+00 (LT)
SCALE : 1" = 100'

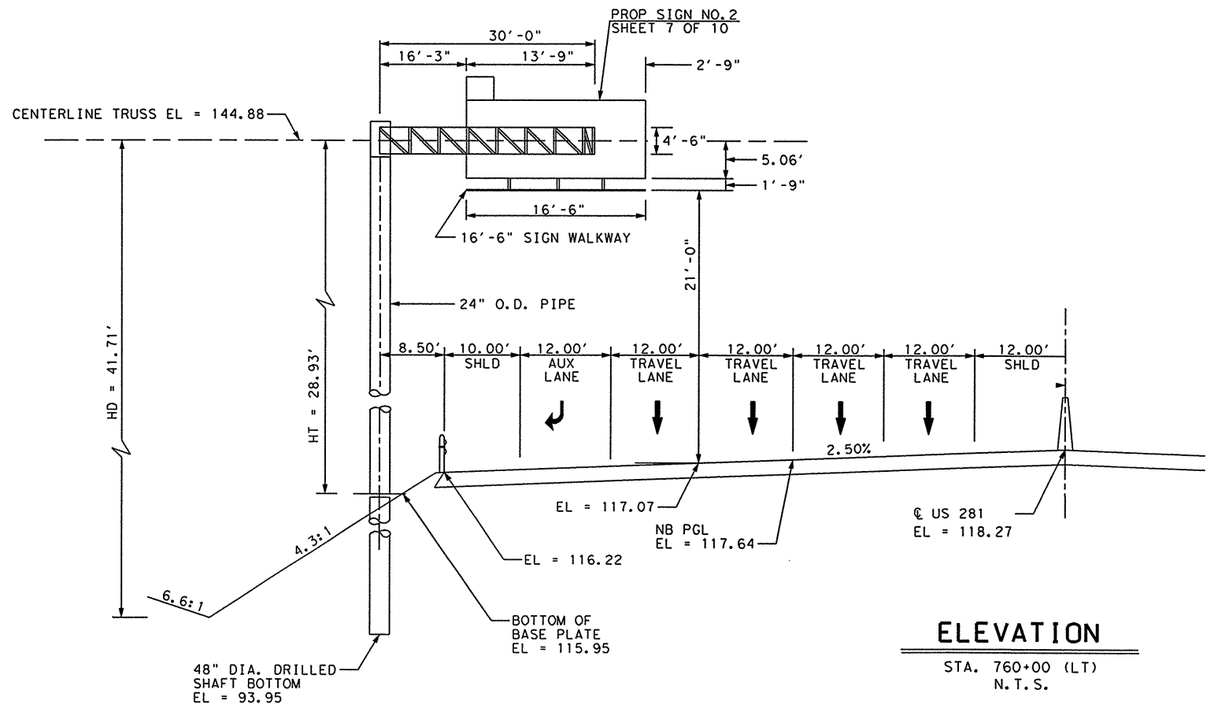

ELEVATION

STA. 760+00 (LT)
N.T.S.

DESIGN PARAMETERS:

CANTILEVER SPAN = 30 FT
DESIGN HEIGHT, Hd = 42.63 FT
COLUMN HEIGHT, Ht = 29.85 FT
AVG PEN. VALUE = 16 BLOWS/FT
WIND ZONE 4 - 70 MPH (HIDALGO COUNTY)
BELOW ICE ZONE (100 MPH USED)
FOR DESIGN, USE STANDARDS: HCOSS-Z1, COSS-FD & COSSF

NOTES:

INSTALL NEW OVERHEAD SIGNS, WALKWAY AND SUPPORT BRACKETS AS SHOWN ON STANDARDS SL(1)-95, SWW(1) & SB(SWL-1).

ITEM	DESCRIPTION	UNIT	QTY
416 0508	DRILL SHAFT (SIGN MTS) (48")	LF	22
650 0602	OVERHEAD SIGN SUPT (30 FT CANT) (21 FT 0 IN HT)	EA	1
654 0502	SIGN WALKWAY W/HANDRAIL (36")	LF	16.5

△BM & HORIZONTAL DATA
BM=US 281-10
EL=105.56
STA=767+10.57, 210.84 LT
3 1/4" TXDOT ALUMINUM DISK

THE SEAL APPEARING ON THIS DOCUMENT WAS AUTHORIZED BY PHAISARN CWATANAPHOL, P.E. 89252 ON 06/26/2003.

STATE OF TEXAS
PHAISARN CWATANAPHOL
89252
REGISTERED
PROFESSIONAL ENGINEER

Parsons Brinckerhoff Quade & Douglas Inc.

Texas Department of Transportation

© 2003 by TxDOT

US 281 OVERHEAD SIGN DETAIL

SCALE : AS SHOWN

SHEET 10 OF 16					281OHS11.DGN		
DESIGNED: TT	FED. RD DIV. No.	STATE	FEDERAL AID PROJECT No.			HIGHWAY No.	
CHECKED: DM	6	TEXAS				US 281	
DRAWN: JT	STATE DISTRICT	COUNTY	CONTROL No.	SECTION No.	JOB No.	SHEET No.	
CHECKED: DM	PHARR	HIDALGO	0255	08	091	820	

Phaisarn C.
03:39:24 PM
06/26/2003
i:\22322a\cadd\sheets\traffic\signing\lg sign details\281ohs11.dgn

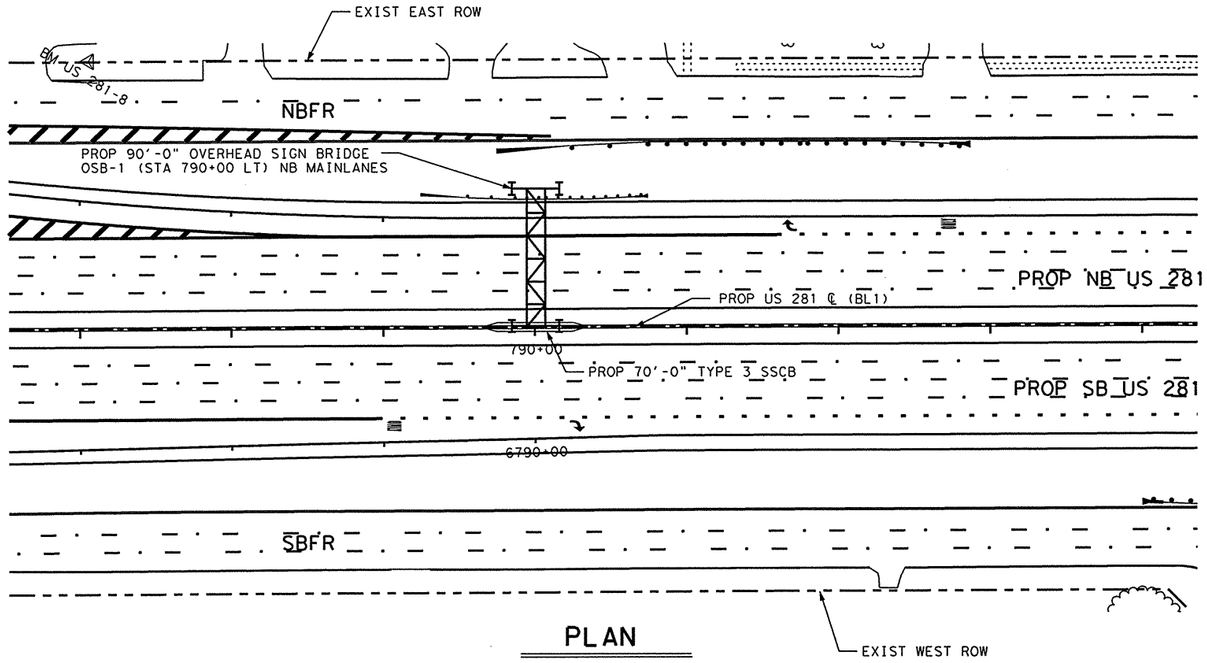

PLAN

STA. 790+00 (LT)
SCALE : 1" = 100'

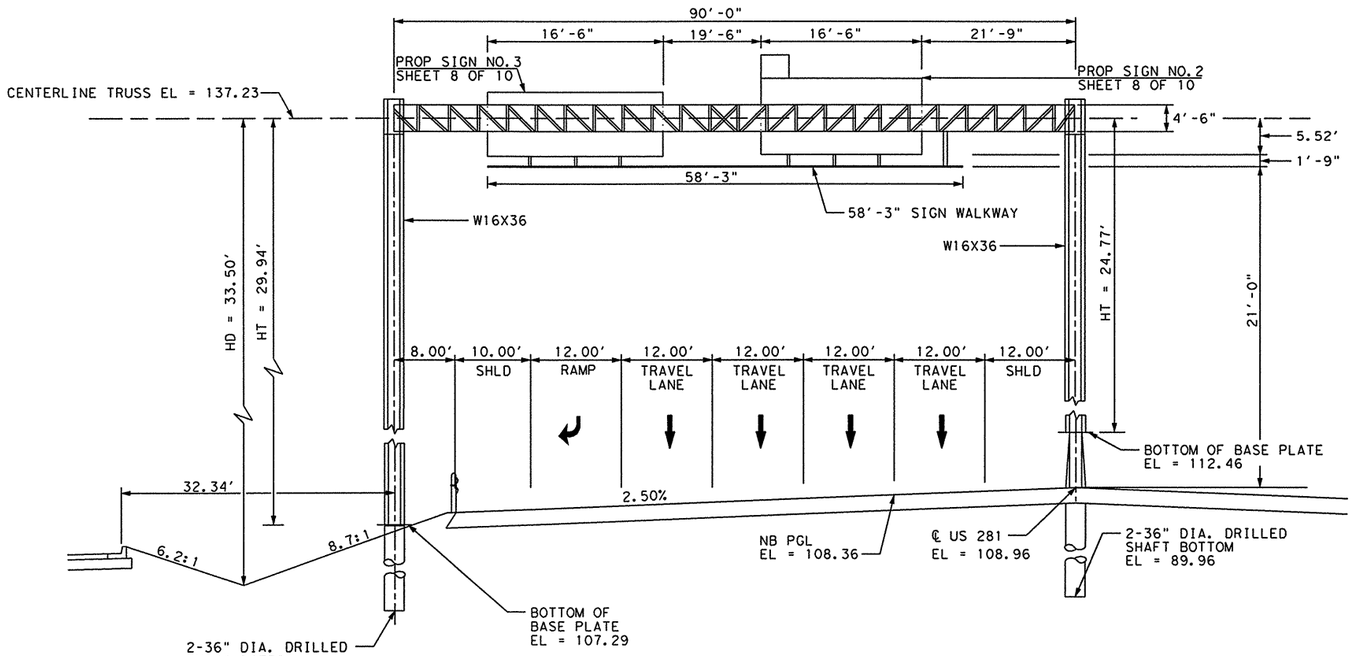

ELEVATION

STA. 790+00 (LT)
N.T.S.

DESIGN PARAMETERS:

OVERHEAD BRIDGE SPAN = 90 FT
DESIGN HEIGHT, Hd = 33.50 FT
COLUMN HEIGHT, Ht = 29.94 & 24.77 FT
AVG PEN. VALUE = 12 BLOWS/FT
WIND ZONE 4 - 70 MPH (HIDALGO COUNTY)
BELOW ICE ZONE (100 MPH USED)
FOR DESIGN, USE STANDARDS: HOSB-Z4, OSB-FD & OSBT

NOTES:

INSTALL NEW OVERHEAD SIGNS, WALKWAY AND SUPPORT BRACKETS AS SHOWN ON STANDARDS SL(1)-95, SWW(1) & SB(SWL-1).

ITEM	DESCRIPTION	UNIT	QTY
416 0506	DRILL SHAFT (SIGN MTS) (36")	FT	83
650 0562	OVERHEAD SIGN SUPT (90 FT BRDG) (21 FT 0 IN HT)	EA	1
654 0502	SIGN WALKWAY W/HANDRAIL (36")	FT	58.25

BM & HORIZONTAL DATA
BM=US 281-8
EL=104.97
STA=787+06.77, 175.17 LT
3 1/4" TXDOT ALUMINUM DISK

THE SEAL APPEARING ON THIS DOCUMENT WAS AUTHORIZED BY PHAISARN CWATANAPHOL, P.E. 89252 ON 06/26/2003.

STATE OF TEXAS
PHAISARN CWATANAPHOL
89252
REGISTERED
PROFESSIONAL ENGINEER

Parsons Brinckerhoff Quade & Douglas Inc.

Texas Department of Transportation

© 2003 by TxDOT

US 281 OVERHEAD SIGN DETAIL

SCALE : AS SHOWN

SHEET 11 OF 16				281OHS12.DGN			
DESIGNED: TT	FED. RD DIV. NO.	STATE	FEDERAL AID PROJECT No.			HIGHWAY No.	
CHECKED: DM	6	TEXAS				US 281	
DRAWN: JT	STATE DISTRICT	COUNTY	CONTROL No.	SECTION No.	JOB No.	SHEET No.	
CHECKED: DM	PHARR	HIDALGO	0255	08	091	821	

Phaisarn C.
03:39:31 PM
06/26/2003
i:\22322a\cadd\sheets\traffic\signing\lg sign details\281ohs12.dgn

Phaisarn C.
03:39:38 PM
06/26/2003
i:\22322a\cadd\sheets\traffic\signing\lg sign details\281ohs13.dgn

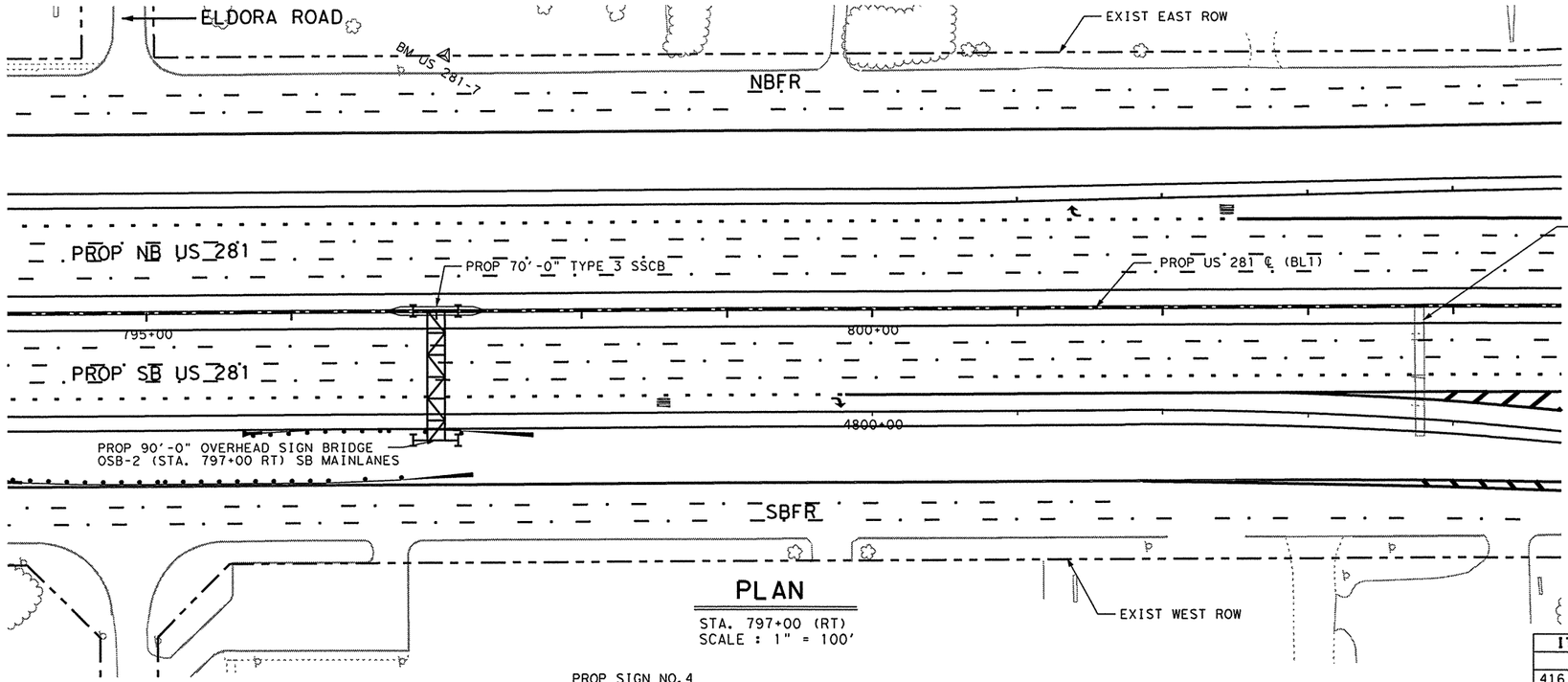

PLAN

STA. 797+00 (RT)
SCALE : 1" = 100'

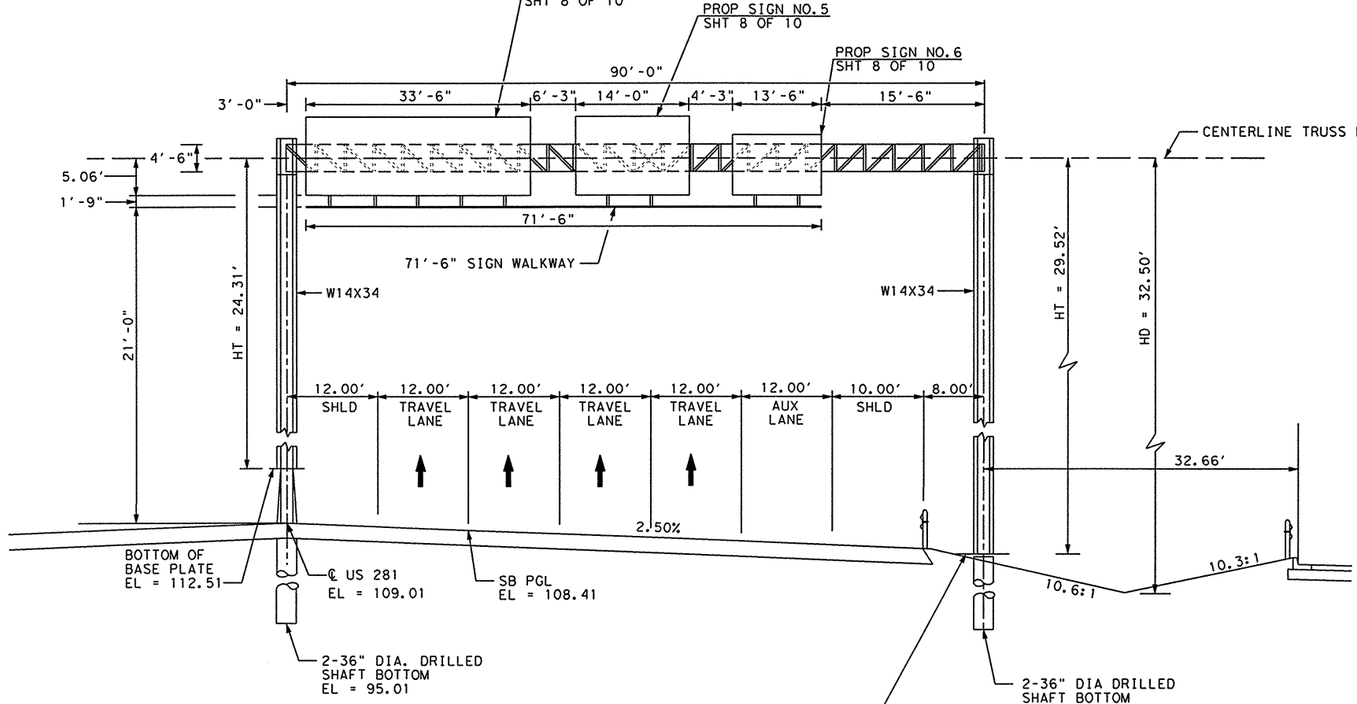

ELEVATION

STA. 797+00 (RT)
N.T.S.

DESIGN PARAMETERS:

OVERHEAD BRIDGE SPAN = 90 FT
DESIGN HEIGHT, Hd = 32.50 FT
COLUMN HEIGHT, Ht = 24.31 & 29.52 FT
AVG PEN. VALUE = 19 BLOWS/FT
WIND ZONE 4 - 70 MPH (HIDALGO COUNTY)
BELOW ICE ZONE (100 MPH USED)
FOR DESIGN, USE STANDARDS: HOSB-Z4, OSB-FD & OSBT

NOTES:

INSTALL NEW OVERHEAD SIGNS, WALKWAY AND SUPPORT BRACKETS AS SHOWN ON STANDARDS SL(1)-95, SWW(1) & SB(SWL-1).

ITEM	DESCRIPTION	UNIT	QTY
416 0506	DRILL SHAFT (SIGN MTS) (36")	LF	63
650 0562	OVERHEAD SIGN SUPT (90 FT BRDG) (21 FT 0 IN HT)	EA	1
654 0502	SIGN WALKWAY W/HANDRAIL (36")	LF	71.5
651 0501	REMOVE OVHD SIGN SUPPORTS	EA	1

BM & HORIZONTAL DATA
BM=US 281-7
EL=104.98
STA=797+06.99, 175.36 LT
3 1/4" TXDOT ALUMINUM DISK

THE SEAL APPEARING ON THIS DOCUMENT WAS AUTHORIZED BY PHAISARN CWATANAPHOL, P.E. 89252 ON 06/26/2003.

STATE OF TEXAS
PHAISARN CWATANAPHOL
89252
REGISTERED PROFESSIONAL ENGINEER

Parsons Brinckerhoff Quade & Douglas Inc.

Texas Department of Transportation

© 2003 by TxDOT

US 281 OVERHEAD SIGN DETAIL

SCALE : AS SHOWN

SHEET 12 OF 16				281OHS13.DGN			
DESIGNED: TT	FED. RD DIV. No.	STATE	FEDERAL AID PROJECT No.			HIGHWAY No.	
CHECKED: DM	6	TEXAS				US 281	
DRAWN: JT	STATE DISTRICT	COUNTY	CONTROL No.	SECTION No.	JOB No.	SHEET No.	
CHECKED: DM	PHARR	HIDALGO	0255	08	091	822	

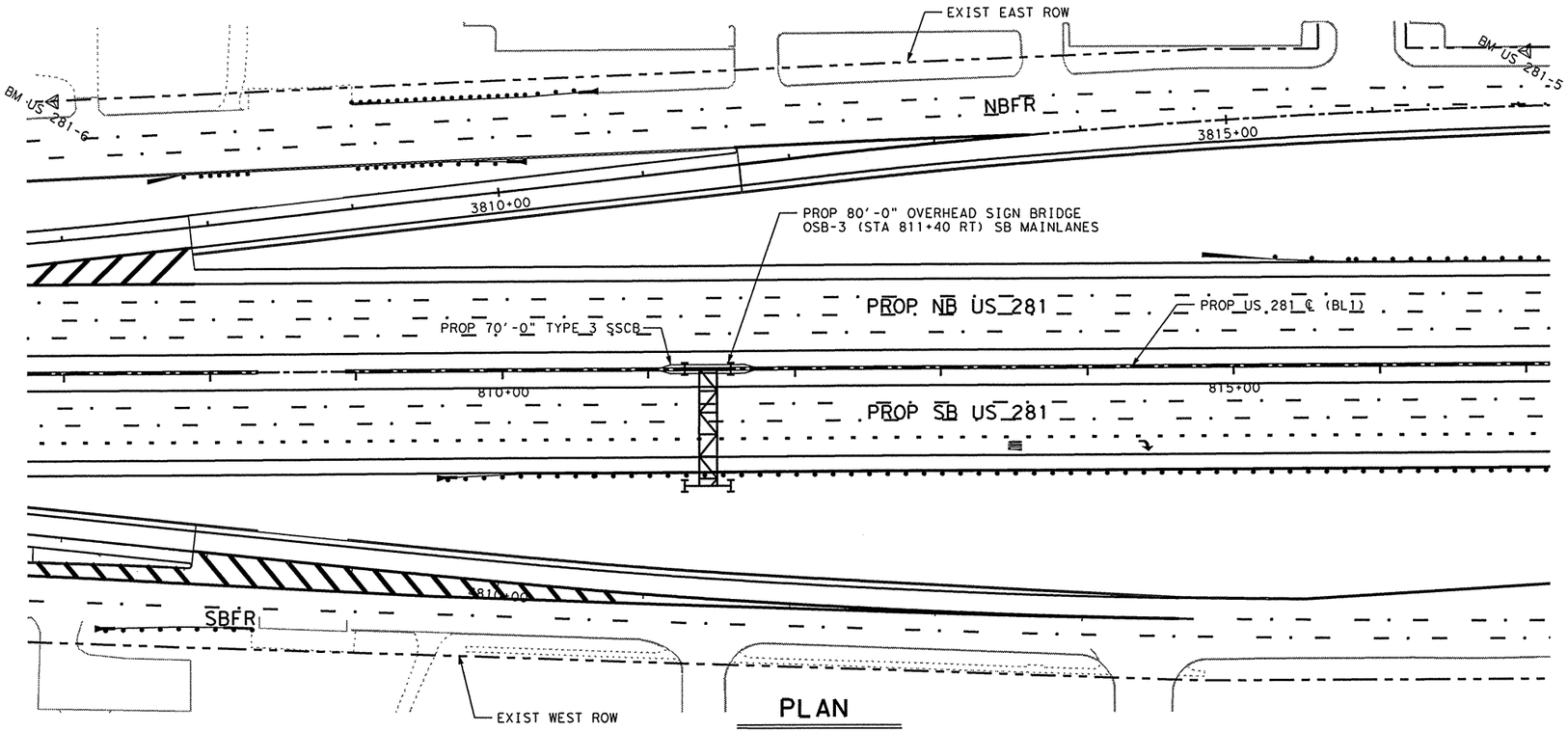

PLAN

STA. 811+40 (RT)
SCALE : 1" = 100'

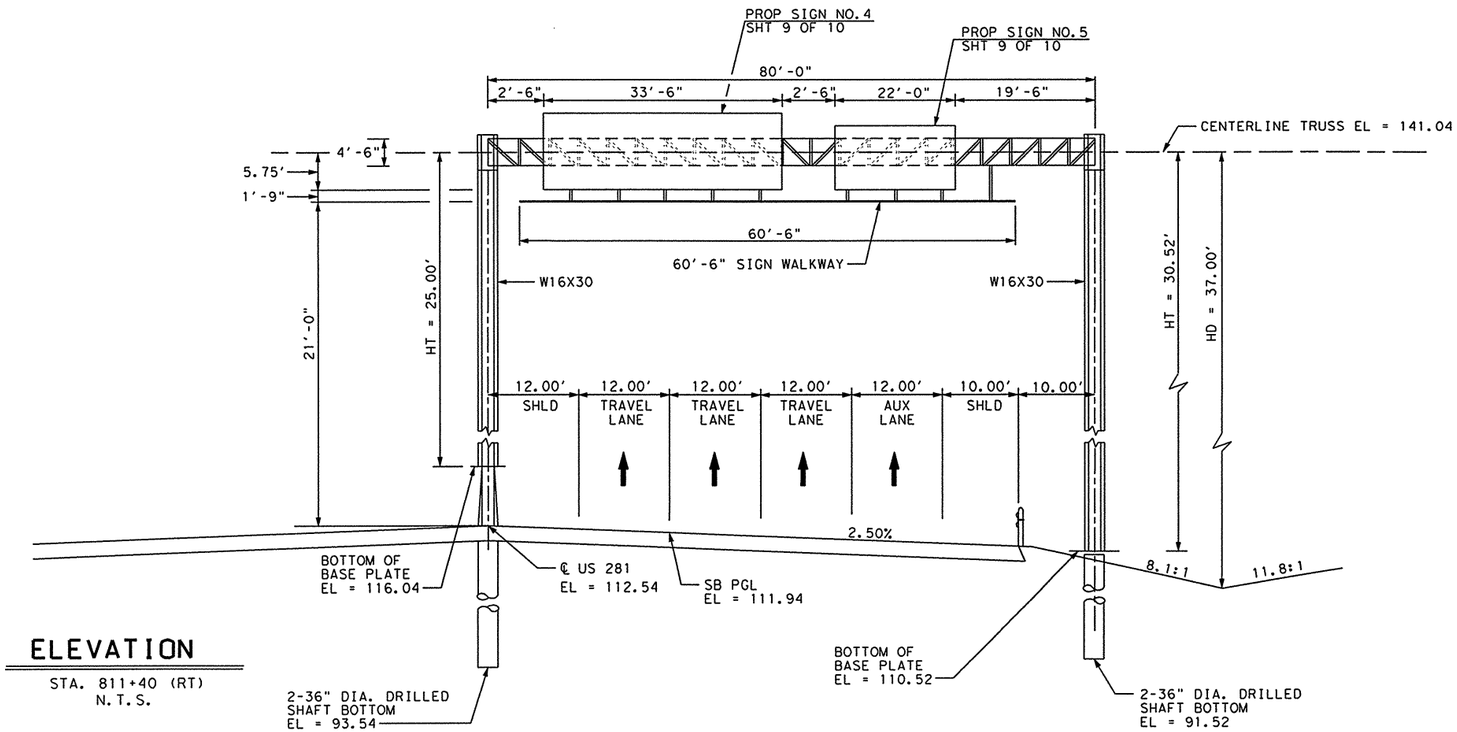

ELEVATION

STA. 811+40 (RT)
N.T.S.

DESIGN PARAMETERS:

OVERHEAD BRIDGE SPAN = 80 FT
DESIGN HEIGHT, Hd = 37.00 FT
COLUMN HEIGHT, Ht = 25.00 & 30.52 FT
AVG PEN. VALUE = 17 BLOWS/FT
WIND ZONE 4 - 70 MPH (HIDALGO COUNTY)
BELOW ICE ZONE (100 MPH USED)
FOR DESIGN, USE STANDARDS: HOSB-Z4. OSB-FD & OSBT

NOTES:

INSTALL NEW OVERHEAD SIGNS, WALKWAY AND SUPPORT BRACKETS AS SHOWN ON STANDARDS SL(1)-95, SWW(1) & SB(SWL-1).

ITEM	DESCRIPTION	UNIT	QTY
416 0506	DRILL SHAFT (SIGN MTS) (36")	LF	83
650 0560	OVERHEAD SIGN SUPT (80 FT BRDG) (21 FT 0 IN HT)	EA	1
654 0502	SIGN WALKWAY W/HANDRAIL (36")	LF	60.5

BM & HORIZONTAL DATA
BM=US 281-5
EL=107.46
STA=817+01.19, 211.65 LT
3 1/4" TXDOT ALUMINUM DISK

BM & HORIZONTAL DATA
BM=US 281-6
EL=105.28
STA=806+94.49, 183.50 LT
3 1/4" TXDOT ALUMINUM DISK

THE SEAL APPEARING ON THIS DOCUMENT WAS AUTHORIZED BY PHAISARN CWATANAPHOL, P.E. 89252 ON 06/26/2003.

STATE OF TEXAS
PHAISARN CWATANAPHOL
89252
REGISTERED PROFESSIONAL ENGINEER

Parsons Brinckerhoff Quade & Douglas Inc.

Texas Department of Transportation
© 2003 by TxDOT

US 281 OVERHEAD SIGN DETAIL

SCALE : AS SHOWN

SHEET 13 OF 16				281OHS14.DGN			
DESIGNED: TT	FED. RD DIV. No.	STATE	FEDERAL AID PROJECT No.			HIGHWAY No.	
CHECKED: DM	6	TEXAS				US 281	
DRAWN: JT	STATE DISTRICT	COUNTY	CONTROL No.	SECTION No.	JOB No.	SHEET No.	
CHECKED: DM	PHARR	HIDALGO	0255	08	091	823	

Phaisarn C.
03:39:45 PM
06/26/2003
i:\22322a\cadd\sheets\traffic\signing\lg sign details\281ohs14.dgn

Phaisarn C.
03:39:53 PM
06/26/2003
i:\22322a\cadd\sheets\traffic\signing\lg sign details\281ohs15.dgn

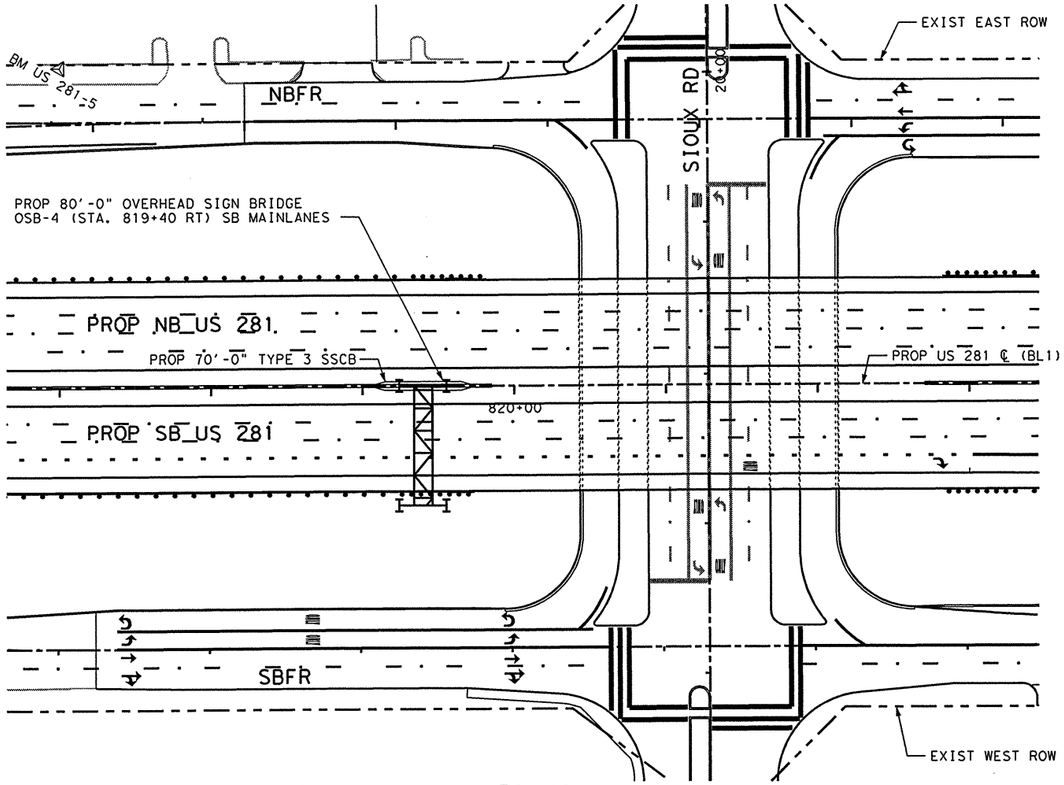

PLAN

STA. 819+40 (RT)
SCALE: 1" = 100'

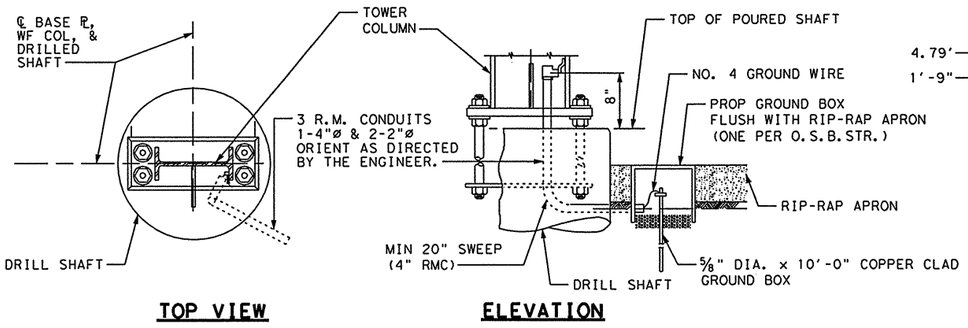

TOP VIEW **ELEVATION**

PROP R.M. CONDUIT DETAIL

NOTE: GROUND TOWER BY BRAZING GROUND WIRE LUG TO CLOUMN

EXISTING TY-2 VMS RELOCATED FROM EXISTING SIGN BRIDGE WEIGHT = 3,500 LBS (PER RECORD DRAWINGS)

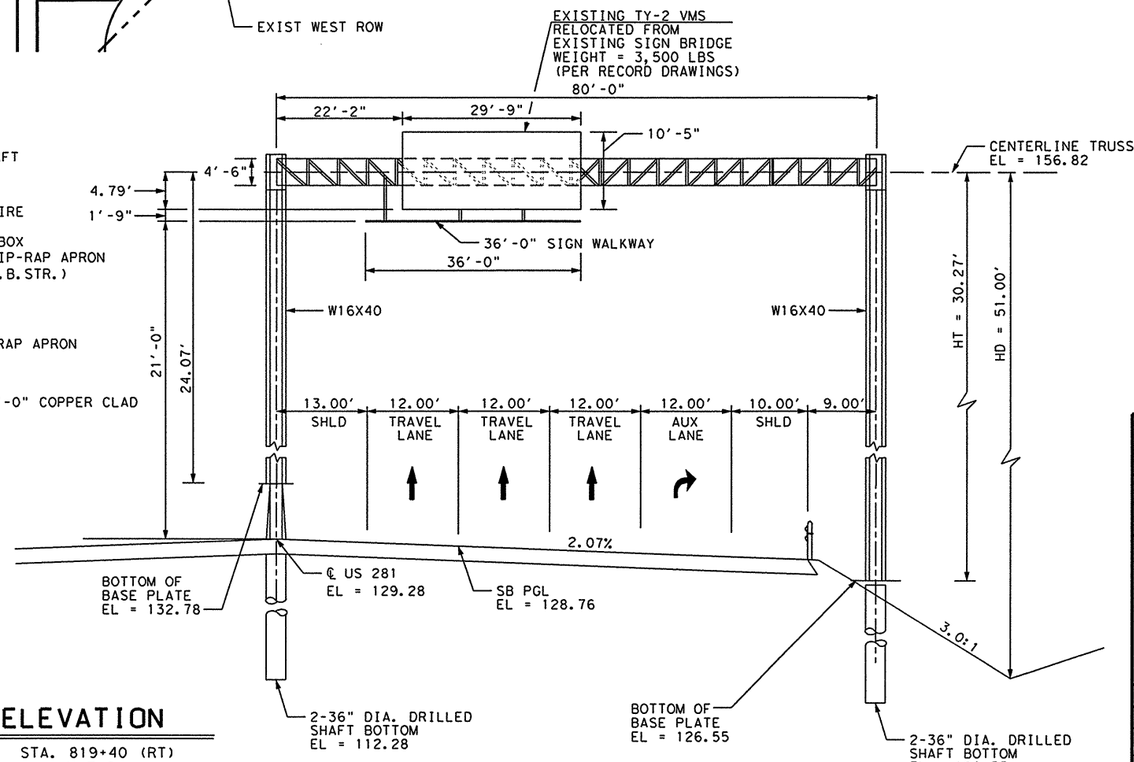

ELEVATION

STA. 819+40 (RT)
N.T.S.

DESIGN PARAMETERS:

OVERHEAD BRIDGE SPAN = 80 FT
DESIGN HEIGHT, Hd = 51.00 FT
COLUMN HEIGHT, Ht = 24.07 & 30.27 FT
AVG PEN. VALUE = 35 BLOWS/FT
WIND ZONE 4 - 70 MPH (HIDALGO COUNTY)
BELOW ICE ZONE (100 MPH USED)
FOR DESIGN, USE STANDARDS: HOSB-Z4, OSB-FD, & OSBT

NOTES:

INSTALL NEW OVERHEAD SIGNS, WALKWAY AND SUPPORT BRACKETS AS SHOWN ON STANDARDS SL(1)-95, SWW(1) & SB(SWL-1).

SEE ITS DRAWINGS FOR ADDITIONAL INFORMATION INCLUDING CONDUIT RUNS.

EXISTING TY-2 VMS SHALL BE LOCATED AS SHOWN. IF VMS IS RELOCATED OR ADDITIONAL SIGNS ATTACHED, THE OVERHEAD SIGN BRIDGE SHALL BE ANALYZED FOR STRUCTURAL ADEQUACY.

ITEM	DESCRIPTION	UNIT	QTY
416 0506	DRILL SHAFT (SIGN MTS) (36")	LF	75
650 0560	OVERHEAD SIGN SUPT (80 FT BRDG) (21 FT 0 IN HT)	EA	1
654 0502	SIGN WALKWAY W/HANDRAIL (36")	LF	36

△BM & HORIZONTAL DATA
BM=US 281-5
EL=107.46
STA=817+01.19, 211.65 LT
3 ¼" TXDOT ALUMINUM DISK

THE SEAL APPEARING ON THIS DOCUMENT WAS AUTHORIZED BY PHAISARN CWATANAPHOL, P.E. 89252 ON 06/26/2003.

STATE OF TEXAS
PHAISARN CWATANAPHOL
89252
REGISTERED PROFESSIONAL ENGINEER

Parsons Brinckerhoff Quade & Douglas Inc.

Texas Department of Transportation

© 2003 by TxDOT

US 281 OSB/TY-2 VMS DETAILS

SHEET 14 OF 16				2810HS15.DGN			
DESIGNED: TT	FED. RD DIV. NO.	STATE	FEDERAL AID PROJECT No.			HIGHWAY No.	
CHECKED: DM	6	TEXAS				US 281	
DRAWN: JT	STATE DISTRICT	COUNTY	CONTROL No.	SECTION No.	JOB No.	SHEET No.	
CHECKED: DM	PHARR	HIDALGO	0255	08	091	824	

Phaisarn C.
03:40:01 PM
06/26/2003
i:\22322a\cadd\sheets\traffic\signing\lg sign details\281ohs16.dgn

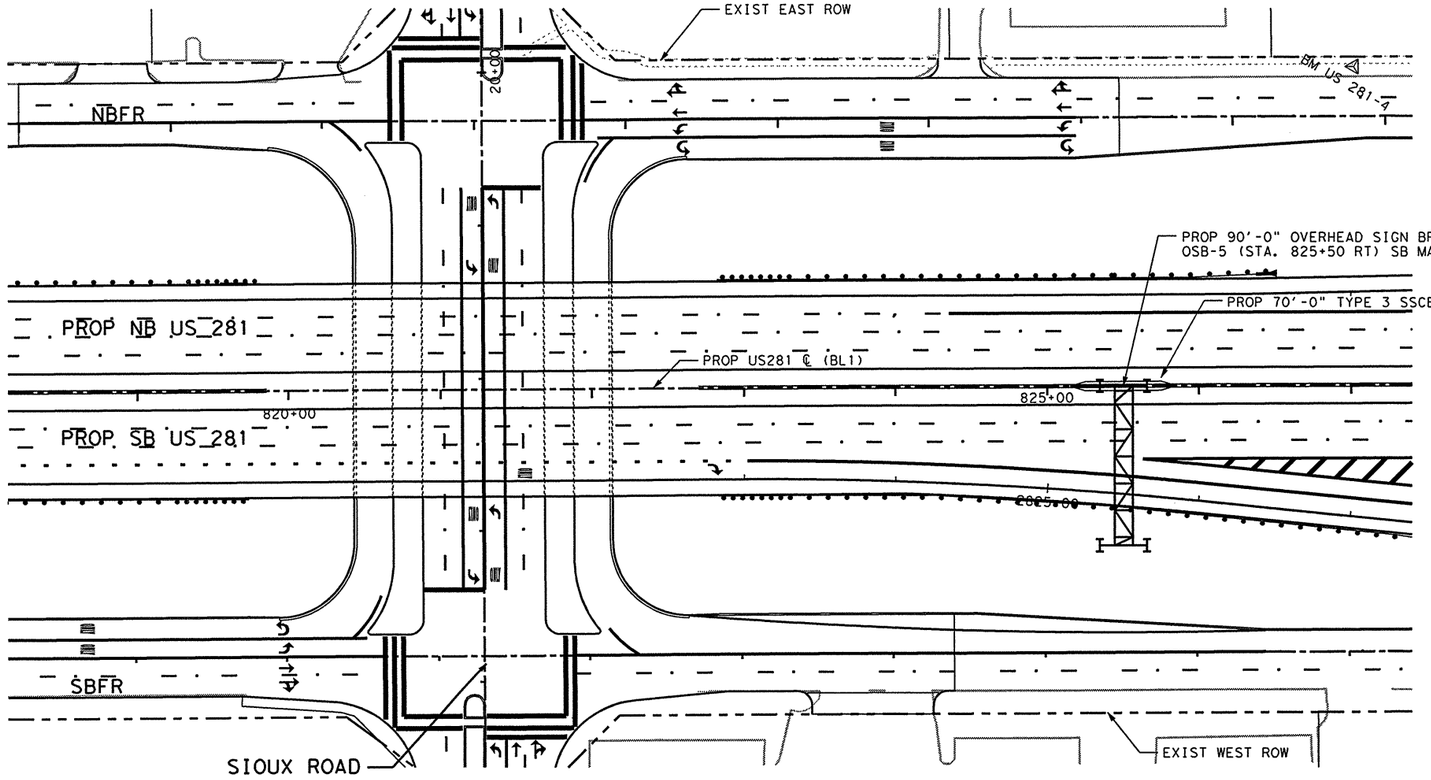

PLAN

STA. 825+50 (RT)
SCALE: 1" = 100'

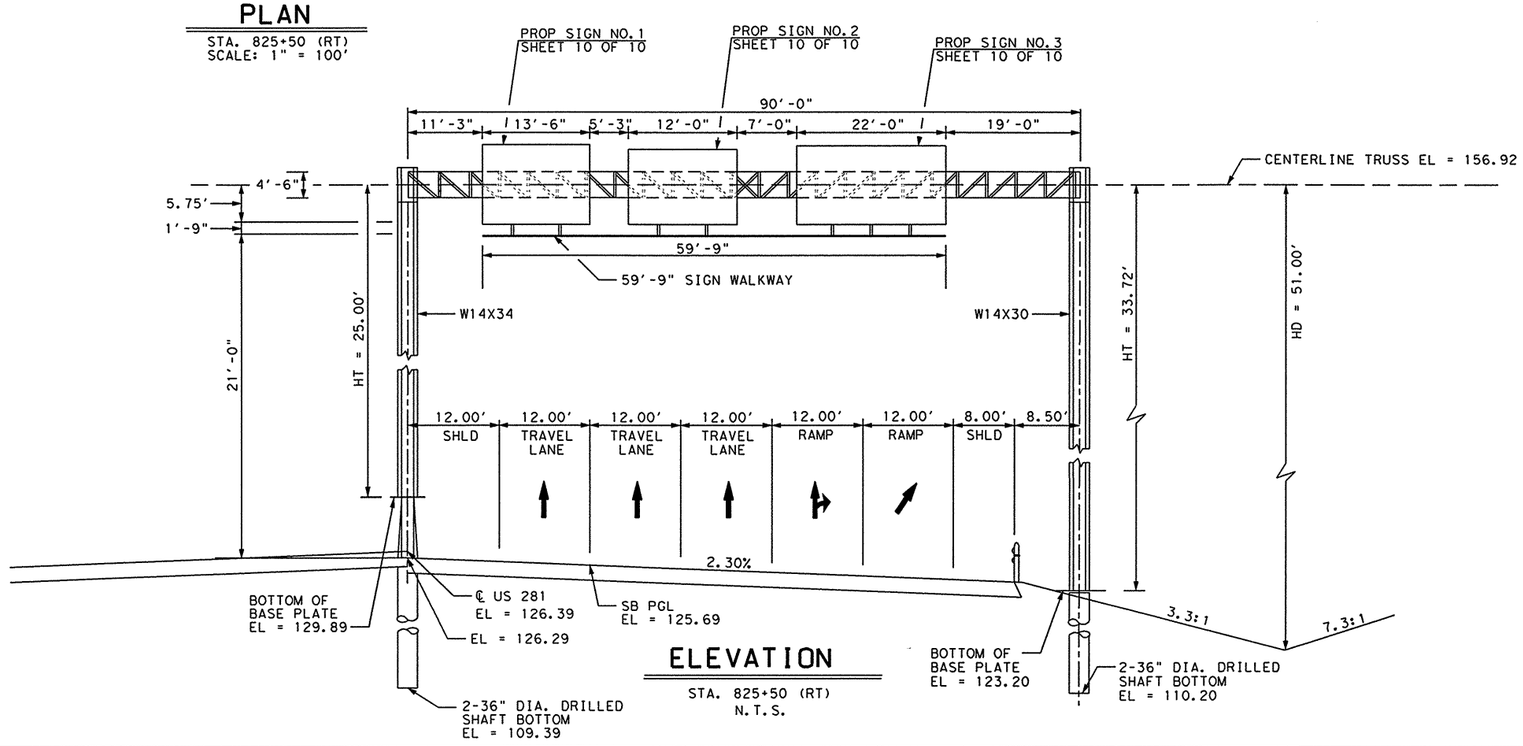

ELEVATION

STA. 825+50 (RT)
N.T.S.

DESIGN PARAMETERS:

OVERHEAD BRIDGE SPAN = 90 FT
DESIGN HEIGHT, Hd = 51.00 FT
COLUMN HEIGHT, Ht = 25.00 & 33.72 FT
AVG PEN. VALUE = 17 BLOWS/FT
WIND ZONE 4 - 70 MPH (HIDALGO COUNTY)
BELOW ICE ZONE (100 MPH USED)
FOR DESIGN, USE STANDARDS: HOSB-Z4, OSB-FD & OSBT

NOTES:

INSTALL NEW OVERHEAD SIGNS, WALKWAY AND SUPPORT BRACKETS AS SHOWN ON STANDARDS SL(1)-95, SWW(1) & SB(SWL-1).

ITEM	DESCRIPTION	UNIT	QTY
416 0506	DRILL SHAFT (SIGN MTS) (36")	LF	67
650 0562	OVERHEAD SIGN SUPT (90 FT BRDG) (21 FT 0 IN HT)	EA	1
654 0502	SIGN WALKWAY W/HANDRAIL (36")	LF	59.75

△BM & HORIZONTAL DATA
BM=US 281-4
EL=106.43
STA=827+02.50, 207.77 LT
3 1/4" TXDOT ALUMINUM DISK

THE SEAL APPEARING ON THIS DOCUMENT WAS AUTHORIZED BY PHAISARN CWATANAPHOL, P.E. 89252 ON 06/26/2003.

STATE OF TEXAS
PHAISARN CWATANAPHOL
89252
REGISTERED
PROFESSIONAL ENGINEER

Parsons Brinckerhoff Quade & Douglas Inc.

Texas Department of Transportation

© 2003 by TxDOT

US 281 CANTILEVER OVERHEAD SIGN DETAILS

SHEET 15 OF 16				281OHS16.DGN	
DESIGNED: TT	FED. RD DIV. No.	STATE	FEDERAL AID PROJECT No.		HIGHWAY No.
CHECKED: DM	6	TEXAS			US 281
DRAWN: JT	STATE DISTRICT	COUNTY	CONTROL No.	SECTION No.	JOB No.	SHEET No.
CHECKED: DM	PHARR	HIDALGO	0255	08	091	825

Phaisarn C.
03:40:08 PM
06/26/2003
I:\22322a\cadd\sheets\traffic\signing\lg sign details\281ohs17.dgn

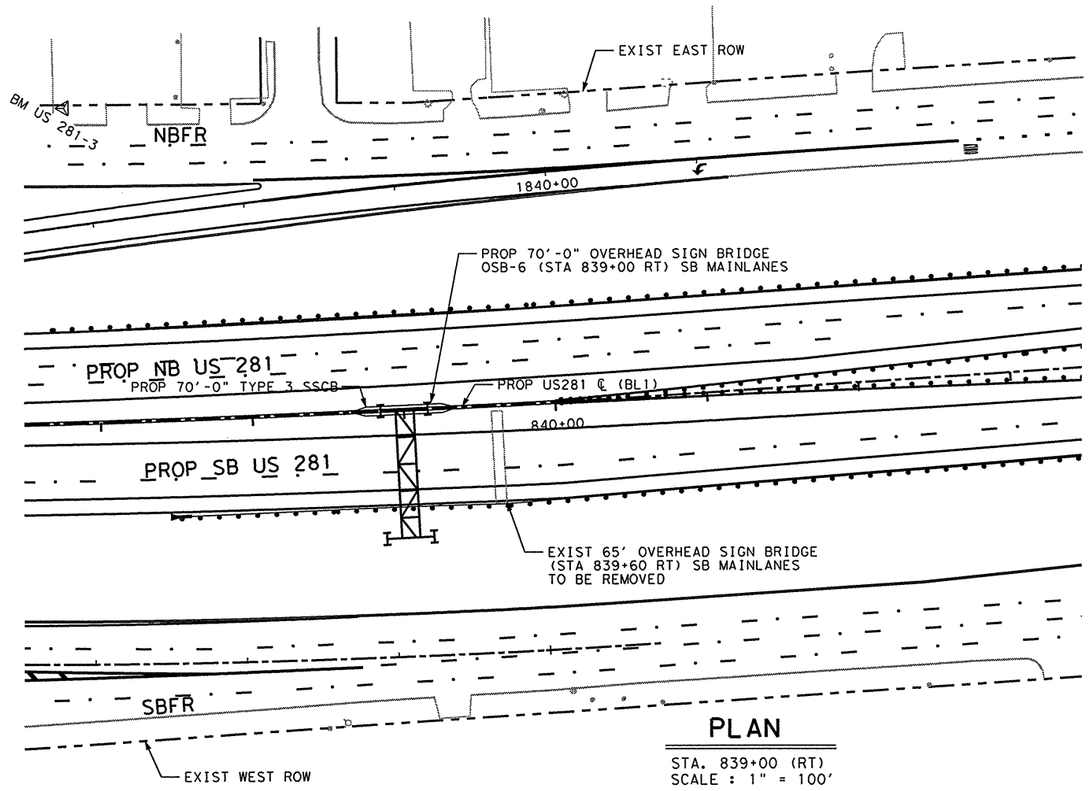

PLAN

STA. 839+00 (RT)
SCALE : 1" = 100'

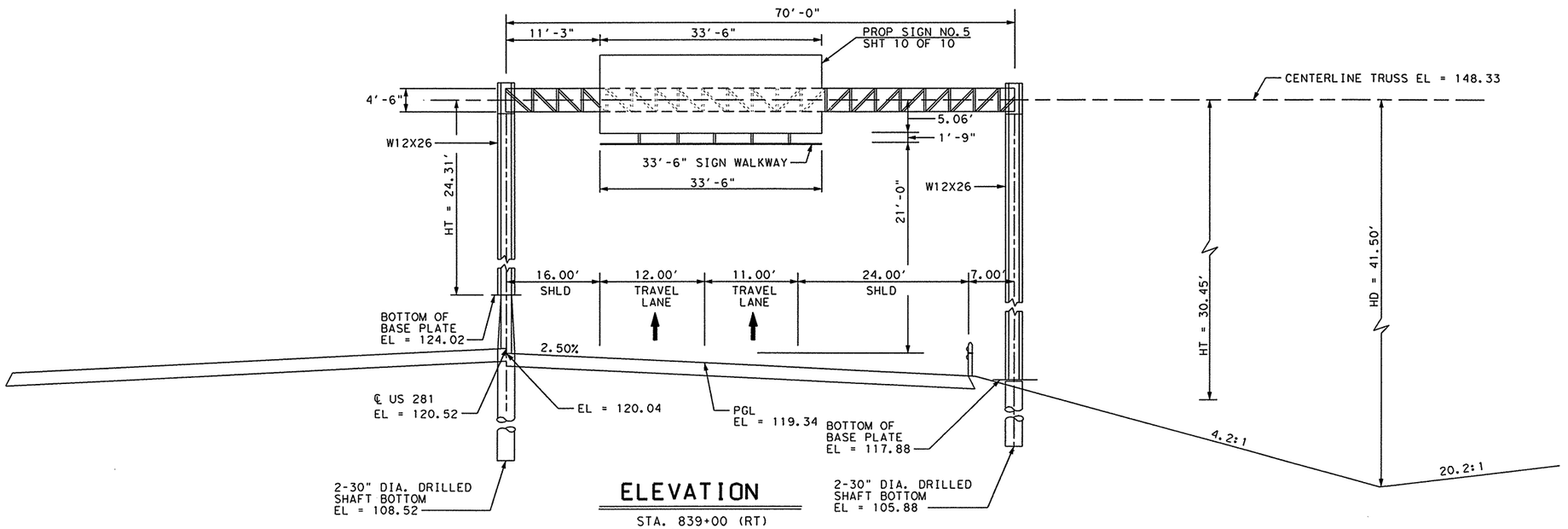

ELEVATION

STA. 839+00 (RT)
N.T.S.

DESIGN PARAMETERS:

CANTILEVER SPAN = 70 FT
DESIGN HEIGHT, Hd = 41.50 FT
COLUMN HEIGHT, Ht = 24.31 & 30.45 FT
AVG PEN. VALUE = 20 BLOWS/FT
WIND ZONE 4 - 70 MPH (HIDALGO COUNTY)
BELOW ICE ZONE (100 MPH USED)
FOR DESIGN, USE STANDARDS: OSB-SE, HOSB-Z4, OSBC & OSBT

NOTES:

INSTALL NEW OVERHEAD SIGNS, WALKWAY AND SUPPORT BRACKETS AS SHOWN ON STANDARDS SL(1)-95, SWW(1) & SB(SWL-1).

ITEM	DESCRIPTION	UNIT	QTY
416 0504	DRILL SHAFT (SIGN MTS) (30")	LF	55
650 0558	OVERHEAD SIGN SUPT (70 FT BRDG) (21 FT 0 IN HT)	EA	1
654 0502	SIGN WALKWAY W/HANDRAIL (36")	LF	33.5
651 0501	REMOVE OVHD SIGN SUPPORTS	EA	1

⚠BM & HORIZONTAL DATA
BM=US 281-3
EL=107.76
STA=836+81.89, 209.01 LT
3 1/4" TXDOT ALUMINUM DISK

THE SEAL APPEARING ON THIS DOCUMENT WAS AUTHORIZED BY PHAISARN CWATANAPHOL, P.E. 89252 ON 06/26/2003.

STATE OF TEXAS
PHAISARN CWATANAPHOL
89252
REGISTERED
PROFESSIONAL ENGINEER

Phaisarn Cwatanaphol

PB Parsons Brinckerhoff Quade & Douglas Inc.

Texas Department of Transportation

© 2003 by TxDOT

US 281 OVERHEAD SIGN DETAIL

SCALE : AS SHOWN

SHEET 16 OF 16					281OHS17.DGN			
DESIGNED: TT	FED. RD. DIV. No.	STATE	FEDERAL AID PROJECT No.				HIGHWAY No.	
CHECKED: DM	6	TEXAS					US 281	
DRAWN: JT	STATE DISTRICT	COUNTY		CONTROL No.	SECTION No.	JOB No.	SHEET No.	
CHECKED: DM	PHARR	HIDALGO		0255	08	091	826	

NAME
09:29:18 AM
06/27/2003
I:\22322o\CADD\Sheets\Summary\281sdrs01.dgn

SUMMARY OF SMALL SIGNS

PLAN SHT. NO.	SIGN NO.	SIGN TYPE	SIGN TEXT	SIGN DIMENS. (INCHES)	REMOVE SMALL SIGN ASSM. (EA)	RELOCATE SMALL SIGN ASSM (EA)
			CSJ: 0255-08-091			
1/10	1	R1-1	STOP	30X30	X	
	2	R6-1R	ONE WAY W ARROW	36X12	X	
	3	SR5-1	DO NOT ENTER	48X48	X	
	4	SR5-1	DO NOT ENTER	48X48	X	
	5	D3-1	WISCONSIN ROAD	84X12	X	
	6	W12-2T	16 FT 0 IN	36X36	X	
	7	W12-2T	16 FT 0 IN	36X36	X	
	8	R1-1	STOP	30X30	X	
	9	D3-1	WISCONSIN ROAD	84X12	X	
2/10	10	M3-1	NORTH	24X12	X	
		M1-4A3	US 281	24X24		
		M6-2L	45 DEG ARROW LT	21X15		
	11	W4-1R	MERGE	36X36	X	
	12	R1-1	STOP	30X30	X	
	13	M3-1	NORTH	24X12	X	
		M1-4A3	US 281	24X24		
	14	R6-1R	ONE WAY W ARROW	36X12	X	
	15	R5-1	DO NOT ENTER	48X48	X	
	16	D1-2	HIDALGO COUNTY ⇨	96X24	X	
			APPRAISAL DISTRICT			
	17	R5-1	DO NOT ENTER	48X48	X	
	29	D1-2	HIDALGO COUNTY ⇨	96X24	X	
			APPRAISAL DISTRICT			
	30	R5-1	DO NOT ENTER	48X48	X	
	31	R5-1	DO NOT ENTER	48X48	X	
	32	R1-2	YIELD	36X36X36	X	
	33	R5-1a	WRONG WAY	48X36	X	
	34	W13-2	EXIT 45 MPH	48X60	X	
3/10	18	D3-1	TRENTON RD	84X12	X	
	19	R5-1	DO NOT ENTER	48X48	X	
	20	R5-1	DO NOT ENTER	48X48	X	
	21	R1-2	YIELD	36X36X36	X	
	22	R5-1a	WRONG WAY	48X36	X	
	23	R5-1a	WRONG WAY	48X36	X	
	24	M3-3	SOUTH	24X12	X	
		M1-4A3	US 281	24X24		
		M6-2L	45 DEG ARROW LT	21X15		
	25	M3-3	SOUTH	24X12	X	
		M1-4A3	US 281	24X24		
		M6-2L	45 DEG ARROW LT	21X15		
	26	EW4-1R	MERGE	36X36	X	
	27	R1-1	STOP	30X30	X	
	28	R6-1R	ONE WAY W ARROW	48X16	X	
	35	W13-2	EXIT 45 MPH	48X60	X	
	36	W12-2T	16 FT 1 IN	36X36	X	
	37	W12-2T	16 FT 1 IN	36X36	X	
	273	R1-1	STOP	30X30	X	
	274	D1-2	HIDALGO COUNTY ⇨	96X24	X	
			APPRAISAL DISTRICT			
4/10	38	R1-1	STOP	30X30	X	
	39	R5-1	DO NOT ENTER	48X48	X	
	40	R5-1	DO NOT ENTER	48X48	X	
	41	D3-1	ALBERTA RD	77X12	X	
	42	M3-1	NORTH	24X12	X	
		M1-4A3	US 281	24X24		
		M6-2L	45 DEG ARROW LT	21X15		
	43	EW4-1R	MERGE	36X36	X	
	44	ER8-4	EMERGENCY PARKING ONLY	30X24	X	
	45	W1-2R	RT CURVE	30X30	X	
		W13-1	ADVISORY SPEED 20 MPH	18X18		
	46	R5-1	DO NOT ENTER	48X48	X	
	47	R5-1	DO NOT ENTER	48X48	X	
	48	R1-2	YIELD	36X36X36	X	
	49	R5-1a	WRONG WAY	48X36	X	
	50	R1-1	STOP	30X30	X	
	51	R6-1R	ONE WAY W ARROW	48X16	X	
	52	R5-1	DO NOT ENTER	48X48	X	
	53	R5-1	DO NOT ENTER	48X48	X	
	54	D3-1	ALBERTA RD	77X12	X	
	55	W13-2	EXIT 20 MPH	48X60	X	

SUMMARY OF SMALL SIGNS

PLAN SHT. NO.	SIGN NO.	SIGN TYPE	SIGN TEXT	SIGN DIMENS. (INCHES)	REMOVE SMALL SIGN ASSM. (EA)	RELOCATE SMALL SIGN ASSM (EA)
4/10	86	M3-3	SOUTH	24X12	X	
		M1-4A3	US 281	24X24		
	88	M3-3	SOUTH	24X12	X	
		M1-4A3	US 281	24X24		
		M6-1L	HORIZONTAL ARROW	21X15		
		M3-1	NORTH	24X12		
		M1-4A3B	US 281	24X24		
		M6-1R	HORIZONTAL ARROW	21X15		
	89	R1-1	STOP	30X30	X	
	90	R1-1	STOP	30X30	X	
	91	R5-1a	WRONG WAY	48X36	X	
		D1-1	HOSPITAL ⇨			
	92	R5-1a	WRONG WAY	48X36	X	
	93	D1-2	⇦ PHARR	72X24	X	
			EDINBURG ⇨			
	94	W1-9R	LG ARROW BD	96X36	X	
	95	W3-1a	STOP AHEAD	36X36	X	
	96	W3-1a	STOP AHEAD	36X36	X	
	97	D1-1	⇦ OWASSA ROAD	77X12	X	
	280	D1-2	PHARR-McALLEN		X	
			THRU TRAFFIC ⇨			
5/10	56	R2-1	SPEED LIMIT 55	24X30	X	
	57	R14-2	HAZARDOUS CARGO	24X24	X	
		R14-1	TRUCK ROUTE	24X18		
		M6-2R	45 DEG ARROW RT	21X15		
	58	W3-1a	STOP AHEAD	36X36	X	
	59	W3-1a	STOP AHEAD	36X36	X	
	60	W12-2T	16 FT 5 IN	36X36	X	
	61	R14-3	HAZARDOUS CARGO PROHIBITED	24X24	X	
		M6-3	UP ARROW	21X15		
	62	SW19-2	WATCH FOR ICE ON BRIDGE FLD	36X36	X	
	63	I-2a	EDINBURG CITY LIMIT	54X24	X	
	64	SW19-2	WATCH FOR ICE ON BRIDGE FLD	36X36	X	
	65	R1-1	STOP	30X30	X	
	66	R5-1	DO NOT ENTER	48X48	X	
		R6-1R	ONE WAY W ARROW	36X12		
	67	R5-1	DO NOT ENTER	48X48	X	
	68	R5-1	DO NOT ENTER	48X48	X	
	69	R5-1a	WRONG WAY	48X36	X	
	70	D3-1	OWASSA ROAD	77X12	X	
	71	ER8-4	EMERGENCY PARKING ONLY	30X24	X	
	72	R6-1R	ONE WAY W ARROW	36X12	X	
	73	R5-1	DO NOT ENTER	48X48	X	
	74	R5-1	DO NOT ENTER	48X48	X	
	75	EW4-1R	MERGE	36X36	X	
	76	I-2a	PHARR CITY LIMIT	54X24	X	
	77	R1-1	STOP	30X30	X	
	78	I-2a	PHARR CITY LIMIT	54X24	X	
	79	I-2a	PHARR CITY LIMIT	54X24	X	
	80		TO OWASSA RD TRN ARND ARROW		X	
	81	R5-1	DO NOT ENTER	48X48	X	
	82	R1-1	STOP	30X30	X	
	83	W1-4R	RT REVERSE CURVE	36X36	X	
	84	W1-4R	RT REVERSE CURVE	36X36	X	
		W13-1	ADVISORY SPEED 20 MPH	18X18		
	85	R1-1	STOP	30X30	X	
	87	SW19-2	WATCH FOR ICE ON BRIDGE FLD	36X36	X	

SUMMARY OF SMALL SIGNS

PLAN SHT. NO.	SIGN NO.	SIGN TYPE	SIGN TEXT	SIGN DIMENS. (INCHES)	REMOVE SMALL SIGN ASSM. (EA)	RELOCATE SMALL SIGN ASSM (EA)
5/10	98	R5-1	DO NOT ENTER	48X48	X	
	99	R5-1	DO NOT ENTER	48X48	X	
	100	R1-2	YIELD	36X36X36	X	
	101	R5-1a	WRONG WAY	48X36	X	
	102	R5-1a	WRONG WAY	48X36	X	
	125	R5-1	DO NOT ENTER	48X48	X	
	126	M3-3	SOUTH	24X12	X	
		M1-4A3	US 281	24X24		
		M6-2L	45 DEG ARROW LT	21X15		
	127	R2-1	SPEED LIMIT 60	24X30	X	
	275	R1-1	STOP	30X30	X	
	276	R1-2	YIELD	36X36X36	X	
6/10	103	W13-2	EXIT 45 MPH	48X60	X	
	104	W3-2a	YIELD AHEAD	36X36	X	
	105	W3-2a	YIELD AHEAD	36X36	X	
	106	R6-1R	ONE WAY W ARROW	36X12	X	
	107	R6-1R	ONE WAY W ARROW	36X12	X	
	108		THRU TRUCKS USE TRUCK ROUTE		X	
	109	D3-1	MINNESOTA ROAD	84X12	X	
		R6-1R	ONE WAY W ARROW	36X12		
		R1-1	STOP	30X30		
	110	R5-1	DO NOT ENTER	48X48	X	
	111	R5-1	DO NOT ENTER	48X48	X	
	112	R5-1a	WRONG WAY	48X36	X	
	113	R5-1a	WRONG WAY	48X36	X	
	114	R5-1a	WRONG WAY	48X36	X	
	115	W13-2	EXIT 45 MPH	48X60	X	
	116	W4-2L	PVMT TRANS LEFT	36X36	X	
	117	W4-2L	PVMT TRANS LEFT	36X36	X	
	118	W9-2R	LN ENDS MERGE RT	36X36	X	
	119	R1-1	STOP	30X30	X	
	120	R6-1R	ONE WAY W ARROW	36X12	X	
	121	R5-1	DO NOT ENTER	48X48	X	
	122	R5-1	DO NOT ENTER	48X48	X	
	123	R1-1	STOP	30X30	X	
	124	R5-1a	WRONG WAY	48X36	X	
		D3-1	MINNESOTA ROAD	84X12		
	170	R5-1	DO NOT ENTER	48X48	X	
	171	R5-1	DO NOT ENTER	48X48	X	
	277	M3-1	NORTH	24X12	X	
		M1-4A3	US 281	48X48		
		M6-2L	45 DEG ARROW LT	21X15		
7/10	129	R6-1R	ONE WAY W ARROW	36X12	X	
	130	EW4-1R	MERGE	36X36	X	
	131	M1-6F	FARM ROAD 3461	24X24	X	
		M6-4	DBL HEADED ARROW HORIZONTAL	21X15		
	132	R6-1R	ONE WAY W ARROW	36X12	X	
			SHEET TOTALS:		139	0

TABULATION OF

SIGNS TO BE REMOVED/RELOCATED
UNDER ITEM 649

(WITHOUT REMOVABLE COPY)

Parsons Brinckerhoff Quade & Douglas Inc.

Texas Department of Transportation

© 2003 by TxDOT

US 281
SUMMARY OF SMALL SIGNS

REMOVALS/RELOCATIONS

SHEET 1 OF 3 | 281SDRS01.DGN

DESIGNED:	FED. RD DIV. NO.	STATE	FEDERAL AID PROJECT NO.			HIGHWAY NO.	
CHECKED:	6	TEXAS				US 281	
DRAWN:	STATE DISTRICT	COUNTY	CONTROL No.	SECTION No.	JOB No.	SHEET No.	
CHECKED:	PHARR	HIDALGO	0255	08	091	827	

NAME
09:29:41 AM
06/27/2003
I:\22322a\CADD\Sheets\Summary\281sdrs02.dgn

SUMMARY OF SMALL SIGNS

PLAN SHT. NO.	SIGN NO.	SIGN TYPE	SIGN TEXT	SIGN DIMENS. (INCHES)	REMOVE SMALL SIGN ASSM. (EA)	RELOCATE SMALL SIGN ASSM (EA)
			CSJ: 0255-08-091			
7/10	133	M3-1	NORTH	24X12	X	
		M1-4A3	US 281	24X24		
		M6-3	UP ARROW	21X15		
		M3-4	WEST	24X12		
		M1-6F	FARM ROAD 3461	24X24		
		M6-1L	HORIZONTAL ARROW	21X15		
		M3-2	EAST	24X12		
		M1-6F	FARM ROAD 3461	24X24		
		M6-1R	HORIZONTAL ARROW	21X15		
	134	R3-8U	U TRN ONLY ARROW	24X30	X	
	135	R5-1a	WRONG WAY	48X36	X	
	136	D3-1	NOLANA LOOP	77X12	X	
	137	R3-8U	U TRN ONLY ARROW	24X30	X	
	138	R6-1R	ONE WAY W ARROW	36X12	X	
	139	R6-1R	ONE WAY W ARROW	36X12	X	
	140	R3-8	LEFT/LT ST/ST RT ONLY	66X30	X	
	141	R3-8	LEFT/LT ST/ST RT ONLY	66X30	X	
	142	M2-1	JCT	21X15	X	
		M1-6F	FARM ROAD 3461	24X24		
	143	W3-3	SYMBOL SIGNAL AHEAD	36X36	X	
	144	W3-3	SYMBOL SIGNAL AHEAD	36X36	X	
	148	SW19-2	WATCH FOR ICE ON BRIDGE FLD	36X36	X	
	149	SW19-2	WATCH FOR ICE ON BRIDGE FLD	36X36	X	
	150	R3-5R	RT TRN ONLY	30X36	X	
	151	SW9-2L	LN ENDS MERGE LT	36X36	X	
	152	R1-2	YIELD	36X36X36	X	
	153	M3-3	SOUTH	24X12	X	
		M1-4A3	US 281	24X24		
		M6-2L	45 DEG ARROW LT	21X15		
	154	R6-1R	ONE WAY W ARROW	36X12	X	
	155	M3-3	SOUTH	24X12	X	
		M1-4A3	US 281	24X24		
		M6-1L	ARROW LT	21X15		
	156	M3-3	SOUTH	24X12	X	
		M1-4A3	US 281	24X24		
		M6-6R	DBL ARROW 90 DEG/RT	21X15		
	157	M3-2	EAST	24X12	X	
		M1-6F	FARM ROAD 3461	24X24		
		M6-3	UP ARROW	21X15		
		M3-1	NORTH	24X12		
		M1-4A3	US 281	24X24		
		M5-1L	90 DEG LT ARROW	21X15		
		M3-3	SOUTH	24X12		
		M1-4A3	US 281	24X24		
		M6-1R	HORIZONTAL ARROW RT	21X15		
	158	R5-1	DO NOT ENTER	48X48	X	
	159	M3-3	SOUTH	24X12	X	
		M1-4A3	US 281	24X24		
		M6-3	UP ARROW	21X15		
		M3-2	EAST	24X12		
		M1-6F	FARM ROAD 3461	24X24		
		M6-1L	HORIZONTAL ARROW	21X15		
		M3-4	WEST	24X12		
		M1-6F	FARM ROAD 3461	24X24		
		M6-1R	HORIZONTAL ARROW	21X15		
	160	D3-1	NOLANA LOOP	77X12	X	
	161	R5-1a	WRONG WAY	48X36	X	
	162	R3-8U	U TRN ONLY ARROW	24X30	X	
	163	R5-1	DO NOT ENTER	48X48	X	
		R3-8U	U TRN ONLY ARROW	24X30		
	164	M2-1	JCT	21X15	X	
		M1-6F	FARM ROAD 3461	24X24		
	165	SW19-2	WATCH FOR ICE ON BRIDGE FLD	36X36	X	
	166	SW19-2	WATCH FRO ICE ON BRIDGE FLD	36X36	X	
	167	W3-3	SYMBOL SIGNAL AHEAD	36X36	X	
	168	W3-3	SYMBOL SIGNAL AHEAD	36X36	X	
	169	M3-3	SOUTH	24X12	X	
		M1-4A3	US 281	24X24		

SUMMARY OF SMALL SIGNS

PLAN SHT. NO.	SIGN NO.	SIGN TYPE	SIGN TEXT	SIGN DIMENS. (INCHES)	REMOVE SMALL SIGN ASSM. (EA)	RELOCATE SMALL SIGN ASSM (EA)
7/10	172	D1-2	⇧ MC ALLEN	72X24	X	
			⇦ PHARR			
	173	R1-2	YIELD	36X36X36	X	
8/10	145	R6-1R	ONE WAY W ARROW	36X12	X	
	146	R1-1	STOP	30X30	X	
	147	R6-1R	ONE WAY W ARROW	36X12	X	
	174	R5-1	DO NOT ENTER	48X48	X	
	175	R5-1	DO NOT ENTER	48X48	X	
	176	R5-1a	WRONG WAY	48X36	X	
	177	R5-1a	WRONG WAY	48X36	X	
	178	W13-2	EXIT 45 MPH	48X60	X	
	179	W4-2L	PVMT TRANS LEFT	36X36	X	
	180	W4-2L	PVMT TRANS LEFT	36X36	X	
	181	W9-2R	LN ENDS MERGE RT	36X36	X	
	182	R6-1R	ONE WAY W ARROW	36X12	X	
		R1-1	STOP	30X30		
	183	SPL	TX COASTAL BIRD TRL			X
	184	R5-1a	WRONG WAY	48X36	X	
		D3-1	ELDORA ROAD	84X12		
	196	W9-2R	LN ENDS MERGE RT	36X36	X	
	197	SPL	TX COASTAL BIRD TRL			X
	198	R1-1	STOP	30X30	X	
	199	R6-1R	ONE WAY W ARROW	36X12	X	
	200	R5-1	DO NOT ENTER	48X48	X	
	201	R5-1	DO NOT ENTER	48X48	X	
	202	R5-1a	WRONG WAY	48X36	X	
		D3-1	ELDORA ROAD	84X12		
	203	EW4-1R	MERGE	36X36	X	
	204	M3-3	SOUTH	24X12	X	
		M1-4A3	US 281	24X24		
		M6-2L	45 DEG ARROW LT	21X15		
	205	R2-1	SPEED LIMIT 60	24X30	X	
9/10	185	R5-1	DO NOT ENTER	48X48	X	
	186	R5-1	DO NOT ENTER	48X48	X	
	187	W13-2	EXIT 45 MPH	48X60	X	
	188	W19-2	WATCH FOR ICE ON BRIDGE FLD	36X36	X	
	189	R1-1	STOP	30X30	X	
	190	W19-2	WATCH FOR ICE ON BRIDGE FLD	36X36	X	
	191	R6-1R	ONE WAY W ARROW	36X12	X	
	192	SW19-2	WATCH FOR ICE ON BRIDGE FLD	36X36	X	
	193	SW19-2	WATCH FOR ICE ON BRIDGE FLD	36X36	X	
	194	W4-2L	PVMT TRANS LEFT	36X36	X	
	195	W4-2L	PVMT TRANS LEFT	36X36	X	
	206	EW4-1R	MERGE	36X36	X	
	207	R1-1	STOP	30X30	X	
	208	M3-1	NORTH	24X12	X	
		M1-4A3	US 281	24X24		
		M6-2L	45 DEG ARROW LT	21X15		
	209	R1-1	STOP	30X30	X	
	210	W19-2	WATCH FOR ICE ON BRIDGE FLD	36X36	X	
	211	W19-2	WATCH FOR ICE ON BRIDGE FLD	36X36	X	

SUMMARY OF SMALL SIGNS

PLAN SHT. NO.	SIGN NO.	SIGN TYPE	SIGN TEXT	SIGN DIMENS. (INCHES)	REMOVE SMALL SIGN ASSM. (EA)	RELOCATE SMALL SIGN ASSM (EA)
9/10	212	M3-1	NORTH	24X12	X	
		M1-4A3	US 281	24X24		
		M6-2L	45 DEG ARROW LT	21X15		
	213	R6-1R	ONE WAY W ARROW	36X12	X	
	214	D3-1	SHARM DRIVE	84X12	X	
	215	R1-1	STOP	30X30	X	
	216	R6-1R	ONE WAY W ARROW	36X12	X	
	217	R1-1	STOP	30X30	X	
	218	R6-1R	ONE WAY W ARROW	36X12	X	
		R1-1	STOP	30X30		
	219	D3-1	SIOUX ROAD	84X12	X	
	220	R5-1	DO NOT ENTER	48X48	X	
		R1-1	STOP	30X30		
		R1-3	3 WAY	12X6		
	221	R5-1	DO NOT ENTER	48X48	X	
		R1-1	STOP	30X30		
		R1-3	3 WAY	12X6		
	222	R5-1a	WRONG WAY	48X36	X	
	223	R5-1a	WRONG WAY	48X36	X	
	236	W9-2R	LN ENDS MERGE RT	36X36	X	
		R8-SPL	NO TRUCK TRACTOR TRAILER		TO REMAIN	
			PARKING ANYTIME			
	238	R6-1R	ONE WAY W ARROW	36X12	X	
		R8-SPL	NO TRUCK TRACTOR TRAILER		TO REMAIN	
			PARKING ANYTIME			
	240	M3-3	SOUTH	24X12	X	
		M1-4A3	US 281	24X24		
		R8-SPL	NO TRUCK TRACTOR TRAILER		TO REMAIN	
			PARKING ANYTIME			
	242	R8-SPL	NO TRUCK TRACTOR TRAILER		X	
			PARKING ANYTIME			
	243	R6-1R	ONE WAY W ARROW	36X12	X	
		R1-1	STOP	30X30		
	244	R5-1	DO NOT ENTER	48X48	X	
		R1-1	STOP	30X30		
		R1-3	3 WAY	12X6		
	245	D3-1	SIOUX ROAD	84X12	X	
	246	W3-1a	STOP AHEAD	36X36	X	
	247	W3-1a	STOP AHEAD	36X36	X	
	278	R5-1	DO NOT ENTER	48X48	X	
	279	R6-1R	ONE WAY W ARROW	36X12	X	
		R1-1	STOP	30X30		
10/10	224	W3-1a	STOP AHEAD	36X36	X	
	225	W3-1a	STOP AHEAD	36X36	X	
	226	R6-1R	ONE WAY W ARROW	36X12	X	
		R1-1	STOP	30X30		
	227	SW19-2	WATCH FOR ICE ON BRIDGE FLD	36X36	X	
	228	R2-1	SPEED LIMIT 60	24X30	X	
	229	R6-1R	ONE WAY W ARROW	36X12	X	
			SHEET TOTALS:		104	2

TABULATION OF

SIGNS TO BE REMOVED/RELOCATED
UNDER ITEM 649

(WITHOUT REMOVABLE COPY)

Parsons Brinckerhoff Quade & Douglas Inc.

Texas Department of Transportation

© 2003 by TxDOT

US 281
SUMMARY OF SMALL SIGNS
REMOVALS/RELOCATIONS

SHEET 2 OF 3			281SDRS02.DGN			
DESIGNED:	FED. RD DIV. NO.	STATE	FEDERAL AID PROJECT No.			HIGHWAY No.
CHECKED:	6	TEXAS				US 281
DRAWN:	STATE DISTRICT	COUNTY	CONTROL No.	SECTION No.	JOB No.	SHEET No.
CHECKED:	PHARR	HIDALGO	0255	08	091	828

NAME
09:30:37 AM
06/27/2003
I:\2232a\CADD\Sheets\Summary\281sdrs03.dgn

SUMMARY OF SMALL SIGNS

PLAN SHT. NO.	SIGN NO.	SIGN TYPE	SIGN TEXT	SIGN DIMENS. (INCHES)	REMOVE SMALL SIGN ASSM. (EA)	RELOCATE SMALL SIGN ASSM (EA)
			CSJ : 0255-08-091			
10/10	230	R5-1a	WRONG WAY	48X36	X	
	231	R5-1a	WRONG WAY	48X36	X	
	232	W4-2L	PVMT TRANS LEFT	36X36	X	
	233	W4-2L	PVMT TRANS LEFT	36X36	X	
	234	SW19-2	WATCH FOR ICE ON BRIDGE FLD	36X36	X	
	235	R6-1R	ONE WAY W ARROW	36X12	X	
	248	M3-1	NORTH	24X12	X	
		M1-4A3	US 281	24X24		
		M6-2L	45 DEG ARROW LT	21X15		
	249	EW4-1R	MERGE	36X36	X	
	250	R3-20	LT LN MUST ENTER RAMP	48X48	X	
	251	M3-1	NORTH	24X12	X	
		M1-4A3	US 281	24X24		
		M6-2L	45 DEG ARROW LT	21X15		
	252	M3-1	NORTH	24X12	X	
		M1-4A3	US 281	24X24		
	253	R3-20	LT LN MUST ENTER RAMP	48X48	X	
	254	R14-2	HAZARDOUS CARGO	24X24	X	
		R14-1	TRUCK ROUTE	24X18		
		M6-3	UP ARROW	21X15		
	255	R5-1	DO NOT ENTER	48X48	X	
	256	R5-1	DO NOT ENTER	48X48	X	
	257	R1-2	YIELD	36X36X36	X	
	258	M3-3	SOUTH	24X12	X	
		M1-4A3	US 281	24X24		
		M6-3	UP ARROW	21X15		
		M3-2	EAST	24X12		
		M1-6F	FARM ROAD 495	24X24		
		M6-1L	HORIZONTAL ARROW	21X15		
		M3-4	WEST	24X12		
		M1-6F	FARM ROAD 495	24X24		
		M6-1R	HORIZONTAL ARROW	21X15		
	259	R3-8U	U TRN ONLY ARROW	24X30	X	
	260	R14-3	HAZARDOUS CARGO PROHIBITED	24X24	X	
		M6-4	DBL HORIZONTAL ARROW	21X15		
	261	R3-5R	RT TRN ONLY	30X36	X	
	262	R3-8U	U TURN ONLY ARROW	30X36	X	
	263	R1-1	STOP	30X30	X	
	264	R6-1R	ONE WAY W ARROW	36X12	X	
	265	R3-7R	RT LN MUST TRN RT	48X48	X	
	266	D1-2	PHARR INTL BRIDGE 8 ⇧	72X24	X	
	267	W3-3	SYMBOL SIGNAL AHEAD	36X36	X	
	268	W3-3	SYMBOL SIGNAL AHEAD	36X36	X	
	269	SW19-2	WATCH FOR ICE ON BRIDGE FLD	36X36	X	
	270	SW19-2	WATCH FOR ICE ON BRIDGE FLD	36X36	X	
	271	R5-1a	WRONG WAY	48X36	X	
	272	R5-1a	WRONG WAY	48X36	X	
			SHEET TOTALS		**31**	
			PROJECT TOTALS		**274**	**2**

TABULATION OF

SIGNS TO BE REMOVED/RELOCATED
UNDER ITEM 649

(WITHOUT REMOVABLE COPY)

Parsons Brinckerhoff Quade & Douglas Inc.

Texas Department of Transportation

© 2003 by TxDOT

US 281
SUMMARY
OF SMALL SIGNS

REMOVALS/RELOCATIONS

SHEET 3 OF 3 | 281SDRS03.DGN

DESIGNED:	FED. RD DIV. No.	STATE	FEDERAL AID PROJECT No.			HIGHWAY No.	
CHECKED:	6	TEXAS				US 281	
DRAWN:	STATE DISTRICT	COUNTY	CONTROL No.	SECTION No.	JOB No.	SHEET No.	
CHECKED:	PHARR	HIDALGO	0255	08	091	829	

SUMMARY OF SMALL SIGNS

SM RD SGN ASSM TY XXXXX(X)XX(X-XXXX)

- Post Type: FRP = Fiberglass; TWT = Thin-Wall; 10BWG = 10 BWG; S80 = Sch 80
- Posts (1 or 2)
- Anchor Type: UA = Univer-Conc; UB = Univer-Bolt; WA = Wedge-Conc; SA = Slip-Conc; SB = Slip-Bolt
- Mounting Designation: P = Prefab. "Plain"; T = Prefab. "T"; U = Prefab. "U"
- 1EXT or 2EXT = # of Ext.; BM = Extruded Wind Beam; WC = 1.12 #/ft Wing Chan.; EXAL = Extruded Alum. signs

PLAN SHEET NO.	SIGN NO.	SIGN NOMENCLATURE	SIGN TEXT	SIGN DIMENSIONS	REFLECTIVE SHEETING	PLYWOOD TYPE A	ALUMINUM TYPE A	ALUMINUM TYPE G	Post Type	Posts	Anchor Type	Mounting Designation	
1/10	1	M3-1	NORTH	24X12			2.00		10BWG	1	SA	P	
		M1-4A3	US 281	30X24			5.00						
		M6-2L	45 DEG ARROW LT	21X15			2.19						
	2	FW4-1R	MERGE	48X48			16.00		10BWG	1	SA	T	
	3	R6-1R	ONE WAY W ARROW	36X12			3.00		TWT	1	WA	P	
		R1-1	STOP	30X30			5.18						
	4	FR6-1R	ONE WAY W ARROW	48X16			5.33		10BWG	1	SA	P	BM
	5	M3-1	NORTH	24X12			2.00		10BWG	1	SA	P	
		M1-4A3	US 281	30X24			5.00						
		M6-2L	45 DEG ARROW LT	21X15			2.19						
	6	D1-1	WISCONSIN ROAD ⇨	84X12			7.00		10BWG	1	SA	T	
	7	FR6-1R	ONE WAY W ARROW	48X16			5.33		10BWG	1	SA	P	BM
	8	FW4-3L	SYMBOL LN ADDED LT	48X48			16.00		10BWG	1	SA	T	
	9	R5-1a	WRONG WAY	36X24			6.00		10BWG	1	SA	P	
	10	R5-1a	WRONG WAY	36X24			6.00		10BWG	1	SA	P	
	11	ER5-1	DO NOT ENTER	36X36			9.00		10BWG	1	SA	P	
	12	ER5-1	DO NOT ENTER	36X36			9.00		10BWG	1	SA	P	
	13	D1-1	WISCONSIN ROAD ⇨	84X12			7.00		10BWG	1	SA	T	
	14	FR6-1R	ONE WAY W ARROW	48X16			5.33		10BWG	1	SA	P	BM
	15	R6-1R	ONE WAY W ARROW	36X12			3.00		TWT	1	WA	P	
		R1-1	STOP	30X30			5.18						
	16	M3-3	SOUTH	24X12			2.00		10BWG	1	SA	P	
		M1-4A3	US 281	30X24			5.00						
		M6-2L	45 DEG ARROW LT	21X15			2.19						
	17	FW4-3R	SYMBOL LN ADDED RT	48X48			16.00		10BWG	1	SA	T	
2/10	1	FR6-1R	ONE WAY W ARROW	48X16			5.33		10BWG	1	SA	P	BM
	2	FR6-1R	ONE WAY W ARROW	48X16			5.33		10BWG	1	SA	P	BM
	3	ER5-1	DO NOT ENTER	36X36			9.00		10BWG	1	SA	P	
	4	ER5-1	DO NOT ENTER	36X36			9.00		10BWG	1	SA	P	
	5	R5-1a	WRONG WAY	36X24			6.00		10BWG	1	SA	P	
	6	R5-1a	WRONG WAY	36X24			6.00		10BWG	1	SA	P	
	7	FW4-3L	SYMBOL LN ADDED LT	48X48			16.00		10BWG	1	SA	T	
	8	W4-2L	PVMT TRANS LEFT	36X36			9.00		10BWG	1	SA	P	
	9	R2-1	SPEED LIMIT 50	24X30			5.00		TWT	1	UA	P	
	10	M3-1	NORTH	24X12			2.00		10BWG	1	SA	P	
		M1-4A3	US 281	30X24			5.00						
	11	W9-2R	LN ENDS MERGE RT	36X36			9.00		10BWG	1	SA	P	
	12	ER5-1	DO NOT ENTER ┐B-B	36X36			9.00		10BWG	1	SA	P	
		R3-8U	U TRN ONLY ARROW ┘B-B	24X30			5.00						
	13	ER5-1	DO NOT ENTER	36X36			9.00		10BWG	1	SA	P	
	14	M3-3	SOUTH	24X12			2.00		10BWG	1	SA	P	
		M1-4A3	US 281	30X24			5.00						
		M6-2L	45 DEG ARROW LT	21X15			2.19						
	15	W19-2	WATCH FOR ICE ON BRIDGE FOLDING	36X36			9.00		10BWG	1	SA	P	
	16	W3-3	SYMBOL SIGNAL AHEAD	36X36			9.00		10BWG	1	SA	P	
	17	R5-1a	WRONG WAY ┐B-B	36X24			6.00		S80	1	SA	P	
		SPL-02	LT/ST/ST OR RT ┘B-B	56X30			11.67						
	18	R5-1a	WRONG WAY ┐B-B	36X24			6.00		S80	1	SA	P	
		SPL-02	LT/ST/ST OR RT ┘B-B	56X30			11.67						
	19	D1-2	HIDALGO COUNTY ⇨	96X24			16.00		10BWG	1	SA	T	
			APPRAISAL DISTRICT										
	20	R3-8U	U TRN ONLY ARROW	24X30			5.00		10BWG	1	SA	P	
	21	ER5-1	DO NOT ENTER	36X36			9.00		10BWG	1	SA	P	
	22	R3-8U	U TRN ONLY ARROW ┐B-B	24X30			5.00		10BWG	1	SA	P	
		ER5-1	DO NOT ENTER ┘B-B	36X36			9.00						
	23	FW4-2L	PVMT TRANS LT	48X48			16.00		10BWG	1	SA	T	
	24	FW9-2R	LN ENDS MERGE RT	48X48			16.00		10BWG	1	SA	T	
	25	W4-2L	PVMT TRANS LT	36X36			9.00		10BWG	1	SA	P	
	26	R1-2	YEILD	36X36X36			3.90		TWT	1	WA	P	
	27	R3-5R	ARROW ONLY	30X36			7.50		10BWG	1	SA	P	
	28	R1-2	YEILD	36X36X36			3.90		TWT	1	WA	P	
	29	M3-1	NORTH	24X12			2.00		S80	1	SA	U	
		M1-4A3	US 281	30X24			5.00						
		M6-1R	HORIZONTAL ARROW	21X15			2.19						
		M3-3	SOUTH	24X12			2.00						
		M1-4A3	US 281	30X24			5.00						
		M5-1L	LT 90DEG ARROW	21X15			2.19						
	30	M3-1	NORTH	24X12			2.00		10BWG	1	SA	P	
		M1-4A3	US 281	30X24			5.00						
		M6-1L	HORIZONTAL ARROW	21X15			2.19						
	31	M3-3	SOUTH	24X12			2.00		10BWG	1	SA	P	
		M1-4A3	US 281	30X24			5.00						
		M6-1L	HORIZONTAL ARROW	21X15			2.19						
	32	M3-3	SOUTH	24X12			2.00		10BWG	1	SA	P	
		M1-4A3	US 281	30X24			5.00						
		M6-3	UP ARROW	21X15			2.19						
	33	M3-3	SOUTH	24X12			2.00		S80	1	SA	U	
		M1-4A3	US 281	30X24			5.00						
		M6-1R	HORIZONTAL ARROW	21X15			2.19						
		M3-1	NORTH	24X12			2.00						
		M1-4A3	US 281	30X24			5.00						
		M5-1L	LT 90DEG ARROW	21X15			2.19						
	34	W12-3	XX FT XX IN	84X24			14.00						
	35	W12-3	XX FT XX IN	84X24			14.00						
	36	W12-3	XX FT XX IN	84X24			14.00						
	37	W12-3	XX FT XX IN	84X24			14.00						

Sign supports shall be located as shown on the plans, except that the Engineer may shift the sign supports, within design guidelines, where necessary to secure a more desirable location or to avoid conflict with utilities. Unless otherwise shown on the plans, the Contractor shall stake and the Engineer will verify all sign support locations.

Reflective sheeting will be designated as:

Type C - High Specific Intensity
Type D - Non-fluorescent Prismatic

ALUMINUM SIGN BLANKS (TYPE A)

Square Ft.	Min. Thickness
Less than 7.5	0.080"
7.5 to 15	0.100"
Greater than 15	0.125"

©TxDOT May 2003

DN:--CK:DMT DW:-- CK:-- DN:--

REVISIONS
11-93
8-95

SUMMARY OF SMALL SIGNS

SHEET 1 OF 8

DISTRICT	COUNTY	CONTROL	SECTION	JOB	HIGHWAY
PHARR	HIDALGO	0255	08	091	US 281

REGION 6 — FEDERAL AID PROJECT — SHEET 830

Traffic Operations Division — 10

SUMMARY OF SMALL SIGNS

SM RD SGN ASSM TY XXXXX(X)XX(X-XXXX)

Post Type: FRP = Fiberglass; TWT = Thin-Wall; 10BWG = 10 BWG; S80 = Sch 80

Posts (1 or 2)

Anchor Type: UA = Univer-Conc; UB = Univer-Bolt; WA = Wedge-Conc; SA = Slip-Conc; SB = Slip-Bolt

Mounting Designation: P = Prefab. "Plain"; T = Prefab. "T"; U = Prefab. "U"

1EXT or 2EXT = # of Ext.; BM = Extruded Wind Beam; WC = 1.12 #/ft Wing Chan.; EXAL = Extruded Alum. signs

PLAN SHEET NO.	SIGN NO.	SIGN NOMENCLATURE	SIGN TEXT	SIGN DIMENSIONS	REFLECTIVE SHEETING	PLYWOOD TYPE A	ALUMINUM TYPE A	ALUMINUM TYPE G	Post Type	Posts	Anchor Type	Mounting Designation	
	1	D1-2	⇦ HIDALGO COUNTY	96X24			16.00		10BWG	1	SA	T	
			APPRAISAL DISTRICT										
3/10	2	R3-8U	U TRN ONLY ARROW	24X30			5.00		10BWG	1	SA	P	
	3	R5-1a	WRONG WAY (B-B)	36X24			6.00		S80	1	SA	P	
		SPL-02	LT/ST/ST OR RT (B-B)	56X30			11.67						
	4	R5-1a	WRONG WAY (B-B)	36X24			6.00		S80	1	SA	P	
		SPL-02	LT/ST/ST OR RT (B-B)	56X30			11.67						
	5	W3-3	SYMBOL SIGNAL AHEAD	36X36			9.00		10BWG	1	SA	P	
	6	W19-2	WATCH FOR ICE ON BRIDGE FOLDING	36X36			9.00		10BWG	1	SA	P	
	7	M3-1	NORTH	24X12			2.00		10BWG	1	SA	P	
		M1-4A3	US 281	30X24			5.00						
		M6-2L	45 DEG ARROW LT	21X15			2.19						
	8	M3-1	NORTH	24X12			2.00		10BWG	1	SA	P	
		M1-4A3	US 281	30X24			5.00						
		M6-2L	45 DEG ARROW LT	21X15			2.19						
	9	FW4-3R	SYMBOL LN ADDED RT	48X48			16.00		10BWG	1	SA	T	
	10	R2-1	SPEED LIMIT 55	24X30			5.00		TWT	1	UA	P	
	11	W9-2R	LN ENDS MERGE RT	36X36			9.00		10BWG	1	SA	P	
	12	M3-3	SOUTH	24X12			2.00		10BWG	1	SA	P	
		M1-4A3	US 281	30X24			5.00						
	13	W4-2L	PVMT TRANS LEFT	36X36			9.00		10BWG	1	SA	P	
	14	FW4-3L	SYMBOL LN ADDED LT	48X48			16.00		10BWG	1	SA	T	
	15	R5-1a	WRONG WAY	36X24			6.00		10BWG	1	SA	P	
	16	R5-1a	WRONG WAY	36X24			6.00		10BWG	1	SA	P	
	17	ER5-1	DO NOT ENTER	36X36			9.00		10BWG	1	SA	P	
	18	ER5-1	DO NOT ENTER	36X36			9.00		10BWG	1	SA	P	
	19	R3-5R	ARROW ONLY	30X36			7.50		10BWG	1	SA	P	
	1	R6-1R	ONE WAY W ARROW	36X12			3.00		TWT	1	WA	P	
		R1-1	STOP	30X30			5.18						
4/10	2	FR6-1R	ONE WAY W ARROW	48X16			5.33		10BWG	1	SA	P	BM
	3	D1-1	ALBERTA ROAD ⇨	78X12			6.50		10BWG	1	SA	T	
	4	ER5-1	DO NOT ENTER	36X36			9.00		10BWG	1	SA	P	
	5	R5-1a	WRONG WAY	36X24			6.00		10BWG	1	SA	P	
	6	ER5-1	DO NOT ENTER	36X36			9.00		10BWG	1	SA	P	
	7	R5-1a	WRONG WAY	36X24			6.00		10BWG	1	SA	P	
	8	FR6-1R	ONE WAY W ARROW	48X16			5.33		10BWG	1	SA	P	BM
	9	FR6-1R	ONE WAY W ARROW	48X16			5.33		10BWG	1	SA	P	BM
	10	FR6-1R	ONE WAY W ARROW	48X16			5.33		10BWG	1	SA	P	BM
	11	FW4-3L	SYMBOL LN ADDED LT	48X48			16.00		10BWG	1	SA	T	
	12	FR6-1R	ONE WAY W ARROW	48X16			5.33		10BWG	1	SA	P	BM
	13	W4-2L	PVMT TRANS LEFT	36X36			9.00		10BWG	1	SA	P	
	14	D1-1	ALBERTA ROAD ⇨	78X12			6.50		10BWG	1	SA	T	
	15	FW4-3R	SYMBOL LN ADDED RT	48X48			16.00		10BWG	1	SA	T	
	16	FR6-1R	ONE WAY W ARROW	48X16			5.33		10BWG	1	SA	P	BM
	17	R1-1	STOP	30X30			5.18		TWT	1	WA	P	
	18	M3-3	SOUTH	24X12			2.00		10BWG	1	SA	P	
		M1-4A3	US 281	30X24			5.00						
		M6-2L	45 DEG ARROW LT	21X15			2.19						
	19	W19-2	WATCH FOR ICE ON BRIDGE FOLDING	36X36			9.00		10BWG	1	SA	P	
		W13-1	ADVISORY SPEED 20 M.P.H.	18X18			2.25						
	21	M3-3	SOUTH	24X12			2.00		10BWG	1	SA	P	
		M1-4A3	US 281	30X24			5.00						
		M6-2L	45 DEG ARROW LT	21X15			2.19						
	24	R5-1a	WRONG WAY (B-B)	36X24			6.00		10BWG	1	SA	P	
		R3-8U	U TRN ONLY ARROW (B-B)	24X30			5.00						
	25	D9-2	H (HOSPITAL)	24X24			4.00		10BWG	1	SA	P	
		PLAQUE	HOSPITAL (B-B)	24X6			1.00						
		M6-1B	HORIZONTAL ARROW RT (B-B)	21X15			2.19						
		R5-1a	WRONG WAY	36X24			6.00						
	26	ER5-1	DO NOT ENTER	36X36			9.00		S80	1	SA	P	
		M3-1	NORTH (B-B)	24X12			2.00						
		M1-4A3B	BUSINESS 281 (B-B)	30X24			5.00						
		M6-1R	HOTIZONTAL ARROW	21X15			2.19						
	27	ER5-1	DO NOT ENTER	36X36			9.00		S80	1	SA	P	
	28	D1-2	⇦ PHARR	72X24			12.00		10BWG	1	SA	T	
			EDINBURG ⇨				2.19						
	29	FW1-9R	RT ARROW & HATCH	144X36			36.00		S80	2	SA	T	2EXT
	30	FW6-1R	ONE WAY W ARROW	48X16			5.33		10BWG	1	SA	P	BM
	31	ER5-1	DO NOT ENTER (B-B)	36X36			9.00		S80	1	SA	P	
		ER1-1	STOP (B-B)	36X36			9.00						
	32	ER5-1	DO NOT ENTER (B-B)	36X36			9.00		S80	1	SA	P	
		ER1-1	STOP (B-B)	36X36			9.00						
	33	ER5-1	DO NOT ENTER (B-B)	36X36			9.00		S80	1	SA	P	
		ER1-1	STOP (B-B)	36X36			9.00						
	34	ER5-1	DO NOT ENTER (B-B)	36X36			9.00		S80	1	SA	P	
		ER1-1	STOP (B-B)	36X36			9.00						
	35	M3-1	NORTH	24X12			2.00		10BWG	1	SA	P	
		M1-4A3B	BUSINESS 281	30X24			5.00						
		R3-8U	U TRN ONLY ARROW	24X30			5.00						
	36	R5-1a	WRONG WAY	36X24			6.00		10BWG	1	SA	P	
	37	FW12-2T	XX FT XX IN (B-B)	36X36			9.00		10BWG	1	SA	P	
		R5-1a	WRONG WAY (B-B)	36X24			6.00						

Sign supports shall be located as shown on the plans, except that the Engineer may shift the sign supports, within design guidelines, where necessary to secure a more desirable location or to avoid conflict with utilities. Unless otherwise shown on the plans, the Contractor shall stake and the Engineer will verify all sign support locations.

Reflective sheeting will be designated as:

Type C - High Specific Intensity
Type D - Non-fluorescent Prismatic

ALUMINUM SIGN BLANKS (TYPE A)

Square Ft.	Min. Thickness
Less than 7.5	0.080"
7.5 to 15	0.100"
Greater than 15	0.125"

SUMMARY OF SMALL SIGNS

©TxDOT May 2003

DATE REVISED: 11-93, 8-95

REVISIONS

DATE: 06/26/03
DN: CK: DW:

DISTRICT	COUNTY	CONTROL	SECTION	JOB	HIGHWAY
PHARR	HIDALGO	0255	08	091	US 281

FEDERAL AID PROJECT

SHEET 831

SHEET 2 OF 8

Traffic Operations Division

10

SUMMARY OF SMALL SIGNS

SM RD SGN ASSM TY XXXXX(X)XX(X-XXXX)

Post Type: FRP = Fiberglass, TWT = Thin-Wall, 10BWG = 10 BWG, S80 = Sch 80

Posts (1 or 2)

Anchor Type: UA = Univer-Conc, UB = Univer-Bolt, WA = Wedge-Conc, SA = Slip-Conc, SB = Slip-Bolt

Mounting Designation: P = Prefab. "Plain", T = Prefab. "T", U = Prefab. "U"

1EXT or 2EXT = # of Ext. BM = Extruded Wind Beam, WC = 1.12 #/ft Wing Chan., EXAL = Extruded Alum. signs

PLAN SHEET NO.	SIGN NO.	SIGN NOMENCLATURE	SIGN TEXT	SIGN DIMENSIONS	REFLECTIVE SHEETING	PLYWOOD TYPE A	ALUMINUM TYPE A	ALUMINUM TYPE G	Post Type	Posts	Anchor Type	Mounting Designation	
4/10	38	FW12-2T	XX FT XX IN	36X36			9.00		10BWG	1	SA	P	
	39	FW12-2T	XX FT XX IN	36X36			9.00		10BWG	1	SA	P	
	40	FW12-2T	XX FT XX IN	84X24			14.00						
5/10	1	M3-1	NORTH	24X12			2.00		10BWG	1	SA	P	
		M1-4A3	US 281	30X24			5.00						
	2	W9-2R	LN ENDS MERGE RT	36X36			9.00		10BWG	1	SA	P	
	3	FR6-1R	ONE WAY W ARROW	48X16			5.33		10BWG	1	SA	P	BM
	4	FR6-1R	ONE WAY W ARROW	48X16			5.33		10BWG	1	SA	P	BM
	5	R14-3	HAZARDOUS CARGO PROHIBITED	24X24			4.00		10BWG	1	SA	P	BM
		M6-3	UP ARROW	21X15			2.19						
	6	R6-1R	ONE WAY W ARROW	36X12			3.00		TWT	1	WA	P	
		R1-1	STOP	30X30			5.18						
	7	FR6-1R	ONE WAY W ARROW	48X16			5.33		10BWG	1	SA	P	BM
	8	ER5-1	DO NOT ENTER (B-B)	36X36			9.00		S80	1	SA	T	
		I-2a	EDINBURG CITY LIMIT (B-B)	54X24			9.00						
			POP. 48,465										
	9	R3-8U	U TRN ONLY ARROW (B-B)	24X30			5.00		10BWG	1	SA	P	
		ER5-1	DO NOT ENTER (B-B)	36X36			9.00						
	10	D1-1	OWASSA ROAD	66X12			5.50		10BWG	1	SA	T	
	11	R14-2	HAZARDOUS CARGO ROUTE	24X24			4.00		10BWG	1	SA	P	
		R14-1	TRUCK ROUTE (B-B)	24X18			3.00						
		M6-2R	45 DEG ARROW RT (B-B)	21X15			2.19						
	12	D9-2	H (HOSPITAL)	24X24			4.00		10BWG	1	SA	P	
		PLAQUE	HOSPITAL	24X6			1.00						
		M6-2BL	DIRECTIONAL ARROW LT	21X15			2.19						
	13	W19-2	WATCH FOR ICE ON BRIDGE FOLDING	36X36			9.00		10BWG	1	SA	P	
	14	I-2a	EDINBURG CITY LIMIT	54X24			9.00		10BWG	1	SA	T	
			POP. 48,465										
	15	R5-1a	WRONG WAY	36X24			6.00		10BWG	1	SA	P	
	16	FR6-1R	ONE WAY W ARROW	48X16			5.33		10BWG	1	SA	P	BM
	17	R2-1	SPEED LIMIT 50	24X30			5.00		TWT	1	UA	P	
	18	M3-3	SOUTH	24X12			2.00		10BWG	1	SA	P	
		M1-4A3	US 281	30X24			5.00						
	19	D1-1	OWASSA ROAD	66X12			5.50		10BWG	1	SA	T	
	20	M3-3	SOUTH	24X12			2.00		10BWG	1	SA	P	
		M1-4A3	US 281	30X24			5.00						
		M6-1L	HORIZONTAL ARROW	21X15			2.19						
		ER5-1	DO NOT ENTER	36X36			9.00						
	21	R6-1R	ONE WAY W ARROW	36X12			3.00		TWT	1	WA	P	
		R1-1	STOP	30X30			5.18						
	22	I-2a	PHARR CITY LIMIT	54X24			9.00		10BWG	1	SA	T	
			POP. 46,660										
	23	W9-2R	LN ENDS MERGE RT	36X36			9.00		10BWG	1	SA	P	
	24	W4-2L	PVMT TRANS LEFT	36X36			9.00		10BWG	1	SA	P	
	25	FW4-3L	SYMBOL LN ADDED LT	48X48			16.00		10BWG	1	SA	T	
	26	R5-1a	WRONG WAY	36X24			6.00		10BWG	1	SA	P	
	27	R5-1a	WRONG WAY	36X24			6.00		10BWG	1	SA	P	
	28	I-2a	PHARR CITY LIMIT	54X24			9.00		10BWG	1	SA	T	
			POP. 46,660										
	29	FR6-1R	ONE WAY W ARROW	48X16			5.33		10BWG	1	SA	P	BM
	30	R2-1	SPEED LIMIT 35	24X30			5.00		TWT	1	UA	P	
	31	R2-1	SPEED LIMIT 35	24X30			5.00		TWT	1	UA	P	
	32	W12-3	XX FT XX IN	84X24			14.00						
	33	W12-3	XX FT XX IN	84X24			14.00						
	34	M3-3	SOUTH	24X12			2.00		S80	1	SA	U	
		M1-4A3	US 281	30X24			5.00						
		M5-1L	LT 90 DEG ARROW	21X15			2.19						
		M3-1	NORTH	24X12			2.00						
		M1-4A3	US 281	30X24			5.00						
		M6-1R	HORIZONTAL ARROW	21X15			2.19						
	35	M3-1	NORTH	24X12			2.00		10BWG	1	SA	P	
		M1-4A3	US 281	30X24			5.00						
		M6-1L	HORIZONTAL ARROW	21X15			2.19						
	36	R3-8U	U TRN ONLY ARROW	24X30			5.00		10BWG	1	SA	P	
	37	R3-8U	U TRN ONLY ARROW (B-B)	24X30			5.00		10BWG	1	SA	P	
		ER5-1	DO NOT ENTER (B-B)	36X36			9.00						
	38	M3-3	SOUTH	24X12			2.00		S80	1	SA	P	
		M1-4A3	US 281	30X24			5.00						
		M6-3	UP ARROW	21X15			2.19						
	39	M3-1	NORTH	24X12			2.00		S80	1	SA	U	
		M1-4A3	US 281	30X24			5.00						
		M5-1L	LT 90 DEG ARROW	21X15			2.19						
		M3-3	SOUTH	24X12			2.00						
		M1-4A3	US 281	30X24			5.00						
		M6-1R	HORIZONTAL ARROW	21X15			2.19						
	40	W12-3	XX FT XX IN	84X24			14.00						
	41	W12-3	XX FT XX IN	84X24			14.00						
	42	W12-3	XX FT XX IN	84X24			14.00						
	43	W12-3	XX FT XX IN	84X24			14.00						
	44	R5-1a	WRONG WAY (B-B)	36X24			6.00		S80	1	SA	P	
		SPL-02	LT/ST/ST OR RT (B-B)	56X30			11.67						
	45	R5-1a	WRONG WAY (B-B)	36X24			6.00		S80	1	SA	P	
		SPL-02	LT/ST/ST OR RT (B-B)	56X30			11.67						
	46	R5-1a	WRONG WAY (B-B)	36X24			6.00		S80	1	SA	P	
		SPL-02	LT/ST/ST OR RT (B-B)	56X30			11.67						

Sign supports shall be located as shown on the plans, except that the Engineer may shift the sign supports, within design guidelines, where necessary to secure a more desirable location or to avoid conflict with utilities. Unless otherwise shown on the plans, the Contractor shall stake and the Engineer will verify all sign support locations.

Reflective sheeting will be designated as:

Type C - High Specific Intensity
Type D - Non-fluorescent Prismatic

ALUMINUM SIGN BLANKS (TYPE A)

Square Ft.	Min. Thickness
Less than 7.5	0.080"
7.5 to 15	0.100"
Greater than 15	0.125"

©TxDOT May 2003

DN: TxDOT CK: TxDOT DW: TxDOT CK: DN

REVISIONS
11-93
8-95

SUMMARY OF SMALL SIGNS

SHEET 3 OF 8

STATE	DISTRICT	COUNTY	CONTROL	SECTION	JOB	HIGHWAY
	PHARR	HIDALGO	0255	08	091	US 281

FEDERAL REGION 6 — FEDERAL AID PROJECT — SHEET 832

Traffic Operations Division 10

SUMMARY OF SMALL SIGNS

SM RD SGN ASSM TY XXXXX(X)XX(X-XXXX)

Post Type: FRP = Fiberglass; TWT = Thin-Wall; 10BWG = 10 BWG; S80 = Sch 80

Posts (1 or 2)

Anchor Type: UA = Univer-Conc; UB = Univer-Bolt; WA = Wedge-Conc; SA = Slip-Conc; SB = Slip-Bolt

Mounting Designation: P = Prefab. "Plain"; T = Prefab. "T"; U = Prefab. "U"

1EXT or 2EXT = # of Ext. BM = Extruded Wind Beam WC = 1.12 #/ft Wing Chan. EXAL = Extruded Alum. signs

PLAN SHEET NO.	SIGN NO.	SIGN NOMENCLATURE	SIGN TEXT	SIGN DIMENSIONS	REFLECTIVE SHEETING	PLYWOOD TYPE A	ALUMINUM TYPE A	ALUMINUM TYPE G	Post Type	Posts	Anchor Type	Mounting Designation	
5/10	47	R5-1a	WRONG WAY (B-B)	36X24			6.00		S80	1	SA	P	
		SPL-02	LT/ST/ST OR RT (B-B)	56X30			11.67						
	48	R5-1a	WRONG WAY	36X24			6.00		10BWG	1	SA	P	
	49	W12-3	XX FT XX IN	84X24			14.00						
	50	W1-4R	RT REVERSE CURVE	36X36			9.00		10BWG	1	SA	P	
		W13-1	ADVISORY SPEED 40 MPH	18X18			2.25						
	51	W19-2	WATCH FOR ICE ON BRIDGE FOLDING	36X36			9.00		10BWG	1	SA	P	
	52	W12-3	XX FT XX IN	36X36			9.00		10BWG	1	SA	P	
	53	W12-3	XX FT XX IN	84X24			14.00						
	54	W12-3	XX FT XX IN	84X24			14.00						
	55	W12-3	XX FT XX IN	84X24			14.00						
	56	W12-3	XX FT XX IN	84X24			14.00						
6/10	1	M3-1	NORTH	24X12			2.00		10BWG	1	SA	P	
		M1-4A3	US 281	30X24			5.00						
		M6-2L	45 DEG ARROW LT	21X15			2.19						
	2	FR6-1R	ONE WAY W ARROW	48X16			5.33		10BWG	1	SA	P	BM
	3	FR6-1R	ONE WAY W ARROW	48X16			5.33		10BWG	1	SA	P	BM
	4	FW4-3R	SYMBOL LN ADDED RT	48X48			16.00		10BWG	1	SA	T	
	5	M3-1	NORTH	24X12			2.00		10BWG	1	SA	P	
		M1-4A3	US 281	30X24			5.00						
		M6-2L	45 DEG ARROW LT	21X15			2.19						
	6	R6-1R	ONE WAY W ARROW	36X12			3.00		TWT	1	WA	P	
		R1-1	STOP	30X30			5.18						
	7	FR6-1R	ONE WAY W ARROW	48X16			5.33		10BWG	1	SA	P	BM
	8	FR6-1R	ONE WAY W ARROW	48X16			5.33		10BWG	1	SA	P	BM
	9	FR6-1R	ONE WAY W ARROW	48X16			5.33		10BWG	1	SA	P	BM
	10	D1-1	MINNESOTA ROAD ⇨	84X12			7.00		10BWG	1	SA	T	
	11	FR6-1R	ONE WAY W ARROW	48X16			5.33		10BWG	1	SA	P	BM
	12	ER5-1	DO NOT ENTER	36X36			9.00		10BWG	1	SA	P	
	13	ER5-1	DO NOT ENTER	36X36			9.00		10BWG	1	SA	P	
	14	ER5-1	DO NOT ENTER	36X36			9.00		10BWG	1	SA	P	
	15	D1-1	MINNESOTA ROAD ⇨	84X12			7.00		10BWG	1	SA	T	
	16	FR6-1R	ONE WAY W ARROW	48X16			5.33		10BWG	1	SA	P	BM
	17	FR6-1R	ONE WAY W ARROW	48X16			5.33		10BWG	1	SA	P	BM
	18	M3-3	SOUTH	24X12			2.00		10BWG	1	SA	P	
		M1-4A3	US 281	30X24			5.00						
		M6-2L	45 DEG ARROW LT	21X15			2.19						
	19	R6-1R	ONE WAY W ARROW	36X12			3.00		TWT	1	WA	P	
		R1-1	STOP	30X30			5.18						
	20	FR6-1R	ONE WAY W ARROW	48X16			5.33		10BWG	1	SA	P	BM
	21	FW4-3R	SYMBOL LN ADDED RT	48X48			16.00		10BWG	1	SA	T	
	22	M3-3	SOUTH	24X12			2.00		10BWG	1	SA	P	
		M1-4A3	US 281	30X24			5.00						
		M6-2L	45 DEG ARROW LT	21X15			2.19						
	23	W19-2	WATCH FOR ICE ON BRIDGE FOLDING	36X36			9.00		10BWG	1	SA	P	
	24	FR6-1R	ONE WAY W ARROW	48X16			5.33		10BWG	1	SA	P	BM
	25	FR6-1R	ONE WAY W ARROW	48X16			5.33		10BWG	1	SA	P	BM
	26	FR6-1R	ONE WAY W ARROW	48X16			5.33		10BWG	1	SA	P	BM
	27	W19-2	WATCH FOR ICE ON BRIDGE FOLDING	36X36			9.00		10BWG	1	SA	P	
7/10	1	ER5-1	DO NOT ENTER	36X36			9.00		10BWG	1	SA	P	
	2	R5-1a	WRONG WAY	36X24			6.00		10BWG	1	SA	P	
	3	FR6-1R	ONE WAY W ARROW	48X16			5.33		10BWG	1	SA	P	BM
	4	R5-1a	WRONG WAY	36X24			6.00		10BWG	1	SA	P	
	5	FW4-3L	SYMBOL LN ADDED LT	48X48			16.00		10BWG	1	SA	T	
	6	FR6-1R	ONE WAY W ARROW	48X16			5.33		10BWG	1	SA	P	BM
	7	FR6-1R	ONE WAY W ARROW	48X16			5.33		10BWG	1	SA	P	BM
	8	W4-2L	PVMT TRANS LEFT	36X36			9.00		10BWG	1	SA	P	
	9	M3-1	NORTH	24X12			2.00		10BWG	1	SA	P	
		M1-4A3	US 281	30X24			5.00						
	10	W9-2R	LN ENDS MERGE RT	36X36			9.00		10BWG	1	SA	P	
	11	R2-1	SPEED LIMIT 50	24X30			5.00		TWT	1	UA	P	
	12	FR6-1R	ONE WAY W ARROW	48X16			5.33		10BWG	1	SA	P	BM
	13	M3-4	WEST	24X12			2.00		S80	1	SA	U	1EXT
		M1-6F	FARM ROAD 3461	24X24			4.00						
		M6-3	UP ARROW	21X15			2.19						
		M3-3	SOUTH	24X12			2.00						
		M1-4A3	US 281	30X24			5.00						
		M5-1L	LT 90 DEG ARROW	21X15			2.19						
		M3-1	NORTH	24X12			2.00						
		M1-4A3	US 281	30X24			5.00						
		M6-1	HORIZONTAL ARROW	21X15			2.19						
	14	D1-2	⇧MCALLEN	60X24			10.00		10BWG	1	SA	T	
			⇦PHARR										
	16	R5-1	DO NOT ENTER (B-B)	30X30			6.25		10BWG	1	SA	P	
		R3-8U	U TRN ONLY ARROW	24X30			5.00						
	17	R5-1	DO NOT ENTER	30X30			6.25		10BWG	1	SA	P	
	18	M3-1	NORTH	24X12			2.00		S80	1	SA	U	1EXT
		M1-4A3	US 281	30X24			5.00						
		M6-3	UP ARROW	21X15			2.19						
		M3-4	WEST	24X12			2.00						
		M1-6F	FARM ROAD 3461	24X24			4.00						
		M6-1	HORIZONTAL ARROW	21X15			2.19						

ALUMINUM SIGN BLANKS (TYPE A)

Square Ft.	Min. Thickness
Less than 7.5	0.080"
7.5 to 15	0.100"
Greater than 15	0.125"

Sign supports shall be located as shown on the plans, except that the Engineer may shift the sign supports, within design guidelines, where necessary to secure a more desirable location or to avoid conflict with utilities. Unless otherwise shown on the plans, the Contractor shall stake and the Engineer will verify all sign support locations.

Reflective sheeting will be designated as:

Type C - High Specific Intensity
Type D - Non-fluorescent Prismatic

© TxDOT May 2003

DN: TxDOT CK: LRJMT DW: DN CK:

REVISIONS 11-93 8-95

DISTRICT	COUNTY	CONTROL	SECTION	JOB	HIGHWAY
PHARR	HIDALGO	0255	08	091	US 281

FEDERAL AID PROJECT

SHEET 833

SUMMARY OF SMALL SIGNS

SHEET 4 OF 8

Traffic Operations Division

SUMMARY OF SMALL SIGNS

SM RD SGN ASSM TY XXXXX(X)XX(X-XXXX)

- **Post Type**: FRP = Fiberglass; TWT = Thin-Wall; 10BWG = 10 BWG; S80 = Sch 80
- **Posts (1 or 2)**
- **Anchor Type**: UA = Univer-Conc; UB = Univer-Bolt; WA = Wedge-Conc; SA = Slip-Conc; SB = Slip-Bolt
- **Mounting Designation**: P = Prefab. "Plain"; T = Prefab. "T"; U = Prefab. "U"
- 1EXT or 2EXT = # of Ext. BM = Extruded Wind Beam; WC = 1.12 #/ft Wing Chan.; EXAL = Extruded Alum. signs

PLAN SHEET NO.	SIGN NO.	SIGN NOMENCLATURE	SIGN TEXT	SIGN DIMENSIONS	REFLECTIVE SHEETING	PLYWOOD TYPE A	ALUMINUM TYPE A	ALUMINUM TYPE G	Post Type	Posts (1 or 2)	Anchor Type	Mounting Designation	
7/10		M3-2	EAST	24X12			2.00						
		M1-6F	FARM ROAD 3461	24X24			4.00						
		M6-1	HORIZONTAL ARROW	21X15			2.19						
	19	M3-1	NORTH	24X12			2.00		10BWG	1	SA	U	
		M1-4A	US 281	24X24			5.00						
		M6-1	HORIZONTAL ARROW	21X15			2.19						
		M3-2	EAST	24X12			2.00						
		M1-6F	FARM ROAD 3461	24X24			5.00						
		M6-3	UP ARROW	21X15			2.19						
	20	R3-8U	U TRN ONLY ARROW	24X30			5.00		10BWG	1	SA	P	
	21	R5-1a	WRONG WAY (B-B)	36X24			6.00		S80	1	SA	P	
		SPL-01	LEFT/STR OR LT/STR/RT (B-B)	60X30			12.50						
	22	FR6-1R	ONE WAY W ARROW	48X16			5.33		10BWG	1	SA	P	BM
	23	R5-1a	WRONG WAY (B-B)	36X24			6.00		S80	1	SA	P	
		SPL-01	LEFT/STR OR LT/STR/RT (B-B)	60X30			12.50						
	24	FR6-1R	ONE WAY W ARROW	48X16			5.33		10BWG	1	SA	P	BM
	25	M2-1	JCT	21X15			2.19		10BWG	1	SA	P	
		M1-6F	FARM ROAD 3461	24X24			4.00						
	26	FR6-1R	ONE WAY W ARROW	48X16			5.33		10BWG	1	SA	P	BM
	27	W3-3	SYM SIGNAL AHEAD	36X36			9.00		10BWG	1	SA	P	
	28	R5-1a	WRONG WAY (B-B)	36X24			6.00		S80	1	SA	P	BM
		SPL-01	LEFT/STR OR LT/STR/RT (B-B)	60X30			12.50						
	29	R5-1a	WRONG WAY (B-B)	36X24			6.00		S80	1	SA	P	BM
		SPL-01	LEFT/STR OR LT/STR/RT (B-B)	60X30			12.50						
	30	R3-8U	U TRN ONLY ARROW	24X30			5.00		10BWG	1	SA	P	
	31	FR6-1R	ONE WAY W ARROW	48X16			5.33		10BWG	1	SA	P	BM
	32	M3-3	SOUTH	24X12			2.00		S80	1	SA	U	
		M1-4A3	US 281	30X24			5.00						
		M6-1	HORIZONTAL ARROW	21X15			2.19						
		M3-4	WEST	24X12			2.00						
		M1-6F	FARM ROAD 3461	24X24			4.00						
		M6-3	UP ARROW	21X15			2.19						
	33	M3-3	SOUTH	24X12			2.00		S80	1	SA	U	1EXT
		M1-4A3	US 281	30X24			5.00						
		M6-3	UP ARROW	21X15			2.19						
		M3-2	EAST	24X12			2.00						
		M1-6F	FARM ROAD 3461	30X24			4.00						
		M6-1	HORIZONTAL ARROW	21X15			2.19						
		M3-4	WEST	24X12			2.00						
		M1-6F	FARM ROAD 3461	24X24			4.00						
		M6-1	HORIZONTAL ARROW	21X15			2.19						
	34	ER5-1	DO NOT ENTER	36X36		9.00			10BWG	1	SA	P	
	35	R3-8U	U TRN ONLY ARROW (B-B)	24X30		5.00			10BWG	1	SA	P	
		ER5-1	DO NOT ENTER (B-B)	36X36		9.00							
	36	M3-2	EAST	24X12			2.00		S80	1	SA	U	1EXT
		M1-6F	FARM ROAD 3461	24X24			4.00						
		M6-3	UP ARROW	21X15			2.19						
		M3-1	NORTH	24X12			2.00						
		M1-4A3	US 281	30X24			5.00						
		M5-1L	LT 90DEG ARROW	21X15			2.19						
		M3-3	SOUTH	24X12			2.00						
		M1-4A3	US 281	30X24			5.00						
		M6-1	HORIZONTAL ARROW	21X15			2.19						
	37	FR6-1R	ONE WAY W ARROW	48X16			5.33		10BWG	1	SA	P	BM
	38	M3-3	SOUTH	24X12			2.00		10BWG	1	SA	P	
		M1-4A3	US 281	30X24			5.00						
	39	R2-1	SPEED LIMIT 50	24X30			5.00		TWT	1	UA	P	
	40	FW4-1R	MERGE	48X48			16.00		10BWG	1	SA	T	
	41	M3-3	SOUTH	24X12			2.00		10BWG	1	SA	P	
		M1-4A3	US 281	30X24			5.00						
		M6-2L	45 DEG ARROW LT	21X15			2.19						
	42	FR6-1R	ONE WAY W ARROW	48X16			5.33		10BWG	1	SA	P	BM
	43	FR6-1R	ONE WAY W ARROW	48X16			5.33		10BWG	1	SA	P	BM
	44	W12-3	XX FT XX IN	84X24			14.00						
	45	W12-3	XX FT XX IN	84X24			14.00						
	46	W12-3	XX FT XX IN	84X24			14.00						
	47	W12-3	XX FT XX IN	84X24			14.00						
	48	W19-2	WATCH FOR ICE ON BRIDGE FOLDING	36X36			9.00		10BWG	1	SA	P	
8/10	1	W3-3	SYMBOL SIGNAL AHEAD	36X36			9.00		10BWG	1	SA	P	
	2	FR6-1R	ONE WAY W ARROW	48X16			5.33		10BWG	1	SA	P	BM
	3	M2-1	JCT	21X15			2.19		10BWG	1	SA	P	
		M1-6F	FARM ROAD 3461	24X24			4.00						
	4	ER5-1	DO NOT ENTER	36X36			9.00		10BWG	1	SA	P	
	5	ER5-1	DO NOT ENTER	36X36			9.00		10BWG	1	SA	P	
	6	W19-2	WATCH FOR ICE ON BRIDGE FOLDING	36X36			9.00		10BWG	1	SA	P	
	7	R5-1a	WRONG WAY	36X24			6.00		10BWG	1	SA	P	
	8	R5-1a	WRONG WAY	36X24			6.00		10BWG	1	SA	P	
	9	FR6-1R	ONE WAY W ARROW	48X16			5.33		10BWG	1	SA	P	BM
	10	FW4-3L	SYMBOL LN ADDED LT	48X48			16.00		10BWG	1	SA	T	
	11	FR6-1R	ONE WAY W ARROW	48X16			5.33		10BWG	1	SA	P	BM
	12	W4-2R	PVMT TRANS RT	36X36			9.00		10BWG	1	SA	P	
	13	FR6-1R	ONE WAY W ARROW	48X16			5.33		10BWG	1	SA	P	BM

ALUMINUM SIGN BLANKS (TYPE A)

Square Ft.	Min. Thickness
Less than 7.5	0.080"
7.5 to 15	0.100"
Greater than 15	0.125"

Sign supports shall be located as shown on the plans, except that the Engineer may shift the sign supports, within design guidelines, where necessary to secure a more desirable location or to avoid conflict with utilities. Unless otherwise shown on the plans, the Contractor shall stake and the Engineer will verify all sign support locations.

Reflective sheeting will be designated as:

Type C - High Specific Intensity
Type D - Non-fluorescent Prismatic

SHEET 5 OF 8

SUMMARY OF SMALL SIGNS

© TxDOT May 2003

DN: TxDOT	CK: LB/AM	DW:	CK: DN
REVISIONS			
11-93			
8-95			

DISTRICT	COUNTY	CONTROL	SECTION	JOB	HIGHWAY
PHARR	HIDALGO	0255	08	091	US 281

FEDERAL AID PROJECT

SHEET 834

Traffic Operations Division

10

SUMMARY OF SMALL SIGNS

SM RD SGN ASSM TY XXXXX(X)XX(X-XXXX)

- Post Type: FRP = Fiberglass; TWT = Thin-Wall; 10BWG = 10 BWG; S80 = Sch 80
- Posts (1 or 2)
- Anchor Type: UA = Univer-Conc; UB = Univer-Bolt; WA = Wedge-Conc; SA = Slip-Conc; SB = Slip-Bolt
- Mounting Designation: P = Prefab. "Plain"; T = Prefab. "T"; U = Prefab. "U"
- 1EXT or 2EXT = # of Ext.; BM = Extruded Wind Beam; WC = 1.12 #/ft Wing Chan.; EXAL = Extruded Alum. signs

PLAN SHEET NO.	SIGN NO.	SIGN NOMENCLATURE	SIGN TEXT	SIGN DIMENSIONS	REFLECTIVE SHEETING	PLYWOOD TYPE A	ALUMINUM TYPE A	ALUMINUM TYPE G	Post Type	Posts	Anchor Type	Mounting Designation	
	14	R6-1R	ONE WAY W ARROW	36X12			3.00		TWT	1	WA	P	
		R1-1	STOP	30X30			5.18						
	15	R6-1R	ONE WAY W ARROW	36X12			3.00		10BWG	1	SA	P	
	16	W9-2R	LANE ENDS MERGE RT	36X36			9.00		10BWG	1	SA	P	
	17	D1-1	ELDORA ROAD ⇨	78X12			6.50		10BWG	1	SA	T	
	18	M3-3	SOUTH	24X12			2.00		10BWG	1	SA	P	
		M1-4A3	US 281	30X24			5.00						
		M6-2L	45 DEG ARROW LT	21X15			2.19						
	19	FR6-1R	ONE WAY W ARROW	48X16			5.33		10BWG	1	SA	P	BM
	20	D1-1	ELDORA ROAD ⇨	78X12			6.50		10BWG	1	SA	T	
	21	W9-2R	LANE ENDS MERGE RT	36X36			9.00		10BWG	1	SA	P	
	22	FR6-1R	ONE WAY W ARROW	48X16			5.33		10BWG	1	SA	P	BM
	23	R6-1R	ONE WAY W ARROW	36X12			3.00		TWT	1	WA	P	
		R1-1	STOP	30X30			5.18						
	24	W19-2	WATCH FOR ICE ON BRIDGE FOLDING	36X36			9.00		10BWG	1	SA	P	
	25	W4-2L	PVMT TRANS LT	36X36			9.00		10BWG	1	SA	P	
	26	FR6-1R	ONE WAY W ARROW	48X16			5.33		10BWG	1	SA	P	BM
	27	FR6-1R	ONE WAY W ARROW	48X16			5.33		10BWG	1	SA	P	BM
9/10	1	FR6-1R	ONE WAY W ARROW	48X16			5.33		10BWG	1	SA	P	BM
	2	M3-1	NORTH	24X12			2.00		10BWG	1	SA	P	
		M1-4A3	US 281	30X24			5.00						
		M6-2L	45 DEG ARROW LT	21X15			2.19						
	3	FW4-1R	MERGE	48X48			16.00		10BWG	1	SA	T	
	4	W19-2	WATCH FOR ICE ON BRIDGE FOLDING	36X36			9.00		10BWG	1	SA	P	
	5	R6-1R	ONE WAY W ARROW	36X12			3.00		TWT	1	WA	P	
		R1-1	STOP	30X30			5.18						
	6	FR6-1R	ONE WAY W ARROW	48X16			5.33		10BWG	1	SA	P	BM
	7	M3-1	NORTH	24X12			2.00		10BWG	1	SA	P	
		M1-4A3	US 281	30X24			5.00						
		M6-2L	45 DEG ARROW LT	21X15			2.19						
	8	R2-1	SPEED LIMIT 50	24X30			5.00		TWT	1	UA	P	
	9	M3-1	NORTH	24X12			2.00		10BWG	1	SA	P	
		M1-4A3	US 281	30X24			5.00						
	10	W19-2	WATCH FOR ICE ON BRIDGE FOLDING	36X36			9.00		10BWG	1	SA	P	
	11	R3-8U	U TRN ONLY ARROW ┐	24X30			5.00		10BWG	1	SA	P	
		ER5-1	DO NOT ENTER ┘	36X36			9.00						
	12	ER5-1	DO NOT ENTER	36X36			9.00		10BWG	1	SA	P	
	13	FR6-1R	ONE WAY W ARROW	48X16			5.33		10BWG	1	SA	P	BM
	14	R3-8U	U TRN ONLY ARROW	24X30			5.00		10BWG	1	SA	P	
	15	FW4-3L	SYMBOL LN ADDED LT	48X48			16.00		10BWG	1	SA	T	
	16	FR6-1R	ONE WAY W ARROW	48X16			5.33		10BWG	1	SA	P	BM
	17	R5-1a	WRONG WAY	36X24			6.00		10BWG	1	SA	P	
	18	R5-1a	WRONG WAY	36X24			6.00		10BWG	1	SA	P	
	19	W19-2	WATCH FOR ICE ON BRIDGE FOLDING	36X36			9.00		10BWG	1	SA	P	
	20	ER5-1	DO NOT ENTER	36X36			9.00		10BWG	1	SA	P	
	21	ER5-1	DO NOT ENTER	36X36			9.00		10BWG	1	SA	P	
	22	W3-3	SYMBOL SIGNAL AHEAD	36X36			9.00		10BWG	1	SA	P	
	23	FR6-1R	ONE WAY W ARROW	48X16			5.33		10BWG	1	SA	P	BM
	24	R5-1a	WRONG WAY ┐B-B	36X24			6.00		S80	1	SA	P	BM
		SPL-02	LEFT/STR/STR OR RT ┘B-B	56X30			11.67						
	25	R5-1a	WRONG WAY ┐B-B	36X24			6.00		S80	1	SA	P	BM
		SPL-02	LEFT/STR/STR OR RT ┘B-B	56X30			11.67						
	26	R3-8U	U TRN ONLY ARROW	24X30			5.00		10BWG	1	SA	P	
	27	R5-1	DO NOT ENTER	36X36			9.00		10BWG	1	SA	P	
	28	R3-8U	U TRN ONLY ARROW ┐	24X30			5.00		10BWG	1	SA	P	
		ER5-1	DO NOT ENTER ┘	36X36			9.00						
	29	W9-2R	LANE ENDS MERGE RIGHT	36X36			9.00		10BWG	1	SA	P	
	30	FR6-1R	ONE WAY W ARROW	48X16			5.33		10BWG	1	SA	P	BM
	31	FR6-1R	ONE WAY W ARROW	48X16			5.33		10BWG	1	SA	P	BM
	32	W12-3	SOUTH	24X12			2.00						
	33	M3-3	SOUTH	24X12			2.00		S80	1	SA	U	
		M1-4A3	US 281	30X24			5.00						
		M6-1R	HORIZONTAL ARROW	21X15			2.19						
		M3-1	NORTH	24X12			2.00						
		M1-4A3	US 281	30X24			5.00						
		M5-1L	LT 90DEG ARROW	21X15			2.19						
	34	M3-3	SOUTH	24X12			2.00		10BWG	1	SA	P	
		M1-4A3	US 281	30X24			5.00						
		M6-3	UP ARROW	21X15			2.19						
	35	M3-3	SOUTH	24X12			2.00		10BWG	1	SA	P	
		M1-4A3	US 281	30X24			5.00						
		M6-1L	HORIZONTAL ARROW	21X15			2.19						
	36	W12-3	SOUTH	24X12			2.00						
	37	M3-1	NORTH	24X12			2.00		S80	1	SA	U	
		M1-4A3	US 281	30X24			5.00						
		M6-1R	HORIZONTAL ARROW	21X15			2.19						
		M3-3	SOUTH	24X12			2.00						
		M1-4A3	US 281	30X24			5.00						
		M5-1L	LT 90DEG ARROW	21X15			2.19						
	38	M3-1	NORTH	24X12			2.00		10BWG	1	SA	P	
		M1-4A3	US 281	30X24			5.00						
		M6-1L	HORIZONTAL ARROW	21X15			2.19						
	39	W12-3	XX FT XX IN	84X24			14.00						
	40	W12-3	XX FT XX IN	84X24			14.00						

ALUMINUM SIGN BLANKS (TYPE A)

Square Ft.	Min. Thickness
Less than 7.5	0.080"
7.5 to 15	0.100"
Greater than 15	0.125"

Sign supports shall be located as shown on the plans, except that the Engineer may shift the sign supports, within design guidelines, where necessary to secure a more desirable location or to avoid conflict with utilities. Unless otherwise shown on the plans, the Contractor shall stake and the Engineer will verify all sign support locations.

Reflective sheeting will be designated as:

Type C - High Specific Intensity
Type D - Non-fluorescent Prismatic

©TxDOT May 2003

DN:TxDOT CK: DW:TxDOT CK:

REVISIONS
11-93
8-95

DISTRICT	COUNTY	CONTROL	SECTION	JOB	HIGHWAY
PHARR	HIDALGO	0255	08	091	US 281

FEDERAL AID PROJECT

SHEET 10

SUMMARY OF SMALL SIGNS

SHEET 6 OF 8

Traffic Operations Division

SUMMARY OF SMALL SIGNS

SM RD SGN ASSM TY XXXXX(X)XX(X-XXXX)

- Post Type: FRP = Fiberglass; TWT = Thin-Wall; 10BWG = 10 BWG; S80 = Sch 80
- Posts (1 or 2)
- Anchor Type: UA = Univer-Conc; UB = Univer-Bolt; WA = Wedge-Conc; SA = Slip-Conc; SB = Slip-Bolt
- Mounting Designation: P = Prefab. "Plain"; T = Prefab. "T"; U = Prefab. "U"
- 1EXT or 2EXT = # of Ext.; BM = Extruded Wind Beam; WC = 1.12 #/ft Wing Chan.; EXAL = Extruded Alum. signs

PLAN SHEET NO.	SIGN NO.	SIGN NOMENCLATURE	SIGN TEXT	SIGN DIMENSIONS	REFLECTIVE SHEETING	PLYWOOD TYPE A	ALUMINUM TYPE A	ALUMINUM TYPE G	Post Type	Posts	Anchor Type	Mounting Designation	
10/10	1	R5-1a	WRONG WAY (B-B)	36X24			6.00		S80	1	SA	P	BM
		SPL-02	LEFT/STR/STR OR RT (B-B)	56X30			11.67						
	2	R5-1a	WRONG WAY (B-B)	36X24			6.00		S80	1	SA	P	BM
		SPL-02	LEFT/STR/STR OR RT (B-B)	56X30			11.67						
	3	FR6-1R	ONE WAY W ARROW	48X16			5.33		10BWG	1	SA	P	BM
	4	W3-3	SYMBOL SIGNAL AHEAD	36X36			9.00		10BWG	1	SA	P	
	5	FR6-1R	ONE WAY W ARROW	48X16			5.33		10BWG	1	SA	P	BM
	6	FR6-1R	ONE WAY W ARROW	48X16			5.33		10BWG	1	SA	P	BM
	7	FR6-1R	ONE WAY W ARROW	48X16			5.33		10BWG	1	SA	P	BM
	8	M3-1	NORTH	24X12			2.00		10BWG	1	SA	P	
		M1-4A3	US 281	30X24			5.00						
		M6-2L	45 DEG ARROW LT	21X15			2.19						
	9	W19-2	WATCH FOR ICE ON BRIDGE FOLDING	36X36			9.00		10BWG	1	SA	P	
	10	R2-1	SPEED LIMIT 50	24X30			5.00		TWT	1	UA	P	
	11	M3-1	NORTH	24X12			2.00		10BWG	1	SA	P	
		M1-4A3	US 281	30X24			5.00						
		M6-2L	45 DEG ARROW LT	21X15			2.19						
	12	R3-2O	LEFT LANE MUST ENTER RAMP	48X48			16.00		10BWG	1	SA	T	
	13	FW4-1R	MERGE	48X48			16.00		10BWG	1	SA	T	
	14	FR6-1R	ONE WAY W ARROW	48X16			5.33		10BWG	1	SA	P	BM
	15	M3-1	NORTH	24X12			2.00		10BWG	1	SA	P	
		M1-4A3	US 281	30X24			5.00						
	16	R14-2	HAZARDOUS CARGO ROUTE	24X24			4.00		10BWG	1	SA	P	
		R14-1	TRUCK ROUTE	24X18			3.00						
		M6-3	UP ARROW	21X15			2.19						
	17	R3-2O	LEFT LANE MUST ENTER RAMP	48X48			16.00		10BWG	1	SA	T	
	18	M3-4	WEST	24X12			2.00		S80	1	SA	U	1EXT
		M1-6T	TEXAS 495	24X24			4.00						
		M6-3	UP ARROW	21X15			2.19						
		M3-3	SOUTH	24X12			2.00						
		M1-4A3	US 281	30X24			5.00						
		M5-1L	LT 90 DEG ARROW	21X15			2.19						
		M3-1	NORTH	24X12			2.00						
		M1-4A3	US 281	30X24			5.00						
		M6-1	HORIZONTAL ARROW	21X15			2.19						
	19	M3-1	NORTH	24X12			2.00		S80	1	SA	U	
		M1-4A3	US 281	30X24			5.00						
		M6-1	HORIZONTAL ARROW	21X15			2.19						
		M3-2	EAST	24X12			2.00						
		M1-6T	TEXAS 495	24X24			4.00						
		M6-3	UP ARROW	21X15			2.19						
	20	R3-8U	U TRN ONLY ARROW (B-B)	24X30			5.00		10BWG	1	SA	P	
		ER5-1	DO NOT ENTER (B-B)	36X36			9.00						
	21	ER5-1	DO NOT ENTER	36X36			9.00		10BWG	1	SA	P	
	22	R3-8U	U TRN ONLY ARROW	24X30			5.00		10BWG	1	SA	P	
	23	R5-1a	WRONG WAY (B-B)	36X24			6.00		S80	1	SA	P	BM
		SPL-03	LT/STR/STR/RT (B-B)	60X30			12.50						
	24	R5-1a	WRONG WAY (B-B)	36X24			6.00		S80	1	SA	P	BM
		SPL-03	LT/STR/STR/RT (B-B)	60X30			12.50						
	25	FR6-1R	ONE WAY W ARROW	48X16			5.33		10BWG	1	SA	P	BM
	26	FR6-1R	ONE WAY W ARROW	48X16			5.33		10BWG	1	SA	P	BM
	27	R2-1	SPEED LIMIT 50	24X30			5.00		TWT	1	UA	P	
	28	FR6-1R	ONE WAY W ARROW	48X16			5.33		10BWG	1	SA	P	BM
	29	M3-3	SOUTH	24X12			2.00		10BWG	1	SA	P	
		M1-4A3	US 281	30X24			5.00						
	30	FW4-3L	SYMBOL LN ADDED LT	48X48			16.00		10BWG	1	SA	T	
	31	FR6-1R	ONE WAY W ARROW	48X16			5.33		10BWG	1	SA	P	
	32	R5-1a	WRONG WAY	36X24			6.00		10BWG	1	SA	P	
	33	FR6-1R	ONE WAY W ARROW	48X16			5.33		10BWG	1	SA	P	BM
	34	R5-1a	WRONG WAY	36X24			6.00		10BWG	1	SA	P	
	35	ER5-1	DO NOT ENTER	36X36			9.00		10BWG	1	SA	P	
	36	ER5-1	DO NOT ENTER	36X36			9.00		10BWG	1	SA	P	
	37	M2-1	JCT	24X12			2.00		10BWG	1	SA	P	
		M1-6T	TEXAS 495	24X24			4.00						
	38	W19-2	WATCH FOR ICE ON BRIDGE FOLDING	36X36			9.00		10BWG	1	SA	P	
	39	FR6-1R	ONE WAY W ARROW	48X16			5.33		10BWG	1	SA	P	BM
	40	W3-3	SYMBOL SIGNAL AHEAD	36X36			9.00		10BWG	1	SA	P	
	41	R5-1a	WRONG WAY (B-B)	36X24			6.00		S80	1	SA	P	BM
		SPL-01	LEFT/STR OR LT/STR/RT (B-B)	60X30			12.50						
	42	R5-1a	WRONG WAY (B-B)	36X24			6.00		S80	1	SA	P	BM
		SPL-01	LEFT/STR OR LT/STR/RT (B-B)	60X30			12.50						
	43	R3-7R	RIGHT LANE MUST TURN RIGHT	30X30			6.25		10BWG	1	SA	P	
	44	R3-8U	U TRN ONLY ARROW	24X30			5.00		10BWG	1	SA	P	

ALUMINUM SIGN BLANKS (TYPE A)

Square Ft.	Min. Thickness
Less than 7.5	0.080"
7.5 to 15	0.100"
Greater than 15	0.125"

Sign supports shall be located as shown on the plans, except that the Engineer may shift the sign supports within design guidelines, where necessary to secure a more desirable location or to avoid conflict with utilities. Unless otherwise shown on the plans, the Contractor shall stake and the Engineer will verify all sign support locations.

Reflective sheeting will be designated as:

Type C - High Specific Intensity
Type D - Non-fluorescent Prismatic

SHEET 7 OF 8

SUMMARY OF SMALL SIGNS

©TxDOT May 2003

DN: TxDOT CK: LRAMI DW: CK:

REVISIONS	
11-93	
8-95	

STATE DISTRICT	FEDERAL REGION	FEDERAL AID PROJECT
PHARR	6	

COUNTY	CONTROL	SECTION	JOB	HIGHWAY
HIDALGO	0255	08	091	US 281

SHEET 836

Traffic Operations Division

10

SUMMARY OF SMALL SIGNS

SM RD SGN ASSM TY XXXXX(X)XX(X-XXXX)

- **Post Type**: FRP = Fiberglass; TWT = Thin-Wall; 10BWG = 10 BWG; S80 = Sch 80
- **Posts (1 or 2)**
- **Anchor Type**: UA = Univer-Conc; UB = Univer-Bolt; WA = Wedge-Conc; SA = Slip-Conc; SB = Slip-Bolt
- **Mounting Designation**: P = Prefab. "Plain"; T = Prefab. "T"; U = Prefab. "U"
- 1EXT or 2EXT = # of Ext.; BM = Extruded Wind Beam; WC = 1.12 #/ft Wing Chan.; EXAL = Extruded Alum. signs

PLAN SHEET NO.	SIGN NO.	SIGN NOMENCLATURE	SIGN TEXT	SIGN DIMENSIONS	REFLECTIVE SHEETING	PLYWOOD TYPE A	ALUMINUM TYPE A	ALUMINUM TYPE G	Post Type	Posts	Anchor Type	Mounting Designation	
10/10	45	R14-3	HAZARDOUS CARGO PROHIBITED	24X24			4.00		10BWG	1	SA	P	
		M6-4	DBL HEADED ARROW HORIZONTAL	21X15			2.19						
	46	M3-3	SOUTH	24X12			2.00		S80	1	SA	U	1EXT
		M1-4A3	US 281	30X24			5.00						
		M6-3	UP ARROW	21X15			2.19						
		M3-2	EAST	24X12			2.00						
		M1-6T	TEXAS 495	24X24			4.00						
		M6-1	HORIZONTAL ARROW	21X15			2.19						
		M3-4	WEST	24X12			2.00						
		M1-6T	TEXAS 495	24X24			4.00						
		M6-1	HORIZONTAL ARROW	21X15			2.19						
	47	ER5-1	DO NOT ENTER	36X36			9.00		10BWG	1	SA	P	
	48	R3-8U	U TRN ONLY ARROW (B-B)	24X30			5.00		10BWG	1	SA	P	
		ER5-1	DO NOT ENTER (B-B)	36X36			9.00						
	49	M3-3	SOUTH	24X12			2.00		S80	1	SA	U	
		M1-4A3	US 281	30X24			5.00						
		M6-1	HORIZONTAL ARROW	21X15			2.19						
		M3-4	WEST	24X12			2.00						
		M1-6T	TEXAS 495	24X24			4.00						
		M6-3	UP ARROW	21X15			2.19						
	50	M3-2	EAST	24X12			2.00		S80	1	SA	U	1EXT
		M1-6T	TEXAS 495	24X24			4.00						
		M6-3	UP ARROW	21X15			2.19						
		M3-1	NORTH	24X12			2.00						
		M1-4A3	US 281	30X24			5.00						
		M5-1L	LT 90 DEG ARROW	21X15			2.19						
		M3-3	SOUTH	24X12			2.00						
		M1-4A3	US 281	30X24			5.00						
		M6-1	HORIZONTAL ARROW	21X15			2.19						
	51	M3-1	NORTH	24X12			2.00		S80	1	SA	U	1EXT
		M1-4A3	US 281	30X24			5.00						
		M6-3	UP ARROW	21X15			2.19						
		M3-4	WEST	24X12			2.00						
		M1-6T	TEXAS 495	24X24			4.00						
		M6-1	HORIZONTAL ARROW	21X15			2.19						
		M3-2	EAST	24X12			2.00						
		M1-6T	TEXAS 495	24X24			4.00						
		M6-1	HORIZONTAL ARROW	21X15			2.19						
	52	FW4-2L	PVMT TRNS LEFT	48X48			16.00		10BWG	1	SA	T	
		W13-1	ADVISORY SPEED 45 M.P.H.	18X18			2.25						
	53	W4-2L	PVMT TRANS LEFT	36X36			9.00		10BWG	1	SA	P	
	54	R2-1	SPEED LIMIT 70	24X30			5.00		TWT	1	UA	P	
	55	FW9-2R	LN ENDS MERGE RT	48X48			16.00		10BWG	1	SA	T	

ALUMINUM SIGN BLANKS (TYPE A)

Square Ft.	Min. Thickness
Less than 7.5	0.080"
7.5 to 15	0.100"
Greater than 15	0.125"

Sign supports shall be located as shown on the plans, except that the Engineer may shift the sign supports, within design guidelines, where necessary to secure a more desirable location or to avoid conflict with utilities. Unless otherwise shown on the plans, the Contractor shall stake and the Engineer will verify all sign support locations.

Reflective sheeting will be designated as:

Type C - High Specific Intensity
Type D - Non-fluorescent Prismatic

SHEET 8 OF 8

SUMMARY OF SMALL SIGNS

©TxDOT May 2003

DN: TxDOT	CK: LEV/JBT	DW:	CK:
REVISIONS	11-93	8-95	

DISTRICT	COUNTY	CONTROL	SECTION	JOB	HIGHWAY	SHEET
PHARR	HIDALGO	0255	08	091	US 281	836A

DESIGN DISTRICT VERSION 6 — FEDERAL AID PROJECT

Traffic Operations Division

DESCRIPTIVE CODE		TALLY	TOTAL
0644 0604 SM RD SGN ASSM TY FRP(1)UA(P)	EA		
0644 0605 SM RD SGN ASSM TY FRP(1)UB(P)	EA		
0644 0606 SM RD SGN ASSM TY FRP(2)UA(P)	EA		
0644 0607 SM RD SGN ASSM TY FRP(2)UB(P)	EA		
0644 0608 SM RD SGN ASSM TY TWT(1)UA(P)	EA	1+1+3+1+1+1+2+1	11
0644 0609 SM RD SGN ASSM TY TWT(1)UA(T-2EXT)	EA		
0644 0610 SM RD SGN ASSM TY TWT(1)UA(T)	EA		
0644 0611 SM RD SGN ASSM TY TWT(1)WA(P)	EA	4+2+2+2+0+3+0+0	13
0644 0612 SM RD SGN ASSM TY TWT(1)WA(T-2EXT)	EA		
0644 0613 SM RD SGN ASSM TY TWT(1)WA(T)	EA		
0644 0614 SM RD SGN ASSM TY 10BWG(1)SA(P)	EA	27+24+20+21+17+27+20+4	160
0644 0615 SM RD SGN ASSM TY 10BWG(1)SA(P-BM)	EA	5+7+6+16+11+11+10+0	66
0644 0616 SM RD SGN ASSM TY 10BWG(1)SA(P-EXAL)	EA		
0644 0617 SM RD SGN ASSM TY 10BWG(1)SA(T-2EXT)	EA		
0644 0618 SM RD SGN ASSM TY 10BWG(1)SA(T)	EA	9+8+6+6+2+4+4+2	41
0644 0619 SM RD SGN ASSM TY 10BWG(1)SA(U)	EA	0+0+0+0+1+0+0+0	1
0644 0620 SM RD SGN ASSM TY 10BWG(1)SB(P)	EA		
0644 0621 SM RD SGN ASSM TY 10BWG(1)SB(P-BM)	EA		
0644 0622 SM RD SGN ASSM TY 10BWG(1)SB(P-EXAL)	EA		
0644 0623 SM RD SGN ASSM TY 10BWG(1)SB(T-2EXT)	EA		
0644 0624 SM RD SGN ASSM TY 10BWG(1)SB(T)	EA		
0644 0625 SM RD SGN ASSM TY 10BWG(1)SB(U)	EA		
0644 0626 SM RD SGN ASSM TY 10BWG(2)SA(P)	EA		
0644 0627 SM RD SGN ASSM TY 10BWG(2)SA(T-2EXT)	EA		
0644 0628 SM RD SGN ASSM TY 10BWG(2)SB(P)	EA		
0644 0629 SM RD SGN ASSM TY 10BWG(2)SB(T-2EXT)	EA		
0644 0630 SM RD SGN ASSM TY S80(1)SA(P)	EA	2+8+4+1+3+0+0+0	18
0644 0631 SM RD SGN ASSM TY S80(1)SA(P-BM)	EA	0+0+0+0+1+2+6+0	9
0644 0632 SM RD SGN ASSM TY S80(1)SA(P-EXAL)	EA		
0644 0633 SM RD SGN ASSM TY S80(1)SA(T-2EXT)	EA		
0644 0634 SM RD SGN ASSM TY S80(1)SA(T)	EA	0+0+1+0+0+0+0+0	1
0644 0635 SM RD SGN ASSM TY S80(1)SA(U)	EA	2+0+2+0+3+2+1+1	11
0644 0636 SM RD SGN ASSM TY S80(1)SA(U-1EXT)	EA	0+0+0+2+0+0+1+3	6
0644 0637 SM RD SGN ASSM TY S80(1)SA(U-2EXT)	EA		
0644 0638 SM RD SGN ASSM TY S80(1)SA(U-BM)	EA		
0644 0639 SM RD SGN ASSM TY S80(1)SA(U-WC)	EA		
0644 0640 SM RD SGN ASSM TY S80(1)SB(P)	EA		
0644 0641 SM RD SGN ASSM TY S80(1)SB(P-BM)	EA		
0644 0642 SM RD SGN ASSM TY S80(1)SB(P-EXAL)	EA		
0644 0643 SM RD SGN ASSM TY S80(1)SB(T-2EXT)	EA		
0644 0644 SM RD SGN ASSM TY S80(1)SB(T)	EA		
0644 0645 SM RD SGN ASSM TY S80(1)SB(U)	EA		
0644 0646 SM RD SGN ASSM TY S80(1)SB(U-1EXT)	EA		
0644 0647 SM RD SGN ASSM TY S80(1)SB(U-2EXT)	EA		
0644 0648 SM RD SGN ASSM TY S80(1)SB(U-BM)	EA		
0644 0649 SM RD SGN ASSM TY S80(1)SB(U-WC)	EA		
0644 0650 SM RD SGN ASSM TY S80(2)SA(P)	EA		
0644 0651 SM RD SGN ASSM TY S80(2)SA(P-EXAL)	EA		
0644 0652 SM RD SGN ASSM TY S80(2)SA(T-2EXT)	EA	0+1+0+0+0+0+0+0	1
0644 0653 SM RD SGN ASSM TY S80(2)SB(P)	EA		
0644 0654 SM RD SGN ASSM TY S80(2)SB(P-EXAL)	EA		
0644 0655 SM RD SGN ASSM TY S80(2)SB(T-2EXT)	EA		

STANDARD PLANS
Texas Department of Transportation
Traffic Operations Division

SIGN MOUNTING DETAILS SMALL ROADSIDE SIGNS DESCRIPTIVE CODES

© TxDOT 2003

DN: BAS	CK: GRB	DW: FDN	CK: CAL

REVISIONS	STATE DISTRICT	FEDERAL REGION	FEDERAL AID PROJECT	SHEET
	PHARR	6		836B

COUNTY	CONTROL	SECTION	JOB	HIGHWAY
HIDALGO	0255	08	091	US 281

Phaisorn C.
06/26/2003
04:27:49 PM
I:\22322o\CADD\Sheets\Summary\281sdisT01.dgn

Phaisarn C.

04:27:21 PM

06/26/2003

i:\22322a\cadd\sheets\summary\281lrgsgnrmvl.dgn

SUMMARY OF LARGE SIGNS (TO BE REMOVED)

PLAN SHEET NO.	SIGN NO.	STATION (L/R)	SIGN TEXT	TYPE OF MOUNT
1 OF 10	1	629+01.07 LEFT	E4-1 I Road	GROUND MOUNT
1 OF 10	2	633+54.01 LEFT	E1-3 USDA Service Center Texas Attorney General NEXT RIGHT	GROUND MOUNT
2 OF 10	3	638+01.48 RIGHT	E4-1 Trenton Road	GROUND MOUNT
2 OF 10	4	655+61.52 RIGHT	E1-1a 281 BUSINESS Owassa Road EXIT ½ MILE	GROUND MOUNT
2 OF 10	5	648+31.18 RIGHT	E5-1 EXIT	GROUND MOUNT
3 OF 10	6	658+02.24 LEFT	E1-3 I Road EXIT 3/4 MILE	GROUND MOUNT
3 OF 10	7	665+77.54 LEFT	E5-1 EXIT	GROUND MOUNT
3 OF 10	8	676+02.09 LEFT	E4-1 Trenton Road	GROUND MOUNT
3 OF 10	9	678+02.89 RIGHT	E4-1 281 BUSINESS Owassa Road	GROUND MOUNT
3 OF 10	10	673+16.84 RIGHT	E20-3 HOSPITAL NEXT RIGHT	GROUND MOUNT
4 OF 10	11	687+29.89 RIGHT	E5-1 EXIT	GROUND MOUNT
5 OF 10	12	707+05.92 LEFT	E1-3 Trenton Road EXIT 3/4 MILE	GROUND MOUNT
5 OF 10	13	709+99.56 LEFT	E4-1 BUSINESS 281 Edinburg NORTH 281	GROUND MOUNT
5 OF 10	14	721+15.00 RIGHT	E1-1a FM 3461 Nolana Loop EXIT ½ MILE	GROUND MOUNT
5 OF 10	15	706+29.28 RIGHT	E4-1 NORTH 281 Edinburg SOUTH 281	GROUND MOUNT
5 OF 10	16	728+91.59 LEFT	E5-1 EXIT	GROUND MOUNT
6 OF 10	17	735+49.97 LEFT	E4-1 281 BUSINESS Owassa Road Edinburg	GROUND MOUNT
6 OF 10	18	739+81.18 LEFT	E20-3 HOSPITAL NEXT RIGHT	GROUND MOUNT
6 OF 10	19	743+13.30 LEFT	E1-1a 281 BUSINESS Owassa Road Edinburg EXIT 1/4 MILE	GROUND MOUNT
6 OF 10	20	750+03.80 RIGHT	E5-1 EXIT	GROUND MOUNT

ITEM	DESCRIPTION	UNIT	QTY
649	REM LG RDSD SGN ASSM	EA	20
651	REM OVHD SGN SUPP	EA	0

Parsons Brinckerhoff Quade & Douglas Inc.

Texas Department of Transportation

© 2003 by TxDOT

US 281 SUMMARY OF LARGE SIGN REMOVALS

SHEET 1 OF 2 | 281LRGSGNRMVL.DGN

DESIGNED: TT	FED. RD DIV. No.	STATE	FEDERAL AID PROJECT No.			HIGHWAY No.	
CHECKED: DM	6	TEXAS				US 281	
DRAWN:	STATE DISTRICT	COUNTY	CONTROL No.	SECTION No.	JOB No.	SHEET No.	
CHECKED: DM	PHARR	HIDALGO	0255	08	091	837	

Phaisarn C.
04:27:22 PM
06/26/2003
i:\22322a\cadd\sheets\summary\281lrgsgnrmvla.dgn

SUMMARY OF LARGE SIGNS (TO BE REMOVED)

PLAN SHEET NO.	SIGN NO.	STATION (L/R)	SIGN TEXT	TYPE OF MOUNT
6 OF 10	21	744+03.12 RIGHT	E4-1	GROUND MOUNT
8 OF 10	22	778+80.91 RIGHT	E1-3 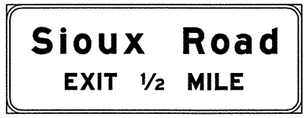	GROUND MOUNT
8 OF 10	23	787+16.76 LEFT	E5-1	GROUND MOUNT
8 OF 10	24	793+12.50 LEFT	E4-1	GROUND MOUNT
9 OF 10	25	805+86.95 RIGHT	E5-1	GROUND MOUNT
9 OF 10	26	810+31.40 RIGHT	E9	GROUND MOUNT
9 OF 10	27	803+79.78 RIGHT		OSB
9 OF 10	28	803+79.78 RIGHT	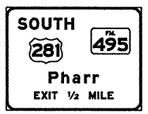	OSB
9 OF 10	29	803+79.78 RIGHT	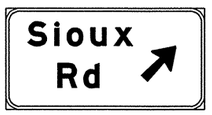	OSB
10 OF 10	30	825+96.57 LEFT	E1-1a	GROUND MOUNT
10 OF 10	31	834+36.26 RIGHT	E5-1	GROUND MOUNT
10 OF 10	32	831+17.00 RIGHT	E4-1 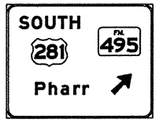	GROUND MOUNT
10 OF 10	33	831+55.48 RIGHT	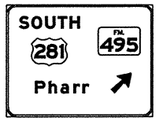	COSS
10 OF 10	34	839+57.75 RIGHT		OSB
10 OF 10	35	839+57.75 RIGHT		OSB

ITEM	DESCRIPTION	UNIT	QTY
649	REM LG RDSD SGN ASSM	EA	9
651	REM OVHD SGN SUPP	EA	3

Parsons Brinckerhoff Quade & Douglas Inc.

Texas Department of Transportation

© 2003 by TxDOT

US 281 SUMMARY OF LARGE SIGN REMOVALS

SHEET 2 OF 2 | 281LRGSGNRMVLA.DGN

DESIGNED: TT	FED. RD DIV. No.	STATE	FEDERAL AID PROJECT No.	HIGHWAY No.			
CHECKED: DM	6	TEXAS		US 281			
DRAWN:	STATE DISTRICT	COUNTY	CONTROL No.	SECTION No.	JOB No.	SHEET No.	
CHECKED: DM	PHARR	HIDALGO	0255	08	091	838	

Phaisorn C.

04:27:25 PM

06/26/2003

i:\22322a\cadd\sheets\summary\lgsgnsum01.dgn

SUMMARY OF LARGE SIGNS

PLAN SHEET NO.	SIGN NO.	SIGN BACK-GROUND COLOR	SIGN TEXT	CONCRETE RIPRAP (C.Y.)	SIGN DIMENSIONS	ROUTE SHIELDS, EXIT ONLY PANELS, & OTHER ATTACHMENTS	BACKGROUND SUBSTRATE (SQ FT)			TYPE OF MOUNT	"X" DIMENSION ⊖			GALVANIZED STRUCTURAL STEEL					DRILLED SHAFT				
							GROUND MOUNT		OVERHEAD		POST ①	POST ②	POST ③	SIZE	LINEAR FEET			TOTAL WEIGHT LBS.	LINEAR FEET				
						ALUMINUM (TYPE A)	PLYWOOD (TYPE A)	ALUMINUM (TYPE G)	ALUMINUM (TYPE O)						POST ①	POST ②	POST ③		NON-REINF 12"ϕ	REINFORCED 24"ϕ	REINFORCED 30"ϕ	REINFORCED 36"ϕ
1/10	1	GREEN (YELLOW)	H 09-2 Trenton Rd ↗ EXIT ONLY — FUTURE E11-1A PANEL; FUTURE E4-1 — 614+00 RT		2'-0" X 2'-0" 11'-0" X 9'-6"	30.25			4.00 104.50	COSS													
1/10	2	GREEN	Edinburg Business District NEXT 3 EXITS — E1-3 — 631+40 LT	1.6	18'-6" X 7'-0"			129.50		330	2.1	3.6	5.1	S4x7.7	16.1	17.6	19.1	512.16	8				
1/10	3	GREEN	EXIT ↗ — E5-1 — 616+80 RT		6'-0" X 5'-0"			*						TYPE G									
2/10	1	GREEN	281 BUSINESS Owassa Rd EXIT ½ MILE — E1-1A — 637+00 RT	1.5	16'-6" X 9'-6"	9.11		156.75		320	1.5	2.1		W6X12	18.0	18.6		519.80		10			
2/10	2	GREEN	EXIT ↗ — E5-1 — 643+20 LT		6'-0" X 5'-0"			*						TYPE G									
2/10	3	GREEN YELLOW	Canton Rd I Rd ↗ EXIT ONLY — E4-1 — 647+40 LT		16'-0" X 9'-0"	44.00			144.00	COSS													
2/10	4	GREEN YELLOW	Canton Rd I Rd EXIT ↓ ONLY — E4-1 — 658+00 LT		14'-0" X 9'-0"	38.50			126.00	COSS													
2/10	5	GREEN YELLOW	281 BUSINESS Owassa Road EXIT ↓ ONLY — E4-1 — 650+00 RT		17'-6" X 10'-6"	9.11 48.13			183.75	COSS													
3/10	1	GREEN	USDA Service Center Texas Attorney General NEXT RIGHT — E1-2 — 668+00 LT	2.1	25'-0" X 7'-0"			175.00		330	5.7	10.9	16.0	W6X9	19.7	24.9	30.0	771.00		9			
3/10	2	GREEN	Canton Rd I Rd EXIT ½ MILE — E1-1A — 673+80 LT	1.5	16'-0" X 8'-0"			128.00		320	1.5	1.9		W6X12	16.5	16.9		481.40		10			
			PAGE TOTALS	6.7		179.10		589.25	562.25									2284.36	8	29			

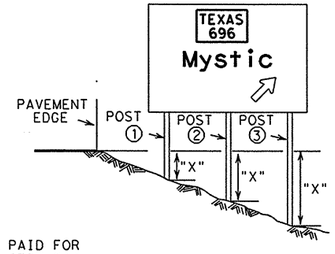

* TO BE PAID FOR UNDER ITEM 644

THE "X" DIMENSION IS THE ELEVATION DIFFERENCE AT THE POST BETWEEN THE GROUND AND THE EDGE OF PAVEMENT OR TOP OF CURB.

SIGN SUPPORTS SHALL BE LOCATED AS SHOWN ON THE PLANS, EXCEPT THAT THE ENGINEER MAY SHIFT THE SIGN SUPPORTS, WITHIN DESIGN GUIDELINES, WHERE NECESSARY TO SECURE A MORE DESIRABLE LOCATION OR TO AVOID CONFLICT WITH UTILITIES. UNLESS OTHERWISE SHOWN ON THE PLANS, THE CONTRACTOR SHALL STAKE AND THE ENGINEER WILL VERIFY ALL SIGN SUPPORT LOCATIONS.

THE POST LENGTHS LISTED HERE ARE APPROXIMATIONS. THE CORRECTED POST LENGTHS WILL BE FURNISHED BY THE ENGINEER AFTER THE CONTRACTOR HAS PLACED THE STUD POSTS.

TOWER HEIGHTS SHALL BE VERIFIED WITH THE ENGINEER BEFORE FABRICATION.

FABRICATION REQUIREMENTS

SIGN BACKGROUND:

COLOR	MATERIAL
BLUE	TYPE C (HIGH SPECIFIC INTENSITY)
BROWN	TYPE C (HIGH SPECIFIC INTENSITY)
GREEN	TYPE C (HIGH SPECIFIC INTENSITY)
ORANGE	TYPE C (HIGH SPECIFIC INTENSITY)
WHITE	TYPE A (ENGINEER GRADE)
YELLOW	TYPE C (HIGH SPECIFIC INTENSITY)

SIGN LEGEND AND BORDERS:

COLOR	MATERIAL
WHITE	TYPE C (HIGH SPECIFIC INTENSITY)
BLACK	VINYL NON-REFLEC. DECAL SHEETING

ROUTE SHIELDS, EXIT ONLY PANELS, AND OTHER ATTACHMENTS:

SEE IM(1), IE(2) AND IE (4) FOR ADDITIONAL DETAILS

SIGN LEGEND AND BORDERS:

- HC — HAZARDOUS CARGO PERMITTED
- HC (prohibited) — HAZARDOUS CARGO PROHIBITED
- AIRPORT
- H — HOSPITAL

Parsons Brinckerhoff Quade & Douglas Inc.

Texas Department of Transportation

© 2003 by TxDOT

SUMMARY OF LARGE SIGNS
US 281

SHEET 1 OF 5					LGSGNSUM01.DGN	
DESIGNED: JA	FED. RD DIV. No.	STATE	FEDERAL AID PROJECT No.			HIGHWAY No.
CHECKED: JP	6	TEXAS				US 281
DRAWN:	STATE DISTRICT	COUNTY	CONTROL No.	SECTION No.	JOB No.	SHEET No.
CHECKED: JA	PHARR	HIDALGO	0255	08	091	839

Phaisarn C.

04:27:26 PM

06/26/2003

i:\22322a\cadd\sheets\summary\lgsgnsum02.dgn

SUMMARY OF LARGE SIGNS

PLAN SHEET NO.	SIGN NO.	SIGN BACK-GROUND COLOR	SIGN TEXT	CONCRETE RIPRAP (C.Y.)	SIGN DIMENSIONS	ROUTE SHIELDS, EXIT ONLY PANELS, & OTHER ATTACHMENTS ALUMINUM (TYPE A)	BACKGROUND SUBSTRATE (SQ FT) GROUND MOUNT PLYWOOD (TYPE A)	GROUND MOUNT ALUMINUM (TYPE G)	OVERHEAD ALUMINUM (TYPE O)	TYPE OF MOUNT	"X" DIMENSION ◒ POST ①	POST ②	POST ③	GALVANIZED STRUCTURAL STEEL SIZE	LINEAR FEET POST ①	POST ②	POST ③	TOTAL WEIGHT LBS.	DRILLED SHAFT LINEAR FEET NON-REINF 12"ϕ	REINFORCED 24"ϕ	30"ϕ	36"ϕ
3/10	3	GREEN	281 BUSINESS / Owassa Rd ↗ / EXIT ONLY		19'-0" X 10'-6"	9.25			199.50	COSS												
		YELLOW	E4-1 667+10 RT			52.25																
3/10	4	GREEN	EXIT ↗		6'-0" X 5'-0"			*						TYPE G								
			E5-1 671+10 RT																			
4/10	1	GREEN	EXIT ↗		6'-0" X 5'-0"			*						TYPE G								
			E5-1 694+70 LT																			
4/10	2	GREEN	H D9-2 / Trenton Rd ↗ / EXIT ONLY		2'-0" X 2'-0"				4.00													
		YELLOW	E4-1 704+00 LT		11'-0" X 9'-6"	30.25			104.50	COSS												
4/10	3	BLUE	HOSPITAL / NEXT RIGHT	1.2	10'-6" X 5'-0"			52.5		320	2.1	3.7		S3X5.7	14.1	15.7		227.66	8			
			E20-3 704+52 LT																			
4/10	4	GREEN	FM 3461 / Nolana Loop / EXIT ½ MILE	1.5	16'-0" X 9'-6"	15.25		152.00		320	1.8	3.6		W6X12	18.3	20.1		541.40		10		
			E1-1A 691+20 RT																			
5/10	1	GREEN	Trenton Road / EXIT ↓ ONLY		12'-6" X 9'-0"				112.50	COSS												
		YELLOW	E4-1 714+00 LT			34.38																
5/10	2	GREEN	FM 3461 / Nolana Loop / EXIT ↓ ONLY		16'-6" X 10'-0"	15.25			165.00	COSS												
		YELLOW	E4-1 711+00 RT			45.38																
5/10	3	GREEN	FM 3461 / Nolana Loop ↗ / EXIT ONLY		21'-0" X 10'-6"	15.25			220.50	COSS												
		YELLOW	E4-1 723+40 RT			57.75																
5/10	4	GREEN	H D9-2 / 281 BUSINESS ↖	1.5	2'-0" X 2'-0"			4.00														
			E4-1 728+20 LT		16'-6" X 7'-6"	9.25		123.75		320	2.0	4.1		W6X9	16.5	18.6		382.30		9		
			PAGE TOTALS	4.2		283.98		332.25	806.00									1151.36	8	19		

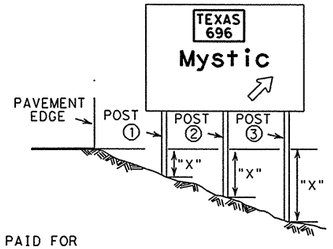

* TO BE PAID FOR UNDER ITEM 644

THE "X" DIMENSION IS THE ELEVATION DIFFERENCE AT THE POST BETWEEN THE GROUND AND THE EDGE OF PAVEMENT OR TOP OF CURB.

SIGN SUPPORTS SHALL BE LOCATED AS SHOWN ON THE PLANS, EXCEPT THAT THE ENGINEER MAY SHIFT THE SIGN SUPPORTS, WITHIN DESIGN GUIDELINES, WHERE NECESSARY TO SECURE A MORE DESIRABLE LOCATION OR TO AVOID CONFLICT WITH UTILITIES. UNLESS OTHERWISE SHOWN ON THE PLANS, THE CONTRACTOR SHALL STAKE AND THE ENGINEER WILL VERIFY ALL SIGN SUPPORT LOCATIONS.

THE POST LENGTHS LISTED HERE ARE APPROXIMATIONS. THE CORRECTED POST LENGTHS WILL BE FURNISHED BY THE ENGINEER AFTER THE CONTRACTOR HAS PLACED THE STUD POSTS.

TOWER HEIGHTS SHALL BE VERIFIED WITH THE ENGINEER BEFORE FABRICATION.

FABRICATION REQUIREMENTS

SIGN BACKGROUND:

COLOR	MATERIAL
BLUE	TYPE C (HIGH SPECIFIC INTENSITY)
BROWN	TYPE C (HIGH SPECIFIC INTENSITY)
GREEN	TYPE C (HIGH SPECIFIC INTENSITY)
ORANGE	TYPE C (HIGH SPECIFIC INTENSITY)
WHITE	TYPE A (ENGINEER GRADE)
YELLOW	TYPE C (HIGH SPECIFIC INTENSITY)

SIGN LEGEND AND BORDERS:

COLOR	MATERIAL
WHITE	TYPE C (HIGH SPECIFIC INTENSITY)
BLACK	VINYL NON-REFLEC. DECAL SHEETING

ROUTE SHIELDS, EXIT ONLY PANELS, AND OTHER ATTACHMENTS:

SEE IM(1), IE(2) AND IE (4) FOR ADDITIONAL DETAILS

SIGN LEGEND AND BORDERS:

- (HC) - HAZARDOUS CARGO PERMITTED
- (NC) - HAZARDOUS CARGO PROHIBITED
- AIRPORT
- HOSPITAL

Parsons Brinckerhoff Quade & Douglas Inc.

Texas Department of Transportation

© 2003 by TxDOT

SUMMARY OF LARGE SIGNS
US 281

SHEET 2 OF 5				LGSGNSUM02.DGN	
DESIGNED: JA	FED. RD DIV. No.	STATE	FEDERAL AID PROJECT No.		HIGHWAY No.
CHECKED: JP	6	TEXAS			US 281
DRAWN:	STATE DISTRICT	COUNTY	CONTROL No.	SECTION No.	JOB No.	SHEET No.
CHECKED: JA	PHARR	HIDALGO	0255	08	091	840

Phaisarn C.

04:27:28 PM

06/26/2003

i:\22322a\cadd\sheets\summary\lgsgnsum03.dgn

SUMMARY OF LARGE SIGNS

PLAN SHEET NO.	SIGN NO.	SIGN BACK-GROUND COLOR	SIGN TEXT	CONCRETE RIPRAP (C.Y.)	SIGN DIMENSIONS	ROUTE SHIELDS, EXIT ONLY PANELS, & OTHER ATTACHMENTS	BACKGROUND SUBSTRATE (SQ FT)			TYPE OF MOUNT	"X" DIMENSION			GALVANIZED STRUCTURAL STEEL					DRILLED SHAFT				
							GROUND MOUNT		OVERHEAD		POST ①	POST ②	POST ③	SIZE	LINEAR FEET			TOTAL WEIGHT LBS.	LINEAR FEET				
						ALUMINUM (TYPE A)	PLYWOOD (TYPE A)	ALUMINUM (TYPE G)	ALUMINUM (TYPE O)						POST ①	POST ②	POST ③		NON-REINF 12"ϕ	REINFORCED 24"ϕ	30"ϕ	36"ϕ
5/10	5	GREEN	EXIT ↗ E5-1 727+50 RT		6'-0" X 5'-0"			*						TYPE G									
6/10	1	GREEN	Trenton Rd EXIT ½ MILE E1-1A 733+10 LT	1.4	15'-6" X 6'-0"			93.00		320	3.7	6.6		W6X9	16.7	19.6		393.10		9		
7/10	1	GREEN	EXIT ↗ E5-1 756+10 LT		6'-0" X 5'-0"			*						TYPE G									
7/10	2	GREEN	H D9-2 281 BUSINESS Owassa Rd Edinburg ↗ E4-1 760+00 LT		2'-0" X 2'-0" 16'-6" X 11'-0"	 9.11			4.00 181.50	COSS													
7/10	3	GREEN	Sioux Rd EXIT ½ MILE E1-1A 755+00 RT	1.3	13'-6" X 6'-0"			81.00		320	1.4	2.6		S4X7.7	14.4	15.6		301.40	8				
7/10	4	BLUE	HOSPITAL NEXT RIGHT E20-3 766+60 LT	1.2	10'-6"X 5'-0"			52.50		320	3.7	8.6		S3X5.7	15.7	20.6		264.71	8				
8/10	1	GREEN	EXIT ↗ E5-1 783+30 LT		6'-0"X 5'-0"			*						TYPE G									
8/10	2	GREEN	H D9-2 281 BUSINESS Owassa Rd Edinburg EXIT ½ MILE E1-1A 790+00 LT		2'-0" X 2'-0" 16'-6" X 12'-0"	 9.11			4.00 198.00	OSB													
8/10	3	GREEN	FM 3461 Nolana Loop ↗ E4-1 790+00 LT		16'-6" X 10'-6"	15.25			173.25	OSB													
8/10	4	GREEN	EAST 83 Harlingen / 83 WEST Mc Allen EXIT 1 MILE E1-4 797+00 RT		33'-6" X 11'-0"	14.36			368.50	OSB													
			PAGE TOTALS	3.9		47.83		226.50	929.25									959.21	16	9			

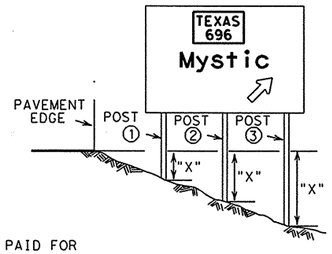

* TO BE PAID FOR UNDER ITEM 644

THE "X" DIMENSION IS THE ELEVATION DIFFERENCE AT THE POST BETWEEN THE GROUND AND THE EDGE OF PAVEMENT OR TOP OF CURB.

SIGN SUPPORTS SHALL BE LOCATED AS SHOWN ON THE PLANS, EXCEPT THAT THE ENGINEER MAY SHIFT THE SIGN SUPPORTS, WITHIN DESIGN GUIDELINES, WHERE NECESSARY TO SECURE A MORE DESIRABLE LOCATION OR TO AVOID CONFLICT WITH UTILITIES. UNLESS OTHERWISE SHOWN ON THE PLANS, THE CONTRACTOR SHALL STAKE AND THE ENGINEER WILL VERIFY ALL SIGN SUPPORT LOCATIONS.

THE POST LENGTHS LISTED HERE ARE APPROXIMATIONS. THE CORRECTED POST LENGTHS WILL BE FURNISHED BY THE ENGINEER AFTER THE CONTRACTOR HAS PLACED THE STUD POSTS.

TOWER HEIGHTS SHALL BE VERIFIED WITH THE ENGINEER BEFORE FABRICATION.

FABRICATION REQUIREMENTS

SIGN BACKGROUND:

COLOR	MATERIAL
BLUE	TYPE C (HIGH SPECIFIC INTENSITY)
BROWN	TYPE C (HIGH SPECIFIC INTENSITY)
GREEN	TYPE C (HIGH SPECIFIC INTENSITY)
ORANGE	TYPE C (HIGH SPECIFIC INTENSITY)
WHITE	TYPE A (ENGINEER GRADE)
YELLOW	TYPE C (HIGH SPECIFIC INTENSITY)

SIGN LEGEND AND BORDERS:

COLOR	MATERIAL
WHITE	TYPE C (HIGH SPECIFIC INTENSITY)
BLACK	VINYL NON-REFLEC. DECAL SHEETING

ROUTE SHIELDS, EXIT ONLY PANELS, AND OTHER ATTACHMENTS:

SEE IM(1), IE(2) AND IE (4) FOR ADDITIONAL DETAILS

SIGN LEGEND AND BORDERS:

- (HC) - HAZARDOUS CARGO PERMITTED
- (NC) - HAZARDOUS CARGO PROHIBITED
- ✈ - AIRPORT
- H - HOSPITAL

Parsons Brinckerhoff Quade & Douglas Inc.

Texas Department of Transportation

© 2003 by TxDOT

SUMMARY OF LARGE SIGNS
US 281

SHEET 3 OF 5				LGSGNSUM03.DGN	
DESIGNED: JA	FED. RD DIV. No.	STATE	FEDERAL AID PROJECT No.		HIGHWAY No.
CHECKED: JP	6	TEXAS			US 281
DRAWN:	STATE DISTRICT	COUNTY	CONTROL No.	SECTION No.	JOB No.	SHEET No.
CHECKED: JA	PHARR	HIDALGO	0255	08	091	841

Phaisarn C.

04:27:29 PM

06/26/2003

i:\22322a\cadd\sheets\summary\lgsgnsum04.dgn

SUMMARY OF LARGE SIGNS

PLAN SHEET NO.	SIGN NO.	SIGN BACK-GROUND COLOR	SIGN TEXT	CONCRETE RIPRAP (C.Y.)	SIGN DIMENSIONS	ROUTE SHIELDS, EXIT ONLY PANELS, & OTHER ATTACHMENTS	BACKGROUND SUBSTRATE (SQ FT)			TYPE OF MOUNT	"X" DIMENSION ◒			GALVANIZED STRUCTURAL STEEL					DRILLED SHAFT				
							GROUND MOUNT		OVERHEAD		POST ①	POST ②	POST ③	SIZE	LINEAR FEET			TOTAL WEIGHT LBS.	LINEAR FEET				
						ALUMINUM (TYPE A)	PLYWOOD (TYPE A)	ALUMINUM (TYPE G)	ALUMINUM (TYPE O)						POST ①	POST ②	POST ③		NON-REINF 12"ϕ	REINFORCED 24"ϕ	30"ϕ	36"ϕ
8/10	5	GREEN	SOUTH 281 TEXAS 495 Pharr EXIT 1/2 MILE E1-1A 797+00 RT		14'-0" X 11'-0"	22.36			154.00	OSB												
8/10	6	GREEN	Sioux Rd ↗ E4-1 797+00 RT		13'-6" X 7'-6"				101.25	OSB												
9/10	1	GREEN	FM 3461 Nolana Loop EXIT 1/2 MILE E1-1A 816+40 LT	1.5	16'-0" X 9'-6"	15.25		152.00		320	4.6	9.4		W6X12	21.1	25.9		644.60		10		
9/10	2	GREEN	EXIT ↗ E5-1 806+90 RT		6'-0" X 5'-0"			*						TYPE G								
9/10	3	GREEN	Pharr Intl Bridge NEXT EXIT E1-2 808+00 RT	1.3	12'-0" X 7'-0"			84.00		320	0.7	1.3		W6X9	14.7	15.3		336.40		9		
9/10	4	GREEN	EAST 83 Harlingen — 83 WEST Mc Allen EXIT 3/4 MILE E1-4 811+40 RT		33'-6" X 11'-0"	14.36			368.50	OSB												
9/10	5	GREEN YELLOW	SOUTH 281 TEXAS 495 Pharr EXIT ↓ ONLY E4-1 811+40 RT		22'-0" X 12'-6"	22.36 30.25			275.00	OSB												
10/10	1	GREEN	83 EAST Harlingen ↓ E4-1 825+50 RT		13'-6" X 10'-0"	7.15			135.00	OSB												
10/10	2	GREEN	83 WEST Mc Allen ↓ E4-1 825+50 RT		12'-0" X 10'-0"	7.15			120.00	OSB												
10/10	3	GREEN YELLOW	South 281 TEXAS 495 Pharr ↗ EXIT ↗ ONLY E4-1 825+50 RT		22'-0" X 12'-6"	22.36 30.25			275.00	OSB												
			PAGE TOTALS	2.8		141.24		236.00	1428.75									981.00		19		

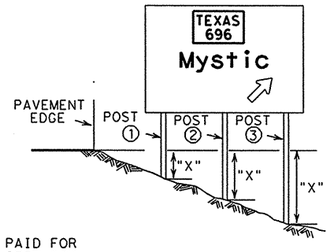

* TO BE PAID FOR UNDER ITEM 644

THE "X" DIMENSION IS THE ELEVATION DIFFERENCE AT THE POST BETWEEN THE GROUND AND THE EDGE OF PAVEMENT OR TOP OF CURB.

SIGN SUPPORTS SHALL BE LOCATED AS SHOWN ON THE PLANS, EXCEPT THAT THE ENGINEER MAY SHIFT THE SIGN SUPPORTS, WITHIN DESIGN GUIDELINES, WHERE NECESSARY TO SECURE A MORE DESIRABLE LOCATION OR TO AVOID CONFLICT WITH UTILITIES. UNLESS OTHERWISE SHOWN ON THE PLANS, THE CONTRACTOR SHALL STAKE AND THE ENGINEER WILL VERIFY ALL SIGN SUPPORT LOCATIONS.

THE POST LENGTHS LISTED HERE ARE APPROXIMATIONS. THE CORRECTED POST LENGTHS WILL BE FURNISHED BY THE ENGINEER AFTER THE CONTRACTOR HAS PLACED THE STUD POSTS.

TOWER HEIGHTS SHALL BE VERIFIED WITH THE ENGINEER BEFORE FABRICATION.

FABRICATION REQUIREMENTS

SIGN BACKGROUND:

COLOR	MATERIAL
BLUE	TYPE C (HIGH SPECIFIC INTENSITY)
BROWN	TYPE C (HIGH SPECIFIC INTENSITY)
GREEN	TYPE C (HIGH SPECIFIC INTENSITY)
ORANGE	TYPE C (HIGH SPECIFIC INTENSITY)
WHITE	TYPE A (ENGINEER GRADE)
YELLOW	TYPE C (HIGH SPECIFIC INTENSITY)

SIGN LEGEND AND BORDERS:

COLOR	MATERIAL
WHITE	TYPE C (HIGH SPECIFIC INTENSITY)
BLACK	VINYL NON-REFLEC. DECAL SHEETING

ROUTE SHIELDS, EXIT ONLY PANELS, AND OTHER ATTACHMENTS:

SEE IM(1), IE(2) AND IE (4) FOR ADDITIONAL DETAILS

SIGN LEGEND AND BORDERS:

- (HC) - HAZARDOUS CARGO PERMITTED
- (NC) - HAZARDOUS CARGO PROHIBITED
- - AIRPORT
- (H) - HOSPITAL

Parsons Brinckerhoff Quade & Douglas Inc.

Texas Department of Transportation

© 2003 by TxDOT

SUMMARY OF LARGE SIGNS
US 281

SHEET 4 OF 5					LGSGNSUM04.DGN	
DESIGNED: JA	FED. RD DIV. No.	STATE	FEDERAL AID PROJECT No.			HIGHWAY No.
CHECKED: JP	6	TEXAS				US 281
DRAWN:	STATE DISTRICT	COUNTY	CONTROL No.	SECTION No.	JOB No.	SHEET No.
CHECKED: JA	PHARR	HIDALGO	0255	08	091	842

Phaisarn C.

04:27:30 PM

06/26/2003

i:\22322o\cadd\sheets\summary\lgsgnsum05.dgn

SUMMARY OF LARGE SIGNS

PLAN SHEET NO.	SIGN NO.	SIGN BACK-GROUND COLOR	SIGN TEXT	CONCRETE RIPRAP (C.Y.)	SIGN DIMENSIONS	ROUTE SHIELDS, EXIT ONLY PANELS, & OTHER ATTACHMENTS	BACKGROUND SUBSTRATE (SQ FT)			TYPE OF MOUNT	"X" DIMENSION ⊖			GALVANIZED STRUCTURAL STEEL					DRILLED SHAFT				
							GROUND MOUNT		OVERHEAD		POST ①	POST ②	POST ③	SIZE	LINEAR FEET			TOTAL WEIGHT LBS.	LINEAR FEET				
						ALUMINUM (TYPE A)	PLYWOOD (TYPE A)	ALUMINUM (TYPE G)	ALUMINUM (TYPE O)						POST ①	POST ②	POST ③		NON-REINF 12"ϕ	REINFORCED 24"ϕ	REINFORCED 30"ϕ	REINFORCED 36"ϕ
10/10	4	GREEN	EXIT ↗ E5-1 830+90 RT		6'-0" X 5'-0"			*						TYPE G									
10/10	5	GREEN	EAST 83 83 WEST Harlingen Mc Allen EXIT 1/4 MILE E1-4 839+00 RT		33'-6" X 11'-0"	14.36			368.50	OSB													
			PAGE TOTALS			14.36			368.50														

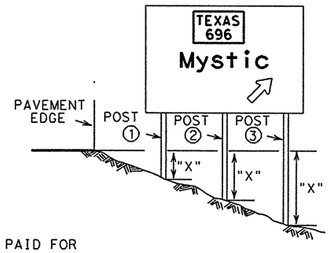

* TO BE PAID FOR UNDER ITEM 644

THE "X" DIMENSION IS THE ELEVATION DIFFERENCE AT THE POST BETWEEN THE GROUND AND THE EDGE OF PAVEMENT OR TOP OF CURB.

SIGN SUPPORTS SHALL BE LOCATED AS SHOWN ON THE PLANS, EXCEPT THAT THE ENGINEER MAY SHIFT THE SIGN SUPPORTS, WITHIN DESIGN GUIDELINES, WHERE NECESSARY TO SECURE A MORE DESIRABLE LOCATION OR TO AVOID CONFLICT WITH UTILITIES. UNLESS OTHERWISE SHOWN ON THE PLANS, THE CONTRACTOR SHALL STAKE AND THE ENGINEER WILL VERIFY ALL SIGN SUPPORT LOCATIONS.

THE POST LENGTHS LISTED HERE ARE APPROXIMATIONS. THE CORRECTED POST LENGTHS WILL BE FURNISHED BY THE ENGINEER AFTER THE CONTRACTOR HAS PLACED THE STUD POSTS.

TOWER HEIGHTS SHALL BE VERIFIED WITH THE ENGINEER BEFORE FABRICATION.

FABRICATION REQUIREMENTS

SIGN BACKGROUND:

COLOR	MATERIAL
BLUE	TYPE C (HIGH SPECIFIC INTENSITY)
BROWN	TYPE C (HIGH SPECIFIC INTENSITY)
GREEN	TYPE C (HIGH SPECIFIC INTENSITY)
ORANGE	TYPE C (HIGH SPECIFIC INTENSITY)
WHITE	TYPE A (ENGINEER GRADE)
YELLOW	TYPE C (HIGH SPECIFIC INTENSITY)

SIGN LEGEND AND BORDERS:

COLOR	MATERIAL
WHITE	TYPE C (HIGH SPECIFIC INTENSITY)
BLACK	VINYL NON-REFLEC. DECAL SHEETING

ROUTE SHIELDS, EXIT ONLY PANELS, AND OTHER ATTACHMENTS:

SEE IM(1), IE(2) AND IE (4) FOR ADDITIONAL DETAILS

SIGN LEGEND AND BORDERS:

- (HC) - HAZARDOUS CARGO PERMITTED
- (NC) - HAZARDOUS CARGO PROHIBITED
- AIRPORT
- H - HOSPITAL

Parsons Brinckerhoff Quade & Douglas Inc.

Texas Department of Transportation

© 2003 by TxDOT

SUMMARY OF LARGE SIGNS
US 281

SHEET 5 OF 5				LGSGNSUM05.DGN			
DESIGNED: JA	FED. RD DIV. No.	STATE	FEDERAL AID PROJECT No.			HIGHWAY No.	
CHECKED: JP	6	TEXAS				US 281	
DRAWN:	STATE DISTRICT	COUNTY	CONTROL No.	SECTION No.	JOB No.	SHEET No.	
CHECKED: JA	PHARR	HIDALGO	0255	08	091	843	

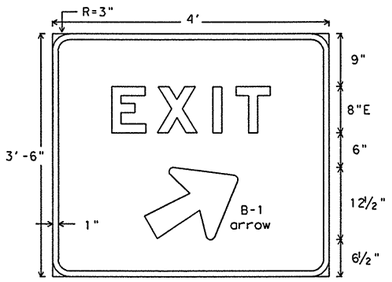

E5-1a
48" X 42"

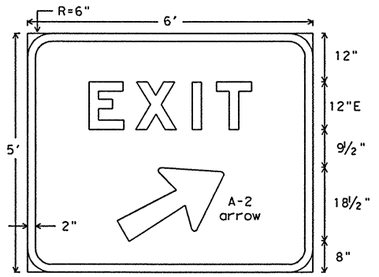

E5-1
72" X 60"

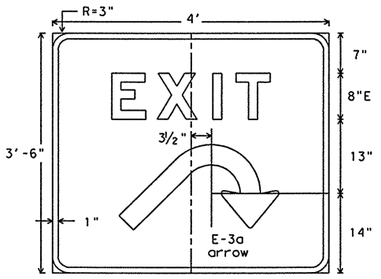

E5-3a
48" X 42"

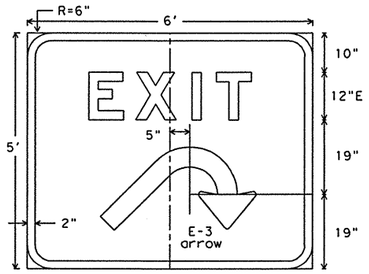

E5-3
72" X 60"

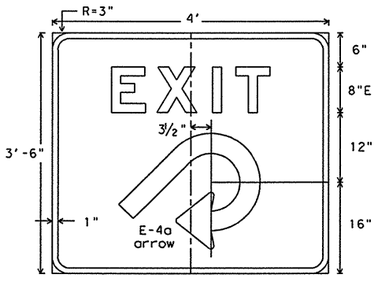

E5-4a
48" X 42"

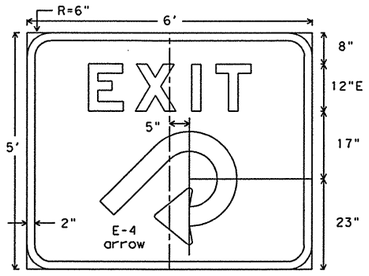

E5-4
72" X 60"

Legend - White Reflective
Border - White Reflective
Background - Green Reflective

EXIT GORE SIGNS

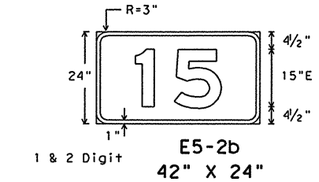

1 & 2 Digit

E5-2b
42" X 24"

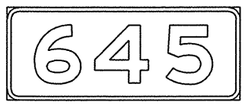

E5-2c
60" X 24"

3 Digit

E5-2d
78" X 24"

4 Digit

Legend - White Reflective
Border - White Reflective
Background - Green Reflective

EXIT SIGN NUMBER PANELS

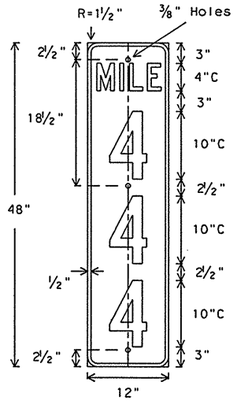

D10-6
12" X 48"

MILEPOST MARKER

Legend - White Reflective
Border - White Reflective
Background - Green Reflective

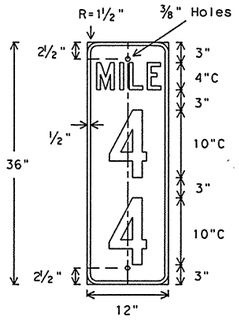

D10-5
12" X 36"

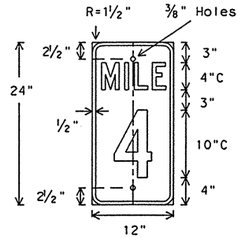

D10-4
12" X 24"

TYPE MW
(WINGED CHANNEL)

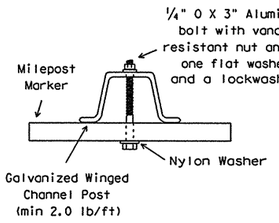

TYPE MP
(POST)

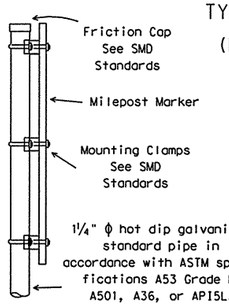

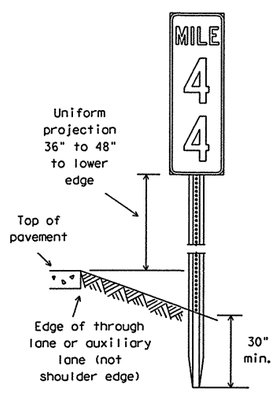

EXIT GORE SIGN
TYPICAL ASSEMBLY

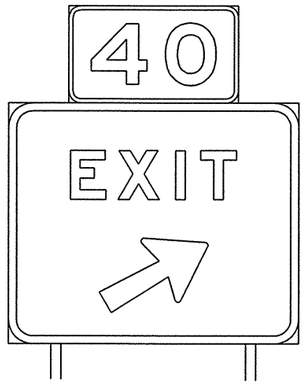

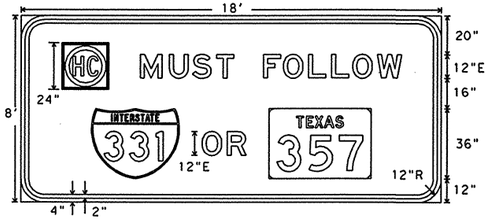

R14-6
18' X 8' (min.)

Legend - Black
Border - Black
Background - White Reflective
Shields - See R, IE and IM Standards for details

SPECIFICATION REFERANCE TABLE	
MATERIALS AND TESTS DIVISION SPECIFICATIONS	
PLYWOOD SIGN BLANKS	D-9-7100
ALUMINUM SIGN BLANKS	D-9-7110
REFLECTIVE SHEETING, TYPE A (ENGINEER GRADE)	D-9-8300
REFLECTIVE SHEETING, TYPE C (HIGH SPECIFIC ITENSITY)	D-9-8300
VINYL NON-REFLECTIVE DECAL SHEETING	D-9-8320

COLOR	USAGE	REFLECTIVE SHEETING OR OTHER MATERIAL
BLUE	BACKGROUND	TYPE C (HIGH SPECIFIC INTENSITY)
BROWN	BACKGROUND	TYPE C (HIGH SPECIFIC INTENSITY)
GREEN	BACKGROUND	TYPE C (HIGH SPECIFIC INTENSITY)
ORANGE	BACKGROUND	TYPE C (HIGH SPECIFIC INTENSITY)
WHITE	BACKGROUND	TYPE A (ENGINEER GRADE)
YELLOW	BACKGROUND	TYPE C (HIGH SPECIFIC INTENSITY)
BLACK	LEGEND & BORDERS	VINYL NON-REFLECTIVE DECAL SHEETING
WHITE	LEGEND & BORDERS	TYPE C (HIGH SPECIFIC INTENSITY)

GENERAL NOTES:

The alphabets and lateral spacing between letters and numerals shall conform with the Texas "Manual on Uniform Traffic Control Devices for Streets and Highways", latest edition, and any approved changes thereto. Lateral spacing of text shall provide a balanced appearance. All materials shall conform to Department Specifications.

Legend (except for sign R14-6), shall be applied by reverse screening process with transparent colored ink, cut-out white reflective sheeting applied to colored background or combination thereof. Background shall be reflective sheeting (Type C).

Sign blanks for roadside mounted guide signs shall be 5/8 inch thick plywood (Type A), unless otherwise noted elsewhere in the plans. Dimensions shown for borders and corner radii are nominal. Borders may vary in width as much as 1/2 inch. Corner radii above 3 inches may vary in radius plus or minus 1 inch. Borders and corner radii must be of matching widths. The sign area outside the corner radius need not be trimmed or rounded. Panels attached above or below a parent sign shall be made of the same material as the parent sign. D10 Milepost Markers shall be one piece 0.08 inch thick sheet aluminum alloy (Type A).

Mounting details for roadside mounted guide signs are shown on Standard Plan Sheets SMD series, mounting details for over head signs shall be as detailed elsewhere in the plans or the supplier's choice subject to approval by the Engineer.

Individual panel sizes may be adjusted during plan preparation to fit actual parnet sign sizes where necessary. Panel sizes to be furnished should be as detailed elsewhere in the plans and/or as shown on sign tabulation sheet. See Standard Plan Sheet IM series for arrow details.

R14-6 HAZARDOUS CARGO ROUTING SIGN

Legend of parent sign shall be black cut-out vinyl non-reflective decal sheeting. Background shall be white reflective sheeting (Type A). Shield details are shown on Standard Plan Sheets R and IM series.

Parent sign blank shall be 5/8 inch thick plywood (Type A). Shields shall be one piece 0.063 inch thick sheet aluminum alloy (Type A).

Attachment of shields to parent sign is as detailed on Standard Plan Sheet IM(2).

LEVELS DISPLAYED
1 2 3 4 5 6 7 8 9 10 11 12 21 31 41 51 61
17 18 19 20 21 22 23 24 25 26 27 28 29 30 31 32 33
33 34 35 36 37 38 39 40 41 42 43 44 45 46 47 48
49 50 51 52 53 54 55 56 57 58 59 60 61 62 63

DATE:
ACC: d58hp1c/usr/d580504
FILE:
DN: LR CK: CW DW: DN CK: MT

STANDARD PLANS
TEXAS DEPARTMENT OF TRANSPORTATION
Traffic Operations Division

EXIT GORE AND MILEPOST SIGNS

IE(1)-95

©TxDOT July 1990

DN: LR	CK:	DW: DN	CK:	MEG NO.:

REVISIONS
9-93
8-95

STATE DISTRICT	FEDERAL REGION	FEDERAL AID PROJECT	SHEET
PHARR	6		844

COUNTY	CONTROL	SECTION	JOB	HIGHWAY
HIDALGO	0255	08	091	US 281

1A

DISCLAIMER
The use of this standard is governed by the "Texas Engineering Practice Act". No warranty of any kind is made by TxDOT for any purpose whatsoever. TxDOT assumes no responsibility for the conversion of this standard to other formats or for incorrect results or damages resulting from its use.

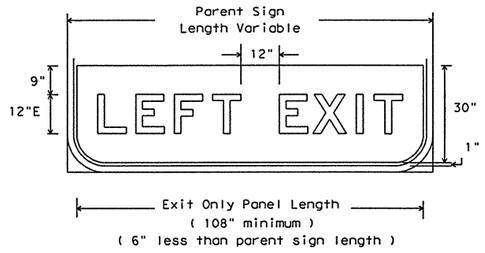

E11-2a

ATTACHMENT TO EXISTING SIGNS ONLY

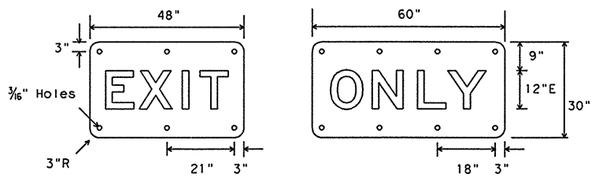

E11-1b

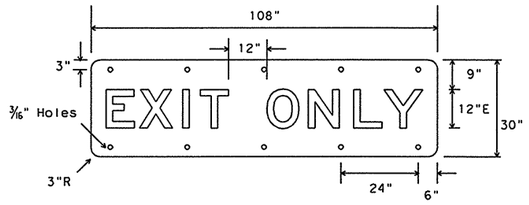

E11-1c

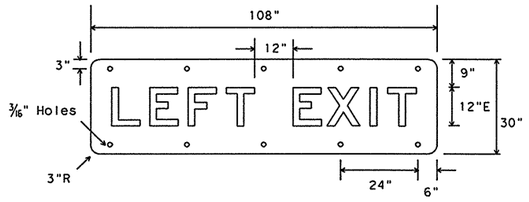

E11-2c

Attachment to Sequence Signs Only

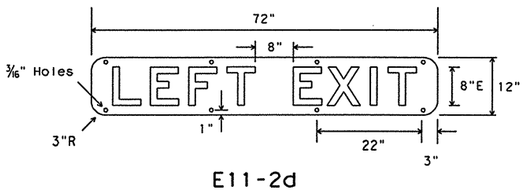

E11-2d

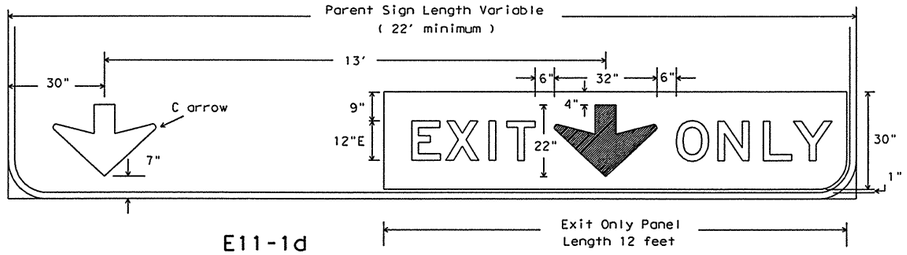

E11-1d

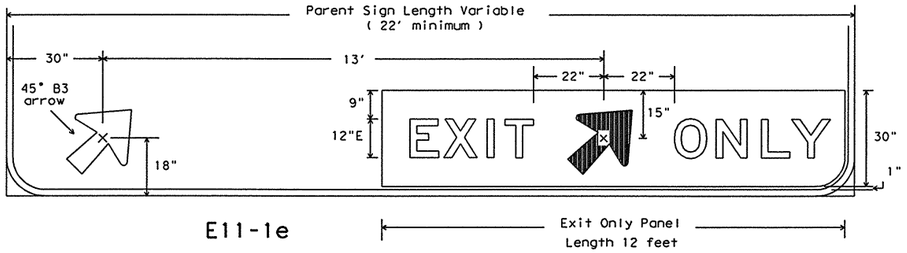

E11-1e

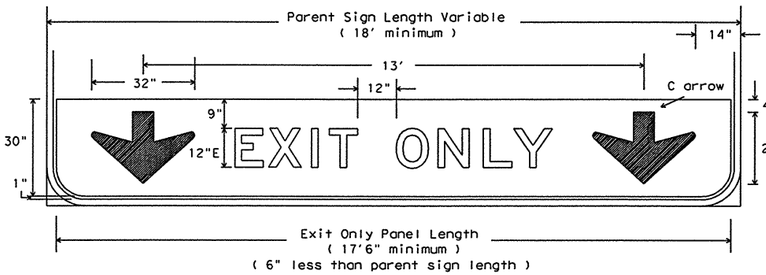

E11-1f

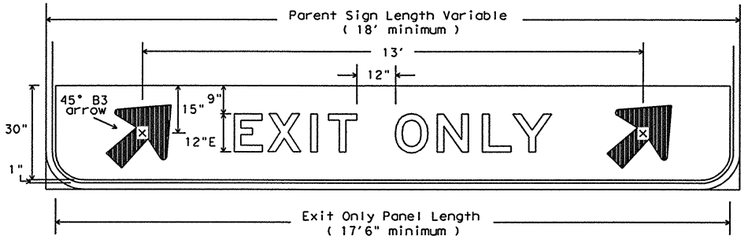

E11-1g

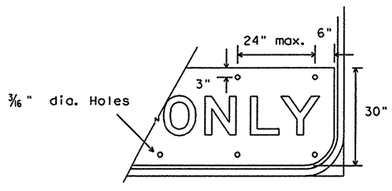

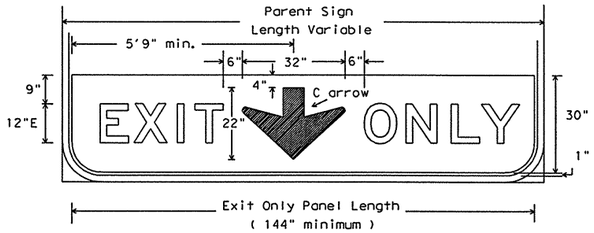

E11-1

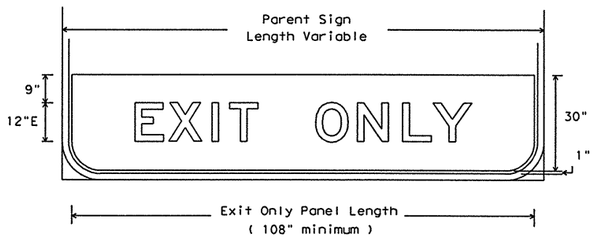

E11-1a

SPECIFICATION REFERENCE TABLE	
MATERIALS AND TESTS DIVISION SPECIFICATIONS	
ALUMINUM SIGN BLANKS	D-9-7110
REFLECTIVE SHEETING, TYPE C (HIGH SPECIFIC ITENSITY)	D-9-8300
VINYL NON-REFLECTIVE DECAL SHEETING	D-9-8320

GENERAL NOTES:

The alphabets and lateral spacing between letters and numerals shall conform with the Texas "Manual on Uniform Traffic Control Devices for Streets and Highways", latest edition, and any approved changes thereto. Lateral spacing of text shall provide a balanced appearance. All materials shall conform to Department Specifications.

Legend shall be black and applied by screening process, cut-out vinyl non-reflective decal sheeting or combination thereof. Background shall be yellow reflective sheeting (Type C).

Panels shall be one piece 0.063 inch thick sheet aluminum alloy (Type A).

Mounting details and arrow dimension are shown on Standard Plan Sheets IM(2).

LEVELS DISPLAYED
1 2 3 4 5 6 7 8 9 10 11 12 13 14 15 16
1 7 10 19 20 22 24 26 27 28 29 30 31 32 33 34
33 34 35 36 37 38 39 40 41 42 43 44 45 46 47 48
49 50 51 52 53 54 55 56 57 58 59 60 61 62 63

DATE:
ACC: d58hp1c/usr/d580504
FILE:

DN: LR CK: CW DW: DN CK: MT

STANDARD PLANS
TEXAS DEPARTMENT OF TRANSPORTATION
Traffic Operations Division

EXIT ONLY AND LEFT EXIT PANELS

IE(4)-95

© TxDOT January 1987	DN: LR	CK: MT	DW: DN	CK:	NEG NO.:

REVISIONS	STATE DISTRICT	FEDERAL REGION	FEDERAL AID PROJECT	SHEET
7-90	PHARR	6		845
9-93	COUNTY		CONTROL / SECTION / JOB	HIGHWAY
8-95	HIDALGO		0255 / 08 / 091	US 281
				1D

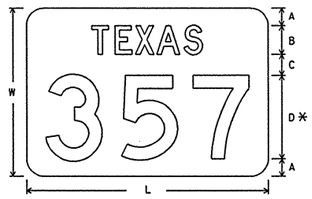

M1-6T

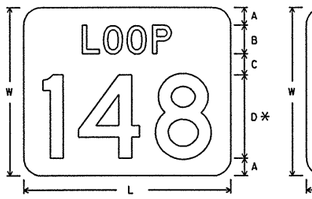

M1-6L

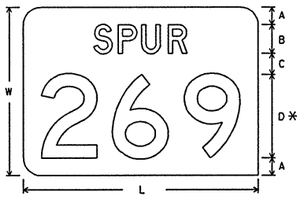

M1-6S

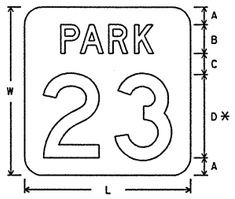

M1-6P

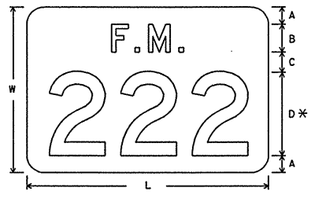

M1-6F

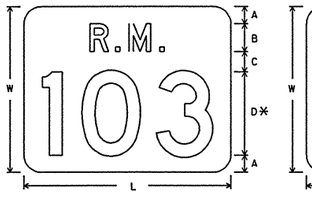

M1-6R

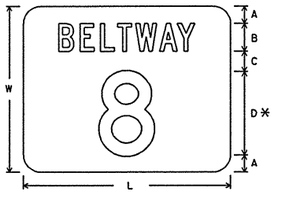

M1-6B

* IN A FEW CASES NUMERALS CANNOT BE ACCOMMODATED WITHIN THE SPACE AVAILABLE. FOR THESE CASES, THE STANDARD SERIES D MAY BE REDUCED TO SERIES C, OR AS A SECOND CHOICE REDUCED TO THE NEXT SMALLER HEIGHT COMMONLY AVAILABLE.

SIGN TYPES		NO. OF DIGITS	W	A	B	C	D
M1-6 (T L S P F R B)	4A	4	24"	2½"	4"	3"	12"
	3A	3					
	2A	2					
	1A	1					
	4B	4	36"	4"	6"	4"	18"
	3B	3					
	2B	2					
	1B	1					
	4C	4	48"	5"	8"	6"	24"
	3C	3					
	2C	2					
	1C	1					

RADIUS FOR CORNERS IS 3" TYPICAL
L: VARIABLE WITH THE NUMBER OF DIGITS; HOWEVER, TOTAL MARKER LENGTH SHALL BE ADJUSTED TO NEAREST 1 INCH MULTIPLE.

M1-6 STATE ROUTE MARKERS FOR GUIDE SIGN USE

Letters - Black
Numerals - Black
Background - White Reflective

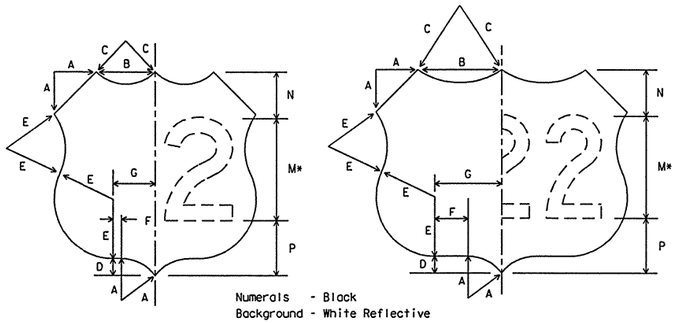

Numerals - Black
Background - White Reflective

	SIZE	A	B	C	D	E	F	G	M*	N	P	AREA
MI-4D2	12" NUMERALS 2 DIGIT	24x24	5	7	5	2	7	1	5	12D	5½	6½	3.18
MI-4D3	12" NUMERALS 3 DIGIT	30x24	5	10	9	2	7	4	8	12D	5½	6½	4.05
MI-4E2	18" NUMERALS 2 DIGIT	36x36	7½	10½	7½	3	10½	1½	7½	18D	8¼	9¾	7.15
MI-4E3	18" NUMERALS 3 DIGIT	45x36	7½	15	13½	3	10½	6	12	18D	8¼	9¾	9.11
MI-4F2	24" NUMERALS 2 DIGIT	48x48	10	14	10	4	14	2	10	24D	11	13	12.70
MI-4F3	24" NUMERALS 3 DIGIT	60x48	10	20	18	4	14	8	16	24D	11	13	16.20

ALL LENGTHS SHOWN ARE IN INCHES, ALL AREAS ARE IN SQUARE FEET.

NOTES:
1. DIMENSIONS FOR THE U.S. ROUTE MARKER OUTLINES ARE SCALE DIMENSIONS AND MAY BE ADJUSTED SLIGHTLY WHERE NECESSARY FOR CLOSURE OF THE OUTLINES.
2. * IN A FEW CASES NUMERALS CANNOT BE ACCOMMODATED WITHIN THE SPACE AVAILABLE. FOR THESE CASES, THE STANDARD SERIES D MAY BE REDUCED TO SERIES C, OR AS A SECOND CHOICE REDUCE TO THE NEXT SMALLER HEIGHT COMMONLY AVAILABLE.

U.S. ROUTE MARKERS FOR GUIDE SIGN USE

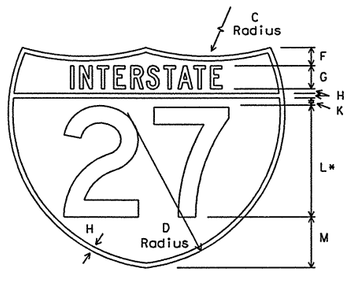

M1-1C2
45" X 36"

Letters - White Reflective
Numerals - White Reflective
Border - White Reflective
Background (Upper Portion) - Red Reflective
Background (Lower Portion) - Blue Reflective

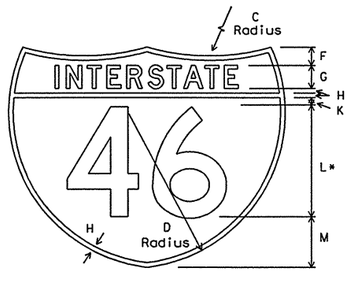

M1-1D2
60" X 48"

Letters - White Reflective
Numerals - White Reflective
Border - White Reflective
Background (Upper Portion) - Red Reflective
Background (Lower Portion) - Blue Reflective

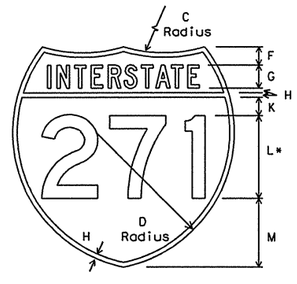

M1-1C3
48" X 48"

Letters - White Reflective
Numerals - White Reflective
Border - White Reflective
Background (Upper Portion) - Red Reflective
Background (Lower Portion) - Blue Reflective

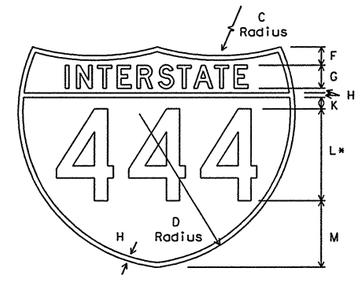

M1-1D3
60" X 48"

Letters - White Reflective
Numerals - White Reflective
Border - White Reflective
Background (Upper Portion) - Red Reflective
Background (Lower Portion) - Blue Reflective

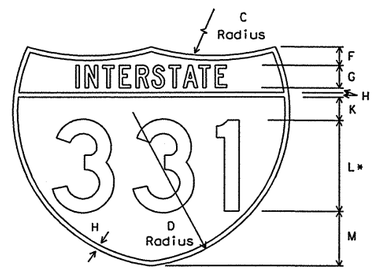

M1-1C3-S
45" X 36"

Letters - White Reflective
Numerals - White Reflective
Border - White Reflective
Background (Upper Portion) - Red Reflective
Background (Lower Portion) - Blue Reflective

		SIZE	C	D	F	G	H	K	L*	M	N	AREA
INTERSTATE	MI-1C2	18" NUMERALS 2 DIGIT	45x36	36	25½	3	3¾C	¾	1½	18D	8¼	-	9.41
	MI-1D2	24" NUMERALS 2 DIGIT	60x48	48	34	4	5D	1	2	24D	11	-	16.74
	MI-1C3-S	15" NUMERALS 3 DIGIT	45x36	36	25½	3	3¾C	¾	3¾	15D	9	-	9.41
	MI-1C3	18" NUMERALS 3 DIGIT	48x48	30	30	4	5C	1	4	18D	15	-	12.76
	MI-1D3	20" NUMERALS 3 DIGIT	60x48	48	34	4	5D	1	2½	20D	14½	-	16.74
BUSINESS LOOP	MI-2C2	15" NUMERALS 2 DIGIT	36x36	22½	22½	3	3¾C	¾	¾	15D	9	2¼D	7.18
BUSINESS SPUR	MI-2D2	20" NUMERALS 2 DIGIT	48x48	30	30	4	5C	1	1	20D	12	3D	12.76
BUSINESS LOOP	MI-3C2	15" NUMERALS 2 DIGIT	36x36	22½	22½	3	3¾C	¾	¾	15D	9	2¼D	7.18
BUSINESS SPUR	MI-3D2	20" NUMERALS 2 DIGIT	48x48	30	30	4	5C	1	1	20D	12	3D	12.76

ALL LENGTHS SHOWN ARE IN INCHES, ALL AREAS ARE IN SQUARE FEET.

△ M1-1C3-S IS FOR USE ON SEQUENCE SIGNS ONLY.

* IN A FEW CASES NUMERALS CANNOT BE ACCOMMODATED WITHIN THE SPACE AVAILABLE. FOR THESE CASES, THE STANDARD SERIES D MAY BE REDUCED TO SERIES C, OR AS A SECOND CHOICE REDUCED TO THE NEXT SMALLER HEIGHT COMMONLY AVAILABLE.

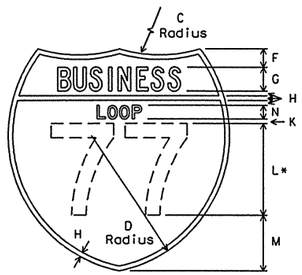

M1-2C2
36" X 36"

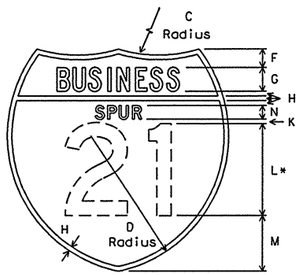

M1-3C2
36" X 36"

M1-2D2
48" X 48"

Letters - White Reflective
Numerals - White Reflective
Border - White Reflective
Background - Green Reflective

M1-3D2
48" X 48"

Letters - White Reflective
Numerals - White Reflective
Border - White Reflective
Background - Green Reflective

INTERSTATE ROUTE MARKERS FOR GUIDE SIGN USE

SPECIFICATION REFERENCE TABLE	
MATERIALS AND TESTS DIVISION SPECIFICATIONS	
ALUMINUM SIGN BLANKS	D-9-7110
REFLECTIVE SHEETING, TYPE C (HIGH SPECIFIC INTENSITY)	D-9-8300
VINYL NON-REFLECTIVE DECAL SHEETING	D-9-8320

GENERAL NOTES:

The Alphabets and lateral spacing between letters and numerals shall conform with the Texas "Manual on Uniform Traffic Control Devices for Streets and Highways", latest edition, and any approved changes thereto. Lateral spacing of text shall provide a balanced appearance. All materials shall conform to Department Specifications.

Legend for State route markers shall be black and applied by screening process, cut-out vinyl non-reflective decal sheeting or combination thereof. Legend for U.S. route markers shall be applied by reverse screening process, cut-out black vinyl non-reflective decal sheeting or combination thereof. Legend for Interstate route markers shall be applied by reverse screening process with transparent colored ink, cut-out white reflective sheeting applied to colored background or combination thereof. Background shall be reflective sheeting (Type C).

Sign blanks shall be one piece 0.063 inch thick sheet aluminum alloy (Type A), unless otherwise noted elsewhere in the plans.

Route Markers shall be attached to guide signs as detailed on Standard Plan Sheet IM (2).

STANDARD PLANS
TEXAS DEPARTMENT OF TRANSPORTATION
Traffic Operations Division

INTERSTATE, U.S. & STATE ROUTE MARKERS FOR ATTACHMENT TO GUIDE SIGNS

IM(1)-95

© TxDOT July 1972

DN: LR/MT	CK:	DW: DN	CK:	MEG NO.:

REVISIONS	STATE DISTRICT	FEDERAL REGION	FEDERAL AID PROJECT	SHEET
1-85 8-95	PHARR	6		846
7-90	COUNTY		CONTROL SECTION JOB	HIGHWAY
9-93	HIDALGO		0255 08 091	US 281
12-94				3A

DN: LR
CK: CW
DW: DN
CK: MT
DATE:
ACC: d58hp1c/usr/d580504
FILE:

LEVELS DISPLAYED
1 2 3 4 5 6 7 8 9 10 11 12 13 14 15 16
17 18 19 20 21 22 23 24 25 26 27 28 29 30 31 32
33 34 35 36 37 38 39 40 41 42 43 44 45 46 47 48
49 50 51 52 53 54 55 56 57 58 59 60 61 62 63

DISCLAIMER
The use of this standard is governed by the "Texas Engineering Practice Act". No warranty of any kind is made by TxDOT for any purpose whatsoever. TxDOT assumes no responsibility for the conversion of this standard to other formats or for incorrect results or damages resulting from its use.

TYPICAL ATTACHMENT OF ROUTE MARKERS AND "EXIT ONLY" PANELS TO GUIDE SIGNS

SCREW ATTACHMENT

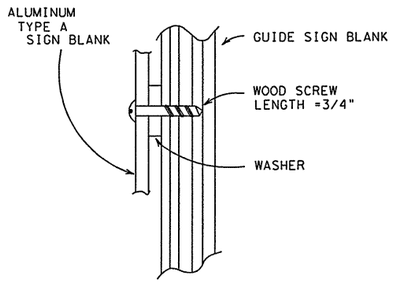

PLYWOOD GUIDE SIGN
(5/8" PLYWOOD)

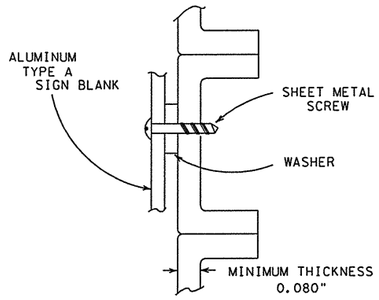

ALUMINUM GUIDE SIGNS
(EXTRUDED ALUMINUM PANELS)

NUT/BOLT ATTACHMENT

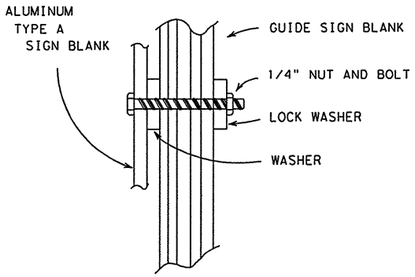

PLYWOOD GUIDE SIGN
(5/8" PLYWOOD)

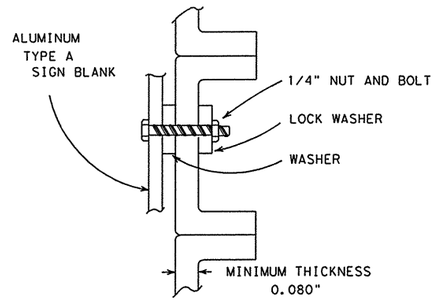

ALUMINUM GUIDE SIGNS
(EXTRUDED ALUMINUM PANELS)

SIGN BLANK PUNCHING DETAILS FOR ROUTE MARKERS WHEN ATTACHED TO GUIDE SIGN

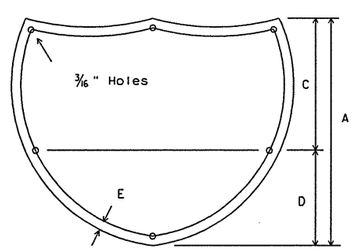

INTERSTATE ROUTE MARKERS

A	C	D	E
36	21	15	1 1/2
48	28	20	1 3/4

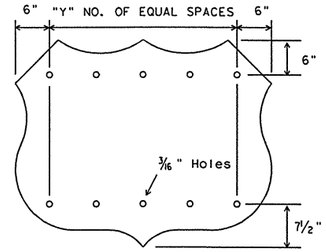

U.S. ROUTE MARKERS

Sign Type	"Y"
MI-4D2	2
MI-4D3	3
MI-4E2	3
MI-4E3	4
MI-4F2	4
MI-4F3	5

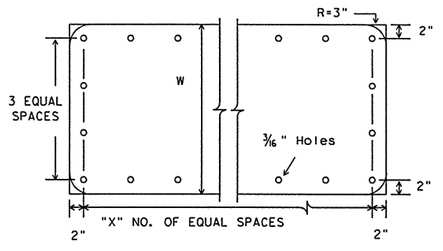

STATE ROUTE MARKERS

No. of Digits	W	X
4	24	4
4	36	5
4	48	6
3	24	3
3	36	4
3	48	5

ARROW DIMENSION DETAILS

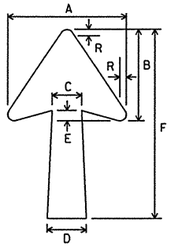

Type A or
Type B

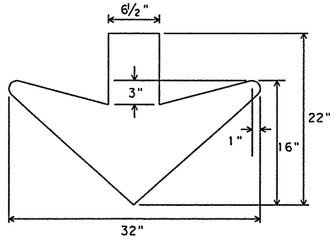

Type C

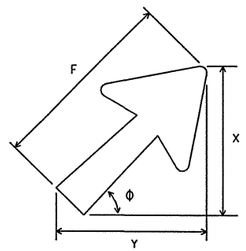

		ARROW DIMENSIONS IN INCHES												
									Φ = 30°		Φ = 45°		Φ = 60°	
CODE	LETTER SIZE	A	B	C	D*	E	F*	R	X	Y	X	Y	X	Y
A-1	8" Caps	15 1/8	1 1 9/16	3 3/4	5	1 5/16	24 1/4	1 3/16	15 1/2	22 3/8	19 1/8	19 1/8	22 3/8	15 1/2
A-2	13 1/3" U.C., 10-12" Caps	18 1/4	14	4 1/2	6	1 1/2	29 1/4	3/4	18 1/2	27	23	23	27	18 1/2
A-3	16" U.C.	22 1/4	17	5 3/8	7 1/8	1 3/4	35 5/8	1	22 5/8	32 3/4	28	28	32 3/4	22 5/8
B-1	8-10" Caps	14 1/4	9 13/16	3 3/8	4 1/2	1 5/16	17 1/4	3/4	12 1/2	16 1/8	14	14	16 1/8	12 1/2
B-2	13 1/3" U.C., 12" Caps	17 1/2	1 1 3/4	4 3/8	5 5/8	1 1/2	20 1/4	7/8	15 3/8	19 1/16	16 1/2	16 1/2	19 1/16	15 3/8
B-3	16" U.C.	21 7/8	14 1/4	5	6 3/4	1 3/4	25	1	19 1/8	23 1/2	20 3/8	20 3/8	23 1/2	19 1/8

WHERE AN ARROW IS REQUIRED ON A GUIDE SIGN WHICH HAS A HEIGHT OF 24" AND WHICH IS USUALLY ERECTED ON RAMPS AND CROSSROADS AT INTERCHANGES, THE ARROW SHALL BE TYPE B-1.

* RECOMMENDED DIMENSIONS: TAPER SHOULD BE HELD CONSTANT FOR LONGER OR SHORTER SHAFT LENGTHS.

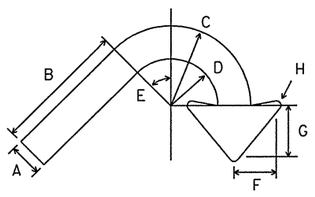

E3 and E3a

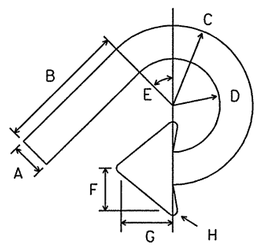

E4 and E4a

CODE	USED ON SIGN NO.	A	B	C	D	E	F	G	H
E-3 & E-4	E5-3 and E5-4	5	20	12	7	45o	6 1/2	8	3/4
E-3a & E-4a	E5-3a and E5-4a	3 1/2	14	8 1/2	5	45o	4 1/2	5 1/2	1/2

SPECIFICATION REFERENCE TABLE
MATERIALS AND TEST SPECIFICATIONS (D-9)

ALUMINUM SIGN BLANKS	D-9-7110
SIGN HARDWARE	D-9-7120
FLAT SURFACE REFLECTIVE SHEETING, TYPE C (HIGH SPECIFIC INTENSITY)	D-9-8300

GENERAL NOTES:

Route markers attached to guide signs shall be one piece sheet aluminum alloy conforming with Department Specification "Aluminum Signs (Type A)." Sketches shown are examples only.

Screws and washers shall be used unless otherwise noted in the plans. Screws or bolts, nuts and washers shall be stainless steel or aluminum.

Screws for plywood signs shall not protrude through the back of the sign. All holes required in the punching detail of blank, shall have screws or nuts and bolts.

Arrows shall be cut-out reflective sheeting (Type C) applied directly to sign background, or reflective sheeting (Type C) applied to one piece 0.063 inch thick sheet aluminum alloy conforming with Department Specification "Aluminum Signs (Type A)." Attachment to of arrows applied to sheet aluminum alloy shall be as illustrated for sign blanks.

STANDARD PLANS
TEXAS DEPARTMENT OF TRANSPORTATION
Traffic Operations Division

ARROW AND ROUTE MARKER ATTACHMENT DETAILS FOR GUIDE SIGNS

IM(2)-93

© TxDOT July 1990

DN: LR	CK:	DW: DN	CK:	REG NO.:

REVISIONS
9-93

STATE DISTRICT	FEDERAL REGION	FEDERAL AID PROJECT	SHEET
PHARR	6		847

COUNTY	CONTROL	SECTION	JOB	HIGHWAY
HIDALGO	0255	08	091	US 281

3B

DN: LR
CK: CW
DW: DN
CK: MT

DATE:
ACC: d58hplc/usr/d580504
FILE:

LEVELS DISPLAYED
1 2 3 4 5 6 7 8 9 10 11 12 13 14 15 16
17 18 19 20 21 22 23 24 25 26 27 28 29 30 31 32
33 34 35 36 37 38 39 40 41 42 43 44 45 46 47 48
49 50 51 52 53 54 55 56 57 58 59 60 61 62 63

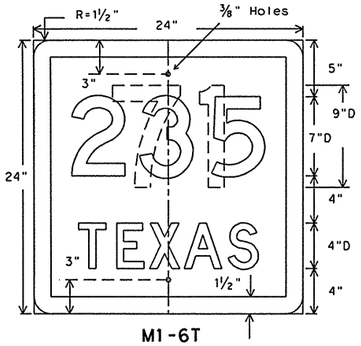

M1-6T
24" X 24"

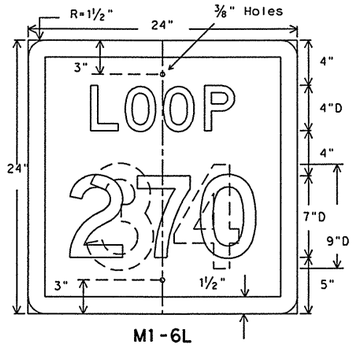

M1-6L
24" X 24"

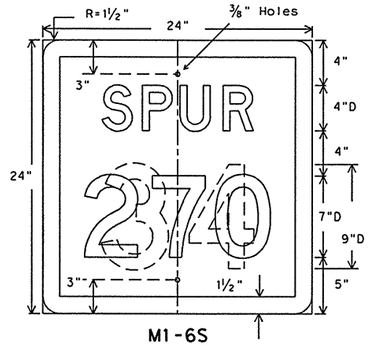

M1-6S
24" X 24"

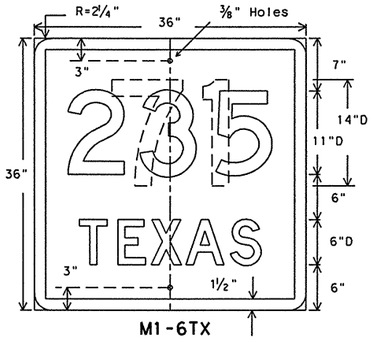

M1-6TX
36" X 36"

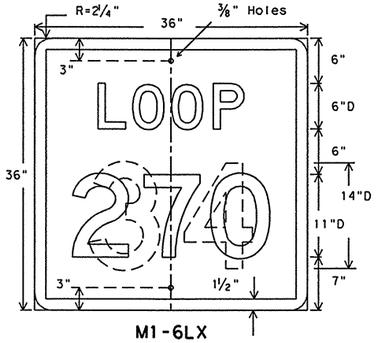

M1-6LX
36" X 36"

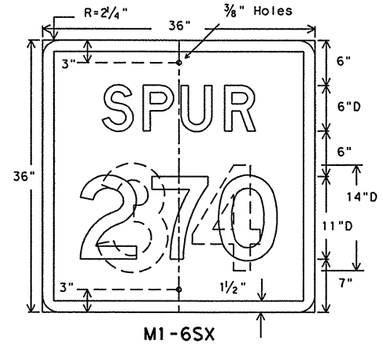

M1-6SX
36" X 36"

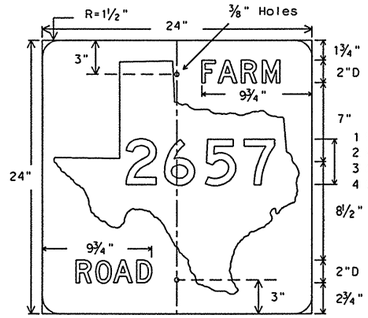

Letters - White Reflective
Numerals - Black
Symbol - White Reflective
Background - Black

M1-6F
24" X 24"

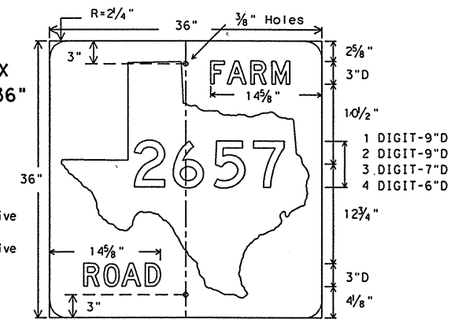

M1-6FX
36" X 36"

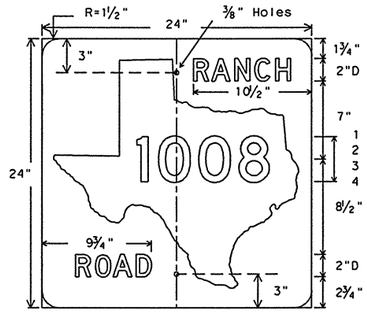

Letters - White Reflective
Numerals - Black
Symbol - White Reflective
Background - Black

M1-6R
24" X 24"

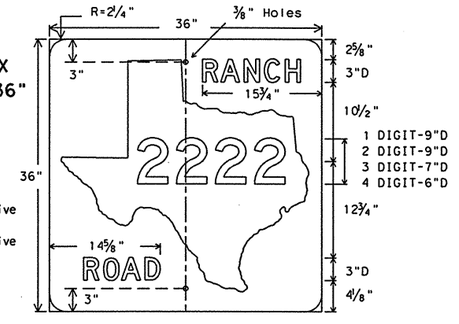

M1-6RX
36" X 36"

DEPARTMENT MATERIAL SPECIFICATIONS

ALUMINUM SIGN BLANKS	DMS 7110
FLAT SURFACE REFLECTIVE SHEETING	DMS 8300
VINYL NON-REFLECTIVE DECAL SHEETING	DMS 8320

SIGN SHEETING

COLOR	USAGE	MATERIAL TYPE
WHITE	BACKGROUND	TYPE C (HIGH SPECIFIC INTENSITY)
BLACK	LEGEND & BORDERS	VINYL NON-REFLECTIVE DECAL SHEETING

⚠1

GENERAL NOTES:

Route Markers are to be used as confirming and reassurance markers and as component parts of a Junction, Route Turn, Directional or Trailblazer assembly.

The alphabets and lateral spacing between letters and numerals shall conform with the "Texas Manual on Uniform Traffic Control Devices for Streets and Highways", latest edition, and any approved changes thereto. Lateral spacing of text shall provide a balanced appearance. All materials shall conform to Department Specifications.

⚠1 Legend shall be black and applied by screening process, cut-out vinyl non-reflective decal sheeting or combination thereof. Check table for sheeting type if used.

Sign blanks shall be one piece sheet aluminum alloy (Type A). 24 x 24 inch blanks shall be 0.080 inch thick, 36 x 36 inch and larger blanks shall be 0.100 inch thick, unless noted otherwise.

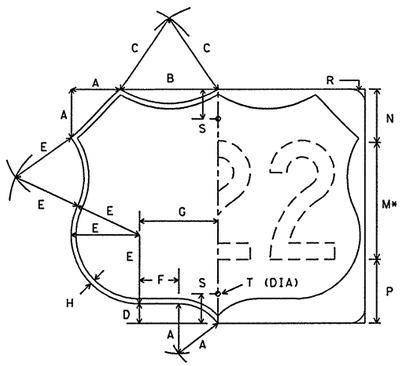

Numerals - Black
Border - Black
Background - White Reflective

		SIZE	A	B	C	D	E
MI-4A2	12" NUMERALS 2 DIGIT	24x24	5	7	5	2	7
MI-4A3	12" NUMERALS 3 DIGIT	30x24	5	10	9	2	7
MI-4B2	18" NUMERALS 2 DIGIT	36x36	7½	10½	7½	3	10½
MI-4B3	18" NUMERALS 3 DIGIT	45x36	7½	15	13½	3	10½

F	G	H	M*	N	P	R	S	T	AREA
1	5	½	12D	5½	6½	1½	3	⅜	3.18
4	8	½	12D	5½	6½	1½	3	⅜	4.05
1½	7½	¾	18D	8¼	9¾	2¼	3	⅜	7.15
6	12	¾	18D	8¼	9¾	2¼	3	⅜	9.11

⚠1 2/01 Revision

All ground mounted signs to use High Specific Intensity sheeting

STANDARD PLANS
Texas Department of Transportation
Traffic Operations Division

U.S. & STATE ROUTE MARKERS FOR INDEPENDENT MOUNTING

M(1)-01

© TxDOT July 1972	DN: LR	CK: GRB	DW: FDN	CK: CAL
REVISIONS 1-85, 7-90, 8-95, 2-01	STATE DISTRICT: PHARR	FEDERAL REGION: 6	FEDERAL AID PROJECT	SHEET: 848
COUNTY: HIDALGO	CONTROL: 0255	SECTION: 08	JOB: 091	HIGHWAY: US 281

5A

LEVELS DISPLAYED
1 2 | 4 5 6 7 7 8 9 10 11 12 13 14 15 16
1 7 8 1 9 2 0 2 1 2 2 3 2 4 2 5 2 6 2 7 2 8 2 9 3 0 3 1 3 2
3 3 4 3 5 3 6 3 7 4 0 4 1 4 2 4 3 4 4 4 5 4 6 4 7 4 8
4 9 5 0 5 1 5 2 5 3 5 4 5 5 5 6 5 7 5 8 5 9 6 0 6 1 6 2 6 3

DN: LR
CK: CW
DW: DN
CK: MT
DATE:
ACC: d58hp1c/usr/d580504
FILE:

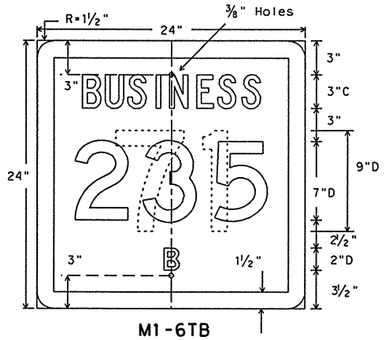

M1-6TB
24" X 24"

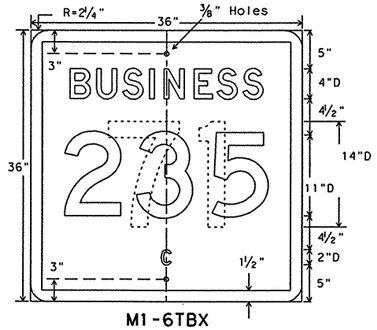

M1-6TBX
36" X 36"

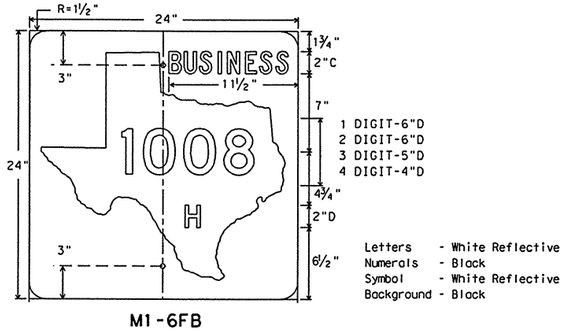

Letters - White Reflective
Numerals - Black
Symbol - White Reflective
Background - Black

M1-6FB
24" X 24"

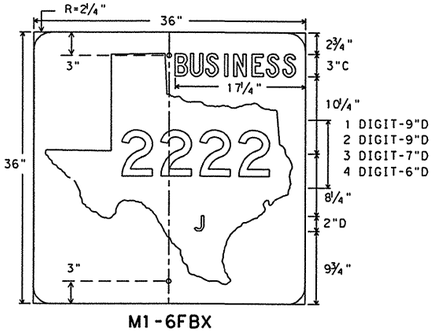

M1-6FBX
36" X 36"

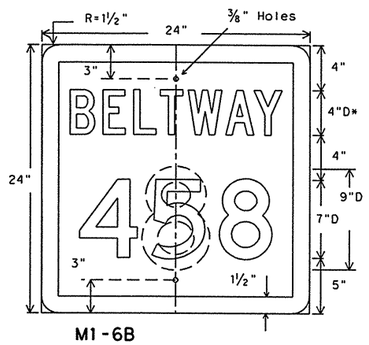

M1-6B
24" X 24"

* reduce spacing 20%

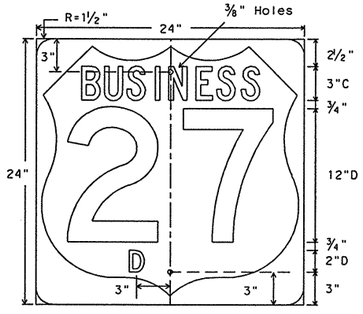

M1-4A2B
24" X 24"

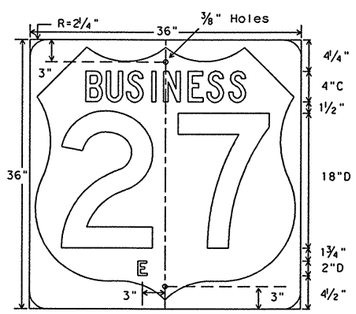

M1-4B2B
36" X 36"

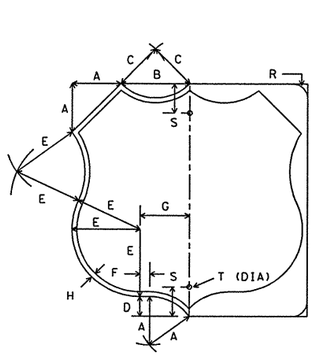

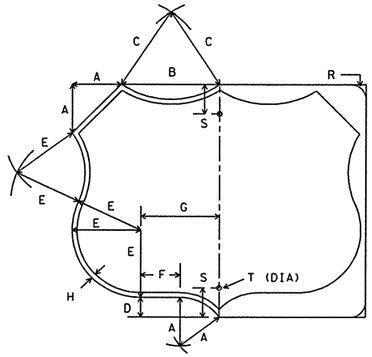

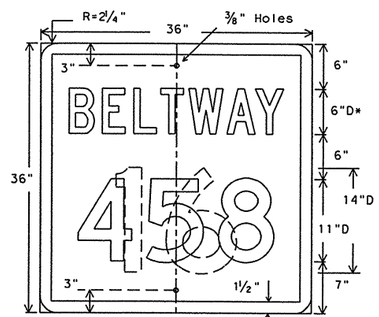

M1-6BX
36" X 36"

* reduce spacing 20%

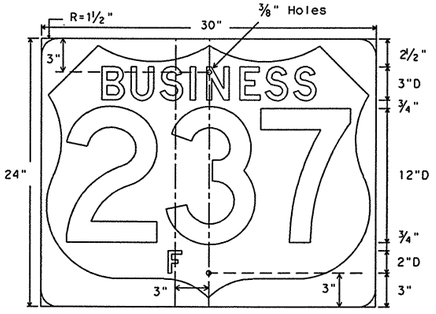

M1-4A3B
30" X 24"

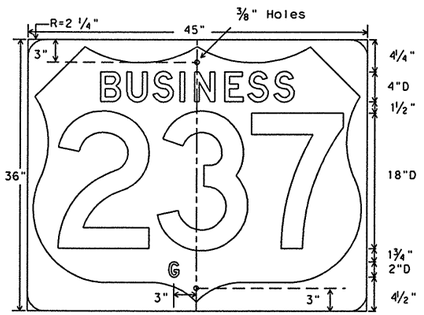

M1-4B3B
45" X 36"

NOTE: M1-4B3 SHALL BE ONE PIECE SHEET ALUMINUM ALLOY 0.100 INCH THICK CONFORMING WITH THE SPECIFICATION ITEM "ALUMINUM SIGNS (TYPE A)."

	SIZE	A	B	C	D	E	F	G	H	R	S	T
M1-4A2B	12" NUMERALS 2 DIGIT	24x24	5	7	5	2	7	1	5	½	1½	3	⅜
M1-4A3B	12" NUMERALS 3 DIGIT	30x24	5	10	9	2	7	4	8	½	1½	3	⅜
M1-4B2B	18" NUMERALS 2 DIGIT	36x36	7½	10½	7½	3	10½	1½	7½	¾	2¼	3	⅜
M1-4B3B	18" NUMERALS 3 DIGIT	45x36	7½	15	13½	3	10½	6	12	¾	2¼	3	⅜

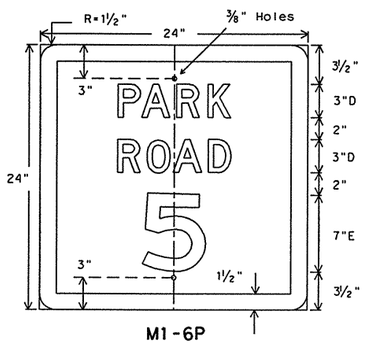

M1-6P
24" X 24"

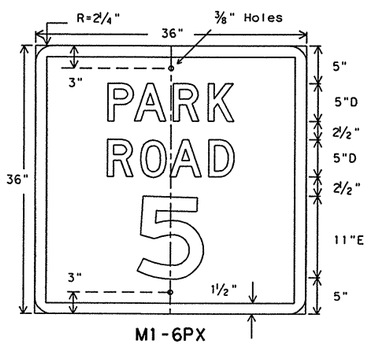

M1-6PX
36" X 36"

GENERAL NOTES:

Route Markers are to be used as confirming and reassurance markers and as component parts of a Junction, Route Turn, Directional or Trailblazer assembly.

The alphabets and lateral spacing between letters and numerals shall conform with the "Texas Manual on Uniform Traffic Control Devices for Streets and Highways", latest edition, and any approved changes thereto. Lateral spacing of text shall provide a balanced appearance. All materials shall conform to Department Specifications.

Legend shall be black and applied by screening process, cut-out vinyl non-reflective decal sheeting or combination thereof. Check table for sheeting type if used.

Sign blanks shall be one piece sheet aluminum alloy (Type A). 24 x 24 inch blanks shall be 0.080 inch thick, 36 x 36 inch and larger blanks shall be 0.100 inch thick, unless noted otherwise.

DEPARTMENT MATERIAL SPECIFICATIONS	
ALUMINUM SIGN BLANKS	DMS 7110
FLAT SURFACE REFLECTIVE SHEETING	DMS 8300
VINYL NON-REFLECTIVE SHEETING	DMS 8320

SIGN SHEETING

COLOR	USAGE	MATERIAL TYPE
WHITE	BACKGROUND	TYPE C (HIGH SPECIFIC INTENSITY)
BLACK	LEGEND & BORDERS	VINYL NON-REFLECTIVE SHEETING

△1 2/01 Revision

△1 All ground mounted signs to use High Specific Intensity sheeting

STANDARD PLANS
Texas Department of Transportation
Traffic Operations Division

U.S. & STATE ROUTE MARKERS FOR INDEPENDENT MOUNTING

M(2)-01

©TxDOT July 1990	DN: LR	CK: GRB	DW: FDN	CK: CAL
REVISIONS 8-95 2-01	STATE DISTRICT: PHARR	FEDERAL REGION: 6	FEDERAL AID PROJECT	SHEET: 848A
COUNTY: HIDALGO	CONTROL: 0255	SECTION: 08	JOB: 091	HIGHWAY: US 281

5B

LEVELS DISPLAYED

1	2	4	5	6	7	8	9	10	11	12	13	14	15	16
17	18	19	20	21	22	23	24	25	26	27	28	29	30	31
33	34	35	36	37	38	39	40	41	42	43	44	45	46	47
49	50	51	52	53	54	55	56	57	58	59	60	61	62	63

DATE:
ACC: d58hplc/usr/d580504
FILE:

DN: LR
CK: CW
DW: DN
CK: MT

DISCLAIMER
The use of this standard is governed by the "Texas Engineering Practice Act". No warranty of any kind is made by TxDOT for any purpose whatsoever. TxDOT assumes no responsibility for the conversion of this standard to other formats or for incorrect results or damages resulting from its use.

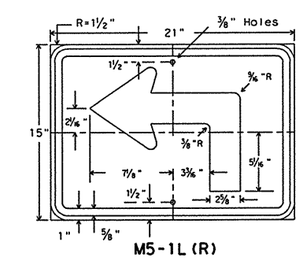

M5-1L (R)
21" X 15"

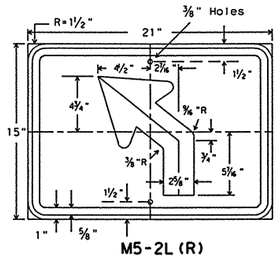

M5-2L (R)
21" X 15"

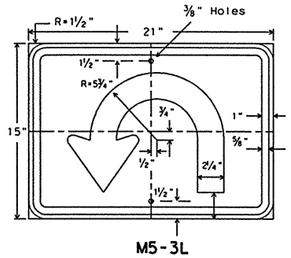

M5-3L
21" X 15"

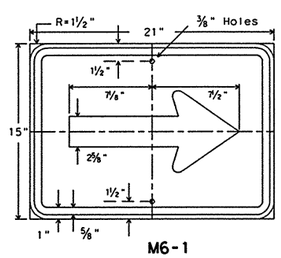

M6-1
21" X 15"

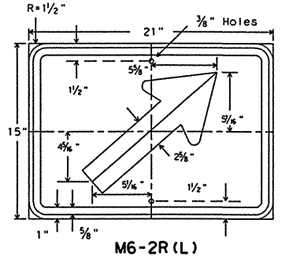

M6-2R (L)
21" X 15"

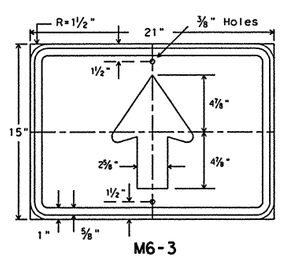

M6-3
21" X 15"

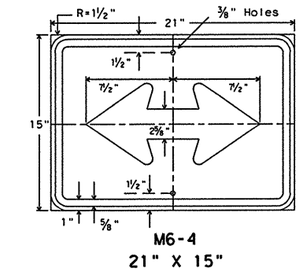

M6-4
21" X 15"

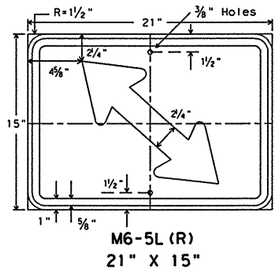

M6-5L (R)
21" X 15"

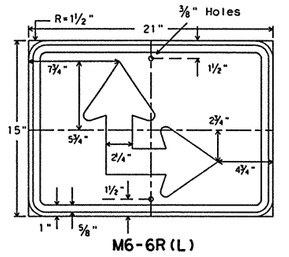

M6-6R (L)
21" X 15"

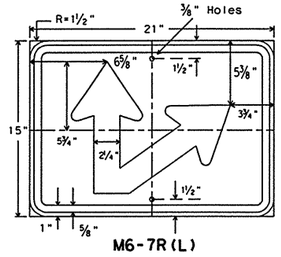

M6-7R (L)
21" X 15"

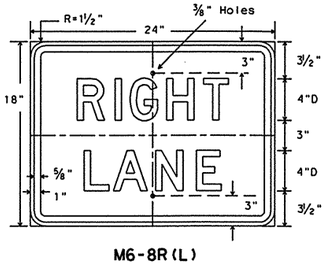

M6-8R (L)
24" X 18"

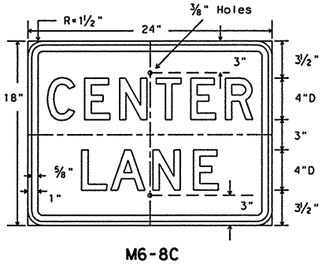

M6-8C
24" X 18"

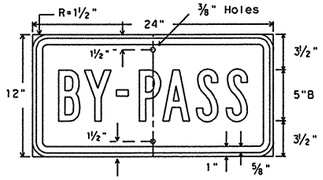

M4-2
24" X 12"

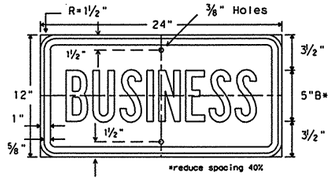

M4-3
24" X 12"

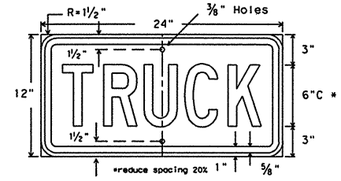

M4-4
24" X 12"

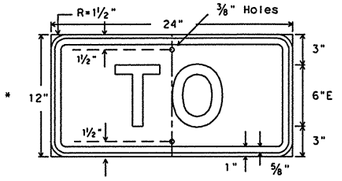

M4-5
24" X 12"

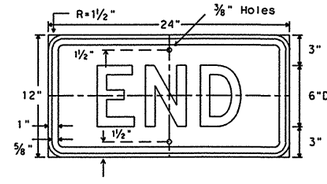

M4-6
24" X 12"

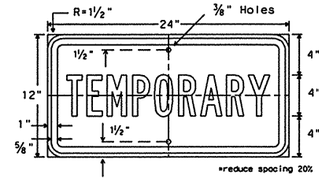

M4-7
24" X 12"

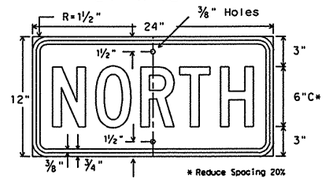

M3-1
24" X 12"

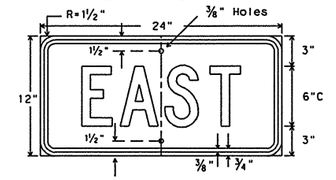

M3-2
24" X 12"

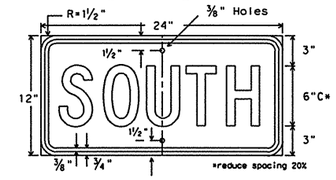

M3-3
24" X 12"

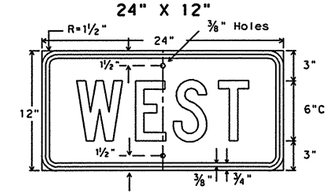

M3-4
24" X 12"

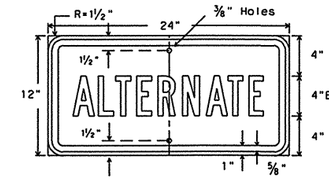

M4-1
24" X 12"

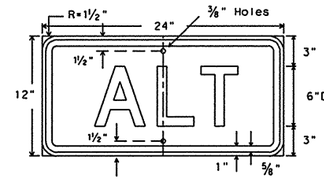

M4-1a
24" X 12"

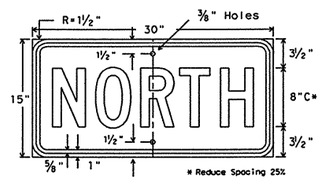

SM3-1
30" X 15"

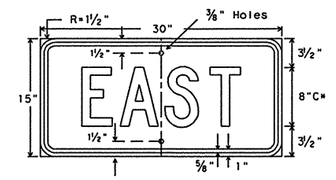

SM3-2
30" X 15"

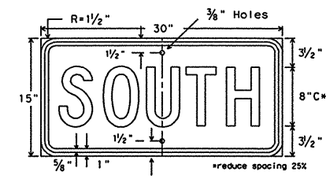

SM3-3
30" X 15"

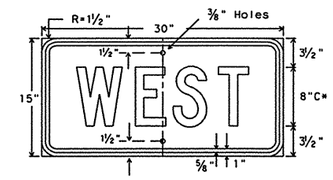

SM3-4
30" X 15"

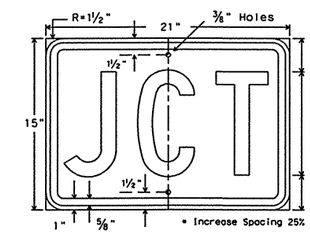

M2-1
21" X 15"

2/01 Revision

⚠1 All ground mounted signs to use High Specific Intensity sheeting

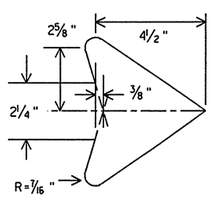

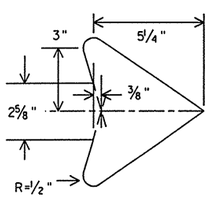

GENERAL NOTES:

The alphabets and lateral spacing between letters and numerals shall conform with the "Texas Manual on Uniform Traffic Control Devices for Streets and Highways", latest edition, and any approved changes thereto. Lateral spacing of text shall provide a balanced appearance. All materials shall conform to Department Specifications.

Legend shall be black and applied by screening process, cut-out vinyl non-reflective decal sheeting or combination thereof. Check table for sheeting type if used.

Sign blanks shall be one piece 0.080 inch thick sheet aluminum alloy (Type A), unless noted otherwise.

⚠1

DEPARTMENT MATERIAL SPECIFICATIONS	
ALUMINUM SIGN BLANKS	DMS 7110
FLAT SURFACE REFLECTIVE SHEETING	DMS 8300
VINYL NON-REFLECTIVE SHEETING	DMS 8320

SIGN SHEETING

COLOR	USAGE	MATERIAL TYPE
WHITE	BACKGROUND	TYPE C (HIGH SPECIFIC INTENSITY)
BLACK	LEGEND & BORDERS	VINYL NON-REFLECTIVE SHEETING

⚠1

STANDARD PLANS
Texas Department of Transportation
Traffic Operations Division

ROUTE MARKER AUXILIARIES

M(3)-01

©TxDOT July 1990		DN: LR/MT	CK: GRB	DW: FDN	CK: CAL
REVISIONS 8-95 4-97 2-01	STATE DISTRICT: PHARR	FEDERAL REGION: 6	FEDERAL AID PROJECT		SHEET: 849
COUNTY: HIDALGO	CONTROL: 0255	SECTION: 08	JOB: 091	HIGHWAY: US 281	

5C

LEVELS DISPLAYED																DATE:
1	2	3	4	5	6	7	8	9	10	11	12	13	14	15	16	
17	18	19	20	21	22	23	24	25	26	27	28	29	30	31	32	ACC:
33	34	35	36	37	38	39	40	41	42	43	44	45	46	47	48	FILE:
49	50	51	52	53	54	55	56	57	58	59	60	61	62	63		

DN:
CK:
DW:
CK:

REFERENCE MARKER PLAQUE

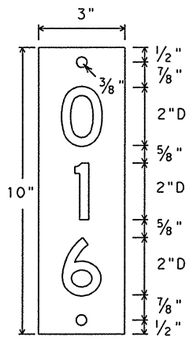

D10-7a
3 X 10

Letters - White Reflective
Numerals - White Reflective
Background - Green Reflective

Use preceding zero for total of three digits

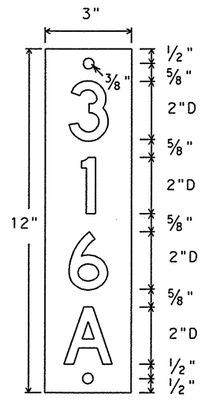

D10-7b
3 X 12

Letters - White Reflective
Numerals - White Reflective
Background - Green Reflective

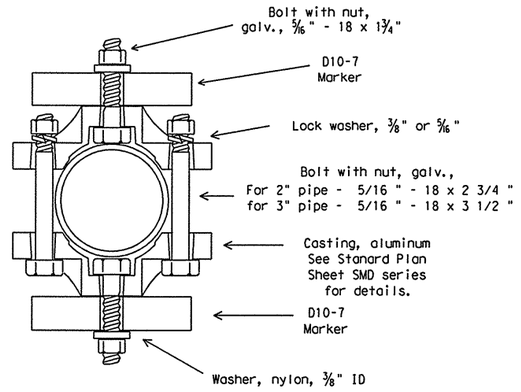

TYPICAL ATTACHMENT

2" OR 3" ROUND
PIPE SUPPORT

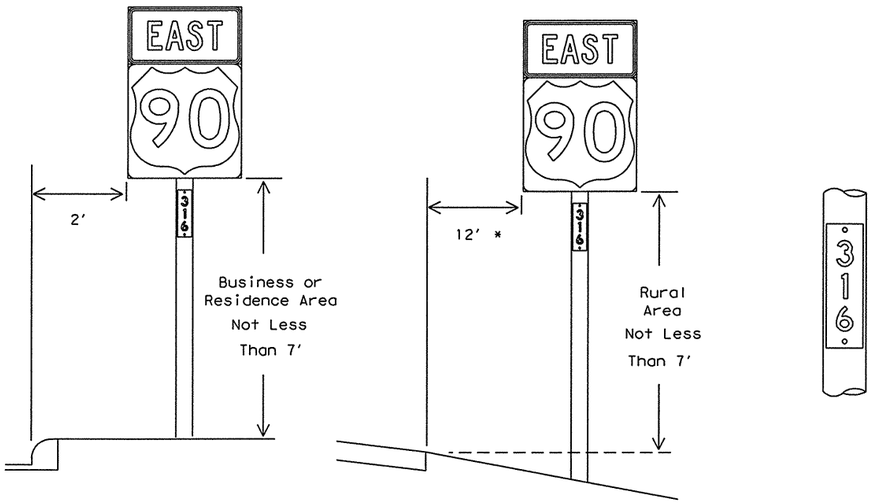

TYPICAL MOUNTING

Use breakaway design that will leave a stub in ground, so mount can be accurately reinstalled.

Reference Marker Plaque should cover existing milepost number, or old number should be removed. Plaques to be mounted back to back.

DEPARTMENT MATERIAL SPECIFICATIONS	
PLYWOOD SIGN BLANKS	DMS 7100
ALUMINUM SIGN BLANKS	DMS 7110
FLAT SURFACE REFLECTIVE SHEETING	DMS 8300

SIGN SHEETING

COLOR	USAGE	MATERIAL TYPE
GREEN	BACKGROUND	TYPE C (HIGH SPECIFIC INTENSITY)
WHITE	BACKGROUND	TYPE C (HIGH SPECIFIC INTENSITY)
WHITE	LEGEND & BORDERS	TYPE C (HIGH SPECIFIC INTENSITY)

GENERAL NOTES:

The alphabets and lateral spacing between letters and numerals shall conform with the "Texas Manual on Uniform Traffic Control Devices for Streets and Highways", latest edition, and any approved changes thereto. Lateral spacing of text shall provide a balanced appearance. All materials shall conform to Department Specifications.

Legend for Reference Markers shall be applied by screening process with transparent colored ink, transparent colored overlay film, cut-out white reflective sheeting applied to colored background or combination thereof. Check table for sheeting type if used.

Reference Markers shall be one piece 0.080 inch thick sheet aluminum alloy (Type A), or 5/8 inch thick plywood (Type A).

2/01 Revision

All ground mounted signs to use High Specific Intensity sheeting

Removed diagram using wing-channel steel post for sign support

STANDARD PLANS
Texas Department of Transportation
Traffic Operations Division

REFERENCE MARKER AND MOUNTING

M(4)-01

©TxDOT July 1990	DN: LR	CK: GRB	DW: FDN	CK: CAL
REVISIONS 9-93 8-95 2-01	STATE DISTRICT: PHARR	FEDERAL REGION: 6	FEDERAL AID PROJECT	SHEET: 850
COUNTY: HIDALGO	CONTROL: 0255	SECTION: 08	JOB: 091	HIGHWAY: US 281

5D

DISCLAIMER
The use of this standard is governed by the "Texas Engineering Practice Act". No warranty of any kind is made by TxDOT for any purpose whatsoever. TxDOT assumes no responsibility for the conversion of this standard to other formats or for incorrect results or damages resulting from its use.

DN: CK: DW: CK:
DATE: ACC: FILE:

LEVELS DISPLAYED
1 2 3 4 5 6 7 8 9 10 11 12 21 31 41 51 61
17 18 19 20 21 22 23 24 25 26 27 28 29 33 53 103
33 34 35 36 37 38 39 40 41 42 43 44 45 46 47 48
49 50 51 52 53 54 55 56 57 58 59 60 61 62 63

R1-1
30" X 30"

Letters - White Reflective
Border - White Reflective
Background - Red Reflective

SR1-1
48" X 48"

Letters - White Reflective
Border - White Reflective
Background - Red Reflective

SR1-2
42" X 42" X 42"

Letters - Red Reflective
Border Band - Red Reflective
Background - White Reflective

FR1-2
60" X 60" X 60"

Letters - Red Reflective
Border Band - Red Reflective
Background - White Reflective

R10-12
30" X 36"

Letters - Black
Border - Black
Circle - Green Refl.
Background - White Refl.

R1-3
12" X 6"

Letters - White Reflective
Border - White Reflective
Background - Red Reflective

R1-4
18" X 6"

Letters - White Reflective
Border - White Reflective
Background - Red Reflective

SR1-2b
48" X 36"

Legend - Black
Background - White Refl.

FR8-4
48" X 36"

Legend - Black
Background - White Refl.

FR8-7

R6-3
24" X 18"

Legend - Black
Background - White Refl.

R6-3a
24" X 18"

Legend - Black
Background - White Refl.

R1-5b
36" X 18"

Legend - Black
Background - White Refl.

ER8-1T
36" X 48"

Letters -Red Reflective
Border -Red Reflective
Background - White Reflective

R1-2a
21" X 15"

Legend - Black
Background - White Refl.

SR1-5R
48" X 24"

Legend - Black
Background - White Refl.

DEPARTMENT MATERIAL SPECIFICATIONS	
PLYWOOD SIGN BLANKS	DMS 7100
ALUMINUM SIGN BLANKS	DMS 7110
FLAT SURFACE REFLECTIVE SHEETING	DMS 8300
VINYL NON-REFLECTIVE SHEETING	DMS 8320

SIGN SHEETING

COLOR	USAGE	MATERIAL TYPE
GREEN	LEGEND	TYPE C (HIGH SPECIFIC INTENSITY)
RED	LEGEND/BACKGROUND	TYPE C (HIGH SPECIFIC INTENSITY)
WHITE	BACKGROUND	TYPE C (HIGH SPECIFIC INTENSITY)
WHITE	LEGEND & BORDERS	TYPE C (HIGH SPECIFIC INTENSITY)
BLACK	LEGEND & BORDERS	VINYL NON-REFLECTIVE SHEETING

GENERAL NOTES:

The alphabets and lateral spacing between letters and numerals shall conform with the "Texas Manual on Uniform Traffic Control Devices for Streets and Highways", latest edition, and any approved changes thereto. Lateral spacing of text shall provide a balanced appearance. All materials shall conform to Department Specifications.

Colored legends shall be applied by screening process with transparent colored ink, transparent colored overlay film, cut-out white reflective sheeting applied to colored background, colored sheeting or combination thereof. Black legends shall be applied by screening process, cut-out vinyl non-reflective decal sheeting or combination thereof. Check table for sheeting type if used.

Sign blanks shall be any material that meets the DMS requirements for permanent sign substrates.

2/01 Revision

All ground mounted signs to use High Specific Intensity sheeting

STANDARD PLANS
Texas Department of Transportation
Traffic Operations Division

REGULATORY SIGNS

R(1)-01

©TxDOT February 1976	DN: LR/MT	CK: GRB	DW: FDN	CK: CAL
REVISIONS 7-90 8-95 4-98 2-01	STATE DISTRICT: PHARR	FEDERAL REGION: 6	FEDERAL AID PROJECT	SHEET 851
	COUNTY: HIDALGO	CONTROL: 0255	SECTION: 08 / JOB: 091	HIGHWAY: US 281

7A

LEVELS DISPLAYED															
1	2	3	4	5	6	7	8	9	10	11	12	13	14	15	16
17	18	19	20	21	22	23	24	25	26	27	28	29	30	31	32
33	34	35	36	37	38	39	40	41	42	43	44	45	46	47	48
49	50	51	52	53	54	55	56	57	58	59	60	61	62	63	

DATE:
ACC: d58hplc/usr/d580504
FILE:
DN: LR
CK: CW
DW: DN
CK: MT

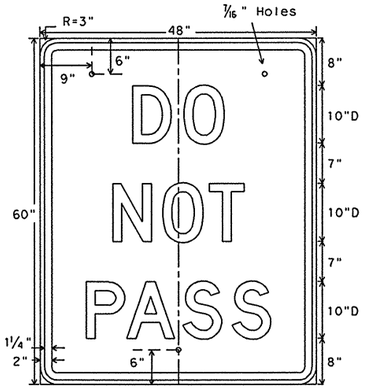

FR4-1
48" X 60"

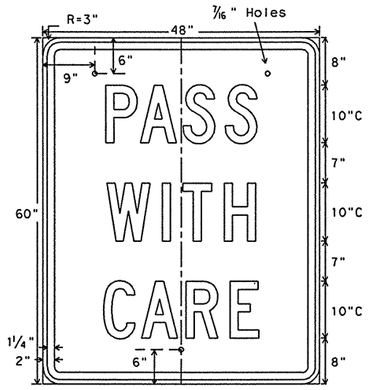

FR4-2
48" X 60"

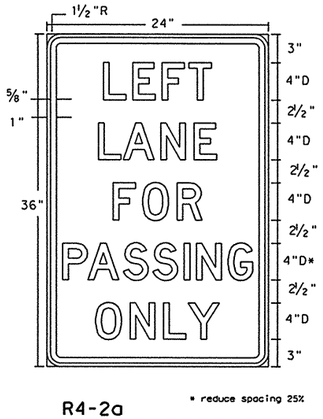

R4-2a
24" X 36"

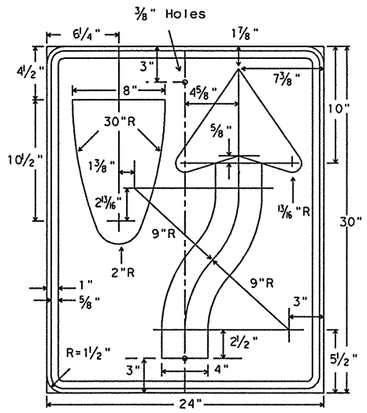

R4-7
24" X 30"

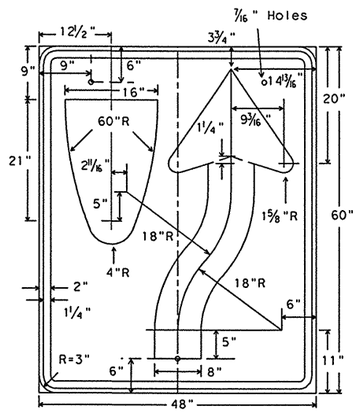

FR4-7
48" X 60"

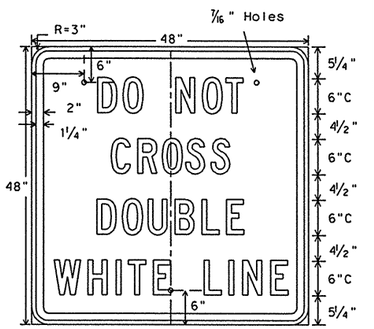

FR4-3B
48" X 48"

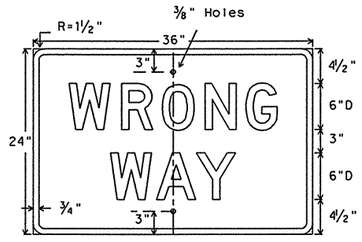

R5-1a
36" X 24"

Letters - White Reflective
Border - White Reflective
Background - Red Reflective

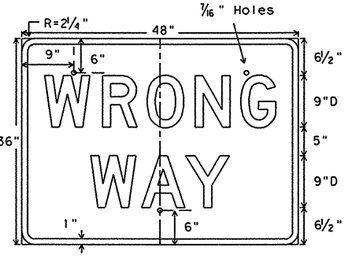

SR5-1a
48" X 36"

Letters - White Reflective
Border - White Reflective
Background - Red Reflective

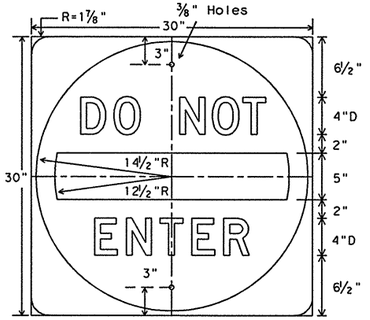

R5-1
30" X 30"

Letters - White Reflective
Bar - White Reflective
Background - Red Reflective

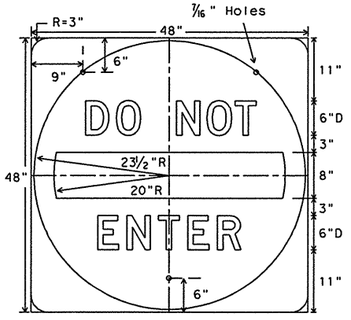

SR5-1
48" X 48"

Letters - White Reflective
Bar - White Reflective
Background - Red Reflective

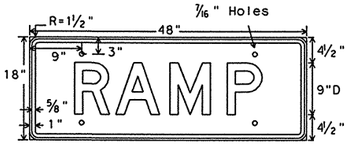

R5-1T
48" X 18"

Letters -Red Reflective
Border -Red Reflective
Background - White Reflective

FR11-1
48" X 60"

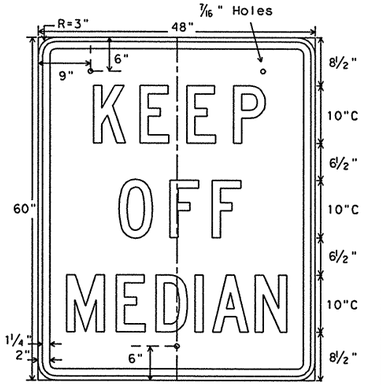

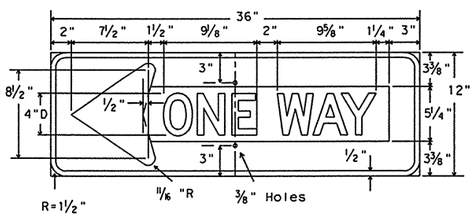

R6-1L
36" X 12"

Letters - Black
Symbol - White Reflective
Border - White Reflective
Background - Black

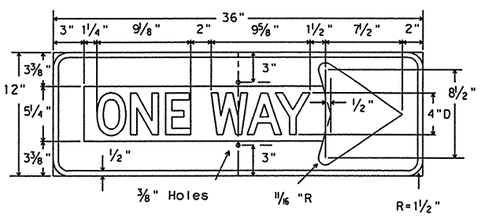

R6-1R
36" X 12"

Letters - Black
Symbol - White Reflective
Border - White Reflective
Background - Black

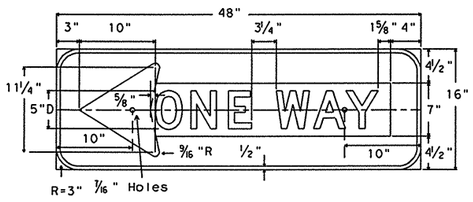

FR6-1L
48" X 16"

Letters - Black
Symbol - White Reflective
Border - White Reflective
Background - Black

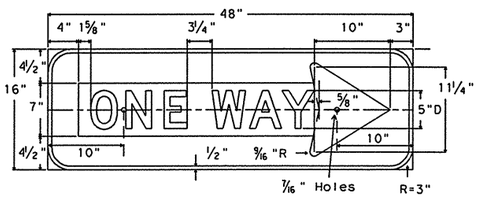

FR6-1R
48" X 16"

Letters - Black
Symbol - White Reflective
Border - White Reflective
Background - Black

GENERAL NOTES:

The alphabets and lateral spacing between letters and numerals shall conform with the "Texas Manual on Uniform Traffic Control Devices for Streets and Highways", latest edition, and any approved changes thereto. Lateral spacing of text shall provide a balanced appearance. All materials shall conform to Department Specifications.

Colored legends shall be applied by screening process with transparent colored ink, transparent colored overlay film, cut-out white reflective sheeting applied to colored background or combination thereof. Black legends and background shall be applied by screening process, cut-out vinyl non-reflective decal sheeting or combination thereof. Check table for sheeting type if used.

Sign blanks shall be any material that meets the DMS requirements for permanent sign substrates.

DEPARTMENT MATERIAL SPECIFICATIONS	
PLYWOOD SIGN BLANKS	DMS 7100
ALUMINUM SIGN BLANKS	DMS 7110
FLAT SURFACE REFLECTIVE SHEETING	DMS 8300
VINYL NON-REFLECTIVE SHEETING	DMS 8320

SIGN SHEETING

COLOR	USAGE	MATERIAL TYPE
RED	LEGEND/BACKGROUND	TYPE C (HIGH SPECIFIC INTENSITY)
WHITE	BACKGROUND	TYPE C (HIGH SPECIFIC INTENSITY)
WHITE	LEGEND & BORDERS	TYPE C (HIGH SPECIFIC INTENSITY)
BLACK	LEGEND & BORDERS	VINYL NON-REFLECTIVE SHEETING
BLACK	BACKGROUND	VINYL NON-REFLECTIVE SHEETING

1 2/01 Revision

All ground mounted signs to use High Specific Intensity sheeting

DN: LR CK: GW DW: DN CK: MT
DATE:
FILE: d58npic/usr/d580504
ACC:

LEVELS DISPLAYED
1 2 3 4 5 6 7 8 9 10 11 12 13 14 15 16
17 18 19 20 21 22 23 24 25 26 27 28 29 30 31 32
33 34 35 36 37 38 39 40 41 42 43 44 45 46 47 48
49 50 51 52 53 54 55 56 57 58 59 60 61 62 63

STANDARD PLANS
Texas Department of Transportation
Traffic Operations Division

REGULATORY SIGNS

R(2)-01

©TxDOT February 1976

DN: LR	CK: GRB	DW: FDN	CK: CAL

REVISIONS	STATE DISTRICT	FEDERAL REGION	FEDERAL AID PROJECT	SHEET
7-90				
8-95	PHARR	6		852
12-97				
2-01				

COUNTY	CONTROL	SECTION	JOB	HIGHWAY
HIDALGO	0255	08	091	US 281

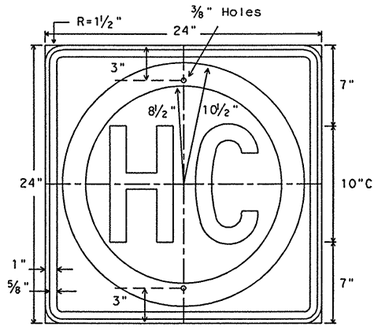

R14-2
24" X 24"

Letters - Black
Border - Black
Ring - Green Reflective
Background - White Reflective

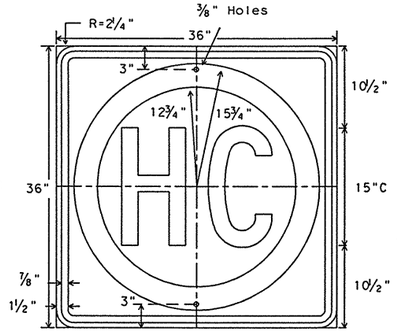

ER14-2
36" X 36"

Letters - Black
Border - Black
Ring - Green Reflective
Background - White Reflective

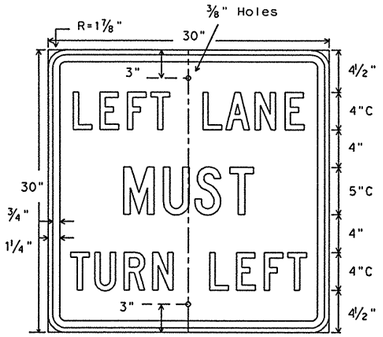

R3-7L
30" X 30"

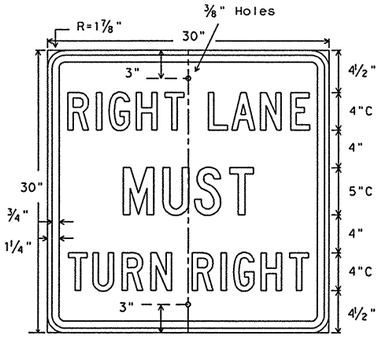

R3-7R
30" X 30"

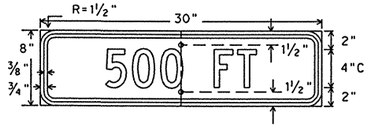

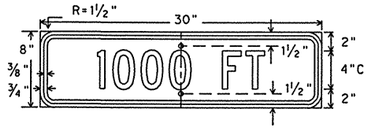

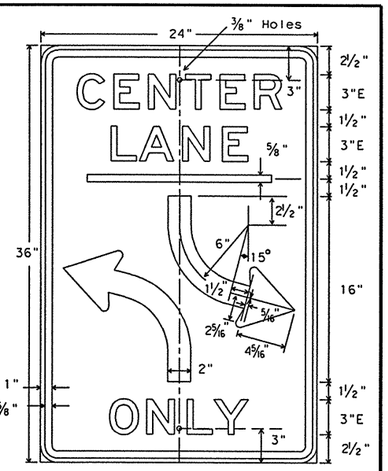

R3-9b
24" X 36"

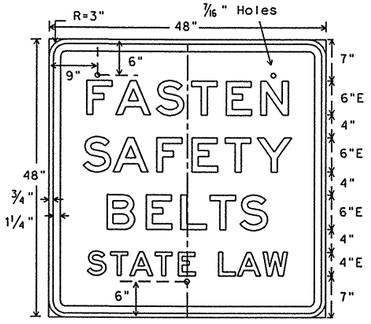

FR19-8
48" X 48"

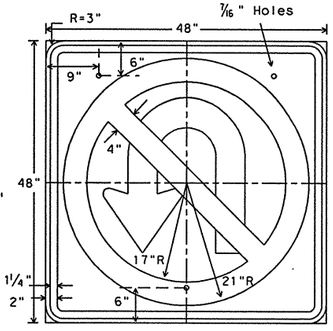

SR3-4
48" X 48"

Letters - Black
Arrow - Black
Border - Black
Circle & Diagonal - Red Reflective
Background - White Reflective

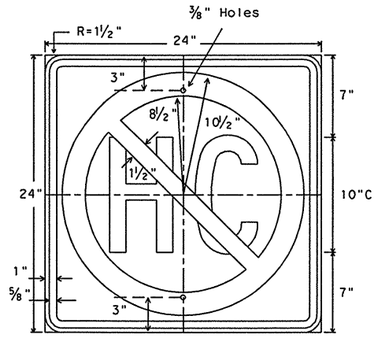

R14-3
24" X 24"

Letters - Black
Border - Black
Ring/Slash - Red Reflective
Background - White Reflective

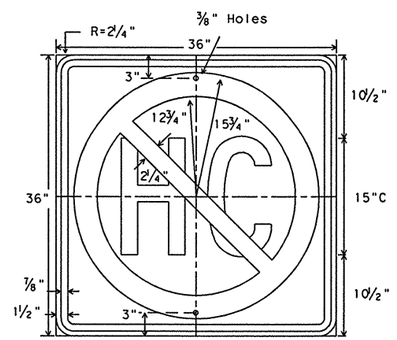

ER14-3
36" X 36"

Letters - Black
Border - Black
Ring/Slash - Red Reflective
Background - White Reflective

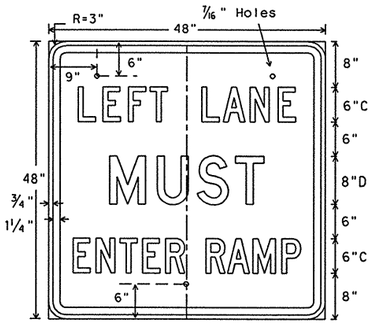

R3-20
48" X 48"

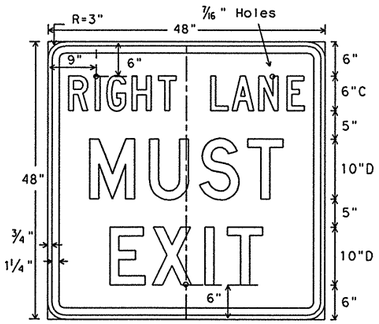

R3-21R
48" X 48"

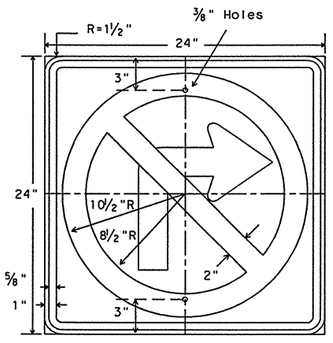

R3-1
24" X 24"

Letters - Black
Arrow - Black
Border - Black
Circle & Diagonal - Red Reflective
Background - White Reflective

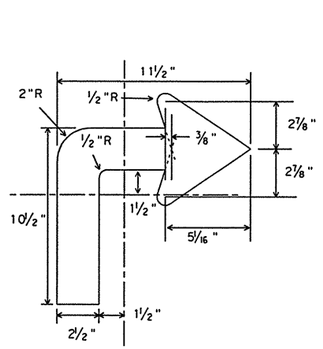

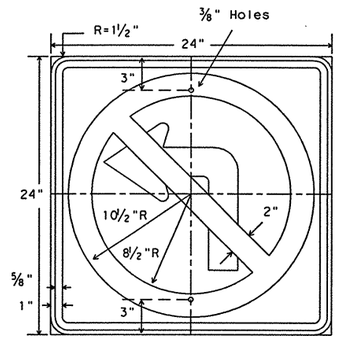

R3-2
24" X 24"

Letters - Black
Arrow - Black
Border - Black
Circle & Diagonal - Red Reflective
Background - White Reflective

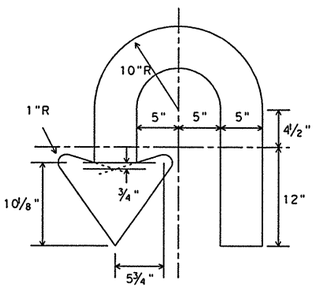

DEPARTMENT MATERIAL SPECIFICATIONS	
PLYWOOD SIGN BLANKS	DMS 7100
ALUMINUM SIGN BLANKS	DMS 7110
FLAT SURFACE REFLECTIVE SHEETING	DMS 8300
VINYL NON-REFLECTIVE DECAL SHEETING	DMS 8320

SIGN SHEETING

COLOR	USAGE	MATERIAL TYPE
WHITE	BACKGROUND	TYPE C (HIGH SPECIFIC INTENSITY)
GREEN	LEGEND	TYPE C (HIGH SPECIFIC INTENSITY)
RED	LEGEND	TYPE C (HIGH SPECIFIC INTENSITY)
BLACK	LEGEND & BORDERS	VINYL NON-REFLECTIVE DECAL SHEETING

GENERAL NOTES:

The alphabets and lateral spacing between letters and numerals shall conform with the "Texas Manual on Uniform Traffic Control Devices for Streets and Highways", latest edition, and any approved changes thereto. Lateral spacing of text shall provide a balanced appearance. All materials shall conform to Department Specifications.

Colored legends shall be applied by screening process with transparent colored ink, transparent colored overlay film, colored sheeting or combination thereof. Black legends shall be applied by screening process, cut-out vinyl non-reflective decal sheeting or combination thereof. Check table for sheeting type if used.

Sign blanks shall be any material that meets the DMS requirements for permanent sign substrates.

2/01 Revision

All ground mounted signs to use High Specific Intensity sheeting

STANDARD PLANS
Texas Department of Transportation
Traffic Operations Division

REGULATORY SIGNS

R(3)-01

© TxDOT July 1990	DW: LR	CK: GRB	DW: FDN	CK: CAL

REVISIONS	STATE DISTRICT	FEDERAL REGION	FEDERAL AID PROJECT	SHEET
8-95 2-01	PHARR	6		853

COUNTY	CONTROL	SECTION	JOB	HIGHWAY
HIDALGO	0255	08	091	US 281

7C

DN: LR CK: CW DW: DN CK: MT

DATE: ACC: d58hp1c/usr/d580504 FILE:

LEVELS DISPLAYED
1 2 3 4 5 6 7 8 9 10 11 12 13 14 15 16
17 18 19 20 21 22 23 24 25 26 27 28 29 30 31 32 33
33 34 35 36 37 38 39 40 41 42 43 44 45 46 47 48
49 50 51 52 53 54 55 56 57 58 59 60 61 62 63

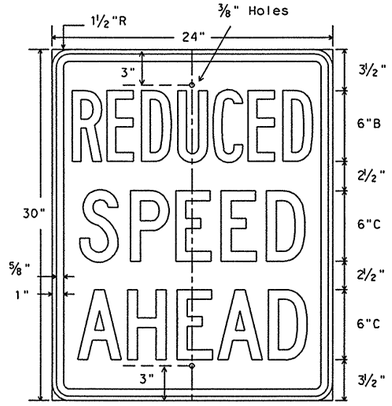

R2-5a
24" X 30"
Legend - Black
Background - White Refl.

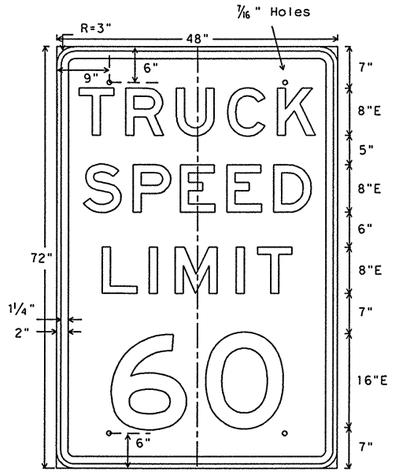

FR2-2a
48" X 72"
Legend - Black
Background - White Refl.

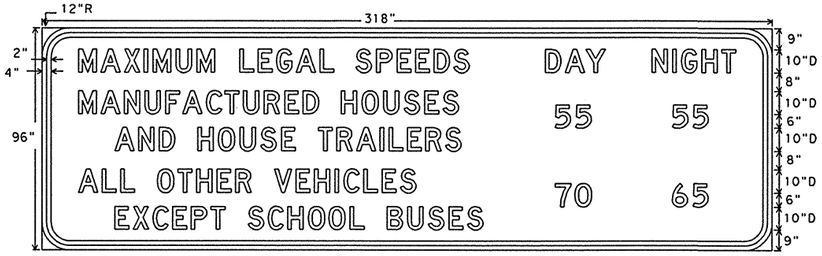

⚠1

R2-4Tc
318" X 96"
Legend - Black
Background - White Refl.
(For IH, US & SH entrances to the State only)

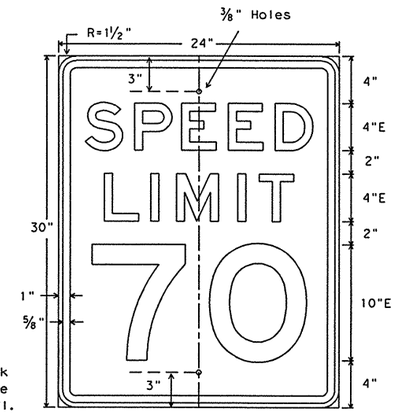

R2-1
24" X 30"
Legend - Black
Background - White Refl.

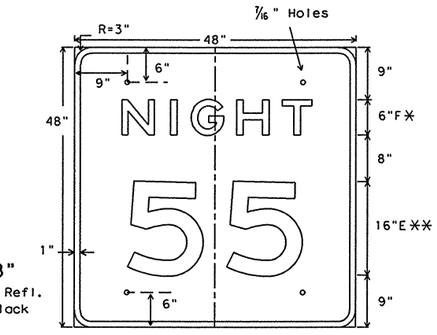

FR2-3
48" X 48"
Legend - White Refl.
Background - Black

** optically space numerals about vertical centerline
* increase spacing 50%

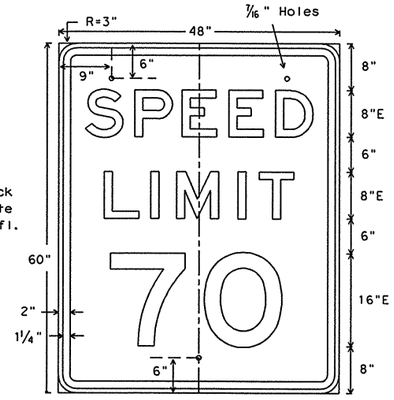

FR2-1
48" X 60"
Legend - Black
Background - White Refl.

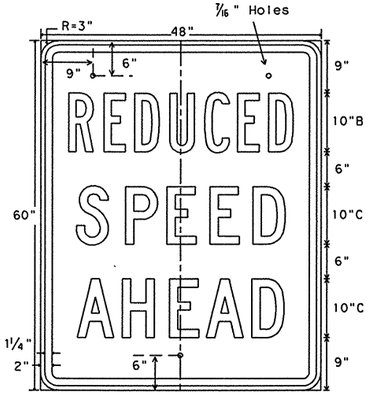

FR2-5a
48" X 60"
Legend - Black
Background - White Refl.

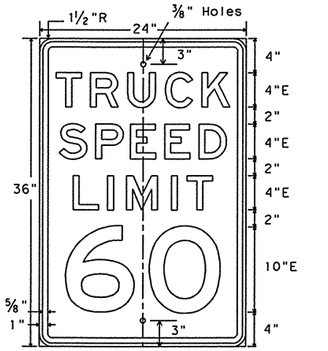

R2-2a
24" X 36"
Legend - Black
Background - White Refl.

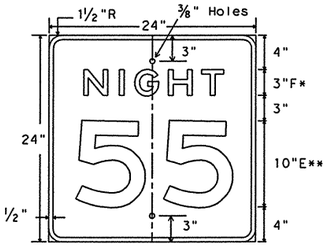

R2-3
24" X 24"
Legend - White Refl.
Background - Black

** optically space numerals about vertical centerline
* increase spacing 50%

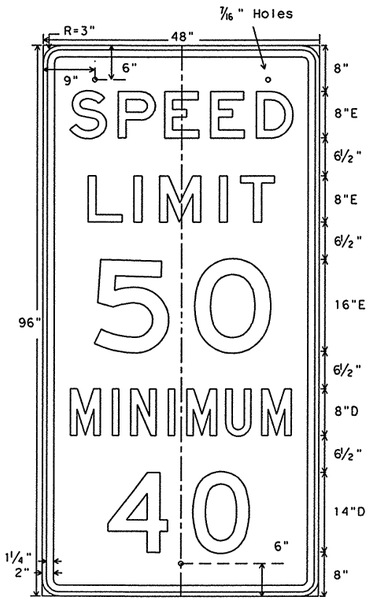

FR2-4a
48" X 96"
Legend - Black
Background - White Refl.

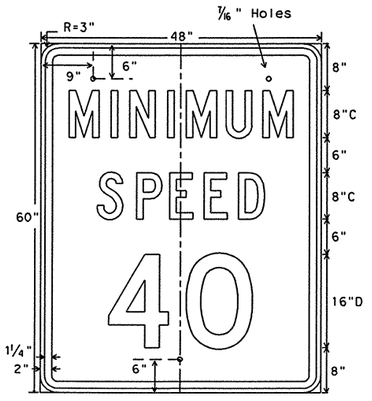

FR2-4
48" X 60"
Legend - Black
Background - White Refl.

GENERAL NOTES:

The alphabets and lateral spacing between letters and numerals shall conform with the "Texas Manual on Uniform Traffic Control Devices for Streets and Highways", latest edition, and any approved changes thereto. Lateral spacing of text shall provide a balanced appearance. All materials shall conform to Department Specifications.

Legend (except where noted), shall be black and applied by screening process, cut-out vinyl non-reflective decal sheeting or combination thereof. Check table for sheeting type if used. Legend on R2-3 and FR2-3 shall be reflective white on black background.

⚠1 Sign blanks shall be any material that meets the DMS requirements for permanent sign substrates.

DEPARTMENT MATERIAL SPECIFICATIONS

PLYWOOD SIGN BLANKS	DMS 7100
ALUMINUM SIGN BLANKS	DMS 7110
FLAT SURFACE REFLECTIVE SHEETING	DMS 8300
VINYL NON-REFLECTIVE SHEETING	DMS 8320

SIGN SHEETING

COLOR	USAGE	MATERIAL TYPE
WHITE	BACKGROUND	TYPE C (HIGH SPECIFIC INTENSITY)
WHITE	LEGEND & BORDER	TYPE C (HIGH SPECIFIC INTENSITY)
BLACK	LEGEND & BORDER	VINYL NON-REFLECTIVE SHEETING
BLACK	BACKGROUND	VINYL NON-REFLECTIVE SHEETING

⚠1 2/01 Revision

All ground mounted signs to use High Specific Intensity sheeting

Removed signs R2-4T, FR2-4Ta, and FR2-4T replaced with R2-4Tc

LEVELS DISPLAYED
1 2 3 4 5 6 7 8 9 10 11 12 13 14 15 16
17 18 19 20 21 22 23 24 25 26 27 28 29 30 31 32
33 34 35 36 37 38 39 40 41 42 43 44 45 46 47 48
49 50 51 52 53 54 55 56 57 58 59 60 61 62 63

DATE:
ACC: d58hplc/usr/d580504
FILE:

DN: LR CK: CW
DW: DN CK: MT

STANDARD PLANS
Texas Department of Transportation
Traffic Operations Division

REGULATORY SIGNS

R(4)-01

© TxDOT August 1995	DN: LR	CK: GRB	DW: FDN	CK: CAL

REVISIONS	STATE DISTRICT	FEDERAL REGION	FEDERAL AID PROJECT	SHEET
12-95	PHARR	6		854
4-98	COUNTY		CONTROL / SECTION / JOB	HIGHWAY
2-01	HIDALGO		0255 / 08 / 091	US 281

7D

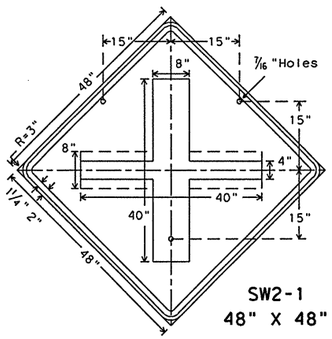

SW2-1
48" X 48"

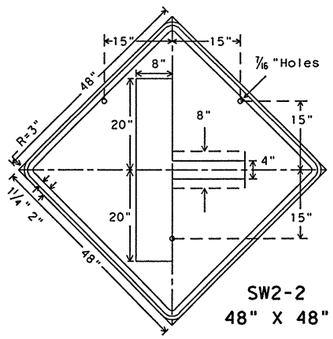

SW2-2
48" X 48"

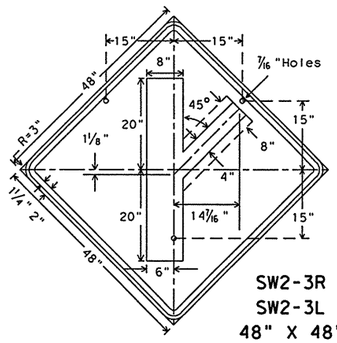

SW2-3R
SW2-3L
48" X 48"

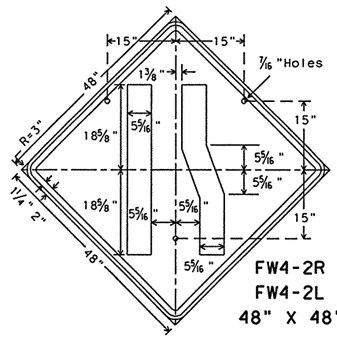

FW4-2R
FW4-2L
48" X 48"

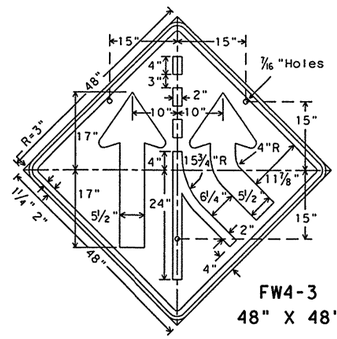

FW4-3
48" X 48"

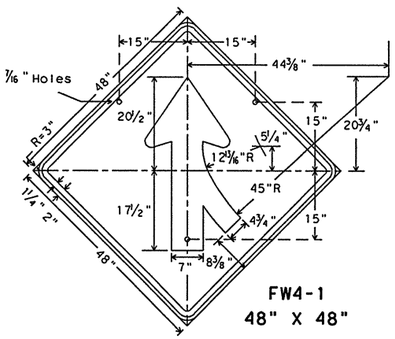

FW4-1
48" X 48"

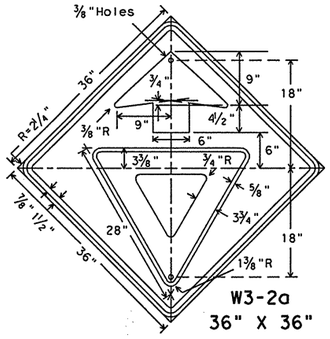

W3-2a
36" X 36"

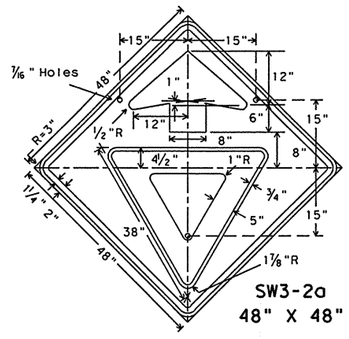

SW3-2a
48" X 48"

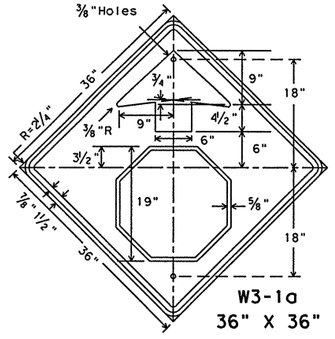

W3-1a
36" X 36"

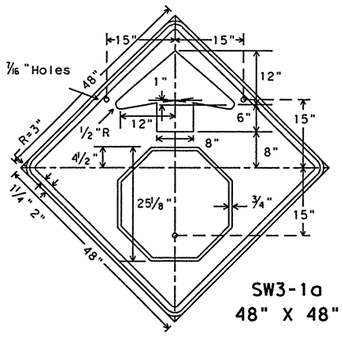

SW3-1a
48" X 48"

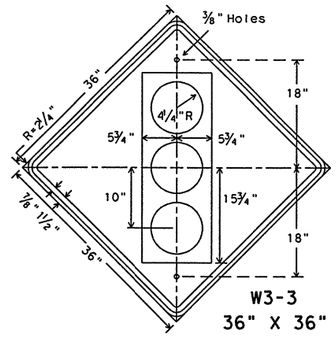

W3-3
36" X 36"

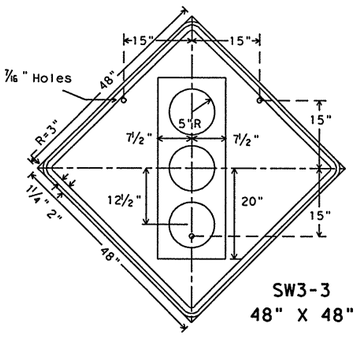

SW3-3
48" X 48"

Border and Arrow - Black
Symbol - Red Border Band on
White Background (Refl)
Background - Yellow Reflective

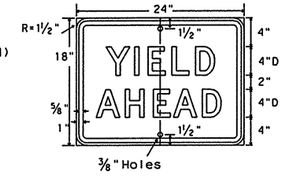

Border and Arrow - Black
Symbol - Red Border Band on
White Background (Refl)
Background - Yellow Reflective

Border and Arrow - Black
Symbol - White Border on
Red Background (Refl)
Background - Yellow Reflective

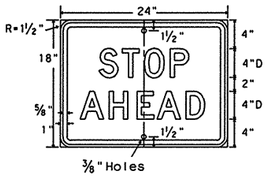

Border and Arrow - Black
Symbol - White Border on
Red Background (Refl)
Background - Yellow Reflective

Symbol and Border - Black
Top Circle - Red Reflective
Bottom Circle - Green Reflective
Background - Yellow Reflective

Symbol and Border - Black
Top Circle - Red Reflective
Bottom Circle - Green Reflective
Background - Yellow Reflective

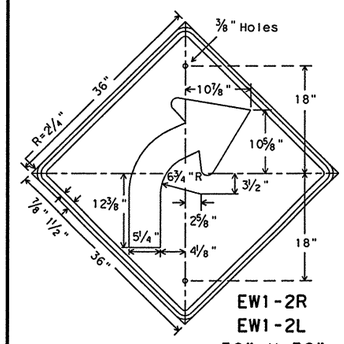

EW1-2R
EW1-2L
36" X 36"

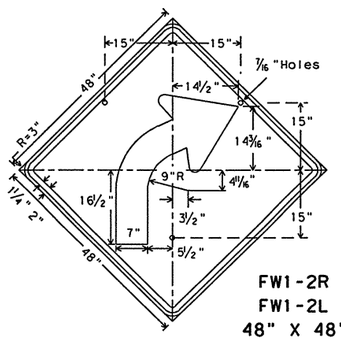

FW1-2R
FW1-2L
48" X 48"

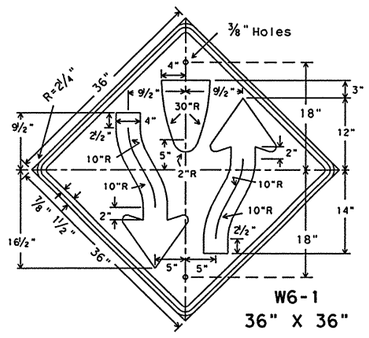

W6-1
36" X 36"

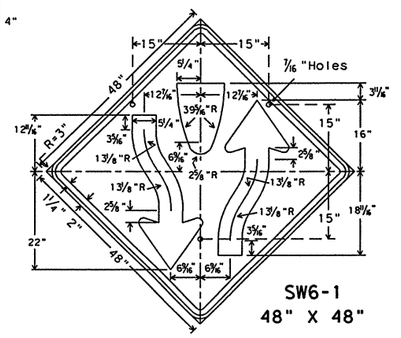

SW6-1
48" X 48"

SPECIFICATION REFERENCE TABLE	
MATERIALS AND TESTS DIVISION SPECIFICATIONS	
PLYWOOD SIGN BLANKS	D-9-7100
REFLECTIVE SHEETING, TYPE C (HIGH SPECIFIC INTENSITY)	D-9-8300
VINYL NON-REFLECTIVE DECAL SHEETING	D-9-8320

GENERAL NOTES:

The alphabets and lateral spacing between letters and numerals shall conform with the Texas "Manual on Uniform Traffic Control Devices for Streets and Highways", latest edition, and any approved changes thereto. Lateral spacing of text shall provide a balanced appearance. All materials shall conform to Department Specifications.

Legend (except where noted), shall be applied by screening process of black and/or transparent colored ink, cut-out black vinyl non-reflective decal sheeting and/or reflective sheeting or combination thereof. Background shall be yellow reflective sheeting (Type C).

Sign blanks shall be one piece 5/8 inch thick plywood (Type A), unless otherwise noted elsewhere in the plans.

ARROWHEAD DETAILS

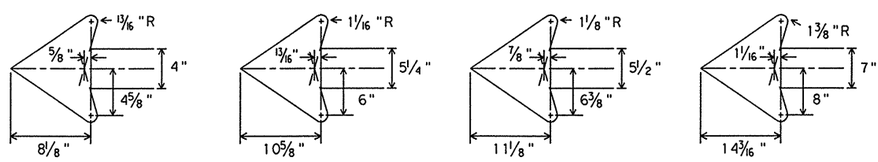

LEVELS DISPLAYED
1 2 3 4 5 6 7 8 9 10 11 12 13 14 15 16
17 18 19 20 21 22 23 24 25 26 27 28 29 30 31 32
33 34 35 36 37 38 39 40 41 42 43 44 45 46 47 48
49 50 51 52 53 54 55 56 57 58 59 60 61 62 63

DATE:
ACC: d58hplc/usr/d580504
FILE:

DN: LR
CK: CW
DW: DN
CK: MT

STANDARD PLANS
TEXAS DEPARTMENT OF TRANSPORTATION
Traffic Operations Division

WARNING SIGNS

W(1)-95

© TxDOT January 1981

DN: LR	CK: -	DW: DN	CK: -	MSG NO.:

REVISIONS	STATE DISTRICT	FEDERAL REGION	FEDERAL AID PROJECT	SHEET
1-85	PHARR	6		855
7-90	COUNTY		CONTROL	SECTION	JOB	HIGHWAY
8-95	HIDALGO		0255	08	091	US 281

9A

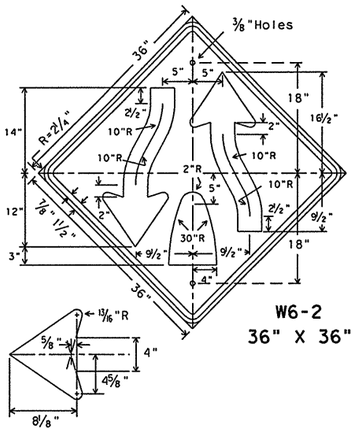

W6-2
36" X 36"

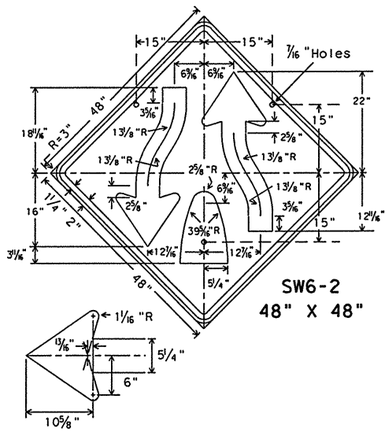

SW6-2
48" X 48"

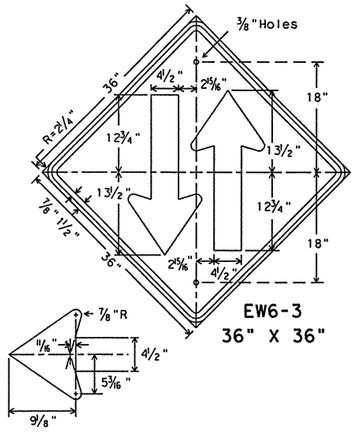

EW6-3
36" X 36"

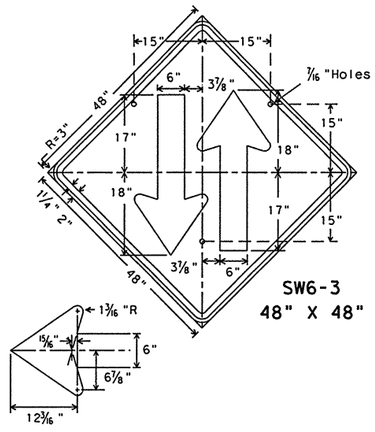

SW6-3
48" X 48"

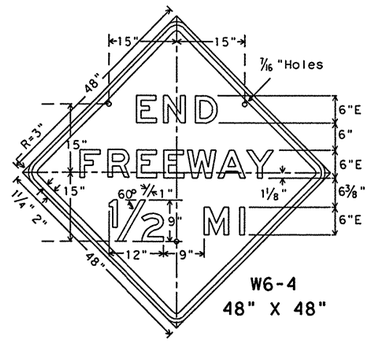

W6-4
48" X 48"

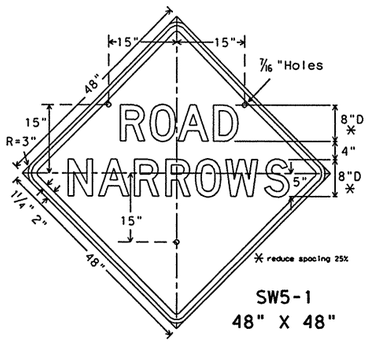

SW5-1
48" X 48"

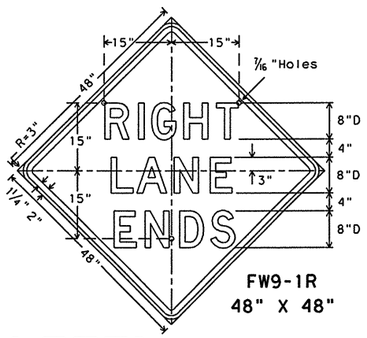

FW9-1R
48" X 48"

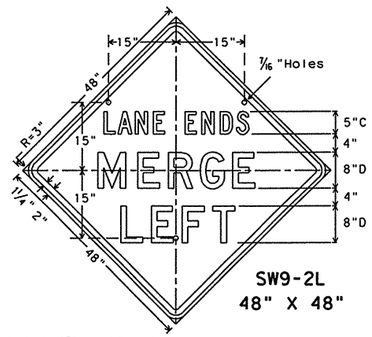

SW9-2L
48" X 48"

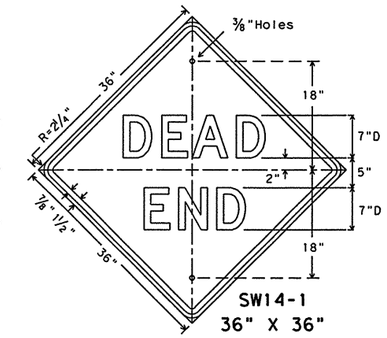

SW14-1
36" X 36"

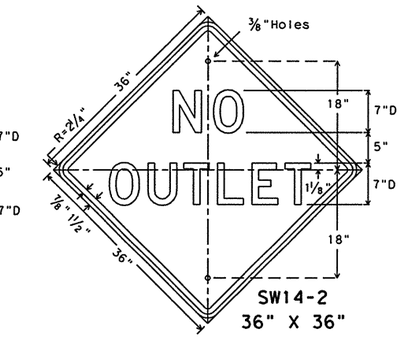

SW14-2
36" X 36"

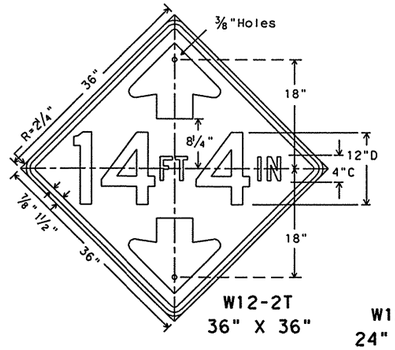

W12-2T
36" X 36"

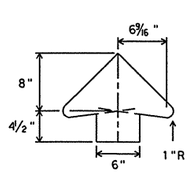

W12-2P
24" X 18"

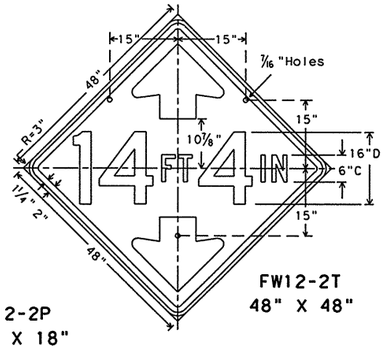

FW12-2T
48" X 48"

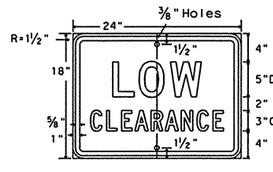

W12-2P
24" X 18"

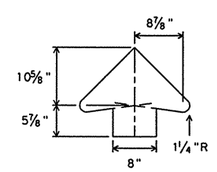

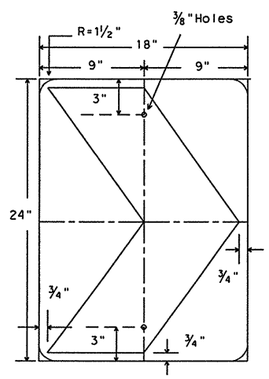

W1-8
18" X 24"

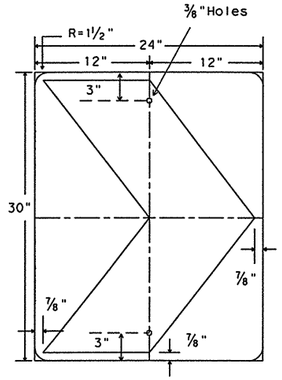

EW1-8
30" X 36"

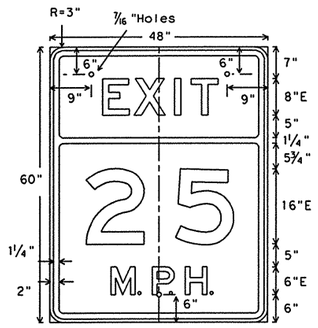

W13-2
48" X 60"

RAMP 8"E

W13-3
48" X 60"
(Same as W13-2 except
"EXIT replaced with "RAMP")

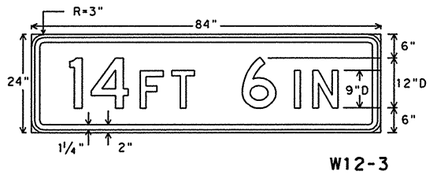

W12-3
84" X 24"

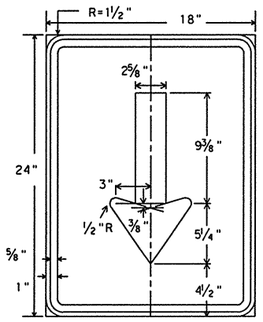

W12-3P
18" X 24"

SPECIFICATION REFERENCE TABLE

MATERIALS AND TESTS DIVISION SPECIFICATIONS	
PLYWOOD SIGN BLANKS	D-9-7100
REFLECTIVE SHEETING, TYPE C (HIGH SPECIFIC INTENSITY)	D-9-8300
VINYL NON-REFLECTIVE DECAL SHEETING	D-9-8320

GENERAL NOTES:

The alphabets and lateral spacing between letters and numerals shall conform with the Texas "Manual on Uniform Traffic Control Devices for Streets and Highways", latest edition, and any approved changes thereto. Lateral spacing of text shall provide a balanced appearance. All materials shall conform to Department Specifications.

Legend (except where noted), shall be black and applied by screening process, cut-out vinyl non-reflective decal sheeting or combination thereof. Background shall be yellow reflective sheeting (Type C).

Sign blanks shall be one piece 5/8 inch thick plywood (Type A), unless otherwise noted elsewhere in the plans.

STANDARD PLANS
TEXAS DEPARTMENT OF TRANSPORTATION
Traffic Operations Division

WARNING SIGNS

W(2)-95

©TxDOT January 1981

DN: LR	CK: -	DW: DN	CK: -	MSG NO.:

REVISIONS
1-82
1-85
7-90
8-95

STATE DISTRICT	FEDERAL REGION	FEDERAL AID PROJECT	SHEET
PHARR	6		856

COUNTY	CONTROL	SECTION	JOB	HIGHWAY
HIDALGO	0255	08	091	US 281

9B

LEVELS DISPLAYED
1 2 3 4 5 6 7 8 9 10 11 21 31 41 51 61
17 18 19 20 21 22 23 24 25 26 27 28 29 30 31 32
33 34 35 36 37 38 39 40 41 42 43 44 45 46 47 48
49 50 51 52 53 54 55 56 57 58 59 60 61 62 63

DATE:
ACC: d58nplc/usr/d580504
FILE:

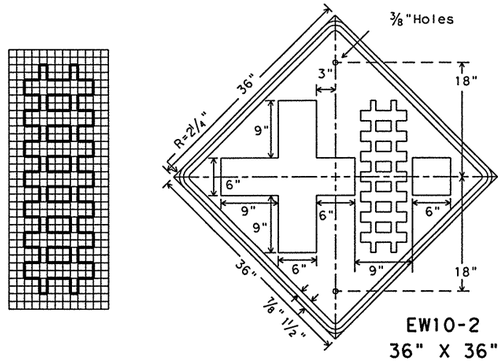

EW10-2
36" X 36"

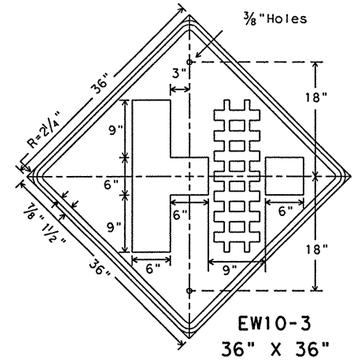

EW10-3
36" X 36"

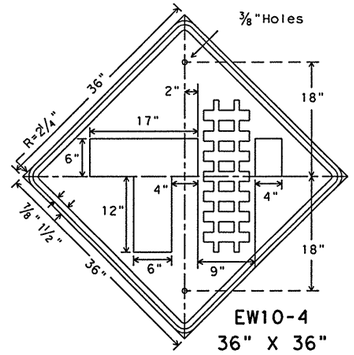

EW10-4
36" X 36"

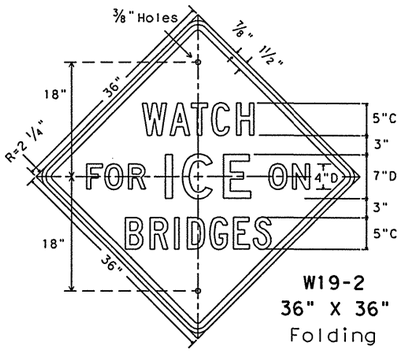

W19-2
36" X 36"
Folding

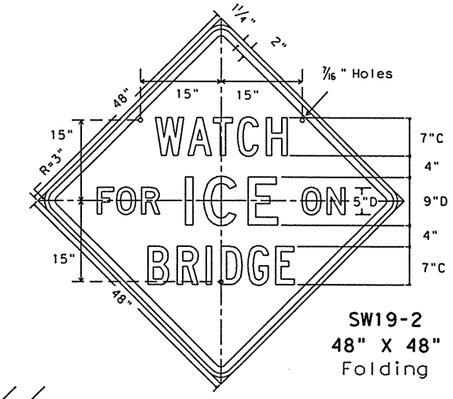

SW19-2
48" X 48"
Folding

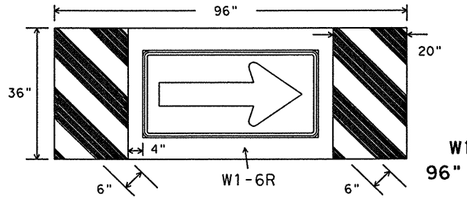

W1-9R
96" x 36"

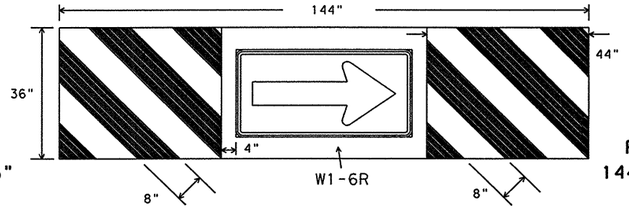

FW1-9R
144" x 36"

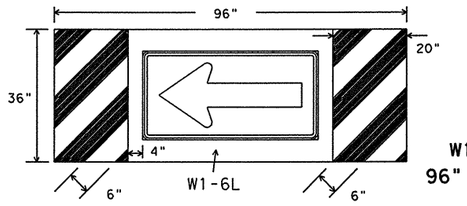

W1-9L
96" x 36"

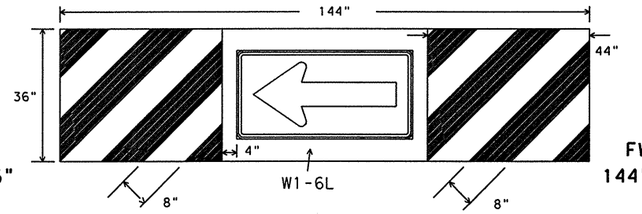

FW1-9L
144" x 36"

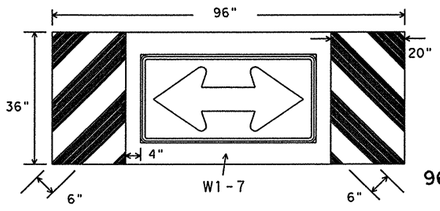

W1-10
96" x 36"

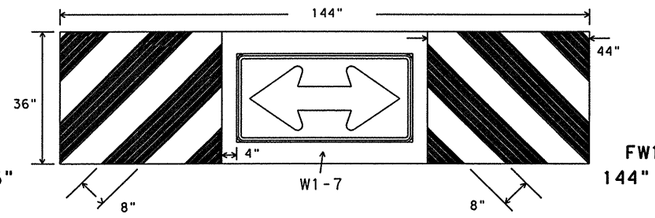

FW1-10
144" x 36"

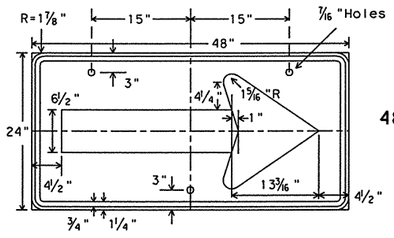

W1-6
48" X 24"

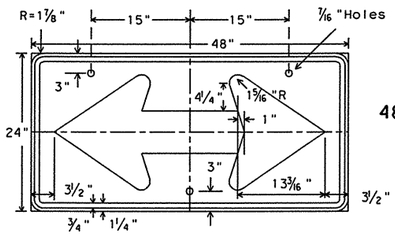

W1-7
48" X 24"

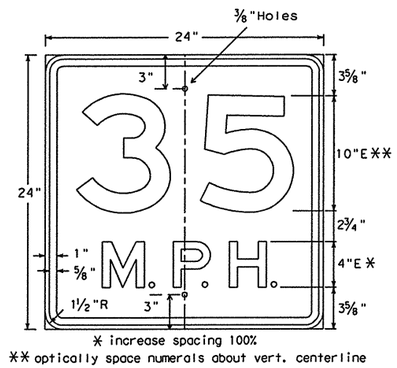

* increase spacing 100%
** optically space numerals about vert. centerline

SW13-1
24" X 24"

Speed value to be determined at the site by the Engineer.

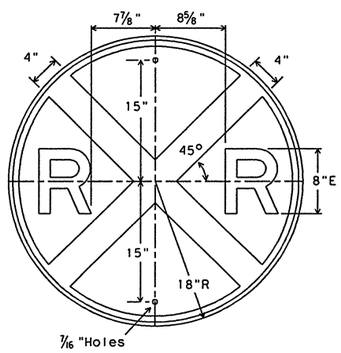

W10-1
36" Diameter

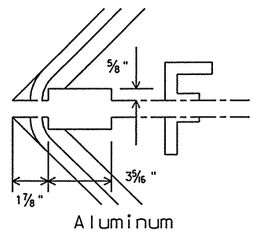

Aluminum

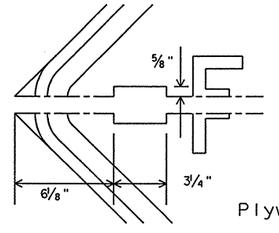

Plywood

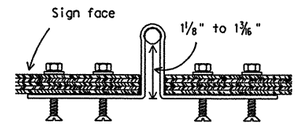

Folding Sign Hinge Details

Aluminum folding signs shall use 3" flat hinges, three per sign. The hinge slot on each half of sign is 5/8" deep by 3 5/16" wide. The sign halves are seperated by 3/32" when hinges are installed to the back of the sign with four 3/16" pop rivets. Location of hinges on the sign are as shown on above detail.

Plywood folding signs shall use 6" strap hinges, three per sign. The hinge slot on each half of sign is 5/8" deep by 3 1/4" wide. The hinges are bent with tapered side of holes on the external side, and attached to the back of sign with pivot extending through to front of sign. Attachment of each hinge will be with four each of 10x24x1" flat head screws with a tapered head shank, 5/16"x 3/16" flat washers and 3/16" bolt x 7/16" wrench hex nuts. Hinge bending and location on sign are as shown on above details.

SPECIFICATION REFERENCE TABLE
MATERIALS AND TESTS DIVISION SPECIFICATIONS

PLYWOOD SIGN BLANKS	D-9-7100
ALUMINUM SIGN BLANKS	D-9-7110

Square Ft.	Min. Thickness
Less than 7.5	0.080
7.5 to 15	0.100
Greater than 15	0.125

REFLECTIVE SHEETING, TYPE C (HIGH SPECIFIC INTENSITY)	D-9-8300
VINYL NON-REFLECTIVE DECAL SHEETING	D-9-8320

GENERAL NOTES:

The alphabets and lateral spacing between letters and numerals shall conform with the Texas "Manual on Uniform Traffic Control Devices for Streets and Highways", latest edition, and any approved changes thereto. Lateral spacing of text shall provide a balanced appearance. All materials shall conform to Department Specifications.

Legend (except where noted), shall be black and applied by screening process, cut-out vinyl non-reflective decal sheeting or combination thereof. Background shall be yellow reflective sheeting (Type C).

Sign blanks shall be fabricated as specified in the plans of one piece 5/8 inch thick plywood (Type A) or one piece aluminum alloy (Type A) of the approved thickness.

Large arrow signs W1-9, W1-10, FW1-9 and FW1-10 shall be composed of a standard W1-6 or W1-7 sign attached directly to the background material.

STANDARD PLANS
TEXAS DEPARTMENT OF TRANSPORTATION
Traffic Operations Division

WARNING SIGNS

W(3)-95

© TxDOT July 1990

DN: LR	CK:	DW: DN	CK:	MEG NO.:

REVISIONS
8-90
8-95

STATE DISTRICT	FEDERAL REGION	FEDERAL AID PROJECT				SHEET
PHARR	6					857
COUNTY		CONTROL	SECTION	JOB	HIGHWAY	
HIDALGO		0255	08	091	US 281	

9C

DN: LR
CK: CW
DW: DN
CK: MT

DATE:
FILE: d58hplc/usr/d580504

LEVELS DISPLAYED
1 2 3 4 5 6 7 8 9 10 11 12 13 41 51 61
17 18 19 20 21 22 23 24 25 26 27 28 29 30 31 32
33 34 35 36 37 38 39 40 41 42 43 44 45 46 47 48
49 50 51 52 53 54 55 56 57 58 59 60 61 62 63

DISCLAIMER
The use of this standard is governed by the "Texas Engineering Practice Act". No warranty of any kind is made by TxDOT for any purpose whatsoever. TxDOT assumes no responsibility for the conversion of this standard to other formats or for incorrect results or damages resulting from its use.

SIGN SUPPORT DESCRIPTIVE CODES

(Descriptive Codes correspond to project estimate and quantities sheets)

SM RD SGN ASSM TY XXXXX(X)XX(X-XXXX)

Post Type

FRP = Fiberglass Reinforced Plastic Pipe (see SMD(FRP))
TWT = Thin-Walled Tubing (see SMD(TWT))
10BWG = 10 BWG Tubing (see SMD(SLIP-1) to SMD(SLIP-3))
S80 = Schedule 80 Pipe (see SMD(SLIP-1) to SMD(SLIP-3))

Number of Posts (1 or 2)

Anchor Type

UA = Universal Anchor - Concreted (see SMD(FRP) and SMD(TWT))
UB = Universal Anchor - Bolted down (see SMD(FRP) and SMD(TWT))
WA = Wedge Anchor - (see SMD(TWT))
SA = Slipbase - Concreted (see SMD(SLIP-1) to SMD(SLIP-3))
SB = Slipbase - Bolted Down (see SMD(SLIP-1) to SMD(SLIP-3))

Sign Mounting Designation

P = Prefab. "Plain" (see SMD(SLIP-1) to (3), SMD(TWT), SMD(FRP))
T = Prefab. "T" (see SMD(SLIP-1) to (3), SMD(TWT))
U = Prefab. "U" (see SMD(SLIP-1) to (3))
IF REQUIRED
1EXT or 2EXT = Number of Extensions (see SMD(SLIP-1) to (3), SMD(TWT))
BM = Extruded Wind Beam (see SMD(SLIP-1) to (3))
WC = 1.12 #/ft Wing Channel (see SMD(SLIP-1) to (3))
EXAL = Extruded Aluminum sign panels (see SMD(SLIP-3))

REQUIRED CLEARANCE FOR BREAKAWAY SUPPORT

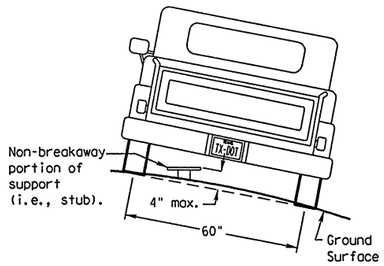

To avoid vehicle undercarriage snagging, any substantial remains of a breakaway support, when it is broken away, should not project more than 4 inches above a 60-inch chord (i.e., typical space between wheel paths).

No more than 2 sign posts should be located within a 7 ft. circle.

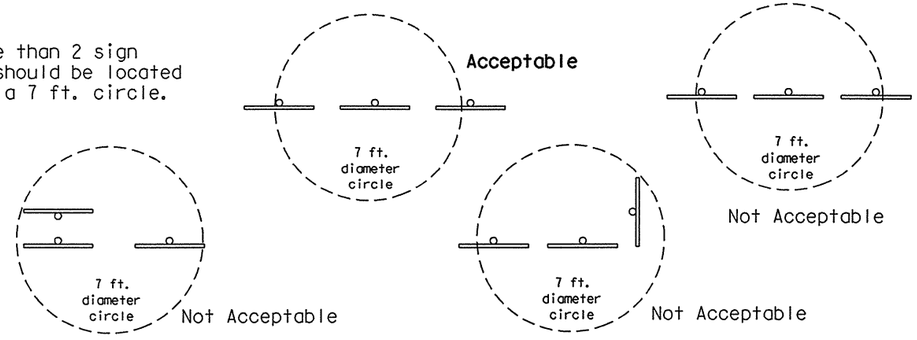

SIGN LOCATION

PAVED SHOULDERS

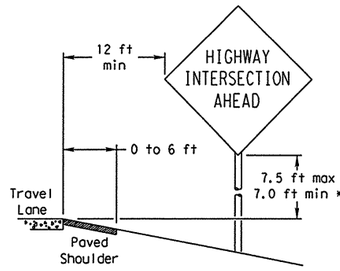

LESS THAN 6 FT. WIDE

When the shoulder is 6 ft. or less in width, the sign must be placed at least 12 ft. from the edge of the travel lane.

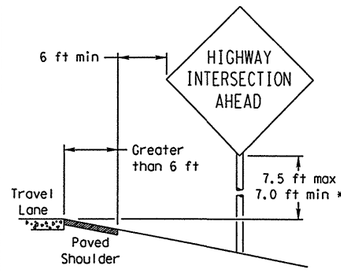

GREATER THAN 6 FT. WIDE

When the shoulder is greater than 6 ft in width, the sign must be placed at least 6 ft. from the edge of the shoulder.

BEHIND BARRIER

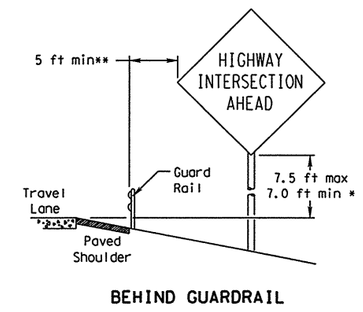

BEHIND GUARDRAIL

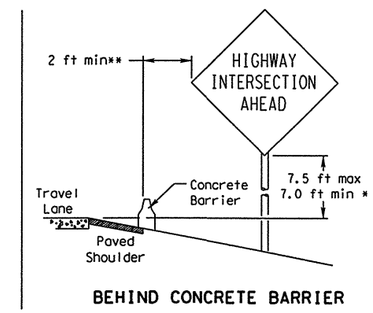

BEHIND CONCRETE BARRIER

**Sign clearance based on distance required for proper guard rail or concrete barrier performance.

T-INTERSECTION

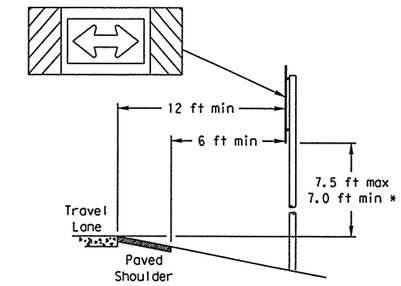

When this sign is needed at the end of a two-lane, two way roadway, the right edge of the sign should be in line with the centerline of the roadway. Place as close to ROW as practical.

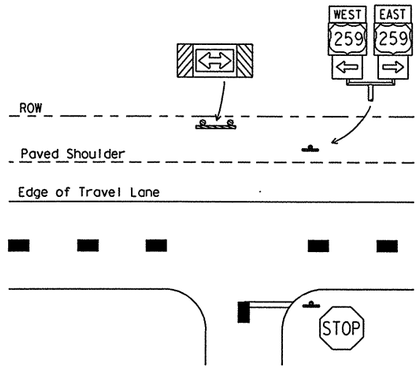

* Signs shall be mounted using the following condition that results in the greatest sign elevation:

(1) a minimum of 7 to a maximum of 7.5 feet above the edge of the travel lane or

(2) a minimum of 7 to a maximum of 7.5 feet above the grade at the base of the support when sign is installed on the backslope.

The maximum values may be increased when directed by the Engineer.

See the Traffic Operations Division website for detailed drawings of sign clamps, Texas Universal Triangular Slipbase System components and Wedge Anchor System components.

The website address is:
ftp://ftp.dot.state.tx.us/pub/txdot-info/cmd/cserve/standard/traffic/slip.pdf

TYPICAL SIGN ATTACHMENT DETAIL

Single Signs

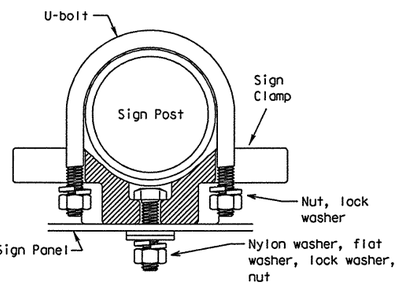

Bolts used to mount sign panels to the clamp are 5/16-18 UNC galvanized square head with nut, nylon washer, flat washer and lock washer. The bolt length is 1 inch for aluminum and 1 3/4 inch for plywood signs.

When two sign clamps are used to mount signs back-to-back, use a 5/16-18 UNC galvanized hex head per ASTM A307 with nut and helical-spring lock washer. The approximate bolt lengths for various post sizes and sign clamp types are given in the table at right. The bolt length may need to be adjusted depending upon field conditions.

Sign clamps may be either the specific size clamp or the universal clamp.

Back-to-Back Signs

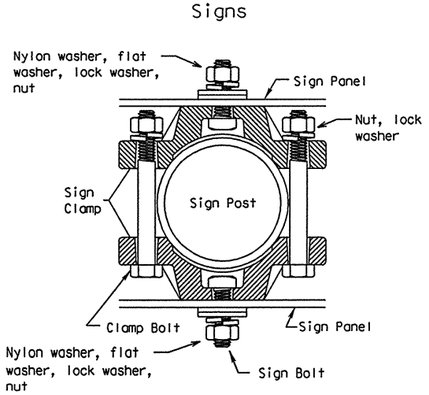

Pipe Diameter	Approximate Bolt Length	
	Specific Clamp	Universal Clamp
2" nominal	3"	3 or 3 1/2"
2 1/2" nominal	3 or 3 1/2"	3 1/2 or 4"
3" nominal	3 1/2 or 4"	4 1/2"

SIGNS WITH PLAQUES

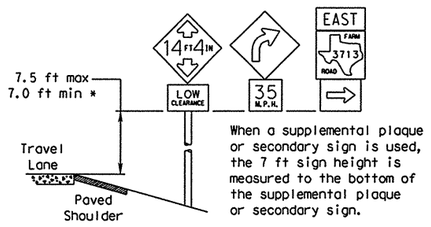

When a supplemental plaque or secondary sign is used, the 7 ft sign height is measured to the bottom of the supplemental plaque or secondary sign.

MEDIANS

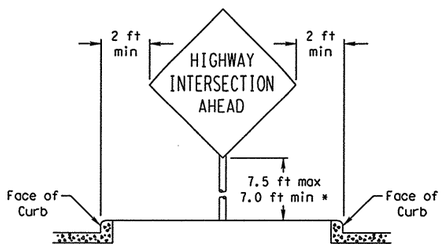

RESTRICTED RIGHT-OF-WAY

(When 6 ft min. is not possible.)

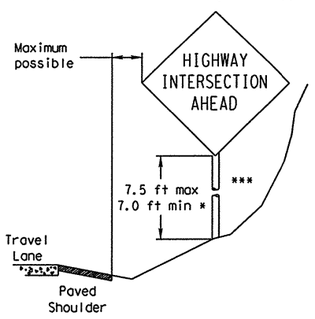

Right-of-way restrictions may be created by rocks, water, vegetation, forest, buildings, a narrow island, or other factors.

In situations where a lateral restriction prevents the minimum horizontal clearance from the edge of the travel lane, signs should be placed as far from the travel lane as practical.

*** Post may be shorter if protected by guardrail or if Engineer determines the post could not be hit due to extreme slope.

LEVELS DISPLAYED
1 2 3 4 5 6 7 8 9 10 11 12 13 14 15 16
17 18 19 20 21 22 23 24 25 26 27 28 29 30 31 32
33 34 35 36 37 38 39 40 41 42 43 44 45 46 47 48
49 50 51 52 53 54 55 56 57 58 59 60 61 62 63

ACC:

STANDARD PLANS
TEXAS DEPARTMENT OF TRANSPORTATION
Traffic Operations Division

SIGN MOUNTING DETAILS SMALL ROADSIDE SIGNS GENERAL NOTES & DETAILS

SMD(GEN)-02

©TxDOT July 2002	DN: BAS	CK: GRB	DW: FDN	CK: CAL

REVISIONS	STATE DISTRICT	FEDERAL REGION	FEDERAL AID PROJECT	SHEET
	PHARR	6		858

COUNTY	CONTROL	SECTION	JOB	HIGHWAY
HIDALGO	0255	08	091	US 281

DISCLAIMER
The use of this standard is governed by the "Texas Engineering Practice Act". No warranty of any kind is made by TxDOT for any purpose whatsoever. TxDOT assumes no responsibility for the conversion of this standard to other formats or for incorrect results or damages resulting from its use.

Texas Universal Triangular Slipbase System

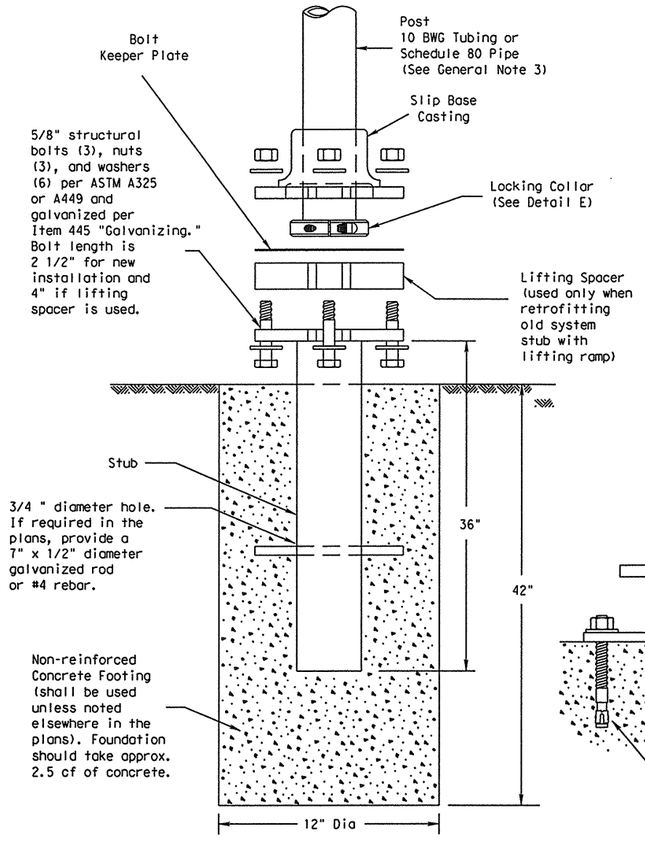

SM RD SGN ASSM TY XXXXX(X)SA(X-XXXX)

Concrete anchor consists of 5/8" diameter stud bolt with UNC series bolt threads on the upper end. Heavy hex nut per ASTM A563, and hardened washer per ASTM F436. The stud bolt shall have minimum yield and ultimate tensile strengths of 50 and 75 KSI, respectively. Nuts, bolts and washers shall be galvanized per Item 445, "Galvanizing." Top of bolt shall extend at least flush with top of the nut when installed. The anchor, when installed in 4000 psi normal-weight concrete with a 5 1/2" minimum embedment, shall have a minimum allowable tension and shear of 3900 and 3100 psi, respectively. Adhesive type anchors shall have stud bolts installed with Type III epoxy per DMS-6100, "Epoxies and Adhesives." Adhesive anchors may be loaded after adequate epoxy cure time, per the manufacturer's recommendations.

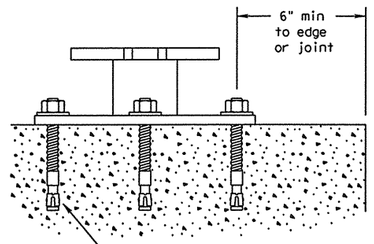

SM RD SGN ASSM TY XXXXX(X)SB(X-XXXX)

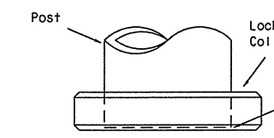

Detail E

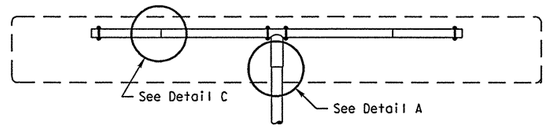

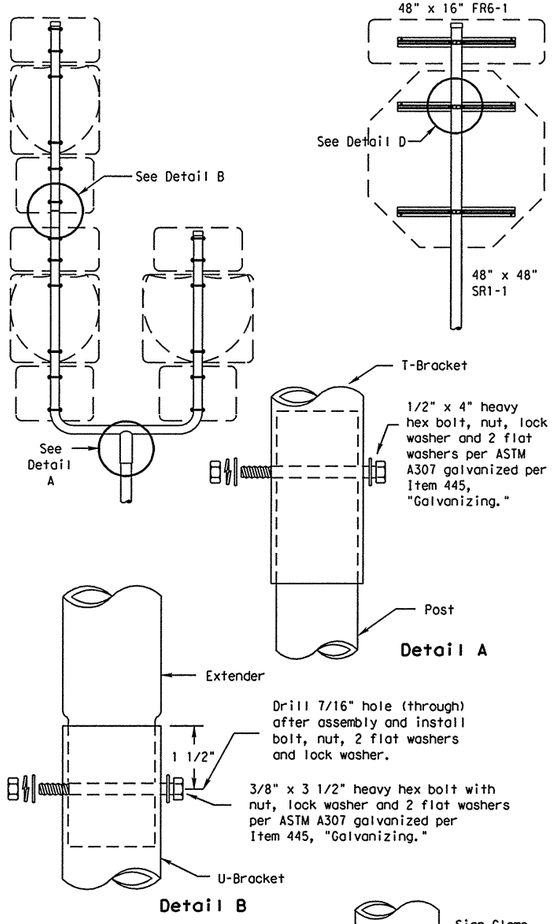

Detail A

Detail B

GENERAL NOTES:

1. Finished components, except posts (10 BWG Tubing and Schedule 80 Pipe) and clamps, shall be permanently marked to indicate manufacturer. Method, design, and location of marking are subject to approval of the TxDOT Traffic Standards Engineer.
2. Except for posts (10 BWG Tubing and Schedule 80 Pipe), clamps, nuts and bolts, all components shall be prequalified. A list of prequalified vendors may be obtained from the TxDOT Traffic Standards Engineer, or the Traffic Operations Division website. The website address is: http://www.dot.state.tx.us/insdtdot/orgchart/trf/trfeng/
3. Material used as post with this system shall conform to the following specifications:
   10 BWG Tubing (2.875" outside diameter)
   - 0.134" nominal wall thickness
   - Seamless or electric-resistance welded steel tubing or pipe
   - Steel shall be HSLAS Gr 55 per ASTM A1011 or ASTM A1008
   - Other steels may be used if they meet the following:
     - 55,000 PSI minimum yield strength
     - 70,000 PSI minimum tensile strength
     - 20% minimum elongation in 2"
   - Wall thickness (uncoated) shall be within the range of 0.122" to 0.138"
   - Outside diameter (uncoated) shall be within the range of 2.867" to 2.883"
   - Galvanization per ASTM A123 or ASTM A653 G210. For precoated steel tubing (ASTM A653), recoat tube outside diameter weld seam by metallizing with zinc wire per ASTM B833.

   Schedule 80 Pipe (2.875" outside diameter)
   - 0.276" nominal wall thickness
   - Steel tubing per ASTM A500 Gr C
   - Other seamless or electric-resistance welded steel tubing or pipe with equivalent outside diameter and wall thickness may be used if they meet the following:
     - 46,000 PSI minimum yield strength
     - 62,000 PSI minimum tensile strength
     - 21% minimum elongation in 2"
   - Wall thickness (uncoated) shall be within the range of 0.248" to 0.304"
   - Outside diameter (uncoated) shall be within the range of 2.855" to 2.895"
   - Galvanization per ASTM A123
4. See the Traffic Operations Division website for detailed drawings of sign clamps and Texas Universal Triangular Slipbase System components. The website address is: ftp://ftp.dot.state.tx.us/pub/txdot-info/cmd/cserve/standard/traffic/slip.pdf
5. Sign supports shall not be spliced except where shown. Sign support posts shall not be spliced.

ASSEMBLY PROCEDURE

Foundation

1. Prepare 12-inch diameter by 42-inch deep hole. If solid rock is encountered, the depth of the foundation may be reduced such that it is embedded a minimum of 18 inches into the solid rock.
2. Thoroughly wet and mix concrete in a container. Place concrete into hole until it is approximately flush with the ground.
3. Push the pipe end of the slip base stub into the center of the concrete. Rotate the stub back and forth while pushing it down into the concrete to assure good contact between the concrete and stub. Continue to work the stub into the concrete until it is between 2 to 4 inches above the ground. The upper value assures that an impacting vehicle should not snag on the footing. The lower value provides clearance for assembly.
4. Plumb the stub by using a torpedo level on the slip plate. Allow concrete adequate time to set.

Support

1. Cut support so that the bottom of the sign will be 7 to 7.5 feet above the edge of the travelway (i.e., edge of the closest lane) when slip plate is below the edge of pavement or 7 to 7.5 feet above slip plate when the slip plate is above the edge of the travelway. The cut shall be plumb and straight.
2. Attach sign to support using connections shown. When multiple signs are installed on the same support, ensure the minimum clearance between each sign is maintained. See SMD(SLIP-2) for clearances based on sign types.
3. Slide the slipbase casting onto the lower end of the sign support.
4. Drive a chisel or a flat-blade screwdriver into the cut on the locking collar to slightly pry the collar open. Slide the collar onto the end of the pipe so the edge of the pipe is between the face of the locking collar and the end of the edge bevel. A dead-blow hammer may be useful in positioning the collar correctly. Remove the tool used to pry the collar open. Torque the allen bolt to 60 foot-pounds (720 inch-pounds). DO NOT OVERTIGHTEN.
5. Place and align bolt keeper plate on slip plate and lift assembled sign and support into position.
6. Place one washer on each bolt and insert them through keeper plate and the notches on the slip plate and casting. After inserting each bolt, place one washer and a nut on the bolt and hand-tighten all three.
7. The breakaway features of this system will work when all three bolts are tightened between 40 to 80 foot-pounds (480 to 960 inch-pounds). The Engineer shall determine the appropriate bolt torque for each project. Tighten all bolts by working around the support in approximately 10 foot-pound increments to assure a balanced tension in the bolts. All three bolts shall be torqued the same. DO NOT OVERTIGHTEN.

ROLL PIN (Optional)

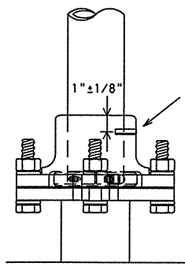

If shown in plans, the Engineer may require the roll pin to be installed to reduce possible sign rotation.

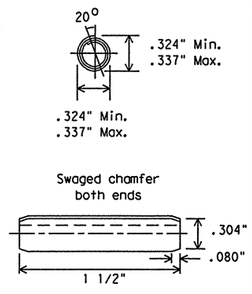

DOUBLE ROLL PIN DETAIL

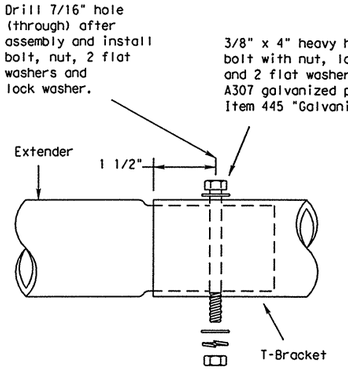

Detail C

Splices shall only be allowed behind the sign substrate.

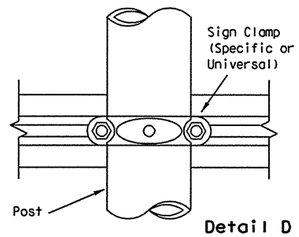

Detail D

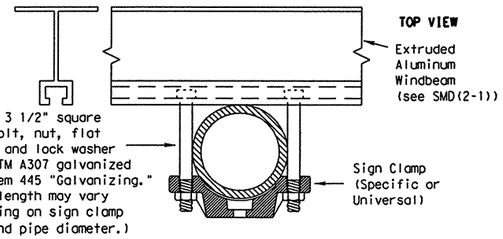

LEVELS DISPLAYED
1 2 3 4 5 6 7 8 9 10 11 12 13 14 15 16
17 18 19 20 21 22 23 24 25 26 27 28 29 30 31 32
33 34 35 36 37 38 39 40 41 42 43 44 45 46 47 48
49 50 51 52 53 54 55 56 57 58 59 60 61 62 63

ACC:

STANDARD PLANS
Texas Department of Transportation
Traffic Operations Division

SIGN MOUNTING DETAILS SMALL ROADSIDE SIGNS TRIANGULAR SLIPBASE SYSTEM

SMD(SLIP-1)-02

© TxDOT July 2002	DN: BAS	CK: GRB	DW: FDN	CK: CAL
REVISIONS	STATE DISTRICT: PHARR	FEDERAL REGION: 6	FEDERAL AID PROJECT	SHEET: 859
	COUNTY: HIDALGO	CONTROL: 0255	SECTION: 08	JOB: 091	HIGHWAY: US 281

DISCLAIMER
The use of this standard is governed by the "Texas Engineering Practice Act". No warranty of any kind is made by TxDOT for any purpose whatsoever. TxDOT assumes no responsibility for the conversion of this standard to other formats or for incorrect results or damages resulting from its use.

LEVELS DISPLAYED

1	2	3	4	5	6	7	8	9	10	11	12	13	14	15	16
17	18	19	20	21	22	23	24	25	26	27	28	29	30	31	32
33	34	35	36	37	38	39	40	41	42	43	44	45	46	47	48
49	50	51	52	53	54	55	56	57	58	59	60	61	62	63	

ACC:

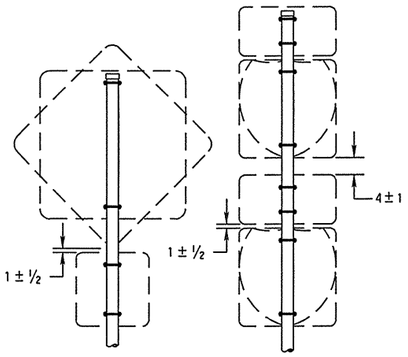

SM RD SGN ASSM TY XXXXX(1)XX(P)

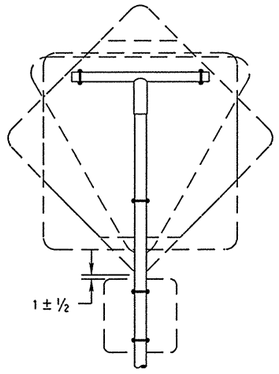

SM RD SGN ASSM TY XXXXX(1)XX(T)

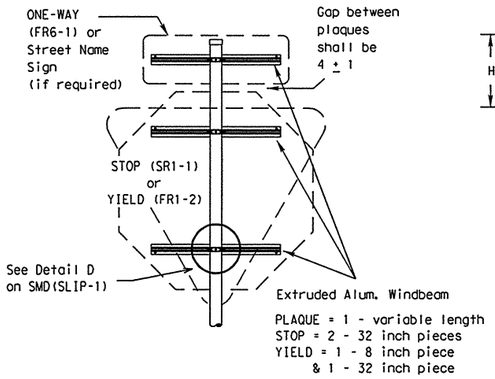

SM RD SGN ASSM TY XXXXX(1)XX(P-BM)

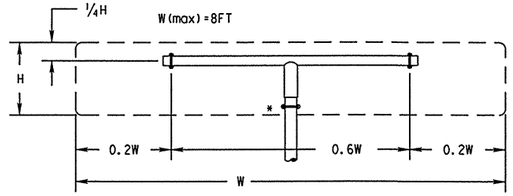

SM RD SGN ASSM TY XXXXX(1)XX(T)
(* - See Note 13)

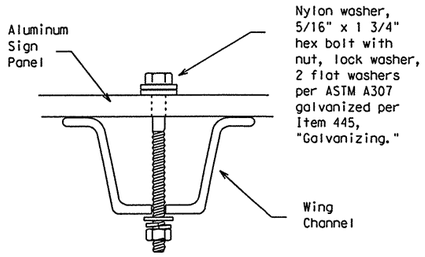

Top View

Detail A

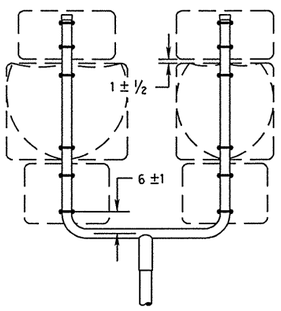

SM RD SGN ASSM TY XXXXX(1)XX(U)

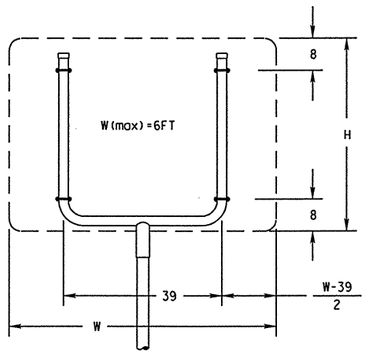

SM RD SGN ASSM TY XXXXX(1)XX(U)

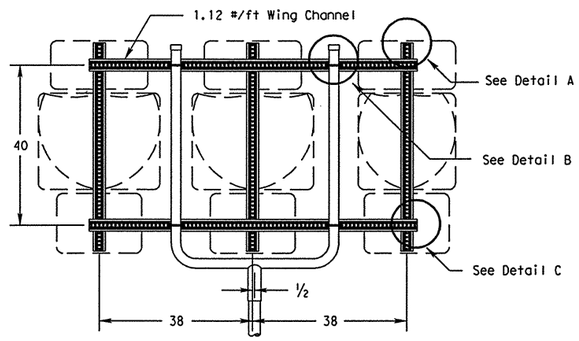

SM RD SGN ASSM TY XXXXX(1)XX(U-WC)
(See Note 12)

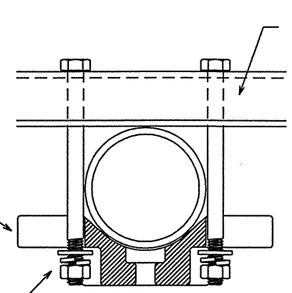

Top View

Detail B

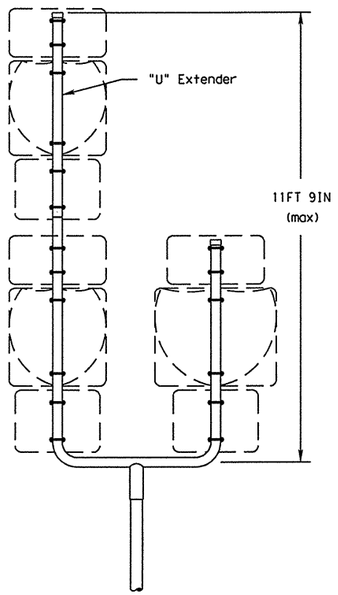

SM RD SGN ASSM TY S80(1)XX(U-1EXT)

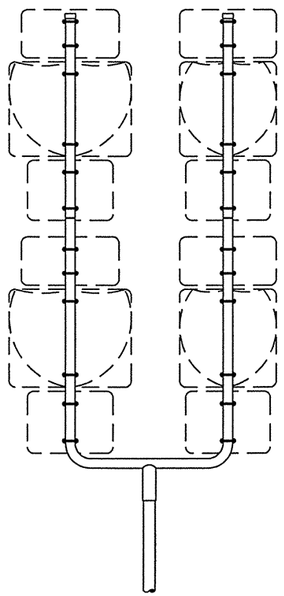

SM RD SGN ASSM TY S80(1)XX(U-2EXT)

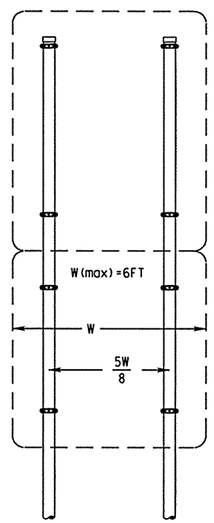

SM RD SGN ASSYM TY XXXXX(2)XX(P)

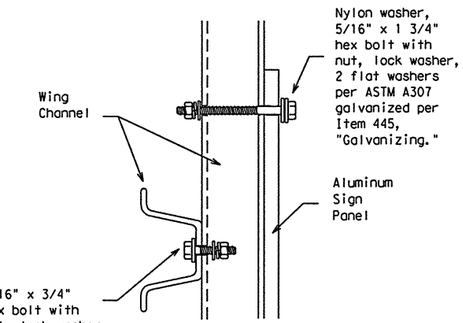

Side View

Detail C

GENERAL NOTES:

1.

SIGN SUPPORT	# OF POSTS	MAX. SIGN AREA
10 BWG	1	16 SF
10 BWG	2	32 SF
Sch 80	1	32 SF
Sch 80	2	64 SF

2. The Engineer may require that a Schedule 80 post be used in place of a 10 BWG where a sign height is abnormally high due to a fill slope.
3. Sign supports shall not be spliced except where shown. Sign support posts shall not be spliced.
4. Aluminum sign blanks shall conform to Departmental Material Specifications DMS-7110 and shall have the following minimum thicknesses: 0.080 for signs less than 7.5 sq. ft., 0.100 for signs 7.5 to 15 sq. ft., and 0.125 for signs greater than 15 sq. ft.
5. Plywood signs shall conform to Departmental Material Specification DMS-7100 and shall be 5/8 inches thick.
6. Signs that require specific supports due to reasons in addition to windloading are indicated on the "REQUIRED SUPPORT" table on this sheet.
7. For horizontal rectangular signs, T-brackets are used for signs 24 inches or less in height. U-brackets are used for signs of greater height.
8. When two triangular slipbase supports are used to support a single sign, they shall not be "rigidly" connected to each other except through the sign panel. This will allow each support to act independently when impacted by an errant vehicle.
9. Wing channel shall meet ASTM A 1011 SS Gr 50 and be galvanized per ASTM A 123.
10. Excess pipe, winged channel, or windbeam shall be cut off so that it does not extend beyond the sign panel (i.e., excess support shall not be visible when the sign is viewed from the front.) Repair galvanized coating at cut support ends per Item 445, "Galvanizing."
11. The Engineer may allow the use of an expanded foam foundation. A list of approved suppliers of expanding foam may be obtained from the Traffic Operations Division (TRF) or from the TRF website. The website address is: http://www.dot.state.tx.us/insdtdot/orgchart/trf/trfeng/
12. Additional route markers may be added vertically, provided the total sign area does not exceed the maximum allowable amount per Note 1.
13. Additional sign clamp required on the "T-bracket" post for 24 inch high signs. Place the clamp 3 inches above bottom of sign when possible.

REQUIRED SUPPORT

	SIGN DESCRIPTION	SUPPORT
Regulatory	48-inch STOP sign (SR1-1)	TY 10BWG(1)XX(T) TY 10BWG(1)XX(P-BM)
	60-inch YIELD sign (FR1-2)	TY 10BWG(1)XX(T) TY 10BWG(1)XX(P-BM)
	48x16-inch ONE-WAY sign (FR6-1)	TY 10BWG(1)XX(T) TY 10BWG(1)XX(P-BM)
	36x48, 48x36, and 48x48-inch signs	TY 10BWG(1)XX(T)
	48x60-inch signs	TY S80(1)XX(T)
Warning	48x48-inch signs (diamond or square)	TY 10BWG(1)XX(T)
	48x60-inch signs	TY S80(1)XX(T)
	48-inch Advance School X-ing sign (SS1-1)	TY 10BWG(1)XX(T)
	48-inch School X-ing sign (SS2-1)	TY 10BWG(1)XX(T)
	Large Arrow sign (W1-6 & W1-7)	TY 10BWG(1)XX(T)

STANDARD PLANS
Texas Department of Transportation
Traffic Operations Division

SIGN MOUNTING DETAILS SMALL ROADSIDE SIGNS TRIANGULAR SLIPBASE SYSTEM

SMD(SLIP-2)-02

©TxDOT July 2002

DN: BAS	CK: GRB	DW: FDN	CK: CAL

REVISIONS	STATE DISTRICT	FEDERAL REGION	FEDERAL AID PROJECT	SHEET
	PHARR	6		860

COUNTY	CONTROL	SECTION	JOB	HIGHWAY
HIDALGO	0255	08	091	US 281

26C

DISCLAIMER
The use of this standard is governed by the "Texas Engineering Practice Act". No warranty of any kind is made by TxDOT for any purpose whatsoever. TxDOT assumes no responsibility for the conversion of this standard to other formats or for incorrect results or damages resulting from its use.

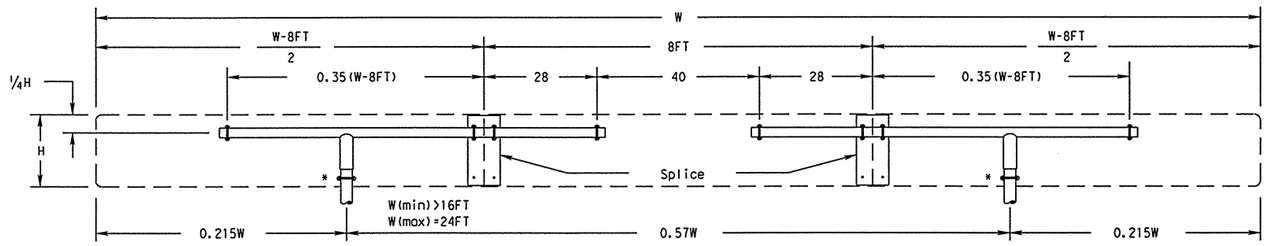

SM RD SGN ASSM TY XXXXX(2)XX(T-2EXT)
(* - See Note 13)

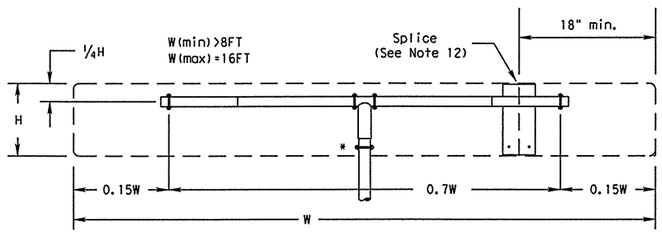

SM RD SGN ASSM TY XXXXX(1)XX(T-2EXT)
(* - See Note 13)

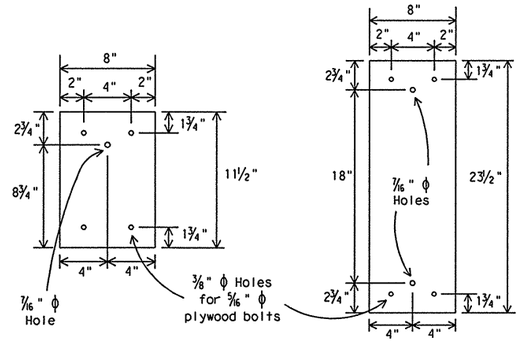

Splice Plates

Splice plates shall be 1/8 " steel plate (ASTM A36) or 1/8 " aluminum plate (ASTM B209 ALLOY 6061-T6 or 5052-H38). Steel shall be galvanized in accordance with ASTM A123.

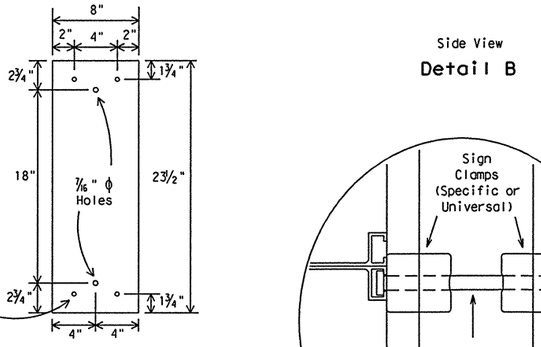

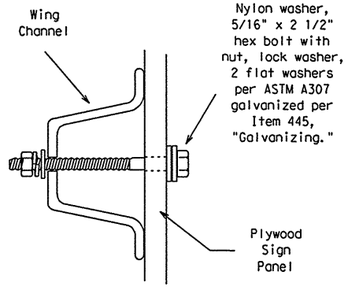

Side View
Detail B

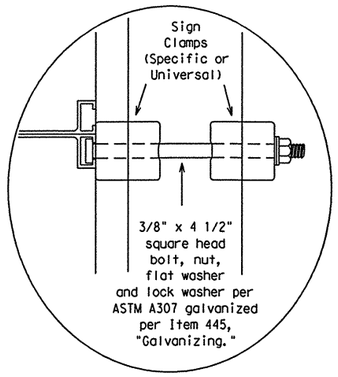

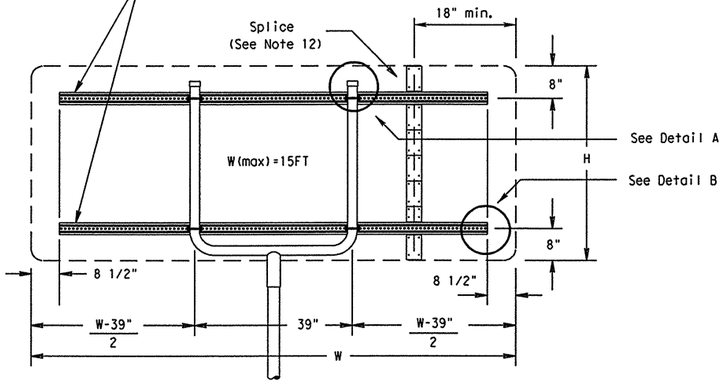

SM RD SGN ASSM TY XXXXX(1)XX(U-XX)

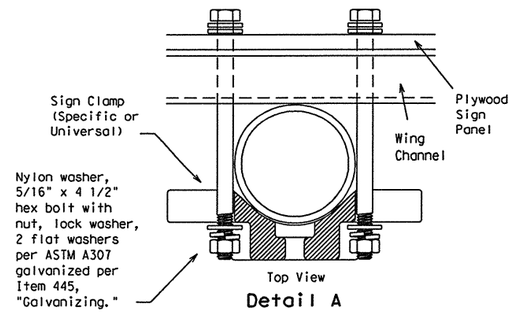

Detail A

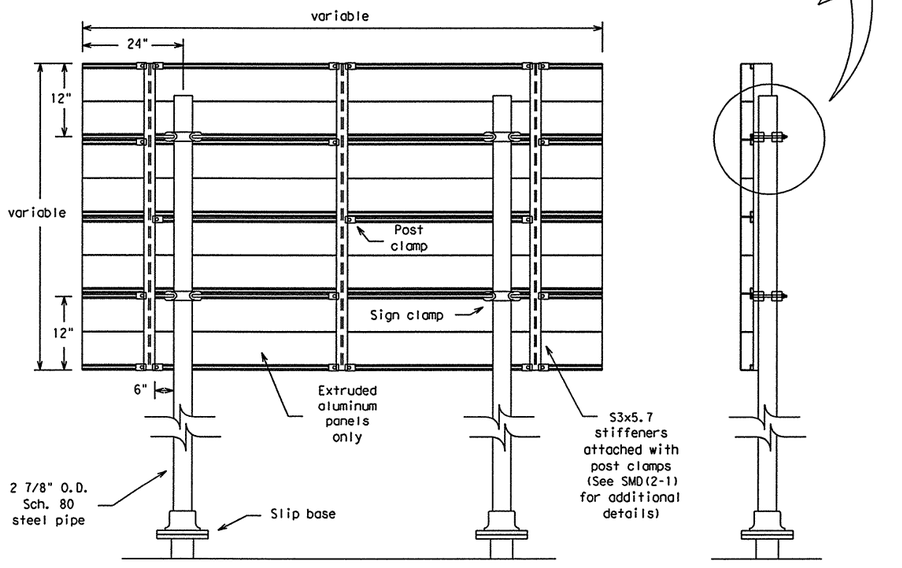

Typical Extruded Aluminum Sign Mount

SM RD SGN ASSM TY S80(2)XX(P-EXAL)

GENERAL NOTES:

SIGN SUPPORT	# OF POSTS	MAX. SIGN AREA
10 BWG	1	16 SF
10 BWG	2	32 SF
Sch 80	1	32 SF
Sch 80	2	64 SF

2. The Engineer may require that a Schedule 80 post be used in place of a 10 BWG where a sign height is abnormally high due to a fill slope.
3. Sign supports shall not be spliced except where shown. Sign support posts shall not be spliced.
4. Aluminum sign blanks shall conform to Departmental Material Specifications DMS-7110 and shall have the following minimum thicknesses: 0.080 for signs less than 7.5 sq. ft., 0.100 for signs 7.5 to 15 sq. ft., and 0.125 for signs greater than 15 sq. ft.
5. Plywood signs shall conform to Departmental Material Specification DMS-7100 and shall be 5/8 inches thick.
6. Signs that require specific supports due to reasons in addition to windloading are indicated on the "REQUIRED SUPPORT" table on this sheet.
7. For horizontal rectangular signs, T-brackets are used for signs 24 inches or less in height. U-brackets are used for signs of greater height.
8. When two triangular slipbase supports are used to support a single sign, they shall not be "rigidly" connected to each other except through the sign panel. This will allow each support to act independently when impacted by an errant vehicle.
9. Wing channel shall meet ASTM A 1011 SS Gr 50 and be galvanized per ASTM A 123.
10. Excess pipe, winged channel, or windbeam shall be cut off so that it does not extend beyond the sign panel (i.e., excess support shall not be visible when the sign is viewed from the front.) Repair galvanized coating at cut support ends per Item 445, "Galvanizing."
11. The Engineer may allow the use of an expanded foam foundation. A list of approved suppliers of expanding foam may be obtained from the Traffic Operations Division (TRF) or from the TRF website. The website address is: http://www.dot.state.tx.us/insdtdot/orgchart/trf/trfeng/
12. Sign blanks shall be the sizes and shapes shown on the plans. Unless otherwise shown, no panel on multi-panel plywood signs shall have a dimension less than 18 inches. Plywood signs 4 feet by 8 feet or smaller in either dimension shall be of one piece construction.
13. Additional sign clamp required on the "T-bracket" post for 24 inch high signs. Place the clamp 3 inches above bottom of sign when possible.

REQUIRED SUPPORT

	SIGN DESCRIPTION	SUPPORT
Regulatory	48-inch STOP sign (SR1-1)	TY 10BWG(1)XX(T) TY 10BWG(1)XX(P-BM)
	60-inch YIELD sign (FR1-2)	TY 10BWG(1)XX(T) TY 10BWG(1)XX(P-BM)
	48x16-inch ONE-WAY sign (FR6-1)	TY 10BWG(1)XX(T) TY 10BWG(1)XX(P-BM)
	36x48, 48x36, and 48x48-inch signs	TY 10BWG(1)XX(T)
	48x60-inch signs	TY S80(1)XX(T)
Warning	48x48-inch signs (diamond or square)	TY 10BWG(1)XX(T)
	48x60-inch signs	TY S80(1)XX(T)
	48-inch Advance School X-ing sign (SS1-1)	TY 10BWG(1)XX(T)
	48-inch School X-ing sign (SS2-1)	TY 10BWG(1)XX(T)
	Large Arrow sign (W1-6 & W1-7)	TY 10BWG(1)XX(T)

LEVELS DISPLAYED
1 2 3 4 5 6 7 8 9 10 11 12 13 14 15 16 17 18 19 20 21 22 23 24 25 26 27 28 29 30 31 32 33 34 35 36 37 38 39 40 41 42 43 44 45 46 47 48 49 50 51 52 53 54 55 56 57 58 59 60 61 62 63 64

ACC:

STANDARD PLANS
Texas Department of Transportation
Traffic Operations Division

SIGN MOUNTING DETAILS SMALL ROADSIDE SIGNS TRIANGULAR SLIPBASE SYSTEM

SMD(SLIP-3)-02

© TxDOT July 2002	DN: BAS	CK: GRB	DW: FDN	CK: CAL
REVISIONS	STATE DISTRICT	FEDERAL REGION	FEDERAL AID PROJECT	SHEET
	PHARR	6		861
	COUNTY	CONTROL	SECTION	JOB	HIGHWAY
	HIDALGO	0255	08	091	US 281

260

DISCLAIMER
The use of this standard is governed by the "Texas Engineering Practice Act". No warranty of any kind is made by TxDOT for any purpose whatsoever. TxDOT assumes no responsibility for the conversion of this standard to other formats or for incorrect results or damages resulting from its use.

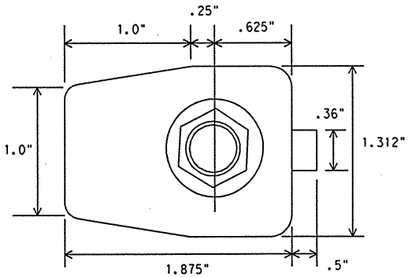

PLAN

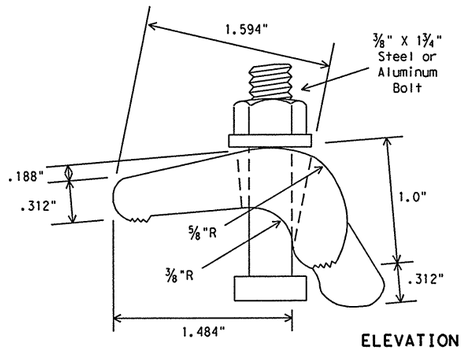

ELEVATION

ALTERNATE POST CLAMP DETAIL

NOTE: centerline of hole for 3/8" diameter squarehead bolt x 2 1/4" long with a flat washer and self-locking nut, or lock washer and hex. nut. Bolt head dimensions shall be in accordance with ANSI B 18.2.1 as referred to in the AISC Manual of steel construction. Bolt assembly shall be galvanized.

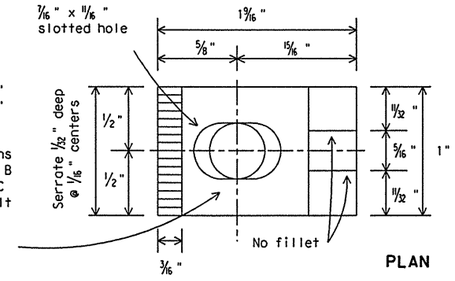

PLAN

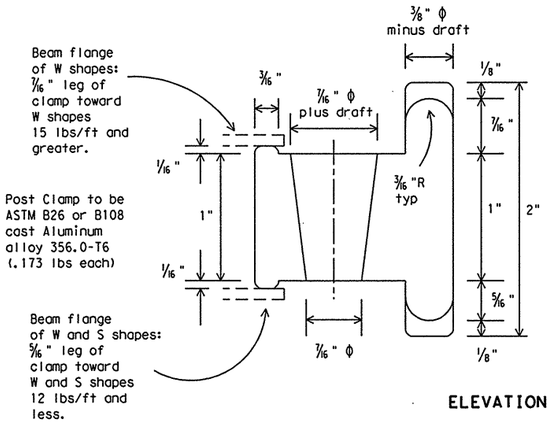

ELEVATION

POST CLAMP DETAIL

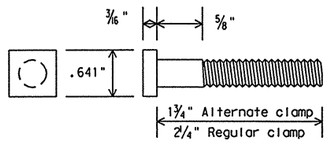

POST CLAMP BOLT DETAIL

WIND BEAM TABLES

For sign widths not in whole foot increments, select next larger sign width from tables for maximum wind beam spacing.

Example: Sign Code = 120, Sign Width = 14'6" ⟶ select 15' Sign Width
Max. Wind Beam Spacing = 3'0"

CODE

SIGN TYPE 1 3 0
- 1 — Wind Design Zone
- 3 — Series No. (Zero Denotes Plywood, 1 Denotes Aluminum)
- 0 — No. of Posts

ZONE 1 (Types 100)

	Two Posts (120)							Three Posts (130)									
Sign Width (W)	4' thru 12'	13'	14'	15'	16'	17'	18'	19'	20'	21'	22'	23'	24'	25'	26'	27'	28'
Max. Wind Beam Spacing	4'-0"	3'-8"	3'-4"	3'-0"	2'-8"	2'-4"	2'-0"	4'-0"		3'-9"	3'-6"	3'-3"	3'-0"	2'-9"	2'-6"	2'-3"	2'-0"

ZONE 2 (Types 200)

	Two Posts (220)			Three Posts (230)			
Sign Width (W)	4' thru 16'	17'	18'	19' thru 24'	25'	26'	27'	28'
Max. Wind Beam Spacing	4'-0"	3'-9"	3'-6"	4'-0"	3'-9"	3'-6"	3'-3"	3'-0"

ZONE 3 (Types 300)

	Two Posts (320)	Three Posts (330)
Sign Width (W)	4' thru 18'	19' thru 28'
Max. Wind Beam Spacing	4'-0"	4'-0"

30' or more desirable. May be reduced depending on cross section, viewing conditions and other related factors.

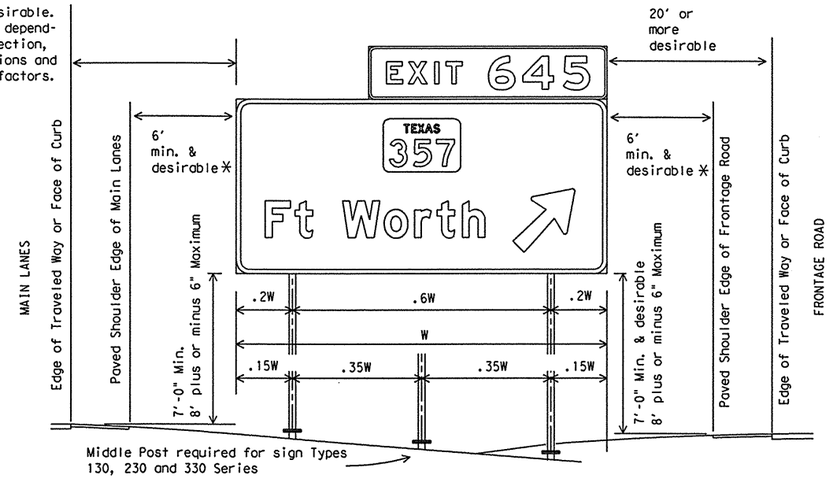

TYPICAL SIGN INSTALLATION AND LOCATION

LATERAL CLEARANCE NOTES:

Lateral clearances of signs mounted on median side of main lanes are the same as shown above where space will permit.

Where a sign is to be located behind guardrail, an allowable minimum clearance of two feet may be used, measured from the face of the guardrail to the near edge of sign.

* - 6' minimum and desirable may be used only in areas of limited lateral clearance and when approved by the Engineer.

POST SPACING NOTES:

Post spacing on a two post sign may vary a maximum of plus or minus 10% of total sign width to fit field conditions.

Post spacing on a three post sign may vary a maximum of plus 5% of total sign width to fit field conditions.

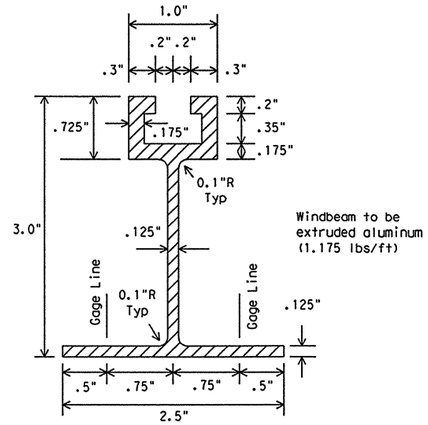

WINDBEAM CROSS SECTION

SIGN SUPPORTS SHALL NOT BE SPLICED EXCEPT AS SHOWN ELSEWHERE ON SMD STANDARDS

SPECIFICATION REFERENCE TABLE
MATERIALS AND TESTS DIVISION SPECIFICATIONS
SIGN HARDWARE D-9-7120

GENERAL NOTES:

1. Design conforms with AASHTO Specifications for the design and construction of structural supports for highway signs.
2. Materials and fabrication shall conform to the requirements of the Department material specifications.
3. Structural steel shall be high strength steel (HS) in accordance with the Item 442, "Metal For Structures."
4. Parts shall be saw cut either before galvanizing and the galvanized cut cleaned of zinc build-up, or saw cut after galvanizing and the cut surface treated with zinc-based solder or zinc-rich paint in accordance with ASTM A780. (Cut surface will not be treated until plate is installed and all bolts fully tightened.)
5. Exit number panel shall be mounted to the right hand side of the parent sign for right exits and to the left for left hand exits. The number panel shall be mounted with two uprights so its right edge is even with the right edge of the parent sign or vice-versa for left hand exits.

LEVELS DISPLAYED
ACC:

1	2	3	4	5	6	7	8	9	10	11	12	13	14	15	16
17	18	19	20	21	22	23	24	25	26	28	29	30	31	32	
33	34	35	36	37	38	39	40	41	42	43	44	45	46	47	48
49	50	51	52	53	54	55	56	57	58	59	60	61	62	63	

STANDARD PLANS
TEXAS DEPARTMENT OF TRANSPORTATION
Traffic Operations Division

SIGN MOUNTING DETAILS-LARGE ROADSIDE SIGNS STRUCTURE

SMD(2-1)-98

©TxDOT August 1995

DN-LR	CK-MT	DW-DN	CK-	MEG NO.?

REVISIONS	STATE DISTRICT	FEDERAL REGION	FEDERAL AID PROJECT	SHEET
6-96	PHARR	6		863
1-97	COUNTY		CONTROL	SECTION	JOB	HIGHWAY
4-98	HIDALGO		0255	08	091	US 281

27A

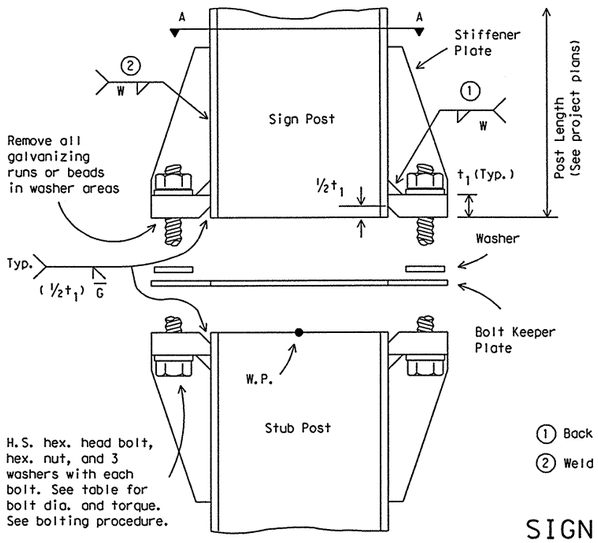

ELEVATION

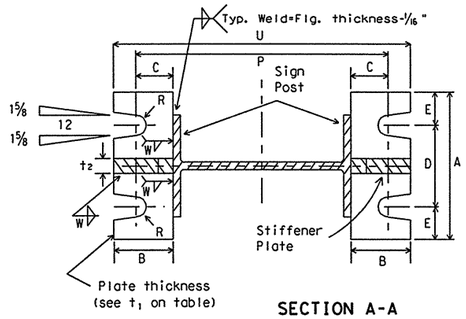

SECTION A-A

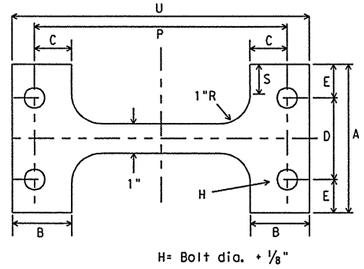

H= Bolt dia. + ⅛"

BOLT KEEPER PLATE

30 Ga galv. sheet steel

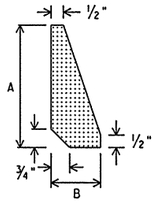

STIFFENER PLATE DETAIL

Steel Plate (thickness = t_2)

(See table for dimensions)

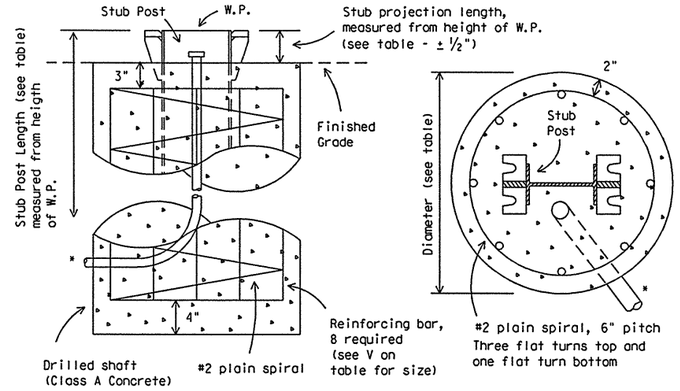

ELEVATION

PLAN

FOUNDATION DETAIL

*Note: For signs with electrical apparatus, see ED(10) for conduit required in founation.

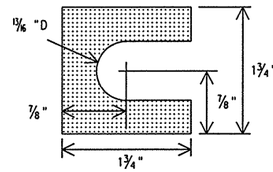

SHIM DETAIL

Furnish two .012"± thick and two .032"± thick shims per post. Shims shall be fabricated from brass shim stock or strip conforming to ASTM B36.

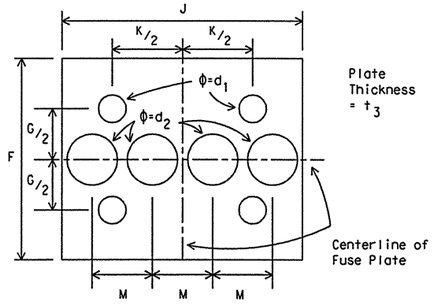

PERFORATED FUSE PLATE DETAIL

Use H.S. hex head bolts, hex head nut and bevel or flat washer (where req'd) under nut. All holes shall be drilled. All plate cuts shall preferably be saw cuts. However; flame cutting will be permitted provided all edges are ground. Metal projecting beyond the plane of the plate face will not be permitted. Steel fuse plates shall conform to the requirements of ASTM A36. ASTM A572 Grade 50 or ASTM A588 may be substituted for A36 at the option of the fabricator. Mill test reports shall be submitted for Fuse Plates. Steel used shall have an ultimate tensile strength not to exceed 80 KSI.

① Back up weld to be made before installing stiffener plate

② Weld W may be continued across clips to seal joint

SIGN POST AND STUB POST

(For W Shapes)

BOLTING PROCEDURE FOR ASSEMBLY OF BASE CONNECTION:

1. Assemble sign post, BOLT KEEPER PLATE and stub post with bolts and three flat washers per bolt as shown.
2. Shim as required to plumb post.
3. Tighten all bolts the maximum possible with a 12 to 15 inch wrench to clean bolt threads and to bed washers and shims.
4. Loosen each bolt in sequence and retighten bolts in a systematic order to the prescribed torque. Do not overtighten.
5. To prevent nut loosening, burr threads of bolt at junction with nut using a center punch.

Dimensions / Post Size	Base Connection Data Table: Bolt Size & Torque	A	B	C	D	E	t_1	t_2	W	R
W6x9	⅝"ϕ x 2¾" 440-450 inch pounds 36-38 foot pounds	5"	2"	1¼"	2¾"	1⅛"	¾"	½"	¼"	11/32"
W6x12										
W6x15										
W8x18										
W8x21	¾"ϕ x 3½" 740-750 inch pounds 62-63 foot pounds	6"	2¼"	1⅜"	3½"	1¼"	1"	¾"	5/16"	13/32"
W10x22										
W10x26										
W12x26										
S3x5.7	½"ϕ x 2½" 440-450 inch pounds 36-38 foot pounds	See Detail Below								
S4x7.7										

Perforated Fuse Plate Data Table										
F	G	J	K	M	d_1	d_2	t_3	Bolt Dia.	Wt. (ea.) (lbs.)	Bolt length
4¼"	2"	4"	2¼"	1"	9/16"	¾"	¼"	½"	1.01	1½"
5"	2½"	6"	3½"	1½"	11/16"	1¼"	⅜"	⅝"	2.51	2¼"
5"	2½"	5¼"	2¾"	1¼"	11/16"	1 1/16"	⅜"	⅝"	2.26	2¼"
5½"	2½"	5¼"	2¾"	1¼"	13/16"	1"	½"	¾"	3.35	2¼"
6"	3"	5¾"	2¾"	1⅜"	13/16"	1⅛"	½"	¾"	4.03	2¼"
6"	3"	6½"	3½"	1⅝"	13/16"	1 5/16"	½"	¾"	4.47	2¼"
3¾"	1½"	2⅝"	1½"	⅝"	9/16"	⅜"	¼"	½"	0.60	1½"

Bolt Keeper Data			
P	S	U	
8⅜"	1"	9⅞"	
8½"		10"	
8½"		10"	
10⅝"		12⅛"	
11"		12¾"	
12⅞"	1½"	14⅝"	
13⅛"		14⅞"	
15"		16¾"	
See Detail Below			

Foundation Data			
Stub length	Stub projection	Dr. Shaft diameter	Bar V Size
2'-0"	3"	24"	#5
2'-0"	3"		#5
2'-6"	3"		#6
2'-6"	3"		#7
3'-0"	2½"		#8
3'-0"	2½"		#9
3'-0"	2½"		#10
3'-0"	2½"		#11
3'-3½"	3½"	12"	Non-reinforced ③

③ Foundation design shall be Type G Mount, see SMD (TY G).

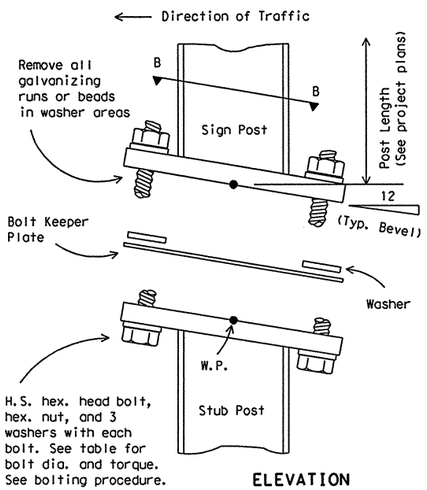

ELEVATION

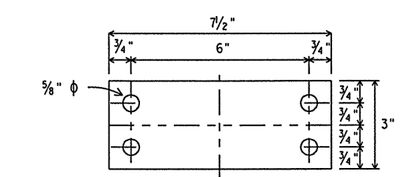

BOLT KEEPER PLATE

30 Ga galv. sheet steel

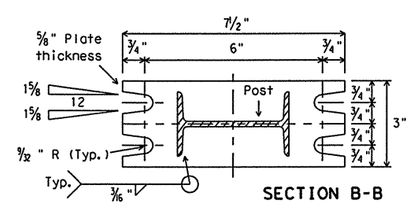

SECTION B-B

SIGN POST AND STUB POST

(For S4x7.7 and S3x5.7)

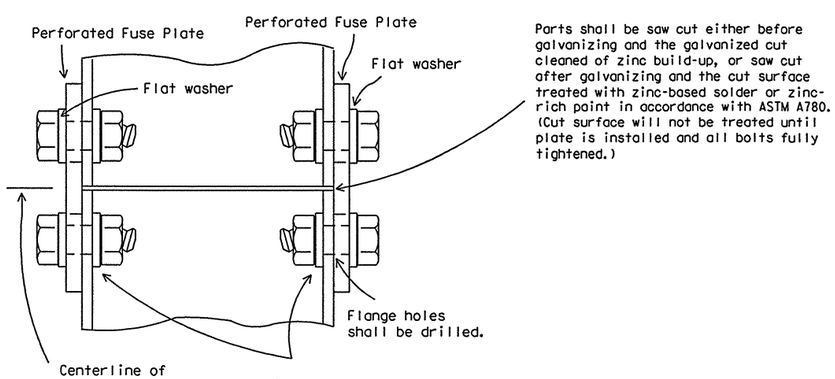

Parts shall be saw cut either before galvanizing and the galvanized cut cleaned of zinc build-up, or saw cut after galvanizing and the cut surface treated with zinc-based solder or zinc-rich paint in accordance with ASTM A780. (Cut surface will not be treated until plate is installed and all bolts fully tightened.)

DETAIL "A"

STANDARD PLANS
TEXAS DEPARTMENT OF TRANSPORTATION
Traffic Operations Division

SIGN MOUNTING DETAILS- LARGE ROADSIDE SIGNS FOUNDATION & STUB

SMD(2-2)-98

© TxDOT August 1995

DN: LR	CK:	DW: DN	CK:	MSG NO.:

REVISIONS
4-98

STATE DISTRICT	FEDERAL REGION	FEDERAL AID PROJECT	SHEET
PHARR	6		864

COUNTY	CONTROL	SECTION	JOB	HIGHWAY
HILDAGO	0255	08	091	US 281

27B

LEVELS DISPLAYED
1 2 3 4 5 6 7 8 9 10 11 12 21 31 41 51 61
17 18 19 20 22 23 24 32 42 52 53 54 55 56
33 34 35 43 45 46 47 48 49 50 57 58 59 60
95 65 66 67 68 69 70 71 72 73 74 75 76 77

DATE:
ACC: d58hp1c/usr/d580504
FILE:

TYPICAL PLYWOOD SIGN & EXIT PANEL ASSEMBLY DETAILS

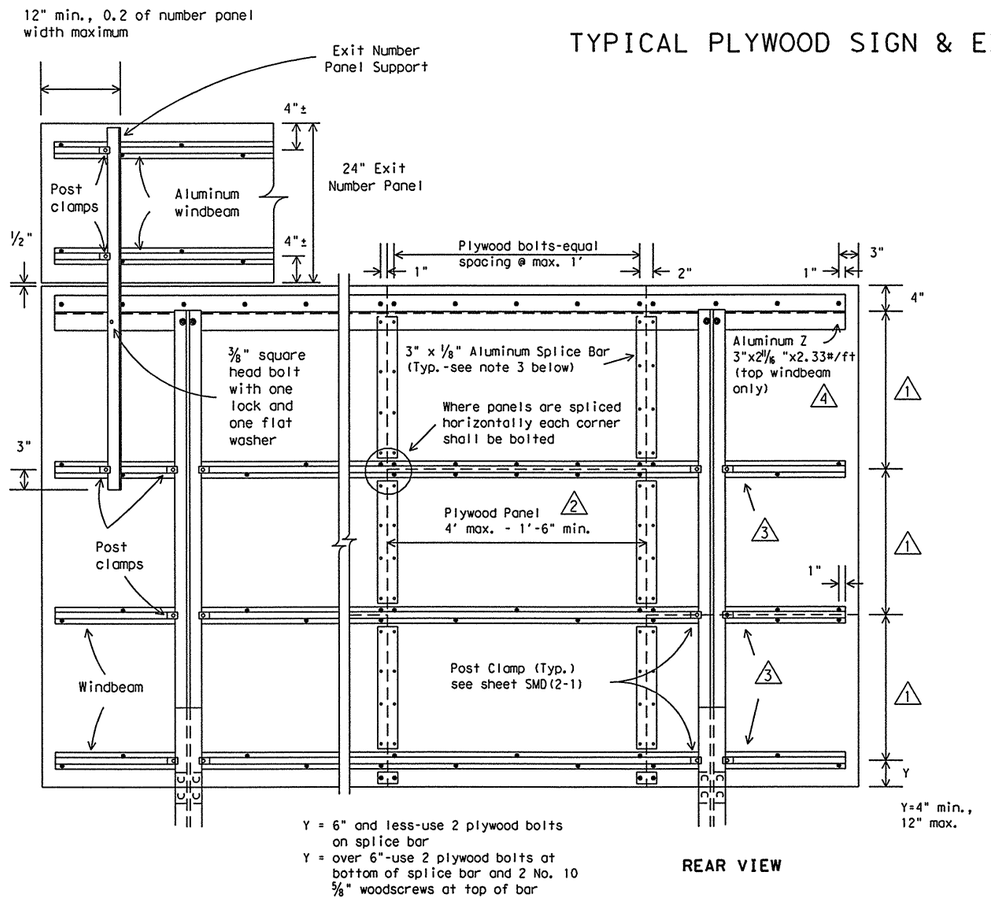

Y = 6" and less-use 2 plywood bolts on splice bar

Y = over 6"-use 2 plywood bolts at bottom of splice bar and 2 No. 10 5/8" woodscrews at top of bar

REAR VIEW

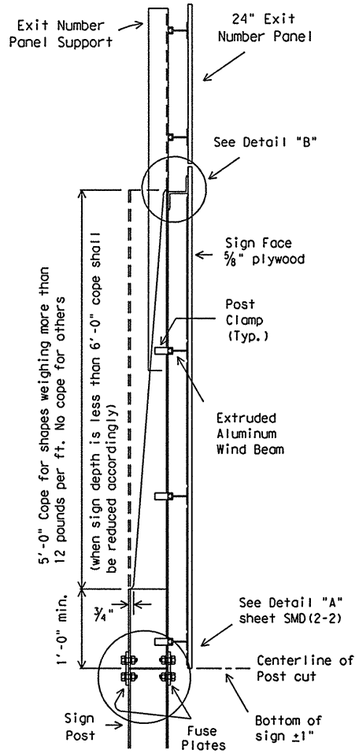

SIDE VIEW

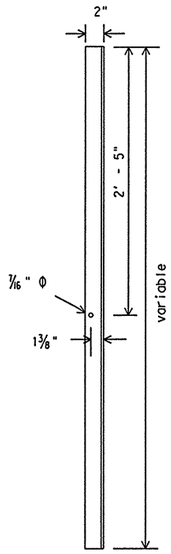

L3" x 2" x 1/4" Steel Upright or
L3" x 2" x 3/8" Aluminum Upright or
3" Windbeam

EXIT NUMBER PANEL SUPPORT

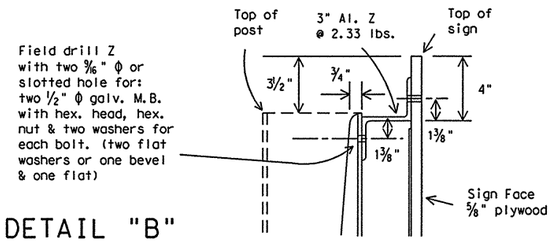

DETAIL "B"

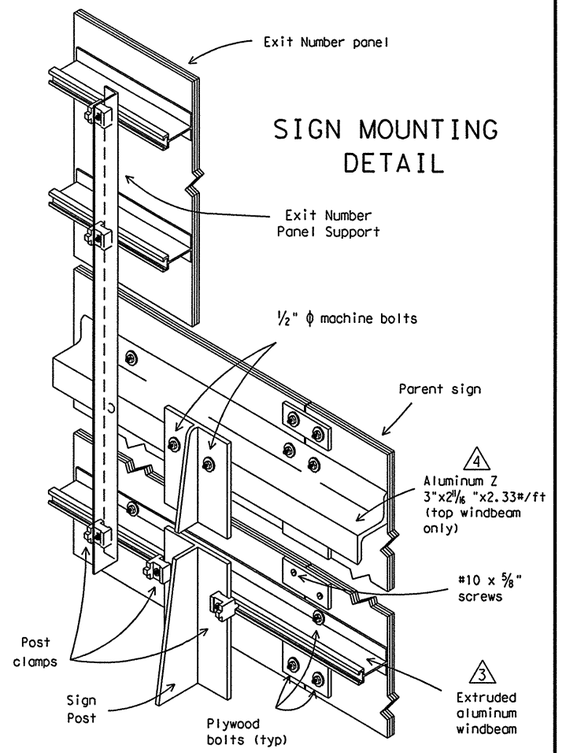

NOTES:

1. Exit number panel shall be mounted to the right hand side of the parent sign for right exits and to the left for left hand exits. The number panel shall be mounted with two uprights so its right edge is even with the right edge of the parent sign or vice-versa for left hand exits.
2. Exit number panel support shall be symmetrical about number panel centerline.
3. Exit number panel support shall be of ASTM A36 structural steel galvanized after fabrication, or ASTM B221 aluminum alloy 6061-T6.
4. All bolts, nuts and washers shall be galvanized per ASTM Designation: B695 Class 50, or A153 Class C or D.
5. When splice bars are required to fabricate the number panel, the splice bar detail as shown for the parent sign is to be used. Splice bars on number panel need not align with those on parent sign.
6. Posts, parent sign panels and exit number panels shall comply with notes on sheets SMD(2-1) and SMD(2-2).
7. Signs (such as exit number panels) attached above a parent sign shall be made of the same type material as the parent sign.
8. Exit number panel support and other connection hardware required to fasten exit number panel to parent sign shall be subsidiary to the sign blank.

NOTES:

1. A tolerance of plus or minus 1/4 inch will be permitted in the plan dimensions for fabrication of each single increment sign panel when necessary for squaring. A tolerance of plus or minus 1/4 inch will be permitted for each increment of a multi-increment sign panel where necessary to secure square, tight-fitting joints.
2. Plywood bolts shall be 5/8" x 1 1/2" elevator type steel with flat or slightly hemispherical head and 3/4" minimum thread length. The head shall have a minimum diameter of 11/16" and a minimum of two fins on the underside. Each bolt shall be provided with one 5/8" steel hex nut, one 5/8" steel flat washer, and one 5/8" steel lock washer. Bolts, nuts and washers shall be galvanized in accordance with ASTM Designation: B695, Class 50, or A153 Class C or D.
3. Splice bars shall be secured with 5/8" long x #10 round head, stainless steel wood screws spaced at 6" maximum along double row spacing with the exception at extreme ends of splice bars, along outside edge of sign, where plywood bolts shall be used as shown. A maximum of one horizontal joint per vertical section will be permitted using a 1/8" gap between panels.
4. Splices shall be kept to a minimum. Panels 4'x8' or larger shall be used to the maximum extent possible in the fabrication of any sign. Signs or sign sections which cannot be fabricated from at least a 4'x8' panel shall be of one piece construction.

1. Approximately equal spacing, fabricator may vary spacing for least interference with message and to utilize wind beam for horizontal splice. Wind beam spacing will not exceed the maximum shown in table on sheet SMD(2-1). Staggered arrangement of horizontal splices as shown is preferred. However, a single horizontal joint across the sign face is permissible.
2. For signs 4'-0" or less in height the plywood panel may exceed 4'-0" in width.
3. Extruded aluminum wind beams shall be continuous with no splices. (see sheet SMD(2-1).
4. Aluminum Z will be provided unless stated otherwise in the plans. If noted elsewhere in the plans, 1.175 lb/ft extruded aluminum windbeam may be used.

DN: LR CK: CW DW: DN CK: MT

LEVELS DISPLAYED
1 2 3 4 5 6 7 8 9 10 11 12 13 14 15 16 17 18 19 20 21 22 23 24 25 26 27 28 29 30 31 32 33 34 35 36 37 38 39 40 41 42 43 44 45 46 47 48 49 50 51 52 53 54 55 56 57 58 59 60 61 62 63

DATE:
ACC: d58hplc/usr/d580504
FILE:

STANDARD PLANS
TEXAS DEPARTMENT OF TRANSPORTATION
Traffic Operations Division

SIGN MOUNTING DETAILS-LARGE ROADSIDE SIGNS, PLYWOOD

SMD(2-3)-95

©TxDOT August 1995

DN: LR	CK:	DW: DN	CK:	HEC NO.:

REVISIONS

STATE DISTRICT	FEDERAL REGION	FEDERAL AID PROJECT	SHEET
PHARR	6		865

COUNTY	CONTROL	SECTION	JOB	HIGHWAY
HIDALGO	0255	08	091	US 281

27C

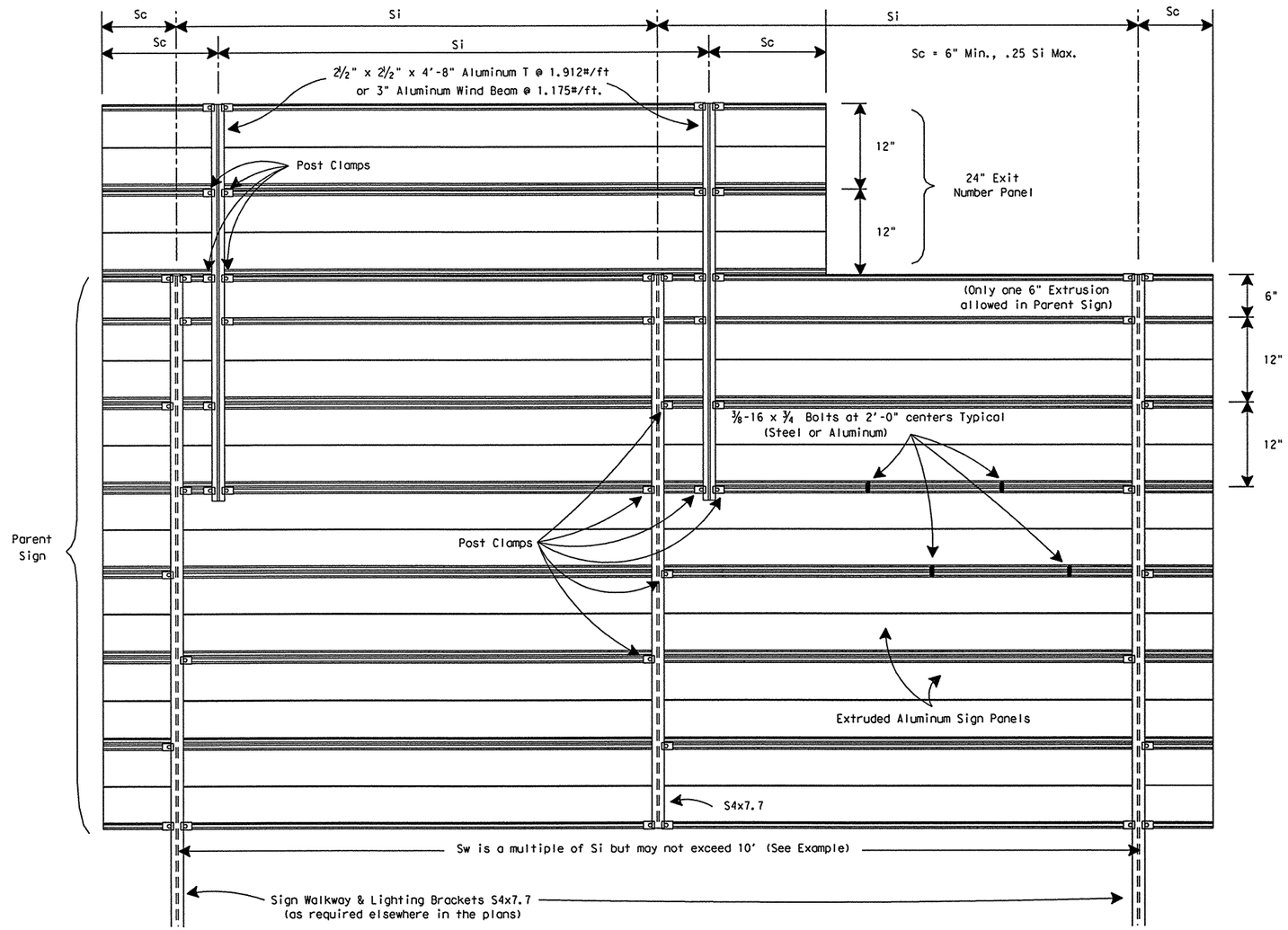

REAR VIEW

EXAMPLES (FOR DETERMINING Si and Sw)

NO.	ZONE	"d"	EXIT PANEL	WALKWAY	Si	Sw	COMMENT
1	1	15.0	YES	YES	4.5	9.0	Sw=2x(Si)
2	2	14.0	YES	NO	7.5	7.5	Sw = Si
3	1	15.0	NO	NO	8.5	8.5	Sw = Si
4	3	14.0	NO	YES	10.0	10.0	Sw = Si

Values shown for Si are maximum values. Si may be varied for different sign lengths and Truss mounting conditions. Sw should not exceed two times Si(Max.) or 10 feet.

MAXIMUM SIGN SUPPORT SPACING "Si" (FEET)

"d" Deepest Sign in Group (Ft.)	EXTRUDED ALUMINUM SIGN PANELS															
	WITH EXIT NUMBER PANELS								WITHOUT EXIT NUMBER PANELS							
	WITH WALKWAYS				WITHOUT WALKWAYS				WITH WALKWAYS				WITHOUT WALKWAYS			
	WIND ZONE				WIND ZONE				WIND ZONE				WIND ZONE			
	1	2	3	4	1	2	3	4	1	2	3	4	1	2	3	4
15	4.5	7	8	10	5	7	8	10	7	8	9	10	8.5	10	10	10
14	6	7.5	9.5	10	6	7.5	9.5	10	8	9	10	10	10	10	10	10
13	7.5	9	10	10	7.5	9	10	10	9	10	10	10	10	10	10	10
12	8.5	10	10	10	8.5	10	10	10	10	10	10	10	10	10	10	10
11 or less	10	10	10	10	10	10	10	10	10	10	10	10	10	10	10	10

STANDARD PLANS
TEXAS DEPARTMENT OF TRANSPORTATION
Traffic Operations Division

SIGN MOUNTING DETAILS-OVERHEAD SIGNS EXTRUDED ALUMINUM

SMD(2-5)-95

©TxDOT December 1995

DN: LR	CK: -	DW: DN	CK: -	REQ NO.:

REVISIONS

STATE DISTRICT	FEDERAL REGION	FEDERAL AID PROJECT	SHEET
PHARR	6		866

COUNTY	CONTROL	SECTION	JOB	HIGHWAY
HIDALGO	0255	08	091	US 281

27E

LEVELS DISPLAYED
1 2 3 4 5 6 7 8 9 10 11 12 13 14 15 16
17 18 19 20 21 22 23 24 25 26 27 28 29 30 31 32
33 34 35 36 37 38 39 40 41 42 43 44 45 46 47 48
49 50 51 52 53 54 55 56 57 58 59 60 61 62 63

DATE:
ACC: d58hplc/usr/d580504
FILE:

DN: LR
CK: CW
DW: DN
CK: MT

DISCLAIMER
The use of this standard is governed by the "Texas Engineering Practice Act". No warranty of any kind is made by TxDOT for any purpose whatsoever. TxDOT assumes no responsibility for the conversion of this standard to other formats or for incorrect results or damages resulting from its use.

WING CHANNEL CLAMP DETAIL FOR TYPE G MOUNT

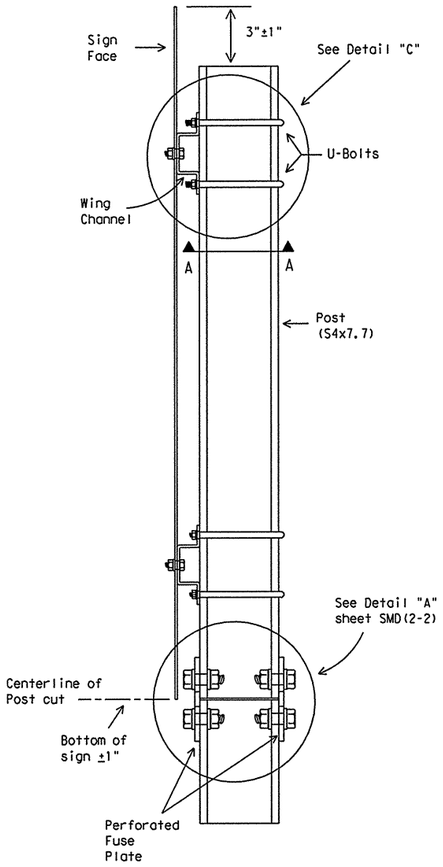

SIDE VIEW

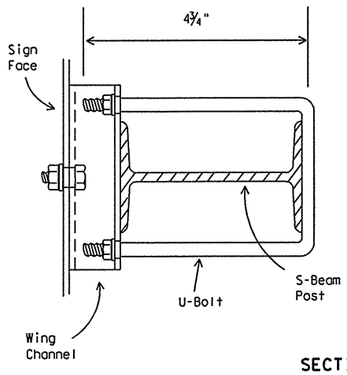

SECTION A-A

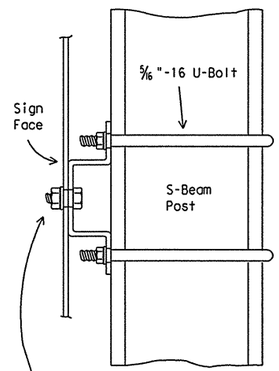

Galvanized steel or aluminum self-locking hex. head nut. 3/8 " - 16 x 3/4 " hex. head bolt for sheet metal. 3/8 " - 16 x 1 1/4 " hex. head bolt for plywood. 3/8 " galvanized medium washer.

DETAIL "C"

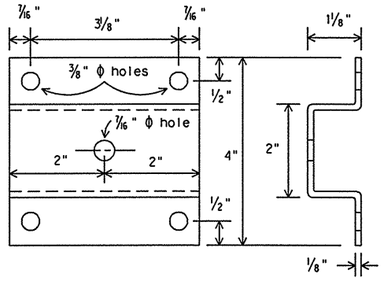

WING CHANNEL

Wing channel, 4" width x 1⅛" depth x ⅛" thickness, shall be aluminum (ASTM B221 6061-T6 or B308 6061-T6), galvanized steel (ASTM A36) or stainless steel (ASTM A167 type 304, No. 2B finish).

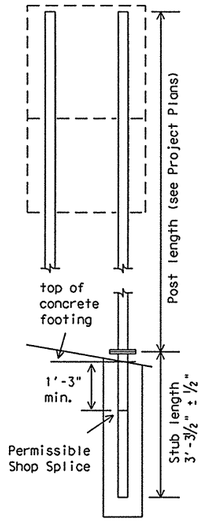

The weight of one S4x7.7 post is equal to 112.2 lbs. plus 7.7 lbs./ft x (post length in feet minus 10 ft). The weight of 112.2 lbs. includes 10 feet of post length, post foundation stub, related connection plates, friction fuse plate, and all high strength bolts, nuts and washers.

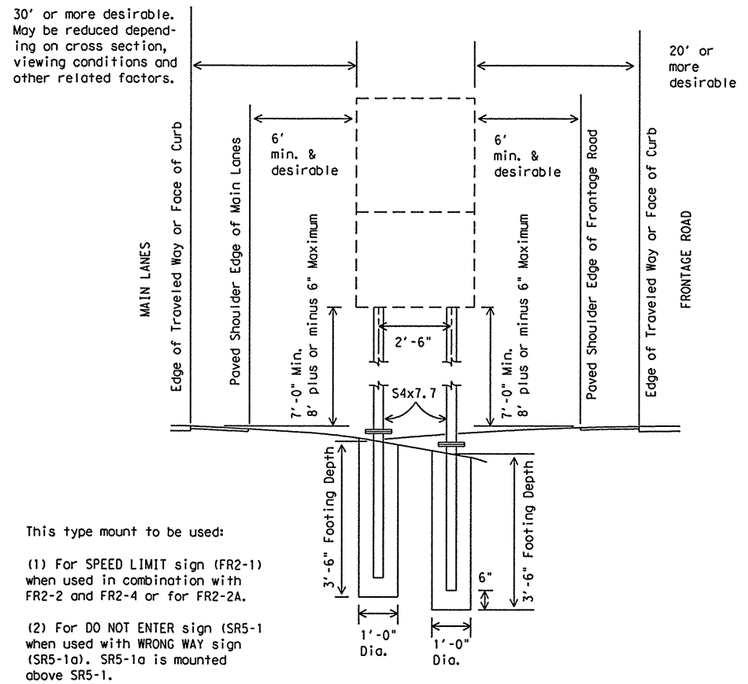

This type mount to be used:

(1) For SPEED LIMIT sign (FR2-1) when used in combination with FR2-2 and FR2-4 or for FR2-2A.

(2) For DO NOT ENTER sign (SR5-1 when used with WRONG WAY sign (SR5-1a). SR5-1a is mounted above SR5-1.

SPECIFICATION REFERENCE TABLE
MATERIALS AND TESTS DIVISION SPECIFICATIONS
SIGN HARDWARE — D-9-7120

GENERAL NOTES:

1. Design conforms with AASHTO Specifications for the design and construction of structural supports for highway signs.
2. Materials and fabrication shall conform to the requirements of the Department material specifications.
3. Structural steel shall be high strength steel (HS) in accordance with Item 442, "Metal For Structures."
4. Parts shall be saw cut either before galvanizing and the galvanized cut cleaned of zinc build-up, or saw cut after galvanizing and the cut surface treated with zinc-based solder or zinc-rich paint in accordance with ASTM A780. (Cut surface will not be treated until plate is installed and all bolts fully tightened.)

LEVELS DISPLAYED
1 2 3 4 5 6 7 8 9 10 11 12 13 14 15 16 17 18 19 20 21 22 23 24 25 26 27 28 29 30 31 32 33 34 35 36 37 38 39 40 41 42 43 44 45 46 47 48 49 50 51 52 53 54 55 56 57 58 59 60 61 62 63

DATE:
ACC:
FILE:
DN:
CK:
DW:
CK:

STANDARD PLANS
TEXAS DEPARTMENT OF TRANSPORTATION
Traffic Operations Division

SIGN MOUNTING DETAILS, TYPE G SUPPORT

SMD(TY G)-97

ORIG DRAW DATE: August 1995	DW: LR	CK:	DW: DN	CK:	NEG NO.:
REVISIONS: 1-97	STATE DISTRICT: PHARR	FEDERAL REGION: 6	FEDERAL AID PROJECT		SHEET: 867
COUNTY: HIDALGO	CONTROL: 0255	SECTION: 08	JOB: 091	HIGHWAY: US 281	

DISCLAIMER
The use of this standard is governed by the "Texas Engineering Practice Act". No warranty of any kind is made by TxDOT for any purpose whatsoever. TxDOT assumes no responsibility for the conversion of this standard to other formats or for incorrect results or damages resulting from its use.

Wedge Anchor System

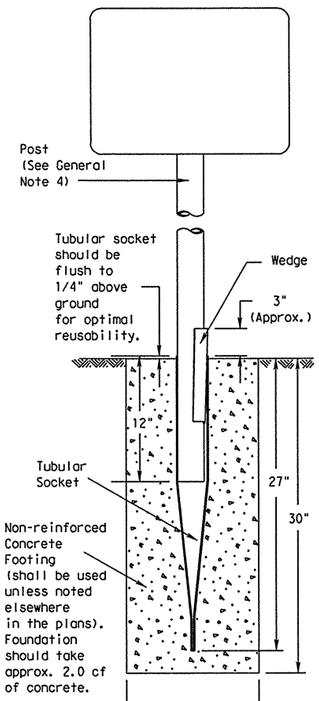

SM RD SGN ASSM TY TWT(X)WA(P)

Universal Anchor System with Thin-Walled Tubing Post

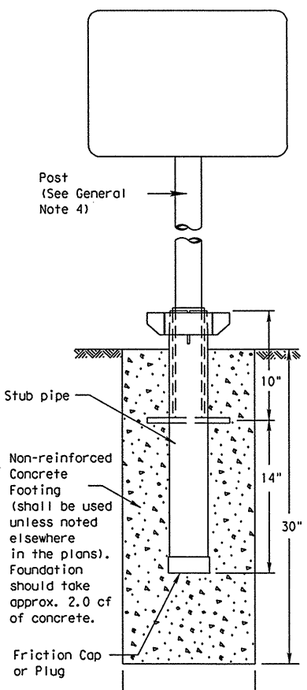

SM RD SGN ASSM TY TWT(X)UA(P)

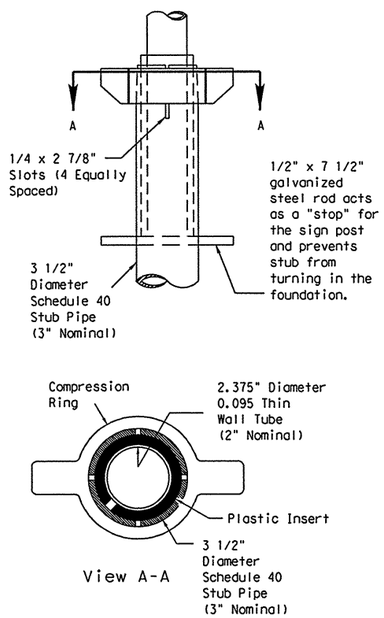

Plastic insert must be used when using the TWT with either the Universal Anchor System or the Bolt Down Universal Anchor System. The insert should be approx. 10" long and cover the tubing from just above the top of the stub pipe to the bottom of the sign post when using the Universal Anchor System. The insert should be cut to approx. 4 1/2" when used with the Bolt Down Universal Anchor System.

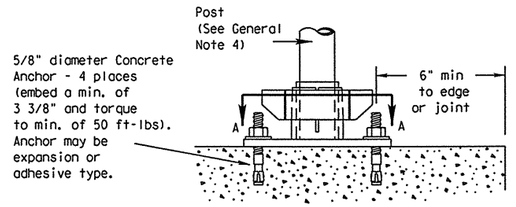

Concrete anchor consists of 5/8" diameter stud bolt with UNC series bolt threads on the upper end. A heavy hex nut per ASTM A563 and hardened washer per ASTM F436. The stud bolt shall have minimum yield and ultimate tensile strengths of 50 and 75 ksi, respectively. Nuts, bolts and washers shall be galvanized per Item 445, "Galvanizing." Top of bolt shall extend at least flush with top of nut when installed. The anchor, when installed in 4000 psi normal-weight concrete with a 3 3/8" minimum embedment, shall have a minimum allowable tension and shear of 2450 and 1525 psi, respectively. Adhesive type anchors shall have stud bolts installed with Type III epoxy per DMS-6100, "Epoxies and Adhesives." Adhesive anchors may be loaded after adequate epoxy cure time per the manufacturer's recommendations.

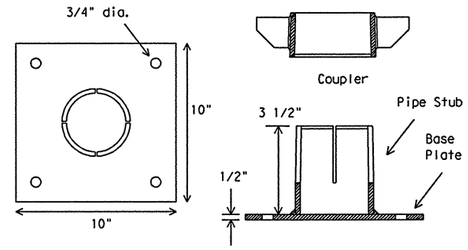

SM RD SGN ASSM TY TWT(X)UB(P)

GENERAL NOTES:

1. The Wedge Anchor System and the Universal Anchor System with thin wall tubing post may be used to support up to 10 square feet of sign area.
2. The tubular socket, wedge and prefabricated T-bracket shall be permanently marked to indicate manufacturer. Method, design, and location of marking are subject to the approval of the TxDOT Traffic Standards Engineer.
3. Except for posts (13 BWG Tubing), clamps, nuts and bolts, all components shall be prequalified. A list of prequalified vendors may be obtained from the TxDOT Traffic Standards Engineer, or the Traffic Operations Division website. The website address is: http://www.dot.state.tx.us/insdtdot/orgchart/trf/trfeng
4. Material used as post with this system shall conform to the following specifications:
   13 BWG Tubing (2.375" outside diameter)
   - 0.095" nominal wall thickness
   - Seamless or electric-resistance welded steel tubing
   - Steel shall be HSLAS Gr 55 per ASTM A1011 or ASTM A1008
   - Other steels may be used if they meet the following:
     - 55,000 PSI minimum yield strength
     - 70,000 PSI minimum tensile strength
     - 18% minimum elongation in 2"
   - Wall thickness (uncoated) shall be within the range of .083" to .099"
   - Outside diameter (uncoated) shall be within the range of 2.369" to 2.381"
   - Galvanization per ASTM 123 or ASTM A653 G210. For precoated steel tubing (ASTM A653), recoat tube outside diameter weld seam by metallizing with zinc wire per ASTM B833.
5. Sign blanks shall be the sizes and shapes shown on the plans. Unless otherwise shown, no panel on multipanel plywood signs shall have a dimension less than 18 inches. Plywood signs 4 feet by 8 feet or smaller in either dimension shall be of one piece construction.
6. Additional sign clamp required on the "T-bracket" post for 24" high signs. Place clamp at least 3" above bottom of sign when possible.
7. Sign supports shall not be spliced except where shown. Sign support posts shall not be spliced.
8. See the Traffic Operations Division website for detailed drawings of sign clamps and Wedge Anchor System components. The website address is: ftp://ftp.dot.state.tx.us/pub/txdot-info/cmd/cserve/standard/traffic/slip.pdf

WEDGE ANCHOR SYSTEM INSTALLATION PROCEDURE

1. Dig foundation hole. Where solid rock is encountered at ground level, the foundation shall be a minimum depth of 18". When solid rock is encountered below ground level, the foundation shall extend in the solid rock a minimum depth of 18" or provide a minimum foundation depth of 30". If solid rock is encountered, the socket/stub may be reduced in length as required to a minimum length of 18". Any material removed from the socket/stub shall be from the bottom and the clearance requirements given on SMD(GEN) must be followed. The inner surfaces of the socket/stub must remain free of concrete or other debris.
2. Thoroughly wet and mix concrete in a container. Place concrete into hole until it is approximately flush with the ground.
3. Insert tubular socket into concrete until top of socket is approximately 1/4 " above the concrete footing.
4. Plumb the socket and allow concrete adequate time to set.
5. Attach the sign to the sign post.
6. Insert the sign post into socket and align sign face with roadway.
7. Drive the wedge into the socket to secure post. This will leave approximately 3 inches of the wedge exposed.

UNIVERSAL ANCHOR SYSTEM INSTALLATION PROCEDURE

1. Dig foundation hole. Where solid rock is encountered at ground level, the foundation shall be a minimum depth of 18". When solid rock is encountered below ground level, the foundation shall extend in the solid rock a minimum depth of 18" or provide a minimum foundation depth of 30". If solid rock is encountered, the socket/stub may be reduced in length as required to a minimum length of 18". Any material removed from the socket/stub shall be from the bottom and the clearance requirements given on SMD(GEN) must be followed. The inner surfaces of the socket/stub must remain free of concrete or other debris.
2. Insert base post in hole to depths shown and backfill hole with concrete.
3. Level and plumb the base post using a torpedo level and allow concrete adequate time to set. The bottom of the slots provided in the stub pipe shall remain above the top of the concrete foundation.
4. Attach the sign to the sign post.
5. Install plastic insert around bottom of post.
6. Insert sign post into base post. Lower until the post comes to rest on steel rod.
7. Seat compression ring using a hammer. Typically, the top of compression ring will be approximately level with top of stub post when optimally installed.
8. Check sign post by hand to ensure it is unable to turn. If loose, increase the tightening of the compression ring.

Sign Installation Using a Prefabricated T-Bracket for Thin-Wall Tubing Post

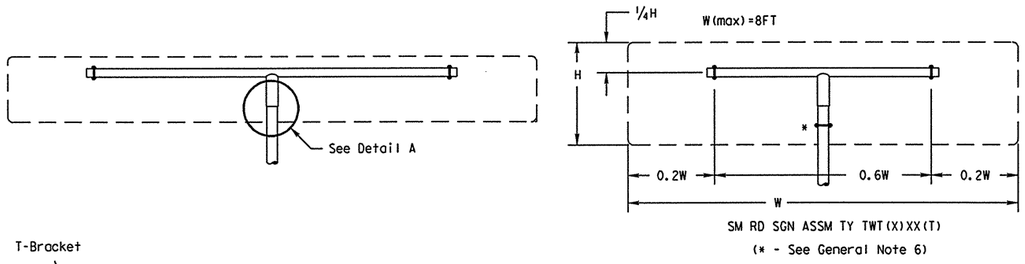

SM RD SGN ASSM TY TWT(X)XX(T)

(* - See General Note 6)

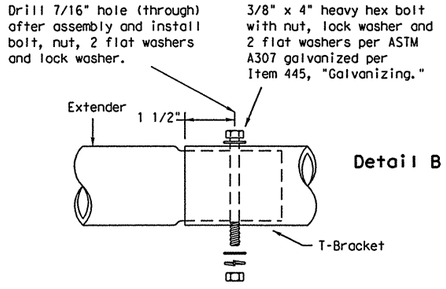

Detail B

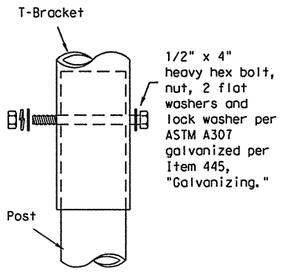

Detail A

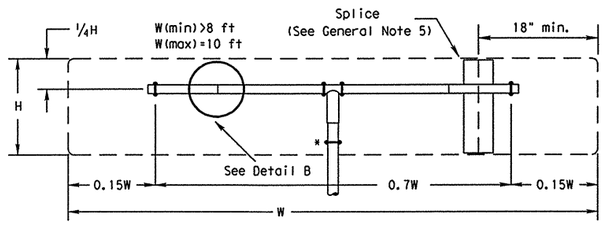

SM RD SGN ASSM TY TWT(X)XX(T-2EXT)

(* - See General Note 6)

For horizontal rectangular signs, T-brackets may be used for signs up to 24" in height. Square footage of signs may not exceed 10 sf on this system.

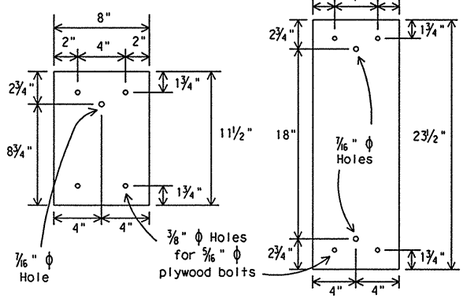

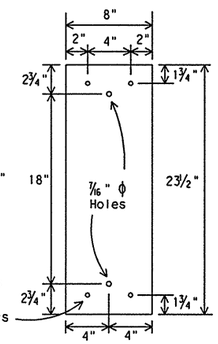

Splice Plates

Splice plates shall be 1/8" steel plate (ASTM A36) or 1/8" aluminum plate (ASTM B209 ALLOY 6061-T6 or 5052-H38.) Steel shall be galvanized in accordance with ASTM A123.

LEVELS DISPLAYED

1	2	3	4	5	6	7	8	9	10	11	21	31	41	51	61	
17	18	19	20	21	22	23	24	25	26	27	28	29	30	31	32	
33	34	35	36	37	38	39	40	41	42	43	44	45	46	47	48	
49	50	51	52	53	54	55	56	57	58	59	60	61	62	63		

ACC:

STANDARD PLANS
TEXAS DEPARTMENT OF TRANSPORTATION
Traffic Operations Division

SIGN MOUNTING DETAILS SMALL ROADSIDE SIGNS WEDGE & UNIVERSAL ANCHOR WITH THIN WALL TUBING POST

SMD(TWT)-02

© TxDOT July 2002	DN: BAS	CK: GRB	DW: FDN	CK: CAL
REVISIONS	STATE DISTRICT	FEDERAL REGION	FEDERAL AID PROJECT	SHEET
	PHARR	6		867A
COUNTY		CONTROL	SECTION	JOB	HIGHWAY
HIDALGO		0255	08	091	US 281

26E

DISCLAIMER
The use of this standard is governed by the "Texas Engineering Practice Act". No warranty of any kind is made by TxDOT for any purpose whatsoever. TxDOT assumes no responsibility for the conversion of this standard to other formats or for incorrect results or damages resulting from its use.

NOTE: Structures north of ice line to be designed for ice.

ZONE 2
(90 MPH WIND)

ZONE 3
(80 MPH WIND)

ZONE 4
(70 MPH WIND)

ICE LINE

ZONE 4
(70 MPH WIND)

ICE LINE

ZONE 3
(80 MPH WIND)

ZONE 1
(100 MPH WIND)

LEGEND

ZONE 1 - = (100 MPH WIND)
ZONE 2 - = (90 MPH WIND)
ZONE 3 - = (80 MPH WIND)
ZONE 4 - = (70 MPH WIND)
= (ICE LINE)
= (DISTRICT LINES)

FOR HARRIS CO. ONLY
Zone line is just North of US 90, around on the North, West and South sides of IH 610 and down the West side of SH 288.

FOR JACKSON CO. ONLY
Zone line is just North of SH 616.

WIND VELOCITY & ICE ZONES FOR OVERHEAD SIGN SUPPORTS

Based on 50 Year Mean Recurrence Interval of Fastest Mile Wind Velocity at 33 feet height.

THIS SHEET TO BE INCLUDED IN ALL P.S.&E.'s WITH OVERHEAD SIGN SUPPORTS

STANDARD PLANS
TEXAS DEPARTMENT OF TRANSPORTATION
Traffic Operations Division

WIND VELOCITY AND ICE ZONES

WV & IZ-96

©TxDOT April 1996

DN:	CK:	DW:	CK:	MEC NO.:
REVISIONS		DN	MT	

STATE DISTRICT	FEDERAL REGION	FEDERAL AID PROJECT	SHEET
PHARR	6		868

COUNTY	CONTROL	SECTION	JOB	HIGHWAY
HIDALGO	0255	08	091	US 281

30

LEVELS DISPLAYED
1 2 4 5 6 7 8 9 10 11 12 21 30 40 50 60
17 18 19 20 21 22 23 24 25 26 27 28 29 30 31 32
33 34 35 36 37 38 39 40 41 42 43 44 45 46 47 48
49 50 51 52 53 54 55 56 57 59 60 61 62 63

DATE:
ACC: d58hplc/usr/d580504
FILE:

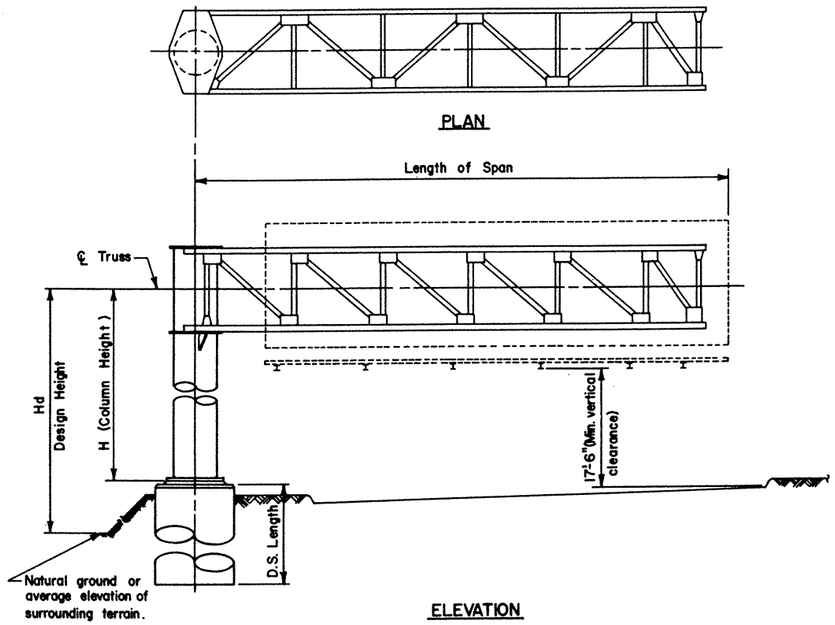

SELECTION EXAMPLE CANTILEVER SPAN

Given: Cantilever Span = 33', Column Height, H = 23.3, Design Height, Hd = 27', Avg. Penetrometer Valve, N = 15 (clay type soil), Hill County

Step 1: Select applicable COSS Standard.
From wind velocity and ice zone sheet determine that Hill County is in zone 4 (70 mph) and is above the ice line. Since design height is less than 30', use standard COSS-Z4 & Z4I. If design height is more than 30', use COSS-Z3 & Z3I. NOTE: In Zone I if design height is greater than 30' use HCOSS-Z1.

Step 2: Determine tower details from COSS-Z4 & Z4I. Use column height to nearest foot, i.e., 23'. Round span length up to the next 5' span, i.e., 35'.
Tower details are:
Tower Pipe 24"ø with min. wall thickness = 0.312"
Base Plate 33¾"ø x 1¾"
Anchor Bolts 8-1¾"ø on 29⅜" bolt circle
Horizontal deflection of tower at ℄ truss = 0.889". During installation, double nuts at base plate may be used to plumb tower to compensate for horizonal deflection.
Design Moment = 244 ft-kips
Design Torsion = 162 ft-kips

Step 3: Determine truss details from COSS-Z4 & Z4I.
Read from small table at bottom of sheet for span=35':
Truss Design Width, W and Depth, D = 4.0' x 4.0'.
Chord ∠ 3x3x5/16(HS50) with 6 bolts connection at tower
D.L. Diag. ∠ 2½x1½x3/16 with 2 bolts connection
W.L. Diag. ∠ 3x3x3/16 " 2 " "
D.L. Vert. ∠ 2½x1½x3/16 " 2 " "
W.L. Strut. ∠ 2x2x3/16 " 1 " "
Bolts are ⅝"ø high strength with 5-¾"ø bolt alternate for chord connection at tower.
D.L. of truss = 50 lb/ft
Truss deflection at free end = 3.2". The Fabricator shall compensate for this deflection by offsetting bolt holes between the upper and lower chords at the truss-to-tower connection.

Step 4: Determine foundation details. Use standard COSSF.

From COSSF with 24"ø pipe and 1¾"ø anchor bolts:
Anchor Bolts 1¾"ø x 3'-10"
Drilled Shaft Dia 42"
Vertical Reinforcing 12 #10 bars
Spiral C = #4 at 6" pitch Grade 60.
Misc. handhole, base plate, anchor bolt and foundation details are shown on COSSF.

Step 5: Determine drilled shaft length from COSS-FD.
Enter the appropriate graph (for 42"ø drilled shaft in clay soil) from the bottom with N=15. Proceed upward interpolating moment curves (solid lines) to locate 244'k.
Project to the left side of the graph to determine the required embedment length, i.e., 12'.
Repeat the procedure for torsion curves (dashed lines) to locate 162'k. The embedment length required to satisfy torsion is 14'. Add 3'-0" to the longer length to obtain a required drilled shaft length of 17'.

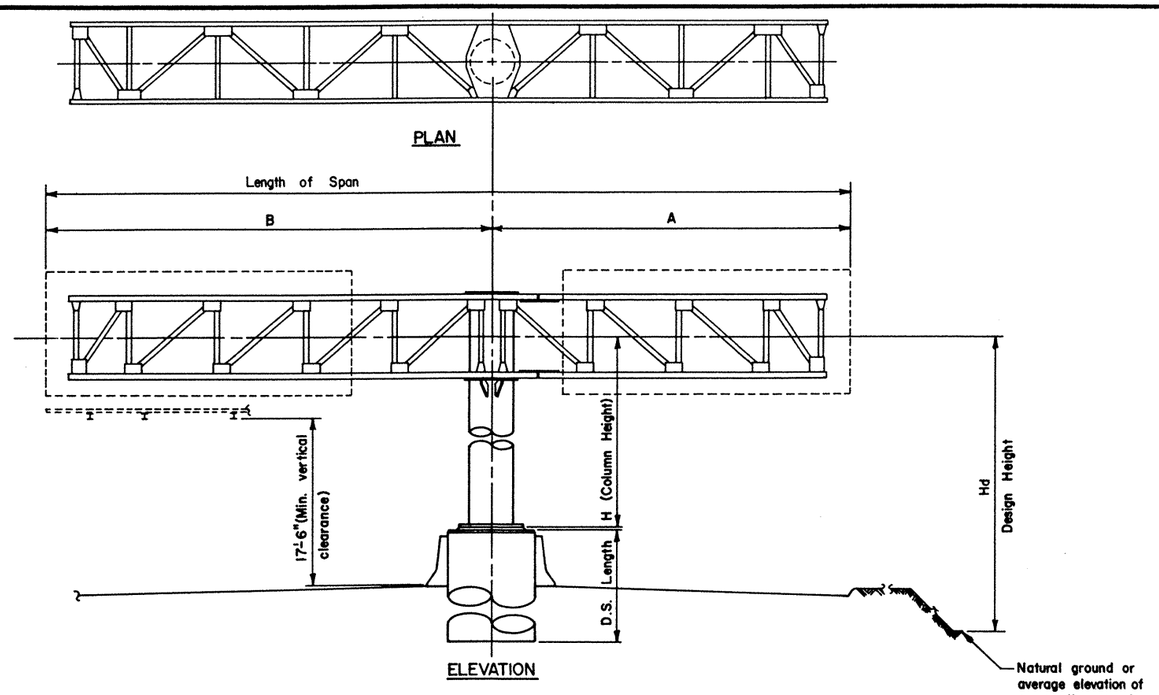

SELECTION EXAMPLE DOUBLE CANTILEVER SPAN

Given: Short Span, A = 9', Long Span, B = 25', Total Cantilever Span = 34', Column Height, H = 24', Design Height, Hd = 26', Avg. Penetrometer Valve, N = 20' (clay type soil), Wheeler County.

Step 1: Select applicable COSS standard.
From wind velocity and ice zone sheet determine that Wheeler County is in Zone 2 (90 mph) and is above the ice line. Since design height is less than 30' use standard COSS-Z2I. If design height is more than 30', use COSS-Z1.

Step 2: Determine tower details from COSS-Z2I.
Use column height = 24'. Round total span length up to the next longer 5' span, i.e., 35'. IF total span length is greater than 40', a special design would be required
Tower details are:
Tower Pipe 30"ø with min. wall thickness = 0.310"
Base Plate 40½"ø x 1¾"
Anchor Bolts 8- 2"ø on 35¾" bolt circle
Horizontal defl of tower at ℄ truss = 0.574 - 0.316 = 0.26".
During installation, double nuts at base plate may be used to plumb tower and compensate for horizontal deflection.
Design Moment = 403 ft kips (use total span = 35')
Design Torsion = 136 ft kips (use long span = 25')

Step 3: Determine truss details from COSS-Z2I.
Read from small table at bottom of sheet for Span A = 9" (use 10'):
Chord ∠ 3x3x3/16 with 3 bolt connection at splice
D.L. Diag. ∠ 2½x1½x3/16 with 2 bolt connection
W.L. Diag. ∠ 3x3x3/16 " 2 " "
D.L. Vert. ∠ 2½x1½x3/16 " 2 " "
W.L. Strut. ∠ 2x2x3/16 " 1 " "
Bolts are ⅝"ø high strength.
D.L of truss = 42 lb/ft
Span B = 25':
Chord ∠ 3x3x¼ with 4 bolt connection at tower
D.L. Diag. ∠ 2½x1½x3/16 with 2 bolt connection
W.L. Diag. ∠ 3x3x3/16 " 2 " "
D.L. Vert. ∠ 2½x1½x3/16 " 2 " "
W.L. Strut. ∠ 2x2x3/16
Bolts are ⅝"ø high strength with 3-¾"ø bolt alternate for chord connection at tower.
D.L. of truss = 47 lb/ft
Truss defl. at free end = 0.2" for span A; = 1.3" for span B.

The Fabricator shall compensate for deflections by offsetting bolt holes between upper and lower cords at splice and at truss-to-tower connection. Top cord shall be shortened between the tower and the splice to achieve the required offset.

Step 4: Determine foundation details. Use standard COSSF.

From COSSF with 30"ø pipe and 2"ø anchor bolts:
Anchor bolts 2"ø x 4'-3"
Drilled Shaft Dia. 54"
Vertical Reinforcing 18 #10 bars
Spiral C = #4 at 6" pitch Grade 60
Misc. handhole, base plate, anchor bolt and foundation details are shown on COSSF.

Step 5: Determine drilled shaft length from COSS-FD.
Enter the approprate graph (for 54"ø drilled shaft in clay type soil) from the bottom with N=20. Proceed upward interpolating moment curves (solid lines) to locate 403'k. Project to the left side of graph to determine required embedment length, i.e., 13'.
Repeat the procedure for the torsion curves (dashed lines) to located 136'k. Embedment length required to satisfy torsion is 9'.
Add 3' to the longer length to obtain required drilled shaft length of 16'.

STATE DEPARTMENT OF HIGHWAYS AND PUBLIC TRANSPORTATION

CANTILEVER OVERHEAD SIGN SUPPORTS

SELECTION EXAMPLES

COSS-SE

ORIGINAL DRAWING DATE: 7-83	STATE DISTRICT	FEDERAL REGION	FEDERAL AID PROJECT #	SHEET
REVISIONS	PHARR	6		869
DN.:- LEH	COUNTY	CONTROL	SECTION	JOB	HIGHWAY
CK.:- MRJ	HIDALGO	0255	08	091	US 281
DW.:- JWK					
CK.:- LEH					

ZONE 1 100 M.P.H. WIND

TOWER HGT. FT.	10' SPAN											15' SPAN											20' SPAN											25' SPAN											TOWER HGT. FT.
	TOWER PIPE			ANCHOR BOLTS			BASE PLATE	TRUSS	DESIGN LOADS			TOWER PIPE			ANCHOR BOLTS			BASE PLATE	TRUSS	DESIGN LOADS			TOWER PIPE			ANCHOR BOLTS			BASE PLATE	TRUSS	DESIGN LOADS			TOWER PIPE			ANCHOR BOLTS			BASE PLATE	TRUSS	DESIGN LOADS			
	O.D. IN.	WALL THICK. IN.	DEFL. ΔH IN.	SIZE	NO.	BOLT CIRCLE DIA.	SIZE IN.	DEFL. Δv IN.	SHEAR V KIPS	TORSION T K-FT	MOMENT M K-FT	O.D. IN.	WALL THICK. IN.	DEFL. ΔH IN.	SIZE	NO.	BOLT CIRCLE DIA.	SIZE IN.	DEFL. Δv IN.	SHEAR V KIPS	TORSION T K-FT	MOMENT M K-FT	O.D. IN.	WALL THICK. IN.	DEFL. ΔH IN.	SIZE	NO.	BOLT CIRCLE DIA.	SIZE IN.	DEFL. Δv IN.	SHEAR V KIPS	TORSION T K-FT	MOMENT M K-FT	O.D. IN.	WALL THICK. IN.	DEFL. ΔH IN.	SIZE	NO.	BOLT CIRCLE DIA.	SIZE IN.	DEFL. Δv IN.	SHEAR V KIPS	TORSION T K-FT	MOMENT M K-FT	
14'	16	0.250	0.108	1¼"ϕ	8	20½"	24X1¼"	0.2	5.61	25.29	77.33	16	0.344	0.180	1½"ϕ	8	21"	25X1¾"	0.5	8.43	58.69	118.08	20	0.310	0.177	1¾"ϕ	8	25⅜"	29¾X1¾"	0.6	11.53	107.50	162.73	24	0.310	0.165	1¾"ϕ	8	29⅜"	33¾X1½"	0.8	14.40	168.25	205.58	14'
15'			0.124				24X1¼"		5.64		82.92		0.344	0.206						8.46		126.44		0.310	0.203					0.6	11.56		174.09		0.310	0.189				33¾X1½"		14.44		219.64	15'
16'			0.141				24X1¼"		5.66		88.55		0.344	0.235						8.48		134.84		0.310	0.231					0.7	11.59		185.51		0.310	0.215				33¾X1⅝"		14.48		233.79	16'
17'			0.159				24X1¼"		5.69		94.20		0.344	0.265						8.51		143.27		0.344	0.240						11.62		197.01		0.344	0.221				33¾X1⅝"		14.52		248.01	17'
18'			0.178				24X1⅜"		5.71		99.88		0.375	0.274						8.54		151.73		0.344	0.269						11.66		208.52		0.344	0.248				33¾X1⅝"	0.8	14.56		262.29	18'
19'			0.198				24X1⅜"		5.74		105.58		0.375	0.306	1½"ϕ		21"	25X1¾"		8.56		160.23		0.344	0.300				29¾X1¾"		11.69		220.08		0.344	0.276	1¾"ϕ		29⅜"	33¾X1¾"	0.9	14.60		276.65	19'
20'			0.220	1¼"ϕ		20½"	24X1½"		5.77		111.32		0.406	0.315	1¾"ϕ		21½"	26X1⅞"		8.59		168.76		0.375	0.306				29¾X1⅞"		11.72		231.68		0.344	0.306	2"ϕ		29¾"	34½X1¾"		14.64		291.07	20'
21'		0.250	0.242	1⅜"ϕ		20¾"	24½X1½"		5.79		117.09		0.406	0.347				26X1⅞"		8.62		177.32		0.375	0.337				29¾X1⅞"		11.76		243.33		0.375	0.311				34½X1⅞"		14.68		305.54	21'
22'		0.281	0.238				24½X1½"		5.82		122.88		0.438	0.354				26X2"		8.64		185.91		0.406	0.341				29¾X1⅞"		11.79		255.00		0.375	0.341				34½X1⅞"		14.72		320.07	22'
23'		0.281	0.260				24½X1⅞"		5.85		128.70		0.438	0.387				26X2"		8.67		194.53		0.406	0.373	1¾"ϕ		25⅜"	29¾ X 2"	0.7	11.82		266.73		0.375	0.373				34½ X 2"		14.76		334.66	23'
24'		0.281	0.283				24½X1⅝"		5.87		134.55		0.469	0.395				26X2"		8.69		203.18		0.406	0.406	2"		25¾"	30½X2"	0.8	11.86		278.50		0.406	0.376				34½X2"	0.9	14.80		349.29	24'
25'		0.312	0.279	1⅜"ϕ		20¾"	24½X1⅝"		5.90		140.42		0.469	0.429				26X2⅛"		8.72		211.85		0.438	0.410				30½X2⅛"		11.89		290.30		0.406	0.408				34½X2"	1.0	14.84		363.98	25'
26'		0.312	0.302	1½"ϕ		21"	25X1¾"		5.93		146.33		0.500	0.440				26X2⅛"		8.75		220.56		0.436	0.443				30½X2⅛"		11.92		302.15		0.406	0.442				34½X2"		14.88		378.72	26'
27'		0.312	0.325				25X1¾"		5.95		152.26		0.500	0.474				26X2⅛"		8.77		229.30		0.469	0.449				30½X2⅛"		11.96		314.03		0.406	0.476				34½X2⅛"		14.92		393.51	27'
28'		0.344	0.320				25X1¾"		5.98		158.22		0.531	0.482	1¾"ϕ		21½"	26X2¼"		8.80		238.06		0.469	0.483				30½X2¼"		11.99		325.95		0.438	0.477	2"ϕ		29¾"	34½X2⅛"		14.96		408.34	28'
29'		0.344	0.343				25X1⅞"		6.01		164.20		0.531	0.517	2"ϕ		22"	27X2¼"		8.83		246.85		0.500	0.488				30½X2¼"		12.02		337.91		0.438	0.512	2¼"ϕ		30"	35X2¼"		15.00		423.22	29'
30'		0.344	0.367	1½"ϕ		21"	25X1⅞"		6.03		170.21		0.656	0.459	2"ϕ		22"	27X2⅜"		8.85		255.67		0.500	0.523				30½X2¼"		12.05		349.90		0.469	0.513				35X2¼"		15.04		438.15	30'
31'		0.375	0.362	1¾"ϕ		21½"	26X1⅞"		6.06		176.25		0.656	0.490	2"ϕ		22"	27X2⅜"		8.88		264.52		0.531	0.528				30½X2¼"		12.09		361.93		0.469	0.548				35X2¼"	1.0	15.08		453.12	31'
32'	16	0.375	0.385	1¾"ϕ	8	21½"	26X1⅞"	0.2	6.09	25.29	182.32	16	0.656	0.523	2"ϕ	8	22"	27X2⅜"	0.5	8.91	58.69	273.39	20	0.531	0.563	2"	8	25¾"	30½X2⅜"	0.8	12.12	107.50	374.00	24	0.469	0.584	2¼"ϕ	8	30"	35X2¼"	1.1	15.12	168.25	468.13	32'

TOWER HGT. FT.	30' SPAN											35' SPAN											40' SPAN											TOWER HGT. FT.
	TOWER PIPE			ANCHOR BOLTS			BASE PLATE	TRUSS	DESIGN LOADS			TOWER PIPE			ANCHOR BOLTS			BASE PLATE	TRUSS	DESIGN LOADS			TOWER PIPE			ANCHOR BOLTS			BASE PLATE	TRUSS	DESIGN LOADS			
	O.D. IN.	WALL THICK. IN.	DEFL. ΔH IN.	SIZE	NO.	BOLT CIRCLE DIA.	SIZE IN.	DEFL. Δv IN.	SHEAR V KIPS	TORSION T K-FT	MOMENT M K-FT	O.D. IN.	WALL THICK. IN.	DEFL. ΔH IN.	SIZE	NO.	BOLT CIRCLE DIA.	SIZE IN.	DEFL. Δv IN.	SHEAR V KIPS	TORSION T K-FT	MOMENT M K-FT	O.D. IN.	WALL THICK. IN.	DEFL. ΔH IN.	SIZE	NO.	BOLT CIRCLE DIA.	SIZE IN.	DEFL. Δv IN.	SHEAR V KIPS	TORSION T K-FT	MOMENT M K-FT	
14'	24	0.375	0.199	2"ϕ	8	29¾"	34½X1¾"	1.1	17.16	242.54	249.26	30	0.310	0.178	2"ϕ	8	35¾"	40½X1⅝"	1.3	20.11	330.60	296.99	30	0.375	0.206	2¼"ϕ	8	36"	41X1⅞"	1.8	22.89	432.38	347.21	14'
15'		0.375	0.238				34½X1¾"	1.2	17.20		265.80		0.310	0.205				40½X1⅝"	1.4	20.16		316.04		0.410	0.219					1.8	22.94		368.40	15'
16'		0.406	0.251				34½X1⅞"		17.24		282.45		0.310	0.233				40½X1⅝"		20.21		335.27		0.410	0.249					1.8	22.99		389.82	16'
17'		0.406	0.283				34½X1⅞"		17.28		299.21		0.344	0.239				40½X1¾"		20.26		354.65		0.410	0.282					1.9	23.04		411.46	17'
18'		0.438	0.296				34½X1⅞"	1.2	17.32		316.06		0.344	0.268				40½X1¾"	1.4	20.31		374.16		0.410	0.316				41X1⅞"	2.0	23.09		433.29	18'
19'		0.438	0.329				34½X 2"	1.3	17.36		332.99		0.344	0.299				40½X1¾"	1.5	20.36		393.81		0.440	0.327				41 X 2"	2.0	23.14		455.29	19'
20'		0.438	0.355				34½X 2"	1.3	17.40		350.00		0.344	0.331	2"ϕ		35¾"	40½X1¾"	1.5	20.41		413.56		0.440	0.362					2.0	23.19		477.44	20'
21'		0.467	0.377	2"ϕ		29¾"	34½X 2"	1.3	17.44		367.09		0.375	0.336	2¼"ϕ		36"	41X1⅞"	1.5	20.46		433.43		0.440	0.399					2.1	23.24		499.74	21'
22'		0.467	0.414	2¼"ϕ		30"	35X2⅛"	1.4	17.48		384.25		0.375	0.369				41X1⅞"	1.6	20.51		453.39		0.440	0.438				41 X 2"	2.2	23.29		522.16	22'
23'		0.467	0.452				35X2⅛"		17.52		401.47		0.375	0.403				41 X 2"	1.6	20.56		473.44		0.470	0.531	2¼"ϕ		36"	41X2⅛"	2.2	23.34		544.69	23'
24'		0.500	0.463				35X2⅛"		17.56		418.75		0.375	0.439				41 X 2"	1.7	20.61		493.59		0.470	0.489	2½"ϕ		36½"	42X2⅛"	2.2	23.39		567.34	24'
25'		0.530	0.475				35X2¼"		17.60		436.09		0.406	0.442				41 X 2"		20.66		513.81		0.470	0.531				42X2¼"	2.3	23.44		590.10	25'
26'		0.530	0.514				35X2¼"	1.4	17.64		453.50		0.406	0.478				41 X 2"		20.70		534.12		0.500	0.540				42X2¼"		23.49		612.95	26'
27'		0.530	0.554				35X2¼"	1.5	17.68		470.95		0.406	0.512				41 X 2"		20.75		554.50		0.500	0.582				42X2¼"		23.54		635.89	27'
28'		0.530	0.596				35X2⅜"	1.5	17.72		488.46		0.438	0.514				41X2⅛"		20.80		574.96		0.500	0.626				42X2⅜"		23.59		658.93	28'
29'		0.562	0.607				35X2⅜"	1.5	17.76		506.03		0.438	0.552				41X2¼"	1.7	20.85		595.49		0.531	0.647				42X2⅜"	2.3	23.64		682.04	29'
30'		0.562	0.649	2¼"ϕ		30"	35X2⅜"	1.6	17.80		523.64		0.438	0.591	2¼"ϕ		36"	41X2¼"	1.8	20.90		616.08		0.531	0.692				42X2¾"	2.4	23.69		705.24	30'
31'		0.594	0.659	2½"ϕ		30½"	36X2½"	1.6	17.84		541.31		0.469	0.591	2½"ϕ		36½"	42X2¼"	1.8	20.95		636.75		0.562	0.687				42X2⅜"	2.4	23.73		728.52	31'
32'	24	0.594	0.702	2½"ϕ	8	30½"	36X2½"	1.6	17.88	242.54	559.02	30	0.469	0.630	2½"ϕ	8	36½"	42X2¼"	1.8	21.00	330.60	657.48	30	0.562	0.732	2½"ϕ	8	36½"	42X2½"	2.4	23.78	432.38	751.87	32'

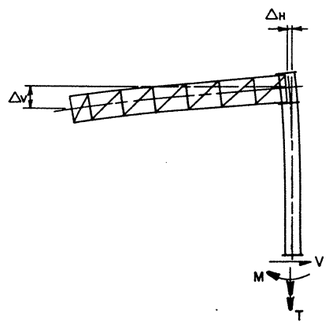

ELEVATION

(SHOWING DESIGN LOADS AND DEAD LOAD DEFLECTIONS)

TRUSS DETAILS

SPAN	10',15' & 20'	25'	30'	35'	40'
W x D = WIDTH x DEPTH	4.5 X 4.5	4.5 X 4.5	4.5 X 4.5	4.5 X 4.5	4.5 X 4.5
CHORD	3 X 3 X 3/16 ③	3 X 3 X ¼ ④	3½X3½X¼(HS50) ⑦	3½X3½X5/16(HS50) ⑨	3½X3½X⅜(HS50) ⑧
DEAD LOAD DIAGONAL	2½ X 1½ X 3/16 ②	2½ X 1½ X 3/16 ②	2½ X 1½ X 3/16 ②	2½X1½X3/16 ②	3 X 2 X 3/16 ②
WIND LOAD DIAGONAL	3 X 3 X 3/16 ②	3 X 3 X 3/16 ②	3 X 2½ X ¼ ③	3 X 3 X ¼ ③	3 X 3 X ¼ ③
DEAD LOAD VERTICAL	2½ X 1½ X 3/16 ②	2½ X 1½ X 3/16 ②	2½ X 1½ X 3/16 ②	2½X1½X3/16 ②	3 X 2 X 3/16 ②
WIND LOAD STRUT	2 X 2 X 3/16 ①	2 X 2 X 3/16 ①	2 X 2 X 3/16 ①	2 X 2 X 3/16 ①	2½X2½X3/16 ①
TRUSS DEAD LOAD	42 #/ft.	47 #/ft.	53 #/ft.	60 #/ft.	70 #/ft.
SIZE H.S. BOLTS IN CONN.	5/8"ϕ	5/8"ϕ	5/8"ϕ	5/8"ϕ	¾"ϕ
NO. & SIZE OF H.S. BOLTS IN CHORD ANGLE TO TOWER CONNECTION PLATE	3 ~ 5/8"ϕ ea.	5 ~ 5/8"ϕ or 3 ~ ¾"ϕ ea.	7 ~ 5/8"ϕ or 5 ~ ¾"ϕ ea.	9 ~ 5/8"ϕ or 7 ~ ¾"ϕ ea.	8 ~ ¾"ϕ ea.

All truss members are angles.

Number of High Strength bolts required in truss connection or splice are indicated thus ③ after the member size.

Deflections shown include the design loads for Truss, Sign Panel, Lights and Walkways.

GENERAL NOTES:

Steel for tower pipe shall conform to ASTM A53 Grade B or to ASTM A501. Tower pipe wall thickness shown is the minimum allowable. Fabricator may use the wall thickness shown or pipe of the same diameter with greater wall thickness.

All other structural steel shall conform to ASTM A36 except where noted HS 50 which shall be ASTM A441, ASTM A572 or ASTM A588.

All connection bolts shall conform to ASTM A325 or ASTM A449.

All structural steel, connection bolts, nuts and washers shall be galvanized in accordance with the Specifications.

Compensate for truss deflection at free end by offsetting upper and lower bolt holes at truss-to-tower connection.

For truss details see sheet 2 of 3.

For base and foundation details see sheet 3 of 3.

For cantilever truss lengths falling between those shown use sizes called for in the next longer span.

Towers for cantilever sign supports are designed for the equivalent area of a 10 foot deep sign panel over 100% of the span length. Design includes 3 lb./□' for sign panel and 20 lb./lin. ft. for lights and 50 lb./lin. ft. for walkways all placed as specified for the design sign panel.

Details called for hereon are applicable for Design Wind Heights up to 30' inclusive.

STATE DEPARTMENT OF HIGHWAYS AND PUBLIC TRANSPORTATION

CANTILEVER OVERHEAD SIGN SUPPORTS

COSS-Z1

ORIGINAL DRAWING DATE: 7-83	STATE DISTRICT	FEDERAL REGION	FEDERAL AID PROJECT #	SHEET
DW.:-CWC REVISIONS	PHARR	6		870
CK.:-LEH	COUNTY		CONTROL	SECTION	JOB	HIGHWAY
DW.:-EDS	HIDALGO		0255	08	091	US 281
CK.:-LEH						61

ZONE I 100 M.P.H. WIND

TOWER HGT. FT.	10' SPAN											15' SPAN											
	TOWER PIPE			ANCHOR BOLTS			BASE PLATE	TRUSS	DESIGN LOADS			TOWER PIPE			ANCHOR BOLTS			BASE PLATE	TRUSS	DESIGN LOADS		
	O.D. IN.	WALL THICK. IN.	DEFL. ΔH IN.	SIZE	NO.	BOLT CIRCLE DIA.	SIZE IN.	DEFL. ΔV IN.	SHEAR V KIPS	TORSION T K-FT	MOMENT M K-FT	O.D. IN.	WALL THICK. IN.	DEFL. ΔH IN.	SIZE	NO.	BOLT CIRCLE DIA.	SIZE IN.	DEFL. ΔV IN.	SHEAR V KIPS	TORSION T K-FT	MOMENT M K-FT
25'	16	0.375	0.24	1½"ø	8	21.0	25 x 1¾	0.2	6.46	27.82	153.7	16	0.531	0.384	1¾"ø	8	21½	26 x 2¼	0.5	9.30	62.60	225.51
26'	16	0.375	0.25	1½"ø	8	21.0	25 x 1¾	↑	6.49	27.82	160.15	16	0.531	0.415	1¾"ø	8	21½	26 x 2¼	↑	9.33	62.60	234.80
27'	16	0.406	0.26	1½"ø	8	21.0	25 x 1¾		6.52	27.82	166.65	16	0.531	0.448	1¾"ø	8	21½	26 x 2¼		9.36	62.60	244.12
28'	16	0.438	0.26	1½"ø	8	21.0	25 x 1⅞		6.55	27.82	173.18	16	0.656	0.400	2"ø	8	22	27 x 2⅜		9.39	62.60	253.47
29'	16	0.469	0.26	1½"ø	8	21.0	25 x 1⅞		6.58	27.82	179.73	16	0.656	0.429	2"ø	8	22	27 x 2⅜		9.42	62.60	262.85
30'	16	0.469	0.27	1¾"ø	8	21.5	26 x 1⅞		6.61	27.82	186.32	16	0.687	0.441	2"ø	8	22	27 x 2½		9.45	62.60	272.26
31'	16	0.469	0.29	1¾"ø	8	21.5	26 x 2		6.64	27.82	192.94	16	0.687	0.471	2"ø	8	22	27 x 2½		9.48	62.60	281.70
32'	16	0.469	0.31	1¾"ø	8	21.5	26 x 2		6.67	27.82	199.59	16	0.687	0.502	2"ø	8	22	27 x 2½		9.50	62.60	291.17
33'	16	0.500	0.32	1¾"ø	8	21.5	26 x 2⅛		6.70	27.82	206.26	16	0.687	0.534	2"ø	8	22	27 x 2½		9.53	62.60	300.68
34'	16	0.500	0.33	1¾"ø	8	21.5	26 x 2⅛		6.73	27.82	212.97	16	0.750	0.525	2"ø	8	22	27 x 2½		9.56	62.60	310.21
35'	16	0.500	0.35	1¾"ø	8	21.5	26 x 2⅛		6.75	27.82	219.70	16	0.750	0.557	2¼"ø	8	22½	28 x 2⅝		9.59	62.60	319.77
36'	16	0.531	0.35	1¾"ø	8	21.5	26 x 2⅛		6.78	27.82	226.47	16	0.750	0.589	2¼"ø	8	22½	28 x 2⅝		9.62	62.60	329.37
37'	16	0.531	0.37	1¾"ø	8	21.5	26 x 2¼		6.81	27.82	233.26	16	0.750	0.622	2¼"ø	8	22½	28 x 2¾		9.65	62.60	338.99
38'	16	0.531	0.39	1¾"ø	8	21.5	26 x 2¼		6.84	27.82	240.08	16	0.750	0.656	2¼"ø	8	22½	28 x 2¾		9.65	62.60	347.49
39'	16	0.656	0.35	1¾"ø	8	21.5	26 x 2¼		6.87	27.82	246.94	16	0.843	0.626	2¼"ø	8	22½	28 x 2⅞		9.71	62.60	358.32
40'	16	0.656	0.36	1¾"ø	8	21.5	26 x 2¼		6.90	27.82	253.82	16	0.843	0.658	2¼"ø	8	22½	28 x 2⅞		9.74	62.60	368.03
42'	16	0.656	0.40	2"ø	8	22.0	27 x 2⅜		6.96	27.82	267.67	16	0.843	0.726	2¼"ø	8	22½	28 x 3		9.80	62.60	387.55
44'	16	0.687	0.42	2"ø	8	22.0	27 x 2⅜	↓	7.02	27.82	281.64	16	1.031	0.675	2¼"ø	8	22½	28 x 3	↓	9.85	62.60	407.18
45'	16	0.687	0.44	2"ø	8	22.0	27 x 2⅜	0.2	7.05	27.82	288.67	16	1.218	0.619	2¼"ø	8	22½	28 x 3	0.5	9.88	62.60	417.04

TOWER HGT. FT.	20' SPAN											25' SPAN											
	TOWER PIPE			ANCHOR BOLTS			BASE PLATE	TRUSS	DESIGN LOADS			TOWER PIPE			ANCHOR BOLTS			BASE PLATE	TRUSS	DESIGN LOADS		
	O.D. IN.	WALL THICK. IN.	DEFL. ΔH IN.	SIZE	NO.	BOLT CIRCLE DIA.	SIZE IN.	DEFL. ΔV IN.	SHEAR V KIPS	TORSION T K-FT	MOMENT M K-FT	O.D. IN.	WALL THICK. IN.	DEFL. ΔH IN.	SIZE	NO.	BOLT CIRCLE DIA.	SIZE IN.	DELF. ΔV IN.	SHEAR V KIPS	TORSION T K-FT	MOMENT M K-FT
25'	20	0.438	0.411	2"ø	8	25¾	30½x2⅛	0.8	12.34	111.29	300.38	24	0.469	0.356	2"ø	8	29¾	34½x2⅛	0.9	15.37	173.89	375.94
26'	20	0.438	0.444	2"ø	8	25¾	30½x2⅛	↑	12.37	111.29	312.67	24	0.469	0.385	2"ø	8	29¾	34½x2⅛	↑	15.41	173.89	391.21
27'	20	0.469	0.449	2"ø	8	25¾	30½x2¼		12.41	111.29	325.01	24	0.500	0.391	2"ø	8	29¾	34½x2¼		15.46	173.89	406.54
28'	20	0.500	0.421	2"ø	8	25¾	30½x2¼		12.44	111.29	337.38	24	0.500	0.421	2¼"ø	8	30	35 x2¼		15.50	173.89	421.92
29'	20	0.500	0.488	2"ø	8	25¾	30½x2¼		12.48	111.29	349.80	24	0.500	0.451	2¼"ø	8	30	35 x2¼		15.54	173.89	437.35
30'	20	0.531	0.495	2"ø	8	25¾	30½x2¼		12.52	111.29	362.25	24	0.500	0.483	2¼"ø	8	30	35 x2¼	↓	15.59	173.89	452.82
31'	20	0.562	0.501	2"ø	8	25¾	30½x2⅜		12.55	111.29	374.75	24	0.531	0.488	2¼"ø	8	30	35 x2¼	0.9	15.63	173.89	468.35
32'	20	0.562	0.534	2¼"ø	8	26	31 x 2⅜		12.59	111.29	387.28	24	0.531	0.520	2¼"ø	8	30	35 x2¼	1.0	15.68	173.89	483.93
33'	20	0.562	0.568	2¼"ø	8	26	31 x 2⅜		12.63	111.29	399.85	24	0.531	0.553	2¼"ø	8	30	35 x2¼	↑	15.72	173.89	499.55
34'	20	0.594	0.573	2¼"ø	8	26	31 x 2⅜		12.66	111.29	412.46	24	0.531	0.587	2¼"ø	8	30	35 x2⅜		15.76	173.89	515.23
35'	20	0.594	0.607	2¼"ø	8	26	31 x2½		12.70	111.29	425.11	24	0.531	0.622	2½"ø	8	30½	36 x2⅜		15.81	173.89	530.95
36'	20	0.594	0.643	2¼"ø	8	26	31 x 2⅝		12.74	111.29	437.80	24	0.562	0.624	2½"ø	8	30½	36 x2½	↓	15.85	173.89	546.71
37'	20	0.625	0.648	2¼"ø	8	26	31 x 2⅝		12.77	111.29	450.53	24	0.562	0.659	2½"ø	8	30½	36 x2½	1.0	15.89	173.89	562.53
38'	20	0.625	0.684	2¼"ø	8	26	31 x 2⅝		12.81	111.29	463.29	24	0.562	0.695	2½"ø	8	30½	36 x2½	1.1	15.94	173.89	578.39
39'	20	0.656	0.689	2¼"ø	8	26	31 x 2¾		12.84	111.29	476.09	24	0.594	0.696	2½"ø	8	30½	36 x2⅜	↑	15.98	173.89	594.30
40'	20	0.656	0.725	2¼"ø	8	26	31 x 2¾		12.88	111.29	488.93	24	0.594	0.732	2½"ø	8	30½	36 x2⅜		16.03	173.89	610.25
42'	20	0.719	0.736	2½"ø	8	26½	31½x2¾		12.95	111.29	514.72	24	0.625	0.770	2½"ø	8	30½	36 x2¾		16.11	173.89	642.29
44'	20	0.750	0.779	2½"ø	8	26½	31½x2⅞	↓	13.03	111.29	540.66	24	0.656	0.808	2½"ø	8	30½	36 x2¾	↓	16.20	173.89	674.52
45'	20	0.750	0.814	2½"ø	8	26½	31½x2⅞	0.8	13.06	111.29	553.68	24	0.688	0.809	2½"ø	8	30½	36 x2¾	1.1	16.24	173.89	690.71

TOWER HGT. FT.	30' SPAN											35' SPAN											
	TOWER PIPE			ANCHOR BOLTS			BASE PLATE	TRUSS	DESIGN LOADS			TOWER PIPE			ANCHOR BOLTS			BASE PLATE	TRUSS	DESIGN LOADS		
	O.D. IN.	WALL THICK. IN.	DEFL. ΔH IN.	SIZE	NO.	BOLT CIRCLE DIA.	SIZE IN.	DEFL. ΔV IN.	SHEAR V KIPS	TORSION T K-FT	MOMENT M K-FT	O.D. IN.	WALL THICK. IN.	DEFL. ΔH IN.	SIZE	NO.	BOLT CIRCLE DIA.	SIZE IN.	DEFL. ΔV IN.	SHEAR V KIPS	TORSION T K-FT	MOMENT M K-FT
25'	24	0.531	0.475	2¼"ø	8	30.0	35 x2¼	1.4	18.21	250.41	449.85	30	0.406	0.442	2¼"ø	8	36	41 x2	1.6	21.34	340.83	529.13
26'	24	0.531	0.514	2¼"ø	8	30.0	35 x2¼	↑	18.25	250.41	467.86	30	0.406	0.478	2¼"ø	8	36	41 x2	1.7	21.40	340.83	550.13
27'	24	0.562	0.526	2¼"ø	8	30.0	35 x2⅜		18.29	250.41	485.93	30	0.438	0.479	2¼"ø	8	36	41 x2⅛	↑	21.45	340.83	571.21
28'	24	0.562	0.566	2¼"ø	8	30.0	35 x2⅜	1.4	18.34	250.41	504.07	30	0.438	0.515	2¼"ø	8	36	41 x2⅛		21.50	340.83	592.37
29'	24	0.562	0.607	2¼"ø	8	30.0	35 x2⅜	1.5	18.38	250.41	522.25	30	0.438	0.552	2¼"ø	8	36	41 x2⅛		21.56	340.83	613.61
30'	24	0.594	0.617	2½"ø	8	30.5	36 x2½	1.5	18.43	250.41	540.50	30	0.438	0.591	2½"ø	8	36½	42 x2¼	↓	21.61	340.83	634.92
31'	24	0.594	0.659	2½"ø	8	30.5	36 x2½	1.5	18.47	250.41	558.79	30	0.469	0.591	2½"ø	8	36½	42 x2¼	1.7	21.67	340.83	656.31
32'	24	0.594	0.702	2½"ø	8	30.5	36 x2⅝	1.6	18.51	250.41	577.14	30	0.469	0.630	2½"ø	8	36½	42 x2¼	1.8	21.72	340.83	677.76
33'	24	0.625	0.712	2½"ø	8	30.5	36 x2⅝	↑	18.56	250.41	595.54	30	0.469	0.670	2½"ø	8	36½	42 x2⅜	↑	21.78	340.83	699.28
34'	24	0.625	0.756	2½"ø	8	30.5	36 x2⅝		18.60	250.41	614.00	30	0.500	0.669	2½"ø	8	36½	42 x2⅜		21.83	340.83	720.87
35'	24	0.656	0.766	2½"ø	8	30.5	36 x2¾		18.64	250.41	632.50	30	0.500	0.709	2½"ø	8	36½	42 x2½		21.89	340.83	742.53
36'	24	0.656	0.811	2½"ø	8	30.5	36 x2¾		18.69	250.41	651.05	30	0.500	0.750	2½"ø	8	36½	42 x2½		21.94	340.83	764.25
37'	24	0.688	0.820	2½"ø	8	30.5	36 x2¾		18.73	250.41	669.66	30	0.531	0.749	2½"ø	8	36½	42 x2½		22.00	340.83	786.04
38'	24	0.688	0.865	2½"ø	8	30.5	36 x2¾		18.78	250.41	688.31	30	0.531	0.790	2⅝"ø	8	37	43 x2⅝		22.05	340.83	807.89
39'	24	0.719	0.875	2½"ø	8	30.5	36 x2⅞		18.82	250.41	707.01	30	0.562	0.788	2¾"ø	8	37	43 x2⅝		22.10	340.83	829.80
40'	24	0.719	0.920	2¾"ø	8	31.5	38 x2⅞		18.86	250.41	725.76	30	0.562	0.829	2¾"ø	8	37	43 x2¾		22.16	340.83	851.78
42'	24	0.750	0.977	2¾"ø	8	31.5	38 x3		18.95	250.41	763.41	30	0.594	0.868	2¾"ø	8	37	43 x2¾		22.27	340.83	895.92
44'	24	0.937	0.877	2¾"ø	8	31.5	38 x3	↓	19.04	250.41	801.24	30	0.625	0.905	2¾"ø	8	37	43 x2¾	1.8	22.38	340.83	940.31
45'	24	0.937	0.918	2¾"ø	8	31.5	38 x 3½	1.6	19.08	250.41	820.23	30	0.625	0.947	2¾"ø	8	37	43 x2¾	1.9	22.43	340.83	962.59

TOWER HGT. FT.	40' SPAN											
	TOWER PIPE			ANCHOR BOLTS			BASE PLATE	TRUSS	DESIGN LOADS			
	O.D. IN.	WALL THICK. IN.	DEFL. ΔH IN.	SIZE	NO.	BOLT CIRCLE DIA.	SIZE IN.	DEFL. ΔV IN.	SHEAR V KIPS	TORSION T K-FT	MOMENT M K-FT	
25'	30	0.500	0.502	2½"ø	8	36½	42 x2¼	2.1	24.18	445.17	606.83	25'
26'	30	0.500	0.543	2½"ø	8	36½	42 x2¼	2.2	24.23	445.17	630.43	26'
27'	30	0.500	0.586	2½"ø	8	36½	42 x2⅜	2.3	24.29	445.17	654.13	27'
28'	30	0.531	0.595	2½"ø	8	36½	42 x2⅜	↓	24.34	445.17	677.92	28'
29'	30	0.531	0.638	2½"ø	8	36½	42 x2⅜		24.40	445.17	701.81	29'
30'	30	0.531	0.683	2½"ø	8	36½	42 x2½	2.3	24.45	445.17	725.77	30'
31'	30	0.562	0.691	2½"ø	8	36½	42 x2½	2.4	24.51	445.17	749.82	31'
32'	30	0.562	0.737	2¾"ø	8	37	43 x2½	↓	24.56	445.17	773.96	32'
33'	30	0.562	0.783	2¾"ø	8	37	43 x2⅝		24.61	445.17	798.17	33'
34'	30	0.594	0.789	2¾"ø	8	37	43 x2⅝	↓	24.67	445.17	822.45	34'
35'	30	0.594	0.836	2¾"ø	8	37	43 x2⅝	2.4	24.72	445.17	846.81	35'
36'	30	0.594	0.885	2¾"ø	8	37	43 x2¾	2.5	24.78	445.17	871.25	36'
37'	30	0.625	0.891	2¾"ø	8	37	43 x2¾	↑	24.83	445.17	895.75	37'
38'	30	0.625	0.940	2¾"ø	8	37	43 x2¾		24.89	445.17	920.33	38'
39'	30	0.656	0.946	2¾"ø	8	37	43 x2¾	↓	24.94	445.17	944.97	39'
40'	30	0.656	0.995	2¾"ø	8	37	43 x2⅞	2.5	25.00	445.17	969.68	40'
42'	30	0.688	1.150	3"ø	8	37½	44 x 3	2.7	25.11	445.17	1019.30	42'
44'	30	0.719	1.106	3"ø	8	37½	44 x 3	2.6	25.22	445.17	1069.19	44'
45'	30	0.719	1.157	3"ø	8	37½	44 x 3	2.6	25.27	445.17	1094.23	45'

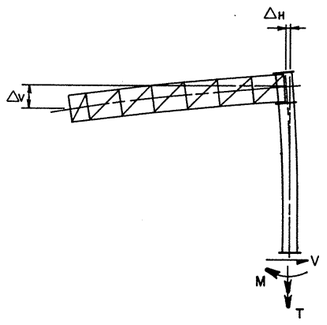

ELEVATION

(SHOWING DESIGN LOADS AND DEAD LOAD DEFLECTIONS)

TRUSS DETAILS

SPAN	10',15' & 20'	25'	30'	35'	40'
WxD = WIDTH x DEPTH	4.5 X 4.5	4.5 X 4.5	4.5 X 4.5	4.5 X 4.5	4.5 X 4.5
CHORD	3 x 3 x 3/16 ③	3 x 3 x ¼ ④	3½x3½x 5/16(HS50) ⑧	3½x3½x 5/16(HS50) ⑨	3½x3½x 3/8(HS50) ⑧
DEAD LOAD DIAGONAL	2½x1½ x 3/16 ②	2½x1½x 3/16 ②	2½x 1½ x 3/16 ②	2½x 1½ x 3/16 ②	3 x 2 x 3/16 ②
WIND LOAD DIAGONAL	3 x 3 x 3/16 ③	3 x 3 x 3/16 ③	3 x 2½ x ¼ ③	3 x 3 x ¼ ④	3 x 3 x ¼ ③
DEAD LOAD VERTICAL	2½ x 1½ x 3/16 ②	2½ x1½ x 3/16 ②	2½x1½ x 3/16 ②	2½ x1½ x 3/16 ②	3 x 2 x 3/16 ②
WIND LOAD STRUT	2 x 2 x 3/16 ①	2 x 2 x 3/16 ①	2 x 2 x 3/16 ①	2 x 2 x 3/16 ①	2½ x 2½ x 3/16 ①
TRUSS DEAD LOAD	42 #/ft.	47 #/ft.	59 #/ft.	60 #/ft.	70 #/ft.
SIZE H.S. BOLTS IN CONN.	5/8"ø	5/8"ø	5/8"ø	5/8"ø	¾"ø
NO. & SIZE OF H.S. BOLTS IN CHORD ANGLE TO TOWER CONNECTION PLATE	3~ 5/8"ø	5~ 5/8"ø or 3~ ¾"ø ea.	8~ 5/8"ø or 6~ ¾"ø ea.	9~ 5/8"ø or 7~ ¾"ø ea.	8~ ¾"ø ea.

All truss members are angles.

Number of High Strength bolts required in truss connection or splice are indicated thus ③ after the member size.

Deflections shown include the design loads for Truss, Sign Panel, Lights and Walkways.

GENERAL NOTES:

Steel for tower pipe shall conform to ASTM A53 Grade B or to ASTM A501. Tower pipe wall thickness shown is the minimum allowable. Fabricator may use the wall thickness shown or pipe of the same diameter with greater wall thickness.

All other structural steel shall conform to ASTM A36 except where noted HS 50 which shall be ASTM A 441, ASTM A572 or ASTM A588.

All connection bolts shall conform to ASTM A325 or ASTM A 449.

All structural steel, connection bolts, nuts and washers shall be galvanized in accordance with the Specifications.

Compensate for truss deflection at free end by offsetting upper and lower bolt holes at truss-to-tower connection.

For truss details see sheet 2 of 3.

For base and foundation details see sheet 3 of 3.

For cantilever truss lengths falling between those shown use sizes called for in the next longer span.

Towers for cantilever sign supports are designed for the equivalent area of a 10 foot deep sign panel over 100% of the span length. Design includes 3 lb./□' for sign panel and 20 lb./lin. ft. for lights and 50 lb./lin. ft. for walkways all placed as specified for the design sign panel.

Details called for hereon are applicable for Design Wind Heights of 30' to 50' inclusive.

STATE DEPARTMENT OF HIGHWAYS AND PUBLIC TRANSPORTATION

HIGH LEVEL CANTILEVER OVERHEAD SIGN SUPPORTS HCOSS-Z1

ORIGINAL DRAWING DATE: 7-83	STATE DISTRICT	FEDERAL REGION	FEDERAL AID PROJECT #	SHEET
DR.:-CWC REVISIONS	PHARR	6		871
CK.:-LEH	COUNTY	CONTROL	SECTION	JOB	HIGHWAY
DW.:-EDS	HIDALGO	0755	06	091	US 281
CK.:-LEH					62

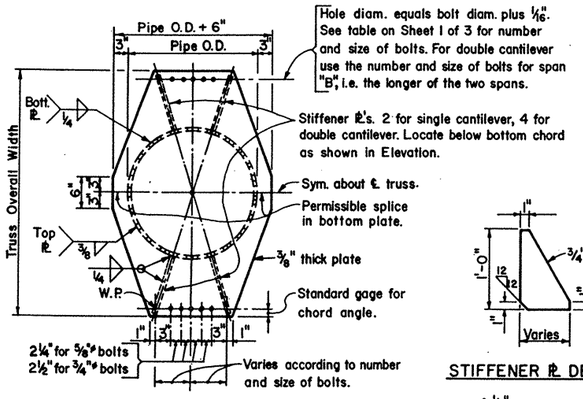

CONNECTION PLATE DETAIL

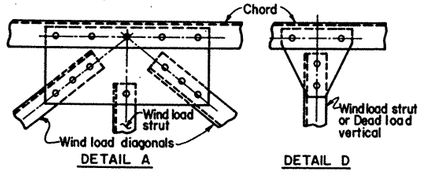

DETAIL A DETAIL D DETAIL G

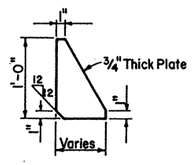

STIFFENER Pl. DETAIL

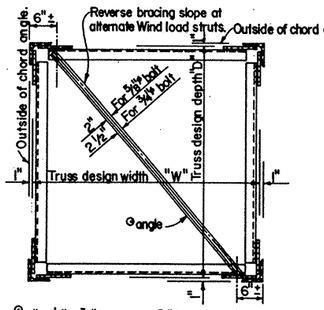

⊙ 2"X1½"X 3/16" angle for 5/8"ϕ bolts. ①
2½"X1½"X 3/16" angle for 3/4"ϕ bolts. ①

TRUSS SECTION
(DIAGONALS NOT SHOWN)

TOTAL NO. OF BOLTS IN DIAGS. IN JOINT	NUMBER OF BOLTS REQD. IN GUSSET Pl. TO CHORD CONNECTION
0	2
2	2
3	3
4	3
5	4
6	4
8	5
10	6

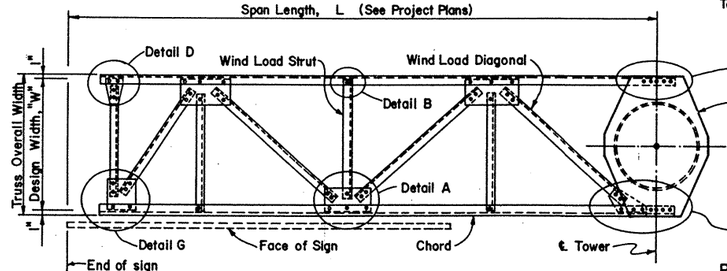

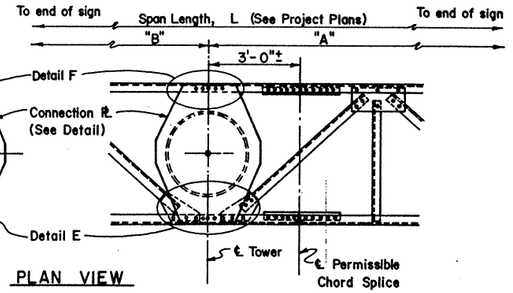

PLAN VIEW

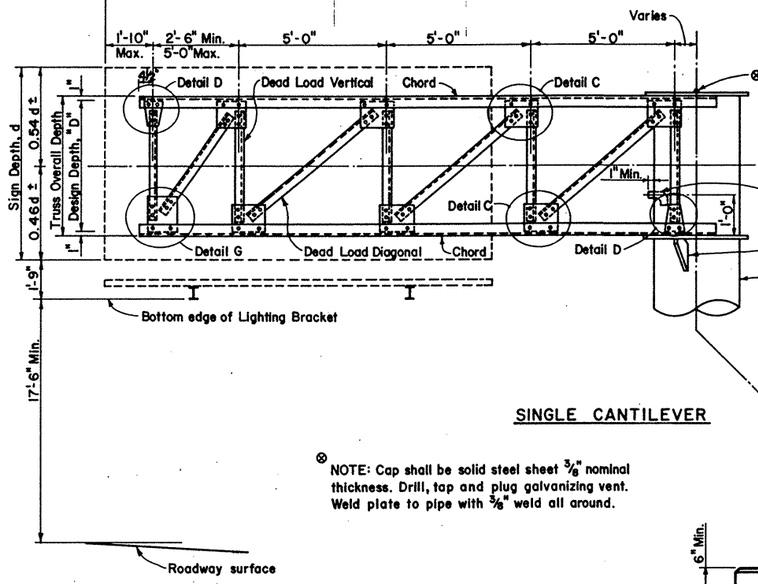

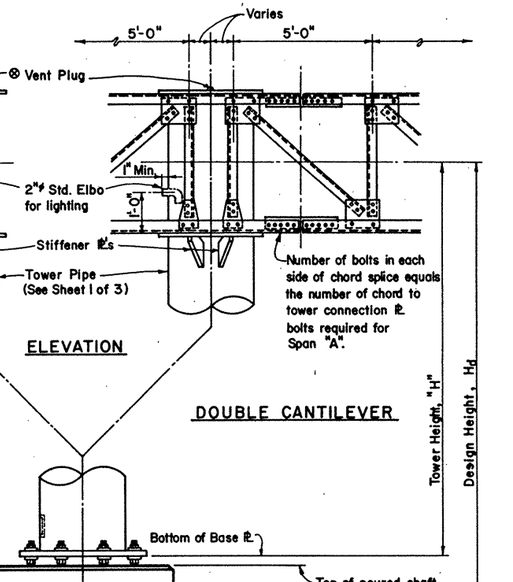

ELEVATION

SINGLE CANTILEVER DOUBLE CANTILEVER

⊗ NOTE: Cap shall be solid steel sheet 3/8" nominal thickness. Drill, tap and plug galvanizing vent. Weld plate to pipe with 3/8" weld all around.

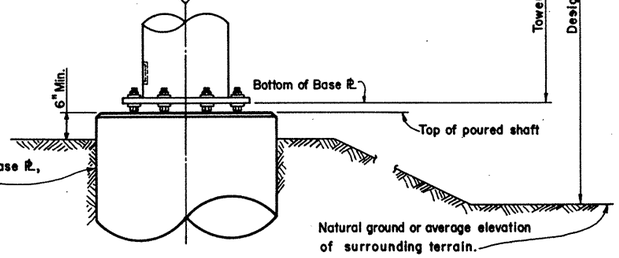

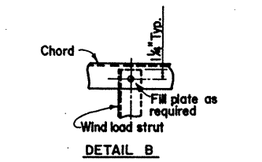

DETAIL B

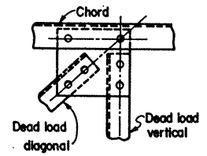

DETAIL C

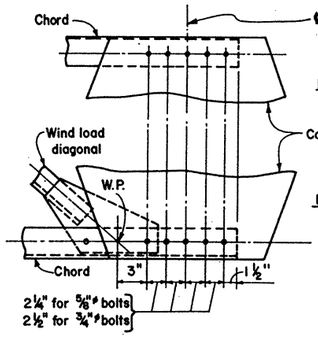

DETAIL F SINGLE CANTILEVER

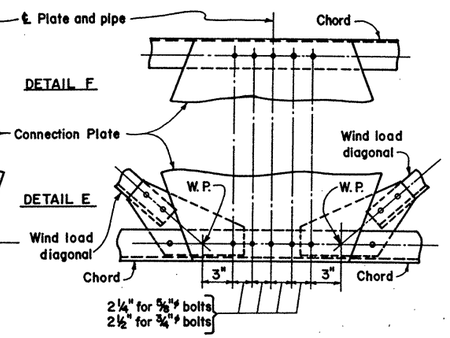

DETAIL E DOUBLE CANTILEVER

* MINIMUM LENGTH OF 3/16" FILLET WELD REQUIRED		
NUMBER OF BOLTS	TO REPLACE 5/8"ϕ BOLTS	TO REPLACE 3/4"ϕ BOLTS
1	2"	3"
2	4"	6"
3	6"	9"
4	8"	11½"
5	10"	14½"
6	12"	17½"
7	14"	20"

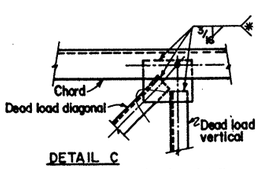

DETAIL C
(Gusset plates in other details to be similar)

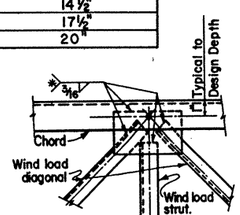

DETAIL A

ALTERNATE WELDED CONNECTION DETAILS

CONNECTION DETAILS

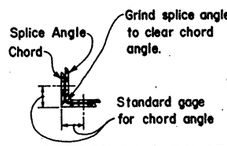

SECTION ON ℄ SPLICE

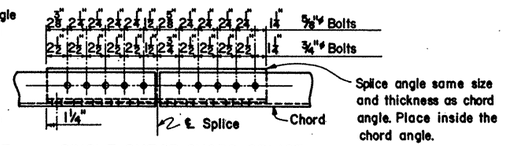

SINGLE SHEAR CHORD SPLICE

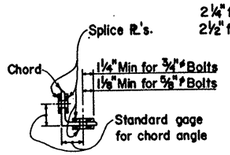

SECTION ON ℄ SPLICE

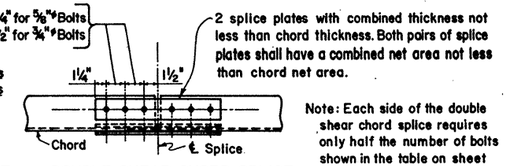

DOUBLE SHEAR CHORD SPLICE

Note: Each side of the double shear chord splice requires only half the number of bolts shown in the table on sheet 1 of 3.

SPLICE DETAILS

GENERAL NOTES:

Design conforms to 1975 AASHTO Standard Specifications for Structural Supports for Highway Signs, Luminaires and Traffic Signals and Interim revisions thereto. Connection details are typical only. Actual size of member and number of bolts will vary. The details on this sheet are intended as a guide only. See Sheet 1 of 3 for number of bolts and size of members.

Gusset plates to be same thickness as thickest web member in connection.

STATE DEPARTMENT OF HIGHWAYS AND PUBLIC TRANSPORTATION

CANTILEVER OVERHEAD SIGN SUPPORT DETAILS

COSSD SHEET 2 OF 3

ORIGINAL DRAWING DATE: 7-83	STATE DISTRICT	FEDERAL REGION	FEDERAL AID PROJECT #	SHEET
DR.:-LEH REVISIONS	PHARR	6		672
CK.:-THD 7-86	COUNTY		CONTROL SECTION JOB	HIGHWAY
DR.:-EDS	HIDALGO		0758 05 091	0523
CK.:-LEH				66

ANCHOR BOLT SIZE	PIPE OUTSIDE DIAMETER 16" BOLT CIRCLE DIA.	16" DR. SHAFT SIZE	16" DR. SHAFT REINF.	20" BOLT CIRCLE DIA.	20" DR. SHAFT SIZE	20" DR. SHAFT REINF.	24" BOLT CIRCLE DIA.	24" DR. SHAFT SIZE	24" DR. SHAFT REINF.	30" BOLT CIRCLE DIA.	30" DR. SHAFT SIZE	30" DR. SHAFT REINF.
1¼"ø X 2'-11"	20½"	36"ø	14-#8 (A)	24½"	36"ø	14-#8(A)						
1⅜"ø X 3'-1"	20¾"	36"ø	12-#9(A)	24¾"	36"ø	12-#9(A)						
1½"ø X 3'-4"	21"	36"ø	12-#9(A)	25"	42"ø	14-#9(A)	29"	42"ø	14-#9 (C)			
1¾"ø X 3'-10"	21½"	36"ø	10-#10(A)	25⅜"	42"ø	12-#10(B)	29⅜"	42"ø	12-#10 (C)	35⅜"	48"ø	16-#10(C)
2"ø X 4'-3"	22"	36"ø	12-#10(A)	25¾"	42"ø	12-#10(B)	29¾"	48"ø	16-#10 (C)	35¾"	54"ø	18-#10(C)
2¼"ø X 4'-9"	22½"	36"ø	10-#11(A)	26"	42"ø	10-#11(B)	30"	48"ø	14-#11 (C)	36"	54"ø	14-#11(D)
2½"ø X 5'-2"				26½"	42"ø	12-#11(B)	30½"	48"ø	16-#11 (C)	36½"	54"ø	16-#11(D)
2¾"ø X 5'-8"							31½"	48"ø	18-#11(D)	37"	54"ø	20-#11(D)
3"ø X 6'-1"										37½"	54"ø	24-#11(D)

A = #3 Plain Spiral at 6" pitch (Grade 40)
B = #4 Plain Spiral at 6" pitch (Grade 40)
C = #4 Plain Spiral at 6" pitch (Grade 60)
D = #4 Plain Spiral at 3½" pitch (Grade 60)

Washers shall conform to ASTM F436-76b.

ANCHOR BOLT DIA. d	WASHER DIMENSIONS OUTSIDE DIAMETER	HOLE DIAMETER	THICKNESS MIN.	THICKNESS MAX.	HOLE IN BASE PLATE
1½" or less	2d	d+⅛"	0.136"	0.177"	d+¼"
1¾"	2d - ⅛"	d+⅛"	0.178"	0.280"	d+5/16"
2"	2d - ¼"	d+⅛"	0.178"	0.280"	d+5/16"
Over 2"	2d - ½"	d+⅛"	0.240"	0.340"	d+5/16"

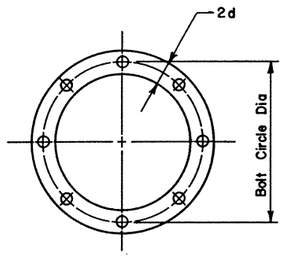

TOP VIEW OF TOP & BOTTOM TEMPLATES

ANCHOR BOLT SIZE DIA.	LENGTH *	PROJ. & THREAD
1¼"ø	2'-11"	5"
1⅜"ø	3'-1"	5½"
1½"ø	3'-4"	6"
1¾"ø	3'-10"	7"
2"ø	4'-3"	8"
2¼"ø	4'-9"	9"
2½"ø	5'-2"	10"
2¾"ø	5'-8"	11"
3"ø	6'-1"	12"

* Minimum dimensions are given.

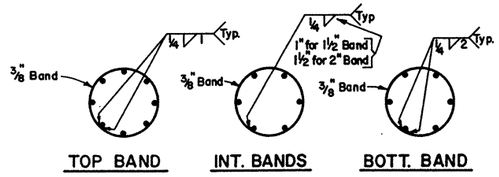

TOP BAND INT. BANDS BOTT. BAND

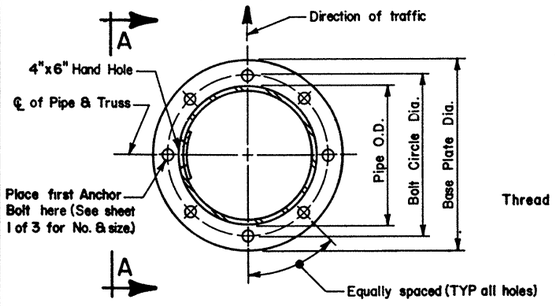

PLAN

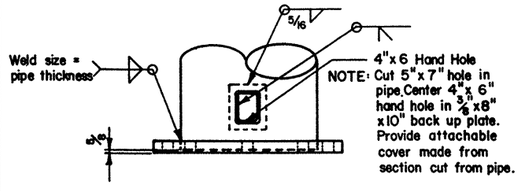

VIEW A-A

BASE PLATE & HANDHOLE DETAILS
(SEE SHEET 1 OF 3 FOR DIAMETER & THICKNESS OF BASE PLATE)

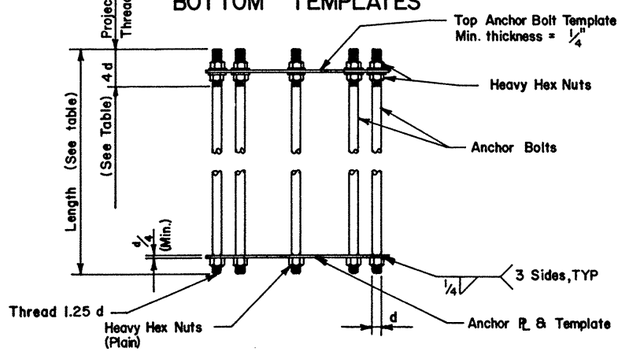

ANCHOR BOLT ASSEMBLY
(PRIOR TO INSTALLATION)

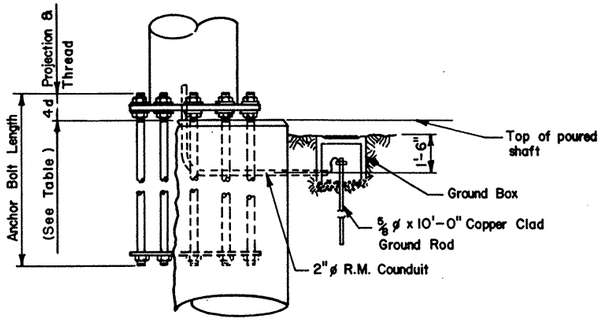

BEARING SEAT ELEVATION

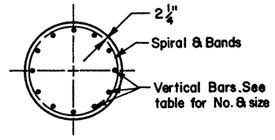

SECTION

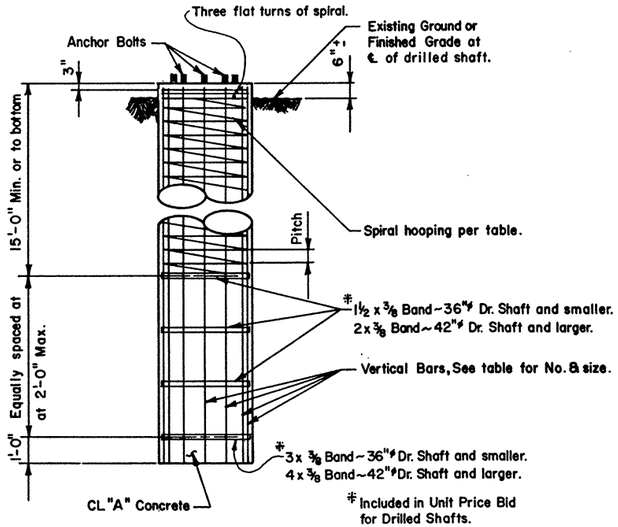

FOUNDATION DETAIL

GENERAL NOTES:

Concrete shall be Class "A".
Reinforcing shall conform to item 440.
Anchor bolts shall conform to ASTM A193-B7. Nuts for anchor bolts shall be heavy hex and shall conform to ASTM A194-2H. Thread for anchor bolts and nuts shall be 8 UN. Unless noted otherwise, anchor bolt top end projection plus 6" shall be galvanized. Nuts and washers at the base plate shall be galvanized. Nuts shall be tapped or chased after galvanizing. Bolts and nuts shall have Class 2A and 2B fit tolerances.
Anchor bolts shall be rigidly held in position during concrete placement using steel templates at the top and bottom. The top templates shall be removed after the concrete has set.
After the structure has been aligned in its final position, tack weld anchor bolt nuts to washer, and tack weld washers to base plate. Galvanizing in welded area shall be reparied in accordance with the Specification.
Unless shown otherwise welded steel bands may be replaced with spiral as noted on the foundation detail.
All vertical reinforcing shall be carried to the bottom of the Dr. Shaft.

STATE DEPARTMENT OF HIGHWAYS AND PUBLIC TRANSPORTATION

CANTILEVER OVERHEAD SIGN SUPPORT FOUNDATION

COSSF

SHEET 3 OF 3

ORIGINAL DRAWING DATE: 7-85	STATE DISTRICT	FEDERAL PROJECT #	SHEET
DN.:-LEH CK.:-THD DW.:-JWK CK.:-LEH REVISIONS	PHARR 6		875
	COUNTY	CONTROL SECTION	JOB
	HIDALGO	0255 05	031 U5251

67

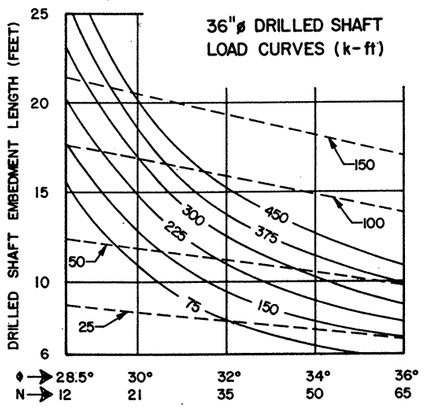

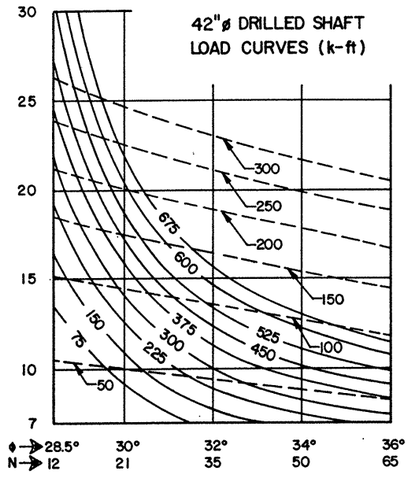

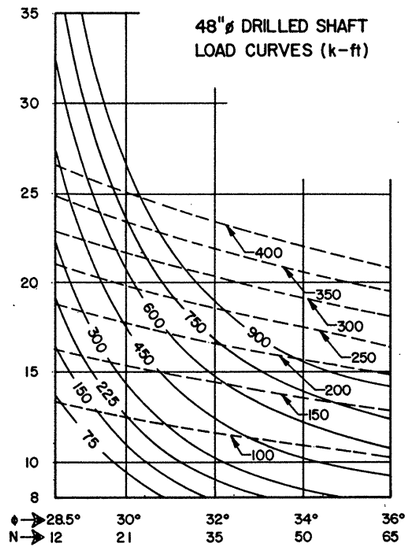

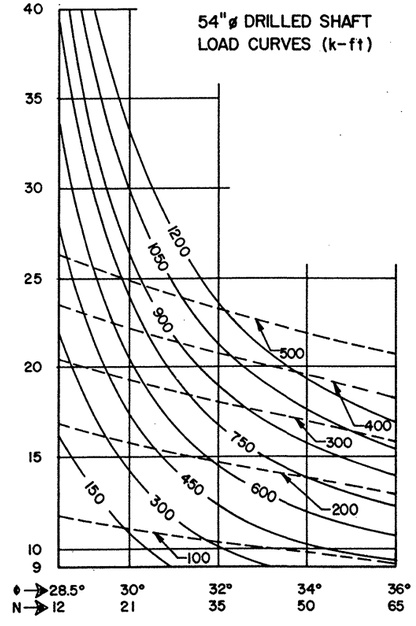

SUBMERGED SAND SOIL (COHESIONLESS) *

MOMENT ———
TORSION - - - - - - - -

*NOTE:
For unsubmerged sands and clayey sands the charts for clay soil will give a conservative foundation design.

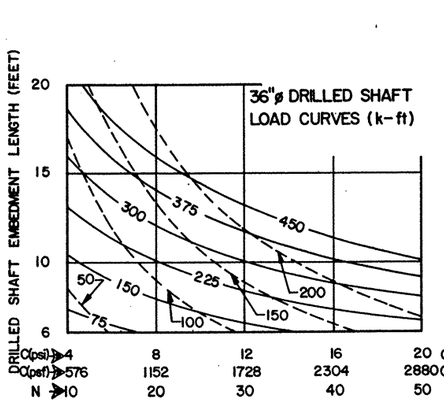

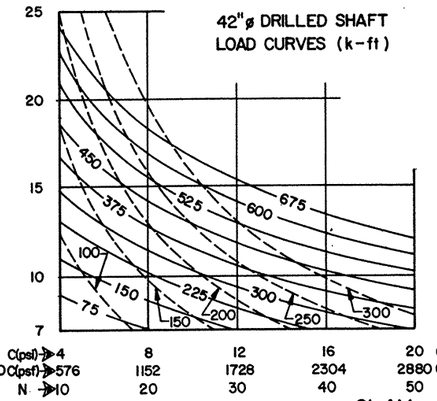

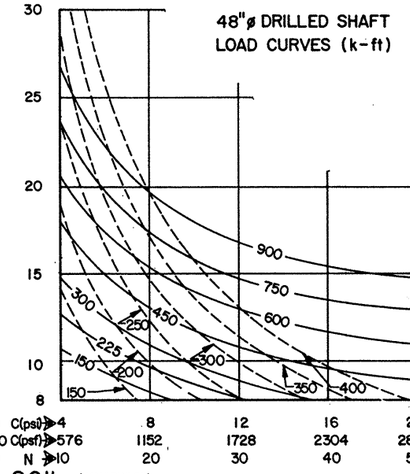

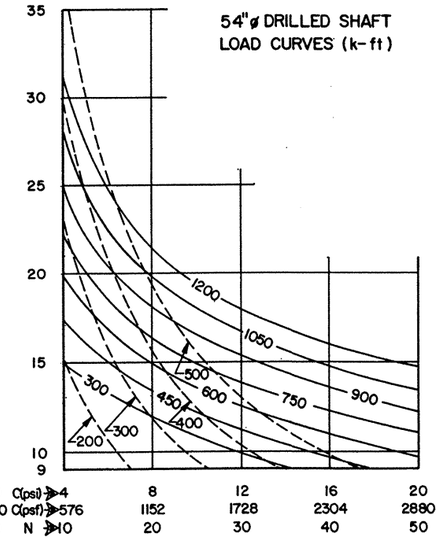

CLAY SOIL (COHESIVE)

MOMENT ———
TORSION - - - - - - - -

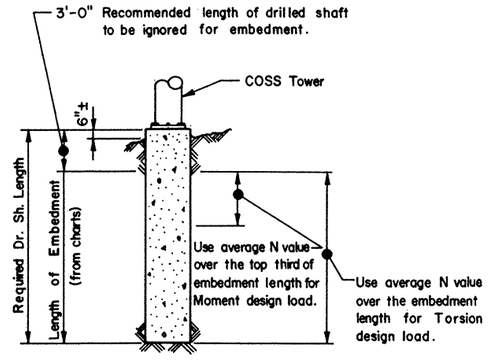

PROCEDURE:

1. Determine design moment and torsion, and the required drilled shaft diameter as outlined in the selection example sheet COSS-SE.
2. Make an initail estimate of the required embedment length.
3. From soil exploration data determine type of soil and average N value or soil property along the upper third of the drilled shaft.
4. Enter chart (for the correct shaft diameter and soil type) from the bottom at the average N value or soil property determined in Step 3.
5. Proceed vertically into chart and locate intersection with design moment. Interpolate between moment curves (solid lines) as needed.
6. From intersection point turn 90° to left and read embedment length along vertical scale.
7. If embedment length differs significantly from estimated value return to Step 3 with the embedment length determined in Step 6.
8. From soil exploration data determine average N value or soil property over the entire length of the embedment.
9. Enter chart (for correct shaft diameter and soil type) from the bottom at the average N value or soil property determined in Step 8.
10. Proceed vertically into chart and locate intersection with design torsion. Interpolate between torsion curves (dashed lines) as needed.
11. From intersection point turn 90° to left and read embedment length along vertical scale.
12. Compute the required length of drilled shaft by adding 3'-0" to longer embedment length required for moment or torsion.

GENERAL NOTES:

These charts are for use with Cantilever Overhead Sign Supports with one shaft per tower.

Solid curves are base moment in k-ft.
Dash curves are base torsion in k-ft.
C = Cohesive shear strength of soil (psf or psi)
ϕ = Angle of internal friction of soil (degrees)
N = Texas Cone Pentrometer value (blows per ft)
Minimum embedment of drilled shaft is two diameters.
Add 3'-0" to the required embedment length to determine the required length of drilled shaft.

STATE DEPARTMENT OF HIGHWAYS AND PUBLIC TRANSPORTATION

FOUNDATION EMBEDMENT SELECTION CHARTS

COSS-FD

ORIGINAL DRAWING DATE: 7-83	STATE DISTRICT	FEDERAL REGION	FEDERAL AID PROJECT #	SHEET
DR.:-CWC	REVISIONS	PHARR	6		874
CK.:-LEH		COUNTY	CONTROL	SECTION	JOB	HIGHWAY
DW.:-JWK		HIDALGO	0255	05	091	US281
CK.:-LEH						68

DISCLAIMER
The use of this standard is governed by the "Texas Engineering Practice Act". No warranty of any kind is made by TxDOT for any purpose whatsoever. TxDOT assumes no responsibility for the conversion of this standard to other formats or for incorrect results or damages resulting from its use.

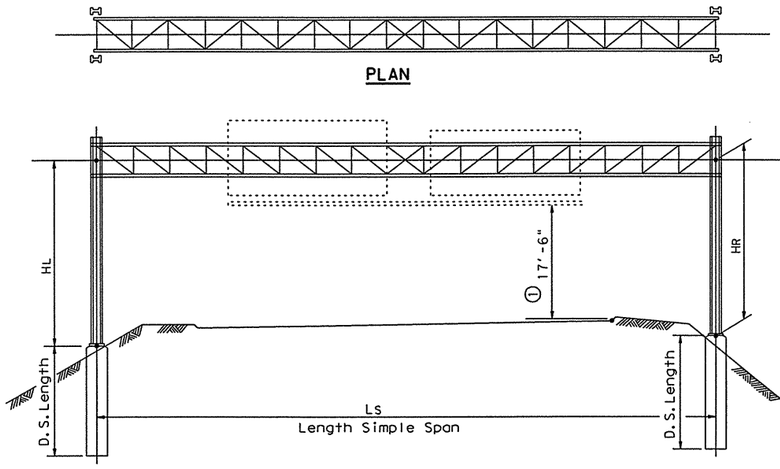

ELEVATION

① Minimum vertical clearance

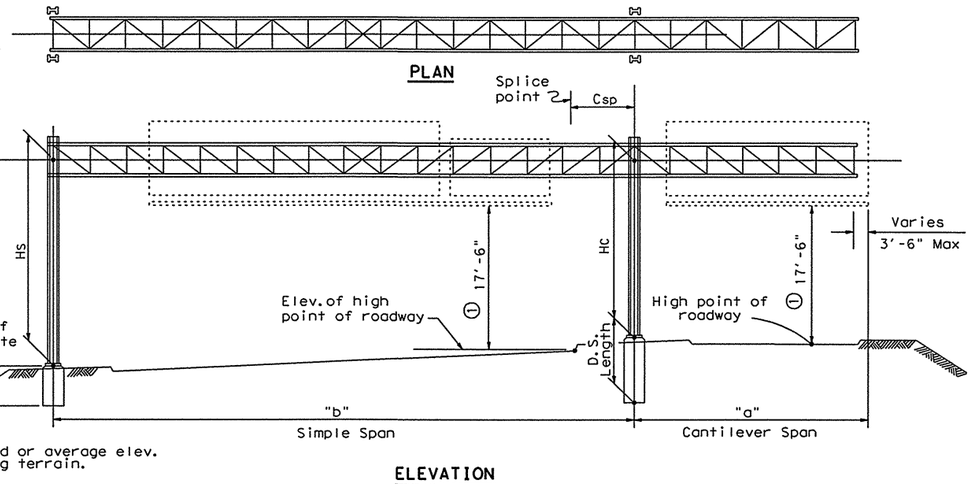

ELEVATION

SELECTION EXAMPLE SIMPLE SPAN

Given: Span, Ls = 93′; Left Tower Height, HL = 26.3′; Right Tower Height, HR = 22.6′; Design Height, Hd = 27′ Avg. Penetrometer Value, N = 25; Dawson County.

Step 1: Select applicable OSB standard.
From wind velocity and ice zone sheet determine that Dawson County is in Zone 2 (90 mph) and is above the ice line. Since Design Height, Hd = 27′, use standard OSB-Z2I. If the Design Height were more than 30′ the applicable standard would be HOSB-Z2I.

Step 2: Determine truss details and tower size from OSB-Z2I.
For our 93′ span go to the next larger span, i.e. 95′.
Truss members are:

Chord	L 4 x 4 x 3/8 (HS50)	with 10 bolt splice
D.L. Diag.	L 3 x 2 1/2 x 3/16	with 2 bolt connection
W.L. Diag.	L 3 x 3 x 1/4	" 3 " "
D.L. Vert.	L 3 x 2 x 3/16	" 2 " "
W.L. Strut	L 2 1/2 x 2 1/2 x 3/16	" 1 " "

Bolts are 3/4" Dia high strength. Truss W x D = 4.5′ x 4.5′.
Required truss camber to compensate for dead load deflection is 1.46". Dead load of truss is 77 lb/ft.
Ave. Tower Height = (26.3′ + 22.6′) ÷ 2 = 24.45′. Use 25′ to determine column size and spacing for both towers, i.e. W14 x 34 spaced at 7.0′. ✳
Use actual tower heights for drilled shaft uplift as follows. For HL = 26.3′ use 26′ to determine design uplift at the left tower = 79.8^{k}. For HR = 22.6′ use 23′ to determine design uplift at the right tower = 69.9^{k}.

Step 3: Determine tower and anchor bolt details. Use standard OSBT.

From OSBT with W14 x 34 columns spaced at 7.0′:

Anchor Bolts	=	1 3/4" Dia x 3′-10"
Base Plate	=	11 1/2" x 2 1/4" x 2′-1"
X, Y and Z	=	9 1/2", 3" and 2 3/4" respectively
Tower Bracing	=	2Ls 3 x 2 1/2 x 1/4
Foundation	=	36" Dia shafts with 8 ~ #9 bars.

Step 4: Determine drilled shaft length from OSB-FD.
Enter chart for 36" Dia drilled shafts at N = 25.
Left Tower Uplift = 79.8^{k} ∴ L = 9′ + 3′ = 12′
Right Tower Uplift = 69.9^{k} ∴ L = 8′ + 3′ = 11′

Step 5: Determine maximum spacing of tower bracing.
The maximum spacing would normally be the same as the column spacing, i.e. 7.0′. However, the special note in the upper left-hand corner of OSBT makes provision for an increase in spacing as follows.
On OSB-Z2I under 95′ span, the W14 x 34 column is shown for 25′ and 26′ column heights. thus, the W14 x 30 column is shown one time for heights greater than the design height of 25′. The special note allows a 1′ increase in the maximum spacing from 7.0′ to 8.0′.

✳ Note: At designer's option each column may be sized separately for the actual tower height.

SELECTION EXAMPLE CANTILEVER SPAN

Given: Simple Span, b = 80′; Cantilever Span, a = 30′; Left Tower Height, Hs = 20.0′; Right Tower Height, Hc = 28.0′; Design Height, Hd = 30′; Avg. Penetrometer Value, N = 25; Duval County.

Step 0: Calculate the following.
Equiv. Simple Span, Ess = b+2a+(a^2 ÷ b)
= 151.3′ Use 155′.
Note: If Ess exceeds 155′ a special tower design is required.
Cantilever Equiv. Simple Span, Cess = 2a = 60′
Splice Point, Csp = (a^2 ÷ b) = 11.3′
Equiv. Simple Span for Truss Web, Essw = b+(a^2 ÷ b) = 91′ Use 95′

Step 1: Select applicable OSB standard.
From Wind Velocity and Ice Zone sheet determine that Duval County is in Zone 4 (70 mph) and is below the ice line. Since Design Height, Hd = 30′, use standard OSB-Z4. If the Design Height were more than 30′ the applicable standard would be HOSB-Z4.

Step2: Determine truss details and tower size from OSB-Z4.
Cantilever Truss: For Cess = 60′ truss members are:

Chord	L 3 x 3 x 1/4 (HS50)	with 6 bolt splice
D.L. Diag.	L 2 1/2 x 1 1/2 x 3/16	with 2 bolt connection
W.L. Diag.	L 2 1/2 x 2 1/2 x 3/16	" 2 " "
D.L. Vert.	L 2 1/2 x 1 1/2 x 3/16	" 2 " "
W.L. Strut	L 2 x 2 x 3/16	" 1 " "

Bolts are 5/8" Dia high strength. Truss W x D = 4.0′ x 4.0′.
Required cantilever truss camber to compensate for dead load deflection is 0.49".
Simple Span Truss: For b = 80′ truss members are:

Chord	L 3 x 3 x 3/8 (HS50)	with 9 bolt splice
D.L. Diag.	L 2 1/2 x 1 1/2 x 3/16	with 2 bolt connection
W.L. Diag.	L 3 x 3 x 3/16	" 2 " "
D.L. Vert.	L 2 1/2 x 1 1/2 x 3/16	" 2 " "
W.L. Strut	L 2 x 2 x 3/16	" 1 " "

Bolts are 5/8" Dia high strength. Truss W x D = 4.0′ x 4.0′.
If W and D for the contilever and simple spans are different, increase the smaller W and D to match the larger truss. Required simple span camber to compensate for dead load deflection is 1.12".
Truss from cantilever tower to splice point: Extend cantilever chords past the tower a distance Csp = 11.2′ which falls in the third panel. The splice is permissible at any point within the third panel.

Web members from the tower out to and including the spliced panel, i.e. the third panel, shall be modified as follows. For Essw = 95′ web members are:

D.L. Diag.	L 2 1/2 x 2 x 3/16	with 2 bolt connection
W.L. Diag.	L 3 x 2 1/2 x 1/4	" 2 " "
D.L. Vert.	L 2 1/2 x 1 1/2 x 3/16	" 2 " "
W.L. Strut	L 2 x 2 x 3/16	" 1 " "

Ignore W and D dimensions. Instead, use W and D as required for cantilever and simple span trusses.
Use 5/8" Dia high strength bolts as required for 95′ span.

Tower size: Avg. Tower Height = (20.0′ + 28.0′) ÷ 2 = 24.0′ Use 24′ height and 155′ equivalent simple span to determine column size and spacing for both towers, i.e. W14 x 34 spaced at 7.7′. ✳
Use spans and actual tower heights for uplift as follows. For Hs = 20′ and b = 80′ determine uplift = 31.7^{k}. For Hc = 28′ and Ess = 155′ determine Uplift = 77.9^{k}.

Step 3: Determine tower and anchor bolt details. Use standard OSBT.

From OSBT with W14 x 34 columns spaced at 7.5′:

Anchor Bolts	=	1 3/4" Dia x 3′-10"
Bass Plate	=	11 1/2" x 2 1/4" x 2′-1"
X, Y and Z	=	9 1/2", 3" and 2 3/4" respectively
Tower Bracing	=	2Ls 3 x 2 1/2 x 1/4
Foundation	=	36" Dia shafts with 8 ~ #9 bars.

Step 4: Determine drilled shaft length from OSB-FD.
Enter chart for 36" Dia drilled shaft at N = 25.
Left Tower Uplift = 31.7^{k} ∴ L = 6′ + 3′ = 9′
Right Tower Uplift = 77.9^{k} ∴ L = 8′ + 3′ = 11′

Step 5: Determine maximum spacing of tower bracing.
The maximum spacing would normally be the same as the column spacing, i.e. 7.5′. However, the special note in the upper left-hand corner of OSBT makes provision for an increase in spacing as follows.

On OSB-Z4 under 155′ span, the W14 x 34 column is shown for 23′ through 26′ column heights. Thus, the W14 x 34 column is shown two times for heights greater than 24′. The special note allows a 2′ increase from 7.5′ to 9.5′.

LEVELS DISPLAYED
1 2 3 4 5 6 7 8 9 10 11 12 13 14 15 16
17 18 19 20 21 22 23 24 25 26 27 28 29 30 31 32
33 34 35 36 37 38 39 40 41 42 43 44 45 46 47 48
49 50 51 52 53 54 55 56 57 58 59 60 61 62 63

DATE:
ACC:
FILE:
DN:
CK:
DW:
CK:

STANDARD PLANS
TEXAS DEPARTMENT OF TRANSPORTATION
Traffic Operations Division

OVERHEAD SIGN BRIDGE SELECTION EXAMPLES

OSB-SE

©TxDOT April 1996

DN:	CK:	DW:	CK:	MSG NO.:
REVISIONS				

STATE DISTRICT	FEDERAL REGION	FEDERAL AID PROJECT	SHEET
PHARR	6		875

COUNTY	CONTROL	SECTION	JOB	HIGHWAY
HILDAGO	0255	08	091	US 281

31

ZONE 1 NO ICE 100 M.P.H. WIND

TRUSS DETAILS

5/8"ø H.S. Bolts Spans 40' Thru 75' — 3/4"ø H.S. Bolts Spans 76' Thru 155'

SPAN	40'	45'	50'	55'	60'	65'	70'	75'	80'	85'	90'	95'	100'	105'	110'
W x D = WIDTH x DEPTH	4.5 X 4.5	4.5 X 4.5	4.5 X 4.5	4.5 X 4.5	4.5 X 4.5	4.5 X 4.5	4.5 X 4.5	4.5 X 4.5	4.5 X 4.5	4.5 X 4.5	4.5 X 4.5	4.5 X 4.5	5.0 X 5.0	5.0 X 5.0	5.0 X 5.0
CHORD	3X3X3/16 (3)	3X3X1/4 (4)	3X3X1/4 (4)	3X3X1/4(HS50) (6)	3½X3½X1/4(HS50) (7)	3½X3½X5/16(HS50) (9)	3½X3½X5/16(HS50) (9)	4X4X5/16(HS50) (10)	3½X3½X3/8(HS50) (8)	4X4X3/8(HS50) (9)	4X4X3/8 (HS50) (10)	4X4X7/16(HS50) (11)	5X5X3/8 (HS50) (11)	4X4X½ (HS50) (12)	5X5X3/8 (HS50) (14)
DEAD LOAD DIAGONAL	2½X1½X3/16 (2)	2½X1½X3/16 (2)	2½X1½X3/16 (2)	2½X1½X3/16 (2)	2½X1½X3/16 (2)	2½X1½X3/16 (2)	2½X1½X3/16 (2)	2½X1½X3/16 (2)	3X2X3/16 (2)	3X2X3/16 (2)	3X2X3/16 (2)	3X2X3/16 (2)	3X2X3/16 (2)	3X2X3/16 (2)	3X2X3/16 (2)
WIND LOAD DIAGONAL	3X3X3/16 (2)	3X3X3/16 (2)	3X3X3/16 (2)	3X2½X1/4 (3)	3X2½X1/4 (3)	3X2½X1/4 (3)	3X3X1/4 (3)	3X3X1/4 (3)	3X3X1/4 (3)	3X3X1/4 (3)	3X3X1/4 (3)	3½X3½X1/4 (3)	3½X3½X1/4 (3)	3½X3½X1/4 (3)	3½X3½X1/4 (3)
DEAD LOAD VERTICAL	2½X1½X3/16 (2)	2½X1½X3/16 (2)	2½X1½X3/16 (2)	2½X1½X3/16 (2)	2½X1½X3/16 (2)	2½X1½X3/16 (2)	2½X1½X3/16 (2)	2½X1½X3/16 (2)	3X2X3/16 (2)	3X2X3/16 (2)	3X2X3/16 (2)	3X2X3/16 (2)	3X2X3/16 (2)	3X2X3/16 (2)	3X2X3/16 (2)
WIND LOAD STRUT	2X2X3/16 (1)	2X2X3/16 (1)	2X2X3/16 (1)	2X2X3/16 (1)	2X2X3/16 (1)	2X2X3/16 (1)	2X2X3/16 (1)	2X2X3/16 (1)	2½X2½X3/16 (1)	2½X2½X3/16 (1)	2½X2½X3/16 (1)	2½X2½X3/16 (1)	2½X2½X3/16 (1)	2½X2½X3/16 (1)	2½X2½X3/16 (1)
TOTAL DEFL. & TRUSS D.L.	Δ=0.12" DL=42#/ft.	Δ=0.18" DL=42#/ft.	Δ=0.21" DL=47#/ft.	Δ=0.30" DL=47#/ft.	Δ=0.38" DL=53#/ft.	Δ=0.44" DL=59#/ft.	Δ=0.58" DL=60#/ft.	Δ=0.75" DL=64#/ft.	Δ=0.86" DL=70#/ft.	Δ=1.08" DL=76#/ft.	Δ=1.20" DL=76#/ft.	Δ=1.43" DL=86#/ft.	Δ=1.46" DL=92#/ft.	Δ=1.58" DL=95#/ft.	Δ=1.88" DL=101#/ft.

TOWER DETAILS

S=COLUMN SPACING	6.0'	6.0'	6.0'	6.0'	6.5'	6.5'	6.5'	6.5'	7.0'	7.0'	7.0'	7.0'	7.5'	7.5'	7.5'
HEIGHT	COLUMN SIZE & UPLIFT (KIPS)														
15'	W1017 (28.0)	W1017 (31.5)	W1022 (34.3)	W1022 (37.8)	W1022 (36.7)	W1022 (39.9)	W1022 (42.9)	W1026 (45.7)	W1026 (44.0)	W1026 (46.8)	W1226 (50.0)	W1226 (52.8)	W1226 (54.0)	W1226 (56.4)	W1430 (59.5)
16'	W1017 (30.0)	W1022 (33.7)	W1022 (36.7)	W1022 (40.5)	W1022 (39.3)	W1022 (42.7)	W1026 (45.9)	W1026 (48.9)	W1026 (47.2)	W1026 (50.1)	W1226 (53.6)	W1226 (56.5)	W1226 (57.8)	W1430 (60.4)	W1430 (63.7)
17'	W1022 (32.0)	W1022 (36.0)	W1022 (39.0)	W1022 (43.1)	W1026 (42.3)	W1026 (45.5)	W1026 (48.8)	W1226 (53.4)	W1226 (51.2)	W1226 (54.3)	W1226 (57.2)	W1226 (60.3)	W1430 (61.5)	W1430 (64.4)	W1430 (68.0)
18'	W1022 (34.0)	W1022 (38.2)	W1022 (41.4)	W1022 (45.8)	W1026 (44.9)	W1026 (48.4)	W1026 (51.9)	W1226 (56.8)	W1226 (54.4)	W1226 (57.7)	W1226 (60.8)	W1430 (64.1)	W1430 (65.4)	W1430 (68.4)	W1430 (72.2)
19'	W1022 (36.4)	W1022 (40.5)	W1026 (43.9)	W1026 (48.4)	W1026 (47.6)	W1226 (51.8)	W1226 (55.6)	W1226 (59.3)	W1226 (57.7)	W1430 (61.8)	W1430 (65.1)	W1430 (68.6)	W1430 (69.2)	W1434 (73.0)	W1430 (76.4)
20'	W1022 (38.5)	W1022 (42.7)	W1026 (46.4)	W1026 (51.1)	W1026 (50.2)	W1226 (54.7)	W1226 (58.7)	W1226 (62.6)	W1226 (60.9)	W1430 (65.3)	W1430 (68.8)	W1430 (72.5)	W1434 (73.1)	W1434 (77.1)	W1434 (80.7)
21'	W1022 (40.6)	W1026 (45.0)	W1026 (49.3)	W1226 (54.4)	W1226 (53.6)	W1226 (57.6)	W1226 (61.8)	W1430 (66.8)	W1430 (65.0)	W1430 (68.8)	W1430 (72.5)	W1434 (76.5)	W1434 (77.6)	W1636 (82.0)	W1636 (85.8)
22'	W1022 (42.7)	W1026 (47.4)	W1026 (51.9)	W1226 (57.1)	W1226 (56.4)	W1226 (60.6)	W1226 (64.9)	W1430 (70.3)	W1430 (68.3)	W1430 (72.4)	W1434 (76.3)	W1434 (80.4)	W1434 (81.6)	W1636 (86.2)	W1636 (90.1)
23'	W1026 (44.2)	W1026 (49.7)	W1226 (55.1)	W1226 (60.0)	W1226 (59.2)	W1430 (64.6)	W1430 (69.1)	W1430 (73.7)	W1430 (71.7)	W1434 (76.0)	W1434 (80.0)	W1636 (85.2)	W1636 (86.5)	W1636 (90.4)	W1640 (94.3)
24'	W1026 (46.3)	W1026 (52.0)	W1226 (57.7)	W1226 (62.8)	W1226 (62.0)	W1430 (67.7)	W1430 (72.4)	W1430 (77.2)	W1434 (75.1)	W1434 (79.5)	W1434 (83.8)	W1636 (89.3)	W1636 (90.6)	W1640 (94.6)	W1640 (98.7)
25'	W1226 (49.7)	W1226 (55.0)	W1226 (60.3)	W1430 (66.9)	W1430 (65.9)	W1430 (70.7)	W1434 (75.6)	W1434 (80.5)	W1434 (78.6)	W1636 (83.0)	W1636 (88.7)	W1636 (93.4)	W1640 (94.5)	W1640 (98.8)	W1640 (103.1)
26'	W1226 (51.9)	W1226 (57.4)	W1226 (63.0)	W1430 (69.8)	W1430 (68.8)	W1430 (73.8)	W1434 (78.9)	W1434 (84.0)	W1434 (82.0)	W1636 (86.6)	W1636 (92.5)	W1640 (97.4)	W1640 (98.6)	W1640 (103.1)	W1846 (107.6)
27'	W1226 (54.1)	W1226 (59.9)	W1430 (67.0)	W1430 (72.8)	W1430 (71.6)	W1434 (76.9)	W1434 (82.2)	W1636 (87.4)	W1636 (86.7)	W1636 (91.6)	W1640 (96.4)	W1640 (101.4)	W1640 (100.2)	W1846 (108.5)	W1846 (113.4)
28'	W1226 (56.4)	W1226 (62.4)	W1430 (69.8)	W1430 (75.8)	W1430 (74.7)	W1434 (80.0)	W1434 (85.5)	W1636 (90.9)	W1636 (90.2)	W1636 (95.4)	W1640 (100.3)	W1640 (105.6)	W1640 (104.2)	W1846 (112.9)	W1846 (118.0)
29'	W1226 (58.7)	W1430 (66.5)	W1430 (72.6)	W1434 (78.7)	W1434 (77.6)	W1434 (83.1)	W1636 (90.4)	W1636 (94.5)	W1640 (93.7)	W1640 (97.5)	W1640 (104.2)	W1846 (111.2)	W1846 (112.4)	W1846 (117.3)	W1846 (122.6)
30'	W1226 (61.0)	W1430 (69.1)	W1430 (75.5)	W1434 (81.7)	W1434 (80.7)	W1636 (86.3)	W1636 (93.9)	W1636 (98.0)	W1640 (97.3)	W1640 (101.2)	W1846 (108.2)	W1846 (115.5)	W1846 (116.6)	W1846 (121.8)	W1850 (127.2)

Height = (HL+HR)/2

ZONE 1 NO ICE 100 M.P.H. WIND

TRUSS DETAILS

SPAN	115'	120'	125'	130'	135'	140'	145'	150'	155'
W x D	5.0 X 5.0	5.0 X 5.0	5.0 X 5.0	5.0 X 5.0	5.0 X 5.0	5.5 X 5.5	5.5 X 5.5	5.5 X 5.5	5.5 X 5.5
CHORD	5X5X7/16(HS50) (5)	5X5X½ (HS50) (16)	5X5X½ (HS50) (18)	6X6X½ (HS50) (20)	6X6X½ (HS50) (21)	6X6X½ (HS50) (21)	6X6X9/16(HS50) (23)	6X6X9/16(HS50) (24)	6X6X5/8 (HS50) (26)
D.L. DIAG.	3X2X3/16 (2)	3X2½X3/16 (2)	3X3X3/16 (2)	3X2X¼ (2)	3X2½X¼ (2)	3X2½X¼ (2)	3X2½X¼ (2)	3X2½X¼ (2)	3X3X¼ (3)
W.L. DIAG.	3½X3½X¼ (4)	4X4X¼ (4)	4X4X¼ (4)	4X4X¼ (4)	3½X3½X5/16 (4)	3½X3½X5/16 (4)	3½X3½X5/16 (4)	3½X3½X5/16 (4)	4X3½X5/16 (4)
D.L. VERT.	3X2X3/16 (2)	3X2½X3/16 (2)	3X2½X3/16 (2)	3X2½X3/16 (2)	3X2½X3/16 (2)	3X3X3/16 (2)	3X2½X¼ (2)	3X2½X¼ (2)	3X2½X¼ (2)
W.L. STRUT	2½X2½X3/16 (1)	2½X2½X3/16 (1)	2½X2½X3/16 (1)	2½X2½X3/16 (1)	2½X2½X3/16 (1)	2½X2½X3/16 (1)	2½X2½X3/16 (1)	2½X2½X3/16 (1)	2½X2½X3/16 (1)
DEFL. & D.L.	Δ=2.04" DL=101#/ft.	Δ=2.30" DL=113#/ft.	Δ=2.61" DL=114#/ft.	Δ=2.74" DL=130#/ft.	Δ=3.14" DL=133#/ft.	Δ=3.09" DL=137#/ft.	Δ=3.36" DL=149#/ft.	Δ=3.82" DL=149#/ft.	Δ=4.14 DL=162#/ft.

TOWER DETAILS

S=COL. SPA.	7.5'	7.5'	7.5'	7.5'	7.5'	7.5'	7.5'	7.5'	7.5'
HEIGHT	COLUMN SIZE & UPLIFT (KIPS)								
15'	W1430 (62.0)	W1434 (64.5)	W1434 (66.9)	W1434 (69.2)	W1434 (71.9)	W1434 (74.8)	W1636 (77.2)	W1636 (80.1)	W1636 (82.6)
16'	W1430 (66.4)	W1434 (69.1)	W1434 (71.6)	W1434 (74.2)	W1434 (77.0)	W1434 (80.1)	W1636 (82.7)	W1636 (85.8)	W1636 (88.5)
17'	W1434 (70.6)	W1434 (73.7)	W1434 (76.4)	W1434 (79.1)	W1636 (82.7)	W1636 (85.5)	W1636 (88.3)	W1640 (91.5)	W1640 (94.3)
18'	W1434 (75.1)	W1434 (78.3)	W1434 (81.2)	W1636 (84.1)	W1636 (88.0)	W1636 (90.8)	W1640 (93.8)	W1640 (97.2)	W1640 (100.3)
19'	W1434 (79.6)	W1636 (83.6)	W1636 (86.7)	W1636 (89.9)	W1640 (93.8)	W1640 (96.1)	W1640 (99.3)	W1846 (104.5)	W1846 (107.7)
20'	W1636 (84.1)	W1636 (88.3)	W1636 (91.6)	W1640 (95.0)	W1640 (99.1)	W1640 (101.5)	W1640 (104.9)	W1846 (110.4)	W1846 (113.9)
21'	W1636 (88.4)	W1640 (92.9)	W1640 (96.4)	W1640 (99.5)	W1846 (104.4)	W1846 (108.6)	W1846 (112.2)	W1846 (116.3)	W1846 (120.0)
22'	W1636 (92.9)	W1640 (97.7)	W1640 (101.3)	W1640 (105.1)	W1846 (109.8)	W1846 (114.2)	W1846 (118.0)	W1846 (122.3)	W1850 (126.2)
23'	W1640 (98.3)	W1640 (102.4)	W1846 (107.2)	W1846 (111.2)	W1846 (115.2)	W1846 (119.8)	W1846 (123.8)	W1850 (128.1)	W1850 (132.1)
24'	W1640 (102.9)	W1846 (107.2)	W1846 (112.2)	W1846 (116.5)	W1846 (120.6)	W1846 (125.4)	W1850 (129.6)	W1850 (134.1)	W1850 (138.3)
25'	W1846 (108.8)	W1846 (113.1)	W1846 (117.3)	W1850 (121.6)	W1850 (126.1)	W1850 (130.8)	W1850 (135.2)	W1855 (140.0)	W1855 (144.4)
26'	W1846 (113.5)	W1846 (118.0)	W1846 (122.3)	W1850 (126.9)	W1850 (131.6)	W1850 (136.5)	W1855 (141.1)	W1855 (146.1)	W1855 (150.7)
27'	W1846 (118.3)	W1846 (122.9)	W1850 (127.5)	W1850 (132.2)	W1850 (137.1)	W1855 (141.9)	W1855 (146.8)	W2157 (154.0)	W2157 (158.9)
28'	W1846 (123.0)	W1850 (127.9)	W1850 (132.6)	W1850 (137.5)	W1855 (142.6)	W1855 (147.7)	W1855 (152.7)	W2157 (160.2)	W2157 (165.3)
29'	W1850 (127.7)	W1850 (132.9)	W1855 (137.5)	W1855 (142.6)	W1855 (148.1)	W2157 (155.6)	W2157 (160.8)	W2162 (166.5)	W2162 (171.8)
30'	W1850 (132.5)	W1850 (137.9)	W1855 (142.6)	W1855 (147.9)	W2157 (153.7)	W2157 (161.5)	W2157 (166.8)	W2162 (172.7)	W2162 (178.3)

Height = (HL+HR)/2

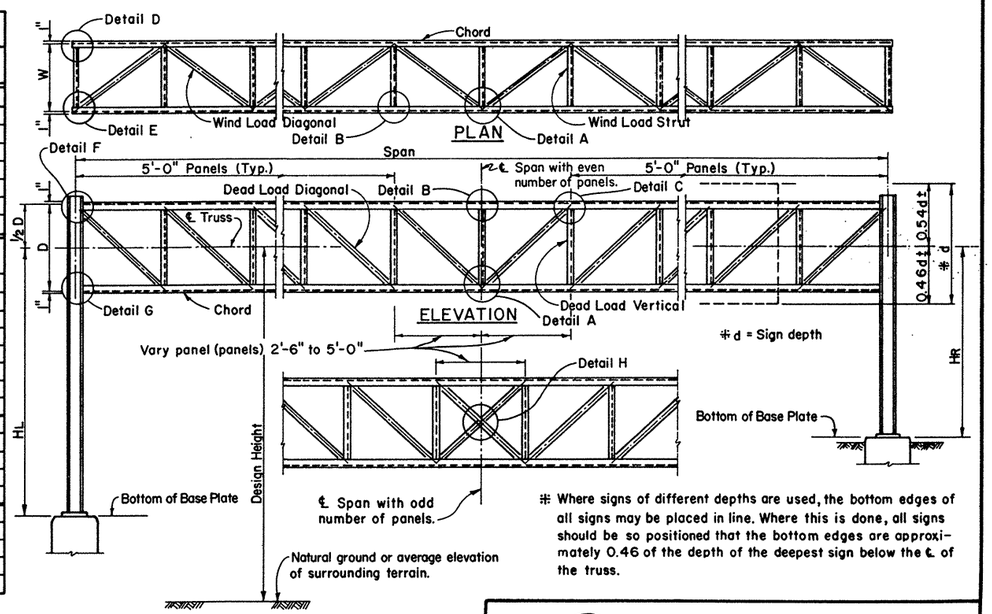

Where signs of different depths are used, the bottom edges of all signs may be placed in line. Where this is done, all signs should be so positioned that the bottom edges are approximately 0.46 of the depth of the deepest sign below the ℄ of the truss.

KEY TO TRUSS AND TOWER DETAILS

Truss members are all angles.

Truss columns are all wide flange shapes.

W 10 25 (42.2) —— Uplift (Kips) at base plate.
- 25 Pounds per foot.
- 10" Nominal size.
- Wide Flange

Δ = 3.02" Deflection due to dead load of truss, walkway, signs and lights.

DL = 77#/ft. Dead load of truss members only, does not include walkway, signs or lights.

GENERAL NOTES:

For over head sign bridges with different tower heights, use column sizes required for the average height of the two towers. Use heights to the nearest foot, for exactly 0.5' increase to the next larger foot.

For truss lengths falling between those shown in the tables use the sizes called for in the next longer span.

Over head sign bridges are designed for the equivalent area of a 10 foot deep sign panel over 75 percent of the span length, located as necessary to produce maximum stress. Design includes 3#/□' for sign panel and 20#/lin. ft. for lights and 50#/lin. ft. for walkway, all placed as specified for the design sign panel.

Details on this sheet are applicable for design height up to 30 feet.

Number of High Strength Bolts required in truss connection or splice are indicated thus (3) after the member size.

STATE DEPARTMENT OF HIGHWAYS AND PUBLIC TRANSPORTATION

OVERHEAD SIGN BRIDGE DETAILS

OSB-Z1

SHEET 1 OF 3

ORIGINAL DRAWING DATE: 7-83	STATE DISTRICT	FEDERAL REGION	FEDERAL AID PROJECT #	SHEET
DN.:-CWC REVISIONS	PHARR	6		576
CK.:-MPN	COUNTY		CONTROL SECTION JOB	HIGHWAY
DW.:-EDS	HIDALGO		0255 03 041	10231
CK.:-CWC				32

ZONE I NO ICE 100 M.P.H. WIND

TRUSS DETAILS

5/8" H.S. BOLTS | 3/4" H.S. BOLTS

SPAN	40'	45'	50'	55'	60'	65'	70'	75'	80'	85'	90'	95'	100'	105'	110'
W x D = WIDTH x DEPTH	4.5' x 4.5'	4.5' x 4.5'	4.5 x 4.5'	4.5' x 4.5'	4.5' x 4.5'	4.5' x 4.5'	4.5' x 4.5'	4.5' x 4.5'	4.5' x 4.5'	4.5' x 4.5'	4.5' x 4.5'	4.5' x 4.5'	5.0' x 5.0'	5.0' x 5.0'	5.0' x 5.0'
CHORD	3x3x 3/16 ③	3x3x 1/4 ④	3x3x 1/4 ④	3 1/2x3 1/2x 5/16 ⑥	3 1/2x3 1/2x 5/16 * ⑧	3 1/2x3 1/2x 5/16* ⑧	3 1/2x3 1/2x 5/16* ⑨	4x4x 5/16 * ⑩	3 1/2x3 1/2x 3/8 * ⑦	4x4x 3/8 * ⑨	4x4x 3/8 * ⑨	4x4x 7/16* ⑩	5x5x 3/8 * ⑪	4x4x 1/2 * ⑫	5x5x 7/16 * ⑬
DEAD LOAD DIAGONAL	2 1/2x1 1/2x 3/16 ②	2 1/2x1 1/2x 3/16 ②	2 1/2x1 1/2x 3/16 ②	2 1/2x1 1/2x 3/16 ②	2 1/2x1 1/2x 3/16 ②	2 1/2x1 1/2x 3/16 ②	2 1/2x1 1/2x 3/16 ②	2 1/2x1 1/2x 3/16 ②	3x2x 3/16 ②	3x2x 3/16 ②	3x2x 3/16 ②	3x2x 3/16 ②	3x2x 3/16 ②	3x2x 3/16 ②	3x2x 3/16 ②
WIND LOAD DIAGONAL	3x3x 3/16 ③	3x3x 3/16 ③	3x3x 3/16 ③	3x2 1/2x 1/4 ④	3x2 1/2x 1/4 ③	3x3x 1/4 ③	3x3x 1/4 ④	3x3x 1/4 ④	3x3x 1/4 ③	3x3x 1/4 ③	3x3x 1/4 ③	3 1/2x3 1/2x 1/4 ③	3 1/2x3 1/2x 1/4 ③	3 1/2x3 1/2x 1/4 ③	3 1/2x3 1/2x 1/4 ③
DEAD LOAD VERTICAL	2 1/2x1 1/2x 3/16 ②	2 1/2x1 1/2x 3/16 ②	2 1/2x1 1/2x 3/16 ②	2 1/2x1 1/2x 3/16 ②	2 1/2x1 1/2x 3/16 ②	2 1/2x1 1/2x3/16 ②	2 1/2x1 1/2x 3/16 ②	2 1/2x1 1/2x 3/16 ②	3x2x 3/16 ②	3x2x 3/16 ②	3x2x 3/16 ②	3x2x 3/16 ②	3x2x 3/16 ②	3x2x 3/16 ②	3x2x 3/16 ②
WIND LOAD STRUT	2x2x 3/16 ①	2x2x 3/16 ①	2x2x 3/16 ①	2x2x 3/16 ①	2x2x 3/16 ①	2x2x 3/16 ①	2x2x 3/16 ①	2x2x 3/16 ①	2 1/2x2 1/2x 3/16 ①	2 1/2x2 1/2x 3/16 ①	2 1/2x2 1/2x 3/16 ①	2 1/2x2 1/2x 3/16 ①	2 1/2x2 1/2x 3/16 ①	2 1/2x2 1/2x 3/16 ①	2 1/2x2 1/2x 3/16 ①
TOTAL DEFL. & TRUSS D.L.	Δ=0.14" DL=42#/ft.	Δ=0.15" DL=47#/ft.	Δ=0.22" DL=47#/ft.	Δ=0.25" DL=59#/ft.	Δ=0.35" DL=59#/ft.	Δ=0.46" DL=60#/ft.	Δ=0.61" DL=60#/ft.	Δ=0.80" DL=64#/ft.	Δ=0.86" DL=70#/ft.	Δ=0.99" DL=76#/ft.	Δ=1.24" DL=78#/ft.	Δ=1.40" DL=86#/ft.	Δ=1.42" DL=92#/ft.	Δ=1.59" DL=95#/ft.	Δ=1.88" DL=101#/ft.

TOWER DETAILS

* = HS 50

S = COLUMN SPACING		6.0'		6.0'		6.0'		6.0'		6.5'		6.5'		6.5'		7.0'		7.0'		7.0'		7.5'		7.5'		7.5'	
HEIGHT	COLUMN SIZE & UPLIFT (KIPS)																										
25'		W1226	(54.9)	W1226	(60.7)	W1430	(66.4)	W1430	(72.5)	W1434	(74.6)	W1434	(79.9)	W1434	(85.3)	W1636	(90.6)	W1636	(88.8)	W1636	(93.8)	W1640	(98.6)	W1640	(103.8)	W1640	(101.0)	W1640	(105.6)	W1846	(110.4)
26'		W1226	(57.4)	W1226	(63.4)	W1430	(69.6)	W1430	(75.7)	W1434	(77.9)	W1434	(83.5)	W1434	(89.1)	W1636	(94.6)	W1636	(92.7)	W1640	(97.6)	W1640	(102.9)	W1640	(108.3)	W1640	(105.5)	W1846	(110.2)	W1846	(115.3)
27'		W1226	(59.9)	W1430	(66.2)	W1430	(72.6)	W1434	(78.5)	W1434	(81.3)	W1434	(87.1)	W1636	(92.7)	W1636	(98.7)	W1640	(96.4)	W1640	(101.8)	W1640	(107.3)	W1846	(112.7)	W1846	(109.8)	W1846	(114.9)	W1846	(120.1)
28'		W1226	(62.5)	W1430	(69.0)	W1434	(75.5)	W1434	(82.0)	W1434	(84.7)	W1636	(90.6)	W1636	(96.6)	W1640	(102.4)	W1640	(100.3)	W1640	(105.9)	W1846	(111.5)	W1846	(117.3)	W1846	(114.2)	W1846	(119.5)	W1850	(124.9)
29'		W1430	(65.1)	W1430	(71.8)	W1434	(78.5)	W1434	(85.3)	W1636	(88.0)	W1636	(94.2)	W1640	(100.1)	W1640	(106.5)	W1640	(104.3)	W1846	(110.0)	W1846	(115.9)	W1846	(121.9)	W1846	(118.7)	W1850	(124.1)	W1850	(129.7)
30'		W1430	(67.7)	W1434	(74.6)	W1434	(81.6)	W1434	(88.6)	W1636	(91.5)	W1636	(97.9)	W1640	(104.0)	W1640	(110.6)	W1846	(108.2)	W1846	(114.2)	W1846	(120.4)	W1846	(126.5)	W1850	(123.1)	W1850	(128.8)	W1850	(134.6)
31'		W1430	(70.3)	W1434	(77.5)	W1434	(84.7)	W1636	(91.7)	W1636	(95.0)	W1640	(101.3)	W1640	(108.0)	W1846	(114.6)	W1846	(112.3)	W1846	(118.5)	W1846	(124.8)	W1850	(131.0)	W1850	(127.6)	W1850	(133.5)	W1855	(139.4)
32'		W1434	(75.6)	W1434	(80.3)	W1636	(87.6)	W1636	(95.1)	W1640	(98.2)	W1640	(105.0)	W1846	(111.8)	W1846	(118.8)	W1846	(116.3)	W1850	(122.6)	W1850	(129.1)	W1850	(135.7)	W1850	(132.2)	W1855	(138.3)	W1855	(144.3)
33'		W1434	(76.9)	W1434	(83.2)	W1636	(90.7)	W1636	(98.4)	W1640	(101.7)	W1640	(108.8)	W1846	(115.8)	W1846	(123.0)	W1846	(120.4)	W1850	(126.8)	W1850	(133.6)	W1850	(140.4)	W1855	(136.8)	W1855	(142.7)	W2157	(149.0)
34'		W1434	(78.3)	W1636	(85.9)	W1636	(93.8)	W1640	(101.4)	W1640	(105.3)	W1846	(112.4)	W1846	(119.7)	W1850	(127.0)	W1850	(124.3)	W1850	(131.2)	W1850	(138.1)	W1855	(145.0)	W1855	(141.0)	W2157	(147.4)	W2157	(154.0)
35'		W1434	(81.0)	W1636	(88.9)	W1636	(97.0)	W1640	(104.8)	W1640	(108.8)	W1846	(116.2)	W1846	(123.8)	W1850	(131.2)	W1850	(128.5)	W1850	(135.5)	W1855	(142.6)	W1855	(149.5)	W2157	(145.6)	W2157	(152.3)	W2157	(159.0)
36'		W1636	(83.5)	W1636	(91.8)	W1640	(99.8)	W1640	(108.2)	W1846	(112.4)	W1846	(120.0)	W1850	(127.6)	W1850	(135.5)	W1850	(132.6)	W1855	(139.8)	W1855	(147.1)	W2157	(154.2)	W2157	(150.2)	W2157	(157.1)	W2157	(164.0)
37'		W1636	(86.2)	W1636	(94.8)	W1640	(103.0)	W1846	(108.6)	W1846	(115.9)	W1846	(123.8)	W1850	(131.6)	W1855	(139.8)	W1855	(136.8)	W1855	(144.0)	W2157	(151.4)	W2157	(159.0)	W2157	(154.9)	W2157	(161.9)	W2162	(168.9)
38'		W1636	(89.0)	W1640	(97.0)	W1640	(106.2)	W1846	(112.0)	W1846	(119.6)	W1850	(127.5)	W1850	(135.7)	W1855	(144.0)	W1855	(140.9)	W2157	(148.2)	W2157	(156.0)	W2157	(163.8)	W2162	(159.5)	W2162	(166.6)	W2162	(173.9)
39'		W1636	(91.8)	W1640	(100.0)	W1846	(109.2)	W1846	(115.4)	W1846	(123.3)	W1850	(131.4)	W1855	(139.8)	W2157	(148.4)	W2157	(144.7)	W2157	(152.6)	W2157	(160.6)	W2162	(168.4)	W2162	(164.0)	W2162	(171.5)	W2162	(179.0)
40'		W1640	(93.7)	W1640	(103.0)	W1846	(112.5)	W1846	(125.3)	W1850	(126.7)	W1850	(135.3)	W1855	(143.9)	W2157	(152.3)	W2157	(149.0)	W2157	(157.0)	W2157	(165.2)	W2162	(173.2)	W2162	(168.7)	W2162	(176.4)	W2168	(188.9)
42'		W1640	(99.4)	W1846	(109.3)	W1846	(119.0)	W1850	(136.1)	W1850	(134.1)	W1855	(143.1)	W2157	(151.8)	W2157	(161.0)	W2157	(157.5)	W2162	(165.7)	W2162	(174.3)	W2162	(183.0)	W2168	(177.9)	W2168	(185.9)	W2168	(194.1)
45'		W1846	(108.1)	W1846	(118.5)	W1855	(137.1)	W1855	(147.6)	W2157	(145.4)	W2157	(155.1)	W2157	(164.4)	W2162	(174.3)	W2162	(170.2)	W2162	(179.2)	W2168	(188.7)	W2168	(198.1)	W2168	(192.3)	W2468	(200.1)	W2468	(209.6)

Height = HL + HR / 2

TRUSS DETAILS

SPAN	115'	120'	125'	130'	135'	140'	145'	150'	155'
W x D	5.0' x 5.0'	5.0' x 5.0'	5.0' x 5.0'	5.0' x 5.0'	5.0' x 5.0'	5.5' x 5.5'	5.5' x 5.5'	5.5' x 5.5'	5.5' x 5.5'
CHORD	5x5x 7/16 * ⑭	5x5x 1/2 * ⑯	5x5x 1/2 * ⑯	6x6x 1/2 * ⑲	6x6x 9/16* ㉑	6x6x 9/16 * ㉑	6x6x 9/16 * ㉒	6x6x 9/16 * ㉓	6x6x 5/8 * ㉕
D.L. DIAG.	3x2x 3/16 ②	3x2x 3/16 ②	3x3x 3/16 ②	3x2 1/2x 1/4 ②	3x2 1/2x 1/4 ③	3x2 1/2x 1/4 ③	3x2 1/2x 1/4 ③	3x2 1/2x 1/4 ③	3x3x 1/4 ③
W.L. DIAG.	4x4x 1/4 ④	4x4x 1/4 ④	4x4x 1/4 ④	3 1/2x3 1/2x 5/16 ④	3 1/2x3 1/2x 5/16 ④	3 1/2x3 1/2x 5/16 ④	3 1/2x3 1/2x 5/16 ④	4x 3 1/2x 5/16 ④	4x 3 1/2x 5/16 ④
D.L. VERT.	3x2 1/2x 3/16 ②	3x2 1/2x 3/16 ②	3x2 1/2x 3/16 ②	3x2 1/2x 3/16 ②	3x2 1/2x 3/16 ②	3x3x 3/16 ②	3x3x 3/16 ②	3x2 1/2x 1/4 ②	3x2 1/2x 1/4 ②
W.L. STRUT	2 1/2x2 1/2x 3/16 ①	2 1/2x2 1/2x 3/16 ①	2 1/2x2 1/2x 3/16 ①	2 1/2x2 1/2x 3/16 ①	2 1/2x2 1/2x 3/16 ①	2 1/2x2 1/2x 3/16 ①	2 1/2x2 1/2x 3/16 ①	2 1/2x2 1/2x 3/16 ①	2 1/2x2 1/2x 3/16 ①
DEFL. & D.L.	Δ=2.24" DL=104#/ft	Δ=2.32" DL=112#/ft.	Δ=2.70" DL=114#/ft.	Δ=3.10" DL=133#/ft.	Δ=3.03" DL=143#/ft.	Δ=2.99" DL=147#/ft.	Δ=3.41" DL=147#/ft.	Δ=3.86" DL=151#/ft.	Δ=4.15" DL=162#/ft.

TOWER DETAILS

S = COL. SPA.	HEIGHT	7.5'		7.5'		7.5'		7.5'		7.5		7.5		7.5'		7.5'	
COLUMN SIZE & UPLIFT (KIPS)																	
	25'	W1846	(115.3)	W1846	(119.6)	W1846	(124.3)	W1850	(132.7)	W1850	(137.8)	W1855	(143.1)	W1855	(147.9)	W2157	(152.9)	W2157	(157.7)
	26'	W1846	(120.3)	W1846	(124.8)	W1850	(129.6)	W1850	(138.6)	W1855	(143.9)	W1855	(148.9)	W1855	(154.4)	W2157	(159.7)	W2157	(164.6)
	27'	W1846	(125.3)	W1850	(129.9)	W1850	(135.0)	W1855	(144.3)	W1855	(149.9)	W1855	(155.3)	W2157	(160.8)	W2157	(166.4)	W2157	(171.6)
	28'	W1850	(130.2)	W1850	(135.1)	W1850	(140.4)	W1855	(150.2)	W1855	(156.0)	W2157	(161.5)	W2157	(167.4)	W2162	(173.1)	W2162	(178.5)
	29'	W1850	(135.3)	W1855	(140.4)	W1855	(145.8)	W2157	(156.2)	W2157	(162.0)	W2157	(167.9)	W2162	(173.9)	W2162	(179.9)	W2162	(185.5)
	30'	W1855	(140.4)	W1855	(145.5)	W1855	(151.2)	W2157	(162.1)	W2157	(168.3)	W2162	(174.2)	W2162	(180.5)	W2162	(186.8)	W2162	(192.6)
	31'	W1855	(145.4)	W2157	(150.6)	W2157	(156.6)	W2157	(168.2)	W2162	(174.4)	W2162	(180.7)	W2162	(187.2)	W2168	(193.5)	W2168	(199.5)
	32'	W2157	(150.3)	W2157	(156.0)	W2157	(162.1)	W2162	(174.1)	W2162	(180.6)	W2162	(187.2)	W2168	(193.7)	W2168	(200.4)	W2168	(206.7)
	33'	W2157	(155.4)	W2157	(161.3)	W2157	(167.6)	W2162	(180.2)	W2162	(186.9)	W2168	(193.5)	W2168	(200.4)	W2168	(207.4)	W2468	(213.8)
	34'	W2157	(160.6)	W2157	(166.7)	W2162	(173.0)	W2162	(186.3)	W2168	(193.1)	W2168	(200.0)	W2468	(207.2)	W2468	(214.4)	W2468	(221.0)
	35'	W2157	(165.8)	W2162	(171.9)	W2162	(178.6)	W2168	(192.2)	W2168	(199.4)	W2168	(206.6)	W2468	(214.0)	W2468	(221.4)	W2468	(228.3)
	36'	W2162	(170.8)	W2162	(177.3)	W2162	(184.2)	W2168	(198.4)	W2168	(205.8)	W2468	(213.2)	W2468	(220.8)	W2476	(228.2)	W2467	(235.2)
	37'	W2162	(176.0)	W2162	(182.7)	W2168	(189.6)	W2168	(204.6)	W2468	(212.2)	W2468	(219.9)	W2476	(227.4)	W2476	(235.2)	W2476	(242.5)
	38'	W2162	(182.3)	W2168	(187.9)	W2168	(195.2)	W2468	(210.8)	W2468	(218.7)	W2476	(226.2)	W2476	(234.2)	W2476	(242.3)	W2476	(249.8)
	39'	W2168	(186.3)	W2168	(193.3)	W2168	(200.8)	W2468	(217.1)	W2476	(224.8)	W2476	(232.9)	W2476	(241.1)	W2476	(249.4)	W2784	(256.9)
	40'	W2168	(191.6)	W2168	(198.8)	W2468	(206.5)	W2476	(236.2)	W2476	(231.3)	W2476	(239.6)	W2476	(248.0)	W2784	(256.2)	W2784	(264.2)
	42'	W2468	(212.9)	W2468	(209.8)	W2468	(217.9)	W2476	(236.2)	W2476	(244.3)	W2784	(252.7)	W2784	(261.6)	W2784	(270.5)	W2784	(279.0)
	45'	W2476	(218.3)	W2476	(237.6)	W2476	(234.8)	W2784	(253.9)	W2784	(263.0)	W2784	(273.2)	W2784	(282.7)	W2784	(292.3)	W2794	(300.9)

Height = HL + HR / 2

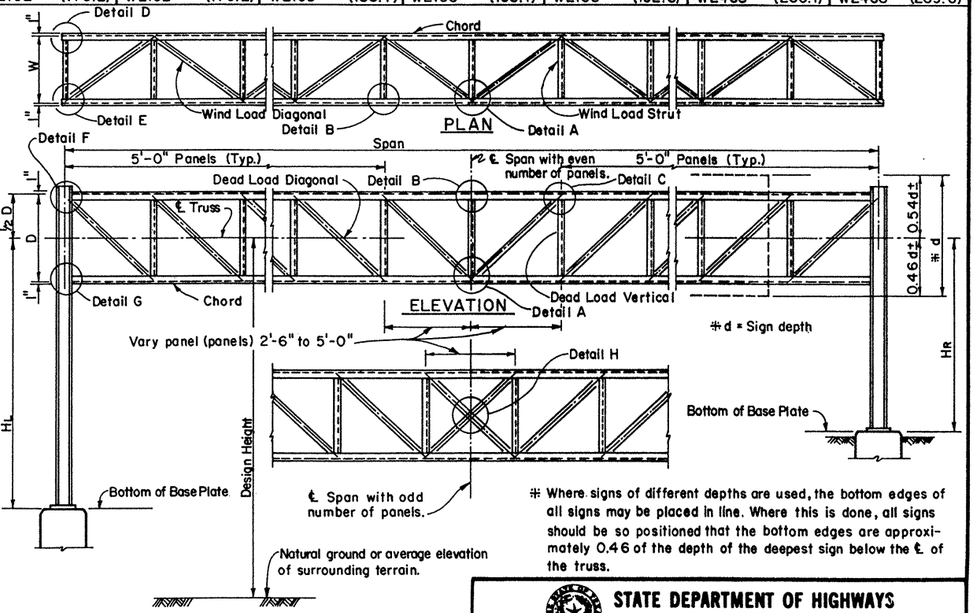

KEY TO TRUSS AND TOWER DETAILS

Truss members are all angles.

Truss columns are all wide flange shapes.

W 10 26 (42.2) ← Uplift (Kips) at base plate.
- W — Wide Flange
- 10" Nominal size.
- 26 Pounds per foot.

Δ = 3.02" Deflection due to dead load of truss, walkway, signs and lights.

DL = 77#/ft. Dead load of truss members only, does not include walkway, signs or lights.

GENERAL NOTES:

For over head sign bridges with different tower heights, use column sizes required for the average height of the two towers. Use heights to the nearest foot; for exactly 0.5' increase to the next larger foot.

For truss lengths falling between those shown in the tables use the sizes called for in the next longer span.

Over head sign bridges are designed for the equivalent area of a 10 foot deep sign panel over 75 percent of the span length, located as necessary to produce maximum stress. Design includes 3#/□' for sign panel and 20#/lin. ft. for lights and 50#/lin. ft. for walkway, all placed as specified for the design sign panel.

Details on this sheet are applicable for design heights between 30 and 50 feet.

Number of High Strength Bolts required in truss connection or splice are indicated thus ③ after the member size.

Where signs of different depths are used, the bottom edges of all signs may be placed in line. Where this is done, all signs should be so positioned that the bottom edges are approximately 0.46 of the depth of the deepest sign below the ℄ of the truss.

STATE DEPARTMENT OF HIGHWAYS AND PUBLIC TRANSPORTATION

HIGH LEVEL OVERHEAD SIGN BRIDGE DETAILS

HOSB-Z1

SHEET 1 OF 3

ORIGINAL DRAWING DATE: 7-83	STATE DISTRICT	FEDERAL REGION	FEDERAL AID PROJECT #	SHEET
DN.:-CWC REVISIONS	PHARR	6		573
CK.:-LEH	COUNTY		CONTROL	SECTION	JOB	HIGHWAY
DW.:-EDS	HIDALGO		0255	05	031	US281
CK.:-CWC						33

SPECIAL NOTE FOR TOWER BRACING

Normally, the maximum spacing for tower bracing is the same as column spacing; however, this spacing may be increased as follows:

Determine required size column and spacing to satisfy height for the wind zone and truss span being used. Height = $\frac{HL + HR}{2}$

Note the number of times this size column is shown for larger heights for the same span and wind zone.

Spacing of bracing may be increased one foot for each time height is shown, except the increase shall not exceed five feet.

Column Spa. "S"	Truss Bearing Angle	H.S. Bolts
6.0'	L 4 x 4 x 5/16	5/8"ϕ
6.5'	L 5 x 5 x 3/8	5/8"ϕ
7.0'	L 5 x 5 x 1/2	3/4"ϕ
7.5' to 8.5'	L 6 x 6 x 5/8	3/4"ϕ
9.0'	L 6 x 6 x 3/4	3/4"ϕ
9.5'	L 6 x 6 x 7/8	3/4"ϕ

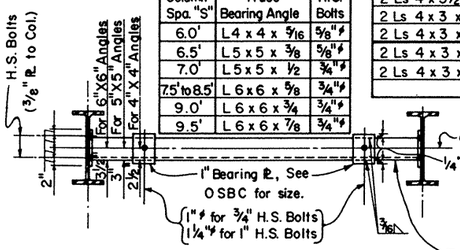

PLAN AT TRUSS BEARING ANGLE

SIZE DOUBLE ANGLES	BOLTS REQUIRED BRACING ¾"	⅞"	WT to WF ¾"	⅞"
2 Ls 4 x 4 x 5/16	6	4	10	8
2 Ls 4 x 4 x 5/16	6	4	10	8
2 Ls 4 x 4 x 5/16	6	4	10	8
2 Ls 4 x 3½ x 5/16	5	4	10	8
2 Ls 4 x 3½ x 5/16	5	4	10	8
2 Ls 4 x 3½ x 5/16	5	4	10	8
2 Ls 4 x 3 x 5/16	5	4	10	8
2 Ls 4 x 3 x 5/16	5	4	10	8

BRACING for 9'-0" to 9'-6" COL. SPAC.

SIZE DOUBLE ANGLES	BOLTS REQUIRED BRACING ¾"	⅞"	WT to WF ¾"	⅞"
2 Ls 4 x 3 x 5/16	5	4	10	8
2 Ls 4 x 3 x 5/16	5	4	10	8
2 Ls 4 x 3 x 5/16	5	4	10	8
2 Ls 3½ x 3 x 5/16	5	4	8	6
2 Ls 3½ x 3 x 5/16	5	4	8	6
2 Ls 3½ x 3 x 5/16	5	4	8	6
2 Ls 4 x 3 x ¼	4	3	8	6
2 Ls 4 x 3 x ¼	4	3	8	6
2 Ls 4 x 3 x ¼	4	3	8	6
2 Ls 3½ x 3 x ¼	4	3	8	6
2 Ls 3½ x 3 x ¼	4	3	8	6

BRACING for 8'-0" to 8'-6" COL. SPAC.

SIZE DOUBLE ANGLES	BOLTS REQUIRED BRACING 5/8"	¾"	⅞"	WT to WF 5/8"	¾"	⅞"
2 Ls 4 x 3 x 5/16	7	5	4	12	10	8
2 Ls 4 x 3 x 5/16	7	5	4	12	10	8
2 Ls 3½ x 3 x 5/16	6	5	4	12	8	6
2 Ls 3½ x 3 x ¼	6	4	3	10	8	6
2 Ls 3½ x 3 x ¼	6	4	3	10	8	6
2 Ls 3½ x 3 x ¼	6	4	3	10	8	6
2 Ls 3½ x 3 x ¼	6	4	3	10	8	6
2 Ls 3½ x 3 x ¼	5	4	3	10	6	4
2 Ls 3½ x 2½ x ¼	5	4	3	8	6	4
2 Ls 3½ x 2½ x ¼	4	3	~	8	6	4
2 Ls 3 x 2½ x ¼	4	3	~	8	6	4
2 Ls 3 x 2½ x ¼	4	3	~	8	6	4
2 Ls 3 x 2½ x ¼	3	2	~	6	4	4
2 Ls 3 x 3 x 3/16	2	2	~	4	4	4
2 Ls 3 x 3 x 3/16	2	2	~	4	4	4
2 Ls 2½ x 2½ x 3/16	2	~	~	4	4	4
2 Ls 2½ x 1½ x 3/16	2	~	~	4	4	4

BRACING for 7'-0" to 7'-6" COL. SPAC.

SIZE DOUBLE ANGLES	BOLTS REQUIRED BRACING 5/8"	¾"	⅞"	WT to WF 5/8"	¾"	⅞"
2 Ls 3 x 3 x ¼	4	3	8	6		
2 Ls 3 x 3 x ¼	4	3	8	6		
2 Ls 3 x 2½ x ¼	4	3	8	6		
2 Ls 3 x 2½ x ¼	4	3	6	4		
2 Ls 3 x 2½ x ¼	4	3	6	4		
2 Ls 3 x 2½ x ¼	4	3	6	4		
2 Ls 3 x 2½ x ¼	4	3	6	4		
2 Ls 2½ x 2½ x 3/16	3	~	4	4		
2 Ls 2½ x 1½ x 3/16	2	~	4	4		
2 Ls 2½ x 1½ x 3/16	2	~	4	4		
2 Ls 2½ x 1½ x 3/16	2	~	4	4		
2 Ls 2½ x 1½ x 3/16	2	~	4	4		

BRACING for 6'-0" to 6'-6" COL. SPAC.

SIZE DOUBLE ANGLES	BOLTS REQUIRED BRACING 5/8"	¾"	WT to WF 5/8"	¾"
2 Ls 3 x 3 x ¼	4	3	8	6
2 Ls 3 x 3 x ¼	4	3	8	6
2 Ls 3 x 2½ x ¼	4	3	8	6
2 Ls 3 x 2½ x ¼	4	3	6	4
2 Ls 3 x 2½ x ¼	4	3	6	4
2 Ls 3 x 2½ x ¼	4	3	6	4
2 Ls 3 x 2½ x ¼	4	3	6	4
2 Ls 2½ x 2½ x 3/16	3	~	4	4
2 Ls 2½ x 1½ x 3/16	2	~	4	4
2 Ls 2½ x 1½ x 3/16	2	~	4	4
2 Ls 2½ x 1½ x 3/16	2	~	4	4
2 Ls 2½ x 1½ x 3/16	2	~	4	4

"X"	"Y"	"Z"	BASE PLATE SIZE	ANCHOR BOLT SIZE	FOUNDATION DATA	COLUMN SIZE
15¼	5	4	18" x 3¼" x 3'-4½"	2¾"ϕ x 5'-8"	48"ϕ Shaft with 18 #11	W24117
15¼	5	4	18" x 3⅛" x 3'-4½"	2¾"ϕ x 5'-8"	48"ϕ Shaft with 18 #11	W24104
15¼	5	4	18" x 3" x 3'-4½"	2¾"ϕ x 5'-8"	48"ϕ Shaft with 18 #11	W2494
15	4½	3¾	16½" x 3" x 3'-3"	2½"ϕ x 5'-2"	48"ϕ Shaft with 14 #11	W2484
14¾	4½	3¾	16½" x 2¾" x 3'-2½"	2½"ϕ x 5'-2"	48"ϕ Shaft with 14 #11	W2476
14¾	4½	3¾	16½" x 2¾" x 3'-2½"	2½"ϕ x 5'-2"	48"ϕ Shaft with 14 #11	W2468
13½	4½	3¾	16½" x 2¾" x 3'-0"	2½"ϕ x 5'-2"	42"ϕ Shaft with 12 #11	W2168
13½	4½	3¾	16½" x 2½" x 3'-0"	2½"ϕ x 5'-2"	42"ϕ Shaft with 12 #11	W2162
13	4	3½	15" x 2½" x 2'-10"	2¼"ϕ x 4'-9"	42"ϕ Shaft with 10 #11	W2157
11¾	4	3½	15" x 2½" x 2'-7½"	2¼"ϕ x 4'-9"	42"ϕ Shaft with 10 #11	W1855
11¾	4	3½	15" x 2½" x 2'-7½"	2¼"ϕ x 4'-9"	42"ϕ Shaft with 10 #11	W1850
11½	3½	3	13" x 2½" x 2'-6"	2"ϕ x 4'-3"	42"ϕ Shaft with 8 #10	W1846
10½	3½	3	13" x 2¼" x 2'-4"	2"ϕ x 4'-3"	36"ϕ Shaft with 8 #10	W1640
10¼	3	2¾	11½ x 2¼" x 2'-2½"	1¾"ϕ x 3'-10"	36"ϕ Shaft with 8 # 9	W1636
9½	3	2¾	11½ x 2¼" x 2'-1"	1¾"ϕ x 3'-10"	36"ϕ Shaft with 8 # 9	W1434
9¼	3	2¾	11½ x 2" x 2'-0½"	1¾"ϕ x 3'-10"	36"ϕ Shaft with 8 # 9	W1430
8	2¾	2⅛	9¾ x 1¾ x 1'-9½"	1½"ϕ x 3'-4"	30"ϕ Shaft with 8 # 8	W1226
7	2½	2	9" x 1¾" x 1'-7"	1⅜"ϕ x 3'-1"	30"ϕ Shaft with 8 # 8	W1026
6¾	2¼	1⅞	8¼" x 1½" x 1'-6"	1⅛"ϕ x 2'-11"	30"ϕ Shaft with 8 # 8	W1022
6¾	2	1⅝	7¼" x 1⅜" x 1'-5½"	1⅛"ϕ x 2'-8"	24"ϕ Shaft with 8 # 7	W1017
6½	1¾	1½	6½" x 1¼" x 1'-4½"	1"ϕ x 2'-5"	24"ϕ Shaft with 8 # 7	W1015

ANCHOR BOLT SIZE DIA.	LENGTH *	PROJ. & THREAD
1"ϕ	2'-5"	4"
1⅛"ϕ	2'-8"	4½"
1¼"ϕ	2'-11"	5"
1⅜"ϕ	3'-1"	5½"
1½"ϕ	3'-4"	6"
1⅝"ϕ	3'-10"	7"
2"ϕ	4'-3"	8"
2¼"ϕ	4'-9"	9"
2½"ϕ	5'-2"	10"
2¾"ϕ	5'-8"	11"

* Minimum dimensions are given.

ANCHOR BOLT DIA. d	WASHER DIMENSIONS OUTSIDE DIAMETER	HOLE DIAMETER	THICKNESS MIN.	MAX.	HOLE IN BASE PLATE
1½" or less	2 d	d + ⅛"	0.136"	0.177"	d + ¼"
1¾"	2d - ⅛"	d + ⅛"	0.178"	0.280"	d + 5/16"
2"	2d - ¼"	d + ⅛"	0.178"	0.280"	d + 5/16"
Over 2"	2d - ½"	d + ⅛"	0.240"	0.340"	d + 5/16"

GENERAL NOTES:

Design conforms to Standard Specification for Structural Supports for Highway Signs, Luminaires and Traffic Signals for Design Heights up to 50'.

For size and spacing of columns see sheet 1 of 3.

At Contractor's option tower bracing connections may be high strength bolted or welded. If welded connections are used, length of connection shall be taken from the table shown on sheet 3 of 3.

All connection bolts shall conform to ASTM A325 or A449. Washers shall conform to ASTM F436 - 76B. Bolts, nuts and washers shall be galvanized.

All structural steel shall conform to ASTM A-36 except where noted. HS 50 shall conform to ASTM A441, ASTM A572 or ASTM A588. Structural steel shall be galvanized after fabrication.

Nuts for Anchor Bolts shall be heavy hex and shall conform to ASTM A194 Gr. 2H. Anchor bolts shall conform to ASTM A193-B7 or A687. Galvanize anchor bolt projection plus 6". Threads for anchor bolts and nuts shall be 8UN threads.

Anchor bolts shall be rigidly held in position during concrete placement by using steel templates at the top and bottom. The bottom template and anchor plate assembly shall remain in place and shall not be damaged during concrete placement. The top template shall be removed after concrete has set.

Exposed nuts and washers shall be galvanized in accordance with the Specifications. Embeded nuts and top and bottom templates need not be galvanized.

Concrete shall be Class "A".

Unless shown otherwise, welded steel bands may be replaced with spiral as noted on the foundation detail.

All vertical reinforcing shall be carried to the bottom of the Drilled Shaft.

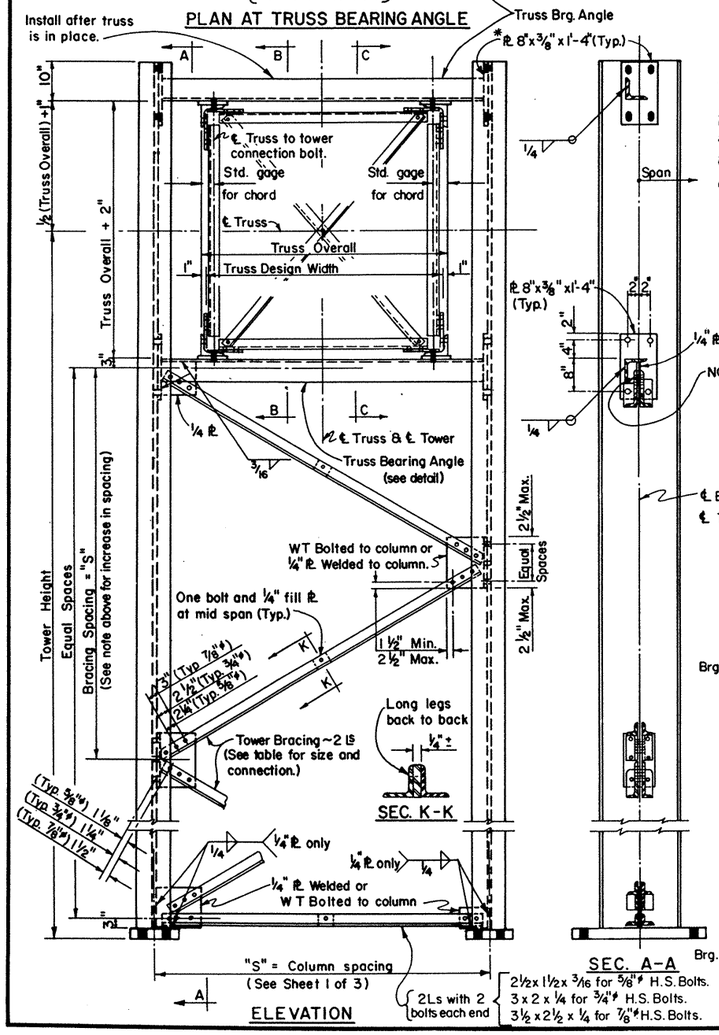

* NOTE: Nominal Dia. X 1½" slots in plate. (Top ℛs only) Use washer on plate side of H.S. Bolt. (See table at left for size of bolts).

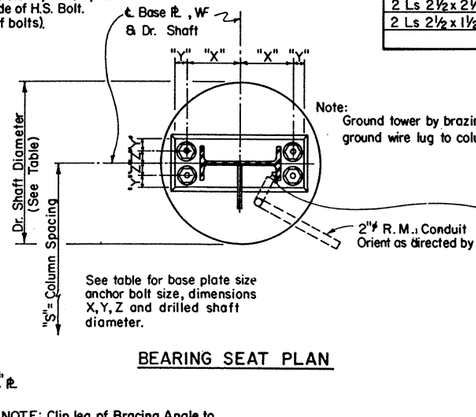

BEARING SEAT PLAN

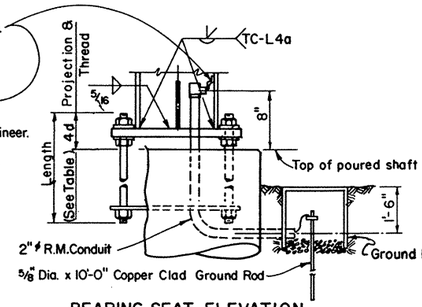

BEARING SEAT ELEVATION

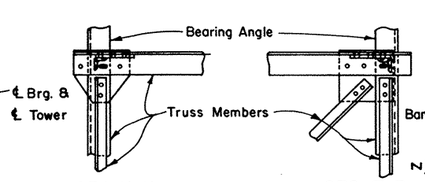

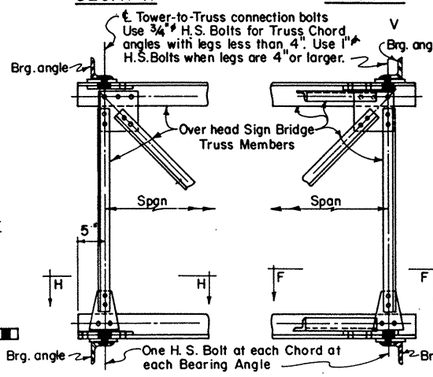

TRUSS-TO-TOWER CONNECTION DETAILS

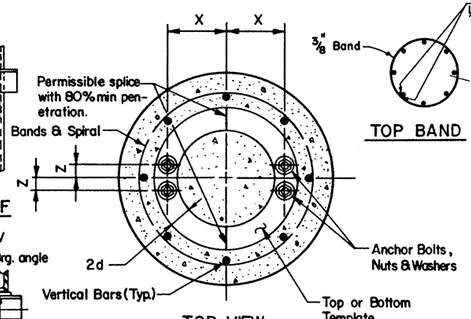

TOP VIEW

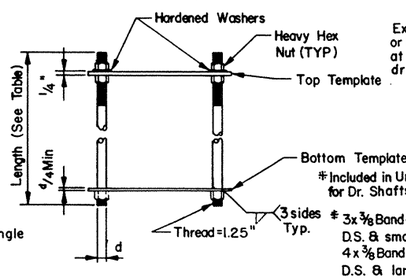

ANCHOR BOLT ASSEMBLY (Prior to installation)

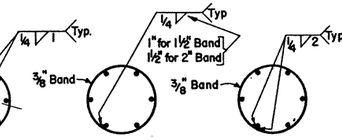

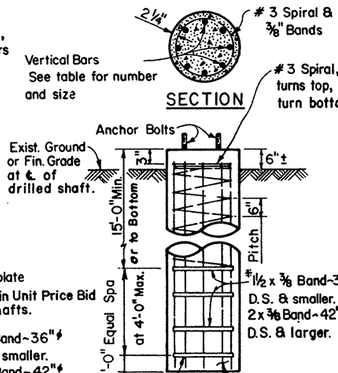

STATE DEPARTMENT OF HIGHWAYS AND PUBLIC TRANSPORTATION

OVERHEAD SIGN BRIDGE TOWER DETAILS OSBT

SHEET 2 OF 3

ORIGINAL DRAWING DATE 7-83	STATE DISTRICT	FEDERAL REGION	FEDERAL AID PROJECT #	SHEET
REVISIONS 11/93 - Rev. "X" dim.	PHARR	6		376
DN.:-LEH CK.:-CWC DW.:-EDS CK.:-LEH	COUNTY HIDALGO	CONTROL 0255	SECTION 08	JOB 051	HIGHWAY US281

45

NOTE: When chord angles of different thickness are spliced, use shim plate and number of bolts required for thinner angle. For Splice Angle use thickness of the thinner angle.

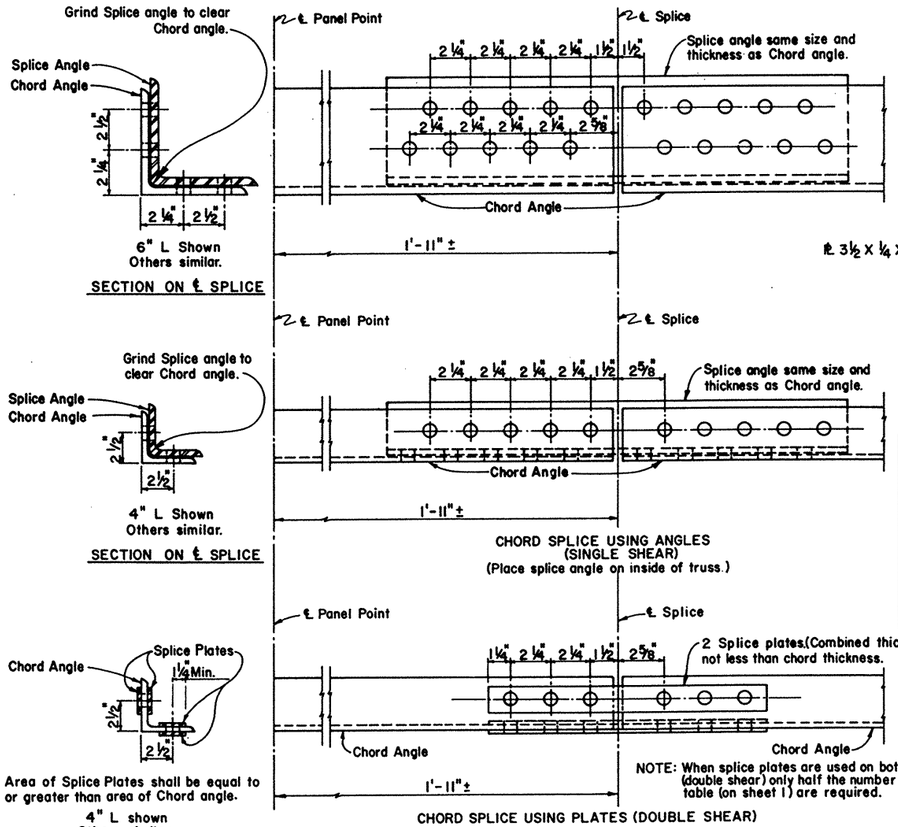

NOTE: When splice plates are used on both sides of chord angle (double shear) only half the number of bolts shown in the table (on sheet 1) are required.

SPLICE DETAILS

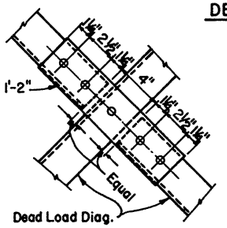

DETAIL H

NUMBER OF BOLTS ℄ TO CHORD CONNECTION	
TOTAL NO. OF BOLTS IN DIAGS. IN JOINT	
0	2
2	2
3	3
4	3
5	4
6	4
8	5
10	6
12	6

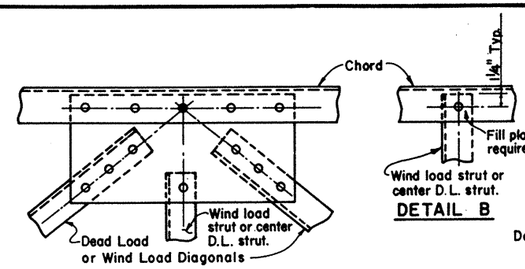

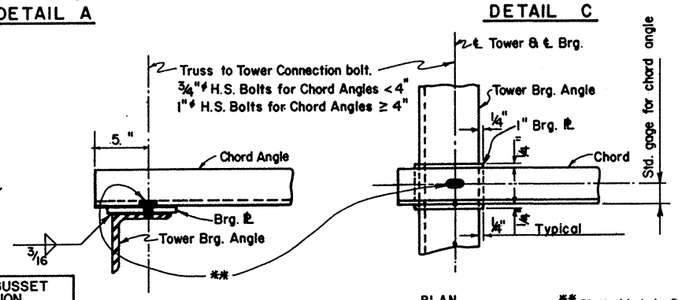

BEARING PLATE DETAILS

NOTE: Bearing Plate may be omitted if if welded connections are used on Wind Truss.

** Slotted hole in Gusset ℄ and Chord Angle.
1" X 1½" slot for ¾"ϕ bolts.
1¼" X 2" slot for 1"ϕ bolts.
Use ℄ washer on Gusset ℄ side.

CONNECTION DETAILS

GENERAL NOTES:

All bolts shall be high strength bolts conforming to A S T M A 325 or A 449.

The truss shall have an upward camber not less than the dead load deflections shown in the table on sheet 1 of 3 when blocked at the ends under dead load of the truss only.

Chord angles may be spliced in convenient lengths for galvanizing.

Connection and splice details are typical only; actual size of member and number of bolts will vary. The details shown on this sheet are intended as a guide only. See sheet 1 of 3 for number of bolts and size of members. Number of bolts shown for chord splice is based on single shear.

Gusset plates to be same thickness as thickest web member in connection.

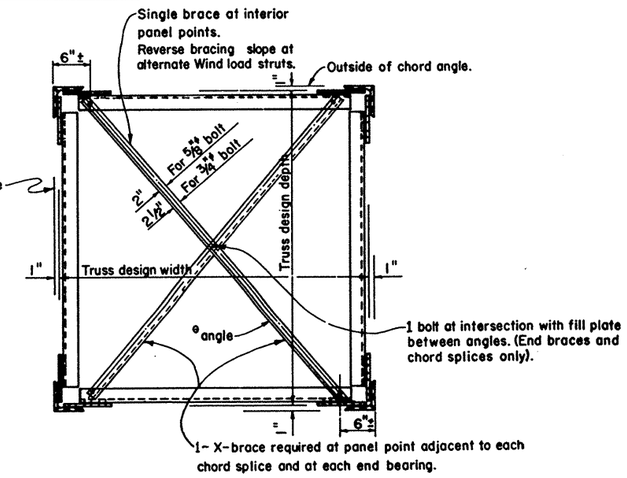

ϕ 2" X 1½" X 3/16" angle for ⅝"ϕ bolts. (1)
2½" X 1½" X 3/16" angle for ¾"ϕ bolts. (1)

TRUSS SECTION
(DIAGONALS NOT SHOWN)

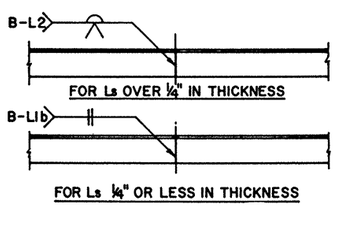

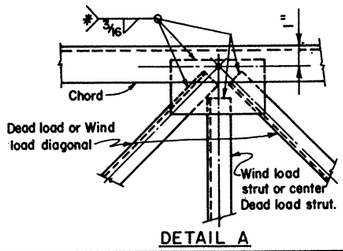

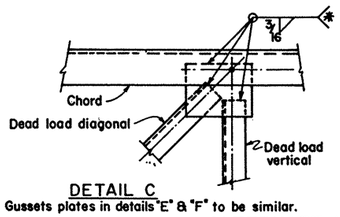

Gussets plates in details "E" & "F" to be similar.

* MINIMUM LENGTH OF 3/16" FILLET WELD REQUIRED		
NUMBER OF BOLTS	TO REPLACE ⅝"ϕ BOLTS	TO REPLACE ¾"ϕ BOLTS
1	2"	3"
2	4"	6"
3	6"	9"
4	8"	11½"
5	10"	14½"
6	12"	17½"
7	14"	20"

ALTERNATE WELDED SPLICE AND CONNECTION DETAILS

STATE DEPARTMENT OF HIGHWAYS AND PUBLIC TRANSPORTATION

OVERHEAD SIGN BRIDGE TRUSS DETAILS

OSBC

SHEET 3 OF 3

ORIGINAL DRAWING DATE: 7-63	STATE DISTRICT	FEDERAL REGION	FEDERAL AID PROJECT #	SHEET
DR.:-CWC	21	6		379
CK.:- LEH	COUNTY	CONTROL	SECTION	JOB	HIGHWAY
DW.:-EDS	HIDALGO	0255	08	091	US281
CK.:-CWC					46

REVISIONS

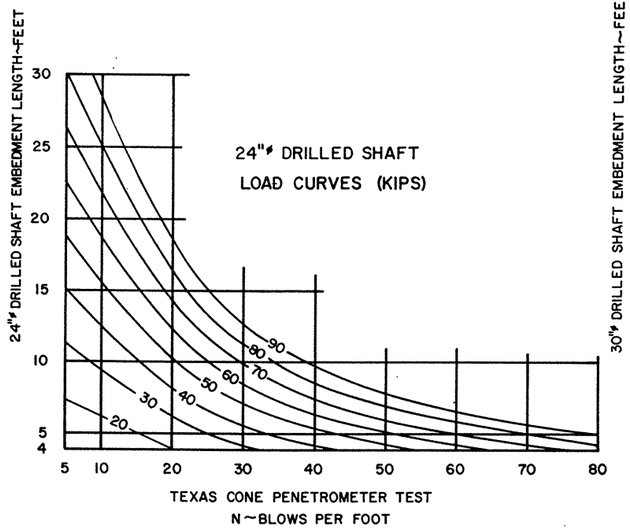

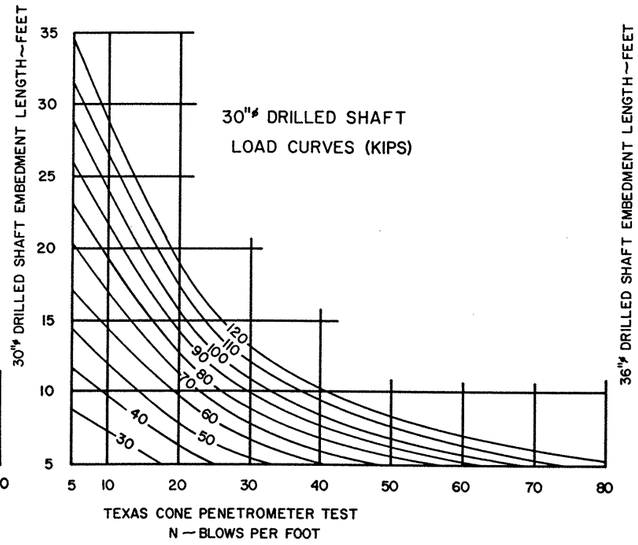

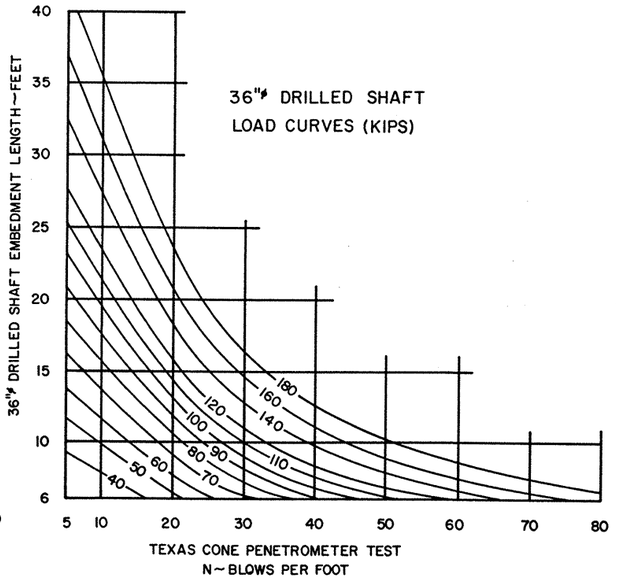

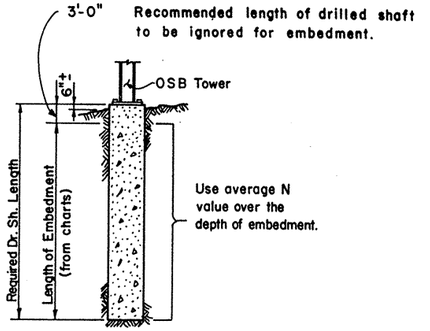

PROCEDURE:

1. Determine uplift from the applicable OSB sheet 1 of 3.
2. Determine required drilled shaft diameter from the applicable OSBT sheet 2 of 3.
3. Make an initial estimate of the required embedment length.
4. From Texas Cone Penetrometer Test data determine the average N value over the length of embedment.
5. Enter chart (for the correct shaft diameter) from the bottom at the average N value.
6. Proceed vertically into chart and locate intersection with column uplift. Interpolate between curves as needed.
7. From intersection point turn 90° to left and read embedment length along vertical scale.
8. If embedment length differs significantly from estimated value, return to step 4 with the embedment length determined in step 7.
9. Compute the required length of drilled shaft by adding 3'-0" to the required embedment length.

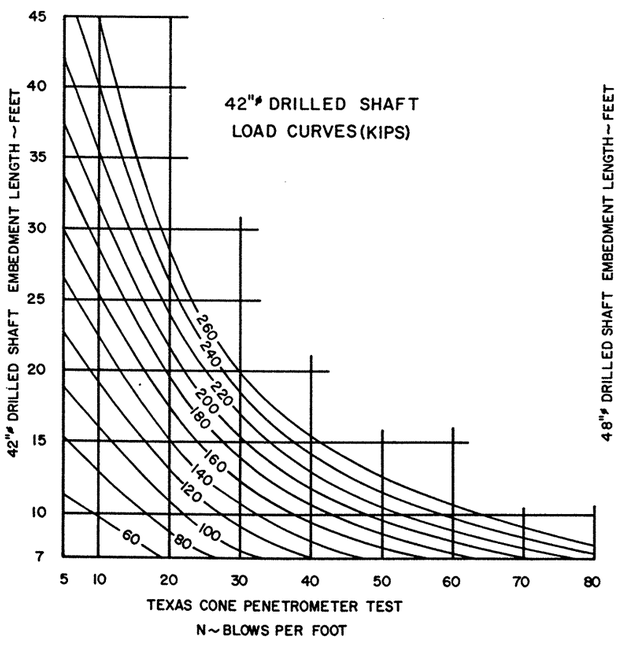

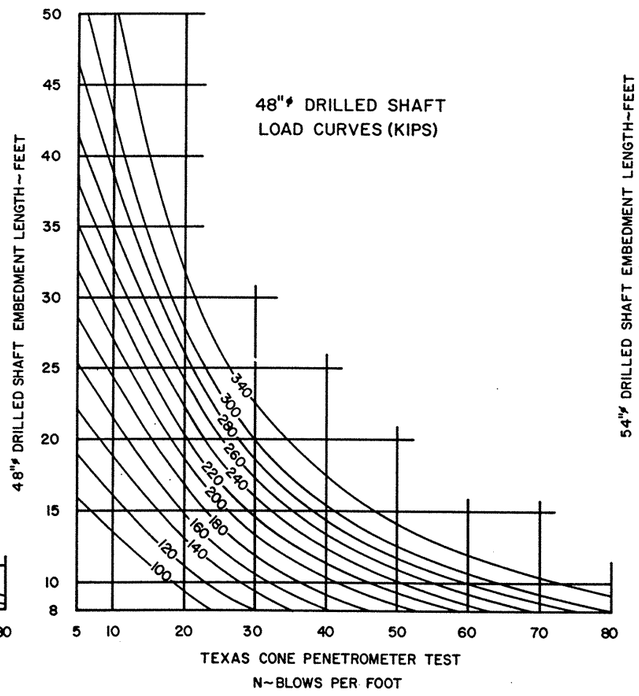

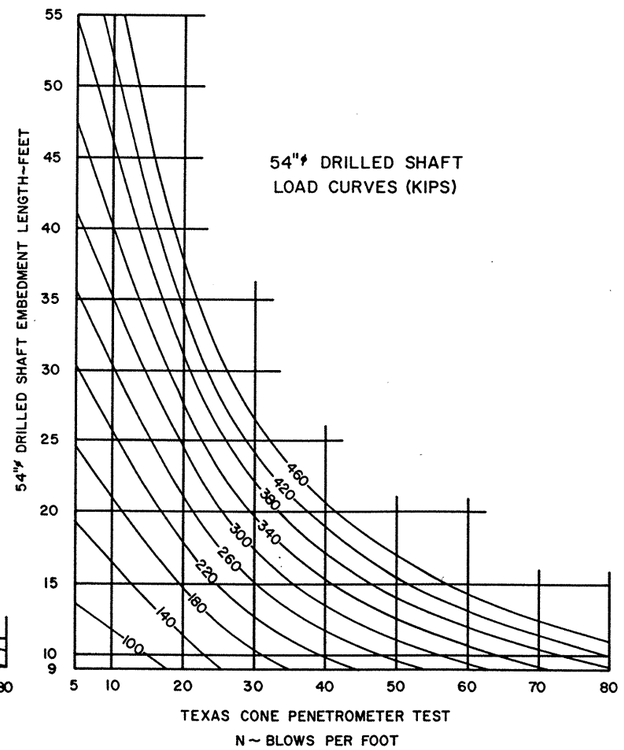

GENERAL NOTES:

These charts are to be used for Simple Span Overhead Sign Bridges with two shafts per tower.

Numbers shown on curved lines are uplift in Kips.
Dead load of concrete in drilled shafts is included in curves.
Minimum embedment of drilled shafts is two diameters.
Load curves shall not be extrapolated below the N value of 5 blows per foot.

STATE DEPARTMENT OF HIGHWAYS AND PUBLIC TRANSPORTATION

FOUNDATION EMBEDMENT SELECTION CHARTS

OSB-FD

ORIGINAL DRAWING DATE: 7-83	STATE DISTRICT	FEDERAL REGION	FEDERAL AID PROJECT #	SHEET
DN.:-LEH	PHARR	6		8&1
CK.:-HEH	COUNTY	CONTROL	SECTION	JOB	HIGHWAY
DW.:-EDS	HIDALGO	0255	08	091	US 281
CK.:-LEH					52

REVISIONS

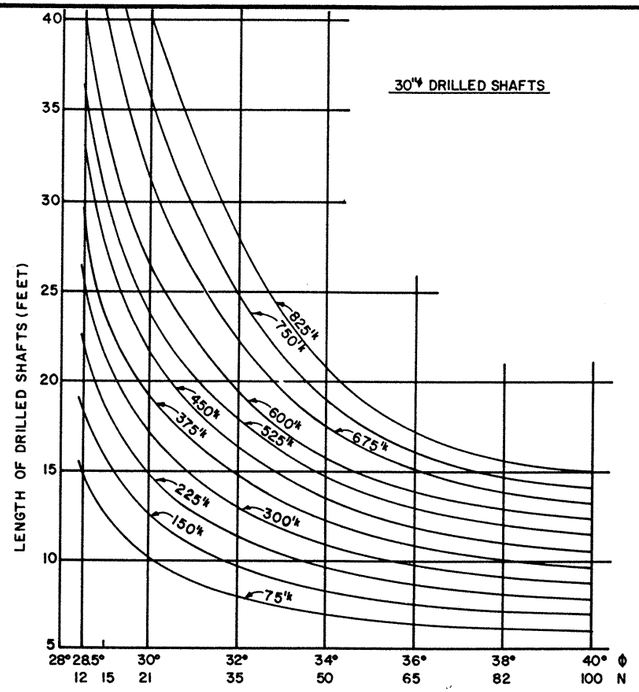

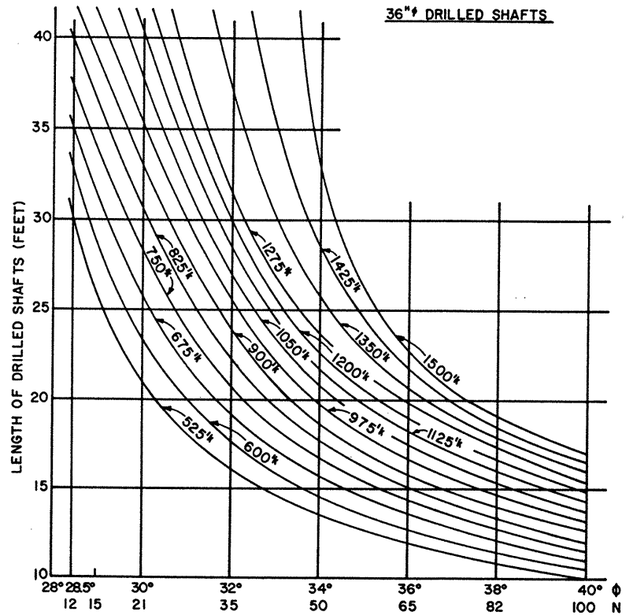

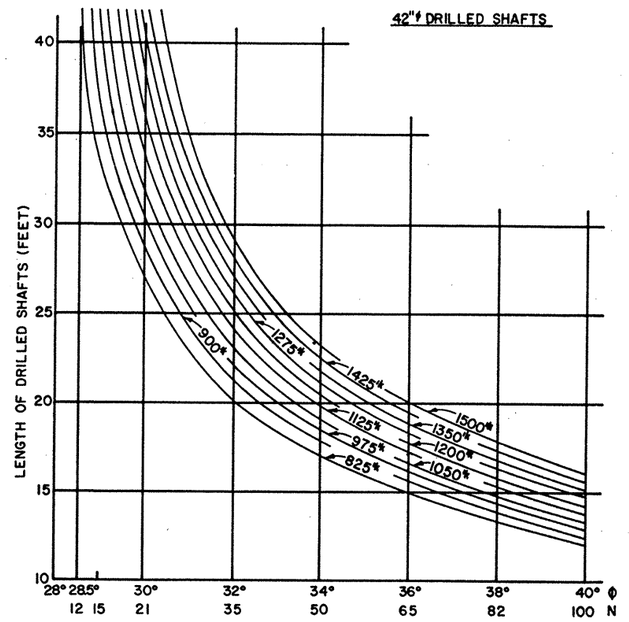

SUBMERGED SAND SOIL (COHESIONLESS) *

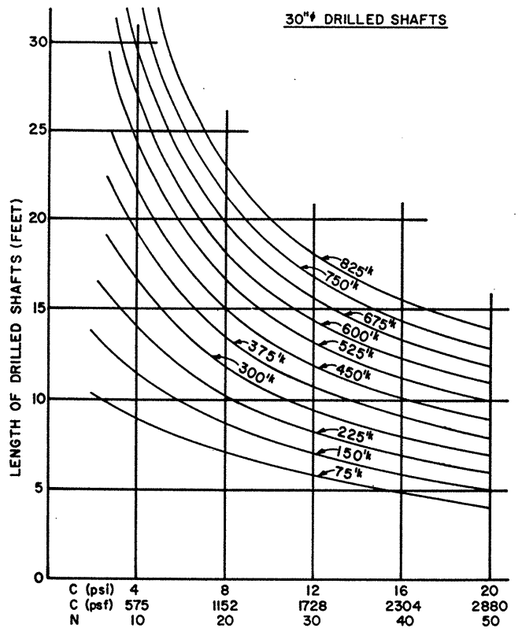

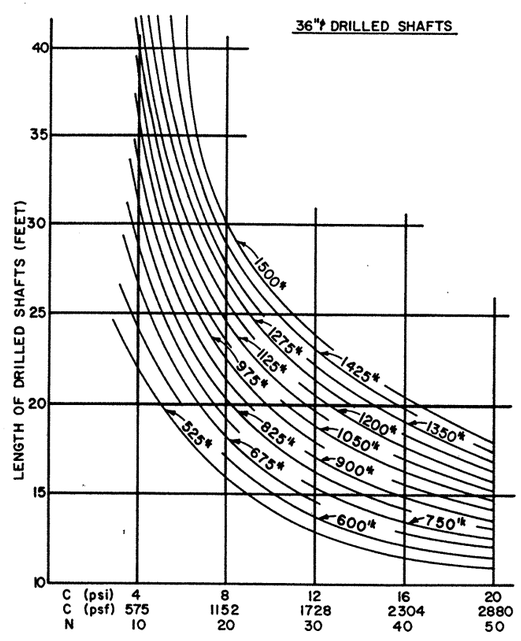

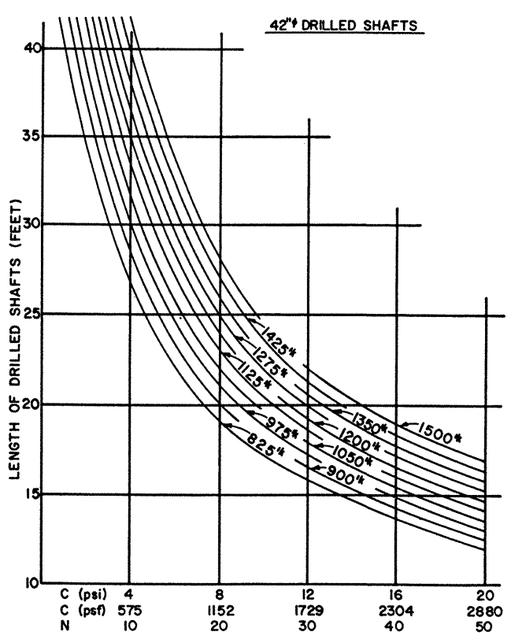

CLAY SOIL

*NOTE:
For unsubmerged sands and clayey sands the charts for clay soil will give a conservative foundation design.

GENERAL NOTES:

Minimum embedment of drilled shafts is two diameters. Add 3'-0" to required design length of drilled shaft.

These graphs are intended for use with Overhead Sign Bridges, with one shaft footing. (Not suitable for Cantilever Structures).

C = Cohesive shear strength of soil, in psf.

ϕ = Angle of internal friction of soil, in degrees.

For values of C and ϕ which are intermediate to those on the charts, embedments may be determined by straight line interpolation.

Enter graph (for the correct shaft size and soil type) from the bottom, either with soil properties, C or ϕ or with Texas Penetrometer Value N. Proceed upward into graph and locate intersection with column moment, from intersection point turn 90° to left and read lengths of drilled shafts along left side of graph.

STATE DEPARTMENT OF HIGHWAYS AND PUBLIC TRANSPORTATION

FOUNDATION EMBEDMENT SELECTION CHARTS

OSB-FD-SC

ORIGINAL DRAWING DATE: 7-83	REVISIONS	STATE DISTRICT: 21	FEDERAL REGION: 6	FEDERAL AID PROJECT #			SHEET: 52
DN:-CWC		COUNTY: HIDALGO		CONTROL: 0756	SECTION: 06	JOB: 051	HIGHWAY: 0523
CK:-JMM							
DW:-EDS							
CK:-LEH							

53

NOTE: Diamond remnants on cut grating edge at walkway end shall be trimmed flush, or sharp edges removed by grinding.

Steel expanded metal grating. Weight = 4¼# (approx.) per sq. ft., U.S. Gypsum Grate-X or Steelcrete Walkway Mesh or U.S. Gypsum Grip Strut Safety Grating or approved equal.

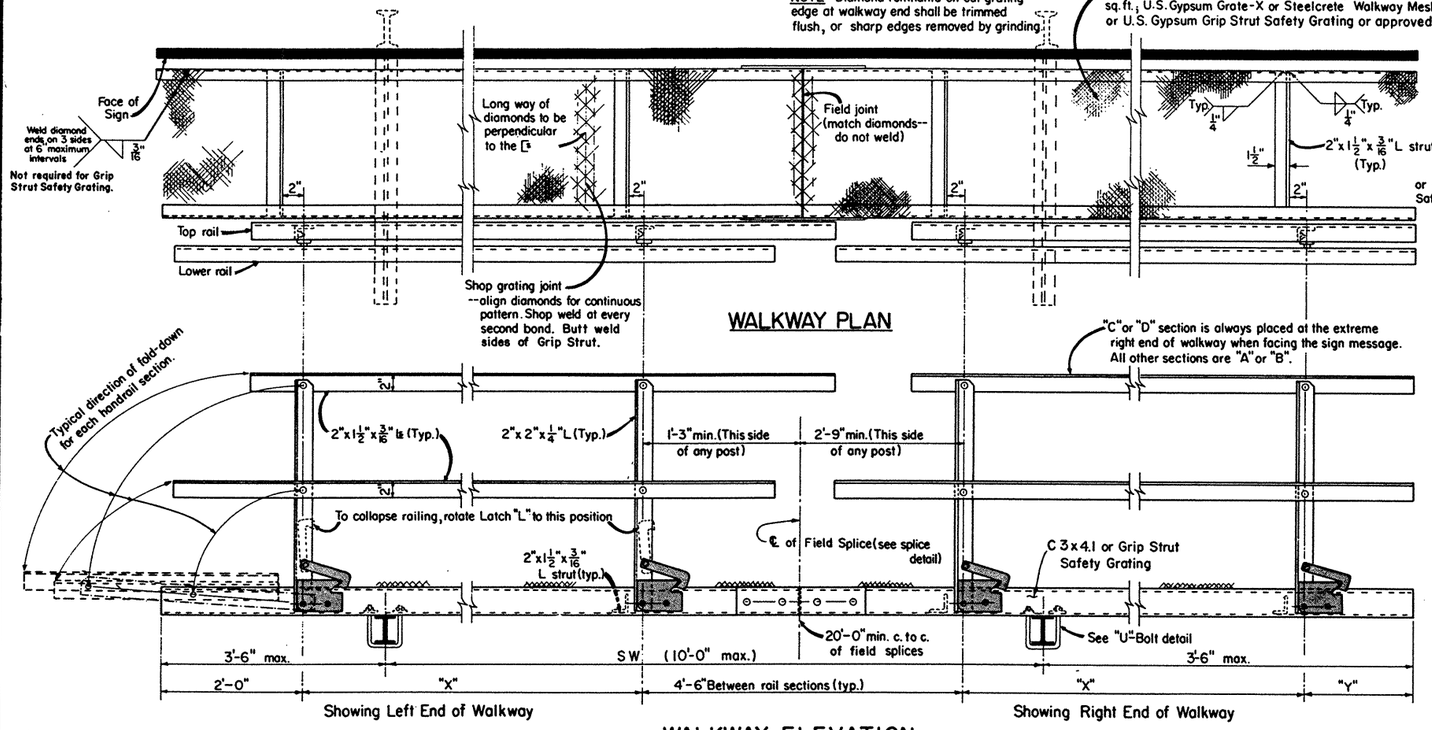

WALKWAY PLAN

Showing Left End of Walkway

Showing Right End of Walkway

WALKWAY ELEVATION

10'-0" Maximum spacing for Walkway, Lights and Sign Support Bracket Spacing, see sheets SL(2), SL(MV), SMD(P-I) PLYWOOD & SMD(A-I) ALUMINUM for other limitations to spacing.

NOTE: Eliminate C 3x4.1 when Grip Strut Safety Grating is used. All other details and materials apply unless otherwise noted.

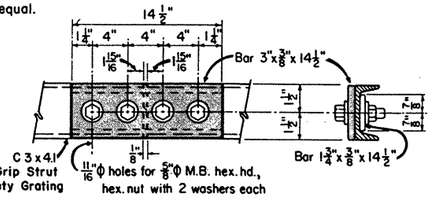

FIELD SPLICE DETAIL

SEE WALKWAY ELEVATION FOR LOCATION

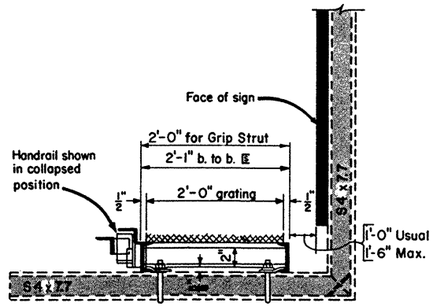

END VIEW OF WALKWAY

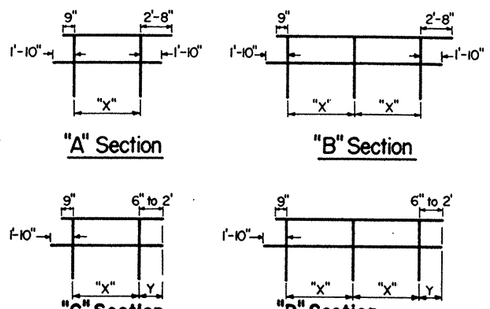

"X" dimension = 8'-0" maximum. See table for minimum dimension "X".
"X" shall be the same for all sections in any one walkway.
"Y" dimension = 6" usual, but variable between 6" and 2'-0" to obtain maximum dimension for "X" in even inches.

TYPES OF HANDRAIL SECTIONS

Walkway Length	Minimum "X" Dimension	Required No. of Sections			
		"A" Sec.	"B" Sec.	"C" Sec.	"D" Sec.
7'-6" to 12'-0"	1 @ 5'-0"	–	–	1	–
12'-6" to 20'-0"	2 @ 5'-0"	–	–	–	1
20'-6" to 24'-6"	2 @ 6'-9"	1	–	1	–
25'-0" to 32'-6"	3 @ 6'-0"	–	1	1	–
33'-0" to 40'-6"	4 @ 6'-6"	–	1	–	1
41'-0" to 45'-0"	4 @ 7'-4½"	1	1	1	–
45'-6" to 53'-0"	5 @ 6'-9"	–	2	1	–
53'-6" to 61'-0"	6 @ 7'-0"	–	2	–	1
61'-6" to 73'-6"	7 @ 6'-6"	–	3	1	–
74'-0" to 81'-6"	8 @ 7'-3"	–	3	–	1
82'-0" to 94'-0"	9 @ 6'-10"	–	4	1	–
94'-6" to 102'-0"	10 @ 7'-4"	–	4	–	1
102'-6" to 114'-6"	11 @ 7'-0"	–	5	1	–
115'-0" to 122'-6"	12 @ 7'-6"	–	5	–	1

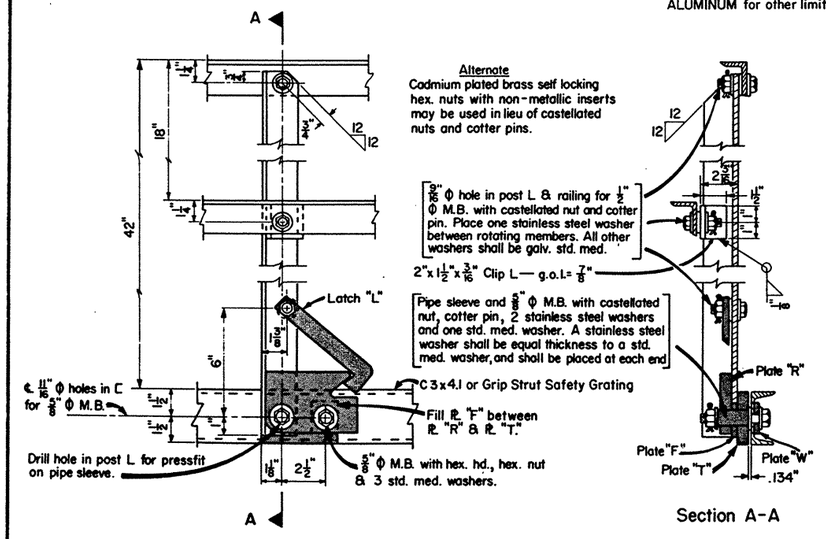

Section A-A

RAILING AND POST DETAIL

After erection, adjust all castellated nuts to remove only excess play in rotating parts then lock in position with cotter pins. Adjust nut on latch "L" for free latch operation.

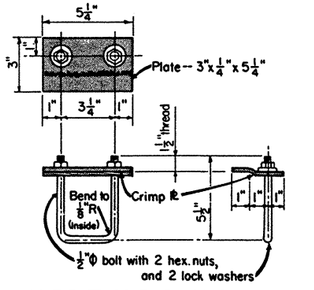

U-BOLT AND CLAMP DETAIL

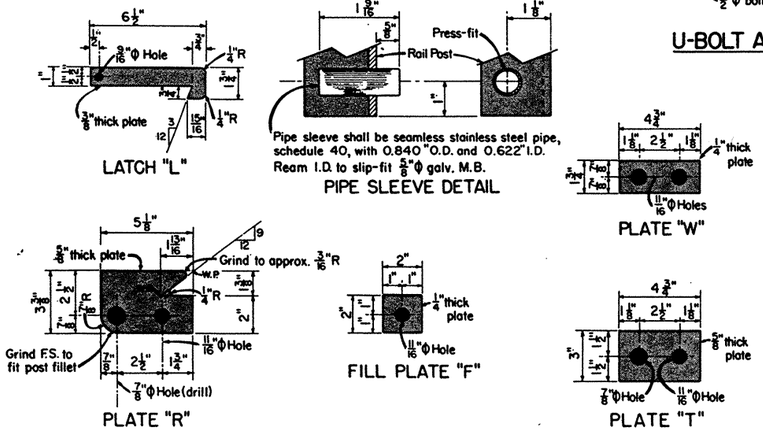

LATCH "L"

PIPE SLEEVE DETAIL

PLATE "W"

PLATE "R"

FILL PLATE "F"

PLATE "T"

PLATE AND MISCELLANEOUS DETAILS

GENERAL NOTES

DESIGN CONFORMS WITH AASHTO SPECIFICATIONS FOR THE DESIGN AND CONSTRUCTION OF STRUCTURAL SUPPORTS FOR HIGHWAY SIGNS.

MATERIALS, FABRICATION, CONSTRUCTION, AND ERECTION SHALL CONFORM WITH THE SPECIFICATIONS.

STRUCTURAL STEEL SHALL CONFORM WITH ASTM SPECIFICATION A 36. BOLTS SHALL HAVE HEXAGON HEADS AND NUTS AND CONFORM WITH ASTM SPECIFICATION A 307.

STAINLESS STEEL PIPE BUSHINGS SHALL CONFORM WITH ASTM SPECIFICATION A 312 TYPE TP 304.

STAINLESS STEEL WASHERS SHALL CONFORM WITH ASTM SPECIFICATION A 167 TYPE 302.

ALL PARTS EXCEPT STAINLESS STEEL SHALL BE GALVANIZED AFTER FABRICATION.

THE STAINLESS STEEL BUSHINGS SHALL BE PRESSED IN THE RAIL POSTS AFTER POSTS ARE GALVANIZED.

THE WALKWAY AND RAILING SHALL BE SHOP ASSEMBLED TO CHECK FABRICATION.

STATE DEPARTMENT OF HIGHWAYS AND PUBLIC TRANSPORTATION

SIGN WALKWAY AND HANDRAIL

SWW(1)

ORIGINAL DRAWING DATE: 2-82	STATE DISTRICT	FEDERAL REGION	FEDERAL AID PROJECT #	SHEET
DN.:- CK.:- DW.:- CK.:- REVISIONS	PHARR	6		885
	COUNTY		CONTROL	SECTION	JOB	HIGHWAY
	HIDALGO		0715	08	051	105

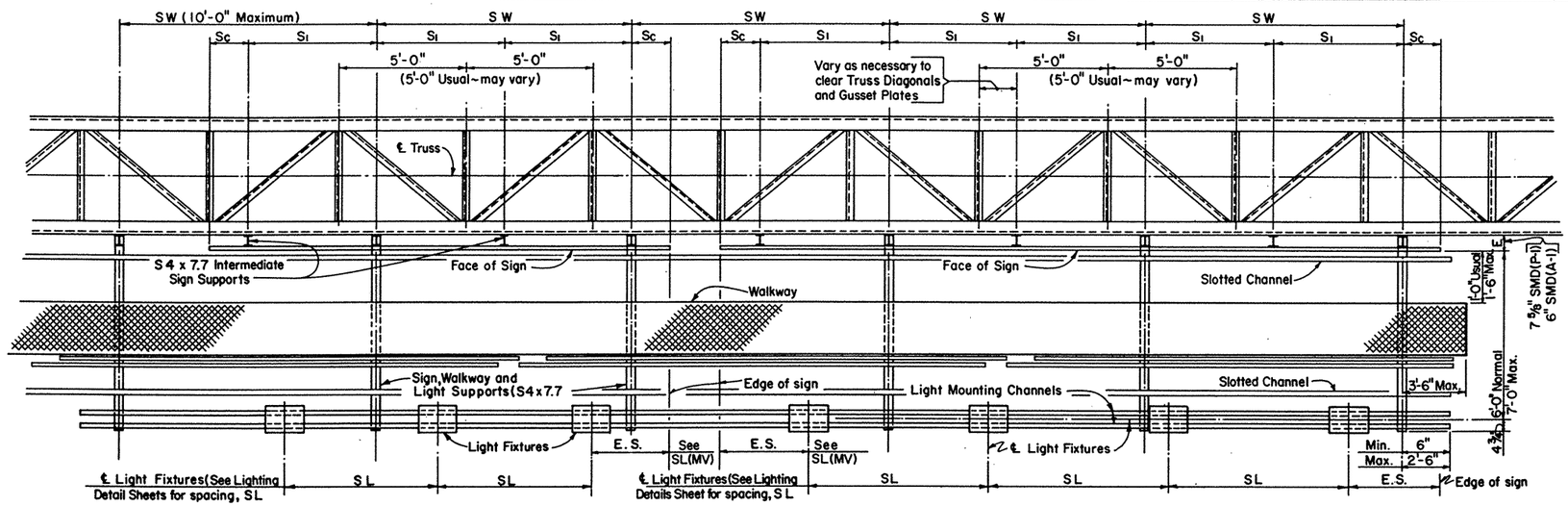

Sc = 6" Min. and .25 SI Max.

PART PLAN

(Showing Truss, Signs, Walkways and Lights)

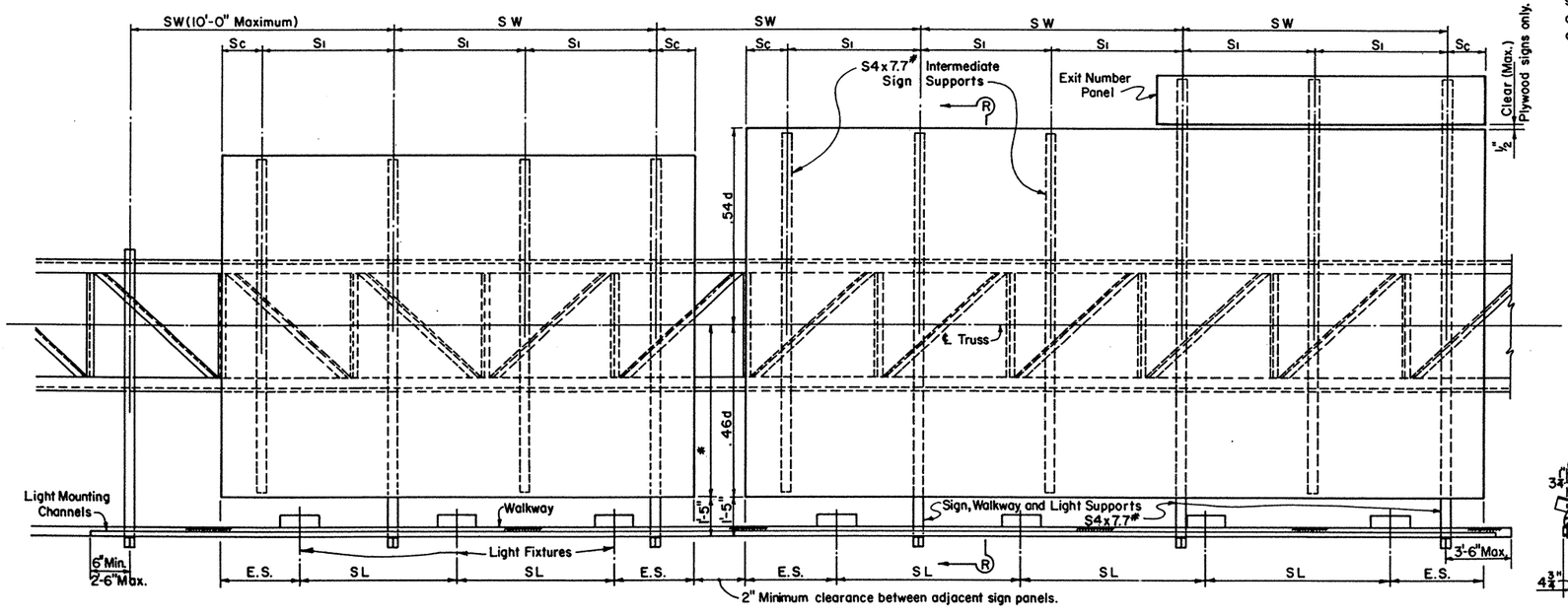

PART ELEVATION

* Where signs of different depths are used, the bottom edges of all signs may be placed in line. Where this is done, all signs should be so positioned that the bottom edges are approximately 0.46 of the depth of the deepest sign below the ℄ of the truss. When signs are spaced thusly, SI is determined by the deepest sign.

See Sheet SL (MV-1) for Lighting Details & Spa. S.L. & E.S.
See Sheet SWW(1) for Walkway Details.
See Sheet SMD(A-1) for Aluminum Sign Details & Max. Spa. for SI.
See Sheet SMD(P-1) for Plywood Sign Details & Max. Spa. for SI.
Sc = 6" Minimum, .25 SI Maximum.

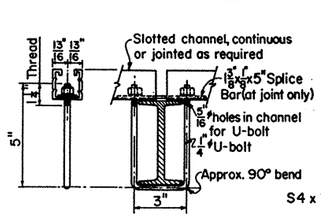

SECTION A-A

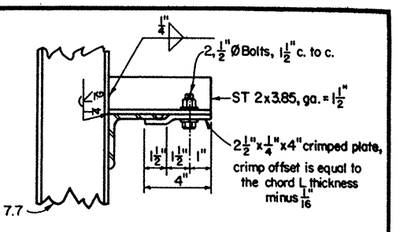

TOP CHORD

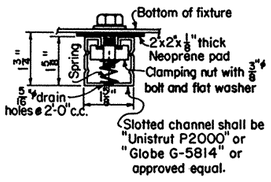

TYPICAL SLOTTED CHANNEL CONNECTED TO LIGHTING FIXTURE

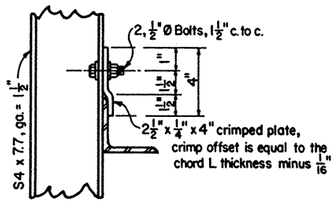

BOTTOM CHORD

SUPPORT TO TRUSS CONNECTION

NOTE: Exit Panel may be supported by sign support brackets as shown hereon, or may be supported as shown on sheets SMD(P-1) & SMD(A-1). Regardless of method used spacing of supports shall not exceed SI.

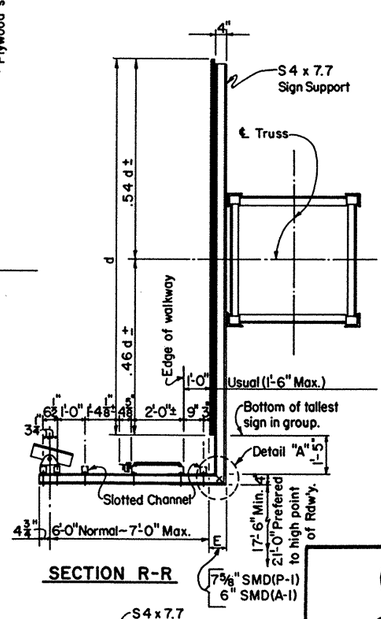

SECTION R-R

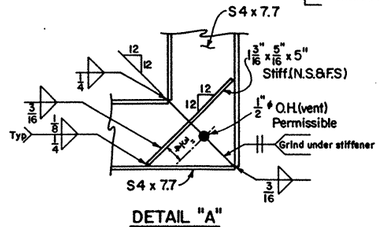

DETAIL "A"

GENERAL NOTES:

Design conforms to the AASHTO Standard Specifications for Structural Supports for Highway Signs, Luminaires and Traffic Signals.

Materials, Fabrication, Construction and Erection shall conform with the requirements of specifications for Interstate Signing and Delineation Projects and Texas Department of Highways and Public Transportation Standard Specifications for Construction of Highways, Streets and Bridges. Structural Steel shall conform with A.S.T.M. Specification A36 unless noted otherwise.

Bolts shall have Hexagon Heads and Nuts and conform with A.S.T.M. Specification A307.

All parts shall be galvanized after fabrication

STATE DEPARTMENT OF HIGHWAYS AND PUBLIC TRANSPORTATION

SUPPORT BRACKETS FOR SIGNS, WALKWAY & LIGHTS

SB (SWL-1)

ORIGINAL DRAWING DATE: 2-82	STATE DISTRICT	FEDERAL REGION	FEDERAL AID PROJECT #	SHEET
DN.:-CWC	REVISIONS			886
CK.:-				
DW.:-EDS				
CK.:-CWC	COUNTY	CONTROL	SECTION	JOB	HIGHWAY
	HIDALGO	0255	08	051	US 281

84

NAME
04:54:12 PM
06/26/2003
i:\22322o\cadd\sheets\traffic\markings\281st01.dgn

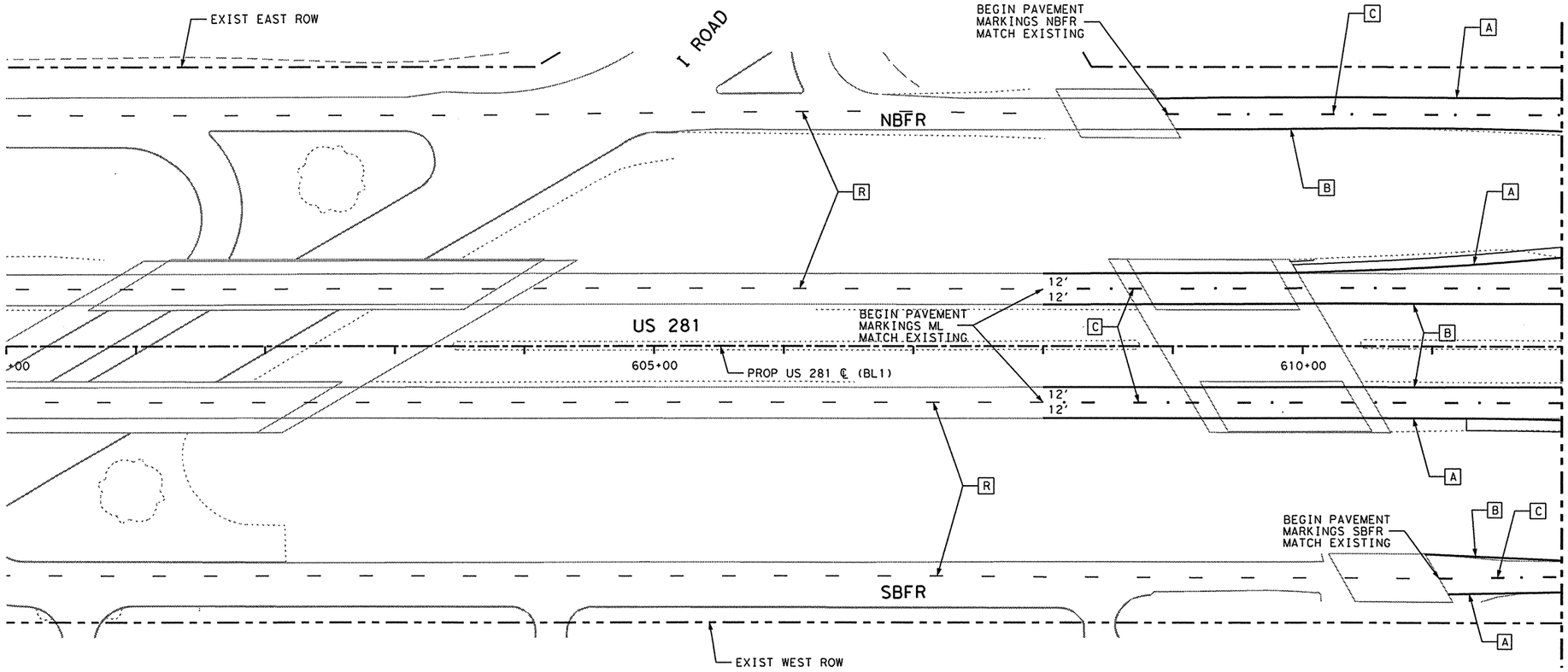

LEGEND:

(90 MIL) THERMOPLASTIC

- [A] 4" SOLID WHITE STRIPE
- [B] 4" SOLID YELLOW STRIPE
- [C] 4" BROKEN WHITE STRIPE & PVMT MRK TY II-CR (DETAIL "B")
- [D] 4" BROKEN YELLOW STRIPE & PVMT MRK TY II-AA (DETAIL "E")
- [E] 8" SOLID WHITE STRIPE (DETAIL "C" OR "F")
- [F] 8" SOLID YELLOW STRIPE (DETAIL "G")
- [G] 12" LANE DROP WHITE
- [H] 24" SOLID WHITE STRIPE
- [J] 24" SOLID YELLOW CROSSHATCHING @ 20' C-C & ROTATED 45°
- [K] WRONG WAY ARROW
- [L] 24" SOLID WHITE CROSSHATCHING @ 20' C-C & ROTATED 45°
- [M] 2-4" SOLID YELLOW STRIPES (DETAIL "D")
- [N] PREFABRICATED WORDS OR ARROWS (TYP)
- [P] 12" SOLID WHITE STRIPE
- [R] EXISTING PVMT MRK

(ITEM 672) SUMMARY OF RAISED PAVEMENT MARKERS

STATION LIMITS	CL B, (REFL)									
	TY I-A (SGL REFL) EA		TY I-C (SGL REFL) EA		TY I-R (SGL REFL) EA		TY II-AA (DBL REFL) EA		TY II-CR (DBL REFL) EA	
	EST	FIN	EST	FIN	EST	FIN	EST	FIN	EST	FIN
STA. 600+00 - STA. 612+00									16	
SHEET TOTALS:									16	

NOTE:
CONTRACTOR SHALL PLACE RAISED PAVEMENT MARKERS CL B (REFL) TY II B-B AT EACH FIRE HYDRANT. EST. @ 60 EA

(ITEM 666) SUMMARY OF REFLECTORIZED PAVEMENT MARKERS

STATION LIMITS	TY I-THERMOPLASTIC, (90 MIL)																	
	4" BROKEN WHITE (LF)		4" SOLID WHITE (LF)		12" LNDP WHITE (LF)		8" SOLID WHITE (LF)		24" SOLID WHITE (LF)		4" BROKEN YELLOW (LF)		4" SOLID YELLOW (LF)		8" SOLID YELLOW (LF)		24" SOLID YELLOW (LF)	
	EST	FIN	EST	FIN	EST	FIN	EST	FIN	EST	FIN	EST	FIN	EST	FIN	EST	FIN	EST	FIN
STA. 600+00 - STA. 612+00	300		1201										1205					
SHEET TOTALS:	300		1201										1205					

(ITEM 668) SUMMARY OF PREFABRICATED PAVEMENT MARKINGS

TY B (WHITE)		SHEET TOTALS:
DESCRIPTION	UNIT	QUANTITY
WORD (ONLY)	EA	
ARROW (LEFT)	EA	
ARROW (RIGHT)	EA	
ARROW (STRAIGHT)	EA	

THE SEAL APPEARING ON THIS DOCUMENT WAS AUTHORIZED BY JAIME AGUILAR, P.E. 87606 ON 06/26/2003.

STATE OF TEXAS
JAIME AGUILAR
87606
REGISTERED PROFESSIONAL ENGINEER

Parsons Brinckerhoff Quade & Douglas Inc.

Texas Department of Transportation

© 2003 by TxDOT

US 281 PAVEMENT MARKING DETAILS

BEGIN OF PROJECT TO STA. 612+00 "BL1"

PLAN 1"= 100' HORIZ

SHEET 1 OF 33 | 281ST01.DGN

DESIGNED: TT	FED. RD DIV. No.	STATE	FEDERAL AID PROJECT No.		HIGHWAY No.
CHECKED: DM	6	TEXAS			US 281
DRAWN: KTD	STATE DISTRICT	COUNTY	CONTROL No.	SECTION No.	JOB No.	SHEET No.
CHECKED: DM	PHARR	HIDALGO	0255	08	091	887

NAME
04:54:19 PM
06/26/2003
i:\22322g\cadd\sheets\traffic\markings\281st02.dgn

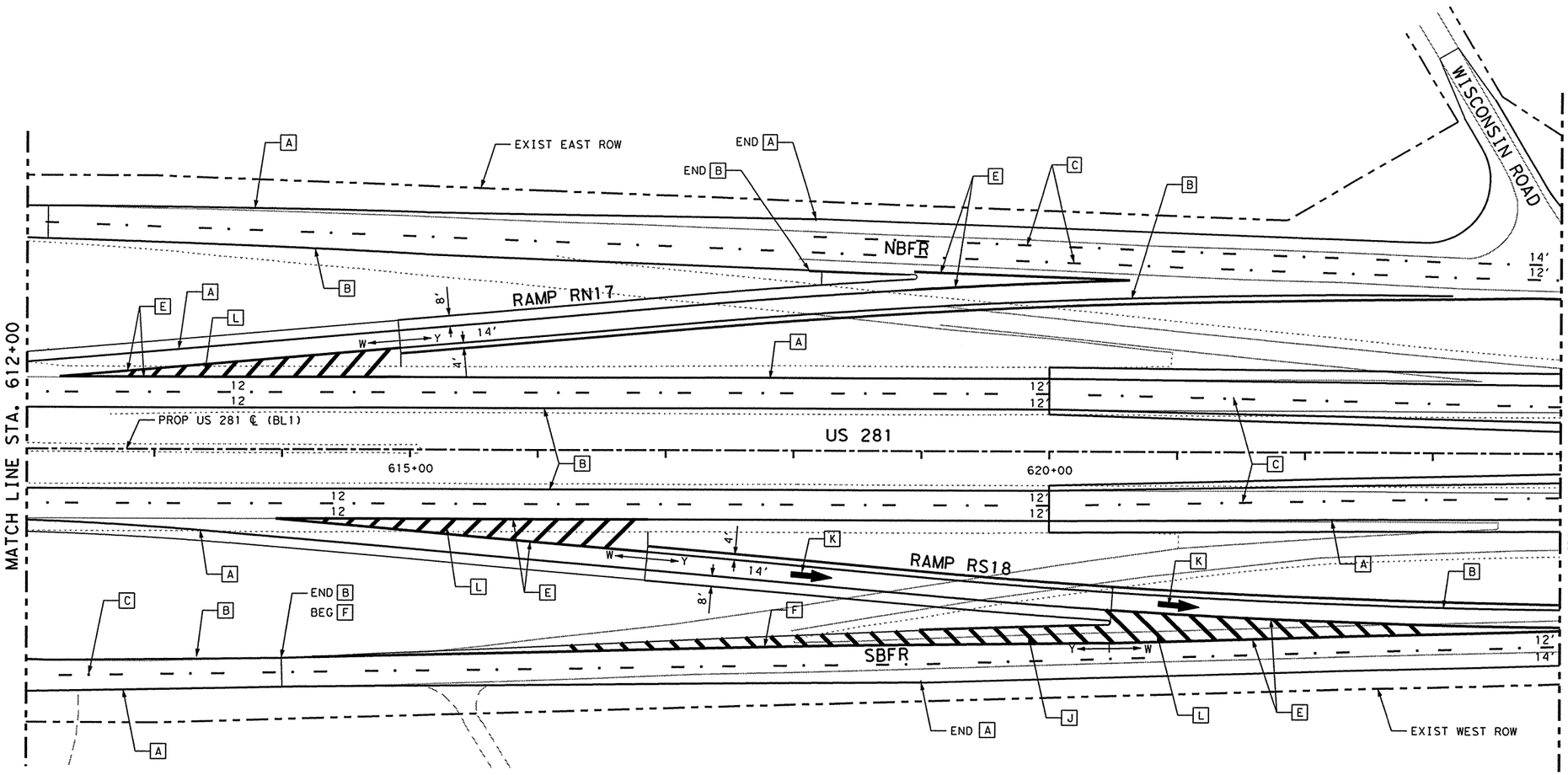

LEGEND:

(90 MIL) THERMOPLASTIC

- A 4" SOLID WHITE STRIPE
- B 4" SOLID YELLOW STRIPE
- C 4" BROKEN WHITE STRIPE & PVMT MRK TY II-CR (DETAIL "B")
- D 4" BROKEN YELLOW STRIPE & PVMT MRK TY II-AA (DETAIL "E")
- E 8" SOLID WHITE STRIPE (DETAIL "C" OR "F")
- F 8" SOLID YELLOW STRIPE (DETAIL "G")
- G 12" LANE DROP WHITE
- H 24" SOLID WHITE STRIPE
- J 24" SOLID YELLOW CROSSHATCHING @ 20' C-C & ROTATED 45°
- K WRONG WAY ARROW
- L 24" SOLID WHITE CROSSHATCHING @ 20' C-C & ROTATED 45°
- M 2-4" SOLID YELLOW STRIPES (DETAIL "D")
- N PREFABRICATED WORDS OR ARROWS (TYP)
- P 12" SOLID WHITE STRIPE
- R EXISTING PVMT MRK

(ITEM 672) SUMMARY OF RAISED PAVEMENT MARKERS

STATION LIMITS	CL B, (REFL) TY I-A (SGL REFL) EA		TY I-C (SGL REFL) EA		TY I-R (SGL REFL) EA		TY II-AA (DBL REFL) EA		TY II-CR (DBL REFL) EA	
	EST	FIN	EST	FIN	EST	FIN	EST	FIN	EST	FIN
STA. 612+00 - STA. 624+00	62		134		28				250	
SHEET TOTALS:	62		134		28				250	

(ITEM 666) SUMMARY OF REFLECTORIZED PAVEMENT MARKERS

STATION LIMITS	TY I-THERMOPLASTIC, (90 MIL) 4" BROKEN WHITE (LF)		4" SOLID WHITE (LF)		12" LNDP WHITE (LF)		8" SOLID WHITE (LF)		24" SOLID WHITE (LF)		4" BROKEN YELLOW (LF)		4" SOLID YELLOW (LF)		8" SOLID YELLOW (LF)		24" SOLID YELLOW (LF)	
	EST	FIN	EST	FIN	EST	FIN	EST	FIN	EST	FIN	EST	FIN	EST	FIN	EST	FIN	EST	FIN
STA. 612+00 - STA. 624+00	1347		4600				2158		728				4762		613		266	
SHEET TOTALS:	1347		4600				2158		728				4762		613		266	

(ITEM 668) SUMMARY OF PREFABRICATED PAVEMENT MARKINGS

TY B (WHITE)		SHEET TOTALS:
DESCRIPTION	UNIT	QUANTITY
WORD (ONLY)	EA	
ARROW (LEFT)	EA	
ARROW (RIGHT)	EA	
ARROW (STRAIGHT)	EA	

THE SEAL APPEARING ON THIS DOCUMENT WAS AUTHORIZED BY JAIME AGUILAR, P.E. 87606 ON 06/26/2003.

STATE OF TEXAS
JAIME AGUILAR
87606
REGISTERED PROFESSIONAL ENGINEER

Parsons Brinckerhoff Quade & Douglas Inc.

Texas Department of Transportation

© 2003 by TxDOT

US 281 PAVEMENT MARKING DETAILS

STA. 612+00 "BL1" TO STA. 624+00 "BL1"

PLAN 1"= 100' HORIZ

SHEET 2 OF 33 | 281ST02.DGN

DESIGNED: TT	FED. RD DIV. No.	STATE	FEDERAL AID PROJECT No.	HIGHWAY No.
CHECKED: DM	6	TEXAS		US 281

DRAWN:	STATE DISTRICT	COUNTY	CONTROL No.	SECTION No.	JOB No.	SHEET No.
CHECKED: DM	PHARR	HIDALGO	0255	08	091	888

Carlos F. Gonzalez
02:19:06 PM
08/07/2003

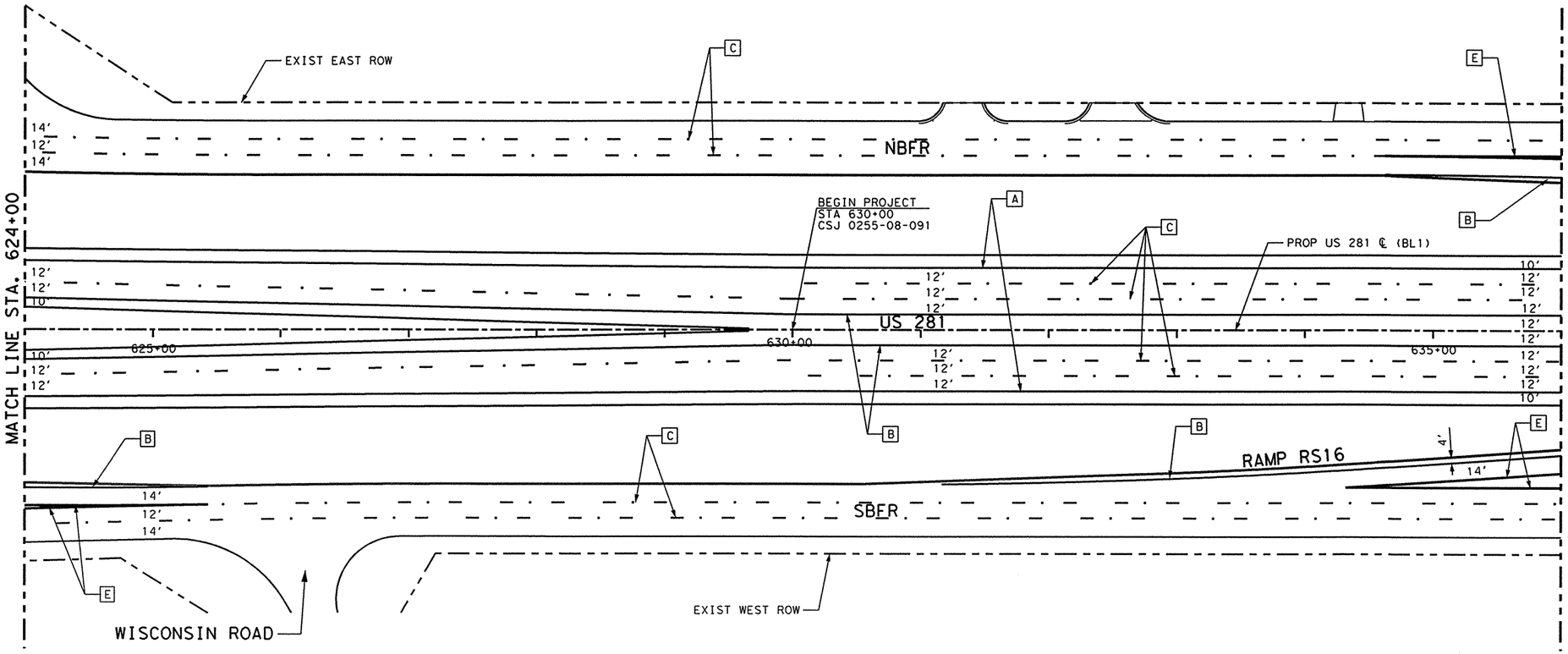

LEGEND:

(90 MIL) THERMOPLASTIC

- [A] 4" SOLID WHITE STRIPE
- [B] 4" SOLID YELLOW STRIPE
- [C] 4" BROKEN WHITE STRIPE & PVMT MRK TY II-CR (DETAIL "B")
- [D] 4" BROKEN YELLOW STRIPE & PVMT MRK TY II-AA (DETAIL "E")
- [E] 8" SOLID WHITE STRIPE (DETAIL "C" OR "F")
- [F] 8" SOLID YELLOW STRIPE (DETAIL "G")
- [G] 12" LANE DROP WHITE
- [H] 24" SOLID WHITE STRIPE
- [J] 24" SOLID YELLOW CROSSHATCHING @ 20' C-C & ROTATED 45°
- [K] WRONG WAY ARROW
- [L] 24" SOLID WHITE CROSSHATCHING @ 20' C-C & ROTATED 45°
- [M] 2-4" SOLID YELLOW STRIPES (DETAIL "D")
- [N] PREFABRICATED WORDS OR ARROWS (TYP)
- [P] 12" SOLID WHITE STRIPE
- [R] EXISTING PVMT MRK

THE SEAL APPEARING ON THIS DOCUMENT WAS AUTHORIZED BY JAIME AGUILAR, P.E. 87606 ON 08/07/2003.

STATE OF TEXAS
JAIME AGUILAR
87606
REGISTERED PROFESSIONAL ENGINEER

(ITEM 672) SUMMARY OF RAISED PAVEMENT MARKERS

STATION LIMITS	CL B, (REFL)									
	TY I-A (SGL REFL) EA		TY I-C (SGL REFL) EA		TY I-R (SGL REFL) EA		TY II-AA (DBL REFL) EA		TY II-CR (DBL REFL) EA	
	EST	FIN	EST	FIN	EST	FIN	EST	FIN	EST	FIN
STA. 624+00 - STA. 636+00			136						157	
SHEET TOTALS:			136						157	

(ITEM 666) SUMMARY OF REFLECTORIZED PAVEMENT MARKERS

STATION LIMITS	TY I-THERMOPLASTIC, (90 MIL)																	
	4" BROKEN WHITE (LF)		4" SOLID WHITE (LF)		12" LNDP WHITE (LF)		8" SOLID WHITE (LF)		24" SOLID WHITE (LF)		4" BROKEN YELLOW (LF)		4" SOLID YELLOW (LF)		8" SOLID YELLOW (LF)		24" SOLID YELLOW (LF)	
	EST	FIN	EST	FIN	EST	FIN	EST	FIN	EST	FIN	EST	FIN	EST	FIN	EST	FIN	EST	FIN
STA. 624+00 - STA. 636+00	2027		2401				901						3165					
SHEET TOTALS:	2027		2401				901						3165					

(ITEM 668) SUMMARY OF PREFABRICATED PAVEMENT MARKINGS

TY B (WHITE)		SHEET TOTALS:
DESCRIPTION	UNIT	QUANTITY
WORD (ONLY)	EA	
ARROW (LEFT)	EA	
ARROW (RIGHT)	EA	
ARROW (STRAIGHT)	EA	

Parsons Brinckerhoff Quade & Douglas Inc.

Texas Department of Transportation

© 2003 by TxDOT

US 281 PAVEMENT MARKING DETAILS

STA. 624+00 "BL1" TO
STA. 636+00 "BL1"

PLAN 1"= 100' HORIZ

SHEET 3 OF 33 | 281ST03.DGN

DESIGNED: TT	FED. RD DIV. NO.	STATE	FEDERAL AID PROJECT No.	HIGHWAY No.
CHECKED: DM	6	TEXAS		US 281

DRAWN:	STATE DISTRICT	COUNTY	CONTROL No.	SECTION No.	JOB No.	SHEET No.
CHECKED: DM	PHARR	HIDALGO	0255	08	091	889

T:\22322G\CADD\Sheets\Traffic\Markings\281st03.dgn

NAME
04:54:29 PM
06/26/2003
i:\22322a\cadd\sheets\traffic\markings\281st04.dgn

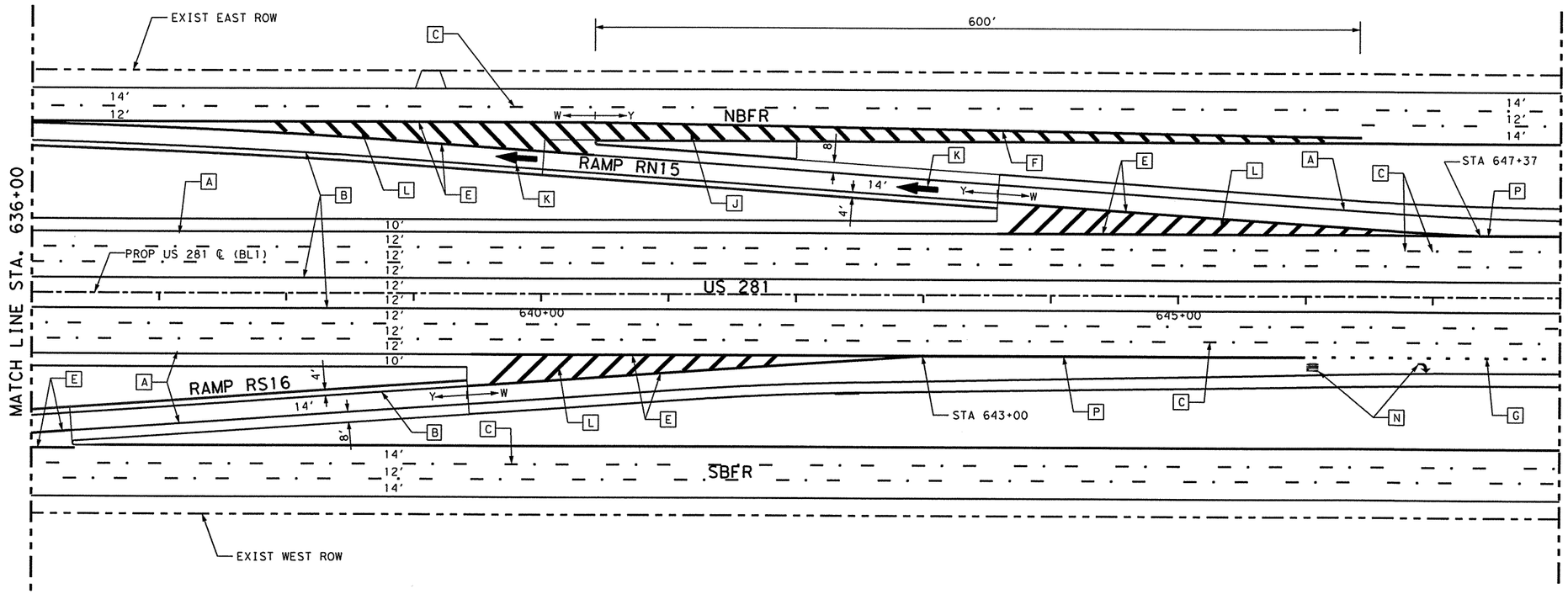

LEGEND:

(90 MIL) THERMOPLASTIC

- [A] 4" SOLID WHITE STRIPE
- [B] 4" SOLID YELLOW STRIPE
- [C] 4" BROKEN WHITE STRIPE & PVMT MRK TY II-CR (DETAIL "B")
- [D] 4" BROKEN YELLOW STRIPE & PVMT MRK TY II-AA (DETAIL "E")
- [E] 8" SOLID WHITE STRIPE (DETAIL "C" OR "F")
- [F] 8" SOLID YELLOW STRIPE (DETAIL "G")
- [G] 12" LANE DROP WHITE
- [H] 24" SOLID WHITE STRIPE
- [J] 24" SOLID YELLOW CROSSHATCHING @ 20' C-C & ROTATED 45°
- [K] WRONG WAY ARROW
- [L] 24" SOLID WHITE CROSSHATCHING @ 20' C-C & ROTATED 45°
- [M] 2-4" SOLID YELLOW STRIPES (DETAIL "D")
- [N] PREFABRICATED WORDS OR ARROWS (TYP)
- [P] 12" SOLID WHITE STRIPE
- [R] EXISTING PVMT MRK

(ITEM 672) SUMMARY OF RAISED PAVEMENT MARKERS

STATION LIMITS	CL B, (REFL) TY I-A (SGL REFL) EA		TY I-C (SGL REFL) EA		TY I-R (SGL REFL) EA		TY II-AA (DBL REFL) EA		TY II-CR (DBL REFL) EA	
	EST	FIN	EST	FIN	EST	FIN	EST	FIN	EST	FIN
STA. 636+00 - STA. 648+00	60		26		28				369	
SHEET TOTALS:	60		26		28				369	

(ITEM 666) SUMMARY OF REFLECTORIZED PAVEMENT MARKERS

STATION LIMITS	TY I-THERMOPLASTIC, (90 MIL) 4" BROKEN WHITE (LF)		4" SOLID WHITE (LF)		12" LNDP WHITE (LF)		8" SOLID WHITE (LF)		24" SOLID WHITE (LF)		4" BROKEN YELLOW (LF)		4" SOLID YELLOW (LF)		8" SOLID YELLOW (LF)		24" SOLID YELLOW (LF)		12" SOLID WHITE (LF)	
	EST	FIN	EST	FIN	EST	FIN	EST	FIN	EST	FIN	EST	FIN	EST	FIN	EST	FIN	EST	FIN	EST	FIN
STA. 636+00 - STA. 648+00	2136		3033		39		2421		831				3502		603		366		363	
SHEET TOTALS:	2136		3033		39		2421		831				3502		603		366		363	

(ITEM 668) SUMMARY OF PREFABRICATED PAVEMENT MARKINGS

TY B (WHITE)		SHEET TOTALS:
DESCRIPTION	UNIT	QUANTITY
WORD (ONLY)	EA	1
ARROW (LEFT)	EA	
ARROW (RIGHT)	EA	1
ARROW (STRAIGHT)	EA	

THE SEAL APPEARING ON THIS DOCUMENT WAS AUTHORIZED BY JAIME AGUILAR, P.E. 87606 ON 06/26/2003.

STATE OF TEXAS · JAIME AGUILAR · 87606 · REGISTERED PROFESSIONAL ENGINEER

Parsons Brinckerhoff Quade & Douglas Inc.

Texas Department of Transportation

© 2003 by TxDOT

US 281 PAVEMENT MARKING DETAILS

STA. 636+00 "BL1" TO STA. 648+00 "BL1"

PLAN 1"= 100' HORIZ

SHEET 4 OF 33 | 281ST04.DGN

DESIGNED: TT	FED. RD DIV. No.	STATE	FEDERAL AID PROJECT No.			HIGHWAY No.	
CHECKED: DM	6	TEXAS				US 281	
DRAWN: KTD	STATE DISTRICT	COUNTY	CONTROL No.	SECTION No.	JOB No.	SHEET No.	
CHECKED: DM	PHARR	HIDALGO	0255	08	091	890	

NAME
04:54:33 PM
06/26/2003
i:\22322e\cadd\sheets\traffic\markings\281st05.dgn

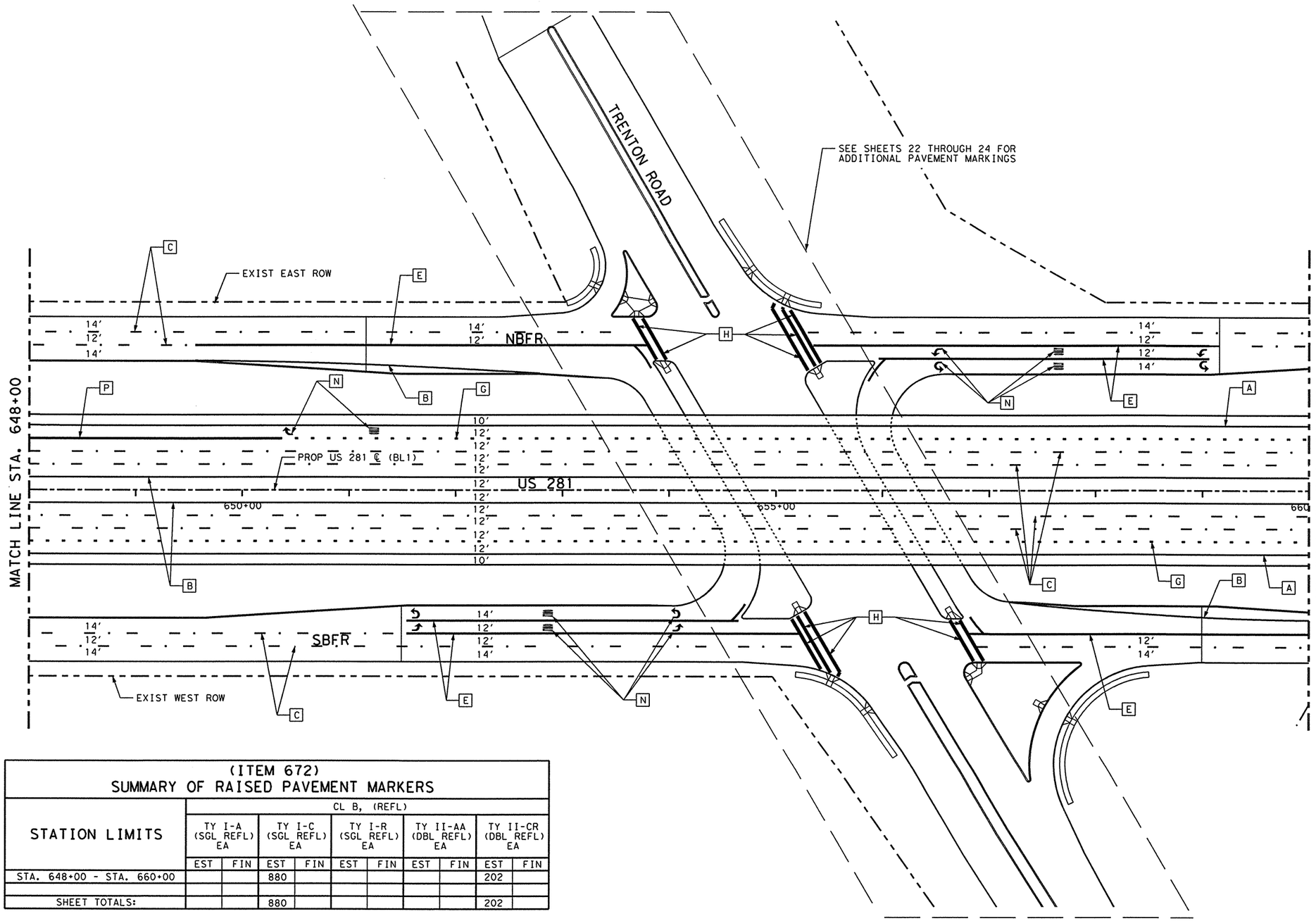

LEGEND:

(90 MIL) THERMOPLASTIC

- [A] 4" SOLID WHITE STRIPE
- [B] 4" SOLID YELLOW STRIPE
- [C] 4" BROKEN WHITE STRIPE & PVMT MRK TY II-CR (DETAIL "B")
- [D] 4" BROKEN YELLOW STRIPE & PVMT MRK TY II-AA (DETAIL "E")
- [E] 8" SOLID WHITE STRIPE (DETAIL "C" OR "F")
- [F] 8" SOLID YELLOW STRIPE (DETAIL "G")
- [G] 12" LANE DROP WHITE
- [H] 24" SOLID WHITE STRIPE
- [J] 24" SOLID YELLOW CROSSHATCHING @ 20' C-C & ROTATED 45°
- [K] WRONG WAY ARROW
- [L] 24" SOLID WHITE CROSSHATCHING @ 20' C-C & ROTATED 45°
- [M] 2-4" SOLID YELLOW STRIPES (DETAIL "D")
- [N] PREFABRICATED WORDS OR ARROWS (TYP)
- [P] 12" SOLID WHITE STRIPE
- [R] EXISTING PVMT MRK

THE SEAL APPEARING ON THIS DOCUMENT WAS AUTHORIZED BY JAIME AGUILAR, P.E. 87606 ON 06/26/2003.

STATE OF TEXAS · JAIME AGUILAR · 87606 · REGISTERED PROFESSIONAL ENGINEER

(ITEM 672) SUMMARY OF RAISED PAVEMENT MARKERS

STATION LIMITS	CL B, (REFL) TY I-A (SGL REFL) EA		TY I-C (SGL REFL) EA		TY I-R (SGL REFL) EA		TY II-AA (DBL REFL) EA		TY II-CR (DBL REFL) EA	
	EST	FIN	EST	FIN	EST	FIN	EST	FIN	EST	FIN
STA. 648+00 - STA. 660+00			880						202	
SHEET TOTALS:			880						202	

(ITEM 666) SUMMARY OF REFLECTORIZED PAVEMENT MARKERS

STATION LIMITS	TY I-THERMOPLASTIC, (90 MIL) 4" BROKEN WHITE (LF)		4" SOLID WHITE (LF)		12" LNDP WHITE (LF)		8" SOLID WHITE (LF)		24" SOLID WHITE (LF)		4" BROKEN YELLOW (LF)		4" SOLID YELLOW (LF)		8" SOLID YELLOW (LF)		24" SOLID YELLOW (LF)		12" SOLID WHITE (LF)	
	EST	FIN	EST	FIN	EST	FIN	EST	FIN	EST	FIN	EST	FIN	EST	FIN	EST	FIN	EST	FIN	EST	FIN
STA. 648+00 - STA. 660+00	1872		2400		433		2199		554				3005						237	
SHEET TOTALS:	1872		2400		433		2199		554				3005						237	

(ITEM 668) SUMMARY OF PREFABRICATED PAVEMENT MARKINGS

TY B (WHITE)		SHEET TOTALS:
DESCRIPTION	UNIT	QUANTITY
WORD (ONLY)	EA	5
ARROW (LEFT)	EA	4
ARROW (RIGHT)	EA	1
ARROW (STRAIGHT)	EA	
ARROW (U-TURN)	EA	4

Parsons Brinckerhoff Quade & Douglas Inc.

Texas Department of Transportation

© 2003 by TxDOT

US 281 PAVEMENT MARKING DETAILS

STA. 648+00 "BL1" TO STA. 660+00 "BL1"

PLAN 1"= 100' HORIZ

SHEET 5 OF 33 — 281ST05.DGN

DESIGNED: TT	FED. RD DIV. No.	STATE	FEDERAL AID PROJECT No.	HIGHWAY No.
CHECKED: DM	6	TEXAS		US 281

DRAWN:	STATE DISTRICT	COUNTY	CONTROL No.	SECTION No.	JOB No.	SHEET No.
CHECKED: DM	PHARR	HIDALGO	0255	08	091	891

NAME
04:54:37 PM
06/26/2003
i:\22322o\cadd\sheets\traffic\markings\281st06.dgn

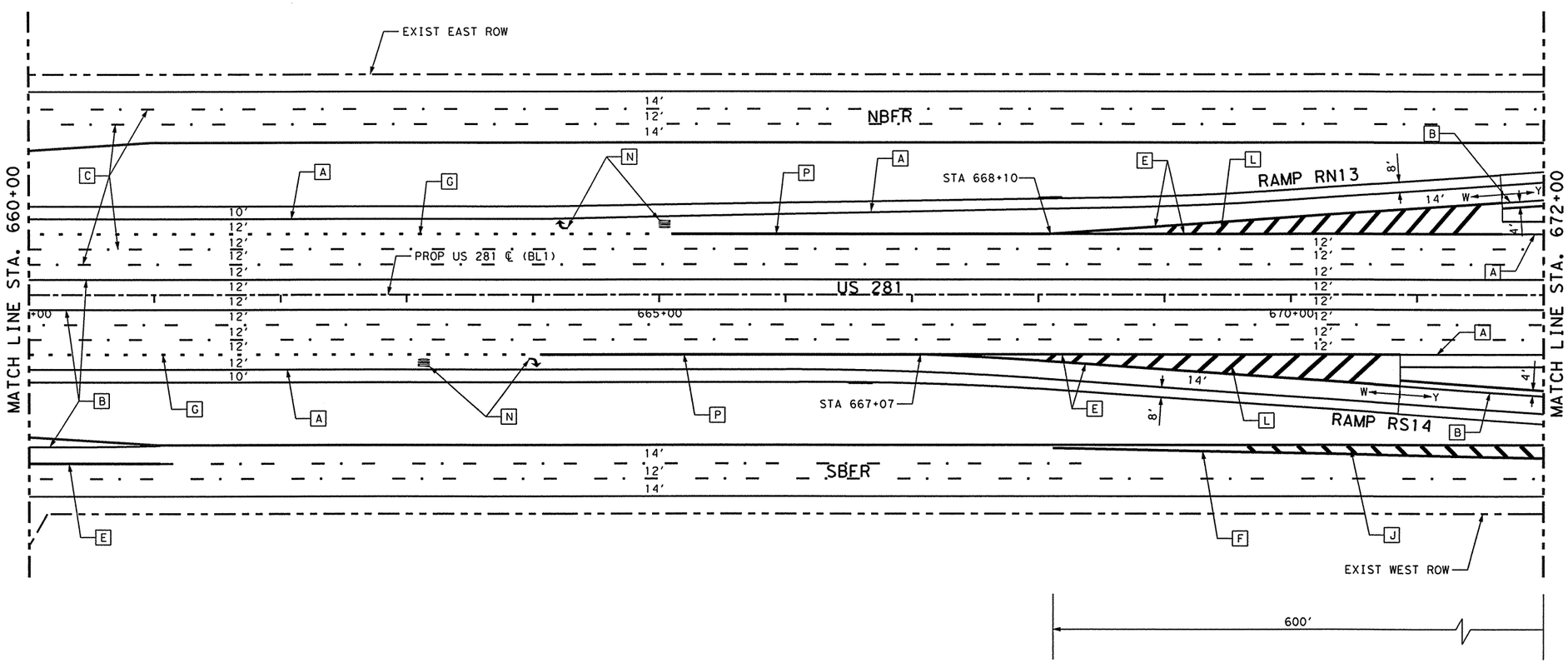

LEGEND:

(90 MIL) THERMOPLASTIC

- [A] 4" SOLID WHITE STRIPE
- [B] 4" SOLID YELLOW STRIPE
- [C] 4" BROKEN WHITE STRIPE & PVMT MRK TY II-CR (DETAIL "B")
- [D] 4" BROKEN YELLOW STRIPE & PVMT MRK TY II-AA (DETAIL "E")
- [E] 8" SOLID WHITE STRIPE (DETAIL "C" OR "F")
- [F] 8" SOLID YELLOW STRIPE (DETAIL "G")
- [G] 12" LANE DROP WHITE
- [H] 24" SOLID WHITE STRIPE
- [J] 24" SOLID YELLOW CROSSHATCHING @ 20' C-C & ROTATED 45°
- [K] WRONG WAY ARROW
- [L] 24" SOLID WHITE CROSSHATCHING @ 20' C-C & ROTATED 45°
- [M] 2-4" SOLID YELLOW STRIPES (DETAIL "D")
- [N] PREFABRICATED WORDS OR ARROWS (TYP)
- [P] 12" SOLID WHITE STRIPE
- [R] EXISTING PVMT MRK

(ITEM 672) SUMMARY OF RAISED PAVEMENT MARKERS

STATION LIMITS	CL B, (REFL) TY I-A (SGL REFL) EA		TY I-C (SGL REFL) EA		TY I-R (SGL REFL) EA		TY II-AA (DBL REFL) EA		TY II-CR (DBL REFL) EA	
	EST	FIN	EST	FIN	EST	FIN	EST	FIN	EST	FIN
STA. 660+00 - STA. 672+00	40		42						335	
SHEET TOTALS:	40		42						335	

(ITEM 666) SUMMARY OF REFLECTORIZED PAVEMENT MARKERS

STATION LIMITS	TY I-THERMOPLASTIC, (90 MIL) 4" BROKEN WHITE (LF)		4" SOLID WHITE (LF)		12" LNDP WHITE (LF)		8" SOLID WHITE (LF)		24" SOLID WHITE (LF)		4" BROKEN YELLOW (LF)		4" SOLID YELLOW (LF)		8" SOLID YELLOW (LF)		24" SOLID YELLOW (LF)		12" SOLID WHITE (LF)	
	EST	FIN	EST	FIN	EST	FIN	EST	FIN	EST	FIN	EST	FIN	EST	FIN	EST	FIN	EST	FIN	EST	FIN
STA. 660+00 - STA. 672+00	2282		2549		183		1581		529				2651		388		126		600	
SHEET TOTALS:	2282		2549		183		1581		529				2651		388		126		600	

(ITEM 668) SUMMARY OF PREFABRICATED PAVEMENT MARKINGS

TY B (WHITE)		SHEET TOTALS:
DESCRIPTION	UNIT	QUANTITY
WORD (ONLY)	EA	2
ARROW (LEFT)	EA	
ARROW (RIGHT)	EA	2
ARROW (STRAIGHT)	EA	

THE SEAL APPEARING ON THIS DOCUMENT WAS AUTHORIZED BY JAIME AGUILAR, P.E. 87606 ON 06/26/2003.

STATE OF TEXAS — JAIME AGUILAR — 87606 — REGISTERED PROFESSIONAL ENGINEER

Parsons Brinckerhoff Quade & Douglas Inc.

Texas Department of Transportation

© 2003 by TxDOT

US 281 PAVEMENT MARKING DETAILS

STA. 660+00 "BL1" TO STA. 672+00 "BL1"

PLAN 1"= 100' HORIZ

SHEET 6 OF 33 | 281ST06.DGN

DESIGNED: TT	FED. RD DIV. NO.	STATE	FEDERAL AID PROJECT No.	HIGHWAY No.
CHECKED: DM	6	TEXAS		US 281

DRAWN: KTD	STATE DISTRICT	COUNTY	CONTROL No.	SECTION No.	JOB No.	SHEET No.
CHECKED: DM	PHARR	HIDALGO	0255	08	091	892

NAME
04:54:42 PM
06/26/2003
i:\22322a\cadd\sheets\traffic\markings\281st07.dgn

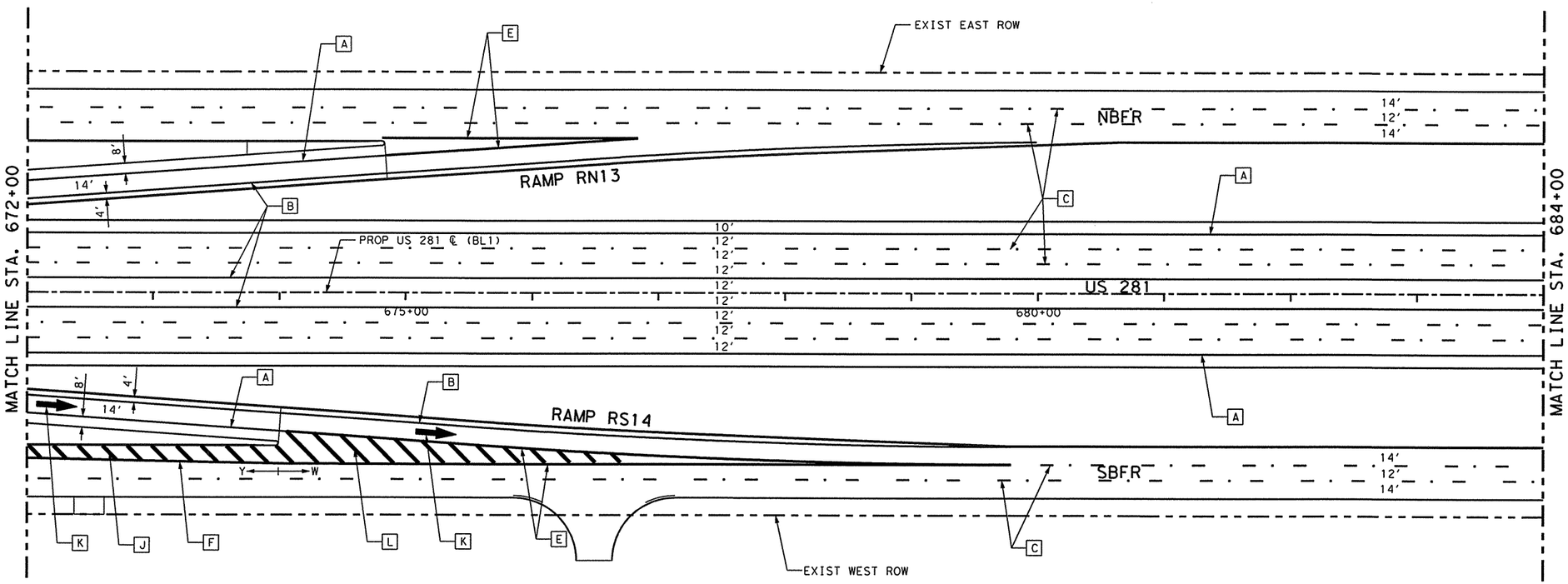

LEGEND:

(90 MIL) THERMOPLASTIC

- [A] 4" SOLID WHITE STRIPE
- [B] 4" SOLID YELLOW STRIPE
- [C] 4" BROKEN WHITE STRIPE & PVMT MRK TY II-CR (DETAIL "B")
- [D] 4" BROKEN YELLOW STRIPE & PVMT MRK TY II-AA (DETAIL "E")
- [E] 8" SOLID WHITE STRIPE (DETAIL "C" OR "F")
- [F] 8" SOLID YELLOW STRIPE (DETAIL "G")
- [G] 12" LANE DROP WHITE
- [H] 24" SOLID WHITE STRIPE
- [J] 24" SOLID YELLOW CROSSHATCHING @ 20' C-C & ROTATED 45°
- [K] WRONG WAY ARROW
- [L] 24" SOLID WHITE CROSSHATCHING @ 20' C-C & ROTATED 45°
- [M] 2-4" SOLID YELLOW STRIPES (DETAIL "D")
- [N] PREFABRICATED WORDS OR ARROWS (TYP)
- [P] 12" SOLID WHITE STRIPE
- [R] EXISTING PVMT MRK

(ITEM 672) SUMMARY OF RAISED PAVEMENT MARKERS

STATION LIMITS	CL B, (REFL) TY I-A (SGL REFL) EA		TY I-C (SGL REFL) EA		TY I-R (SGL REFL) EA		TY II-AA (DBL REFL) EA		TY II-CR (DBL REFL) EA	
	EST	FIN	EST	FIN	EST	FIN	EST	FIN	EST	FIN
STA. 672+00 - STA. 684+00	22		162		28				225	
SHEET TOTALS:	22		162		28				225	

(ITEM 666) SUMMARY OF RREFLECTORIZED PAVEMENT MARKERS

STATION LIMITS	TY I-THERMOPLASTIC, (90 MIL) 4" BROKEN WHITE (LF)		4" SOLID WHITE (LF)		12" LNDP WHITE (LF)		8" SOLID WHITE (LF)		24" SOLID WHITE (LF)		4" BROKEN YELLOW (LF)		4" SOLID YELLOW (LF)		8" SOLID YELLOW (LF)		24" SOLID YELLOW (LF)	
	EST	FIN	EST	FIN	EST	FIN	EST	FIN	EST	FIN	EST	FIN	EST	FIN	EST	FIN	EST	FIN
STA. 672+00 - STA. 684+00	2204		2891				1505		292				3980		211		187	
SHEET TOTALS:	2204		2891				1505		292				3980		211		187	

(ITEM 668) SUMMARY OF PREFABRICATED PAVEMENT MARKINGS

TY B (WHITE)		SHEET TOTALS:
DESCRIPTION	UNIT	QUANTITY
WORD (ONLY)	EA	
ARROW (LEFT)	EA	
ARROW (RIGHT)	EA	
ARROW (STRAIGHT)	EA	

THE SEAL APPEARING ON THIS DOCUMENT WAS AUTHORIZED BY JAIME AGUILAR, P.E. 87606 ON 06/26/2003.

STATE OF TEXAS
JAIME AGUILAR
87606
REGISTERED
PROFESSIONAL ENGINEER

Parsons Brinckerhoff Quade & Douglas Inc.

Texas Department of Transportation

© 2003 by TxDOT

US 281 PAVEMENT MARKING DETAILS

STA. 672+00 "BL1" TO STA. 684+00 "BL1"

PLAN 1"= 100' HORIZ

SHEET 7 OF 33 — 281ST07.DGN

DESIGNED: TT	FED. RD DIV. No.	STATE	FEDERAL AID PROJECT No.			HIGHWAY No.	
CHECKED: DM	6	TEXAS				US 281	
DRAWN: KTD	STATE DISTRICT	COUNTY	CONTROL No.	SECTION No.	JOB No.	SHEET No.	
CHECKED: DM	PHARR	HIDALGO	0255	08	091	893	

NAME
04:54:46 PM
06/26/2003
I:\22322\cadd\sheets\traffic\markings\281st08.dgn

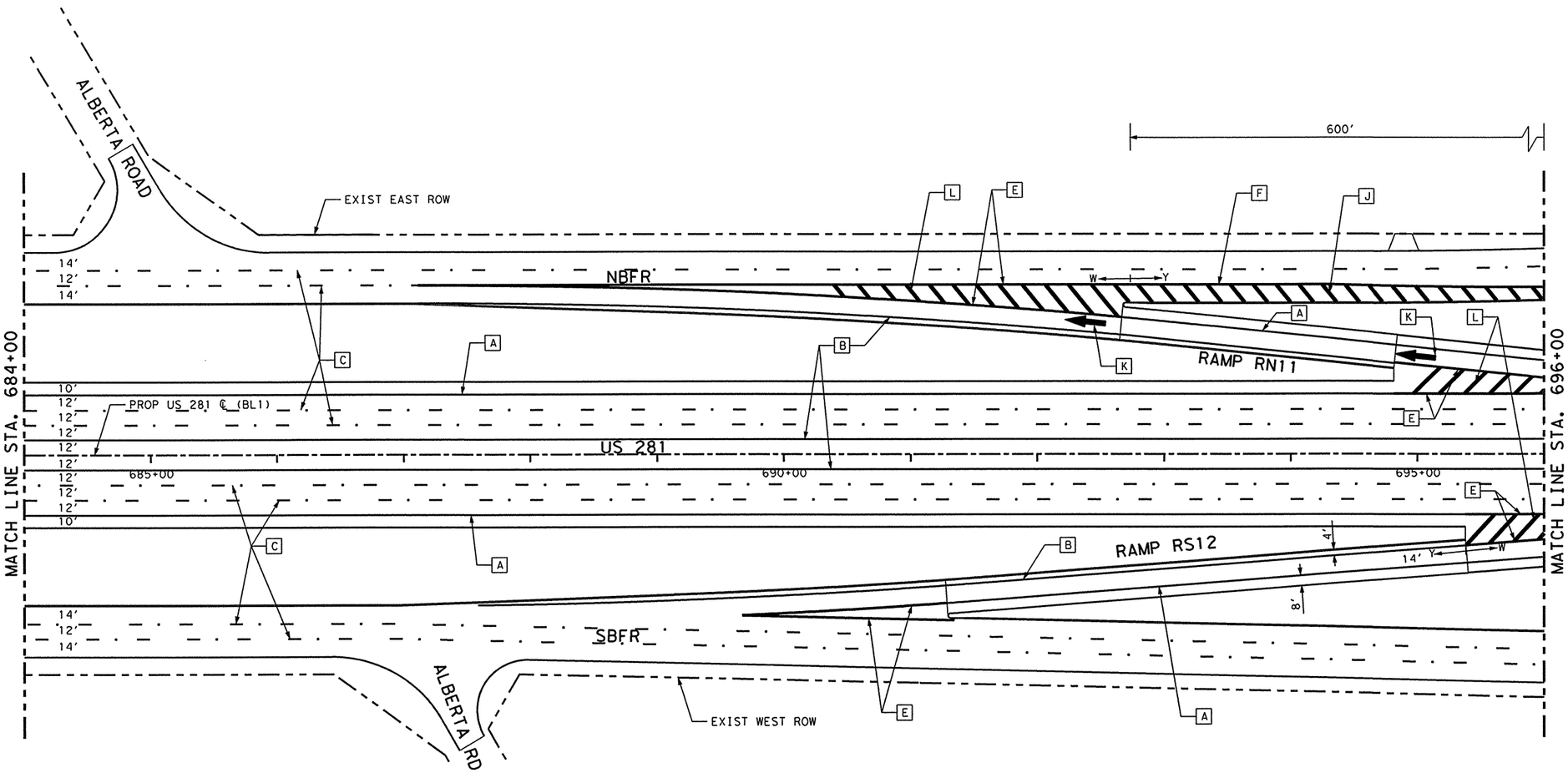

LEGEND:

(90 MIL) THERMOPLASTIC

- [A] 4" SOLID WHITE STRIPE
- [B] 4" SOLID YELLOW STRIPE
- [C] 4" BROKEN WHITE STRIPE & PVMT MRK TY II-CR (DETAIL "B")
- [D] 4" BROKEN YELLOW STRIPE & PVMT MRK TY II-AA (DETAIL "E")
- [E] 8" SOLID WHITE STRIPE (DETAIL "C" OR "F")
- [F] 8" SOLID YELLOW STRIPE (DETAIL "G")
- [G] 12" LANE DROP WHITE
- [H] 24" SOLID WHITE STRIPE
- [J] 24" SOLID YELLOW CROSSHATCHING @ 20' C-C & ROTATED 45°
- [K] WRONG WAY ARROW
- [L] 24" SOLID WHITE CROSSHATCHING @ 20' C-C & ROTATED 45°
- [M] 2-4" SOLID YELLOW STRIPES (DETAIL "D")
- [N] PREFABRICATED WORDS OR ARROWS (TYP)
- [P] 12" SOLID WHITE STRIPE
- [R] EXISTING PVMT MRK

(ITEM 672) SUMMARY OF RAISED PAVEMENT MARKERS

STATION LIMITS	CL B, (REFL) TY I-A (SGL REFL) EA		TY I-C (SGL REFL) EA		TY I-R (SGL REFL) EA		TY II-AA (DBL REFL) EA		TY II-CR (DBL REFL) EA	
	EST	FIN	EST	FIN	EST	FIN	EST	FIN	EST	FIN
STA. 684+00 - STA. 696+00	34		132		28				259	
SHEET TOTALS:	34		132		28				259	

(ITEM 666) SUMMARY OF REFLECTORIZED PAVEMENT MARKERS

STATION LIMITS	TY I-THERMOPLASTIC, (90 MIL) 4" BROKEN WHITE (LF)		4" SOLID WHITE (LF)		12" LNDP WHITE (LF)		8" SOLID WHITE (LF)		24" SOLID WHITE (LF)		4" BROKEN YELLOW (LF)		4" SOLID YELLOW (LF)		8" SOLID YELLOW (LF)		24" SOLID YELLOW (LF)	
	EST	FIN	EST	FIN	EST	FIN	EST	FIN	EST	FIN	EST	FIN	EST	FIN	EST	FIN	EST	FIN
STA. 684+00 - STA. 696+00	2178		3027				1810		507				3953		327		297	
SHEET TOTALS:	2178		3027				1810		507				3953		327		297	

(ITEM 668) SUMMARY OF PREFABRICATED PAVEMENT MARKINGS

TY B (WHITE)		SHEET TOTALS:
DESCRIPTION	UNIT	QUANTITY
WORD (ONLY)	EA	
ARROW (LEFT)	EA	
ARROW (RIGHT)	EA	
ARROW (STRAIGHT)	EA	

THE SEAL APPEARING ON THIS DOCUMENT WAS AUTHORIZED BY JAIME AGUILAR, P.E. 87606 ON 06/26/2003.

STATE OF TEXAS · JAIME AGUILAR · 87606 · REGISTERED PROFESSIONAL ENGINEER

Parsons Brinckerhoff Quade & Douglas Inc.

Texas Department of Transportation

© 2003 by TxDOT

US 281 PAVEMENT MARKING DETAILS

STA. 684+00 "BL1" TO STA. 696+00 "BL1"

PLAN 1"= 100' HORIZ

SHEET 8 OF 33 | 281ST08.DGN

DESIGNED: TT	FED. RD DIV. No.	STATE	FEDERAL AID PROJECT No.			HIGHWAY No.	
CHECKED: DM	6	TEXAS				US 281	
DRAWN: KTD	STATE DISTRICT	COUNTY	CONTROL No.	SECTION No.	JOB No.	SHEET No.	
CHECKED: DM	PHARR	HIDALGO	0255	08	091	894	

NAME
04:54:50 PM
06/26/2003
i:\22322\cadd\sheets\traffic\markings\281st09.dgn

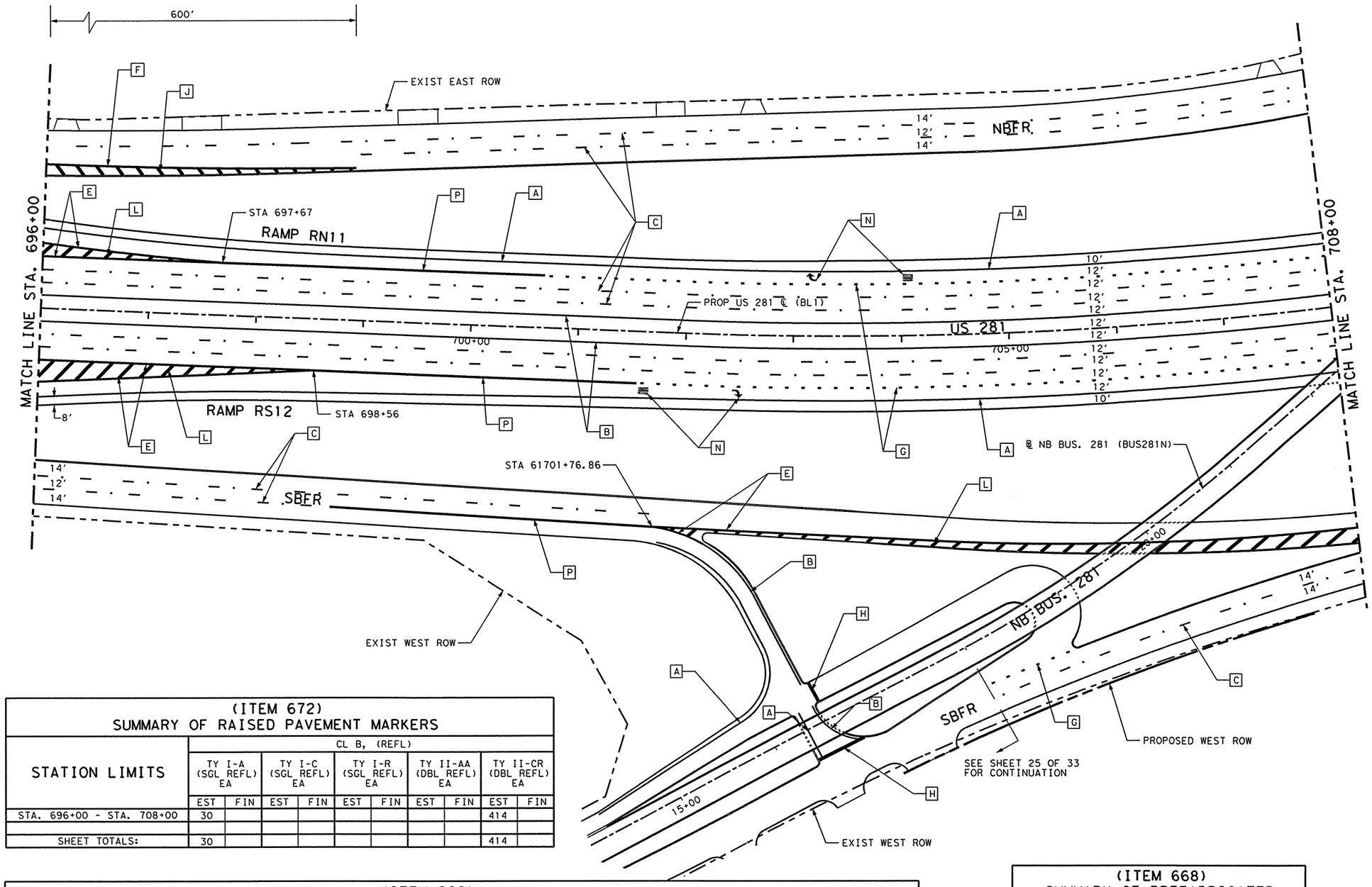

LEGEND:

(90 MIL) THERMOPLASTIC

- [A] 4" SOLID WHITE STRIPE
- [B] 4" SOLID YELLOW STRIPE
- [C] 4" BROKEN WHITE STRIPE & PVMT MRK TY II-CR (DETAIL "B")
- [D] 4" BROKEN YELLOW STRIPE & PVMT MRK TY II-AA (DETAIL "E")
- [E] 8" SOLID WHITE STRIPE (DETAIL "C" OR "F")
- [F] 8" SOLID YELLOW STRIPE (DETAIL "G")
- [G] 12" LANE DROP WHITE
- [H] 24" SOLID WHITE STRIPE
- [J] 24" SOLID YELLOW CROSSHATCHING @ 20' C-C & ROTATED 45°
- [K] WRONG WAY ARROW
- [L] 24" SOLID WHITE CROSSHATCHING @ 20' C-C & ROTATED 45°
- [M] 2-4" SOLID YELLOW STRIPES (DETAIL "D")
- [N] PREFABRICATED WORDS OR ARROWS (TYP)
- [P] 12" SOLID WHITE STRIPE
- [R] EXISTING PVMT MRK

THE SEAL APPEARING ON THIS DOCUMENT WAS AUTHORIZED BY JAIME AGUILAR, P.E. 87606 ON 06/26/2003.

STATE OF TEXAS
JAIME AGUILAR
87606
REGISTERED
PROFESSIONAL ENGINEER

(ITEM 672) SUMMARY OF RAISED PAVEMENT MARKERS

STATION LIMITS	CL B, (REFL) TY I-A (SGL REFL) EA		TY I-C (SGL REFL) EA		TY I-R (SGL REFL) EA		TY II-AA (DBL REFL) EA		TY II-CR (DBL REFL) EA	
	EST	FIN	EST	FIN	EST	FIN	EST	FIN	EST	FIN
STA. 696+00 - STA. 708+00	30								414	
SHEET TOTALS:	30								414	

(ITEM 666) SUMMARY OF REFLECTORIZED PAVEMENT MARKERS

STATION LIMITS	TY I-THERMOPLASTIC, (90 MIL) 4" BROKEN WHITE (LF)		4" SOLID WHITE (LF)		12" LNDP WHITE (LF)		8" SOLID WHITE (LF)		24" SOLID WHITE (LF)		4" BROKEN YELLOW (LF)		4" SOLID YELLOW (LF)		8" SOLID YELLOW (LF)		24" SOLID YELLOW (LF)		12" SOLID WHITE (LF)	
	EST	FIN	EST	FIN	EST	FIN	EST	FIN	EST	FIN	EST	FIN	EST	FIN	EST	FIN	EST	FIN	EST	FIN
STA. 696+00 - STA. 708+00	2018		2835		290		1556		639				2620		288		112		900	
SHEET TOTALS:	2018		2835		290		1556		639				2620		288		112		900	

(ITEM 668) SUMMARY OF PREFABRICATED PAVEMENT MARKINGS

TY B (WHITE) DESCRIPTION	UNIT	SHEET TOTALS: QUANTITY
WORD (ONLY)	EA	2
ARROW (LEFT)	EA	
ARROW (RIGHT)	EA	2
ARROW (STRAIGHT)	EA	
ARROW (U-TURN)	EA	

Parsons Brinckerhoff Quade & Douglas Inc.

Texas Department of Transportation

© 2003 by TxDOT

US 281 PAVEMENT MARKING DETAILS

STA. 696+00 "BL1" TO
STA. 708+00 "BL1"

PLAN 1"= 100' HORIZ

SHEET 9 OF 33 | 281ST09.DGN

DESIGNED: TT	FED. RD DIV. NO.	STATE	FEDERAL AID PROJECT No.	HIGHWAY No.
CHECKED: DM	6	TEXAS		US 281

DRAWN: KTD	STATE DISTRICT	COUNTY	CONTROL No.	SECTION No.	JOB No.	SHEET No.
CHECKED: DM	PHARR	HIDALGO	0255	08	091	895

Phaisarn C.
04:54:15 PM
09/11/2003
I:\22322o\CADD\Sheets\TrafficMarkings\281st09.dgn

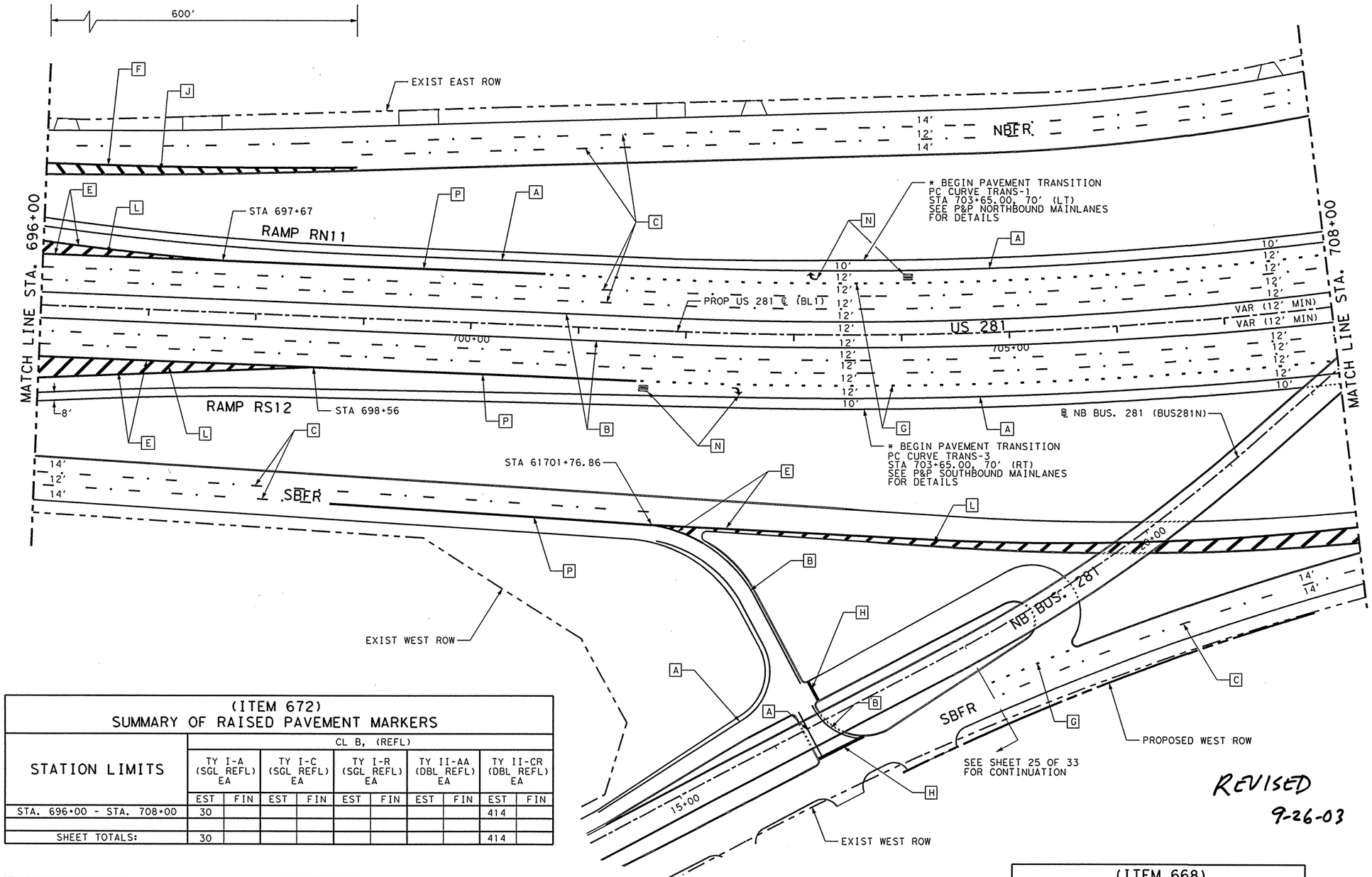

NOTE: * STRIPING OF THE SB AND NB MAINLANES FROM STA. 703+65 TO STA. 708+00 SHALL BE CONCENTRIC TO THE OUTSIDE EDGE OF PAVEMENT.

LEGEND:

(90 MIL) THERMOPLASTIC

- [A] 4" SOLID WHITE STRIPE
- [B] 4" SOLID YELLOW STRIPE
- [C] 4" BROKEN WHITE STRIPE & PVMT MRK TY II-CR (DETAIL "B")
- [D] 4" BROKEN YELLOW STRIPE & PVMT MRK TY II-AA (DETAIL "E")
- [E] 8" SOLID WHITE STRIPE (DETAIL "C" OR "F")
- [F] 8" SOLID YELLOW STRIPE (DETAIL "G")
- [G] 12" LANE DROP WHITE
- [H] 24" SOLID WHITE STRIPE
- [J] 24" SOLID YELLOW CROSSHATCHING @ 20' C-C & ROTATED 45°
- [K] WRONG WAY ARROW
- [L] 24" SOLID WHITE CROSSHATCHING @ 20' C-C & ROTATED 45°
- [M] 2-4" SOLID YELLOW STRIPES (DETAIL "D")
- [N] PREFABRICATED WORDS OR ARROWS (TYP)
- [P] 12" SOLID WHITE STRIPE
- [R] EXISTING PVMT MRK

THE SEAL APPEARING ON THIS DOCUMENT WAS AUTHORIZED BY PHAISARN CWATANAPHOL, P.E. 89252 ON 09/11/2003.

STATE OF TEXAS
PHAISARN CWATANAPHOL
89252
REGISTERED PROFESSIONAL ENGINEER

REVISED 9-26-03

(ITEM 672) SUMMARY OF RAISED PAVEMENT MARKERS

STATION LIMITS	CL B, (REFL) TY I-A (SGL REFL) EA		TY I-C (SGL REFL) EA		TY I-R (SGL REFL) EA		TY II-AA (DBL REFL) EA		TY II-CR (DBL REFL) EA	
	EST	FIN	EST	FIN	EST	FIN	EST	FIN	EST	FIN
STA. 696+00 - STA. 708+00	30								414	
SHEET TOTALS:	30								414	

(ITEM 666) SUMMARY OF REFLECTORIZED PAVEMENT MARKERS

STATION LIMITS	TY I-THERMOPLASTIC, (90 MIL) 4" BROKEN WHITE (LF)		4" SOLID WHITE (LF)		12" LNDP WHITE (LF)		8" SOLID WHITE (LF)		24" SOLID WHITE (LF)		4" BROKEN YELLOW (LF)		4" SOLID YELLOW (LF)		8" SOLID YELLOW (LF)		24" SOLID YELLOW (LF)		12" SOLID WHITE (LF)	
	EST	FIN	EST	FIN	EST	FIN	EST	FIN	EST	FIN	EST	FIN	EST	FIN	EST	FIN	EST	FIN	EST	FIN
STA. 696+00 - STA. 708+00	2018		2835		290		1556		639				2620		288		112		900	
SHEET TOTALS:	2018		2835		290		1556		639				2620		288		112		900	

(ITEM 668) SUMMARY OF PREFABRICATED PAVEMENT MARKINGS

TY B (WHITE)		SHEET TOTALS:
DESCRIPTION	UNIT	QUANTITY
WORD (ONLY)	EA	2
ARROW (LEFT)	EA	
ARROW (RIGHT)	EA	2
ARROW (STRAIGHT)	EA	
ARROW (U-TURN)	EA	

Parsons Brinckerhoff Quade & Douglas Inc.

Texas Department of Transportation

© 2003 by TxDOT

US 281 PAVEMENT MARKING DETAILS

STA. 696+00 "BL1" TO
STA. 708+00 "BL1"

PLAN 1"= 100' HORIZ

SHEET 9 OF 33 | 281ST09.DGN

DESIGNED: TT	FED. RD DIV. No.	STATE	FEDERAL AID PROJECT No.		HIGHWAY No.
CHECKED: DM	6	TEXAS			US 281
DRAWN: KTD	STATE DISTRICT	COUNTY	CONTROL No.	SECTION No.	JOB No.	SHEET No.
CHECKED: DM	PHARR	HIDALGO	0255	08	091	895

NAME
04:54:55 PM
06/26/2003
i:\22322a\cadd\sheets\traffic\markings\281st10.dgn

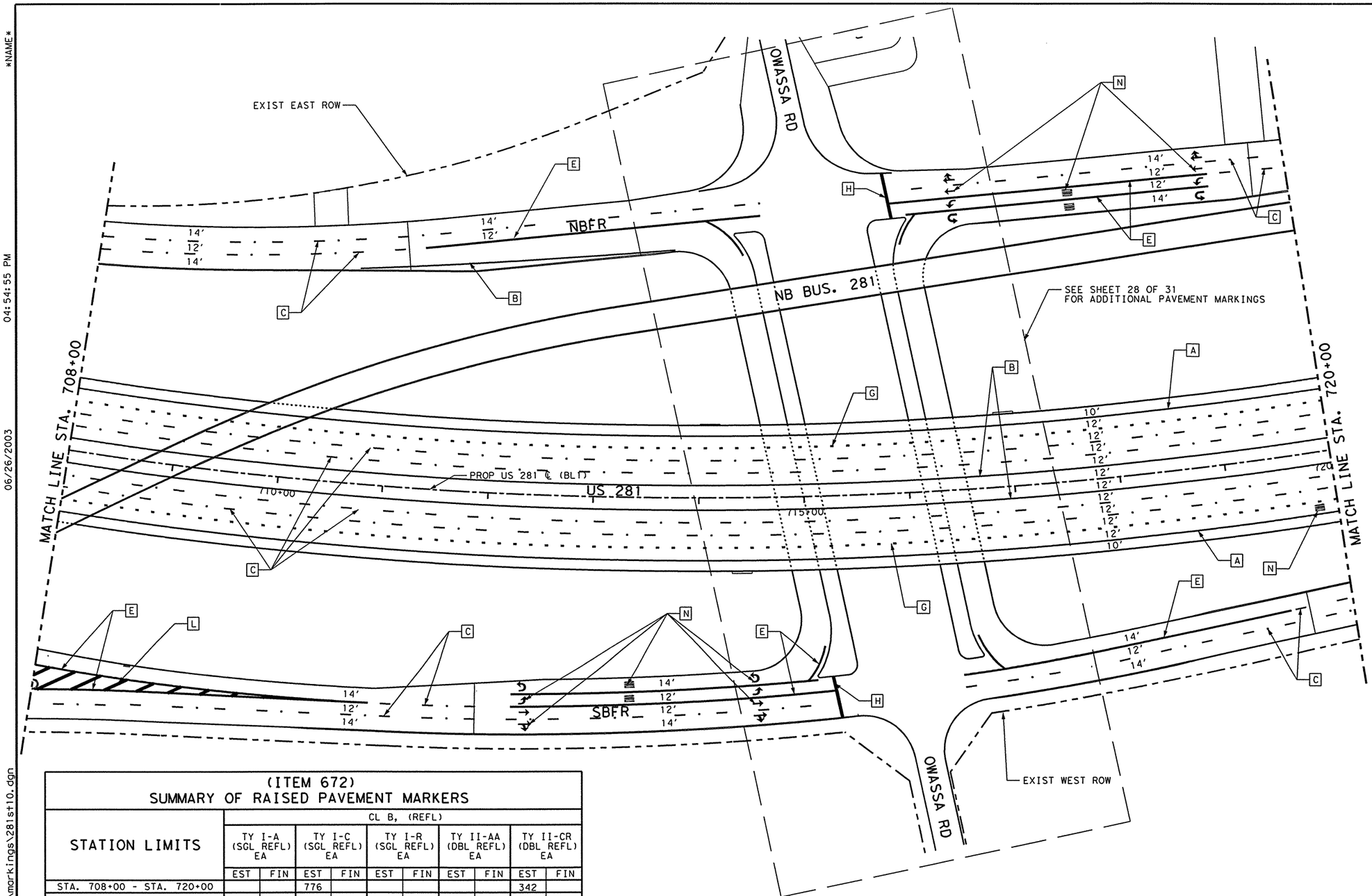

LEGEND:

(90 MIL) THERMOPLASTIC

- [A] 4" SOLID WHITE STRIPE
- [B] 4" SOLID YELLOW STRIPE
- [C] 4" BROKEN WHITE STRIPE & PVMT MRK TY II-CR (DETAIL "B")
- [D] 4" BROKEN YELLOW STRIPE & PVMT MRK TY II-AA (DETAIL "E")
- [E] 8" SOLID WHITE STRIPE (DETAIL "C" OR "F")
- [F] 8" SOLID YELLOW STRIPE (DETAIL "G")
- [G] 12" LANE DROP WHITE
- [H] 24" SOLID WHITE STRIPE
- [J] 24" SOLID YELLOW CROSSHATCHING @ 20' C-C & ROTATED 45°
- [K] WRONG WAY ARROW
- [L] 24" SOLID WHITE CROSSHATCHING @ 20' C-C & ROTATED 45°
- [M] 2-4" SOLID YELLOW STRIPES (DETAIL "D")
- [N] PREFABRICATED WORDS OR ARROWS (TYP)
- [P] 12" SOLID WHITE STRIPE
- [R] EXISTING PVMT MRK

THE SEAL APPEARING ON THIS DOCUMENT WAS AUTHORIZED BY JAIME AGUILAR, P.E. 87606 ON 06/26/2003.

STATE OF TEXAS · JAIME AGUILAR · 87606 · REGISTERED PROFESSIONAL ENGINEER

(ITEM 672)
SUMMARY OF RAISED PAVEMENT MARKERS

STATION LIMITS	CL B, (REFL) TY I-A (SGL REFL) EA		TY I-C (SGL REFL) EA		TY I-R (SGL REFL) EA		TY II-AA (DBL REFL) EA		TY II-CR (DBL REFL) EA	
	EST	FIN	EST	FIN	EST	FIN	EST	FIN	EST	FIN
STA. 708+00 - STA. 720+00			776						342	
SHEET TOTALS:			776						342	

(ITEM 666)
SUMMARY OF REFLECTORIZED PAVEMENT MARKERS

STATION LIMITS	TY I-THERMOPLASTIC, (90 MIL) 4" BROKEN WHITE (LF)		4" SOLID WHITE (LF)		12" LNDP WHITE (LF)		8" SOLID WHITE (LF)		24" SOLID WHITE (LF)		4" BROKEN YELLOW (LF)		4" SOLID YELLOW (LF)		8" SOLID YELLOW (LF)		24" SOLID YELLOW (LF)	
	EST	FIN	EST	FIN	EST	FIN	EST	FIN	EST	FIN	EST	FIN	EST	FIN	EST	FIN	EST	FIN
STA. 708+00 - STA. 720+00	1847		2400		480		2575		251				2699					
SHEET TOTALS:	1847		2400		480		2575		251				2699					

(ITEM 668)
SUMMARY OF PREFABRICATED PAVEMENT MARKINGS

TY B (WHITE) DESCRIPTION	UNIT	SHEET TOTALS: QUANTITY
WORD (ONLY)	EA	5
ARROW (LEFT)	EA	4
ARROW (RIGHT)	EA	
ARROW (STRAIGHT)	EA	4
ARROW (U-TURN)	EA	4
ARROW (STRAIGHT & RIGHT)	EA	4

Parsons Brinckerhoff Quade & Douglas Inc.

Texas Department of Transportation

© 2003 by TxDOT

US 281
PAVEMENT MARKING DETAILS

STA. 708+00 "BL1" TO
STA. 720+00 "BL1"

PLAN 1"= 100' HORIZ

SHEET 10 OF 33 — 281ST10.DGN

DESIGNED: TT	FED. RD DIV. No.	STATE	FEDERAL AID PROJECT No.	HIGHWAY No.
CHECKED: DM	6	TEXAS		US 281

DRAWN: KTD	STATE DISTRICT	COUNTY	CONTROL No.	SECTION No.	JOB No.	SHEET No.
CHECKED: DM	PHARR	HIDALGO	0255	08	091	896

Phaisarn C.
04:52:15 PM
09/11/2003
I:\22322o\CADD\Sheets\Traffic\Markings\281st10.dgn

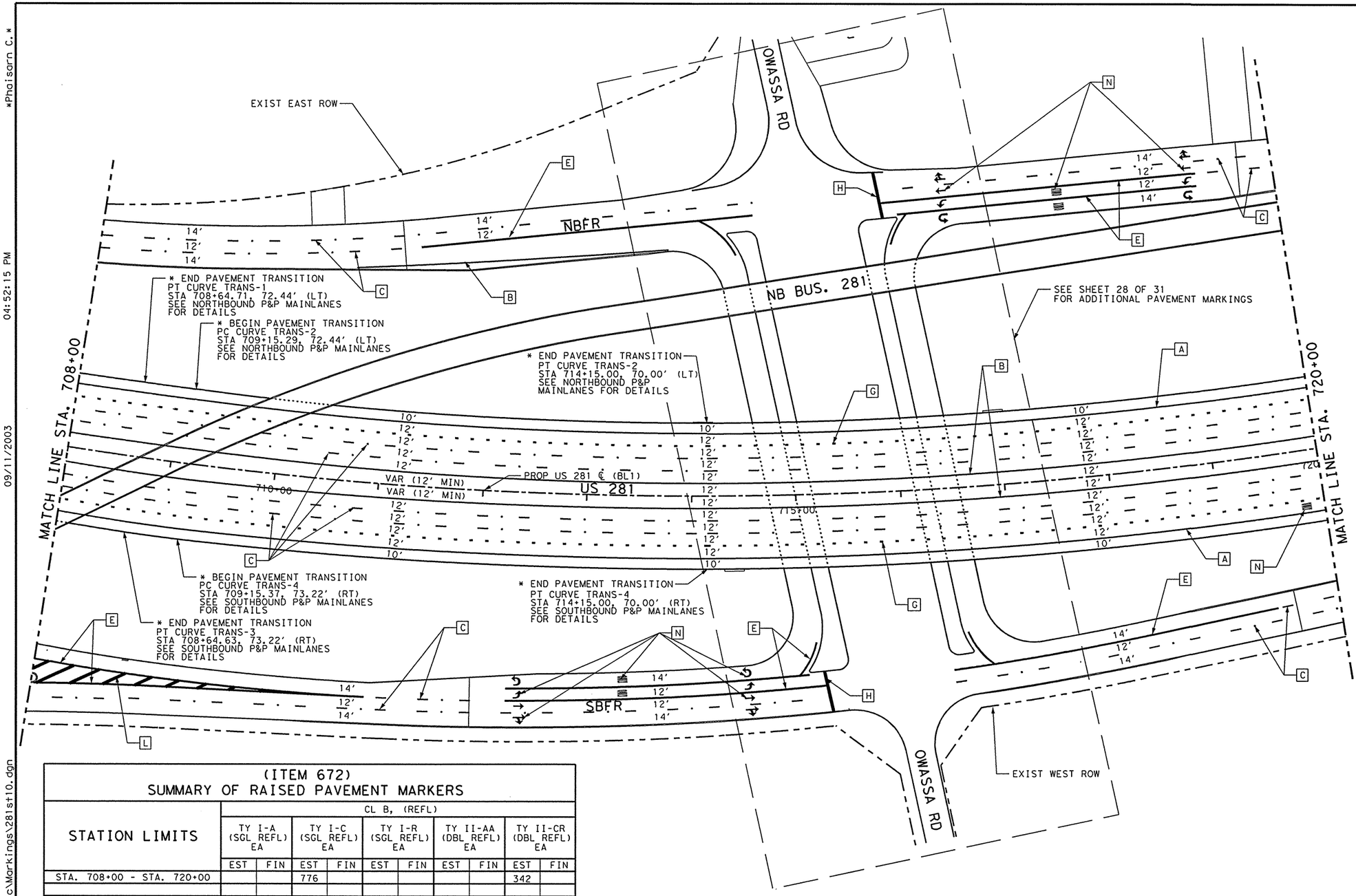

NOTE: * STRIPING OF THE NB AND SB MAINLANES FROM STA. 708+00 TO STA. 714+15 SHALL BE CONCENTRIC TO THE OUTSIDE EDGE OF PAVEMENT.

LEGEND:

(90 MIL) THERMOPLASTIC

- [A] 4" SOLID WHITE STRIPE
- [B] 4" SOLID YELLOW STRIPE
- [C] 4" BROKEN WHITE STRIPE & PVMT MRK TY II-CR (DETAIL "B")
- [D] 4" BROKEN YELLOW STRIPE & PVMT MRK TY II-AA (DETAIL "E")
- [E] 8" SOLID WHITE STRIPE (DETAIL "C" OR "F")
- [F] 8" SOLID YELLOW STRIPE (DETAIL "G")
- [G] 12" LANE DROP WHITE
- [H] 24" SOLID WHITE STRIPE
- [J] 24" SOLID YELLOW CROSSHATCHING @ 20' C-C & ROTATED 45°
- [K] WRONG WAY ARROW
- [L] 24" SOLID WHITE CROSSHATCHING @ 20' C-C & ROTATED 45°
- [M] 2-4" SOLID YELLOW STRIPES (DETAIL "D")
- [N] PREFABRICATED WORDS OR ARROWS (TYP)
- [P] 12" SOLID WHITE STRIPE
- [R] EXISTING PVMT MRK

THE SEAL APPEARING ON THIS DOCUMENT WAS AUTHORIZED BY PHAISARN CWATANAPHOL, P.E. 89252 ON 09/11/2003.

STATE OF TEXAS · PHAISARN CWATANAPHOL · 89252 · REGISTERED PROFESSIONAL ENGINEER

(ITEM 672) SUMMARY OF RAISED PAVEMENT MARKERS

STATION LIMITS	CL B, (REFL) TY I-A (SGL REFL) EA		TY I-C (SGL REFL) EA		TY I-R (SGL REFL) EA		TY II-AA (DBL REFL) EA		TY II-CR (DBL REFL) EA	
	EST	FIN	EST	FIN	EST	FIN	EST	FIN	EST	FIN
STA. 708+00 - STA. 720+00			776						342	
SHEET TOTALS:			776						342	

(ITEM 666) SUMMARY OF REFLECTORIZED PAVEMENT MARKERS

STATION LIMITS	TY I-THERMOPLASTIC, (90 MIL) 4" BROKEN WHITE (LF)		4" SOLID WHITE (LF)		12" LNDP WHITE (LF)		8" SOLID WHITE (LF)		24" SOLID WHITE (LF)		4" BROKEN YELLOW (LF)		4" SOLID YELLOW (LF)		8" SOLID YELLOW (LF)		24" SOLID YELLOW (LF)	
	EST	FIN	EST	FIN	EST	FIN	EST	FIN	EST	FIN	EST	FIN	EST	FIN	EST	FIN	EST	FIN
STA. 708+00 - STA. 720+00	1847		2400		480		2575		251				2699					
SHEET TOTALS:	1847		2400		480		2575		251				2699					

(ITEM 668) SUMMARY OF PREFABRICATED PAVEMENT MARKINGS

TY B (WHITE)		SHEET TOTALS:
DESCRIPTION	UNIT	QUANTITY
WORD (ONLY)	EA	5
ARROW (LEFT)	EA	4
ARROW (RIGHT)	EA	
ARROW (STRAIGHT)	EA	4
ARROW (U-TURN)	EA	4
ARROW (STRAIGHT & RIGHT)	EA	4

REVISED 9-26-03

© 2003 by TxDOT

Parsons Brinckerhoff Quade & Douglas Inc.

Texas Department of Transportation

US 281 PAVEMENT MARKING DETAILS

STA. 708+00 "BL1" TO STA. 720+00 "BL1"

PLAN 1"= 100' HORIZ

SHEET 10 OF 33 | 281ST10.DGN

DESIGNED: TT	FED. RD DIV. NO.	STATE	FEDERAL AID PROJECT No.	HIGHWAY No.
CHECKED: DM	6	TEXAS		US 281

DRAWN: KTD	STATE DISTRICT	COUNTY	CONTROL No.	SECTION No.	JOB No.	SHEET No.
CHECKED: DM	PHARR	HIDALGO	0255	08	091	896

NAME
04:55:00 PM
06/26/2003
i:\22322a\cadd\sheets\traffic\markings\281st11.dgn

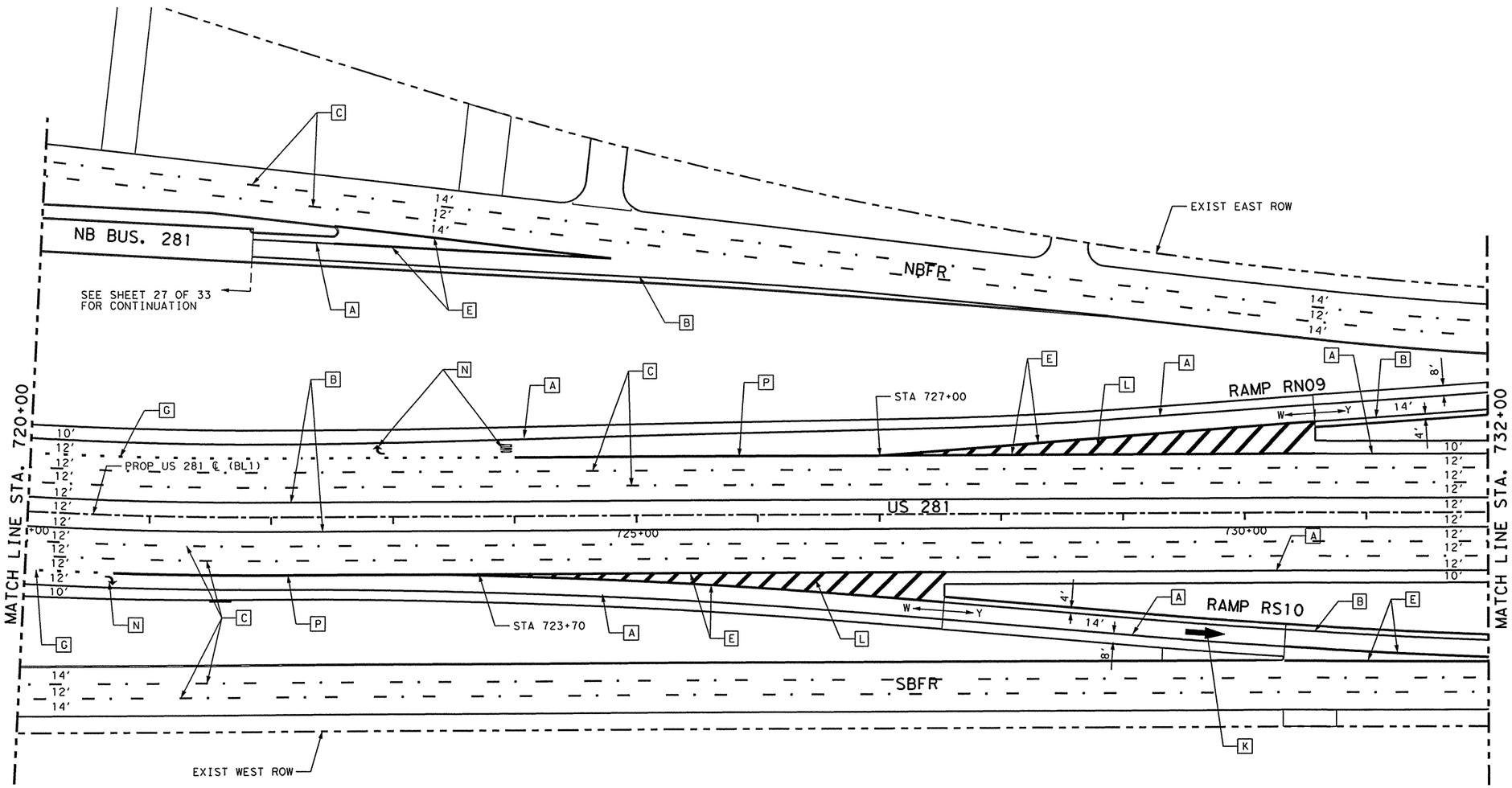

LEGEND:

(90 MIL) THERMOPLASTIC

- [A] 4" SOLID WHITE STRIPE
- [B] 4" SOLID YELLOW STRIPE
- [C] 4" BROKEN WHITE STRIPE & PVMT MRK TY II-CR (DETAIL "B")
- [D] 4" BROKEN YELLOW STRIPE & PVMT MRK TY II-AA (DETAIL "E")
- [E] 8" SOLID WHITE STRIPE (DETAIL "C" OR "F")
- [F] 8" SOLID YELLOW STRIPE (DETAIL "G")
- [G] 12" LANE DROP WHITE
- [H] 24" SOLID WHITE STRIPE
- [J] 24" SOLID YELLOW CROSSHATCHING @ 20' C-C & ROTATED 45°
- [K] WRONG WAY ARROW
- [L] 24" SOLID WHITE CROSSHATCHING @ 20' C-C & ROTATED 45°
- [M] 2-4" SOLID YELLOW STRIPES (DETAIL "D")
- [N] PREFABRICATED WORDS OR ARROWS (TYP)
- [P] 12" SOLID WHITE STRIPE
- [R] EXISTING PVMT MRK

(ITEM 672) SUMMARY OF RAISED PAVEMENT MARKERS

STATION LIMITS	CL B, (REFL) TY I-A (SGL REFL) EA		TY I-C (SGL REFL) EA		TY I-R (SGL REFL) EA		TY II-AA (DBL REFL) EA		TY II-CR (DBL REFL) EA	
	EST	FIN	EST	FIN	EST	FIN	EST	FIN	EST	FIN
STA. 720+00 - STA. 732+00			318		14				343	
SHEET TOTALS:			318		14				343	

(ITEM 666) SUMMARY OF REFLECTORIZED PAVEMENT MARKERS

STATION LIMITS	TY I-THERMOPLASTIC, (90 MIL) 4" BROKEN WHITE (LF)		4" SOLID WHITE (LF)		12" LNDP WHITE (LF)		8" SOLID WHITE (LF)		24" SOLID WHITE (LF)		4" BROKEN YELLOW (LF)		4" SOLID YELLOW (LF)		8" SOLID YELLOW (LF)		24" SOLID YELLOW (LF)		12" SOLID WHITE (LF)	
	EST	FIN	EST	FIN	EST	FIN	EST	FIN	EST	FIN	EST	FIN	EST	FIN	EST	FIN	EST	FIN	EST	FIN
STA. 720+00 - STA. 732+00	2397		2907		89		2336		605				3696						600	
SHEET TOTALS:	2397		2907		89		2336		605				3696						600	

(ITEM 668) SUMMARY OF PREFABRICATED PAVEMENT MARKINGS

TY B (WHITE)		SHEET TOTALS:
DESCRIPTION	UNIT	QUANTITY
WORD (ONLY)	EA	1
ARROW (LEFT)	EA	
ARROW (RIGHT)	EA	2
ARROW (STRAIGHT)	EA	

THE SEAL APPEARING ON THIS DOCUMENT WAS AUTHORIZED BY JAIME AGUILAR, P.E. 87606 ON 06/26/2003.

STATE OF TEXAS
JAIME AGUILAR
87606
REGISTERED PROFESSIONAL ENGINEER

Parsons Brinckerhoff Quade & Douglas Inc.

Texas Department of Transportation

© 2003 by TxDOT

US 281 PAVEMENT MARKING DETAILS

STA. 720+00 "BL1" TO STA. 732+00 "BL1"

PLAN 1"= 100' HORIZ

SHEET 11 OF 33 — 281ST11.DGN

DESIGNED: TT	FED. RD DIV. NO.	STATE	FEDERAL AID PROJECT NO.		HIGHWAY NO.
CHECKED: DM	6	TEXAS			US 281
DRAWN: KTD	STATE DISTRICT	COUNTY	CONTROL No.	SECTION No.	JOB No.	SHEET No.
CHECKED: DM	PHARR	HIDALGO	0255	08	091	897

NAME
04:55:04 PM
06/26/2003
i:\22322o\cadd\sheets\traffic\markings\281st12.dgn

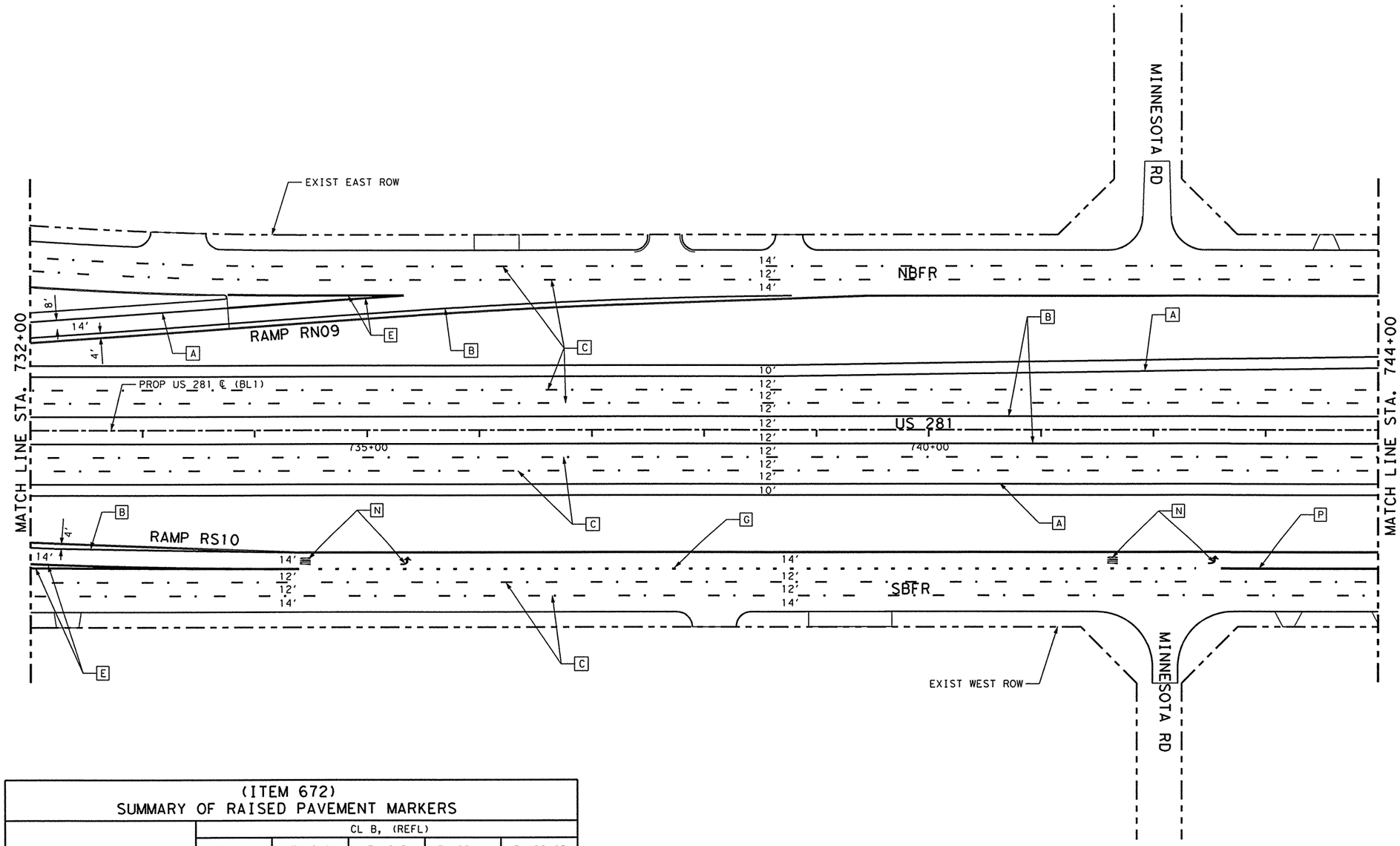

LEGEND:

(90 MIL) THERMOPLASTIC

- [A] 4" SOLID WHITE STRIPE
- [B] 4" SOLID YELLOW STRIPE
- [C] 4" BROKEN WHITE STRIPE & PVMT MRK TY II-CR (DETAIL "B")
- [D] 4" BROKEN YELLOW STRIPE & PVMT MRK TY II-AA (DETAIL "E")
- [E] 8" SOLID WHITE STRIPE (DETAIL "C" OR "F")
- [F] 8" SOLID YELLOW STRIPE (DETAIL "G")
- [G] 12" LANE DROP WHITE
- [H] 24" SOLID WHITE STRIPE
- [J] 24" SOLID YELLOW CROSSHATCHING @ 20' C-C & ROTATED 45°
- [K] WRONG WAY ARROW
- [L] 24" SOLID WHITE CROSSHATCHING @ 20' C-C & ROTATED 45°
- [M] 2-4" SOLID YELLOW STRIPES (DETAIL "D")
- [N] PREFABRICATED WORDS OR ARROWS (TYP)
- [P] 12" SOLID WHITE STRIPE
- [R] EXISTING PVMT MRK

THE SEAL APPEARING ON THIS DOCUMENT WAS AUTHORIZED BY JAIME AGUILAR, P.E. 87606 ON 06/26/2003.

STATE OF TEXAS
JAIME AGUILAR
87606
REGISTERED PROFESSIONAL ENGINEER

(ITEM 672) SUMMARY OF RAISED PAVEMENT MARKERS

STATION LIMITS	CL B, (REFL) TY I-A (SGL REFL) EA		TY I-C (SGL REFL) EA		TY I-R (SGL REFL) EA		TY II-AA (DBL REFL) EA		TY II-CR (DBL REFL) EA	
	EST	FIN	EST	FIN	EST	FIN	EST	FIN	EST	FIN
STA. 732+00 - STA. 744+00			294						171	
SHEET TOTALS:			294						171	

(ITEM 666) SUMMARY OF REFLECTORIZED PAVEMENT MARKERS

STATION LIMITS	TY I-THERMOPLASTIC, (90 MIL) 4" BROKEN WHITE (LF)		4" SOLID WHITE (LF)		12" LNDP WHITE (LF)		8" SOLID WHITE (LF)		24" SOLID WHITE (LF)		4" BROKEN YELLOW (LF)		4" SOLID YELLOW (LF)		8" SOLID YELLOW (LF)		24" SOLID YELLOW (LF)		12" SOLID WHITE (LF)	
	EST	FIN	EST	FIN	EST	FIN	EST	FIN	EST	FIN	EST	FIN	EST	FIN	EST	FIN	EST	FIN	EST	FIN
STA. 732+00 - STA. 744+00	2400		2574		156		734						3319						140	
SHEET TOTALS:	2400		2574		156		734						3319						140	

(ITEM 668) SUMMARY OF PREFABRICATED PAVEMENT MARKINGS

TY B (WHITE)		SHEET TOTALS:
DESCRIPTION	UNIT	QUANTITY
WORD (ONLY)	EA	2
ARROW (LEFT)	EA	2
ARROW (RIGHT)	EA	
ARROW (STRAIGHT)	EA	

Parsons Brinckerhoff Quade & Douglas Inc.

Texas Department of Transportation

© 2003 by TxDOT

US 281 PAVEMENT MARKING DETAILS

STA. 732+00 "BL1" TO STA. 744+00 "BL1"

PLAN 1"= 100' HORIZ

SHEET 12 OF 33 | 281ST12.DGN

DESIGNED: TT	FED. RD DIV. No.	STATE	FEDERAL AID PROJECT No.		HIGHWAY No.	
	6	TEXAS			US 281	
CHECKED: DM	STATE DISTRICT	COUNTY	CONTROL No.	SECTION No.	JOB No.	SHEET No.
DRAWN: KTD	PHARR	HIDALGO	0255	08	091	898
CHECKED: DM						

NAME
04:55:11 PM
06/26/2003
i:\22322o\cadd\sheets\traffic\markings\281st13.dgn

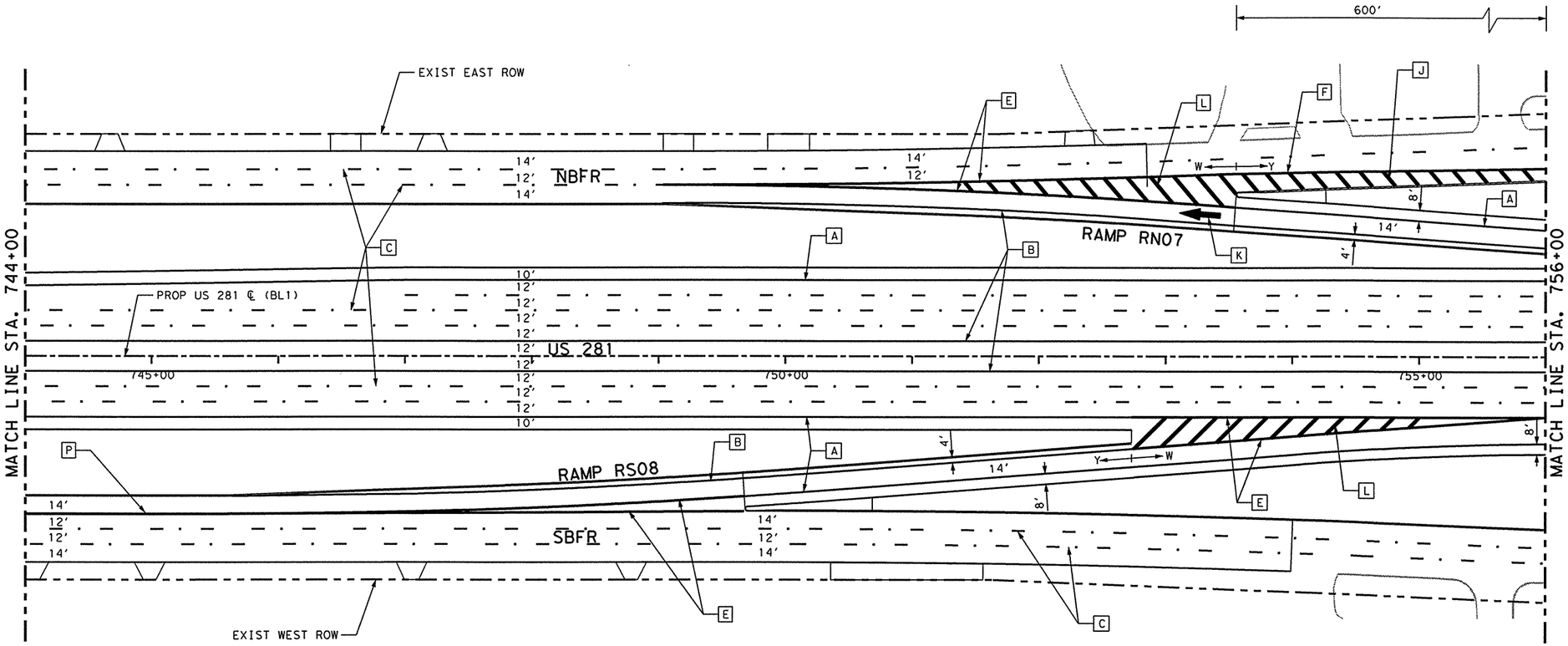

LEGEND:

(90 MIL) THERMOPLASTIC

- [A] 4" SOLID WHITE STRIPE
- [B] 4" SOLID YELLOW STRIPE
- [C] 4" BROKEN WHITE STRIPE & PVMT MRK TY II-CR (DETAIL "B")
- [D] 4" BROKEN YELLOW STRIPE & PVMT MRK TY II-AA (DETAIL "E")
- [E] 8" SOLID WHITE STRIPE (DETAIL "C" OR "F")
- [F] 8" SOLID YELLOW STRIPE (DETAIL "G")
- [G] 12" LANE DROP WHITE
- [H] 24" SOLID WHITE STRIPE
- [J] 24" SOLID YELLOW CROSSHATCHING @ 20' C-C & ROTATED 45°
- [K] WRONG WAY ARROW
- [L] 24" SOLID WHITE CROSSHATCHING @ 20' C-C & ROTATED 45°
- [M] 2-4" SOLID YELLOW STRIPES (DETAIL "D")
- [N] PREFABRICATED WORDS OR ARROWS (TYP)
- [P] 12" SOLID WHITE STRIPE
- [R] EXISTING PVMT MRK

THE SEAL APPEARING ON THIS DOCUMENT WAS AUTHORIZED BY JAIME AGUILAR, P.E. 87606 ON 06/26/2003.

STATE OF TEXAS · JAIME AGUILAR · 87606 · REGISTERED PROFESSIONAL ENGINEER

(ITEM 672)
SUMMARY OF RAISED PAVEMENT MARKERS

STATION LIMITS	CL B, (REFL) TY I-A (SGL REFL) EA		TY I-C (SGL REFL) EA		TY I-R (SGL REFL) EA		TY II-AA (DBL REFL) EA		TY II-CR (DBL REFL) EA	
	EST	FIN	EST	FIN	EST	FIN	EST	FIN	EST	FIN
STA. 744+00 - STA. 756+00	26		304		14				306	
SHEET TOTALS:	26		304		14				306	

(ITEM 666)
SUMMARY OF REFLECTORIZED PAVEMENT MARKERS

STATION LIMITS	TY I-THERMOPLASTIC, (90 MIL) 4" BROKEN WHITE (LF)		4" SOLID WHITE (LF)		12" LNDP WHITE (LF)		8" SOLID WHITE (LF)		24" SOLID WHITE (LF)		4" BROKEN YELLOW (LF)		4" SOLID YELLOW (LF)		8" SOLID YELLOW (LF)		24" SOLID YELLOW (LF)		12" SOLID WHITE (LF)	
	EST	FIN	EST	FIN	EST	FIN	EST	FIN	EST	FIN	EST	FIN	EST	FIN	EST	FIN	EST	FIN	EST	FIN
STA. 744+00 - STA. 756+00	2450		2954				2370		495				3810		245		192		160	
SHEET TOTALS:	2450		2954				2370		495				3810		245		192		160	

(ITEM 668)
SUMMARY OF PREFABRICATED PAVEMENT MARKINGS

TY B (WHITE)		SHEET TOTALS:
DESCRIPTION	UNIT	QUANTITY
WORD (ONLY)	EA	
ARROW (LEFT)	EA	
ARROW (RIGHT)	EA	
ARROW (STRAIGHT)	EA	

Parsons Brinckerhoff Quade & Douglas Inc.

Texas Department of Transportation

© 2003 by TxDOT

US 281
PAVEMENT MARKING DETAILS

STA. 744+00 "BL1" TO
STA. 756+00 "BL1"

PLAN 1"= 100' HORIZ

SHEET 13 OF 33 — 281ST13.DGN

DESIGNED: TT	FED. RD DIV. No.	STATE	FEDERAL AID PROJECT No.			HIGHWAY No.
CHECKED: DM	6	TEXAS				US 281
DRAWN: KTD	STATE DISTRICT	COUNTY	CONTROL No.	SECTION No.	JOB No.	SHEET No.
CHECKED: DM	PHARR	HIDALGO	0255	08	091	899

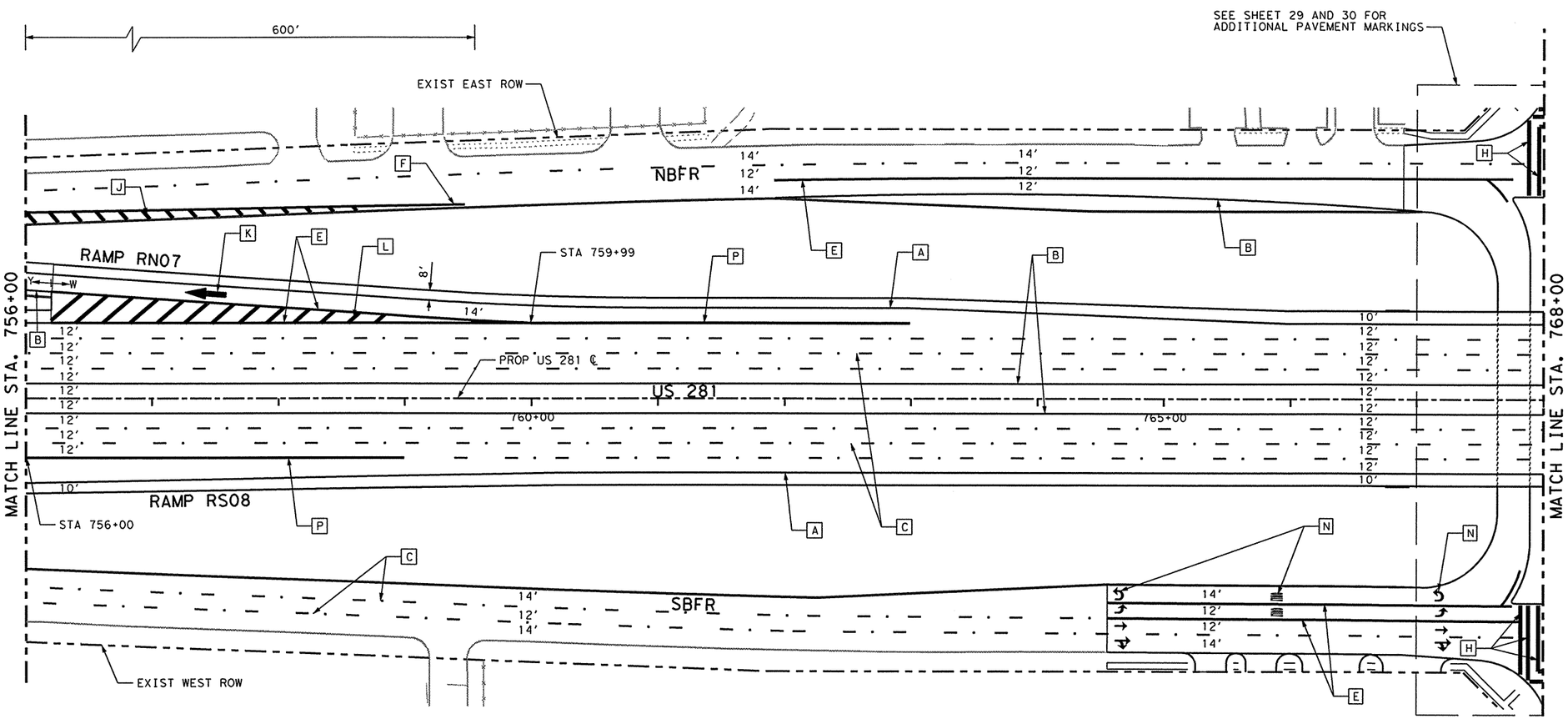

LEGEND:

(90 MIL) THERMOPLASTIC

- [A] 4" SOLID WHITE STRIPE
- [B] 4" SOLID YELLOW STRIPE
- [C] 4" BROKEN WHITE STRIPE & PVMT MRK TY II-CR (DETAIL "B")
- [D] 4" BROKEN YELLOW STRIPE & PVMT MRK TY II-AA (DETAIL "E")
- [E] 8" SOLID WHITE STRIPE (DETAIL "C" OR "F")
- [F] 8" SOLID YELLOW STRIPE (DETAIL "G")
- [G] 12" LANE DROP WHITE
- [H] 24" SOLID WHITE STRIPE
- [J] 24" SOLID YELLOW CROSSHATCHING @ 20' C-C & ROTATED 45°
- [K] WRONG WAY ARROW
- [L] 24" SOLID WHITE CROSSHATCHING @ 20' C-C & ROTATED 45°
- [M] 2-4" SOLID YELLOW STRIPES (DETAIL "D")
- [N] PREFABRICATED WORDS OR ARROWS (TYP)
- [P] 12" SOLID WHITE STRIPE
- [R] EXISTING PVMT MRK

THE SEAL APPEARING ON THIS DOCUMENT WAS AUTHORIZED BY JAIME AGUILAR, P.E. 87606 ON 06/26/2003.

STATE OF TEXAS · JAIME AGUILAR · 87606 · REGISTERED PROFESSIONAL ENGINEER

(ITEM 672) SUMMARY OF RAISED PAVEMENT MARKERS

STATION LIMITS	CL B, (REFL) TY I-A (SGL REFL) EA		TY I-C (SGL REFL) EA		TY I-R (SGL REFL) EA		TY II-AA (DBL REFL) EA		TY II-CR (DBL REFL) EA	
	EST	FIN	EST	FIN	EST	FIN	EST	FIN	EST	FIN
STA. 756+00 - STA. 768+00	36		516		14				248	
SHEET TOTALS:	36		516		14				248	

(ITEM 666) SUMMARY OF REFLECTORIZED PAVEMENT MARKERS

STATION LIMITS	TY I-THERMOPLASTIC, (90 MIL) 4" BROKEN WHITE (LF)		4" SOLID WHITE (LF)		12" LNDP WHITE (LF)		8" SOLID WHITE (LF)		24" SOLID WHITE (LF)		4" BROKEN YELLOW (LF)		4" SOLID YELLOW (LF)		8" SOLID YELLOW (LF)		24" SOLID YELLOW (LF)		12" SOLID WHITE (LF)	
	EST	FIN	EST	FIN	EST	FIN	EST	FIN	EST	FIN	EST	FIN	EST	FIN	EST	FIN	EST	FIN	EST	FIN
STA. 756+00 - STA. 768+00	2522		2401				2046		602				2912		347		122		600	
SHEET TOTALS:	2522		2401				2046		602				2912		347		122		600	

(ITEM 668) SUMMARY OF PREFABRICATED PAVEMENT MARKINGS

TY B (WHITE)		SHEET TOTALS:
DESCRIPTION	UNIT	QUANTITY
WORD (ONLY)	EA	2
ARROW (LEFT)	EA	2
ARROW (RIGHT)	EA	
ARROW (STRAIGHT)	EA	2
ARROW (STRAIGHT & RIGHT)	EA	2
ARROW (U -TURN)	EA	2

Parsons Brinckerhoff Quade & Douglas Inc.

Texas Department of Transportation

© 2003 by TxDOT

US 281 PAVEMENT MARKING DETAILS

STA. 756+00 "BL1" TO
STA. 768+00 "BL1"

PLAN 1"= 100' HORIZ

SHEET 14 OF 33 | 281ST14.DGN

DESIGNED: TT	FED. RD DIV. No.	STATE	FEDERAL AID PROJECT No.	HIGHWAY No.
CHECKED: DM	6	TEXAS		US 281

DRAWN: KTD	STATE DISTRICT	COUNTY	CONTROL No.	SECTION No.	JOB No.	SHEET No.
CHECKED: DM	PHARR	HIDALGO	0255	08	091	900

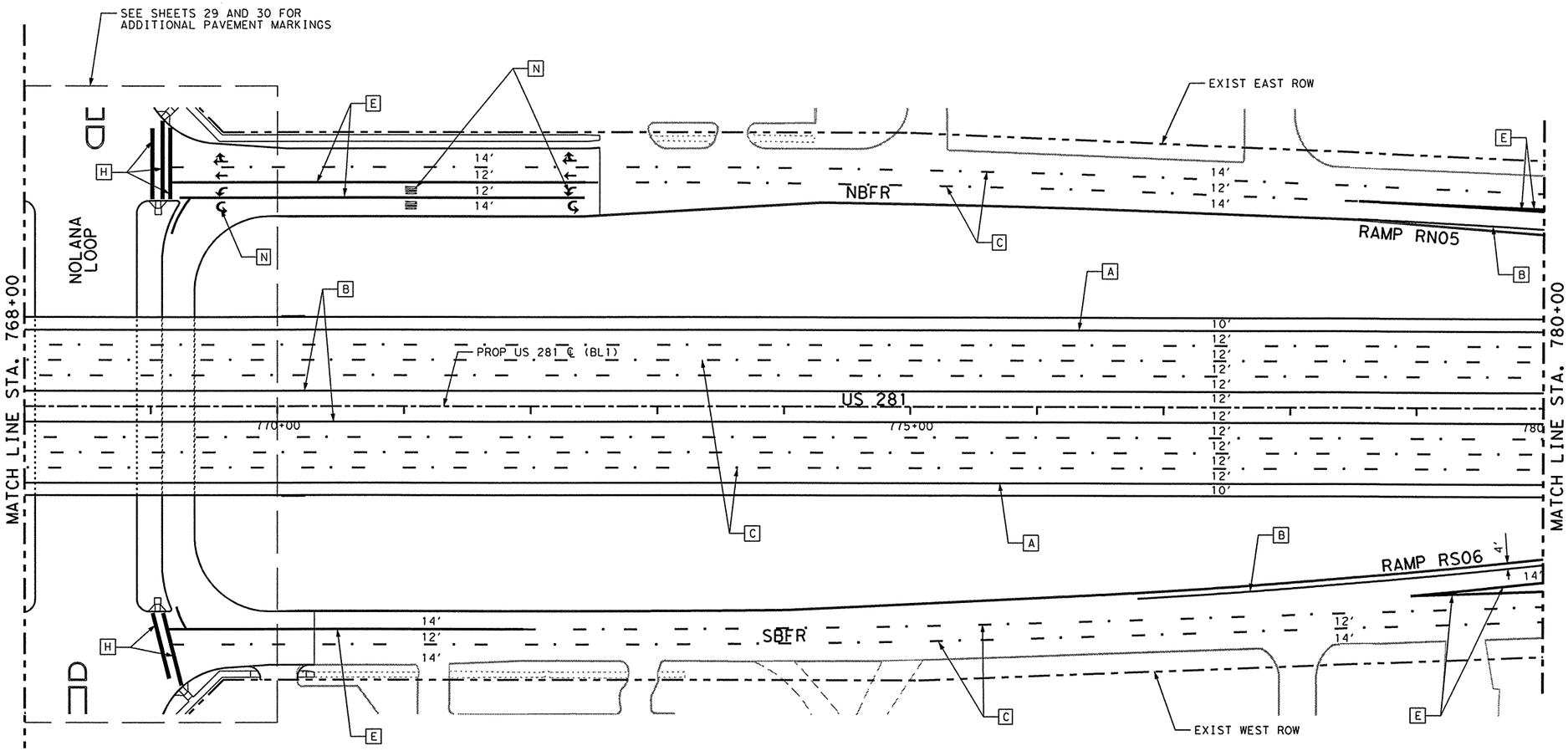

LEGEND:

(90 MIL) THERMOPLASTIC

- [A] 4" SOLID WHITE STRIPE
- [B] 4" SOLID YELLOW STRIPE
- [C] 4" BROKEN WHITE STRIPE & PVMT MRK TY II-CR (DETAIL "B")
- [D] 4" BROKEN YELLOW STRIPE & PVMT MRK TY II-AA (DETAIL "E")
- [E] 8" SOLID WHITE STRIPE (DETAIL "C" OR "F")
- [F] 8" SOLID YELLOW STRIPE (DETAIL "G")
- [G] 8" BROKEN WHITE STRIPE
- [H] 24" SOLID WHITE STRIPE
- [J] 24" SOLID YELLOW CROSSHATCHING @ 20' C-C & ROTATED 45°
- [K] WRONG WAY ARROW
- [L] 24" SOLID WHITE CROSSHATCHING @ 20' C-C & ROTATED 45°
- [M] 2-4" SOLID YELLOW STRIPES (DETAIL "D")
- [N] PREFABRICATED WORDS OR ARROWS (TYP)
- [P] 12" SOLID WHITE STRIPE
- [R] EXISTING PVMT MRK

(ITEM 672) SUMMARY OF RAISED PAVEMENT MARKERS

STATION LIMITS	CL B, (REFL)									
	TY I-A (SGL REFL) EA		TY I-C (SGL REFL) EA		TY I-R (SGL REFL) EA		TY II-AA (DBL REFL) EA		TY II-CR (DBL REFL) EA	
	EST	FIN	EST	FIN	EST	FIN	EST	FIN	EST	FIN
STA. 768+00 - STA. 780+00			476						186	
SHEET TOTALS:			476						186	

(ITEM 666) SUMMARY OF REFLECTORIZED PAVEMENT MARKERS

STATION LIMITS	TY I-THERMOPLASTIC, (90 MIL)																	
	4" BROKEN WHITE (LF)		4" SOLID WHITE (LF)		8" BROKEN WHITE (LF)		8" SOLID WHITE (LF)		24" SOLID WHITE (LF)		4" BROKEN YELLOW (LF)		4" SOLID YELLOW (LF)		8" SOLID YELLOW (LF)		24" SOLID YELLOW (LF)	
	EST	FIN	EST	FIN	EST	FIN	EST	FIN	EST	FIN	EST	FIN	EST	FIN	EST	FIN	EST	FIN
STA. 768+00 - STA. 780+00	2697		2400				1481		283				2868					
SHEET TOTALS:	2697		2400				1481		283				2868					

(ITEM 668) SUMMARY OF PREFABRICATED PAVEMENT MARKINGS

TY B (WHITE)		SHEET TOTALS:
DESCRIPTION	UNIT	QUANTITY
WORD (ONLY)	EA	2
ARROW (LEFT)	EA	2
ARROW (RIGHT)	EA	
ARROW (STRAIGHT)	EA	2
ARROW (U-TURN)	EA	2
ARROW (STRAIGHT & RIGHT)	EA	2

THE SEAL APPEARING ON THIS DOCUMENT WAS AUTHORIZED BY JAIME AGUILAR, P.E. 87606 ON 06/26/2003.

STATE OF TEXAS · JAIME AGUILAR · 87606 · REGISTERED PROFESSIONAL ENGINEER

Parsons Brinckerhoff Quade & Douglas Inc.

Texas Department of Transportation

© 2003 by TxDOT

US 281 PAVEMENT MARKING DETAILS

STA. 768+00 "BL1" TO STA. 780+00 "BL1"

PLAN 1"= 100' HORIZ

SHEET 15 OF 33				281ST15.DGN			
DESIGNED: TT	FED. RD DIV. No.	STATE	FEDERAL AID PROJECT No.		HIGHWAY No.		
CHECKED: DM	6	TEXAS			US 281		
DRAWN: KTD	STATE DISTRICT	COUNTY	CONTROL No.	SECTION No.	JOB No.	SHEET No.	
CHECKED: DM	PHARR	HIDALGO	0255	08	091	901	

NAME
05:01:39 PM
06/26/2003
i:\22322a\cadd\sheets\traffic\markings\281st16.dgn

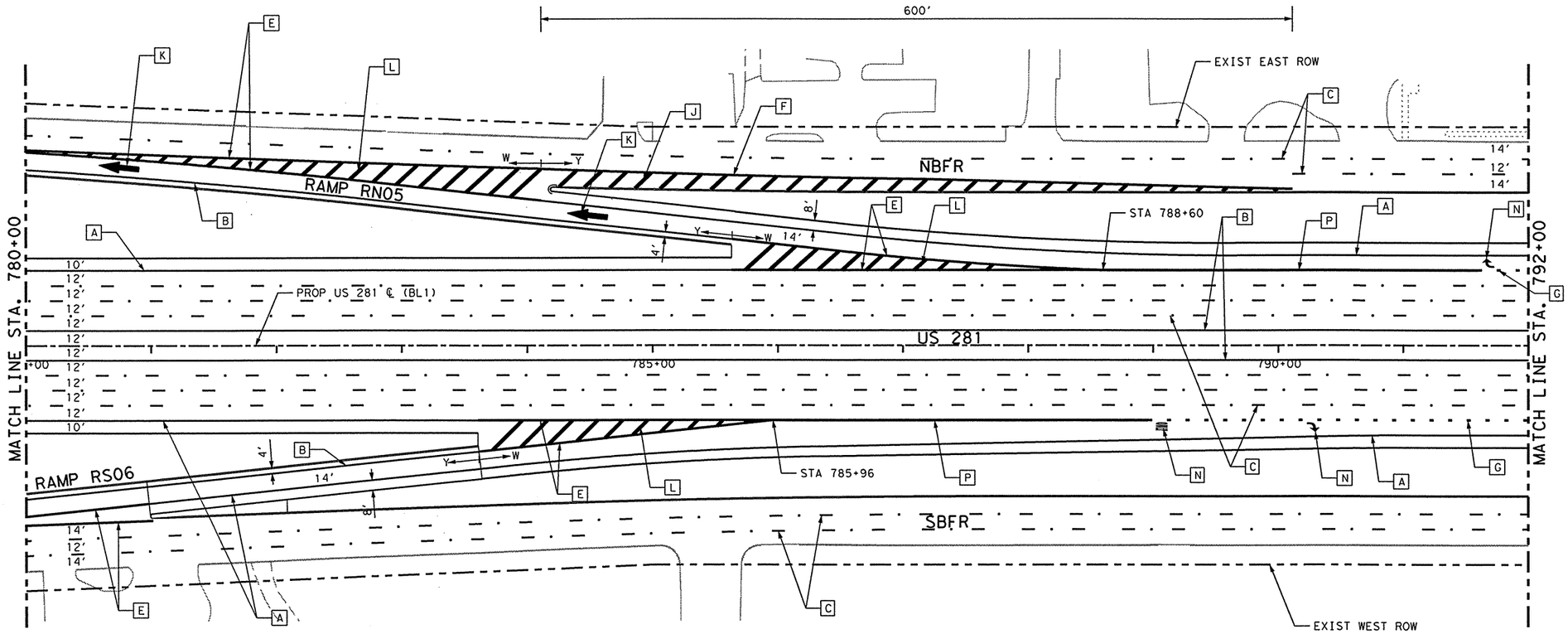

LEGEND:

(90 MIL) THERMOPLASTIC

- [A] 4" SOLID WHITE STRIPE
- [B] 4" SOLID YELLOW STRIPE
- [C] 4" BROKEN WHITE STRIPE & PVMT MRK TY II-CR (DETAIL "B")
- [D] 4" BROKEN YELLOW STRIPE & PVMT MRK TY II-AA (DETAIL "E")
- [E] 8" SOLID WHITE STRIPE (DETAIL "C" OR "F")
- [F] 8" SOLID YELLOW STRIPE (DETAIL "G")
- [G] 12" LANE DROP WHITE
- [H] 24" SOLID WHITE STRIPE
- [J] 24" SOLID YELLOW CROSSHATCHING @ 20' C-C & ROTATED 45°
- [K] WRONG WAY ARROW
- [L] 24" SOLID WHITE CROSSHATCHING @ 20' C-C & ROTATED 45°
- [M] 2-4" SOLID YELLOW STRIPES (DETAIL "D")
- [N] PREFABRICATED WORDS OR ARROWS (TYP)
- [P] 12" SOLID WHITE STRIPE
- [R] EXISTING PVMT MRK

THE SEAL APPEARING ON THIS DOCUMENT WAS AUTHORIZED BY JAIME AGUILAR, P.E. 87606 ON 06/26/2003.

STATE OF TEXAS · JAIME AGUILAR · 87606 · REGISTERED PROFESSIONAL ENGINEER

(ITEM 672)
SUMMARY OF RAISED PAVEMENT MARKERS

STATION LIMITS	CL B, (REFL)									
	TY I-A (SGL REFL) EA		TY I-C (SGL REFL) EA		TY I-R (SGL REFL) EA		TY II-AA (DBL REFL) EA		TY II-CR (DBL REFL) EA	
	EST	FIN	EST	FIN	EST	FIN	EST	FIN	EST	FIN
STA. 780+00 - STA. 792+00	60		80		28				390	
SHEET TOTALS:	60		80		28				390	

(ITEM 666)
SUMMARY OF REFLECTORIZED PAVEMENT MARKERS

STATION LIMITS	TY I-THERMOPLASTIC, (90 MIL)																			
	4" BROKEN WHITE (LF)		4" SOLID WHITE (LF)		12" LNDP WHITE (LF)		8" SOLID WHITE (LF)		24" SOLID WHITE (LF)		4" BROKEN YELLOW (LF)		4" SOLID YELLOW (LF)		8" SOLID YELLOW (LF)		24" SOLID YELLOW (LF)		12" SOLID WHITE (LF)	
	EST	FIN	EST	FIN	EST	FIN	EST	FIN	EST	FIN	EST	FIN	EST	FIN	EST	FIN	EST	FIN	EST	FIN
STA. 780+00 - STA. 792+00	2748		2819		69		2090		715				3330		601		371		600	
SHEET TOTALS:	2748		2819		69		2090		715				3330		601		371		600	

(ITEM 668)
SUMMARY OF PREFABRICATED PAVEMENT MARKINGS

TY B (WHITE)		SHEET TOTALS:
DESCRIPTION	UNIT	QUANTITY
WORD (ONLY)	EA	1
ARROW (LEFT)	EA	
ARROW (RIGHT)	EA	2
ARROW (STRAIGHT)	EA	

Parsons Brinckerhoff Quade & Douglas Inc.

Texas Department of Transportation

© 2003 by TxDOT

US 281
PAVEMENT MARKING DETAILS

STA. 780+00 "BL1" TO
STA. 792+00 "BL1"

PLAN 1"= 100' HORIZ

SHEET 16 OF 33 | 281ST16.DGN

DESIGNED: TT	FED. RD DIV. No.	STATE	FEDERAL AID PROJECT No.			HIGHWAY No.	
CHECKED: DM	6	TEXAS				US 281	
DRAWN: KTD	STATE DISTRICT	COUNTY	CONTROL No.	SECTION No.	JOB No.	SHEET No.	
CHECKED: DM	PHARR	HIDALGO	0255	08	091	902	

NAME
05:12:32 PM
06/26/2003

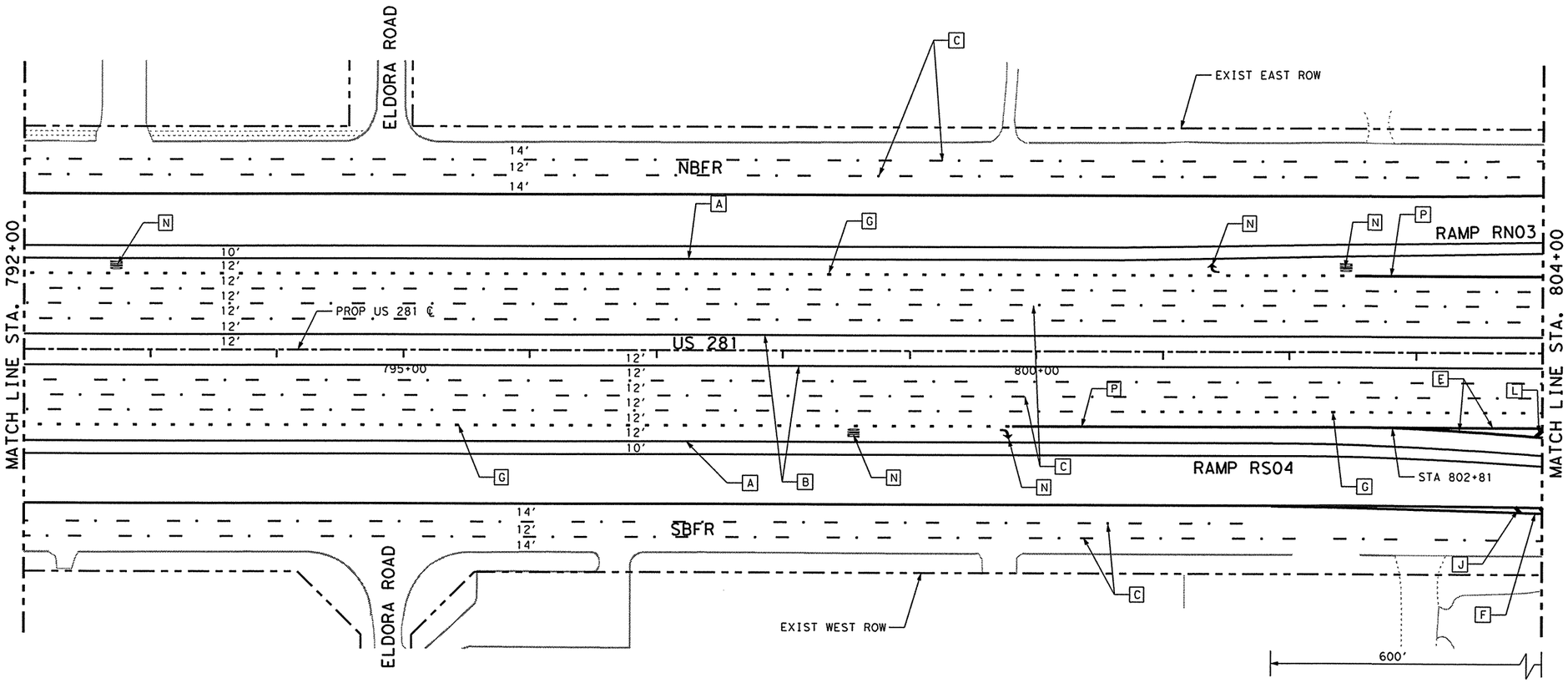

LEGEND:

(90 MIL) THERMOPLASTIC

- [A] 4" SOLID WHITE STRIPE
- [B] 4" SOLID YELLOW STRIPE
- [C] 4" BROKEN WHITE STRIPE & PVMT MRK TY II-CR (DETAIL "B")
- [D] 4" BROKEN YELLOW STRIPE & PVMT MRK TY II-AA (DETAIL "E")
- [E] 8" SOLID WHITE STRIPE (DETAIL "C" OR "F")
- [F] 8" SOLID YELLOW STRIPE (DETAIL "G")
- [G] 12" LANE DROP WHITE
- [H] 24" SOLID WHITE STRIPE
- [J] 24" SOLID YELLOW CROSSHATCHING @ 20' C-C & ROTATED 45°
- [K] WRONG WAY ARROW
- [L] 24" SOLID WHITE CROSSHATCHING @ 20' C-C & ROTATED 45°
- [M] 2-4" SOLID YELLOW STRIPES (DETAIL "D")
- [N] PREFABRICATED WORDS OR ARROWS (TYP)
- [P] 12" SOLID WHITE STRIPE
- [R] EXISTING PVMT MRK

(ITEM 672) SUMMARY OF RAISED PAVEMENT MARKERS

STATION LIMITS	CL B, (REFL) TY I-A (SGL REFL) EA		TY I-C (SGL REFL) EA		TY I-R (SGL REFL) EA		TY II-AA (DBL REFL) EA		TY II-CR (DBL REFL) EA	
	EST	FIN	EST	FIN	EST	FIN	EST	FIN	EST	FIN
STA. 792+00 - STA. 804+00	22								293	
SHEET TOTALS:	22								293	

(ITEM 666) SUMMARY OF REFLECTORIZED PAVEMENT MARKERS

STATION LIMITS	TY I-THERMOPLASTIC, (90 MIL) 4" BROKEN WHITE (LF)		4" SOLID WHITE (LF)		12" LNDP WHITE (LF)		8" SOLID WHITE (LF)		24" SOLID WHITE (LF)		4" BROKEN YELLOW (LF)		4" SOLID YELLOW (LF)		8" SOLID YELLOW (LF)		24" SOLID YELLOW (LF)		12" SOLID WHITE (LF)	
	EST	FIN	EST	FIN	EST	FIN	EST	FIN	EST	FIN	EST	FIN	EST	FIN	EST	FIN	EST	FIN	EST	FIN
STA. 792+00 - STA. 804+00	2864		2400		430		237		8				2400		214		9		458	
SHEET TOTALS:	2864		2400		430		237		8				2400		214		9		458	

(ITEM 668) SUMMARY OF PREFABRICATED PAVEMENT MARKINGS

TY B (WHITE)		SHEET TOTALS:
DESCRIPTION	UNIT	QUANTITY
WORD (ONLY)	EA	3
ARROW (LEFT)	EA	
ARROW (RIGHT)	EA	2
ARROW (STRAIGHT)	EA	

THE SEAL APPEARING ON THIS DOCUMENT WAS AUTHORIZED BY JAIME AGUILAR, P.E. 87606 ON 06/26/2003.

STATE OF TEXAS
JAIME AGUILAR
87606
REGISTERED PROFESSIONAL ENGINEER

Parsons Brinckerhoff Quade & Douglas Inc.

Texas Department of Transportation

© 2003 by TxDOT

US 281 PAVEMENT MARKING DETAILS

STA. 792+00 "BL1" TO
STA. 804+00 "BL1"

PLAN 1"= 100' HORIZ

SHEET 17 OF 33 | 281ST17.DGN

DESIGNED: TT	FED. RD DIV. NO.	STATE	FEDERAL AID PROJECT No.	HIGHWAY No.
CHECKED: DM	6	TEXAS		US 281

DRAWN: KTD	STATE DISTRICT	COUNTY	CONTROL No.	SECTION No.	JOB No.	SHEET No.
CHECKED: DM	PHARR	HIDALGO	0255	08	091	903

I:\22322o\CADD\Sheets\Traffic\Markings\281st17.dgn

NAME
05:01:54 PM
06/26/2003
I:\22322\cadd\sheets\traffic\markings\281st18.dgn

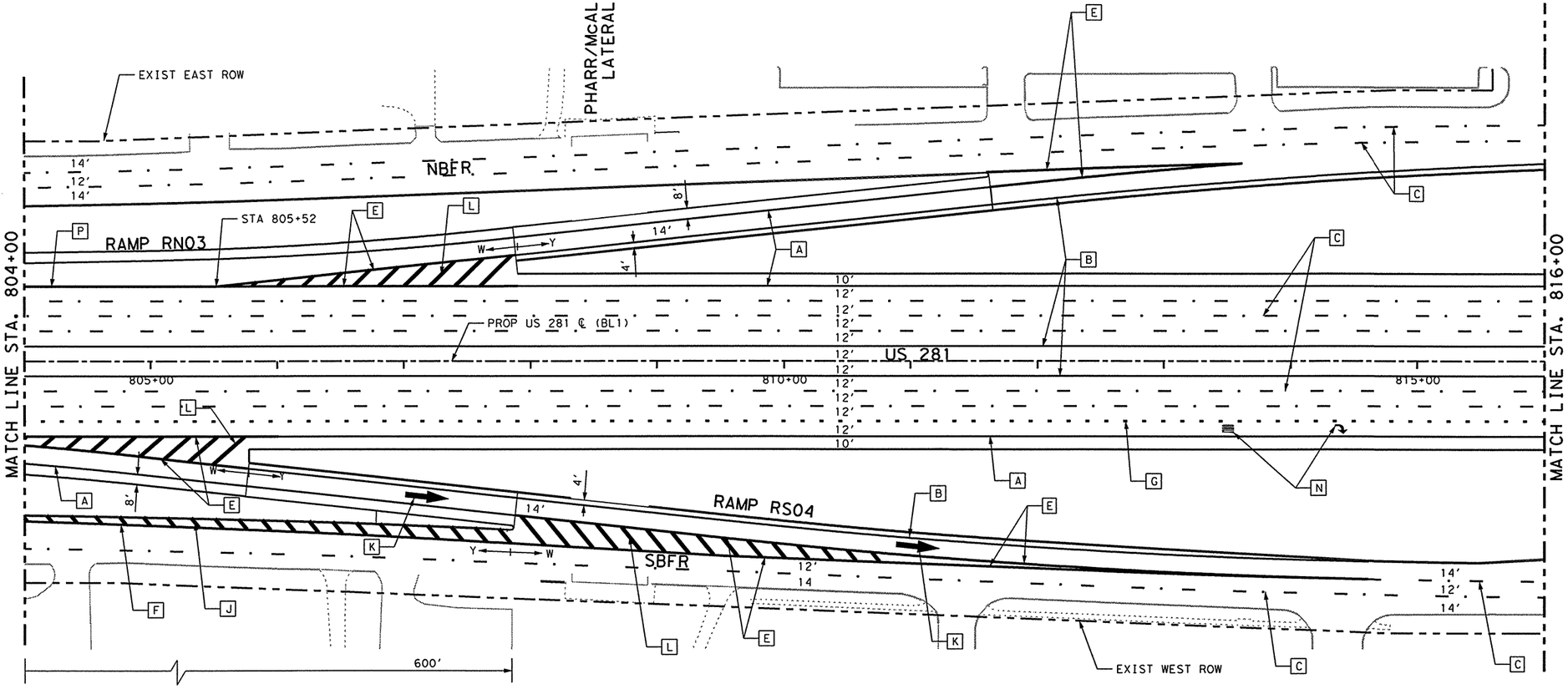

LEGEND:

(90 MIL) THERMOPLASTIC

- [A] 4" SOLID WHITE STRIPE
- [B] 4" SOLID YELLOW STRIPE
- [C] 4" BROKEN WHITE STRIPE & PVMT MRK TY II-CR (DETAIL "B")
- [D] 4" BROKEN YELLOW STRIPE & PVMT MRK TY II-AA (DETAIL "E")
- [E] 8" SOLID WHITE STRIPE (DETAIL "C" OR "F")
- [F] 8" SOLID YELLOW STRIPE (DETAIL "G")
- [G] 12" LANE DROP WHITE
- [H] 24" SOLID WHITE STRIPE
- [J] 24" SOLID YELLOW CROSSHATCHING @ 20' C-C & ROTATED 45°
- [K] WRONG WAY ARROW
- [L] 24" SOLID WHITE CROSSHATCHING @ 20' C-C & ROTATED 45°
- [M] 2-4" SOLID YELLOW STRIPES (DETAIL "D")
- [N] PREFABRICATED WORDS OR ARROWS (TYP)
- [P] 12" SOLID WHITE STRIPE
- [R] EXISTING PVMT MRK

(ITEM 672) SUMMARY OF RAISED PAVEMENT MARKERS

STATION LIMITS	CL B, (REFL) TY I-A (SGL REFL) EA		TY I-C (SGL REFL) EA		TY I-R (SGL REFL) EA		TY II-AA (DBL REFL) EA		TY II-CR (DBL REFL) EA	
	EST	FIN	EST	FIN	EST	FIN	EST	FIN	EST	FIN
STA. 804+00 - STA. 816+00	40		162		28				424	
SHEET TOTALS:	40		162		28				424	

(ITEM 666) SUMMARY OF REFLECTORIZED PAVEMENT MARKERS

STATION LIMITS	TY I-THERMOPLASTIC, (90 MIL) 4" BROKEN WHITE (LF)		4" SOLID WHITE (LF)		12" LNDP WHITE (LF)		8" SOLID WHITE (LF)		24" SOLID WHITE (LF)		4" BROKEN YELLOW (LF)		4" SOLID YELLOW (LF)		8" SOLID YELLOW (LF)		24" SOLID YELLOW (LF)		12" SOLID WHITE (LF)	
	EST	FIN	EST	FIN	EST	FIN	EST	FIN	EST	FIN	EST	FIN	EST	FIN	EST	FIN	EST	FIN	EST	FIN
STA. 804+00 - STA. 816+00	2435		2964		240		2610		677				4103		386		223		152	
SHEET TOTALS:	2435		2964		240		2610		677				4103		386		223		152	

(ITEM 668) SUMMARY OF PREFABRICATED PAVEMENT MARKINGS

TY B (WHITE)		SHEET TOTALS:
DESCRIPTION	UNIT	QUANTITY
WORD (ONLY)	EA	1
ARROW (LEFT)	EA	
ARROW (RIGHT)	EA	1
ARROW (STRAIGHT)	EA	

THE SEAL APPEARING ON THIS DOCUMENT WAS AUTHORIZED BY JAIME AGUILAR, P.E. 87606 ON 06/26/2003.

STATE OF TEXAS
JAIME AGUILAR
87606
REGISTERED PROFESSIONAL ENGINEER

Parsons Brinckerhoff Quade & Douglas Inc.

Texas Department of Transportation

© 2003 by TxDOT

US 281 PAVEMENT MARKING DETAILS

STA. 804+00 "BL1" TO STA. 816+00 "BL1"

PLAN 1"= 100' HORIZ

SHEET 18 OF 33 — 281ST18.DGN

DESIGNED: TT	FED. RD DIV. No.	STATE	FEDERAL AID PROJECT No.			HIGHWAY No.	
CHECKED: DM	6	TEXAS				US 281	
DRAWN: KTD	STATE DISTRICT	COUNTY	CONTROL No.	SECTION No.	JOB No.	SHEET No.	
CHECKED: DM	PHARR	HIDALGO	0255	08	091	904	

NAME
05:16:44 PM
06/26/2003

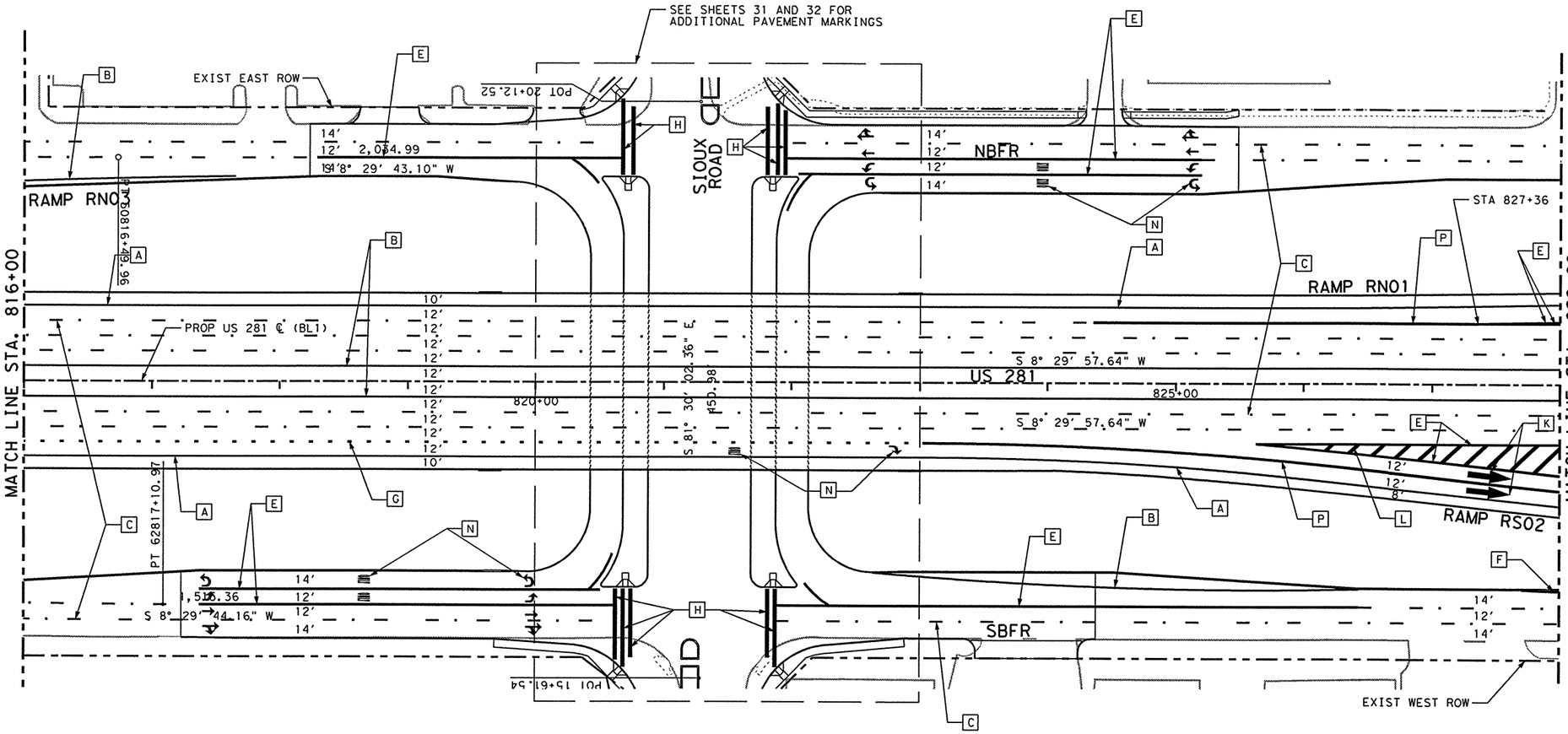

LEGEND:

(90 MIL) THERMOPLASTIC

- [A] 4" SOLID WHITE STRIPE
- [B] 4" SOLID YELLOW STRIPE
- [C] 4" BROKEN WHITE STRIPE & PVMT MRK TY II-CR (DETAIL "B")
- [D] 4" BROKEN YELLOW STRIPE & PVMT MRK TY II-AA (DETAIL "E")
- [E] 8" SOLID WHITE STRIPE (DETAIL "C" OR "F")
- [F] 8" SOLID YELLOW STRIPE (DETAIL "G")
- [G] 12" LANE DROP WHITE
- [H] 24" SOLID WHITE STRIPE
- [J] 24" SOLID YELLOW CROSSHATCHING @ 20' C-C & ROTATED 45°
- [K] WRONG WAY ARROW
- [L] 24" SOLID WHITE CROSSHATCHING @ 20' C-C & ROTATED 45°
- [M] 2-4" SOLID YELLOW STRIPES (DETAIL "D")
- [N] PREFABRICATED WORDS OR ARROWS (TYP)
- [P] 12" SOLID WHITE STRIPE
- [R] EXISTING PVMT MRK

(ITEM 672) SUMMARY OF RAISED PAVEMENT MARKERS

STATION LIMITS	CL B, (REFL) TY I-A (SGL REFL) EA		TY I-C (SGL REFL) EA		TY I-R (SGL REFL) EA		TY II-AA (DBL REFL) EA		TY II-CR (DBL REFL) EA	
	EST	FIN	EST	FIN	EST	FIN	EST	FIN	EST	FIN
STA. 816+00 - STA. 828+00	4		840		28				233	
SHEET TOTALS:	4		840		28				233	

(ITEM 666) SUMMARY OF REFLECTORIZED PAVEMENT MARKERS

STATION LIMITS	TY I-THERMOPLASTIC, (90 MIL) 4" BROKEN WHITE (LF)		4" SOLID WHITE (LF)		12" LNDP WHITE (LF)		8" SOLID WHITE (LF)		24" SOLID WHITE (LF)		4" BROKEN YELLOW (LF)		4" SOLID YELLOW (LF)		8" SOLID YELLOW (LF)		24" SOLID YELLOW (LF)		12" SOLID WHITE (LF)	
	EST	FIN	EST	FIN	EST	FIN	EST	FIN	EST	FIN	EST	FIN	EST	FIN	EST	FIN	EST	FIN	EST	FIN
STA. 816+00 - STA. 828+00	2142		2402		140		2701		748				2945		30				800	
SHEET TOTALS:	2142		2402		140		2701		748				2945		30				800	

(ITEM 668) SUMMARY OF PREFABRICATED PAVEMENT MARKINGS

TY B (WHITE)		SHEET TOTALS:
DESCRIPTION	UNIT	QUANTITY
WORD (ONLY)	EA	5
ARROW (LEFT)	EA	4
ARROW (RIGHT)	EA	1
ARROW (STRAIGHT)	EA	4
ARROW (U-TURN)	EA	4
ARROW (STRAIGHT & RIGHT)	EA	4

THE SEAL APPEARING ON THIS DOCUMENT WAS AUTHORIZED BY JAIME AGUILAR, P.E. 87606 ON 06/26/2003.

STATE OF TEXAS · JAIME AGUILAR · 87606 · REGISTERED PROFESSIONAL ENGINEER

Parsons Brinckerhoff Quade & Douglas Inc.

Texas Department of Transportation

© 2003 by TxDOT

US 281 PAVEMENT MARKING DETAILS

STA. 816+00 "BL1" TO STA. 828+00 "BL1"

PLAN 1"= 100' HORIZ

SHEET 19 OF 33 | 281ST19.DGN

DESIGNED: TT	FED. RD DIV. No.	STATE	FEDERAL AID PROJECT No.			HIGHWAY No.
CHECKED: DM	6	TEXAS				US 281
DRAWN: KTD	STATE DISTRICT	COUNTY	CONTROL No.	SECTION No.	JOB No.	SHEET No.
CHECKED: DM	PHARR	HIDALGO	0255	08	091	905

I:\22322o\CADD\Sheets\Traffic\Markings\281st19.dgn

NAME
05:16:51 PM
06/26/2003
i:\22322e\cadd\sheets\traffic\markings\281st20.dgn

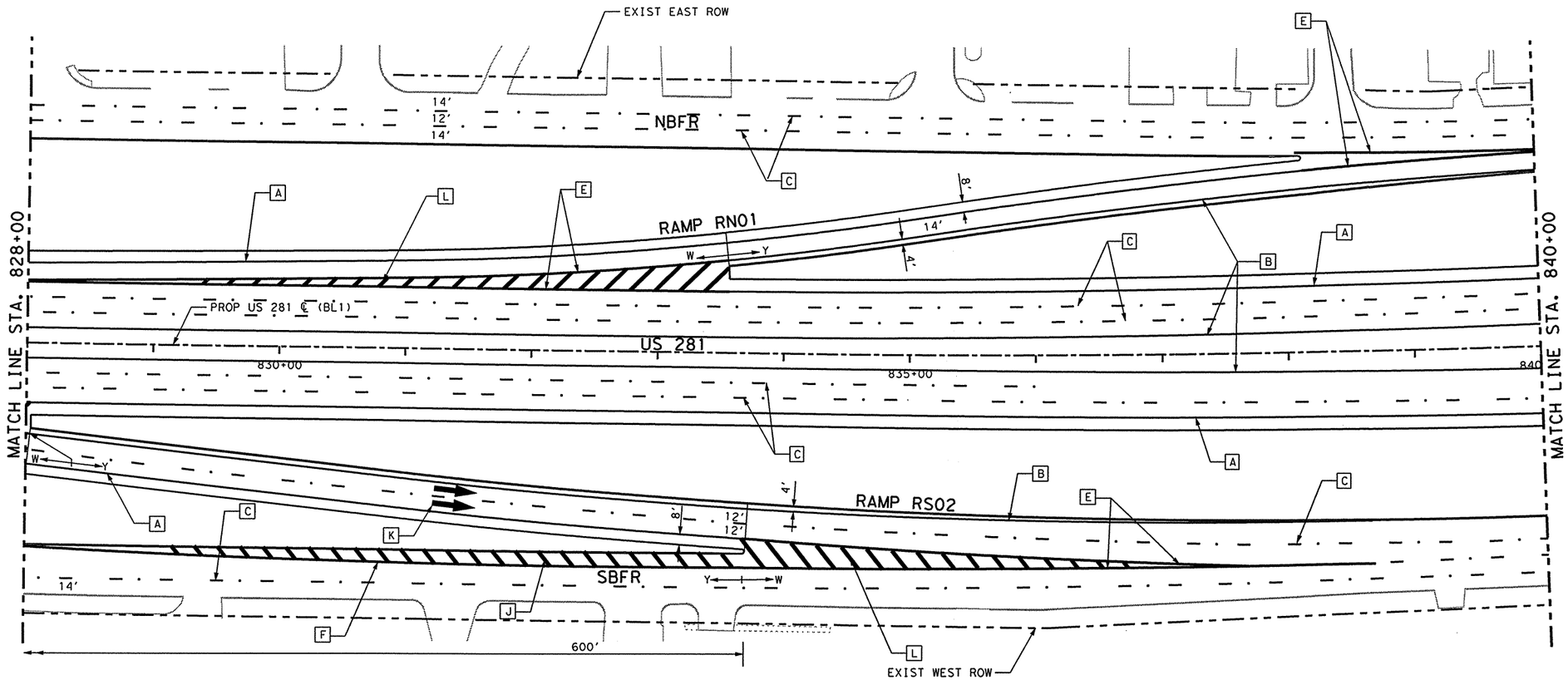

LEGEND:

(90 MIL) THERMOPLASTIC

- [A] 4" SOLID WHITE STRIPE
- [B] 4" SOLID YELLOW STRIPE
- [C] 4" BROKEN WHITE STRIPE & PVMT MRK TY II-CR (DETAIL "B")
- [D] 4" BROKEN YELLOW STRIPE & PVMT MRK TY II-AA (DETAIL "E")
- [E] 8" SOLID WHITE STRIPE (DETAIL "C" OR "F")
- [F] 8" SOLID YELLOW STRIPE (DETAIL "G")
- [G] 12" LANE DROP WHITE
- [H] 24" SOLID WHITE STRIPE
- [J] 24" SOLID YELLOW CROSSHATCHING @ 20' C-C & ROTATED 45°
- [K] WRONG WAY ARROW
- [L] 24" SOLID WHITE CROSSHATCHING @ 20' C-C & ROTATED 45°
- [M] 2-4" SOLID YELLOW STRIPES (DETAIL "D")
- [N] PREFABRICATED WORDS OR ARROWS (TYP)
- [P] 12" SOLID WHITE STRIPE
- [R] EXISTING PVMT MRK

(ITEM 672) SUMMARY OF RAISED PAVEMENT MARKERS

STATION LIMITS	CL B, (REFL) TY I-A (SGL REFL) EA		TY I-C (SGL REFL) EA		TY I-R (SGL REFL) EA		TY II-AA (DBL REFL) EA		TY II-CR (DBL REFL) EA	
	EST	FIN	EST	FIN	EST	FIN	EST	FIN	EST	FIN
STA. 828+00 - STA. 840+00	58		150		28				371	
SHEET TOTALS:	58		150		28				371	

(ITEM 666) SUMMARY OF REFLECTORIZED PAVEMENT MARKERS

STATION LIMITS	TY I-THERMOPLASTIC, (90 MIL) 4" BROKEN WHITE (LF)		4" SOLID WHITE (LF)		12" LNDP WHITE (LF)		8" SOLID WHITE (LF)		24" SOLID WHITE (LF)		4" BROKEN YELLOW (LF)		4" SOLID YELLOW (LF)		8" SOLID YELLOW (LF)		24" SOLID YELLOW (LF)		12 SOLID WHITE (LF)	
	EST	FIN	EST	FIN	EST	FIN	EST	FIN	EST	FIN	EST	FIN	EST	FIN	EST	FIN	EST	FIN	EST	FIN
STA. 828+00 - STA. 840+00	2326		3424				2391		595				4111		571		337			
SHEET TOTALS:	2326		3424				2391		595				4111		571		337			

(ITEM 668) SUMMARY OF PREFABRICATED PAVEMENT MARKINGS

TY B (WHITE)		SHEET TOTALS:
DESCRIPTION	UNIT	QUANTITY
WORD (ONLY)	EA	
ARROW (LEFT)	EA	
ARROW (RIGHT)	EA	
ARROW (STRAIGHT)	EA	

THE SEAL APPEARING ON THIS DOCUMENT WAS AUTHORIZED BY JAIME AGUILAR, P.E. 87606 ON 06/26/2003.

STATE OF TEXAS
JAIME AGUILAR
87606
REGISTERED PROFESSIONAL ENGINEER

Parsons Brinckerhoff Quade & Douglas Inc.

Texas Department of Transportation

© 2003 by TxDOT

US 281 PAVEMENT MARKING DETAILS

STA. 828+00 "BL1" TO STA. 840+00 "BL1"

PLAN 1"= 100' HORIZ

SHEET 20 OF 33			281ST20.DGN				
DESIGNED: TT	FED. RD DIV. No.	STATE	FEDERAL AID PROJECT No.				HIGHWAY No.
CHECKED: DM	6	TEXAS					US 281
DRAWN: KTD	STATE DISTRICT	COUNTY	CONTROL No.	SECTION No.	JOB No.	SHEET No.	
CHECKED: DM	PHARR	HIDALGO	0255	08	091	906	

NAME
05:02:16 PM
06/26/2003
i:\22322o\cadd\sheets\traffic\markings\281st21.dgn

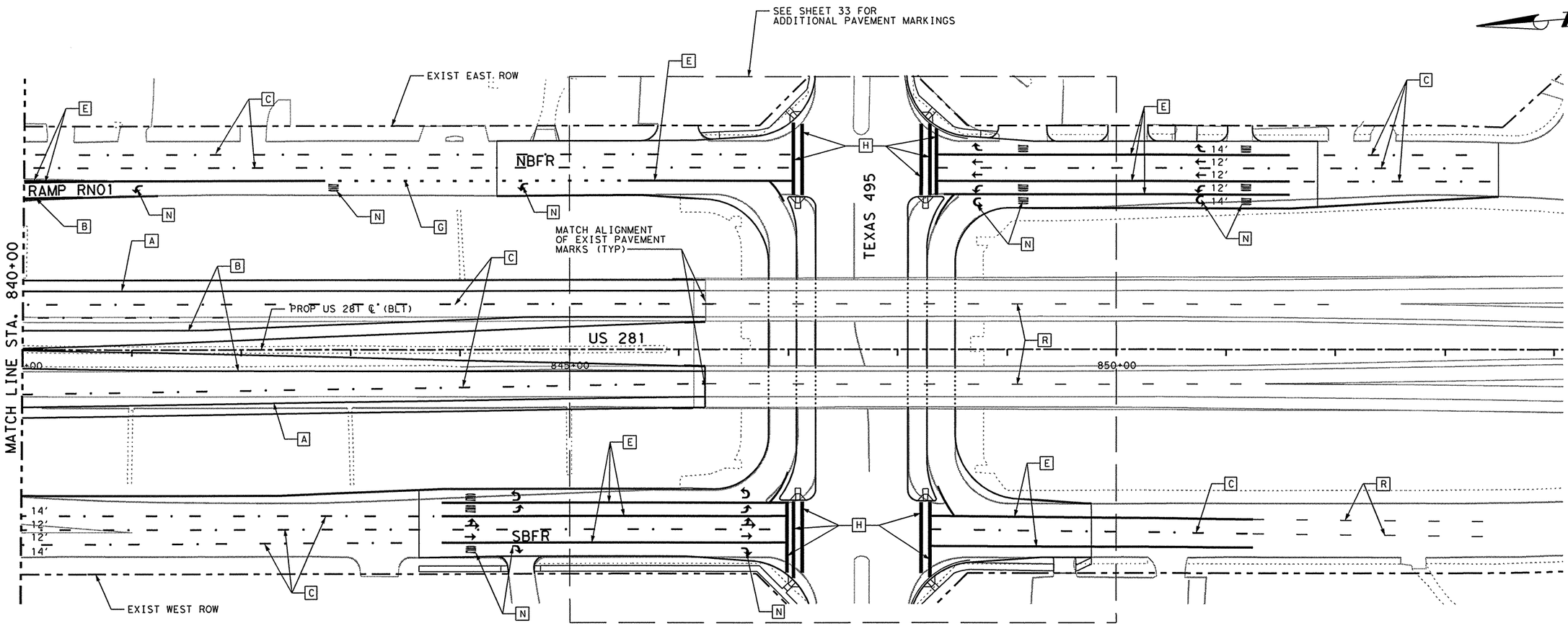

(ITEM 672) SUMMARY OF RAISED PAVEMENT MARKERS

STATION LIMITS	CL B, (REFL) TY I-A (SGL REFL) EA		TY I-C (SGL REFL) EA		TY I-R (SGL REFL) EA		TY II-AA (DBL REFL) EA		TY II-CR (DBL REFL) EA	
	EST	FIN	EST	FIN	EST	FIN	EST	FIN	EST	FIN
STA. 840+00 TO END			1256						84	
SHEET TOTALS:			1256						84	

(ITEM 668) SUMMARY OF PREFABRICATED PAVEMENT MARKINGS

TY B (WHITE)		SHEET TOTALS:
DESCRIPTION	UNIT	QUANTITY
WORD (ONLY)	EA	10
ARROW (LEFT)	EA	6
ARROW (RIGHT)	EA	4
ARROW (STRAIGHT)	EA	6
ARROW (U-TURN)	EA	4
ARROW (STRAIGHT & LEFT)	EA	2

(ITEM 666) SUMMARY OF REFLECTORIZED PAVEMENT MARKERS

STATION LIMITS	TY I-THERMOPLASTIC, (90 MIL) 4" BROKEN WHITE (LF)		4" SOLID WHITE (LF)		12" LNDP WHITE (LF)		8" SOLID WHITE (LF)		24" SOLID WHITE (LF)		4" BROKEN YELLOW (LF)		4" SOLID YELLOW (LF)		8" SOLID YELLOW (LF)		24" SOLID YELLOW (LF)	
	EST	FIN	EST	FIN	EST	FIN	EST	FIN	EST	FIN	EST	FIN	EST	FIN	EST	FIN	EST	FIN
STA. 840+00 TO END	1322		1248		56		3114		649				1302					
SHEET TOTALS:	1322		1248		56		3114		649				1302					

LEGEND:

(90 MIL) THERMOPLASTIC

- [A] 4" SOLID WHITE STRIPE
- [B] 4" SOLID YELLOW STRIPE
- [C] 4" BROKEN WHITE STRIPE & PVMT MRK TY II-CR (DETAIL "B")
- [D] 4" BROKEN YELLOW STRIPE & PVMT MRK TY II-AA (DETAIL "E")
- [E] 8" SOLID WHITE STRIPE (DETAIL "C" OR "F")
- [F] 8" SOLID YELLOW STRIPE (DETAIL "G")
- [G] 12" LANE DROP WHITE
- [H] 24" SOLID WHITE STRIPE
- [J] 24" SOLID YELLOW CROSSHATCHING @ 20' C-C & ROTATED 45°
- [K] ◄ WRONG WAY ARROW
- [L] 24" SOLID WHITE CROSSHATCHING @ 20' C-C & ROTATED 45°
- [M] 2-4" SOLID YELLOW STRIPES (DETAIL "D")
- [N] PREFABRICATED WORDS OR ARROWS (TYP)
- [P] 12" SOLID WHITE STRIPE
- [R] EXISTING PVMT MRK

THE SEAL APPEARING ON THIS DOCUMENT WAS AUTHORIZED BY JAIME AGUILAR, P.E. 87606 ON 06/26/2003.

STATE OF TEXAS · JAIME AGUILAR · 87606 · REGISTERED PROFESSIONAL ENGINEER

PB Parsons Brinckerhoff Quade & Douglas Inc.

Texas Department of Transportation

© 2003 by TxDOT

US 281 PAVEMENT MARKING DETAILS

STA. 840+00 "BL1" TO END OF PROJECT

PLAN 1"= 100' HORIZ

SHEET 21 OF 33			281ST21.DGN				
DESIGNED: TT	FED. RD DIV. No.	STATE	FEDERAL AID PROJECT No.			HIGHWAY No.	
CHECKED: DM	6	TEXAS				US 281	
DRAWN: KTD	STATE DISTRICT	COUNTY	CONTROL No.	SECTION No.	JOB No.	SHEET No.	
CHECKED: DM	PHARR	HIDALGO	0255	08	091	909	

NAME
05:02:24 PM
06/26/2003
i:\223220\cadd\sheets\traffic\markings\281st22.dgn

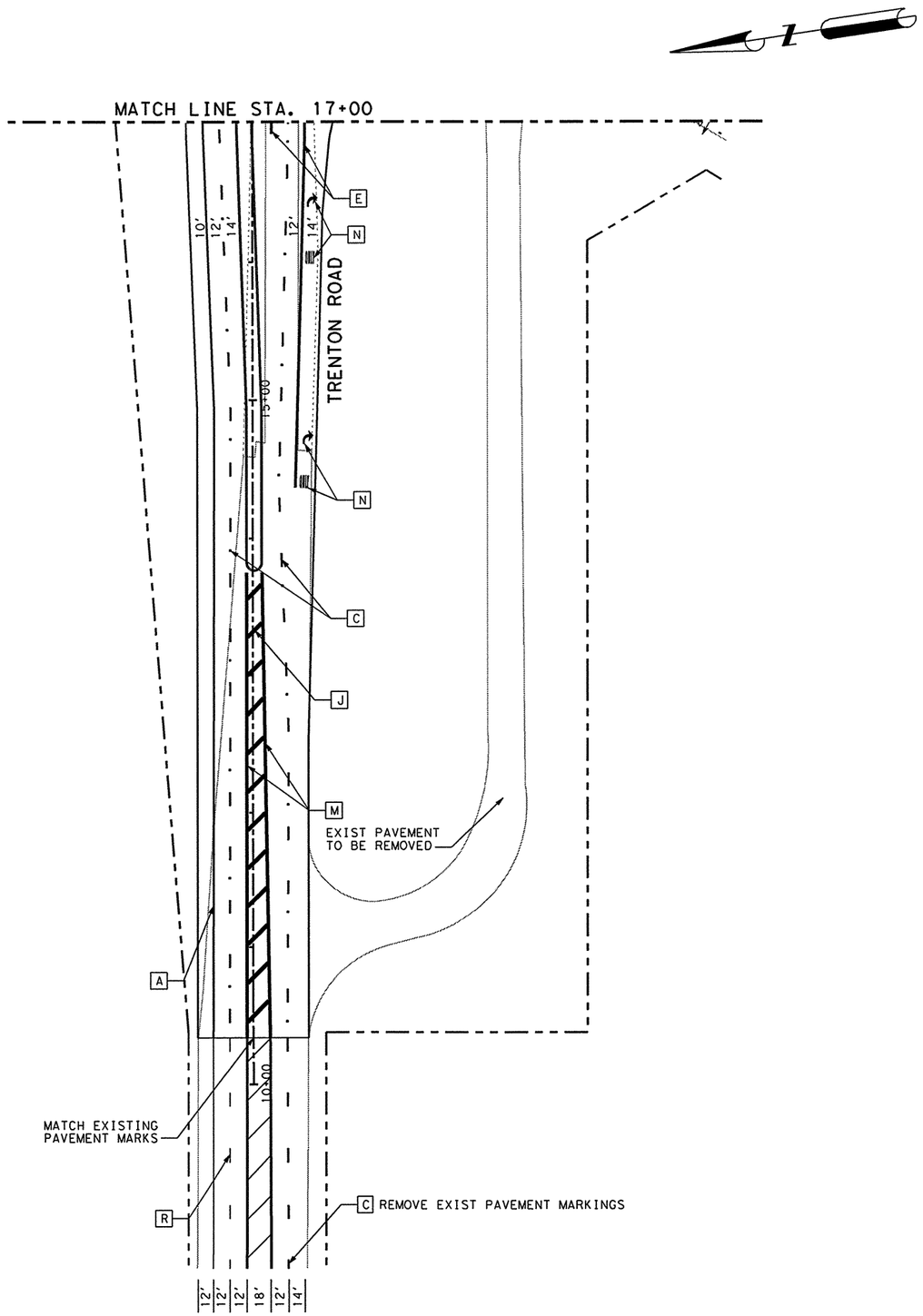

(ITEM 666)
SUMMARY OF REFLECTORIZED PAVEMENT MARKERS

STATION LIMITS	TY I-THERMOPLASTIC, (90 MIL)																	
	4" BROKEN WHITE (LF)		4" SOLID WHITE (LF)		12" LNDP WHITE (LF)		8" SOLID WHITE (LF)		24" SOLID WHITE (LF)		4" BROKEN YELLOW (LF)		4" SOLID YELLOW (LF)		8" SOLID YELLOW (LF)		24" SOLID YELLOW (LF)	
	EST	FIN	EST	FIN	EST	FIN	EST	FIN	EST	FIN	EST	FIN	EST	FIN	EST	FIN	EST	FIN
STA. 10+00 - STA. 17+00	375		666				272						1364				218	
SHEET TOTALS:	375		666				272						1364				218	

(ITEM 672)
SUMMARY OF RAISED PAVEMENT MARKERS

STATION LIMITS	CL B, (REFL)									
	TY I-A (SGL REFL) EA		TY I-C (SGL REFL) EA		TY I-R (SGL REFL) EA		TY II-AA (DBL REFL) EA		TY II-CR (DBL REFL) EA	
	EST	FIN	EST	FIN	EST	FIN	EST	FIN	EST	FIN
STA. 10+00 - STA. 17+00			110				68		19	
SHEET TOTALS:			110				68		19	

(ITEM 668)
SUMMARY OF PREFABRICATED PAVEMENT MARKINGS

TY B (WHITE)		SHEET TOTALS:
DESCRIPTION	UNIT	QUANTITY
WORD (ONLY)	EA	2
ARROW (LEFT)	EA	
ARROW (RIGHT)	EA	2
ARROW (STRAIGHT)	EA	

(ITEM 677)
SUMMARY OF EXISTING PAVEMENT MARKING & MARKER ELIMINATION

STATION LIMITS	ELIMI EXT PAV MRK & MRKR (8") (LF)		ELIMI EXT PAV MRK & MRKR (WORD) (EA)		ELIMI EXT PAV MRK & MRKR (ARROW) (EA)	
	EST	FIN	EST	FIN	EST	FIN
STA. 10+00 - STA. 17+00	80		1		3	
SHEET TOTALS:						

LEGEND:

(90 MIL) THERMOPLASTIC

- [A] 4" SOLID WHITE STRIPE
- [B] 4" SOLID YELLOW STRIPE
- [C] 4" BROKEN WHITE STRIPE & PVMT MRK TY II-CR (DETAIL "B")
- [D] 4" BROKEN YELLOW STRIPE & PVMT MRK TY II-AA (DETAIL "E")
- [E] 8" SOLID WHITE STRIPE (DETAIL "C" OR "F")
- [F] 8" SOLID YELLOW STRIPE (DETAIL "G")
- [G] 12" LANE DROP WHITE
- [H] 24" SOLID WHITE STRIPE
- [J] 24" SOLID YELLOW CROSSHATCHING @ 20' C-C & ROTATED 45°
- [K] WRONG WAY ARROW
- [L] 24" SOLID WHITE CROSSHATCHING @ 20' C-C & ROTATED 45°
- [M] 2-4" SOLID YELLOW STRIPES (DETAIL "D")
- [N] PREFABRICATED WORDS OR ARROWS (TYP)
- [P] 12" SOLID WHITE STRIPE
- [R] EXISTING PVMT MRK

THE SEAL APPEARING ON THIS DOCUMENT WAS AUTHORIZED BY JAIME AGUILAR, P.E. 87606 ON 06/26/2003.

STATE OF TEXAS
JAIME AGUILAR
87606
REGISTERED PROFESSIONAL ENGINEER

Parsons Brinckerhoff Quade & Douglas Inc.

Texas Department of Transportation

© 2003 by TxDOT

US 281
PAVEMENT MARKINGS
DETAILS

STA. 10+00 "XTRENT1" TO
STA. 17+00 "XTRENT1"

PLAN 1"= 100' HORIZ

SHEET 22 OF 33 | 281ST22.DGN

DESIGNED: TT	FED. RD DIV. No.	STATE	FEDERAL AID PROJECT No.			HIGHWAY No.
CHECKED: DM	6	TEXAS				US 281
DRAWN: KTD	STATE DISTRICT	COUNTY	CONTROL No.	SECTION No.	JOB No.	SHEET No.
CHECKED: DM	PHARR	HIDALGO	0255	08	091	910

NAME
05:02:28 PM
06/26/2003
i:\22322a\cadd\sheets\traffic\markings\281st23.dgn

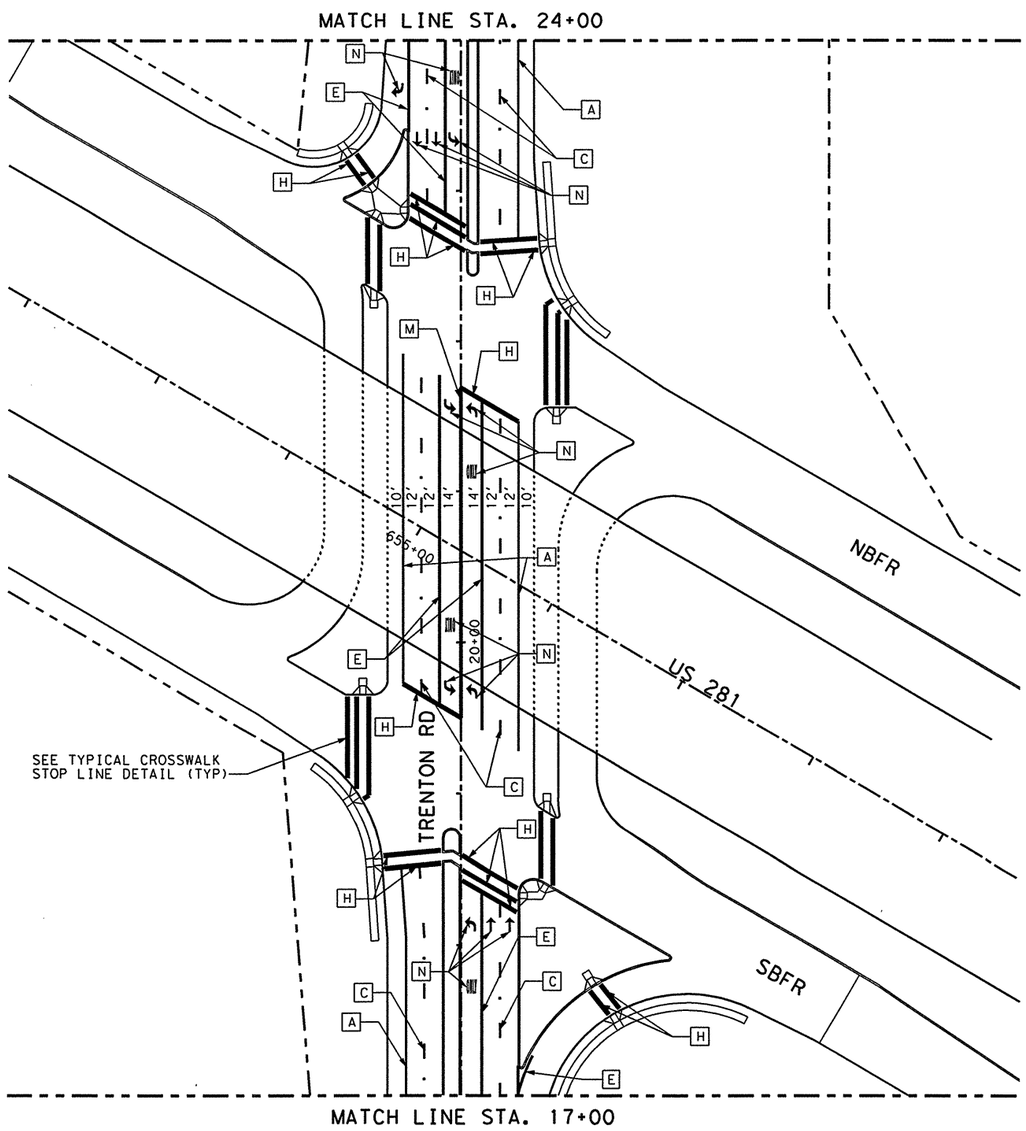

(ITEM 666) SUMMARY OF REFLECTORIZED PAVEMENT MARKERS

STATION LIMITS	TY I-THERMOPLASTIC, (90 MIL)																	
	4" BROKEN WHITE (LF)		4" SOLID WHITE (LF)		12" LNDP WHITE (LF)		8" SOLID WHITE (LF)		24" SOLID WHITE (LF)		4" BROKEN YELLOW (LF)		4" SOLID YELLOW (LF)		8" SOLID YELLOW (LF)		24" SOLID YELLOW (LF)	
	EST	FIN	EST	FIN	EST	FIN	EST	FIN	EST	FIN	EST	FIN	EST	FIN	EST	FIN	EST	FIN
STA. 17+00 - STA. 24+00	237		723				796		573				438					
SHEET TOTALS:	237		723				796		573				438					

(ITEM 672) SUMMARY OF RAISED PAVEMENT MARKERS

STATION LIMITS	CL B, (REFL)									
	TY I-A (SGL REFL) EA		TY I-C (SGL REFL) EA		TY I-R (SGL REFL) EA		TY II-AA (DBL REFL) EA		TY II-CR (DBL REFL) EA	
	EST	FIN	EST	FIN	EST	FIN	EST	FIN	EST	FIN
STA. 17+00 - STA. 24+00			320				22		12	
SHEET TOTALS:			320				22		12	

(ITEM 668) SUMMARY OF PREFABRICATED PAVEMENT MARKINGS

TY B (WHITE)		SHEET TOTALS:
DESCRIPTION	UNIT	QUANTITY
WORD (ONLY)	EA	4
ARROW (LEFT)	EA	6
ARROW (RIGHT)	EA	1
ARROW (STRAIGHT)	EA	4

LEGEND:

(90 MIL) THERMOPLASTIC

- [A] 4" SOLID WHITE STRIPE
- [B] 4" SOLID YELLOW STRIPE
- [C] 4" BROKEN WHITE STRIPE & PVMT MRK TY II-CR (DETAIL "B")
- [D] 4" BROKEN YELLOW STRIPE & PVMT MRK TY II-AA (DETAIL "E")
- [E] 8" SOLID WHITE STRIPE (DETAIL "C" OR "F")
- [F] 8" SOLID YELLOW STRIPE (DETAIL "G")
- [G] 12" LANE DROP WHITE
- [H] 24" SOLID WHITE STRIPE
- [J] 24" SOLID YELLOW CROSSHATCHING @ 20' C-C & ROTATED 45°
- [K] ◀ WRONG WAY ARROW
- [L] 24" SOLID WHITE CROSSHATCHING @ 20' C-C & ROTATED 45°
- [M] 2-4" SOLID YELLOW STRIPES (DETAIL "D")
- [N] PREFABRICATED WORDS OR ARROWS (TYP)
- [P] 12" SOLID WHITE STRIPE
- [R] EXISTING PVMT MRK

THE SEAL APPEARING ON THIS DOCUMENT WAS AUTHORIZED BY JAIME AGUILAR, P.E. 87606 ON 06/26/2003.

STATE OF TEXAS
JAIME AGUILAR
87606
REGISTERED PROFESSIONAL ENGINEER

Parsons Brinckerhoff Quade & Douglas Inc.

Texas Department of Transportation

© 2003 by TxDOT

US 281 PAVEMENT MARKINGS DETAILS

STA. 17+00 "XTRENT1" TO
STA. 24+00 "XTRENT1"

PLAN 1"= 100' HORIZ

SHEET 23 OF 33 | 281ST23.DGN

DESIGNED: TT	FED. RD DIV. NO.	STATE	FEDERAL AID PROJECT NO.			HIGHWAY NO.	
CHECKED: DM	6	TEXAS				US 281	
DRAWN: KTD	STATE DISTRICT	COUNTY	CONTROL No.	SECTION No.	JOB No.	SHEET No.	
CHECKED: DM	PHARR	HIDALGO	0255	08	091	911	

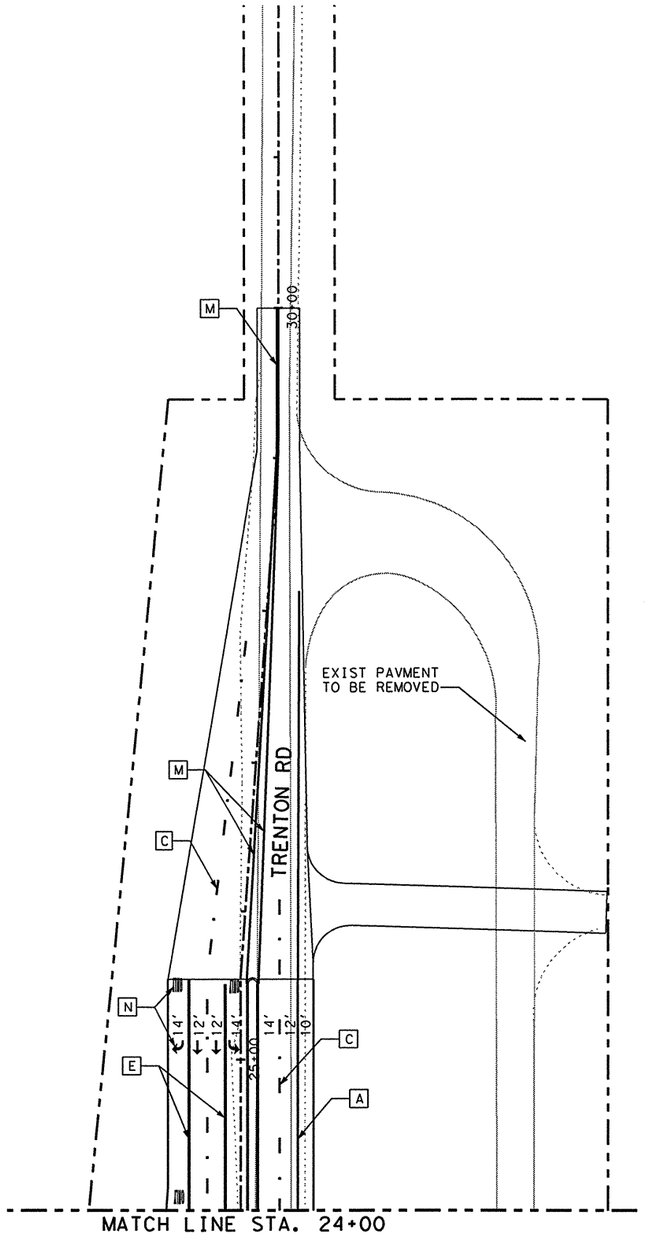

LEGEND:

(90 MIL) THERMOPLASTIC

- [A] 4" SOLID WHITE STRIPE
- [B] 4" SOLID YELLOW STRIPE
- [C] 4" BROKEN WHITE STRIPE & PVMT MRK TY II-CR (DETAIL "B")
- [D] 4" BROKEN YELLOW STRIPE & PVMT MRK TY II-AA (DETAIL "E")
- [E] 8" SOLID WHITE STRIPE (DETAIL "C" OR "F")
- [F] 8" SOLID YELLOW STRIPE (DETAIL "G")
- [G] 12" LANE DROP WHITE
- [H] 24" SOLID WHITE STRIPE
- [J] 24" SOLID YELLOW CROSSHATCHING @ 20' C-C & ROTATED 45°
- [K] WRONG WAY ARROW
- [L] 24" SOLID WHITE CROSSHATCHING @ 20' C-C & ROTATED 45°
- [M] 2-4" SOLID YELLOW STRIPES (DETAIL "D")
- [N] PREFABRICATED WORDS OR ARROWS (TYP)
- [P] 12" SOLID WHITE STRIPE
- [R] EXISTING PVMT MRK

(ITEM 668)
SUMMARY OF PREFABRICATED PAVEMENT MARKINGS

TY B (WHITE)		SHEET TOTALS:
DESCRIPTION	UNIT	QUANTITY
WORD (ONLY)	EA	3
ARROW (LEFT)	EA	1
ARROW (RIGHT)	EA	1
ARROW (STRAIGHT)	EA	2

(ITEM 672)
SUMMARY OF RAISED PAVEMENT MARKERS

STATION LIMITS	CL B, (REFL)									
	TY I-A (SGL REFL) EA		TY I-C (SGL REFL) EA		TY I-R (SGL REFL) EA		TY II-AA (DBL REFL) EA		TY II-CR (DBL REFL) EA	
	EST	FIN	EST	FIN	EST	FIN	EST	FIN	EST	FIN
STA. 24+00 TO END OF PROJECT			128				80		8	
SHEET TOTALS:			128				80		8	

(ITEM 666)
SUMMARY OF REFLECTORIZED PAVEMENT MARKERS

STATION LIMITS	TY I-THERMOPLASTIC, (90 MIL)																	
	4" BROKEN WHITE (LF)		4" SOLID WHITE (LF)		12" LNDP WHITE (LF)		8" SOLID WHITE (LF)		24" SOLID WHITE (LF)		4" BROKEN YELLOW (LF)		4" SOLID YELLOW (LF)		8" SOLID YELLOW (LF)		24" SOLID YELLOW (LF)	
	EST	FIN	EST	FIN	EST	FIN	EST	FIN	EST	FIN	EST	FIN	EST	FIN	EST	FIN	EST	FIN
STA. 24+00 TO END OF PROJECT	161		412				320						1602					
SHEET TOTALS:	161		412				320						1602					

THE SEAL APPEARING ON THIS DOCUMENT WAS AUTHORIZED BY JAIME AGUILAR, P.E. 87606 ON 06/26/2003.

STATE OF TEXAS · JAIME AGUILAR · 87606 · REGISTERED PROFESSIONAL ENGINEER

Parsons Brinckerhoff Quade & Douglas Inc.

Texas Department of Transportation

© 2003 by TxDOT

US 281
PAVEMENT MARKINGS
DETAILS

STA. 24+00 "XTRENT1" TO END OF PROJECT

PLAN 1"= 100' HORIZ

SHEET 24 OF 33 | 281ST24.DGN

DESIGNED: TT	FED. RD DIV. No.	STATE	FEDERAL AID PROJECT No.		HIGHWAY No.	
CHECKED: DM	6	TEXAS			US 281	
DRAWN:	STATE DISTRICT	COUNTY	CONTROL No.	SECTION No.	JOB No.	SHEET No.
CHECKED: DM	PHARR	HIDALGO	0255	08	091	912

NAME
05:02:35 PM
06/26/2003
i:\22322a\cadd\sheets\traffic\markings\281st24.dgn

NAME
05:02:42 PM
06/26/2003

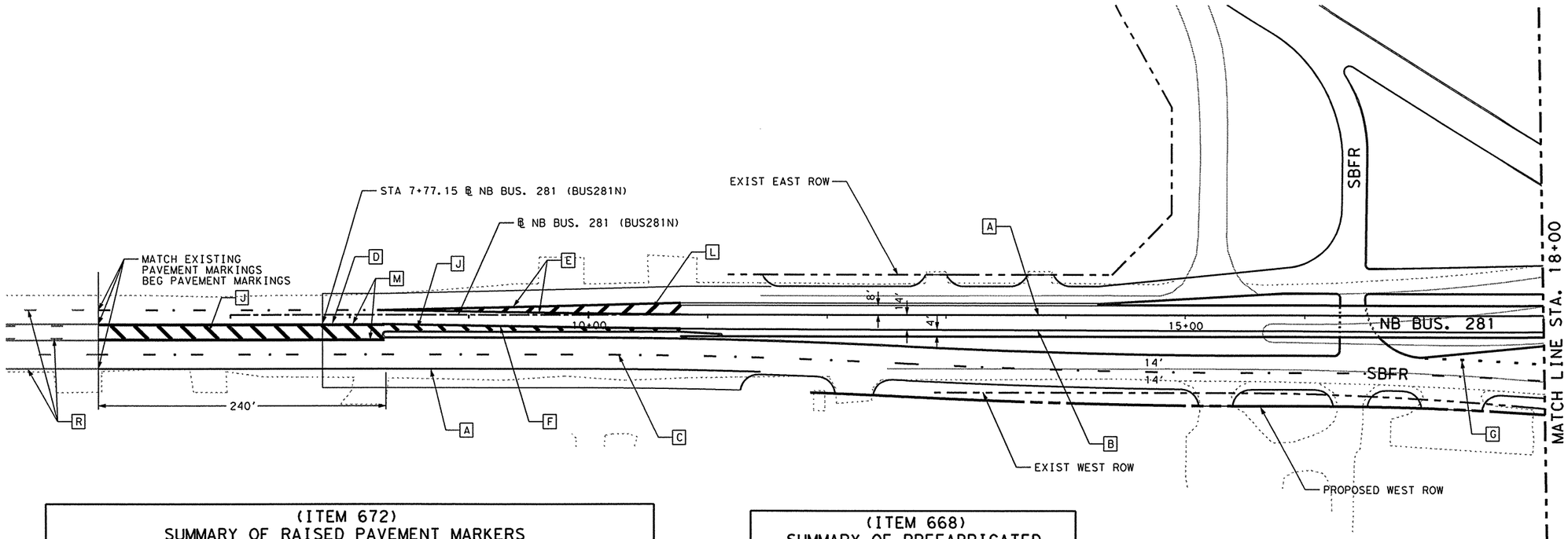

LEGEND:

(90 MIL) THERMOPLASTIC

- [A] 4" SOLID WHITE STRIPE
- [B] 4" SOLID YELLOW STRIPE
- [C] 4" BROKEN WHITE STRIPE & PVMT MRK TY II-CR (DETAIL "B")
- [D] 4" BROKEN YELLOW STRIPE & PVMT MRK TY II-AA (DETAIL "E")
- [E] 8" SOLID WHITE STRIPE (DETAIL "C" OR "F")
- [F] 8" SOLID YELLOW STRIPE (DETAIL "G")
- [G] 12" LANE DROP WHITE
- [H] 24" SOLID WHITE STRIPE
- [J] 24" SOLID YELLOW CROSSHATCHING @ 20' C-C & ROTATED 45°
- [K] WRONG WAY ARROW
- [L] 24" SOLID WHITE CROSSHATCHING @ 20' C-C & ROTATED 45°
- [M] 2-4" SOLID YELLOW STRIPES (DETAIL "D")
- [N] PREFABRICATED WORDS OR ARROWS (TYP)
- [P] 12" SOLID WHITE STRIPE
- [R] EXISTING PVMT MRK

(ITEM 672) SUMMARY OF RAISED PAVEMENT MARKERS

STATION LIMITS	CL B, (REFL) TY I-A (SGL REFL) EA		TY I-C (SGL REFL) EA		TY I-R (SGL REFL) EA		TY II-AA (DBL REFL) EA		TY II-CR (DBL REFL) EA	
	EST	FIN	EST	FIN	EST	FIN	EST	FIN	EST	FIN
STA. 100+00 TO STA. 108+00	26						48		84	
SHEET TOTALS:	26						48		84	

(ITEM 668) SUMMARY OF PREFABRICATED PAVEMENT MARKINGS

TY B (WHITE)		SHEET TOTALS:
DESCRIPTION	UNIT	QUANTITY
WORD (ONLY)	EA	
ARROW (LEFT)	EA	
ARROW (RIGHT)	EA	
ARROW (STRAIGHT)	EA	

(ITEM 666) SUMMARY OF REFLECTORIZED PAVEMENT MARKERS

STATION LIMITS	TY I-THERMOPLASTIC, (90 MIL) 4" BROKEN WHITE (LF)		4" SOLID WHITE (LF)		12" LNDP WHITE (LF)		8" SOLID WHITE (LF)		24" SOLID WHITE (LF)		4" BROKEN YELLOW (LF)		4" SOLID YELLOW (LF)		8" SOLID YELLOW (LF)		24" SOLID YELLOW (LF)	
	EST	FIN	EST	FIN	EST	FIN	EST	FIN	EST	FIN	EST	FIN	EST	FIN	EST	FIN	EST	FIN
STA. 108+00	369		1278		20		509		90				1683		250		306	
SHEET TOTALS:	369		1278		20		509		90				1683		250		306	

(ITEM 677) SUMMARY OF EXISTING PAVEMENT MARKING AND MARKER ELIMINATION

STATION LIMITS	ELIMI EXT PAV MRK & MRKR (4") (LF)		ELIMI EXT RAIS PAV MRKR (EA)		ELIMI EXT PAV MRK (ARROW) (EA)	
	EST	FIN	EST	FIN	EST	FIN
STA. 100+00 TO STA. 108+00	752		27		2	
SHEET TOTALS:	752		27		2	

THE SEAL APPEARING ON THIS DOCUMENT WAS AUTHORIZED BY JAIME AGUILAR, P.E. 87606 ON 06/26/2003.

STATE OF TEXAS · JAIME AGUILAR · 87606 · REGISTERED PROFESSIONAL ENGINEER

Parsons Brinckerhoff Quade & Douglas Inc.

Texas Department of Transportation

© 2003 by TxDOT

US 281 PAVEMENT MARKINGS DETAILS

STA. 7+00 "BUS281N" TO STA. 18+00 "BUS281N"

PLAN 1"= 100' HORIZ

SHEET 25 OF 33 | 281ST25.DGN

DESIGNED: TT	FED. RD DIV. NO.	STATE	FEDERAL AID PROJECT NO.	HIGHWAY NO.
CHECKED: DM	6	TEXAS		US 281

DRAWN:	STATE DISTRICT	COUNTY	CONTROL No.	SECTION No.	JOB No.	SHEET No.
CHECKED: DM	PHARR	HIDALGO	0255	08	091	914

i:\22322a\cadd\sheets\traffic\markings\281st25.dgn

NAME
05:02:46 PM
06/26/2003
i:\22322o\cadd\sheets\traffic\markings\281st26.dgn

(ITEM 666)
SUMMARY OF REFLECTORIZED PAVEMENT MARKERS

STATION LIMITS	TY I-THERMOPLASTIC, (90 MIL)																	
	4" BROKEN WHITE (LF)		4" SOLID WHITE (LF)		12" LNDP WHITE (LF)		8" SOLID WHITE (LF)		24" SOLID WHITE (LF)		4" BROKEN YELLOW (LF)		4" SOLID YELLOW (LF)		8" SOLID YELLOW (LF)		24" SOLID YELLOW (LF)	
	EST	FIN	EST	FIN	EST	FIN	EST	FIN	EST	FIN	EST	FIN	EST	FIN	EST	FIN	EST	FIN
STA.106+00 TO END OF BUS 281			1100										1100					
SHEET TOTALS:			1100										1100					

(ITEM 672)
SUMMARY OF RAISED PAVEMENT MARKERS

STATION LIMITS	CL B, (REFL)									
	TY I-A (SGL REFL) EA		TY I-C (SGL REFL) EA		TY I-R (SGL REFL) EA		TY II-AA (DBL REFL) EA		TY II-CR (DBL REFL) EA	
	EST	FIN	EST	FIN	EST	FIN	EST	FIN	EST	FIN
STA.106+00 TO END OF BUS 281										
SHEET TOTALS:										

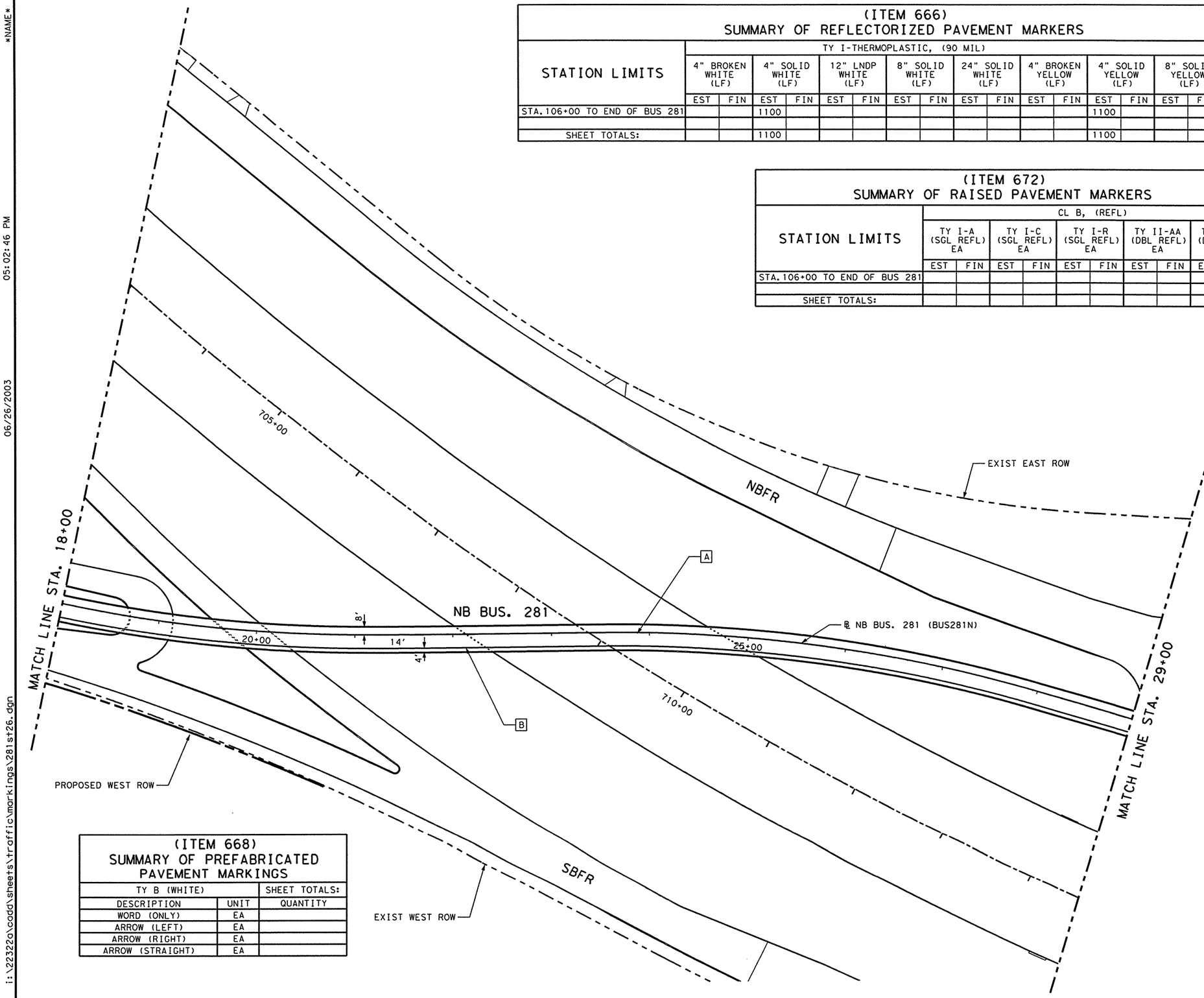

(ITEM 668)
SUMMARY OF PREFABRICATED PAVEMENT MARKINGS

TY B (WHITE)		SHEET TOTALS:
DESCRIPTION	UNIT	QUANTITY
WORD (ONLY)	EA	
ARROW (LEFT)	EA	
ARROW (RIGHT)	EA	
ARROW (STRAIGHT)	EA	

LEGEND:

(90 MIL) THERMOPLASTIC

- [A] 4" SOLID WHITE STRIPE
- [B] 4" SOLID YELLOW STRIPE
- [C] 4" BROKEN WHITE STRIPE & PVMT MRK TY II-CR (DETAIL "B")
- [D] 4" BROKEN YELLOW STRIPE & PVMT MRK TY II-AA (DETAIL "E")
- [E] 8" SOLID WHITE STRIPE (DETAIL "C" OR "F")
- [F] 8" SOLID YELLOW STRIPE (DETAIL "G")
- [G] 12" LANE DROP WHITE
- [H] 24" SOLID WHITE STRIPE
- [J] 24" SOLID YELLOW CROSSHATCHING @ 20' C-C & ROTATED 45°
- [K] WRONG WAY ARROW
- [L] 24" SOLID WHITE CROSSHATCHING @ 20' C-C & ROTATED 45°
- [M] 2-4" SOLID YELLOW STRIPES (DETAIL "D")
- [N] PREFABRICATED WORDS OR ARROWS (TYP)
- [P] 12" SOLID WHITE STRIPE
- [R] EXISTING PVMT MRK

THE SEAL APPEARING ON THIS DOCUMENT WAS AUTHORIZED BY JAIME AGUILAR, P.E. 87606 ON 06/26/2003.

STATE OF TEXAS
JAIME AGUILAR
87606
REGISTERED PROFESSIONAL ENGINEER

Parsons Brinckerhoff Quade & Douglas Inc.

Texas Department of Transportation

© 2003 by TxDOT

US 281
PAVEMENT MARKINGS
DETAILS

STA. 18+00 "BUS281N"
TO STA. 29+00 "BUS281N"

PLAN 1"= 100' HORIZ

SHEET 26 OF 33 | 281ST26.DGN

DESIGNED: TT	FED. RD DIV. NO.	STATE	FEDERAL AID PROJECT NO.			HIGHWAY NO.	
CHECKED: DM	6	TEXAS				US 281	
DRAWN: KTD	STATE DISTRICT	COUNTY	CONTROL No.	SECTION No.	JOB No.	SHEET No.	
CHECKED: DM	PHARR	HIDALGO	0255	08	091	915	

NAME

05:02:51 PM

06/26/2003

i:\22322\cadd\sheets\traffic\markings\281st26a.dgn

(ITEM 666)
SUMMARY OF REFLECTORIZED PAVEMENT MARKERS

STATION LIMITS	TY I-THERMOPLASTIC, (90 MIL)																	
	4" BROKEN WHITE (LF)		4" SOLID WHITE (LF)		12" LNDP WHITE (LF)		8" SOLID WHITE (LF)		24" SOLID WHITE (LF)		4" BROKEN YELLOW (LF)		4" SOLID YELLOW (LF)		8" SOLID YELLOW (LF)		24" SOLID YELLOW (LF)	
	EST	FIN	EST	FIN	EST	FIN	EST	FIN	EST	FIN	EST	FIN	EST	FIN	EST	FIN	EST	FIN
STA.106+00 TO END OF BUS 281			718										718					
SHEET TOTALS:			718										718					

(ITEM 672)
SUMMARY OF RAISED PAVEMENT MARKERS

STATION LIMITS	CL B, (REFL)									
	TY I-A (SGL REFL) EA		TY I-C (SGL REFL) EA		TY I-R (SGL REFL) EA		TY II-AA (DBL REFL) EA		TY II-CR (DBL REFL) EA	
	EST	FIN	EST	FIN	EST	FIN	EST	FIN	EST	FIN
STA.106+00 TO END OF BUS 281										
SHEET TOTALS:										

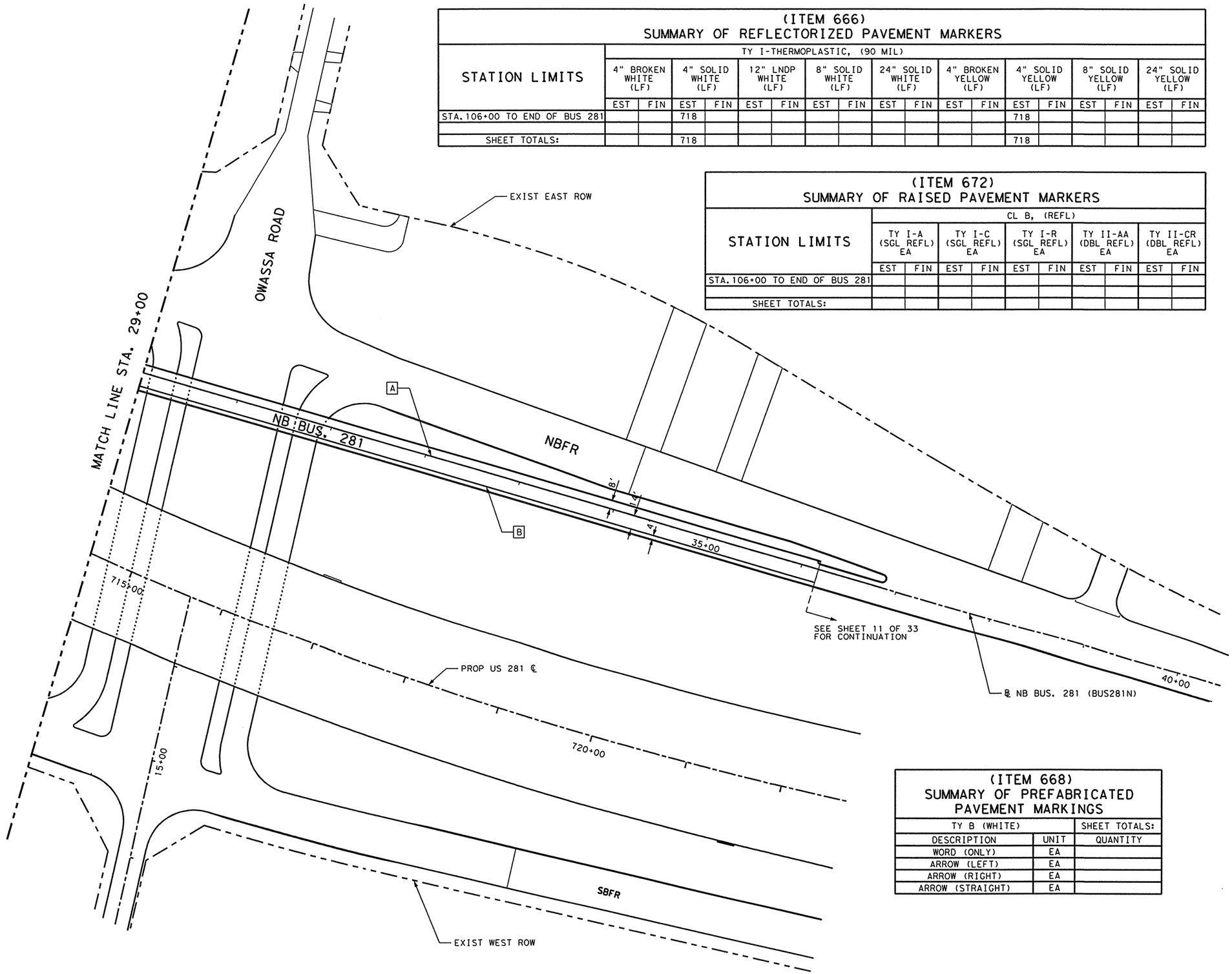

(ITEM 668)
SUMMARY OF PREFABRICATED PAVEMENT MARKINGS

TY B (WHITE)		SHEET TOTALS:
DESCRIPTION	UNIT	QUANTITY
WORD (ONLY)	EA	
ARROW (LEFT)	EA	
ARROW (RIGHT)	EA	
ARROW (STRAIGHT)	EA	

LEGEND:

(90 MIL) THERMOPLASTIC

- [A] 4" SOLID WHITE STRIPE
- [B] 4" SOLID YELLOW STRIPE
- [C] 4" BROKEN WHITE STRIPE & PVMT MRK TY II-CR (DETAIL "B")
- [D] 4" BROKEN YELLOW STRIPE & PVMT MRK TY II-AA (DETAIL "E")
- [E] 8" SOLID WHITE STRIPE (DETAIL "C" OR "F")
- [F] 8" SOLID YELLOW STRIPE (DETAIL "G")
- [G] 12" LANE DROP WHITE
- [H] 24" SOLID WHITE STRIPE
- [J] 24" SOLID YELLOW CROSSHATCHING @ 20' C-C & ROTATED 45°
- [K] WRONG WAY ARROW
- [L] 24" SOLID WHITE CROSSHATCHING @ 20' C-C & ROTATED 45°
- [M] 2-4" SOLID YELLOW STRIPES (DETAIL "D")
- [N] PREFABRICATED WORDS OR ARROWS (TYP)
- [P] 12" SOLID WHITE STRIPE
- [R] EXISTING PVMT MRK

THE SEAL APPEARING ON THIS DOCUMENT WAS AUTHORIZED BY JAIME AGUILAR, P.E. 87606 ON 06/26/2003.

STATE OF TEXAS
JAIME AGUILAR
87606
REGISTERED PROFESSIONAL ENGINEER

Parsons Brinckerhoff Quade & Douglas Inc.

Texas Department of Transportation

© 2003 by TxDOT

US 281
PAVEMENT MARKINGS
DETAILS

STA. 29+00 "BUS281N"
TO END OF NB BUS. 281

PLAN 1"= 100' HORIZ

SHEET 27 OF 33 | 281ST26A.DGN

DESIGNED: TT	FED. RD DIV. No.	STATE	FEDERAL AID PROJECT No.			HIGHWAY No.	
CHECKED: DM	6	TEXAS				US 281	
DRAWN: KTD	STATE DISTRICT	COUNTY	CONTROL No.	SECTION No.	JOB No.	SHEET No.	
CHECKED: DM	PHARR	HIDALGO	0255	08	091	916	

NAME
05:02:55 PM
06/26/2003
i:\22322o\cadd\sheets\traffic\markings\281st26b.dgn

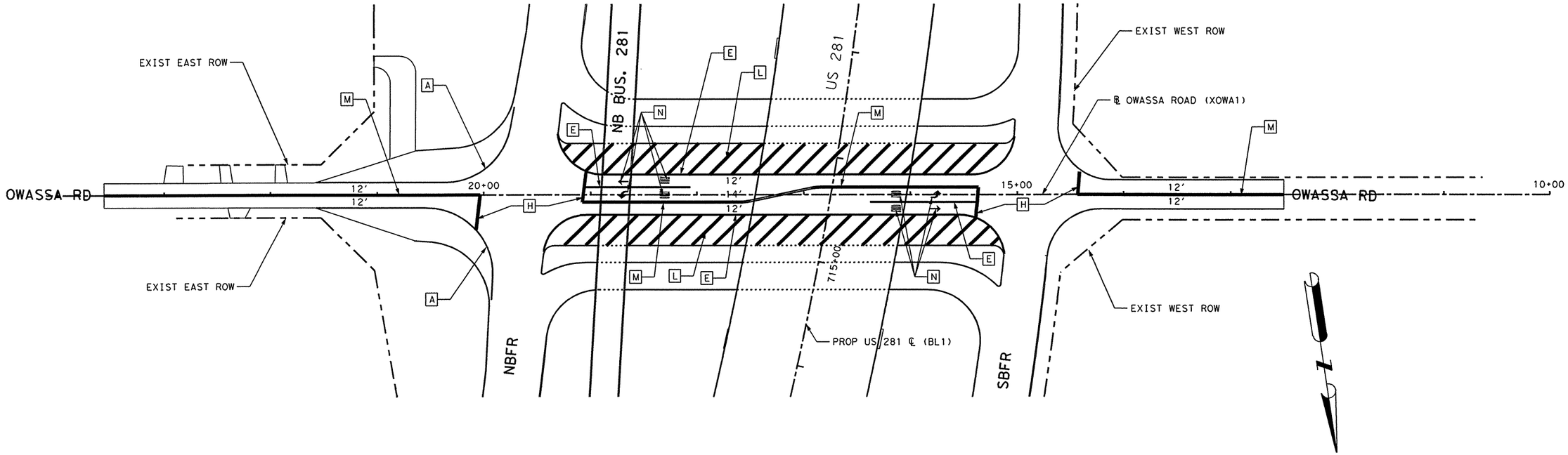

(ITEM 666)
SUMMARY OF REFLECTORIZED PAVEMENT MARKERS

STATION LIMITS	TY I-THERMOPLASTIC, (90 MIL)																	
	4" BROKEN WHITE (LF)		4" SOLID WHITE (LF)		12" LNDP WHITE (LF)		8" SOLID WHITE (LF)		24" SOLID WHITE (LF)		4" BROKEN YELLOW (LF)		4" SOLID YELLOW (LF)		8" SOLID YELLOW (LF)		24" SOLID YELLOW (LF)	
	EST	FIN	EST	FIN	EST	FIN	EST	FIN	EST	FIN	EST	FIN	EST	FIN	EST	FIN	EST	FIN
STA. 708+00 - STA. 720+00			454				1136		1735				1838					
SHEET TOTALS:			454				1136		1735				1838					

(ITEM 672)
SUMMARY OF RAISED PAVEMENT MARKERS

STATION LIMITS	CL B, (REFL)									
	TY I-A (SGL REFL) EA		TY I-C (SGL REFL) EA		TY I-R (SGL REFL) EA		TY II-AA (DBL REFL) EA		TY II-CR (DBL REFL) EA	
	EST	FIN	EST	FIN	EST	FIN	EST	FIN	EST	FIN
STA. 708+00 - STA. 720+00			20				92		94	
SHEET TOTALS:			20				92		94	

(ITEM 668)
SUMMARY OF PREFABRICATED PAVEMENT MARKINGS

TY B (WHITE)		SHEET TOTALS:
DESCRIPTION	UNIT	QUANTITY
WORD (ONLY)	EA	4
ARROW (LEFT)	EA	2
ARROW (RIGHT)	EA	
ARROW (STRAIGHT)	EA	2
ARROW (U-TURN)	EA	

LEGEND:

(90 MIL) THERMOPLASTIC

- [A] 4" SOLID WHITE STRIPE
- [B] 4" SOLID YELLOW STRIPE
- [C] 4" BROKEN WHITE STRIPE & PVMT MRK TY II-CR (DETAIL "B")
- [D] 4" BROKEN YELLOW STRIPE & PVMT MRK TY II-AA (DETAIL "E")
- [E] 8" SOLID WHITE STRIPE (DETAIL "C" OR "F")
- [F] 8" SOLID YELLOW STRIPE (DETAIL "G")
- [G] 12" LANE DROP WHITE
- [H] 24" SOLID WHITE STRIPE
- [J] 24" SOLID YELLOW CROSSHATCHING @ 20' C-C & ROTATED 45°
- [K] ◀ WRONG WAY ARROW
- [L] 24" SOLID WHITE CROSSHATCHING @ 20' C-C & ROTATED 45°
- [M] 2-4" SOLID YELLOW STRIPES (DETAIL "D")
- [N] PREFABRICATED WORDS OR ARROWS (TYP)
- [P] 12" SOLID WHITE STRIPE
- [R] EXISTING PVMT MRK

THE SEAL APPEARING ON THIS DOCUMENT WAS AUTHORIZED BY JAIME AGUILAR, P.E. 87606 ON 06/26/2003.

STATE OF TEXAS
JAIME AGUILAR
87606
REGISTERED PROFESSIONAL ENGINEER

Parsons Brinckerhoff Quade & Douglas Inc.

Texas Department of Transportation

© 2003 by TxDOT

US 281
PAVEMENT MARKING
DETAILS

STA. 10+00 "XOWA1" TO
STA. 24+00 "XOWA1"

PLAN 1"= 100' HORIZ

SHEET 28 OF 33 | 281ST26B.DGN

DESIGNED: TT	FED. RD DIV. NO.	STATE	FEDERAL AID PROJECT No.			HIGHWAY No.	
CHECKED: DM	6	TEXAS				US 281	
DRAWN: KTD	STATE DISTRICT	COUNTY	CONTROL No.	SECTION No.	JOB No.	SHEET No.	
CHECKED: DM	PHARR	HIDALGO	0255	08	091	917	

NAME
05:03:03 PM
06/26/2003
i:\22322o\cadd\sheets\traffic\markings\281st27.dgn

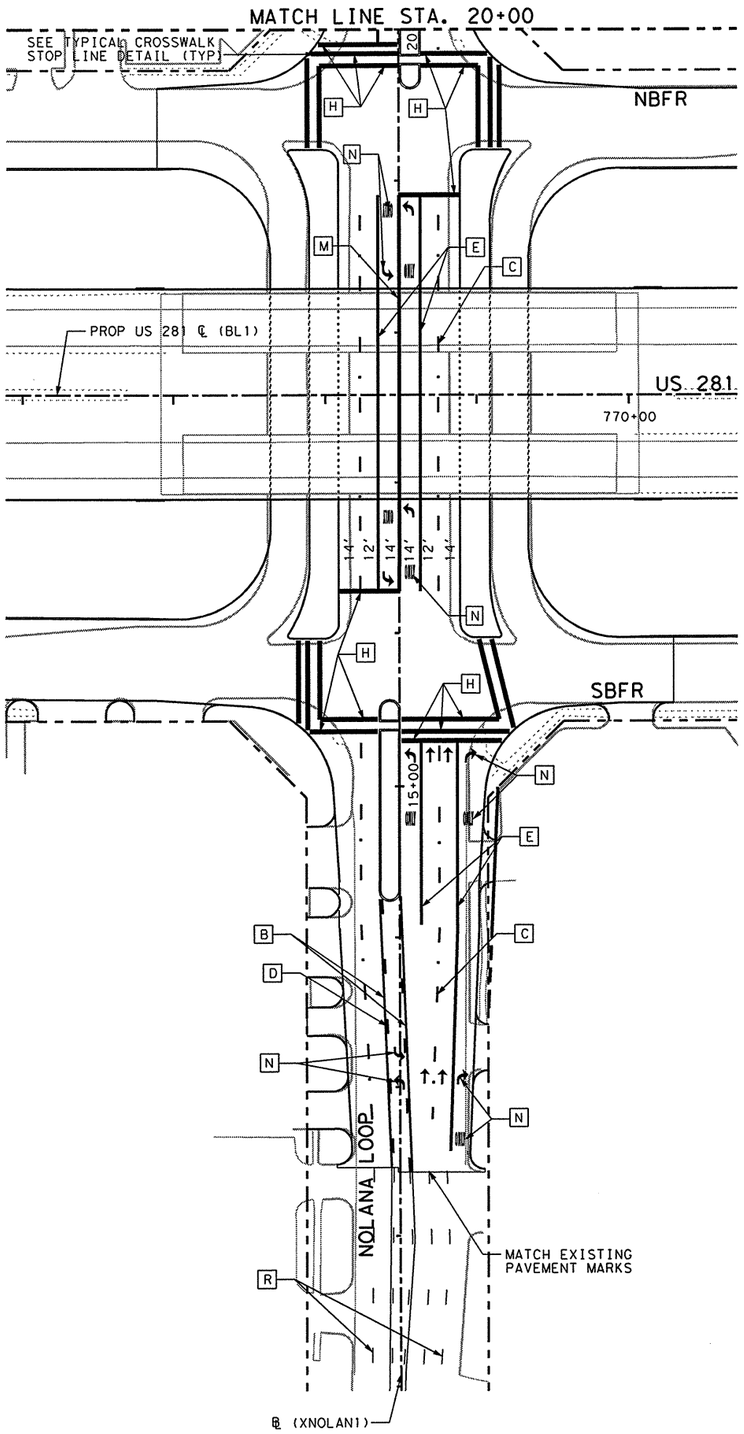

(ITEM 666) SUMMARY OF REFLECTORIZED PAVEMENT MARKERS

STATION LIMITS	TY I-THERMOPLASTIC, (90 MIL)																	
	4" BROKEN WHITE (LF)		4" SOLID WHITE (LF)		12" LNDP WHITE (LF)		8" SOLID WHITE (LF)		24" SOLID WHITE (LF)		4" BROKEN YELLOW (LF)		4" SOLID YELLOW (LF)		8" SOLID YELLOW (LF)		24" SOLID YELLOW (LF)	
	EST	FIN	EST	FIN	EST	FIN	EST	FIN	EST	FIN	EST	FIN	EST	FIN	EST	FIN	EST	FIN
STA. 10+00 - STA. 20+00	257						931		610		91		891					
SHEET TOTALS:	257						931		610		91		891					

(ITEM 672) SUMMARY OF RAISED PAVEMENT MARKERS

STATION LIMITS	CL B, (REFL)									
	TY I-A (SGL REFL) EA		TY I-C (SGL REFL) EA		TY I-R (SGL REFL) EA		TY II-AA (DBL REFL) EA		TY II-CR (DBL REFL) EA	
	EST	FIN	EST	FIN	EST	FIN	EST	FIN	EST	FIN
STA. 10+00 - STA. 20+00			372				52			
SHEET TOTALS:			372				52			

(ITEM 668) SUMMARY OF PREFABRICATED PAVEMENT MARKINGS

TY B (WHITE)		SHEET TOTALS:
DESCRIPTION	UNIT	QUANTITY
WORD (ONLY)	EA	7
ARROW (LEFT)	EA	7
ARROW (RIGHT)	EA	2
ARROW (STRAIGHT)	EA	4

LEGEND:

(90 MIL) THERMOPLASTIC

- [A] 4" SOLID WHITE STRIPE
- [B] 4" SOLID YELLOW STRIPE
- [C] 4" BROKEN WHITE STRIPE & PVMT MRK TY II-CR (DETAIL "B")
- [D] 4" BROKEN YELLOW STRIPE & PVMT MRK TY II-AA (DETAIL "E")
- [E] 8" SOLID WHITE STRIPE (DETAIL "C" OR "F")
- [F] 8" SOLID YELLOW STRIPE (DETAIL "G")
- [G] 12" LANE DROP WHITE
- [H] 24" SOLID WHITE STRIPE
- [J] 24" SOLID YELLOW CROSSHATCHING @ 20' C-C & ROTATED 45°
- [K] WRONG WAY ARROW
- [L] 24" SOLID WHITE CROSSHATCHING @ 20' C-C & ROTATED 45°
- [M] 2-4" SOLID YELLOW STRIPES (DETAIL "D")
- [N] PREFABRICATED WORDS OR ARROWS (TYP)
- [P] 12" SOLID WHITE STRIPE
- [R] EXISTING PVMT MRK

THE SEAL APPEARING ON THIS DOCUMENT WAS AUTHORIZED BY JAIME AGUILAR, P.E. 87606 ON 06/26/2003.

STATE OF TEXAS
JAIME AGUILAR
87606
REGISTERED PROFESSIONAL ENGINEER

Parsons Brinckerhoff Quade & Douglas Inc.

Texas Department of Transportation

© 2003 by TxDOT

US 281 PAVEMENT MARKINGS DETAILS

STA. 10+00 "XNOLAN1" TO STA. 20+00 "XNOLAN1"

PLAN 1"= 100' HORIZ

SHEET 29 OF 33 | 281ST27.DGN

DESIGNED: TT	FED. RD DIV. No.	STATE	FEDERAL AID PROJECT No.			HIGHWAY No.	
CHECKED: DM	6	TEXAS				US 281	
DRAWN: KTD	STATE DISTRICT	COUNTY	CONTROL No.	SECTION No.	JOB No.	SHEET No.	
CHECKED: DM	PHARR	HIDALGO	0255	08	091	918	

NAME
05:03:10 PM
06/26/2003
i:\22322o\cadd\sheets\traffic\markings\281st28.dgn

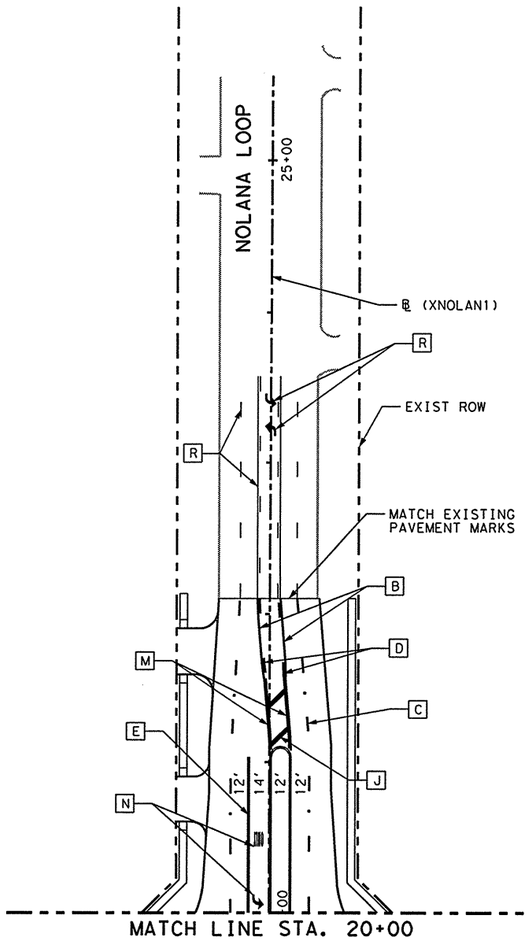

LEGEND:

(90 MIL) THERMOPLASTIC

- [A] 4" SOLID WHITE STRIPE
- [B] 4" SOLID YELLOW STRIPE
- [C] 4" BROKEN WHITE STRIPE & PVMT MRK TY II-CR (DETAIL "B")
- [D] 4" BROKEN YELLOW STRIPE & PVMT MRK TY II-AA (DETAIL "E")
- [E] 8" SOLID WHITE STRIPE (DETAIL "C" OR "F")
- [F] 8" SOLID YELLOW STRIPE (DETAIL "G")
- [G] 12" LANE DROP WHITE
- [H] 24" SOLID WHITE STRIPE
- [J] 24" SOLID YELLOW CROSSHATCHING @ 20' C-C & ROTATED 45°
- [K] ◀ WRONG WAY ARROW
- [L] 24" SOLID WHITE CROSSHATCHING @ 20' C-C & ROTATED 45°
- [M] 2-4" SOLID YELLOW STRIPES (DETAIL "D")
- [N] PREFABRICATED WORDS OR ARROWS (TYP)
- [P] 12" SOLID WHITE STRIPE
- [R] EXISTING PVMT MRK

(ITEM 668) SUMMARY OF PREFABRICATED PAVEMENT MARKINGS

TY B (WHITE)		SHEET TOTALS:
DESCRIPTION	UNIT	QUANTITY
WORD (ONLY)	EA	1
ARROW (LEFT)	EA	1
ARROW (RIGHT)	EA	
ARROW (STRAIGHT)	EA	

(ITEM 672) SUMMARY OF RAISED PAVEMENT MARKERS

STATION LIMITS	CL B, (REFL)									
	TY I-A (SGL REFL) EA		TY I-C (SGL REFL) EA		TY I-R (SGL REFL) EA		TY II-AA (DBL REFL) EA		TY II-CR (DBL REFL) EA	
	EST	FIN	EST	FIN	EST	FIN	EST	FIN	EST	FIN
STA. 20+00 - STA. 25+00			42				18		6	
SHEET TOTALS:			42				18		6	

(ITEM 666) SUMMARY OF REFLECTORIZED PAVEMENT MARKERS

STATION LIMITS	TY I-THERMOPLASTIC, (90 MIL)																	
	4" BROKEN WHITE (LF)		4" SOLID WHITE (LF)		12" LNDP WHITE (LF)		8" SOLID WHITE (LF)		24" SOLID WHITE (LF)		4" BROKEN YELLOW (LF)		4" SOLID YELLOW (LF)		8" SOLID YELLOW (LF)		24" SOLID YELLOW (LF)	
	EST	FIN	EST	FIN	EST	FIN	EST	FIN	EST	FIN	EST	FIN	EST	FIN	EST	FIN	EST	FIN
STA. 20+00 - STA. 25+00	105						103				27		304				32	
SHEET TOTALS:	105						103				27		304				32	

THE SEAL APPEARING ON THIS DOCUMENT WAS AUTHORIZED BY JAIME AGUILAR, P.E. 87606 ON 06/26/2003.

STATE OF TEXAS · JAIME AGUILAR · 87606 · REGISTERED PROFESSIONAL ENGINEER

PB Parsons Brinckerhoff Quade & Douglas Inc.

Texas Department of Transportation

© 2003 by TxDOT

US 281 PAVEMENT MARKINGS DETAILS

STA. 20+00 "XNOLAN1" TO STA. 25+00 "XNOLAN1"

PLAN 1"= 100' HORIZ

SHEET 30 OF 33 | 281ST28.DGN

DESIGNED: TT	FED. RD DIV. No.	STATE	FEDERAL AID PROJECT No.		HIGHWAY No.	
CHECKED: DM	6	TEXAS			US 281	
DRAWN: KTD	STATE DISTRICT	COUNTY	CONTROL No.	SECTION No.	JOB No.	SHEET No.
CHECKED: DM	PHARR	HIDALGO	0255	08	091	919

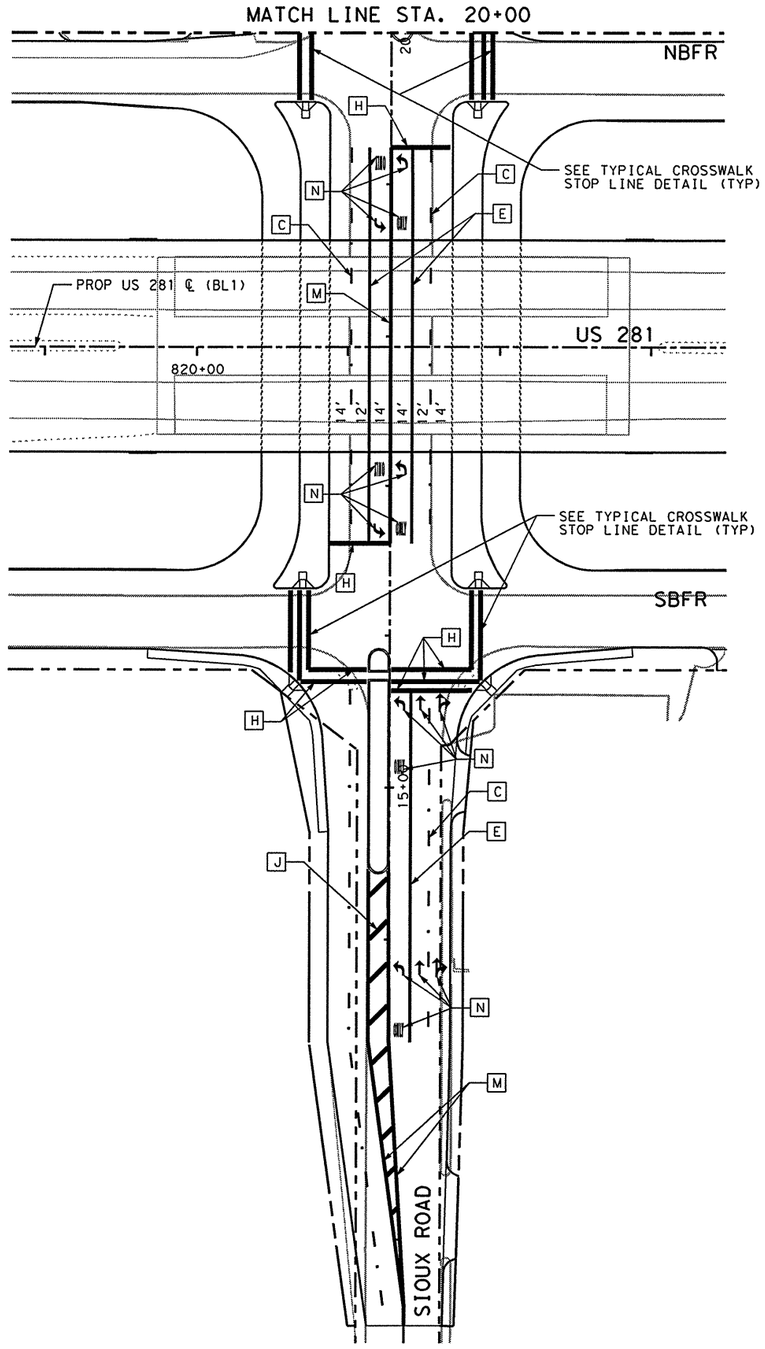

(ITEM 666) SUMMARY OF REFLECTORIZED PAVEMENT MARKERS

STATION LIMITS	TY I-THERMOPLASTIC, (90 MIL)																	
	4" BROKEN WHITE (LF)		4" SOLID WHITE (LF)		12" LNDP WHITE (LF)		8" SOLID WHITE (LF)		24" SOLID WHITE (LF)		4" BROKEN YELLOW (LF)		4" SOLID YELLOW (LF)		8" SOLID YELLOW (LF)		24" SOLID YELLOW (LF)	
	EST	FIN	EST	FIN	EST	FIN	EST	FIN	EST	FIN	EST	FIN	EST	FIN	EST	FIN	EST	FIN
STA. 10+00 - STA. 20+00	292						758		325				1698				120	
SHEET TOTALS:	292						758		325				1698				120	

(TIEM 672) SUMMARY OF RAISED PAVEMENT MARKERS

STATION LIMITS	CL B, (REFL)									
	TY I-A (SGL REFL) EA		TY I-C (SGL REFL) EA		TY I-R (SGL REFL) EA		TY II-AA (DBL REFL) EA		TY II-CR (DBL REFL) EA	
	EST	FIN	EST	FIN	EST	FIN	EST	FIN	EST	FIN
STA. 10+00 - STA. 20+00			304				86		15	
SHEET TOTALS:			304				86		15	

(ITEM 668) SUMMARY OF PREFABRICATED PAVEMENT MARKINGS

TY B (WHITE)		SHEET TOTALS:
DESCRIPTION	UNIT	QUANTITY
WORD (ONLY)	EA	6
ARROW (LEFT)	EA	6
ARROW (RIGHT)	EA	
ARROW (STRAIGHT)	EA	2
ARROW (STRAIGHT & RIGHT)	EA	2

LEGEND:

(90 MIL) THERMOPLASTIC

- [A] 4" SOLID WHITE STRIPE
- [B] 4" SOLID YELLOW STRIPE
- [C] 4" BROKEN WHITE STRIPE & PVMT MRK TY II-CR (DETAIL "B")
- [D] 4" BROKEN YELLOW STRIPE & PVMT MRK TY II-AA (DETAIL "E")
- [E] 8" SOLID WHITE STRIPE (DETAIL "C" OR "F")
- [F] 8" SOLID YELLOW STRIPE (DETAIL "G")
- [G] 12" LANE DROP WHITE
- [H] 24" SOLID WHITE STRIPE
- [J] 24" SOLID YELLOW CROSSHATCHING @ 20' C-C & ROTATED 45°
- [K] ◀ WRONG WAY ARROW
- [L] 24" SOLID WHITE CROSSHATCHING @ 20' C-C & ROTATED 45°
- [M] 2-4" SOLID YELLOW STRIPES (DETAIL "D")
- [N] PREFABRICATED WORDS OR ARROWS (TYP)
- [P] 12" SOLID WHITE STRIPE
- [R] EXISTING PVMT MRK

THE SEAL APPEARING ON THIS DOCUMENT WAS AUTHORIZED BY JAIME AGUILAR, P.E. 87606 ON 06/26/2003.

STATE OF TEXAS
JAIME AGUILAR
87606
REGISTERED
PROFESSIONAL ENGINEER

Parsons Brinckerhoff Quade & Douglas Inc.

Texas Department of Transportation

© 2003 by TxDOT

US 281 PAVEMENT MARKINGS DETAILS

STA. 10+00 "XSIOUX1" TO STA. 20+00 "XSIOUX1"

PLAN 1"= 100' HORIZ

SHEET 31 OF 33 | 281ST29.DGN

DESIGNED: TT	FED. RD DIV. No.	STATE	FEDERAL AID PROJECT No.			HIGHWAY No.	
CHECKED: DM	6	TEXAS				US 281	
DRAWN: KTD	STATE DISTRICT	COUNTY	CONTROL No.	SECTION No.	JOB No.	SHEET No.	
CHECKED: DM	PHARR	HIDALGO	0255	08	091	920	

NAME
05:03:17 PM
06/26/2003
i:\223220\cadd\sheets\traffic\markings\281st29.dgn

NAME
05:03:25 PM
06/26/2003
i:\22322a\cadd\sheets\traffic\markings\281st30.dgn

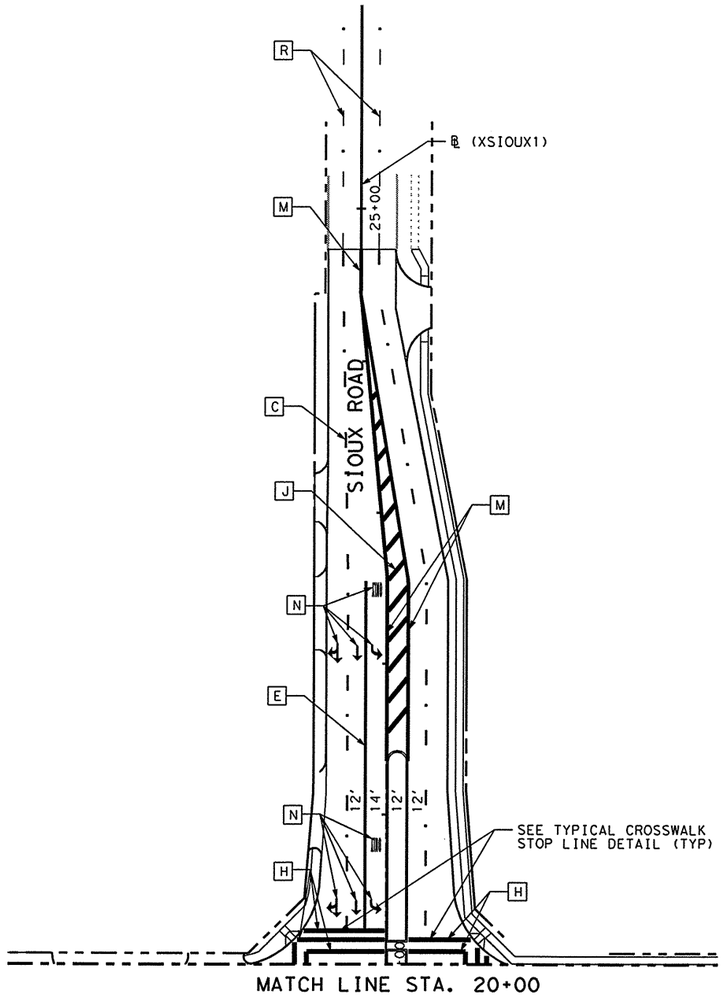

LEGEND:

(90 MIL) THERMOPLASTIC

- [A] 4" SOLID WHITE STRIPE
- [B] 4" SOLID YELLOW STRIPE
- [C] 4" BROKEN WHITE STRIPE & PVMT MRK TY II-CR (DETAIL "B")
- [D] 4" BROKEN YELLOW STRIPE & PVMT MRK TY II-AA (DETAIL "E")
- [E] 8" SOLID WHITE STRIPE (DETAIL "C" OR "F")
- [F] 8" SOLID YELLOW STRIPE (DETAIL "G")
- [G] 12" LANE DROP WHITE
- [H] 24" SOLID WHITE STRIPE
- [J] 24" SOLID YELLOW CROSSHATCHING @ 20' C-C & ROTATED 45°
- [K] WRONG WAY ARROW
- [L] 24" SOLID WHITE CROSSHATCHING @ 20' C-C & ROTATED 45°
- [M] 2-4" SOLID YELLOW STRIPES (DETAIL "D")
- [N] PREFABRICATED WORDS OR ARROWS (TYP)
- [P] 12" SOLID WHITE STRIPE
- [R] EXISTING PVMT MRK

(ITEM 668) SUMMARY OF PREFABRICATED PAVEMENT MARKINGS

TY B (WHITE)		SHEET TOTALS:
DESCRIPTION	UNIT	QUANTITY
WORD (ONLY)	EA	2
ARROW (LEFT)	EA	2
ARROW (RIGHT)	EA	
ARROW (STRAIGHT)	EA	2
ARROW (STRAIGHT & RIGHT)	EA	2

(ITEM 672) SUMMARY OF RAISED PAVEMENT MARKERS

STATION LIMITS	CL B, (REFL)									
	TY I-A (SGL REFL) EA		TY I-C (SGL REFL) EA		TY I-R (SGL REFL) EA		TY II-AA (DBL REFL) EA		TY II-CR (DBL REFL) EA	
	EST	FIN	EST	FIN	EST	FIN	EST	FIN	EST	FIN
STA. 20+00 - STA. 25+00			94				64		12	
SHEET TOTALS:			94				64		12	

(ITEM 666) SUMMARY OF REFLECTORIZED PAVEMENT MARKERS

STATION LIMITS	TY I-THERMOPLASTIC, (90 MIL)																	
	4" BROKEN WHITE (LF)		4" SOLID WHITE (LF)		12" LNDP WHITE (LF)		8" SOLID WHITE (LF)		24" SOLID WHITE (LF)		4" BROKEN YELLOW (LF)		4" SOLID YELLOW (LF)		8" SOLID YELLOW (LF)		24" SOLID YELLOW (LF)	
	EST	FIN	EST	FIN	EST	FIN	EST	FIN	EST	FIN	EST	FIN	EST	FIN	EST	FIN	EST	FIN
STA. 20+00 - STA. 25+00	228						232		241				1274				179	
SHEET TOTALS:	228						232		241				1274				179	

THE SEAL APPEARING ON THIS DOCUMENT WAS AUTHORIZED BY JAIME AGUILAR, P.E. 87606 ON 06/26/2003.

STATE OF TEXAS
JAIME AGUILAR
87606
REGISTERED PROFESSIONAL ENGINEER

Parsons Brinckerhoff Quade & Douglas Inc.

Texas Department of Transportation

© 2003 by TxDOT

US 281 PAVEMENT MARKINGS DETAILS

STA. 20+00 "XSIOUX1" TO STA. 25+00 "XSIOUX1"

PLAN 1"= 100' HORIZ

SHEET 32 OF 33 | 281ST30.DGN

DESIGNED: TT	FED. RD DIV. No.	STATE	FEDERAL AID PROJECT No.		HIGHWAY No.	
CHECKED: DM	6	TEXAS			US 281	
DRAWN: KTD	STATE DISTRICT	COUNTY	CONTROL No.	SECTION No.	JOB No.	SHEET No.
CHECKED: DM	PHARR	HIDALGO	0255	08	091	921

NAME
05:03:29 PM
06/26/2003
i:\22322o\cadd\sheets\traffic\markings\281st31.dgn

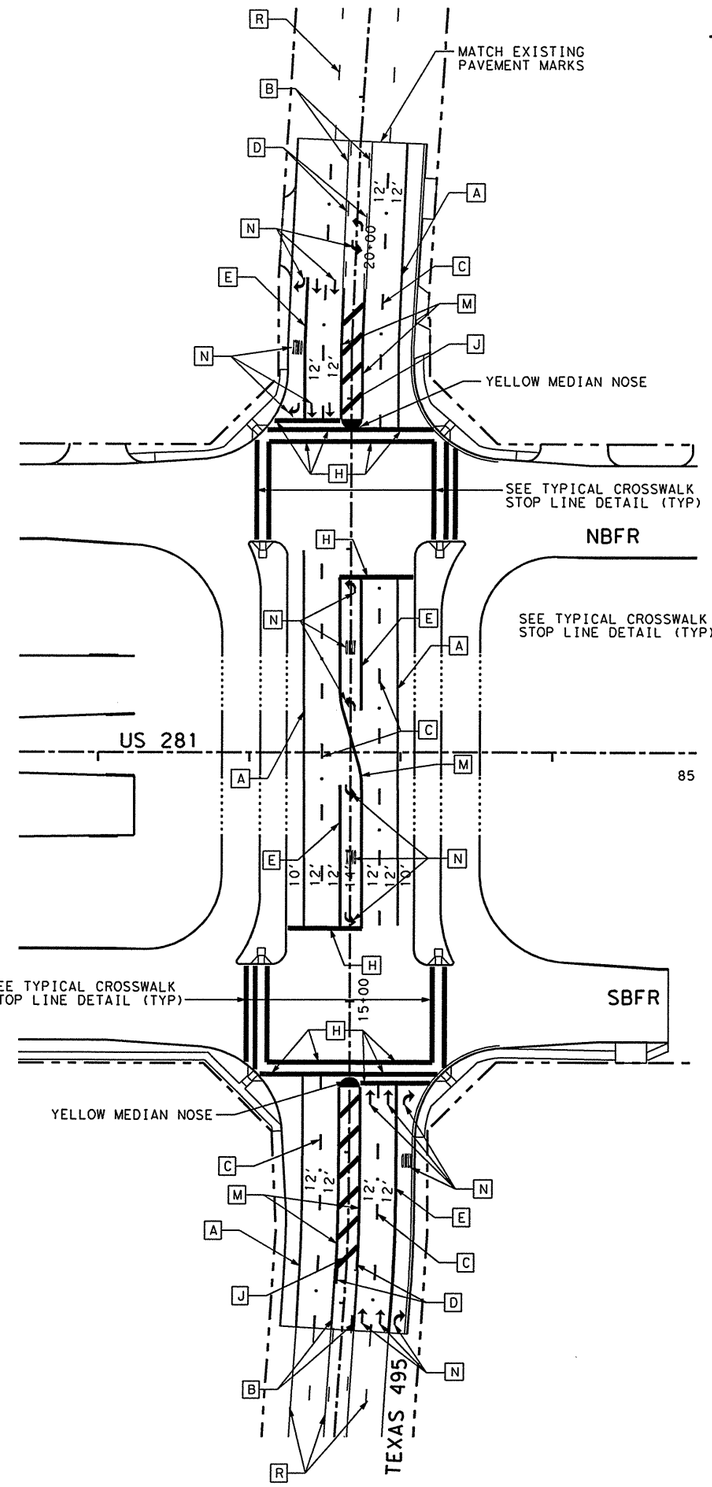

(ITEM 666) SUMMARY OF REFLECTORIZED PAVEMENT MARKERS

STATION LIMITS	TY I-THERMOPLASTIC, (90 MIL)																			
	4" BROKEN WHITE (LF)		4" SOLID WHITE (LF)		12" LNDP WHITE (LF)		8" SOLID WHITE (LF)		24" SOLID WHITE (LF)		4" BROKEN YELLOW (LF)		4" SOLID YELLOW (LF)		8" SOLID YELLOW (LF)		24" SOLID YELLOW (LF)		YELLOW MED NOSE (EA)	
	EST	FIN	EST	FIN	EST	FIN	EST	FIN	EST	FIN	EST	FIN	EST	FIN	EST	FIN	EST	FIN	EST	FIN
STA. 10+00 - STA. 19+00	295		840				443		632		69		1573				334		2	
SHEET TOTALS:	295		840				443		632		69		1573				334		2	

(ITEM 672) SUMMARY OF RAISED PAVEMENT MARKERS

STATION LIMITS	CL B, (REFL)									
	TY I-A (SGL REFL) EA		TY I-C (SGL REFL) EA		TY I-R (SGL REFL) EA		TY II-AA (DBL REFL) EA		TY II-CR (DBL REFL) EA	
	EST	FIN	EST	FIN	EST	FIN	EST	FIN	EST	FIN
STA. 10+00 - STA. 19+00			178				84		15	
SHEET TOTALS:			178				84		15	

(ITEM 668) SUMMARY OF PREFABRICATED PAVEMENT MARKINGS

TY B (WHITE)		SHEET TOTALS:
DESCRIPTION	UNIT	QUANTITY
WORD (ONLY)	EA	4
ARROW (LEFT)	EA	6
ARROW (RIGHT)	EA	4
ARROW (STRAIGHT)	EA	8

LEGEND:

(90 MIL) THERMOPLASTIC

- [A] 4" SOLID WHITE STRIPE
- [B] 4" SOLID YELLOW STRIPE
- [C] 4" BROKEN WHITE STRIPE & PVMT MRK TY II-CR (DETAIL "B")
- [D] 4" BROKEN YELLOW STRIPE & PVMT MRK TY II-AA (DETAIL "E")
- [E] 8" SOLID WHITE STRIPE (DETAIL "C" OR "F")
- [F] 8" SOLID YELLOW STRIPE (DETAIL "G")
- [G] 12" LANE DROP WHITE
- [H] 24" SOLID WHITE STRIPE
- [J] 24" SOLID YELLOW CROSSHATCHING @ 20' C-C & ROTATED 45°
- [K] ◀ WRONG WAY ARROW
- [L] 24" SOLID WHITE CROSSHATCHING @ 20' C-C & ROTATED 45°
- [M] 2-4" SOLID YELLOW STRIPES (DETAIL "D")
- [N] PREFABRICATED WORDS OR ARROWS (TYP)
- [P] 12" SOLID WHITE STRIPE
- [R] EXISTING PVMT MRK

THE SEAL APPEARING ON THIS DOCUMENT WAS AUTHORIZED BY JAIME AGUILAR, P.E. 87606 ON 06/26/2003.

STATE OF TEXAS
JAIME AGUILAR
87606
REGISTERED PROFESSIONAL ENGINEER

Parsons Brinckerhoff Quade & Douglas Inc.

Texas Department of Transportation

© 2003 by TxDOT

US 281 PAVEMENT MARKINGS DETAILS

STA. 10+00 "XFM4951" TO
STA. 19+00 "XFM4951"

PLAN 1"= 100' HORIZ

SHEET 33 OF 33 | 281ST31.DGN

DESIGNED: TT	FED. RD DIV. No.	STATE	FEDERAL AID PROJECT No.			HIGHWAY No.
CHECKED: DM	6	TEXAS				US 281
DRAWN:	STATE DISTRICT	COUNTY	CONTROL No.	SECTION No.	JOB No.	SHEET No.
CHECKED: DM	PHARR	HIDALGO	0255	08	091	922

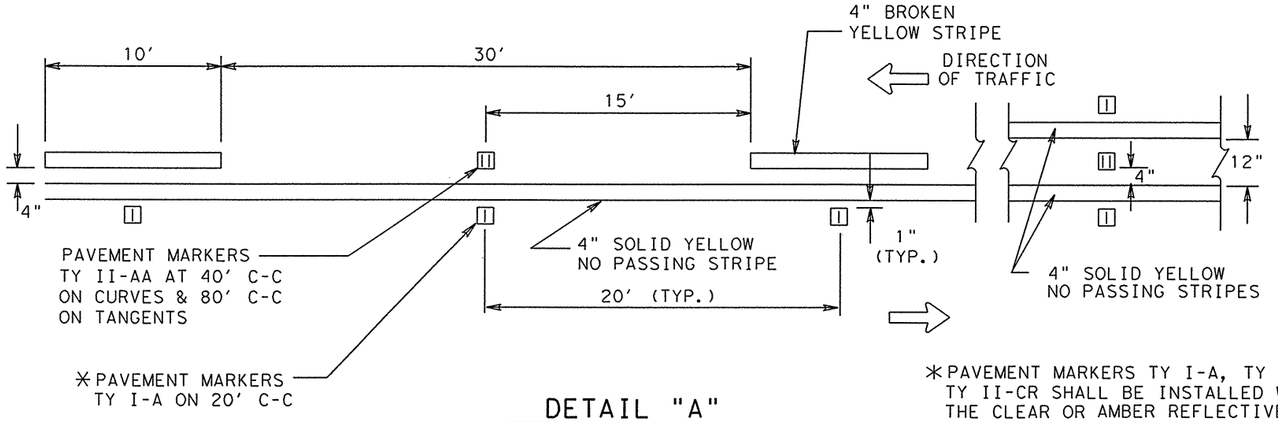

DETAIL "A"

✳PAVEMENT MARKERS TY I-A, TY I-C & TY II-CR SHALL BE INSTALLED WITH THE CLEAR OR AMBER REFLECTIVE FACE TOWARDS THE DIRECTION OF ONCOMING TRAFFIC.

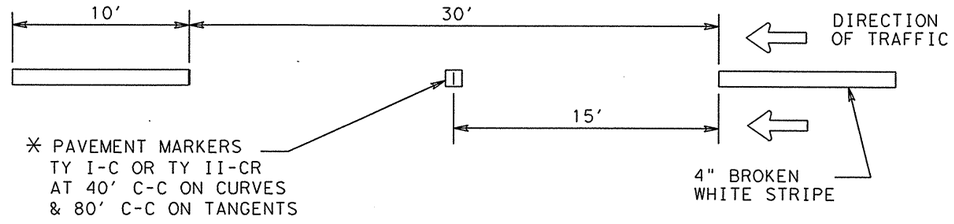

DETAIL "B"

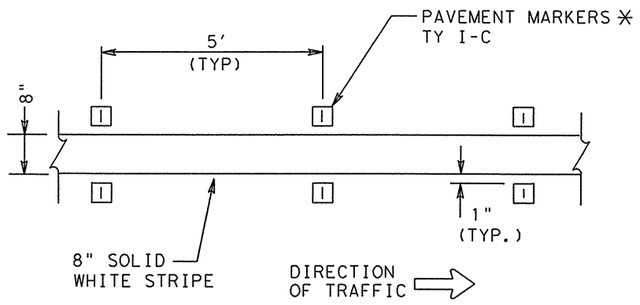

DETAIL "C"

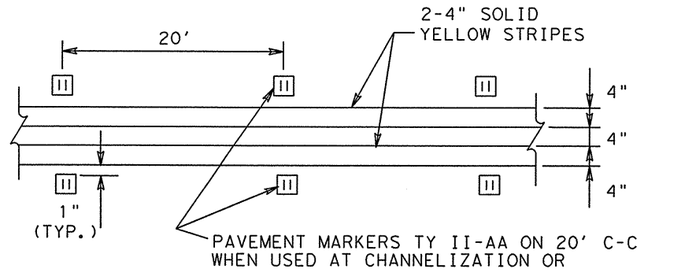

DETAIL "D"

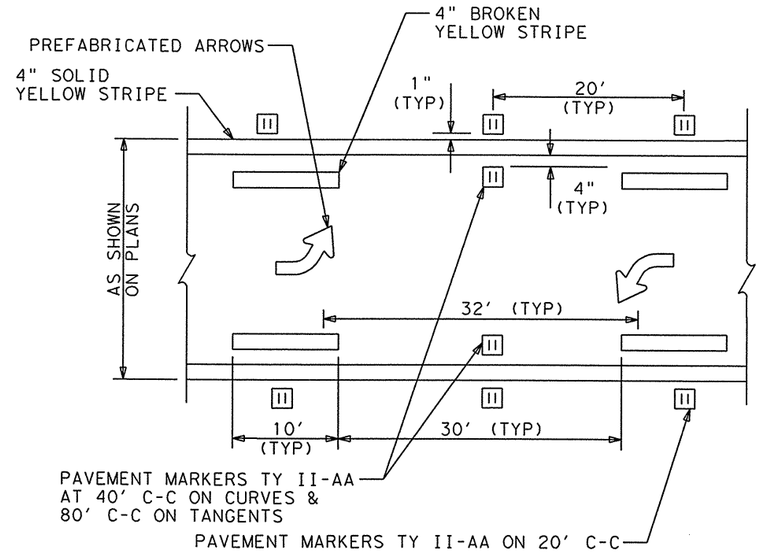

DETAIL "E"

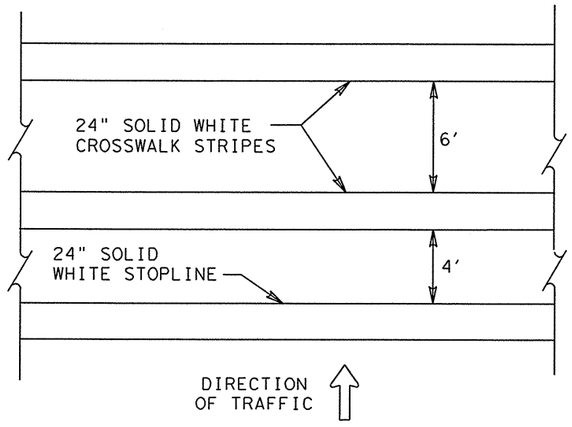

DETAIL-CROSSWALK/STOPLINE

NOTES:

ALL PERMANENT PAVEMENT MARKINGS AND MARKERS SHALL BE INSTALLED BY THE CONTRACTOR.

THE PAVEMENT SURFACE SHALL BE FREE OF DELETERIOUS MATERIAL BEFORE APPLICATION OF PERMANENT STRIPING AND PAVEMENT MARKERS. IF THE SURFACE NEEDS TO BE CLEANED, AS DETERMINED BY THE ENGINEER, THE CONTRACTOR SHALL PREPARE THE SURFACE IN ACCORDANCE WITH ITEM 678, "PAVEMENT SURFACE PREPARATION FOR MARKINGS", EXCEPT FOR "MEASUREMENT" AND "PAYMENT". THE PREPARATION OF PAVEMENT SURFACE SHALL BE SUBSIDIARY TO ITEMS 666, 668 AND 672.

ALL PERMANENT PAVEMENT MARKINGS SHALL BE (90MIL) THERMOPLASTIC.

TEXAS DEPARTMENT OF TRANSPORTATION

PAVEMENT MARKING DETAILS

FTP: 144.45.60.218

© 2001TxDOT

pmstd1ex.dgn

SHEET 1 OF 2

DN: RDG	DRAWING	DATE	FED.RD. DIV.NO.	STATE	PROJECT NO.			SHEET NO.
CK DN:	ORIGINAL	JUL. 2000	6	TEXAS				923
DW: RDG			STATE DIST.NO.	COUNTY	CONTROL NO.	SECTION NO.	JOB NO.	HIGHWAY NO.
CK DW:			PHARR	HIDALGO	0255	08	091	US281

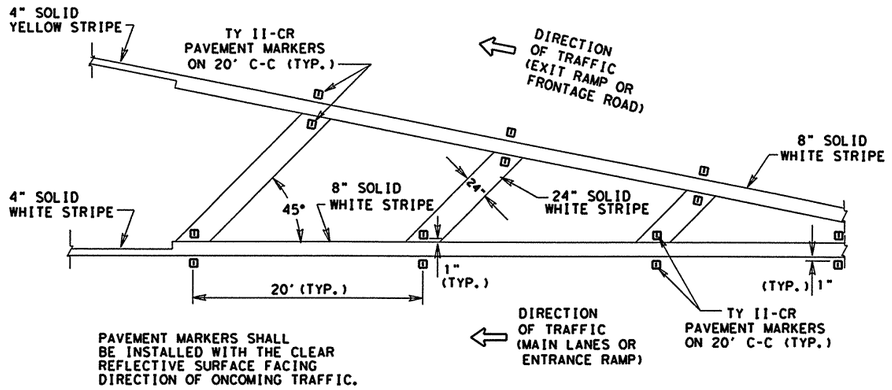

DETAIL "F"- GORE MARKINGS

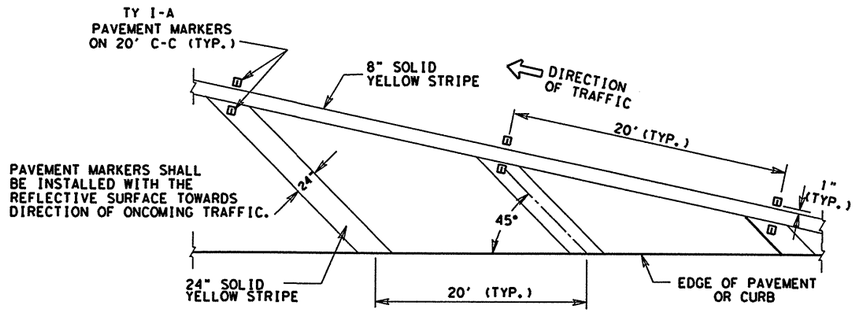

DETAIL "G"- LANE TRANSITION MARKINGS

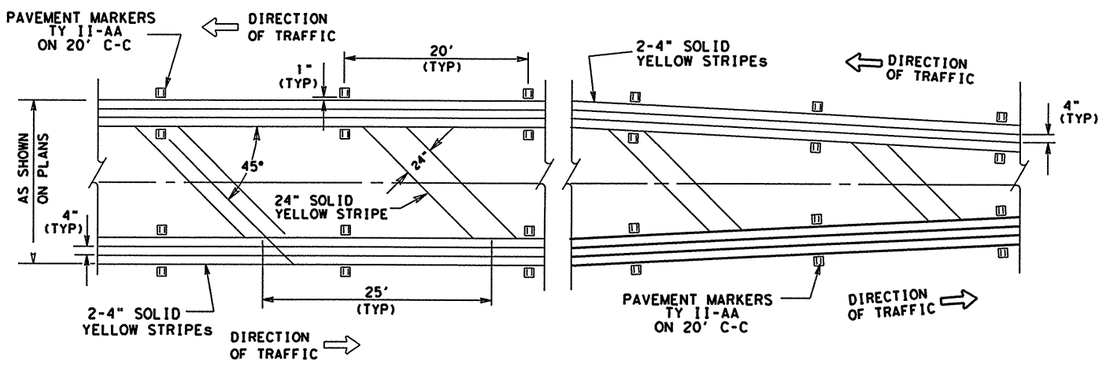

DETAIL "H" - PAINTED FLUSH MEDIAN/TRANSITION

ALL INDIVIDUAL UNIT MARKERS IN THE WRONG WAY ARROW SHALL BE THE TYPE I-R REFLECTORIZED PAVEMENT MARKERS WITH THE RED REFLECTORIZED SURFACE FACING THE WRONG WAY TRAFFIC. (TYPE II-CR SHALL NOT BE USED.)

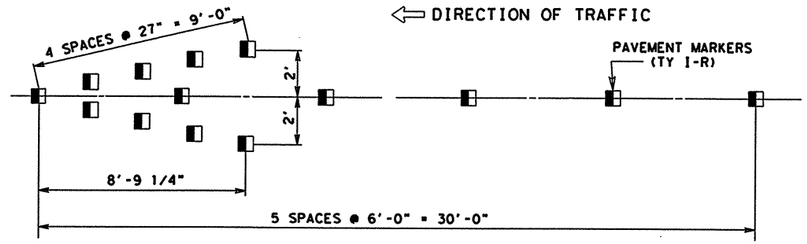

DETAIL - WRONG WAY ARROW

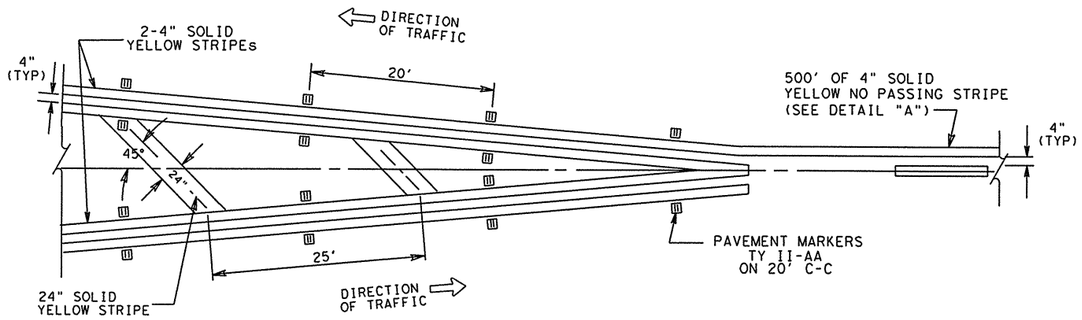

DETAIL "J"- MEDIAN TRANSITION

TEXAS DEPARTMENT OF TRANSPORTATION

PAVEMENT MARKING DETAILS

FTP: 144.45.60.218

© 2001 TxDOT

pmstd1ex.dgn | SHEET 2 OF 2

DN: RDG	DRAWING	DATE	FED.RD. DIV.NO.	STATE	PROJECT NO.				SHEET NO.
CK DN:	ORIGINAL	JUL. 2000	6	TEXAS					924
DW: RDG			STATE DIST. NO.	COUNTY	CONTROL NO.	SECTION NO.	JOB NO.	HIGHWAY NO.	
CK DW:			PHARR	HIDALGO	0255	08	091	US281	

DISCLAIMER
The use of this standard is governed by the "Texas Engineering Practice Act". No warranty of any kind is made by TxDOT for any purpose whatsoever. TxDOT assumes no responsibility for the conversion of this standard to other formats or for incorrect results or damages resulting from its use.

TWO LANE TWO-WAY ROADWAY WITH OR WITHOUT SHOULDERS

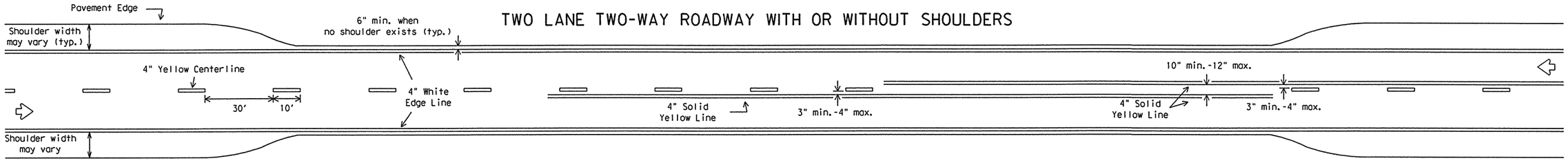

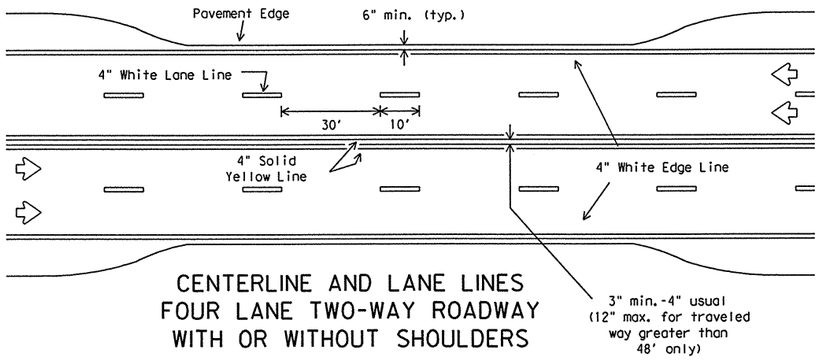

CENTERLINE AND LANE LINES FOUR LANE TWO-WAY ROADWAY WITH OR WITHOUT SHOULDERS

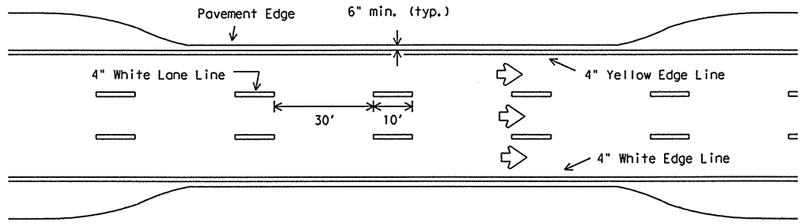

EDGE LINE AND LANE LINES ONE-WAY ROADWAY WITH OR WITHOUT SHOULDERS

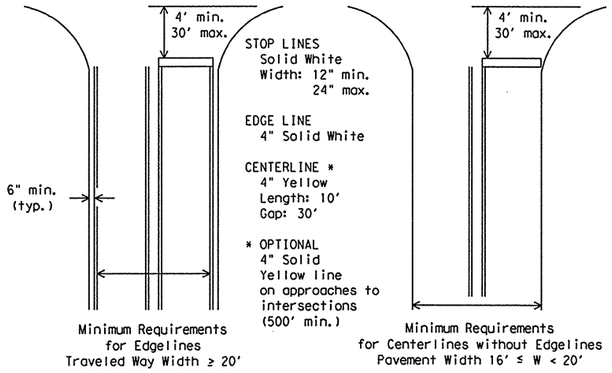

GUIDE FOR PLACEMENT OF STOP LINES, EDGE LINE & CENTERLINE

Based on Traveled Way and Pavement Widths for Undivided Highways

FOUR LANE DIVIDED ROADWAY INTERSECTIONS

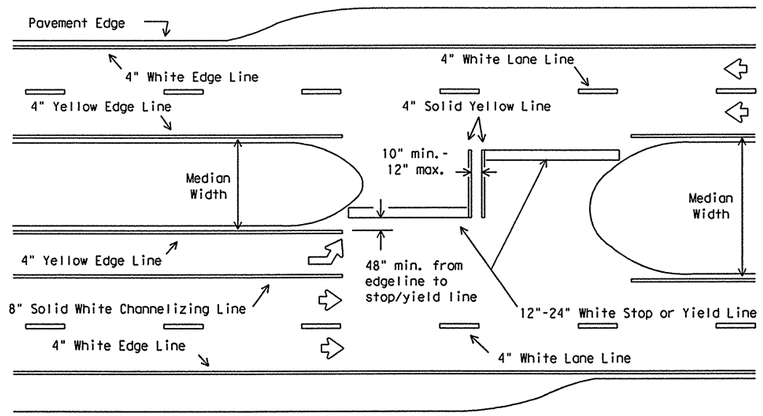

All medians shall be field measured to determine the location of necessary striping. Stop/Yield bars and centerlines shall be placed when the median width is greater than 30 ft. The median width is defined as the area between two roadways of a divided highway measured from edge of traveled way to edge of traveled way. The median excludes turn lanes. The median width might be different between intersections, interchanges and of opposite approaches of the same intersection. The narrow median width will be the controlling width to determine if markings are required.

ROADWAYS WITH REDUCED SHOULDER WIDTHS ACROSS BRIDGE OR CULVERT

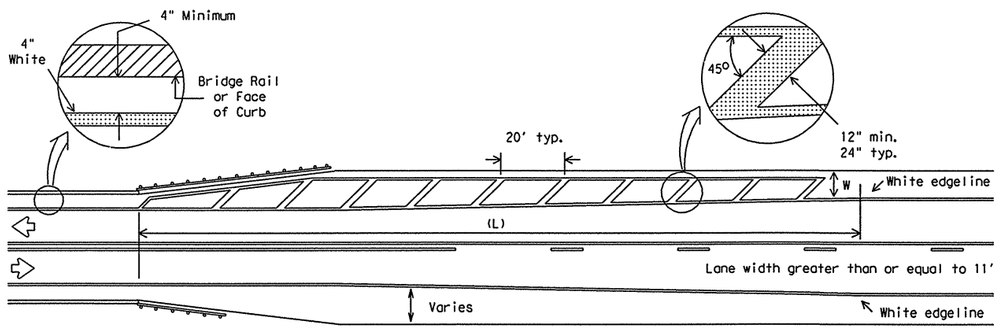

NOTES:

1. No-passing zone on bridge approach is optional but if used, it shall be a minimum 500 feet long.
2. For crosshatching length (L) see Table 1.
3. The width of the offset (W) and the required crosshatching width is the full shoulder width in advance of the bridge.
4. The crosshatching should be required if the shoulder width in advance of the bridge is 4 foot or wider and any reduction in shoulder width across the bridge occurs.
5. For guard fence details, refer elsewhere in the plans.

TABLE 1 - TYPICAL LENGTH (L)

Posted Speed *	Formula
30, 35, 40	$L = \frac{WS^2}{60}$
45, 50, 55, 60, 65, 70	L=WS

* 85th Percentile Speed may be used on roads where traffic speeds normally exceed the posted speed limit. Crosshatching length should be rounded up to nearest 5 foot increment.

L=Length of Crosshatching (FT.) W=Width of Offset (FT.)
S=Posted Speed (MPH)

EXAMPLES:

An 8 foot shoulder in advance of a bridge reduces to 4 feet on a 70 MPH roadway. The length of the cross-hatching should be:

$L = 8 \times 70 = 560$ ft.

A 4 foot shoulder in advance of a bridge reduces to 2 feet on a 40 MPH roadway. The length of the cross-hatching should be:

$L = 4(40)^2 / 60 = 106.67$ ft. rounded to 110 ft.

GENERAL NOTES:

Edgeline striping shall be as shown in the plans or as directed by the Engineer. The edgeline should typically be placed a minimum of 6 inches from the edge of pavement. This distance may vary due to pavement raveling or other conditions. Edgelines are not required in curb and gutter sections of roadways.

The traveled way includes only that portion of the roadway used for vehicular travel and not the parking lanes, sidewalks, berms and shoulders. The traveled ways shall be measured from the inside of edgeline to inside of edgeline of a two lane roadway.

All pavement marking materials shall meet the required Departmental Material Specifications as specified by the plans.

SPECIFICATION REFERENCE TABLE

MATERIAL SPECIFICATIONS	
PAVEMENT MARKERS (REFLECT.)	DMS-4200
EPOXY	DMS-6100
BITUMINOUS ADHESIVE FOR PAVEMENT MARKERS	DMS-6130

YIELD LINES

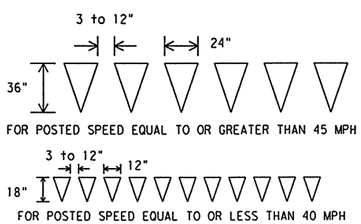

LEVELS DISPLAYED ACC:

1	2	3	4	5	6	7	8	9	10	11	12	13	14	15	16
17	18	19	20	21	22	23	24	25	26	27	28	29	30	31	32
33	34	35	36	37	38	39	40	41	42	43	44	45	46	47	48
49	50	51	52	53	54	55	56	57	58	59	60	61	62	63	

STANDARD PLANS
Texas Department of Transportation
Traffic Operations Division

TYPICAL STANDARD PAVEMENT MARKINGS

PM(1)-03

© TxDOT November 1978

DN: BAS	CK: GRB	DW: FDN	CK: CAL	MSG NO.:

REVISIONS	STATE DISTRICT	FEDERAL REGION	FEDERAL AID PROJECT	SHEET
8-95	PHARR	6		925
5-00				
8-00	COUNTY		CONTROL / SECTION / JOB	HIGHWAY
3-03	HIDALGO		0255 / 08 / 091	US 281

DISCLAIMER
The use of this standard is governed by the "Texas Engineering Practice Act". No warranty of any kind is made by TxDOT for any purpose whatsoever. TxDOT assumes no responsibility for the conversion of this standard to other formats or for incorrect results or damages resulting from its use.

REFLECTIVE RAISED PAVEMENT MARKERS FOR VEHICLE POSITIONING GUIDANCE

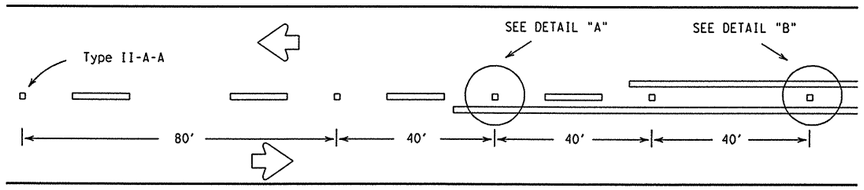

CENTERLINE FOR ALL TWO LANE ROADWAYS

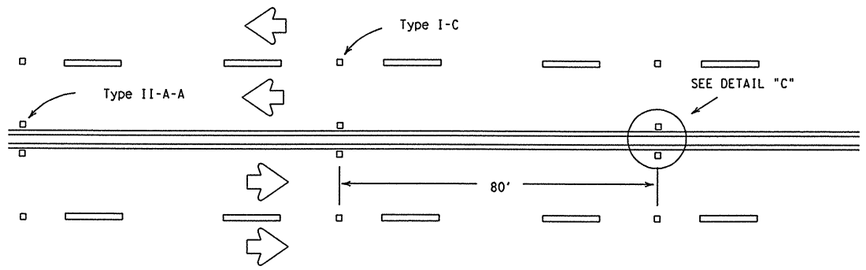

CENTERLINE & LANE LINES FOR FOUR LANE TWO-WAY HIGHWAYS

Raised pavement marker Type I-C, clear face toward normal traffic, shall be placed on 80-foot centers.

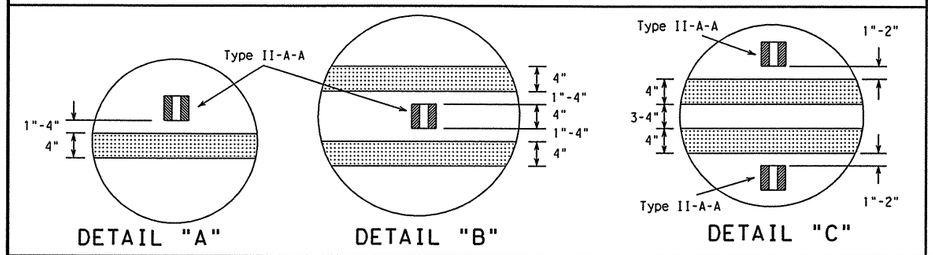

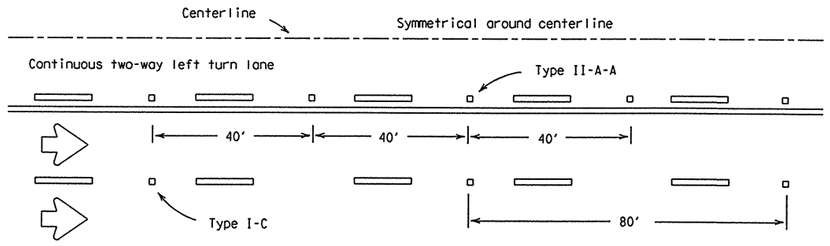

CENTERLINE AND LANE LINES FOR TWO-WAY LEFT TURN LANE

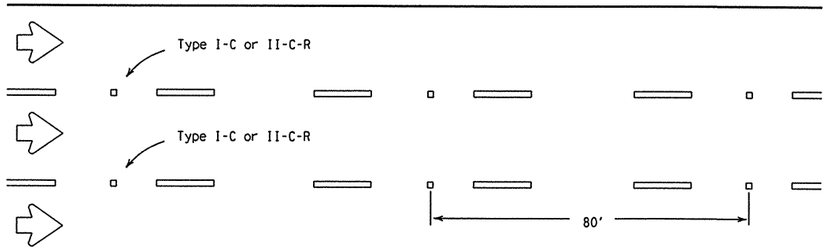

LANE LINES FOR ONE-WAY ROADWAY (NON-FREEWAY FACILITIES)

Raised pavement markers Type II-C-R shall have clear face toward normal traffic and red face toward wrong-way traffic.

As required by the Engineer or shown elsewhere in the plans, Type II-C-R or Type I-C markers may be placed on 40-foot centers for the below listed conditions:

1. horizontal curves,
2. continuously illuminated sections,
3. high volume roadways
4. or roadways where safety concerns exist.

RAISED PAVEMENT MARKERS

(REFLECTORIZED)

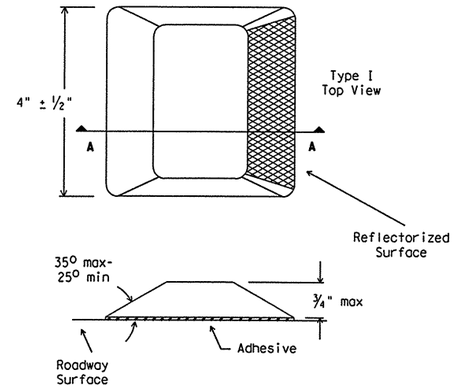

SECTION A

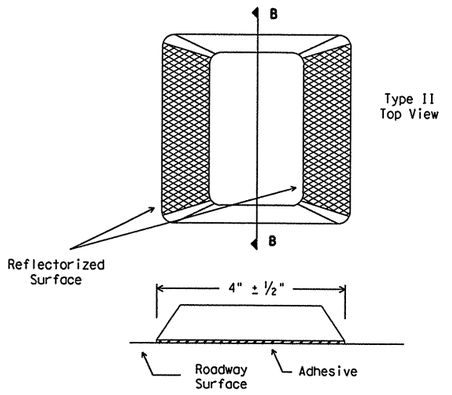

SECTION B

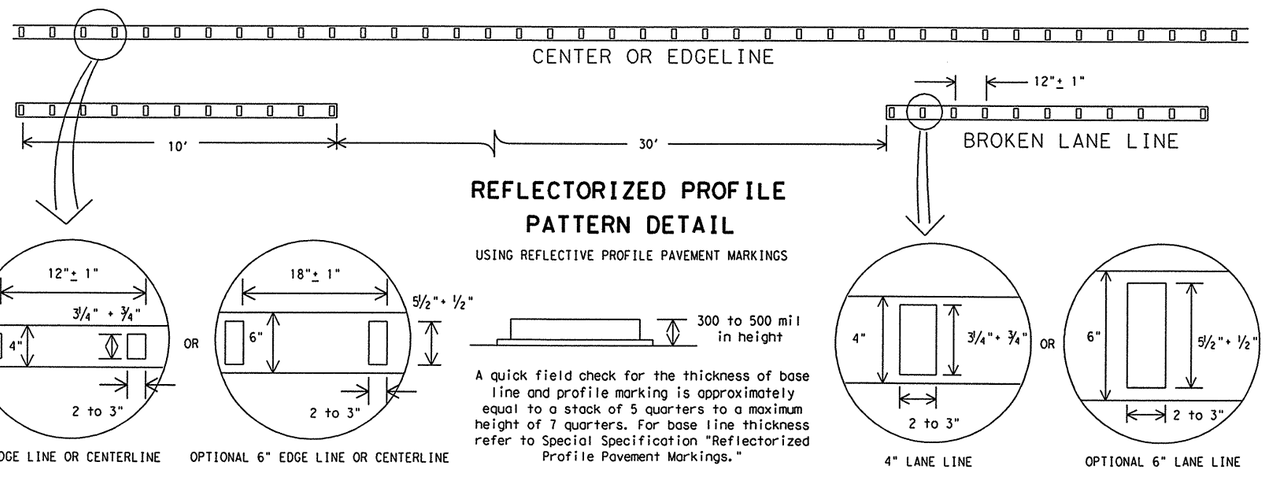

REFLECTORIZED PROFILE PATTERN DETAIL

USING REFLECTIVE PROFILE PAVEMENT MARKINGS

A quick field check for the thickness of base line and profile marking is approximately equal to a stack of 5 quarters to a maximum height of 7 quarters. For base line thickness refer to Special Specification "Reflectorized Profile Pavement Markings."

4" EDGE LINE OR CENTERLINE

OPTIONAL 6" EDGE LINE OR CENTERLINE

4" LANE LINE

OPTIONAL 6" LANE LINE

GENERAL NOTES:

All raised pavement markers placed in broken lines shall be placed in line with and midway between the stripes.

On concrete pavements the raised pavement markers should be placed to one side of the longitudinal joints.

All pavement marking materials shall meet the required Departmental Material Specifications as specified by the plans.

SPECIFICATION REFERENCE TABLE

MATERIAL SPECIFICATIONS	
PAVEMENT MARKERS (REFLECT.)	DMS-4200
EPOXY	DMS-6100
BITUMINOUS ADHESIVE FOR PAVEMENT MARKERS	DMS-6130

LEVELS DISPLAYED

1	2	3	4	5	6	7	8	9	10	11	12	13	14	15	16
17	18	19	20	21	22	23	24	25	26	27	28	29	30	31	32
33	34	35	36	37	38	39	40	41	42	43	44	45	46	47	48
49	50	51	52	53	54	55	56	57	58	59	60	61	62	63	

ACC:

STANDARD PLANS
Texas Department of Transportation
Traffic Operations Division

POSITION GUIDANCE USING RAISED MARKERS
REFLECTORIZED PROFILE MARKINGS
PM(2)-00A

© TxDOT April 1977

DN: BAS	CK: GRB	DW: FDN	CK: CAL

REVISIONS	STATE DISTRICT	FEDERAL REGION	FEDERAL AID PROJECT	SHEET
10-86	PHARR	6		926
4-92				
5-00	COUNTY		CONTROL / SECTION / JOB	HIGHWAY
8-00	HIDALGO		0255 / 08 / 091	US 281

DISCLAIMER
The use of this standard is governed by the "Texas Engineering Practice Act". No warranty of any kind is made by TxDOT for any purpose whatsoever. TxDOT assumes no responsibility for the conversion of this standard to other formats or for incorrect results or damages resulting from its use.

REFLECTIVE RAISED PAVEMENT MARKERS USED TO SUPPLEMENT STANDARD PAVEMENT MARKINGS

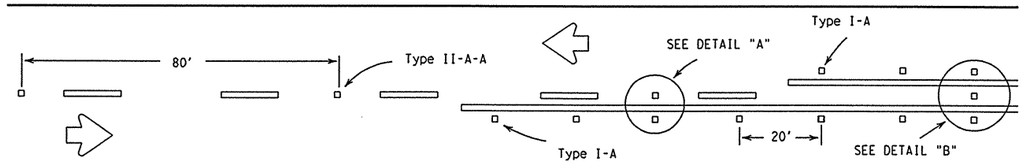

CENTERLINE & NO-PASSING LINES FOR 2 LANE TWO-WAY HWYS 24 FT. OR WIDER

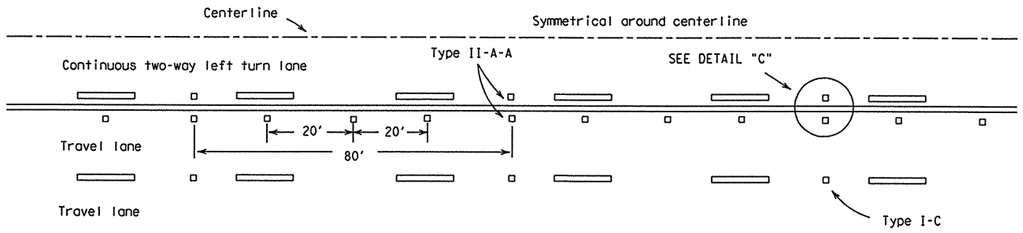

CENTERLINES & LANE LINES FOR TWO-WAY LEFT TURN LANE

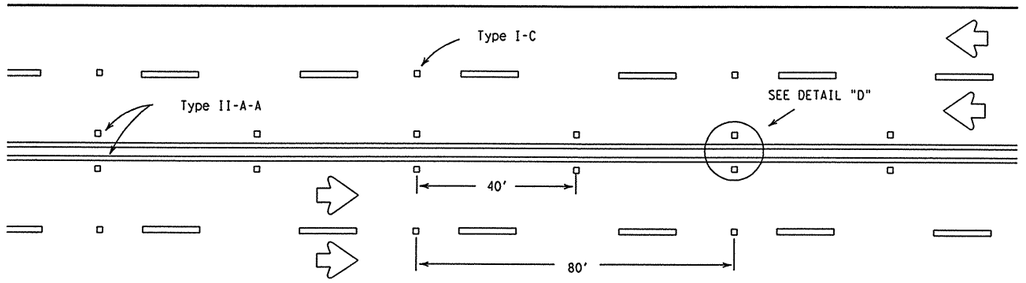

CENTERLINE & LANE LINES FOR 4 LANE TWO-WAY HIGHWAYS

Raised pavement marker Type I-C, clear face toward normal traffic, shall be placed on 80-foot centers.

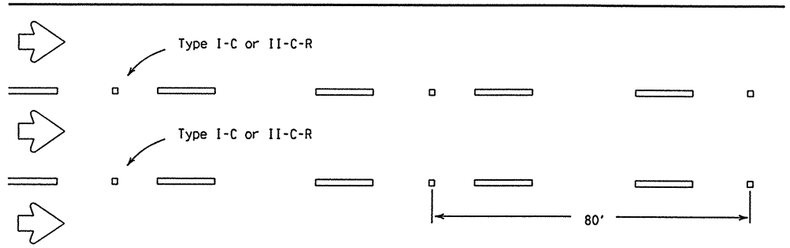

LANE LINES FOR ONE-WAY ROADWAY (NON-FREEWAY)

Raised pavement markers Type II-C-R shall have clear face toward normal traffic and red face toward wrong-way traffic.

As required by the Engineer or shown elsewhere in the plans, Type II-C-R or Type I-C markers may be placed on 40-foot centers for the below listed conditions:

1. horizontal curves,
2. continuously illuminated sections,
3. high volume roadways
4. or roadways where safety concerns exist.

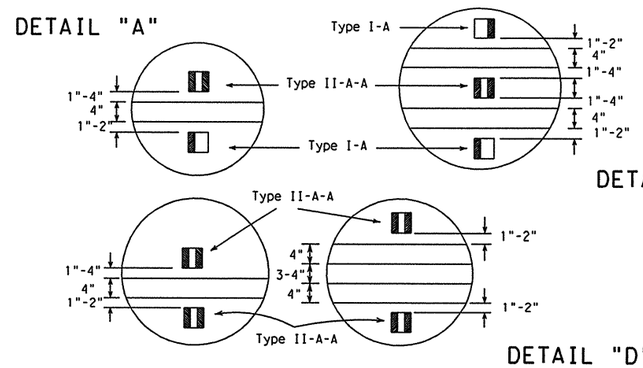

RAISED PAVEMENT MARKERS

(REFLECTORIZED)

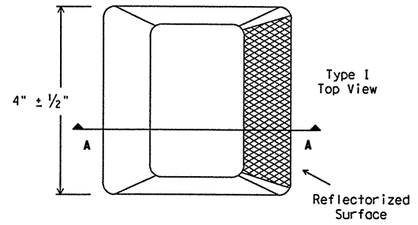

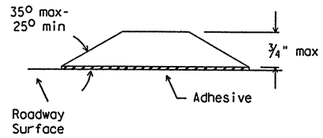

SECTION A

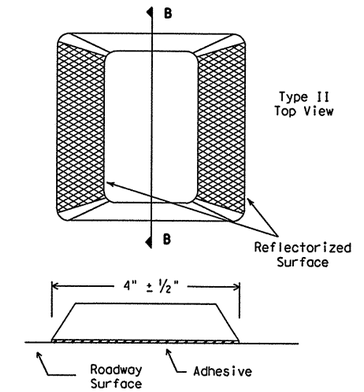

SECTION B

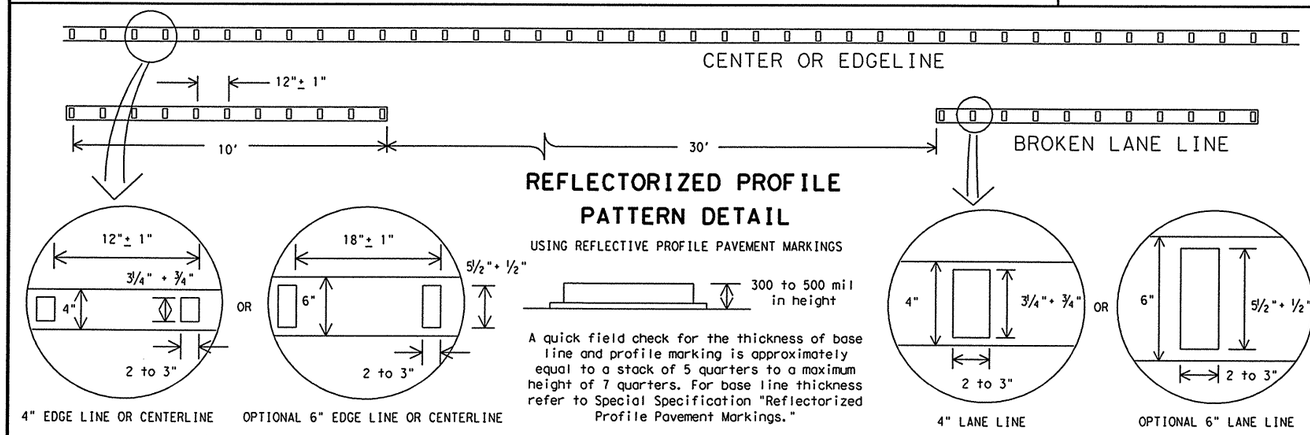

4" EDGE LINE OR CENTERLINE

OPTIONAL 6" EDGE LINE OR CENTERLINE

4" LANE LINE

OPTIONAL 6" LANE LINE

REFLECTORIZED PROFILE PATTERN DETAIL

USING REFLECTIVE PROFILE PAVEMENT MARKINGS

A quick field check for the thickness of base line and profile marking is approximately equal to a stack of 5 quarters to a maximum height of 7 quarters. For base line thickness refer to Special Specification "Reflectorized Profile Pavement Markings."

GENERAL NOTES:

All raised pavement markers placed in broken lines shall be placed in line with and midway between the stripes.

On concrete pavements the raised pavement markers should be placed to one side of the longitudinal joints.

All pavement marking materials shall meet the required Departmental Material Specifications as specified by the plans.

SPECIFICATION REFERENCE TABLE

MATERIAL SPECIFICATIONS	
PAVEMENT MARKERS (REFLECT.)	DMS-4200
EPOXY	DMS-6100
BITUMINOUS ADHESIVE FOR PAVE. MKS.	DMS-6130

LEVELS DISPLAYED — ACC:

1	2	3	4	5	6	7	8	9	10	11	12	13	14	15	16	
17	18	19	20	21	22	23	24	25	26	27	28	29	30	31	32	
33	34	35	36	37	38	39	40	41	42	43	44	45	46	47	48	
49	50	51	52	53	54	55	56	57	58	59	60	61	62	63		

STANDARD PLANS
Texas Department of Transportation
Traffic Operations Division

SUPPLEMENTAL MARKINGS USING RAISED PAVEMENT MARKERS
REFLECTORIZED PROFILE MARKINGS
PM(3)-00A

© TxDOT April 1977

DN: BAS	CK: GRB	DW: FDN	CK: CAL	MEG NO.:

REVISIONS	STATE DISTRICT	FEDERAL REGION	FEDERAL AID PROJECT			SHEET
10-86	PHARR	6				927
4-92	COUNTY		CONTROL	SECTION	JOB	HIGHWAY
5-00	HIDALGO		0255	08	091	US 281
8-00						

DISCLAIMER
The use of this standard is governed by the "Texas Engineering Practice Act". No warranty of any kind is made by TxDOT for any purpose whatsoever. TxDOT assumes no responsibility for the conversion of this standard to other formats or for incorrect results or damages resulting from its use.

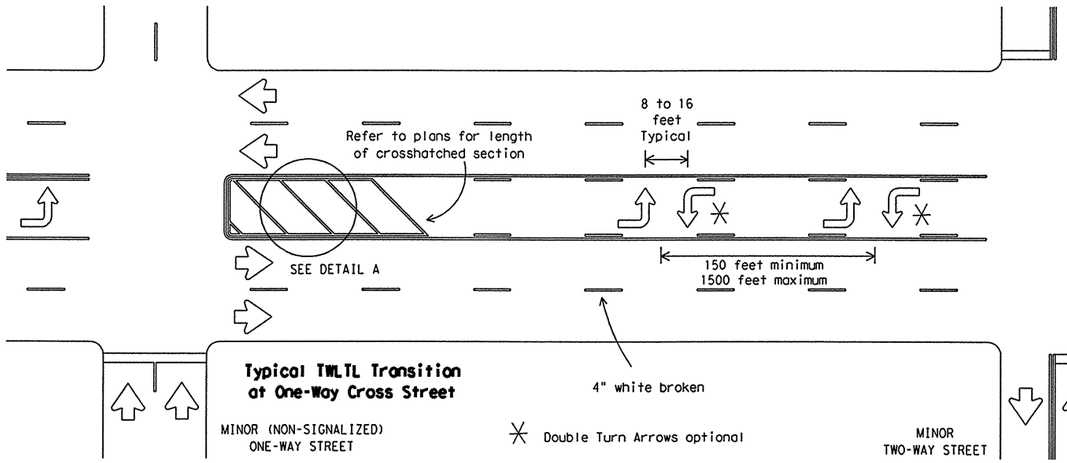

Typical TWLTL Transition at One-Way Cross Street

Double Turn Arrows optional

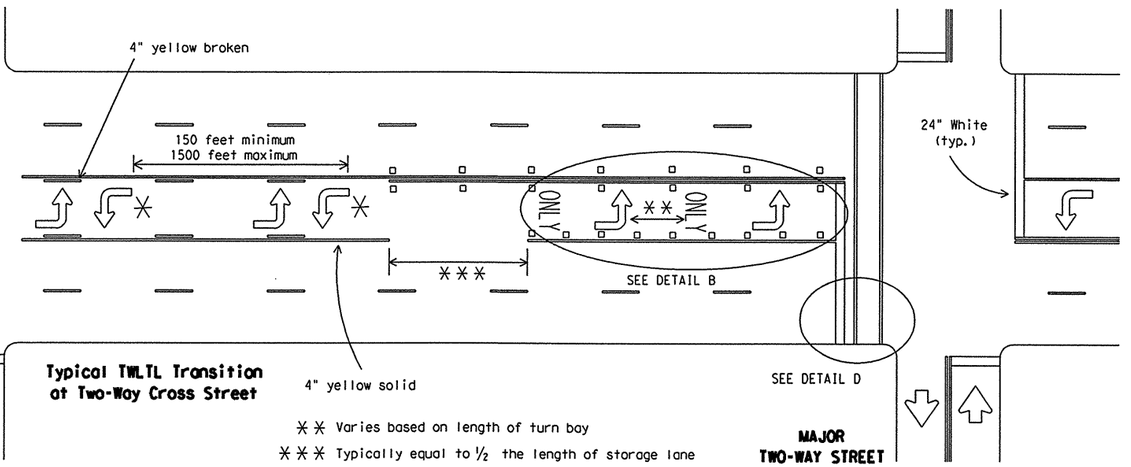

Typical TWLTL Transition at Two-Way Cross Street

✳✳ Varies based on length of turn bay

✳✳✳ Typically equal to ½ the length of storage lane

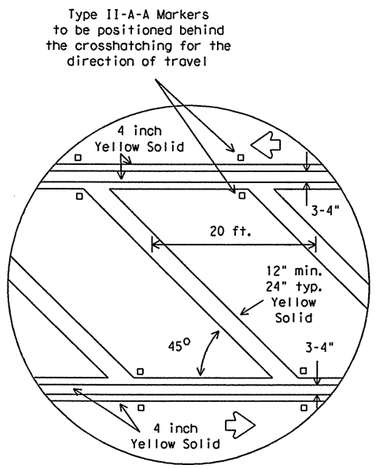

DETAIL A

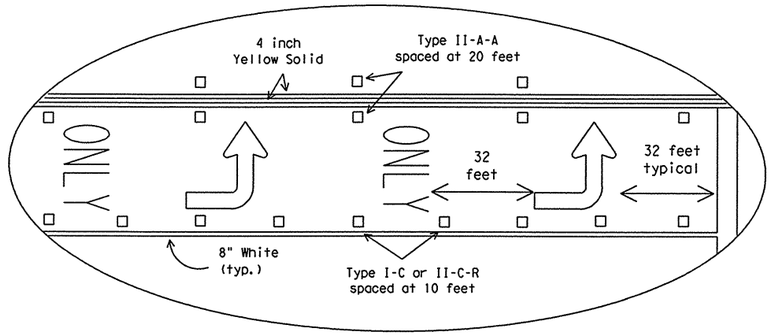

DETAIL B

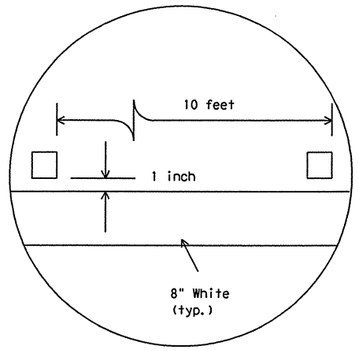

DETAIL C

Raised pavement marker Type I-C with undivided highways, flush medians and two way left turn lanes. Raised pavement marker Type II-C-R with divided highways and raised medians.

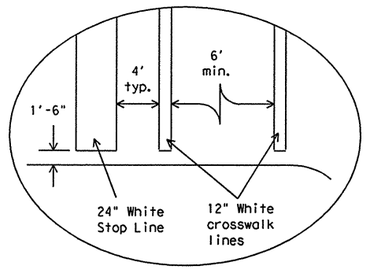

DETAIL D

Final placement of Stop Bar and Crosswalk shall be approved by the Engineer in the field.

GENERAL NOTES

Refer elsewhere in plans for additional RPM placement and details.

Details for words and arrows as shown on other sheets.

All pavement marking materials shall meet the required Departmental Material Specifications as specified by the plans.

For a left turn bay, two sets of words and arrows shall be used if the length of the bay is equal to or greater than 180 feet. The bottom of the first ONLY shall be placed at the beginning of the turn bay lane line as shown above.

Other crosswalk paterns as shown in the "Texas Manual on Uniform Traffic Control Devices" may be used.

SPECIFICATION REFERENCE TABLE

MATERIAL SPECIFICATIONS	
PAVEMENT MARKERS (REFLECT.)	DMS-4200
EPOXY	DMS-6100
BITUMINOUS ADHESIVE FOR PAVE. MKS.	DMS-6130

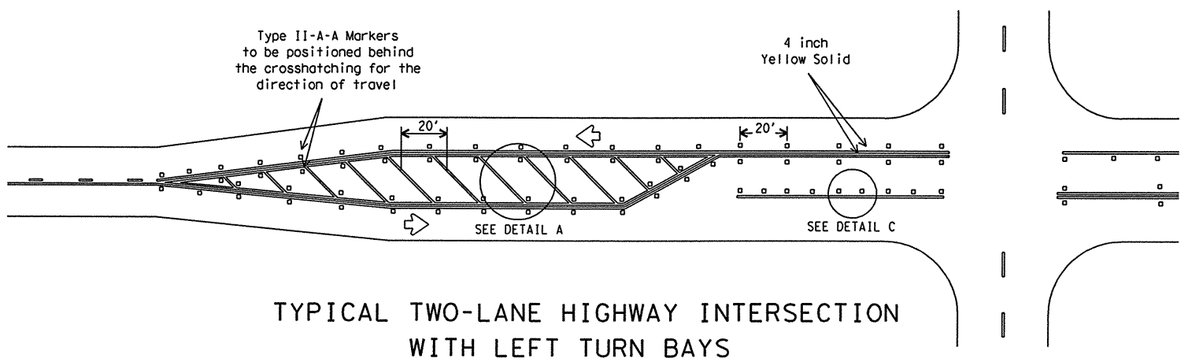

TYPICAL TWO-LANE HIGHWAY INTERSECTION WITH LEFT TURN BAYS

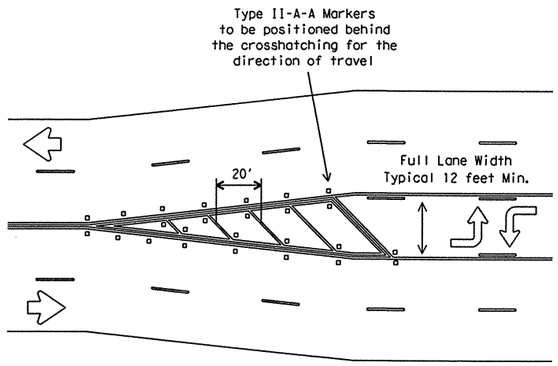

TYPICAL TRANSITION FOR TWLTL AND DIVIDED HIGHWAY

STANDARD PLANS
Texas Department of Transportation
Traffic Operations Division

PAVEMENT MARKINGS FOR TWO-WAY LEFT TURN LANES DIVIDED HIGHWAYS AND RURAL LEFT TURN BAYS

PM(4)-03

© TxDOT April 1998

DW: BAS	CK: GRB	DW: FDN	CK: CAL	MSG NO.:

REVISIONS	STATE DISTRICT	FEDERAL REGION	FEDERAL AID PROJECT				SHEET
5-00	PHARR	6					928
8-00	COUNTY		CONTROL	SECTION	JOB		HIGHWAY
3-03	HIDALGO		0255	08	091		US 281

LEVELS DISPLAYED
1 2 3 4 5 6 7 8 9 10 11 12 13 14 15 16 17 18 19 20 21 22 23 24 25 26 27 28 29 30 31 32 33 34 35 36 37 38 39 40 41 42 43 44 45 46 47 48 49 50 51 52 53 54 55 56 57 58 59 60 61 62 63

ACC:

DISCLAIMER
The use of this standard is governed by the "Texas Engineering Practice Act". No warranty of any kind is made by TxDOT for any purpose whatsoever. TxDOT assumes no responsibility for the conversion of this standard to other formats or for incorrect results or damages resulting from its use.

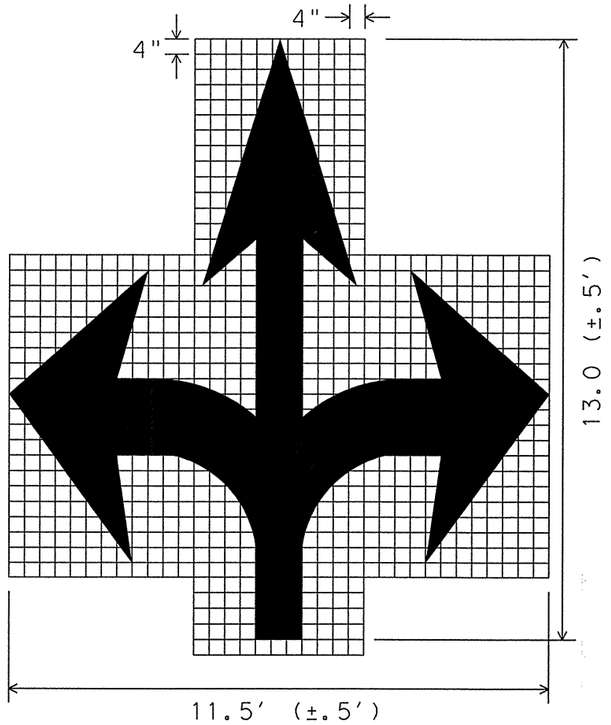

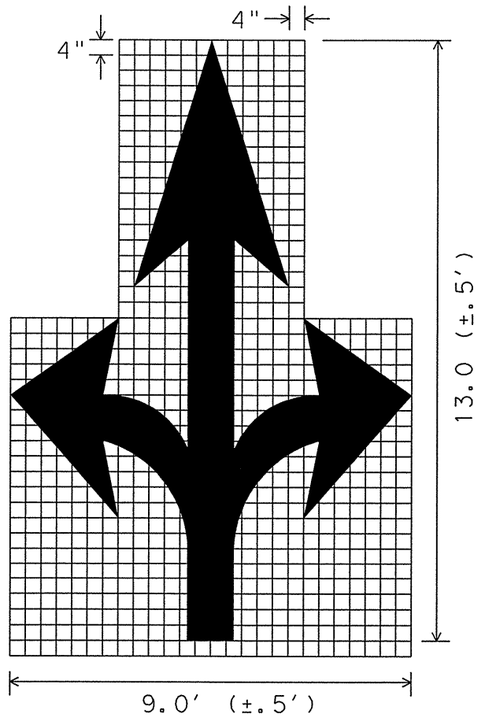

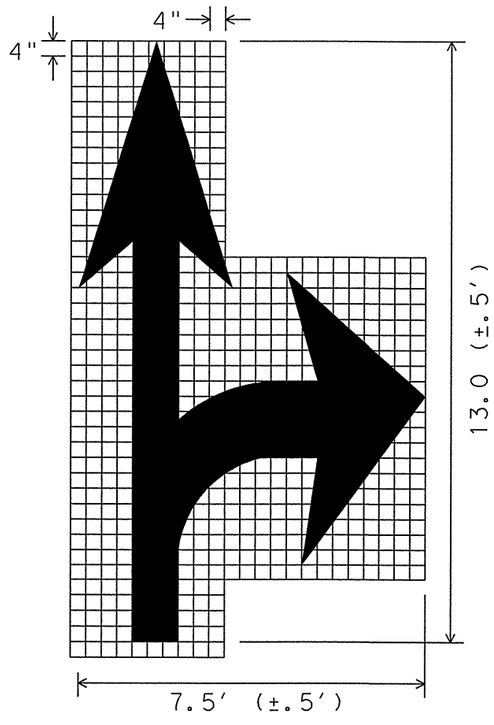

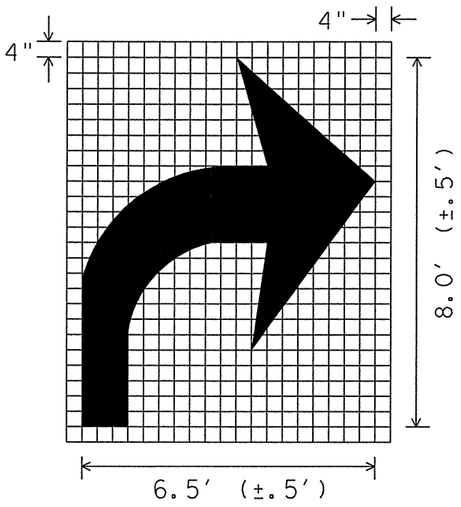

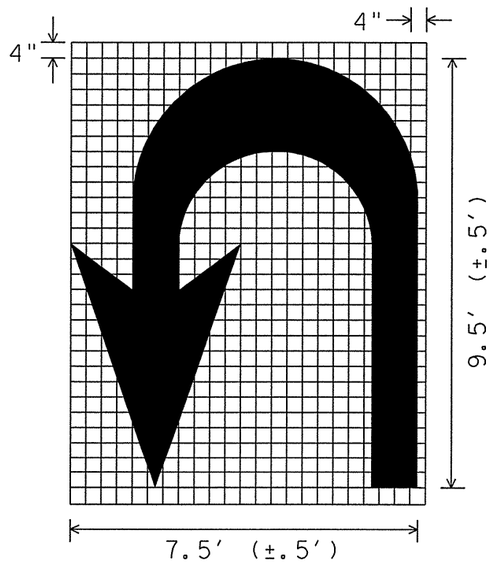

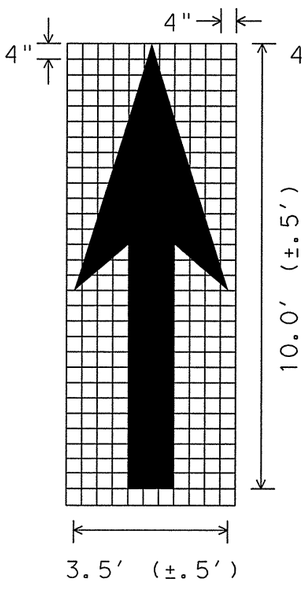

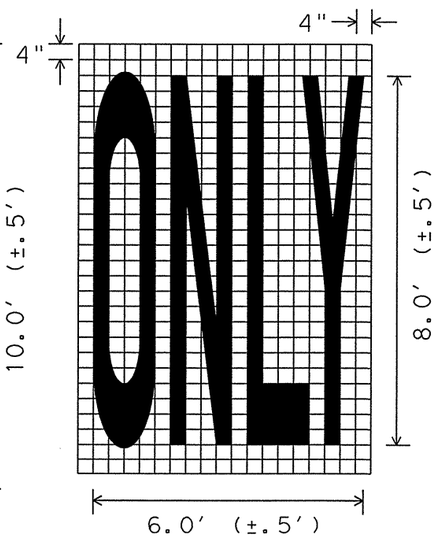

GENERAL NOTES;

1. Minimum 8 foot white markings should be used, unless otherwise noted. If message consists of more than one word, it should be placed with first word nearest the driver.
2. These details are standard size for normal installation; sizes may be reduced approximately one-third for low speed urban conditions; larger sizes may be needed for freeways, above average speed conditions or other critical locations.
3. The longitudinal space between markings should be at least four times the height of the markings, on low speed roads, but should not exceed ten times the height under any condition.
4. Markings considered appropriate for use when warranted include the following:
   A. Regulatory
      STOP
      RIGHT (LEFT) TURN ONLY
      25 MPH
      SYMBOL ARROWS
   B. Warning
      STOP AHEAD
      SIGNAL AHEAD
      SCHOOL
      SCHOOL X-ING
      PED X-ING
      R X R (see RCPM standard)
   C. Guide
      US XXX
      ROUTE XXX
      STATE XXX
      Other words or symbols may be necessary under certain conditions
5. Uncontrolled use of pavement markings can result in driver confusion. Word and symbol markings should be no more than three lines.
6. The word "STOP" shall not be used on the pavement unless accompanied by a Stop line and Stop sign. The word "STOP" shall not be placed on the pavement in advance to a stop line, unless every vehicle is required to stop at all times.
7. Pavement markings should generally be no more than one lane in width, with School messages being the exception. For details of School and School crossing pavement markings, refer to Part VII of the "Texas Manual on Uniform Traffic Control Devices".
8. Spacing between letters should be approximately 4 inches. The width of letters may vary depending on the width of the travel lanes.
9. Lane-Use arrow markings may be used to convey either guidance or mandatory messages. Arrows used to convey a mandatory movement must be accompanied by standard signs and the pavement marking word "ONLY".
10. Pavement markings are to be located as specified elsewhere in the plans.

SPACING BETWEEN LINES OF PAVEMENT MARKINGS	
MPH	SPACING
≤ 45	MINIMUM 4 TIMES THE LETTER HEIGHT
> 45	MINIMUM - 4 TIMES THE LETTER HEIGHT MAXIMUM - 10 TIMES THE LETTER HEIGHT

LEVELS DISPLAYED

1	2	3	4	5	6	7	8	9	10	11	12	13	14	15	16
17	18	19	20	21	22	23	24	25	26	27	28	29	30	31	32
33	34	35	36	37	38	39	40	41	42	43	44	45	46	47	48
49	50	51	52	53	54	55	56	57	58	59	60	61	62	63	

ACC:

STANDARD PLANS
Texas Department of Transportation
Traffic Operations Division

STANDARD PAVEMENT MARKINGS (ARROWS)

PM(6)-01

© TxDOT March 2001

DN:	CK: GRB	DW: FDN	CK: CAL

REVISIONS	STATE DISTRICT	FEDERAL REGION	FEDERAL AID PROJECT	SHEET
	PHARR	6		928A

COUNTY	CONTROL	SECTION	JOB	HIGHWAY
HIDALGO	0255	08	091	US 281

22H

DISCLAIMER
The use of this standard is governed by the "Texas Engineering Practice Act". No warranty of any kind is made by TxDOT for any purpose whatsoever. TxDOT assumes no responsibility for the conversion of this standard to other formats or for incorrect results or damages resulting from its use.

TRAFFIC LANE LINES PAVEMENT MARKING DETAILS

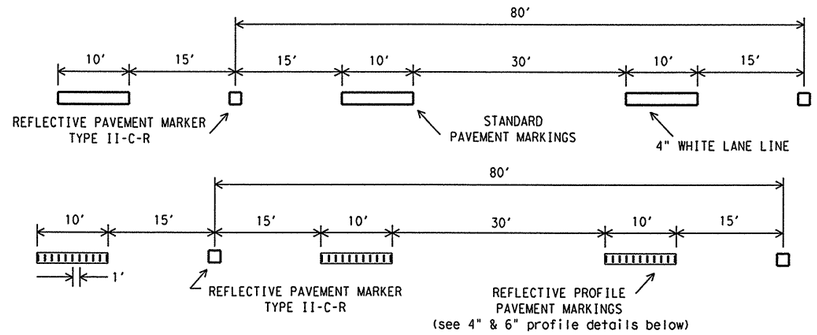

PAVEMENT MARKERS (REFL) TYPE II-C-R SHOULD BE SPACED ON 80' CENTERS WITH THE CLEAR FACE TOWARD NORMAL TRAFFIC AND THE RED FACE TOWARD WRONG WAY TRAFFIC. AS REQUIRED BY THE ENGINEER OR SHOWN ELSEWHERE IN THE PLANS, TYPE II-C-R MAY BE PLACED ON 40 FOOT CENTERS FOR THE BELOW LISTED CONDITIONS:

1. horizontal curves,
2. continuously illuminated sections,
3. high volume roadways
4. or roadways where safety concerns exist.

EDGELINE PAVEMENT MARKINGS

EDGELINES SHOULD TYPICALLY BE 4" WIDE AND THE MATERIALS SHALL BE AS SPECIFIED IN THE PLANS.
IF RAISED PROFILE PAVEMENT MARKINGS ARE USED SEE DETAILS BELOW.

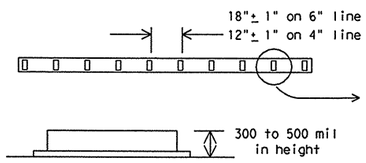

REFLECTIVE PROFILE PAVEMENT MARKINGS

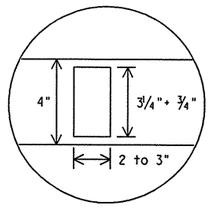

STANDARD 4" PROFILE DETAIL

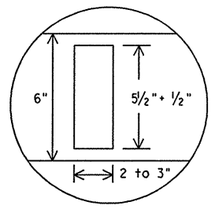

OPTIONAL 6" PROFILE DETAIL

WRONG WAY ARROW DETAIL

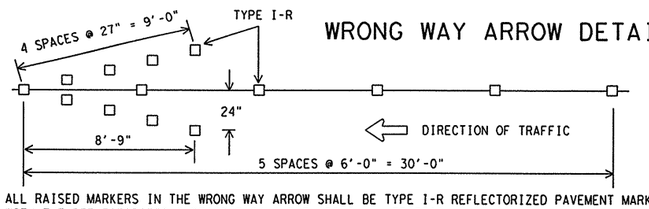

ALL RAISED MARKERS IN THE WRONG WAY ARROW SHALL BE TYPE I-R REFLECTORIZED PAVEMENT MARKERS WITH THE REFLECTORIZED SURFACE FACING THE WRONG WAY TRAFFIC. TYPE II-C-R SHALL NOT BE USED.

REFLECTORIZED WRONG WAY ARROWS, NOT TO EXCEED TWO, MAY BE PLACED ON EXIT RAMPS.
LOCATION OF THE ARROWS SHALL BE AS SHOWN IN THE PLANS OR AS DIRECTED BY THE ENGINEER.

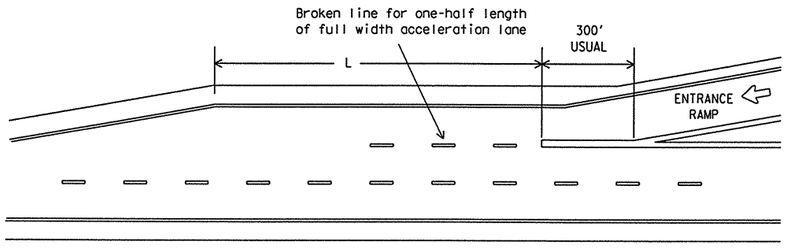

PARALLEL ACCELERATION LANE

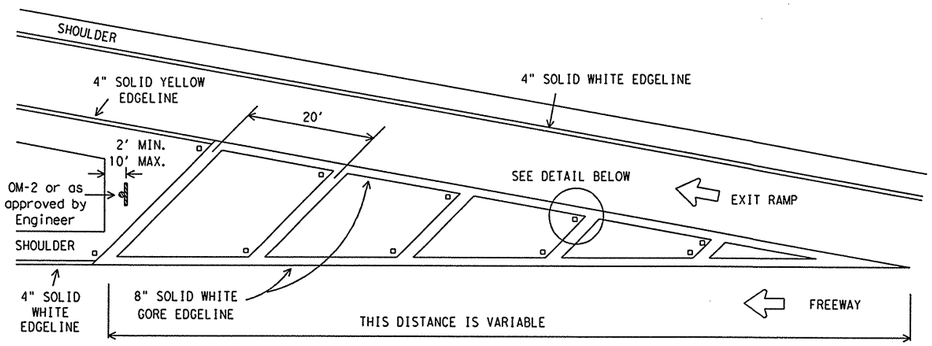

THE SHAPE OF THE GORE MARKING WILL VARY DEPENDING ON THE RAMP DESIGN AND WILL BE AS SHOWN IN THE PLANS OR AS DIRECTED BY THE ENGINEER. OM-2 OR SURFACE MOUNT OBJECT MARKER MOUNTING HEIGHT IS 36 INCHES.

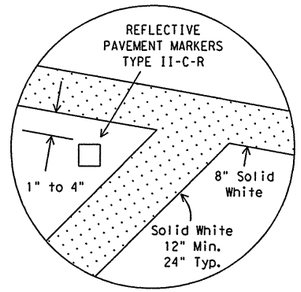

TYPICAL EXIT RAMP GORE MARKING

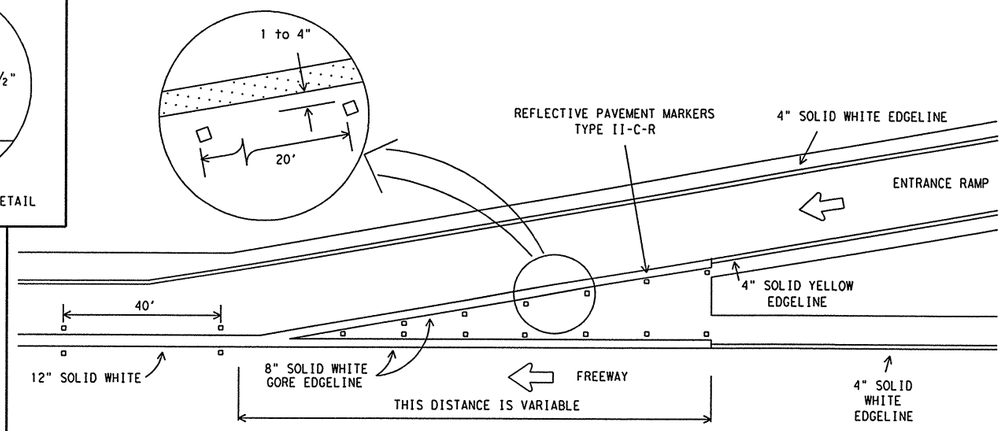

TYPICAL ENTRANCE RAMP GORE MARKING

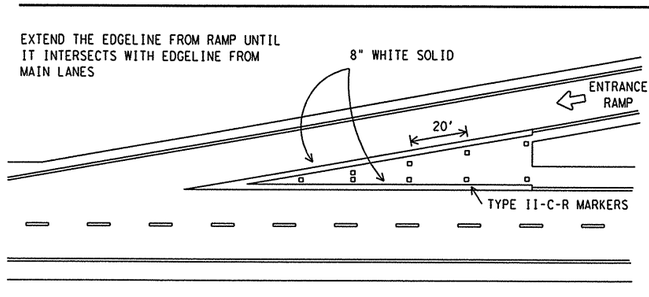

TAPERED ACCELERATION LANE

All pavement marking materials shall meet the required Departmental Material Specifications as specified by the plans.

SPECIFICATION REFERENCE TABLE

MATERIAL SPECIFICATIONS	
PAVEMENT MARKERS (REFLECT.)	DMS-4200
EPOXY	DMS-6100
BITUMINOUS ADHESIVE FOR PAVE. MKS.	DMS-6130

RAISED PAVEMENT MARKERS

(REFLECTORIZED)

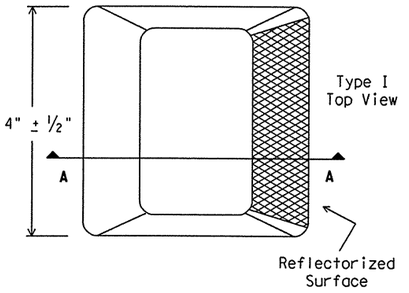

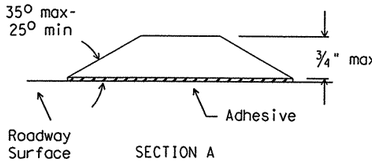

SECTION A

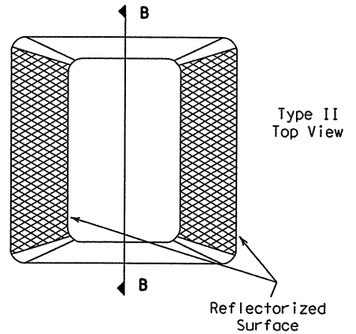

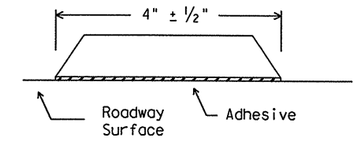

SECTION B

LEVELS DISPLAYED

1	2	3	4	5	6	7	8	9	10	11	12	13	14	15	16
17	18	19	20	21	22	23	24	25	26	27	28	29	30	31	32
33	34	35	36	37	38	39	40	41	42	43	44	45	46	47	48
49	50	51	52	53	54	55	56	57	58	59	60	61	62	63	

ACC:

STANDARD PLANS
Texas Department of Transportation
Traffic Operations Division

TYPICAL STANDARD FREEWAY PAVEMENT MARKINGS WITH RAISED PAVEMENT MARKERS

FPM(1)-00A

©TxDOT May 1974	DN: BAS	CK: GRB	DW: FDN	CK: CAL

REVISIONS	STATE DISTRICT	FEDERAL REGION	FEDERAL AID PROJECT	SHEET
12-90	PHARR	6		929
4-92				
5-00				
8-00				

COUNTY	CONTROL	SECTION	JOB	HIGHWAY
HIDALGO	0255	08	091	US 281

23A

DISCLAIMER
The use of this standard is governed by the "Texas Engineering Practice Act". No warranty of any kind is made by TxDOT for any purpose whatsoever. TxDOT assumes no responsibility for the conversion of this standard to other formats or for incorrect results or damages resulting from its use.

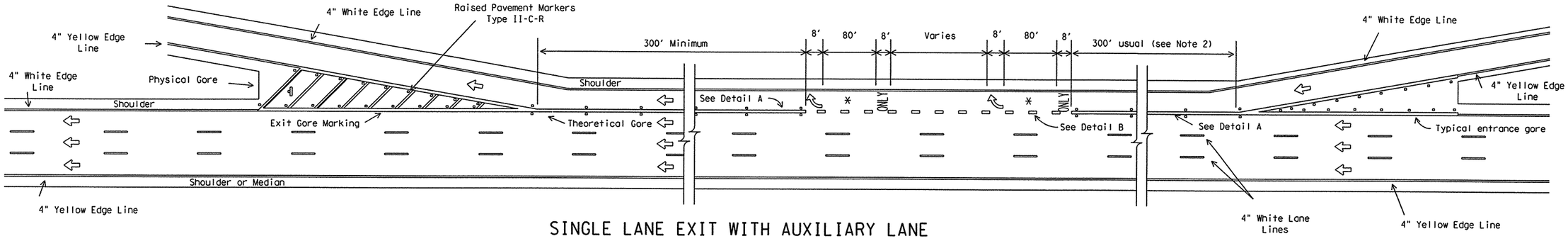

SINGLE LANE EXIT WITH AUXILIARY LANE

(See Note 5)

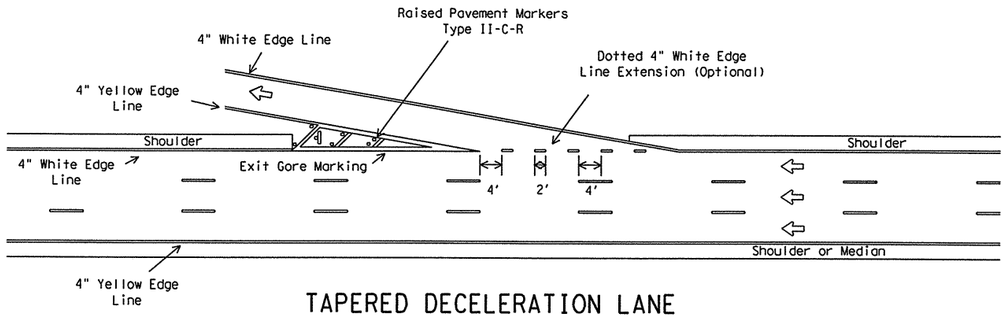

TAPERED DECELERATION LANE

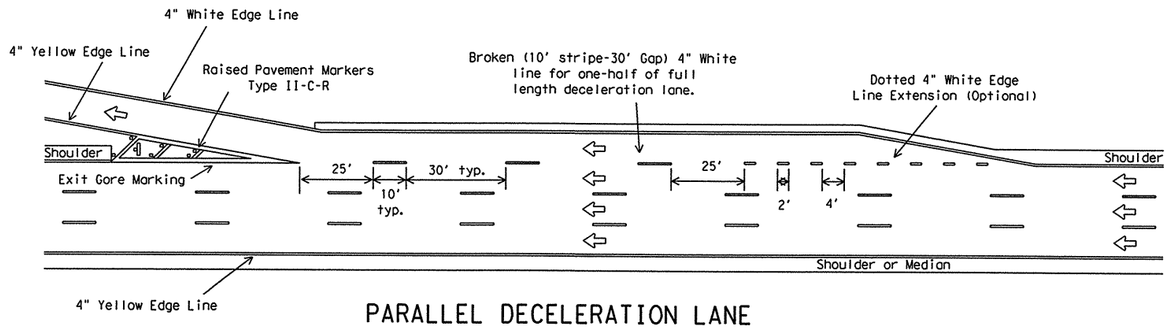

PARALLEL DECELERATION LANE

LEGEND

- OM-2, or approved surface mount object marker installed 2 to 10 feet from Physical Gore. Mounting height is approximately 36 inches.
- Denotes direction of traffic.
- Pavement marking arrows (white).
- Arrow markings are optional, however "ONLY" is required if arrow is used.

GENERAL NOTES:

1. Pavement markings shall be white except as otherwise noted.
2. Length of 12" white line may vary depending on location.
3. Lane drop markings are to be used to separate lanes that are required to go in different directions.
4. A lane drop (EXIT ONLY) condition is typically when the nearest entrance ramp is greater than 2000 feet upstream of the exit ramp, measured from theoretical gore of entrance ramp to theoretical gore of exit ramp.
5. All pavement marking materials shall meet the required Departmental Material Specifications as specified by the plans.

SPECIFICATION REFERENCE TABLE

MATERIAL SPECIFICATIONS	
PAVEMENT MARKERS (REFLECT.)	DMS-4200
EPOXY	DMS-6100
BITUMINOUS ADHESIVE FOR PAVE. MKS.	DMS-6130

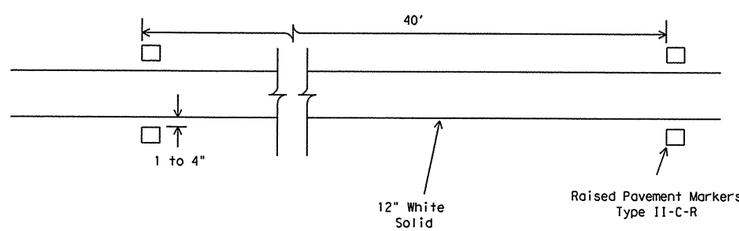

DETAIL A

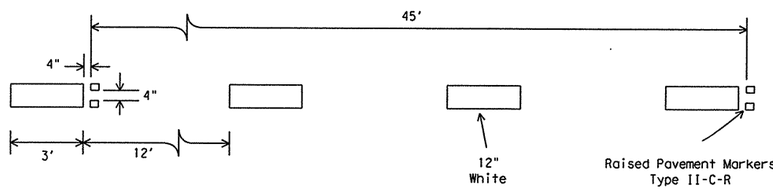

DETAIL B

LEVELS DISPLAYED
1 2 3 4 5 6 7 8 9 10 11 12 13 14 15 16 17 18 19 20 21 22 23 24 25 26 27 28 29 30 31 32 33 34 35 36 37 38 39 40 41 42 43 44 45 46 47 48 49 50 51 52 53 54 55 56 57 58 59 60 61 62 63

ACC:

STANDARD PLANS
Texas Department of Transportation
Traffic Operations Division

TYPICAL STANDARD FREEWAY PAVEMENT MARKINGS ENTRANCE AND EXIT RAMPS

FPM(2)-00A

©TxDOT February 1977

DN: BAS	CK: GRB	DW: FDN	CK: CAL

REVISIONS	STATE DISTRICT	FEDERAL REGION	FEDERAL AID PROJECT	SHEET
4-92	PHARR	6		930
8-95				
5-00	COUNTY		CONTROL / SECTION / JOB	HIGHWAY
8-00	HIDALGO		0255 / 08 / 091	US 281

DISCLAIMER
The use of this standard is governed by the "Texas Engineering Practice Act". No warranty of any kind is made by TxDOT for any purpose whatsoever. TxDOT assumes no responsibility for the conversion of this standard to other formats or for incorrect results or damages resulting from its use.

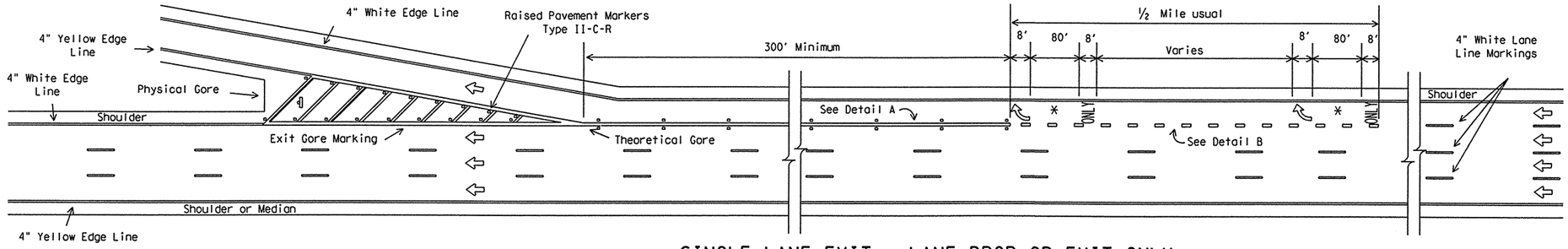

SINGLE LANE EXIT - LANE DROP OR EXIT ONLY

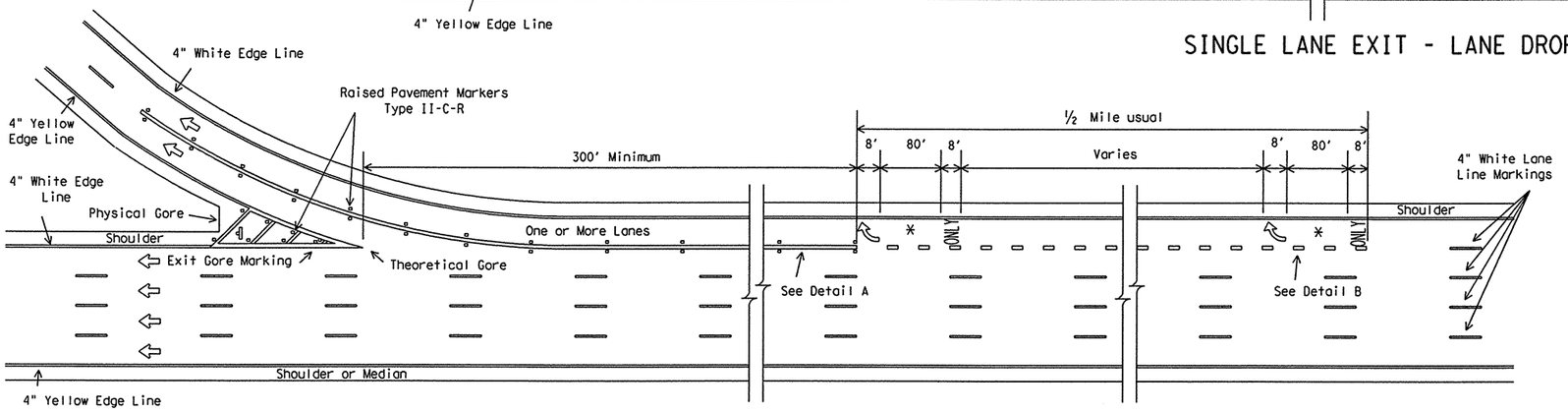

MULTIPLE LANE EXIT - EXIT ONLY WITH OPTION LANE

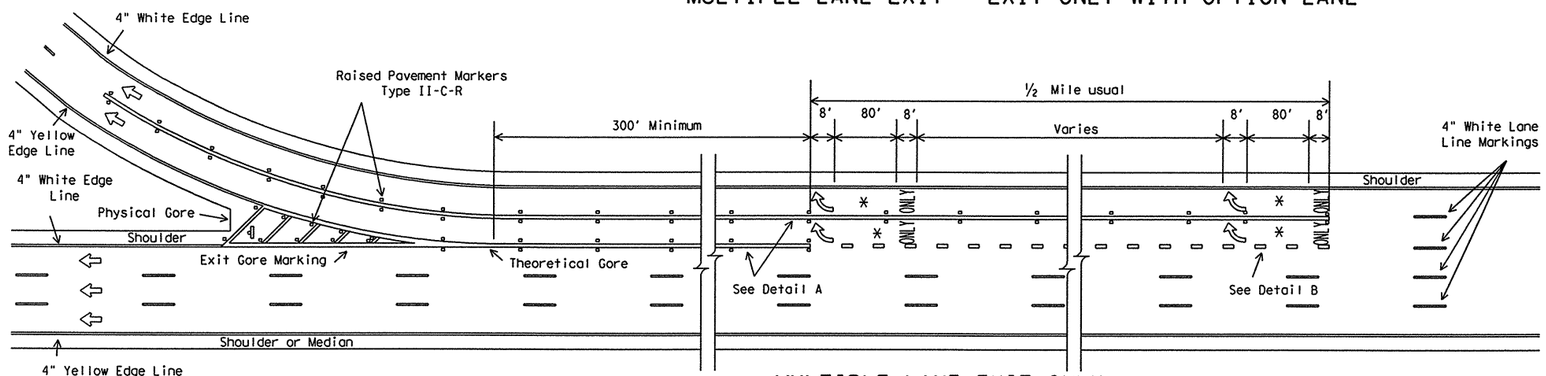

MULTIPLE LANE EXIT ONLY

LEGEND

- OM-2, or approved surface mount object marker installed 2 to 10 feet from Physical Gore. Mounting height is approximately 36 inches.
- Denotes direction of traffic.
- Pavement marking arrows (white).
- Arrow markings are optional, however "ONLY" is required if arrow is used.

GENERAL NOTES:

1. Pavement markings shall be white except as otherwise noted.
2. Length of 12" white line may vary depending on location.
3. Lane drop markings are to be used to separate lanes that are required to go in different directions.
4. A lane drop (EXIT ONLY) condition is typically when the nearest entrance ramp is greater than 2000 feet upstream of the exit ramp, measured from theoretical gore of entrance ramp to theoretical gore of exit ramp.
5. All pavement marking materials shall meet the required Departmental Material Specifications as specified by the plans.

SPECIFICATION REFERENCE TABLE

MATERIAL SPECIFICATIONS	
PAVEMENT MARKERS (REFLECT.)	DMS-4200
EPOXY	DMS-6100
BITUMINOUS ADHESIVE FOR PAVE. MKS.	DMS-6130

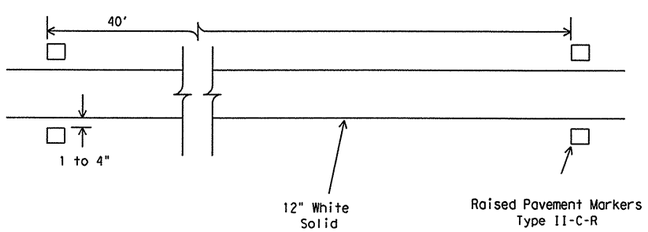

DETAIL A

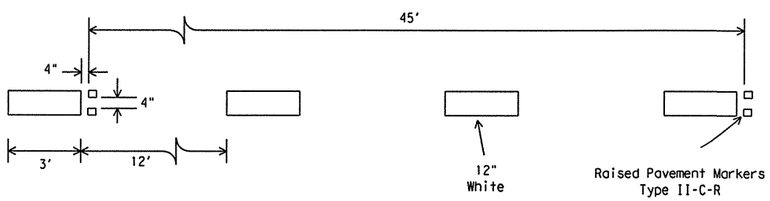

DETAIL B

LEVELS DISPLAYED ACC:

1	2	3	4	5	6	7	8	9	10	11	12	13	14	15	16
17	18	19	20	21	22	23	24	25	26	27	28	29	30	31	32
33	34	35	36	37	38	39	40	41	42	43	44	45	46	47	48
49	50	51	52	53	54	55	56	57	58	59	60	61	62	63	

STANDARD PLANS
Texas Department of Transportation
Traffic Operations Division

TYPICAL STANDARD FREEWAY PAVEMENT MARKINGS LANE DROP (EXIT ONLY) EXIT RAMPS

FPM(3)-00A

© TxDOT April 1992

DN: BAS	CK: GRB	DW: FDN	CK: CAL

REVISIONS	STATE DISTRICT	FEDERAL REGION	FEDERAL AID PROJECT	SHEET
5-00 8-00	PHARR	6		931

COUNTY	CONTROL	SECTION	JOB	HIGHWAY
HIDALGO	0255	08	091	US 281

23C

DISCLAIMER
The use of this standard is governed by the "Texas Engineering Practice Act". No warranty of any kind is made by TxDOT for any purpose whatsoever. TxDOT assumes no responsibility for the conversion of this standard to other formats or for incorrect results or damages resulting from its use.

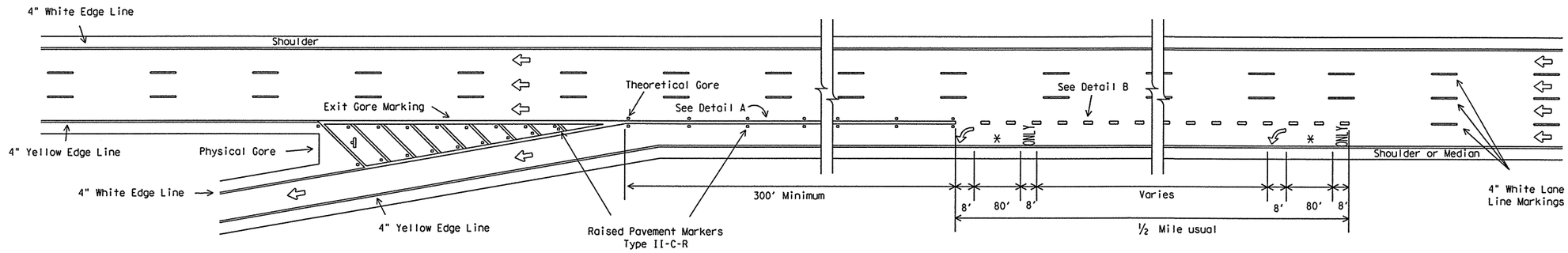

SINGLE LANE EXIT - LANE DROP OR EXIT ONLY (LEFTHAND)

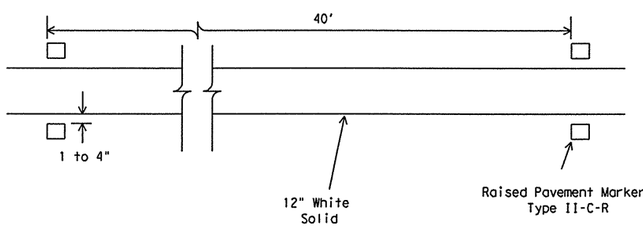

DETAIL A

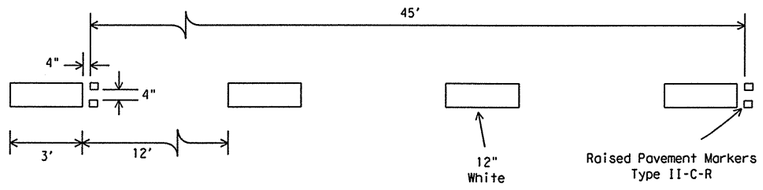

DETAIL B

LEGEND

- OM-2, or approved surface mount object marker installed 2 to 10 feet from Physical Gore. Mounting height is approximately 36 inches.
- Denotes direction of traffic.
- Pavement marking arrows (white).
- Arrow markings are optional, however "ONLY" is required if arrow is used.

GENERAL NOTES:

1. Pavement markings shall be white except as otherwise noted.
2. Length of 12" white line may vary depending on location.
3. Lane drop markings are to be used to separate lanes that are required to go in different directions.
4. A lane drop (EXIT ONLY) condition is typically when the nearest entrance ramp is greater than 2000 feet upstream of the exit ramp, measured from theoretical gore of entrance ramp to theoretical gore of exit ramp.
5. All pavement marking materials shall meet the required Departmental Material Specifications as specified by the plans.

SPECIFICATION REFERENCE TABLE

MATERIAL SPECIFICATIONS	
PAVEMENT MARKERS (REFLECT.)	DMS-4200
EPOXY	DMS-6100
BITUMINOUS ADHESIVE FOR PAVE. MKS.	DMS-6130

STANDARD PLANS
Texas Department of Transportation
Traffic Operations Division

TYPICAL STANDARD FREEWAY PAVEMENT MARKINGS LANE DROP (EXIT ONLY) DETAILS

FPM(4)-00A

©TxDOT April 1992	DN: BAS	CK: GRB	DW: FDN	CK: CAL
REVISIONS 5-00 8-00	STATE DISTRICT: PHARR	FEDERAL REGION: 6	FEDERAL AID PROJECT	SHEET: 932
COUNTY: HIDALGO	CONTROL: 0255	SECTION: 08	JOB: 091	HIGHWAY: US 281

23D

LEVELS DISPLAYED
1 2 3 4 5 6 7 8 9 10 11 12 13 14 15 16
17 18 19 20 21 22 23 24 25 26 27 28 29 30 31 32
33 34 35 36 37 38 39 40 41 42 43 44 45 46 47 48
49 50 51 52 53 54 55 56 57 58 59 60 61 62 63
ACC:

Phaisarn C.
05:24:20 PM
06/24/2003

ENVIRONMENTAL PERMITS, ISSUES AND COMMITMENTS

GENERAL PROJECT INFORMATION

CSJ:	0255-08-091	PROJECT TYPE:	FONSI
DISTRICT:	PHARR	PROJECT #:	
COUNTY:	HIDALGO	SOURCE:	FED/STATE/CITY/COUNTY
HIGHWAY:	US 281 EXPRESSWAY		
LETTING DATE:	OCTOBER 2003		
LIMITS FROM:	TRENTON RD		
TO:	TEXAS 495		

DESCRIPTION: RECONSTRUCTION AND WIDENING OF EXISTING MAIN LANES, BRIDGES, APPROACHES, AND FRONTAGE ROADS, RECONFIGURATION OF INTERSECTIONS & FRONTAGE ROADS. WORK TO CONSIST OF GRADING, LIME TREATED SUBGRADE, FLEXIBLE BASE, HDSM & SUPERPAVE HM ASPHALTIC CONCRETE PAVEMENT, CONCRETE CURB, CONCRETE CURB AND GUTTER, RETAINING WALLS, DRAINAGE IMPROVEMENTS, TRAFFIC SIGNALS, ILLUMINATION, SIGNING, PAVEMENT MARKINGS, SIDEWALKS, WHEELCHAIR RAMPS AND LANDSCAPING.

WATER RESOURCES ISSUES

NONE

BIOLOGICAL RESOURCES ISSUES
NONE
NOISE ISSUES
NONE
HAZARDOUS MATERIALS ISSUES
NONE
ARCHEOLOGICAL ISSUES
NONE
HISTORICAL ISSUES
NONE
PUBLIC INVOLVEMENT ISSUES
NONE

LOCATION MAP FOR REQUIRED PERMIT AREAS

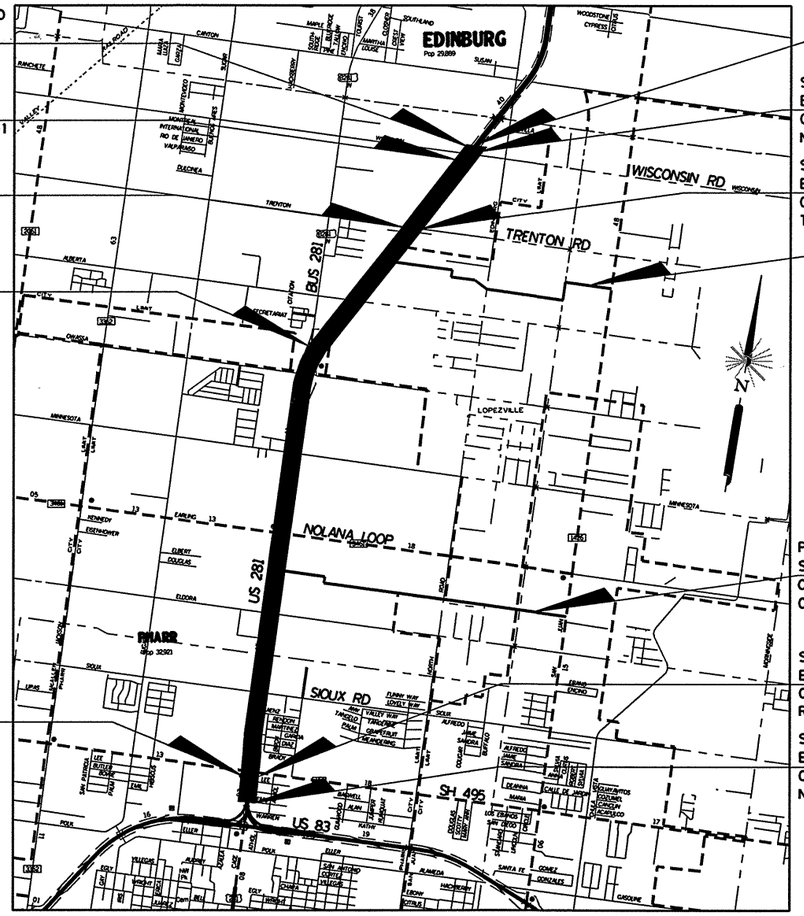

STA 61614+00.00
BEG INCIDENTAL
CONSTRUCTION
SBFR

STA 630+00.00
BEG PROJECT
CONTROL 0255-08-091
RM= 778.3

STA 10+30.00
BEG INCIDENTAL
CONSTRUCTION
TRENTON RD

STA 7+77.15
BEG INCIDENTAL
CONSTRUCTION
NB BUS. 281

STA 62849+90.00
END INCIDENTAL
CONSTRUCTION
SBFR

STA 620+00.00
BEG INCIDENTAL CONSTRUCTION
NB & SB MAINLANES

STA 50613+00.00
BEG INCIDENTAL
CONSTRUCTION
NBFR

STA 30+00.00
END INCIDENTAL
CONSTRUCTION
TRENTON RD

PROPOSED
NORTH MAIN
OUTFALL
CHANNEL

PROPOSED
SOUTH MAIN
OUTFALL
CHANNEL

STA 846+24.00
END PROJECT
CONTROL 0255-08-091
RM = 782.4

STA 50853+15.00
END INCIDENTAL
CONSTRUCTION
NBFR

© TxDOT 2003 by Texas Department of Transportation (512) 416-2055; all rights reserved

Parsons Brinckerhoff Quade & Douglas Inc.

Texas Department of Transportation
© 2003 by TxDOT

ENVIRONMENTAL PERMITS, ISSUES AND COMMITMENTS

SCALE: AS SHOWN

SHEET 1 OF 1 | 281envp01.DGN

DESIGNED: TT	FED. RD DIV. NO.	STATE	FEDERAL AID PROJECT No.			HIGHWAY No.	
CHECKED: DM	6	TEXAS				US 281	
DRAWN:	STATE DISTRICT	COUNTY	CONTROL No.	SECTION No.	JOB No.	SHEET No.	
CHECKED: DM	PHARR	HIDALGO	0255	08	091	933	

I:\22322a\CADD\Sheets\SW3P\281envp01.dgn

SITE DESCRIPTION

PROJECT LIMITS: FROM: 0.25 MILES NORTH OF WISCONSIN RD.
TO: SH 495

PROJECT DESCRIPTION: FOR THE CONSTRUCTION OF A FREEWAY FACILITY CONSISTING OF GRADING, STRUCTURES, FLEXBASE, ASPHALTIC CONC. PAVEMENT, SIGNING, SIGNALS AND STORM WATER POLLUTION CONTROL DEVICES.

MAJOR SOIL DISTURBING ACTIVITIES: PREPARING OF ROW: CLEARING & GRUBBING, GRADING, EXCAVATION & EMBANKMENT FOR ROADWAY, DRIVEWAY AND DRAINAGE STRUCTURES, EROSION & SEDIMENT CONTROLS.

TOTAL PROJECT AREA: 247.1 ACRES +/- FOR ROADWAY + 49.85 ACRES +/- FOR 2 OUTFALLS

TOTAL AREA TO BE DISTURBED: 247.1 ACRES +/-

WEIGHTED RUNOFF COEFFICIENT (AFTER CONSTRUCTION): 0.70

EXISTING CONDITION OF SOIL & VEGETATIVE COVER AND % OF EXISTING VEGETATIVE COVER: EXIST. SOIL CONSISTS OF TWO DIFFERENT SOIL TYPES. THE MAJORITY GENERALLY CONSISTS OF HIDALGO DEEP MODERATELY PERMEABLE SOILS THAT TYPICALLY HAVE A DARK GRAYISH BROWN SANDY CLAY LOAM SURFACE LAYER WITH 0 TO 1 PERCENT SLOPES. HOWEVER THERE ARE SMALL PORTIONS OF HIDALGO URBAN LAND COMPLEX WITH 0 TO 3 PERCENT SLOPES. THESE SOILS ARE COVERED WITH APPROX. 61% OF VARIOUS GRASSES WHICH ARE IN FAIR CONDITION. REMAINING 39% OF THE SOIL IN THE PROP. R.O.W. IS COVERED WITH THE EXIST. RDWY.

NAME OF RECEIVING WATERS: RUNOFF FROM US 281 DRAINS INTO 5 OUTFALLS WHICH WILL RECEIVE A TOTAL OF 536.9 ACRES.

1. PHARR-McALLEN LATERAL - 136.9 ACRES
2. NORTH MAIN DRAIN - 247.3 ACRES
3. HCID No.1 DRAINAGE DITCH - 80.6 ACRES
4. NORTH DRAINAGE DITCH - 46.7 ACRES
5. SOUTH DRAINAGE DITCH - 25.4 ACRES

ULTIMATELY THE RUNOFF WILL FLOW INTO THE LAGUNA MADRE ON THE TEXAS GULF COAST.

HISTORICAL STRUCTURES: NONE

ENDANGERED SPECIES: THE OCELOT, JAQUARUNDI, AMERICAN PEREGRINE FALCON, INTERIOR LEAST TERN, BLACK SPOTTED NEWT, RIO GRAND LESSER SIREN, STAR CACTUS, TEXAS AVENIA, AND WALKERS MANIOC ARE THREATENED OR ENDANGERED SPECIES WHICH MAY OCCUR IN HIDALGO COUNTY. POSSIBLE IMPACT TO THE ENDANGERED SPECIES WILL BE COVERED IN THE ENVIRONMENTAL IMPACT STATEMENT PREPARED BY TURNER, COLLIE & BRADEN.

EROSION AND SEDIMENT CONTROLS

SOIL STABILIZATION PRACTICES:

- [X] TEMPORARY SEEDING
- [X] PERMANENT PLANTING, SODDING, OR SEEDING
- [ ] CELL FIBER MULCH SEED
- [ ] SOIL RETENTION BLANKET
- [ ] BUFFER ZONES
- [X] PRESERVATION OF NATURAL RESOURCES

OTHER:

STRUCTURAL PRACTICES:

- [X] SILT FENCES (TEMPORARY)
- [ ] HAY BALES
- [X] ROCK BERMS (TEMPORARY)
- [ ] DIVERSION, INTERCEPTOR, OR PERIMETER DIKES
- [ ] DIVERSION, INTERCEPTOR, OR PERIMETER SWALES
- [ ] DIVERSION DIKE AND SWALE COMBINATIONS
- [ ] PIPE SLOPE DRAINS
- [ ] CONCRETE FLUMES
- [ ] ROCK BEDDING AT CONSTRUCTION EXIT
- [X] TIMBER MATTING AT CONSTRUCTION EXIT
- [ ] CHANNEL LINERS
- [ ] SEDIMENT TRAPS
- [ ] SEDIMENT BASINS
- [ ] STORM INLET SEDIMENT TRAP
- [ ] STONE OUTLET STRUCTURES
- [X] CURBS AND GUTTERS
- [X] STORM SEWERS
- [ ] VELOCITY CONTROL DEVICES

OTHER:

NARRATIVE - SEQUENCE OF CONSTRUCTION (STORM WATER MANAGEMENT) ACTIVITIES:

THE ORDER OF ACTIVITIES WILL BE AS FOLLOWS:

ALL WORK TO BE PERFORMED BY THE CONTRACTOR.

1. INSTALL CONTROLS FOR INGRESS AND EGRESS INTO THE PROJECT SITE.
2. INSTALL SEDIMENT CONTROL FENCES AROUND THE CROSS CULVERTS AND ALONG THE ROADSIDE DITCHES AFTER SAFETY ENDS HAVE BEEN INSTALLED.
3. BEGIN SEQUENCE OF CONSTRUCTION.
4. SEED DISTURBED AREA FROM THE RIGHT OF WAY LINE TO THE RIGHT OF WAY LINE. IF CONSTRUCTION OPERATION CEASE FOR MORE THAN TWO WEEKS.
5. WHEN ALL CONSTRUCTION ACTIVITY IS COMPLETED AND THE SITE IS STABILIZED AND APPROVED BY THE PROJECT ENGINEER, REMOVE ALL TEMPORARY EROSION CONTROL AND STABILIZE ANY AREAS DISTURBED BY THEIR REMOVAL.

STORM WATER MANAGEMENT: STORM WATER DRAINAGE WILL BE PROVIDED BY ROADWAY DITCHES AND MAINLANE PAVEMENT WITHIN THE RIGHT-OF-WAY WHICH WILL DIRECT RUNOFF TO INLETS CONNECTED TO A STORM DRAIN SYSTEM. THE SYSTEM WILL BE CONNECTED TO THE PROJECT'S OUTFALLS LISTED UNDER "NAME OF RECEIVING WATERS". REFER TO THE TRAFFIC CONTROL PLANS FOR CONSTRUCTION PHASES 1 THROUGH 4. THE TRAFFIC CONTROL PLAN SHEETS SHOW THE TEMPORARY EROSION CONTROL DEVICES TO BE INSTALLED DURING THE VARIOUS PHASES OF CONSTRUCTION.

"I CERTIFY UNDER PENALTY OF LAW THAT THIS DOCUMENT AND ALL ATTACHMENTS WERE PREPARED UNDER MY DIRECTION OR SUPERVISION IN ACCORDANCE WITH A SYSTEM DESIGNED TO ASSURE THAT QUALIFIED PERSONNEL PROPERLY GATHERED AND EVALUATED THE INFORMATION SUBMITTED. BASED ON MY INQUIRY OF THE PERSON OR PERSONS WHO MANAGE THE SYSTEM, OR THOSE PERSONS DIRECTLY RESPONSIBLE FOR GATHERING THE INFORMATION, THE INFORMATION SUBMITTED IS, TO THE BEST OF MY KNOWLEDGE AND BELIEF, TRUE, ACCURATE, AND COMPLETE. I AM AWARE THAT THERE ARE SIGNIFICANT PENALTIES FOR SUBMITTING FALSE INFORMATION, INCLUDING THE POSSIBILITY OF FINE AND IMPRISONMENT FOR KNOWING VIOLATIONS."

OTHER EROSION AND SEDIMENT CONTROLS:

MAINTENANCE: ALL EROSION AND SEDIMENT CONTROLS WILL BE MAINTAINED IN GOOD WORKING ORDER. IF A REPAIR IS NECESSARY, IT WILL BE DONE AT THE EARLIEST DATE POSSIBLE, BUT NO LATER THAN 7 CALENDAR DAYS AFTER THE SURROUNDING EXPOSED GROUND HAS DRIED SUFFICIENTLY TO PREVENT FURTHER DAMAGE FROM HEAVY EQUIPMENT. THE PROJECT'S OUTFALLS WILL HAVE PRIORITY FOLLOWED BY DEVICE PROTECTING STORM DRAIN INLETS. SEDIMENT TEMPORARILY STOCKPILED ON SITE WILL BE PLACED IN SUCH A MANNER AS TO MINIMIZE WASHING OFF OF SEDIMENT BACK INTO THE LOCAL DRAINAGE SYSTEM.

INSPECTION: AN INSPECTION WILL BE PERFORMED BY A TxDOT INSPECTOR EVERY WEEK AND AFTER EVERY HALF INCH OR MORE OF RAIN (AS RECORDED ON A NON-FREEZING RAIN GAUGE TO BE LOCATED AT THE PROJECT SITE). AN INSPECTION AND MAINTENANCE REPORT WILL BE MADE PER EACH INSPECTION. BASED ON THE INSPECTION RESULTS, THE CONTROLS SHALL BE REVISED PER THE INSPECTION REPORT.

WASTE MATERIALS: ALL WASTE MATERIALS WILL BE COLLECTED AND STORED IN A SECURELY LIDDED DUMPSTER MEETING ALL STATE AND LOCAL CITY SOLID WASTE MANAGEMENT REGULATIONS. ALL TRASH AND CONSTRUCTION DEBRIS FROM THE SITE WILL BE DEPOSITED AS NECESSARY, OR AS REQUIRED BY LOCAL REGULATIONS, AND HAULED TO A LOCAL DUMP. NO CONSTRUCTION WASTE MATERIAL WILL BE BURIED ON SITE.

HAZARDOUS WASTE (INCLUDING SPILL REPORTING): AT A MINIMUM, ANY PRODUCTS IN THE FOLLOWING CATEGORIES TO BE HAZARDOUS: PAINTS, ACIDS FOR CLEANING MASONRY SURFACES, CLEANING SOLVENTS, ASPHALT PRODUCTS, CHEMICAL ADDITIVES FOR SOIL STABILIZATION, OR CONCRETE CURING COMPOUNDS AND ADDITIVES. IN THE EVENT OF A SPILL WHICH MAY BE HAZARDOUS, THE SPILL COORDINATOR SHOULD BE CONTACTED IMMEDIATELY. WASH WATER AND CONCRETE WILL NOT BE ALLOWED TO ENTER ANY STORM DRAIN OR WATERWAY. LIKEWISE, WASHOUT OF CONCRETE TRUCKS SHALL NOT BE PERFORMED ON SITE WITHOUT A SYSTEM OF CONTAINMENT FOR THESE DISCHARGES ARE CONSIDERED NON-ALLOWABLE NON-STORM WASTER DISCHARGES. CONCRETE TRUCKS SHALL NOT DUMP INTO STORM DRAINS OR SANITARY SEWERS.

SANITARY WASTE: ALL SANITARY WASTE WILL BE COLLECTED FROM THE PORTABLE UNITS AS NECESSARY OR AS REQUIRED BY LOCAL REGULATION BY LICENSED SANITARY WASTE MANAGEMENT CONTRACTOR.

OFFSITE VEHICLE TRACKING:

- [X] HAUL ROADS DAMPENED FOR DUST CONTROL
- [ ] LOADED HAUL TRUCKS TO BE COVERED WITH TARPAULIN
- [X] EXCESS DIRT ON ROAD REMOVED DAILY
- [X] STABILIZED CONSTRUCTION ENTRANCE

OTHER:

REMARKS: DISPOSAL AREAS, STOCKPILES, AND HAUL ROADS SHALL BE CONSTRUCTED IN A MANNER THAT WILL MINIMIZE AND CONTROL THE AMOUNT OF SEDIMENT THAT MAY ENTER RECEIVING WATERS. DISPOSAL AREAS SHALL NOT BE LOCATED IN ANY WETLAND, WATERBODY, OR STREAMBED.

CONSTRUCTION STAGING AREAS AND VEHICLE MAINTENANCE AREAS SHALL BE CONSTRUCTED BY THE CONTRACTOR IN A MANNER TO MINIMIZE THE RUNOFF OF POLLUTANTS.

ALL WATERWAYS SHALL BE CLEARED AS SOON AS PRACTICAL OF TEMPORARY EMBANKMENT, TEMPORARY BRIDGES, MATTING, FALSEWORK, PILING, DEBRIS OR OTHER OBSTRUCTIONS PLACED DURING CONSTRUCTION OPERATIONS THAT ARE NOT A PART OF THE FINISHED WORK.

THE SEAL APPEARING ON THIS DOCUMENT WAS AUTHORIZED BY JOHN M PEREZ, P.E. 66425 ON 06/26/2003.

STATE OF TEXAS
JOHN M. PEREZ
66425
REGISTERED PROFESSIONAL ENGINEER

6/24/03

TxDOT STORM WATER POLLUTION PREVENTION PLAN (SW3P)

FED.RD. DIV.NO.	FEDERAL AID PROJECT NO.		SHEET NO.
6			933A
STATE	DIST.	COUNTY	
TEXAS	PHARR	HIDALGO	
CONT.	SECT.	JOB	HIGHWAY NO.
0255	08	091	US 281

06/26/2003 05:46:57 PM I:\223220\CADD\Sheets\SW3P\281SW3P-NARR.dgn

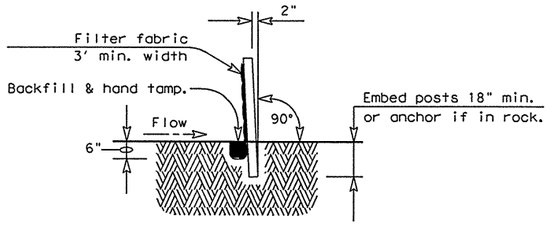

SECTION A-A

SEDIMENT CONTROL FENCE USAGE GUIDELINES

A sediment control fence may be constructed near the downstream perimeter of a disturbed area along a contour to intercept sediment from overland runoff. A 2 year storm frequency may be used to calculate the flow rate to be filtered.

Sediment control fence should be sized to filter a max. flow through rate of 100 GPM/FT^2. Sediment control fence is not recommended to control erosion from a drainage area larger than 2 acres.

PLAN SHEET LEGEND

Sediment Control Fence —— SCF ——

GENERAL NOTES

1. The guidelines shown hereon are suggestions only and may be modified by the Engineer.

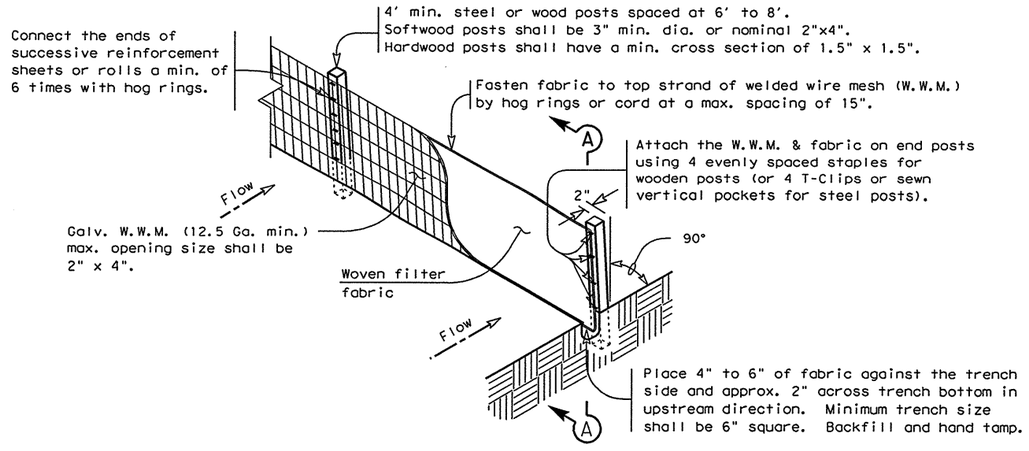

TEMPORARY SEDIMENT CONTROL FENCE

SCF

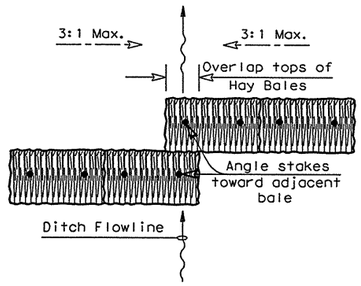

PLAN VIEW

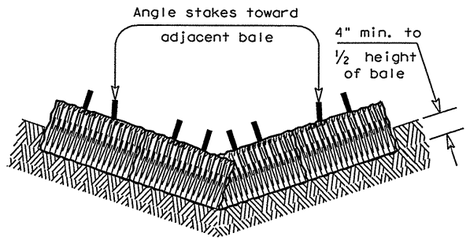

PROFILE VIEW

PLANS SHEET LEGEND

Baled Hay —— BH ——

BALED HAY USAGE GUIDELINES

A Baled Hay installation may be constructed near the downstream perimeter of a disturbed area along a contour to intercept sediment from overland runoff. A two year storm frequency may be used to calculate the flow rate to be filtered. The installation should be sized to filter a maximum flow thru rate of 5 GPM/FT^2 of cross sectional area. Baled hay may be used at the following locations:

1. Where the runoff approaching the baled hay flows over disturbed soil for less than 100'. If the slope of the disturbed soil exceeds 10%, the length of slope upstream the baled hay should be less than 50'.
2. Where the installation will be required for less than 3 months.
3. Where the contributing drainage area is less than ½ acre.

For Baled Hay installations in small ditches, the additional following considerations apply:

1. The ditch sideslopes should be graded as flat as possible to maximize the drainage flowrate thru the hay.
2. The ditch should be graded large enough to contain the overtopping drainage when sediment has filled to the top of the baled hay.

Bales should be replaced usually every 2 months or more often during wet weather when loss of structural integrity is accelerated.

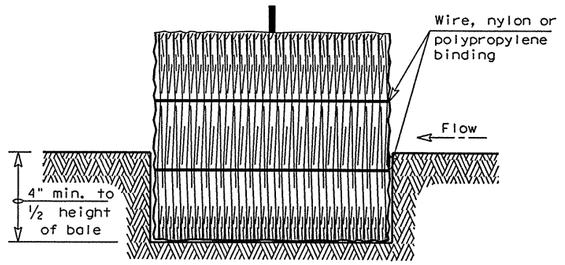

SECTION B-B

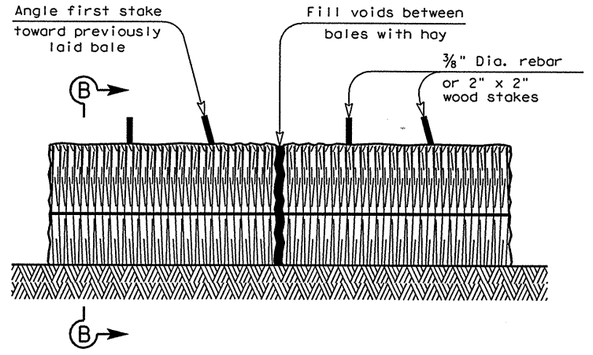

BALED HAY FOR EROSION CONTROL

BH

GENERAL NOTES

1. Hay bales shall be a minimum of 30" in length and weigh a minimum of 50 Lbs.
2. Hay bales shall be bound by either wire or nylon or polypropylene string. The bales shall be composed entirely of vegetative matter.
3. Hay bales shall be embedded in the soil a minimum of 4" and where possible ½ the height of the bale.
4. Hay bales shall be placed in a row with ends tightly abutting the adjacent bales. The bales shall be placed with bindings parallel to the ground.
5. Hay bales shall be securely anchored in place with ⅜" Dia. rebar or 2" x 2" wood stakes, driven through the bales. The first stake shall be angled towards the previously laid bale to force the bales together.
6. The guidelines shown hereon are suggestions only and may be modified by the Engineer.

Texas Department of Transportation
Design Division (Roadway)

TEMPORARY EROSION, SEDIMENT AND WATER POLLUTION CONTROL MEASURES

FENCED & BALED HAY

EC(1)-93

FILE: EC193.DGN	DN: HEJ	CK: HEJ	DW: BGD	CK:	
©TxDOT JUNE 1993	DISTRICT	FEDERAL AID PROJECT			SHEET
REVISIONS	PHARR				934
	COUNTY		CONTROL	SECT	JOB	HIGHWAY
	HIDALGO		0255	08	091	US 281

DISCLAIMER:
The use of this standard is governed by the "Texas Engineering Practice Act". No warranty of any kind is made by TxDOT for any purpose whatsoever. TxDOT assumes no responsibility for the conversion of this standard to other formats or for incorrect results or damages resulting from its use.

LEVELS DISPLAYED
11 3 4 5 6 7 8 9 10 11 2 3 4 5 16
17 18 19 20 21 22 23 24 25 26 27 28 29 30 31 32
33 34 35 36 37 38 39 40 41 42 43 44 45 46 47 48
49 50 51 52 53 54 55 56 57 58 59 60 61 62 63

FILTER DAM AT TOE OF SLOPE

(RFD1)
TYPE 1

FILTER DAM AT SEDIMENT TRAP

(RFD1) OR (RFD2)
TYPE 1 OR TYPE 2

FILTER DAM AT CHANNEL SECTIONS

(RFD1) OR (RFD2) OR (RFD3)
TYPE 1 OR TYPE 2

SECTION B-B

PROFILE

PLAN VIEW

"V" SHAPE

(Plan View)

SECTION C-C

PLANS SHEET LEGEND

Type 1 Rock Filter Dam —(RFD1)—
Type 2 Rock Filter Dam —(RFD2)—
Type 3 Rock Filter Dam —(RFD3)—

TYPE 4 (SACK GABIONS)

SECTION A-A

ROCK FILTER DAM USAGE GUIDELINES

Rock Filter Dams should be constructed downstream from disturbed areas to intercept sediment from overland runoff and/or concentrated flow. The dams should be sized to filter a maximum flow through rate of 60 GPM/FT^2 of cross sectional area. A 2 year storm frequency may be used to calculate the flow rate.

Type 1 (18" high with no wire mesh): Type 1 may be used at the toe of slopes, around inlets, in small ditches, and at dike or swale outlets. This type of dam is recommended to control erosion from a drainage area of 5 acres or less. Type 1 may not be used in concentrated high velocity flows (approx. 8 Ft/Sec or more) in which aggregate wash out may occur. Sandbags may be used at the embedded foundation (4" deep min.) for better filtering efficiency of low flows if called for on the plans or directed by the Engineer.

Type 2 (18" high with wire mesh): Type 2 may be used in ditches and at dike or swale outlets.

Type 3 (36" high with wire mesh): Type 3 may be used in stream flow and should be secured to the stream bed.

Type 4 (Sack gabions): Type 4 May be used in ditches and smaller channels to form an erosion control dam.

GENERAL NOTES

1. If shown on the plans or directed by the Engineer, filter dams should be placed near the toe of slopes where erosion is anticipated, upstream and/or downstream at drainage structures, and in roadway ditches and channels to collect sediment.
2. Materials (aggregate, wire mesh, sandbags, etc.) shall be as indicated by the specification for "Rock Filter Dams for Erosion and Sedimentation Control".
3. The rock filter dam dimensions shall be as indicated on the SW3P plans.
4. Side slopes should be 2:1 or flatter. Dams within the safety zone shall have sideslopes of 6:1 or flatter.
5. Maintain a minimum of 1′ between top of rock filter dam weir and top of embankment for filter dams at sediment traps.
6. Filter dams should be embedded a minimum of 4" into existing ground.
7. The sediment trap for ponding of sediment laden runoff shall be of the dimensions shown on the plans.
8. Rock filter dam types 2 & 3 shall be secured with 20 gauge galvanized woven wire mesh with 1" diameter hexagonal openings. The aggregate shall be placed on the mesh to the height & slopes specified. The mesh shall be folded at the upstream side over the aggregate and tightly secured to itself on the downstream side using wire ties or hog rings. In stream use the mesh should be secured or staked to the stream bed prior to aggregate placement.
9. Sack Gabions should be staked down with ¾" dia. rebar stakes.
10. Flow outlet should be onto a stabilized area (vegetation, rock, etc.).
11. The guidelines shown hereon are suggestions only and may be modified by the Engineer.

DISCLAIMER:
The use of this standard is governed by the "Texas Engineering Practice Act". No warranty of any kind is made by TxDOT for any purpose whatsoever. TxDOT assumes no responsibility for the conversion of this standard to other formats or for incorrect results or damages resulting from its use.

Texas Department of Transportation
Design Division (Roadway)

TEMPORARY EROSION, SEDIMENT AND WATER POLLUTION CONTROL MEASURES

ROCK FILTER DAMS

EC(2)-93

FILE: EC293.DGN	DN: HEJ	CK: HEJ	DW: BGD		CK:	
© TxDOT JUNE 1993	DISTRICT	FEDERAL AID PROJECT				SHEET
REVISIONS	PHARR					935
	COUNTY		CONTROL	SECT	JOB	HIGHWAY
	HIDALGO		0255	08	091	US 281

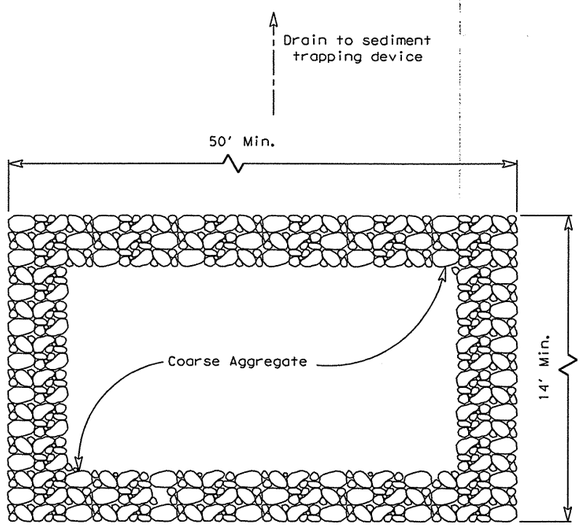

PLAN

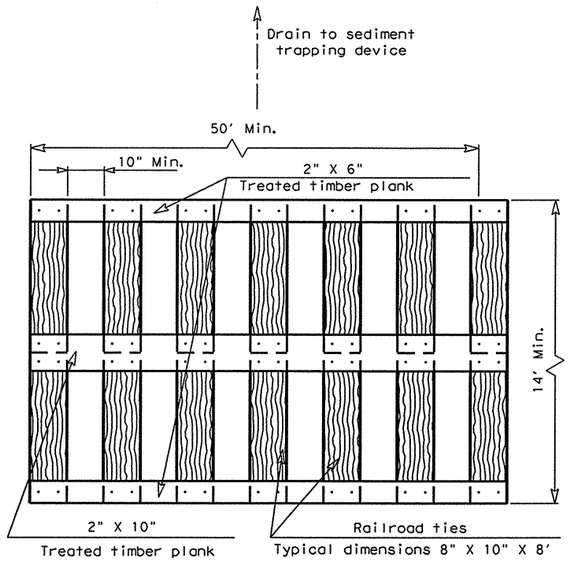

PLAN

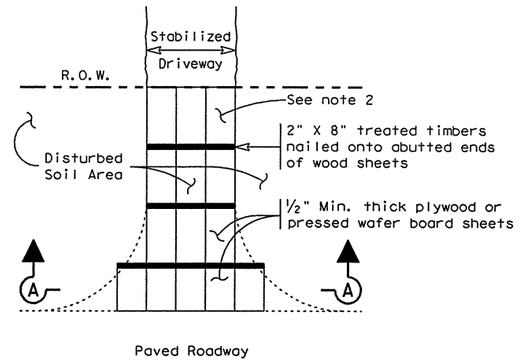

PLAN

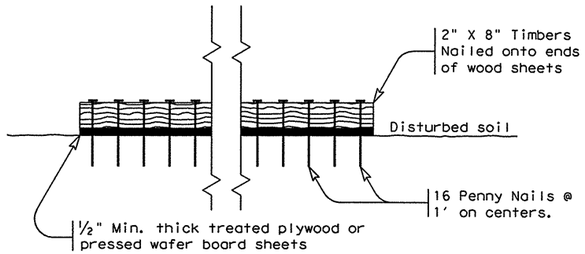

SECTION A-A

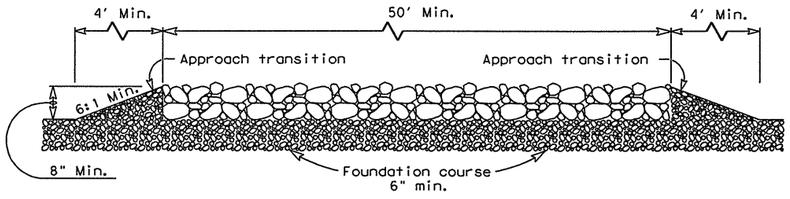

PROFILE

CONSTRUCTION EXIT (TYPE 1)

GENERAL NOTES

1. The length of the type 1 construction exit shall be as indicated on the plans, but not less than 50'.
2. The coarse aggregate should be open graded with a size of 4" to 8".
3. The approach transitions should be no steeper than 6:1 and constructed as directed by the Engineer.
4. The construction exit foundation course shall be flexible base, bituminous concrete, portland cement concrete or other material as approved by the Engineer.
5. The construction exit shall be graded to allow drainage to a sediment trapping device.
6. The guidelines shown hereon are suggestions only and may be modified by the Engineer.

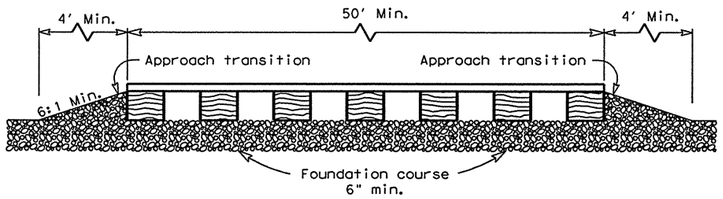

PROFILE

CONSTRUCTION EXIT (TYPE 2)

GENERAL NOTES

1. The length of the type 2 construction exit shall be as indicated on the plans, but not less than 50'.
2. The treated timber planks shall be attached to the railroad ties with ½"x 6" min. lag bolts. Other fasteners may be used as approved by the Engineer.
3. The treated timber planks shall be #2 grade min., and should be free from large and loose knots.
4. The approach transitions shall be no steeper than 6:1 and constructed as directed by the Engineer.
5. The construction exit foundation course shall be flexible base, bituminous concrete, portland cement concrete or other material as approved by the Engineer.
6. The construction exit should be graded to allow drainage to a sediment trapping device.
7. The guidelines shown hereon are suggestions only and may be modified by the Engineer.

CONSTRUCTION EXIT (TYPE 3)

GENERAL NOTES

1. The length of the type 3 construction exit shall be as shown on the plans, or as directed by the Engineer.
2. The type 3 construction exit may be constructed from open graded crushed stone with a size of two to four inches spread a min. of 4" thick to the limits shown on the plans.
3. The treated timber planks shall be #2 grade min., and should be free from large and loose knots.
4. The guidelines shown hereon are suggestions only and may be modified by the Engineer.

DISCLAIMER:
The use of this standard is governed by the "Texas Engineering Practice Act". No warranty of any kind is made by TxDOT for any purpose whatsoever. TxDOT assumes no responsibility for the conversion of this standard to other formats or for incorrect results or damages resulting from its use.

LEVELS DISPLAYED
1 3 4 5 6 7 8 9 10 11 12 13 14 15 16
17 18 19 20 21 22 23 24 25 26 27 28 29 30 31 32
33 34 35 36 37 38 39 40 41 42 43 44 45 46 47 48
49 50 51 52 53 54 55 56 57 58 59 60 61 62 63

Texas Department of Transportation
Design Division (Roadway)

TEMPORARY EROSION, SEDIMENT AND WATER POLLUTION CONTROL MEASURES

CONSTRUCTION EXITS

EC(3)-93

FILE: EC393.DGN	DN: HEJ	CK: HEJ	DW: BGD	CK:	
©TxDOT JUNE 1993	DISTRICT	FEDERAL AID PROJECT			SHEET
REVISIONS	PHARR				936
	COUNTY		CONTROL	SECT	JOB	HIGHWAY
	HIDALGO		0255	08	091	US 281

US 281 / TRENTON
ESTIMATED SHEET TOTALS

SITE LOCATION	STONE TYPE*	COLOR**	PATTERN	QTY. EST. SQ. FT
TRENTON RD.	HOLLAND	ANTIQUE TERRA COTTA	SEE DETAIL	
	HOLLAND	CHARCOAL EDGER	SEE DETAIL	
	HOLLAND	WHITE	SEE DETAIL	
	HOLLAND	GREY	SEE DETAIL	
			EST. TOTAL	30,422

**COLOR SHALL BE APPROVED BY THE ENGINEER PRIOR TO INSTALLATION OF ANY BRICK.

*AS PER PAVESTONE OR EQUAL.

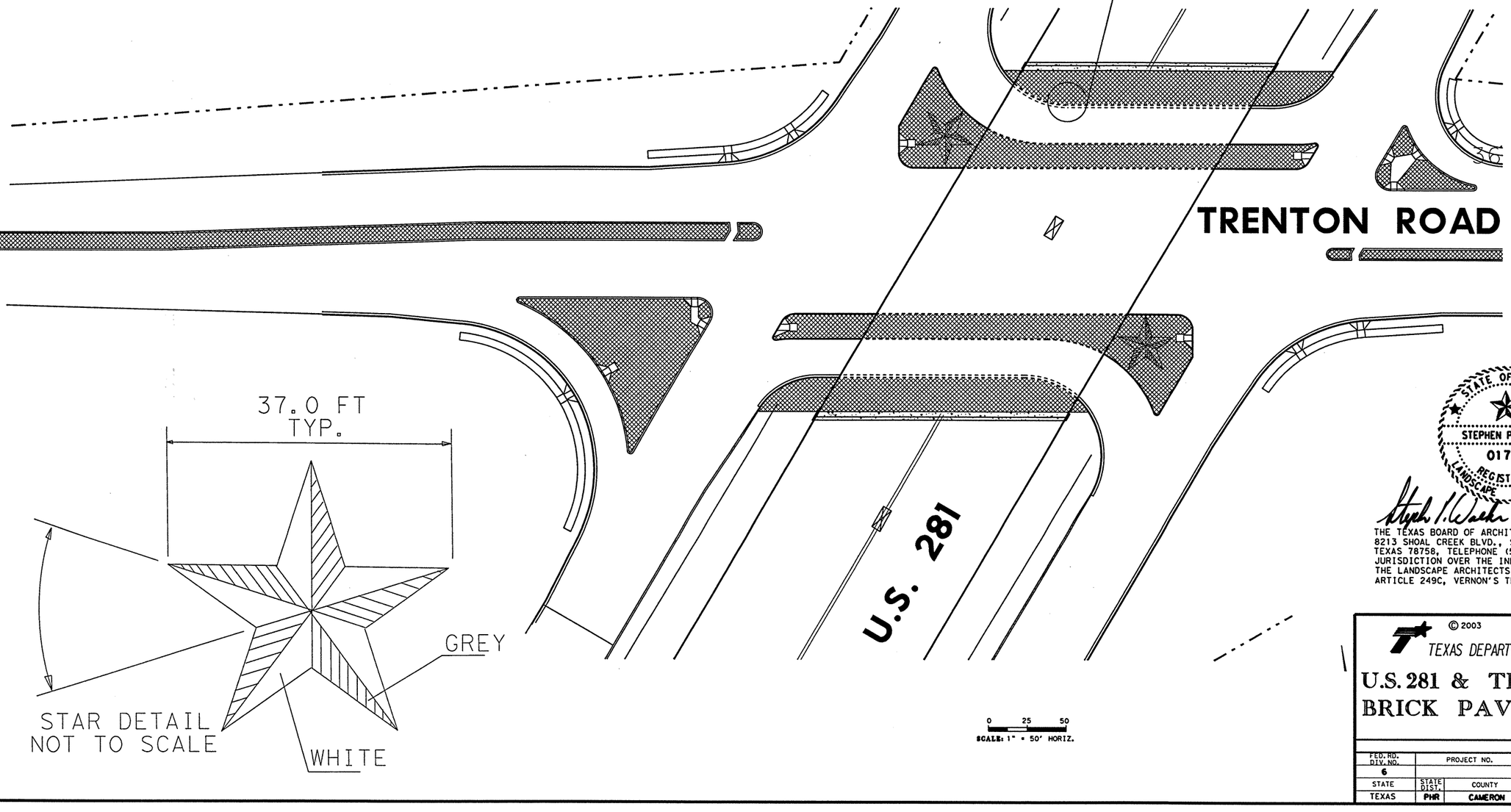

STATE OF TEXAS
STEPHEN P. WALKER
01774
REGISTERED LANDSCAPE ARCHITECT

Stephen P. Walker 07.01.03

THE TEXAS BOARD OF ARCHITECTURAL EXAMINERS, 8213 SHOAL CREEK BLVD., SUITE 107, AUSTIN, TEXAS 78758, TELEPHONE (512) 458-4126, HAS JURISDICTION OVER THE INDIVIDUALS LICENSED UNDER THE LANDSCAPE ARCHITECTS REGISTRATION LAW ARTICLE 249C, VERNON'S TEXAS CIVIL STATUTES.

© 2003

TEXAS DEPARTMENT OF TRANSPORTATION

U.S. 281 & TRENTON RD. BRICK PAVER LAYOUT

FED. RD. DIV. NO.	PROJECT NO.					SHEET NO.
6						937
STATE	STATE DIST.	COUNTY	CONT.	SECT.	JOB	HIGHWAY NO.
TEXAS	PHR	CAMERON	0255	08	091	US 281

US 281 / OWASSA
ESTIMATED SHEET TOTALS

SITE LOCATION	STONE TYPE*	COLOR**	PATTERN	QTY. EST. SQ. FT
SP 112	HOLLAND	ANTIQUE RED	SEE DETAIL	
	HOLLAND	CHARCOAL EDGER	SEE DETAIL	
	HOLLAND	WHITE	SEE DETAIL	
	HOLLAND	GREY	SEE DETAIL	
			EST. TOTAL	28,007

**COLOR SHALL BE APPROVED BY THE ENGINEER PRIOR TO INSTALLATION OF ANY BRICK.

*AS PER PAVESTONE OR EQUAL.

LIMITS OF PAVERS

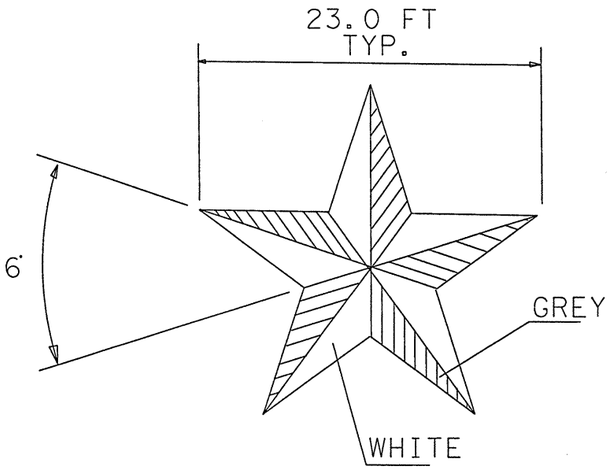

STAR DETAIL
NOT TO SCALE

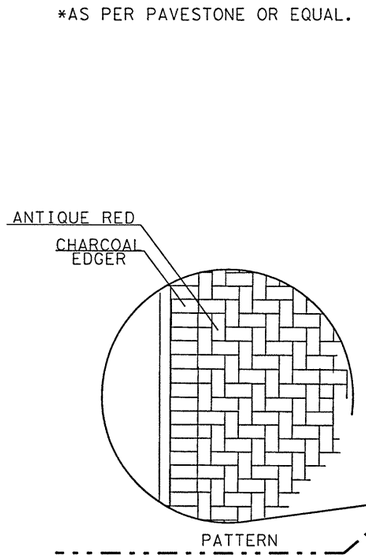

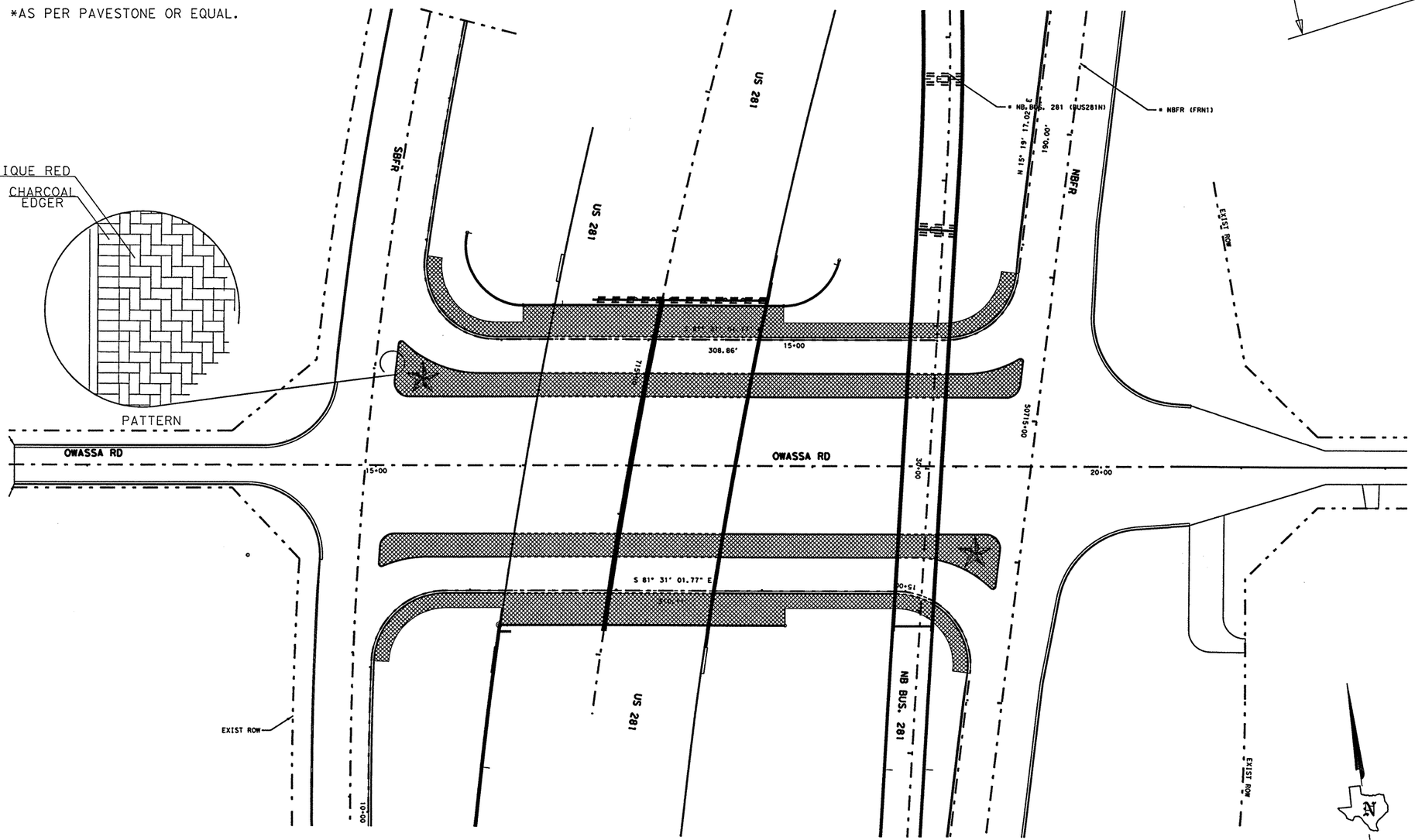

0 25 50
SCALE: 1" = 50' HORIZ.

STATE OF TEXAS
STEPHEN P. WALKER
01774
REGISTERED
LANDSCAPE ARCHITECT

Stephen P. Walker 02.03.01

THE TEXAS BOARD OF ARCHITECTURAL EXAMINERS, 8213 SHOAL CREEK BLVD., SUITE 107, AUSTIN, TEXAS 78758, TELEPHONE (512) 458-4126, HAS JURISDICTION OVER THE INDIVIDUALS LICENSED UNDER THE LANDSCAPE ARCHITECTS REGISTRATION LAW ARTICLE 249C, VERNON'S TEXAS CIVIL STATUTES.

© 2003

TEXAS DEPARTMENT OF TRANSPORTATION

US 281 & OWASSA RD.
BRICK PAVER LAYOUT

STA. 12+50 "XOWA1" TO
STA. 16+50 "XOWA1"

FED. RD. DIV. NO.	PROJECT NO.					SHEET NO.
6						938
STATE	STATE DIST.	COUNTY	CONT.	SECT.	JOB	HIGHWAY NO.
TEXAS	PHR	CAMERON	0255	08	091	US 281

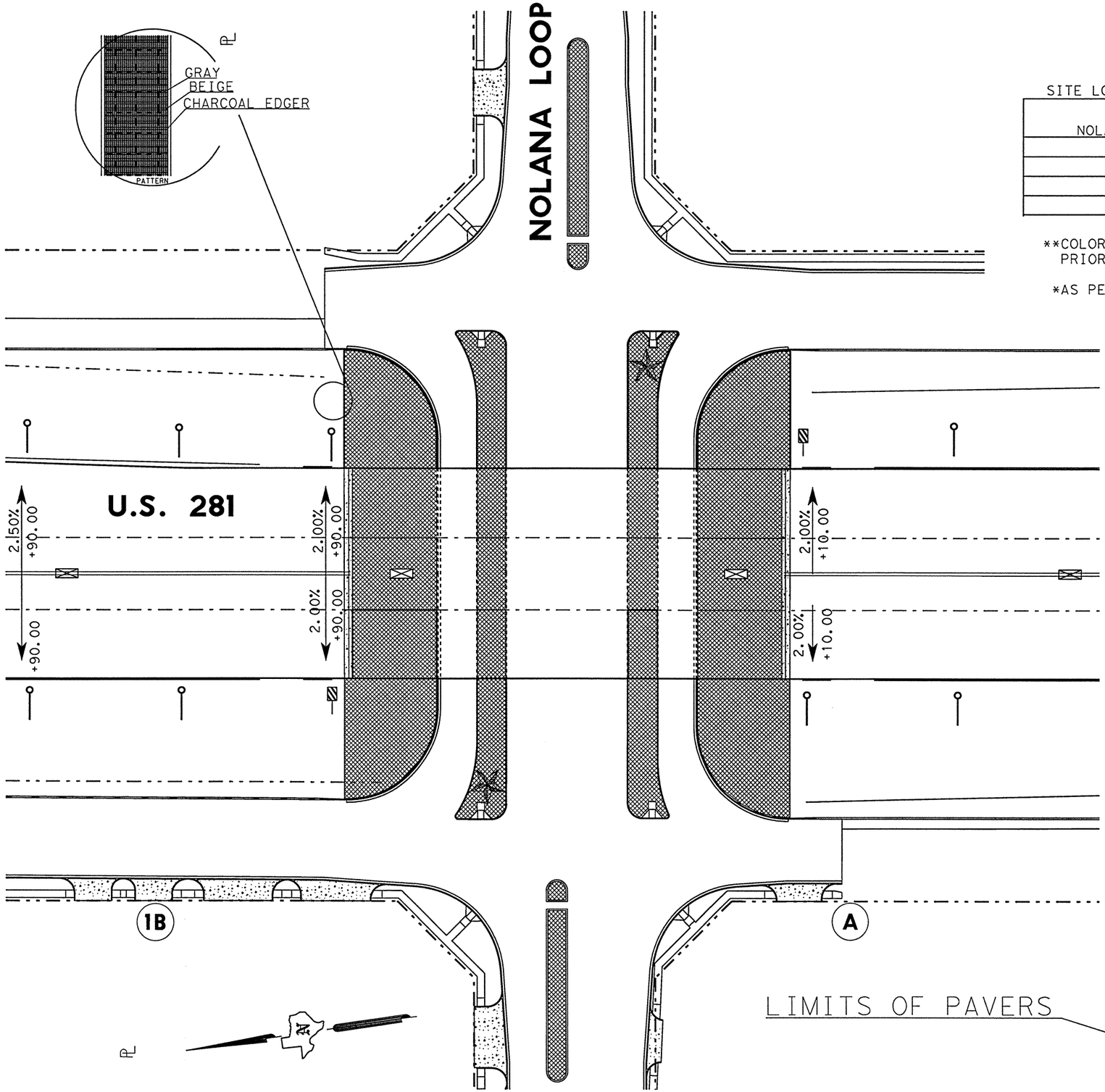

US 281 / NOLANA
ESTIMATED SHEET TOTALS

SITE LOCATION	STONE TYPE*	COLOR**	PATTERN	QTY. EST. SQ. FT
NOLANA	HOLLAND	BEIGE	SEE DETAIL	
	HOLLAND	CHARCOAL EDGER	SEE DETAIL	
	HOLLAND	WHITE	SEE DETAIL	
	HOLLAND	GREY	SEE DETAIL	
			EST. TOTAL	40,887

**COLOR SHALL BE APPROVED BY THE ENGINEER PRIOR TO INSTALLATION OF ANY BRICK.

*AS PER PAVESTONE OR EQUAL.

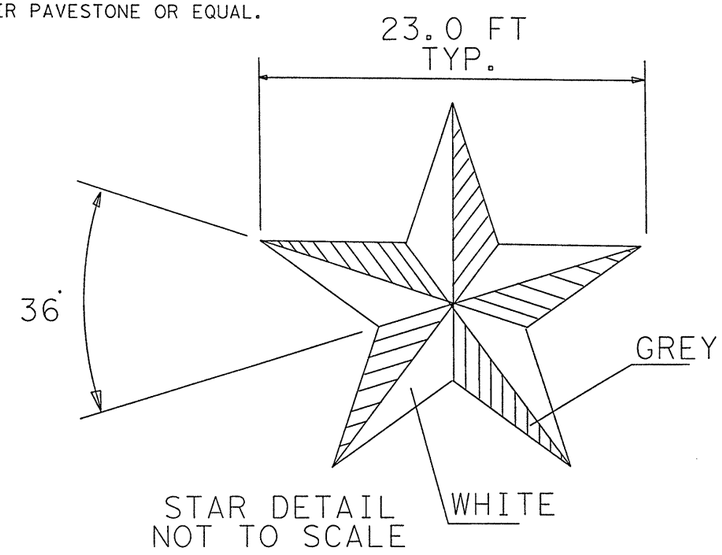

STAR DETAIL
NOT TO SCALE

STATE OF TEXAS
STEPHEN P. WALKER
01774
REGISTERED LANDSCAPE ARCHITECT

07.01.03

THE TEXAS BOARD OF ARCHITECTURAL EXAMINERS, 8213 SHOAL CREEK BLVD., SUITE 107, AUSTIN, TEXAS 78758, TELEPHONE (512) 458-4126, HAS JURISDICTION OVER THE INDIVIDUALS LICENSED UNDER THE LANDSCAPE ARCHITECTS REGISTRATION LAW ARTICLE 249C, VERNON'S TEXAS CIVIL STATUTES.

SCALE: 1" = 50' HORIZ.

LIMITS OF PAVERS

© 2003

TEXAS DEPARTMENT OF TRANSPORTATION

U.S. 281 & NOLANA LOOP
BRICK PAVER LAYOUT

FED. RD. DIV. NO.	PROJECT NO.				SHEET NO.
6					939
STATE	STATE DIST.	COUNTY	CONT.	SECT.	JOB	HIGHWAY NO.
TEXAS	PHR	CAMERON	0255	08	091	US 281

US 281 / SIOUX
ESTIMATED SHEET TOTALS

SITE LOCATION	STONE TYPE*	COLOR**	PATTERN	QTY. EST. SQ. FT
SIOUX RD.	HOLLAND	OAK BLEND	SEE DETAIL	
	HOLLAND	CHARCOAL EDGER	SEE DETAIL	
	HOLLAND	WHITE	SEE DETAIL	
	HOLLAND	GREY	SEE DETAIL	
			EST. TOTAL	48,013

**COLOR SHALL BE APPROVED BY THE ENGINEER PRIOR TO INSTALLATION OF ANY BRICK.

*AS PER PAVESTONE OR EQUAL.

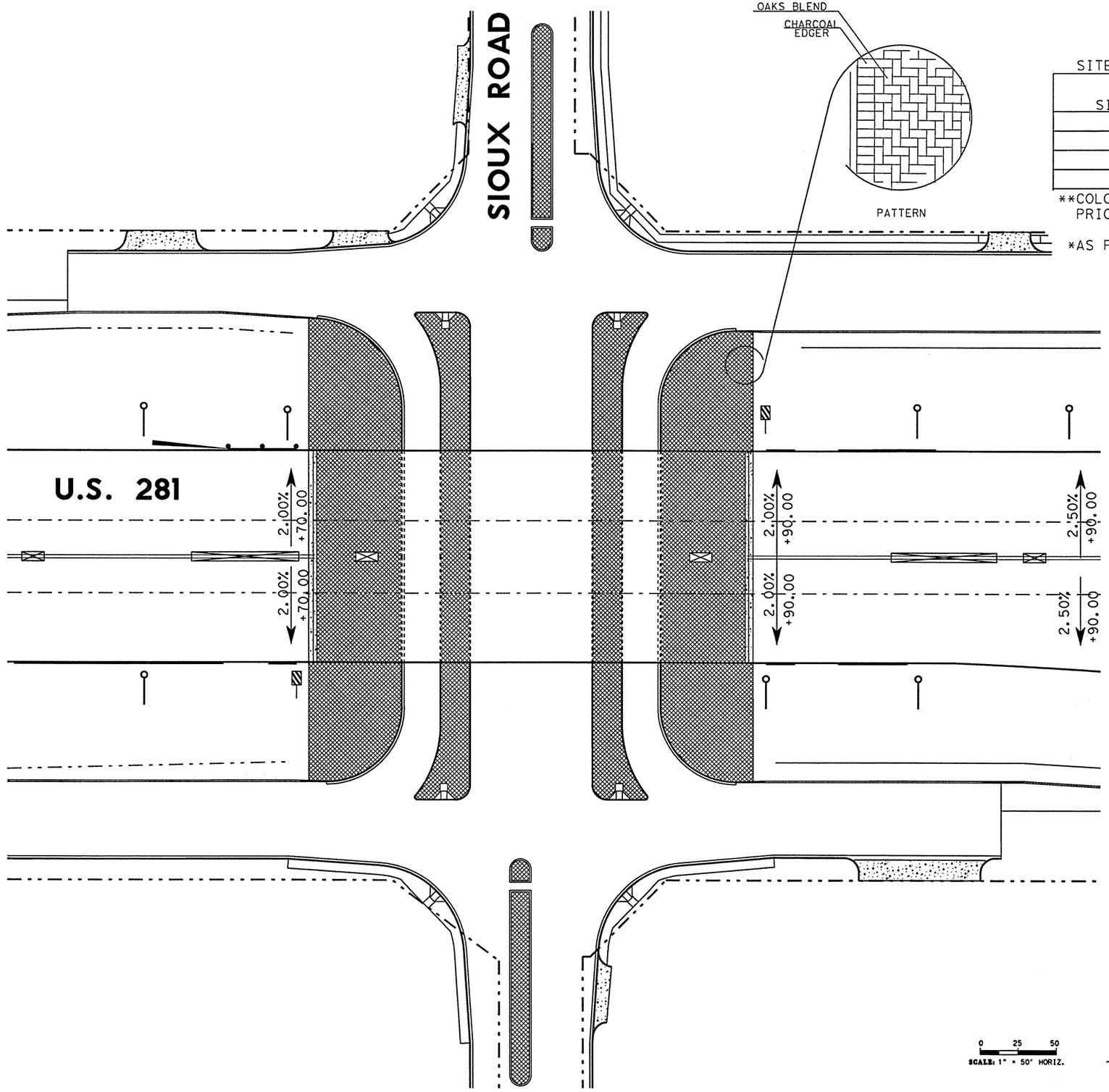

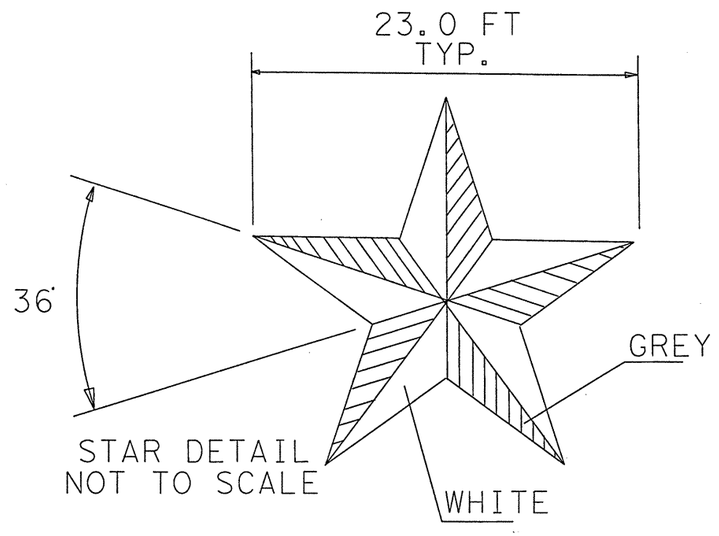

STAR DETAIL
NOT TO SCALE

0 25 50
SCALE: 1" = 50' HORIZ.

STATE OF TEXAS
STEPHEN P. WALKER
01774
REGISTERED
LANDSCAPE ARCHITECT

07.01.07

THE TEXAS BOARD OF ARCHITECTURAL EXAMINERS, 8213 SHOAL CREEK BLVD., SUITE 107, AUSTIN, TEXAS 78758, TELEPHONE (512) 458-4126, HAS JURISDICTION OVER THE INDIVIDUALS LICENSED UNDER THE LANDSCAPE ARCHITECTS REGISTRATION LAW ARTICLE 249C, VERNON'S TEXAS CIVIL STATUTES.

© 2003

TEXAS DEPARTMENT OF TRANSPORTATION

U.S. 281 & SIOUX RD.
BRICK PAVER LAYOUT

FED. RD. DIV. NO.	PROJECT NO.					SHEET NO.
6						940
STATE	STATE DIST.	COUNTY	CONT.	SECT.	JOB	HIGHWAY NO.
TEXAS	PHR	CAMERON	0255	08	091	US 281

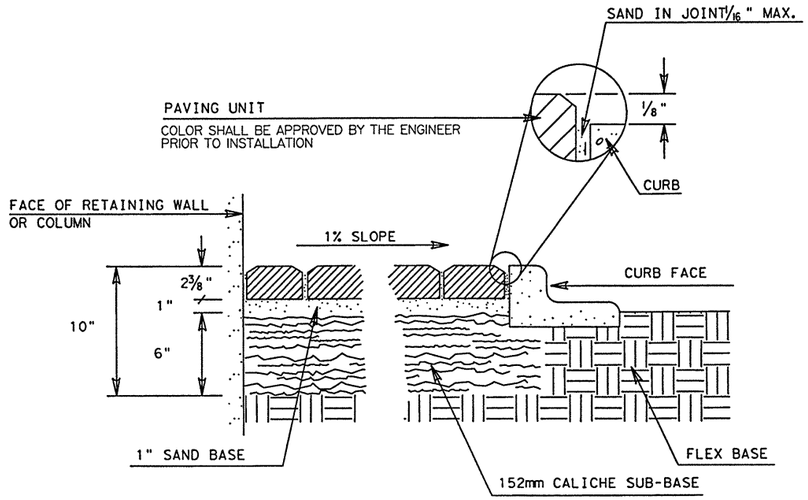

PAVING DETAIL AT VERTICAL COLUMN

N. T. S.

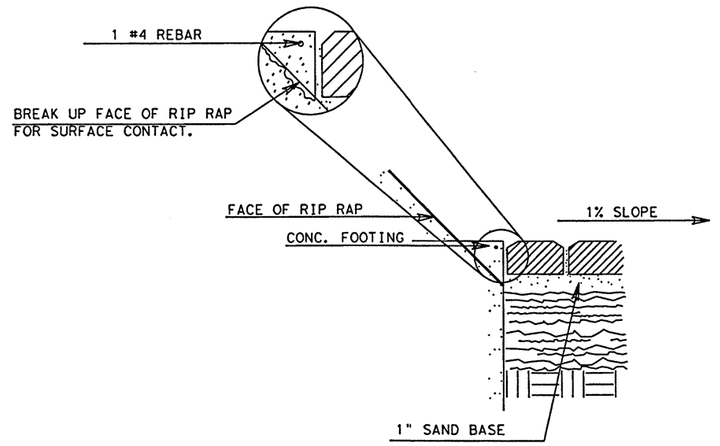

PAVING DETAIL AT RIP RAP

N. T. S.

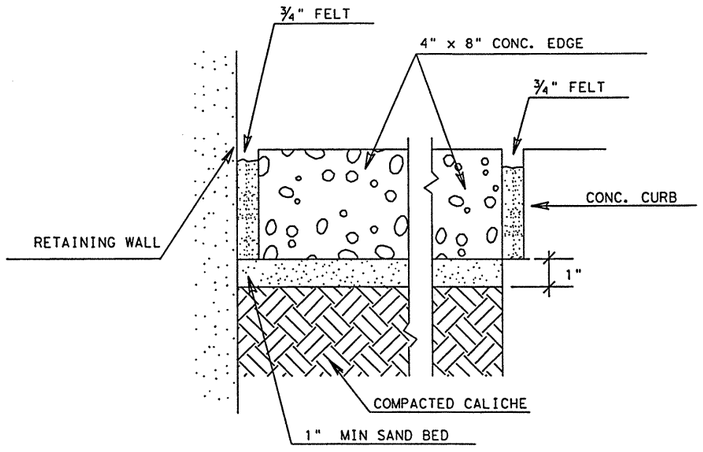

CONC EDGE EXP'N JOINT

N. T. S. (LONGITUDAL SECTION)

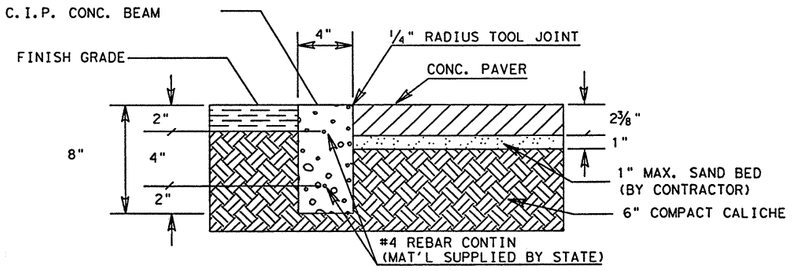

NOTES:

1. EDGE TREATMENT SHOULD BE AS STRAIGHT AS POSSIBLE TO COMPLIMENT THE ALIGNMENT OF PAVING STONES.
2. ALL EDGE TREATMENT MUST BE VERTICLE TO ALLOW CLOSE FIT OF PAVERS.
3. RELIEF TOOL FOR PAVER SIDE SHALL BE AS SMALL AS POSSIBLE (1/8").
4. RELIEF TO ITEM #530, TEXAS DOT STANDARD SPECIFICATIONS.

CALICHE SHALL MEET REQUIRMENTS AS SPECIFIED IN ITEMS 247 AND / OR 251.
ALL MATERAILS AND LABOR SHALL BE CONSIDERED SUBSIDIARY TO THE ITEM "LANDSCAPE PAVERS".

CONC EDGE & PAVER DETAIL

N. T. S.

CONC. PAVERS DETAILS

STATE OF TEXAS
STEPHEN P. WALKER
01774
REGISTERED
LANDSCAPE ARCHITECT
09.01.08

THE TEXAS BOARD OF ARCHITECTURAL EXAMINERS, 8213 SHOAL CREEK BLVD., SUITE 107, AUSTIN, TEXAS 78758, TELEPHONE (512) 458-4126, HAS JURISDICTION OVER THE INDIVIDUALS LICENSED UNDER THE LANDSCAPE ARCHITECTS REGISTRATION LAW ARTICLE 249C, VERNON'S TEXAS CIVIL STATUTES.

© 2000 by Texas Department of Transportation. (512) 416-2055, All rights reserved.

Texas Department of Transportation

Texas Department of Transportation

US 281

DISTRICT STANDARD FOR CONC. PAVER DETAILS

FED. RD. DIV. NO.	FEDERAL AID PROJECT NO.	SHEET NO.
6		941

STATE	DIST.	COUNTY	
TEXAS	PHARR	HIDALGO	
CONT.	SECT.	JOB	HIGHWAY NO.
0255	08	091, ETC.	US 281

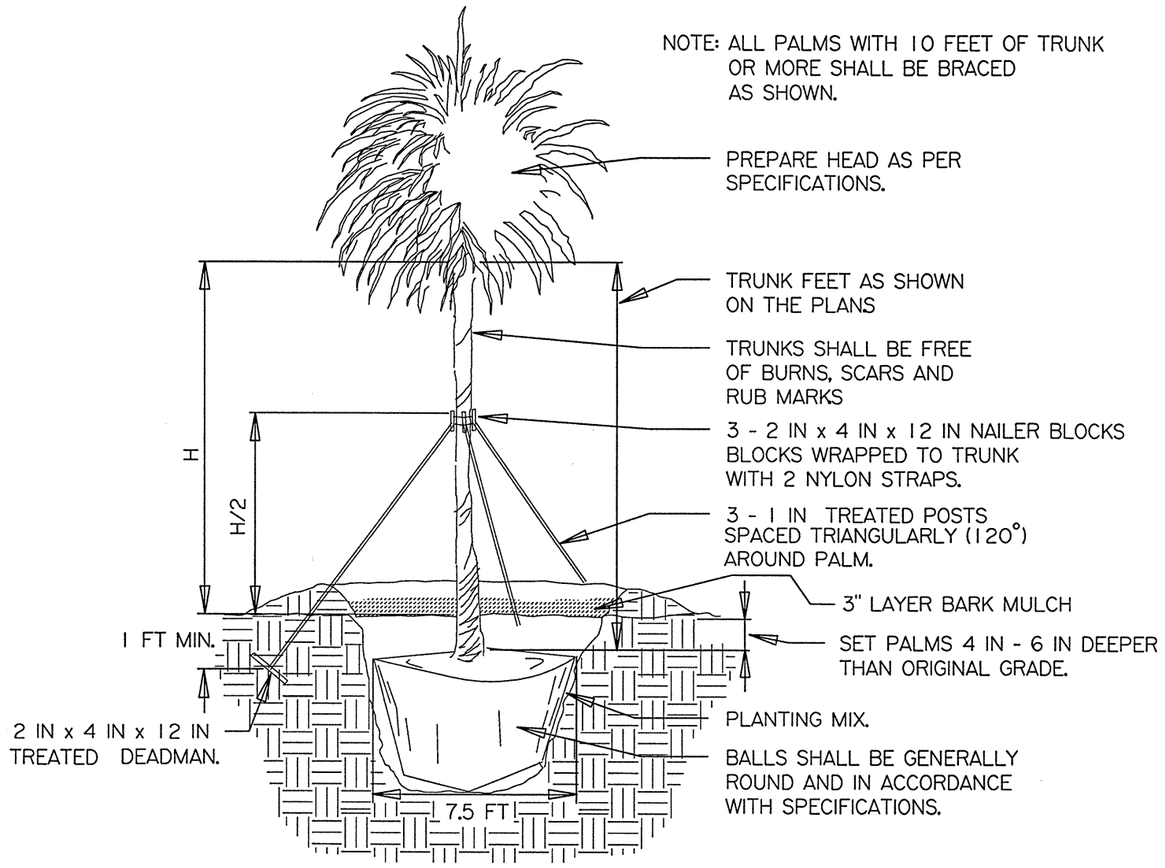

PALM PLANTING AND BRACING BY TREE SPADE

N.T.S.

Texas Department of Transportation

© 2002 by Texas Department of Transportation.
All rights reserved.

STATE OF TEXAS
STEPHEN P. WALKER
01774
REGISTERED LANDSCAPE ARCHITECT

09.01.03

THE TEXAS BOARD OF ARCHITECTURAL EXAMINERS, 8213 SHOAL CREEK BLVD., SUITE 107, AUSTIN, TEXAS 78758, TELEPHONE (512) 459-4126, HAS JURISDICTION OVER THE INDIVIDUALS LICENSED UNDER THE LANDSCAPE ARCHITECTS REGISTRATION LAW ARTICLE 249C, VERNON'S TEXAS CIVIL STATUTES.

PALM PLANTING & BRACING BY TREE SPADE

Texas Department of Transportation

©TxDOT 2003

FED. RD. DIV. NO.	FEDERAL AID PROJECT NO.					SHEET NO.
6						942
STATE	DIST.	COUNTY	CONT.	SECT.	JOB	HIGHWAY NO.
TEXAS	21	HIDALGO	255	08	091	US 281

ALLEN CROZIER
03:10:41 PM
06/25/2003

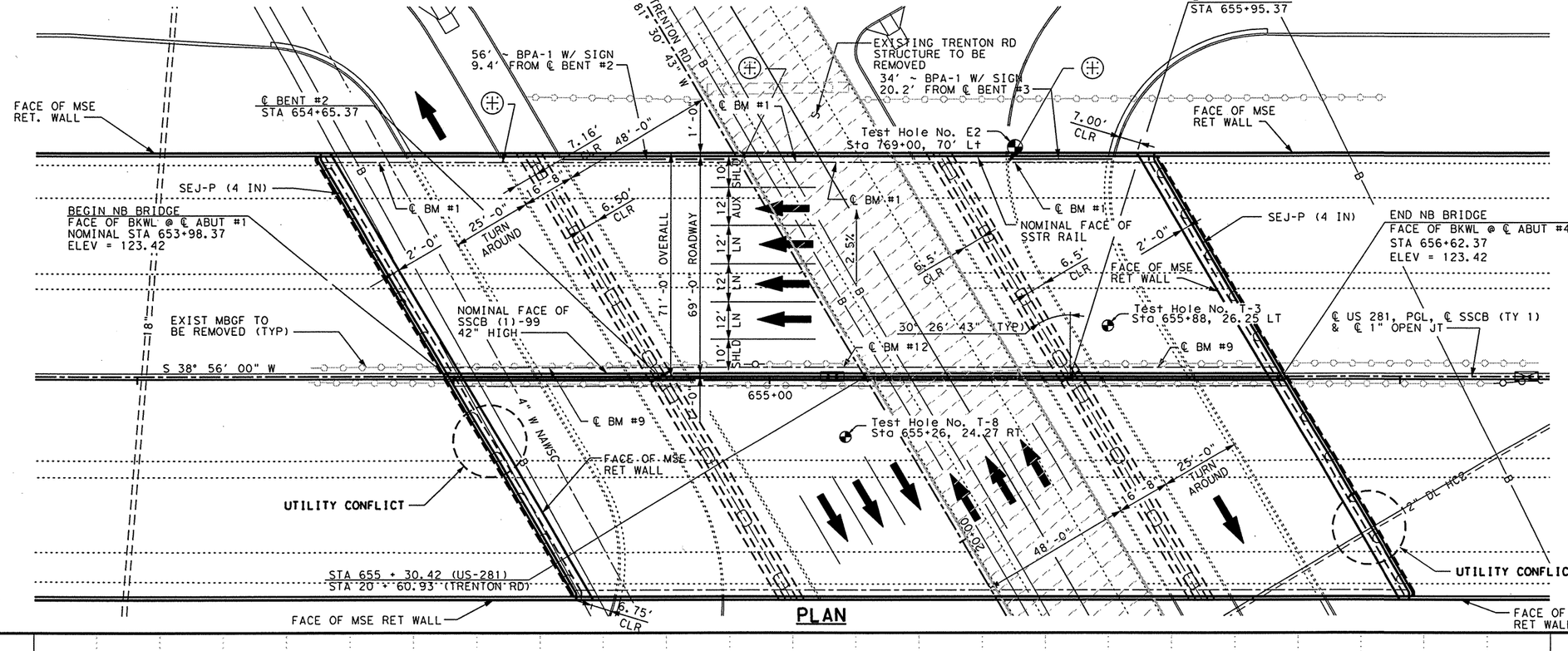

- ● - TEST HOLE
- ⊕ - POINT OF MIN VERT CLEAR
  STA 654+15.22 (68' LT)
  STA 654+90.76 (68' LT)
  STA 655+75.63 (68' LT)
- ⊠ - CENTER OF 10' SSCB (TY. 4) RAIL
  AT ℄ US 281.
  STA 655+20.00
  STA 657+40.00

ALL BENTS AND ABUTMENTS ARE ON A BEARING OF N 81° 30' 43" W

NOTE: EXISTING 510' x 41'-7" PRESTR. CONC. BM. BRIDGE, INCLUDING TY2 RAILING, & MBGF SHALL BE REMOVED UNDER ITEM 496. EXISTING FOUNDATIONS TO BE REMOVED TO 2' BELOW PROP. RDWY SUBGRADE. SEE SHEETS "REMOVAL ITEM DETAILS" AND "TRAFFIC CONTROL PLAN" FOR ADDITIONAL INFORMATION.

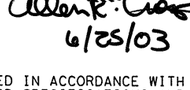

6/25/03

NOTES:

DESIGNED IN ACCORDANCE WITH 1996 AASHTO STANDARD SPECIFICATIONS AND ALL CURRENT INTERIMS.

ELEVATIONS BASED ON THE CURRENT NAVD 88 DATUM. EXISTING STRUCTURE WAS SURVEYED UNDER THE USGS&GS DATUM SYSTEM.

BORE HOLE DATA PROVIDED BY TxDOT, PHARR DISTRICT.

BM US 281-21
STA 655+88.78
OFFSET = 173.20' LT
ELEV = 98.66
DESC = 3 1/4" TxDOT ALUM DISK

FUNC CLASS	: FREEWAY
DESIGN SPEED	: 70 MPH
ADT(2002)	: 56,200 VPD
ADT(2022)	: 91,400 VPD
NBI	: 21-109-0-0255-08-261
EXIST PSN	: 0255-08-066

HS25 LOADING

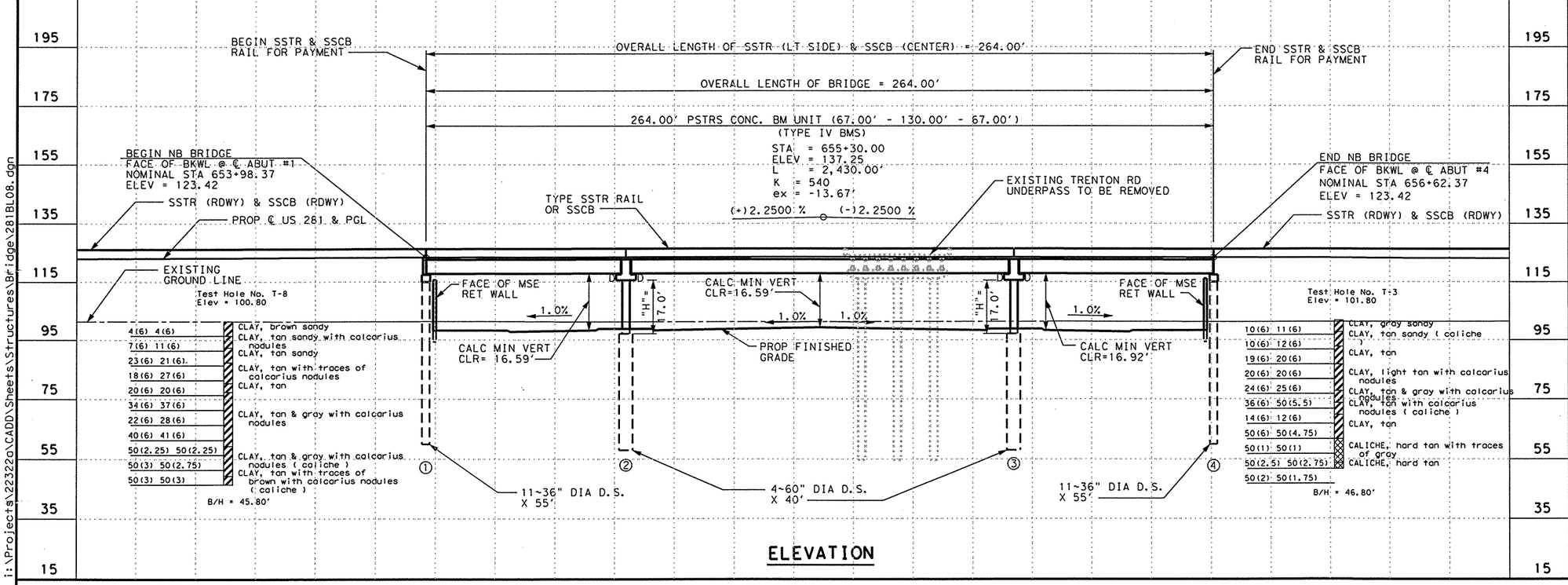

Parsons Brinckerhoff Quade & Douglas Inc.

Texas Department of Transportation

© 2003 by TxDOT

BRIDGE LAYOUT

TRENTON ROAD OVERPASS

NORTHBOUND MAINLANES

PLAN 1"= 40' HORIZ
PROFILE 1"= 40' VERT

281BL08.DGN

DESIGNED: ARC	FED. RD DIV. No.	STATE	FEDERAL AID PROJECT No.			HIGHWAY No.
CHECKED: ABM	6	TEXAS	NH 2003 ( )			US 281
DRAWN: OJH	STATE DISTRICT	COUNTY	CONTROL No.	SECTION No.	JOB No.	SHEET No.
CHECKED: ARC	PHARR	HIDALGO	0255	08	091	943

i:\Projects\22322a\CADD\Sheets\Structures\Bridge\281BL08.dgn

$NAME$

03:27:44 PM

09/16/2003

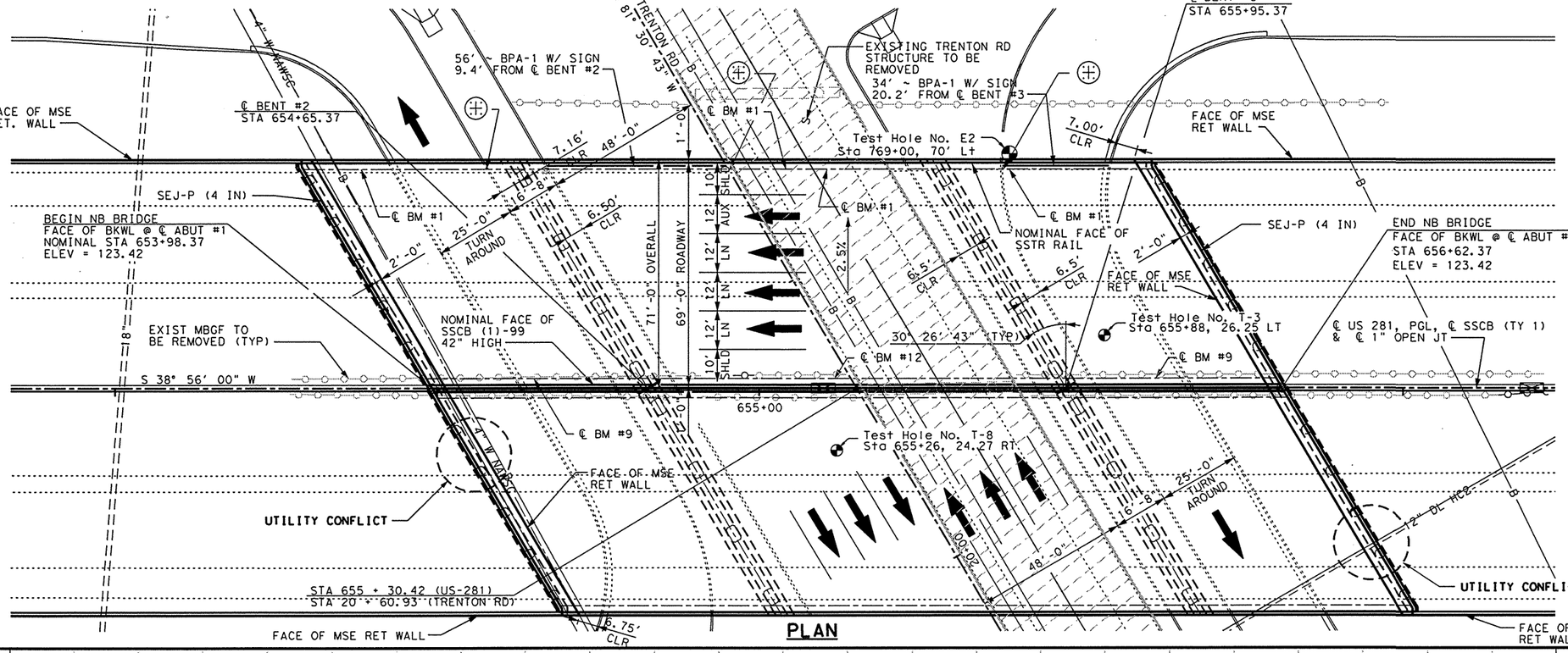

- ● - TEST HOLE
- ⊕ - POINT OF MIN VERT CLEAR
  STA 654+15.22 (68' LT)
  STA 654+90.76 (68' LT)
  STA 655+75.63 (68' LT)
- ⊠ - CENTER OF 10' SSCB (TY. 4) RAIL AT ℄ US 281.
  STA 655+20.00
  STA 657+40.00

ALL BENTS AND ABUTMENTS ARE ON A BEARING OF N 81° 30' 43" W

NOTE: EXISTING 510' x 41'-7" PRESTR. CONC. BM. BRIDGE, INCLUDING TY2 RAILING, & MBGF SHALL BE REMOVED UNDER ITEM 496. EXISTING FOUNDATIONS TO BE REMOVED TO 2' BELOW PROP. RDWY SUBGRADE. SEE SHEETS "REMOVAL ITEM DETAILS" AND "TRAFFIC CONTROL PLAN" FOR ADDITIONAL INFORMATION.

STATE OF TEXAS
ALLEN R. CROZIER
81450
REGISTERED PROFESSIONAL ENGINEER
9/16/03

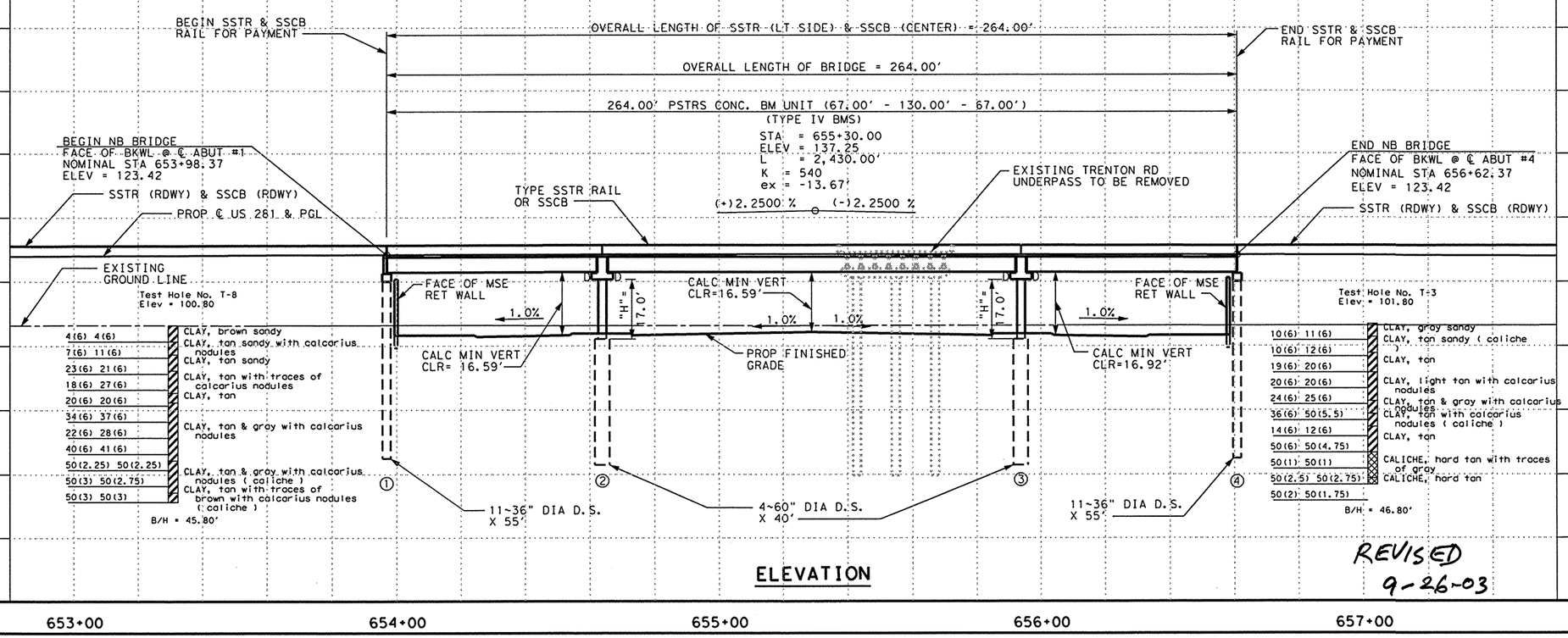

ELEVATION

REVISED 9-26-03

NOTES:

DESIGNED IN ACCORDANCE WITH 1996 AASHTO STANDARD SPECIFICATIONS AND ALL CURRENT INTERIMS.

ELEVATIONS BASED ON THE CURRENT NAVD 88 DATUM. EXISTING STRUCTURE WAS SURVEYED UNDER THE USGS&GS DATUM SYSTEM.

BORE HOLE DATA PROVIDED BY TxDOT, PHARR DISTRICT.

BM US 281-21
STA 655+88.78
OFFSET = 173.20' LT
ELEV = 98.66
DESC = 3 1/4" TxDOT ALUM DISK

FUNC CLASS	: FREEWAY
DESIGN SPEED	: 70 MPH
ADT(2002)	: 56,200 VPD
ADT(2022)	: 91,400 VPD
NBI	: 21-109-0-0255-08-261
EXIST PSN	: 0255-08-066

HS25 LOADING

Parsons Brinckerhoff Quade & Douglas Inc.

Texas Department of Transportation

© 2003 by TxDOT

BRIDGE LAYOUT

TRENTON ROAD OVERPASS

NORTHBOUND MAINLANES

PLAN 1"= 40' HORIZ
PROFILE 1"= 40' VERT

281BL08.DGN

DESIGNED: ARC	FED. RD DIV. No.	STATE	FEDERAL AID PROJECT No.		HIGHWAY No.
CHECKED: ABM	6	TEXAS	NH 2003 ( )		US 281
DRAWN: OJH	STATE DISTRICT	COUNTY	CONTROL No.	SECTION No.	JOB No.	SHEET No.
CHECKED: ARC	PHARR	HIDALGO	0255	08	091	943

I:\projects\22322a\CADD\Sheets\Structures\Bridge\281BL08.dgn

ALLEN CROZIER
03:45:40 PM
08/05/2003

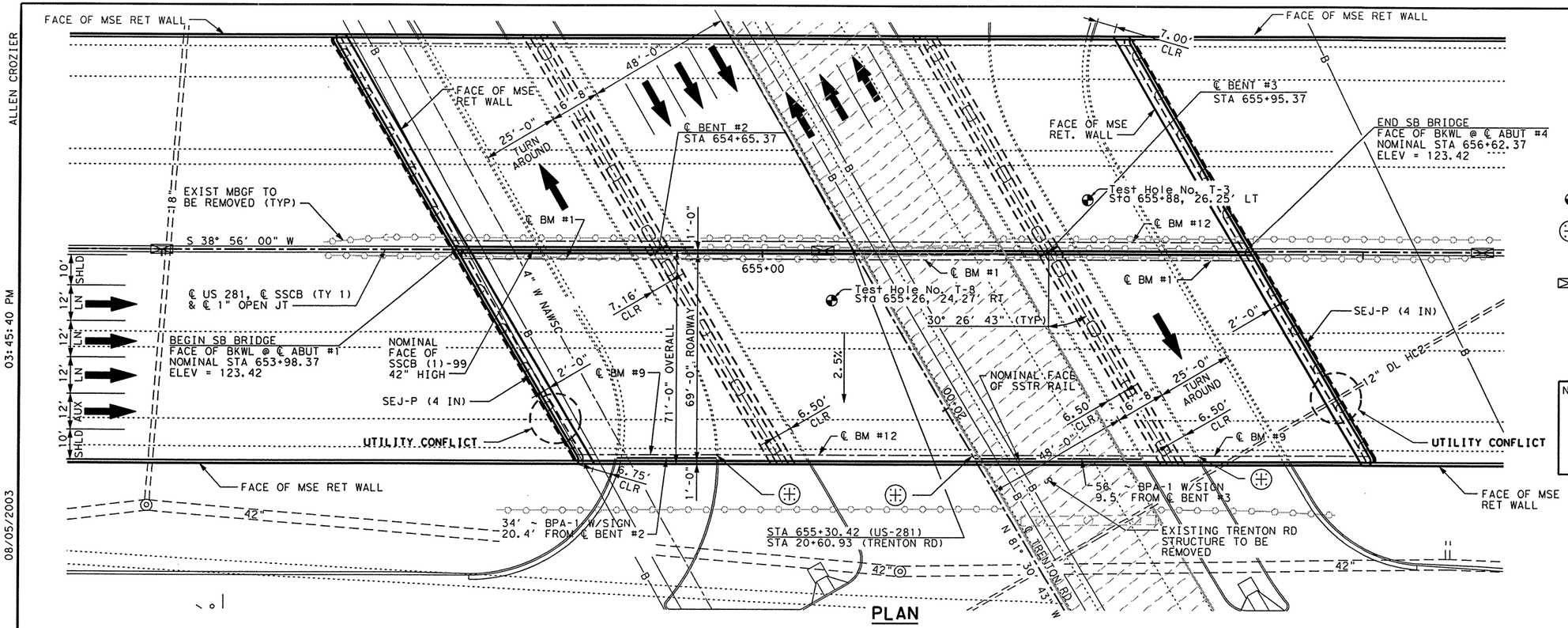

PLAN

- ℄ - TEST HOLE
- ⊕ - POINT OF MIN VERT CLEAR
  STA 654+85.03 (68' RT)
  STA 655+70.37 (68' RT)
  STA 656+45.36 (68' RT)
- ⊠ - CENTER OF 10' SSCB (TY. 4) RAIL AT ℄ US 281.
  STA 655+20.00
  STA 657+40.00

ALL BENTS AND ABUTMENTS ARE ON A BEARING OF N 81° 30' 43" W

NOTE: EXISTING 510' x 41'-7" PRESTR. CONC. BM. BRIDGE, INCLUDING TY2 RAILING, & MBGF SHALL BE REMOVED UNDER ITEM 496. EXISTING FOUNDATIONS TO BE REMOVED TO 2' BELOW PROP. RDWY SUBGRADE. SEE SHEETS "REMOVAL ITEM DETAILS" AND "TRAFFIC CONTROL PLAN" FOR ADDITIONAL INFORMATION.

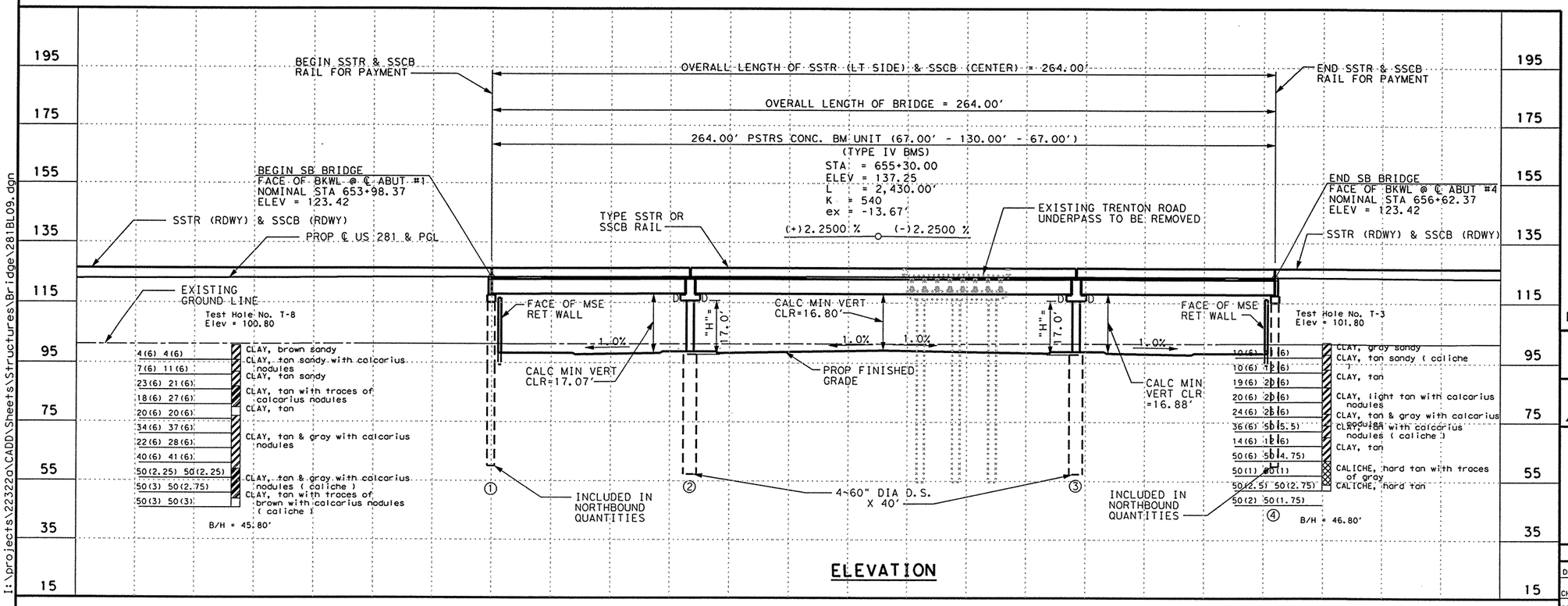

ELEVATION

NOTES:

DESIGNED IN ACCORDANCE WITH 1996 AASHTO STANDARD SPECIFICATIONS AND ALL CURRENT INTERIMS.

ELEVATIONS BASED ON THE CURRENT NAVD 88 DATUM. EXISTING STRUCTURE WAS SURVEYED UNDER THE USGS&GS DATUM SYSTEM.

BORE HOLE DATA PROVIDED BY TxDOT, PHARR DISTRICT

BM US 281-21
STA 655+88.78
OFFSET = 173.20 LT
ELEV = 98.66
DESC = 3 1/4" TxDOT ALUM DISK

FUNC CLASS	: FREEWAY
DESIGN SPEED	: 70 MPH
ADT(2002)	: 56,200 VPD
ADT(2022)	: 91,400 VPD
NBI	: 21-109-0-0255-08-262
EXIST PSN	: 0255-08-066

HS25 LOADING

Parsons Brinckerhoff Quade & Douglas Inc.

Texas Department of Transportation

© 2003 by TxDOT

BRIDGE LAYOUT

TRENTON ROAD OVERPASS

SOUTHBOUND MAINLANES

PLAN 1"= 40' HORIZ
PROFILE 1"= 40' VERT

281BL09.DGN

DESIGNED: ARC	FED. RD DIV. NO.	STATE	FEDERAL AID PROJECT No.				HIGHWAY No.
CHECKED: ABM	6	TEXAS	NH 2003 ( )				US 281
DRAWN: OJH	STATE DISTRICT	COUNTY	CONTROL No.	SECTION No.	JOB No.	SHEET No.	
CHECKED: ARC	PHARR	HIDALGO	0255	08	091	944	

I:\projects\22322a\CADD\Sheets\Structures\Bridge\281BL09.dgn

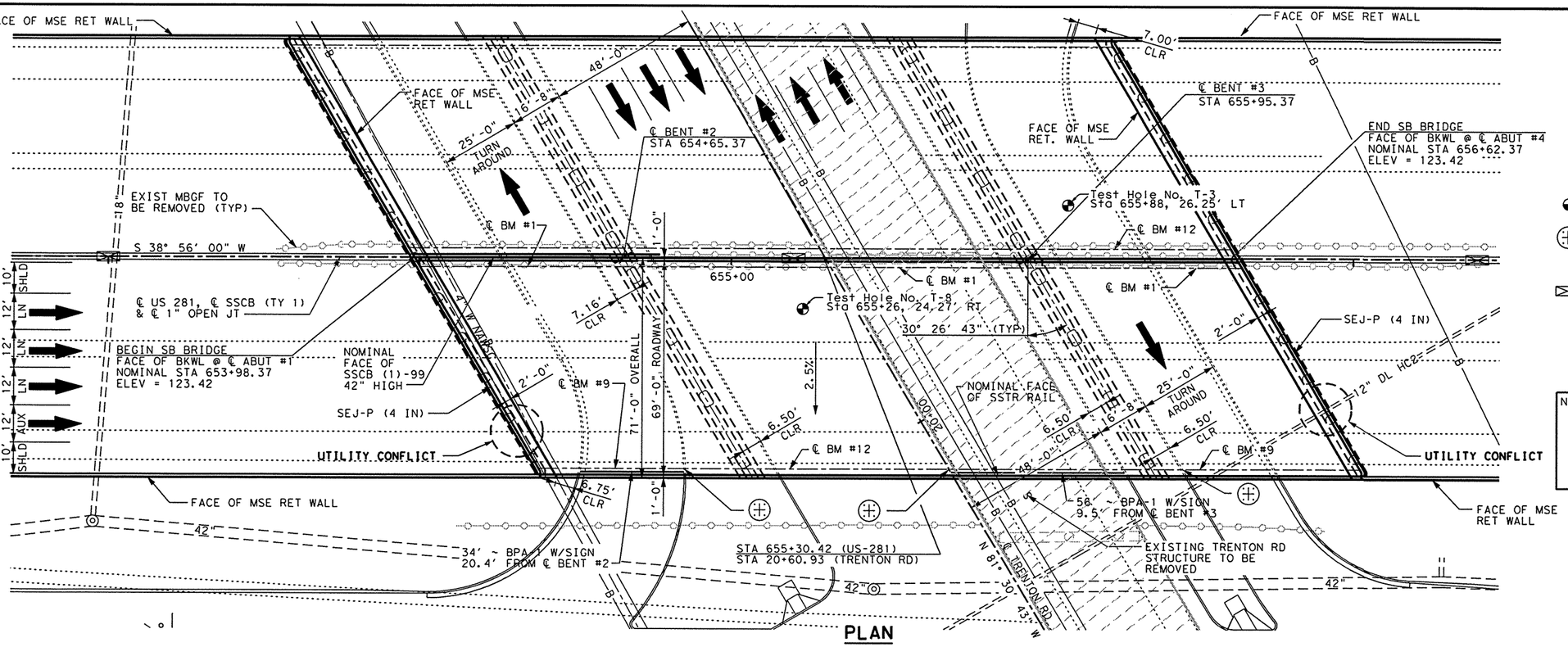

PLAN

STATE OF TEXAS
ALLEN R. CROZIER
81450
REGISTERED PROFESSIONAL ENGINEER
Allen R. Crozier
9/16/03

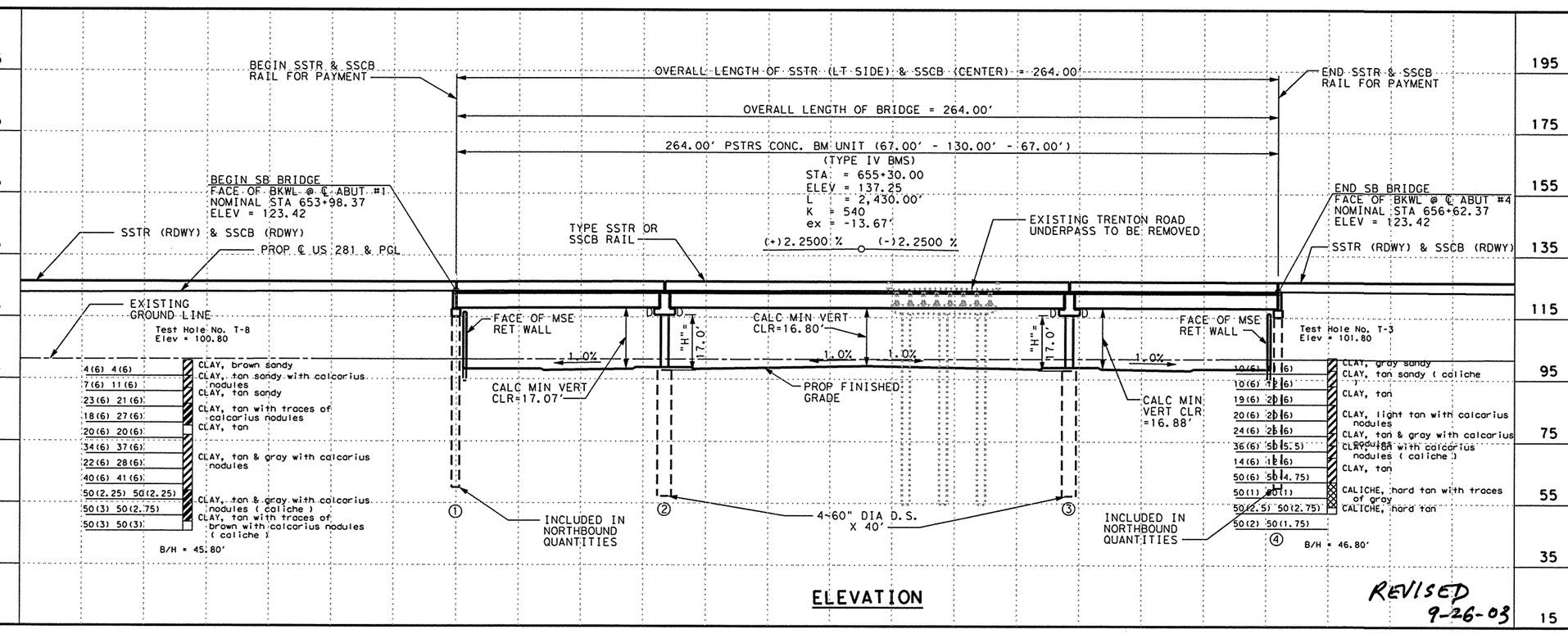

ELEVATION

REVISED 9-26-03

NOTES:

DESIGNED IN ACCORDANCE WITH 1996 AASHTO STANDARD SPECIFICATIONS AND ALL CURRENT INTERIMS.

ELEVATIONS BASED ON THE CURRENT NAVD 88 DATUM. EXISTING STRUCTURE WAS SURVEYED UNDER THE USGS&GS DATUM SYSTEM.

BORE HOLE DATA PROVIDED BY TxDOT, PHARR DISTRICT

BM US 281-21
STA 655+88.78
OFFSET = 173.20 LT
ELEV = 98.66
DESC = 3 1/4" TxDOT ALUM DISK

FUNC CLASS	: FREEWAY
DESIGN SPEED	: 70 MPH
ADT(2002)	: 56,200 VPD
ADT(2022)	: 91,400 VPD
NBI	: 21-109-0-0255-08-262
EXIST PSN	: 0255-08-066

HS25 LOADING

Parsons Brinckerhoff Quade & Douglas Inc.

Texas Department of Transportation

© 2003 by TxDOT

BRIDGE LAYOUT

TRENTON ROAD OVERPASS

SOUTHBOUND MAINLANES

PLAN 1"= 40' HORIZ
PROFILE 1"= 40' VERT

281BL09.DGN

DESIGNED: ARC	FED. RD DIV. No.	STATE	FEDERAL AID PROJECT No.		HIGHWAY No.
CHECKED: ABM	6	TEXAS	NH 2003 ( )		US 281
DRAWN: OJH	STATE DISTRICT	COUNTY	CONTROL No.	SECTION No.	JOB No.	SHEET No.
CHECKED: ARC	PHARR	HIDALGO	0255	08	091	944

$NAME$ 03:37:05 PM 09/16/2003 I:\projects\22322a\CADD\Sheets\Structures\Bridge\281BL09.dgn

ESMERALDA G. EGGER
12:18:28 PM
06/25/2003
I:\projects\22322a\CADD\Sheets\Structures\Bridge\281brdgSECT.dgn

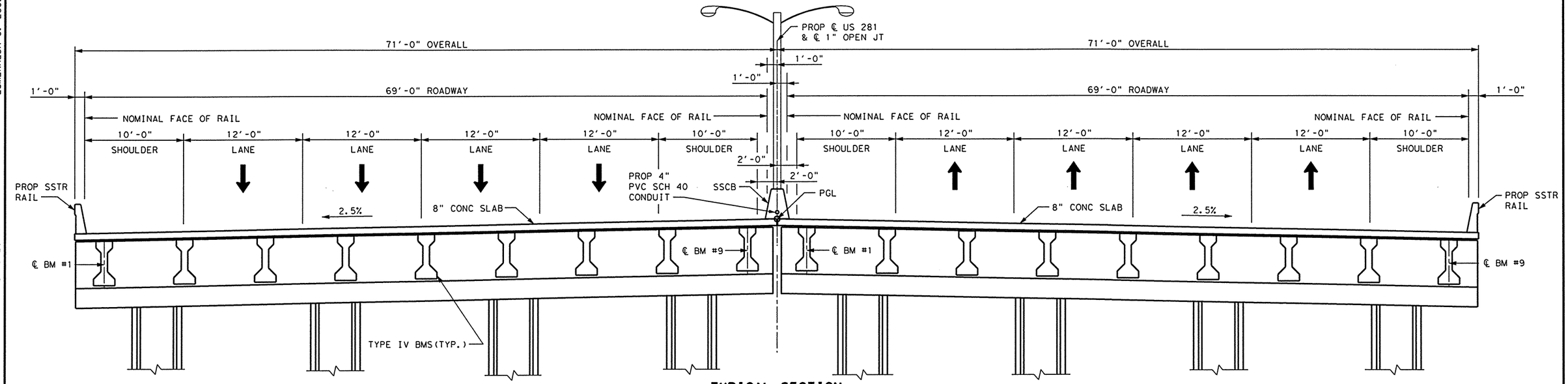

NORTHBOUND MAINLANES

TYPICAL SECTION
(SPANS 1 & 3)

SOUTHBOUND MAINLANES

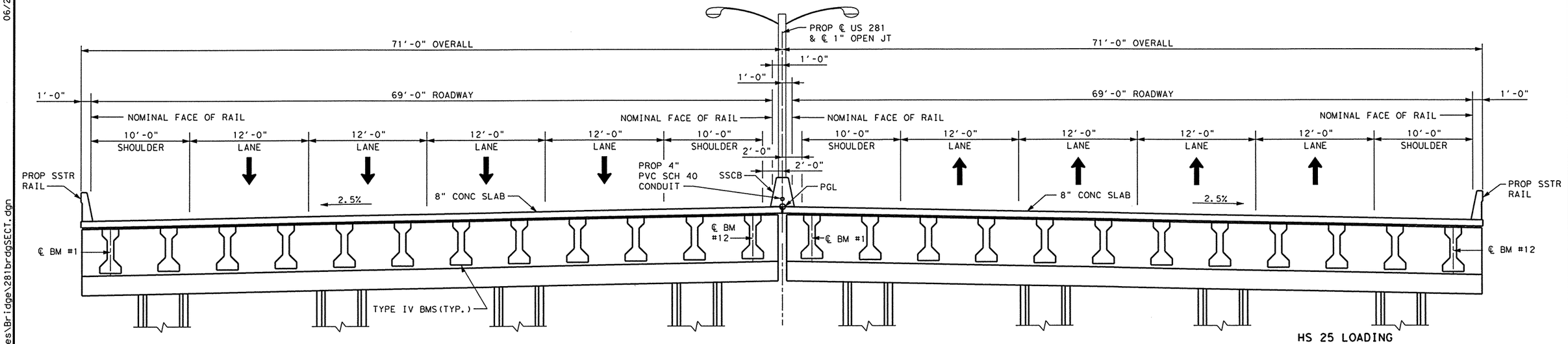

NORTHBOUND MAINLANES

TYPICAL SECTION
(SPAN 2)

SOUTHBOUND MAINLANES

HS 25 LOADING

NOTE:

REFER TO EXISTING STRUCTURE PLANS
PROJECT NO. F301(9)
CSJ: 0255-08-052
FOR ADDITIONAL DETAILS.

STATE OF TEXAS
ALLEN R. CROZIER
81450
REGISTERED PROFESSIONAL ENGINEER
Allen R. Crozier
6/25/03

Parsons Brinckerhoff Quade & Douglas Inc.

Texas Department of Transportation

© 2002 by TxDOT

TYPICAL SECTIONS

TRENTON ROAD OVERPASS

NORTHBOUND & SOUTHBOUND MAINLANES

281BRDGSECT.DGN

DESIGNED: ARC	FED. RD DIV. No.	STATE	FEDERAL AID PROJECT No.	HIGHWAY No.
CHECKED: ABM	6	TEXAS	NH 2003 ( )	US 281

DRAWN: DJH	STATE DISTRICT	COUNTY	CONTROL No.	SECTION No.	JOB No.	SHEET No.
CHECKED: ARC	PHARR	HIDALGO	0255	08	091	945

ALLEN CROZIER
03:46:07 PM
08/05/2003
I:\projects\22322a\CADD\Sheets\Structures\Bridge\281EQ03.dgn

SUMMARY OF ESTIMATED QUANTITIES

ITEM NUMBER	416		420		422	425	428	432	444	454	450	514		496	
ITEM / DESCRIPTION	DRILLED SHAFTS		CLASS "C" CONCRETE		REINF CONCRETE SLAB	PRESTR CONCRETE BEAM	CONCRETE SURFACE TREATMENT	RIPRAP CONCRETE	BRIDGE PROTECTIVE ASSEMBLY	SEALED EXPANSION JOINT	RAILING	CONCRETE TRAFFIC BARRIER		REMOVE OLD STRUCTURE	
	36" ø	60" ø	ABUTMENT	BENT		TYPE "IV"		CLASS "B"		4"	SSTR	SSCB (1)	SSCB (4)	LARGE	
	LF	LF	CY	CY	SF	LF	SY	CY	EA	LF	LF	LF	LF	EA	
2~ABUTMENTS	1,210		168.2												
2~INTERIOR BENTS		320		252.2											
1~264.00' PRESTR CONC BM UNIT					18,733	2,671.1	2011		2		264.0	254.0	10.0		
TOTAL	① 1,210	320	① 168.2	252.2	18,733	2,671.1	2011	① 5.0	2	② 162	264.0	254.0	10.0	1	

① INCLUDES QUANTITIES FOR NORTHBOUND AND SOUTHBOUND STRUCTURES.

② LENGTHS SHOWN ARE FOR ONE COMPLETE JOINT.
ABUT NO. 1 = 81'
ABUT NO. 4 = 81'

BEARING SEAT ELEVATIONS

		BEAM 1	BEAM 2	BEAM 3	BEAM 4	BEAM 5	BEAM 6	BEAM 7	BEAM 8	BEAM 9	BEAM 10	BEAM 11	BEAM 12
BENT 1	(FWD)	116.136	116.354	116.571	116.789	117.005	117.222	117.438	117.653	117.868			
BENT 2	(BK)	116.299	116.511	116.723	116.935	117.146	117.357	117.567	117.777	117.986			
	(FWD)	116.164	116.318	116.472	116.626	116.779	116.932	117.086	117.238	117.391	117.543	117.695	117.847
BENT 3	(BK)	116.255	116.401	116.547	116.693	116.838	116.984	117.129	117.274	117.418	117.563	117.707	117.851
	(FWD)	116.398	116.599	116.799	116.998	117.198	117.396	117.595	117.793	117.990			
BENT 4	(BK)	116.328	116.523	116.717	116.911	117.105	117.298	117.491	117.683	117.875			

HS 25 LOADING

STATE OF TEXAS
ALLEN R. CROZIER
81450
REGISTERED PROFESSIONAL ENGINEER
Allen R. Crozier
8/5/03

Parsons Brinckerhoff Quade & Douglas Inc.

Texas Department of Transportation

© 2003 by TxDOT

ESTIMATED QUANTITIES AND BEARING SEAT ELEVATIONS TRENTON ROAD OVERPASS

NORTHBOUND MAINLANES

281EQ03.DGN

DESIGNED: ARC	FED. RD DIV. No.	STATE	FEDERAL AID PROJECT No.			HIGHWAY No.
CHECKED: ALA	6	TEXAS	NH 2003 ( )			US 281
DRAWN: KTD	STATE DISTRICT	COUNTY	CONTROL No.	SECTION No.	JOB No.	SHEET No.
CHECKED: ARC	PHARR	HIDALGO	0255	08	091	946

LEE AUSTIN
04:22:20 PM
07/02/2003

SUMMARY OF ESTIMATED QUANTITIES

ITEM NUMBER	416		420		422	425	428	432	444	454	450				
ITEM / DESCRIPTION	DRILLED SHAFTS		CLASS "C" CONCRETE		REINF CONCRETE SLAB	PRESTR CONCRETE BEAM	CONCRETE SURFACE TREATMENT	RIPRAP CONCRETE	BRIDGE PROTECTIVE ASSEMBLY	SEALED EXPANSION JOINT	RAILING				
	36" ø	60" ø	ABUTMENT	BENT		TYPE "IV"		CLASS "B"		4"	SSTR				
	LF	LF	CY	CY	SF	LF	SY	CY	EA	LF	LF				
2~ABUTMENTS	①		①												
2~INTERIOR BENTS		320		252.2											
1~264.00' PRESTR CONC BM UNIT					18,733	2,671.1	2011		2		264				
TOTAL	①	320	①	252.2	18,733	2,671.1	2011	①	2	② 162	**264**				

① ABUTMENT CONCRETE AND DRILLED SHAFT QUANTITIES INCLUDED IN NORTHBOUND ESTIMATED QUANTITIES.

② LENGTHS SHOWN ARE FOR ONE COMPLETE JOINT.
ABUT NO. 1 = 81'
ABUT NO. 4 = 81'

BEARING SEAT ELEVATIONS

	BEAM 1	BEAM 2	BEAM 3	BEAM 4	BEAM 5	BEAM 6	BEAM 7	BEAM 8	BEAM 9	BEAM 10	BEAM 11	BEAM 12
BENT 1 (FWD)	117.877	117.685	117.492	117.300	117.106	116.913	116.719	116.524	116.329			
BENT 2 (BK)	117.991	117.793	117.595	117.397	117.198	116.999	116.799	116.599	116.399			
(FWD)	117.851	117.707	117.563	117.419	117.274	117.129	116.984	116.839	116.693	116.548	116.402	116.255
BENT 3 (BK)	117.847	117.695	117.542	117.390	117.237	117.084	116.931	116.778	116.624	116.471	116.317	116.163
(FWD)	117.986	117.776	117.566	117.356	117.145	116.934	116.722	116.510	116.298			
BENT 4 (BK)	117.866	117.651	117.436	117.220	117.003	116.786	116.569	116.352	116.133			

HS 25 LOADING

Parsons Brinckerhoff
Quade & Douglas Inc.

Texas Department of Transportation
© 2003 by TxDOT

STATE OF TEXAS
ALLEN R. CROZIER
81450
REGISTERED PROFESSIONAL ENGINEER
7/2/03

ESTIMATED QUANTITIES AND BEARING SEAT ELEVATIONS
TRENTON ROAD OVERPASS
SOUTHBOUND MAINLANES

281EQ04.DGN

DESIGNED: ARC	FED. RD DIV. No.	STATE	FEDERAL AID PROJECT No.	HIGHWAY No.
CHECKED: ALA	6	TEXAS	NH 2003 ( )	US 281

DRAWN: KTD	STATE DISTRICT	COUNTY	CONTROL No.	SECTION No.	JOB No.	SHEET No.
CHECKED: ARC	PHARR	HIDALGO	0255	08	091	947

I:\projects\22322a\CADD\Sheets\Structures\Bridge\281EQ04.dgn

ALLEN CROZIER
07:21:02 AM
06/25/2003
i:\Projects\22322a\CADD\Sheets\Structures\Bridge\281Abt08.dgn

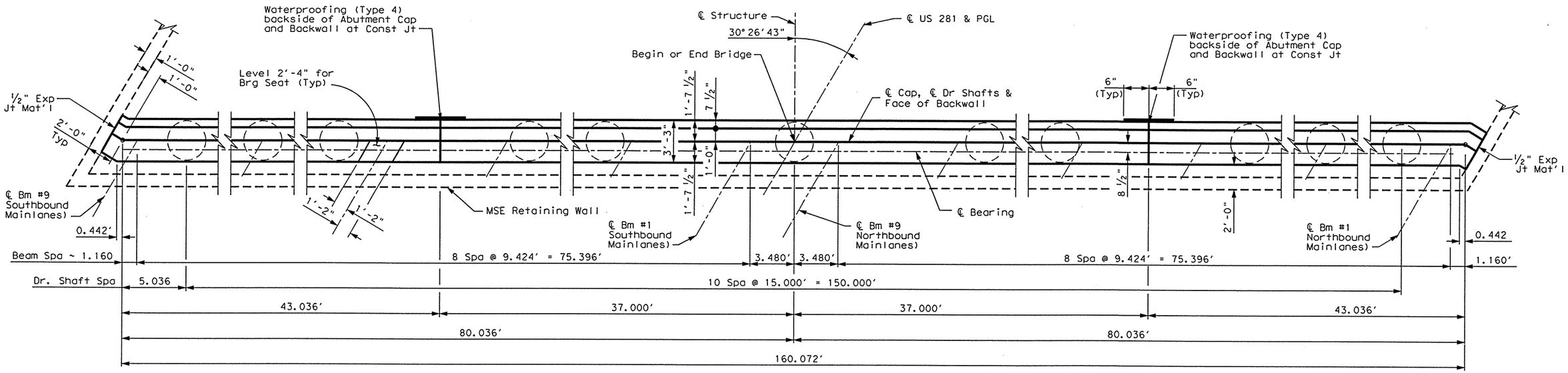

PLAN

Showing Abutment No. 1 (Abutment No. 4 ~ Opposite Hand)

Waterproofing (Type 4) shall be considered subsidiary to the Bid Item Class "C" Concrete

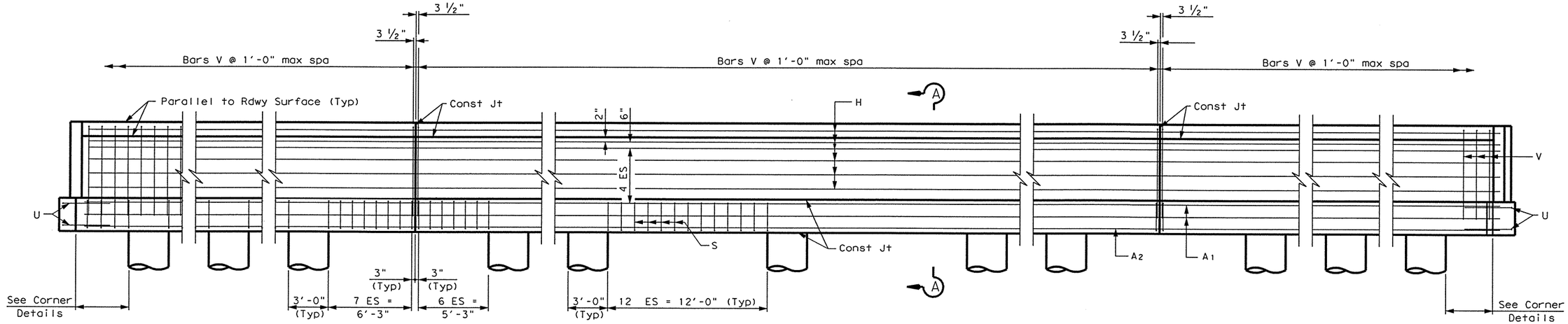

ELEVATION

Showing Abutment No. 1 (Abutment No. 4 ~ Opposite Hand)

HS25 LOADING

SHEET 1 OF 2

Parsons Brinckerhoff Quade & Douglas Inc.

Texas Department of Transportation

© 2003 by TxDOT

ABUTMENT NOS. 1 & 4

TRENTON ROAD OVERPASS

NORTHBOUND & SOUTHBOUND MAINLANES

281Abt08.DGN

DESIGNED: ARC	FED. RD DIV. No.	STATE	FEDERAL AID PROJECT No.	HIGHWAY No.
CHECKED: ALA	6	TEXAS	NH 2003 ( )	US 281

DRAWN: OJH	STATE DISTRICT	COUNTY	CONTROL No.	SECTION No.	JOB No.	SHEET No.
CHECKED: ARC	PHARR	HIDALGO	0255	08	091	949

STATE OF TEXAS
ALLEN R. CROZIER
81450
REGISTERED PROFESSIONAL ENGINEER

Allen R. Crozier
6/25/03

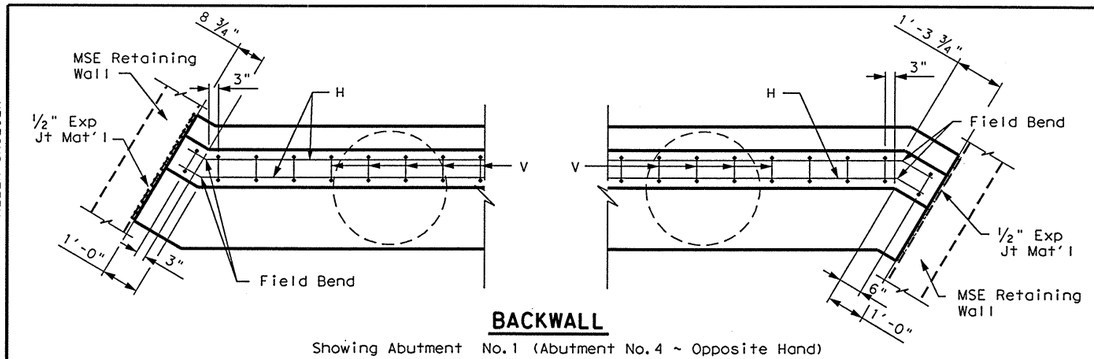

BACKWALL

Showing Abutment No.1 (Abutment No.4 ~ Opposite Hand)

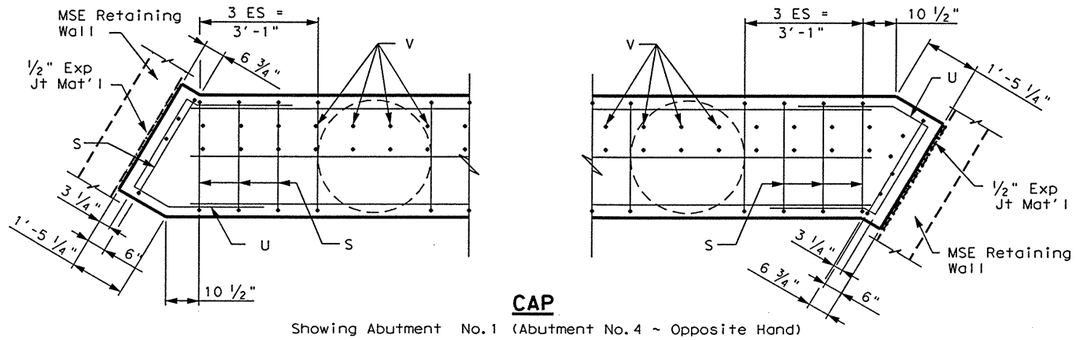

CAP

Showing Abutment No.1 (Abutment No.4 ~ Opposite Hand)

CORNER DETAILS

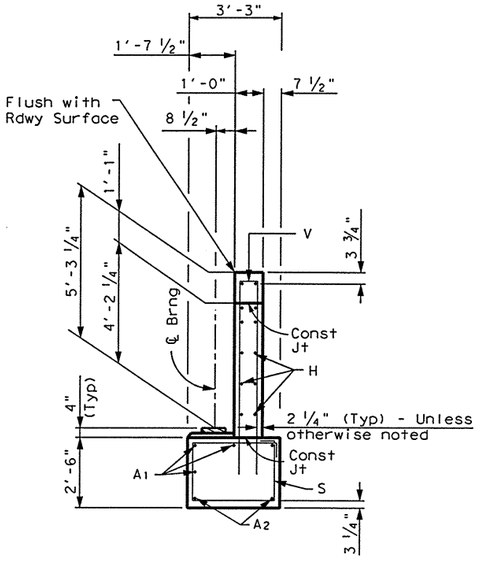

SECTION A-A

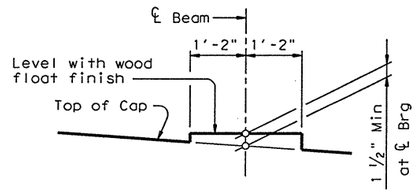

BEARING SEAT DETAIL

(Bearing surface shall be clean and free of all loose material before placing bearing pad.)

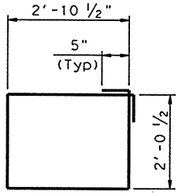

BARS S

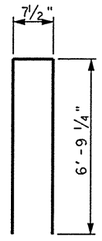

BARS V

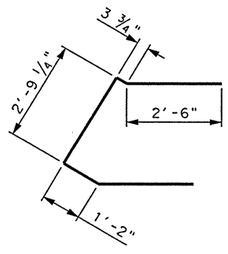

BARS U

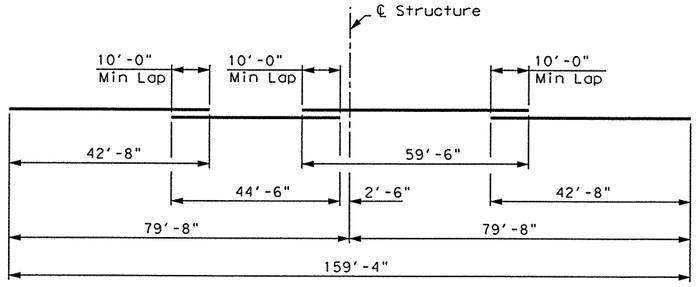

BARS A1

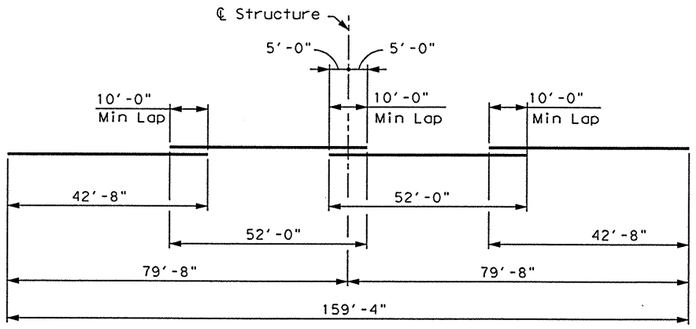

BARS A2

① TABLE OF CONSTANT QUANTITIES

Bar	No.	Size	Length	Weight
A1	4	#11	189'- 4" ②	4024
A2	2	#11	189'- 4" ②	2012
H	12	# 5	161'- 8" ③	2023
S	144	# 4	10'- 8"	1026
U	4	# 6	9'- 3"	56
V	165	# 5	14'- 2"	2438
Reinforcing Steel			Lb	11579
Class "C" Concrete			CY	84.1

① Quantities shown are for one Abut only.

② Includes 3 ~ 10'-0" min Laps.

③ Includes 3 ~ 1'-3" min Laps

GENERAL NOTES:

Designed according to AASTHO 1996 Standard and current Interim Specifications.
See SEJ-P Standard for additional details.
Calculated Foundation Load ~ 100 T/D.S.
See Foundation Detail Standard sheet, FD(MOD) for all Foundation details and notes.
Class "C" Concrete strength f'c = 3600 psi.
All reinforcing steel shall be Grade 60.

HS25 LOADING

SHEET 2 OF 2

Parsons Brinckerhoff Quade & Douglas Inc.

Texas Department of Transportation

© 2003 by TxDOT

ABUTMENT NOS. 1 & 4

TRENTON ROAD OVERPASS

NORTHBOUND & SOUTHBOUND MAINLANES

281Abt09.DGN

DESIGNED: ARC	FED. RD DIV. No.	STATE	FEDERAL AID PROJECT No.			HIGHWAY No.
CHECKED: ALA	6	TEXAS	NH 2003 ( )			US 281
DRAWN: JMR	STATE DISTRICT	COUNTY	CONTROL No.	SECTION No.	JOB No.	SHEET No.
CHECKED: ARC	PHARR	HIDALGO	0255	08	091	950

STATE OF TEXAS
ALLEN R. CROZIER
81450
REGISTERED PROFESSIONAL ENGINEER

Allen R. Crozier
6/25/03

ALLEN CROZIER
07:33:20 AM
06/25/2003

i:\Projects\22322a\CADD\Sheets\Structures\Bridge\281Abt09.dgn

ESMERALDA G. EGGER
09:40:23 AM
06/25/2003
I:\projects\22322a\CADD\Sheets\Structures\Bridge\281Bnt08.dgn

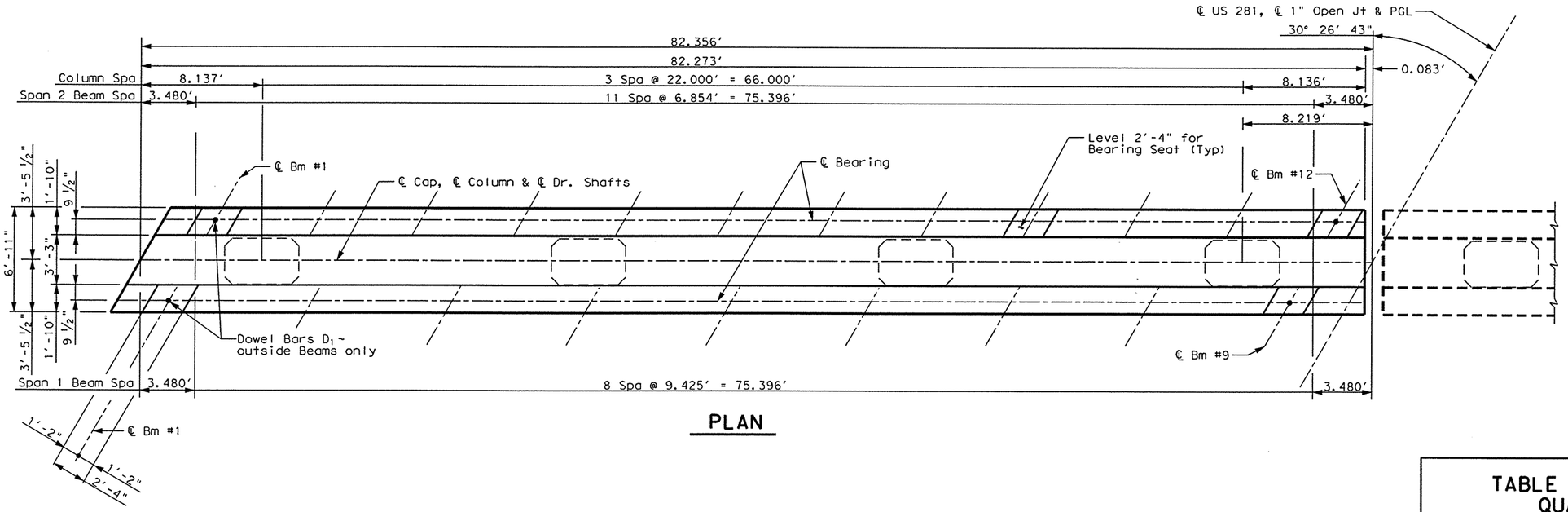

PLAN

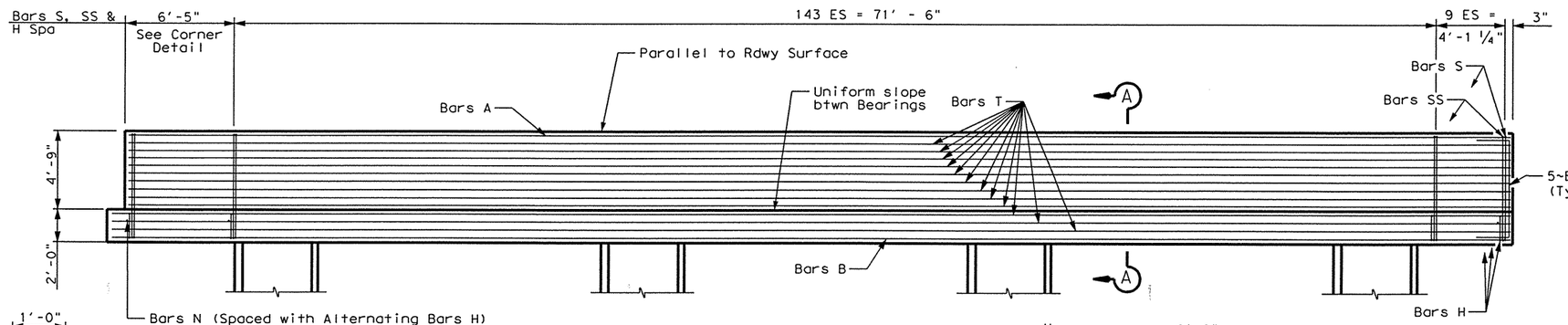

ELEVATION

TABLE OF CONSTANT QUANTITIES				
Bar	No.	Size	Length	Weight
A_{1-5}	5	#11	90'-6" Av	2404
B_{1-8}	8	#11	88'-6" Av	3762
D_1	4	1 1/4"ø	1'-8"	29
D_2	80	#11	20'-0"	8501
H_1	153	#6	18'-2"	4175
H_{2-16}	15	#6	19'-3" Av	434
M	10	#5	8'-3"	86
N_1	76	#5	6'-8"	528
N_{2-9}	8	#5	7'-3" Av	61
S_1	153	#5	19'-6"	3112
S_{2-16}	15	#5	20'-0" Av	313
SS_1	153	#5	16'-10"	2686
SS_{2-16}	15	#5	17'-1" Av	267
T	24	#7	86'-3" ①	4231
Reinforcing Steel			Lb	30589
Class "C" Concrete			CY	89.6

① Length includes 1~2'-1" min Lap.

TABLE OF VARIABLE QUANTITIES ②						TOTAL ESTIMATED QUANTITIES ③	
"H"	Class "C" Conc (Cols)	Bars K ~ #4 10'-2"		Bars V 80 ~ # 11		Reinf Steel	Class "C" Conc
Ft	CY	No.	Weight	Length	Weight	Lb	CY
17	36.5	136	924	22'-10"	9705	41218	126.1

② Adjust Bars V length by 1 ft and add four additional Bars K for each linear foot of variation in "H" value.

③ Adjust Reinforcing Steel total by 502 Lb. and Class "C" Concrete total by 2.15 CY for each linear foot of variation in "H" value.

GENERAL NOTES:

Designed according to AASTHO 1996 Standard and current Interim Specifications.
Calculated Foundation Load ~ 350 T/D.S.
See Foundation Detail Standard sheet, FD(MOD), for all Foundation details and notes.
Class "C" Concrete strength f'c = 3600 psi.
All reinforcing steel shall be Grade 60.

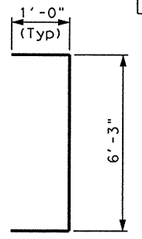

BARS M

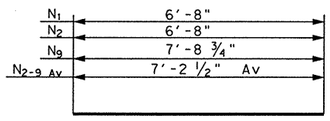

BARS N_{1-9}

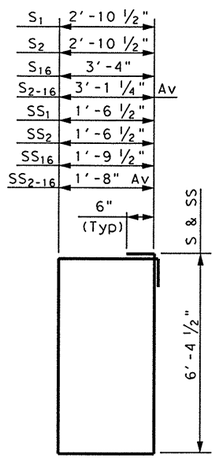

BARS S_{1-16} & SS_{1-16}

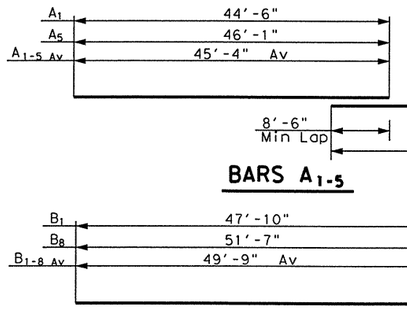

BARS A_{1-5}

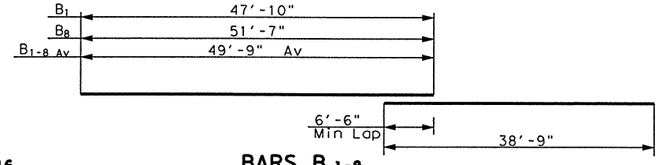

BARS B_{1-8}

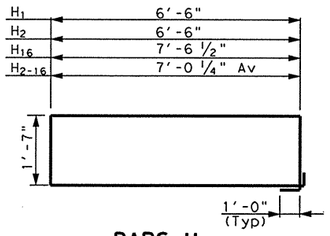

BARS H_{1-16}

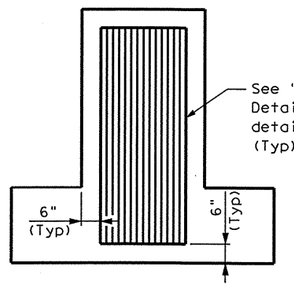

FORM LINER LOCATION

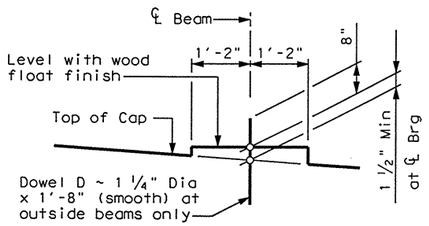

BEARING SEAT DETAIL

(Bearing surface shall be clean and free of all loose material before placing bearing pad.)

STATE OF TEXAS
ALLEN R. CROZIER
81450
REGISTERED PROFESSIONAL ENGINEER
6/25/03

HS25 LOADING SHEET 1 OF 2

Parsons Brinckerhoff Quade & Douglas Inc.

Texas Department of Transportation

© 2003 by TxDOT

INTERIOR BENT NO. 2

TRENTON ROAD OVERPASS

NORTHBOUND MAINLANES

281Bnt08.DGN

DESIGNED: ARC	FED. RD DIV. No.	STATE	FEDERAL AID PROJECT No.			HIGHWAY No.	
CHECKED: ALA	6	TEXAS	NH 2003 ( )			US 281	
DRAWN: RLJ	STATE DISTRICT	COUNTY	CONTROL No.	SECTION No.	JOB No.	SHEET No.	
CHECKED: ARC	PHARR	HIDALGO	0255	08	091	951	

ESMERALDA G. EGGER
09:43:33 AM
06/25/2003
I:\projects\22322a\CADD\Sheets\Structures\Bridge\281Bnt08a.dgn

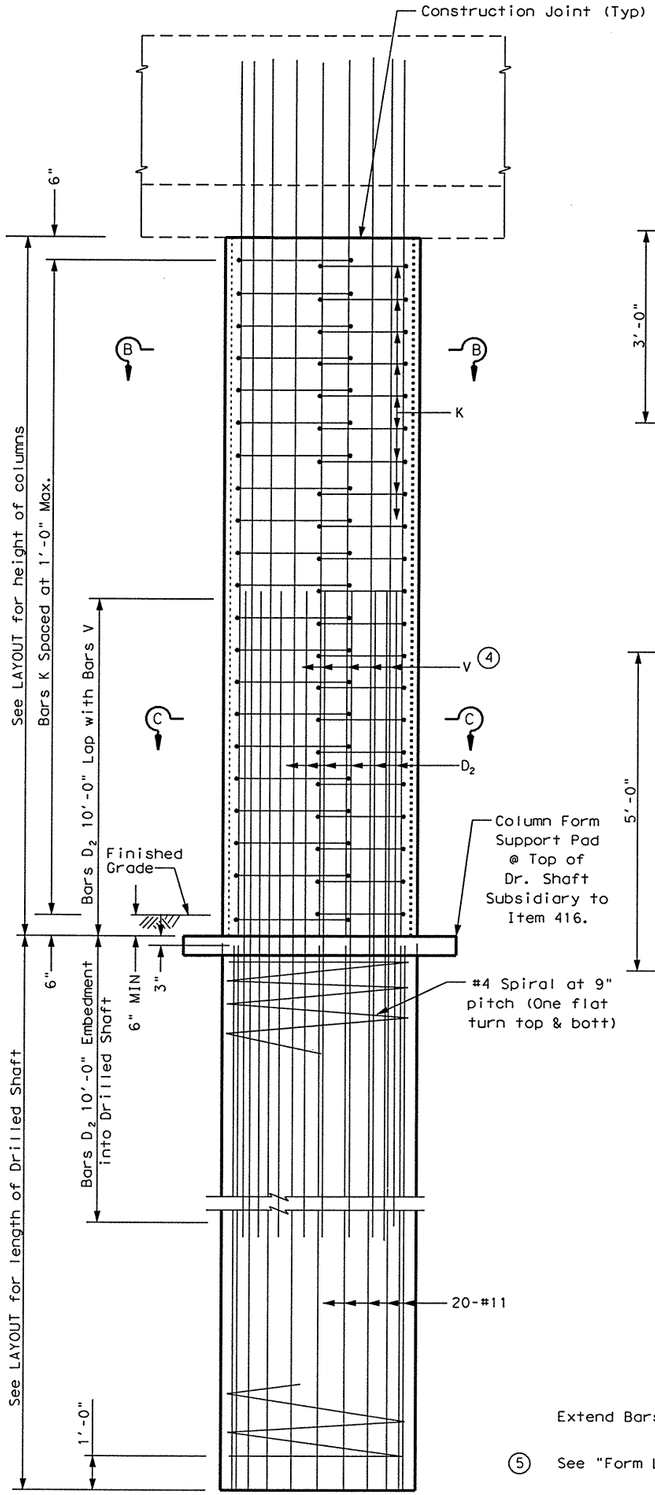

TYPICAL COLUMN DETAILS

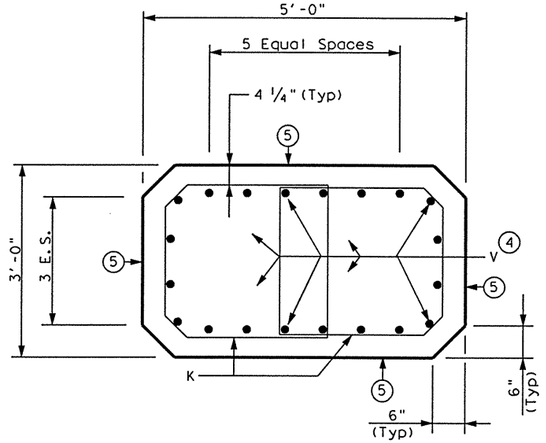

SECTION B-B

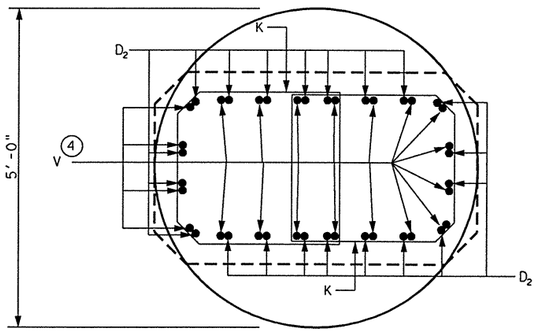

TYPICAL SECTION SHOWING BARS D_2 & BARS V

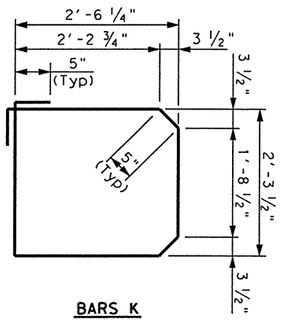

BARS K

Extend Bars V 5' -10" min into Bent Cap.

(5) See "Form Liner Details" for details not shown.

(6) Drilled Shaft Bars shall terminate 3" below top of Drilled Shaft

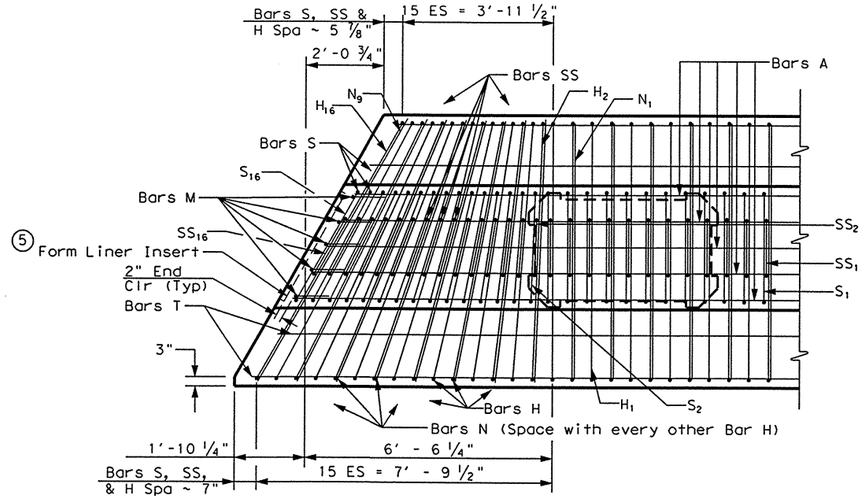

CORNER DETAIL

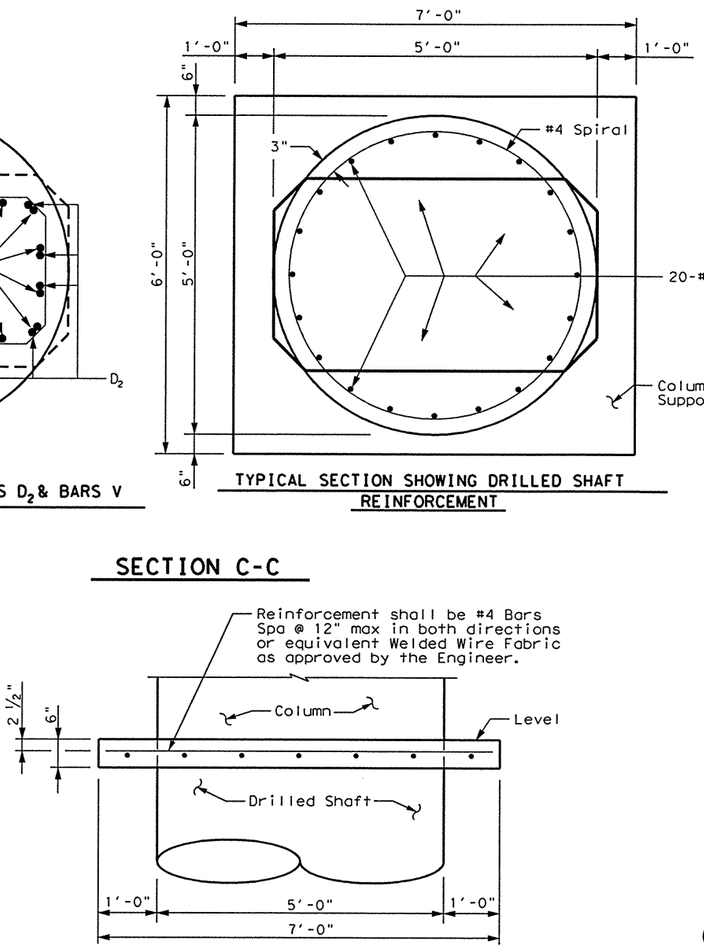

TYPICAL SECTION SHOWING DRILLED SHAFT REINFORCEMENT

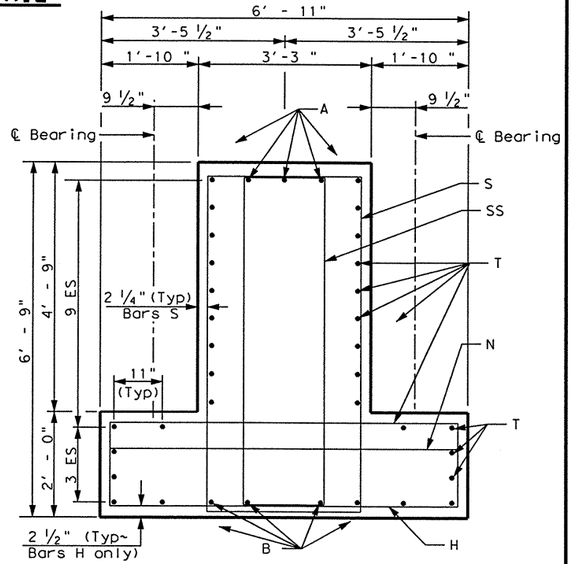

SECTION A-A

SECTION C-C

SECTION THRU COLUMN FORM SUPPORT PAD

Column Support Pad concrete and reinforcement shall be subsidiary to Bid Item 416 "Drilled Shaft Foundations"

STATE OF TEXAS
ALLEN R. CROZIER
81450
REGISTERED PROFESSIONAL ENGINEER
Allen R. Crozier
6/25/03

HS25 LOADING

SHEET 2 OF 2

Parsons Brinckerhoff Quade & Douglas Inc.

Texas Department of Transportation

© 2003 by TxDOT

INTERIOR BENT NO. 2

TRENTON ROAD OVERPASS

NORTHBOUND MAINLANES

281Bnt08A.DGN

DESIGNED: ARC	FED. RD DIV. NO.	STATE	FEDERAL AID PROJECT No.	HIGHWAY No.
CHECKED: ALA	6	TEXAS	NH 2003 ( )	US 281

DRAWN: RLJ	STATE DISTRICT	COUNTY	CONTROL No.	SECTION No.	JOB No.	SHEET No.
CHECKED: ARC	PHARR	HIDALGO	0255	08	091	952

ESMERALDA G. EGGER
09:45:15 AM
06/25/2003
I:\projects\22322o\CADD\Sheets\Structures\Bridge\281Bnt10.dgn

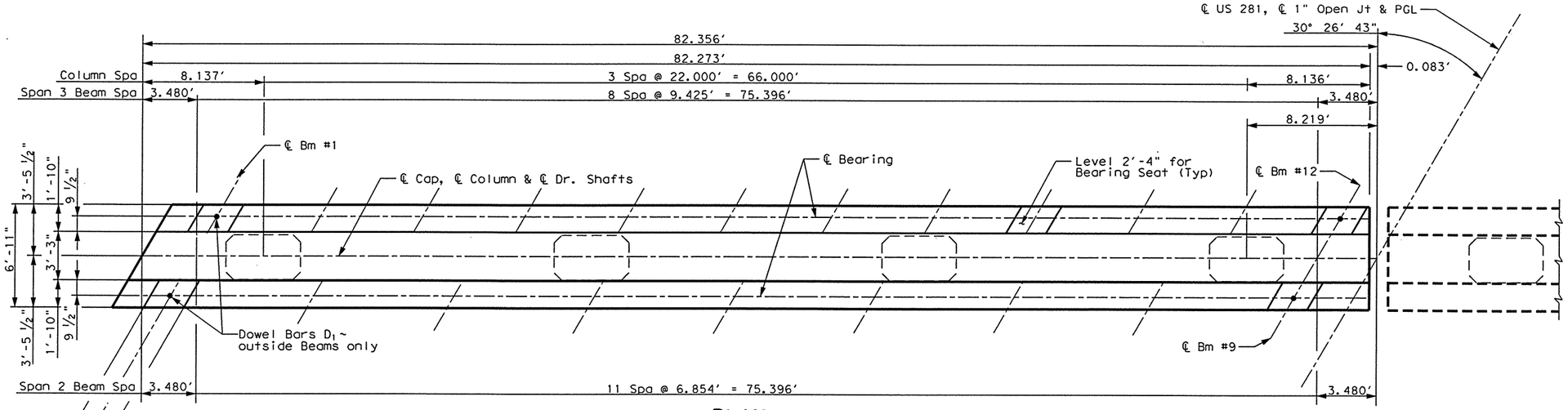

PLAN

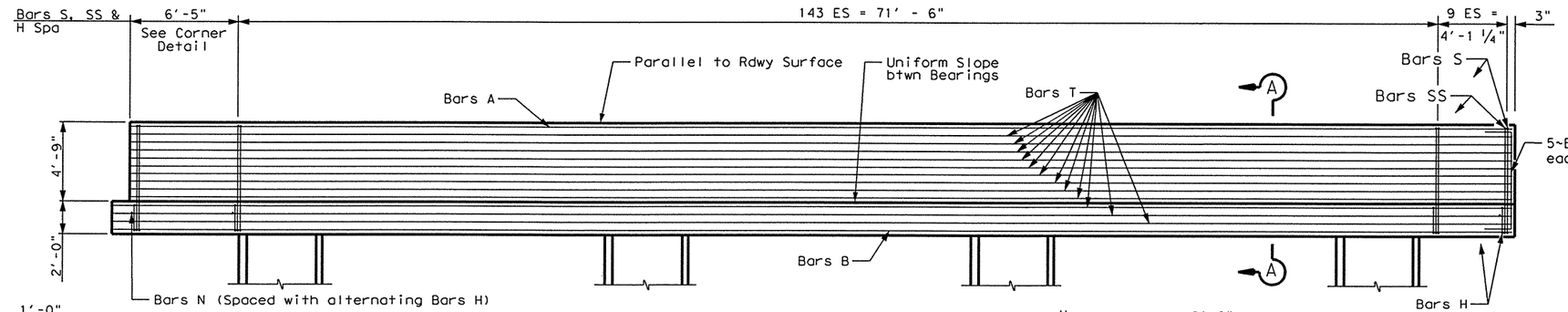

ELEVATION

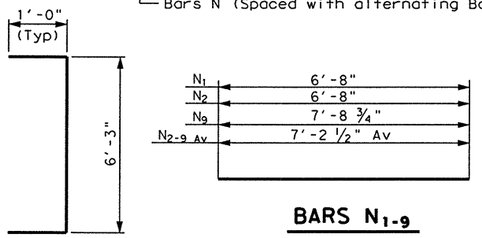

BARS M

BARS N_{1-9}

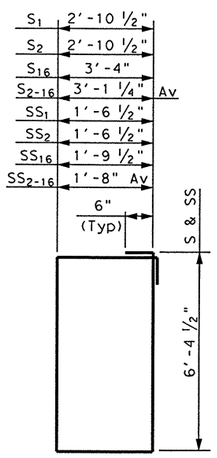

BARS S_{1-16} & SS_{1-16}

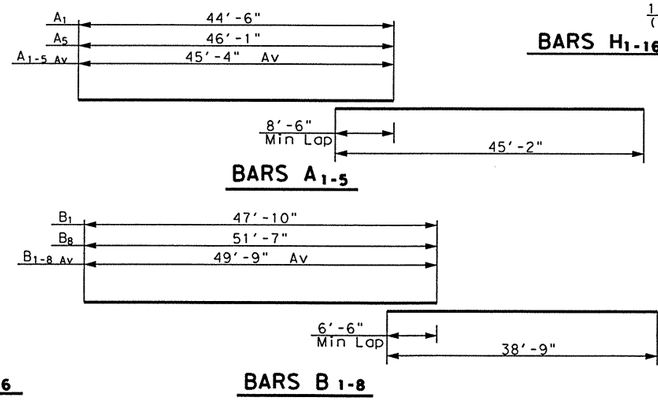

BARS A_{1-5}

BARS B 1-8

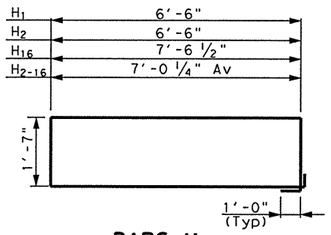

BARS H_{1-16}

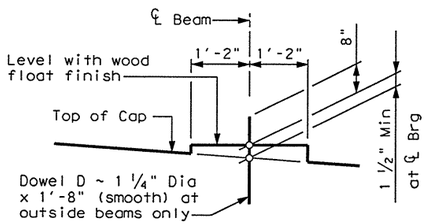

BEARING SEAT DETAIL

(Bearing surface shall be clean and free of all loose material before placing bearing pad.)

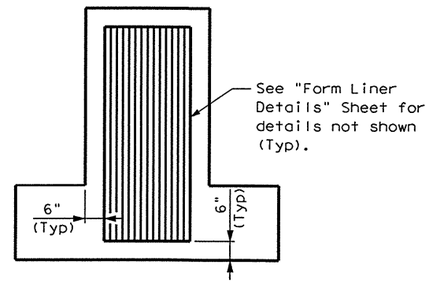

FORM LINER LOCATION

TABLE OF CONSTANT QUANTITIES

Bar	No.	Size	Length	Weight
A_{1-5}	5	#11	90'-6" Av	2404
B_{1-8}	8	#11	88'-6" Av	3762
D_1	4	1 1/4"ø	1'-8"	29
D_2	80	#11	20'-0"	8501
H_1	153	#6	18'-2"	4175
H_{2-16}	15	#6	19'-3" Av	434
M	10	#5	8'-3"	86
N_1	76	#5	6'-8"	528
N_{2-9}	8	#5	7'-3" Av	61
S_1	153	#5	19'-6"	3112
S_{2-16}	15	#5	20'-0" Av	313
SS_1	153	#5	16'-10"	2686
SS_{2-16}	15	#5	17'-1" Av	267
T	24	#7	86'-3" ①	4231
Reinforcing Steel			Lb	30589
Class "C" Concrete			CY	89.6

① Length includes 1~2'-1" min Lap.

TABLE OF VARIABLE QUANTITIES ②

"H"	Class "C" Conc (Cols)	Bars K ~ #4 10'-2"		Bars V 80 ~ # 11		TOTAL ESTIMATED QUANTITIES ③ Reinf Steel	Class "C" Conc
		No.	Weight	Length	Weight		
Ft	CY	No.	Weight	Length	Weight	Lb	CY
17	36.5	136	924	22'-10"	9705	41218	126.1

② Adjust Bars V length by 1 ft and add four additional Bars K for each linear foot of variation in "H" value.

③ Adjust Reinforcing Steel total by 502 Lb. and Class "C" Concrete total by 2.15 CY for each linear foot of variation in "H" value.

GENERAL NOTES:

Designed according to AASTHO 1996 Standard and current Interim Specifications.
Calculated Foundation Load ~ 350 T/D.S.
See Foundation Detail Standard sheet, FD(MOD), for all Foundation details and notes.
Class "C" Concrete strength f'c = 3600 psi.
All reinforcing steel shall be Grade 60.

HS25 LOADING

Parsons Brinckerhoff Quade & Douglas Inc.

Texas Department of Transportation

© 2003 by TxDOT

INTERIOR BENT NO. 3

TRENTON ROAD OVERPASS

NORTHBOUND MAINLANES

STATE OF TEXAS
ALLEN R. CROZIER
81450
REGISTERED PROFESSIONAL ENGINEER
6/25/03

281Bnt10.DGN

	FED. RD DIV. No.	STATE	FEDERAL AID PROJECT No.	HIGHWAY No.
DESIGNED: ARC	6	TEXAS	NH 2003 ( )	US 281
CHECKED: ALA				

	STATE DISTRICT	COUNTY	CONTROL No.	SECTION No.	JOB No.	SHEET No.
DRAWN: RLJ	PHARR	HIDALGO	0255	08	091	953
CHECKED: ARC						

ESMERALDA G. EGGER
09:47:38 AM
06/25/2003
I:\projects\22322a\CADD\Sheets\Structures\Bridge\281Bnt10a.dgn

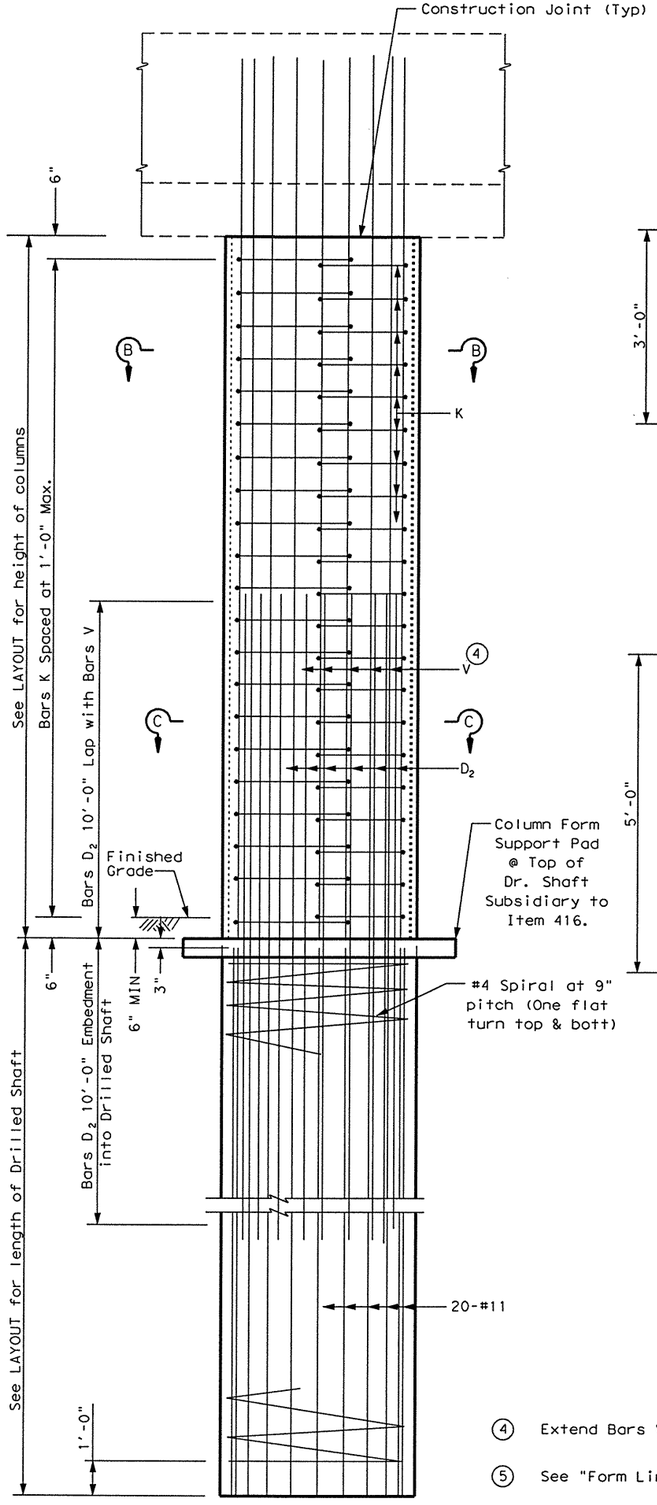

TYPICAL COLUMN DETAILS

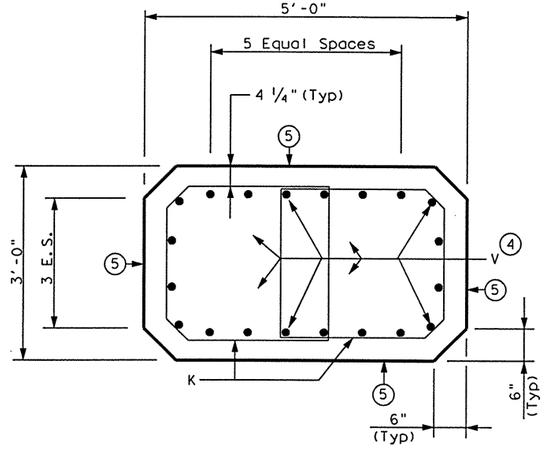

SECTION B-B

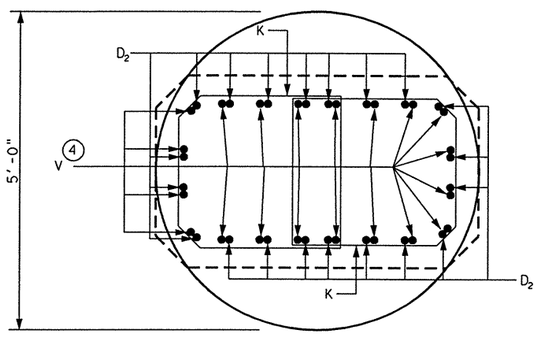

TYPICAL SECTION SHOWING BARS D_2 & BARS V

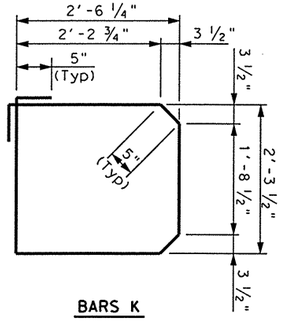

BARS K

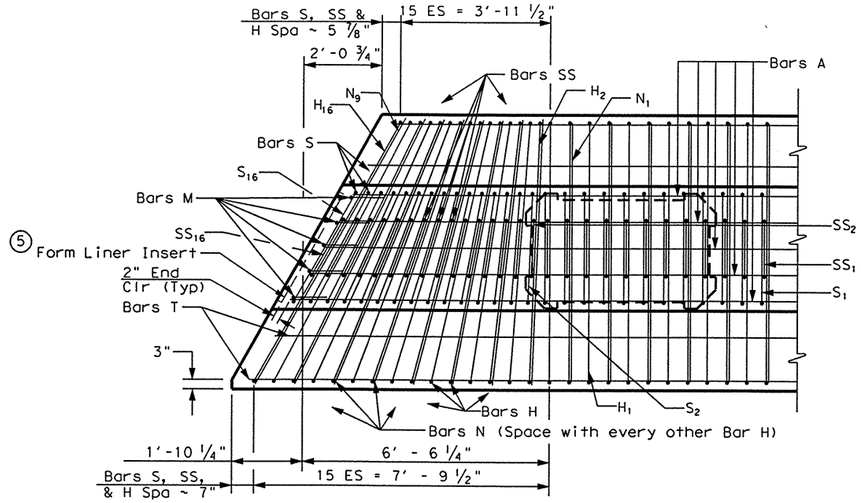

CORNER DETAIL

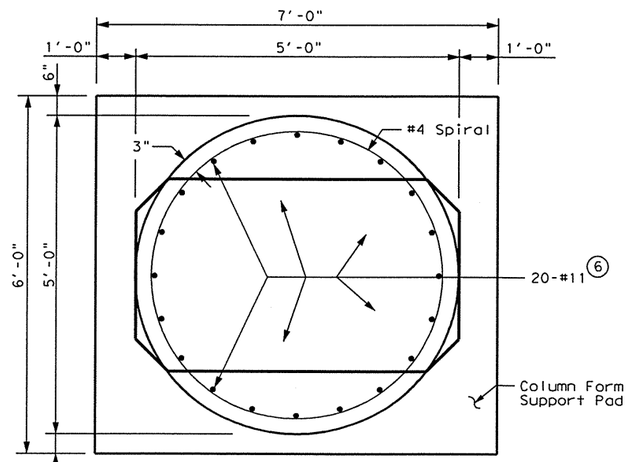

TYPICAL SECTION SHOWING DRILLED SHAFT REINFORCEMENT

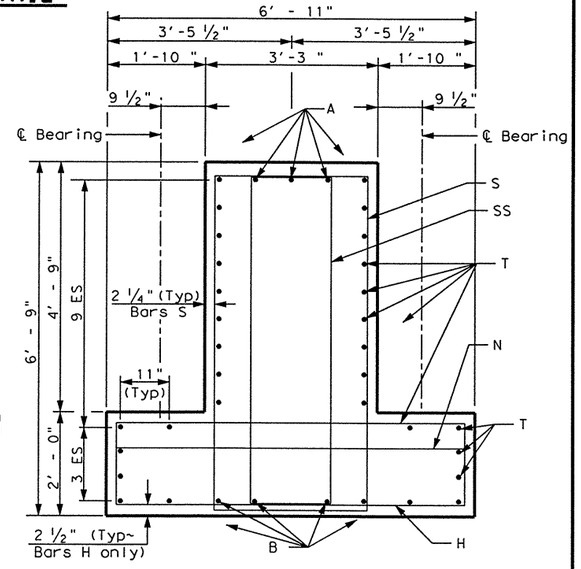

SECTION A-A

SECTION C-C

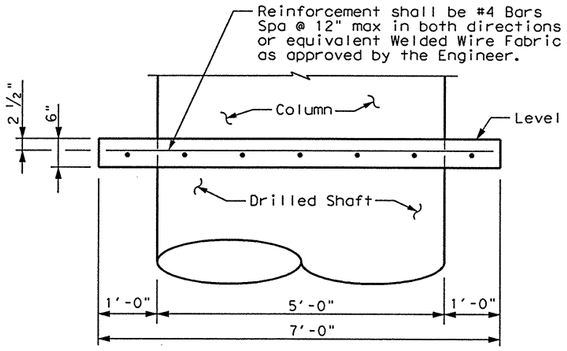

SECTION THRU COLUMN FORM SUPPORT PAD

Column Support Pad concrete and reinforcement shall be subsidiary to Bid Item 416 "Drilled Shaft Foundations"

4. Extend Bars V 5' -10" min into Bent Cap.
5. See "Form Liner Details" for details not shown.
6. Drilled Shaft Bars shall terminate 3" below top of Drilled Shaft

STATE OF TEXAS
ALLEN R. CROZIER
81450
REGISTERED PROFESSIONAL ENGINEER
Allen R. Crozier
6/25/03

HS25 LOADING SHEET 2 OF 2

Parsons Brinckerhoff Quade & Douglas Inc.

Texas Department of Transportation

© 2003 by TxDOT

INTERIOR BENT NO. 3

TRENTON ROAD OVERPASS

NORTHBOUND MAINLANES

281Bnt10A.DGN

DESIGNED: ARC	FED. RD DIV. No.	STATE	FEDERAL AID PROJECT No.		HIGHWAY No.
CHECKED: ALA	6	TEXAS	NH 2003 ( )		US 281
DRAWN: RLJ	STATE DISTRICT	COUNTY	CONTROL No.	SECTION No.	JOB No.	SHEET No.
CHECKED: ARC	PHARR	HIDALGO	0255	08	091	954

ESMERALDA G. EGGER
09:51:06 AM
06/25/2003

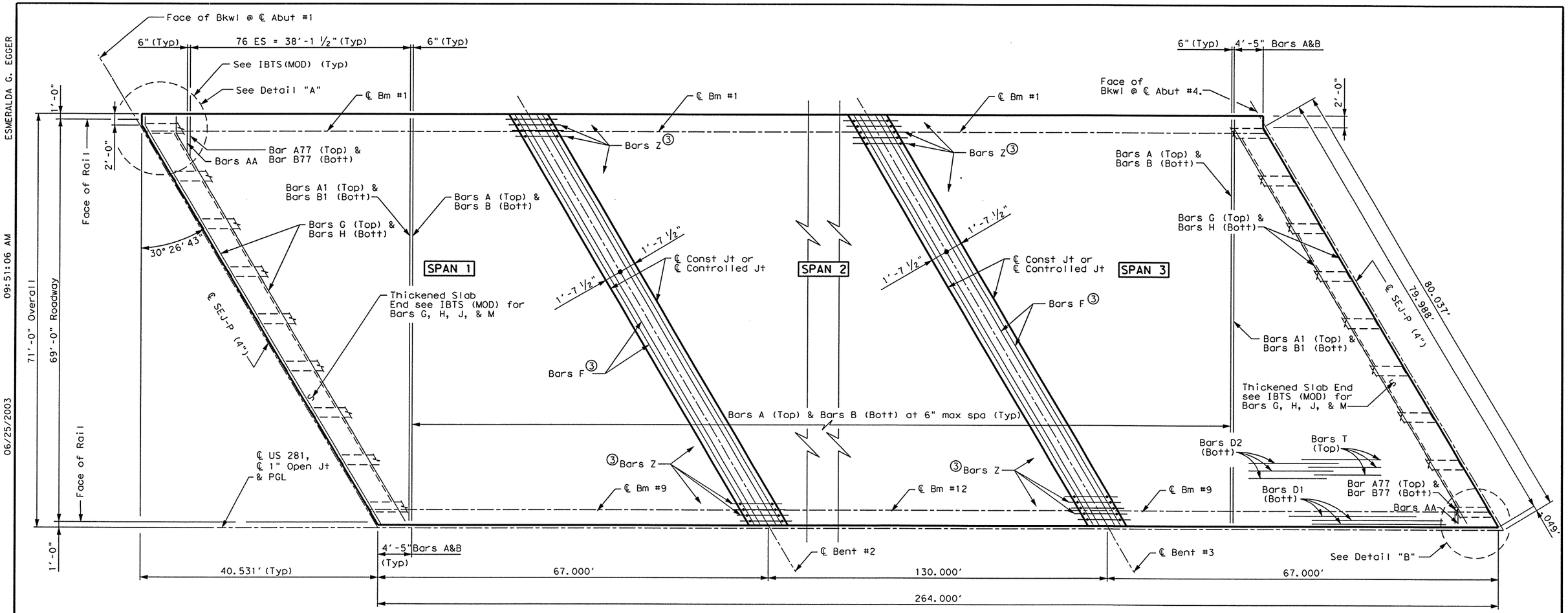

Span No.	Beam No.	"A"	"B"
1&3	1&9	0.012'	0.016'
1&3	2-8	0.013'	0.019'
2	ALL	0.145'	0.205'

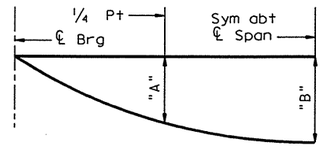

DEAD LOAD DEFLECTION DIAGRAM

NOTE: Deflections shown are due to cast-in-place concrete only. (E_c= 5 X 10^6 psi) Calculated deflections shown are theoretical and actual dimensions may be less. Deflections shall be adjusted based on field observations.

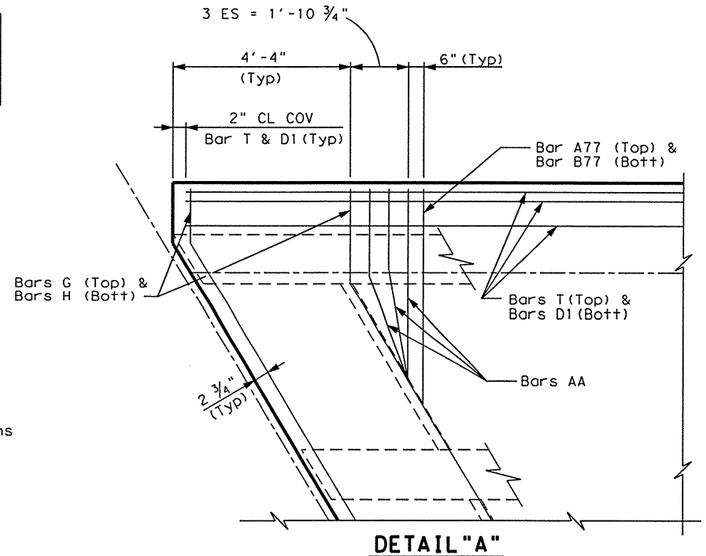

DETAIL "A"

PLAN

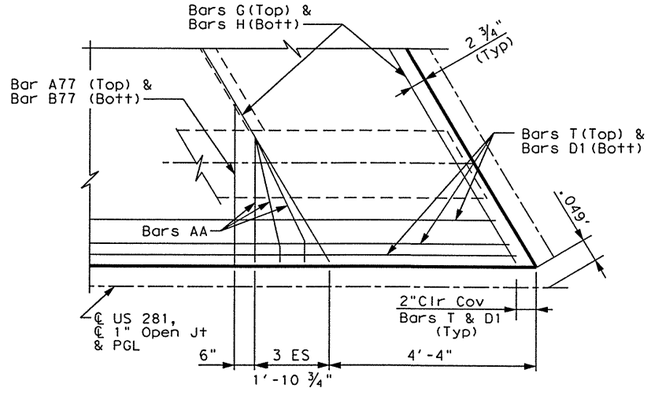

DETAIL "B"

STATE OF TEXAS
ALLEN R. CROZIER
81450
REGISTERED PROFESSIONAL ENGINEER
6/25/03

HS 25 LOADING SHEET 1 OF 2

Parsons Brinckerhoff Quade & Douglas Inc.

Texas Department of Transportation
© 2003 by TxDOT

264.00' PRESTR CONC BEAM UNIT
(SPANS #1 - #3)

TRENTON ROAD OVERPASS
NORTHBOUND MAINLANES

281Spn08.DGN

DESIGNED: ARC	FED. RD DIV. No.	STATE	FEDERAL AID PROJECT No.			HIGHWAY No.
CHECKED: ALA	6	TEXAS	NH 2003 ( )			US 281
DRAWN: OJH	STATE DISTRICT	COUNTY	CONTROL No.	SECTION No.	JOB No.	SHEET No.
CHECKED: ARC	PHARR	HIDALGO	0255	08	091	955

I:\projects\22322a\CADD\Sheets\Structures\Bridge\281Spn08.dgn

ESMERALDA G. EGGER
09:53:50 AM
06/25/2003
I:\projects\22322a\CADD\Sheets\Structures\Bridge\281Spn11.dgn

BAR TABLE	
Bar	Size
A	#5
B	#5
D	#5
F	#4
G	#5
H	#6
J	#5
T	#4
Z	#4

TABLE OF ESTIMATED QUANTITIES

Span	REINF CONC SLAB	PRESTRESSED CONC BEAM (TYPE IV)②	CLASS "S" CONCRETE	REINFORCING STEEL①
NO.	SF	LF	CY	LB
1	4,754	581.67	122.8	30,901
2	9,225	1,507.80	233.8	59,963
3	4,754	581.67	122.8	30,901
Total	18,733	2,671.14	479.4	121,765

① Reinforcing steel weight is calculated using an approximate factor of 6.5 lbs per sq ft.

② Quantity shown are bottom beam flange lengths with adjustments made for beam slope.
Beam Length = 64.63′ ~ Span 1~ Each Beam
125.65′ ~ Span 2~ Each Beam
64.63′ ~ Span 3~ Each Beam

③ See MISCELLANEOUS SLAB DETAILS , Sheet 2 of 2, for details not shown .

TABLE OF SECTION DEPTHS

Span No.	Beam No.	"X" at ℄ Brg	"Y" at ℄ Brg	"Z" at ℄ Span④
1&3	1&9	9 1/4"	5′-3 1/4"	8 3/4"
1&3	2-8	9 1/4"	5′-3 1/4"	8 7/8"
2	1&12	11"	5′-5"	8 7/8"
2	2-11	11"	5′-5"	8 3/4"

④ Theoretical Dimension

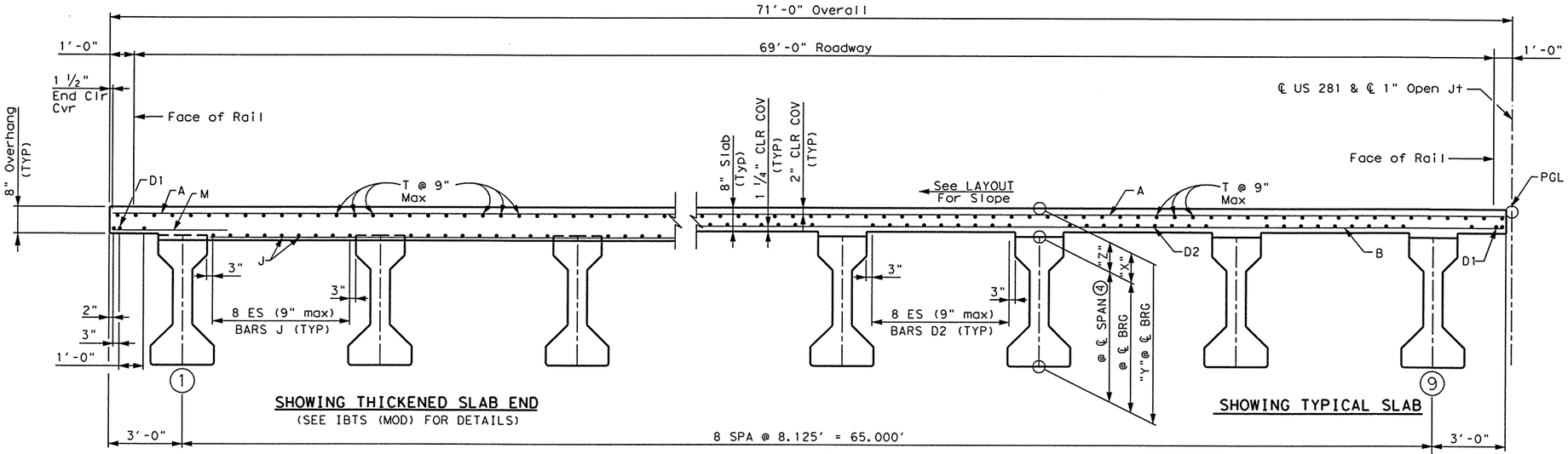

TYPICAL TRANSVERSE SECTION
(SPANS 1 & 3)

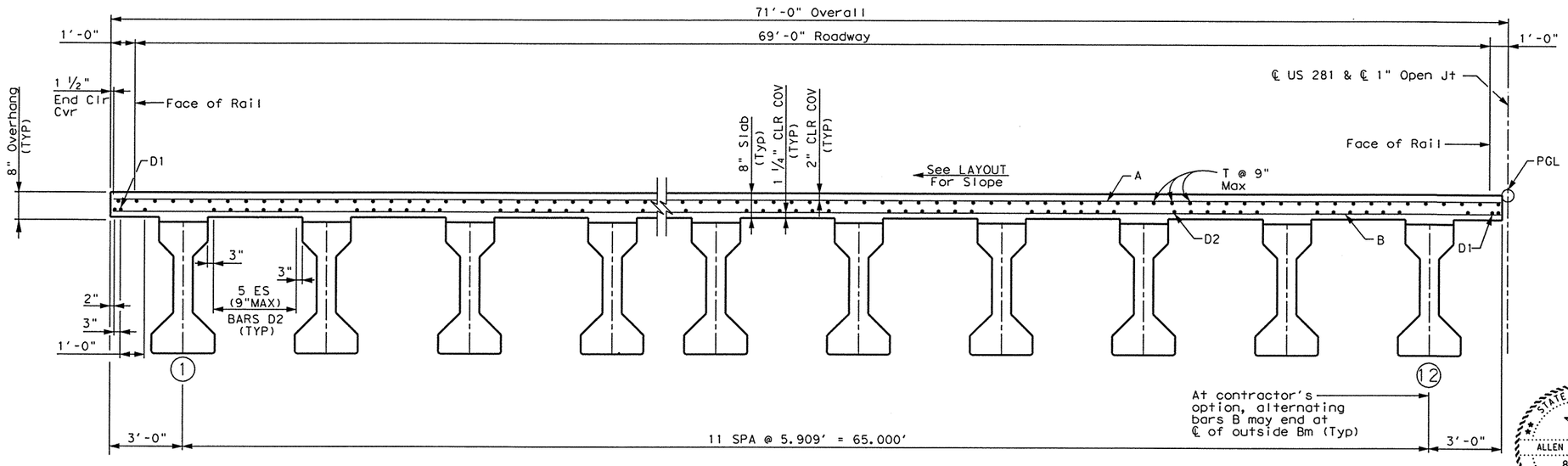

TYPICAL TRANSVERSE SECTION
(SPAN 2)

GENERAL NOTES:

Designed according to 1996 AASHTO standard and current interim specifications.
See PCP(C)(MOD) standard for details and quantity adjustments if this option is used.
See IBTS(MOD) standard for thickened slab end details & IBMS (MOD) for Slab Details over Inverted-T.
See SEJ-P Standard for additional details.
All reinforcing shall be Grade 60.
Class "S" Concrete strength f'c= 4000 psi
Bar laps, where required, shall be as follows:
~ #4 = 1′-5"
~ #5 = 1′-9"

HS 25 LOADING SHEET 2 OF 2

Parsons Brinckerhoff Quade & Douglas Inc.

Texas Department of Transportation

© 2003 by TxDOT

STATE OF TEXAS
ALLEN R. CROZIER
81450
REGISTERED PROFESSIONAL ENGINEER
Allen R. Crozier
6/25/03

264.00′ PRESTR CONC BEAM UNIT
(SPANS #1 - #3)

TRENTON ROAD OVERPASS
NORTHBOUND MAINLANES

281Spn11.DGN

DESIGNED: ARC	FED. RD DIV. No.	STATE	FEDERAL AID PROJECT No.			HIGHWAY No.
CHECKED: ALA	6	TEXAS	NH 2003 ( )			US 281
DRAWN: OJH	STATE DISTRICT	COUNTY	CONTROL No.	SECTION No.	JOB No.	SHEET No.
CHECKED: ARC	PHARR	HIDALGO	0255	08	091	956

ESMERALDA G. EGGER
09:55:51 AM
06/25/2003
i:\projects\22322a\CADD\Sheets\Structures\Bridge\281Bnt09.dgn

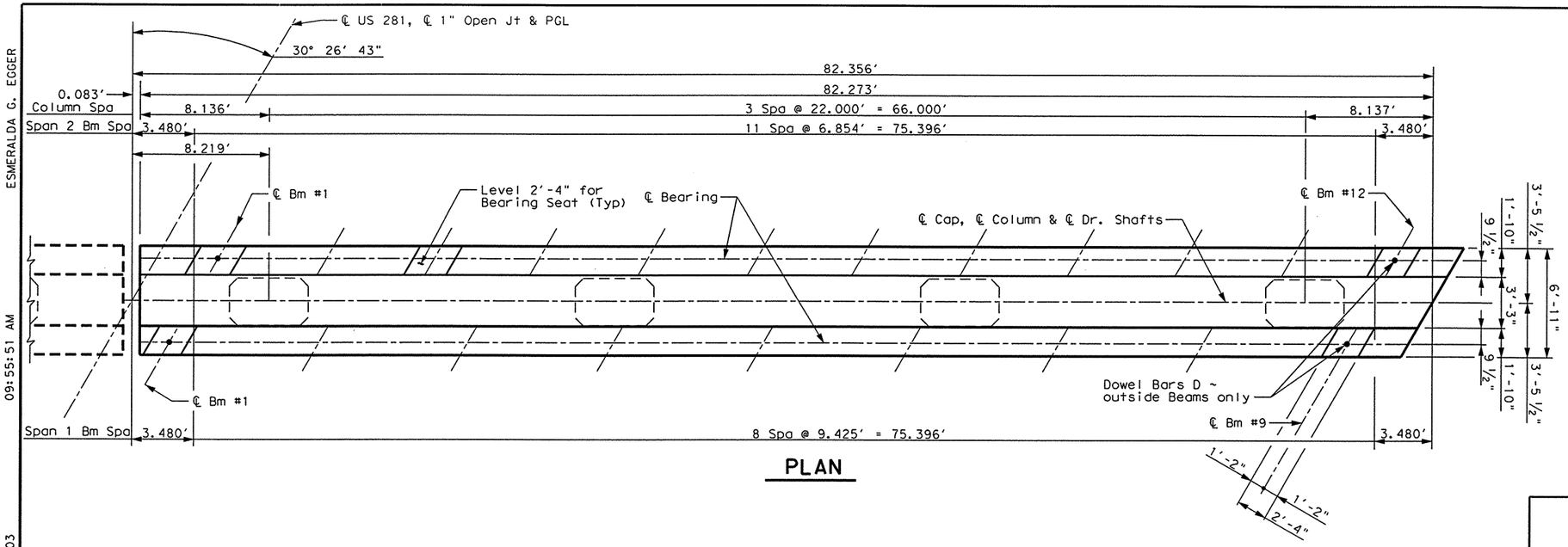

PLAN

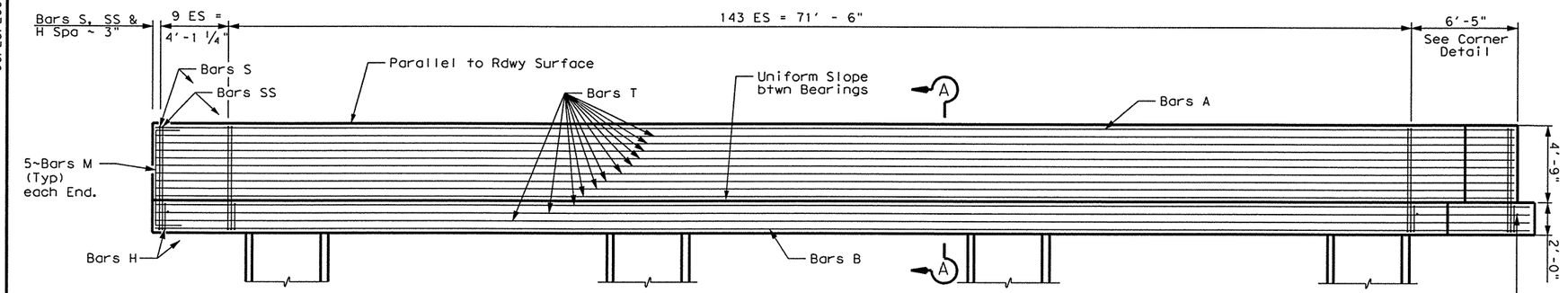

ELEVATION

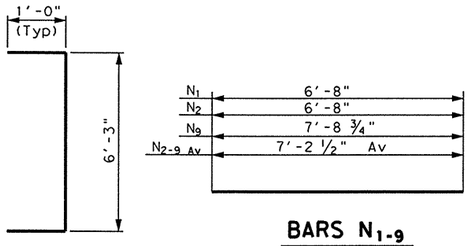

BARS M

BARS N1-9

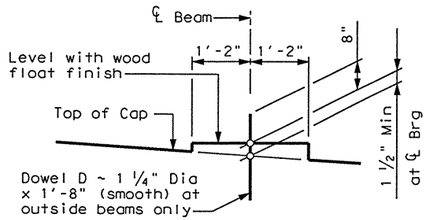

BEARING SEAT DETAIL

(Bearing surface shall be clean and free of all loose material before placing bearing pad.)

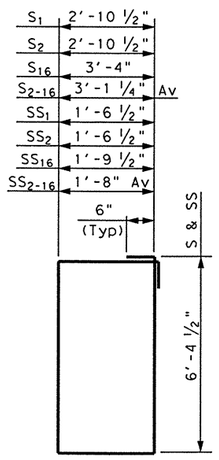

BARS S1-16 & SS1-16

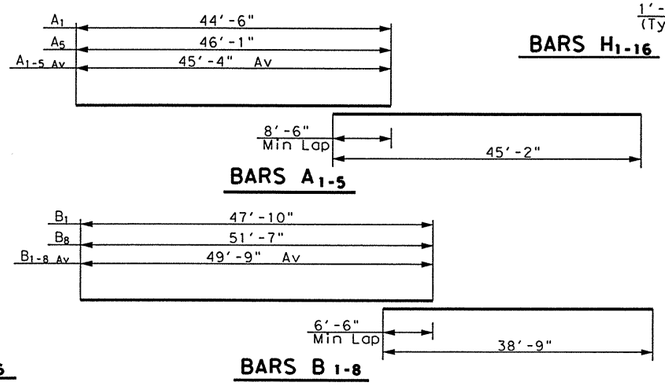

BARS A1-5

BARS B 1-8

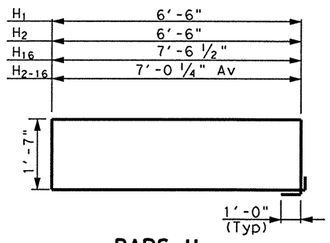

BARS H1-16

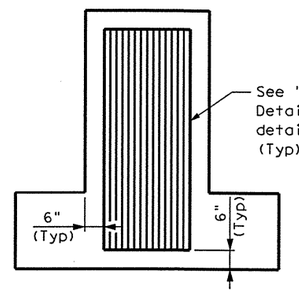

FORM LINER LOCATION

TABLE OF CONSTANT QUANTITIES

Bar	No.	Size	Length	Weight
A_{1-5}	5	#11	90'-6" Av	2404
B_{1-8}	8	#11	88'-6" Av	3762
D_1	4	1 1/4"ø	1'-8"	29
D_2	80	#11	20'-0"	8501
H_1	153	#6	18'-2"	4175
H_{2-16}	15	#6	19'-3" Av	434
M	10	#5	8'-3"	86
N_1	76	#5	6'-8"	528
N_{2-9}	8	#5	7'-3" Av	61
S_1	153	#5	19'-6"	3112
S_{2-16}	15	#5	20'-0" Av	313
SS_1	153	#5	16'-10"	2686
SS_{2-16}	15	#5	17'-1" Av	267
T	24	#7	86'-3" ①	4231
Reinforcing Steel			Lb	30589
Class "C" Concrete			CY	89.6

① Length includes 1~2'-1" min Lap.

TABLE OF VARIABLE QUANTITIES ②

TOTAL ESTIMATED QUANTITIES ③

"H"	Class "C" Conc (Cols)	Bars K ~ #4 10'-2"		Bars V 80 ~ # 11		Reinf Steel	Class "C" Conc
Ft	CY	No.	Weight	Length	Weight	Lb	CY
17	36.5	136	924	22'-10"	9705	41218	126.1

② Adjust Bars V length by 1 ft and add four additional Bars K for each linear foot of variation in "H" value.

③ Adjust Reinforcing Steel total by 502 Lb. and Class "C" Concrete total by 2.15 CY for each linear foot of variation in "H" value.

GENERAL NOTES:

Designed according to AASTHO 1996 Standard and current Interim Specifications.
Calculated Foundation Load ~ 350 T/D.S.
See Foundation Detail Standard sheet, FD(MOD), for all Foundation details and notes.
Class "C" Concrete strength f'c = 3600 psi.
All reinforcing steel shall be Grade 60.

HS25 LOADING

SHEET 1 OF 2

STATE OF TEXAS
ALLEN R. CROZIER
81450
REGISTERED PROFESSIONAL ENGINEER
Allen R. Crozier 6/25/03

Parsons Brinckerhoff Quade & Douglas Inc.

Texas Department of Transportation

© 2003 by TxDOT

INTERIOR BENT NO. 2

TRENTON ROAD OVERPASS

SOUTHBOUND MAINLANES

281Bnt09.DGN

DESIGNED: ARC	FED. RD DIV. No.	STATE	FEDERAL AID PROJECT No.		HIGHWAY No.	
CHECKED: ALA	6	TEXAS	NH 2003 ( )		US 281	
DRAWN: RLJ	STATE DISTRICT	COUNTY	CONTROL No.	SECTION No.	JOB No.	SHEET No.
CHECKED: ARC	PHARR	HIDALGO	0255	08	091	957

ESMERALDA G. EGGER
09:57:57 AM
06/25/2003
I:\projects\223220\CADD\Sheets\Structures\Bridge\281Bnt09a.dgn

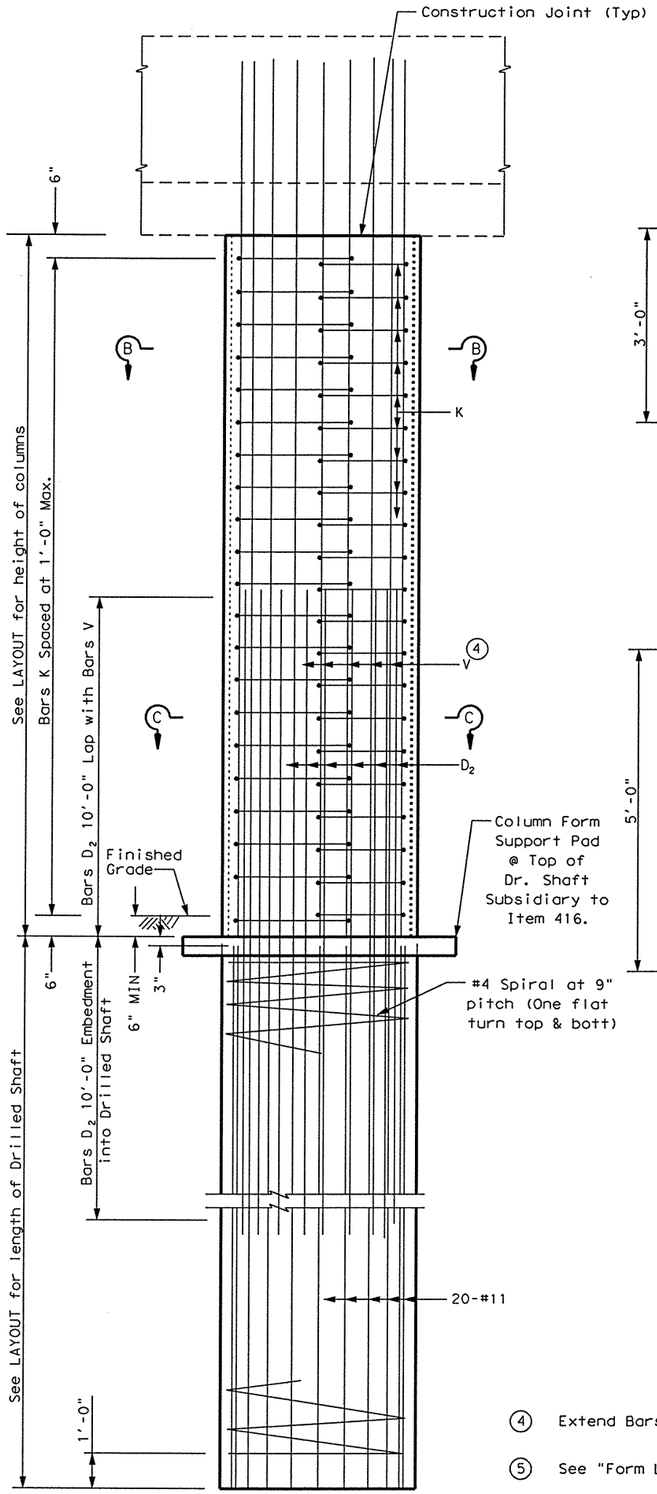

TYPICAL COLUMN DETAILS

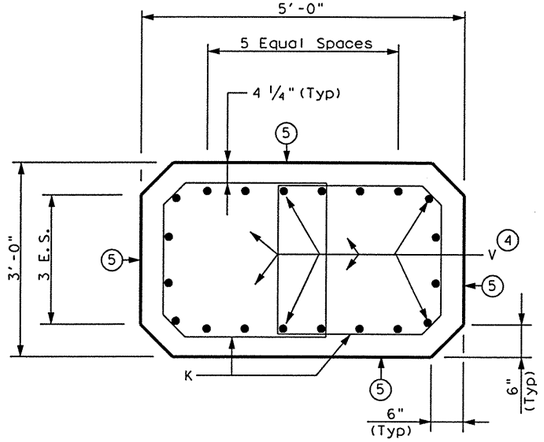

SECTION B-B

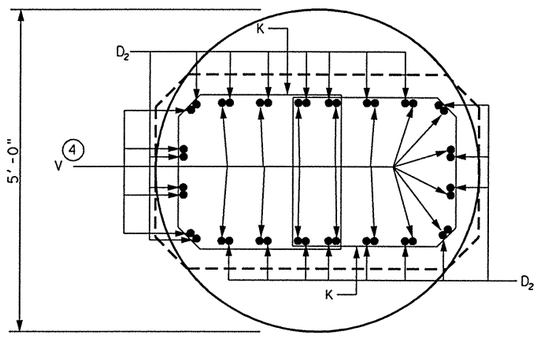

TYPICAL SECTION SHOWING BARS D_2 & BARS V

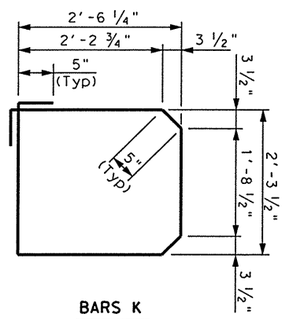

BARS K

SECTION C-C

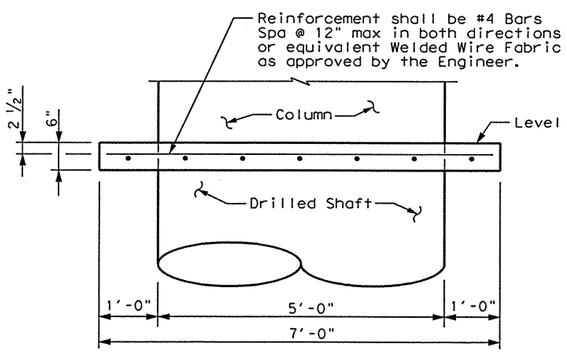

SECTION THRU COLUMN FORM SUPPORT PAD

Column Support Pad concrete and reinforcement shall be subsidiary to Bid Item 416 "Drilled Shaft Foundations"

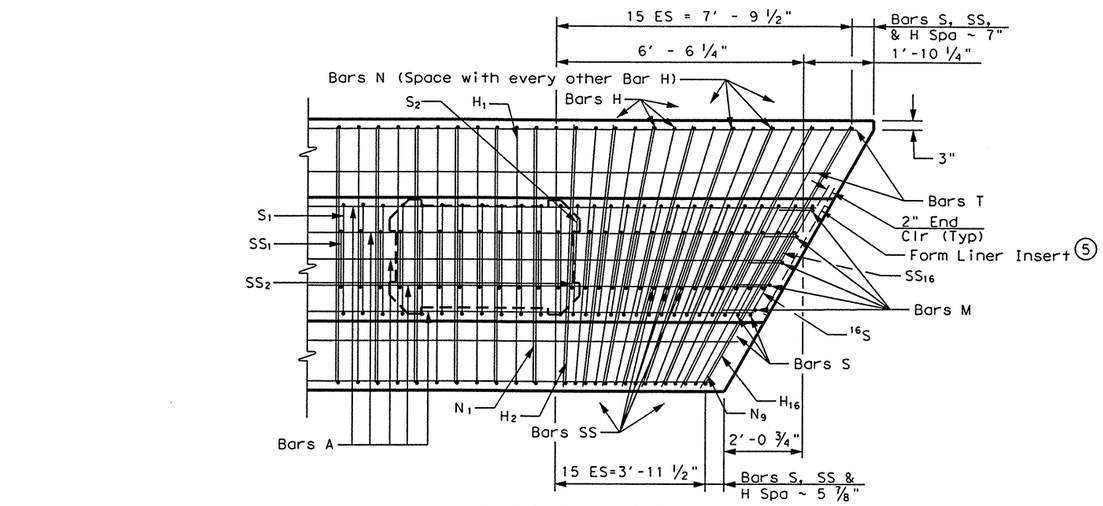

CORNER DETAIL

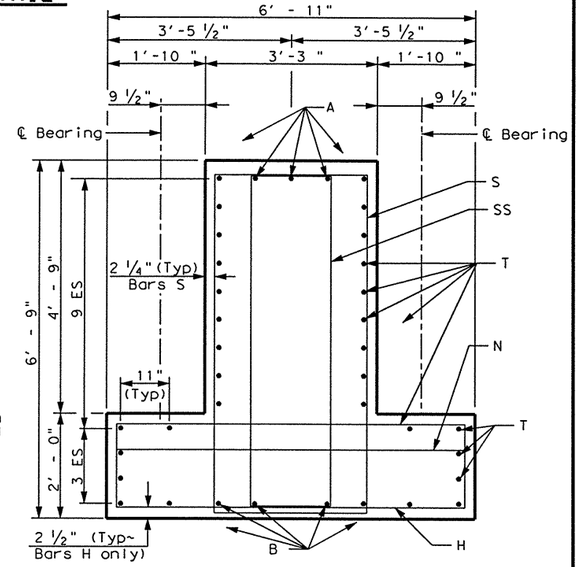

SECTION A-A

HS25 LOADING

SHEET 2 OF 2

Parsons Brinckerhoff Quade & Douglas Inc.

Texas Department of Transportation

© 2003 by TxDOT

INTERIOR BENT NO. 2

TRENTON ROAD OVERPASS

SOUTHBOUND MAINLANES

STATE OF TEXAS
ALLEN R. CROZIER
81450
REGISTERED PROFESSIONAL ENGINEER

Allen R. Crozier
6/25/03

281Bnt09A.DGN

DESIGNED: ARC	FED. RD DIV. No.	STATE	FEDERAL AID PROJECT No.		HIGHWAY No.
CHECKED: ALA	6	TEXAS	NH 2003 ( )		US 281
DRAWN: RLJ	STATE DISTRICT	COUNTY	CONTROL No.	SECTION No.	JOB No.	SHEET No.
CHECKED: ARC	PHARR	HIDALGO	0255	08	091	958

④ Extend Bars V 5' -10" min into Bent Cap.

⑤ See "Form Liner Details" for details not shown.

⑥ Drilled Shaft Bars shall terminate 3" below top of Drilled Shaft

ESMERALDA G. EGGER
09:59:51 AM
06/25/2003

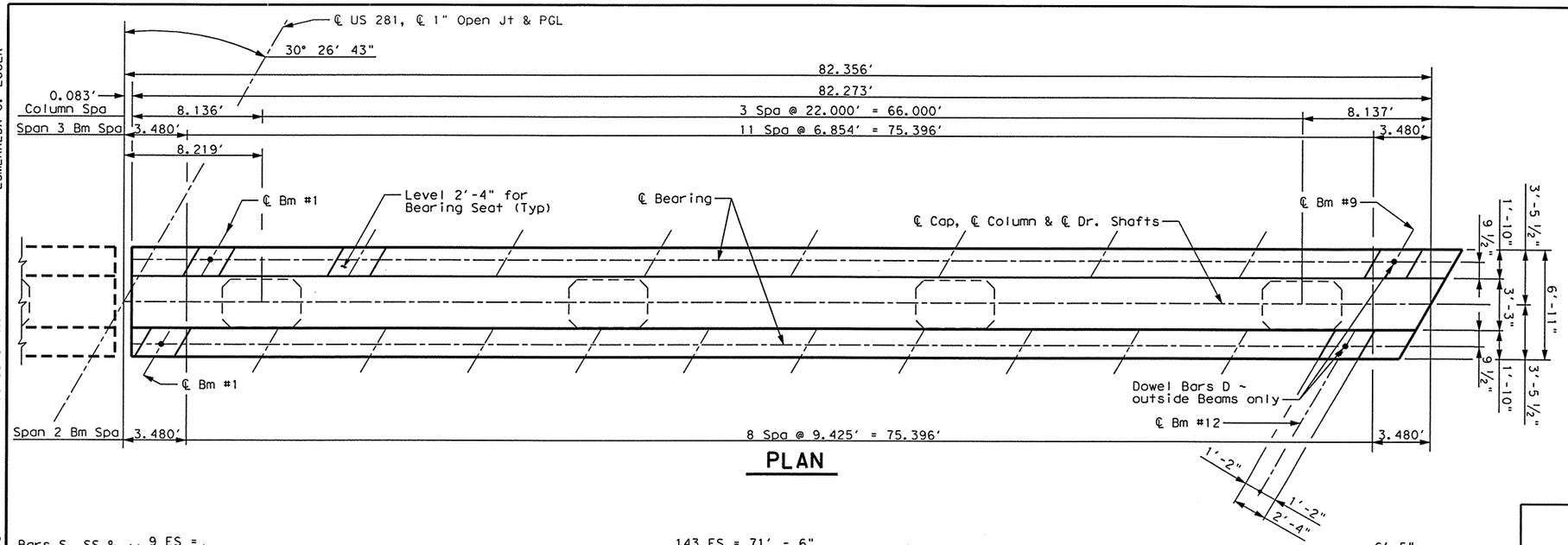

PLAN

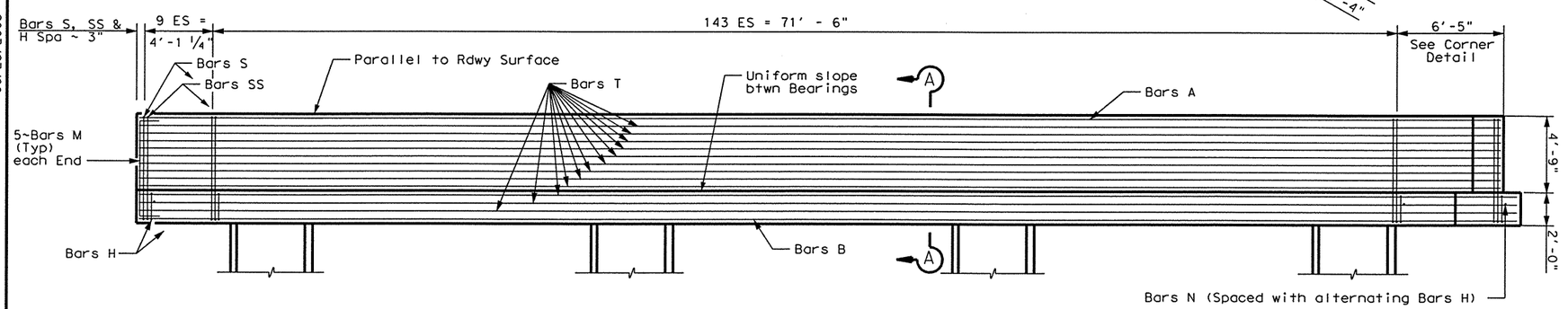

TABLE OF CONSTANT QUANTITIES

Bar	No.	Size	Length	Weight
A_{1-5}	5	#11	90'-6" Av	2404
B_{1-8}	8	#11	88'-6" Av	3762
D_1	4	1¼"ø	1'-8"	29
D_2	80	#11	20'-0"	8501
H_1	153	#6	18'-2"	4175
H_{2-16}	15	#6	19'-3" Av	434
M	10	#5	8'-3"	86
N_1	76	#5	6'-8"	528
N_{2-9}	8	#5	7'-3" AV	61
S_1	153	#5	19'-6"	3112
S_{2-16}	15	#5	20'-0" AV	313
SS_1	153	#5	16'-10"	2686
SS_{2-16}	15	#5	17'-1" AV	267
T	24	#7	86'-3" ①	4231
Reinforcing Steel			Lb	30589
Class "C" Concrete			CY	89.6

① Length includes 1~2'-1" min Lap.

TABLE OF VARIABLE QUANTITIES ②

"H"	Class "C" Conc (Cols)	Bars K ~ #4 10'-2"		Bars V 80 ~ # 11	
Ft	CY	No.	Weight	Length	Weight
17	36.5	136	924	22'-10"	9705

TOTAL ESTIMATED QUANTITIES ③

Reinf Steel	Class "C" Conc
Lb	CY
41218	126.1

② Adjust Bars V length by 1 ft and add four additional Bars K for each linear foot of variation in "H" value.

③ Adjust Reinforcing Steel total by 502 Lb. and Class "C" Concrete total by 2.15 CY for each linear foot of variation in "H" value.

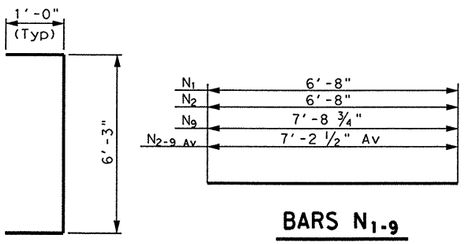

BARS M

BARS N_{1-9}

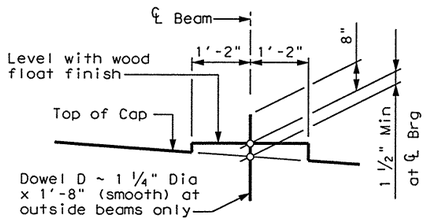

BEARING SEAT DETAIL

(Bearing surface shall be clean and free of all loose material before placing bearing pad.)

ELEVATION

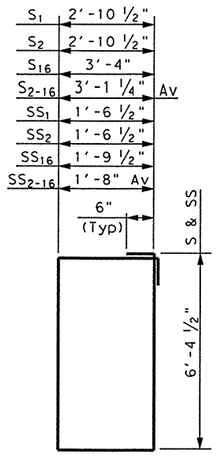

BARS S_{1-16} & SS_{1-16}

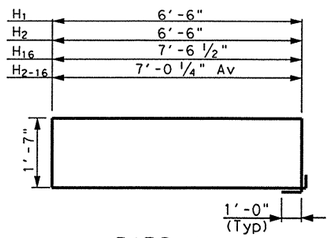

BARS H_{1-16}

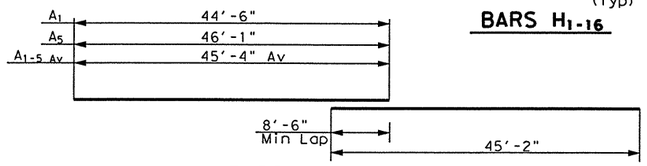

BARS A_{1-5}

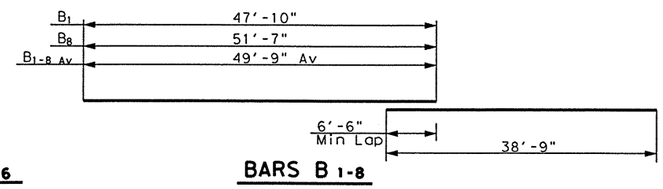

BARS B_{1-8}

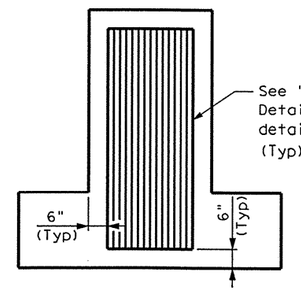

FORM LINER LOCATION

GENERAL NOTES:

Designed according to AASTHO 1996 Standard and current Interim Specifications.
Calculated Foundation Load ~ 350 T/D.S.
See Foundation Detail Standard sheet, FD(MOD), for all Foundation details and notes.
Class "C" Concrete strength f'c = 3600 psi.
All reinforcing steel shall be Grade 60.

HS25 LOADING

SHEET 1 OF 2

Parsons Brinckerhoff Quade & Douglas Inc.

Texas Department of Transportation

© 2003 by TxDOT

INTERIOR BENT NO. 3

TRENTON ROAD OVERPASS

SOUTHBOUND MAINLANES

STATE OF TEXAS — ALLEN R. CROZIER — 81450 — REGISTERED PROFESSIONAL ENGINEER

Allen R. Crozier 6/25/03

281Bnt11.DGN

DESIGNED: ARC	FED. RD DIV. No.	STATE	FEDERAL AID PROJECT No.		HIGHWAY No.	
CHECKED: ALA	6	TEXAS	NH 2003 ( )		US 281	
DRAWN: RLJ	STATE DISTRICT	COUNTY	CONTROL No.	SECTION No.	JOB No.	SHEET No.
CHECKED: ARC	PHARR	HIDALGO	0255	08	091	959

I:\projects\22322a\CADD\Sheets\Structures\Bridge\281Bnt11.dgn

ESMERALDA G. EGGER
10:01:39 AM
06/25/2003
I:\projects\223220\CADD\Sheets\Structures\Bridge\281Bnt11a.dgn

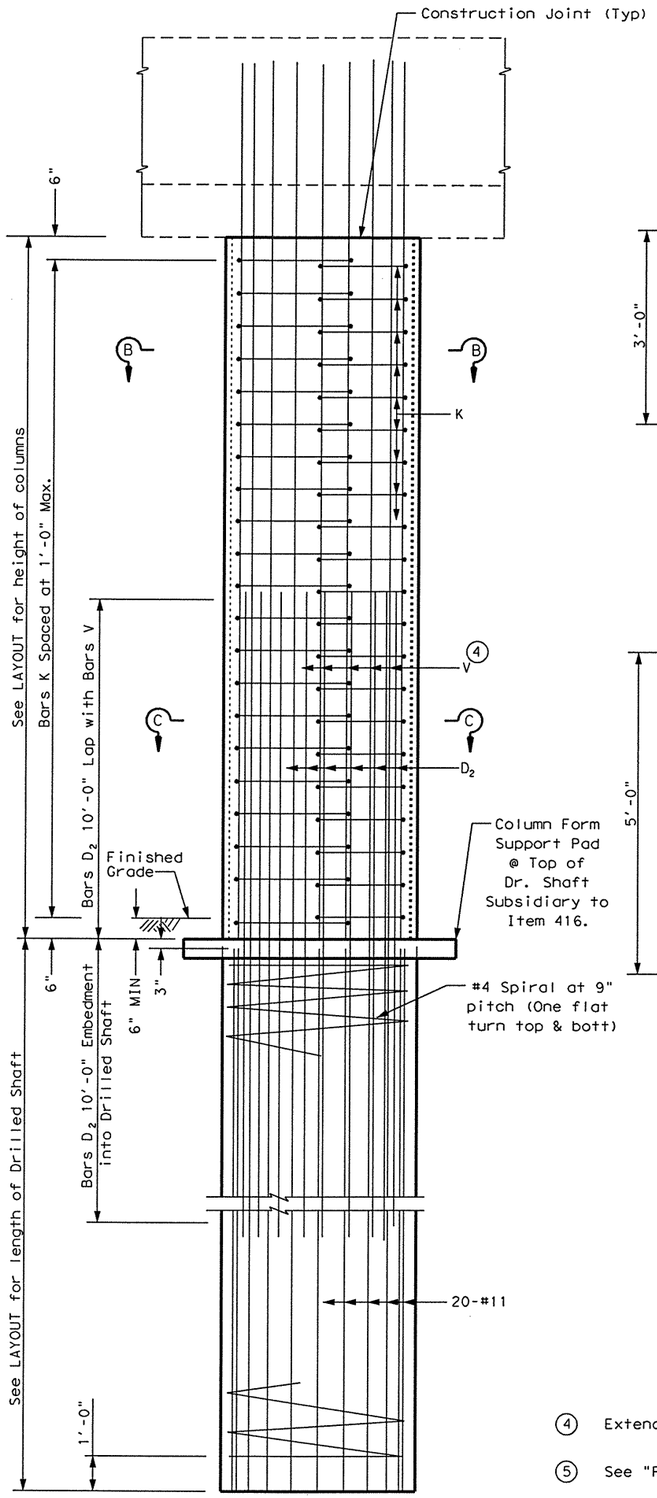

TYPICAL COLUMN DETAILS

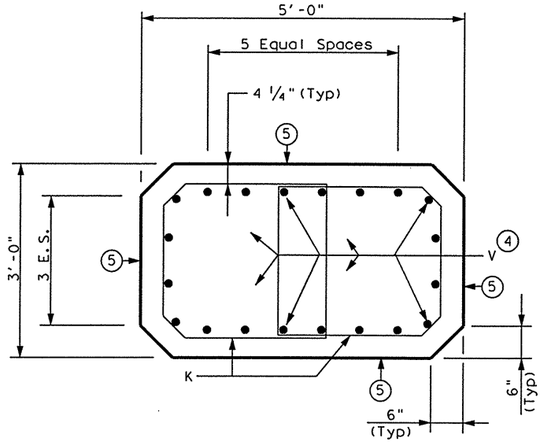

SECTION B-B

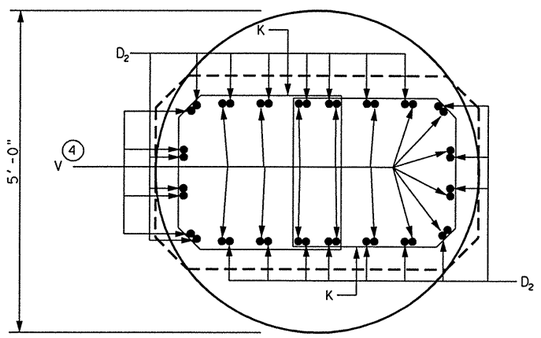

TYPICAL SECTION SHOWING BARS D_2 & BARS V

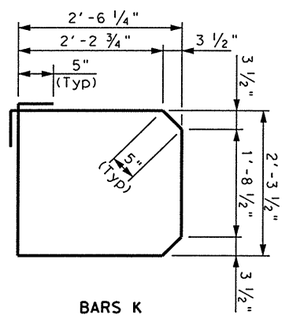

BARS K

④ Extend Bars V 5' -10" min into Bent Cap.

⑤ See "Form Liner Details" for details not shown.

⑥ Drilled Shaft Bars shall terminate 3" below top of Drilled Shaft

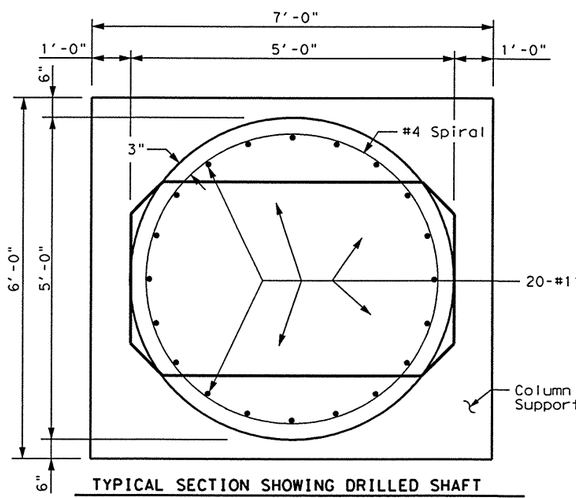

TYPICAL SECTION SHOWING DRILLED SHAFT REINFORCEMENT

SECTION C-C

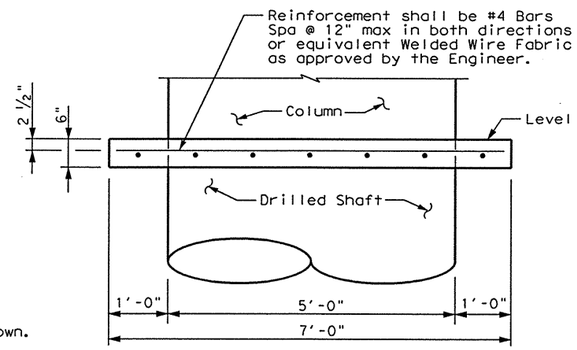

SECTION THRU COLUMN FORM SUPPORT PAD

Column Support Pad concrete and reinforcement shall be subsidiary to Bid Item 416 "Drilled Shaft Foundations"

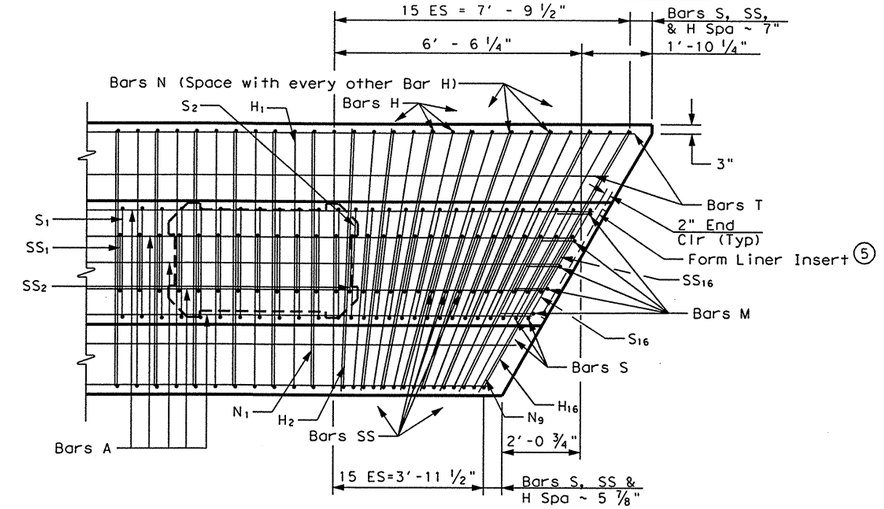

CORNER DETAIL

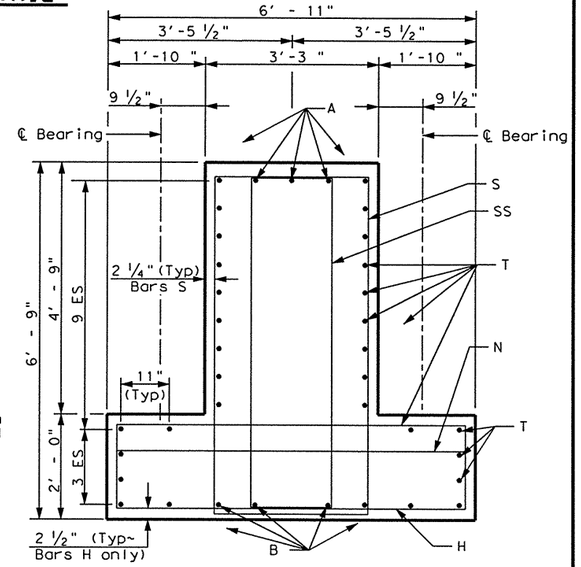

SECTION A-A

HS25 LOADING SHEET 2 OF 2

Parsons Brinckerhoff Quade & Douglas Inc.

Texas Department of Transportation

© 2003 by TxDOT

INTERIOR BENT NO. 3

TRENTON ROAD OVERPASS

SOUTHBOUND MAINLANES

STATE OF TEXAS
ALLEN R. CROZIER
81450
REGISTERED PROFESSIONAL ENGINEER
4/25/03

281Bnt11A.DGN

DESIGNED: ARC	FED. RD DIV. No.	STATE	FEDERAL AID PROJECT No.		HIGHWAY No.
CHECKED: ALA	6	TEXAS	NH 2003 ( )		US 281
DRAWN: RLJ	STATE DISTRICT	COUNTY	CONTROL No.	SECTION No.	JOB No.	SHEET No.
CHECKED: ARC	PHARR	HIDALGO	0255	08	091	960

ESMERALDA G. EGGER
10:04:03 AM
06/25/2003
I:\projects\22322a\CADD\Sheets\Structures\Bridge\281spn10.dgn

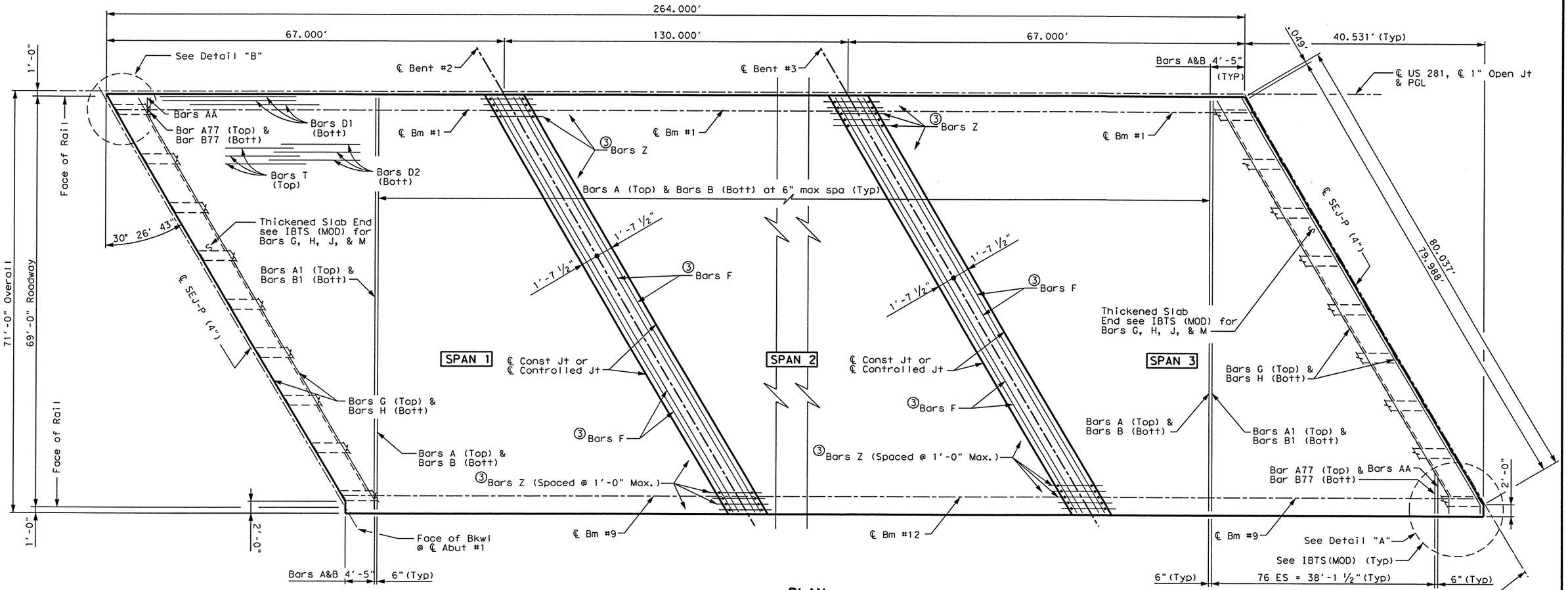

PLAN

Span No.	Beam No.	"A"	"B"
1&3	1&9	0.012'	0.016'
1&3	2-8	0.013'	0.019'
2	ALL	0.145'	0.205'

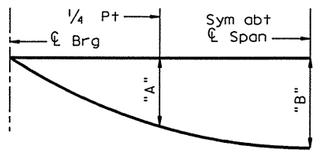

DEAD LOAD DEFLECTION DIAGRAM

NOTE: Deflections shown are due to cast-in-place concrete only. (E_c= 5 X 10^6 psi) Calculated deflections shown are theoretical and actual dimensions may be less. Deflections shall be adjusted based on field observations.

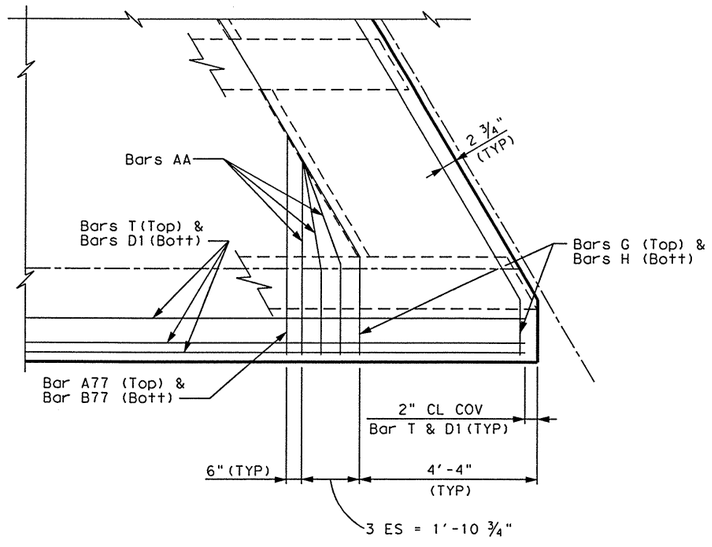

DETAIL "A"

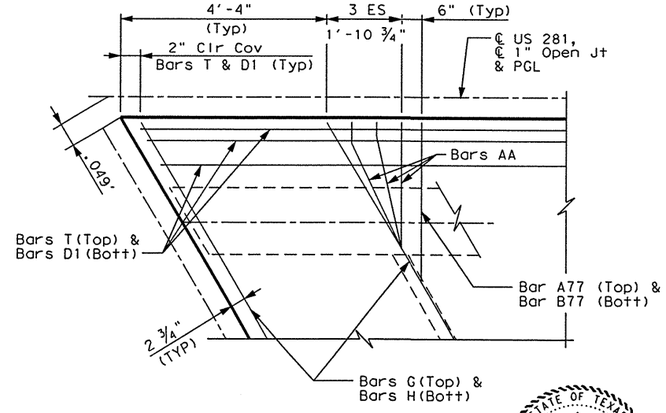

DETAIL "B"

STATE OF TEXAS
ALLEN R. CROZIER
81450
REGISTERED PROFESSIONAL ENGINEER
Allen R. Crozier
6/25/03

HS 25 LOADING SHEET 1 OF 2

Parsons Brinckerhoff Quade & Douglas Inc.

Texas Department of Transportation

© 2003 by TxDOT

264.00' PRESTR CONC BEAM UNIT
(SPANS #1 - #3)

TRENTON ROAD OVERPASS
SOUTHBOUND MAINLANES

281Spn10.DGN

DESIGNED: ARC	FED. RD DIV. No.	STATE	FEDERAL AID PROJECT No.			HIGHWAY No.	
CHECKED: ALA	6	TEXAS	NH 2003 ( )			US 281	
DRAWN: OJH	STATE DISTRICT	COUNTY	CONTROL No.	SECTION No.	JOB No.	SHEET No.	
CHECKED: ARC	PHARR	HIDALGO	0255	08	091	961	

ESMERALDA G. EGGER
10:10:16 AM
06/25/2003
I:\projects\22322a\CADD\Sheets\Structures\Bridge\281Spn09.dgn

BAR TABLE	
Bar	Size
A	#5
B	#5
D	#5
F	#4
G	#5
H	#6
J	#5
T	#4
Z	#4

TABLE OF ESTIMATED QUANTITIES

Span	REINF CONC SLAB	PRESTRESSED CONC BEAM (TYPE IV)②	CLASS "S" CONCRETE	REINFORCING STEEL ①
NO.	SF	LF	CY	LB
1	4,754	581.67	122.8	30,901
2	9,225	1,507.80	233.8	59,963
3	4,754	581.67	122.8	30,901
Total	18,733	2,671.14	479.4	121,765

① Reinforcing steel weight is calculated using an approximate factor of 6.5 lbs per sq ft.

② Quantity shown are bottom beam flange lengths with adjustments made for beam slope.
Beam Length = 64.63′ ~ Span 1~ Each Beam
125.65′ ~ Span 2~ Each Beam
64.63′ ~ Span 3~ Each Beam

③ See MISCELLANEOUS SLAB DETAILS , Sheet 2 of 2, for details not shown .

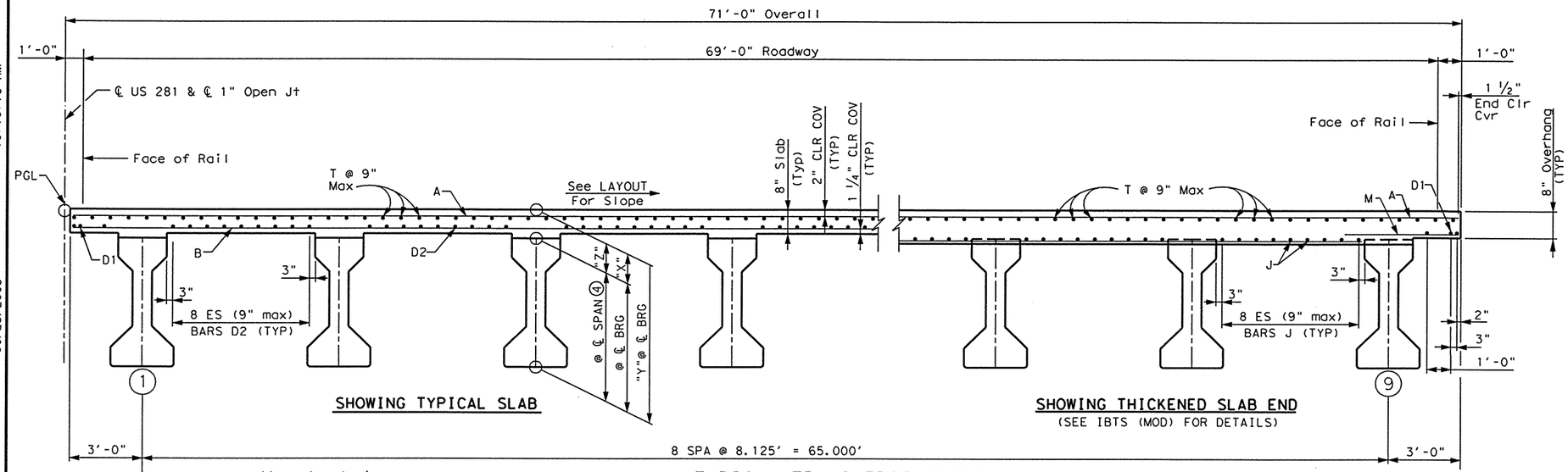

SHOWING TYPICAL SLAB

SHOWING THICKENED SLAB END
(SEE IBTS (MOD) FOR DETAILS)

TYPICAL TRANSVERSE SECTION
(SPANS 1 & 3)

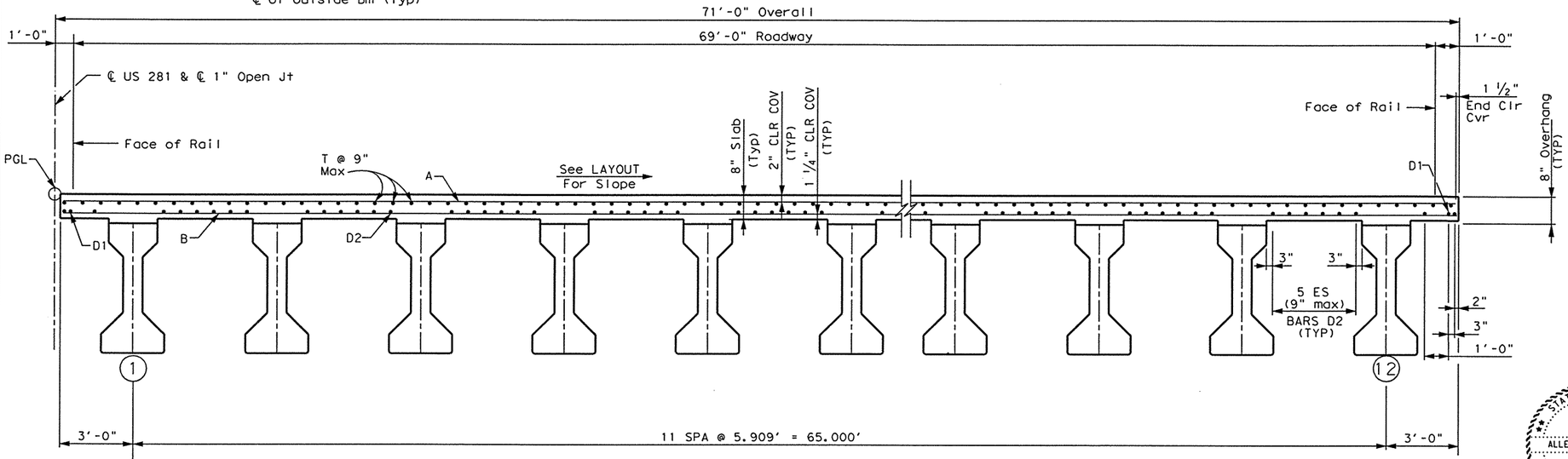

TYPICAL TRANSVERSE SECTION
(SPAN 2)

TABLE OF SECTION DEPTHS

Span No.	Beam No.	"X" at ℄ Brg	"Y" at ℄ Brg	"Z" at ℄ Span ④
1&3	1&9	9 ¼"	5′-3 ¼"	8 ¾"
1&3	2-8	9 ¼"	5′-3 ¼"	8 ⅞"
2	1&12	11"	5′-5"	8 ⅞"
2	2-11	11"	5′-5"	8 ¾"

④ Theoretical Dimension

GENERAL NOTES:

Designed according to 1996 AASHTO standard and current interim specifications.
See PCP(C)(MOD) standard for details and quantity adjustments if this option is used.
See IBTS(MOD) standard for thickened slab end details & IBMS (MOD) for Slab details over Inverted-T.
See SEJ-P Standard for additional details.
All reinforcing shall be Grade 60.
Class "S" Concrete strength f'c= 4000 psi
Bar laps, where required, shall be as follows:
~ #4 = 1′-5"
~ #5 = 1′-9"

HS25 LOADING SHEET 2 OF 2

Parsons Brinckerhoff Quade & Douglas Inc.

Texas Department of Transportation

© 2003 by TxDOT

264.00′ PRESTR CONC BEAM UNIT
(SPANS #1 - #3)

TRENTON ROAD OVERPASS
SOUTHBOUND MAINLANES

281Spn09.DGN

DESIGNED: ARC	FED. RD DIV. No.	STATE	FEDERAL AID PROJECT No.			HIGHWAY No.
CHECKED: ALA	6	TEXAS	NH 2003 ( )			US 281
DRAWN: OJH	STATE DISTRICT	COUNTY	CONTROL No.	SECTION No.	JOB No.	SHEET No.
CHECKED: ARC	PHARR	HIDALGO	0255	08	091	962

STATE OF TEXAS
ALLEN R. CROZIER
81450
REGISTERED PROFESSIONAL ENGINEER

Allen R. Crozier
6/25/03

ALLEN CROZIER
03:11:42 PM
06/25/2003

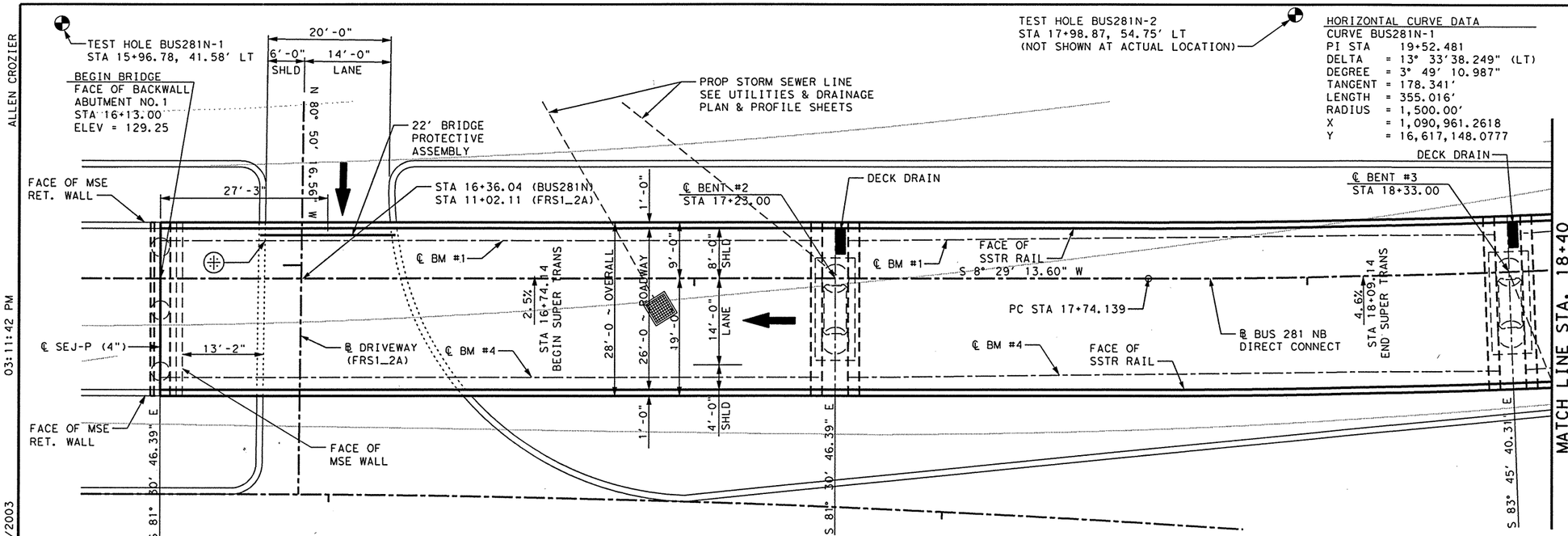

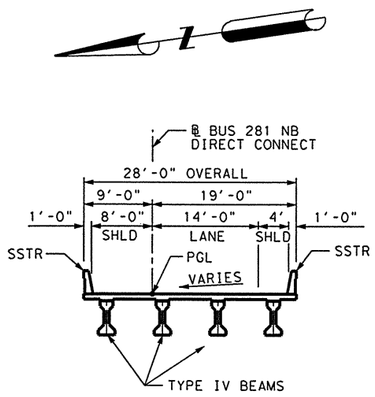

TYPICAL SECTION

STATE OF TEXAS
ALLEN R. CROZIER
81450
REGISTERED PROFESSIONAL ENGINEER
Allen R. Crozier
6/25/03

NOTES:

DESIGNED IN ACCORDANCE WITH 1996 AASHTO STANDARD SPECIFICATIONS AND ALL CURRENT INTERIMS

BORE HOLE DATA PROVIDED BY TxDOT, PHARR DISTRICT

BM US 281-16
STA 706+19.13 (℄ US 281)
OFFSET = 220.37' LT (℄ US 281)
ELEV = 103.82
DESC = 3 1/4" TxDOT ALUM DISK

FUNC CLASS	: DIRECT CONNECTOR
DESIGN SPEED	: 45 MPH
ADT (2002)	: 13,050 VPD
ADT (2022)	: 21,170 VPD
NBI	: 21-109-0-0255-08-270

HS 25 LOADING

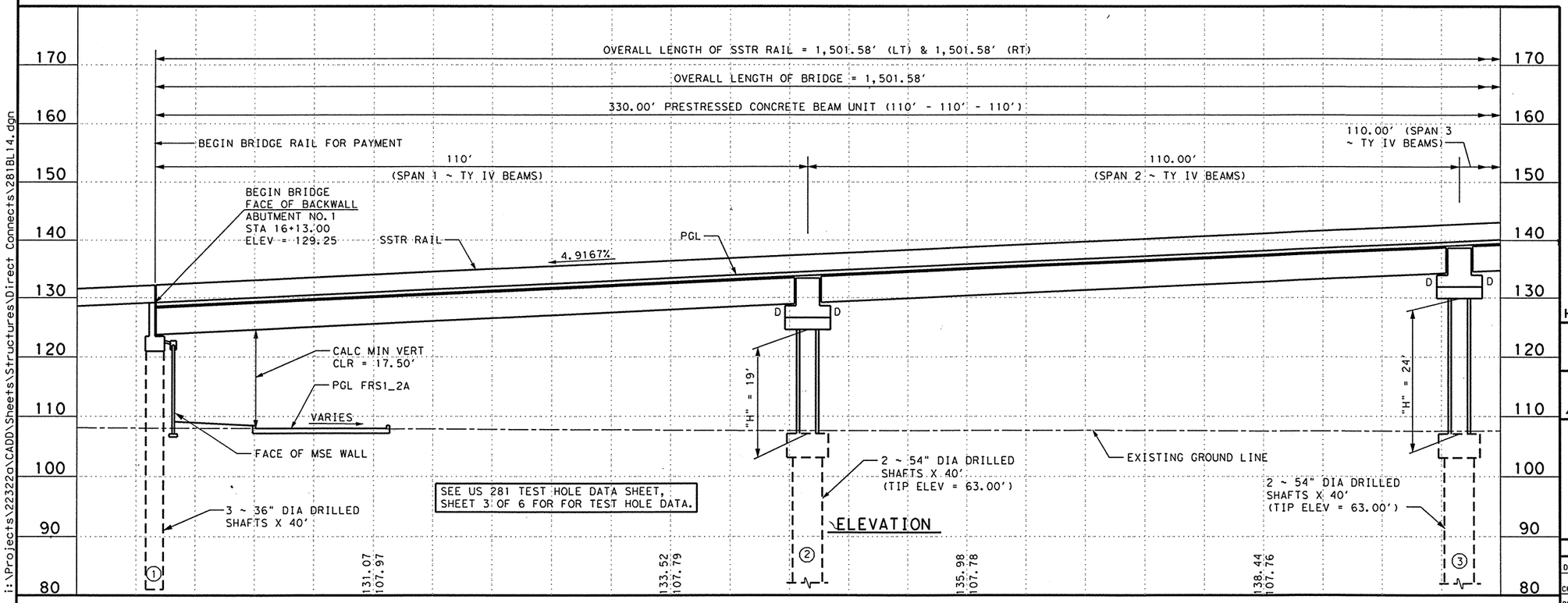

ELEVATION

Parsons Brinckerhoff Quade & Douglas Inc.

Texas Department of Transportation

© 2003 by TxDOT

BRIDGE LAYOUT

BUS 281 NB DIRECT CONNECT

PLAN 1"= 20' HORIZ
PROFILE 1"= 20' VERT

SHEET 1 OF 7			281BL14.DGN					
DESIGNED: ARC	FED. RD DIV. NO.	STATE	FEDERAL AID PROJECT No.			HIGHWAY No.		
CHECKED: ALA	6	TEXAS	NH 2003 ( )			US 281		
DRAWN: RLJ	STATE DISTRICT	COUNTY	CONTROL No.	SECTION No.	JOB No.	SHEET No.		
CHECKED: ARC	PHARR	HIDALGO	0255	08	091	963		

i:\Projects\22322o\CADD\Sheets\Structures\Direct Connects\281BL14.dgn

ALLEN CROZIER
03:11:57 PM
06/25/2003

HORIZONTAL CURVE DATA
CURVE BUS281N-1
PI STA = 19+52.481
DELTA = 13° 33′38.249" (LT)
DEGREE = 3° 49′ 10.987"
TANGENT = 178.341′
LENGTH = 355.016′
RADIUS = 1,500.00′
X = 1,090,961.2618
Y = 16,617,148.0777

POINT OF MIN VERT CLEAR
STA 18+68.32 (6.931′ LT)
STA 19+56.86 (6.434′ LT)

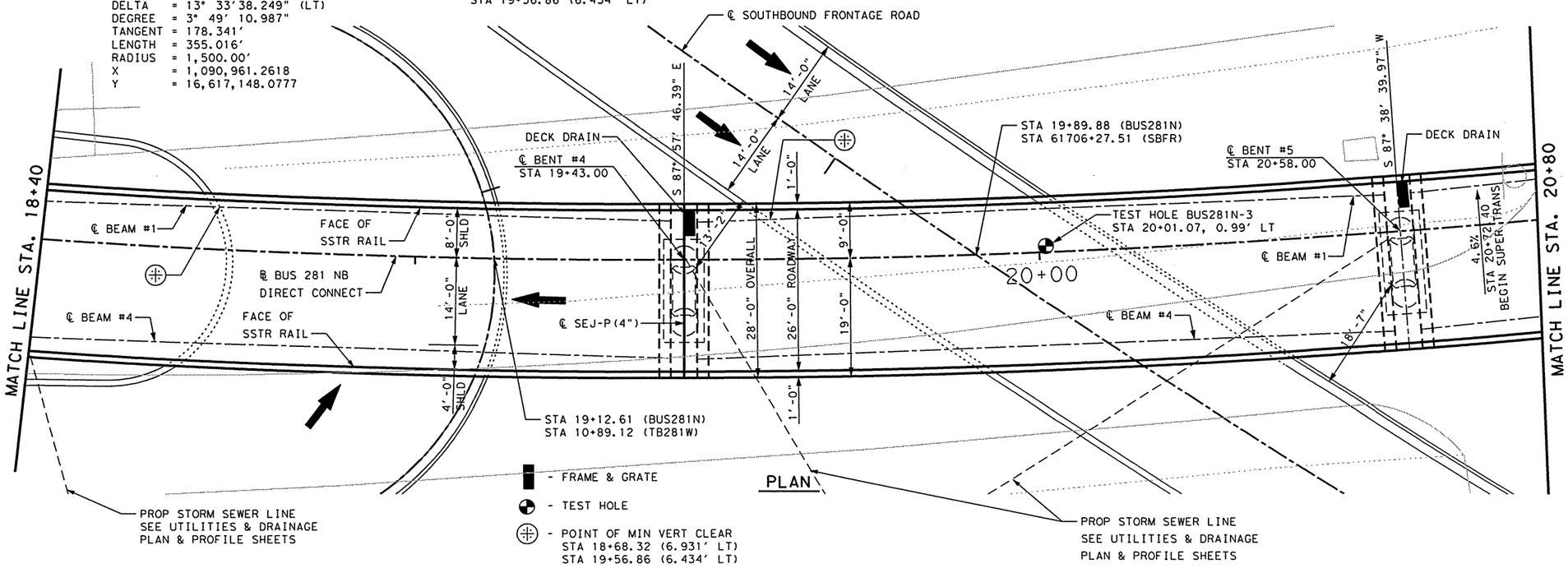

- FRAME & GRATE
- TEST HOLE
- POINT OF MIN VERT CLEAR
  STA 18+68.32 (6.931′ LT)
  STA 19+56.86 (6.434′ LT)

PLAN

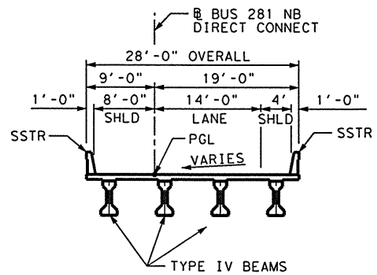

TYPICAL SECTION

STATE OF TEXAS
ALLEN R. CROZIER
81450
REGISTERED PROFESSIONAL ENGINEER
Allen R. Crozier
6/25/03

NOTES:

DESIGNED IN ACCORDANCE WITH 1996 AASHTO STANDARD SPECIFICATIONS AND ALL CURRENT INTERIMS

BORE HOLE DATA PROVIDED BY TxDOT, PHARR DISTRICT

BM US 281-16
STA 706+19.13 (℄ US 281)
OFFSET = 220.37′ LT (℄ US 281)
ELEV = 103.82
DESC = 3 1/4" TxDOT ALUM DISK

FUNC CLASS	: DIRECT CONNECTOR
DESIGN SPEED	: 45 MPH
ADT (2002)	: 13,050 VPD
ADT (2022)	: 21,170 VPD
NBI	: 21-109-0-0255-08-270

HS 25 LOADING

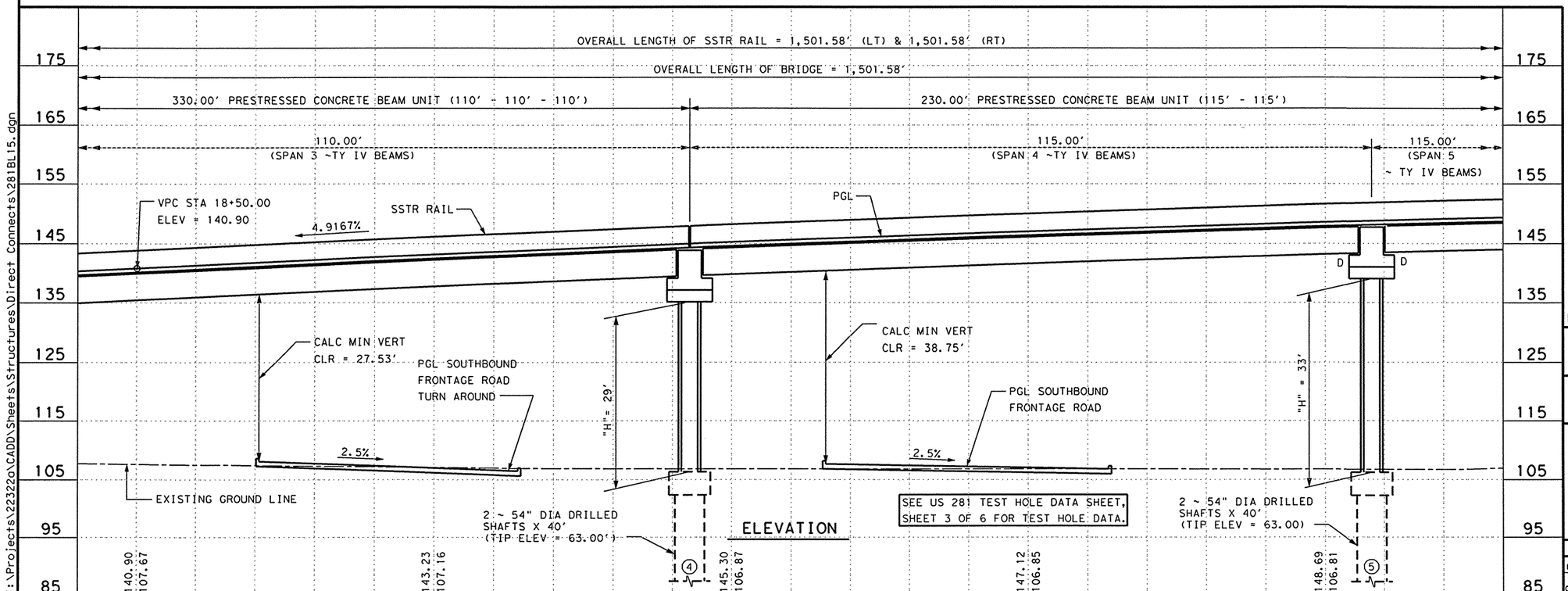

ELEVATION

Parsons Brinckerhoff Quade & Douglas Inc.

Texas Department of Transportation
© 2003 by TxDOT

BRIDGE LAYOUT

BUS 281 NB DIRECT CONNECT

PLAN 1"= 20′ HORIZ
PROFILE 1"= 20′ VERT

SHEET 2 OF 7 | 281BL15.DGN

DESIGNED: ARC	FED. RD DIV. No.	STATE	FEDERAL AID PROJECT No.			HIGHWAY No.
CHECKED: ALA	6	TEXAS	NH 2003 ( )			US 281
DRAWN: RLJ	STATE DISTRICT	COUNTY	CONTROL No.	SECTION No.	JOB No.	SHEET No.
CHECKED: ARC	PHARR	HIDALGO	0255	08	091	964

i:\Projects\22322a\CADD\Sheets\Structures\Direct Connects\281BL15.dgn

ALLEN CROZIER
02:12:18 PM
08/06/2003

HORIZONTAL CURVE DATA
CURVE BUS281N-1
PI STA = 19+52.481
DELTA = 13° 33' 38.249" (LT)
DEGREE = 3° 49' 10.987"
TANGENT = 178.341'
LENGTH = 355.016'
RADIUS = 1,500.00'
X = 1,090,961.2618
Y = 16,617,148.0777

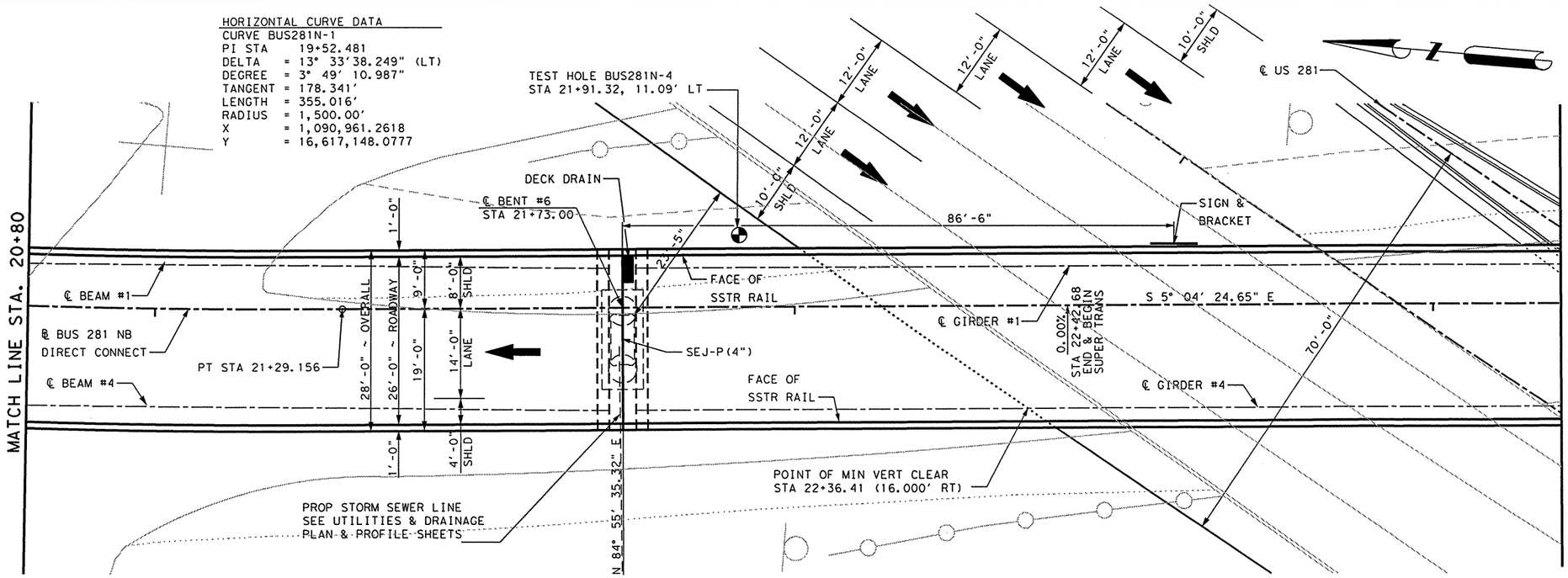

PLAN

■ - FRAME & GRATE
⊕ - TEST HOLE

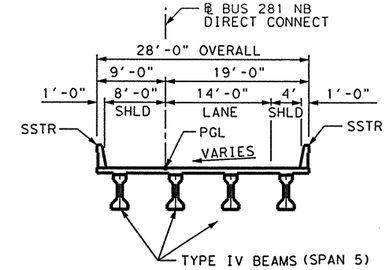

TYPICAL SECTIONS

Allen R. Crozier 8/5/03

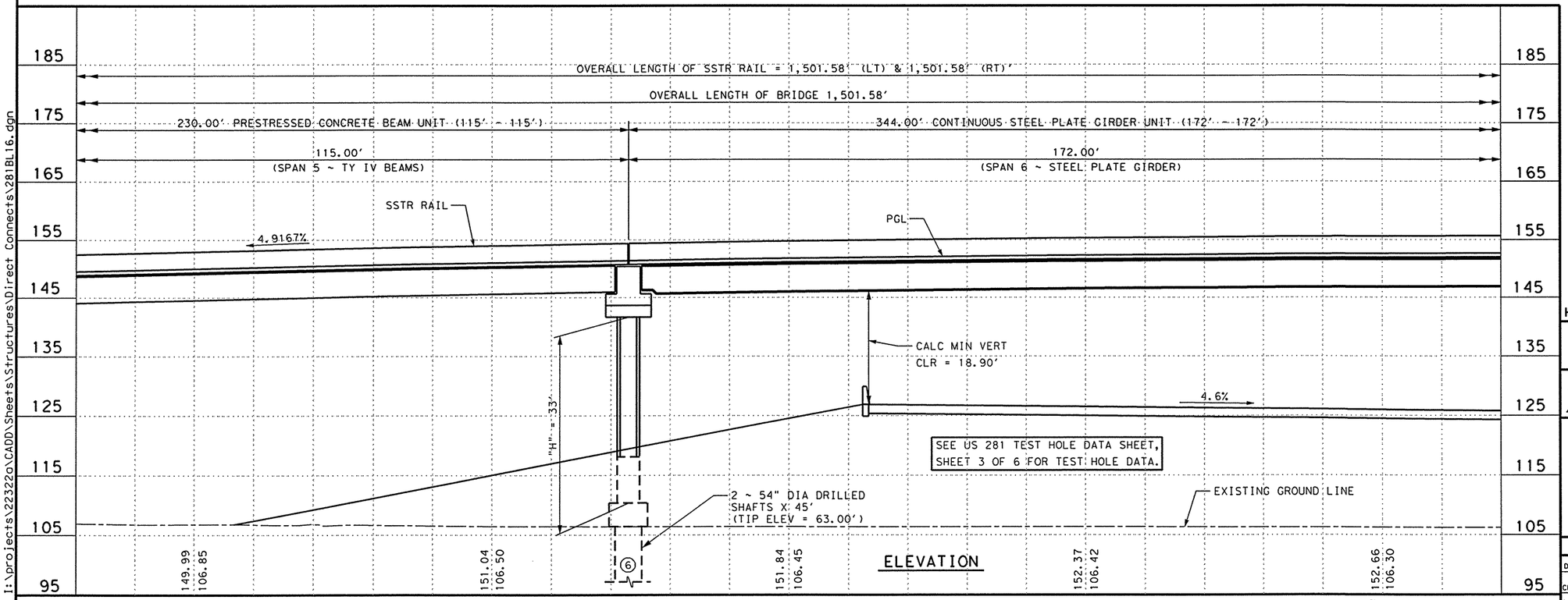

ELEVATION

NOTES:

DESIGNED IN ACCORDANCE WITH 1996 AASHTO STANDARD SPECIFICATIONS AND ALL CURRENT INTERIMS

BORE HOLE DATA PROVIDED BY TxDOT, PHARR DISTRICT

BM US 281-16
STA 706+19.13 (℄ US 281)
OFFSET = 220.37' LT (℄ US 281)
ELEV = 103.82
DESC = 3 1/4" TxDOT ALUM DISK

FUNC CLASS	: DIRECT CONNECTOR
DESIGN SPEED	: 45 MPH
ADT (2002)	: 13,050 VPD
ADT (2022)	: 21,170 VPD
NBI	: 21-109-0-0255-08-270

HS 25 LOADING

Parsons Brinckerhoff Quade & Douglas Inc.

Texas Department of Transportation
© 2003 by TxDOT

BRIDGE LAYOUT

BUS 281 NB DIRECT CONNECT

PLAN 1"= 20' HORIZ
PROFILE 1"= 20' VERT

SHEET 3 OF 7 | 281BL16.DGN

DESIGNED: ARC	FED. RD DIV. No.	STATE	FEDERAL AID PROJECT No.		HIGHWAY No.	
CHECKED: ALA	6	TEXAS	NH 2003 ( )		US 281	
DRAWN: RLJ	STATE DISTRICT	COUNTY	CONTROL No.	SECTION No.	JOB No.	SHEET No.
CHECKED: ARC	PHARR	HIDALGO	0255	08	091	965

I:\projects\22322o\CADD\Sheets\Structures\Direct Connects\281BL16.dgn

$NAME$
07:54:12 AM
09/10/2003
I:\projects\22322a\CADD\Sheets\Structures\Direct Connects\281BL16.dgn

HORIZONTAL CURVE DATA
CURVE BUS281N-1
PI STA = 19+52.481
DELTA = 13° 33' 38.249" (LT)
DEGREE = 3° 49' 10.987"
TANGENT = 178.341'
LENGTH = 355.016'
RADIUS = 1,500.00'
X = 1,090,961.2618
Y = 16,617,148.0777

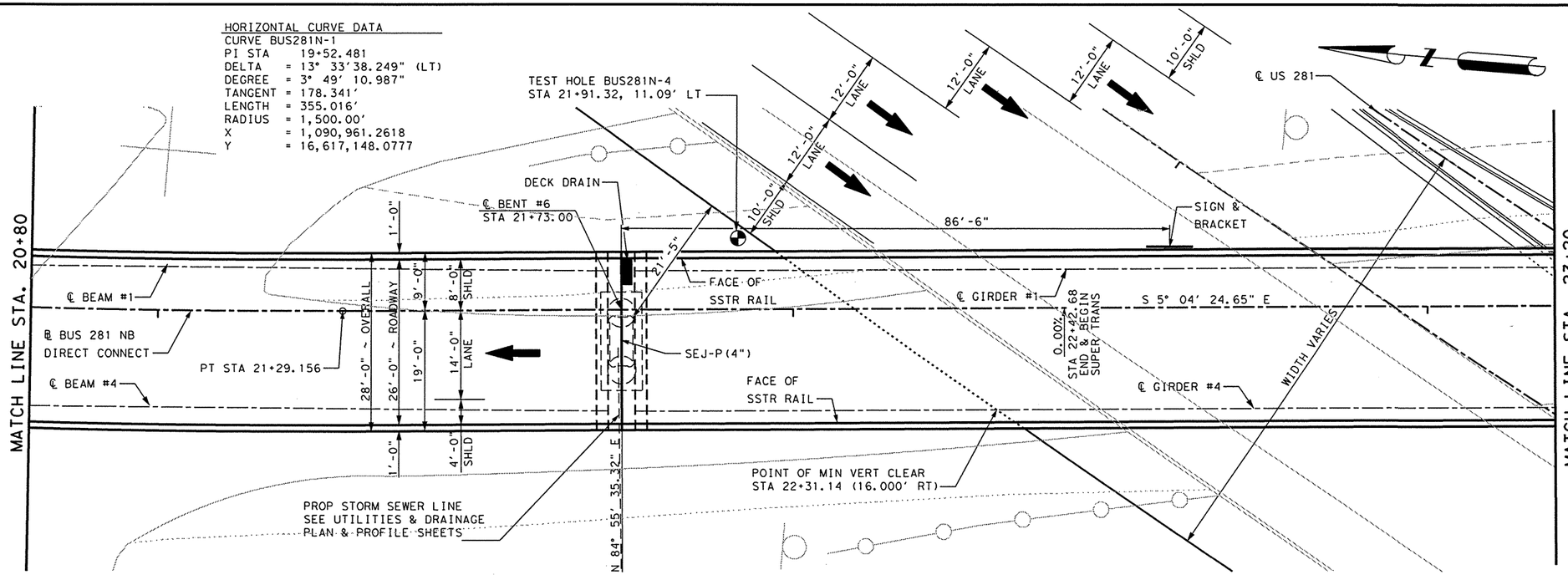

PLAN

- ▮ - FRAME & GRATE
- ⊕ - TEST HOLE

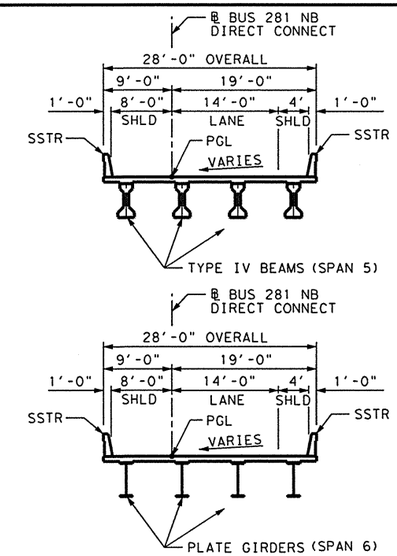

TYPICAL SECTIONS

Allen R. Crozier
9/10/03

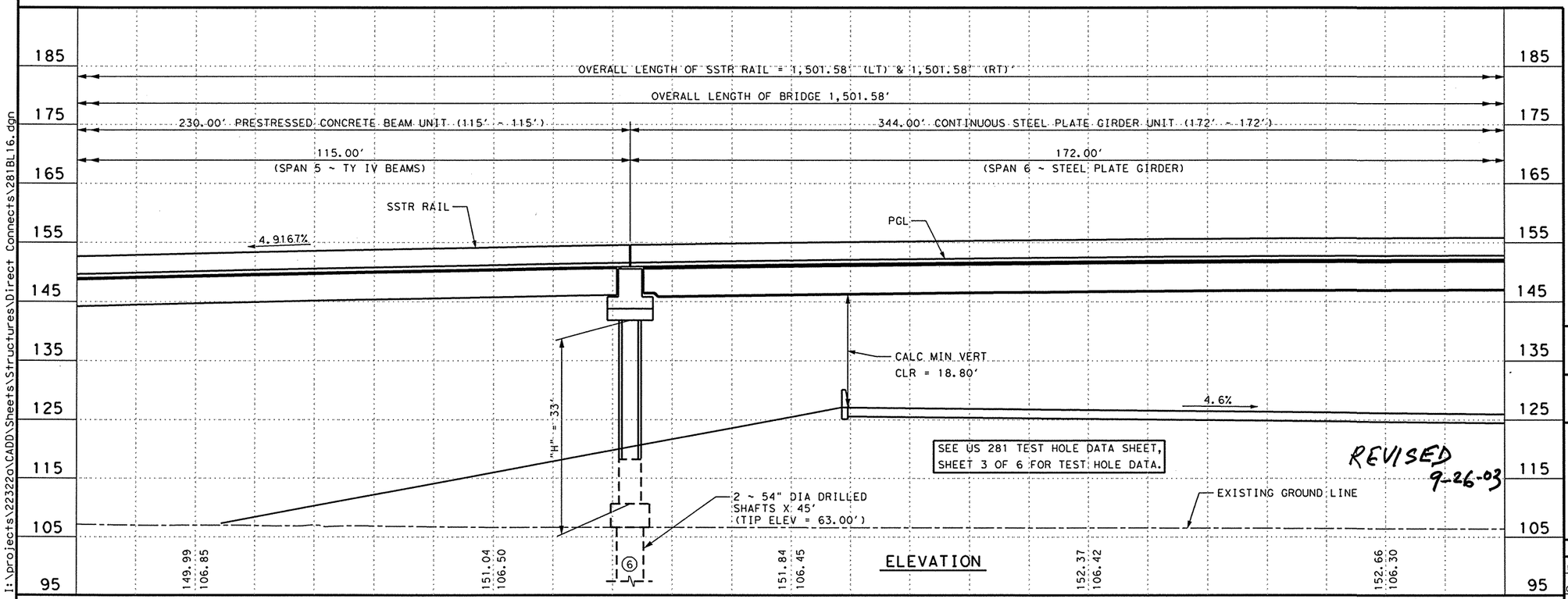

ELEVATION

NOTES:

DESIGNED IN ACCORDANCE WITH 1996 AASHTO STANDARD SPECIFICATIONS AND ALL CURRENT INTERIMS

BORE HOLE DATA PROVIDED BY TxDOT, PHARR DISTRICT

BM US 281-16
STA 706+19.13 (℄ US 281)
OFFSET = 220.37' LT (℄ US 281)
ELEV = 103.82
DESC = 3 1/4" TxDOT ALUM DISK

FUNC CLASS	: DIRECT CONNECTOR
DESIGN SPEED	: 45 MPH
ADT (2002)	: 13,050 VPD
ADT (2022)	: 21,170 VPD
NBI	: 21-109-0-0255-08-270

HS 25 LOADING

Parsons Brinckerhoff Quade & Douglas Inc.

Texas Department of Transportation

© 2003 by TxDOT

BRIDGE LAYOUT

BUS 281 NB DIRECT CONNECT

PLAN 1"= 20' HORIZ
PROFILE 1"= 20' VERT

SHEET 3 OF 7 | 281BL16.DGN

DESIGNED: ARC	FED. RD DIV. No.	STATE	FEDERAL AID PROJECT No.				HIGHWAY No.	
CHECKED: ALA	6	TEXAS	NH 2003 ( )				US 281	
DRAWN: RLJ	STATE DISTRICT	COUNTY		CONTROL No.	SECTION No.	JOB No.	SHEET No.	
CHECKED: ARC	PHARR	HIDALGO		0255	08	091	965	

ALLEN CROZIER
02:17:51 PM
08/06/2003

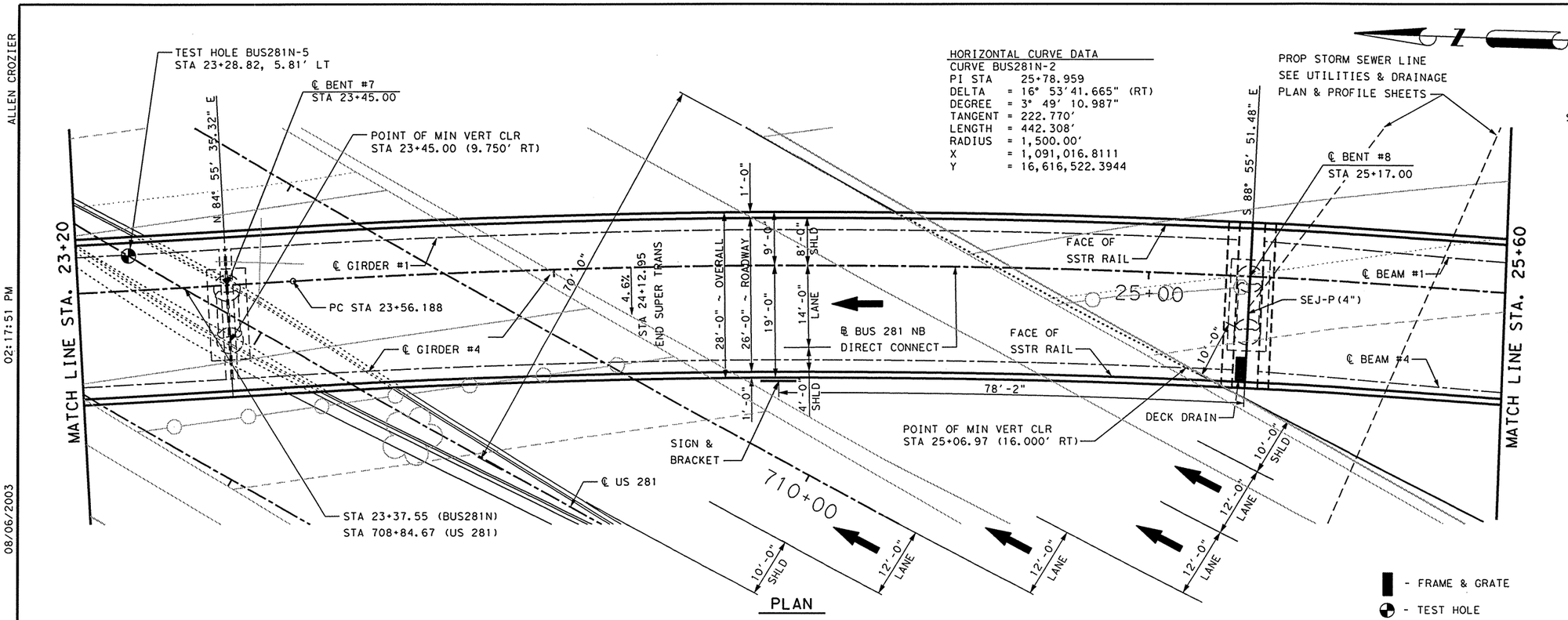

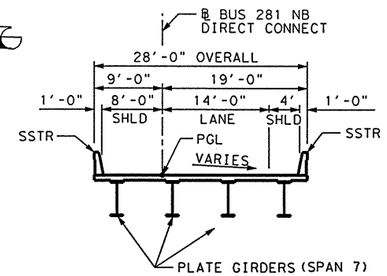

TYPICAL SECTIONS

STATE OF TEXAS
ALLEN R. CROZIER
81450
REGISTERED PROFESSIONAL ENGINEER
8/5/03

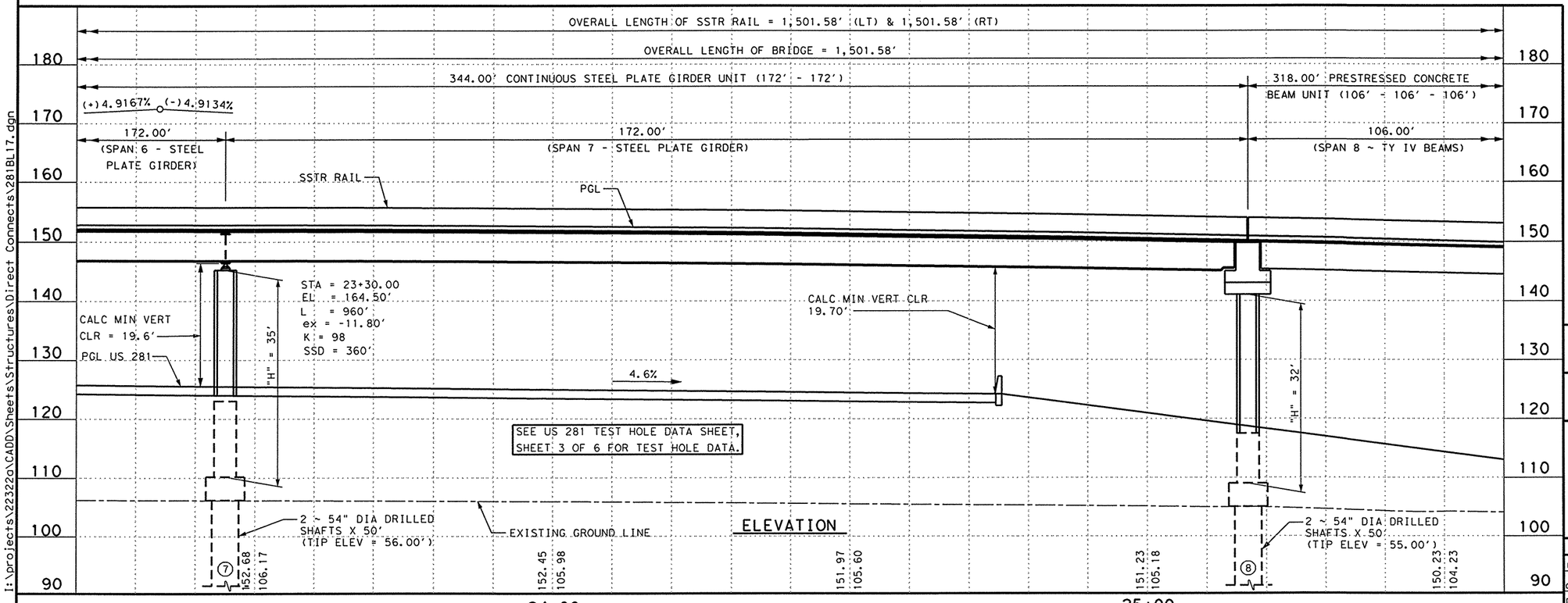

NOTES:

DESIGNED IN ACCORDANCE WITH 1996 AASHTO STANDARD SPECIFICATIONS AND ALL CURRENT INTERIMS

BORE HOLE DATA PROVIDED BY TxDOT, PHARR DISTRICT

BM US 281-16
STA 706+19.13 (℄ US 281)
OFFSET = 220.37' LT (℄ US 281)
ELEV = 103.82
DESC = 3 1/4" TxDOT ALUM DISK

FUNC CLASS	: DIRECT CONNECTOR
DESIGN SPEED	: 45 MPH
ADT (2002)	: 13,050 VPD
ADT (2022)	: 21,170 VPD
NBI	: 21-109-0-0255-08-270

HS 25 LOADING

Parsons Brinckerhoff Quade & Douglas Inc.

Texas Department of Transportation

© 2003 by TxDOT

BRIDGE LAYOUT

BUS 281 NB DIRECT CONNECT

PLAN 1"= 20' HORIZ
PROFILE 1"= 20' VERT

SHEET 4 OF 7 | 281BL17.DGN

DESIGNED: ARC	FED. RD DIV. No.	STATE	FEDERAL AID PROJECT No.			HIGHWAY No.
CHECKED: ALA	6	TEXAS	NH 2003 ( )			US 281
DRAWN: RLJ	STATE DISTRICT	COUNTY	CONTROL No.	SECTION No.	JOB No.	SHEET No.
CHECKED: ARC	PHARR	HIDALGO	0255	08	091	966

I:\projects\22322a\CADD\Sheets\Structures\Direct Connects\281BL17.dgn

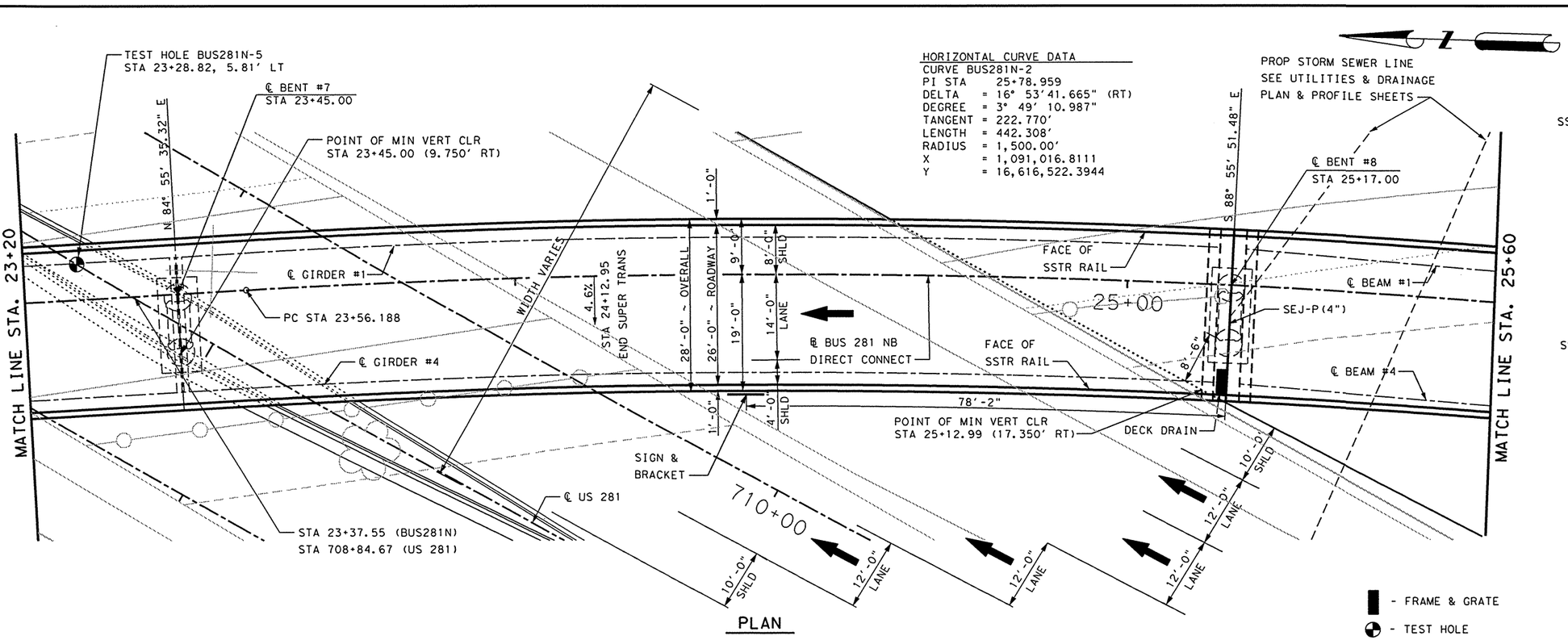

PLAN

HORIZONTAL CURVE DATA

CURVE BUS281N-2

PI STA	25+78.959
DELTA	= 16° 53' 41.665" (RT)
DEGREE	= 3° 49' 10.987"
TANGENT	= 222.770'
LENGTH	= 442.308'
RADIUS	= 1,500.00'
X	= 1,091,016.8111
Y	= 16,616,522.3944

■ - FRAME & GRATE

◐ - TEST HOLE

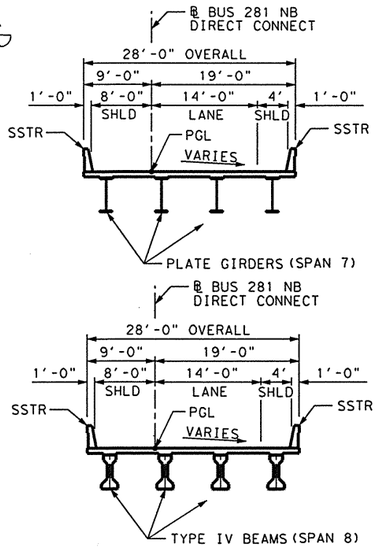

TYPICAL SECTIONS

STATE OF TEXAS
ALLEN R. CROZIER
81450
REGISTERED
PROFESSIONAL ENGINEER

Allen R. Crozier
9/10/03

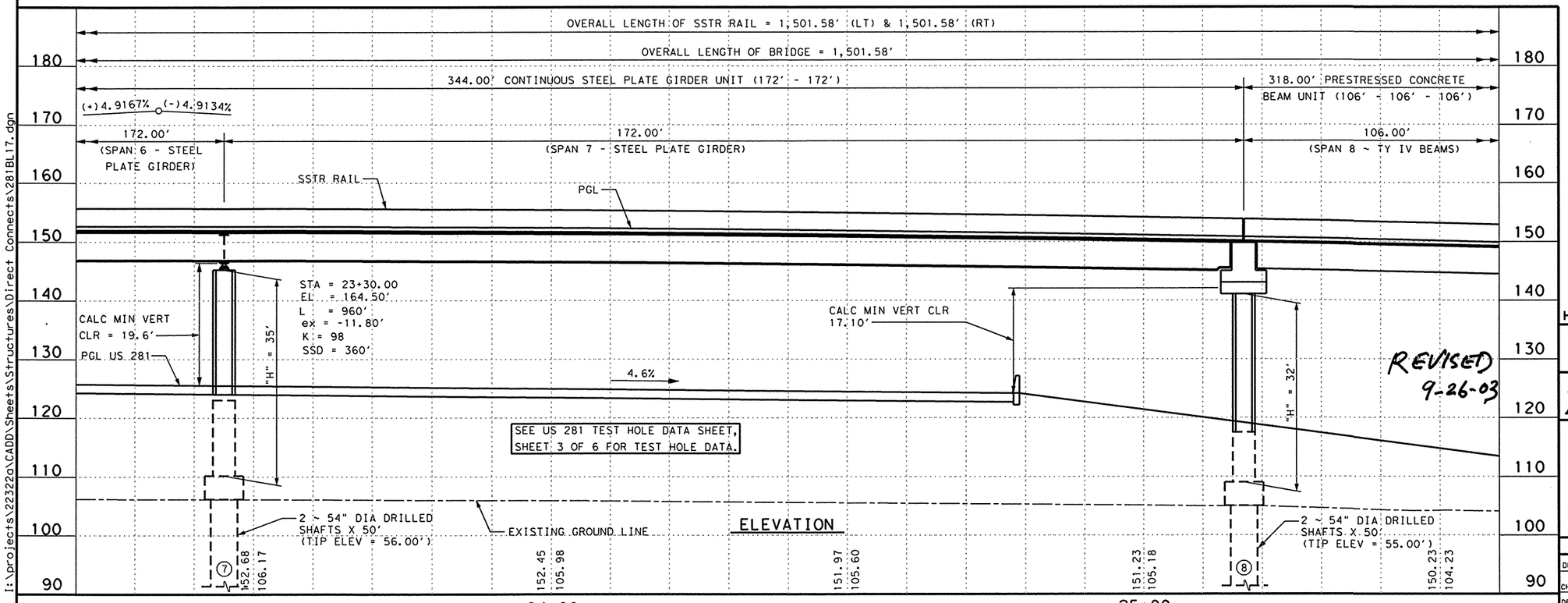

ELEVATION

REVISED
9-26-03

NOTES:

DESIGNED IN ACCORDANCE WITH 1996 AASHTO STANDARD SPECIFICATIONS AND ALL CURRENT INTERIMS

BORE HOLE DATA PROVIDED BY TxDOT, PHARR DISTRICT

BM US 281-16
STA 706+19.13 (℄ US 281)
OFFSET = 220.37' LT (℄ US 281)
ELEV = 103.82
DESC = 3 1/4" TxDOT ALUM DISK

FUNC CLASS	: DIRECT CONNECTOR
DESIGN SPEED	: 45 MPH
ADT (2002)	: 13,050 VPD
ADT (2022)	: 21,170 VPD
NBI	: 21-109-0-0255-08-270

HS 25 LOADING

Parsons Brinckerhoff
Quade & Douglas Inc.

Texas Department of Transportation

© 2003 by TxDOT

BRIDGE LAYOUT

BUS 281 NB DIRECT CONNECT

PLAN 1"= 20' HORIZ
PROFILE 1"= 20' VERT

SHEET 4 OF 7 | 281BL17.DGN

DESIGNED: ARC	FED. RD DIV. No.	STATE	FEDERAL AID PROJECT No.					HIGHWAY No.	
CHECKED: ALA	6	TEXAS	NH 2003 ( )					US 281	
DRAWN: RLJ	STATE DISTRICT	COUNTY		CONTROL No.	SECTION No.	JOB No.	SHEET No.		
CHECKED: ARC	PHARR	HIDALGO		0255	08	091	966		

$NAME$
08:16:14 AM
09/10/2003
I:\projects\22322a\CADD\Sheets\Structures\Direct Connects\281BL17.dgn

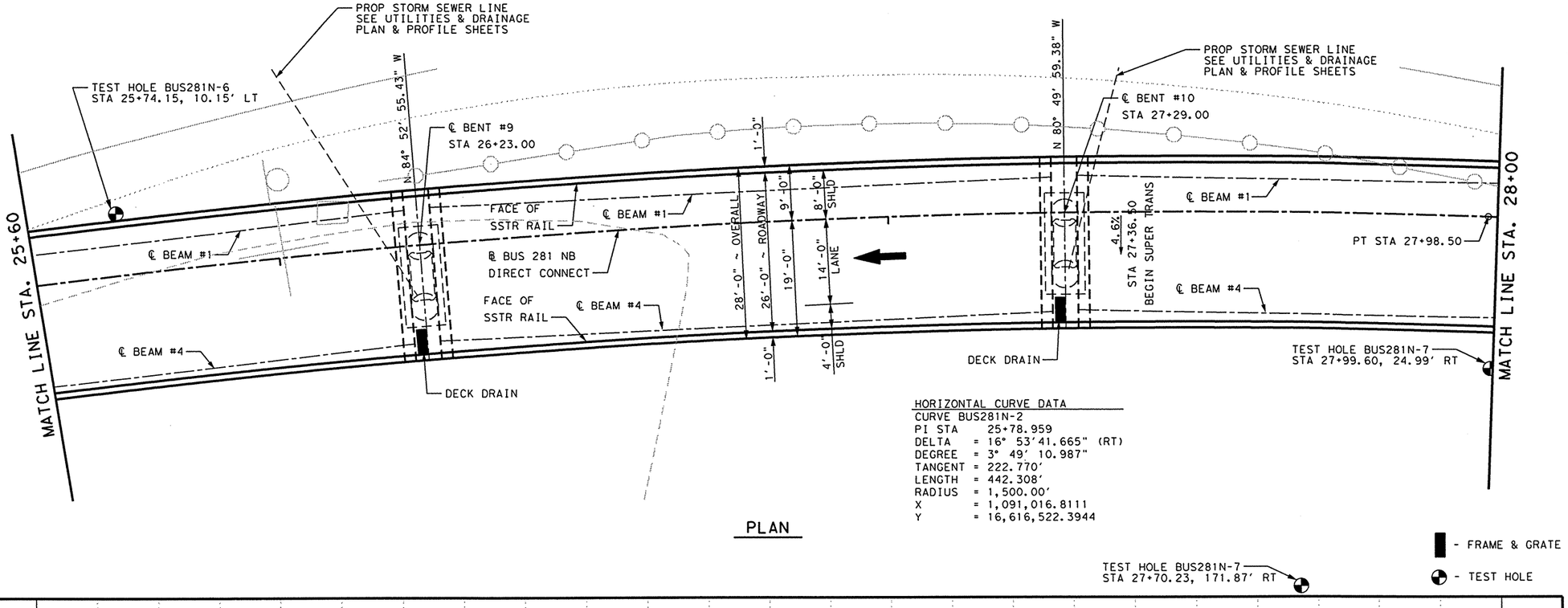

HORIZONTAL CURVE DATA
CURVE BUS281N-2
PI STA 25+78.959
DELTA = 16° 53'41.665" (RT)
DEGREE = 3° 49' 10.987"
TANGENT = 222.770'
LENGTH = 442.308'
RADIUS = 1,500.00'
X = 1,091,016.8111
Y = 16,616,522.3944

PLAN

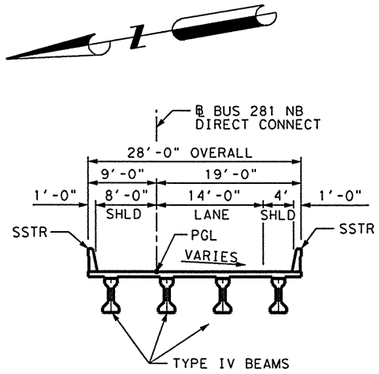

TYPICAL SECTION

TEST HOLE BUS281N-7
STA 27+70.23, 171.87' RT

- FRAME & GRATE
- TEST HOLE

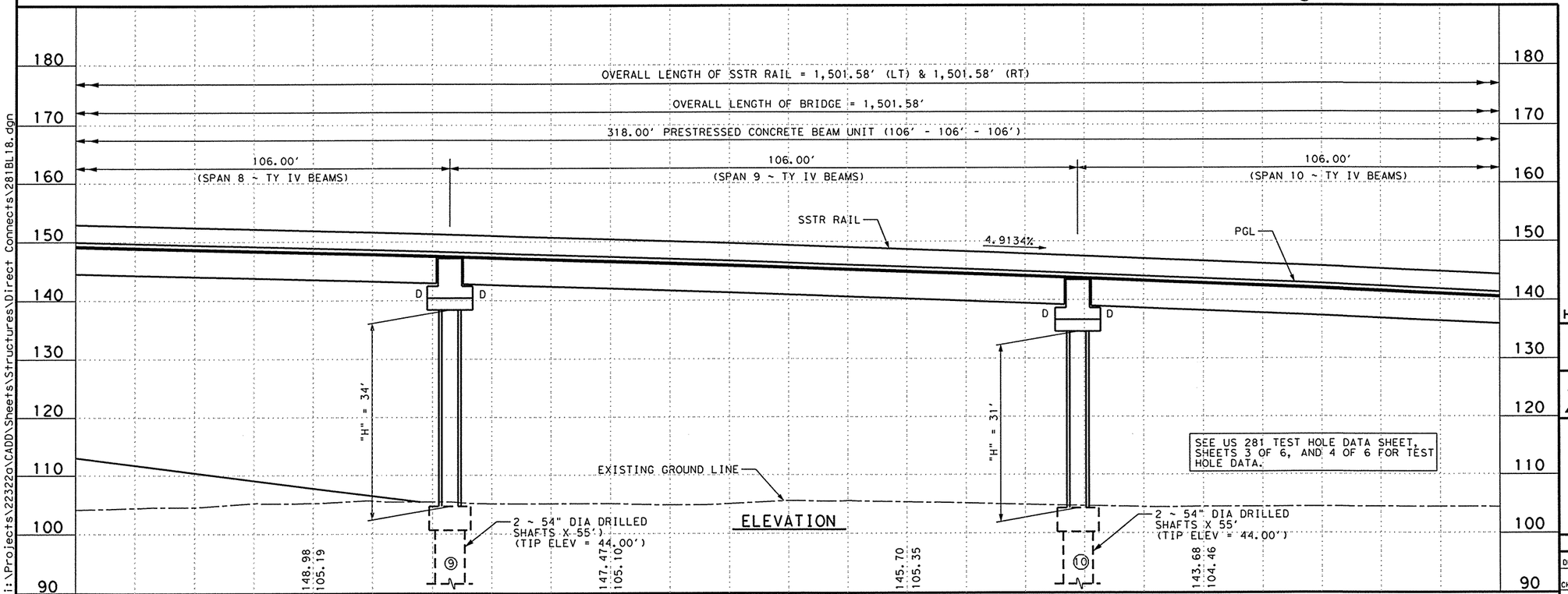

ELEVATION

SEE US 281 TEST HOLE DATA SHEET, SHEETS 3 OF 6, AND 4 OF 6 FOR TEST HOLE DATA.

STATE OF TEXAS
ALLEN R. CROZIER
81450
REGISTERED PROFESSIONAL ENGINEER

Allen R. Crozier
6/25/03

NOTES:

DESIGNED IN ACCORDANCE WITH 1996 AASHTO STANDARD SPECIFICATIONS AND ALL CURRENT INTERIMS

BORE HOLE DATA PROVIDED BY TxDOT, PHARR DISTRICT

BM US 281-16
STA 706+19.13 (℄ US 281)
OFFSET = 220.37' LT (℄ US 281)
ELEV = 103.82
DESC = 3 1/4" TxDOT ALUM DISK

FUNC CLASS	: DIRECT CONNECTOR
DESIGN SPEED	: 45 MPH
ADT (2002)	: 13,050 VPD
ADT (2022)	: 21,170 VPD
NBI	: 21-109-0-0255-08-270

HS 25 LOADING

Parsons Brinckerhoff Quade & Douglas Inc.

Texas Department of Transportation
© 2003 by TxDOT

BRIDGE LAYOUT

BUS 281 NB DIRECT CONNECT

PLAN 1"= 20' HORIZ
PROFILE 1"= 20' VERT

SHEET 5 OF 7 281BL18.DGN

DESIGNED: ARC	FED. RD DIV. No.	STATE	FEDERAL AID PROJECT No.	HIGHWAY No.
CHECKED: ALA	6	TEXAS	NH 2003 ( )	US 281

DRAWN: RLJ	STATE DISTRICT	COUNTY	CONTROL No.	SECTION No.	JOB No.	SHEET No.
CHECKED: ARC	PHARR	HIDALGO	0255	08	091	967

ALLEN CROZIER
03:12:48 PM
06/25/2003
i:\Projects\22322a\CADD\Sheets\Structures\Direct Connects\281BL18.dgn

ALLEN CROZIER
03:13:04 PM
06/25/2003

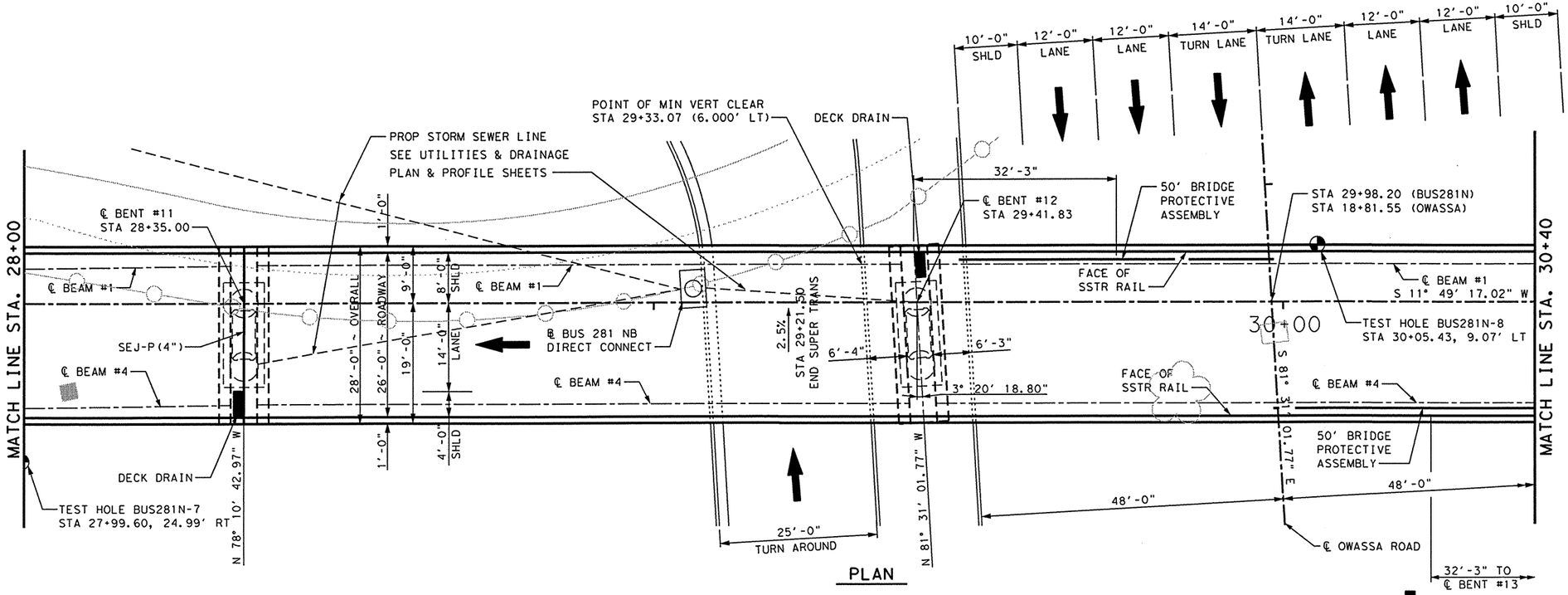

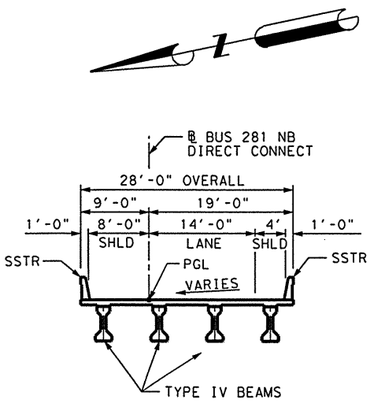

TYPICAL SECTION

Allen R. Crozier
6/25/03

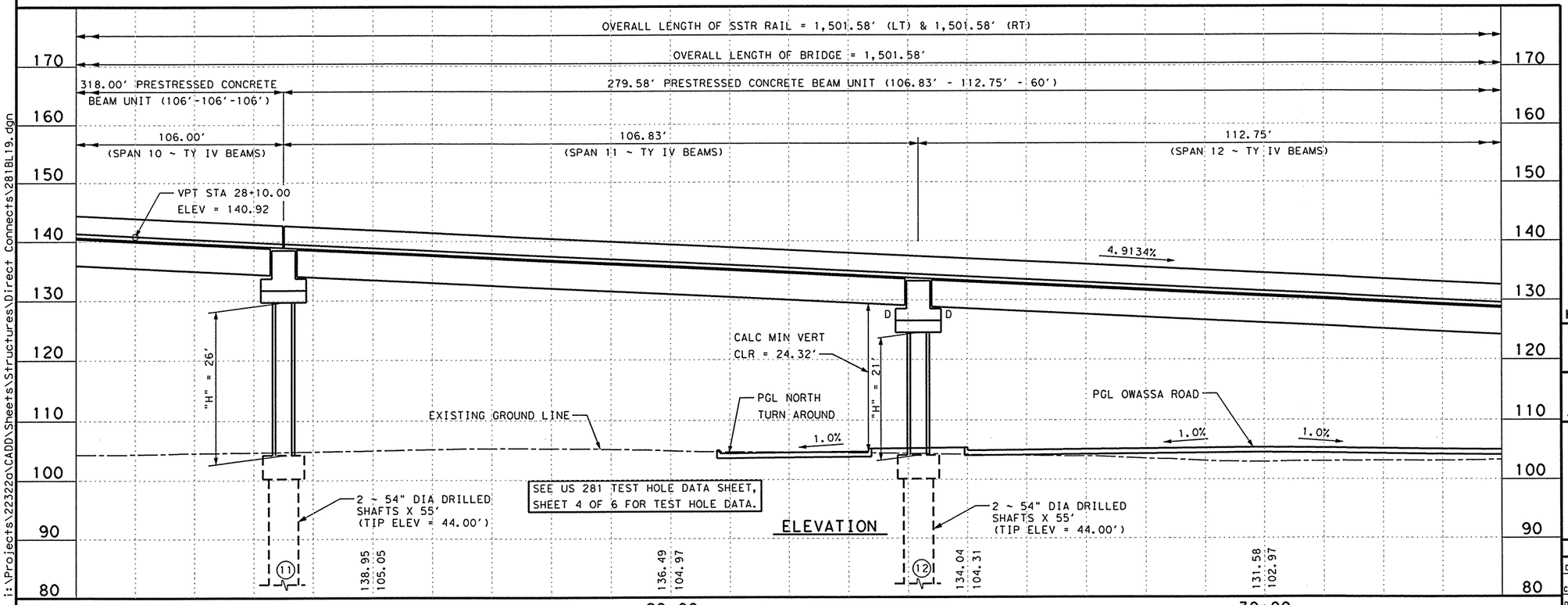

NOTES:

DESIGNED IN ACCORDANCE WITH 1996 AASHTO STANDARD SPECIFICATIONS AND ALL CURRENT INTERIMS

BORE HOLE DATA PROVIDED BY TxDOT, PHARR DISTRICT

BM US 281-16
STA 706+19.13 (℄ US 281)
OFFSET = 220.37' LT (℄ US 281)
ELEV = 103.82
DESC = 3 1/4" TxDOT ALUM DISK

FUNC CLASS	: DIRECT CONNECTOR
DESIGN SPEED	: 45 MPH
ADT (2002)	: 13,050 VPD
ADT (2022)	: 21,170 VPD
NBI	: 21-109-0-0255-08-270

HS 25 LOADING

Parsons Brinckerhoff Quade & Douglas Inc.

Texas Department of Transportation

© 2003 by TxDOT

BRIDGE LAYOUT

BUS 281 NB DIRECT CONNECT

PLAN 1"= 20' HORIZ
PROFILE 1"= 20' VERT

SHEET 6 OF 7 | 281BL19.DGN

DESIGNED: ARC	FED. RD DIV. NO.	STATE	FEDERAL AID PROJECT No.				HIGHWAY No.
CHECKED: ALA	6	TEXAS	NH 2003 ( )				US 281
DRAWN: RLJ	STATE DISTRICT	COUNTY	CONTROL No.	SECTION No.	JOB No.	SHEET No.	
CHECKED: ARC	PHARR	HIDALGO	0255	08	091	968	

i:\Projects\22322a\CADD\Sheets\Structures\Direct Connects\281BL19.dgn

ALLEN CROZIER
03:13:19 PM
06/25/2003

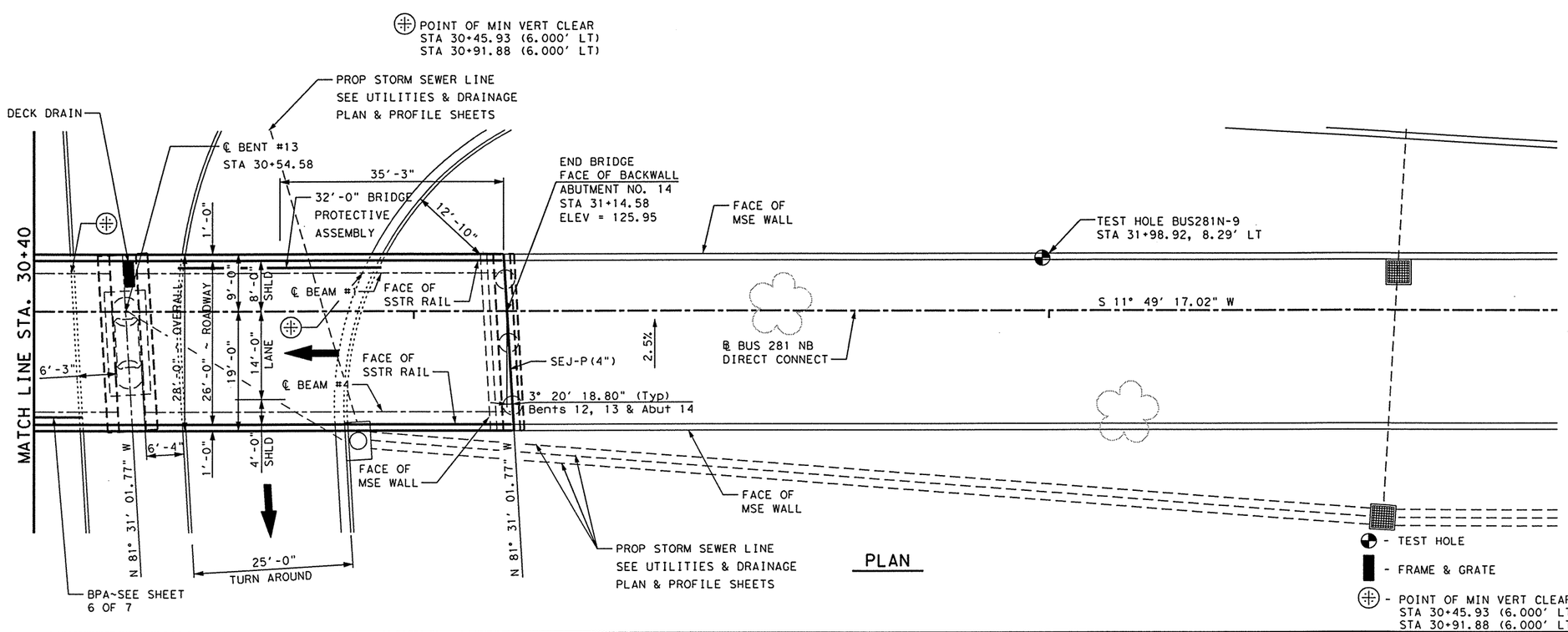

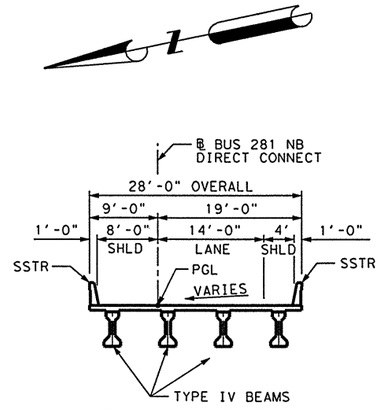

TYPICAL SECTION

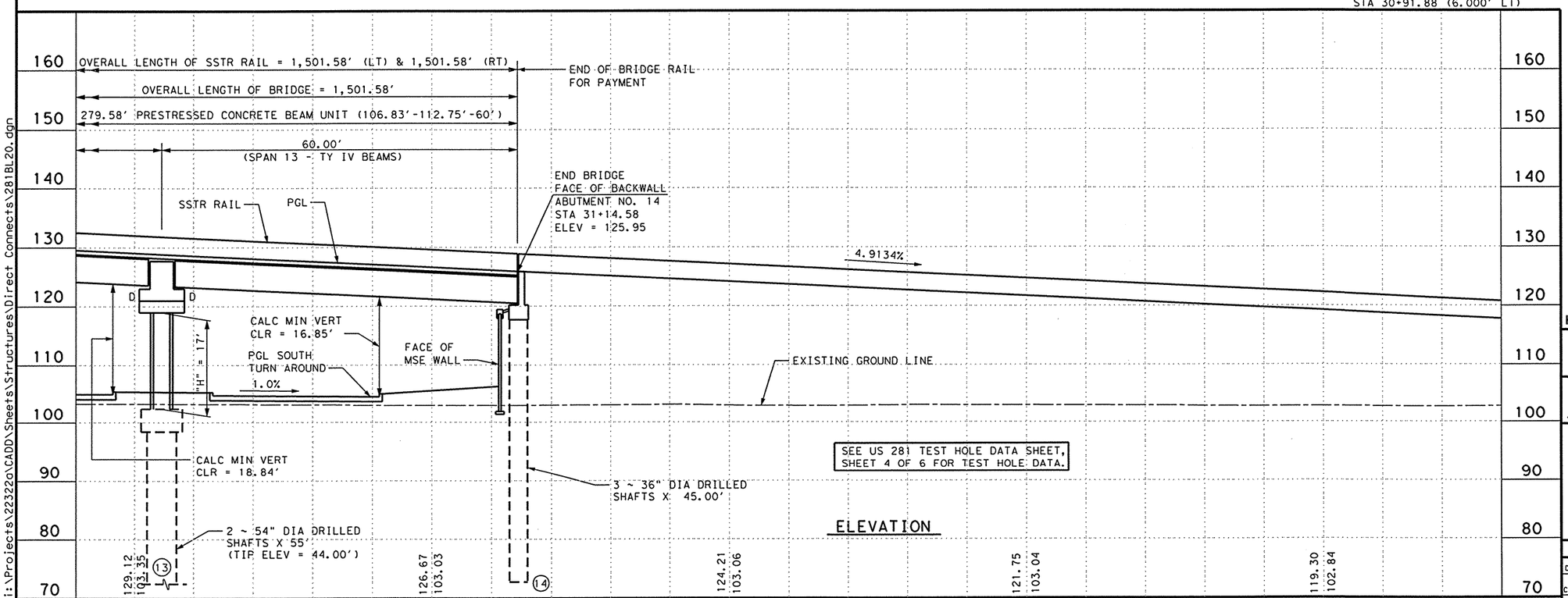

ELEVATION

NOTES:

DESIGNED IN ACCORDANCE WITH 1996 AASHTO STANDARD SPECIFICATIONS AND ALL CURRENT INTERIMS

BORE HOLE DATA PROVIDED BY TxDOT, PHARR DISTRICT

BM US 281-16
STA 706+19.13 (℄ US 281)
OFFSET = 220.37' LT (℄ US 281)
ELEV = 103.82
DESC = 3 1/4" TxDOT ALUM DISK

FUNC CLASS	: DIRECT CONNECTOR
DESIGN SPEED	: 45 MPH
ADT (2002)	: 13,050 VPD
ADT (2022)	: 21,170 VPD
NBI	: 21-109-0-0255-08-270

HS 25 LOADING

STATE OF TEXAS
ALLEN R. CROZIER
81450
REGISTERED PROFESSIONAL ENGINEER
Allen R. Crozier
6/25/03

Parsons Brinckerhoff Quade & Douglas Inc.

Texas Department of Transportation

© 2003 by TxDOT

BRIDGE LAYOUT

BUS 281 NB DIRECT CONNECT

PLAN 1"= 20' HORIZ
PROFILE 1"= 20' VERT

SHEET 7 OF 7 | 281BL20.DGN

DESIGNED: ARC	FED. RD DIV. No.	STATE	FEDERAL AID PROJECT No.			HIGHWAY No.
CHECKED: ALA	6	TEXAS	NH 2003 ( )			US 281
DRAWN: RLJ	STATE DISTRICT	COUNTY	CONTROL No.	SECTION No.	JOB No.	SHEET No.
CHECKED: ARC	PHARR	HIDALGO	0255	08	091	969

i:\Projects\22322a\CADD\Sheets\Structures\Direct Connects\281BL20.dgn

SUMMARY OF ESTIMATED QUANTITIES

ITEM NUMBER	400	403	416		420		422	425	428	432	434	442	450	454	481	
ITEM / DESCRIPTION	STRUCT EXCAV	TEMPORARY SPECIAL SHORING	DRILLED SHAFTS		CLASS "C" CONCRETE		REINF CONCRETE SLAB	PRESTR CONC BEAM	CONCRETE SURFACE TREATMENT	RIPRAP CONCRETE	SLIDING ELASTOMERIC BEARING	STRUCT STEEL	RAIL	SEALED EXPANSION JOINT	PVC PIPE (SCH 40)	
			36" ø	54" ø	ABUTMENT	BENT		TYPE IV		CLASS "B"						
	CY	SF	LF	LF	CY	CY	SF	LF	SY	CY	EA	LBS	LF	LF	LF	
2~ABUTMENTS			255		26.9											
12~INTERIOR BENTS	250	2,340		1,160		1,100.0						22,940			540	
1~330.00' PRESTR CONC BM UNIT							9,256	1,275.40	940				661.13			
1~230.00' PRESTR CONC BM UNIT							6,458	884.64	656				461.24			
1~344.00' CONT STL PLATE GIRDER UNIT							9,617		977		8	462,900	686.93			
1~318.00' PRESTR CONC BM UNIT							8,878	1,211.76	902				634.13			
1~279.58' PRESTR CONC BM UNIT							7,836	1,072.47	796				559.73			
TOTAL	250	2,340	255	1,160	26.9	1,100.0	42,045	4,444.27	4,271	② 1.0	8	485,840	3,003.16	① 52.34	540	

ITEM NUMBER	444	444	471
ITEM / DESCRIPTION	BRIDGE PROTECTIVE ASSEMBLY	SIGN AND BRACKET	GRATE AND FRAME DECK DRAIN
	EA	EA	EA
2~ABUTMENTS			
12~INTERIOR BENTS			
1~330.00' PRESTR CONC BM UNIT	1		
1~230.00' PRESTR CONC BM UNIT			
1~344.00' CONT STL PLATE GIRDER UNIT		2	
1~318.00' PRESTR CONC BM UNIT			
1~279.58' PRESTR CONC BM UNIT	3		
TOTAL	4	2	11

① LENGTHS SHOWN ARE FOR ONE COMPLETE JOINT.
ABUT NO. 1 = 26.17'
ABUT NO. 14 = 26.17'

② RIPRAP BETWEEN RETAINING WALL COPING AND ABUTMENT CAP.

BEARING SEAT ELEVATIONS

		BEAM 1	BEAM 2	BEAM 3	BEAM 4
BENT 1	(FWD)	123.403	123.587	123.770	123.953
		BEAM 1	BEAM 2	BEAM 3	BEAM 4
BENT 2	(BK)	128.590	128.826	129.062	129.297
	(FWD)	129.017	129.259	129.502	129.744
		BEAM 1	BEAM 2	BEAM 3	BEAM 4
BENT 3	(BK)	134.057	134.395	134.733	135.071
	(FWD)	134.344	134.680	135.017	135.354
		BEAM 1	BEAM 2	BEAM 3	BEAM 4
BENT 4	(BK)	139.049	139.387	139.725	140.063
	(FWD)	139.260	139.597	139.934	140.271
		BEAM 1	BEAM 2	BEAM 3	BEAM 4
BENT 5	(BK)	142.944	143.282	143.620	143.957
	(FWD)	143.129	143.466	143.803	144.140
		BEAM 1	BEAM 2	BEAM 3	BEAM 4
BENT 6	(BK)	145.690	145.834	145.978	146.121
	(FWD)	145.743	145.875	146.008	146.140

BENT 7 - Steel Thru Bent - Top of Column Elevation = 144.510'

		BEAM 1	BEAM 2	BEAM 3	BEAM 4
BENT 8	(BK)	145.613	145.276	144.939	144.601
BENT 8	(FWD)	145.589	145.252	144.914	144.576
		BEAM 1	BEAM 2	BEAM 3	BEAM 4
BENT 9	(BK)	143.129	142.792	142.455	142.118
	(FWD)	142.954	142.616	142.279	141.941
		BEAM 1	BEAM 2	BEAM 3	BEAM 4
BENT 10	(BK)	139.406	139.069	138.732	138.396
	(FWD)	139.148	138.810	138.473	138.134
		BEAM 1	BEAM 2	BEAM 3	BEAM 4
BENT 11	(BK)	134.322	134.253	134.185	134.117
	(FWD)	133.938	133.887	133.835	133.783
		BEAM 1	BEAM 2	BEAM 3	BEAM 4
BENT 12	(BK)	128.801	128.963	129.126	129.288
	(FWD)	128.493	128.656	128.818	128.980
		BEAM 1	BEAM 2	BEAM 3	BEAM 4
BENT 13	(BK)	123.240	123.402	123.564	123.727
	(FWD)	123.140	123.303	123.465	123.627
		BEAM 1	BEAM 2	BEAM 3	BEAM 4
BENT 14	(BK)	120.370	120.533	120.695	120.857

HS 25 LOADING

STATE OF TEXAS
ALLEN R. CROZIER
81450
REGISTERED
PROFESSIONAL ENGINEER
Allen R. Crozier
8/5/03

Parsons Brinckerhoff Quade & Douglas Inc.

Texas Department of Transportation

© 2003 by TxDOT

ESTIMATED QUANTITIES AND BEARING SEAT ELEVATIONS BUS 281 NB DIRECT CONNECT

281NBDCEQ.DGN

DESIGNED: ARC	FED. RD DIV. No.	STATE	FEDERAL AID PROJECT No.		HIGHWAY No.	
CHECKED: ALA	6	TEXAS	NH 2003 ( )		US 281	
DRAWN: KTD	STATE DISTRICT	COUNTY	CONTROL No.	SECTION No.	JOB No.	SHEET No.
CHECKED: ARC	PHARR	HIDALGO	0255	08	091	970

ALLEN CROZIER
02:21:09 PM
08/06/2003
I:\projects\22322a\CADD\Sheets\Structures\Direct Connects\281NBDCEQ.dgn

ESMERALDA G. EGGER
10:15:17 AM
06/25/2003
I:\projects\22322a\CADD\Sheets\Structures\Direct Connects\281nbdcABT1.DGN

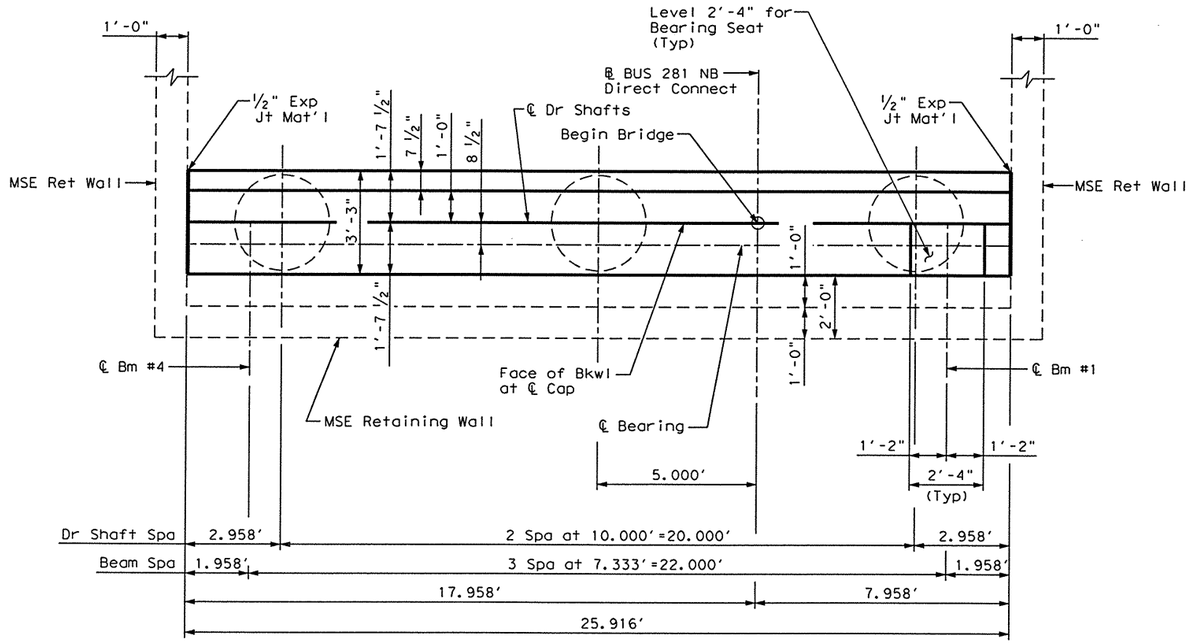

PLAN

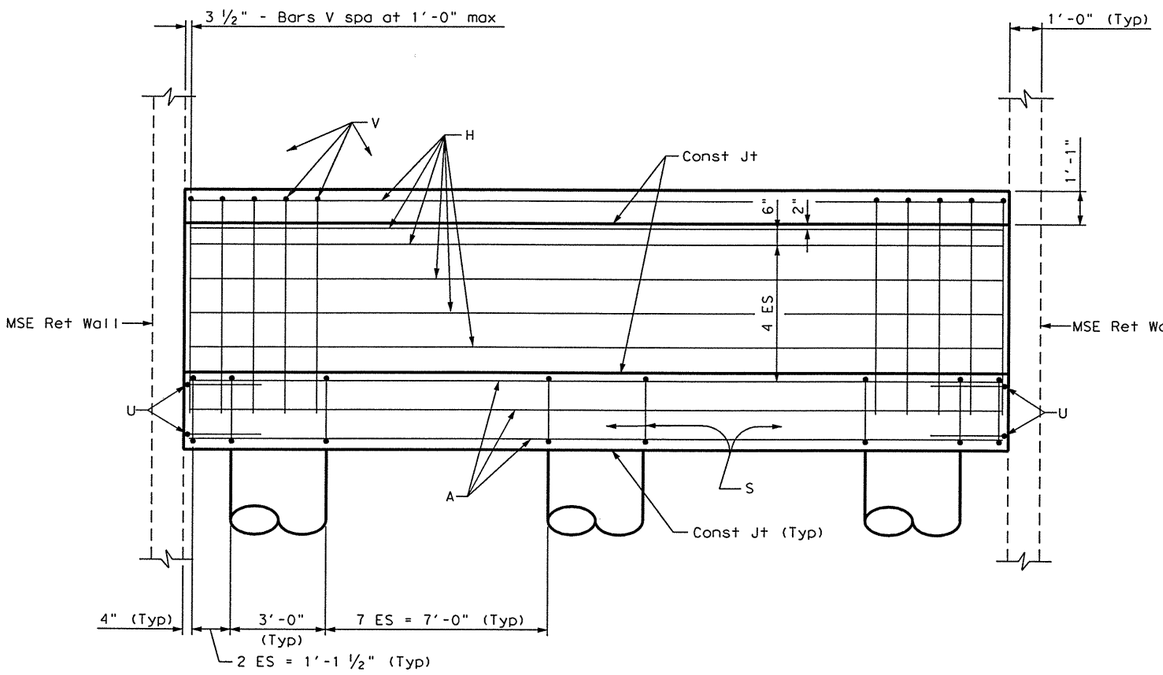

ELEVATION

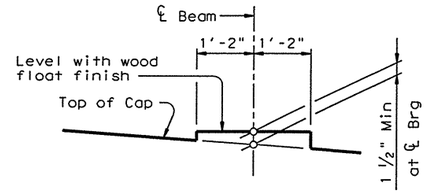

BEARING SEAT DETAIL

(Bearing surface shall be clean and free of all loose material before placing bearing pad.)

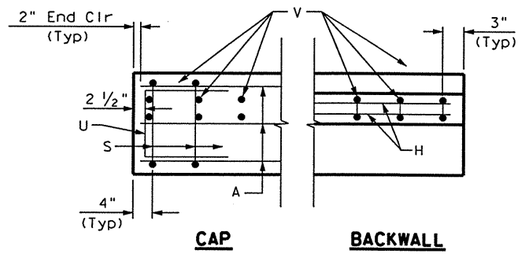

CAP BACKWALL

CORNER DETAILS

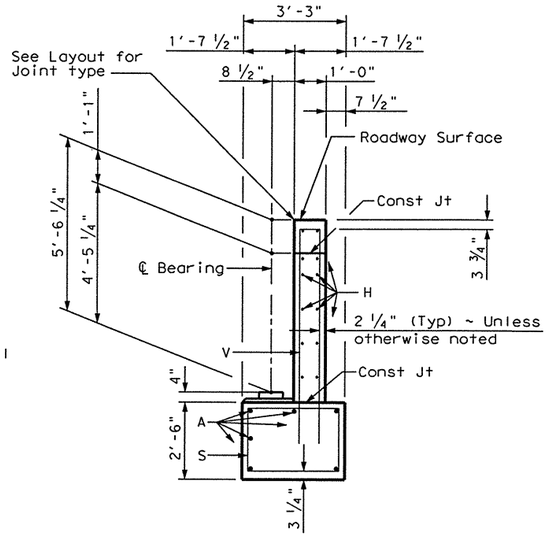

SECTION A-A

TABLE OF CONSTANT QUANTITIES				
Bar	No.	Size	Length	Weight
A	6	#11	25'-7"	816
H	12	#5	25'-7"	320
S	22	#4	10'-8"	157
U	4	#6	7'-9"	47
V	27	#5	14'-3"	401
Reinforcing Steel			Lb	1,741
Class "C" Concrete			Cy	13.6

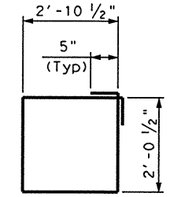

BARS S

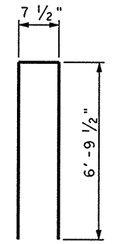

BARS V

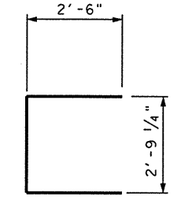

BARS U

GENERAL NOTES:

Designed according to AASHTO 1996 Standard and current Interim Specifications.
See Foundation Detail Standard Sheet, FD, for all foundation details and notes.
See SEJ-P Standard for additional details.
All reinforcing steel shall be Grade 60.
Class "C" Concrete strength f'c = 3,600 psi.
Calculated Foundation Loads = 110 Tons/D.S.

HS25 LOADING

Parsons Brinckerhoff Quade & Douglas Inc.

Texas Department of Transportation

© 2003 by TxDOT

STATE OF TEXAS
ALLEN R. CROZIER
81450
REGISTERED PROFESSIONAL ENGINEER

Allen R. Crozier 6/25/03

ABUTMENT NO. 1

BUS 281 NB DIRECT CONNECT

281NBDCABT1.DGN

DESIGNED: ARC	FED. RD DIV. No.	STATE	FEDERAL AID PROJECT No.		HIGHWAY No.	
CHECKED: ALA	6	TEXAS	NH 2003 ( )		US 281	
DRAWN: DRM	STATE DISTRICT	COUNTY	CONTROL No.	SECTION No.	JOB No.	SHEET No.
CHECKED: ARC	PHARR	HIDALGO	0255	08	091	971

ESMERALDA G. EGGER
10:15:55 AM
06/25/2003
I:\projects\22322a\CADD\Sheets\Structures\Direct Connects\281nbdcABT14.DGN

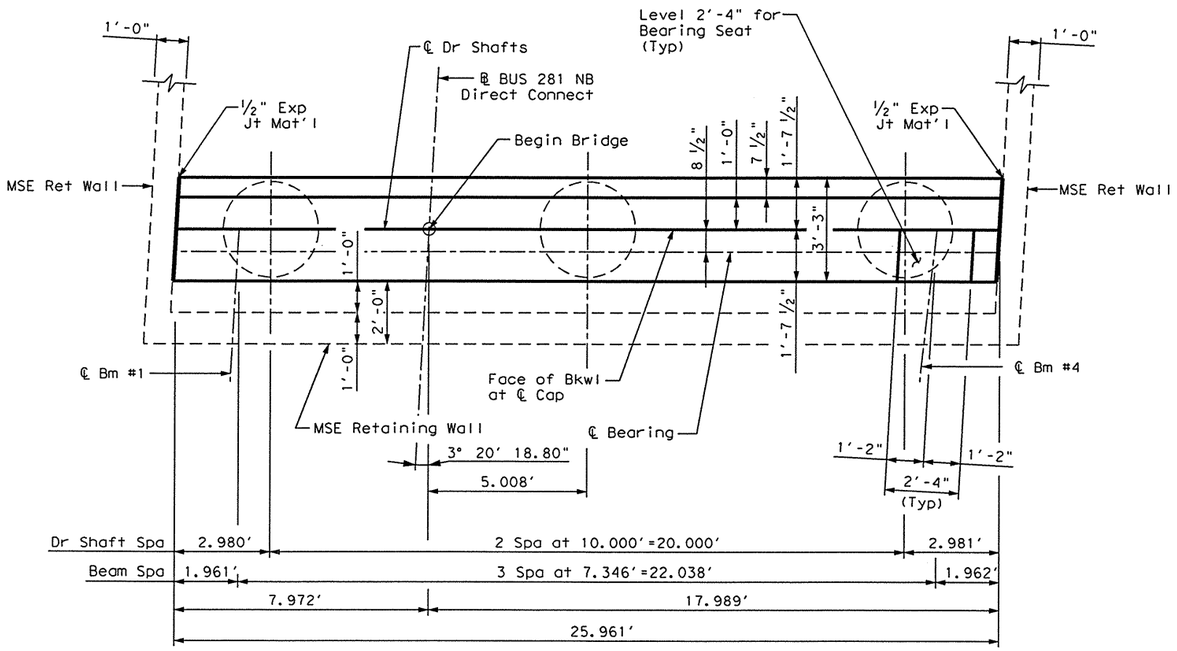

PLAN

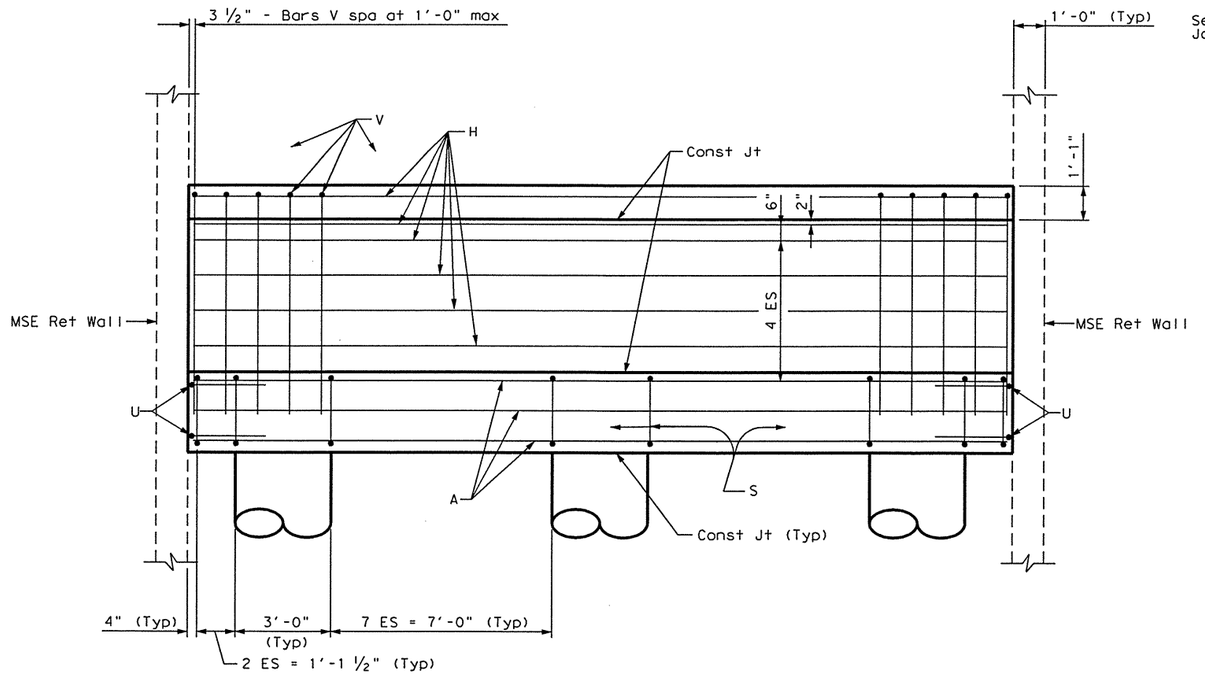

ELEVATION

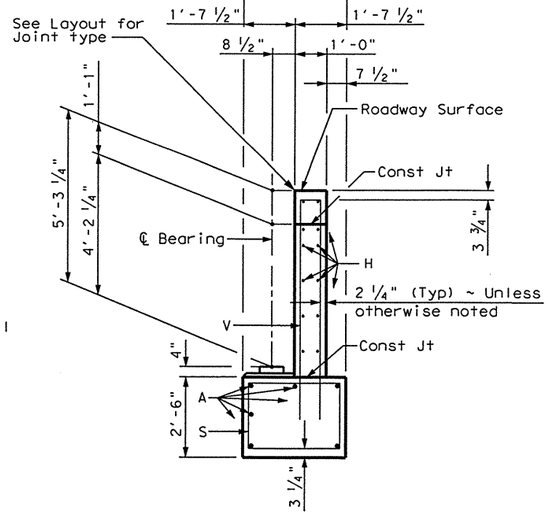

SECTION A-A

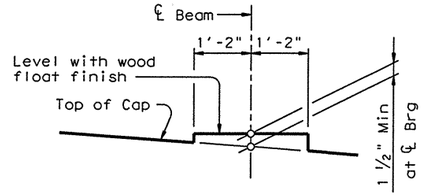

BEARING SEAT DETAIL

(Bearing surface shall be clean and free of all loose material before placing bearing pad.)

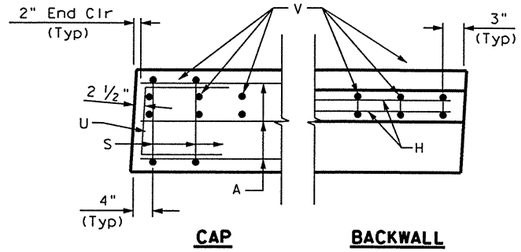

CAP **BACKWALL**

CORNER DETAILS

TABLE OF CONSTANT QUANTITIES				
Bar	No.	Size	Length	Weight
A	6	#11	25'-7"	816
H	12	#5	25'-7"	320
S	22	#4	10'-8"	157
U	4	#6	7'-9"	47
V	27	#5	13'-9"	387
Reinforcing Steel			Lb	1,727
Class "C" Concrete			Cy	13.3

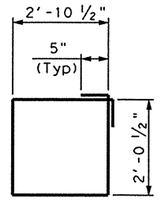

BARS S

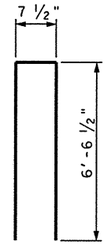

BARS V

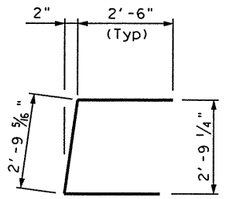

BARS U

GENERAL NOTES:

Designed according to AASHTO 1996 Standard and current Interim Specifications.
See Foundation Detail Standard Sheet, FD, for all foundation details and notes.
See SEJ-P Standard for details
All reinforcing steel shall be Grade 60.
Class "C" Concrete strength f'c = 3,600 psi.
Calculated Foundation Loads = 75 Tons/D.S.

HS25 LOADING

STATE OF TEXAS
ALLEN R. CROZIER
81450
REGISTERED PROFESSIONAL ENGINEER
Allen R. Crozier
6/25/03

Parsons Brinckerhoff Quade & Douglas Inc.

Texas Department of Transportation

© 2003 by TxDOT

ABUTMENT NO. 14

BUS 281 NB DIRECT CONNECT

281NBDCABT14.DGN

DESIGNED: ARC	FED. RD DIV. No.	STATE	FEDERAL AID PROJECT No.			HIGHWAY No.
CHECKED: ALA	6	TEXAS	NH 2003 ( )			US 281
DRAWN: DRM	STATE DISTRICT	COUNTY	CONTROL No.	SECTION No.	JOB No.	SHEET No.
CHECKED: ARC	PHARR	HIDALGO	0255	08	091	972

ESMERALDA G. EGGER
10:18:31 AM
06/25/2003
I:\projects\22322a\CADD\Sheets\Structures\Direct Connects\281nbdcBNT05.dgn

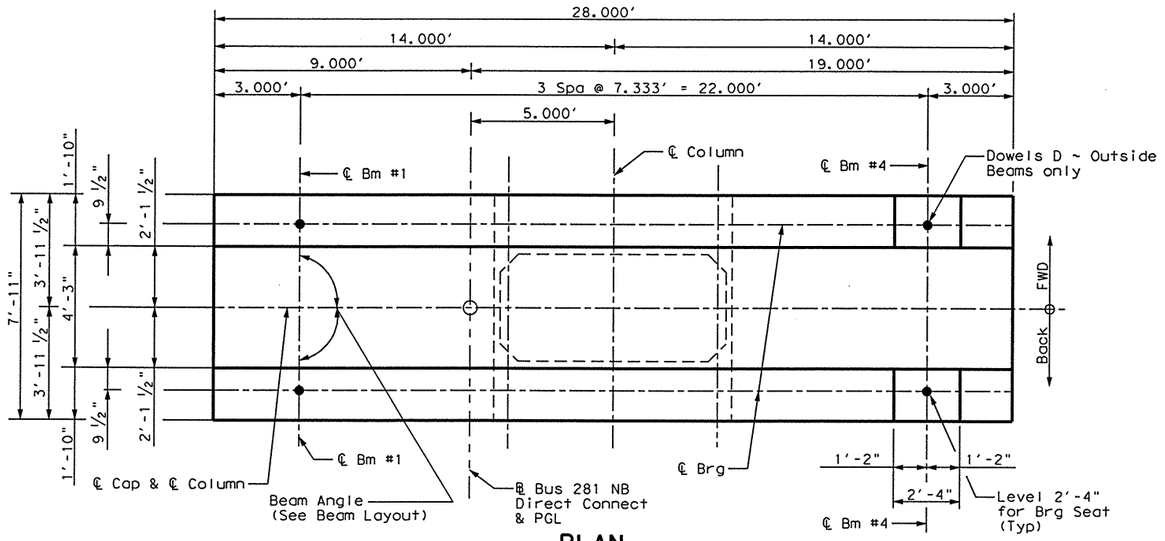

PLAN
(Showing Bents 2-5 & 9-11)

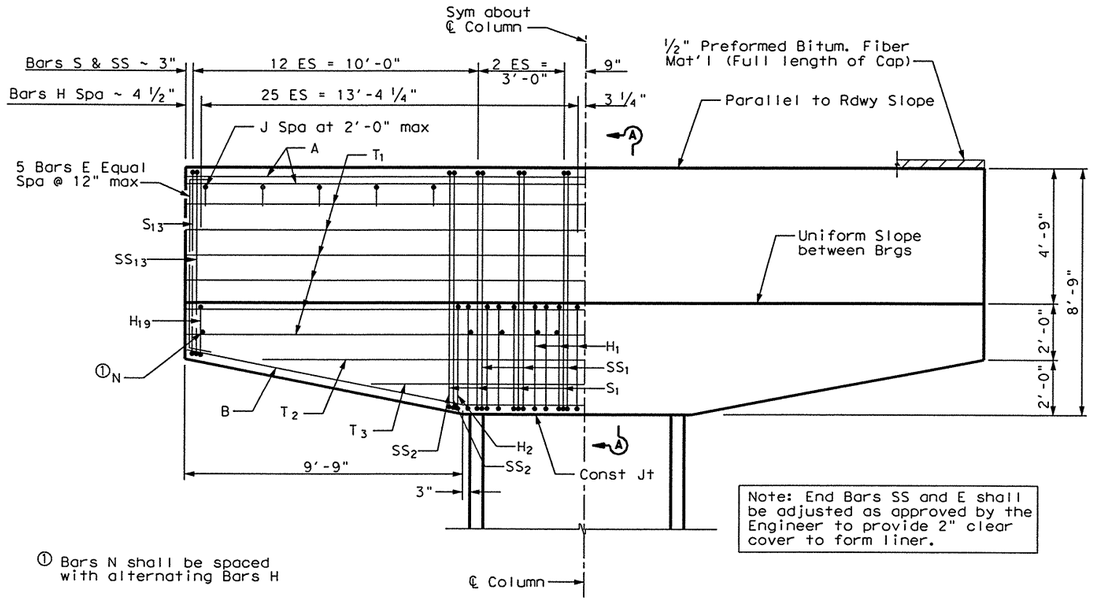

① Bars N shall be spaced with alternating Bars H

Note: End Bars SS shall be adjusted as approved by the Engineer to provide 2" clear cover to form liner.

ELEVATION
(Showing Bents 2-5 & 9-11)

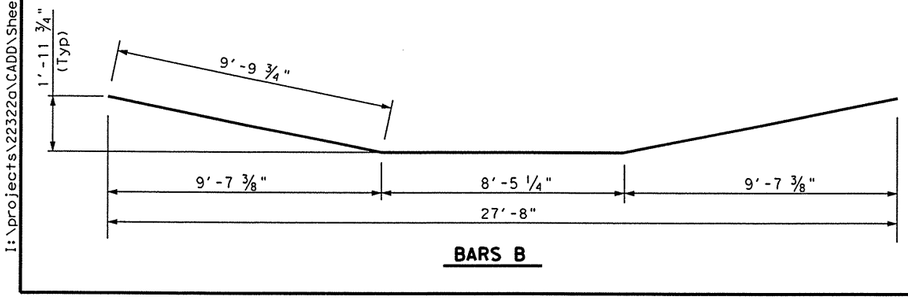

BARS B

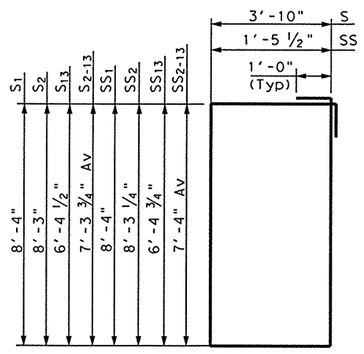

BARS S & SS

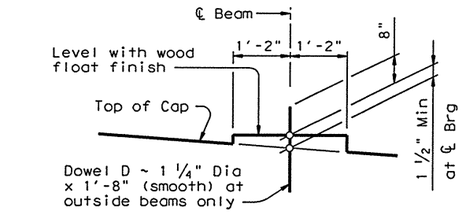

BEARING SEAT DETAIL
(Bearing surface shall be clean and free of all loose material before placing bearing pad.)
(Omit Dowels D at Bents 4 & 11)

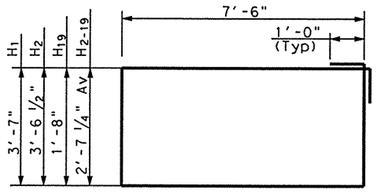

BARS H

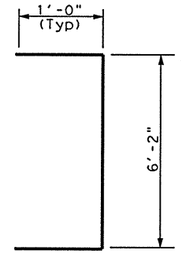

BARS E

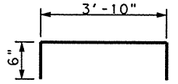

BARS J

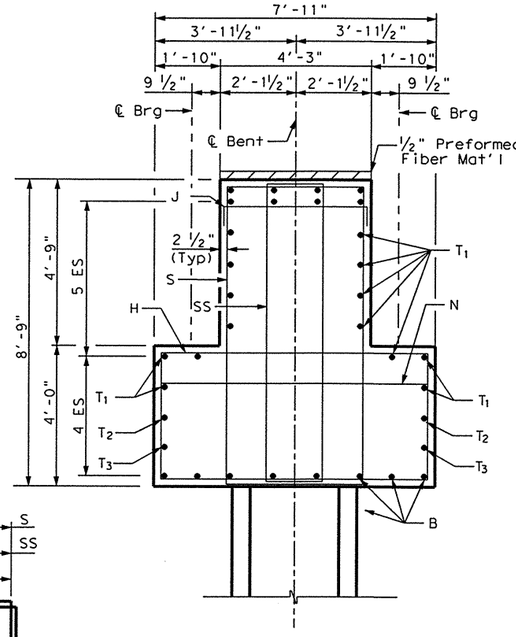

SECTION A-A

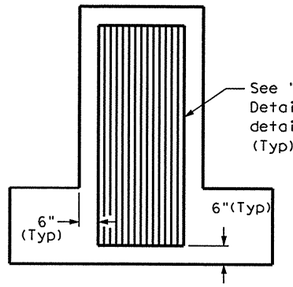

FORM LINER LOCATION

TABLE OF CAP QUANTITIES

Bar	No.	Size	Length	Weight
A	8	#11	27'-8"	1,176
B	8	#11	28'-1"	1,194
D	4	1 1/4" ø	1'-8"	29
E	10	#6	8'-2"	123
H_1	16	#6	24'-2"	581
H_{2-19}	36	#6	22'-3" Av	1,203
J	15	#4	4'-10"	48
N	27	#5	7'-7"	214
S_1	6	#6	26'-4"	237
S_{2-13}	24	#6	24'-4" Av	877
SS_1	6	#6	21'-7"	195
SS_{2-13}	24	#6	19'-7" Av	706
T_1	14	#8	27'-8"	1,034
T_2	2	#8	23'-8"	126
T_3	2	#8	15'-8"	84
Reinforcing Steel			Lb	7,827
Class "C" Concrete			CY	48.2

Deduct 29 lbs for the omission of Dowels D at Bents 4 & 11.

GENERAL NOTES:

Designed according to AASTHO 1996 Standard and current Interim Specifications.

Calculated Foundation Load ~ 530 T/D.S.

See Foundation Detail Standard sheet, FD(MOD), for additional Foundation details and notes.

Class "C" Concrete Strength f'c = 3600 psi.

All reinforcing steel shall be Grade 60.

HS25 LOADING

Parsons Brinckerhoff Quade & Douglas Inc.

Texas Department of Transportation
© 2003 by TxDOT

INTERIOR BENTS NOS. 2-5 & 9-13

BUS 281 NB DIRECT CONNECT

STATE OF TEXAS
ALLEN R. CROZIER
81450
REGISTERED PROFESSIONAL ENGINEER
Allen R. Crozier
6/25/03

281nbdcBNT05.DGN

DESIGNED: ARC	FED. RD DIV. No.	STATE	FEDERAL AID PROJECT No.	HIGHWAY No.
CHECKED: ALA	6	TEXAS	NH 2003 ( )	US 281

DRAWN: RLJ	STATE DISTRICT	COUNTY	CONTROL No.	SECTION No.	JOB No.	SHEET No.
CHECKED: ARC	PHARR	HIDALGO	0255	08	091	973

ESMERALDA G. EGGER
10:19:02 AM
06/25/2003
I:\projects\22322a\CADD\Sheets\Structures\Direct Connects\281nbdcBNT05A.dgn

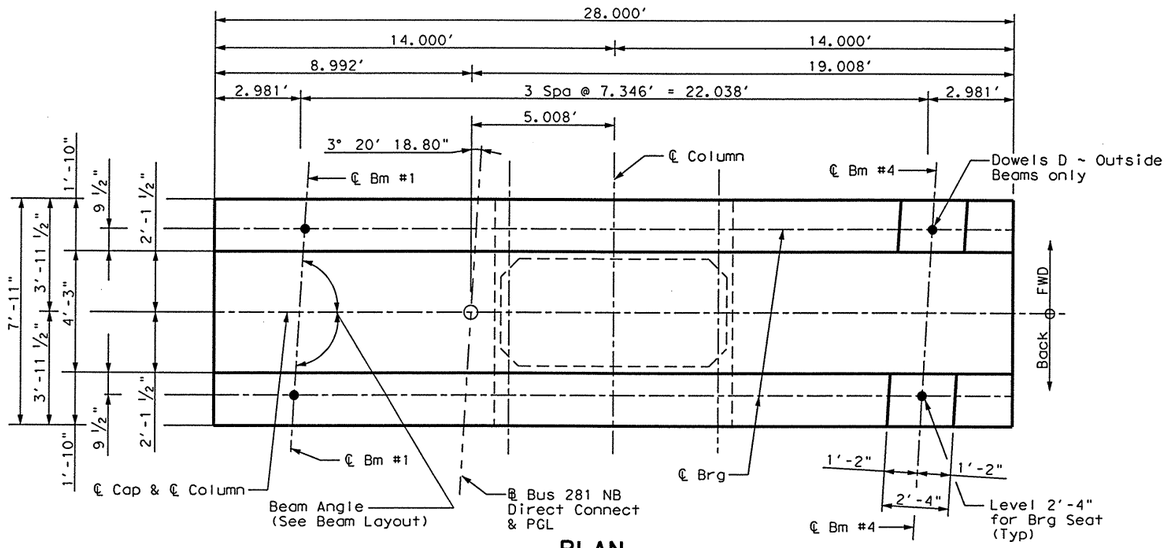

PLAN
(Showing Bents 12 & 13)

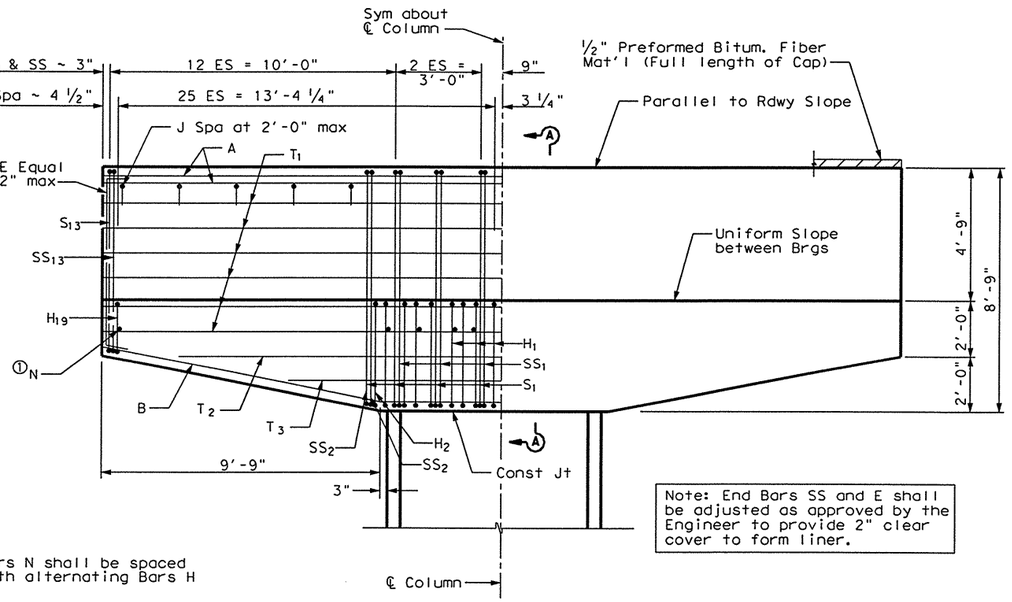

① Bars N shall be spaced with alternating Bars H

Note: End Bars SS and E shall be adjusted as approved by the Engineer to provide 2" clear cover to form liner.

ELEVATION
(Showing Bents 12 & 13)

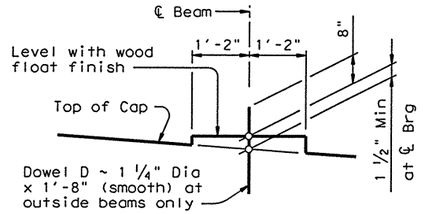

BEARING SEAT DETAIL
(Bearing surface shall be clean and free of all loose material before placing bearing pad.)

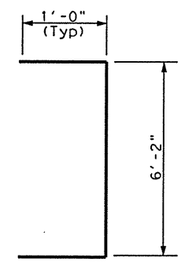

BARS E

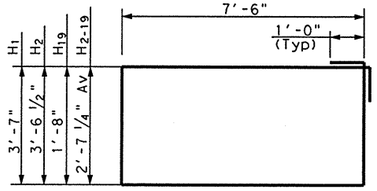

BARS H

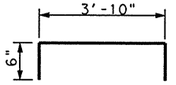

BARS J

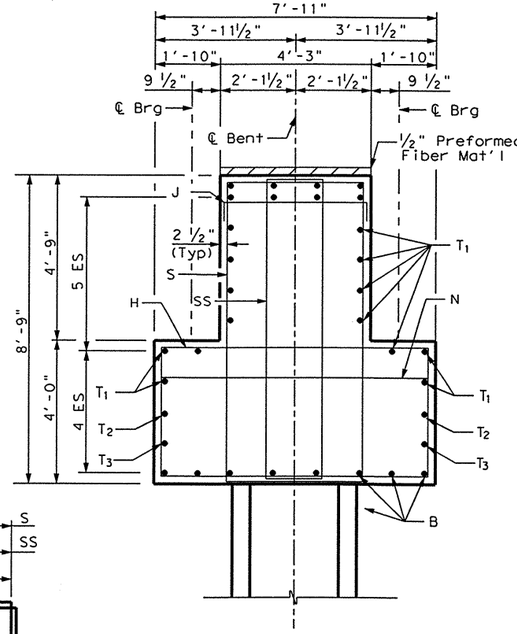

SECTION A-A

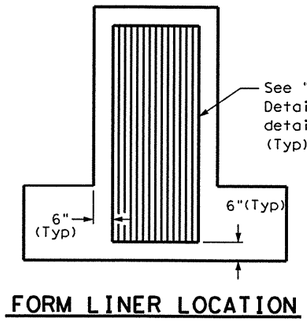

FORM LINER LOCATION

TABLE OF CAP QUANTITIES

Bar	No.	Size	Length	Weight
A	8	#11	27'-8"	1,176
B	8	#11	28'-1"	1,194
D	4	1¼" ø	1'-8"	29
E	10	#6	8'-2"	123
H_1	16	#6	24'-2"	581
H_{2-19}	36	#6	22'-3" Av	1,203
J	15	#4	4'-10"	48
N	27	#5	7'-7"	214
S_1	6	#6	26'-4"	237
S_{2-13}	24	#6	24'-4" Av	877
SS_1	6	#6	21'-7"	195
SS_{2-13}	24	#6	19'-7" Av	706
T_1	14	#8	27'-8"	1,034
T_2	2	#8	23'-8"	126
T_3	2	#8	15'-8"	84
Reinforcing Steel			Lb	7,827
Class "C" Concrete			CY	48.2

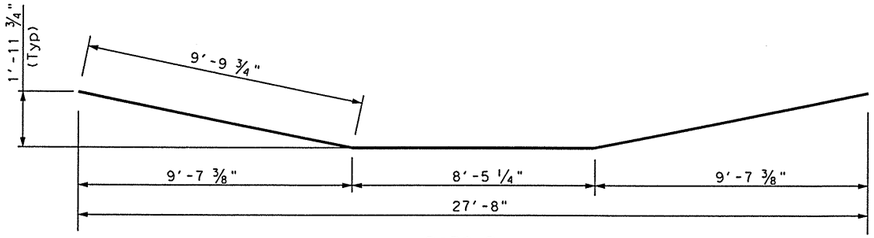

BARS B

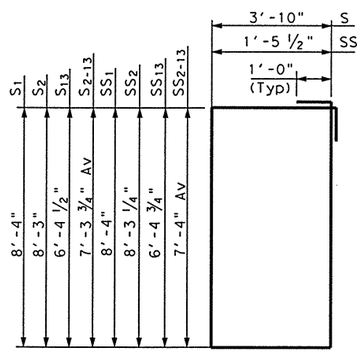

BARS S & SS

STATE OF TEXAS
ALLEN R. CROZIER
81450
REGISTERED PROFESSIONAL ENGINEER
Allen R. Crozier
6/25/03

HS25 LOADING SHEET 2 OF 3

Parsons Brinckerhoff Quade & Douglas Inc.

Texas Department of Transportation

© 2003 by TxDOT

INTERIOR BENTS NOS. 2-5 & 9-13

BUS 281 NB DIRECT CONNECT

281nbdcBNT05a.DGN

DESIGNED: ARC	FED. RD DIV. No.	STATE	FEDERAL AID PROJECT No.	HIGHWAY No.
CHECKED: ALA	6	TEXAS	NH 2003 ( )	US 281

DRAWN: RLJ	STATE DISTRICT	COUNTY	CONTROL No.	SECTION No.	JOB No.	SHEET No.
CHECKED: ARC	PHARR	HIDALGO	0255	08	091	973A

ESMERALDA G. EGGER
10:22:26 AM
06/25/2003
I:\projects\22322a\CADD\Sheets\Structures\Direct Connects\281nbdcBNT05b.dgn

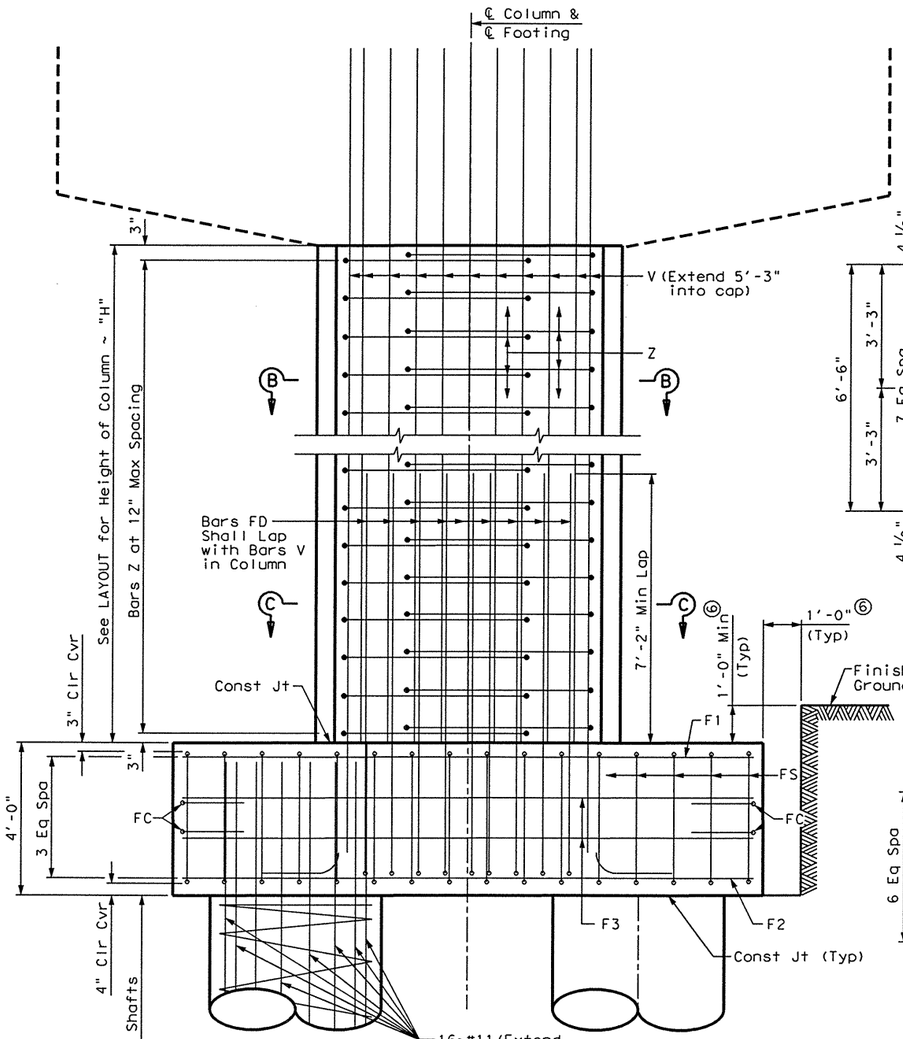

ELEVATION

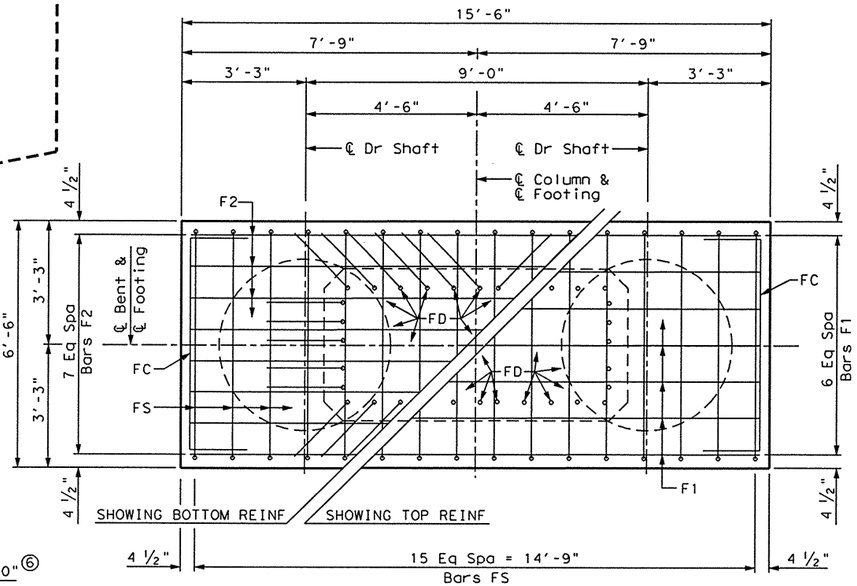

PLAN

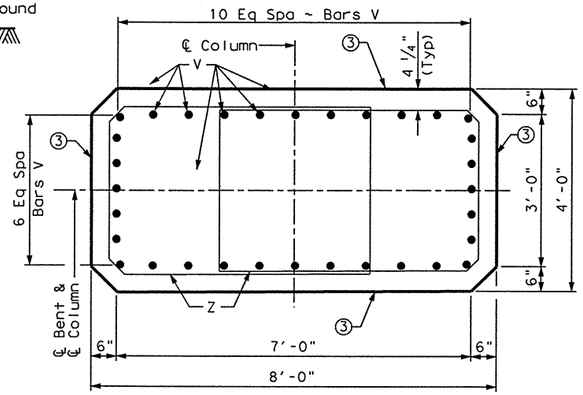

SECTION B-B

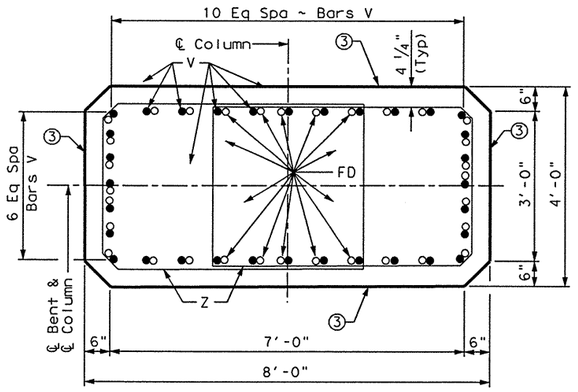

SECTION C-C

③ See "Form Liner Details" for details not shown.

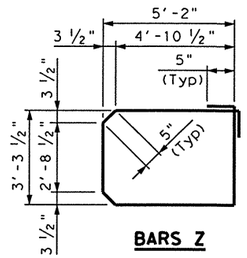

BARS Z

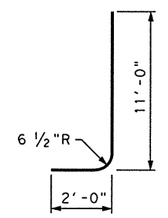

BARS FD

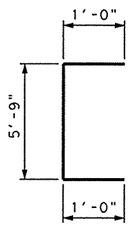

BARS FC

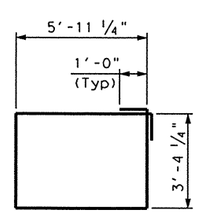

BARS FS

TABLE OF FOOTING QUANTITIES

Bar	No.	Size	Length	Weight
F1	7	# 6	15'- 0"	158
F2	8	#11	15'- 0"	638
F3	4	# 6	15'- 0"	90
FC	4	# 6	7'- 9"	47
FD	32	#11	13'- 0"	2210
FS	16	# 6	20'- 7"	495
Reinforcing Steel			Lb	3,638
Class "C" Concrete			CY	15.0

TABLE OF VARIABLE COLUMN QUANTITIES ⑤

TOTAL ESTIMATED QUANTITIES

Bent No.	"H"	Class "C" Conc (Cols)	Bars Z 17'-5" ~ #4		Bars V 32 ~ # 11		Reinf Steel ④	Class "C" Conc ④
	Ft	CY	No.	Weight	Length	Weight	Lb	CY
2	19	22.2	40	465	24'-3"	4,123	16,053	85.4
3	24	28.0	50	582	29'-3"	4,973	17,020	91.2
4	29	33.8	60	698	34'-3"	5,823	17,986	97.0
5	33	38.5	68	791	38'-3"	6,503	18,759	101.7
9	34	39.7	70	814	39'-3"	6,673	18,952	102.9
10	31	36.2	64	745	36'-3"	6,163	18,373	99.4
11	26	30.3	54	628	31'-3"	5,313	17,406	93.5
12	21	24.5	44	512	26'-3"	4,463	16,440	87.7
13	17	19.8	36	419	22'-3"	3,783	15,667	83.0

④ Adjust Reinforcing Steel total by 195 lbs & Class "C" Concrete total by 1.16 cy for each foot variation in "H" value.

⑤ Adjust Bars V length by 1 ft and add two additional Bars Z for each linear foot variation in "H" value.

⑥ Limits of Temporary Special Shoring and Structural Excavation.
Temporary Special Shoring = 260 SF/Bent = 2,340 SF
Structural Excavation = 27.78 CY/Bent = 250 CY

HS25 LOADING SHEET 3 OF 3

Parsons Brinckerhoff Quade & Douglas Inc.

Texas Department of Transportation

© 2003 by TxDOT

INTERIOR BENTS NOS. 2-5 & 9-13

BUS 281 NB DIRECT CONNECT

STATE OF TEXAS
ALLEN R. CROZIER
81450
REGISTERED PROFESSIONAL ENGINEER
Allen R. Crozier 6/25/03

281NBDCBNT05B.DGN

DESIGNED: ARC	FED. RD DIV. No.	STATE	FEDERAL AID PROJECT No.		HIGHWAY No.	
CHECKED: ALA	6	TEXAS	NH 2003 ( )		US 281	
DRAWN: DRM	STATE DISTRICT	COUNTY	CONTROL No.	SECTION No.	JOB No.	SHEET No.
CHECKED: ARC	PHARR	HIDALGO	0255	08	091	974

Column & Footing Elevation

ESMERALDA G. EGGER
10:26:35 AM
06/25/2003
I:\projects\22322a\CADD\Sheets\Structures\Direct Connects\281nbdcBNT06.dgn

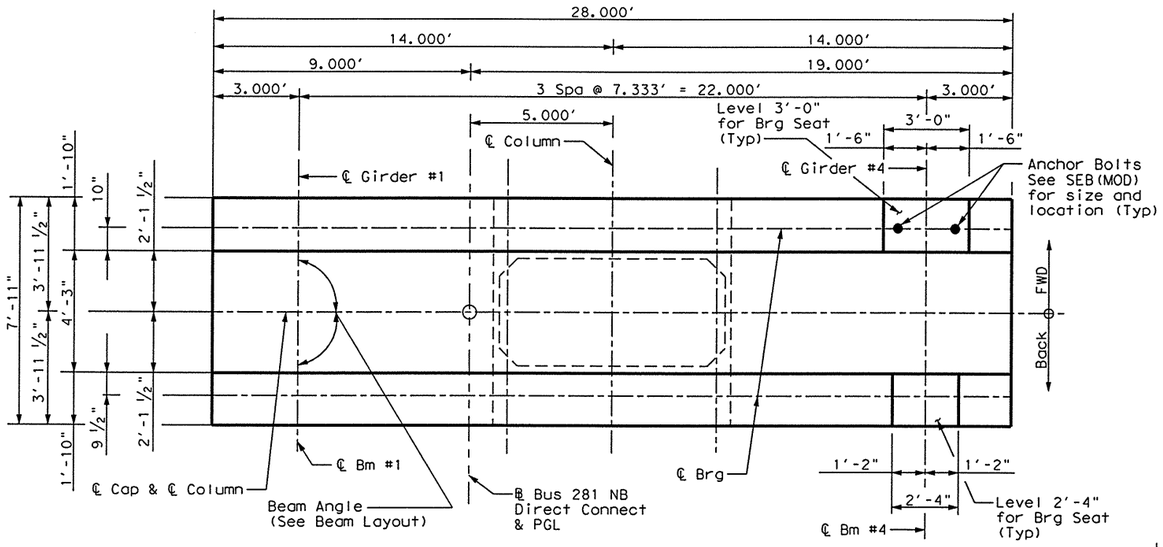

PLAN

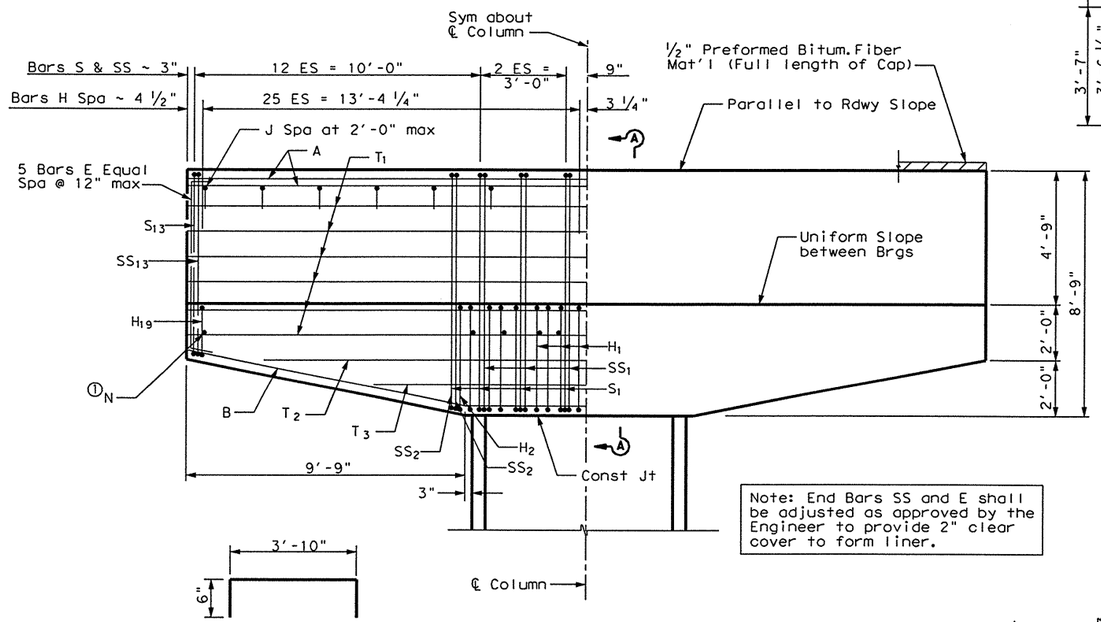

Note: End Bars SS and E shall be adjusted as approved by the Engineer to provide 2" clear cover to form liner.

① Bars N shall be spaced with alternating Bars H.

ELEVATION

BARS B

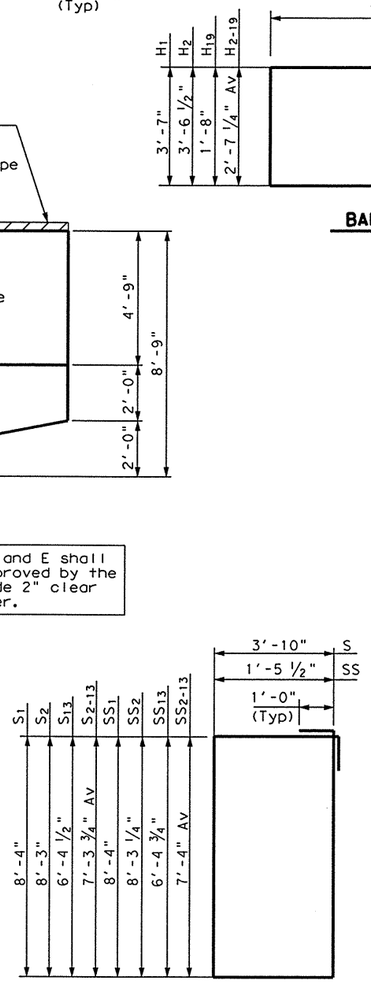

BARS S & SS

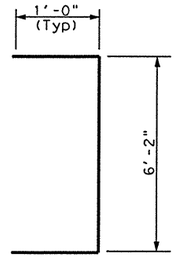

BARS E

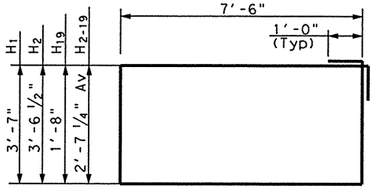

BARS H

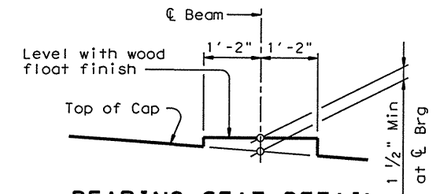

BEARING SEAT DETAIL

(Bearing surface shall be clean and free of all loose material before placing bearing pad.)
(Beneath Prestressed Beams)

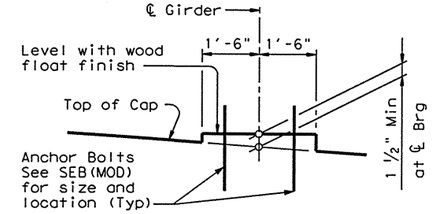

BEARING SEAT DETAIL

(Bearing surface shall be clean and free of all loose material before placing bearing pad.)
(Beneath Plate Girders)

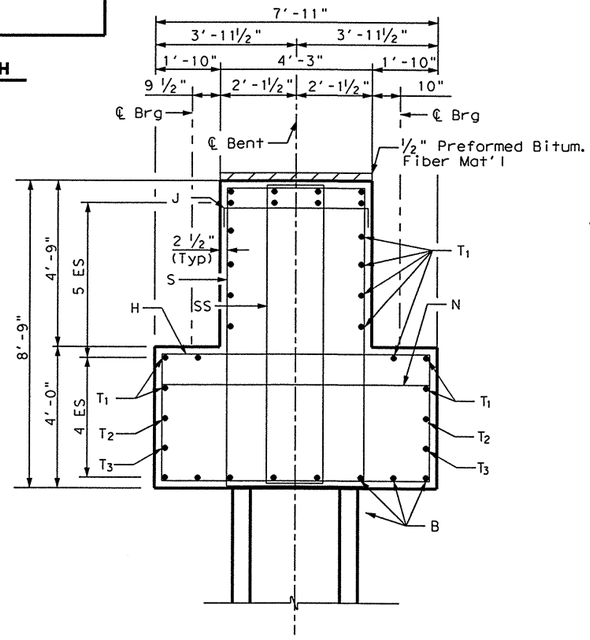

SECTION A-A

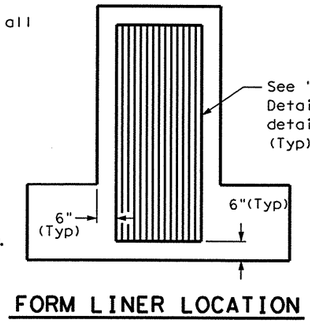

FORM LINER LOCATION

TABLE OF CAP QUANTITIES

Bar	No.	Size	Length	Weight
A	8	#11	27'-8"	1,176
B	8	#11	28'-1"	1,194
E	10	#6	8'-2"	123
H_1	16	#6	24'-2"	581
H_{2-19}	36	#6	22'-3" Av	1,203
J	15	#4	4'-10"	48
N	27	#5	7'-7"	214
S_1	6	#6	26'-4"	237
S_{2-13}	24	#6	24'-4" Av	877
SS_1	6	#6	21'-7"	195
SS_{2-13}	24	#6	19'-7" Av	706
T_1	14	#8	27'-8"	1,034
T_2	2	#8	23'-8"	126
T_3	2	#8	15'-8"	84
Reinforcing Steel			Lb	7,798
Class "C" Concrete			CY	48.3

GENERAL NOTES:

Designed according to AASTHO 1996 Standard and current Interim Specifications.
Calculated Foundation Load ~ 570 T/D.S.
See Foundation Detail Standard sheet, FD(MOD), for additional Foundation details and notes.
Class "C" Concrete strength f'c = 3600 psi.
All reinforcing steel shall be Grade 60.

HS25 LOADING

Parsons Brinckerhoff Quade & Douglas Inc.
Texas Department of Transportation
© 2003 by TxDOT

STATE OF TEXAS
ALLEN R. CROZIER
81450
REGISTERED PROFESSIONAL ENGINEER
Allen R. Crozier
6/25/03

INTERIOR BENT NO. 6

BUS 281 NB DIRECT CONNECT

281nbdcBNT06.DGN

DESIGNED: ARC	FED. RD DIV. No.	STATE	FEDERAL AID PROJECT No.	HIGHWAY No.
CHECKED: ALA	6	TEXAS	NH 2003 ( )	US 281
DRAWN: RLJ	STATE DISTRICT	COUNTY	CONTROL No.	SECTION No.	JOB No.	SHEET No.
CHECKED: ARC	PHARR	HIDALGO	0255	08	091	975

ESMERALDA G. EGGER
10:27:11 AM
06/25/2003
i:\projects\22322a\CADD\Sheets\Structures\Direct Connects\281nbdcBNT06B.dgn

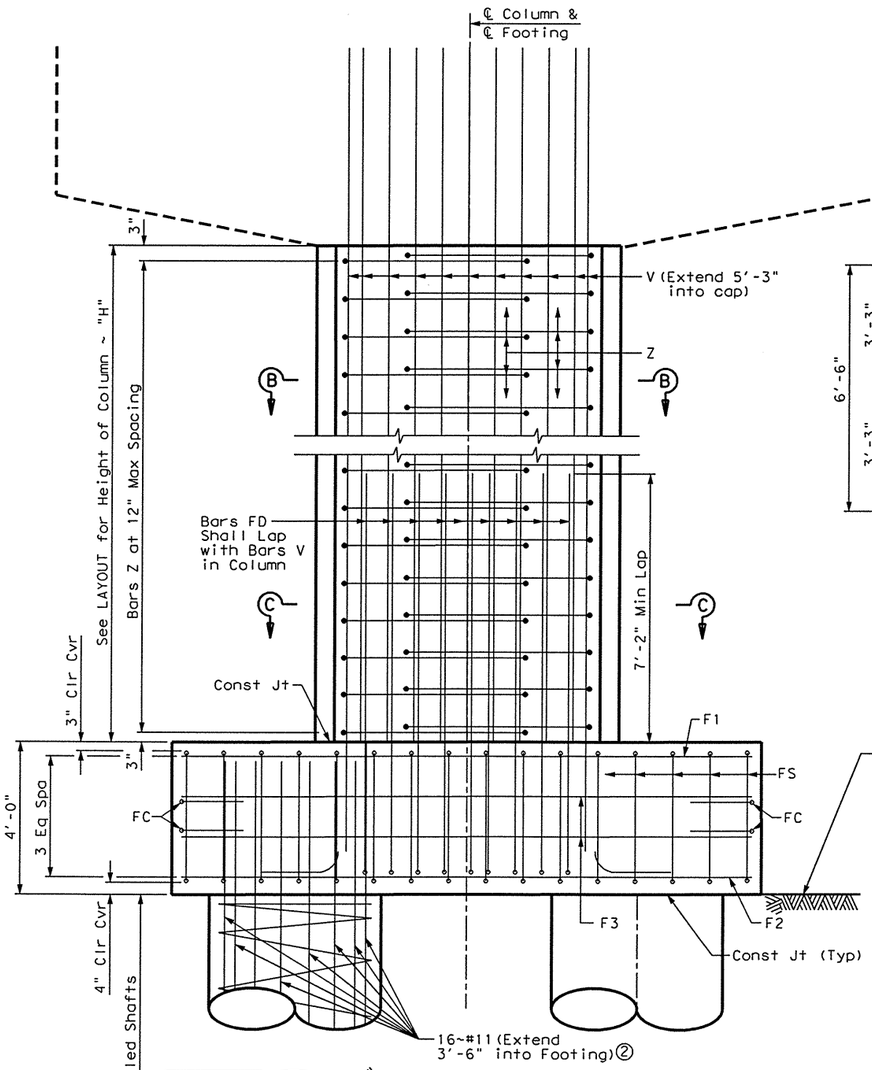

ELEVATION

Column & Footing Elevation

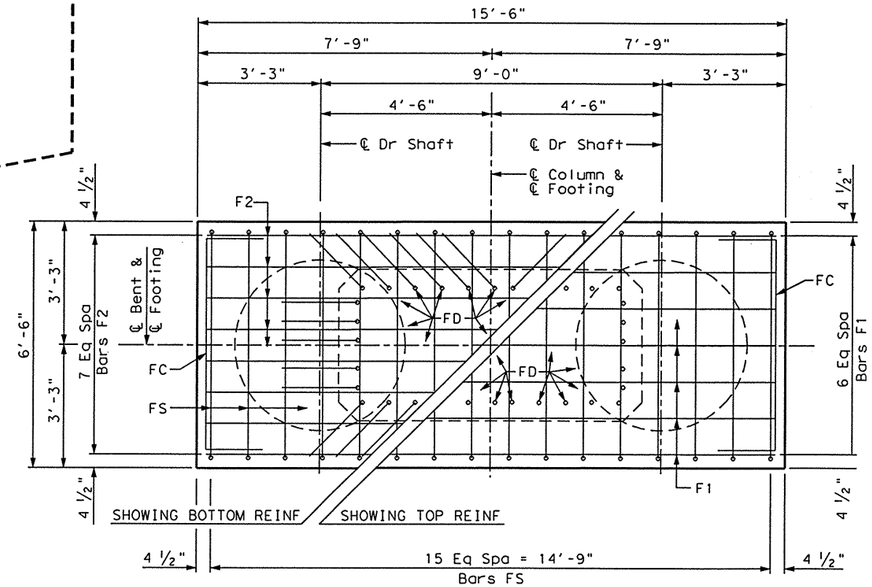

PLAN

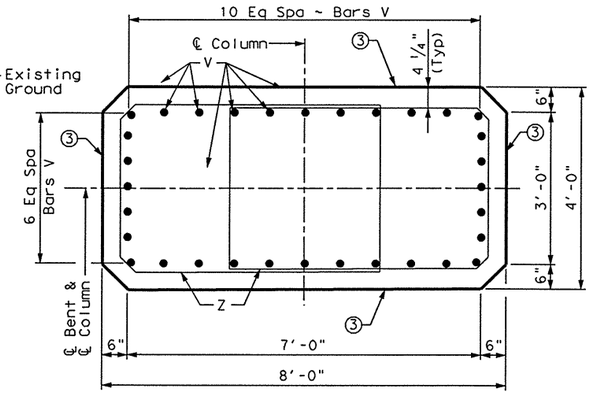

SECTION B-B

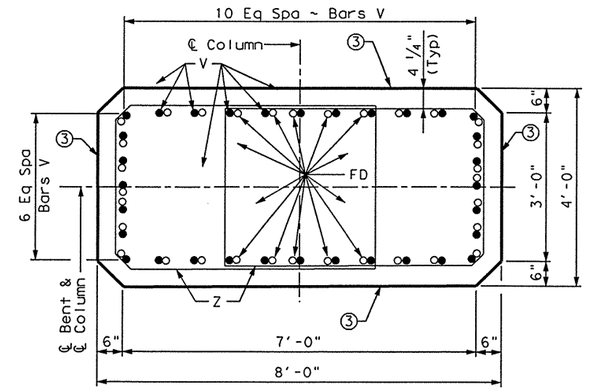

SECTION C-C

③ See "Form Liner Details" for details not shown.

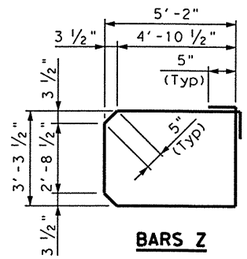

BARS Z

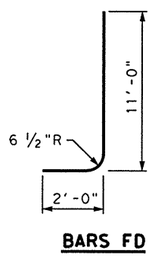

BARS FD

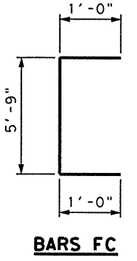

BARS FC

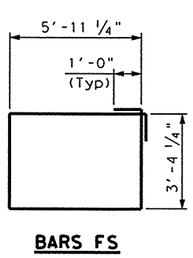

BARS FS

TABLE OF FOOTING QUANTITIES

Bar	No.	Size	Length	Weight
F1	7	# 6	15'- 0"	158
F2	8	#11	15'- 0"	638
F3	4	# 6	15'- 0"	90
FC	4	# 6	7'- 9"	47
FD	32	#11	13'- 0"	2210
FS	16	# 6	20'- 7"	495
Reinforcing Steel			Lb	3,638
Class "C" Concrete			CY	15.0

TABLE OF VARIABLE COLUMN QUANTITIES ⑤

TOTAL ESTIMATED QUANTITIES

Bent No.	"H"	Class "C" Conc (Cols)	Bars Z 17'-5" ~ #4		Bars V 32 ~ # 11		Reinf ④ Steel	Class ④ "C" Conc
	Ft	CY	No.	Weight	Length	Weight	Lb	CY
6	33	38.5	68	791	38'-3"	6,503	18,730	101.8

④ Adjust Reinforcing Steel total by 195 lbs & Class "C" Concrete total by 1.16 cy for each foot variation in "H" value.

⑤ Adjust Bars V length by 1 ft and add two additional Bars Z for each linear foot variation in "H" value.

HS25 LOADING

SHEET 2 OF 2

Parsons Brinckerhoff Quade & Douglas Inc.

Texas Department of Transportation

© 2003 by TxDOT

STATE OF TEXAS
ALLEN R. CROZIER
81450
REGISTERED PROFESSIONAL ENGINEER

Allen R. Crozier 6/25/03

INTERIOR BENT NO. 6

BUS 281 NB DIRECT CONNECT

281NBDCBNT06B.DGN

DESIGNED: ARC	FED. RD DIV. No.	STATE	FEDERAL AID PROJECT No.			HIGHWAY No.
CHECKED: ALA	6	TEXAS	NH 2003 ( )			US 281
DRAWN: DRM	STATE DISTRICT	COUNTY	CONTROL No.	SECTION No.	JOB No.	SHEET No.
CHECKED: ARC	PHARR	HIDALGO	0255	08	091	976

ALLEN CROZIER
07:18:27 AM
08/06/2003
I:\projects\22322a\CADD\Sheets\Structures\Direct Connects\281nbdcbnt07a.dgn

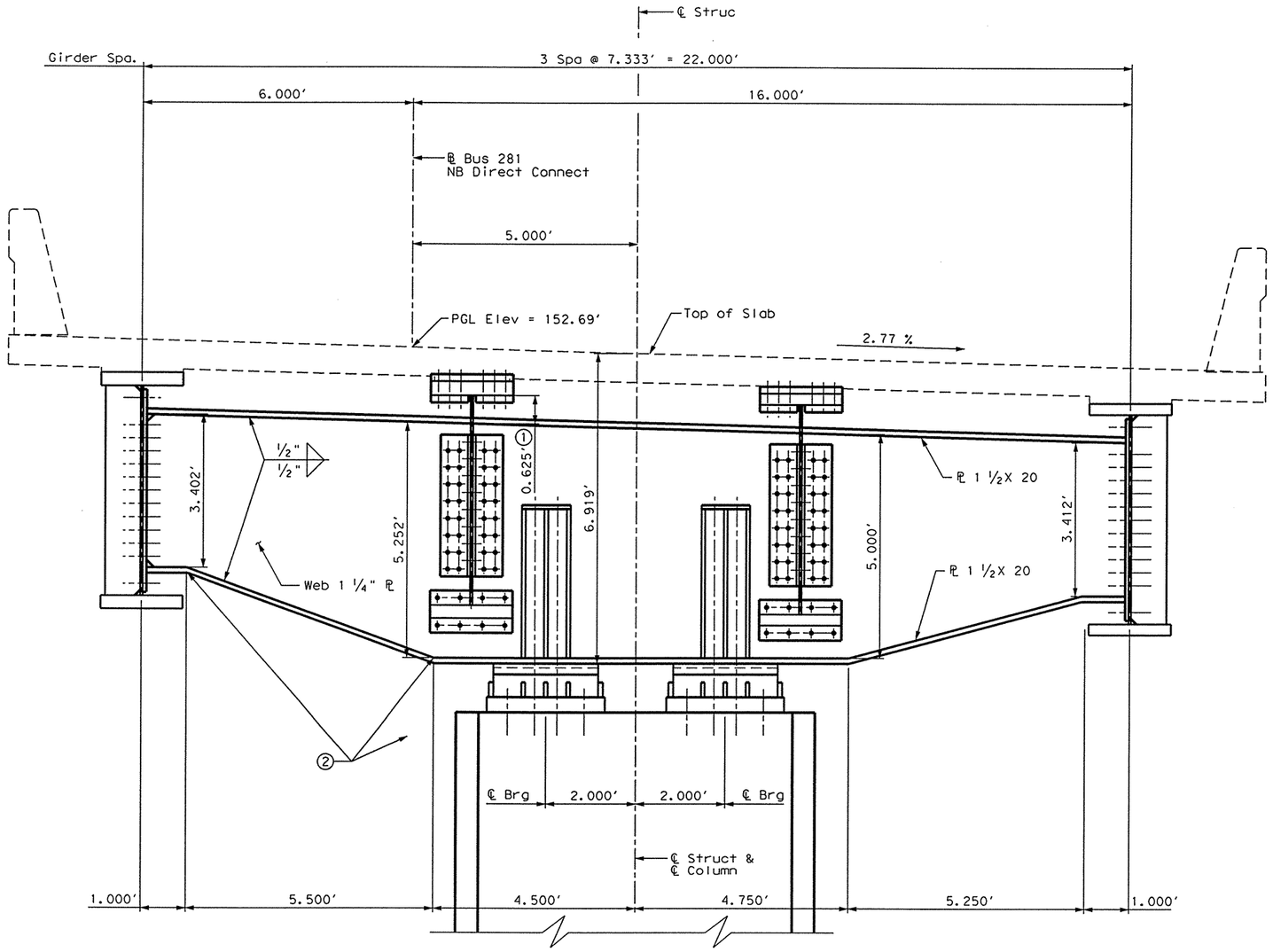

① 0.625' measured from top of Girder Webs to top of Cap Web

② Bottom flange may be bent to final shape utilizing a 8" minimum radius or may be fabricated by using full penetration groove welds or any combination of the above.

THRU-GIRDER CAP ELEVATION

TOTAL ESTIMATED QUANTITIES CAP, COLUMN & FOOTING

Bent No.	H	Class "C" Concrete C.Y.	Reinforcing Steel Lbs. ③	Structural Steel-H.S. Lbs.
7	35'	55.8	10,398	22,940

③ For Contractor's Information only.

GENERAL NOTES:

Designed in accordance with AASHTO 1996 Standard and current Interim Specifications. In addition, design follows recommendations in CTR Research Report No. 1302-2F (April 1995).

All steel for cap shall conform to A709 Gr 50 or Gr 50W and shall be paid for as "Structural Steel-HS".

Top Flange splice plates and clip angles for Girder Nos. 2 & 3 are classified as tension components and shall conform to Item 442.3(1).

The top flange and one half of the web depth connected to the top flange are Fracture Critical Members (FCM) and shall conform to the Fracture Control Plan.

No shop splices are permitted for the top flange plate or web plate.

All bolted connections shall be made with 1" A325 bolts unless otherwise noted and shall be tightened in accordance with the Item "Structural Bolting".

All faying surfaces of bolted connections shall receive a prime coat of the selected paint protection system. A minimum of 72 hours of cure time shall elapse before bolting may take place.

Anchor Rods and Hold-Down Rods shall conform to the Item "Anchor Bolts" except as noted.

The bent cap shall be erected with the web set plumb and all anchor and hold-down rods uniformly tightened. Adjustments of the girders for proper splice alignment can be made by loosening the nuts of the hold-down rods on one side of the cap while tightening the corresponding nuts on the other side of the cap by an equal amount. After the slab and rail have been placed and dead load deflection has occured, all hold-down rods shall be loosened and uniformly re-tightened to a snug tight condition plus one-quarter turn.

All column and footing concrete shall be Class "C".

Class "C" Concrete strength f'c = 3,600 psi.

All Reinforcing shall be Grade 60.

All Structural Steel shall be painted.

Calculated Foundation Load = 770 tons/drilled shaft.

STATE OF TEXAS
ALLEN R. CROZIER
81450
REGISTERED PROFESSIONAL ENGINEER
Allen R. Crozier
8/5/03

HS25 LOADING SHEET 1 OF 5

Parsons Brinckerhoff Quade & Douglas Inc.

Texas Department of Transportation

© 2003 by TxDOT

INTERIOR BENT NO. 7
BUS 281 NB DIRECT CONNECT

281NBDCBNT07A.DGN

DESIGNED: ARC	FED. RD DIV. NO.	STATE	FEDERAL AID PROJECT No.				HIGHWAY No.
CHECKED: ALA	6	TEXAS	NH 2003 ( )				US 281
DRAWN: DRM	STATE DISTRICT	COUNTY	CONTROL No.	SECTION No.	JOB No.	SHEET No.	
CHECKED: ARC	PHARR	HIDALGO	0255	08	091	977	

ESMERALDA G. EGGER
10:30:25 AM
06/25/2003
I:\projects\22322a\CADD\Sheets\Structures\Direct Connects\281nbdcbnt07b.dgn

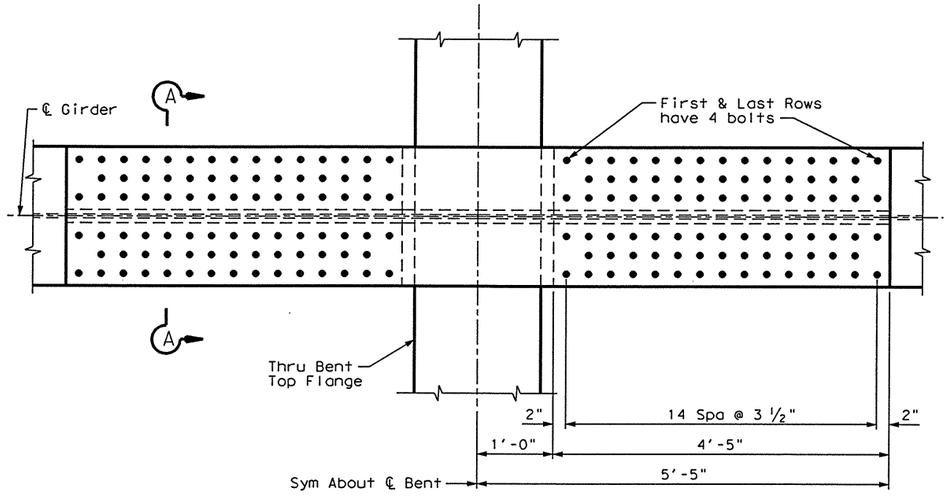

PLAN

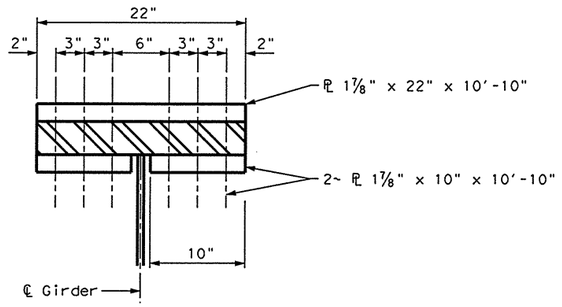

SECTION A-A

All Bolts are 1" Dia. A325 Ty3 With One Hardened Washer Each.
All Holes are 1 1/16" Dia.

TOP FLANGE

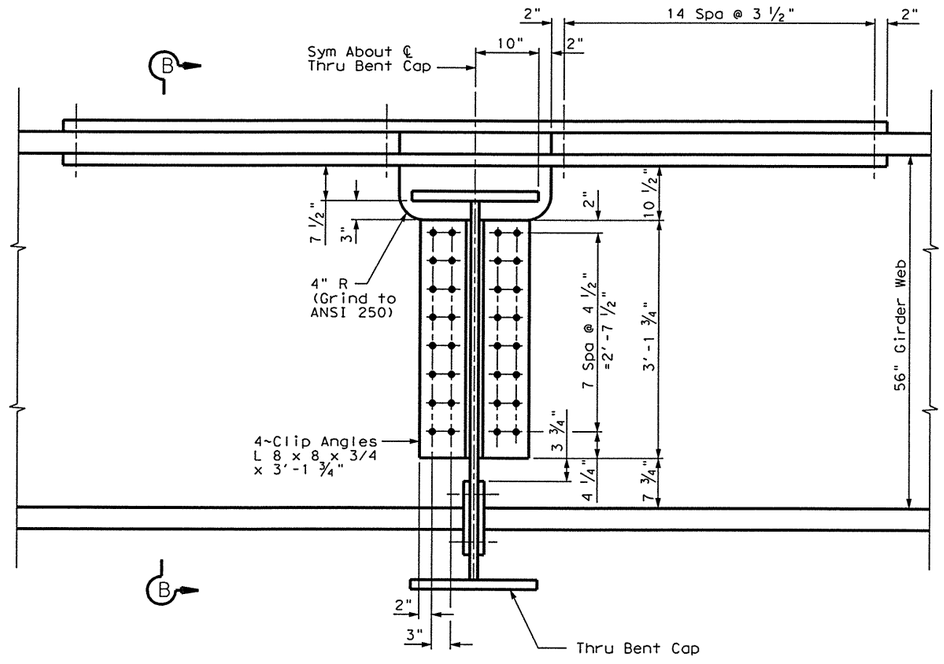

ELEVATION

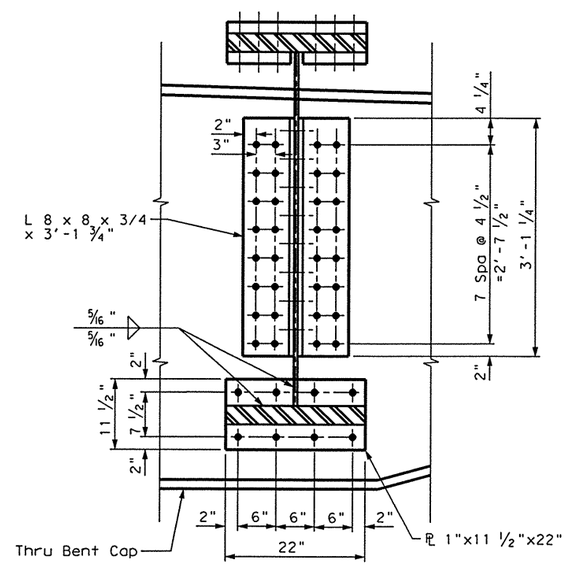

SECTION B-B

GIRDER WEB
INTERIOR GIRDER CONNECTION DETAILS
(Girders 2 & 3)

STATE OF TEXAS
ALLEN R. CROZIER
81450
REGISTERED PROFESSIONAL ENGINEER
Allen R. Crozier
6/25/03

HS25 LOADING SHEET 2 OF 5

Parsons Brinckerhoff Quade & Douglas Inc.

Texas Department of Transportation

© 2003 by TxDOT

INTERIOR BENT NO. 7
BUS 281 NB DIRECT CONNECT

281NBDCBNT07B.DGN

DESIGNED: ARC	FED. RD DIV. No.	STATE	FEDERAL AID PROJECT No.		HIGHWAY No.
CHECKED: ALA	6	TEXAS	NH 2003 ( )		US 281
DRAWN: DRM	STATE DISTRICT	COUNTY	CONTROL No.	SECTION No.	JOB No.	SHEET No.
CHECKED: ARC	PHARR	HIDALGO	0255	08	091	978

ESMERALDA G. EGGER
10:32:08 AM
06/25/2003
I:\projects\22322a\CADD\Sheets\Structures\Direct Connects\281nbdcbnt07c.dgn

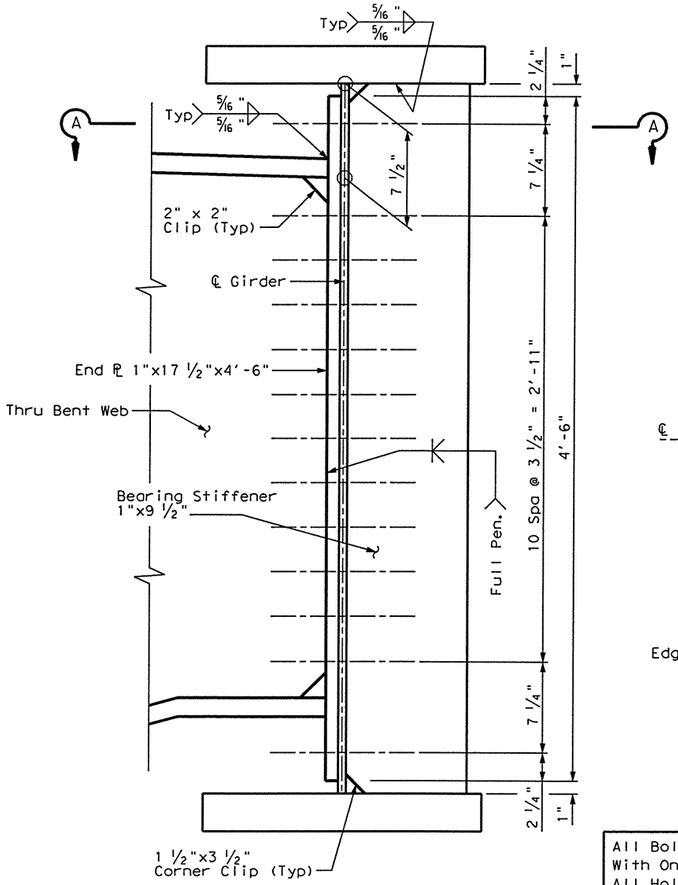

ELEVATION

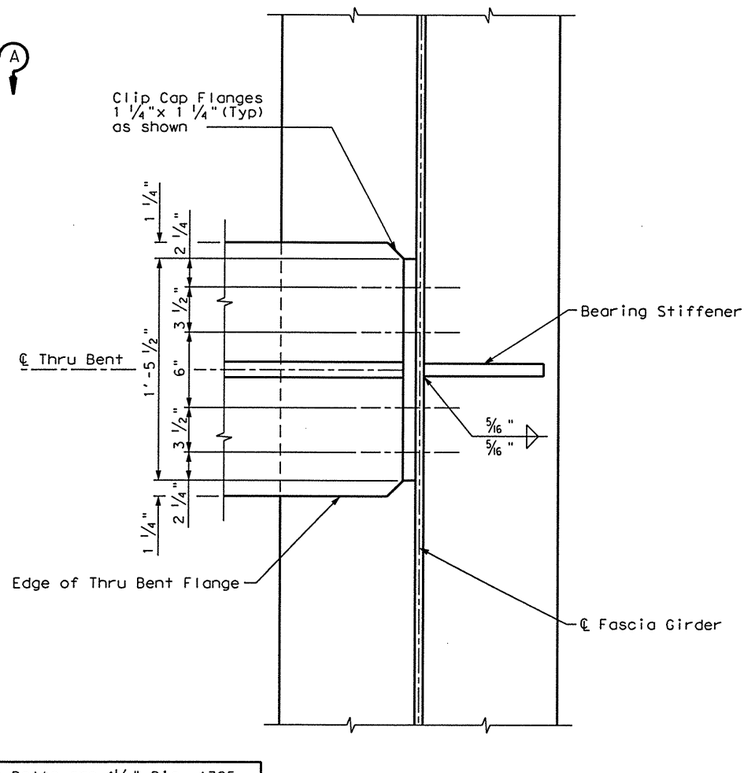

All Bolts are 1¼" Dia. A325
With One Hardened Washer Each.
All Holes are 1 5/16" Dia.

SECTION A-A

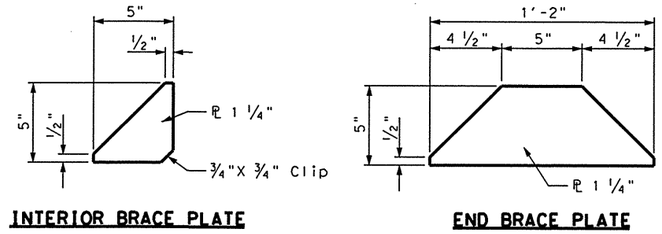

INTERIOR BRACE PLATE

END BRACE PLATE

BRACE PLATE DETAILS

FASCIA GIRDER CONNECTION DETAILS

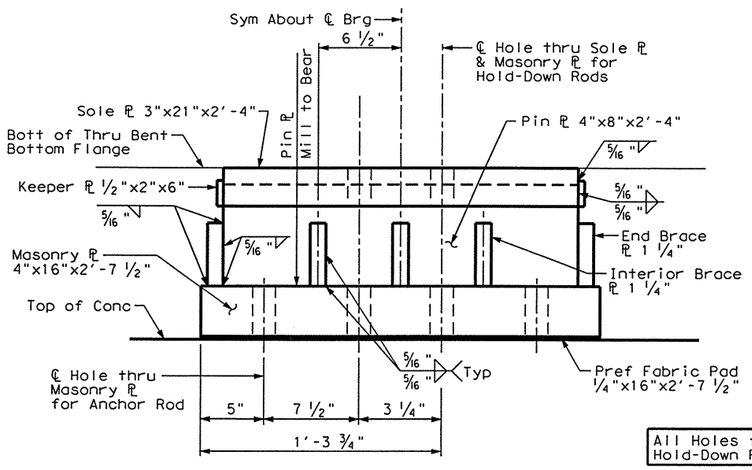

ELEVATION

All Holes for Anchor Rods & Hold-Down Rods are 1 15/16" Dia

Mating surfaces between sole ℙ & Pin ℙ shall be finished to ANSI 125

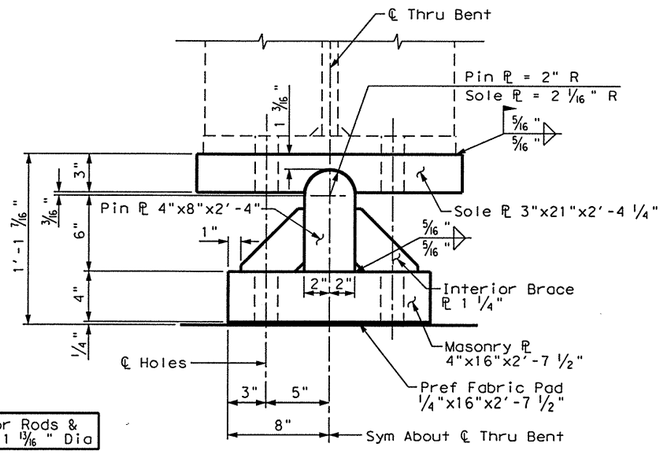

SECTION

BEARING ASSEMBLY DETAILS

ALLEN R. CROZIER
81450
REGISTERED PROFESSIONAL ENGINEER
STATE OF TEXAS
Allen R. Crozier
6/25/03

HS25 LOADING SHEET 3 OF 5

Parsons Brinckerhoff Quade & Douglas Inc.

Texas Department of Transportation

© 2003 by TxDOT

INTERIOR BENT NO. 7

BUS 281 NB DIRECT CONNECT

281NBDCBNT07C.DGN

DESIGNED: ARC	FED. RD DIV. No.	STATE	FEDERAL AID PROJECT No.			HIGHWAY No.	
CHECKED: ALA	6	TEXAS	NH 2003 ( )			US 281	
DRAWN: DRM	STATE DISTRICT	COUNTY	CONTROL No.	SECTION No.	JOB No.	SHEET No.	
CHECKED: ARC	PHARR	HIDALGO	0255	08	091	979	

ESMERALDA G. EGGER
10:32:43 AM
06/25/2003
I:\projects\22322a\CADD\Sheets\Structures\Direct Connects\281nbdcbnt07e.dgn

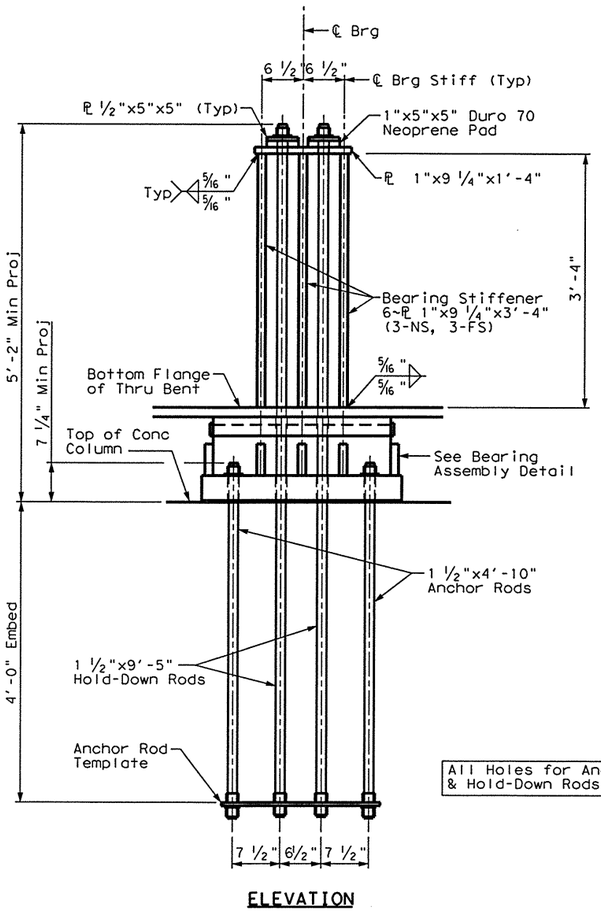

ELEVATION

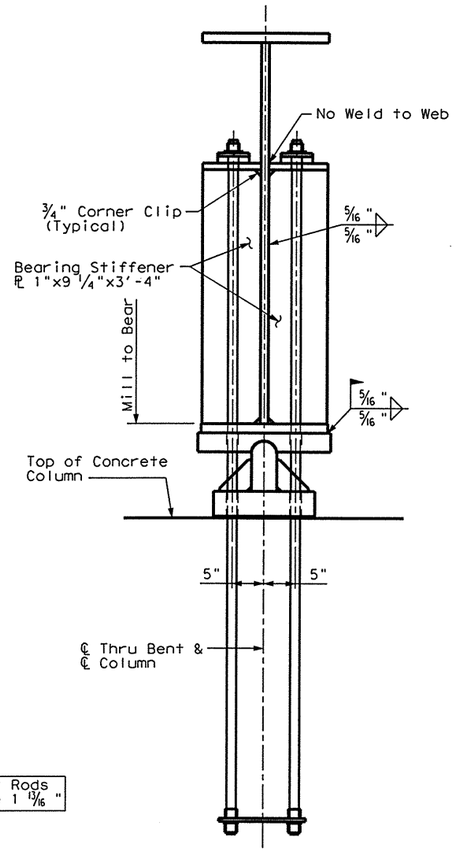

SECTION

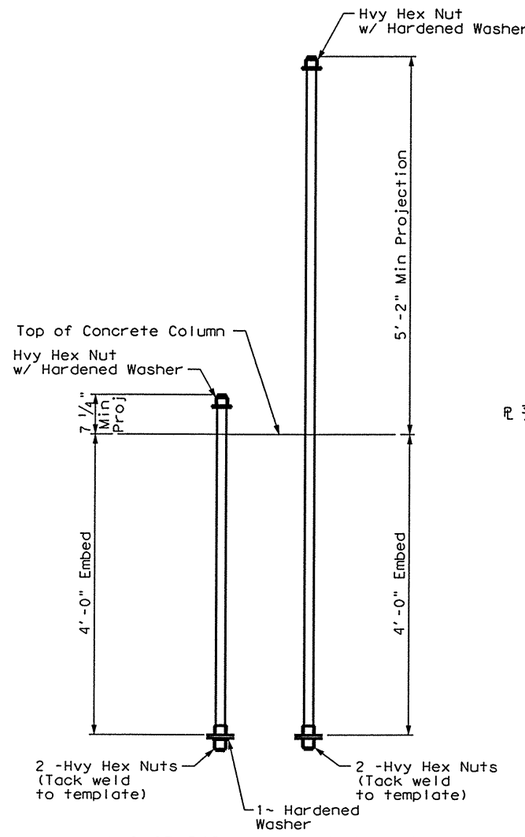

ANCHOR ROD
1 ½" Dia x 4'-10"

HOLD-DOWN ROD
1 ½" Dia x 9'-5"

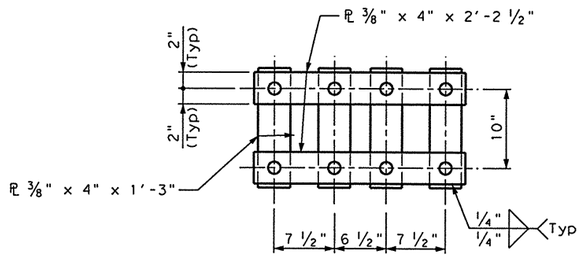

TEMPLATE DETAIL

BEARING STIFFENER DETAILS

General Notes:

Splices shall not be permitted in rod mat'l.

Rod Mat'l shall conform to A193 B7.

Rods shall be hot-dipped galvanized for their exposed length plus 6".

Exposed nuts and washers shall likewise be galvanized.

Rods shall be threaded at each end for a minimum length of 6".

Rods and their associated hardware, including the template, shall be considered subsidiary to the Bid Item "Structural Steel".

STATE OF TEXAS
ALLEN R. CROZIER
81450
REGISTERED PROFESSIONAL ENGINEER
Allen R. Crozier
6/25/03

HS25 LOADING SHEET 4 OF 5

Parsons Brinckerhoff Quade & Douglas Inc.

Texas Department of Transportation

© 2003 by TxDOT

INTERIOR BENT NO. 7

BUS 281 NB DIRECT CONNECT

281NBDCBNT07E.DGN

DESIGNED: ARC	FED. RD DIV. No.	STATE	FEDERAL AID PROJECT No.			HIGHWAY No.
CHECKED: ALA	6	TEXAS	NH 2003 ( )			US 281
DRAWN: DRM	STATE DISTRICT	COUNTY	CONTROL No.	SECTION No.	JOB No.	SHEET No.
CHECKED: ARC	PHARR	HIDALGO	0255	08	091	980

ESMERALDA C. EGGER
10:33:08 AM
06/25/2003
I:\projects\22322a\CADD\Sheets\Structures\Direct Connects\281nbdcbnt07d.dgn

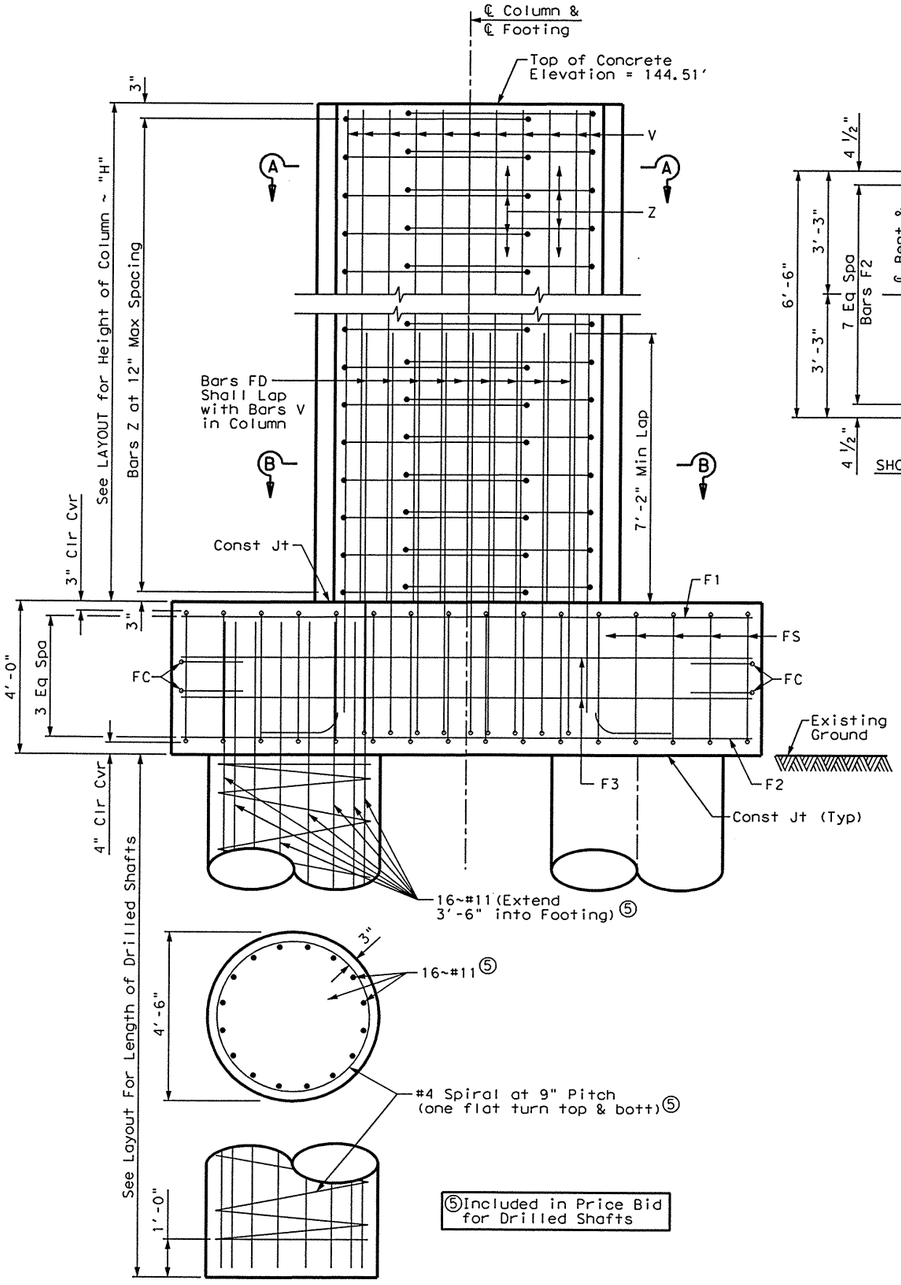

ELEVATION

Column & Footing Elevation

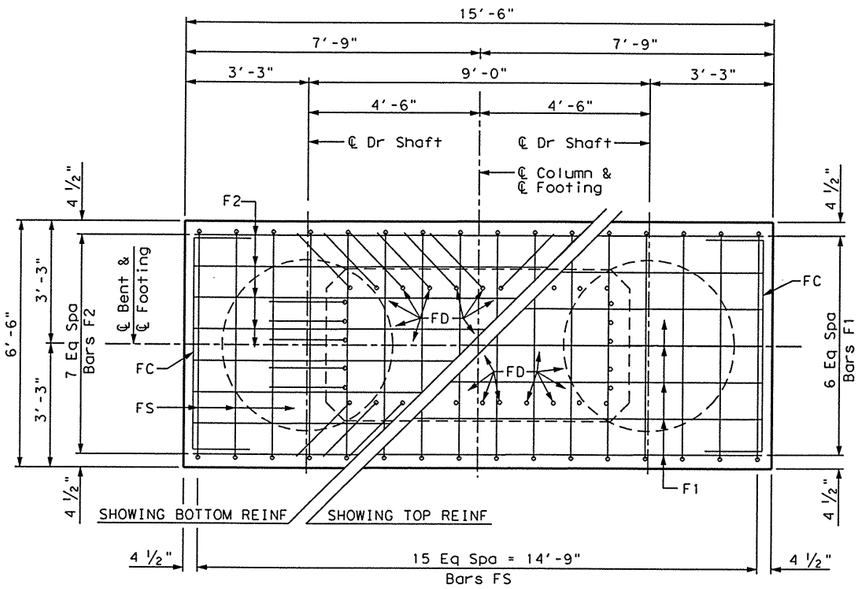

PLAN

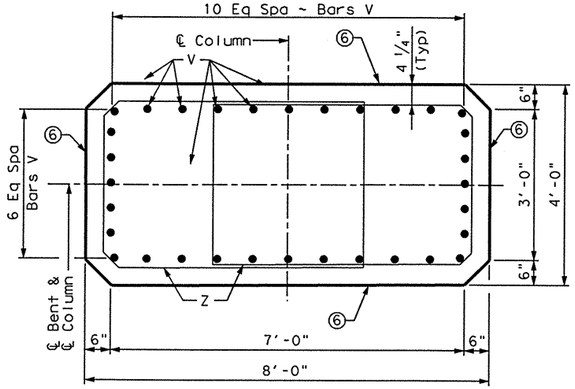

SECTION B-B

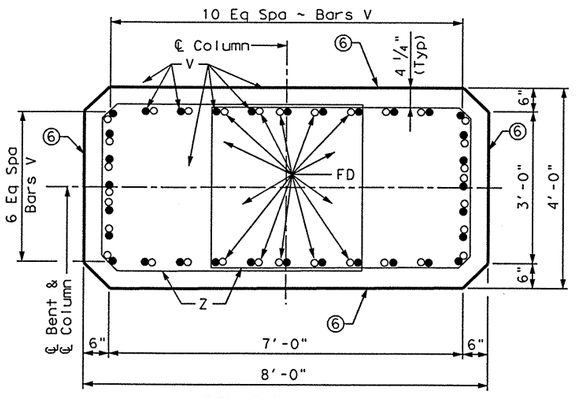

SECTION C-C

⑥ See "Form Liner Details" for details not shown.

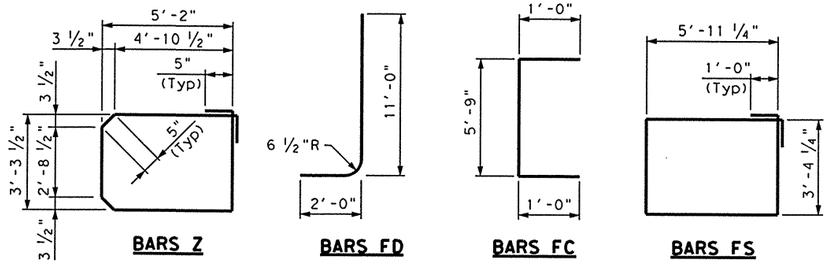

TABLE OF FOOTING QUANTITIES

Bar	No.	Size	Length	Weight
F1	7	# 6	15'- 0"	158
F2	8	#11	15'- 0"	638
F3	4	# 6	15'- 0"	90
FC	4	# 6	7'- 9"	47
FD	32	#11	13'- 0"	2210
FS	16	# 6	20'- 7"	495
Reinforcing Steel			Lb	3,638
Class "C" Concrete			CY	15.0

TABLE OF VARIABLE COLUMN QUANTITIES

Bent No.	"H"	Class "C" Conc (Cols)	Bars Z 17'-5" ~ #4		Bars V 32 ~ # 11		TOTAL ESTIMATED QUANTITIES: Reinf ④ Steel	Class ④ "C" Conc
	Ft	CY	No.	Weight	Length	Weight	Lb	CY
7	35	40.8	72	838	34'-10"	5,922	10,398	55.8

④ Adjust Reinforcing Steel total by 195 lbs & Class "C" Concrete total by 1.16 cy for each foot variation in "H" value.

HS25 LOADING

SHEET 5 OF 5

Parsons Brinckerhoff Quade & Douglas Inc.

Texas Department of Transportation

© 2003 by TxDOT

INTERIOR BENT NO. 7

BUS 281 NB DIRECT CONNECT

281NBDCBNT07D.DGN

DESIGNED: ARC	FED. RD DIV. No.	STATE	FEDERAL AID PROJECT No.	HIGHWAY No.
CHECKED: ALA	6	TEXAS	NH 2003 ( )	US 281

DRAWN: DRM	STATE DISTRICT	COUNTY	CONTROL No.	SECTION No.	JOB No.	SHEET No.
CHECKED: ARC	PHARR	HIDALGO	0255	08	091	981

STATE OF TEXAS
ALLEN R. CROZIER
81450
REGISTERED PROFESSIONAL ENGINEER

Allen R. Crozier
6/25/03

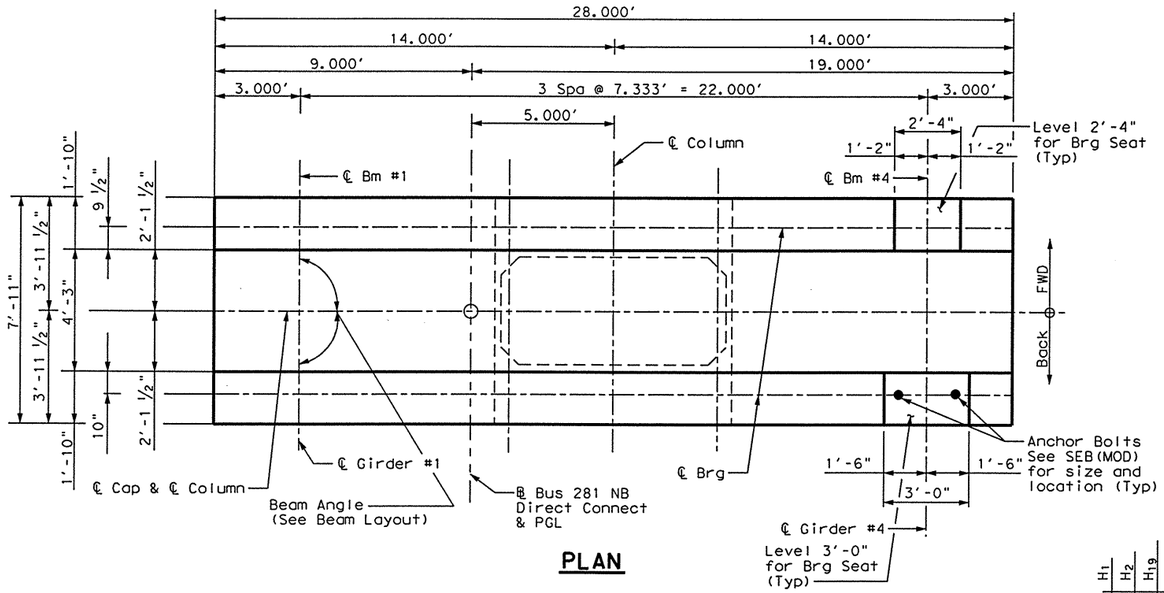

PLAN

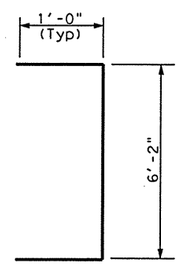

BARS E

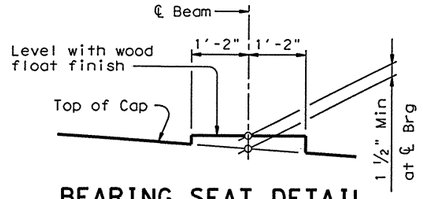

BEARING SEAT DETAIL

(Bearing surface shall be clean and free of all loose material before placing bearing pad.)
(Beneath Prestressed Beams)

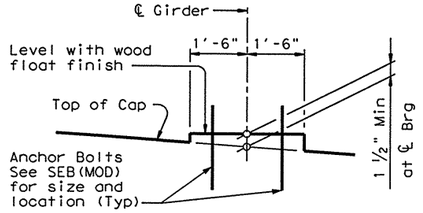

BEARING SEAT DETAIL

(Bearing surface shall be clean and free of all loose material before placing bearing pad.)
(Beneath Plate Girders)

TABLE OF CAP QUANTITIES				
Bar	No.	Size	Length	Weight
A	8	#11	27'-8"	1,176
B	8	#11	28'-1"	1,194
E	10	#6	8'-2"	123
H_1	16	#6	24'-2"	581
H_{2-19}	36	#6	22'-3" Av	1,203
J	15	#4	4'-10"	48
N	27	#5	7'-7"	214
S_1	6	#6	26'-4"	237
S_{2-13}	24	#6	24'-4" Av	877
SS_1	6	#6	21'-7"	195
SS_{2-13}	24	#6	19'-7" Av	706
T_1	14	#8	27'-8"	1,034
T_2	2	#8	23'-8"	126
T_3	2	#8	15'-8"	84
Reinforcing Steel			Lb	7,798
Class "C" Concrete			CY	48.3

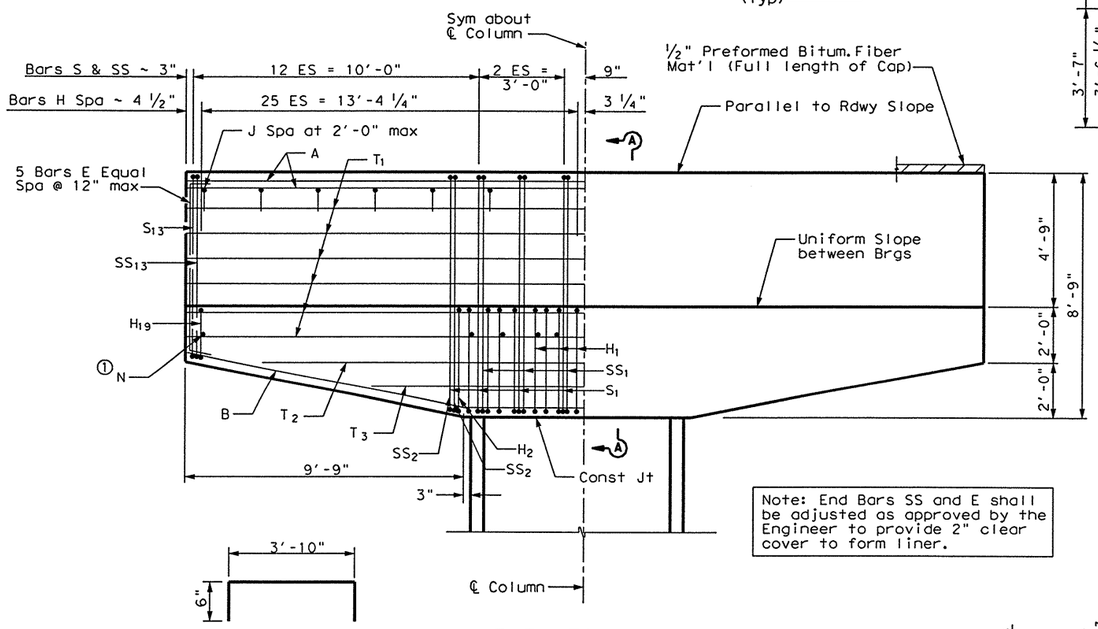

ELEVATION

Note: End Bars SS and E shall be adjusted as approved by the Engineer to provide 2" clear cover to form liner.

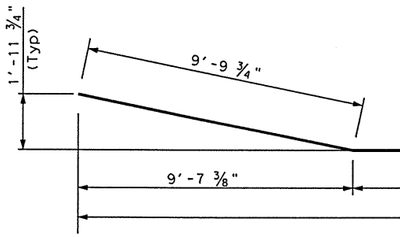

BARS B

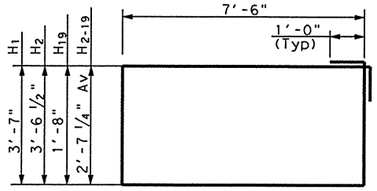

BARS H

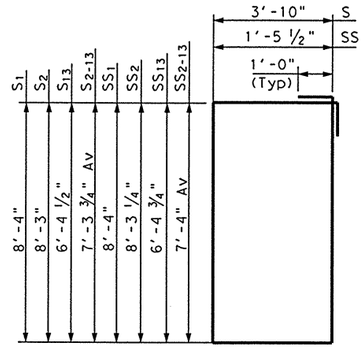

BARS S & SS

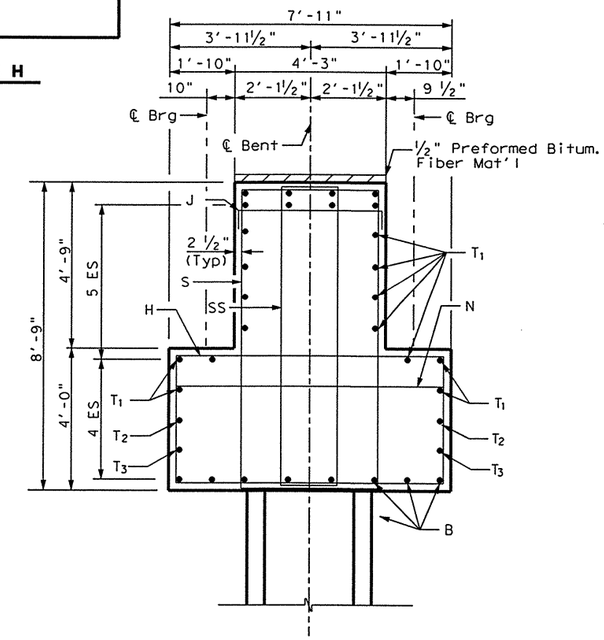

SECTION A-A

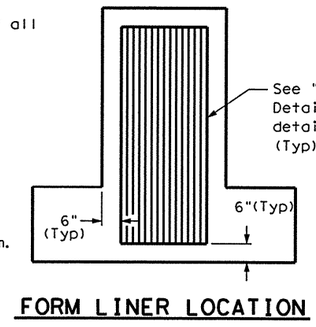

FORM LINER LOCATION

GENERAL NOTES:

Designed according to AASTHO 1996 Standard and current Interim Specifications.
Calculated Foundation Load ~ 570 T/D.S.
See Foundation Detail Standard sheet, FD(MOD), for additional Foundation details and notes.
Class "C" Concrete strength f'c = 3600 psi.
All reinforcing steel shall be Grade 60.

HS25 LOADING

Parsons Brinckerhoff Quade & Douglas Inc.
Texas Department of Transportation
© 2003 by TxDOT

INTERIOR BENT NO. 8

BUS 281 NB DIRECT CONNECT

281nbdcBNT08.DGN

DESIGNED: ARC	FED. RD DIV. No.	STATE	FEDERAL AID PROJECT No.	HIGHWAY No.
CHECKED: ALA	6	TEXAS	NH 2003 ( )	US 281
DRAWN: RLJ	STATE DISTRICT	COUNTY	CONTROL No.	SECTION No.	JOB No.	SHEET No.
CHECKED: ARC	PHARR	HIDALGO	0255	08	091	982

STATE OF TEXAS
ALLEN R. CROZIER
81450
REGISTERED PROFESSIONAL ENGINEER
Allen R. Crozier
6/25/03

ESMERALDA G. EGGER
10:33:31 AM
06/25/2003
I:\projects\22322a\CADD\Sheets\Structures\Direct Connects\281nbdcBNT08.dgn

ESMERALDA G. EGGER
10:33:55 AM
06/25/2003
i:\projects\22322a\CADD\Sheets\Structures\Direct Connects\281nbdcBNT08B.dgn

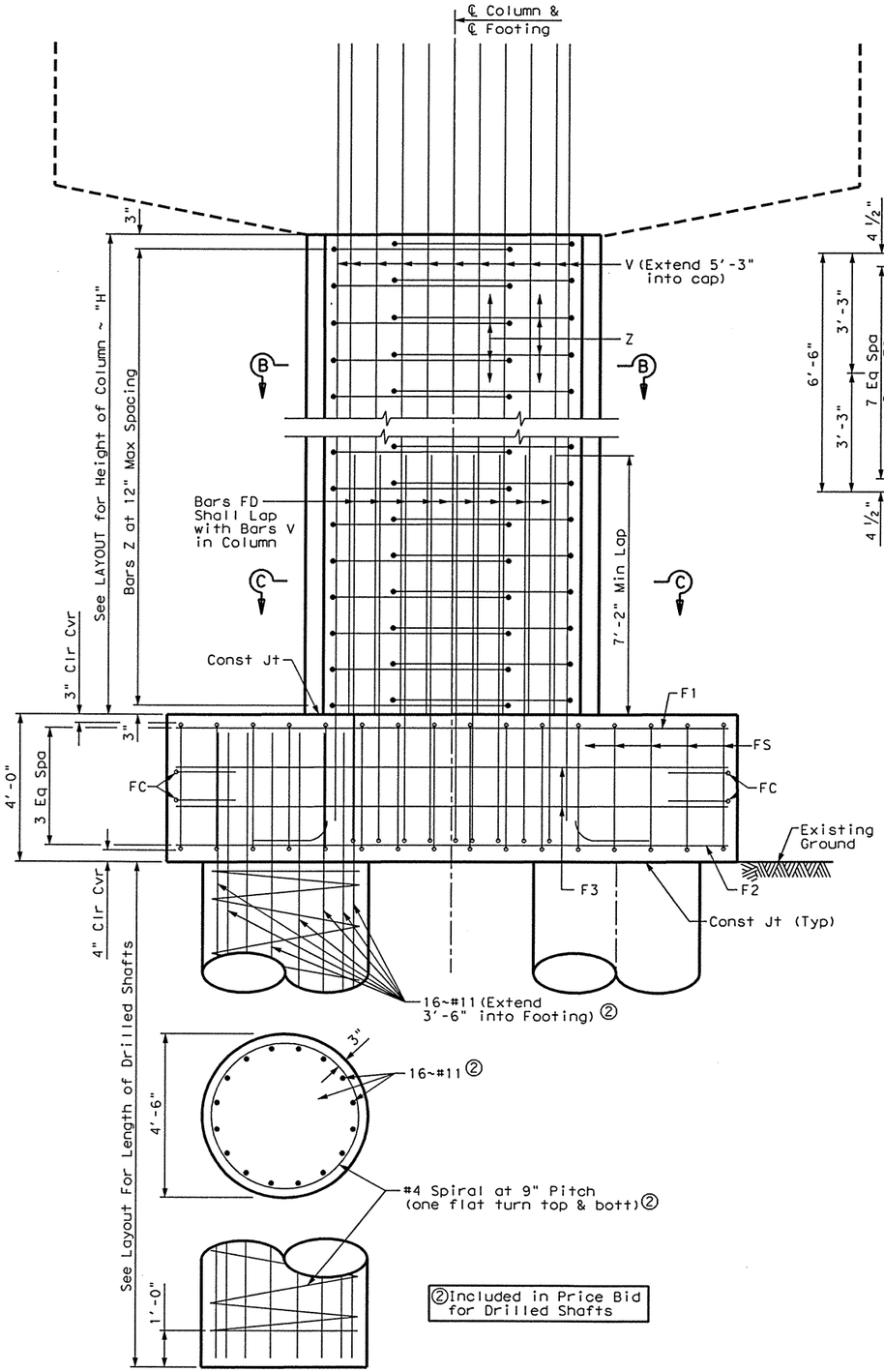

ELEVATION

Column & Footing Elevation

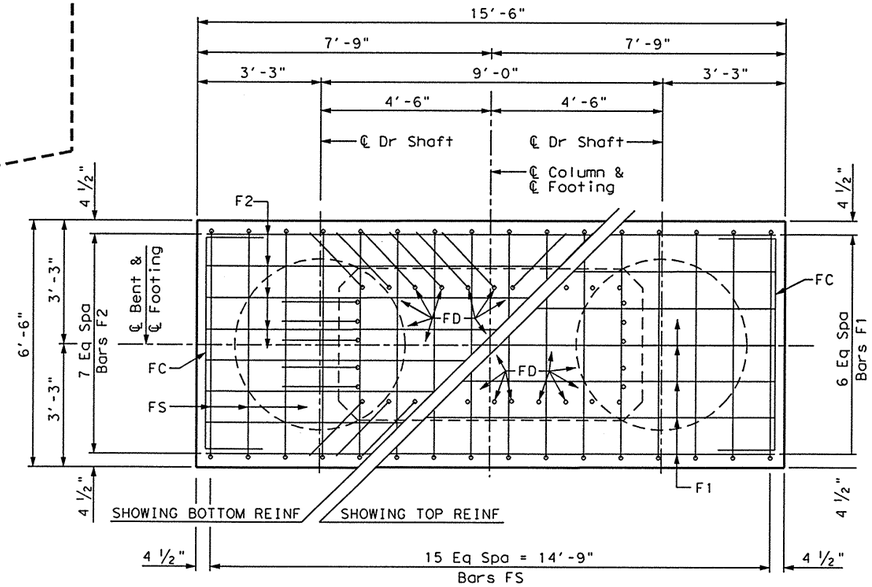

PLAN

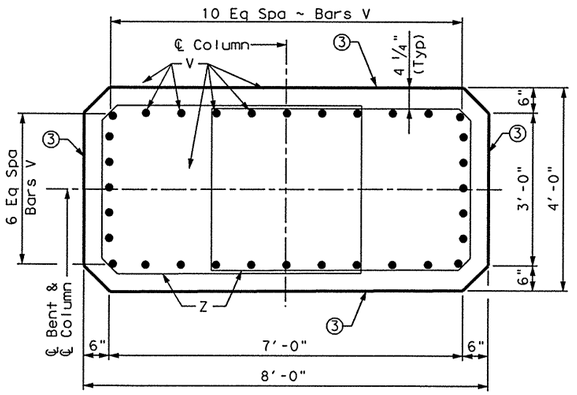

SECTION B-B

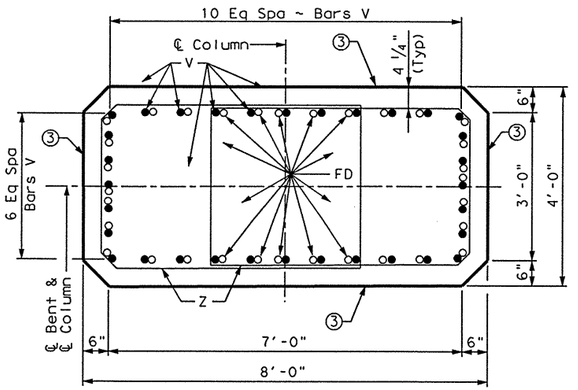

SECTION C-C

③ See "Form Liner Details" for details not shown.

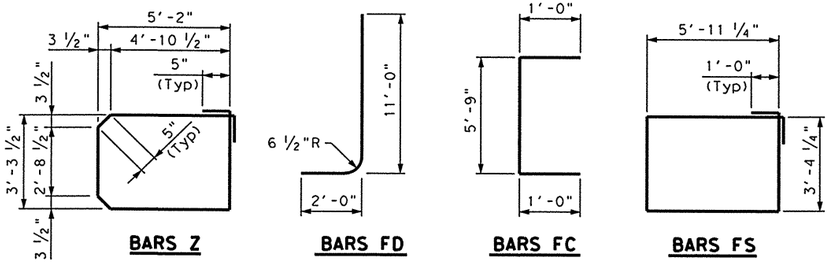

TABLE OF FOOTING QUANTITIES

Bar	No.	Size	Length	Weight
F1	7	# 6	15'- 0"	158
F2	8	#11	15'- 0"	638
F3	4	# 6	15'- 0"	90
FC	4	# 6	7'- 9"	47
FD	32	#11	13'- 0"	2210
FS	16	# 6	20'- 7"	495
Reinforcing Steel			Lb	3,638
Class "C" Concrete			CY	15.0

TABLE OF VARIABLE COLUMN QUANTITIES ⑤

TOTAL ESTIMATED QUANTITIES

Bent No.	"H"	Class "C" Conc (Cols)	Bars Z 17'-5" ~ #4		Bars V 32 ~ # 11		Reinf Steel ④	Class "C" Conc ④
	Ft	CY	No.	Weight	Length	Weight	Lb	CY
8	32	37.3	66	768	37'-3"	6,333	18,537	100.6

④ Adjust Reinforcing Steel total by 195 lbs & Class "C" Concrete total by 1.16 cy for each foot variation in "H" value.

⑤ Adjust Bars V length by 1 ft and add two additional Bars Z for each linear foot variation in "H" value.

HS25 LOADING

SHEET 2 OF 2

Parsons Brinckerhoff Quade & Douglas Inc.

Texas Department of Transportation

© 2003 by TxDOT

INTERIOR BENT NO. 8

BUS 281 NB DIRECT CONNECT

STATE OF TEXAS
ALLEN R. CROZIER
81450
REGISTERED PROFESSIONAL ENGINEER

Allen R. Crozier 6/25/03

281NBDCBNT08B.DGN

DESIGNED: ARC	FED. RD DIV. NO.	STATE	FEDERAL AID PROJECT No.		HIGHWAY No.
CHECKED: ALA	6	TEXAS	NH 2003 ( )		US 281
DRAWN: DRM	STATE DISTRICT	COUNTY	CONTROL No.	SECTION No.	JOB No.	SHEET No.
CHECKED: ARC	PHARR	HIDALGO	0255	08	091	983

ESMERALDA G. EGGER
10:37:13 AM
06/25/2003
I:\projects\22322a\CADD\Sheets\Structures\Direct Connects\281nbdcBML01.dgn

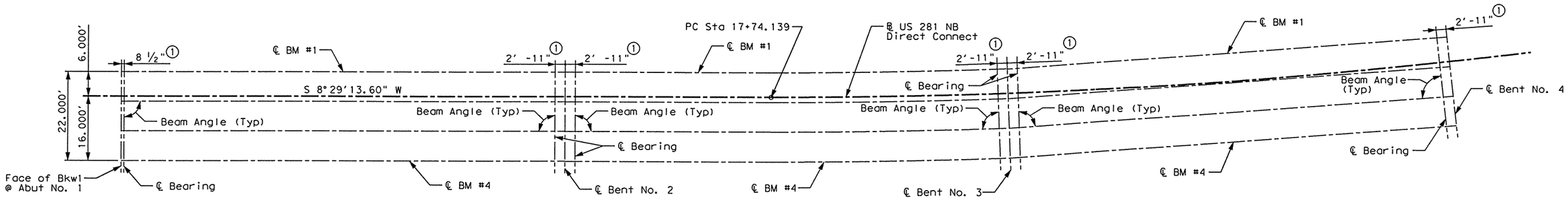

SPAN 1
(TYPE IV BEAMS)

SPAN 2
(TYPE IV BEAMS)

SPAN 3
(TYPE IV BEAMS)

BENT REPORT

BENT NO. 1 (N 81 30 46.39 W)
DISTANCE BETWEEN STATION LINE AND BEAM 1 6.000 L

			BEAM SPAC. (C.L. BENT)	BEAM ANGLE D	M	S
SPAN 1	BEAM	1	.000	90	0	0
	BEAM	2	7.333	90	0	0
	BEAM	3	7.333	90	0	0
	BEAM	4	7.333	90	0	0
	TOTAL		22.000			

BENT NO. 2 (N 81 30 46.39 W)
DISTANCE BETWEEN STATION LINE AND BEAM 1 6.000 L

			BEAM SPAC. (C.L. BENT)	BEAM ANGLE D	M	S
SPAN 1	BEAM	1	.000	90	0	0
	BEAM	2	7.333	90	0	0
	BEAM	3	7.333	90	0	0
	BEAM	4	7.333	90	0	0
	TOTAL		22.000			
SPAN 2	BEAM	1	.000	89	23	58
	BEAM	2	7.333	89	23	53
	BEAM	3	7.333	89	23	48
	BEAM	4	7.333	89	23	43
	TOTAL		22.000			

BENT REPORT

BENT NO. 3 (N 83 45 40.31 W)
DISTANCE BETWEEN STATION LINE AND BEAM 1 6.000 L

			BEAM SPAC. (C.L. BENT)	BEAM ANGLE D	M	S
SPAN 2	BEAM	1	.000	88	21	7
	BEAM	2	7.333	88	21	12
	BEAM	3	7.333	88	21	17
	BEAM	4	7.333	88	21	22
	TOTAL		22.000			
SPAN 3	BEAM	1	.000	87	53	56
	BEAM	2	7.333	87	53	56
	BEAM	3	7.333	87	53	56
	BEAM	4	7.333	87	53	56
	TOTAL		22.000			

BENT NO. 4 (N 87 57 46.39 W)
DISTANCE BETWEEN STATION LINE AND BEAM 1 6.000 L

			BEAM SPAC. (C.L. BENT)	BEAM ANGLE D	M	S
SPAN 3	BEAM	1	.000	87	53	56
	BEAM	2	7.333	87	53	56
	BEAM	3	7.333	87	53	56
	BEAM	4	7.333	87	53	56
	TOTAL		22.000			

BEAM REPORT

BEAM REPORT, SPAN 1

	HORIZONTAL DISTANCE C-C BENT	C-C BRG.	TRUE DISTANCE ② BOT. BM. FLG.
BEAM 1	110.000	106.375	107.59
BEAM 2	110.000	106.375	107.59
BEAM 3	110.000	106.375	107.59
BEAM 4	110.000	106.375	107.59

BEAM REPORT, SPAN 2

	HORIZONTAL DISTANCE C-C BENT	C-C BRG.	TRUE DISTANCE ② BOT. BM. FLG.
BEAM 1	109.756	103.921	105.13
BEAM 2	110.043	104.209	105.42
BEAM 3	110.331	104.496	105.71
BEAM 4	110.619	104.784	106.00

BEAM REPORT, SPAN 3

	HORIZONTAL DISTANCE C-C BENT	C-C BRG.	TRUE DISTANCE ② BOT. BM. FLG.
BEAM 1	109.535	103.698	104.89
BEAM 2	110.073	104.236	105.43
BEAM 3	110.611	104.774	105.96
BEAM 4	111.148	105.311	106.50

① Measured perpendicular to ℄ Bent.

② Beam lengths shown are bottom beam flange lengths with adjustments made for beam slope.

STATE OF TEXAS
ALLEN R. CROZIER
81450
REGISTERED PROFESSIONAL ENGINEER

Allen R. Crozier
6/25/03

Parsons Brinckerhoff Quade & Douglas Inc.

Texas Department of Transportation

© 2003 by TxDOT

BEAM LAYOUT
(SPANS #1 - #3)

BUS 281 NB DIRECT CONNECT

281NBDCBML01.DGN

DESIGNED: ARC	FED. RD DIV. No.	STATE	FEDERAL AID PROJECT No.			HIGHWAY No.
CHECKED: ALA	6	TEXAS	NH 2003 ( )			US 281
DRAWN: DRM	STATE DISTRICT	COUNTY	CONTROL No.	SECTION No.	JOB No.	SHEET No.
CHECKED: ARC	PHARR	HIDALGO	0255	08	091	984

ESMERALDA G. EGGER
10:37:39 AM
06/25/2003
I:\projects\22322a\CADD\Sheets\Structures\Direct Connects\281nbdcBML02.dgn

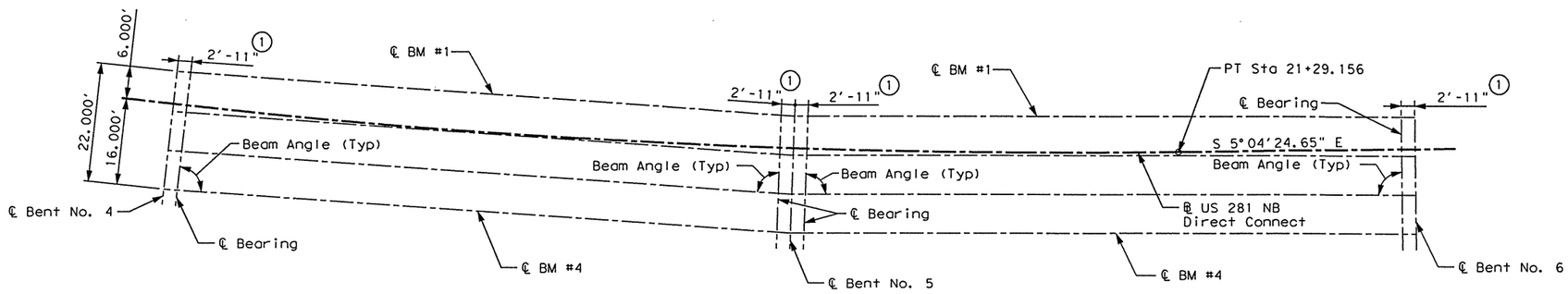

SPAN 4
(TYPE IV BEAMS)

SPAN 5
(TYPE IV BEAMS)

1. Measured perpendicular to ℄ Bent.
2. Beam lengths shown are bottom beam flange lengths with adjustments made for beam slope.

BENT REPORT

BENT NO. 4 (N 87 57 46.39 W)
DISTANCE BETWEEN STATION LINE AND BEAM 1 6.000 L

			BEAM SPAC. (C.L. BENT)	BEAM ANGLE D M S
SPAN 4	BEAM	1	.000	87 48 13
	BEAM	2	7.333	87 48 13
	BEAM	3	7.333	87 48 13
	BEAM	4	7.333	87 48 13
	TOTAL		22.000	

BENT NO. 5 (S 87 38 39.97 W)
DISTANCE BETWEEN STATION LINE AND BEAM 1 6.000 L

			BEAM SPAC. (C.L. BENT)	BEAM ANGLE D M S
SPAN 4	BEAM	1	.000	87 48 13
	BEAM	2	7.333	87 48 13
	BEAM	3	7.333	87 48 13
	BEAM	4	7.333	87 48 13
	TOTAL		22.000	
SPAN 5	BEAM	1	.000	88 7 17
	BEAM	2	7.333	88 7 23
	BEAM	3	7.333	88 7 29
	BEAM	4	7.333	88 7 34
	TOTAL		22.000	

BENT NO. 6 (S 84 55 35.32 W)
DISTANCE BETWEEN STATION LINE AND BEAM 1 6.000 L

			BEAM SPAC. (C.L. BENT)	BEAM ANGLE D M S
SPAN 5	BEAM	1	.000	89 9 37
	BEAM	2	7.333	89 9 31
	BEAM	3	7.333	89 9 26
	BEAM	4	7.333	89 9 20
	TOTAL		22.000	

BEAM REPORT

BEAM REPORT, SPAN 4 ②

	HORIZONTAL DISTANCE C-C BENT	C-C BRG.	TRUE DISTANCE BOT. BM. FLG.
BEAM 1	114.512	108.674	109.82
BEAM 2	115.074	109.236	110.38
BEAM 3	115.636	109.799	110.95
BEAM 4	116.198	110.361	111.51

BEAM REPORT, SPAN 5 ②

	HORIZONTAL DISTANCE C-C BENT	C-C BRG.	TRUE DISTANCE BOT. BM. FLG.
BEAM 1	114.701	108.866	109.98
BEAM 2	115.049	109.214	110.32
BEAM 3	115.397	109.562	110.67
BEAM 4	115.745	109.909	111.01

STATE OF TEXAS
ALLEN R. CROZIER
81450
REGISTERED PROFESSIONAL ENGINEER
Allen R. Crozier
6/25/03

Parsons Brinckerhoff Quade & Douglas Inc.

Texas Department of Transportation

© 2003 by TxDOT

BEAM LAYOUT
(SPANS #4 & #5)

BUS 281 NB DIRECT CONNECT

281NBDCBML02.DGN

DESIGNED: ARC	FED. RD DIV. No.	STATE	FEDERAL AID PROJECT No.			HIGHWAY No.
CHECKED: ALA	6	TEXAS	NH 2003 ( )			US 281
DRAWN: DRM	STATE DISTRICT	COUNTY	CONTROL No.	SECTION No.	JOB No.	SHEET No.
CHECKED: ARC	PHARR	HIDALGO	0255	08	091	985

ESMERALDA G. EGGER
10:38:09 AM
06/25/2003
I:\projects\22322a\CADD\Sheets\Structures\Direct Connects\281nbdcBML04.dgn

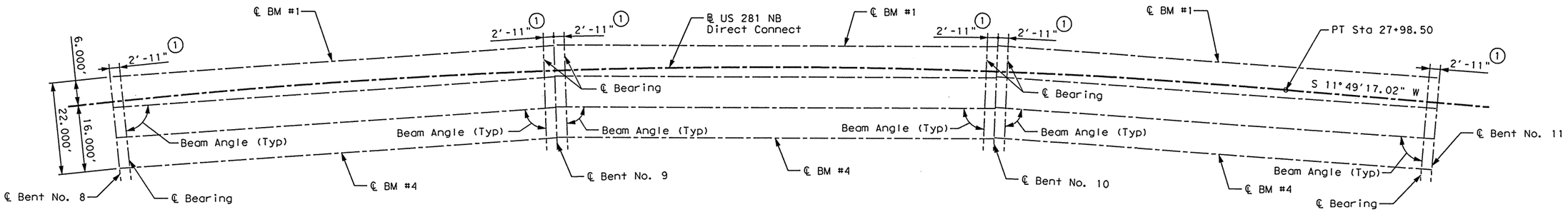

SPAN 8
(TYPE IV BEAMS)

SPAN 9
(TYPE IV BEAMS)

SPAN 10
(TYPE IV BEAMS)

BENT REPORT

BENT NO. 8 (N 88 55 51.48 W)
DISTANCE BETWEEN STATION LINE AND BEAM 1 6.000 L

			BEAM SPAC. (C.L. BENT)	BEAM ANGLE D	M	S
SPAN 8	BEAM	1	.000	87	58	31
	BEAM	2	7.333	87	58	31
	BEAM	3	7.333	87	58	31
	BEAM	4	7.333	87	58	31
	TOTAL		22.000			

BENT NO. 9 (N 84 52 55.43 W)
DISTANCE BETWEEN STATION LINE AND BEAM 1 6.000 L

			BEAM SPAC. (C.L. BENT)	BEAM ANGLE D	M	S
SPAN 8	BEAM	1	.000	87	58	31
	BEAM	2	7.333	87	58	31
	BEAM	3	7.333	87	58	31
	BEAM	4	7.333	87	58	31
	TOTAL		22.000			
SPAN 9	BEAM	1	.000	87	58	31
	BEAM	2	7.333	87	58	31
	BEAM	3	7.333	87	58	31
	BEAM	4	7.333	87	58	31
	TOTAL		22.000			

BENT REPORT

BENT NO. 10 (N 80 49 59.38 W)
DISTANCE BETWEEN STATION LINE AND BEAM 1 6.000 L

			BEAM SPAC. (C.L. BENT)	BEAM ANGLE D	M	S
SPAN 9	BEAM	1	.000	87	58	31
	BEAM	2	7.333	87	58	31
	BEAM	3	7.333	87	58	31
	BEAM	4	7.333	87	58	31
	TOTAL		22.000			
SPAN 10	BEAM	1	.000	88	13	0
	BEAM	2	7.333	88	12	55
	BEAM	3	7.333	88	12	49
	BEAM	4	7.333	88	12	44
	TOTAL		22.000			

BENT NO. 11 (N 78 10 42.97 W)
DISTANCE BETWEEN STATION LINE AND BEAM 1 6.000 L

			BEAM SPAC. (C.L. BENT)	BEAM ANGLE D	M	S
SPAN 10	BEAM	1	.000	89	7	43
	BEAM	2	7.333	89	7	48
	BEAM	3	7.333	89	7	53
	BEAM	4	7.333	89	7	58
	TOTAL		22.000			

BEAM REPORT

BEAM REPORT, SPAN 8 ②

	HORIZONTAL DISTANCE C-C BENT	C-C BRG.	TRUE DISTANCE BOT. BM. FLG.
BEAM 1	106.402	100.565	101.68
BEAM 2	105.884	100.047	101.16
BEAM 3	105.366	99.529	100.64
BEAM 4	104.848	99.011	100.13

BEAM REPORT, SPAN 9 ②

	HORIZONTAL DISTANCE C-C BENT	C-C BRG.	TRUE DISTANCE BOT. BM. FLG.
BEAM 1	106.402	100.565	101.71
BEAM 2	105.884	100.047	101.19
BEAM 3	105.366	99.529	100.68
BEAM 4	104.848	99.011	100.16

BEAM REPORT, SPAN 10 ②

	HORIZONTAL DISTANCE C-C BENT	C-C BRG.	TRUE DISTANCE BOT. BM. FLG.
BEAM 1	106.265	100.430	101.63
BEAM 2	105.926	100.091	101.28
BEAM 3	105.586	99.751	100.93
BEAM 4	105.246	99.411	100.58

① Measured perpendicular to ℄ Bent.

② Beam lengths shown are bottom beam flange lengths with adjustments made for beam slope.

STATE OF TEXAS
ALLEN R. CROZIER
81450
REGISTERED PROFESSIONAL ENGINEER
Allen R. Crozier
6/25/03

Parsons Brinckerhoff Quade & Douglas Inc.

Texas Department of Transportation

© 2003 by TxDOT

BEAM LAYOUT
(SPANS #8 - #10)

BUS 281 NB DIRECT CONNECT

281NBDCBML04.DGN

DESIGNED: ARC	FED. RD DIV. No.	STATE	FEDERAL AID PROJECT No.			HIGHWAY No.	
CHECKED: ALA	6	TEXAS	NH 2003 ( )			US 281	
DRAWN: DRM	STATE DISTRICT	COUNTY	CONTROL No.	SECTION No.	JOB No.	SHEET No.	
CHECKED: ARC	PHARR	HIDALGO	0255	08	091	986	

ESMERALDA G. EGGER
10:38:37 AM
06/25/2003
I:\projects\22322a\CADD\Sheets\Structures\Direct Connects\281nbdcBML05.dgn

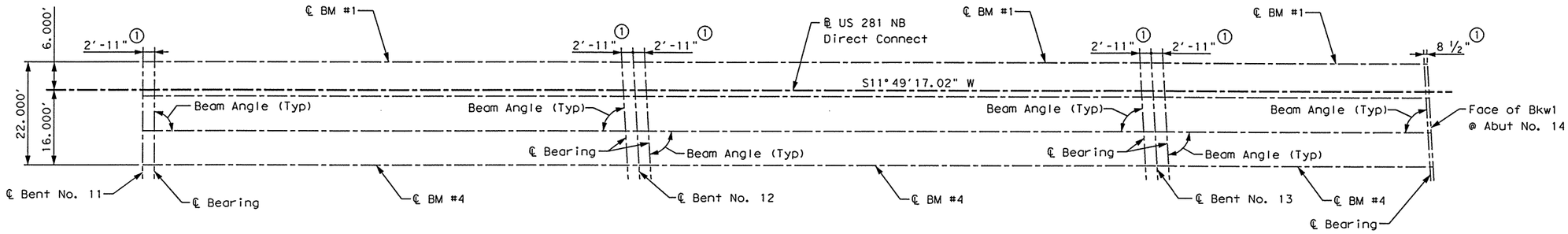

SPAN 11
(TYPE IV BEAMS)

SPAN 12
(TYPE IV BEAMS)

SPAN 13
(TYPE IV BEAMS)

BENT REPORT

BENT NO. 11 (N 78 10 42.97 W)
DISTANCE BETWEEN STATION LINE AND BEAM 1 6.000 L

			BEAM SPAC. (C.L. BENT)	BEAM ANGLE D	M	S
SPAN 11	BEAM	1	.000	90	0	0
	BEAM	2	7.333	90	0	0
	BEAM	3	7.333	90	0	0
	BEAM	4	7.333	90	0	0
	TOTAL		22.000			

BENT NO. 12 (S 81 31 1.77 E)
DISTANCE BETWEEN STATION LINE AND BEAM 1 6.010 L

			BEAM SPAC. (C.L. BENT)	BEAM ANGLE D	M	S
SPAN 11	BEAM	1	.000	86	39	41
	BEAM	2	7.346	86	39	41
	BEAM	3	7.346	86	39	41
	BEAM	4	7.346	86	39	41
	TOTAL		22.037			
SPAN 12	BEAM	1	.000	86	39	41
	BEAM	2	7.346	86	39	41
	BEAM	3	7.346	86	39	41
	BEAM	4	7.346	86	39	41
	TOTAL		22.037			

BENT REPORT

BENT NO. 13 (S 81 31 1.77 E)
DISTANCE BETWEEN STATION LINE AND BEAM 1 6.010 L

			BEAM SPAC. (C.L. BENT)	BEAM ANGLE D	M	S
SPAN 12	BEAM	1	.000	86	39	41
	BEAM	2	7.346	86	39	41
	BEAM	3	7.346	86	39	41
	BEAM	4	7.346	86	39	41
	TOTAL		22.037			
SPAN 13	BEAM	1	.000	86	39	41
	BEAM	2	7.346	86	39	41
	BEAM	3	7.346	86	39	41
	BEAM	4	7.346	86	39	41
	TOTAL		22.037			

BENT NO. 14 (S 81 31 1.77 E)
DISTANCE BETWEEN STATION LINE AND BEAM 1 6.010 L

			BEAM SPAC. (C.L. BENT)	BEAM ANGLE D	M	S
SPAN 13	BEAM	1	.000	86	39	41
	BEAM	2	7.346	86	39	41
	BEAM	3	7.346	86	39	41
	BEAM	4	7.346	86	39	41
	TOTAL		22.037			

BEAM REPORT

BEAM REPORT, SPAN 11

		HORIZONTAL DISTANCE C-C BENT	C-C BRG.	TRUE DISTANCE ② BOT. BM. FLG.
BEAM	1	106.475	100.637	101.85
BEAM	2	106.903	101.064	102.27
BEAM	3	107.331	101.492	102.69
BEAM	4	107.758	101.920	103.10

BEAM REPORT, SPAN 12

		HORIZONTAL DISTANCE C-C BENT	C-C BRG.	TRUE DISTANCE ② BOT. BM. FLG.
BEAM	1	112.750	106.907	108.12
BEAM	2	112.750	106.907	108.12
BEAM	3	112.750	106.907	108.12
BEAM	4	112.750	106.907	108.12

BEAM REPORT, SPAN 13

		HORIZONTAL DISTANCE C-C BENT	C-C BRG.	TRUE DISTANCE ② BOT. BM. FLG.
BEAM	1	60.000	56.369	57.52
BEAM	2	60.000	56.369	57.52
BEAM	3	60.000	56.369	57.52
BEAM	4	60.000	56.369	57.52

① Measured perpendicular to ℄ Bent.

② Beam lengths shown are bottom beam flange lengths with adjustments made for beam slope.

STATE OF TEXAS
ALLEN R. CROZIER
81450
REGISTERED PROFESSIONAL ENGINEER
Allen R. Crozier
6/25/03

Parsons Brinckerhoff Quade & Douglas Inc.

Texas Department of Transportation

© 2003 by TxDOT

BEAM LAYOUT
(SPANS #11 - #13)

BUS 281 NB DIRECT CONNECT

281NBDCBML05.DGN

DESIGNED: ARC	FED. RD DIV. No.	STATE	FEDERAL AID PROJECT No.	HIGHWAY No.
CHECKED: ALA	6	TEXAS	NH 2003 ( )	US 281

DRAWN: DRM	STATE DISTRICT	COUNTY	CONTROL No.	SECTION No.	JOB No.	SHEET No.
CHECKED: ARC	PHARR	HIDALGO	0255	08	091	987

ESMERALDA G. EGGER
10:42:40 AM
06/25/2003
I:\projects\22322a\CADD\Sheets\Structures\Direct Connects\281nbdcSPAN01.dgn

TABLE OF ESTIMATED QUANTITIES

SPAN	REINF CONC SLAB	PRESTRESSED CONC BEAMS (Type IV) (2)	CLASS "S" CONCRETE	REINFORCING STEEL (1)
No.	SF	LF	CY	Lb
1	3,080	430.36	83.0	20,020
2	3,086	422.26	81.6	20,059
3	3,090	422.78	81.8	20,085
TOTAL	9,256	1,275.40	246.4	60,164

(1) Reinforcing steel weight is calculated using an approximate factor of 6.5 lbs per sq ft

(2) Quantity shown are bottom beam flange lengths with adjustments made for beam slope. See BEAM LAYOUT for beam lengths and beam angles.

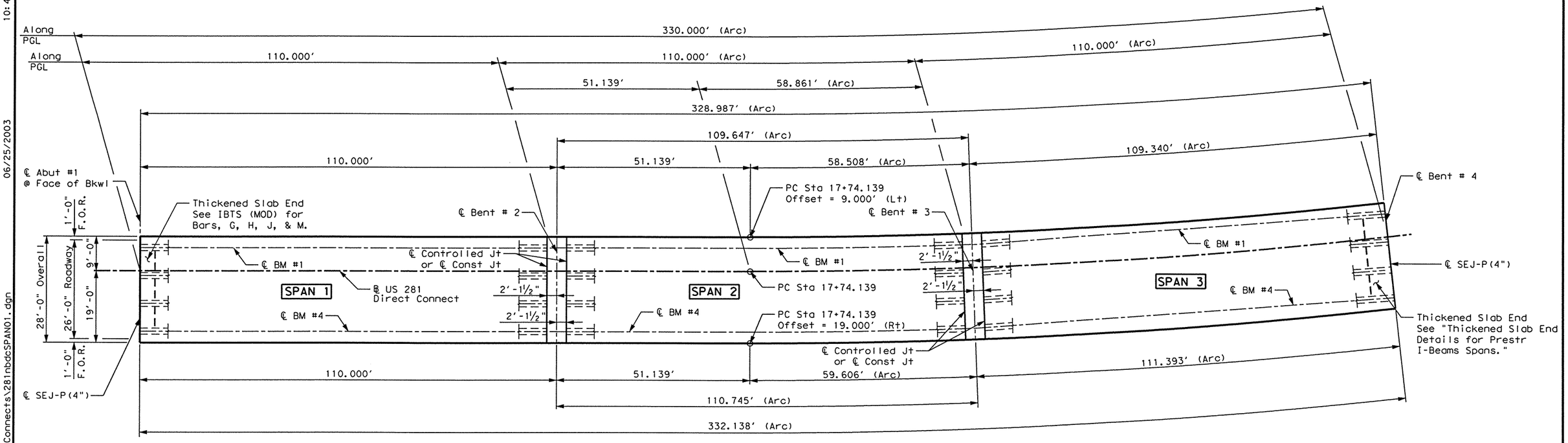

PLAN

GENERAL NOTES:

Designed according to AASHTO 1996 Standard and current Interim Specifications.
See PCP(C)(MOD) Standard for details and quantity adjustments if this option is used.
See SEJ-P Standard for additional details.
See IBTS(MOD) for Thickened Slab or "Thickened Slab End Details for Prestr I-Beam Spans" for Thickened Slab over Inverted-T Bents.
See IBMS(MOD) for slab details over Inverted-T.
All reinforcing shall be Grade 60.
Class "S" Concrete strength f'c = 4000 psi.
Bar laps, where required, shall be as follows:
#4 = 1'-5"
#5 = 1'-9"

STATE OF TEXAS
ALLEN R. CROZIER
81450
REGISTERED PROFESSIONAL ENGINEER
6/25/03

HS25 LOADING SHEET 1 OF 2

Parsons Brinckerhoff Quade & Douglas Inc.

Texas Department of Transportation
© 2003 by TxDOT

330.00' PRESTR CONCRETE BEAM UNIT
(SPANS #1 - #3)
BUS 281 NB DIRECT CONNECT

281NBDCSPAN01.DGN

DESIGNED: ARC	FED. RD DIV. NO.	STATE	FEDERAL AID PROJECT No.	HIGHWAY No.
CHECKED: ALA	6	TEXAS	NH 2003 ( )	US 281

DRAWN: DRM	STATE DISTRICT	COUNTY	CONTROL No.	SECTION No.	JOB No.	SHEET No.
CHECKED: ARC	PHARR	HIDALGO	0255	08	091	988

ESMERALDA G. EGGER
10:43:29 AM
06/25/2003
I:\projects\22322o\CADD\Sheets\Structures\Direct Connects\281nbdoSPAN01B.dgn

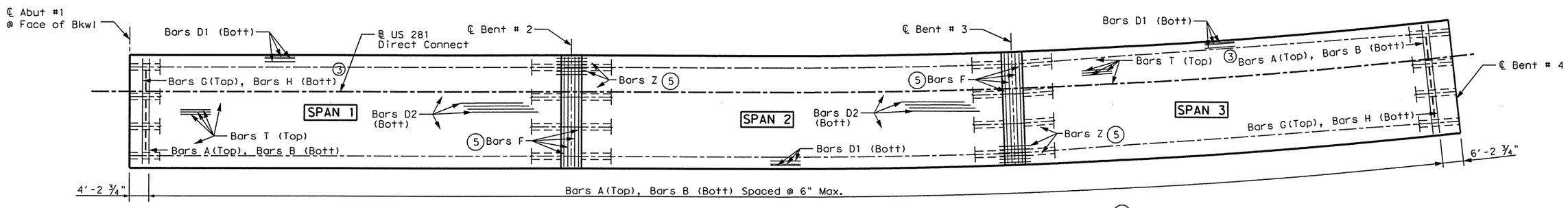

PLAN
(Showing Slab Reinforcing)

5 See MISCELLANEOUS SLAB DETAILS, Sheet 2 of 2 for additional details.

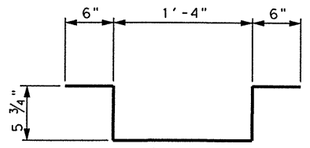

BARS U

NOTE: Bars U shall match Beam Bars R spacing for a min. length of 1/4 x (Beam Length). Span 1 only.

BAR TABLE

BAR	SIZE
A	#5
B	#5
D	#5
G	#5
H	#6
J	#5
M	#5
T	#4
U	#4
W	#4
Y	#4
Z	#4

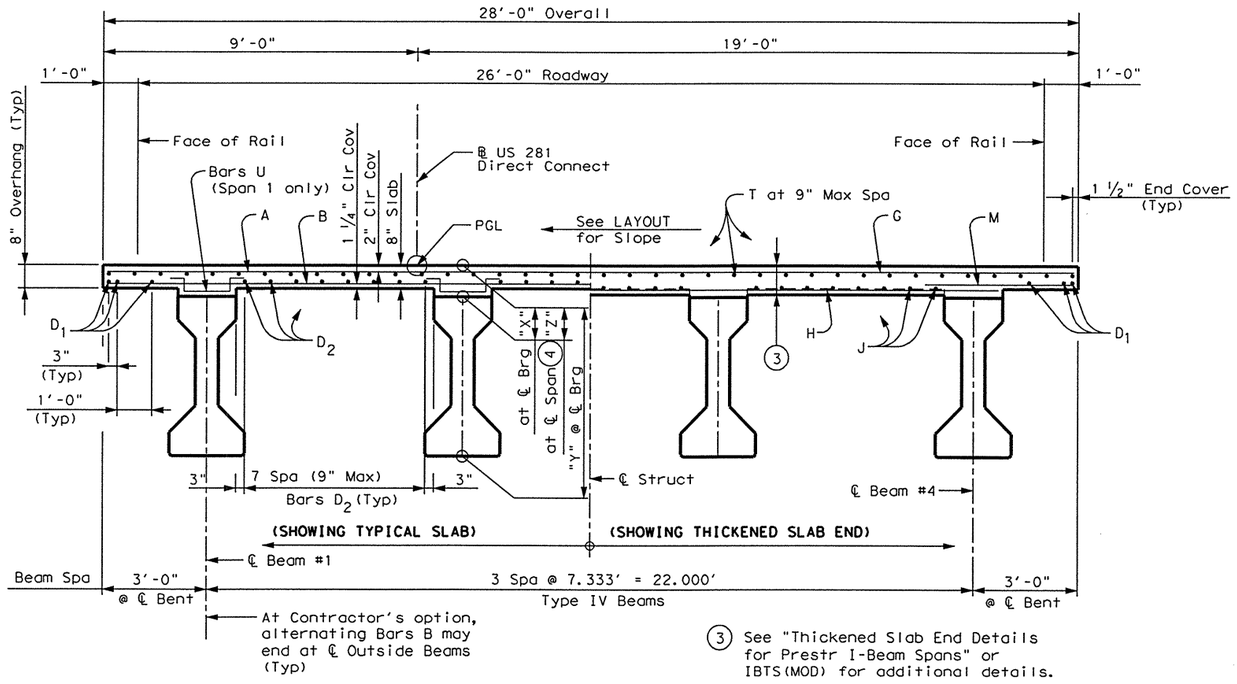

3 See "Thickened Slab End Details for Prestr I-Beam Spans" or IBTS(MOD) for additional details.

TYPICAL RADIAL SECTION

Span No.	Beam No.	"A"	"B"
1	1&4	.088'	.123'
1	2&3	.096'	.135'
2	1	.080'	.112'
2	2	.089'	.125'
2	3	.090'	.126'
2	4	.082'	.116'
3	1	.068'	.096'
3	2	.089'	.125'
3	3	.091'	.127'
3	4	.095'	.133'

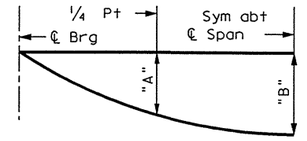

NOTE: Deflections shown are due to cast - in place concrete only. (E_c= 5 X 10^6 psi) Calculated deflections shown are theoretical and actual dimensions may be less. Deflections shall be adjusted based on field observations.

DEAD LOAD DEFLECTION DIAGRAM

TABLE OF SECTION DEPTHS

Span No.	Beam No.	"X" at ℄ Brg	"Y" at ℄ Brg	"Z" at ℄ Span (4)
1	1 & 2	12 1/4"	5'-6 1/4"	10"
1	3	12 1/4"	5'-6 1/4"	9 5/8"
1	4	12 1/4"	5'-6 1/4"	9 1/8"
2	1	10 1/2"	5'-4 1/2"	9 1/4"
2	2	10 1/2"	5'-4 1/2"	9 5/8"
2	3 & 4	10 1/2"	5'-4 1/2"	9 7/8"
3	ALL	10 1/2"	5'-4 1/2"	9 1/2"

(4) Theoretical dimension

HS25 LOADING SHEET 2 OF 2

Parsons Brinckerhoff Quade & Douglas Inc.

Texas Department of Transportation

© 2003 by TxDOT

330.00' PRESTR CONCRETE BEAM UNIT
(SPANS #1 - #3)
BUS 281 NB DIRECT CONNECT

STATE OF TEXAS
ALLEN R. CROZIER
81450
REGISTERED PROFESSIONAL ENGINEER
6/25/03

281NBDCSPAN01B.DGN

DESIGNED: ARC	FED. RD DIV. NO.	STATE	FEDERAL AID PROJECT No.	HIGHWAY No.
CHECKED: ALA	6	TEXAS	NH 2003 ( )	US 281

DRAWN: DRM	STATE DISTRICT	COUNTY	CONTROL No.	SECTION No.	JOB No.	SHEET No.
CHECKED: ARC	PHARR	HIDALGO	0255	08	091	989

ESMERALDA G. EGGER
10:44:12 AM
06/25/2003
I:\projects\22322a\CADD\Sheets\Structures\Direct Connects\281nbdcSPAN02.dgn

TABLE OF ESTIMATED QUANTITIES

SPAN	REINF CONC SLAB	PRESTRESSED CONC BEAMS (Type IV) (2)	CLASS "S" CONCRETE	REINFORCING STEEL (1)
No.	SF	LF	CY	Lb
4	3,231	442.66	85.4	21,002
5	3,227	441.98	85.8	20,976
TOTAL	6,458	884.64	171.2	41,978

(1) Reinforcing steel weight is calculated using an approximate factor of 6.5 lbs per sq ft

(2) Quantity shown are bottom beam flange lengths with adjustments made for beam slope. See BEAM LAYOUT for beam lengths and beam angles.

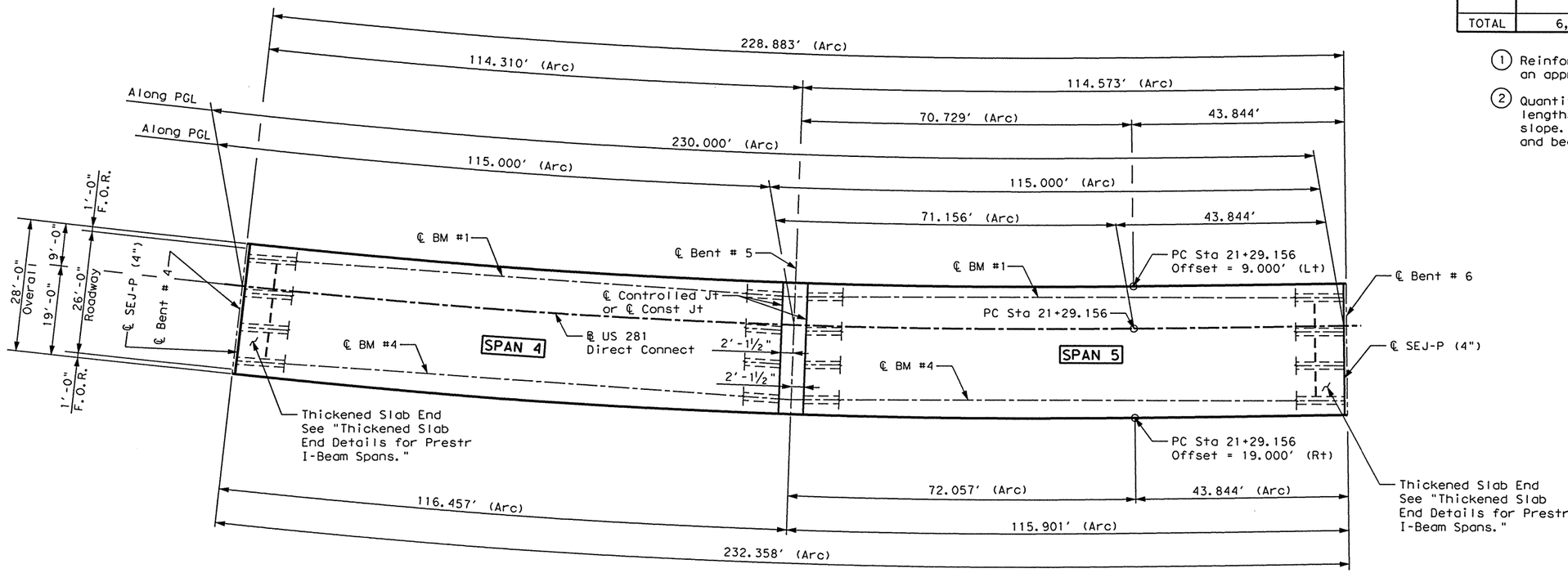

PLAN

GENERAL NOTES:

Designed according to AASHTO 1996 Standard and current Interim Specifications.
See PCP(C)(MOD) Standard for details and quantity adjustments if this option is used.
See SEJ-P Standard for additional details.
See "Thickened Slab End Details for Prestr I-Beam Spans" for Thickened Slab over Inverted-T Bents.
See IBMS(MOD) for slab details over Inverted-T.
All reinforcing shall be Grade 60.
Class "S" Concrete strength f'c = 4000 psi.
Bar laps, where required, shall be as follows:
#4 = 1'-5"
#5 = 1'-9"

HS25 LOADING SHEET 1 OF 2

STATE OF TEXAS
ALLEN R. CROZIER
81450
REGISTERED PROFESSIONAL ENGINEER
Allen R. Crozier
6/25/03

Parsons Brinckerhoff Quade & Douglas Inc.

Texas Department of Transportation

© 2003 by TxDOT

230.00' PRESTR CONCRETE BEAM UNIT
(SPANS #4 & #5)
BUS 281 NB DIRECT CONNECT

281NBDCSPAN02.DGN

DESIGNED: ARC	FED. RD DIV. No.	STATE	FEDERAL AID PROJECT No.			HIGHWAY No.
CHECKED: ALA	6	TEXAS	NH 2003 ( )			US 281
DRAWN:	STATE DISTRICT	COUNTY	CONTROL No.	SECTION No.	JOB No.	SHEET No.
CHECKED: ARC	PHARR	HIDALGO	0255	08	091	990

ESMERALDA G. EGGER
10:44:40 AM
06/25/2003
I:\projects\22322a\CADD\Sheets\Structures\Direct Connects\281nbdcSPAN02B.dgn

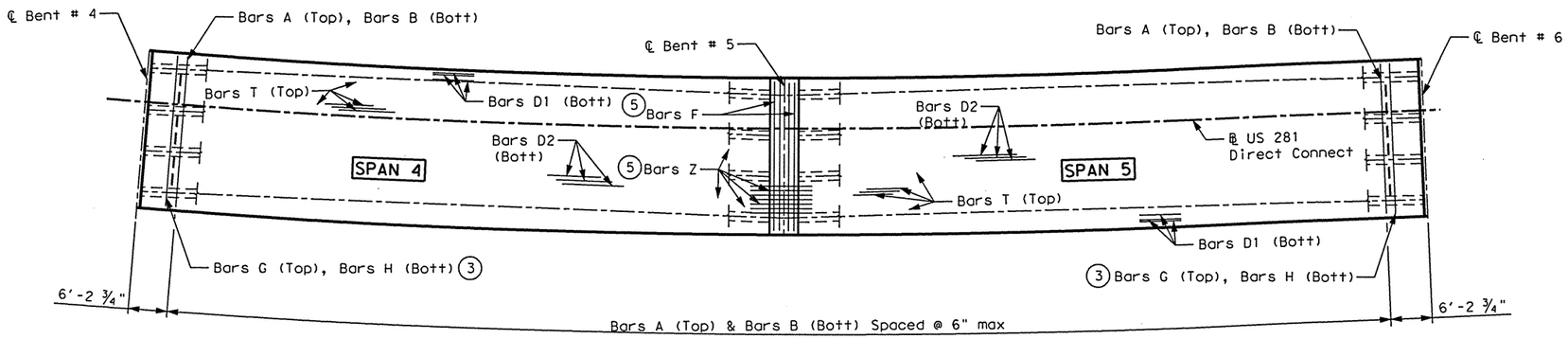

PLAN
(Showing Slab Reinforcing)

(5) See MISCELLANEOUS SLAB DETAILS, Sheet 2 of 2 for additional details.

BAR TABLE

BAR	SIZE
A	#5
B	#5
D	#5
G	#5
H	#6
J	#5
M	#5
T	#4
W	#4
Y	#4
Z	#4

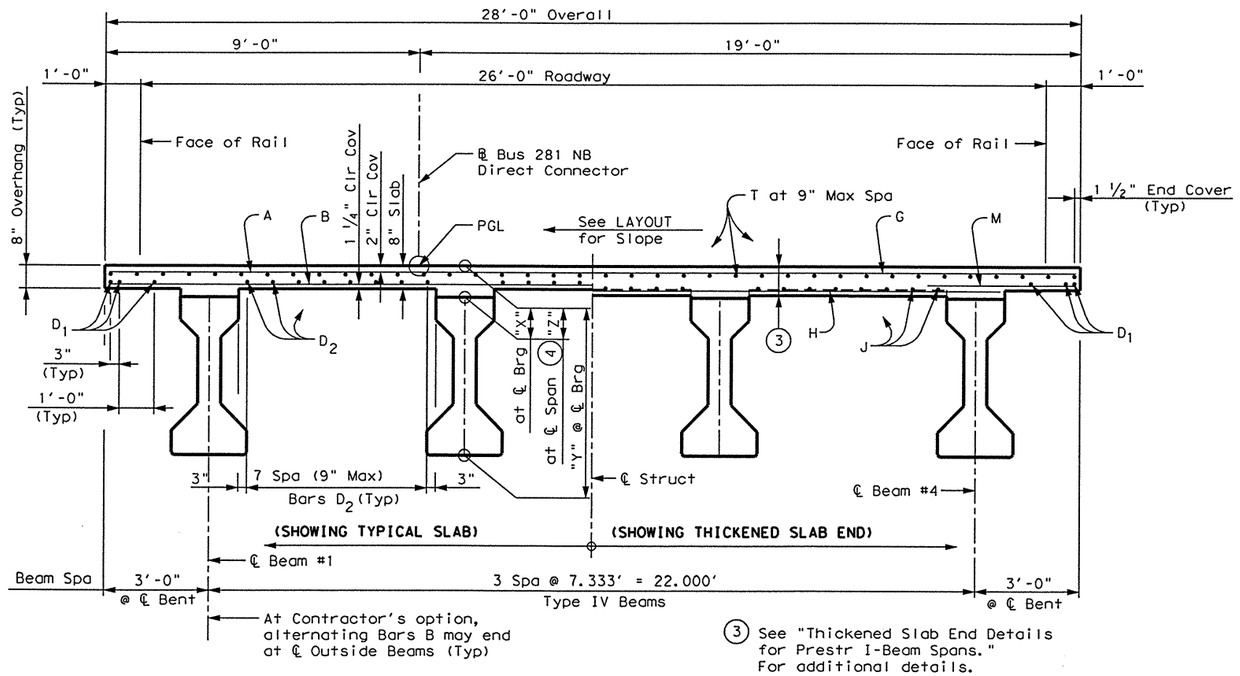

(3) See "Thickened Slab End Details for Prestr I-Beam Spans." For additional details.

TYPICAL RADIAL SECTION

Span No.	Beam No.	"A"	"B"
4	1	.083′	.116′
4	2	.107′	.150′
4	3	.109′	.153′
4	4	.115′	.162′
5	1	.100′	.141′
5	2	.107′	.150′
5	3	.109′	.153′
5	4	.105′	.148′

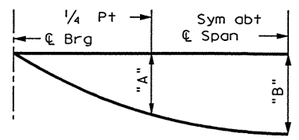

NOTE: Deflections shown are due to cast - in place concrete only. (E_c = 5 X 10^6 psi) Calculated deflections shown are theoretical and actual dimensions may be less. Deflections shall be adjusted based on field observations.

DEAD LOAD DEFLECTION DIAGRAM

TABLE OF SECTION DEPTHS

Span No.	Beam No.	"X" at ℄ Brg	"Y" at ℄ Brg	"Z" at ℄ Span (4)
4	1	10 3/4"	5'-4 3/4"	9 1/8"
4	2-3	10 3/4"	5'-4 3/4"	9 1/4"
4	4	10 3/4"	5'-4 3/4"	9 1/2"
5	1	10 1/2"	5'-4 1/2"	9 1/8"
5	2	10 1/2"	5'-4 1/2"	9 1/2"
5	3 & 4	10 1/2"	5'-4 1/2"	9 5/8"

(4) Theoretical dimension

HS25 LOADING SHEET 2 OF 2

Parsons Brinckerhoff Quade & Douglas Inc.

Texas Department of Transportation

© 2003 by TxDOT

230.00' PRESTR CONCRETE BEAM UNIT
(SPANS #4 & #5)
BUS 281 NB DIRECT CONNECT

STATE OF TEXAS — ALLEN R. CROZIER — 81450 — REGISTERED PROFESSIONAL ENGINEER
6/25/03

281NBDCSPAN02B.DGN

DESIGNED: ARC	FED. RD DIV. No.	STATE	FEDERAL AID PROJECT No.	HIGHWAY No.
CHECKED: AL A	6	TEXAS	NH 2003 ( )	US 281

DRAWN:	STATE DISTRICT	COUNTY	CONTROL No.	SECTION No.	JOB No.	SHEET No.
CHECKED: ARC	PHARR	HIDALGO	0255	08	091	991

ESMERALDA G. EGGER
10:45:07 AM
06/25/2003
I:\projects\22322a\CADD\Sheets\Structures\Direct Connects\281nbdcSPAN07A.DGn

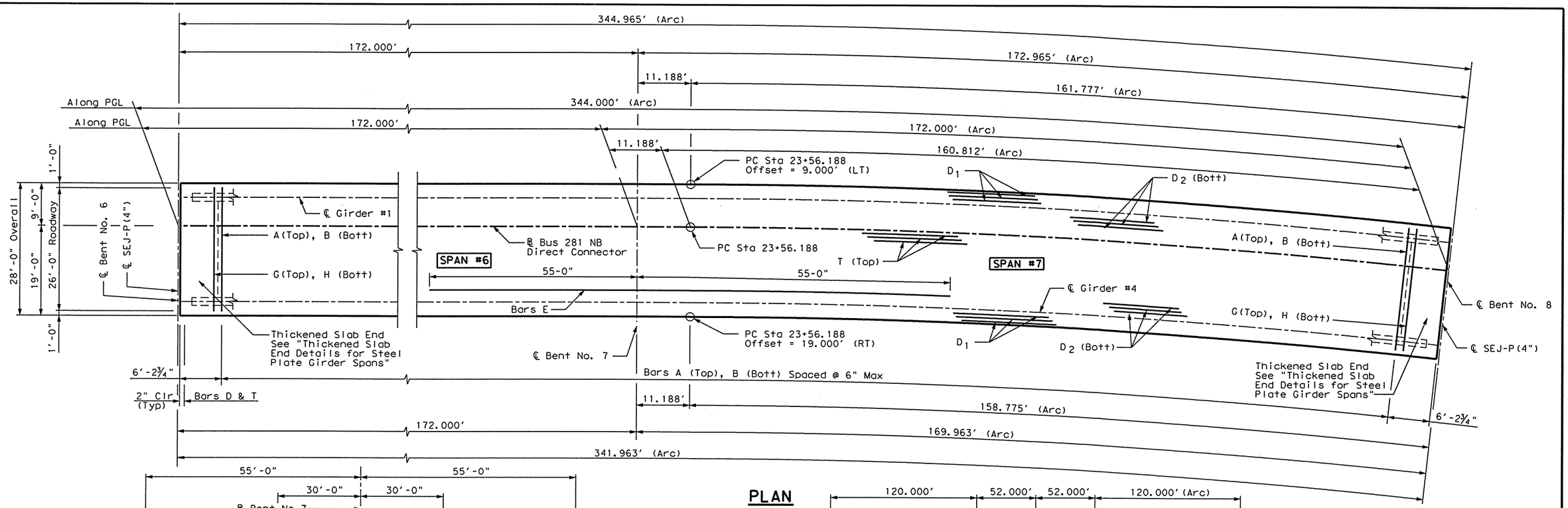

PLAN

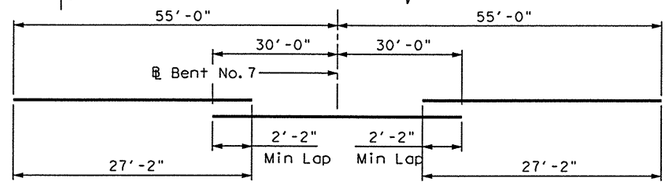

BARS E DETAIL

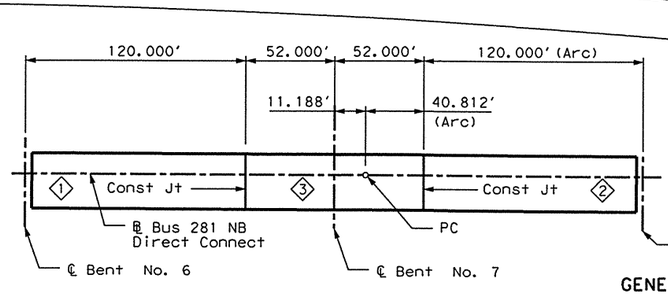

CONCRETE PLACING SEQUENCE

(Continuous placement shall not be permitted)

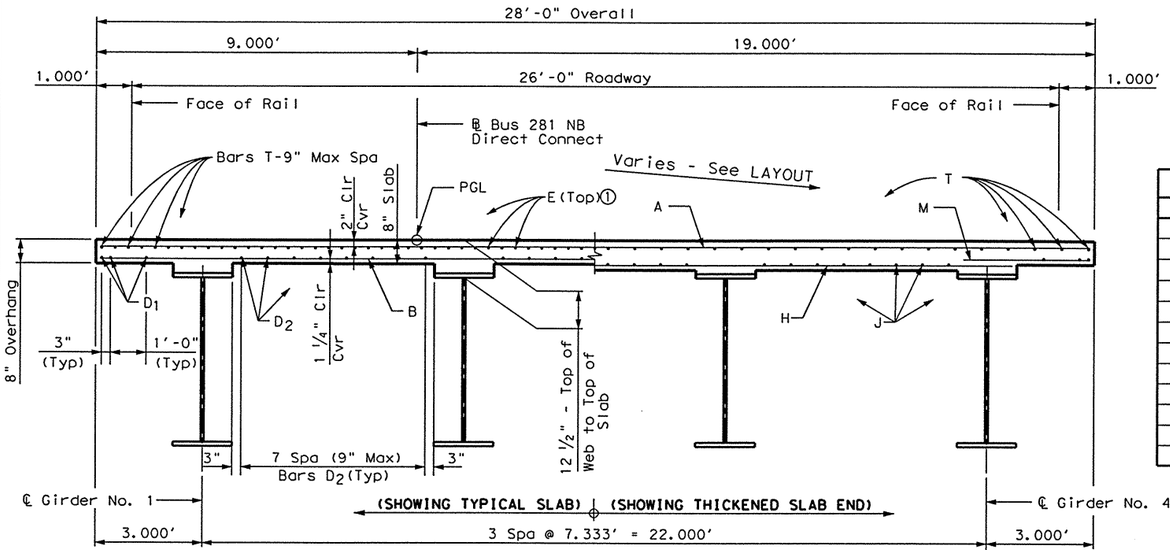

① Place Bars E between bars T over interior bents. See Plan for placement.

TYPICAL RADIAL SECTION

At Contractor's option, alternating Bars B may end at ℄ outside girder (Typ)

BAR TABLE	
Bar	Size
A	#5
B	#5
D	#5
E	#5
G	#5
H	#6
J	#5
M	#5
T	#4
W	#4
Y	#4
Z	#4

TABLE OF ESTIMATED QUANTITIES

SPAN	REINF CONC SLAB	REINFORCING STEEL ②	CLASS "S" CONCRETE	STRUCTURAL STEEL (HS)
NO.	SF	LB	CY	LB
6	4,816	33,712	132.0	
7	4,801	33,607	131.8	
Total	9,617	67,319	263.8	462,900

② Reinforcing Steel weight is calculated using an approximate factor of 7.0 lbs. per sq. ft.

GENERAL NOTES:

Designed according to 1996 AASHTO standard and current interim specifications.
Prestressed concrete panels shall not be permitted.
See PMDF(S) standard for details and quantity adjustments if this option is used.
See "Thickened Slab End Details for Steel Plate Girder Spans".
See SEJ-P standard for additional details.
All reinforcing shall be Grade 60.
Class "S" Concrete strength f'c= 4,000 psi.
Bar laps, where required shall be as follows:
~ #4 = 1'-5"
~ #5 = 1'-9"

HS25 LOADING

SHEET 1 OF 6

Parsons Brinckerhoff Quade & Douglas Inc.

Texas Department of Transportation

© 2003 by TxDOT

344.00' CONTINUOUS PLATE GIRDER UNIT
(SPANS #6 & #7)
BUS 281 NB DIRECT CONNECT

STATE OF TEXAS
ALLEN R. CROZIER
81450
REGISTERED PROFESSIONAL ENGINEER
Allen R. Crozier
6/25/03

281NBDCSPAN07A.DGN

DESIGNED: ARC	FED. RD DIV. No.	STATE	FEDERAL AID PROJECT No.		HIGHWAY No.
CHECKED: ALA	6	TEXAS	NH 2003 ( )		US 281
DRAWN: DRM	STATE DISTRICT	COUNTY	CONTROL No.	SECTION No.	JOB No.	SHEET No.
CHECKED: ARC	PHARR	HIDALGO	0255	08	091	992

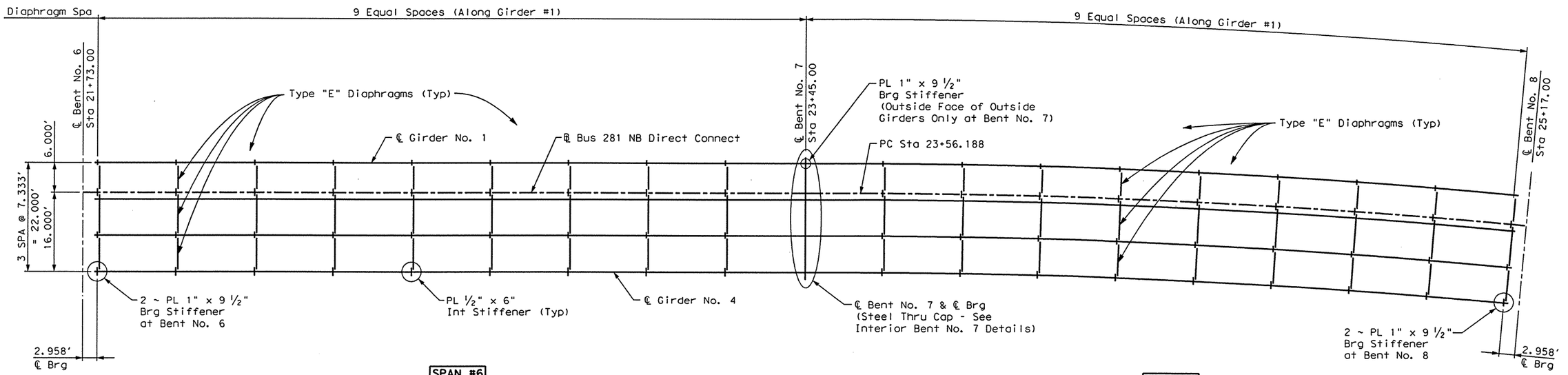

FRAMING PLAN

(ALL DIMENSIONS SHOWN ARE HORIZONTAL)

TABLE OF GIRDER RADII	
Girder	Radii (Ft)
1	1,506'
PGL	1,500'
2	1,498.67'
3	1,491.33'
4	1,484'

HS25 LOADING

Parsons Brinckerhoff
Quade & Douglas Inc.

Texas Department of Transportation

© 2003 by TxDOT

344.00' CONTINUOUS PLATE GIRDER UNIT

(SPANS #6 & #7)

BUS 281 NB DIRECT CONNECT

STATE OF TEXAS
ALLEN R. CROZIER
81450
REGISTERED PROFESSIONAL ENGINEER
6/25/03

281NBDCSPAN07B.DGN

DESIGNED: ARC	FED. RD DIV. No.	STATE	FEDERAL AID PROJECT No.			HIGHWAY No.
CHECKED: ALA	6	TEXAS	NH 2003 ( )			US 281
DRAWN: DRM	STATE DISTRICT	COUNTY	CONTROL No.	SECTION No.	JOB No.	SHEET No.
CHECKED: ARC	PHARR	HIDALGO	0255	08	091	993

ESMERALDA G. EGGER
10:48:05 AM
06/25/2003
I:\projects\22322a\CADD\Sheets\Structures\Direct Connects\281nbdcSPAN07B.DGN

ESMERALDA G. EGGER
10:48:27 AM
06/25/2003
I:\projects\23232a\CADD\Sheets\Structures\Direct Connects\281nbdcSPAN07C.dgn

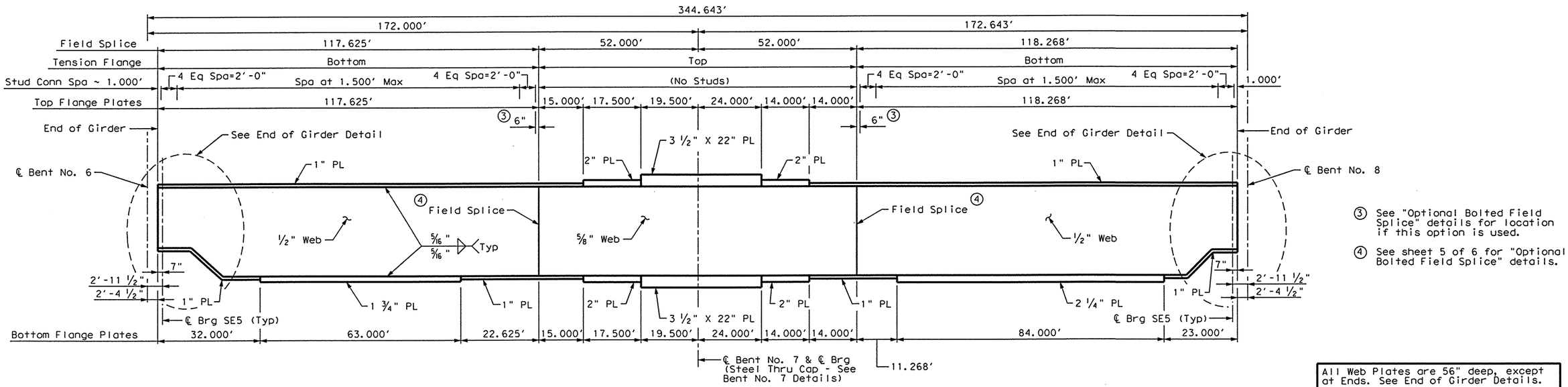

GIRDER NO. 1

③ See "Optional Bolted Field Splice" details for location if this option is used.

④ See sheet 5 of 6 for "Optional Bolted Field Splice" details.

All Web Plates are 56" deep, except at Ends. See End of Girder Details.

All Flange Plates are 20" wide except where noted otherwise.

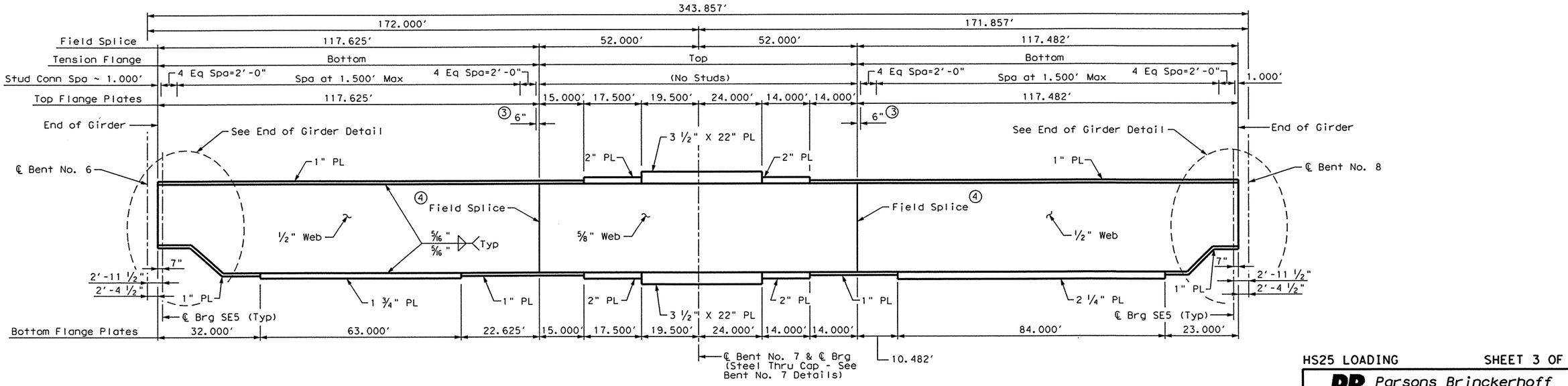

GIRDER NO. 2

PLATE GIRDER FABRICATION NOTES:

All structural steel including stiffeners and diaphragms shall conform to ASTM A709 Gr 50 or 50W and shall be paid for at the unit price bid for Structural Steel - HS.

All structural steel shall be painted.

Girder tension flanges and webs are classified as tension components and shall conform to Item 442.3(1).

All dimensions shown in Girder Elevations are horizontal Arc dimensions.

Except at changes in section, shop or field flange and web splices in plate girders may be located as desirable to optimize plate lengths and erection procedures, except that splices will not be allowed where a 40' or less unspliced length would suffice; neither will tension flange splices be allowed within .055 either side of interior bearings, nor within the range between .305 and .505 from the end bearings (S=length c.c. Bearing of Span in which the splice is made).

Flange and Web Splices shall be made by full penetration groove welds in accordance with the Item "Steel Structures".

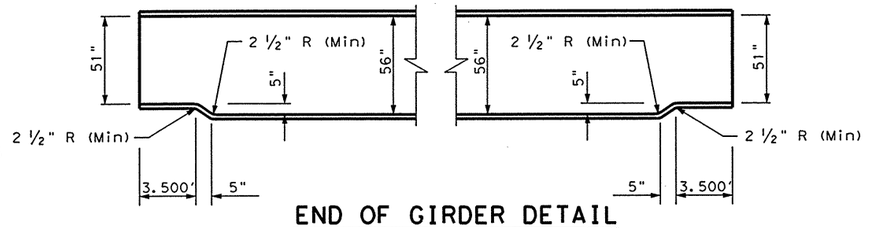

END OF GIRDER DETAIL

STATE OF TEXAS
ALLEN R. CROZIER
81450
REGISTERED PROFESSIONAL ENGINEER
Allen R. Crozier
6/25/03

HS25 LOADING SHEET 3 OF 6

Parsons Brinckerhoff Quade & Douglas Inc.

Texas Department of Transportation

© 2003 by TxDOT

344.00' CONTINUOUS PLATE GIRDER UNIT
(SPANS #6 & #7)
BUS 281 NB DIRECT CONNECT

281NBDCSPAN07C.DGN

DESIGNED: ARC	FED. RD DIV. No.	STATE	FEDERAL AID PROJECT No.	HIGHWAY No.
CHECKED: ALA	6	TEXAS	NH 2003 ( )	US 281

DRAWN: DRM	STATE DISTRICT	COUNTY	CONTROL No.	SECTION No.	JOB No.	SHEET No.
CHECKED: ARC	PHARR	HIDALGO	0255	08	091	994

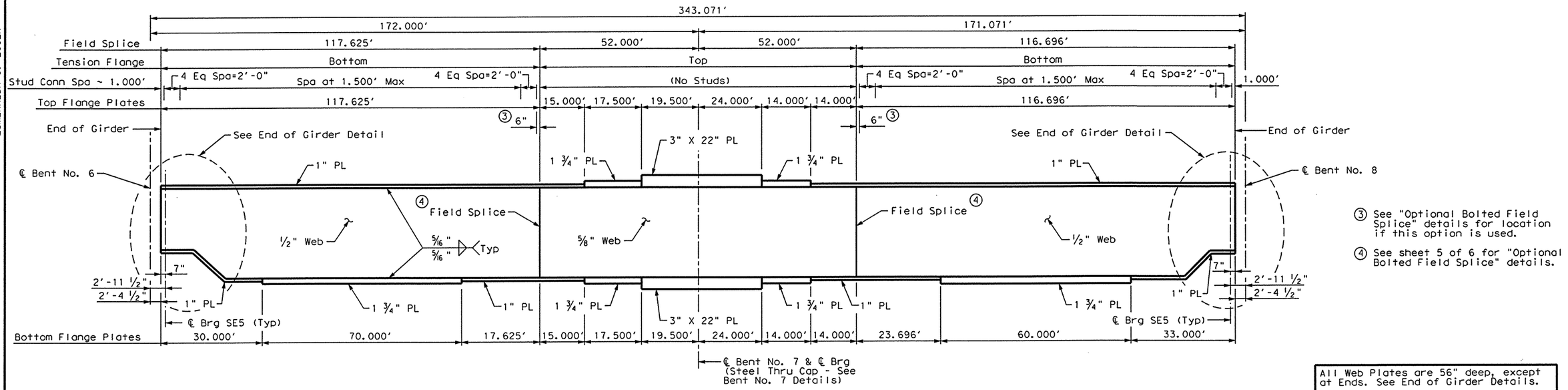

③ See "Optional Bolted Field Splice" details for location if this option is used.

④ See sheet 5 of 6 for "Optional Bolted Field Splice" details.

All Web Plates are 56" deep, except at Ends. See End of Girder Details.

All Flange Plates are 20" wide except where noted otherwise.

GIRDER NO. 3

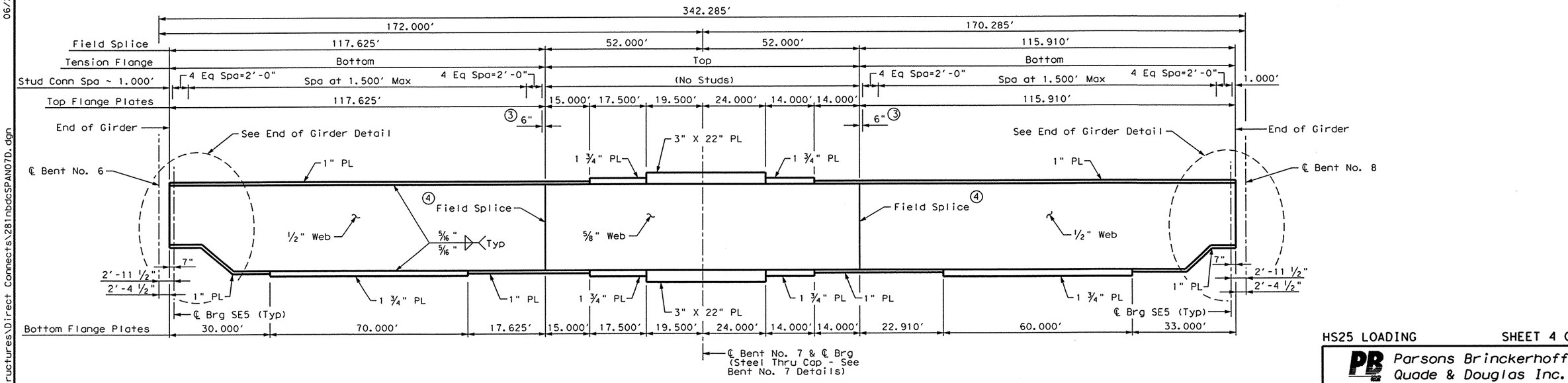

GIRDER NO. 4

HS25 LOADING SHEET 4 OF 6

Parsons Brinckerhoff Quade & Douglas Inc.

Texas Department of Transportation

© 2003 by TxDOT

344.00' CONTINUOUS PLATE GIRDER UNIT

(SPANS #6 & #7)

BUS 281 NB DIRECT CONNECT

STATE OF TEXAS
ALLEN R. CROZIER
81450
REGISTERED PROFESSIONAL ENGINEER

Allen R. Crozier 6/25/03

281NBDCSPAN07D.DGN

DESIGNED: ARC	FED. RD DIV. No.	STATE	FEDERAL AID PROJECT No.		HIGHWAY No.
CHECKED: ALA	6	TEXAS	NH 2003 ( )		US 281
DRAWN: DRM	STATE DISTRICT	COUNTY	CONTROL No.	SECTION No.	JOB No.	SHEET No.
CHECKED: ARC	PHARR	HIDALGO	0255	08	091	995

ESMERALDA G. EGGER
10:48:49 AM
06/25/2003
I:\projects\22322a\CADD\Sheets\Structures\Direct Connects\281nbdcSPAN07D.dgn

ESMERALDA G. EGGER
10:49:19 AM
06/25/2003
I:\projects\22322a\CADD\Sheets\Structures\Direct Connects\281nbdcSPAN07E.DGN

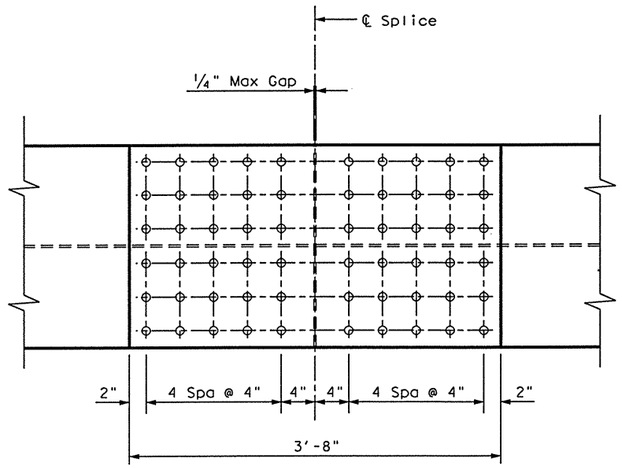

PLAN

All Bolts are 1" Dia. A325 Ty 3 With One Hardened Washer Each.

All Holes are 1 1/16" Dia.

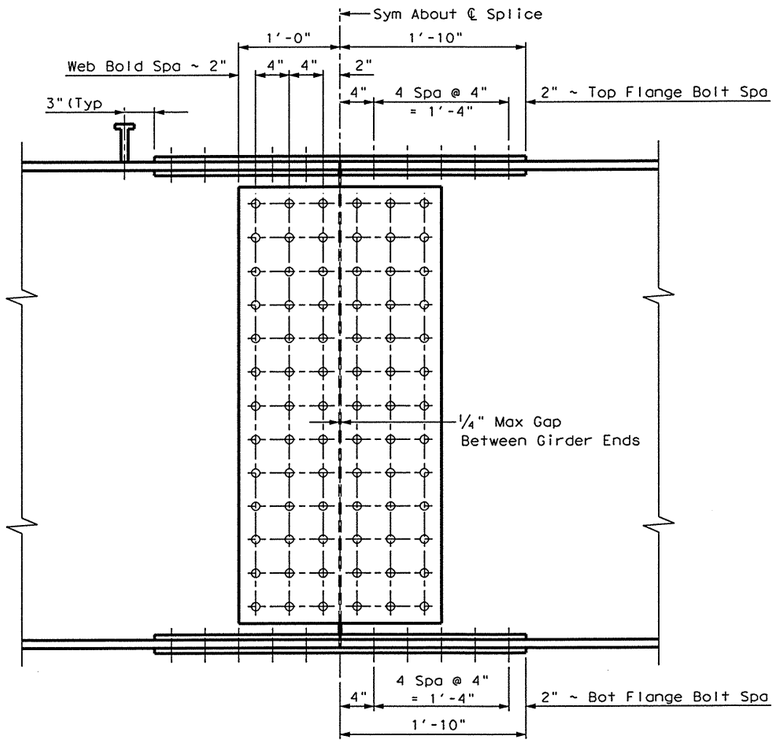

ELEVATION

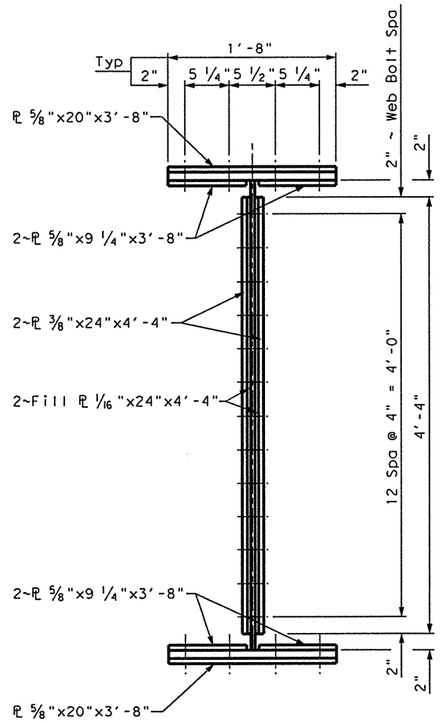

SECTION

Plate Girder ~ Optional Bolted Splice

General Notes:

In Lieu of Welded Field Splices, Bolted Field Splices shown here may be used at the Contractors option.

All Bolts used in Field Splices shall be 1" Dia A325 Ty 3 with one hardened washer each and shall be tightened according to TxDOT Standard Specification Item 447 "Structural Bolting".

Payment will be based on the welded Field Splice option regardless of the method selected.

All Plates shall be HS Steel.

STATE OF TEXAS
ALLEN R. CROZIER
81450
REGISTERED PROFESSIONAL ENGINEER

Allen R. Crozier
6/25/03

HS25 LOADING SHEET 5 OF 6

PB Parsons Brinckerhoff Quade & Douglas Inc.

Texas Department of Transportation

© 2003 by TxDOT

344.00' CONTINUOUS PLATE GIRDER UNIT
(SPANS #6 & #7)
BUS 281 NB DIRECT CONNECT

281NBDCSPAN07E.DGN

DESIGNED: ARC	FED. RD DIV. No.	STATE	FEDERAL AID PROJECT No.		HIGHWAY No.
CHECKED: ALA	6	TEXAS	NH 2003 ( )		US 281
DRAWN: DRM	STATE DISTRICT	COUNTY	CONTROL No.	SECTION No.	JOB No. / SHEET No.
CHECKED: ARC	PHARR	HIDALGO	0255	08	091 / 996

ESMERALDA G. EGGER
10:49:57 AM
06/25/2003
I:\projects\22322o\CADD\Sheets\Structures\Direct Connects\281nbdcSPAN07F.dgn

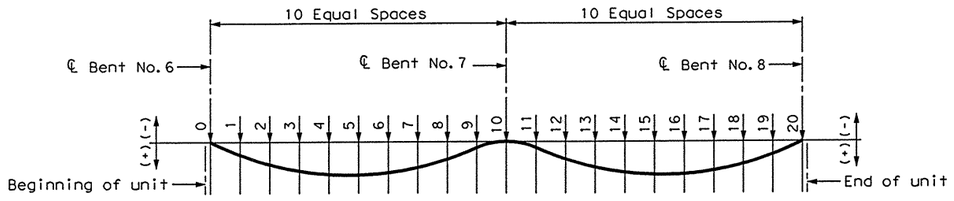

DEAD LOAD DEFLECTION DIAGRAM

Deflections shown are due to Cast-in-Place concrete slab only.

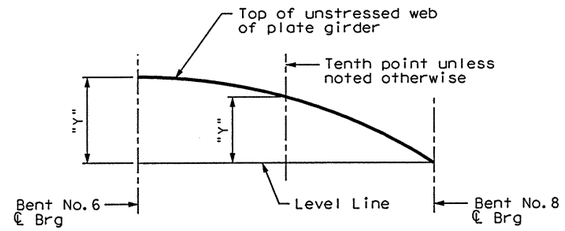

CAMBER DIAGRAM

Values include all dead load deflections and vertical curve corrections.

TABLE OF DEAD LOAD DEFLECTIONS

Due to Cast in Place Concrete only (DEC FT)

	LOCATION	GIR 1	GIR 2	GIR 3	GIR 4
Span 6	0	0.000	0.000	0.000	0.000
	1	-0.105	-0.108	-0.112	-0.115
	2	-0.186	-0.194	-0.200	-0.207
	3	-0.236	-0.246	-0.255	-0.265
	4	-0.249	-0.261	-0.273	-0.285
	5	-0.227	-0.241	-0.254	-0.267
	6	-0.178	-0.191	-0.204	-0.217
	FS	-0.115	-0.127	-0.140	-0.151
	7	-0.110	-0.122	-0.134	-0.146
	8	-0.049	-0.057	-0.066	-0.074
	9	-0.010	-0.014	-0.019	-0.023
	10	0.000	0.000	0.000	0.000
Span 7	11	-0.020	-0.017	-0.014	-0.010
	12	-0.066	-0.059	-0.053	-0.046
	13	-0.133	-0.122	-0.112	-0.101
	FS	-0.137	-0.128	-0.118	-0.107
	14	-0.203	-0.189	-0.175	-0.160
	15	-0.255	-0.238	-0.220	-0.202
	16	-0.276	-0.257	-0.239	-0.220
	17	-0.258	-0.241	-0.224	-0.207
	18	-0.202	-0.189	-0.177	-0.163
	19	-0.113	-0.106	-0.099	-0.091
	20	0.000	0.000	0.000	0.000

FS=Field Splice

TABLE OF DEAD LOAD DEFLECTIONS

Total Dead Load Deflection Incl Steel (DEC FT)

	LOCATION	GIR 1	GIR 2	GIR 3	GIR 4
Span 6	0	0.000	0.000	0.000	0.000
	1	-0.160	-0.167	-0.174	-0.180
	2	-0.284	-0.298	-0.311	-0.324
	3	-0.359	-0.378	-0.397	-0.415
	4	-0.378	-0.402	-0.425	-0.447
	5	-0.344	-0.370	-0.395	-0.420
	6	-0.266	-0.293	-0.318	-0.343
	FS	-0.169	-0.193	-0.218	-0.241
	7	-0.161	-0.185	-0.290	-0.232
	8	-0.067	-0.084	-0.103	-0.119
	9	-0.011	-0.019	-0.028	-0.036
	10	0.000	0.000	0.000	0.000
Span 7	11	-0.040	-0.033	-0.025	-0.017
	12	-0.121	-0.106	-0.090	-0.074
	13	-0.235	-0.211	-0.187	-0.162
	FS	-0.243	-0.220	-0.197	-0.172
	14	-0.351	-0.319	-0.287	-0.254
	15	-0.434	-0.395	-0.357	-0.319
	16	-0.465	-0.425	-0.385	-0.345
	17	-0.432	-0.396	-0.360	-0.324
	18	-0.336	-0.309	-0.283	-0.255
	19	-0.187	-0.172	-0.158	-0.143
	20	0.000	0.000	0.000	0.000

FS=Field Splice

CAMBER DIAGRAM TABLE

"Y" Values in Feet

	LOCATION	GIR 1	GIR 2	GIR 3	GIR 4
Span 6	0	0.13	0.60	1.07	1.54
	1	0.57	1.01	1.46	1.90
	2	0.94	1.36	1.78	2.19
	3	1.24	1.63	2.02	2.40
	4	1.45	1.81	2.17	2.53
	5	1.58	1.91	2.23	2.56
	6	1.64	1.93	2.22	2.52
	FS	1.64	1.90	2.16	2.42
	7	1.64	1.89	2.15	2.41
	8	1.62	1.83	2.05	2.27
	9	1.60	1.78	1.96	2.13
	10	1.61	1.74	1.88	2.01
Span 7	11	1.64	1.73	1.82	1.92
	12	1.68	1.73	1.78	1.83
	13	1.72	1.73	1.74	1.75
	FS	1.72	1.73	1.74	1.74
	14	1.73	1.70	1.67	1.64
	15	1.66	1.62	1.58	1.55
	16	1.50	1.46	1.42	1.38
	17	1.26	1.22	1.18	1.15
	18	0.91	0.89	0.86	0.83
	19	0.49	0.48	0.46	0.45
	20	0.00	0.00	0.00	0.00

FS=Field Splice

HS25 LOADING SHEET 6 OF 6

Parsons Brinckerhoff Quade & Douglas Inc.

Texas Department of Transportation

© 2003 by TxDOT

STATE OF TEXAS
ALLEN R. CROZIER
81450
REGISTERED PROFESSIONAL ENGINEER
Allen R. Crozier
6/25/03

344.00' CONTINUOUS PLATE GIRDER UNIT

(SPANS #6 & #7)

BUS 281 NB DIRECT CONNECT

281NBDCSPAN07F.DGN

DESIGNED: ARC	FED. RD DIV. No.	STATE	FEDERAL AID PROJECT No.			HIGHWAY No.
CHECKED: ALA	6	TEXAS	NH 2003 ( )			US 281
DRAWN: DRM	STATE DISTRICT	COUNTY	CONTROL No.	SECTION No.	JOB No.	SHEET No.
CHECKED: ARC	PHARR	HIDALGO	0255	08	091	997

ESMERALDA G. EGGER
10:52:53 AM
06/25/2003
I:\projects\22322a\CADD\Sheets\Structures\Direct Connects\281nbdcSPAN04.dgn

TABLE OF ESTIMATED QUANTITIES

SPAN	REINF CONC SLAB	PRESTRESSED CONC BEAMS (Type IV) (2)	CLASS "S" CONCRETE	REINFORCING STEEL (1)
No.	SF	LF	CY	Lb
8	2,958	403.61	77.5	19,227
9	2,958	403.74	77.2	19,227
10	2,962	404.41	78.0	19,253
TOTAL	8,878	1,211.76	232.7	57,707

(1) Reinforcing steel weight is calculated using an approximate factor of 6.5 lbs per sq ft

(2) Quantity shown are bottom beam flange lengths with adjustments made for beam slope. See BEAM LAYOUT for beam lengths and beam angles.

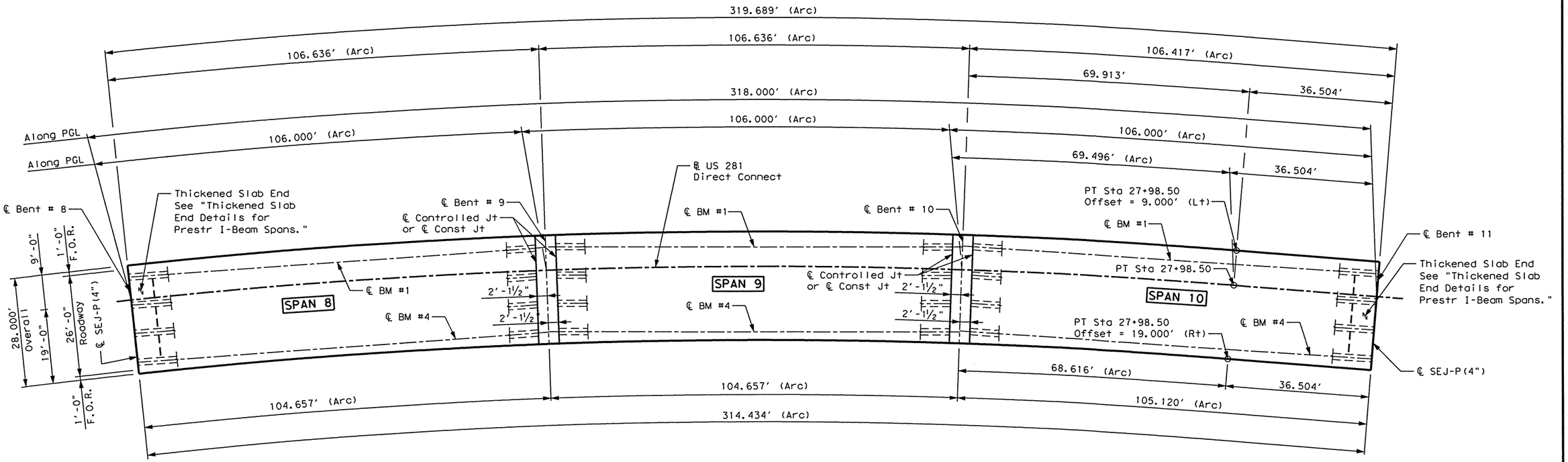

PLAN

GENERAL NOTES:

Designed according to AASHTO 1996 Standard and current Interim Specifications.

See PCP(C)(MOD) Standard for details and quantity adjustments if this option is used.

See SEJ-P Standard for additional details.

See "Thickened Slab End Details for Prestr I-Beam Spans" for Thickened Slab over Inverted-T Bents.

See IBMS(MOD) for slab details over Inverted-T.

All reinforcing shall be Grade 60.

Class "S" Concrete strength f'c = 4000 psi.

Bar laps, where required, shall be as follows:

#4 = 1'-5"

#5 = 1'-9"

STATE OF TEXAS
ALLEN R. CROZIER
81450
REGISTERED PROFESSIONAL ENGINEER

Allen R. Crozier
6/25/03

HS25 LOADING

Parsons Brinckerhoff Quade & Douglas Inc.

Texas Department of Transportation

© 2003 by TxDOT

318.00' PRESTR CONCRETE BEAM UNIT
(SPANS #8 - #10)
BUS 281 NB DIRECT CONNECT

281NBDCSPAN04.DGN

DESIGNED: ARC	FED. RD DIV. No.	STATE	FEDERAL AID PROJECT No.			HIGHWAY No.	
CHECKED: ALA	6	TEXAS	NH 2003 ( )			US 281	
DRAWN:	STATE DISTRICT	COUNTY	CONTROL No.	SECTION No.	JOB No.	SHEET No.	
CHECKED: ARC	PHARR	HIDALGO	0255	08	091	998	

ESMERALDA G. EGGER
10:53:12 AM
06/25/2003
I:\projects\22322a\CADD\Sheets\Structures\Direct Connects\281nbdcSPAN04B.dgn

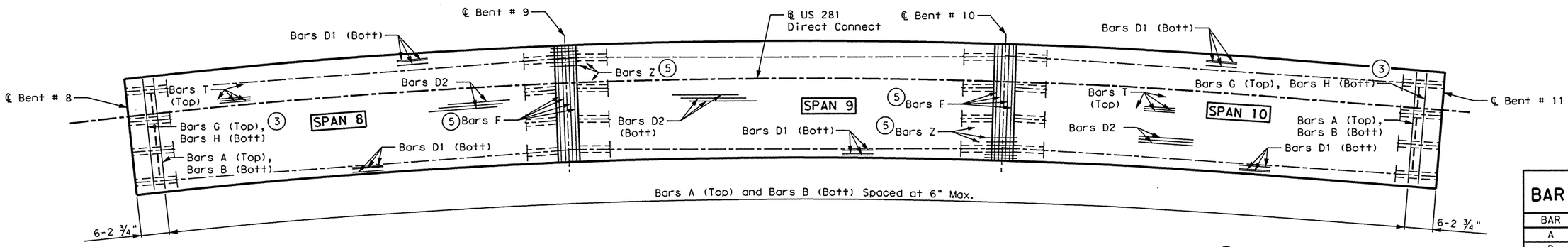

PLAN
(Showing Slab Reinforcing)

5 See MISCELLANEOUS SLAB DETAILS, Sheet 2 of 2 for additional details.

BAR TABLE

BAR	SIZE
A	#5
B	#5
D	#5
G	#5
H	#6
J	#5
M	#5
T	#4
W	#4
Y	#4
Z	#4

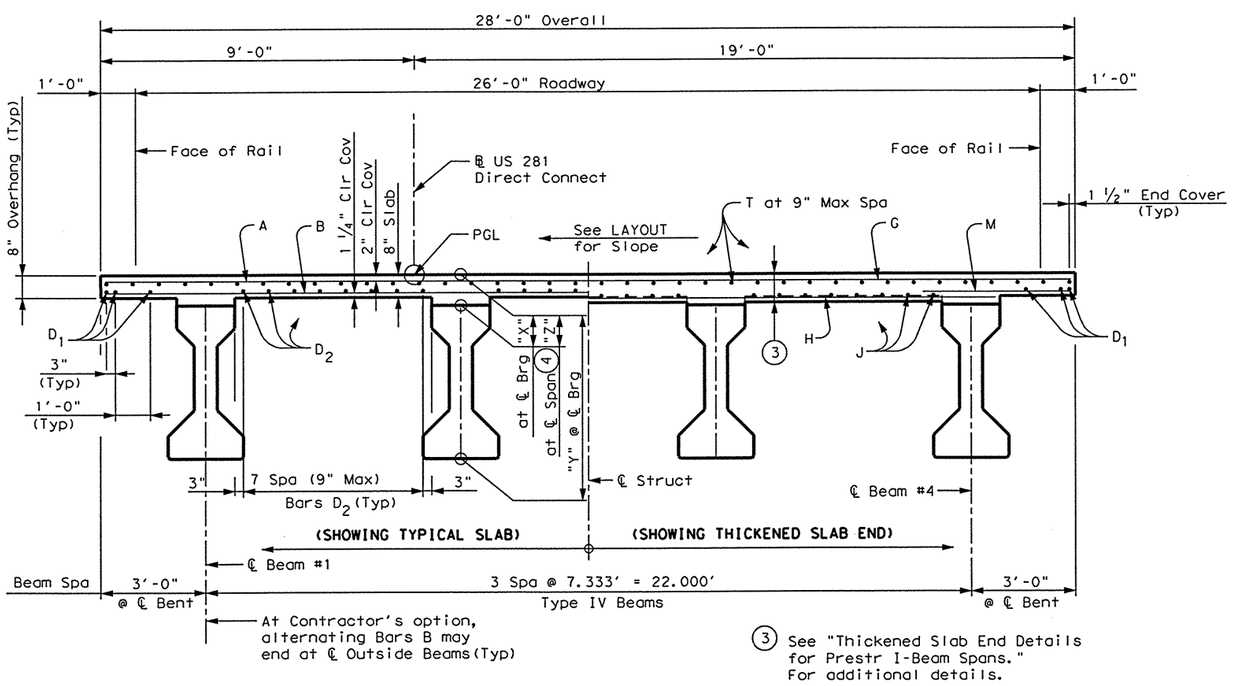

3 See "Thickened Slab End Details for Prestr I-Beam Spans." For additional details.

TYPICAL RADIAL SECTION

Span No.	Beam No.	"A"	"B"
8 & 9	1	.078'	.110'
8 & 9	2	.076'	.106'
8 & 9	3	.074'	.104'
8 & 9	4	.073'	.103'
10	1	.073'	.102'
10	2	.076'	.106'
10	3	.078'	.105'
10	4	.064'	.089'

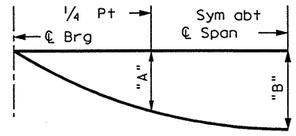

NOTE: Deflections shown are due to cast - in place concrete only. (E_c= 5 X 10^6 psi) Calculated deflections shown are theoretical and actual dimensions may be less. Deflections shall be adjusted based on field observations.

DEAD LOAD DEFLECTION DIAGRAM

TABLE OF SECTION DEPTHS

Span No.	Beam No.	"X" at ℄ Brg	"Y" at ℄ Brg	"Z" at ℄ Span (4)
8	All	10"	5'-4"	9 1/8"
9	All	10"	5'-4"	9 1/8"
10	All	10 1/4"	5'-4 1/4	9 1/4"

(4) Theoretical dimension

HS25 LOADING SHEET 2 OF 2

Parsons Brinckerhoff Quade & Douglas Inc.

Texas Department of Transportation

© 2003 by TxDOT

318.00' PRESTR CONCRETE BEAM UNIT
(SPANS #8 - #10)
BUS 281 NB DIRECT CONNECT

STATE OF TEXAS
ALLEN R. CROZIER
81450
REGISTERED PROFESSIONAL ENGINEER

Allen R. Crozier
6/25/03

281NBDCSPAN04B.DGN

DESIGNED: ARC	FED. RD DIV. No.	STATE	FEDERAL AID PROJECT No.	HIGHWAY No.
CHECKED: ALA	6	TEXAS	NH 2003 ( )	US 281

DRAWN:	STATE DISTRICT	COUNTY	CONTROL No.	SECTION No.	JOB No.	SHEET No.
CHECKED: ARC	PHARR	HIDALGO	0255	08	091	999

ESMERALDA G. EGGER
10:56:15 AM
06/25/2003
I:\projects\22322a\CADD\Sheets\Structures\Direct Connects\281nbdcSPAN05.dgn

TABLE OF ESTIMATED QUANTITIES

SPAN	REINF CONC SLAB	PRESTRESSED CONC BEAMS (Type IV) (2)	CLASS "S" CONCRETE	REINFORCING STEEL (1)
No.	SF	LF	CY	Lb
11	2,999	409.91	79.9	19,494
12	3,157	432.48	83.1	20,521
13	1,680	230.08	44.0	10,920
TOTAL	7,836	1,072.47	207.0	50,935

(1) Reinforcing steel weight is calculated using an approximate factor of 6.5 lbs per sq ft

(2) Quantity shown are bottom beam flange lengths with adjustments made for beam slope. See BEAM LAYOUT for beam lengths and beam angles.

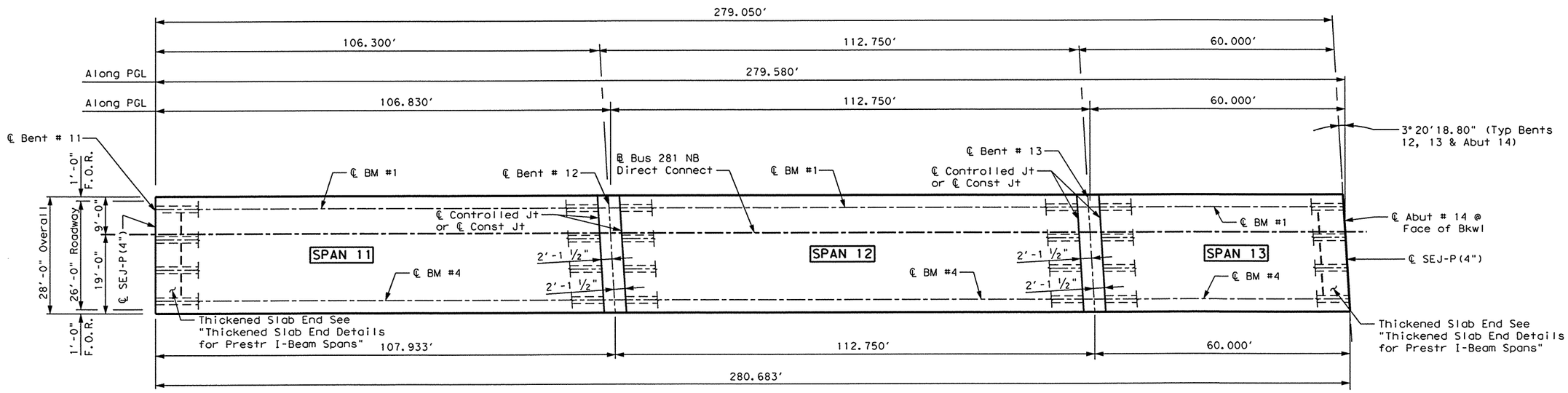

PLAN

GENERAL NOTES:

Designed according to AASHTO 1996 Standard and current Interim Specifications.

See PCP(C)(MOD) Standard for details and quantity adjustments if this option is used.

See SEJ-P Standard for additional details.

See IBTS(MOD) for Thickened Slab or "Thickened Slab End Details for Prestr I-Beam Spans" for Thickened Slab over Inverted-T Bents.

See IBMS(MOD) for slab details over Inverted-T.

All reinforcing shall be Grade 60.

Class "S" Concrete strength f'c = 4000 psi.

Bar laps, where required, shall be as follows:

#4 = 1'-5"

#5 = 1'-9"

STATE OF TEXAS
ALLEN R. CROZIER
81450
REGISTERED PROFESSIONAL ENGINEER
Allen R. Crozier
6/25/03

HS25 LOADING SHEET 1 OF 2

Parsons Brinckerhoff Quade & Douglas Inc.

Texas Department of Transportation

© 2003 by TxDOT

279.58' PRESTR CONCRETE BEAM UNIT
(SPANS #11 - #13)
BUS 281 NB DIRECT CONNECT

281NBDCSPAN05.DGN

DESIGNED: ARC	FED. RD DIV. No.	STATE	FEDERAL AID PROJECT No.	HIGHWAY No.
CHECKED: ALA	6	TEXAS	NH 2003 ( )	US 281

DRAWN: DRM	STATE DISTRICT	COUNTY	CONTROL No.	SECTION No.	JOB No.	SHEET No.
CHECKED: ARC	PHARR	HIDALGO	0255	08	091	1000

ESMERALDA G. EGGER
10:57:21 AM
06/25/2003
I:\projects\22322a\CADD\Sheets\Structures\Direct Connects\281nbdcSPAN05B.dgn

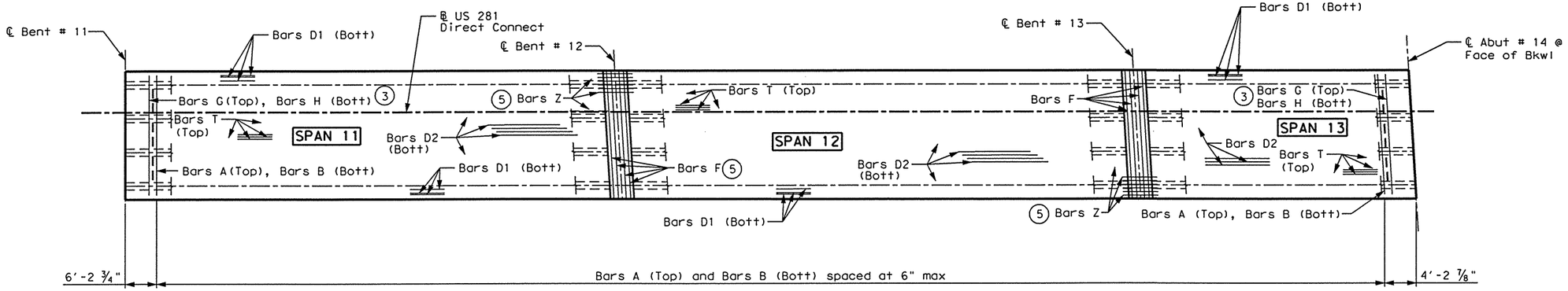

PLAN

(5) See MISCELLANEOUS SLAB DETAILS Sheet 2 of 2 for additional details.

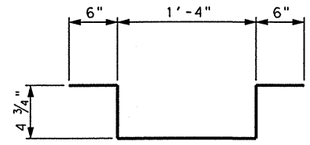

BARS U

NOTE: Bars U shall match Beam Bars R spacing for a min. length of 1/4 x (Beam Length). Spans 11 & 12 only.

BAR TABLE	
BAR	SIZE
A	#5
B	#5
D	#5
G	#5
H	#6
J	#5
M	#5
T	#4
U	#4
W	#4
Y	#4
Z	#4

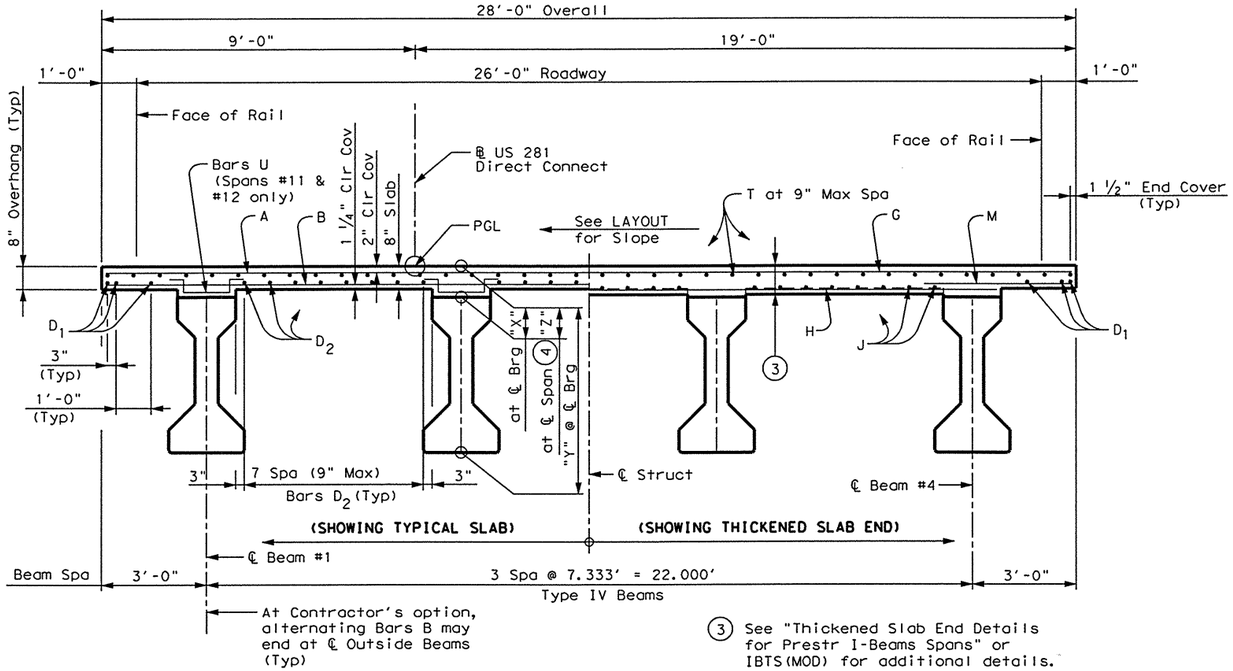

(3) See "Thickened Slab End Details for Prestr I-Beams Spans" or IBTS(MOD) for additional details.

TYPICAL SECTION

Span No.	Beam No.	"A"	"B"
11	1	.071'	.099'
11	2	.078'	.110'
11	3	.080'	.112'
11	4	.074'	.104'
12	ALL	.098'	.138'
13	ALL	.007'	.010'

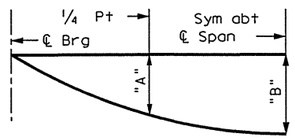

NOTE: Deflections shown are due to cast - in place concrete only. (E_c= 5 X 10^6 psi) Calculated deflections shown are theoretical and actual dimensions may be less. Deflections shall be adjusted based on field observations.

DEAD LOAD DEFLECTION DIAGRAM

TABLE OF SECTION DEPTHS				
Span No.	Beam No.	"X" at ℄ Brg	"Y" at ℄ Brg	"Z" at ℄ Span (4)
11	1	11 1/4"	5'-5 1/4"	8 7/8"
11	2	11 1/4"	5'-5 1/4"	9 1/4"
11	3	11 1/4"	5'-5 1/4"	9 5/8"
11	4	11 1/4"	5'-5 1/4"	9 7/8"
12	ALL	11 1/2"	5'-5 1/2"	8 7/8"
13	ALL	9 1/4"	5'-3 1/4"	8 7/8"

(4) Theoretical dimension

HS25 LOADING SHEET 2 OF 2

Parsons Brinckerhoff Quade & Douglas Inc.

Texas Department of Transportation

© 2003 by TxDOT

279.58' PRESTR CONCRETE BEAM SPAN
(SPANS #11 - #13)
BUS 281 NB DIRECT CONNECT

STATE OF TEXAS
ALLEN R. CROZIER
81450
REGISTERED PROFESSIONAL ENGINEER
6/25/03

281NBDCSPAN05B.DGN

DESIGNED: ARC	FED. RD DIV. No.	STATE	FEDERAL AID PROJECT No.		HIGHWAY No.	
CHECKED: ALA	6	TEXAS	NH 2003 ( )		US 281	
DRAWN: DRM	STATE DISTRICT	COUNTY	CONTROL No.	SECTION No.	JOB No.	SHEET No.
CHECKED: ARC	PHARR	HIDALGO	0255	08	091	1001

ESMERALDA G. EGGER
10:57:57 AM
06/25/2003
I:\projects\22322a\CADD\Sheets\Structures\Direct Connects\281dradet01.dgn

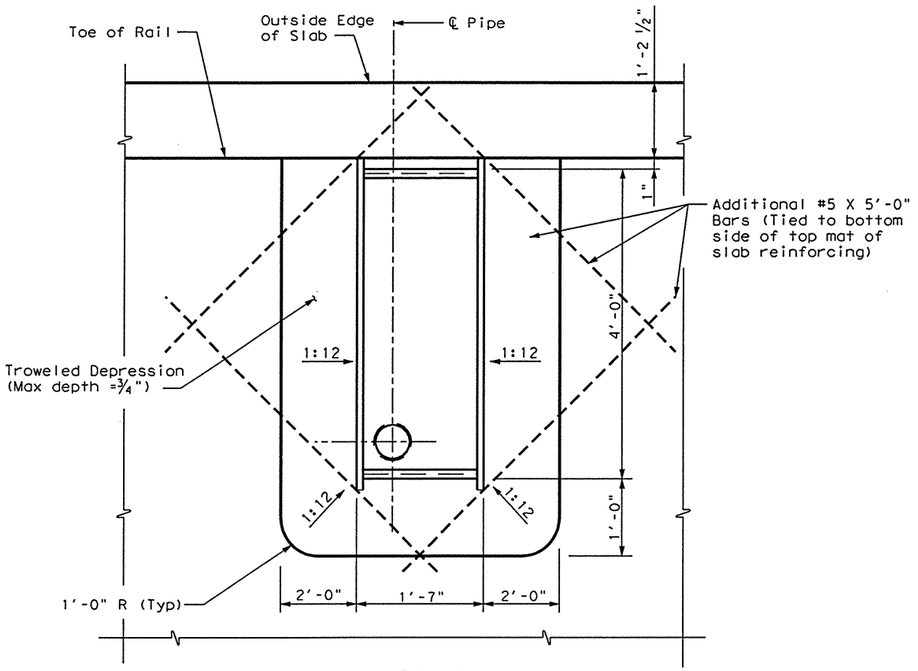

PLAN

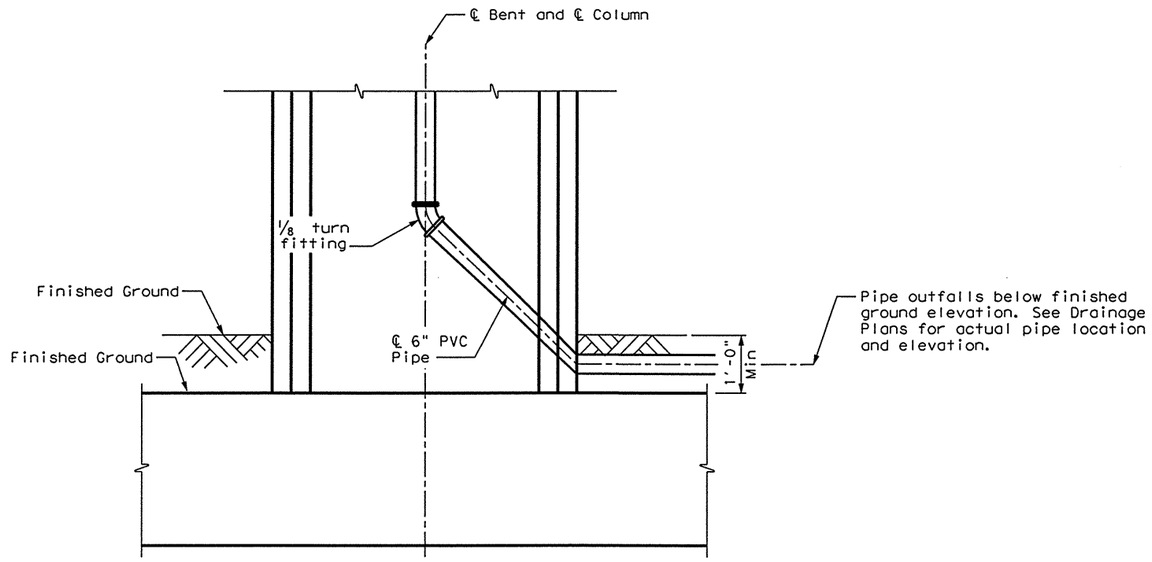

TYPICAL OUTFALL DETAIL

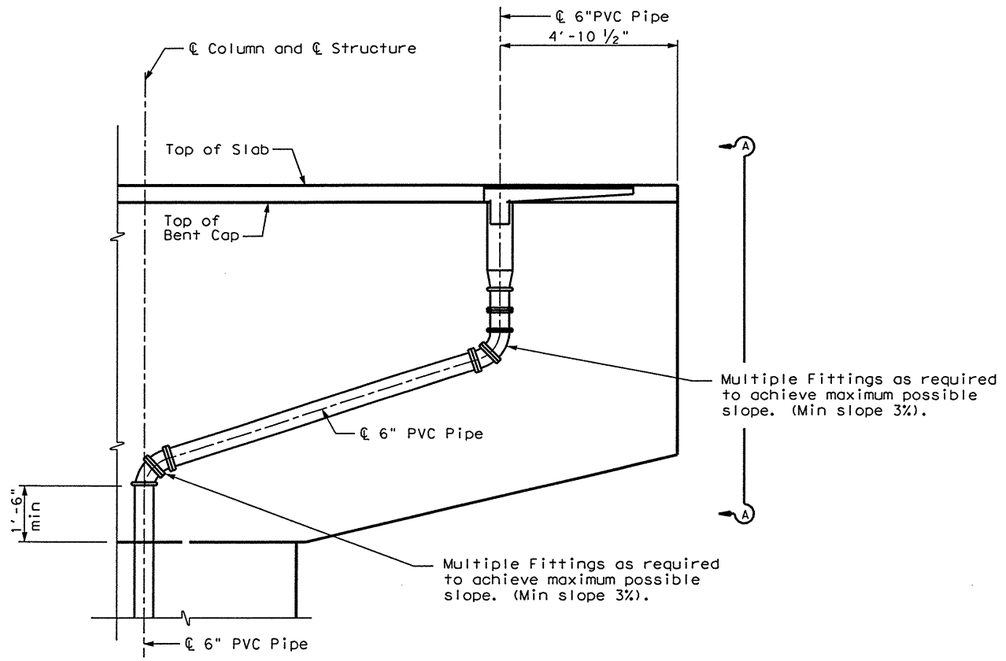

ELEVATION

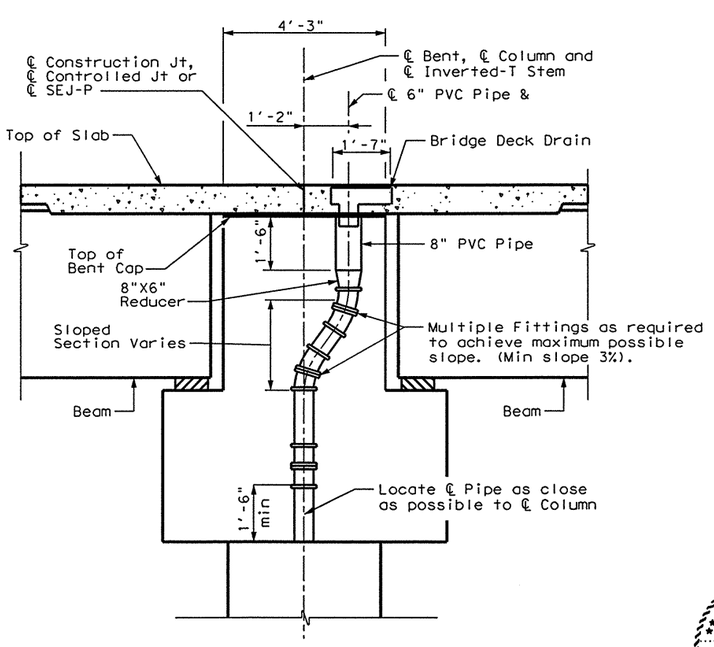

VIEW A-A

GENERAL NOTES:

Grate and Inlet shall conform to the Standard Specification Item 471, "Frame, Grate, Rings and Covers" and Item 442, "Metal for Structures".

After fabrication, each Grate and Inlet shall be galvanized in accordance with the Standard Specification Item 445, "Galvanizing" with the following specifications:
Grate and Inlet - ASTM A153, Class A

Steel plate and pipe for inlet shall conform to the requirements of ASTM A36.

Unless shown otherwise in the details, all drain pipes shall be 6" dia. PVC pipe with a minimum wall thickness of .280". All PVC Pipe shall conform to Standard Specification Item 481, "PVC Pipe for Bridge Drains".

Fittings to be used as directed by the Engineer.

When placing slab concrete, care shall be taken to prevent honeycombing or air pockets around or beneath inlet.

Additional slab reinforcing required shall be considered subsidiary to Bid Item "Reinforced Concrete Slab".

The entire drain system for each span shall be fully connected and operational prior to placement of bridge rails.

See BRIDGE LAYOUT for location of Deck Drain.

Deviation from Bridge Drain Details contained herein shall not be permitted without prior approval from the Engineer.

Parsons Brinckerhoff Quade & Douglas Inc.
Texas Department of Transportation
© 2003 by TxDOT

BRIDGE DECK DRAIN DETAILS

BUS 281 NB DIRECT CONNECT

STATE OF TEXAS
ALLEN R. CROZIER
81450
REGISTERED PROFESSIONAL ENGINEER
Allen R. Crozier
6/25/03

281DRADET01.DGN

DESIGNED: ARC	FED. RD DIV. No.	STATE	FEDERAL AID PROJECT No.			HIGHWAY No.	
CHECKED: ALA	6	TEXAS	NH 2003 ( )			US 281	
DRAWN: RLJ	STATE DISTRICT	COUNTY	CONTROL No.	SECTION No.	JOB No.	SHEET No.	
CHECKED: ARC	PHARR	HIDALGO	0255	08	091	1002	

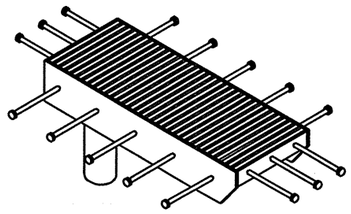

ISOMETRIC VIEW
OF DECK DRAIN

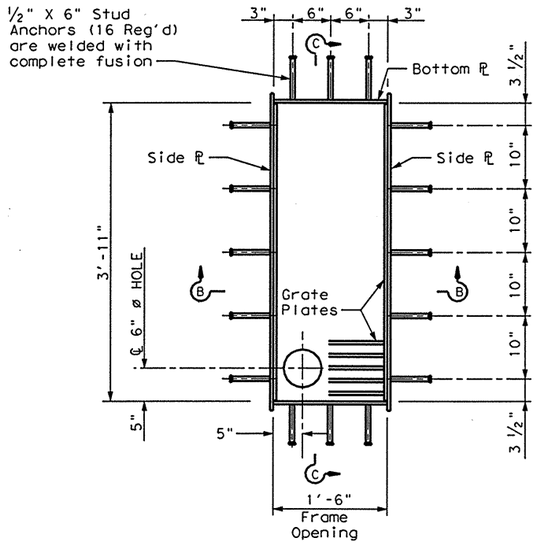

PLAN

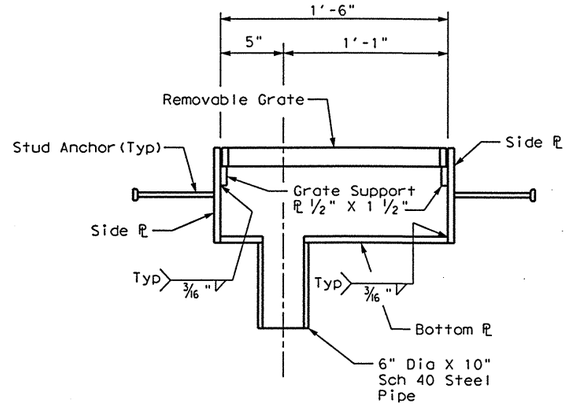

SECTION B-B

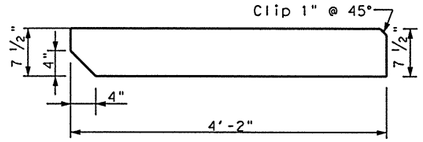

SIDE PLATE ELEVATION

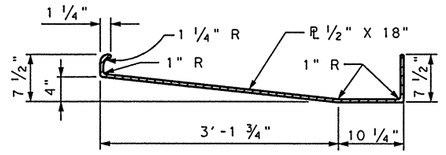

BOTTOM PLATE BENDING DIAGRAM

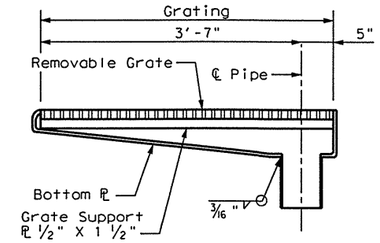

SECTION C-C

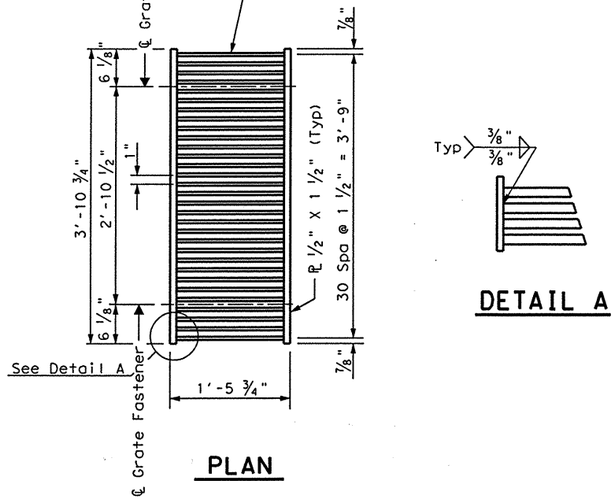

PLAN

DETAIL A

REMOVEABLE GRATE DETAILS

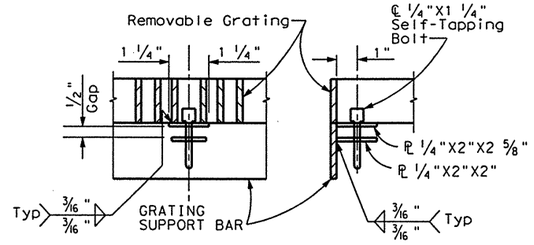

GRATING FASTENER DETAIL
(Two each long side of grating)
NOTE: Tap drill Plates after fabrication.

SHEET 2 OF 2

Parsons Brinckerhoff Quade & Douglas Inc.

Texas Department of Transportation

© 2003 by TxDOT

BRIDGE DECK DRAIN DETAILS

BUS 281 NB DIRECT CONNECT

281DRADET02.DGN

DESIGNED: ARC	FED. RD DIV. No.	STATE	FEDERAL AID PROJECT No.			HIGHWAY No.	
CHECKED: ALA	6	TEXAS	NH 2003 ( )			US 281	
DRAWN: RLJ	STATE DISTRICT	COUNTY	CONTROL No.	SECTION No.	JOB No.	SHEET No.	
CHECKED: ARC	PHARR	HIDALGO	0255	08	091	1003	

$NAME$ 03:19:41 PM 08/19/2003
I:\projects\22322a\CADD\Sheets\Structures\Direct Connects\281dradet02.dgn

ALLEN CROZIER
02:27:15 PM
08/06/2003
i:\projects\22322o\CADD\Sheets\Structures\Direct Connects\Owassa\281ownbBL01.dgn

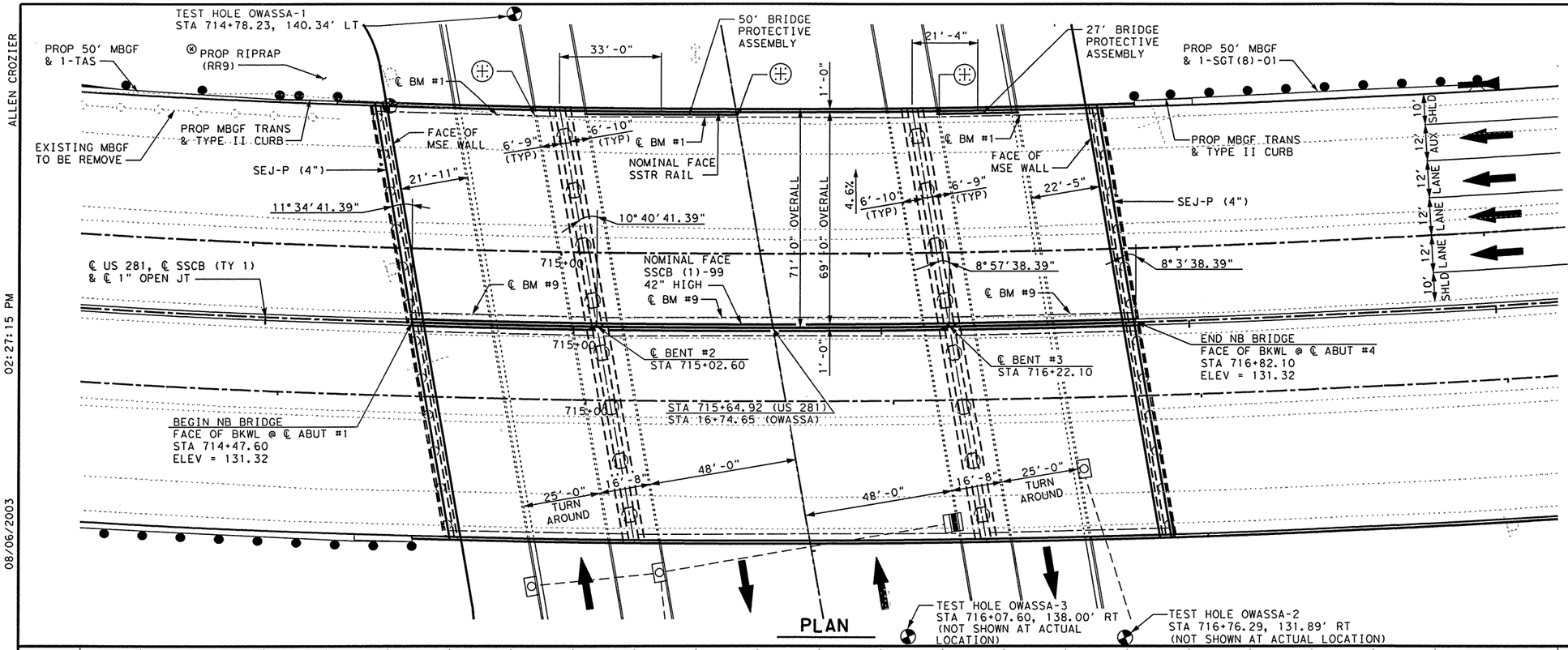

- ⊛ - RIPRAP SHALL BE COLORED-TEXTURIZED CONCRETE
- ◔ - TEST HOLE
- ⊕ - POINT OF MIN VERT CLEAR
  STA 714+90.32 (68.1' LT)
  STA 715+52.87 (68.3' LT)
  STA 716+14.86 (68.1' LT)

HORIZONTAL CURVE DATA

CURVE BL1-2

PI STA	= 712+28.45
DELTA	= 30° 26' 02.38" (LT)
DEGREE OF CURVE	= 1° 30' 00.00"
TANGENT	= 1,039.1'
LENGTH	= 2,028.93'
RADIUS	= 3,819.72'
X	= 1,090,727.9378
Y	= 16,616,532.1110

ALL BENT AND ABUTMENTS ARE ON A BEARING OF S 81° 31' 01.77" E

STATE OF TEXAS
ALLEN R. CROZIER
81450
REGISTERED PROFESSIONAL ENGINEER
Allen R. Crozier
8/5/03

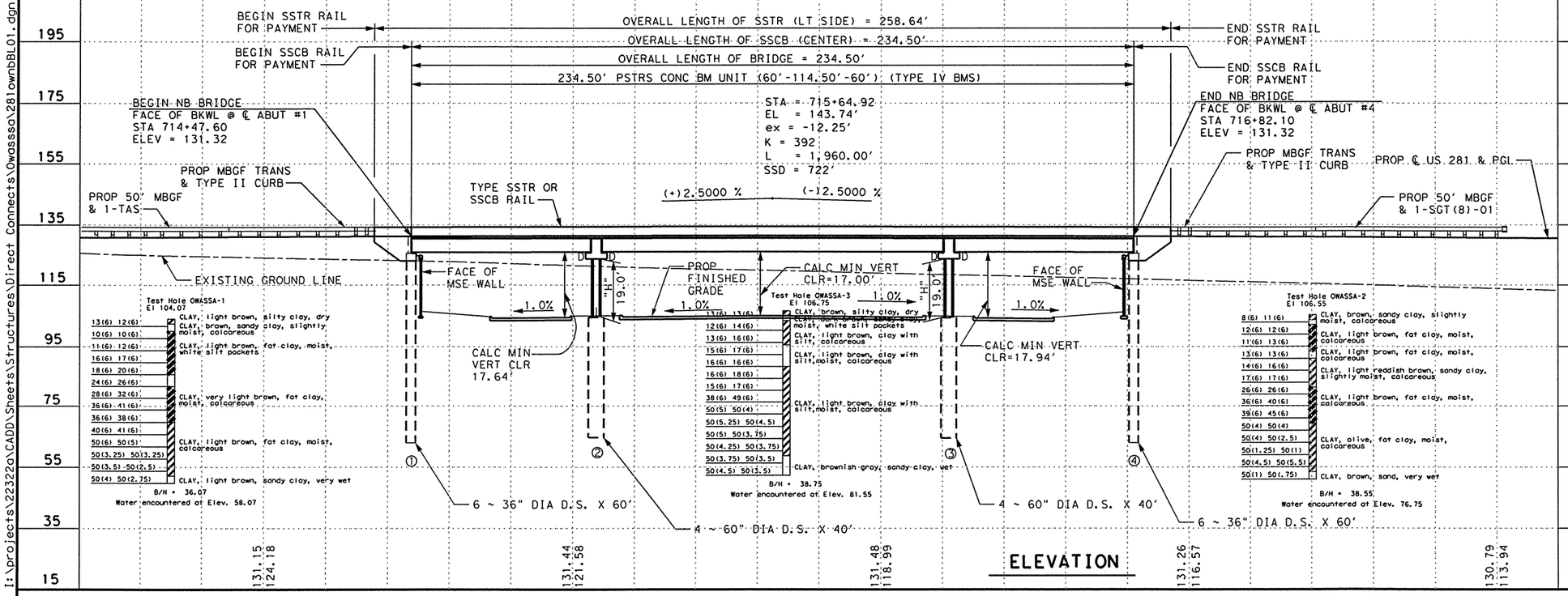

NOTES:

DESIGNED IN ACCORDANCE WITH 1996 AASHTO STANDARD SPECIFICATIONS AND ALL CURRENT INTERIMS.

ELEVATIONS BASED ON THE CURRENT NAVD 88 DATUM.

BORE HOLE DATA PROVIDED BY TxDOT, PHARR DISTRICT

BM US 281-15
STA 717+06.49
OFFSET = 448.89' LT
ELEV = 103.73
DESC = 3 1/4" TxDOT ALUM DISK

FUNC CLASS	: FREEWAY
DESIGN SPEED:	70 MPH
ADT(2002)	: 56,200 VPD
ADT(2022)	: 91,400 VPD
NBI	: 21-109-0-0255-08-271

HS25 LOADING

Parsons Brinckerhoff Quade & Douglas Inc.

Texas Department of Transportation

© 2003 by TxDOT

BRIDGE LAYOUT

OWASSA ROAD OVERPASS

NORTHBOUND MAINLANES

PLAN 1"= 40' HORIZ
PROFILE 1"= 40' VERT

281OWNBBL01.DGN

DESIGNED: ALA	FED. RD DIV. NO.	STATE	FEDERAL AID PROJECT No.		HIGHWAY No.
CHECKED: ARC	6	TEXAS	NH 2003 ( )		US 281
DRAWN: RLJ	STATE DISTRICT	COUNTY	CONTROL No.	SECTION No.	JOB No.	SHEET No.
CHECKED: ALA	PHARR	HIDALGO	0255	08	091	1004

ALLEN CROZIER
02:29:12 PM
08/06/2003
I:\projects\22322g\CADD\Sheets\Structures\Direct Connects\Owassso\281owsbBL01.dgn

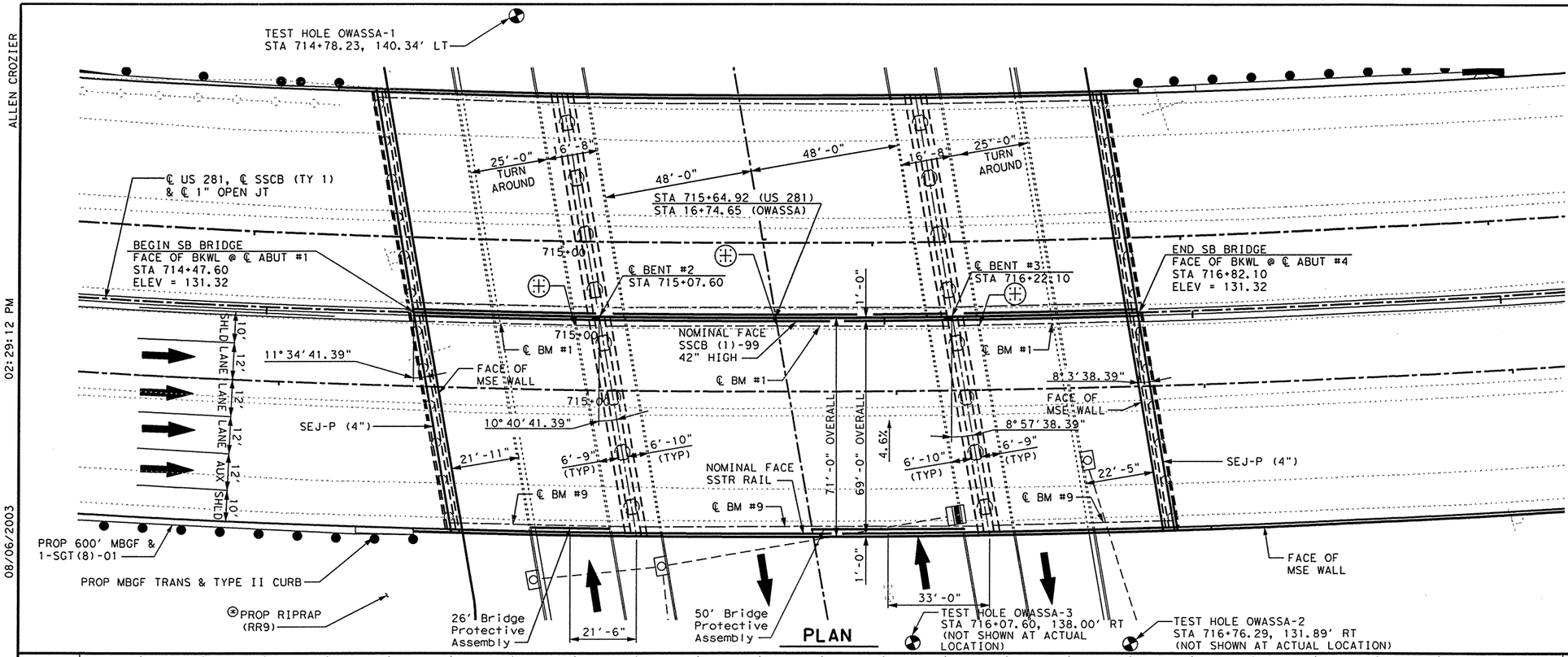

PLAN

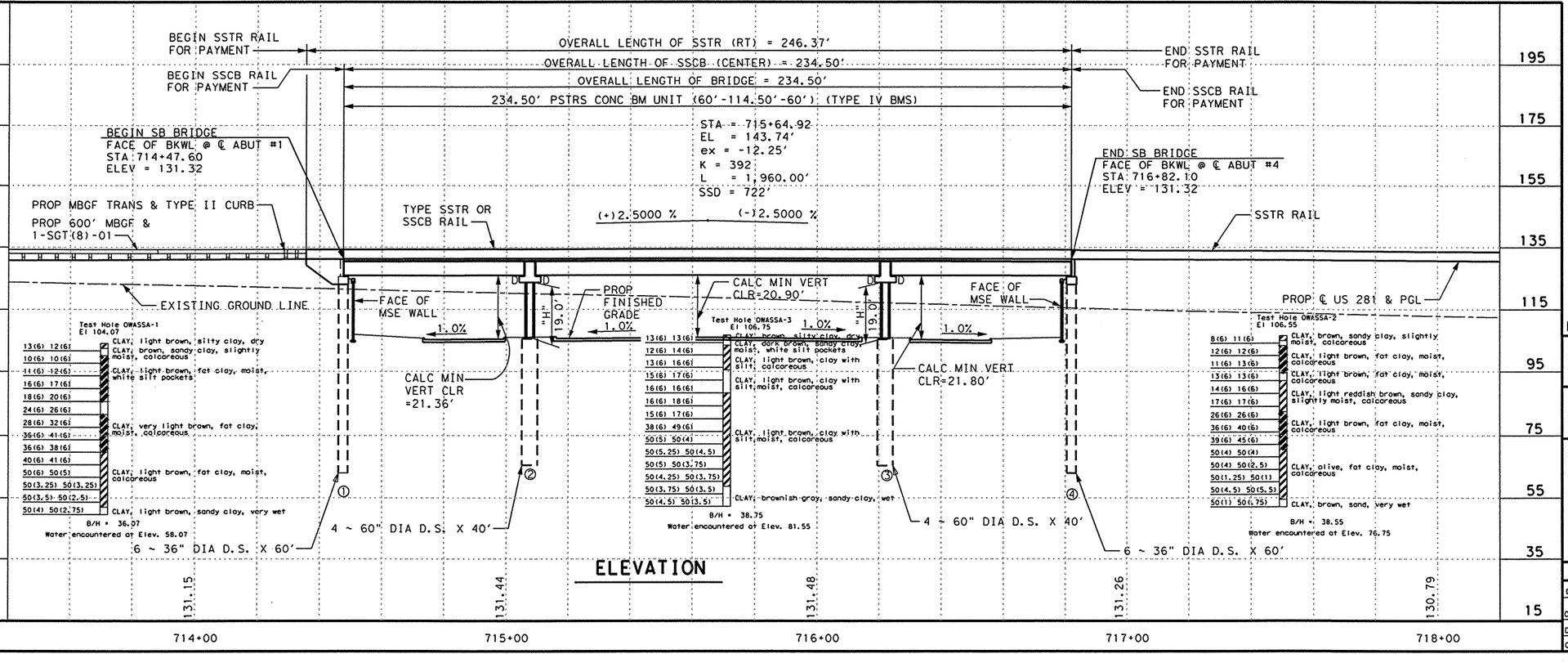

ELEVATION

⊛ - RIPRAP SHALL BE COLORED-TEXTURIZED CONCRETE

● - TEST HOLE

⊕ - POINT OF MIN VERT CLEAR
STA 715+04.28 (2.92' RT)
STA 715+65.34 (2.67' RT)
STA 716+26.18 (2.91' RT)

HORIZONTAL CURVE DATA

CURVE BL1-2	
PI STA	= 712+28.45
DELTA	= 30° 26' 02.38" (LT)
DEGREE OF CURVE	= 1° 30' 00.00"
TANGENT	= 1,039.1'
LENGTH	= 2,028.93'
RADIUS	= 3,819.72'
X	= 1,090,727.9378
Y	= 16,616,532.1110

ALL BENT AND ABUTMENTS ARE ON A BEARING OF S 81° 31' 01.77" E

STATE OF TEXAS
ALLEN R. CROZIER
81450
REGISTERED PROFESSIONAL ENGINEER
8/5/03

NOTES:

DESIGNED IN ACCORDANCE WITH 1996 AASHTO STANDARD SPECIFICATIONS AND ALL CURRENT INTERIMS.

ELEVATIONS BASED ON THE CURRENT NAVD 88 DATUM.

BORE HOLE DATA PROVIDED BY TxDOT, PHARR DISTRICT

BM US 281-15
STA 717+06.49
OFFSET = 448.89' LT
ELEV = 103.73
DESC = 3 1/4" TxDOT ALUM DISK

FUNC CLASS	: FREEWAY
DESIGN SPEED:	70 MPH
ADT(2002)	: 56,200 VPD
ADT(2022)	: 91,400 VPD
NBI	: 21-109-0-0255-08-272

HS25 LOADING SHEET X OF X

Parsons Brinckerhoff Quade & Douglas Inc.

Texas Department of Transportation

© 2003 by TxDOT

BRIDGE LAYOUT

OWASSA ROAD OVERPASS

SOUTHBOUND MAINLANES

PLAN 1"= 40' HORIZ
PROFILE 1"= 40' VERT

281OWSBBL01.DGN

DESIGNED: ALA	FED. RD DIV. No.	STATE	FEDERAL AID PROJECT No.		HIGHWAY No.	
CHECKED: ARC	6	TEXAS	NH 2003 ( )		US 281	
DRAWN: RLJ	STATE DISTRICT	COUNTY	CONTROL No.	SECTION No.	JOB No.	SHEET No.
CHECKED: ALA	PHARR	HIDALGO	0255	08	091	1005

ESMERALDA G. EGGER
02:03:31 PM
06/25/2003
I:\projects\22322o\CADD\Sheets\Structures\Direct Connects\Owassso\281TYPSEC2.dgn

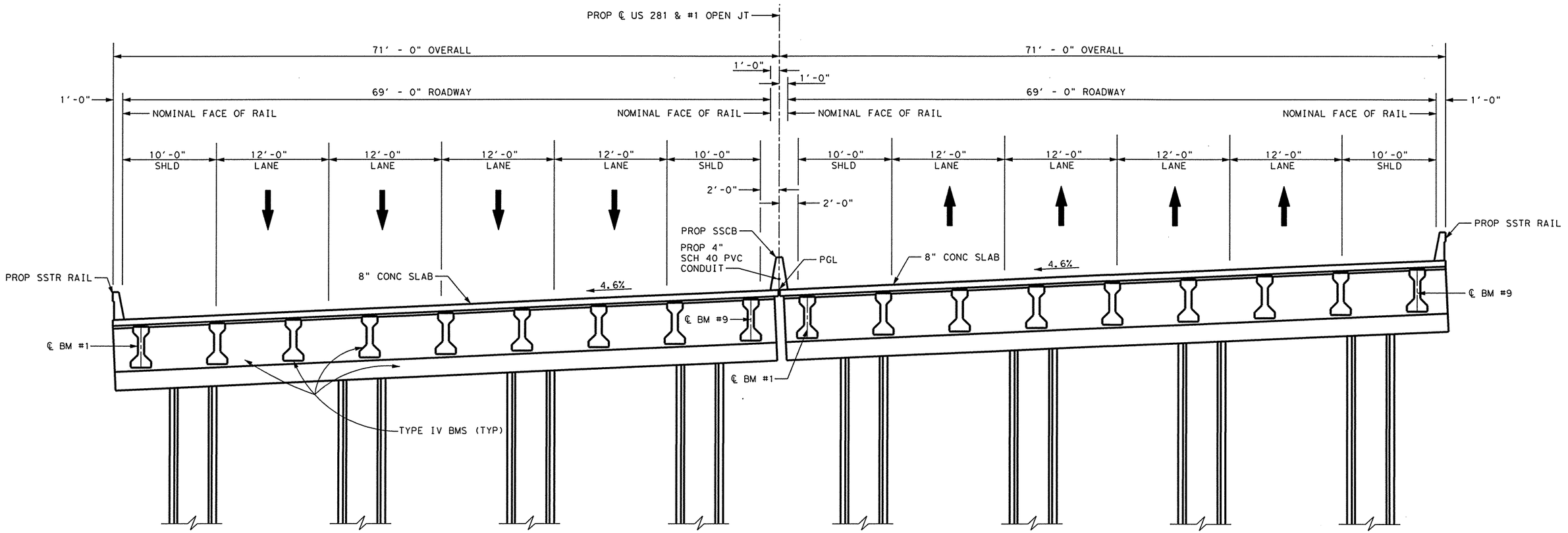

NORTHBOUND MAINLANES

SOUTHBOUND MAINLANES

TYPICAL SECTION
(SPANS 1-3)

HS25 LOADING

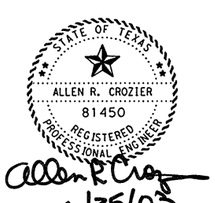

Parsons Brinckerhoff Quade & Douglas Inc.

Texas Department of Transportation

© 2003 by TxDOT

TYPICAL SECTION
OWASSA ROAD OVERPASS
NORTHBOUND & SOUTHBOUND MAINLANES

281TYPSEC2.DGN

DESIGNED: ALA	FED. RD DIV. No.	STATE	FEDERAL AID PROJECT No.	HIGHWAY No.
CHECKED: ARC	6	TEXAS	NH 2003 ( )	US 281

DRAWN: RLJ	STATE DISTRICT	COUNTY	CONTROL No.	SECTION No.	JOB No.	SHEET No.
CHECKED: ALA	PHARR	HIDALGO	0255	08	091	1006

SUMMARY OF ESTIMATED QUANTITIES

ITEM NUMBER	416		420		422	425	428	432	444	454	450	514	5559		
ITEM / DESCRIPTION	DRILLED SHAFTS		CLASS "C" CONCRETE		REINF CONCRETE SLAB	PRESTR CONCRETE BEAM	CONCRETE SURFACE TREATMENT	RIPRAP CONCRETE	BRIDGE PROTECTIVE ASSEMBLY	SEALED EXPANSION JOINT	RAILING	CONCRETE TRAFFIC BARRIER	COLORED-TEXTURIZED CONCRETE		
	36" ø	60" ø	ABUTMENT	BENT		TYPE "IV"		CLASS "B"		4"	SSTR	SSCB (1)	4"		
	LF	LF	CY	CY	SF	LF	SY	CY	EA	LF	LF	LF	SY		
2~ABUTMENTS	720		76.8								24.00				
2~INTERIOR BENTS		320		238.6											
1~234.50' PRESTR CONC BM UNIT					16,644	2,039.5	1,790		2		234.64	234.50			
TOTAL	720	320	76.8	238.6	16,644	2,039.5	1,790	① 101.0	2	② 141	258.64	234.50	886		

① FOR CONTRACTORS INFORMATION ONLY. INCLUDES RIPRAP QUANTITY FOR NORTHBOUND AND SOUTHBOUND BRIDGE STRUCTURES. RIPRAP CONCRETE SHALL BE COLORED-TEXTURIZED IN ACCORDANCE WITH SPECIAL SPECIFICATION 5559.

② LENGTHS SHOWN ARE FOR ONE COMPLETE JOINT.
ABUT NO. 1 = 71'
ABUT NO. 4 = 70'

BEARING SEAT ELEVATIONS

	BEAM 1	BEAM 2	BEAM 3	BEAM 4	BEAM 5	BEAM 6	BEAM 7	BEAM 8	BEAM 9
BENT 1 (FWD)	122.647	123.026	123.405	123.784	124.163	124.543	124.922	125.301	125.679
	BEAM 1	BEAM 2	BEAM 3	BEAM 4	BEAM 5	BEAM 6	BEAM 7	BEAM 8	BEAM 9
BENT 2 (BK)	122.796	123.173	123.549	123.926	124.302	124.679	125.055	125.431	125.808
(FWD)	122.596	122.972	123.349	123.725	124.101	124.477	124.854	125.230	125.606
	BEAM 1	BEAM 2	BEAM 3	BEAM 4	BEAM 5	BEAM 6	BEAM 7	BEAM 8	BEAM 9
BENT 3 (BK)	122.630	123.003	123.375	123.747	124.119	124.491	124.863	125.235	125.607
(FWD)	122.834	123.206	123.578	123.950	124.322	124.694	125.065	125.437	125.809
	BEAM 1	BEAM 2	BEAM 3	BEAM 4	BEAM 5	BEAM 6	BEAM 7	BEAM 8	BEAM 9
BENT 4 (BK)	122.719	123.090	123.460	123.831	124.201	124.572	124.942	125.312	125.683

HS25 LOADING

STATE OF TEXAS
ALLEN R. CROZIER
81450
REGISTERED PROFESSIONAL ENGINEER
8/5/03

Parsons Brinckerhoff Quade & Douglas Inc.

Texas Department of Transportation

© 2003 by TxDOT

ESTIMATED QUANTITIES AND BEARING SEAT ELEVATIONS
OWASSA ROAD OVERPASS
NORTHBOUND MAINLANES

281OWASSANBEQ.DGN

DESIGNED: ALA	FED. RD DIV. No.	STATE	FEDERAL AID PROJECT No.		HIGHWAY No.	
CHECKED: ARC	6	TEXAS	NH 2003 ( )		US 281	
DRAWN: RLJ	STATE DISTRICT	COUNTY	CONTROL No.	SECTION No.	JOB No.	SHEET No.
CHECKED: ALA	PHARR	HIDALGO	0255	08	091	1007

ALLEN CROZIER
02:30:51 PM
08/06/2003
I:\projects\22322a\CADD\Sheets\Structures\Direct Connects\Owassa\281OWASSANBEQ.dgn

ALLEN CROZIER
02:31:04 PM
08/06/2003
I:\projects\22322a\CADD\Sheets\Structures\Direct Connects\Owassa\2810WASSASBEQ.dgn

SUMMARY OF ESTIMATED QUANTITIES

ITEM NUMBER	416		420		422	425	428	432	444	454	450	5559			
ITEM / DESCRIPTION	DRILLED SHAFTS		CLASS "C" CONCRETE		REINF CONCRETE SLAB	PRESTR CONCRETE BEAM	CONCRETE SURFACE TREATMENT	RIPRAP CONCRETE	BRIDGE PROTECTIVE ASSEMBLY	SEALED EXPANSION JOINT	RAILING	COLORED-TEXTURIZED CONCRETE			
	36" ø	60" ø	ABUTMENT	BENT		TYPE "IV"		CLASS "B"		4"	SSTR	4"			
	LF	LF	CY	CY	SF	LF	SY	CY	EA	LF	LF	SY			
2~ABUTMENTS	720		74.8								12.00				
2~INTERIOR BENTS		320		238.4											
1~234.50' PRESTR CONC BM UNIT					16,636	2,038.3	1,790		2		234.37				
TOTAL	720	320	74.8	238.4	16,636	2,038.3	1,790	①	2	② 141	246.37	③			

① FOR CONTRACTORS INFORMATION ONLY. RIPRAP QUANTITY INCLUDED IN NORTHBOUND MAINLANE QUANTITIES. RIPRAP CONCRETE SHALL BE COLORED-TEXTURIZED IN ACCORDANCE WITH SPECIAL SPECIFICATION 5559.

② LENGTHS SHOWN ARE FOR ONE COMPLETE JOINT.
ABUT NO. 1 = 71'
ABUT NO. 4 = 70'

③ COLORED-TEXTURIZED CONCRETE QUANTITY INCLUDED IN NORTHBOUND MAINLANE QUANTITIES

BEARING SEAT ELEVATIONS

		BEAM 1	BEAM 2	BEAM 3	BEAM 4	BEAM 5	BEAM 6	BEAM 7	BEAM 8	BEAM 9
BENT 1	(FWD)	125.959	126.338	126.716	127.094	127.473	127.851	128.229	128.607	128.986
		BEAM 1	BEAM 2	BEAM 3	BEAM 4	BEAM 5	BEAM 6	BEAM 7	BEAM 8	BEAM 9
BENT 2	(BK)	126.085	126.461	126.837	127.213	127.589	127.965	128.340	128.716	129.092
	(FWD)	125.883	126.259	126.635	127.010	127.386	127.762	128.137	128.513	128.888
		BEAM 1	BEAM 2	BEAM 3	BEAM 4	BEAM 5	BEAM 6	BEAM 7	BEAM 8	BEAM 9
BENT 3	(BK)	125.882	126.254	126.626	126.998	127.369	127.741	128.113	128.485	128.856
	(FWD)	126.084	126.456	126.827	127.199	127.571	127.942	128.314	128.686	129.057
		BEAM 1	BEAM 2	BEAM 3	BEAM 4	BEAM 5	BEAM 6	BEAM 7	BEAM 8	BEAM 9
BENT 4	(BK)	125.956	126.327	126.697	127.067	127.437	127.808	128.178	128.548	128.918

HS25 LOADING

STATE OF TEXAS
ALLEN R. CROZIER
81450
REGISTERED
PROFESSIONAL ENGINEER
Allen R. Crozier
8/5/03

Parsons Brinckerhoff Quade & Douglas Inc.

Texas Department of Transportation

© 2003 by TxDOT

ESTIMATED QUANTITIES AND BEARING SEAT ELEVATIONS
OWASSA ROAD OVERPASS
SOUTHBOUND MAINLANES

2810WASSASBEQ.DGN

DESIGNED: ALA	FED. RD DIV. No.	STATE	FEDERAL AID PROJECT No.	HIGHWAY No.
CHECKED: ARC	6	TEXAS	NH 2003 ( )	US 281

DRAWN: RLJ	STATE DISTRICT	COUNTY	CONTROL No.	SECTION No.	JOB No.	SHEET No.
CHECKED: ALA	PHARR	HIDALGO	0255	08	091	1008

ESMERALDA G. EGGER
11:19:32 AM
06/25/2003
I:\projects\22322ca\CADD\Sheets\Structures\Direct Connects\Owassa\281ownbabut01.dgn

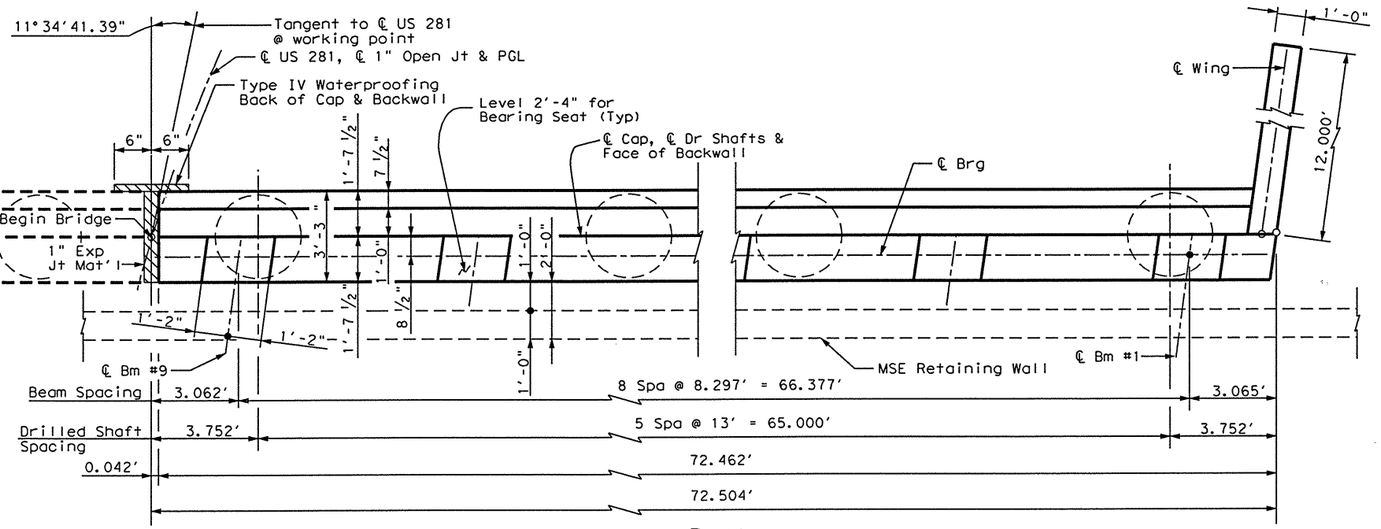

PLAN

Type IV Waterproofing shall be considered Subsidiary to Bid Item Class "C" Concrete.

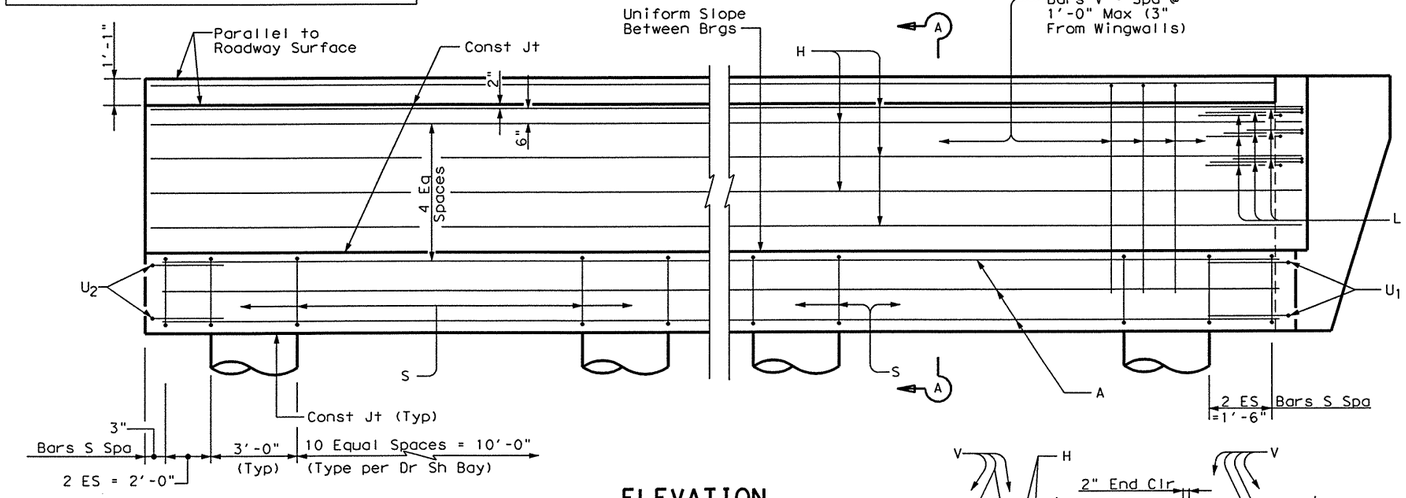

ELEVATION

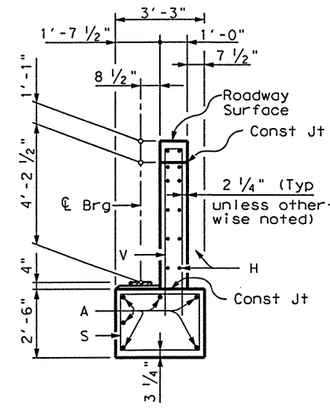

SECTION A-A

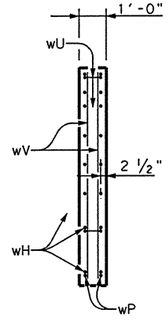

SECTION B-B

TABLE OF ESTIMATED QUANTITIES				
Bar	No.	Size	Length	Weight
A	6	#11	81'- 10" ①	2609
H	12	#5	73'- 1" ②	915
L	9	#6	4'- 0"	54
S	61	#4	10'- 8"	435
U_1	2	#6	7'-10"	24
U_2	2	#6	7'-10"	24
V	72	#5	13'-10"	1039
wH_1	6	#6	11'- 8"	105
wH_2	2	#6	9'-11"	30
wH_3	2	#6	8'- 4"	25
wH_4	2	#6	6'- 9"	20
wH_5	2	#6	6'-10"	21
wH_6	2	#6	4'- 4"	13
wP	2	#6	10'-11"	33
wU	8	#4	1'- 7"	8
wV_1	6	#5	7'- 9"	48
wV_{2-10}	18	#5	4'- 3"Av	80
Reinforcing Steel			Lb	5483
Class "C" Concrete			CY	38.6

① Includes 1~10'-0" min lap
② Includes 1~1'-3" min lap

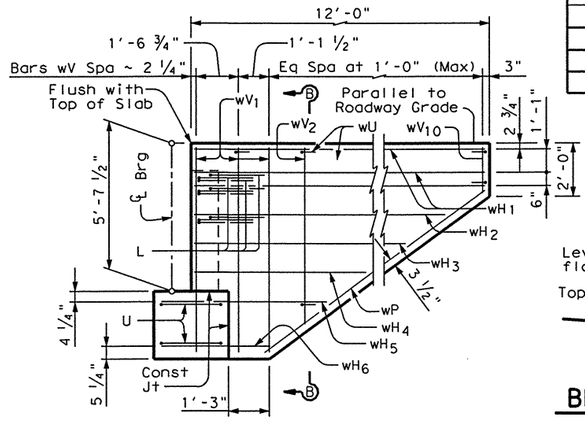

WINGWALL ELEVATION

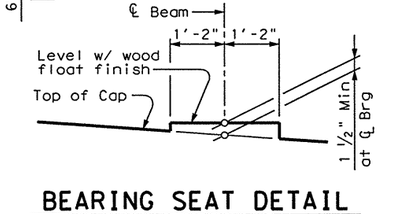

BEARING SEAT DETAIL

(Bearing surface shall be clean and free of all loose material before placing bearing pad.)

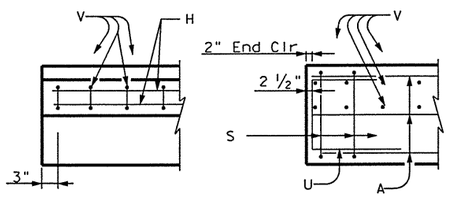

BACKWALL CAP

CORNER DETAILS AT EXP Jt

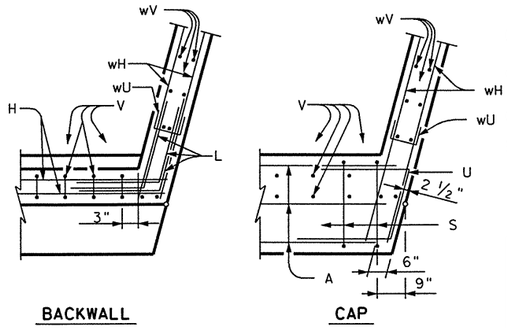

BACKWALL CAP

CORNER DETAILS AT WINGWALL

GENERAL NOTES:

Designed according to 1996 AASHTO Standard and current Interim Specifications.
Concrete strength f'c = 3,600 psi.
All cap and wall reinforcing shall be Grade 60.
See Foundation Detail Standard Sheet, FD, for all foundation details and notes.
See SEJ-P Standard for additional details.
Calculated Foundation Load = 85 T/D.S.

HS25 LOADING

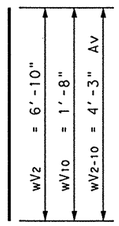

BARS wV

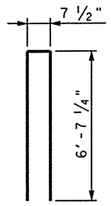

BARS V

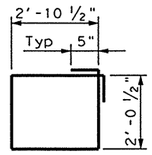

BARS S

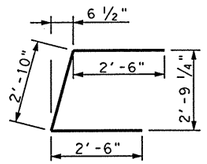

BARS U_1

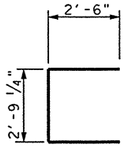

BARS U_2

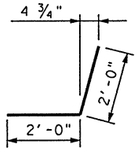

BARS L

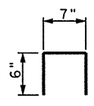

BARS wU

STATE OF TEXAS
ALLEN R. CROZIER
81450
REGISTERED PROFESSIONAL ENGINEER
Allen R. Crozier
6/25/03

Parsons Brinckerhoff Quade & Douglas Inc.

Texas Department of Transportation

© 2003 by TxDOT

ABUTMENT NO. 1

OWASSA ROAD OVERPASS
NORTHBOUND MAINLANES

281OWNBABUT01.DGN

DESIGNED: ALA	FED. RD DIV. No.	STATE	FEDERAL AID PROJECT No.		HIGHWAY No.
CHECKED: ARC	6	TEXAS	NH 2003 ( )		US 281
DRAWN: RLJ	STATE DISTRICT	COUNTY	CONTROL No.	SECTION No.	JOB No. / SHEET No.
CHECKED: ALA	PHARR	HIDALGO	0255	08	091 / 1010

ESMERALDA G. EGGER
11:19:52 AM
06/25/2003
I:\projects\22322a\CADD\Sheets\Structures\Direct Connects\Owasssa\281ownbabut04.dgn

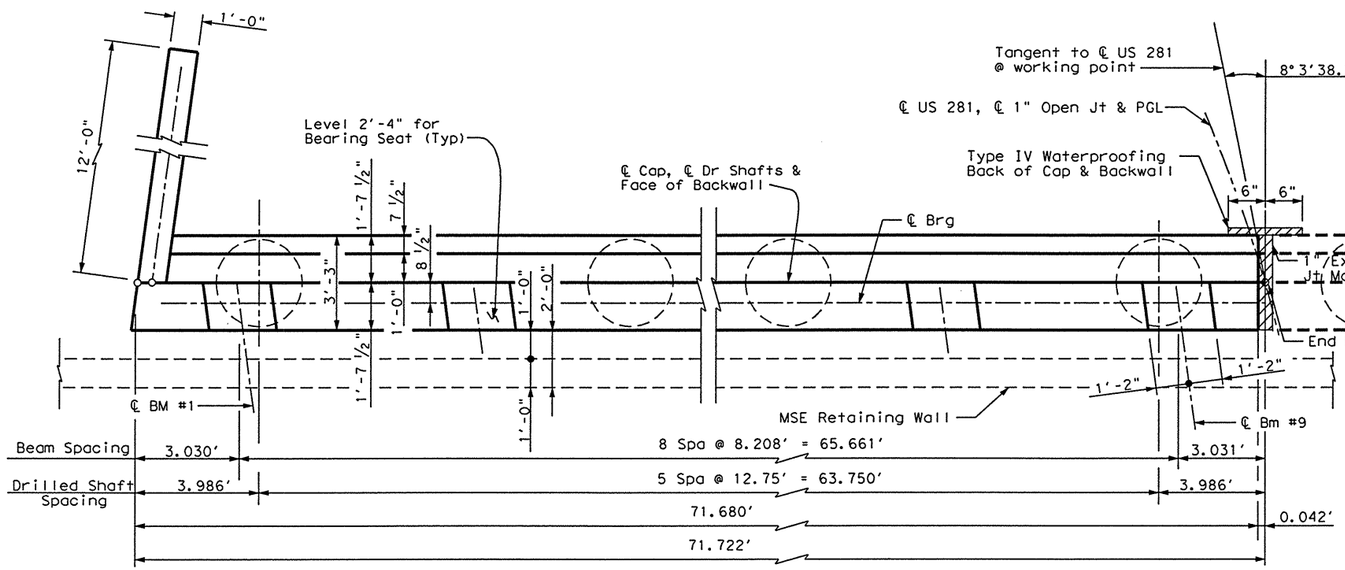

PLAN

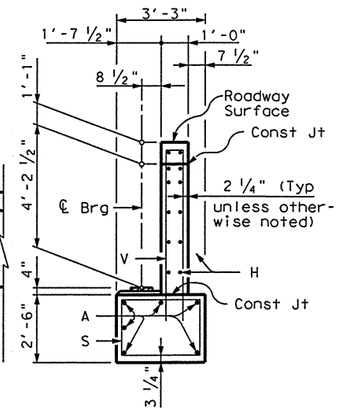

SECTION A-A

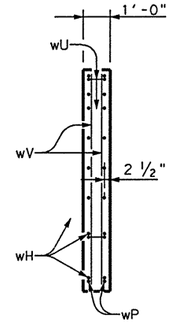

SECTION B-B

TABLE OF ESTIMATED QUANTITIES				
Bar	No.	Size	Length	Weight
A	6	#11	81'- 7"①	2601
H	12	#5	72'-10"②	912
L	9	#6	4'- 0"	54
S	62	#4	10'- 8"	442
U_1	2	#6	7'-10"	24
U_2	2	#6	7'-10"	24
V	71	#5	13'-10"	1024
wH_1	6	#6	11'- 8"	105
wH_2	2	#6	9'-11"	30
wH_3	2	#6	8'- 4"	25
wH_4	2	#6	6'- 9"	20
wH_5	2	#6	6'-10"	21
wH_6	2	#6	4'- 4"	13
wP	2	#6	10'-11"	33
wU	8	#4	1'- 7"	8
wV_1	6	#5	7'- 9"	48
$wV_{2\text{-}10}$	18	#5	4'- 3" Av	80
Reinforcing Steel			Lb	5464
Class "C" Concrete			CY	38.2

① Includes 1 ~ 10'-0" min lap
② Includes 1 ~ 1'-3" min lap

Type IV Waterproofing shall be considered Subsidiary to Bid Item Class "C" Concrete.

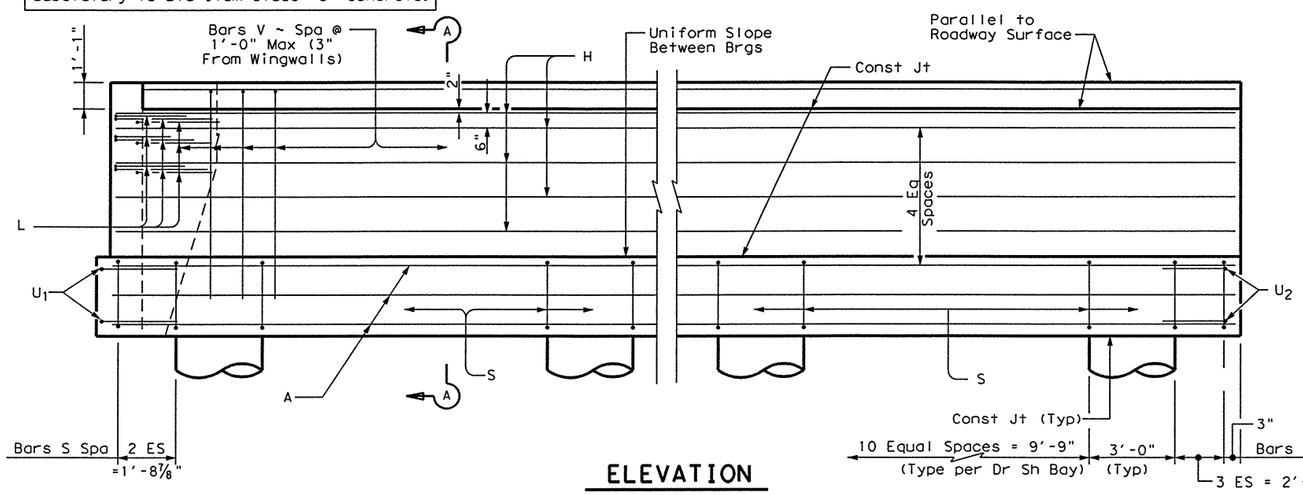

ELEVATION

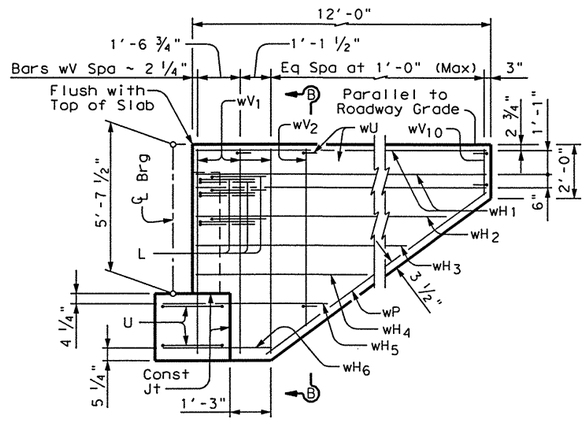

WINGWALL ELEVATION

BEARING SEAT DETAIL

(Bearing surface shall be clean and free of all loose material before placing bearing pad.)

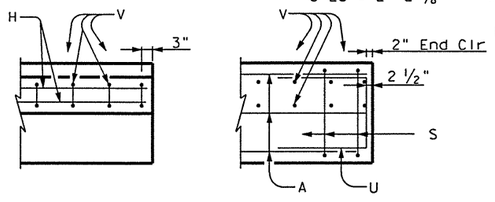

BACKWALL CAP

CORNER DETAILS AT EXP Jt

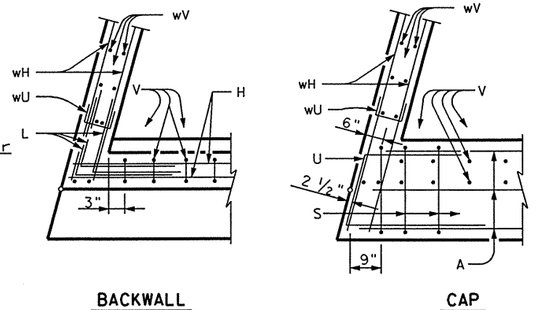

BACKWALL CAP

CORNER DETAILS AT WINGWALL

GENERAL NOTES:

Designed according to 1996 AASHTO Standard and current Interim Specifications.

Concrete strength f'c = 3,600 psi.

All cap and wall reinforcing shall be Grade 60.

See Foundation Detail Standard Sheet, FD, for all foundation details and notes.

See SEJ-P Standard for additional details.

Calculated Foundation Load = 85 T/D.S.

HS25 LOADING

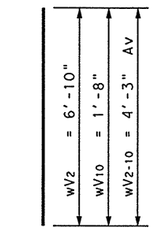

BARS wV

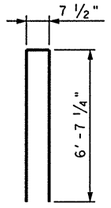

BARS V

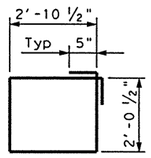

BARS S

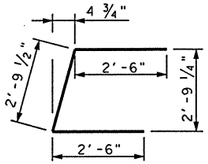

BARS U_1

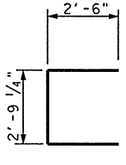

BARS U_2

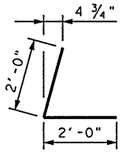

BARS L2

BARS wU

STATE OF TEXAS
ALLEN R. CROZIER
81450
REGISTERED PROFESSIONAL ENGINEER
6/25/03

PB Parsons Brinckerhoff Quade & Douglas Inc.
Texas Department of Transportation
© 2003 by TxDOT

ABUTMENT NO. 4

OWASSA ROAD OVERPASS
NORTHBOUND MAINLANES

281OWNBABUT04.DGN

DESIGNED: ALA	FED. RD DIV. No.	STATE	FEDERAL AID PROJECT No.		HIGHWAY No.
CHECKED: ARC	6	TEXAS	NH 2003 ( )		US 281
DRAWN: RLJ	STATE DISTRICT	COUNTY	CONTROL No.	SECTION No.	JOB No. / SHEET No.
CHECKED: ALA	PHARR	HIDALGO	0255	08	091 / 1011

ESMERALDA G. EGGER
11:21:25 AM
06/25/2003
I:\projects\22322o\CADD\Sheets\Structures\Direct Connects\Owassso\2810WNBBNT2.dgn

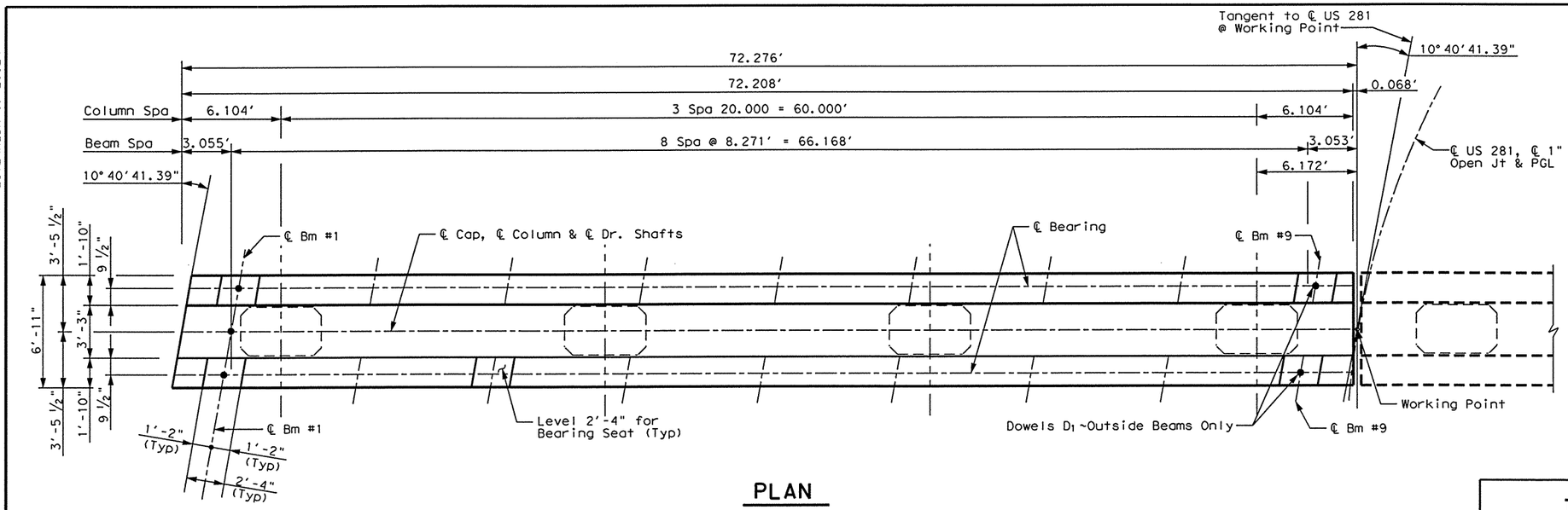

PLAN

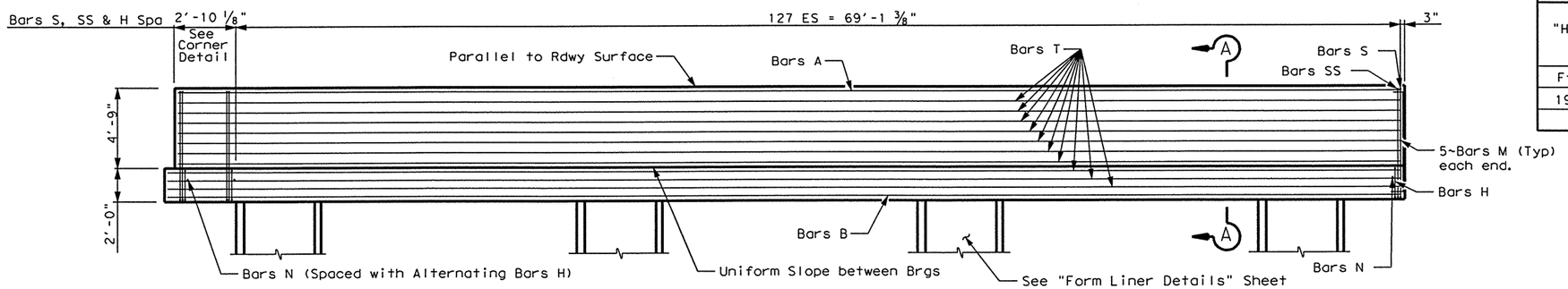

ELEVATION

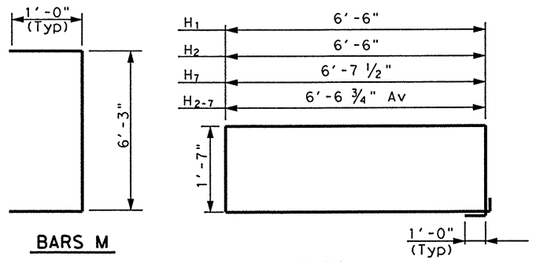

BARS M

BARS H

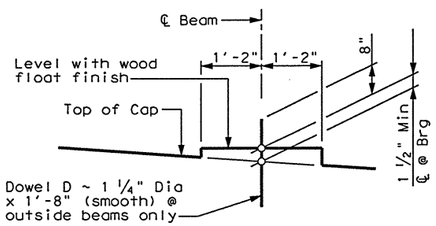

BEARING SEAT DETAIL

(Bearing surface shall be clean and free of all loose material before placing bearing pad.)

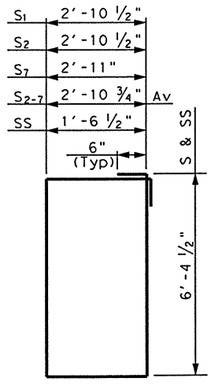

BARS S & SS

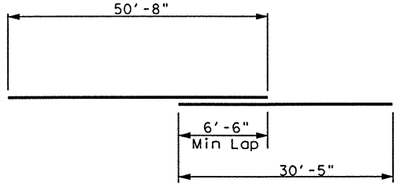

BARS B

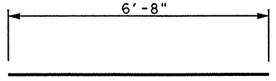

BARS N

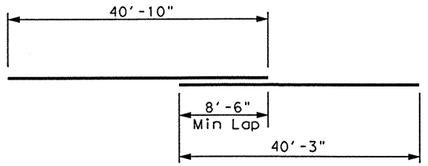

BARS A

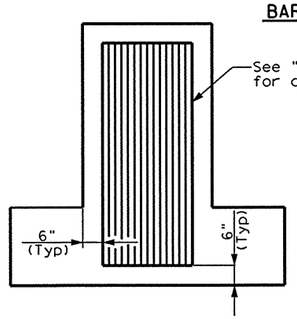

FORM LINER LOCATION

TABLE OF CONSTANT QUANTITIES

Bar	No.	Size	Length	Weight
A	5	#11	81'-1"	2154
B	7	#11	81'-1"	3016
D_1	4	1¼"ø	1'-8"	29
D_2	80	#11	20'-0"	8501
H_1	127	#6	18'-2"	3465
H_{2-7}	6	#6	18'-4" Av	165
M	10	#5	8'-3"	86
N	67	#5	6'-8"	466
S_1	127	#5	19'-6"	2583
S_{2-7}	6	#5	19'-7" Av	123
SS	133	#5	16'-10"	2535
T	24	#7	74'-8" (1)	3663
Reinforcing Steel			Lb	26,786
Class "C" Concrete			CY	78.7

(1) Length includes 1~2'-1" min Lap.

TABLE OF VARIABLE QUANTITIES (2)

"H"	Class "C" Conc (Cols)	Bars K ~ #4 10'-2"		Bars V 80 ~ # 11		Reinf Steel	Class "C" Conc
Ft	CY	No.	Weight	Length	Weight	Lb	CY
19	40.8	144	978	24'-10"	10,555	38,319	119.5

TOTAL ESTIMATED QUANTITIES (3)

(2) Adjust Bars V length by 1 ft and add four additional Bars K for each linear foot of variation in "H" value.

(3) Adjust Reinforcing Steel total by 502 Lb. and Class "C" Concrete total by 2.15 CY for each linear foot of variation in "H" value.

GENERAL NOTES:

Designed according to AASTHO 1996 Standard and current Interim Specifications.
Calculated Foundation Load ~ 300 T/D.S.
See Foundation Detail Standard sheet, FD(MOD), for all Foundation details and notes.
Class "C" concrete Strength f'c = 3600 psi.
All reinforcing steel shall be Grade 60.

HS25 LOADING

Parsons Brinckerhoff Quade & Douglas Inc.

Texas Department of Transportation

© 2003 by TxDOT

STATE OF TEXAS
ALLEN R. CROZIER
81450
REGISTERED PROFESSIONAL ENGINEER

Allen R. Crozier 6/25/03

INTERIOR BENT NO. 2

OWASSA ROAD OVERPASS

NORTHBOUND MAINLANES

2810WNBBNT2.DGN

DESIGNED: ALA	FED. RD DIV. No.	STATE	FEDERAL AID PROJECT No.	HIGHWAY No.
CHECKED: ARC	6	TEXAS	NH 2003 ( )	US 281

DRAWN: RLJ	STATE DISTRICT	COUNTY	CONTROL No.	SECTION No.	JOB No.	SHEET No.
CHECKED: ALA	PHARR	HIDALGO	0255	08	091	1012

ESMERALDA G. EGGER
11:23:25 AM
06/25/2003
I:\projects\22322a\CADD\Sheets\Structures\Direct Connects\Owasssa\2810WNBBNT2b.dgn

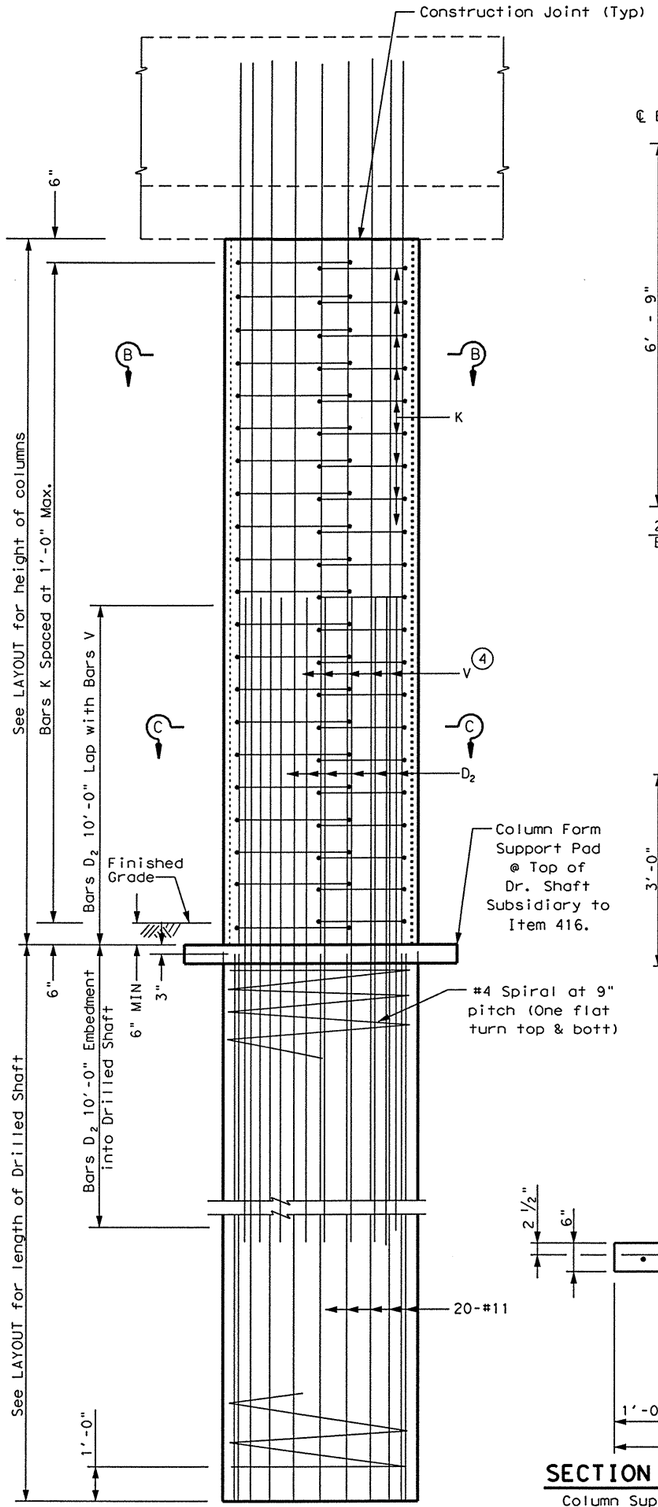

TYPICAL COLUMN DETAILS

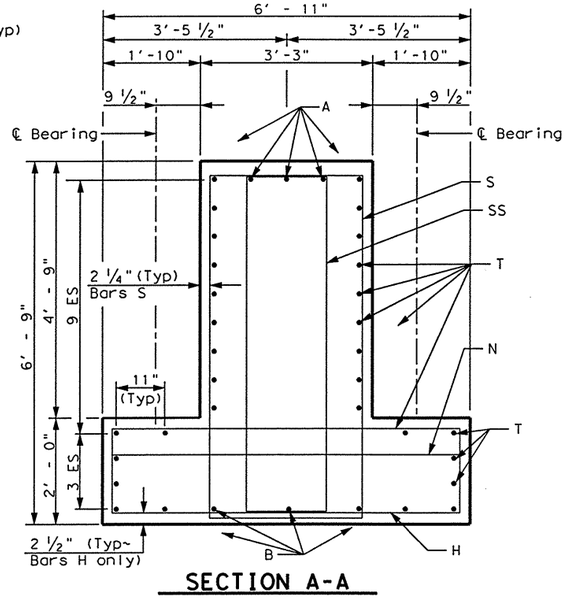

SECTION A-A

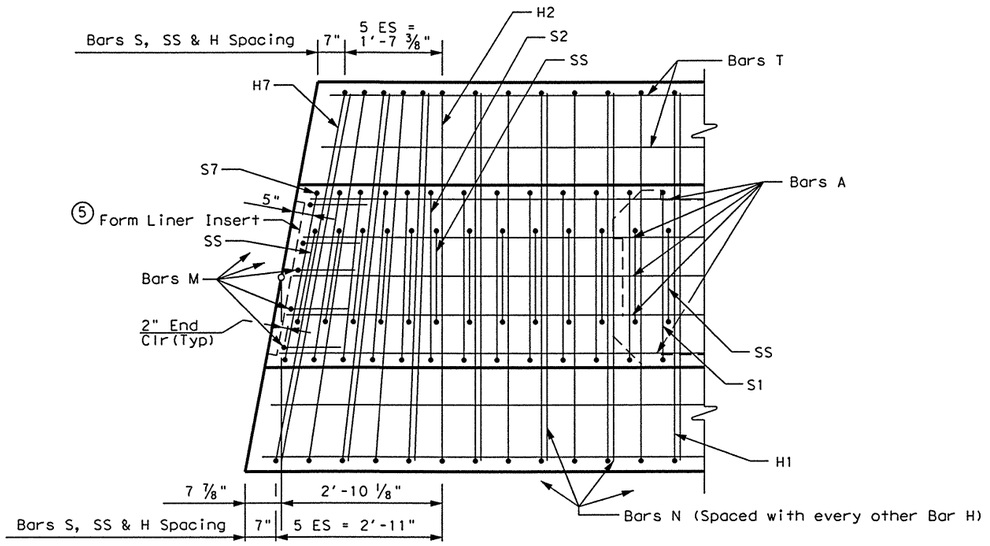

CORNER DETAIL

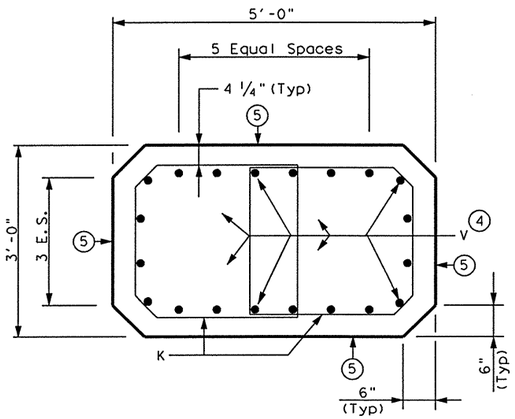

SECTION B-B

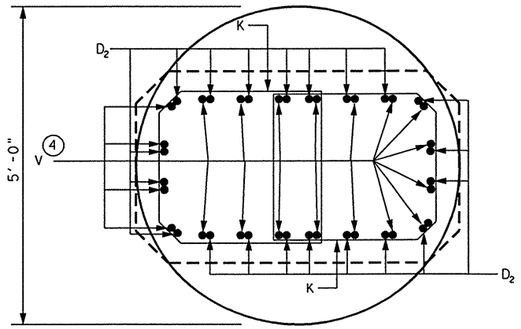

TYPICAL SECTION SHOWING BARS D_2 & BARS V

TYPICAL SECTION SHOWING DRILLED SHAFT REINFORCEMENT

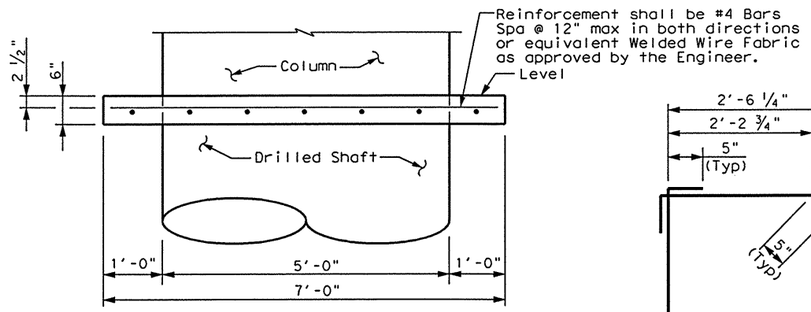

SECTION THRU COLUMN FORM SUPPORT PAD

Column Support Pad concrete and reinforcement shall be subsidiary to Bid Item 416 "Drilled Shaft Foundations"

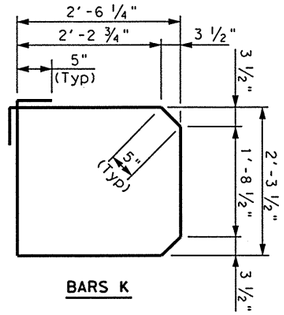

BARS K

SECTION C-C

(4) Extend Bars V 5'-10" min Into Bent Cap.

(5) See "Form Liner Details" For details not shown.

(6) Drilled Shaft Bars Shall Terminate 3" Below Top of Drilled Shaft.

STATE OF TEXAS
ALLEN R. CROZIER
81450
REGISTERED PROFESSIONAL ENGINEER
Allen R. Crozier
6/25/03

HS25 LOADING

SHEET 2 OF 2

Parsons Brinckerhoff Quade & Douglas Inc.

Texas Department of Transportation

© 2003 by TxDOT

INTERIOR BENT NO. 2

OWASSA ROAD OVERPASS

NORTHBOUND MAINLANES

2810WNBBNT2B.DGN

DESIGNED: ALA	FED. RD DIV. No.	STATE	FEDERAL AID PROJECT No.			HIGHWAY No.
CHECKED: ARC	6	TEXAS	NH 2003 ( )			US 281
DRAWN: RLJ	STATE DISTRICT	COUNTY	CONTROL No.	SECTION No.	JOB No.	SHEET No.
CHECKED: ALA	PHARR	HIDALGO	0255	08	091	1013

ESMERALDA G. EGGER
06/25/2003 11:27:01 AM
I:\projects\22322a\CADD\Sheets\Structures\Direct Connects\Owassa\2810WNBBNT3.dgn

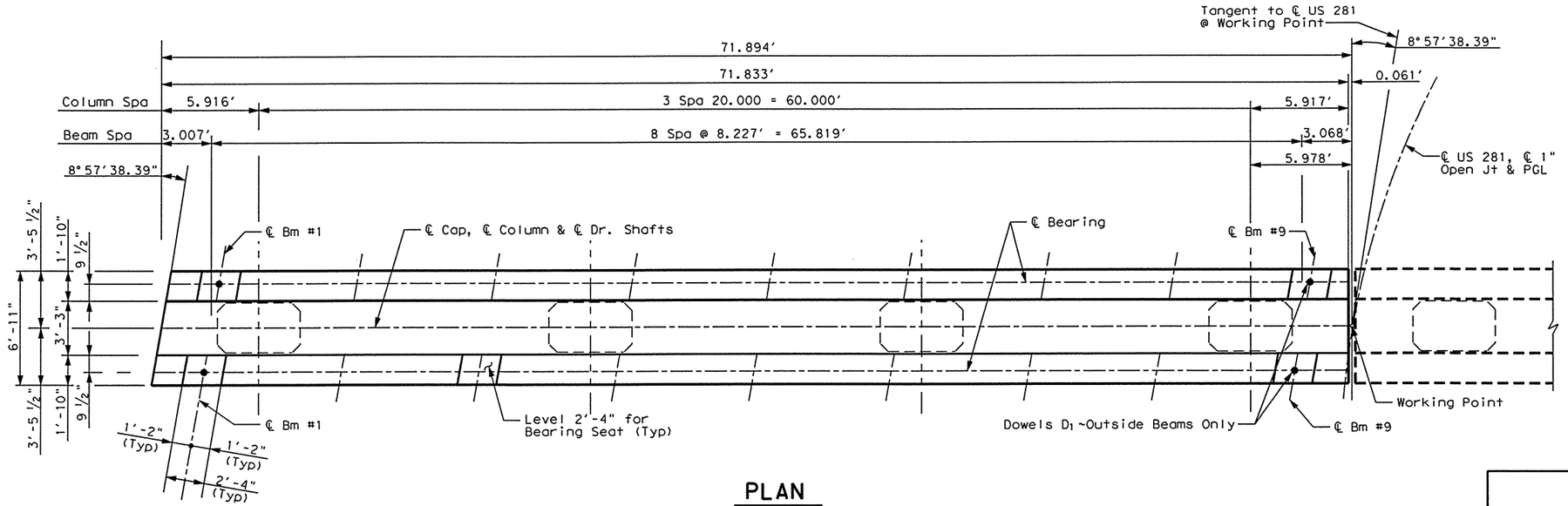

PLAN

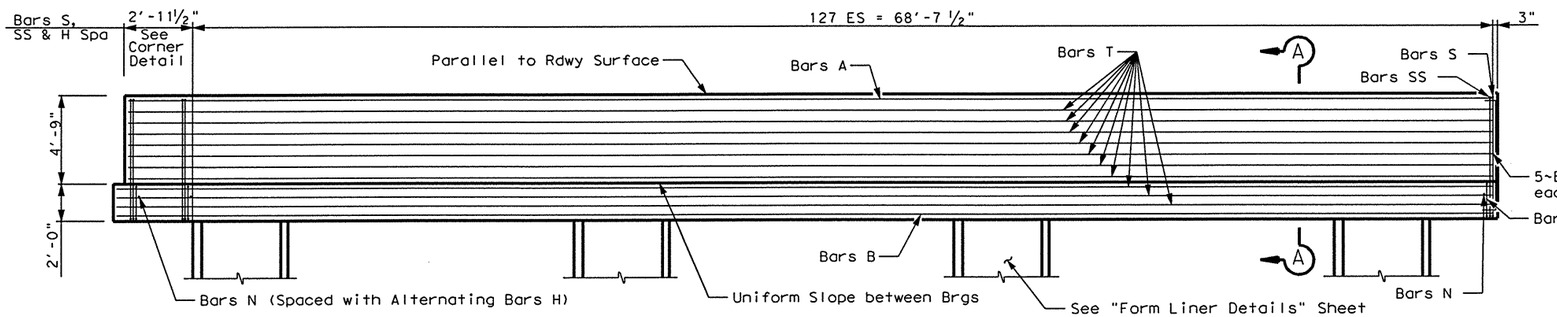

ELEVATION

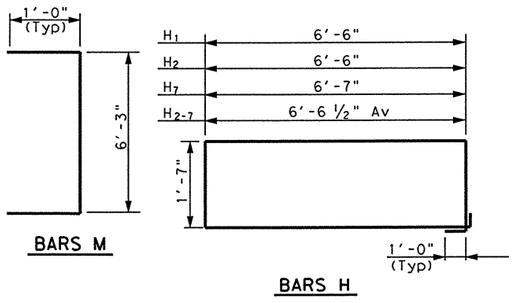

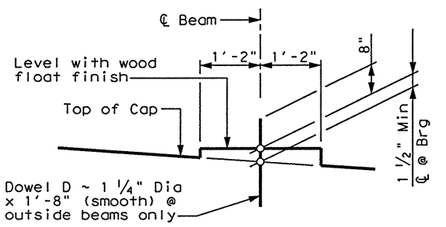

BEARING SEAT DETAIL

(Bearing surface shall be clean and free of all loose material before placing bearing pad.)

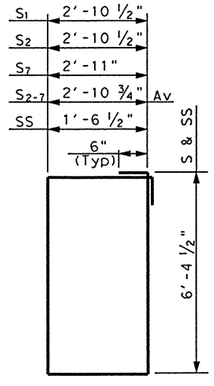

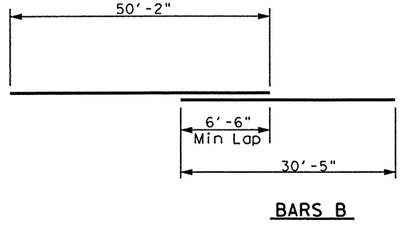

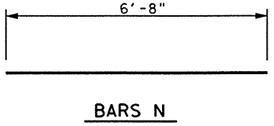

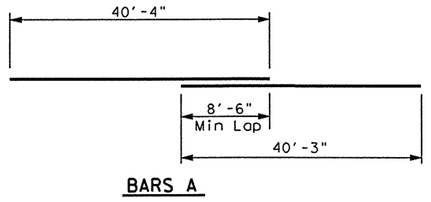

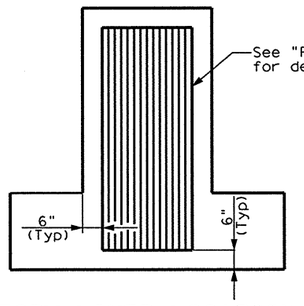

TABLE OF CONSTANT QUANTITIES

Bar	No.	Size	Length	Weight
A	5	#11	80'-7"	2141
B	7	#11	80'-7"	2997
D_1	4	1¼"ø	1'-8"	29
D_2	80	#11	20'-0"	8501
H_1	127	#6	18'-2"	3465
H_{2-7}	6	#6	18'-3" Av	164
M	10	#5	8'-3"	86
N	67	#5	6'-8"	466
S_1	127	#5	19'-6"	2583
S_{2-7}	6	#5	19'-7" Av	123
SS	133	#5	16'-10"	2335
T	24	#7	74'-3" (1)	3642
Reinforcing Steel			Lb	26,532
Class "C" Concrete			CY	78.3

(1) Length includes 1~2'-1" min Lap.

TABLE OF VARIABLE QUANTITIES (2)

"H"	Class "C" Conc (Cols)	Bars K ~ #4 10'-2"		Bars V 80 ~ # 11	
Ft	CY	No.	Weight	Length	Weight
19	40.8	144	978	24'-10"	10,555

TOTAL ESTIMATED QUANTITIES (3)

Reinf Steel	Class "C" Conc
Lb	CY
38,065	119.1

(2) Adjust Bars V length by 1 ft and add four additional Bars K for each linear foot of variation in "H" value.

(3) Adjust Reinforcing Steel total by 502 Lb. and Class "C" Concrete total by 2.15 CY for each linear foot of variation in "H" value.

GENERAL NOTES:

Designed according to AASTHO 1996 Standard and current Interim Specifications.
Calculated Foundation Load ~ 300 T/D.S.
See Foundation Detail Standard sheet, FD(MOD), for all Foundation details and notes.
Class "C" concrete Strength f'c = 3600 psi.
All reinforcing steel shall be Grade 60.

HS25 LOADING SHEET 1 OF 2

Parsons Brinckerhoff Quade & Douglas Inc.

Texas Department of Transportation

© 2003 by TxDOT

INTERIOR BENT NO. 3

OWASSA ROAD OVERPASS

NORTHBOUND MAINLANES

STATE OF TEXAS
ALLEN R. CROZIER
81450
REGISTERED PROFESSIONAL ENGINEER

Allen R. Crozier
6/25/03

2810WNBBNT3.DGN

DESIGNED: ALA	FED. RD DIV. No.	STATE	FEDERAL AID PROJECT No.	HIGHWAY No.
CHECKED: ARC	6	TEXAS	NH 2003 ( )	US 281

DRAWN: RLJ	STATE DISTRICT	COUNTY	CONTROL No.	SECTION No.	JOB No.	SHEET No.
CHECKED: ALA	PHARR	HIDALGO	0255	08	091	1014

ESMERALDA G. EGGER
06/25/2003 11:27:27 AM
I:\projects\223220\CADD\Sheets\Structures\Direct Connects\Owassa\281OWNBBNT3b.dgn

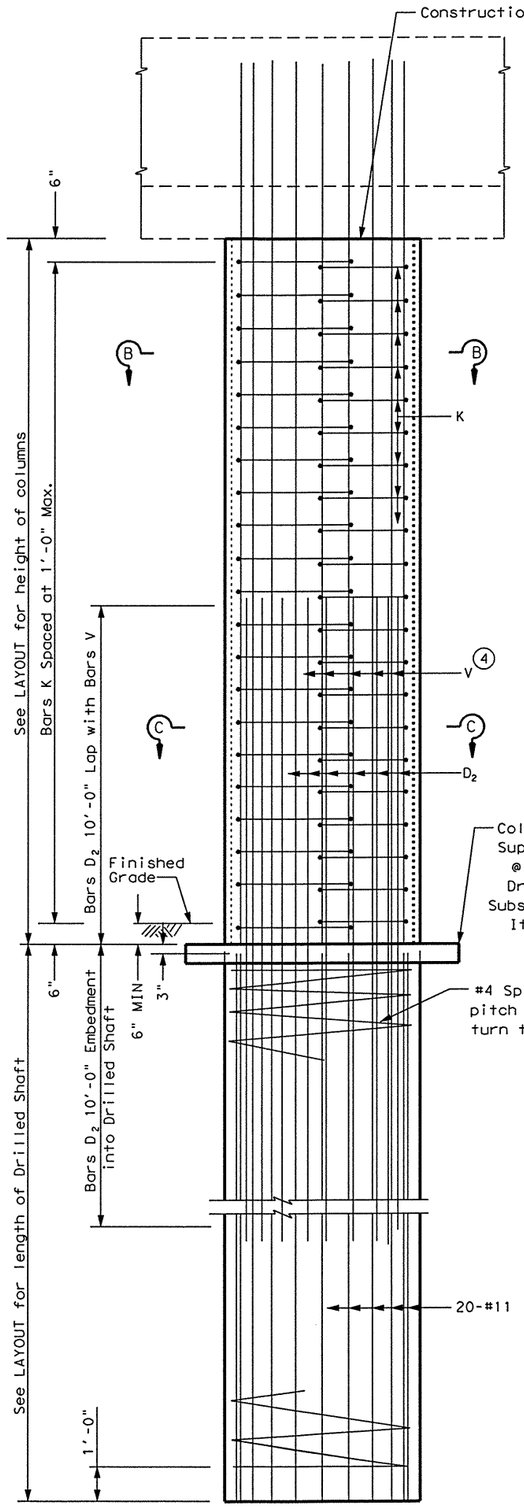

TYPICAL COLUMN DETAILS

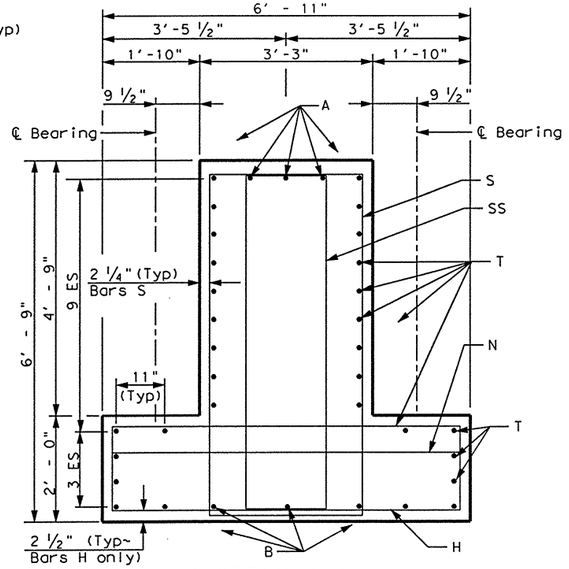

SECTION A-A

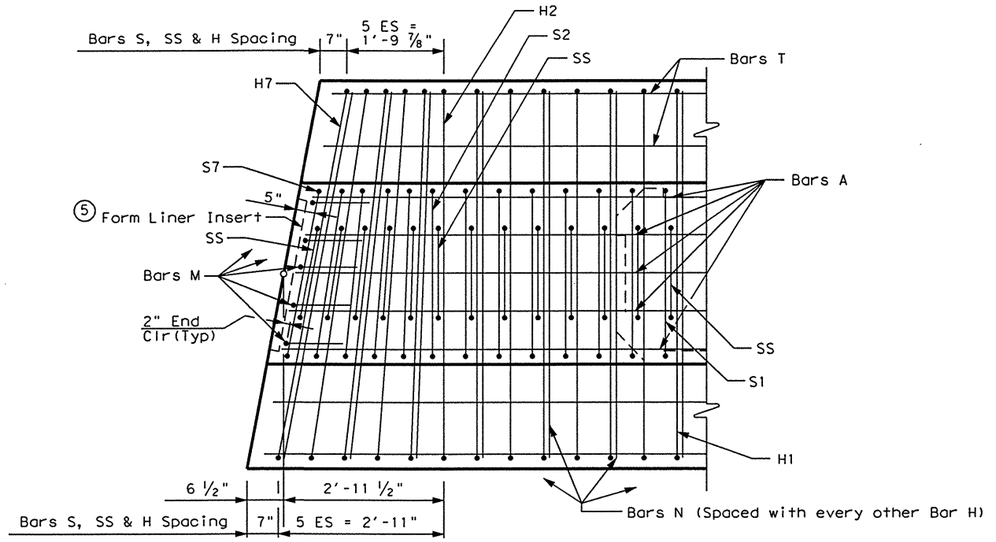

CORNER DETAIL

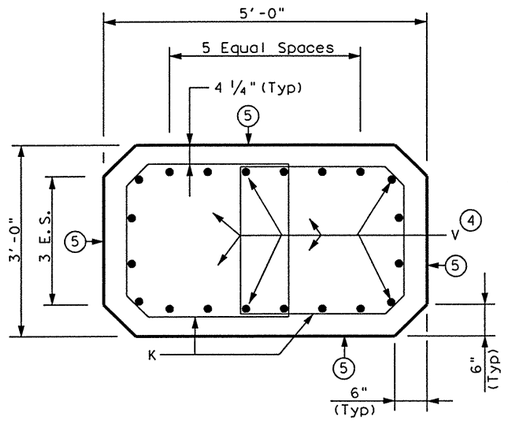

SECTION B-B

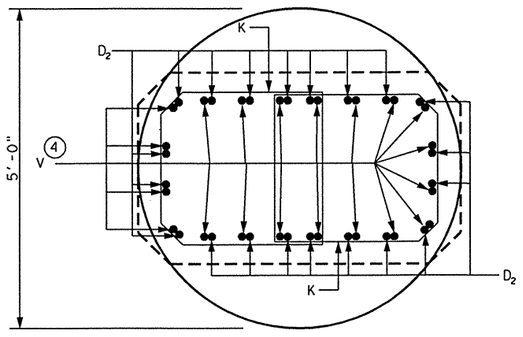

TYPICAL SECTION SHOWING BARS D_2 & BARS V

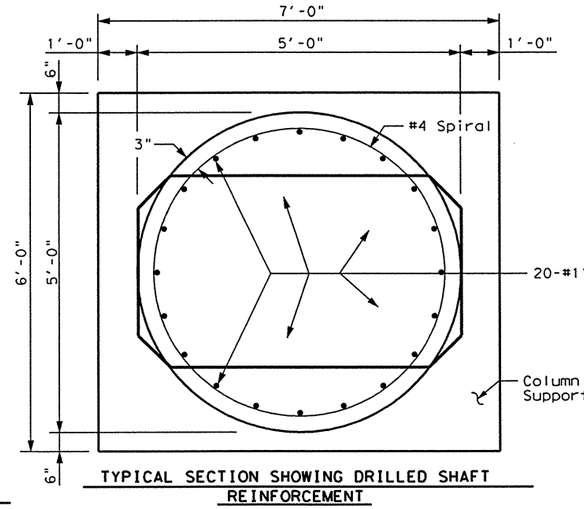

TYPICAL SECTION SHOWING DRILLED SHAFT REINFORCEMENT

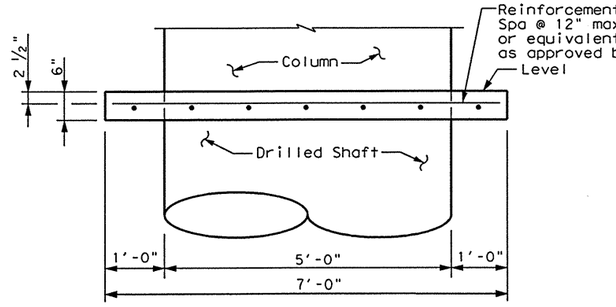

SECTION THRU COLUMN FORM SUPPORT PAD

Column Support Pad concrete and reinforcement shall be subsidiary to Bid Item 416 "Drilled Shaft Foundations"

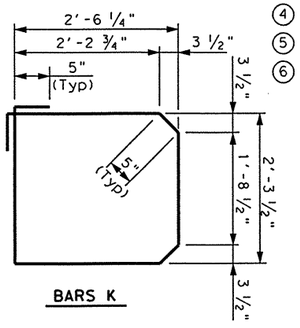

BARS K

SECTION C-C

④ Extend Bars V 5'-10" min Into Bent Cap.

⑤ See "Form Liner Details" For details not shown.

⑥ Drilled Shaft Bars Shall Terminate 3" Below Top of Drilled Shaft.

STATE OF TEXAS
ALLEN R. CROZIER
81450
REGISTERED PROFESSIONAL ENGINEER
Allen R. Crozier
6/25/03

HS25 LOADING SHEET 2 OF 2

Parsons Brinckerhoff Quade & Douglas Inc.

Texas Department of Transportation

© 2003 by TxDOT

INTERIOR BENT NO. 3

OWASSA ROAD OVERPASS

NORTHBOUND MAINLANES

281NBBNT3B.DGN

DESIGNED: ALA	FED. RD DIV. No.	STATE	FEDERAL AID PROJECT No.	HIGHWAY No.
CHECKED: ARC	6	TEXAS	NH 2003 ( )	US 281

DRAWN: RLJ	STATE DISTRICT	COUNTY	CONTROL No.	SECTION No.	JOB No.	SHEET No.
CHECKED: ALA	PHARR	HIDALGO	0255	08	091	1015

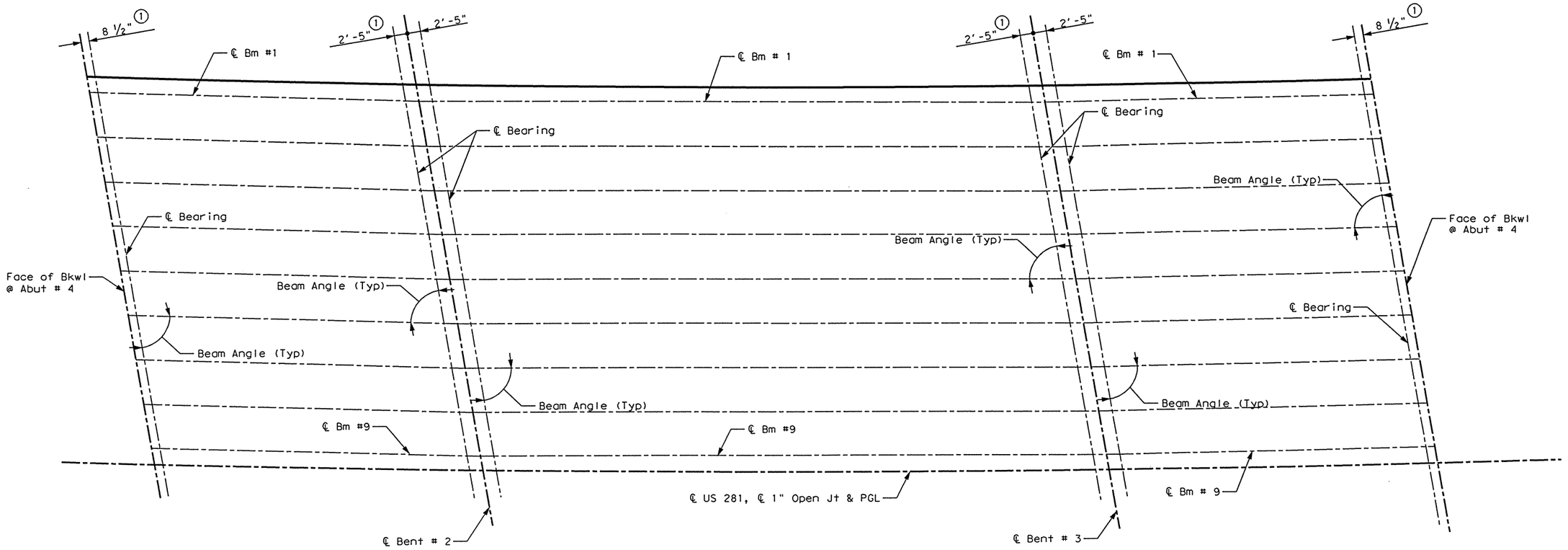

SPAN 1
(TYPE IV BEAMS)

BENT REPORT

BENT NO. 1 (S 81 31 1.77 E)
DISTANCE BETWEEN STATION LINE AND BEAM 1 69.439 L

		BEAM SPAC. (C.L. BENT)	BEAM ANGLE D M S
SPAN 1	BEAM 1	.000	78 40 2
	BEAM 2	8.297	78 41 30
	BEAM 3	8.297	78 42 58
	BEAM 4	8.297	78 44 26
	BEAM 5	8.297	78 45 54
	BEAM 6	8.297	78 47 22
	BEAM 7	8.297	78 48 50
	BEAM 8	8.297	78 50 18
	BEAM 9	8.297	78 51 46
	TOTAL	66.377	

BENT NO. 2 (S 81 31 1.77 E)
DISTANCE BETWEEN STATION LINE AND BEAM 1 69.221 L

		BEAM SPAC. (C.L. BENT)	BEAM ANGLE D M S
SPAN 1	BEAM 1	.000	78 40 2
	BEAM 2	8.271	78 41 30
	BEAM 3	8.271	78 42 58
	BEAM 4	8.271	78 44 26
	BEAM 5	8.271	78 45 54
	BEAM 6	8.271	78 47 22
	BEAM 7	8.271	78 48 50
	BEAM 8	8.271	78 50 18
	BEAM 9	8.271	78 51 46
	TOTAL	66.168	
SPAN 2	BEAM 1	.000	80 0 2
	BEAM 2	8.271	80 1 20
	BEAM 3	8.271	80 2 37
	BEAM 4	8.271	80 3 54
	BEAM 5	8.271	80 5 12
	BEAM 6	8.271	80 6 29
	BEAM 7	8.271	80 7 47
	BEAM 8	8.271	80 9 4
	BEAM 9	8.271	80 10 22
	TOTAL	66.168	

SPAN 2
(TYPE IV BEAMS)

BENT REPORT

BENT NO. 3 (S 81 31 1.77 E)
DISTANCE BETWEEN STATION LINE AND BEAM 1 68.856 L

		BEAM SPAC. (C.L. BENT)	BEAM ANGLE D M S
SPAN 2	BEAM 1	.000	80 0 2
	BEAM 2	8.227	80 1 20
	BEAM 3	8.227	80 2 37
	BEAM 4	8.227	80 3 54
	BEAM 5	8.227	80 5 12
	BEAM 6	8.227	80 6 29
	BEAM 7	8.227	80 7 47
	BEAM 8	8.227	80 9 4
	BEAM 9	8.227	80 10 22
	TOTAL	65.819	
SPAN 3	BEAM 1	.000	81 20 2
	BEAM 2	8.227	81 21 8
	BEAM 3	8.227	81 22 15
	BEAM 4	8.227	81 23 22
	BEAM 5	8.227	81 24 29
	BEAM 6	8.227	81 25 36
	BEAM 7	8.227	81 26 43
	BEAM 8	8.227	81 27 50
	BEAM 9	8.227	81 28 57
	TOTAL	65.819	

BENT NO. 4 (S 81 31 1.77 E)
DISTANCE BETWEEN STATION LINE AND BEAM 1 68.691 L

		BEAM SPAC. (C.L. BENT)	BEAM ANGLE D M S
SPAN 3	BEAM 1	.000	81 20 2
	BEAM 2	8.208	81 21 8
	BEAM 3	8.208	81 22 15
	BEAM 4	8.208	81 23 22
	BEAM 5	8.208	81 24 29
	BEAM 6	8.208	81 25 36
	BEAM 7	8.208	81 26 43
	BEAM 8	8.208	81 27 50
	BEAM 9	8.208	81 28 57
	TOTAL	65.661	

SPAN 3
(TYPE IV BEAMS)

BEAM REPORT

BEAM REPORT, SPAN 1

	HORIZONTAL DISTANCE C-C BENT	C-C BRG.	TRUE DISTANCE ② BOT. BM. FLG.
BEAM 1	60.042	56.855	57.96
BEAM 2	60.037	56.850	57.95
BEAM 3	60.032	56.845	57.95
BEAM 4	60.027	56.840	57.95
BEAM 5	60.021	56.835	57.94
BEAM 6	60.016	56.831	57.94
BEAM 7	60.011	56.826	57.93
BEAM 8	60.006	56.821	57.93
BEAM 9	60.001	56.816	57.92

BEAM REPORT, SPAN 2

	HORIZONTAL DISTANCE C-C BENT	C-C BRG.	TRUE DISTANCE ② BOT. BM. FLG.
BEAM 1	114.559	109.651	110.75
BEAM 2	114.551	109.643	110.74
BEAM 3	114.543	109.636	110.74
BEAM 4	114.536	109.629	110.73
BEAM 5	114.528	109.622	110.72
BEAM 6	114.521	109.615	110.71
BEAM 7	114.513	109.607	110.71
BEAM 8	114.506	109.600	110.70
BEAM 9	114.498	109.593	110.69

BEAM REPORT, SPAN 3

	HORIZONTAL DISTANCE C-C BENT	C-C BRG.	TRUE DISTANCE ② BOT. BM. FLG.
BEAM 1	60.024	56.863	57.96
BEAM 2	60.021	56.860	57.96
BEAM 3	60.018	56.857	57.95
BEAM 4	60.015	56.854	57.95
BEAM 5	60.012	56.852	57.95
BEAM 6	60.009	56.849	57.94
BEAM 7	60.006	56.846	57.94
BEAM 8	60.003	56.843	57.94
BEAM 9	60.000	56.841	57.94

① Measured perpendicular to ℄ Bent.

② Beam lengths shown are bottom beam flange lengths with adjustments made for beam slope.

STATE OF TEXAS
ALLEN R. CROZIER
81450
REGISTERED PROFESSIONAL ENGINEER
Allen R. Crozier
10/25/03

HS25 LOADING

Parsons Brinckerhoff Quade & Douglas Inc.

Texas Department of Transportation

© 2003 by TxDOT

BEAM LAYOUT
(SPANS #1 - #3)

OWASSA ROAD OVERPASS
NORTHBOUND MAINLANES

281OWNBBML01.DGN

DESIGNED: ALA	FED. RD DIV. No.	STATE	FEDERAL AID PROJECT No.	HIGHWAY No.
CHECKED: ARC	6	TEXAS	NH 2003 ( )	US 281

DRAWN: RLJ	STATE DISTRICT	COUNTY	CONTROL No.	SECTION No.	JOB No.	SHEET No.
CHECKED: ALA	PHARR	HIDALGO	0255	08	091	1016

ESMERALDA G. EGGER 11:28:30 AM 06/25/2003
I:\projects\223220\CADD\Sheets\Structures\Direct Connects\Owassa\281ownbBML01.dgn

I:\projects\223220\CADD\Sheets\Structures\Direct Connects\Owassa\281ownbSPANa.dgn 06/25/2003 11:29:19 AM ESMERALDA G. EGGER

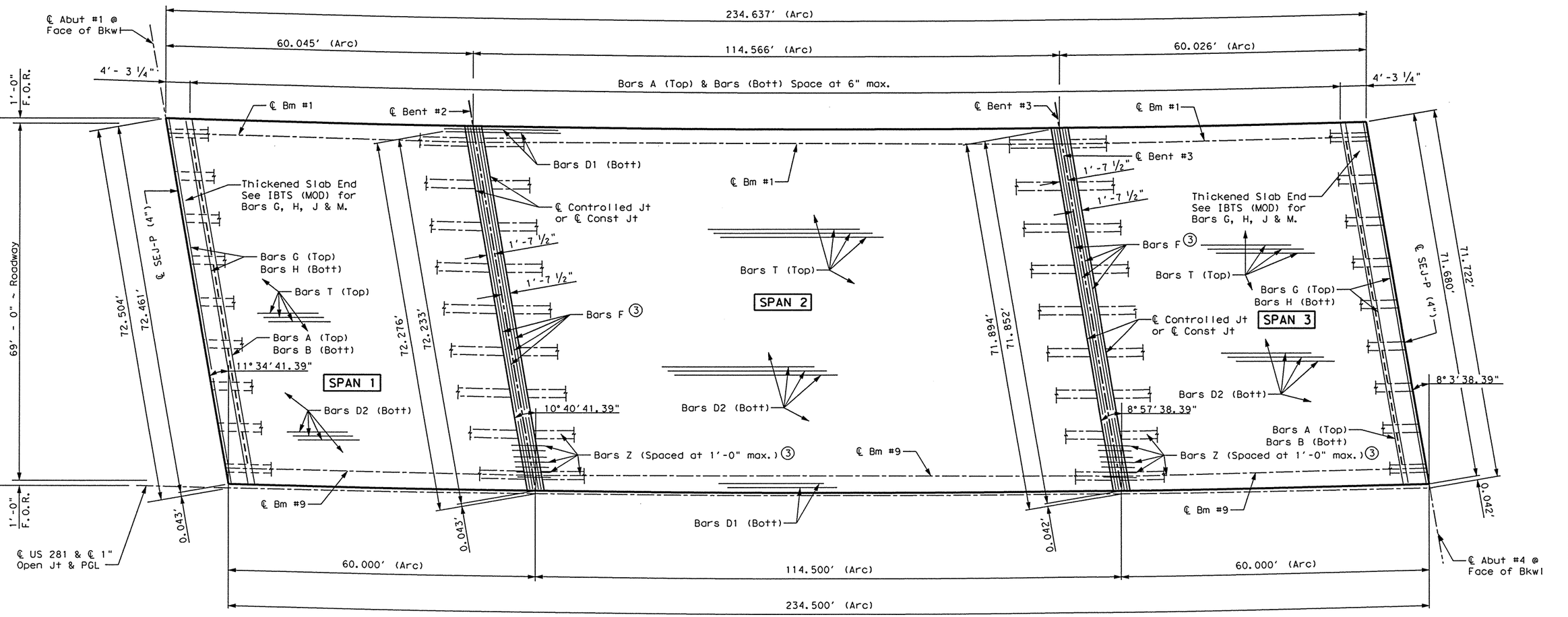

PLAN

HS25 LOADING SHEET 1 OF 2

Parsons Brinckerhoff Quade & Douglas Inc.

Texas Department of Transportation

© 2003 by TxDOT

234.50' PRESTR CONCRETE BEAM UNIT
(Spans #1 - #3)

OWASSA ROAD OVERPASS
NORTHBOUND MAINLANES

281OWNBSPANa.DGN

DESIGNED: ALA	FED. RD DIV. No.	STATE	FEDERAL AID PROJECT No.	HIGHWAY No.
CHECKED: ARC	6	TEXAS	NH 2003 ( )	US 281

DRAWN: RLJ	STATE DISTRICT	COUNTY	CONTROL No.	SECTION No.	JOB No.	SHEET No.
CHECKED: ALA	PHARR	HIDALGO	0255	08	091	1017

STATE OF TEXAS
ALLEN R. CROZIER
81450
REGISTERED PROFESSIONAL ENGINEER
6/25/03

ESMERALDA G. EGGER
11:30:04 AM
06/25/2003
I:\projects\22322a\CADD\Sheets\Structures\Direct Connects\Owassoa\281ownbSPANb.dgn

TABLE OF ESTIMATED QUANTITIES

Span	Reinf Conc Slab	Prestressed Concrete Bm Type IV (1)	Class "S" Concrete	Reinf Steel (2)
No.	SF	LF	CY	LB
1	4259	521.47	111.5	27684
2	8127	996.49	216.3	52826
3	4258	521.53	111.4	27677
Total	16644	2039.49	439.2	108187

(1) Quantity shown are bottom beam flange lengths with adjustments made for beam slope. See BEAM LAYOUT for beam lengths and beam angles.

(2) Reinforcing steel weight is calculated using an approximate factor of 6.5 lbs per square foot of slab.

(3) See MISCELLANEOUS SLAB DETAILS, Sheet 2 of 2, for details not shown.

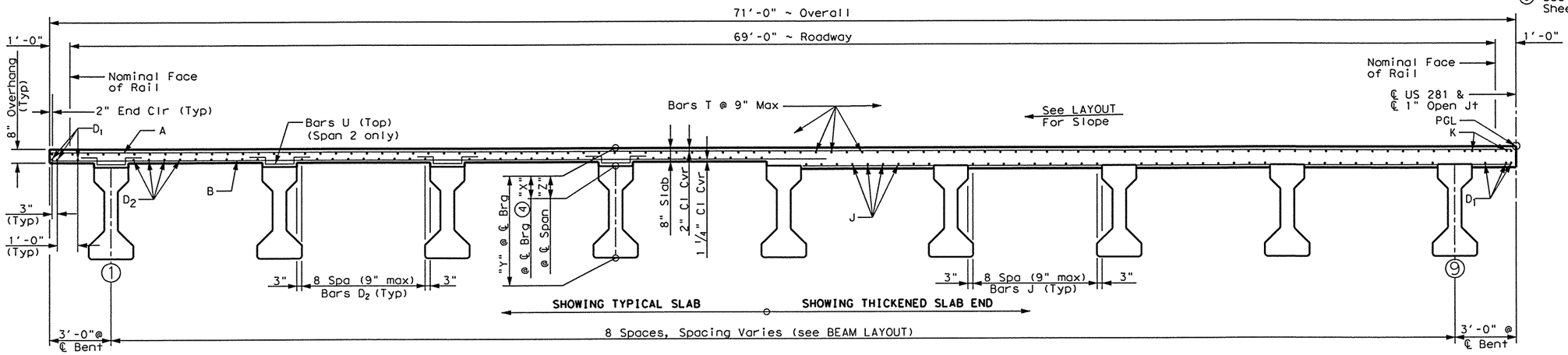

BAR TABLE

Bar	Size
AA	#5
A	#5
B	#5
D	#5
G	#5
H	#6
J	#5
M	#5
T	#4
U	#4

TYPICAL RADIAL SECTION

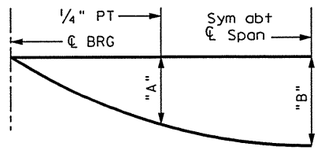

DEAD LOAD DEFLECTION DIAGRAM

NOTE: Deflections shown are due to cast-in-place concrete only. (E_c= 5 X 10^6 psi) Calculated deflections shown are theoretical and actual dimensions may be less. Deflections shall be adjusted based on field observations.

Span No.	Beam Center No.	"A"	"B"
1 & 3	1	0.008'	0.011'
1 & 3	2 - 8	0.018'	0.025'
1 & 3	9	0.008'	0.011'
2	1	0.106'	0.149'
2	2 - 8	0.123'	0.172'
2	9	0.106'	0.149'

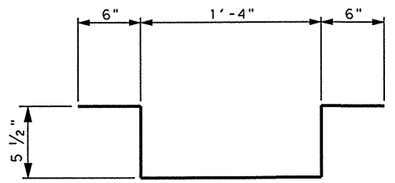

BARS U

NOTE: Bars U shall match Beam Bars R spacing for a min. length of 1/4 x (Beam Length). Span 2 only.

TABLE OF SECTION DEPTHS

Span No.	Beam No.	"X" at ℄ Brg	"Y" at ℄ Brg	"Z" at ℄ Span (4)
1 & 3	ALL	9 1/2"	5'-3 1/2"	9 1/4"
2	1 & 9	12"	5'-6"	9 1/4"
2	2 - 8	12"	5'-6"	9 3/8"

(4) Theoretical Dimension

GENERAL NOTES:

Designed according to AASHTO 1996 Standard and current Interim Specifications.

See PCP(C) Standard for details and quantity adjustments if this option is used.

See SEJ-P Standard for additional details.

See IBTS(MOD) for Thickened Slab End Details and IBMS(MOD) for slab details over Inverted-T.

All reinforcing shall be Grade 60.

Concrete strength f'c = 4000 psi.

Bar laps, where required, shall be as follows:

#4 = 1'-5"

#5 = 1'-9"

HS25 LOADING SHEET 2 OF 2

Parsons Brinckerhoff Quade & Douglas Inc.

Texas Department of Transportation

© 2003 by TxDOT

STATE OF TEXAS
ALLEN R. CROZIER
81450
REGISTERED PROFESSIONAL ENGINEER

Allen R. Crozier
6/25/03

234.50' PRESTR CONCRETE BEAM UNIT

(Spans #1 - #3)

OWASSA ROAD OVERPASS

NORTHBOUND MAINLANES

281OWNBSPANb.DGN

DESIGNED: ABG	FED. RD DIV. No.	STATE	FEDERAL AID PROJECT No.		HIGHWAY No.
CHECKED: ABG	6	TEXAS	NH 2003 ( )		US 281
DRAWN: RLJ	STATE DISTRICT	COUNTY	CONTROL No.	SECTION No.	JOB No. / SHEET No.
CHECKED: ABG	PHARR	HIDALGO	0255	08	091 / 1018

ESMERALDA G. EGGER
11:31:23 AM
06/25/2003
I:\projects\22322a\CADD\Sheets\Structures\Direct Connects\Owassa\281owsbabut01.dgn

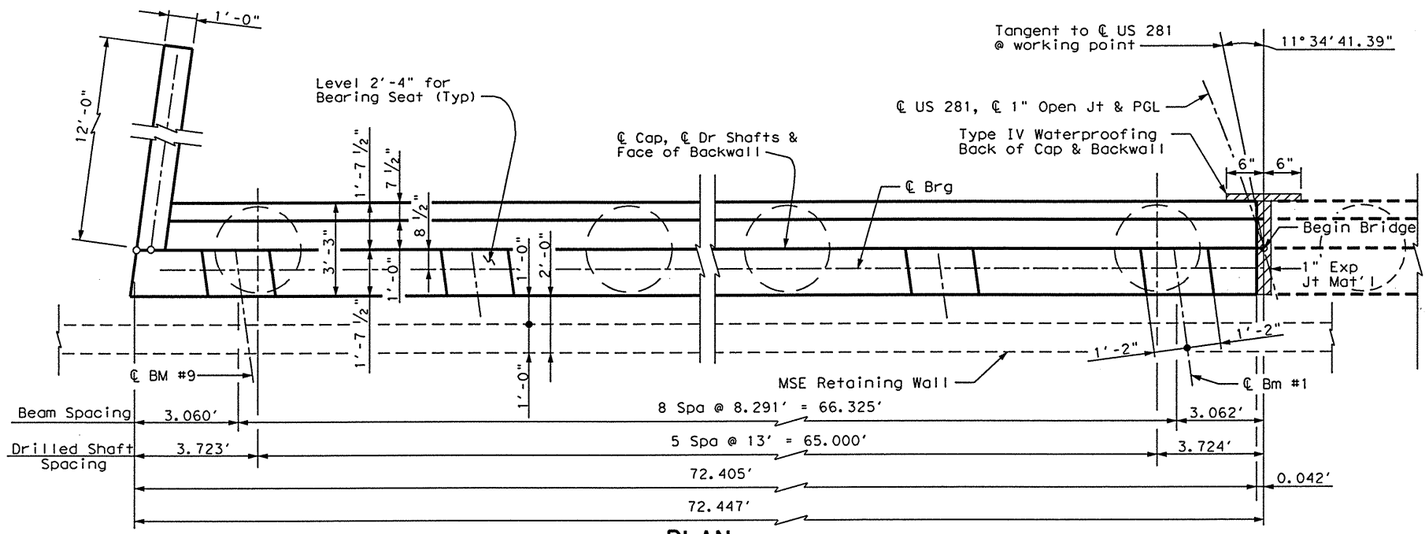

PLAN

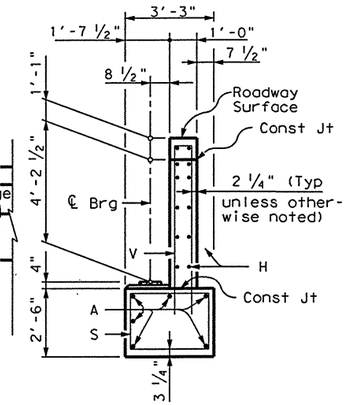

SECTION A-A

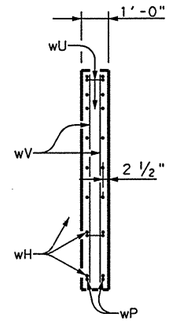

SECTION B-B

TABLE OF ESTIMATED QUANTITIES				
Bar	No.	Size	Length	Weight
A	6	#11	81'- 10"	2609
H	12	#5	73'- 0"	914
L	9	#6	4'- 0"	54
S	61	#4	10'- 8"	435
U_1	2	#6	7'-10"	24
U_2	2	#6	7'-10"	24
V	72	#5	13'-10"	1039
wH_1	6	#6	11'- 8"	105
wH_2	2	#6	9'-11"	30
wH_3	2	#6	8'- 4"	25
wH_4	2	#6	6'- 9"	20
wH_5	2	#6	6'-10"	21
wH_6	2	#6	4'- 4"	13
wP	2	#6	10'-11"	33
wU	8	#4	1'- 7"	8
wV_1	6	#5	7'- 9"	48
wV_{2-10}	18	#5	4'- 3" Av	80
Reinforcing Steel			Lb	5482
Class "C" Concrete			CY	38.6

① Includes 1~10'-0" min lap
② Includes 1~1'-3" min lap

Type IV Waterproofing shall be considered Subsidiary to Bid Item Class "C" Concrete.

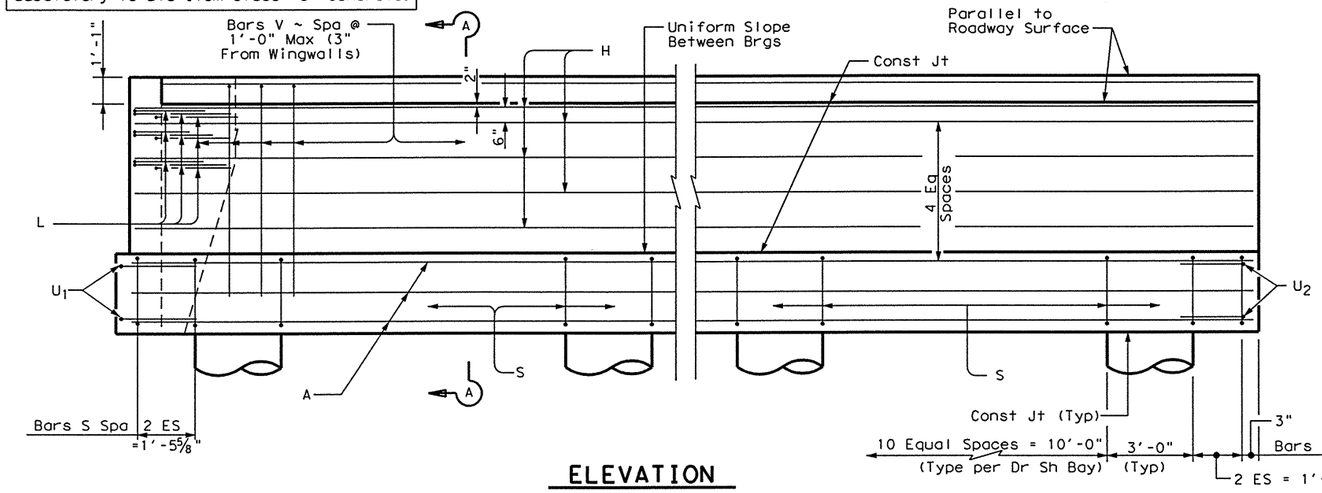

ELEVATION

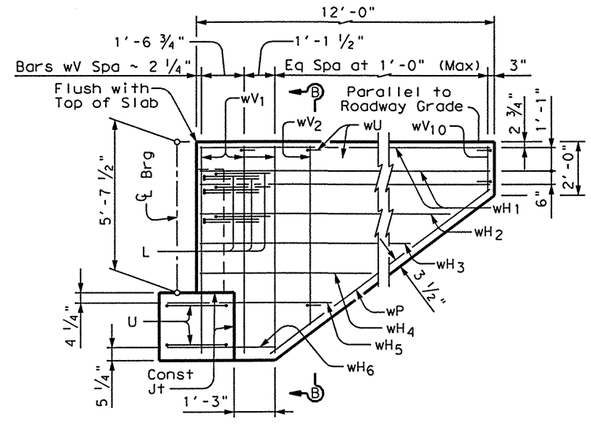

WINGWALL ELEVATION

BEARING SEAT DETAIL

(Bearing surface shall be clean and free of all loose material before placing bearing pad.)

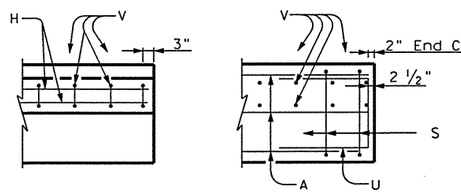

BACKWALL CAP

CORNER DETAILS AT EXP Jt

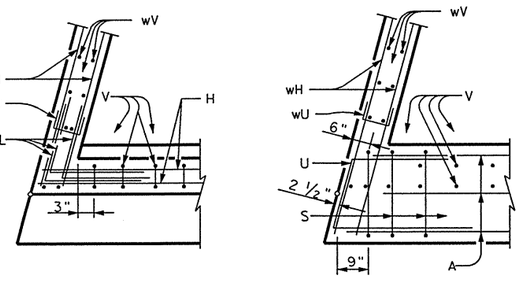

BACKWALL CAP

CORNER DETAILS AT WINGWALL

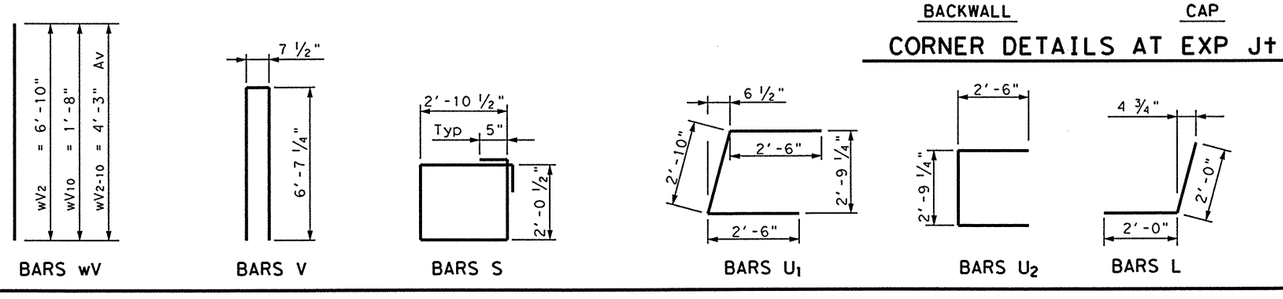

BARS wV BARS V BARS S BARS U_1 BARS U_2 BARS L BARS wU

GENERAL NOTES:

Designed according to 1996 AASHTO Standard and current Interim Specifications.
Concrete strength f'c = 3,600 psi.
All cap and wall reinforcing shall be Grade 60.
See Foundation Detail Standard Sheet, FD, for all foundation details and notes.
See SEJ-P Standard for additional details.
Calculated Foundation Load = 85 T/D.S.

HS25 LOADING

Parsons Brinckerhoff Quade & Douglas Inc.

Texas Department of Transportation

© 2003 by TxDOT

ABUTMENT NO. 1

OWASSA ROAD OVERPASS
SOUTHBOUND MAINLANES

281OWSBABUT01.DGN

DESIGNED: ARC	FED. RD DIV. No.	STATE	FEDERAL AID PROJECT No.	HIGHWAY No.
CHECKED: ALA	6	TEXAS	NH 2003 ( )	US 281
DRAWN: RLJ	STATE DISTRICT	COUNTY	CONTROL No. / SECTION No. / JOB No.	SHEET No.
CHECKED: ARC	PHARR	HIDALGO	0255 / 08 / 091	1019

STATE OF TEXAS
ALLEN R. CROZIER
81450
REGISTERED PROFESSIONAL ENGINEER
Allen R. Crozier
6/25/03

ESMERALDA G. EGGER
11:31:43 AM
06/25/2003
I:\projects\22322a\CADD\Sheets\Structures\Direct Connects\Owassso\281owsbabut04.dgn

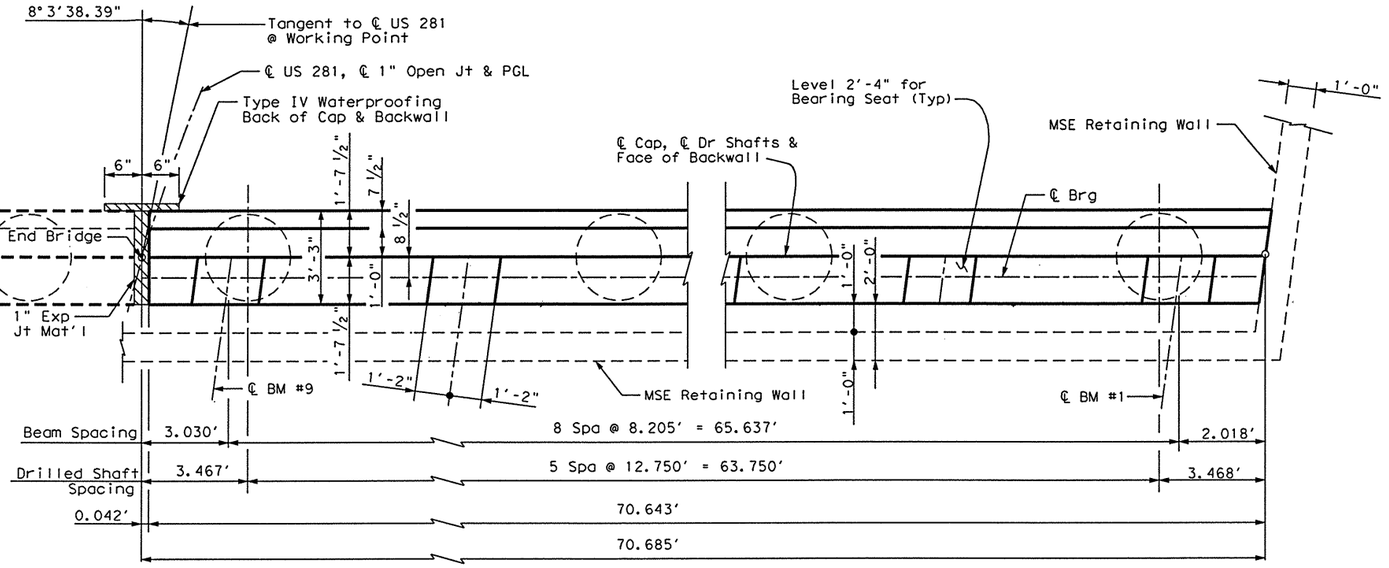

PLAN

Type IV Waterproofing shall be considered Subsidiary to Bid Item Class "C" Concrete.

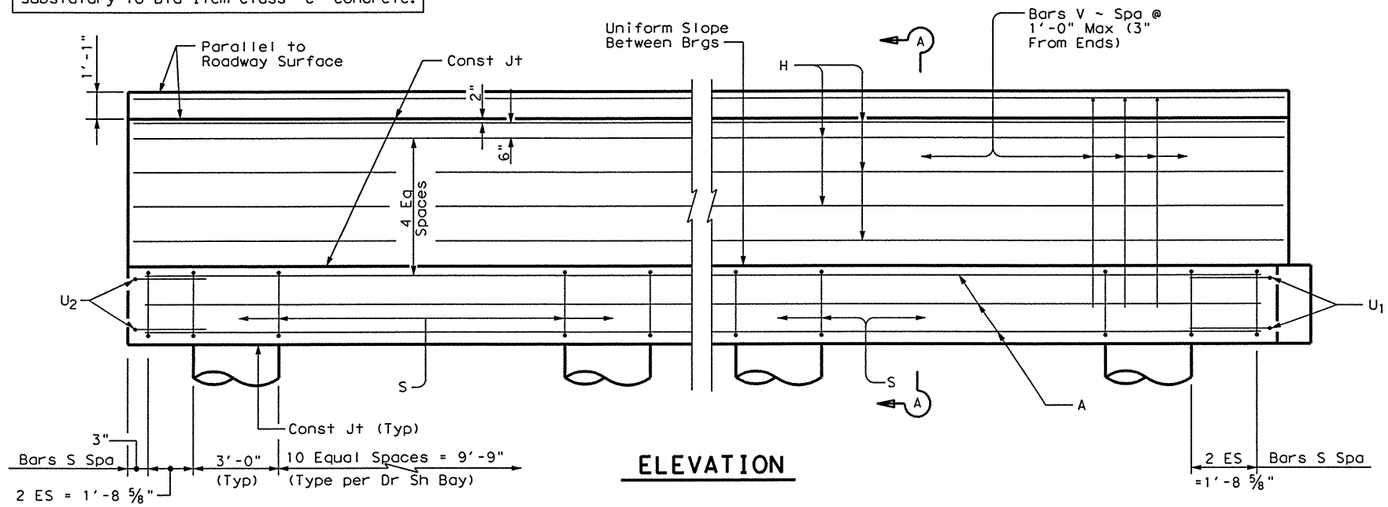

ELEVATION

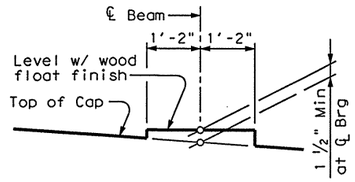

BEARING SEAT DETAIL

(Bearing surface shall be clean and free of all loose material before placing bearing pad.)

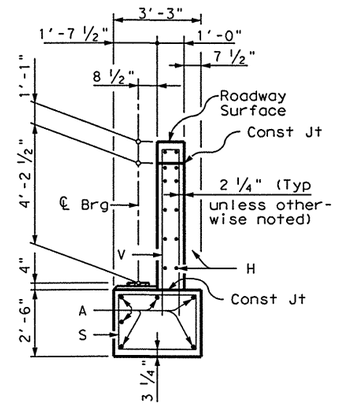

SECTION A-A

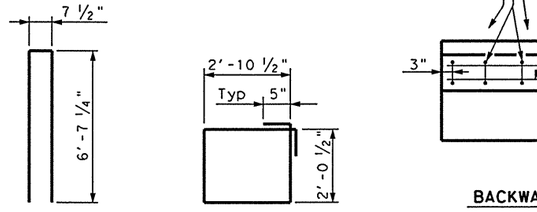

BARS V

BARS S

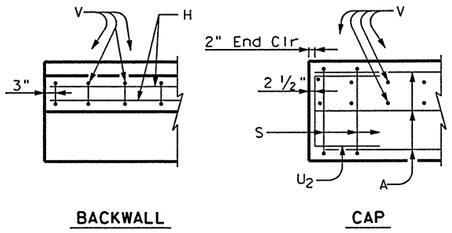

BACKWALL

CAP

CORNER DETAILS AT EXP Jt

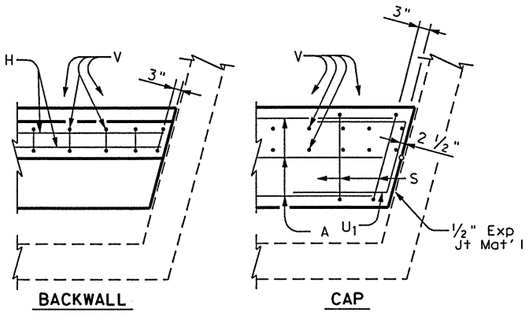

BACKWALL

CAP

CORNER DETAILS AT EXT END

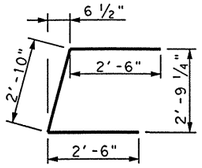

BARS U1

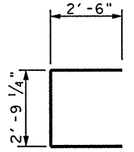

BARS U2

TABLE OF ESTIMATED QUANTITIES

Bar	No.	Size	Length	Weight
A	6	#11	80'- 6"①	2566
H	12	#5	73'- 9"②	923
S	61	#4	10'- 8"	435
U_1	2	#6	7'-10"	24
U_2	2	#6	7'-10"	24
V	72	#5	13'-10"	1039
Reinforcing Steel			Lb	5011
Class "C" Concrete			CY	36.2

① Includes 1 ~ 10'-0" min lap

② Includes 1 ~ 1'-3" min lap

GENERAL NOTES:

Designed according to 1996 AASHTO Standard and current Interim Specifications.
Concrete strength f'c = 3,600 psi.
All cap and wall reinforcing shall be Grade 60.
See Foundation Detail Standard Sheet, FD, for all foundation details and notes.
See SEJ-P Standard for additional details.
Calculated Foundation Load = 85 T/D.S.

HS25 LOADING

Parsons Brinckerhoff Quade & Douglas Inc.

Texas Department of Transportation

© 2003 by TxDOT

ABUTMENT NO. 4

OWASSA ROAD OVERPASS
SOUTHBOUND MAINLANES

281OWSBABUT04.DGN

STATE OF TEXAS
ALLEN R. CROZIER
81450
REGISTERED PROFESSIONAL ENGINEER

Allen R. Crozier
6/25/03

DESIGNED: ALA	FED. RD DIV. No.	STATE	FEDERAL AID PROJECT No.				HIGHWAY No.	
CHECKED: ARC	6	TEXAS	NH 2003 ( )				US 281	
DRAWN: RLJ	STATE DISTRICT	COUNTY	CONTROL No.	SECTION No.	JOB No.	SHEET No.		
CHECKED: ALA	PHARR	HIDALGO	0255	08	091	1020		

ESMERALDA G. EGGER
11:32:13 AM
06/25/2003
I:\projects\22322a\CADD\Sheets\Structures\Direct Connects\Owassa\281OWSBBNT2.dgn

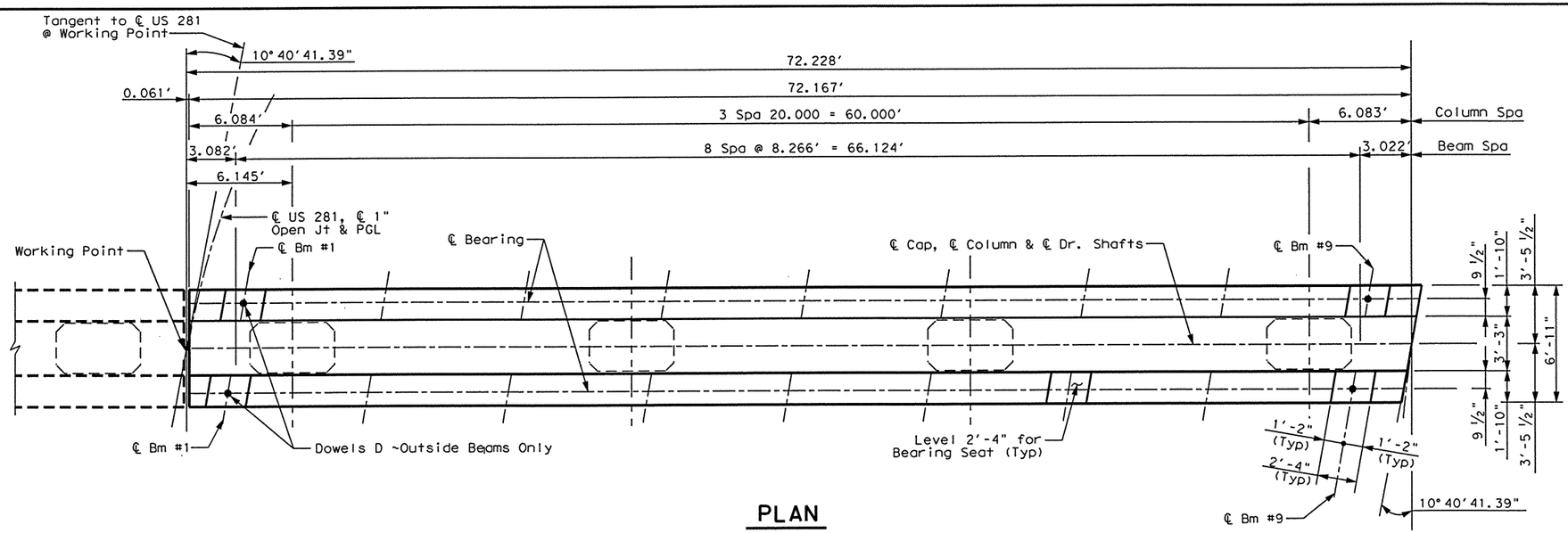

PLAN

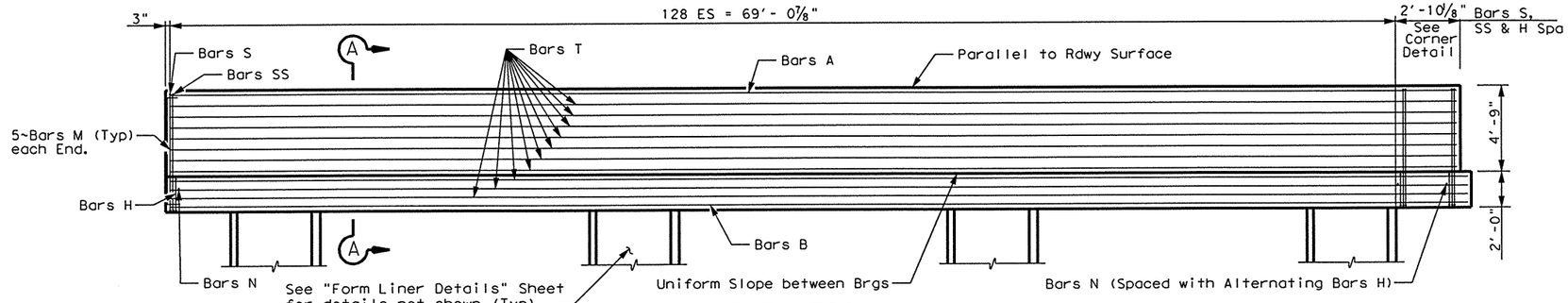

ELEVATION

TABLE OF CONSTANT QUANTITIES				
Bar	No.	Size	Length	Weight
A	5	#11	81'-0"	2152
B	7	#11	81'-0"	3012
D_1	4	1¼"ø	1'-8"	29
D_2	80	#11	20'-0"	8501
H_1	128	#6	18'-2"	3493
H_{2-7}	6	#6	18'-4" Av	165
M	10	#5	8'-3"	86
N	68	#5	6'-8"	473
S_1	128	#5	19'-6"	2603
S_{2-7}	6	#5	19'-7" Av	123
SS	128	#5	16'-10"	2247
T	24	#7	74'-7" ①	3659
Reinforcing Steel			Lb	26,543
Class "C" Concrete			CY	78.6

① Length includes 1~2'-1" min Lap.

TABLE OF VARIABLE QUANTITIES ②						TOTAL ESTIMATED QUANTITIES ③	
"H"	Class "C" Conc (Cols)	Bars K ~ #4 10'-2"		Bars V 80 ~ # 11		Reinf Steel	Class "C" Conc
Ft	CY	No.	Weight	Length	Weight	Lb	CY
19	40.8	144	978	24'-10"	10,555	38,076	119.4

② Adjust Bars V length by 1 ft and add four additional Bars K for each linear foot of variation in "H" value.

③ Adjust Reinforcing Steel total by 502 Lb. and Class "C" Concrete total by 2.15 CY for each linear foot of variation in "H" value.

GENERAL NOTES:

Designed according to AASTHO 1996 Standard and current Interim Specifications.
Calculated Foundation Load ~ 300 T/D.S.
See Foundation Detail Standard sheet, FD(MOD), for all Foundation details and notes.
Class "C" concrete Strength f'c = 3600 psi.
All reinforcing steel shall be Grade 60.

HS25 LOADING

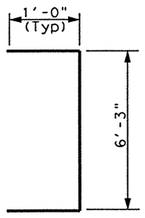

BARS M

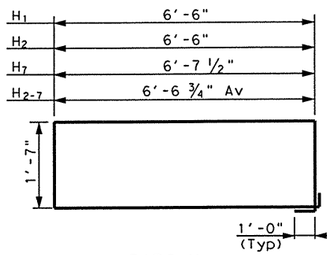

BARS H

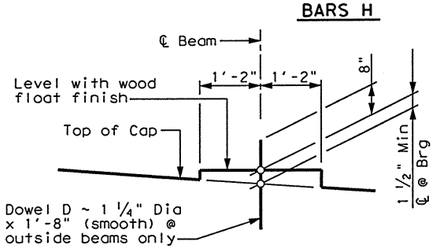

BEARING SEAT DETAIL

(Bearing surface shall be clean and free of all loose material before placing bearing pad.)

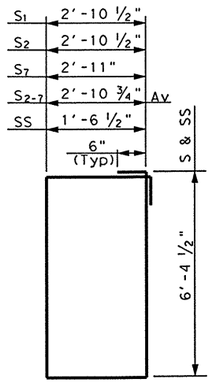

BARS S & SS

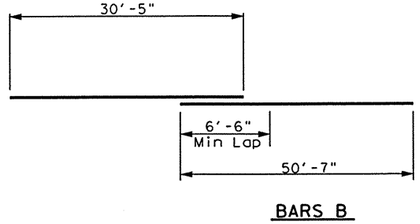

BARS B

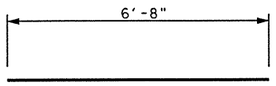

BARS N

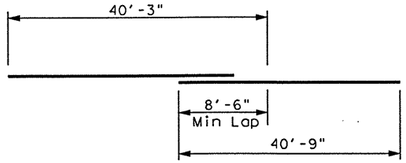

BARS A

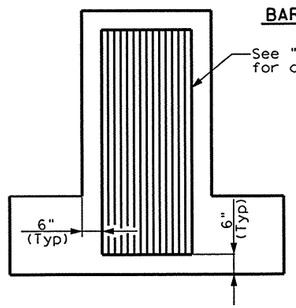

FORM LINER LOCATION

STATE OF TEXAS
ALLEN R. CROZIER
81450
REGISTERED PROFESSIONAL ENGINEER
6/25/03

SHEET 1 OF 2

Parsons Brinckerhoff Quade & Douglas Inc.

Texas Department of Transportation
© 2003 by TxDOT

INTERIOR BENT NO. 2

OWASSA ROAD OVERPASS
SOUTHBOUND MAINLANES

281OWSBBNT2.DGN

DESIGNED: ALA	FED. RD DIV. No.	STATE	FEDERAL AID PROJECT No.	HIGHWAY No.
CHECKED: ARC	6	TEXAS	NH 2003 ( )	US 281

DRAWN: RLJ	STATE DISTRICT	COUNTY	CONTROL No.	SECTION No.	JOB No.	SHEET No.
CHECKED: ALA	PHARR	HIDALGO	0255	08	091	1021

ESMERALDA G. EGGER
11:32:34 AM
06/25/2003
I:\projects\22322a\CADD\Sheets\Structures\Direct Connects\Owassso\2810WSBBNT2b.dgn

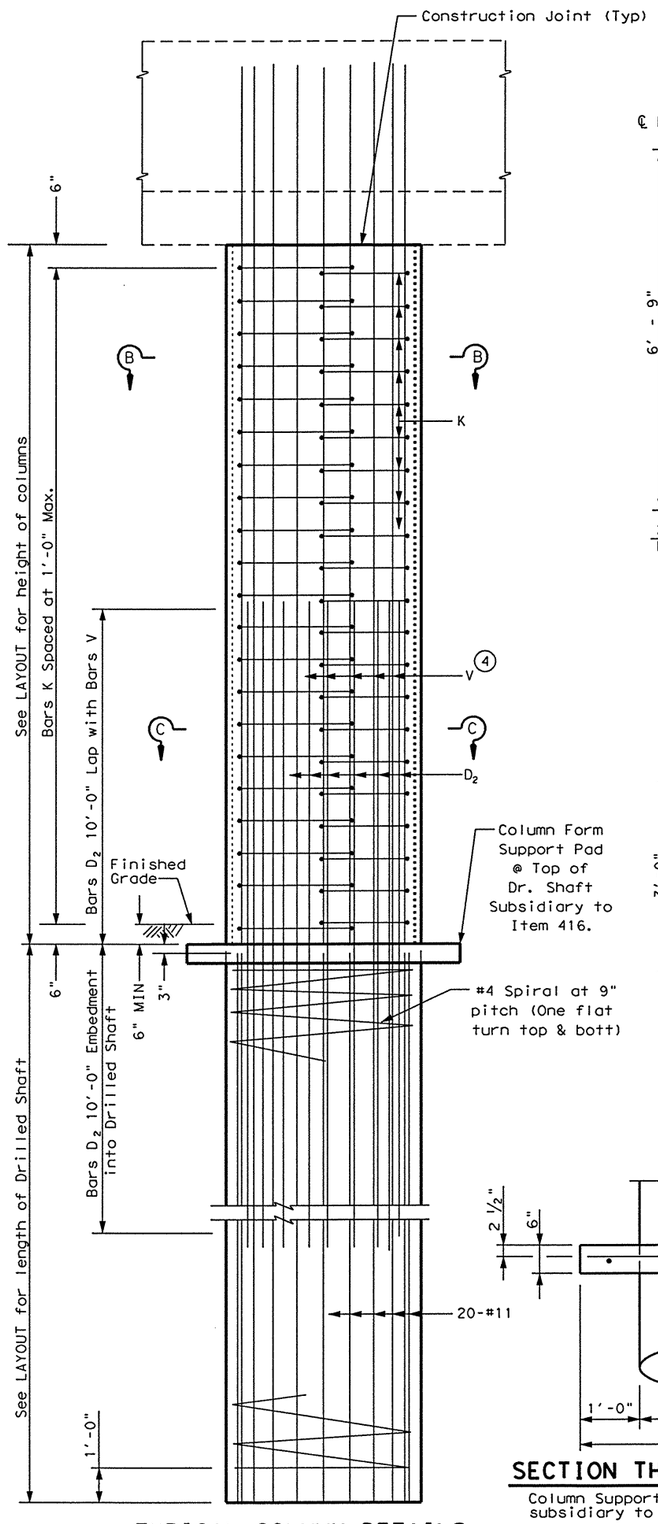

TYPICAL COLUMN DETAILS

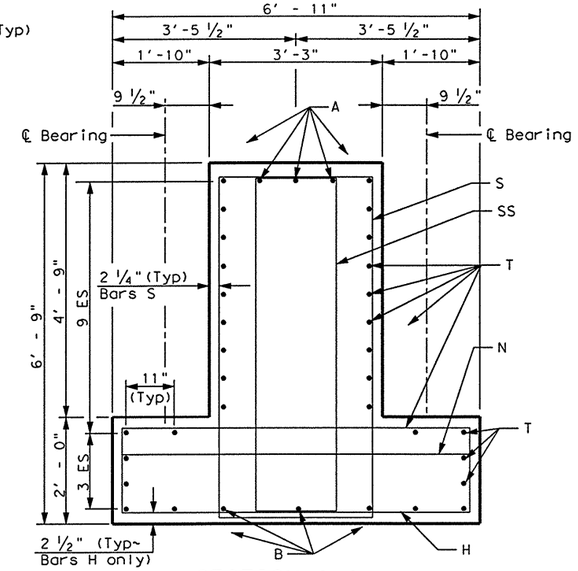

SECTION A-A

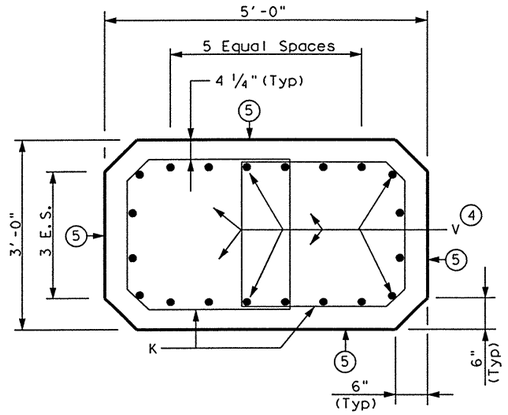

SECTION B-B

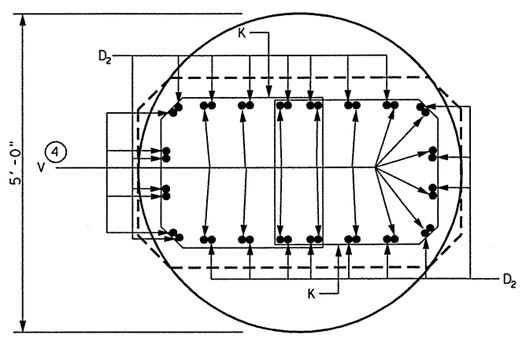

TYPICAL SECTION SHOWING BARS D_2 & BARS V

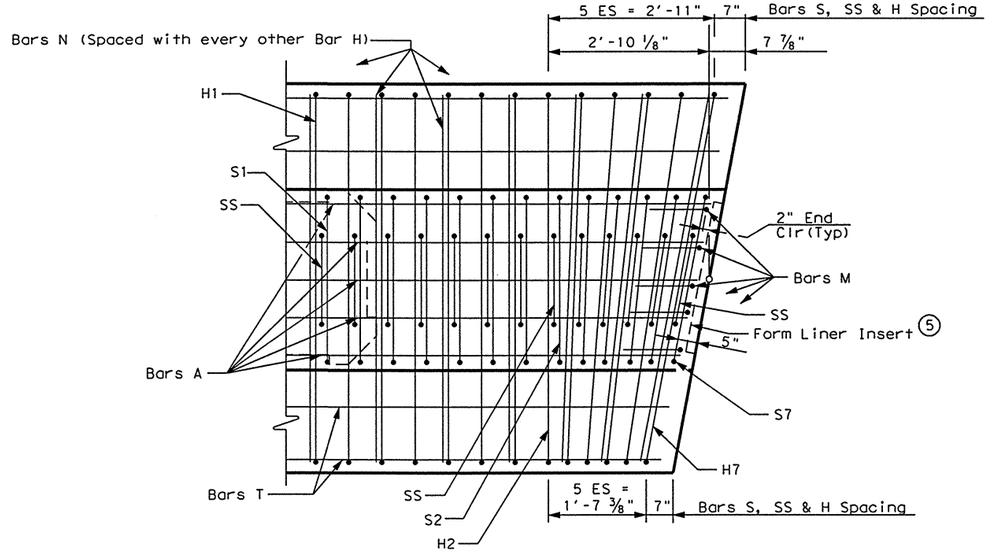

CORNER DETAIL

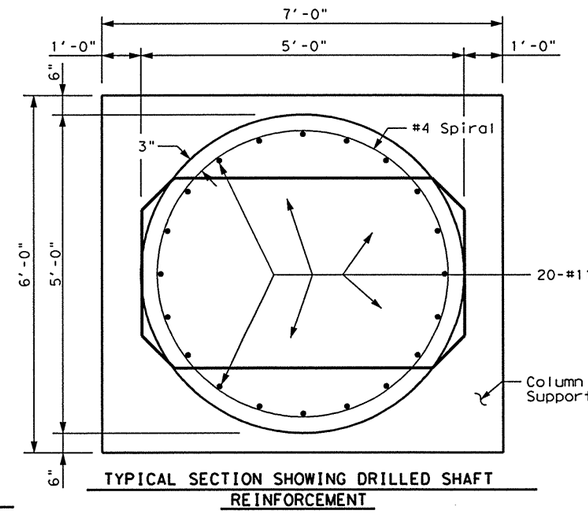

TYPICAL SECTION SHOWING DRILLED SHAFT REINFORCEMENT

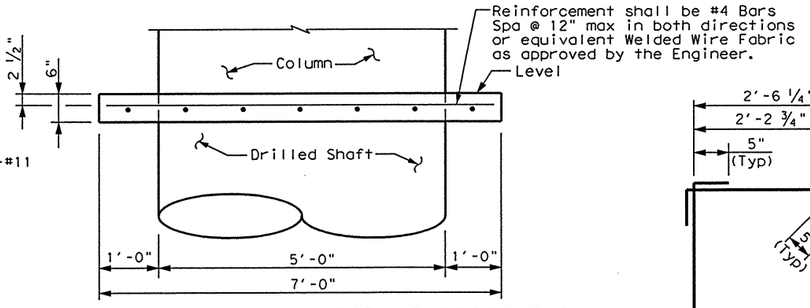

SECTION THRU COLUMN FORM SUPPORT PAD

Column Support Pad concrete and reinforcement shall be subsidiary to Bid Item 416 "Drilled Shaft Foundations"

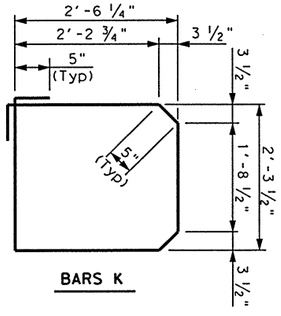

BARS K

SECTION C-C

(4) Extend Bars V 5'-10" min Into Bent Cap.

(5) See "Form Liner Details" For details not shown.

(6) Drilled Shaft Bars Shall Terminate 3" Below Top of Drilled Shaft.

STATE OF TEXAS
ALLEN R. CROZIER
81450
REGISTERED PROFESSIONAL ENGINEER
Allen R. Crozier
10/25/03

HS25 LOADING SHEET 2 OF 2

Parsons Brinckerhoff Quade & Douglas Inc.

Texas Department of Transportation

© 2003 by TxDOT

INTERIOR BENT NO. 2

OWASSA ROAD OVERPASS

SOUTHBOUND MAINLANES

2810WSBBNT2B.DGN

DESIGNED: ALA	FED. RD DIV. No.	STATE	FEDERAL AID PROJECT No.		HIGHWAY No.
CHECKED: ARC	6	TEXAS	NH 2003 ( )		US 281
DRAWN: RLJ	STATE DISTRICT	COUNTY	CONTROL No.	SECTION No.	JOB No.	SHEET No.
CHECKED: ALA	PHARR	HIDALGO	0255	08	091	1022

ESMERALDA G. EGGER
11:37:42 AM
06/25/2003
I:\projects\22322ol\CADD\Sheets\Structures\Direct Connects\Owassa\2810WSBBNT3.dgn

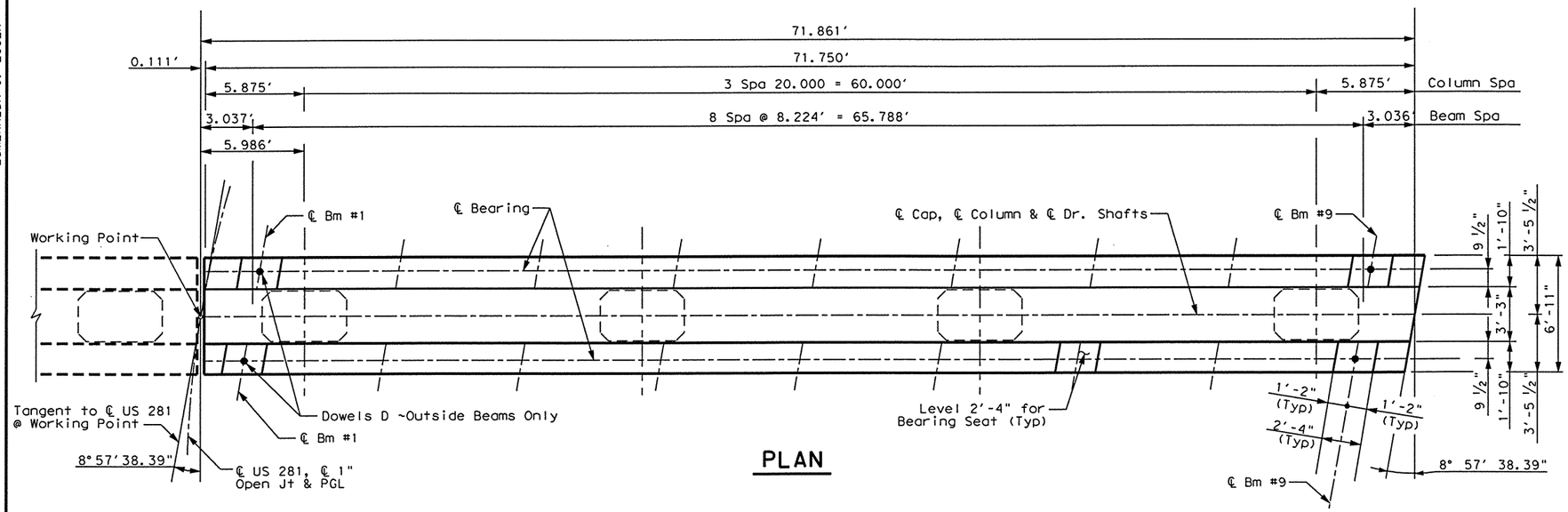

PLAN

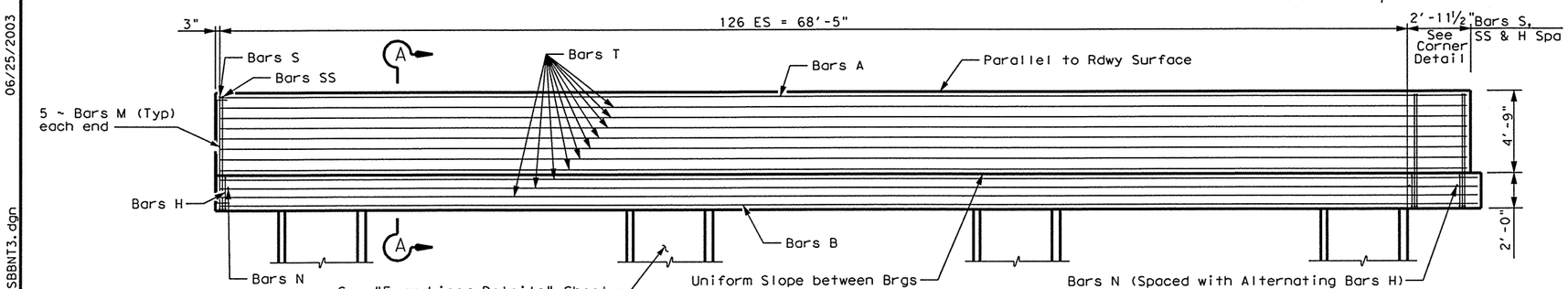

ELEVATION

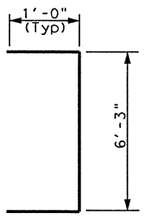

BARS M

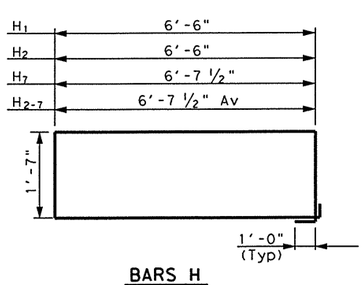

BARS H

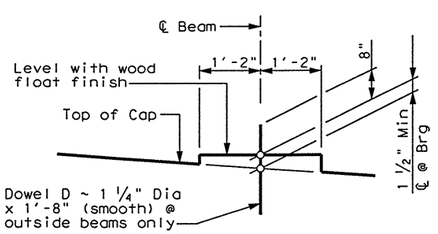

BEARING SEAT DETAIL

(Bearing surface shall be clean and free of all loose material before placing bearing pad.)

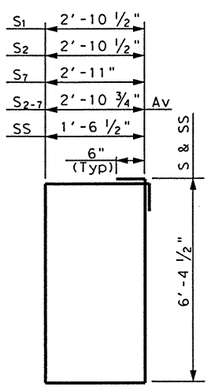

BARS S & SS

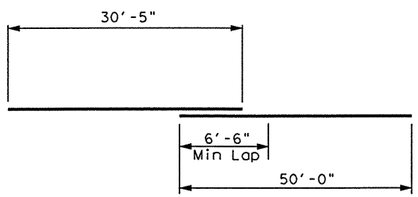

BARS B

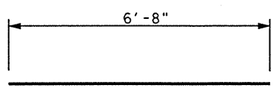

BARS N

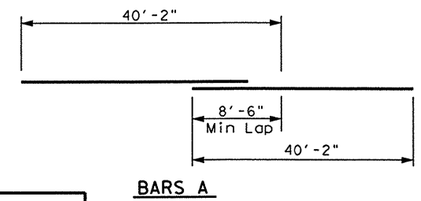

BARS A

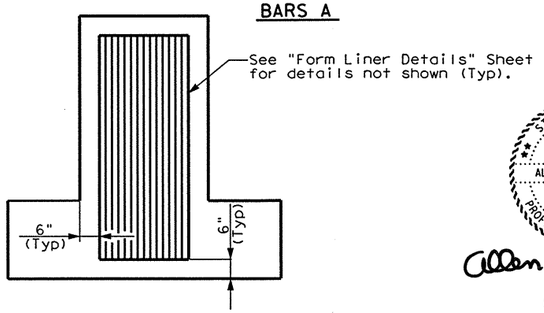

FORM LINER LOCATION

TABLE OF CONSTANT QUANTITIES

Bar	No.	Size	Length	Weight
A	5	#11	80'-4"	2134
B	7	#11	80'-5"	2991
D_1	4	1¼"ø	1'-8"	29
D_2	80	#11	20'-0"	8501
H_1	126	#6	18'-2"	3438
H_{2-7}	6	#6	18'-4" Av	165
M	10	#5	8'-3"	86
N	66	#5	6'-8"	459
S_1	126	#5	19'-6"	2563
S_{2-7}	6	#5	19'-7" Av	123
SS	132	#5	16'-10"	2318
T	24	#7	74'-0" (1)	3630
Reinforcing Steel			Lb	26,437
Class "C" Concrete			CY	78.2

(1) Length includes 1~2'-1" min Lap.

TABLE OF VARIABLE QUANTITIES (2)

"H"	Class "C" Conc (Cols)	Bars K ~ #4 10'-2"		Bars V 80 ~ # 11		Reinf Steel	Class "C" Conc
Ft	CY	No.	Weight	Length	Weight	Lb	CY
19	40.8	144	978	24'-10"	10,555	37,970	119.0

TOTAL ESTIMATED QUANTITIES (3)

(2) Adjust Bars V length by 1 ft and add four additional Bars K for each linear foot of variation in "H" value.

(3) Adjust Reinforcing Steel total by 502 Lb. and Class "C" Concrete total by 1.92 CY for each linear foot of variation in "H" value.

GENERAL NOTES:

Designed according to AASTHO 1996 Standard and current Interim Specifications.
Calculated Foundation Load ~ 300 T/D.S.
See Foundation Detail Standard sheet, FD(MOD), for all Foundation details and notes.
Class "C" concrete Strength f'c = 3600 psi.
All reinforcing steel shall be Grade 60.

HS25 LOADING SHEET 1 OF 2

Parsons Brinckerhoff Quade & Douglas Inc.

Texas Department of Transportation

© 2003 by TxDOT

INTERIOR BENT NO. 3

OWASSA ROAD OVERPASS

SOUTHBOUND MAINLANES

STATE OF TEXAS
ALLEN R. CROZIER
81450
REGISTERED PROFESSIONAL ENGINEER

Allen R. Crozier 6/25/03

2810WSBBNT3.DGN

DESIGNED: ALA	FED. RD DIV. No.	STATE	FEDERAL AID PROJECT No.		HIGHWAY No.	
CHECKED: ARC	6	TEXAS	NH 2003 ( )		US 281	
DRAWN: RLJ	STATE DISTRICT	COUNTY	CONTROL No.	SECTION No.	JOB No.	SHEET No.
CHECKED: ALA	PHARR	HIDALGO	0255	08	091	1023

ESMERALDA G. EGGER
06/25/2003 11:38:04 AM
I:\projects\22322a\CADD\Sheets\Structures\Direct Connects\Owassoa\2810WSBBNT3b.dgn

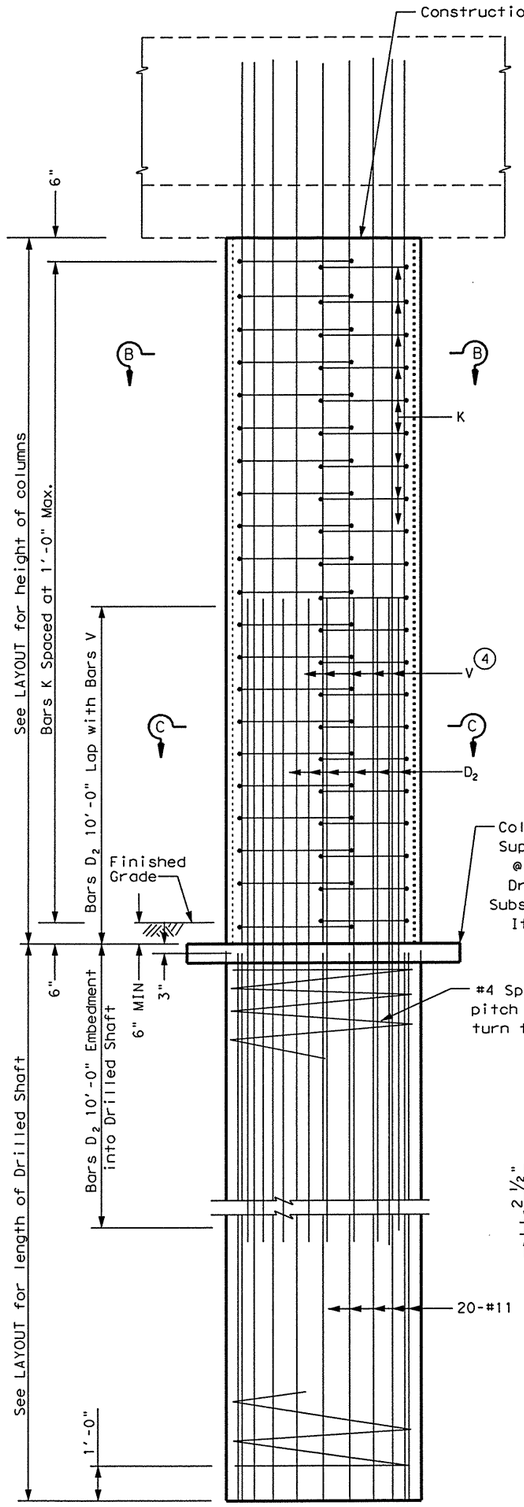

TYPICAL COLUMN DETAILS

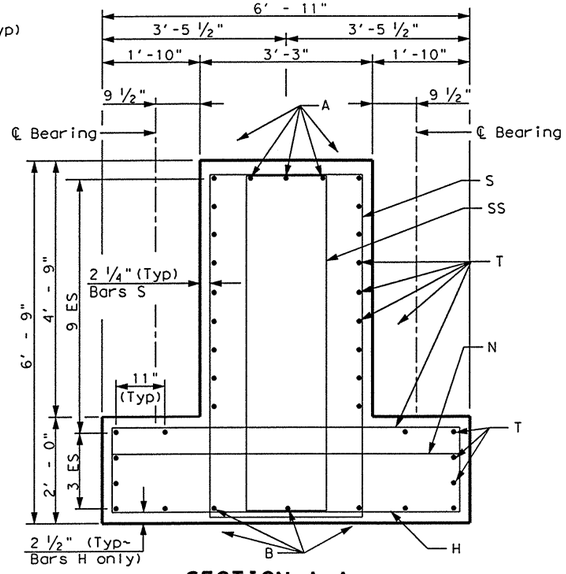

SECTION A-A

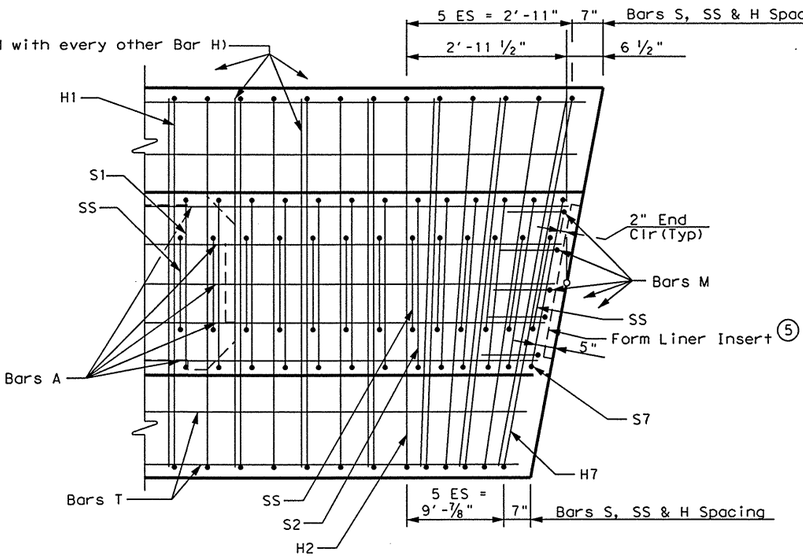

CORNER DETAIL

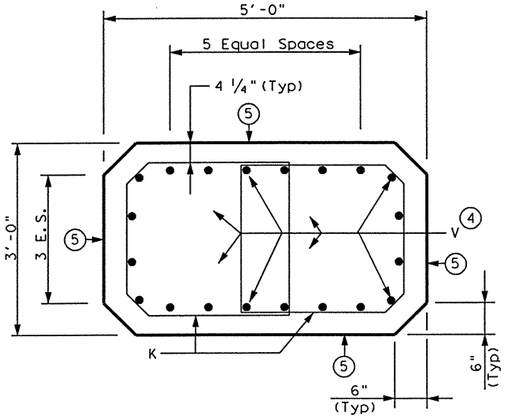

SECTION B-B

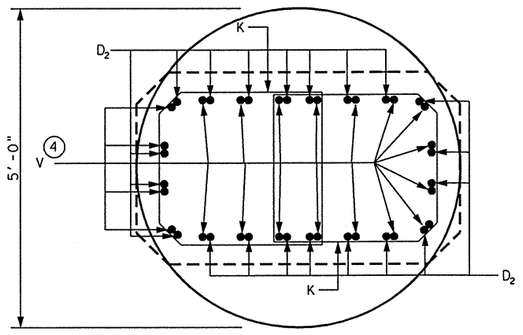

TYPICAL SECTION SHOWING BARS D_2 & BARS V

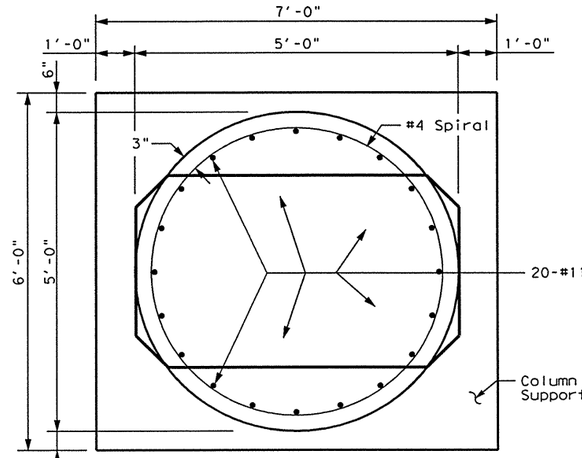

TYPICAL SECTION SHOWING DRILLED SHAFT REINFORCEMENT

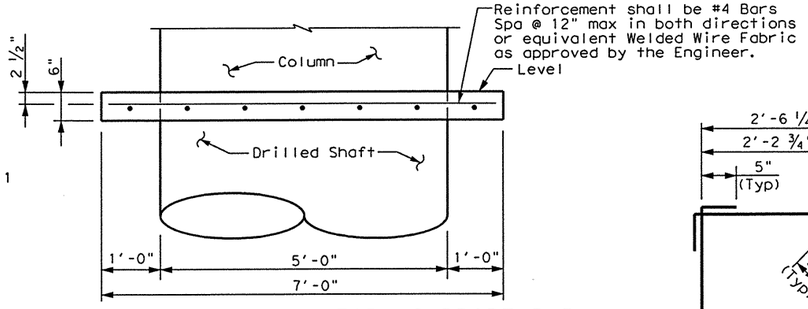

SECTION THRU COLUMN FORM SUPPORT PAD

Column Support Pad concrete and reinforcement shall be subsidiary to Bid Item 416 "Drilled Shaft Foundations"

SECTION C-C

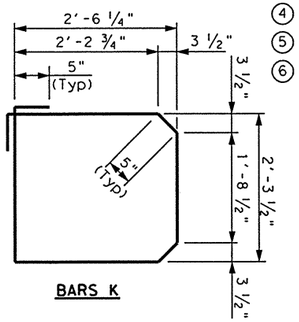

BARS K

(4) Extend Bars V 5'-10" min Into Bent Cap.
(5) See "Form Liner Details" For details not shown.
(6) Drilled Shaft Bars Shall Terminate 3" Below Top of Drilled Shaft.

STATE OF TEXAS
ALLEN R. CROZIER
81450
REGISTERED PROFESSIONAL ENGINEER
Allen R. Crozier
6/25/03

HS25 LOADING SHEET 2 OF 2

Parsons Brinckerhoff Quade & Douglas Inc.

Texas Department of Transportation

© 2003 by TxDOT

INTERIOR BENT NO. 3

OWASSA ROAD OVERPASS

SOUTHBOUND MAINLANES

2810WSBBNT3B.DGN

DESIGNED: ALA	FED. RD DIV. No.	STATE	FEDERAL AID PROJECT No.	HIGHWAY No.
CHECKED: ARC	6	TEXAS	NH 2003 ( )	US 281

DRAWN: RLJ	STATE DISTRICT	COUNTY	CONTROL No.	SECTION No.	JOB No.	SHEET No.
CHECKED: ALA	PHARR	HIDALGO	0255	08	091	1024

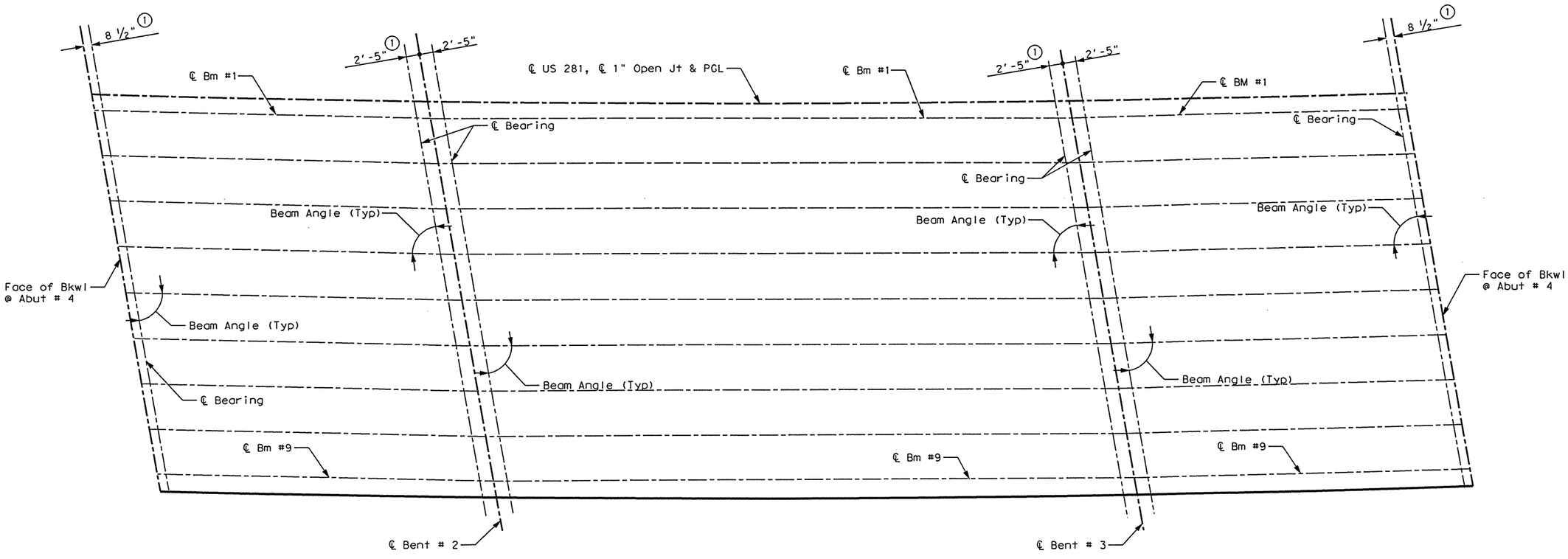

SPAN 1
(TYPE IV BEAMS)

BENT REPORT

BENT NO. 1 (S 81 31 1.77 E)
DISTANCE BETWEEN STATION LINE AND BEAM 1 3.062 R

			BEAM SPAC. (C.L. BENT)	BEAM ANGLE D	M	S
SPAN 1	BEAM	1	.000	78	52	50
	BEAM	2	8.291	78	54	15
	BEAM	3	8.291	78	55	39
	BEAM	4	8.291	78	57	4
	BEAM	5	8.291	78	58	29
	BEAM	6	8.291	78	59	53
	BEAM	7	8.291	79	1	18
	BEAM	8	8.291	79	2	43
	BEAM	9	8.291	79	4	8
	TOTAL		66.325			

BENT NO. 2 (S 81 31 1.77 E)
DISTANCE BETWEEN STATION LINE AND BEAM 1 3.053 R

			BEAM SPAC. (C.L. BENT)	BEAM ANGLE D	M	S
SPAN 1	BEAM	1	.000	78	52	50
	BEAM	2	8.266	78	54	15
	BEAM	3	8.266	78	55	39
	BEAM	4	8.266	78	57	4
	BEAM	5	8.266	78	58	29
	BEAM	6	8.266	78	59	53
	BEAM	7	8.266	79	1	18
	BEAM	8	8.266	79	2	43
	BEAM	9	8.266	79	4	8
	TOTAL		66.124			
SPAN 2	BEAM	1	.000	80	11	18
	BEAM	2	8.266	80	12	32
	BEAM	3	8.266	80	13	47
	BEAM	4	8.266	80	15	1
	BEAM	5	8.266	80	16	16
	BEAM	6	8.266	80	17	30
	BEAM	7	8.266	80	18	45
	BEAM	8	8.266	80	20	0
	BEAM	9	8.266	80	21	14
	TOTAL		66.124			

SPAN 2
(TYPE IV BEAMS)

BENT REPORT

BENT NO. 3 (S 81 31 1.77 E)
DISTANCE BETWEEN STATION LINE AND BEAM 1 3.037 R

			BEAM SPAC. (C.L. BENT)	BEAM ANGLE D	M	S
SPAN 2	BEAM	1	.000	80	11	18
	BEAM	2	8.224	80	12	32
	BEAM	3	8.224	80	13	47
	BEAM	4	8.224	80	15	1
	BEAM	5	8.224	80	16	16
	BEAM	6	8.224	80	17	30
	BEAM	7	8.224	80	18	45
	BEAM	8	8.224	80	20	0
	BEAM	9	8.224	80	21	14
	TOTAL		65.788			
SPAN 3	BEAM	1	.000	81	29	45
	BEAM	2	8.224	81	30	50
	BEAM	3	8.224	81	31	54
	BEAM	4	8.224	81	32	59
	BEAM	5	8.224	81	34	3
	BEAM	6	8.224	81	35	8
	BEAM	7	8.224	81	36	12
	BEAM	8	8.224	81	37	16
	BEAM	9	8.224	81	38	21
	TOTAL		65.788			

BENT NO. 4 (S 81 31 1.77 E)
DISTANCE BETWEEN STATION LINE AND BEAM 1 3.030 R

			BEAM SPAC. (C.L. BENT)	BEAM ANGLE D	M	S
SPAN 3	BEAM	1	.000	81	29	45
	BEAM	2	8.205	81	30	50
	BEAM	3	8.205	81	31	54
	BEAM	4	8.205	81	32	59
	BEAM	5	8.205	81	34	3
	BEAM	6	8.205	81	35	8
	BEAM	7	8.205	81	36	12
	BEAM	8	8.205	81	37	16
	BEAM	9	8.205	81	38	21
	TOTAL		65.637			

SPAN 3
(TYPE IV BEAMS)

BEAM REPORT

BEAM REPORT, SPAN 1

	HORIZONTAL DISTANCE C-C BENT	C-C BRG.	TRUE DISTANCE ② BOT. BM. FLG.
BEAM 1	59.998	56.813	57.92
BEAM 2	59.993	56.808	57.91
BEAM 3	59.988	56.804	57.91
BEAM 4	59.983	56.799	57.90
BEAM 5	59.978	56.795	57.90
BEAM 6	59.974	56.790	57.89
BEAM 7	59.969	56.785	57.89
BEAM 8	59.964	56.781	57.88
BEAM 9	59.959	56.776	57.88

BEAM REPORT, SPAN 2

	HORIZONTAL DISTANCE C-C BENT	C-C BRG.	TRUE DISTANCE ② BOT. BM. FLG.
BEAM 1	114.493	109.588	110.69
BEAM 2	114.486	109.581	110.68
BEAM 3	114.479	109.574	110.67
BEAM 4	114.472	109.567	110.67
BEAM 5	114.465	109.561	110.66
BEAM 6	114.457	109.554	110.65
BEAM 7	114.450	109.547	110.65
BEAM 8	114.443	109.540	110.64
BEAM 9	114.436	109.534	110.63

BEAM REPORT, SPAN 3

	HORIZONTAL DISTANCE C-C BENT	C-C BRG.	TRUE DISTANCE ② BOT. BM. FLG.
BEAM 1	59.998	56.839	57.93
BEAM 2	59.996	56.836	57.93
BEAM 3	59.993	56.833	57.93
BEAM 4	59.990	56.831	57.93
BEAM 5	59.987	56.828	57.92
BEAM 6	59.984	56.825	57.92
BEAM 7	59.982	56.823	57.92
BEAM 8	59.979	56.820	57.92
BEAM 9	59.976	56.818	57.91

① Measured perpendicular to ℄ Bent.

② Beam lengths shown are bottom beam flange lengths with adjustments made for beam slope.

STATE OF TEXAS
ALLEN R. CROZIER
81450
REGISTERED PROFESSIONAL ENGINEER
Allen R. Crozier 6/25/03

INTERIM REVIEW ONLY
Document incomplete: not intended for permit, bidding or construction.
Engineer: ALLEN R. CROZIER, P.E.
P.E. Serial No.: 81450
Date: 06/25/2003

HS25 LOADING

Parsons Brinckerhoff Quade & Douglas Inc.

Texas Department of Transportation

© 2003 by TxDOT

BEAM LAYOUT
(SPANS #1 - #3)

OWASSA ROAD OVERPASS
SOUTHBOUND MAINLANES

2810WSBBML01.DGN

DESIGNED: ALA	FED. RD DIV. No.	STATE	FEDERAL AID PROJECT No.	HIGHWAY No.
CHECKED: ARC	6	TEXAS	NH 2003 ( )	US 281

DRAWN: RLJ	STATE DISTRICT	COUNTY	CONTROL No.	SECTION No.	JOB No.	SHEET No.
CHECKED: ALA	PHARR	HIDALGO	0255	08	091	1025

ESMERALDA G. EGGER 11:38:29 AM 06/25/2003
I:\projects\223220\CADD\Sheets\Structures\Direct Connects\Owassso\281owsbBML01.dgn

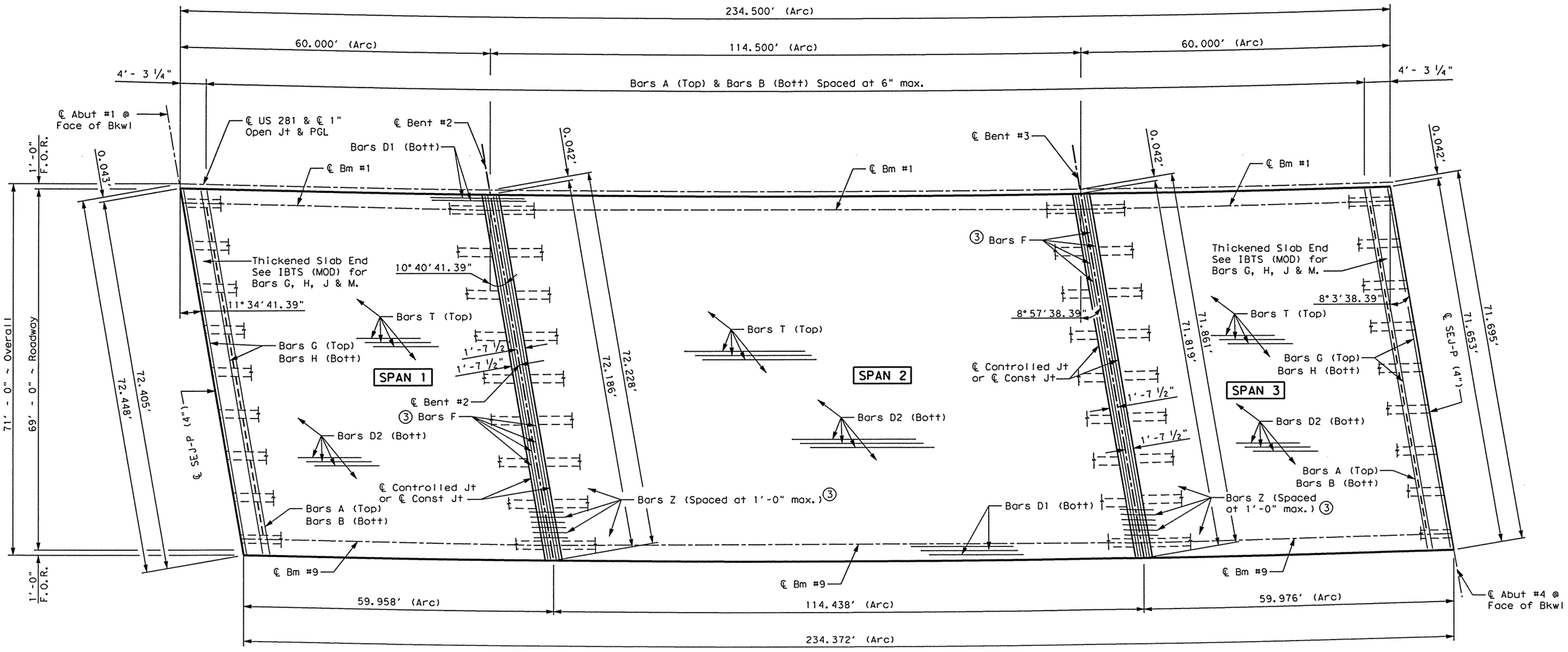

PLAN

HS25 LOADING SHEET 1 OF 2

Parsons Brinckerhoff Quade & Douglas Inc.

Texas Department of Transportation

© 2003 by TxDOT

234.50' PRESTR CONCRETE BEAM UNIT

(Spans #1 - #3)

OWASSA ROAD OVERPASS

SOUTHBOUND MAINLANES

281OWSBSPANa.DGN

STATE OF TEXAS
ALLEN R. CROZIER
81450
REGISTERED PROFESSIONAL ENGINEER

Allen R. Crozier
6/25/03

DESIGNED: ALA	FED. RD DIV. No.	STATE	FEDERAL AID PROJECT No.			HIGHWAY No.	
CHECKED: ARC	6	TEXAS	NH 2003 ( )			US 281	
DRAWN: RLJ	STATE DISTRICT	COUNTY	CONTROL No.	SECTION No.	JOB No.	SHEET No.	
CHECKED: ALA	PHARR	HIDALGO	0255	08	091	1026	

ESMERALDA G. EGGER
11:38:52 AM
06/25/2003
I:\projects\22322a\CADD\Sheets\Structures\Direct Connects\Owassa\281owsbSPANa.dgn

ESMERALDA G. EGGER 11:39:14 AM 06/25/2003 I:\projects\22322a\CADD\Sheets\Structures\Direct Connects\Owassa\281owsbSPANb.dgn

TABLE OF ESTIMATED QUANTITIES

Span	Reinf Conc Slab	Prestressed Concrete Bm Type IV (1)	Class "S" Concrete	Reinf Steel (2)
No.	SF	LF	CY	LB
1	4256	521.08	111.4	27664
2	8123	995.94	216.2	52800
3	4257	521.31	111.4	27671
Total	16636	2038.33	439.0	108135

(1) Quantity shown are bottom beam flange lengths with adjustments made for beam slope. See BEAM LAYOUT for beam lengths and beam angles.

(2) Reinforcing steel weight is calculated using an approximate factor of 6.5 lbs per square foot of slab.

(3) See MISCELLANEOUS SLAB DETAILS, Sheet 2 of 2, for details not shown.

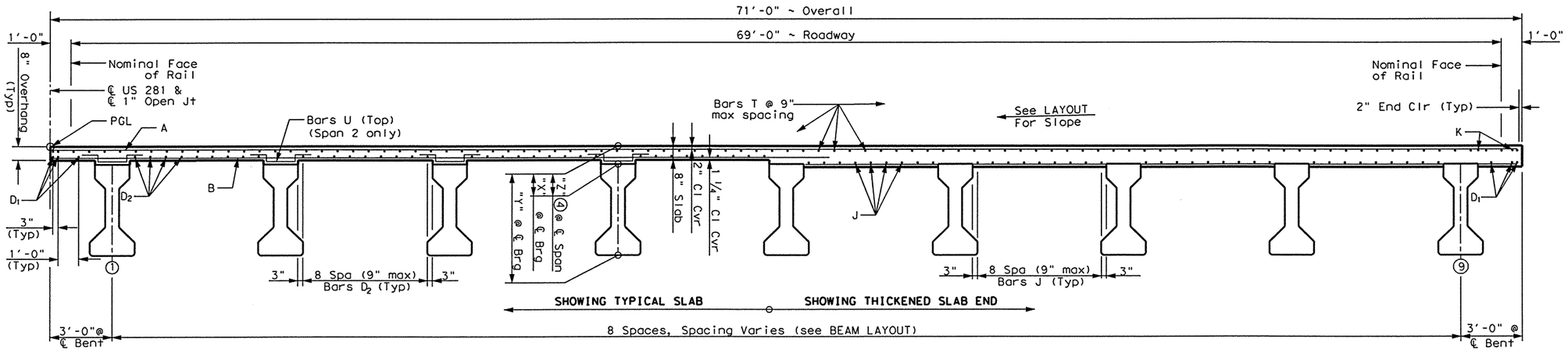

TYPICAL RADIAL SECTION

BAR TABLE

Bar	Size
AA	#5
A	#5
B	#5
D	#5
G	#5
H	#6
J	#5
M	#5
T	#4
U	#4

TABLE OF SECTION DEPTHS

Span No.	Beam No.	"X" at ℄ Brg	"Y" at ℄ Brg	"Z" at ℄ Span (4)
1 & 3	ALL	9 1/2"	5'-3 1/2"	9 1/4"
2	1 & 9	12"	5'-6"	9 1/4"
2	2 - 8	12"	5'-6"	9 3/8"

(4) Theoretical Dimension

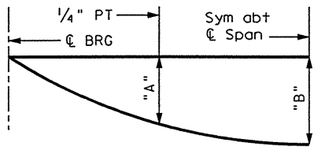

DEAD LOAD DEFLECTION DIAGRAM

NOTE: Deflections shown are due to cast-in-place concrete only. (E_C= 5 X 10^6 psi) Calculated deflections shown are theoretical and actual dimensions may be less. Deflections shall be adjusted based on field observations.

Span No.	Beam Center No.	"A"	"B"
1 & 3	1	0.008'	0.011'
1 & 3	2 - 8	0.018'	0.025'
1 & 3	9	0.008'	0.011'
2	1	0.106'	0.149'
2	2 - 8	0.123'	0.172'
2	9	0.106'	0.149'

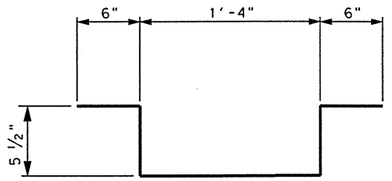

BARS U

NOTE: Bars U shall match Beam Bars R spacing for a min. length of 1/4 x (Beam Length). Span 2 only.

GENERAL NOTES:

Designed according to AASHTO 1996 Standard and current Interim Specifications.

See PCP(C) Standard for details and quantity adjustments if this option is used.

See SEJ-P Standard for additional details.

See IBTS(MOD) for Thickened Slab End Details and IBMS(MOD) for slab details over Inverted-T.

All reinforcing shall be Grade 60.

Concrete strength f'c = 4000 psi.

Bar laps, where required, shall be as follows:

#4 = 1'-5"

#5 = 1'-9"

HS25 LOADING SHEET 2 OF 2

STATE OF TEXAS ALLEN R. CROZIER 81450 REGISTERED PROFESSIONAL ENGINEER

6/25/03

Parsons Brinckerhoff Quade & Douglas Inc.

Texas Department of Transportation

© 2003 by TxDOT

234.50' PRESTR CONCRETE BEAM UNIT

(Spans #1-#3)

OWASSA ROAD OVERPASS

SOUTHBOUND MAINLANES

281OWSBSPANb.DGN

DESIGNED: ALA	FED. RD DIV. No.	STATE	FEDERAL AID PROJECT No.	HIGHWAY No.
CHECKED: ARC	6	TEXAS	NH 2003 ( )	US 281

DRAWN: RLJ	STATE DISTRICT	COUNTY	CONTROL No.	SECTION No.	JOB No.	SHEET No.
CHECKED: ALA	PHARR	HIDALGO	0255	08	091	1027

ALLEN CROZIER
03:14:48 PM
06/25/2003
i:\Projects\22322o\CADD\Sheets\Structures\Bridge\281BL06.dgn

LIMITS OF PROPOSED RIPRAP
① EXIST RIPRAP TO BE REMOVED & REPLACED (TYP)
BEGIN NB BRIDGE
FACE OF BKWL @ ℄ ABUT #1
NOMINAL STA 767+06.21
(24' LT)
ELEV = 128.57
PROP 375' MBGF & 1-TAS
PROP MBGF TRANS & TYPE II CURB
PROP NORTHBOUND MAINLANE PGL
EXIST RIPRAP TO REMAIN (TYP)
① EXIST RIPRAP TO BE REMOVED (TYP)
NOMINAL FACE OF SSCB (1)-99 42" HIGH
S 8° 29' 57.64" W
℄ BENT #2
NOMINAL STA 768+01.36
(24' LT)
40' BPA-1 W/ SIGN 7.6' FROM BENT #2
4" ℄ SUG
1'-0"
4'-0" WIDENING
6'-10" PHASE 3 CONST
NOMINAL FACE OF TY SSTR RAIL
℄ ARMOR JT W/ SILICONE SEALANT SEE SHEET AJ (SPL) (TYP)
71'-0" OVERALL
69'-0" ROADWAY
47'-0"
40'-0" EXISTING
34'-4" EXISTING TO REMAIN
24'-0"
27'-0" WIDENING
29'-10" PHASE 2 CONST
18"
1'-0"
10'-11" CLR
25'-0" TURN AROUND
6'-3" CLR
19'-8"
40'-0"
40'-0"
20'-4"
18"
8 SWB
30' 04.56" W ℄ NOLANA LOOP
℄ LANE MAIN
25' BPA-1 W/ SIGN 12.7' FROM BENT #3
℄ BENT #3
NOMINAL STA 768+96.29
(24' LT)
Test Hole No. N-2-E
Sta 769+00, 70' Lt
BREAKBACK LINE
2.0% (NOMINAL)
8 SWB
℄ BM #1
℄ EXIST BM #1
℄ EXIST BM #6
℄ BM #2
℄ BM #5
11'-7" CLR
℄ ARMOR JT W/ SILICONE SEALANT SEE SHEET AJ (SPL) (TYP)
STA 768+48.71 (US-281)
STA 17+58.91 (NOLANA LP)
Test Hole No. N-1-E
Sta 768+12, 80' Rt
2:1
3:1
LIMITS OF PROPOSED RIPRAP
EXIST RIPRAP TO BE REMOVED & REPLACED(TYP)①
EXIST NORTHBOUND MAINLANE PGL
EXIST MBGF TO BE REMOVED
PROP MBGF TRANS & TYPE II CURB
PROP 475' MBGF & 1-SGT(8)-01
END NB BRIDGE
FACE OF BKWL @ ℄ ABUT #4
NOMINAL STA 769+91.41
(24' LT)
ELEV = 128.59
10' SHLD
12' AUX LN
12' LN
12' LN
12' LN
10' SHLD
32'-0"
770+00
① EXIST RIPRAP TO BE REMOVED (TYP)
EXIST & PROP ℄ US 281, ℄ SSCB & ℄ 1" OPEN JT
① REMOVAL OF CONCRETE RIPRAP SHALL BE SUBSIDIARY TO ITEM 100 "PREP ROW"
ALL ABUTMENTS/BENTS ARE ON A BEARING OF N 81° 30' 16" W. ALL ABUTMENT/BENT CENTERLINES SHALL BE CONSTRUCTED TO MATCH EXISTING SUBSTRUCTURE CENTERLINES.
THE CONTRACTOR SHALL VERIFY ALL DIMENSIONS AND ELEVATIONS IN THE FIELD PRIOR TO ORDERING MATERIALS OR BEGINNING CONSTRUCTION.

PLAN

EXISTING RIPRAP TO BE REMOVED AND REPLACED
EXISTING RIPRAP TO BE REMOVED
- TEST HOLE
- POINT OF MIN VERT CLEAR
STA 767+89.00 (68' LT)
STA 768+48.71 (68' LT)
STA 769+09.00 (68' LT)
- CENTER OF 10' SSCB (TY. 4) RAIL AT ℄ US 281.
STA 767+40.00
STA 769+60.00

BM US 281-10
STA 767+10.57
OFFSET = 210.84' LT
ELEV = 105.56
DESC = 3 1/4" TxDOT ALUM DISK

STATE OF TEXAS
ALLEN R. CROZIER
81450
REGISTERED PROFESSIONAL ENGINEER
6/25/03

BEGIN SSTR RAIL FOR PAYMENT
OVERALL LENGTH OF SSTR RAIL (LT SIDE) = 309'- 2 3/8"
OVERALL LENGTH OF SSCB RAIL (CENTER) = 285'-2 3/8"
OVERALL LENGTH OF BRIDGE = 285'-2 3/8"
END SSTR RAIL FOR PAYMENT
12'-0"
12'-0"
BEGIN SSCB RAIL FOR PAYMENT
END SSCB RAIL FOR PAYMENT
95'-1 3/4" PRESTR CONC BM SPAN (TYPE IV BMS)
94'-11 1/8" PRESTR CONC BM SPAN (TYPE IV BMS)
95'-1 1/2" PRESTR CONC BM SPAN (TYPE IV BMS)
STA = 768+47.12
ELEV = 139.00
L = 1,610.00'
K = 321
ex = -10.11'
(+)2.5210 % (-)2.5002 %
BEGIN NB BRIDGE
FACE OF BKWL @ ℄ ABUT #1
NOMINAL STA 767+06.21
(24' LT)
ELEV = 128.57
PROP 375' MBGF & 1-TAS
PROP MBGF TRANS & TYPE II CURB
TYPE SSTR RAIL OR SSCB
END NB BRIDGE
FACE OF BKWL @ ℄ ABUT #4
NOMINAL STA 769+91.41
(24' LT)
ELEV = 128.59
PROP MBGF TRANS & TYPE II CURB
PROP 475' MBGF & 1-SGT(8)-01
MAINLANE PGL PROP NORTHBOUND
EXIST NATURAL GROUND
2:1 RR9
CALC MIN VERT CLR = 16.88'
1.0%
"H" = 16.0'
CALC MIN VERT CLR =17.12'
0.35%
0.35%
PROPOSED FINISHED GRADE
CALC MIN VERT CLR = 16.71'
1.0%
2:1 RR9
"H" = 16.0'

Test Hole No. N-1-E
Elev = 105.63

8(6) 8(6)	CLAY, silty, tn, moi
8(6) 10(6)	
10(6) 8(6)	
11(6) 15(6)	CLAY, sdy, soft, wb, w/sd veins
14(6) 19(6)	MUCK, Water Bearing
20(6) 40(6)	CALICHE
42(6) 42(6)	
50(6) 50(5)	CLAY, tn, jointed, moi
35(6) 35(6)	CLAY, tn, gray, jointed, moi
42(6) 45(6)	CLAY, tn, soft, loose, friable, moi
50(4) 50(4)	CLAY, tn, gr, jointed, moi
40(6) 52(6)	CLAY, sdy, tn, gr, moi
50(2) 50(1)	
50(2) 50(1)	SAND, cloy, tn, firm, moi

B/H = 32.6'

Test Hole No. N-2-E
Elev = 105.17

10(6) 10(6)	CLAY, silty, tn, soft, moi
11(6) 12(6)	
8(6) 8(6)	
11(6) 8(6)	CLAY, tn, wet, (muck like)
15(6) 18(6)	
30(6) 36(6)	
42(6) 49(6)	CLAY, firm, friable, damp
43(6) 44(6)	
32(6) 30(6)	
50(4.75) 50(3.75)	
50(4.5) 50(4.25)	CLAY, firm, tnish rd, jointed, moi
37(6) 38(6)	

B/H = 43.2'

① 5~30" DIA. D.S. (PHASE 2)
1~30" DIA D.S. (PHASE 3)
X 53'
② 4~42" DIA. D.S. (PHASE 2)
1~42" DIA D.S. (PHASE 3)
X 45'
③ 5~30" DIA. D.S. (PHASE 2)
1~30" DIA D.S. (PHASE 3)
X 53'
④

ELEVATION

767+00 768+00 769+00 770+00
185 165 145 125 105 85 65 45 25 5

NOTES:

DESIGNED IN ACCORDANCE WITH 1996 AASHTO STANDARD SPECIFICATIONS AND ALL CURRENT INTERIMS.

ELEVATIONS BASED ON THE CURRENT NAVD 88 DATUM. EXISTING STRUCTURE WAS SURVEYED UNDER THE USGS&GS DATUM SYSTEM.

BRIDGE STATIONS BASED ON SURVEY OF EXISTING STRUCTURE.

NEW SLAB SHALL MATCH EXISTING SLAB PROFILE AT CONSTRUCTION JOINTS WITH ADJUSTMENTS FOR A 2% NOMINAL CROSS-SLOPE.

BORE HOLE DATA TAKEN FROM EXISTING PLANS. CSJ: 0255-08-063

FUNC CLASS	: FREEWAY
DESIGN SPEED:	70 MPH
ADT(2002)	: 56,200 VPD
ADT(2022)	: 91,400 VPD
NBI	: 21-109-0-0255-08-071
EXIST PSN	: 0255-08-071

HS25 LOADING (WIDENING)
HS20 LOADING (EXISTING)

Parsons Brinckerhoff Quade & Douglas Inc.

Texas Department of Transportation
© 2003 by TxDOT

BRIDGE LAYOUT
NOLANA LOOP OVERPASS
WIDENING
NORTHBOUND MAINLANES

PLAN 1"= 40' HORIZ
PROFILE 1"= 40' VERT

281BL06.DGN

DESIGNED: ARC	FED. RD DIV. No.	STATE	FEDERAL AID PROJECT No.		HIGHWAY No.	
CHECKED: ABM	6	TEXAS	NH 2003 ( )		US 281	
DRAWN: OJH	STATE DISTRICT	COUNTY	CONTROL No.	SECTION No.	JOB No.	SHEET No.
CHECKED: ARC	PHARR	HIDALGO	0255	08	091	1028

ALLEN CROZIER
03:15:05 PM
06/25/2003 -
i:\Projects\22322gCADD\Sheets\Structures\Bridge\281BL07.dgn

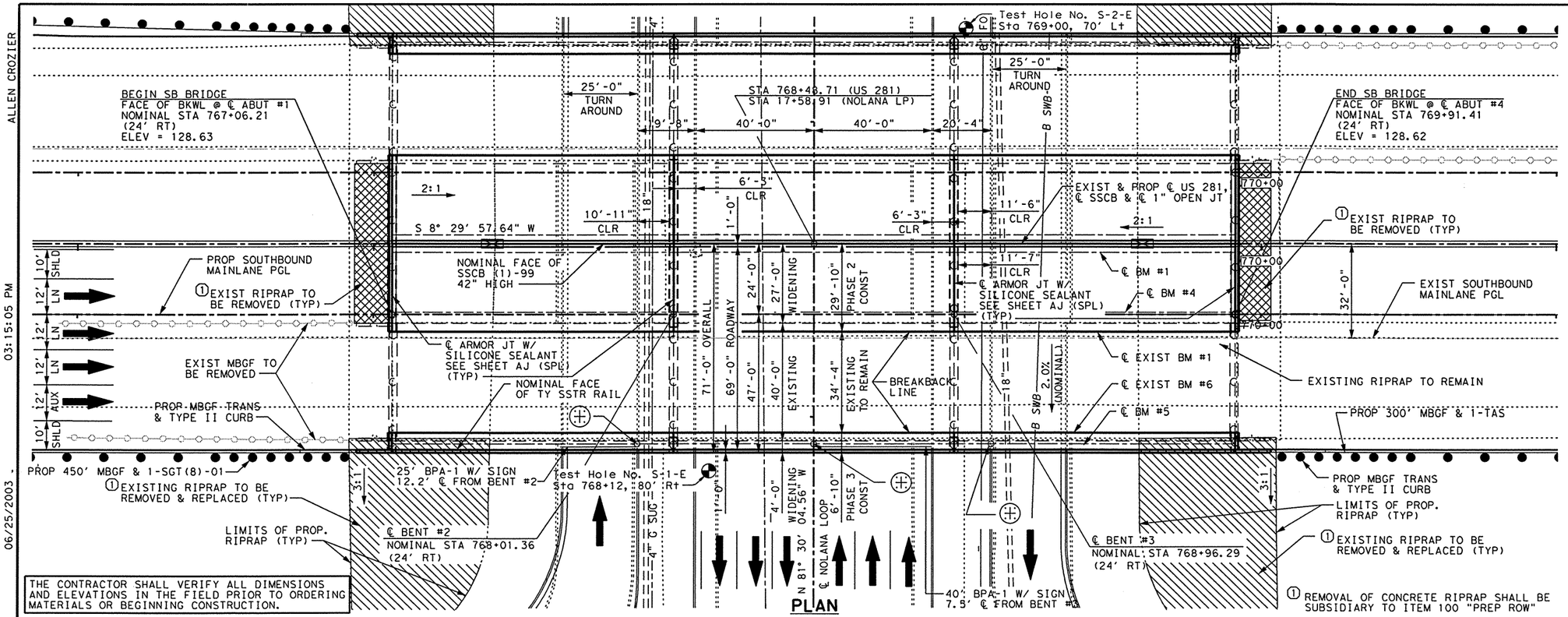

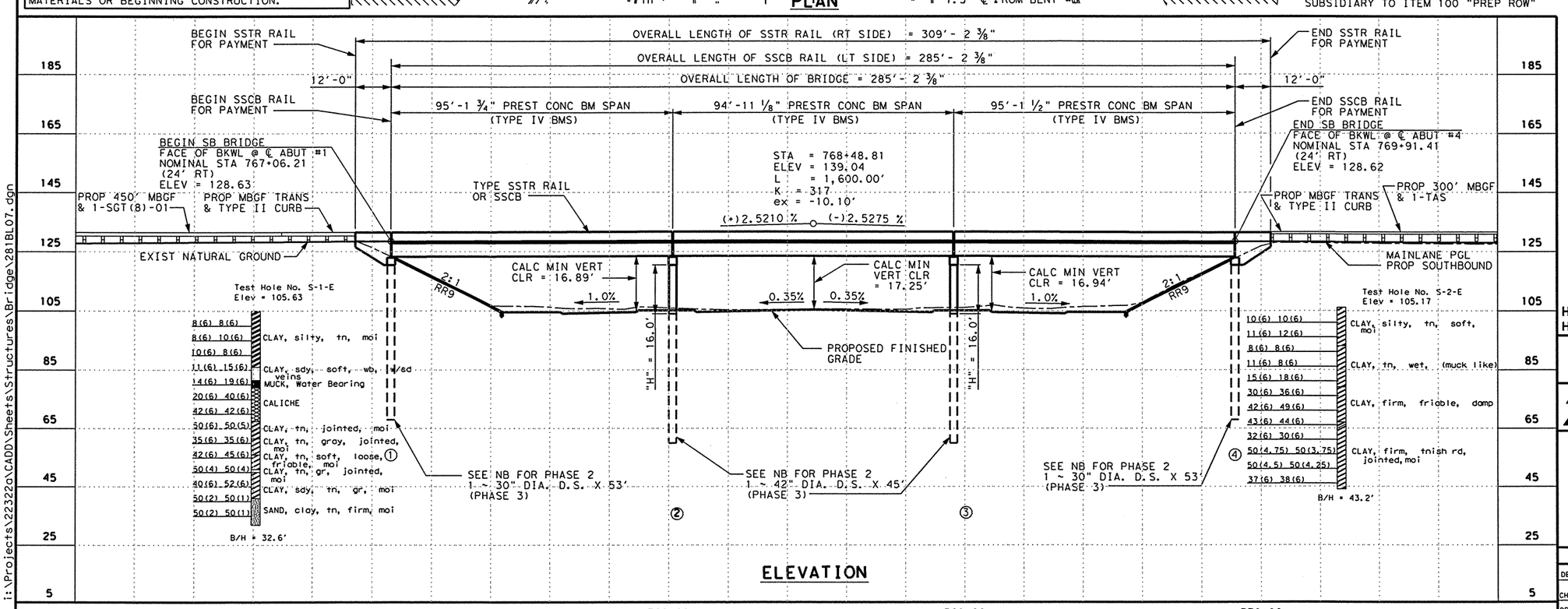

ALL ABUTMENTS/BENTS ARE ON A BEARING OF N 81° 30' 16" W. ALL ABUTMENT/BENT CENTERLINES SHALL BE CONSTRUCTED TO MATCH EXISTING SUBSTRUCTURE CENTERLINES.

EXISTING RIPRAP TO BE REMOVED AND REPLACED

EXISTING RIPRAP TO BE REMOVED

- TEST HOLE

- POINT OF MIN VERT CLEAR
STA 767+89.00 (68' RT)
STA 768+48.71 (68' RT)
STA 769+09.00 (68' RT)

- CENTER OF 10' SSCB (TY. 4) RAIL AT ℄ US 281.
STA 767+40.00
STA 768+60.00

BM US 281-10
STA 767+10.57
OFFSET = 105.84' LT
ELEV = 105.56
DESC = 3 1/4" TxDOT ALUM DISK

STATE OF TEXAS
ALLEN R. CROZIER
81450
REGISTERED PROFESSIONAL ENGINEER
Allen R. Crozier 6/25/03

NOTES:

DESIGNED IN ACCORDANCE WITH 1996 AASHTO STANDARD SPECIFICATIONS AND ALL CURRENT INTERIMS.

ELEVATIONS BASED ON THE CURRENT NAVD 88 DATUM. EXISTING STRUCTURE WAS SURVEYED UNDER THE USGS&GS DATUM SYSTEM.

BRIDGE STATIONS BASED ON SURVEY OF EXISTING STRUCTURE.

NEW SLAB SHALL MATCH EXISTING SLAB PROFILE AT CONSTRUCTION JOINTS WITH ADJUSTMENTS FOR A 2% NOMINAL CROSS-SLOPE.

BORE HOLE DATA TAKEN FROM EXISTING PLANS. CSJ: 0255-08-063

FUNC CLASS	: FREEWAY
DESIGN SPEED	: 70 MPH
ADT(2002)	: 56,200 VPD
ADT(2022)	: 91,400 VPD
NBI	: 21-109-0-0255-08-072
EXIST PSN	: 0255-08-072

HS25 LOADING (WIDENING)
HS20 LOADING (EXISTING)

Parsons Brinckerhoff Quade & Douglas Inc.

Texas Department of Transportation

© 2003 by TxDOT

BRIDGE LAYOUT
NOLANA LOOP OVERPASS WIDENING
SOUTHBOUND MAINLANES

PLAN 1"= 40' HORIZ
PROFILE 1"= 40' VERT

281BL07.DGN

DESIGNED: ARC	FED. RD DIV. No.	STATE	FEDERAL AID PROJECT No.		HIGHWAY No.	
CHECKED: ABM	6	TEXAS	NH 2003 ( )		US 281	
DRAWN: OJH	STATE DISTRICT	COUNTY	CONTROL No.	SECTION No.	JOB No.	SHEET No.
CHECKED: ARC	PHARR	HIDALGO	0255	08	091	1029

ESMERALDA G. EGGER
02:05:33 PM
06/25/2003
I:\projects\22322a\CADD\Sheets\Structures\Bridge\281brdgSECT.dgn

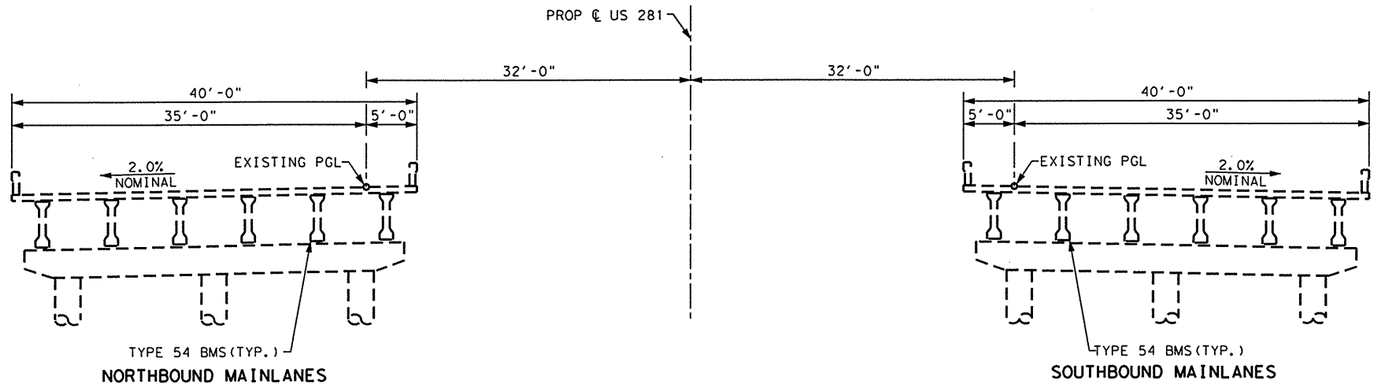

EXISTING STRUCTURE

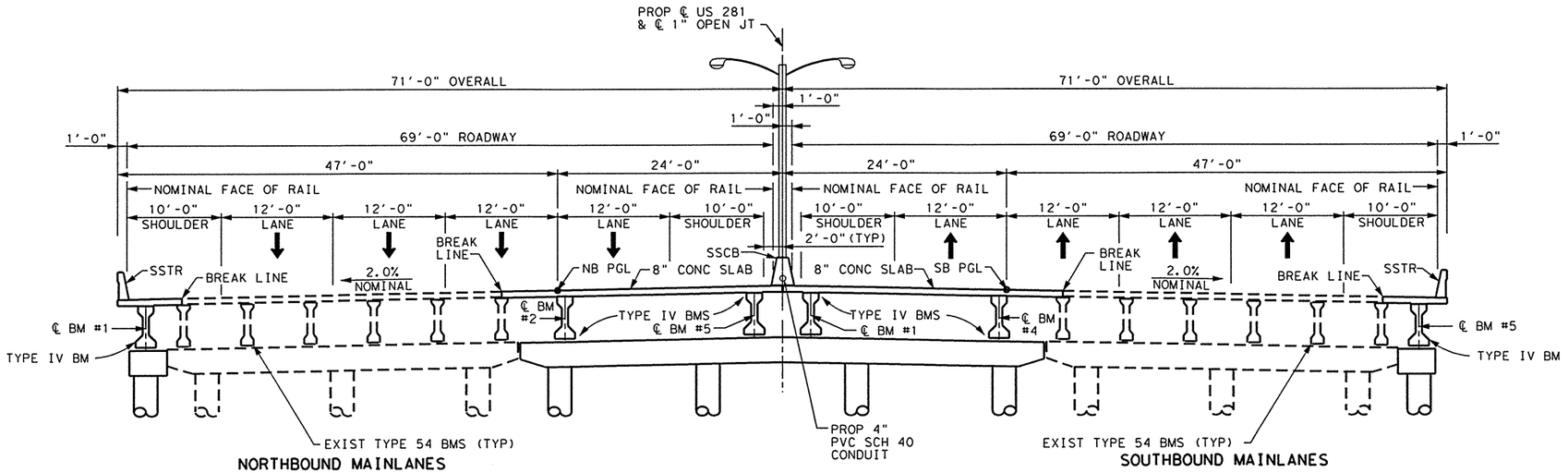

COMPLETE STRUCTURE

NOTE:

REFER TO EXISTING STRUCTURE PLANS
PROJECT NO. F 301(11)
CSJ: 0255-08-063
FOR ADDITIONAL DETAILS

HS 25 LOADING (WIDENING)
HS 20 LOADING (EXISTING)

STATE OF TEXAS
ALLEN R. CROZIER
81450
REGISTERED PROFESSIONAL ENGINEER
Allen R. Crozier
6/25/03

Parsons Brinckerhoff Quade & Douglas Inc.

Texas Department of Transportation

© 2002 by TxDOT

TYPICAL SECTIONS

NOLANA LOOP OVERPASS WIDENING

NORTHBOUND & SOUTHBOUND MAINLANES

281BRDGSECT.DGN

DESIGNED: ARC	FED. RD DIV. No.	STATE	FEDERAL AID PROJECT No.		HIGHWAY No.	
CHECKED: ABM	6	TEXAS	NH 2003 ( )		US 281	
DRAWN: OJH	STATE DISTRICT	COUNTY	CONTROL No.	SECTION No.	JOB No.	SHEET No.
CHECKED: ARC	PHARR	HIDALGO	0255	08	091	1030

ESMERALDA G. EGGER
02:05:41 PM
06/25/2003
I:\projects\22322a\CADD\Sheets\Structures\Bridge\281brdgSECT.dgn

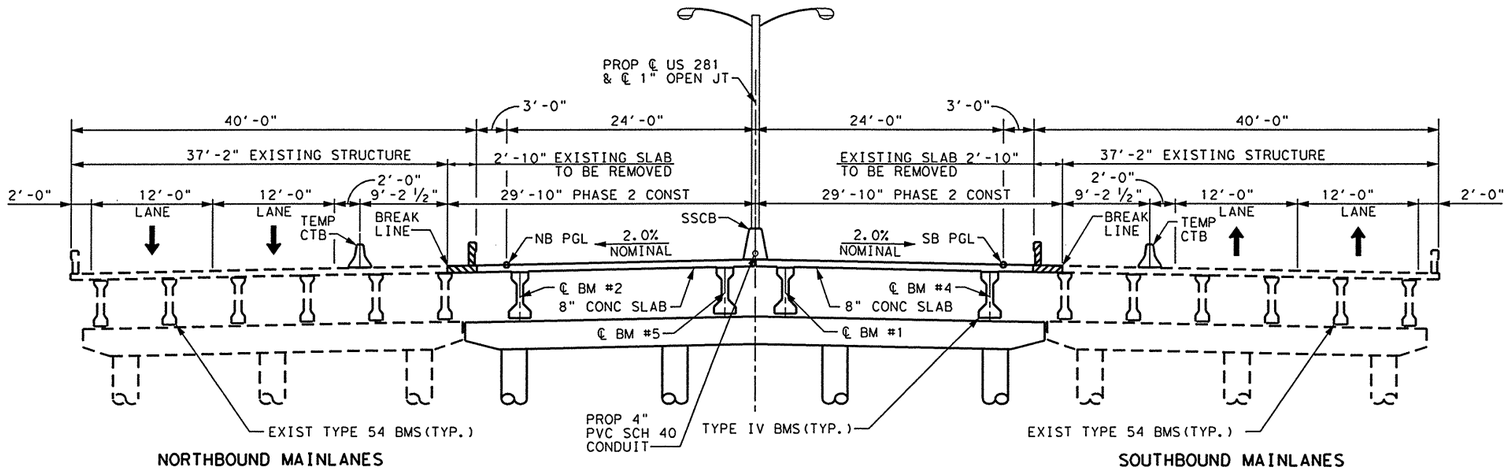

HATCHED PORTION OF EXISTING STRUCTURE TO BE REMOVED

PHASE 2 CONSTRUCTION

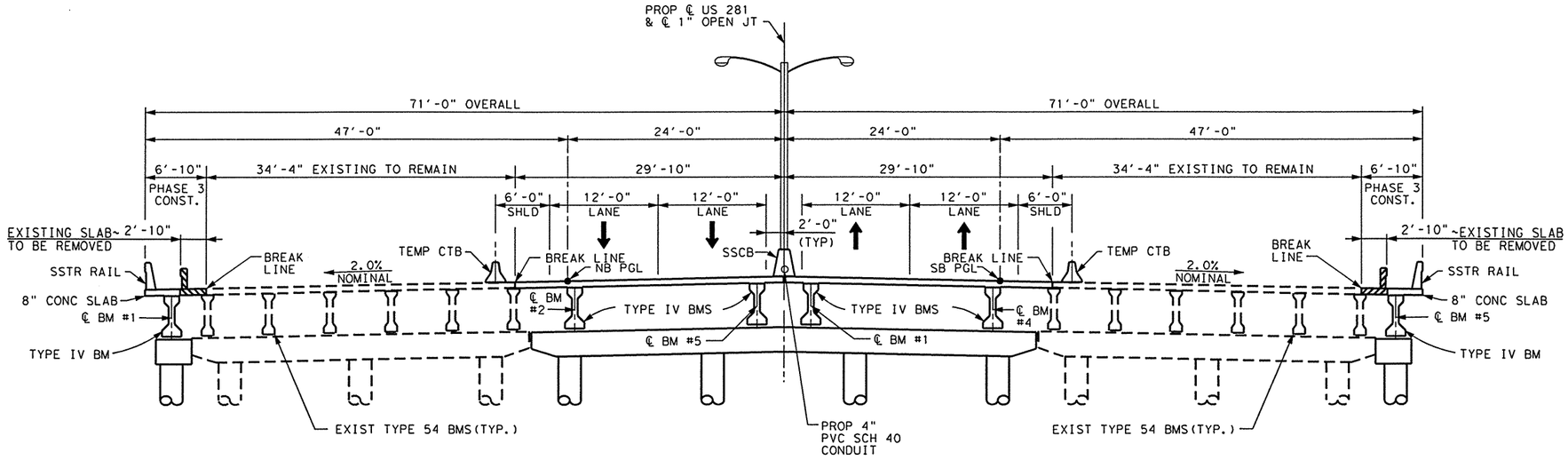

HATCHED PORTION OF EXISTING STRUCTURE TO BE REMOVED

PHASE 3 CONSTRUCTION

NOTE:

REFER TO EXISTING STRUCTURE PLANS
PROJECT NO. F 301(11)
CSJ: 0255-08-063
FOR ADDITIONAL DETAILS

HS 25 LOADING (WIDENING)
HS 20 LOADING (EXISTING)

Parsons Brinckerhoff Quade & Douglas Inc.

Texas Department of Transportation

© 2002 by TxDOT

STATE OF TEXAS
ALLEN R. CROZIER
81450
REGISTERED PROFESSIONAL ENGINEER

Allen R. Crozier
6/25/03

CONSTRUCTION SEQUENCE

NOLANA LOOP OVERPASS WIDENING

NORTHBOUND & SOUTHBOUND MAINLANES

281BRDGSECT.DGN

DESIGNED: ARC	FED. RD DIV. No.	STATE	FEDERAL AID PROJECT No.			HIGHWAY No.	
CHECKED: ABM	6	TEXAS	NH 2003 ( )			US 281	
DRAWN: OJH	STATE DISTRICT	COUNTY	CONTROL No.	SECTION No.	JOB No.	SHEET No.	
CHECKED: ARC	PHARR	HIDALGO	0255	08	091	1031	

ALLEN CROZIER
03:47:36 PM
08/05/2003

SUMMARY OF ESTIMATED QUANTITIES

	ITEM NUMBER	416		430		422	425	428	432	444	442	450	514			
	ITEM / DESCRIPTION	DRILLED SHAFTS		CLASS "C" CONCRETE (FOR EXT STRUCTURE)		REINF CONCRETE SLAB	PRESTR CONCRETE BEAM	CONCRETE SURFACE TREATMENT	RIPRAP CONCRETE	BRIDGE PROTECTIVE ASSEMBLY	STRUCTURAL STEEL ARMOR JT	RAILING	CONCRETE TRAFFIC BARRIER			
		30" ø	42" ø	ABUTMENT	BENT	(EXT STRUC)	TYPE "IV"		CLASS "B"		(SPL)	SSTR	SSCB (1)	SSCB (4)		
		LF	LF	CY	CY	SF	LF	SY	CY	EA	LBS	LF	LF	LF		
PHASE 2	2~ABUTMENTS	530		52.4												
	2~INTERIOR BENTS		360		54.4											
	3~95.00' NOM PRESTR CONC BM SPAN					16,994	2,273.68	1812			5,020		265.2	20.0		
	PHASE 2 TOTAL	530	360	52.4	54.4	16,994	2,273.68	1812			5,020		265.2	20.0		
PHASE 3	2~ABUTMENTS	212		20.8								48.0				
	2~INTERIOR BENTS		180		16.2											
	3~95.00' NOM PRESTR CONC BM SPAN					3,898	568.42	360		4	960	570.4				
	PHASE 3 TOTAL	212	180	20.8	16.2	3,898	568.42	360		4	960	618.4				
	TOTAL	742	540	73.2	70.6	20,892	2,842.10	2172	310.0	4	5,980	618.4	265.2	20.0		

BEARING SEAT ELEVATIONS

NORTHBOUND MAINLANES

	BEAM 1	BEAM 2	BEAM 3	BEAM 4	BEAM 5
BENT 1 (FWD)	122.152	123.047	123.182	123.317	123.452
BENT 2 (BK)	122.435	123.330	123.465	123.600	123.735
(FWD)	122.437	123.332	123.467	123.602	123.737
BENT 3 (BK)	122.442	123.337	123.472	123.607	123.742
(FWD)	122.440	123.335	123.470	123.605	123.740
BENT 4 (BK)	122.167	123.062	123.197	123.332	123.467

SOUTHBOUND MAINLANES

	BEAM 1	BEAM 2	BEAM 3	BEAM 4	BEAM 5
BENT 1 (FWD)	123.510	123.375	123.240	123.105	122.210
BENT 2 (BK)	123.787	123.652	123.517	123.382	122.487
(FWD)	123.789	123.654	123.519	123.384	122.489
BENT 3 (BK)	123.785	123.650	123.515	123.380	122.485
(FWD)	123.783	123.648	123.513	123.378	122.483
BENT 4 (BK)	123.498	123.363	123.228	123.093	122.198

HS 20 LOADING (EXISTING)
HS 25 LOADING (WIDENING)

STATE OF TEXAS
ALLEN R. CROZIER
81450
REGISTERED
PROFESSIONAL ENGINEER
8/5/03

Parsons Brinckerhoff Quade & Douglas Inc.

Texas Department of Transportation

© 2003 by TxDOT

ESTIMATED QUANTITIES AND BEARING SEAT ELEVATIONS NOLANA LOOP OVERPASS WIDENING

281EQ06.DGN

	FED. RD DIV. No.	STATE	FEDERAL AID PROJECT No.		HIGHWAY No.	
DESIGNED: ARC						
CHECKED: ALA	6	TEXAS	NH 2003 ( )		US 281	
DRAWN: KTD	STATE DISTRICT	COUNTY	CONTROL No.	SECTION No.	JOB No.	SHEET No.
CHECKED: ARC	PHARR	HIDALGO	0255	08	091	1032

I:\projects\223220\CADD\Sheets\Structures\Bridge\281EQ06.dgn

ESMERALDA G. EGGER
11:44:18 AM
06/25/2003
I:\projects\223220\CADD\Sheets\Structures\Bridge\281Abt06.dgn

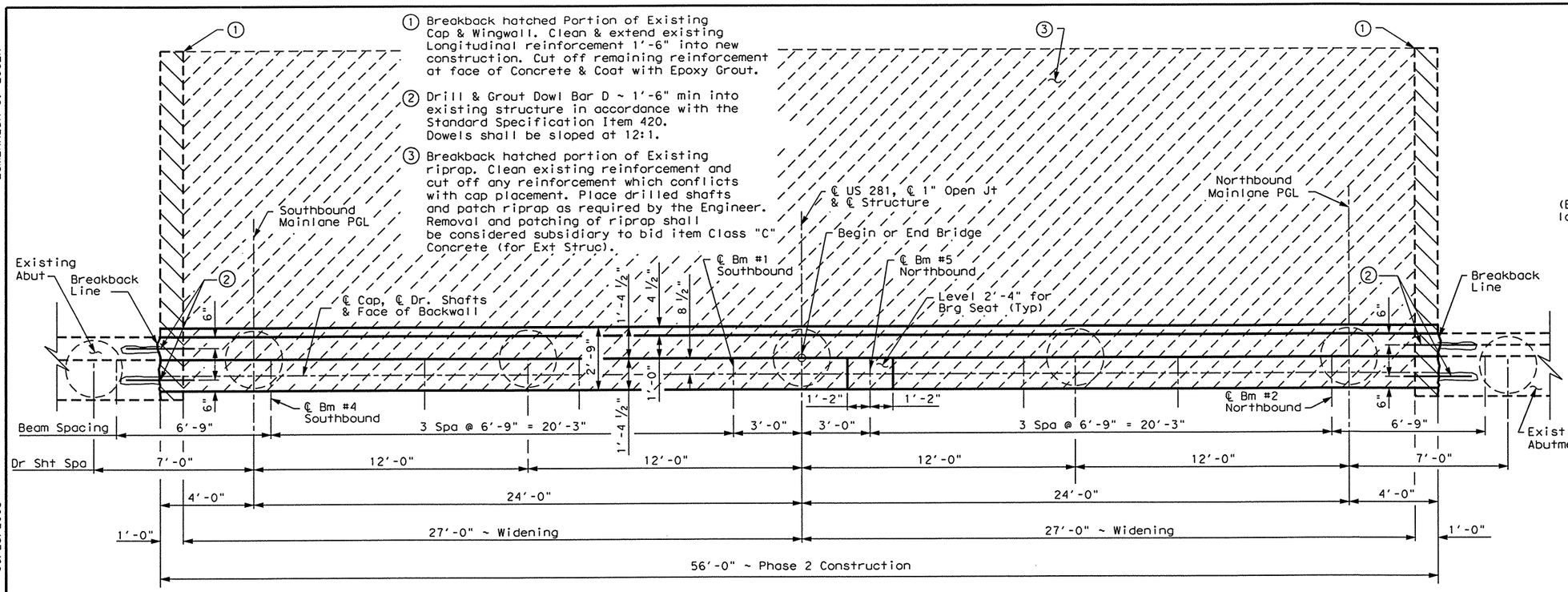

PLAN

Showing Abutment No. 1 (Abutment No. 4 ~ Opposite Hand)

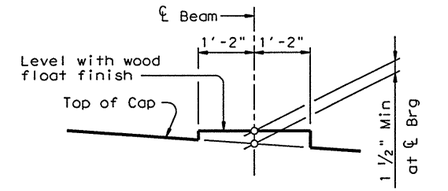

BEARING SEAT DETAIL

(Bearing surface shall be clean and free of all loose material before placing bearing pad.)

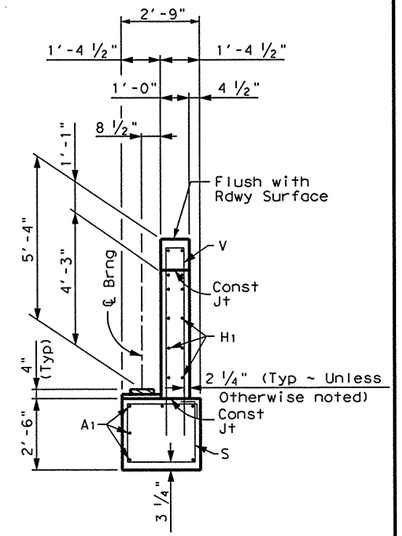

SECTION A-A

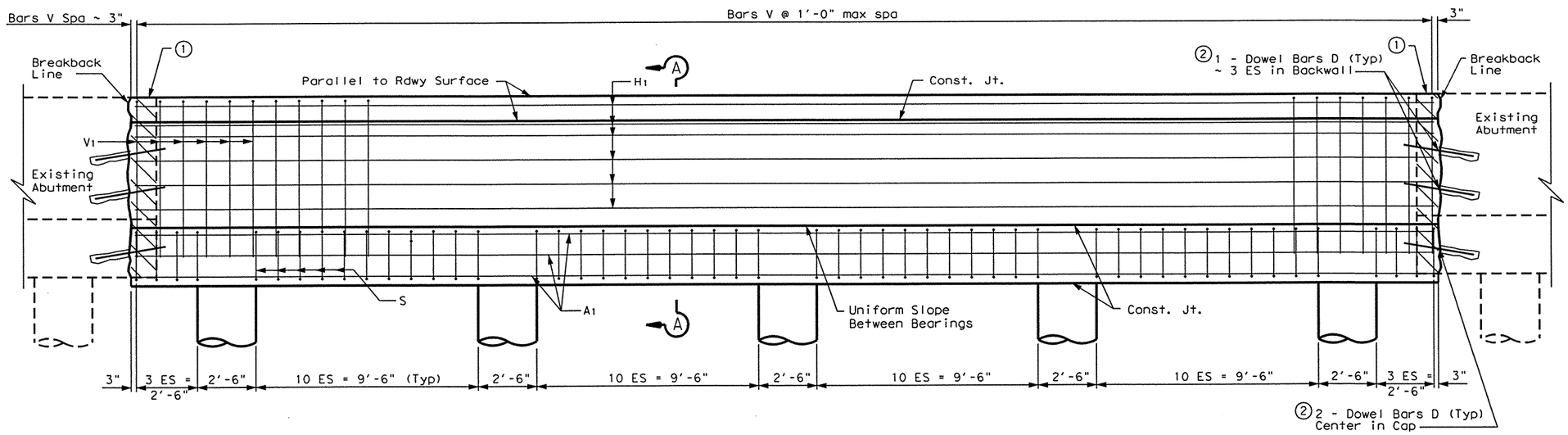

ELEVATION

Showing Abutment No. 1 (Abutment No. 4 ~ Opposite Hand)

STATE OF TEXAS
ALLEN R. CROZIER
81450
REGISTERED PROFESSIONAL ENGINEER
Allen R. Crozier 6/25/03

HS20 LOADING (EXISTING)
HS25 LOADING (WIDENING) SHEET 1 OF 2

Parsons Brinckerhoff Quade & Douglas Inc.

Texas Department of Transportation

© 2003 by TxDOT

ABUTMENT NOS. 1 & 4

NOLANA LOOP OVERPASS WIDENING

PHASE 2 CONSTRUCTION

281Abt06.DGN

DESIGNED: ARC	FED. RD DIV. No.	STATE	FEDERAL AID PROJECT No.	HIGHWAY No.
CHECKED: ALA	6	TEXAS	NH 2003 ( )	US 281

DRAWN: OJH	STATE DISTRICT	COUNTY	CONTROL No.	SECTION No.	JOB No.	SHEET No.
CHECKED: ARC	PHARR	HIDALGO	0255	08	091	1034

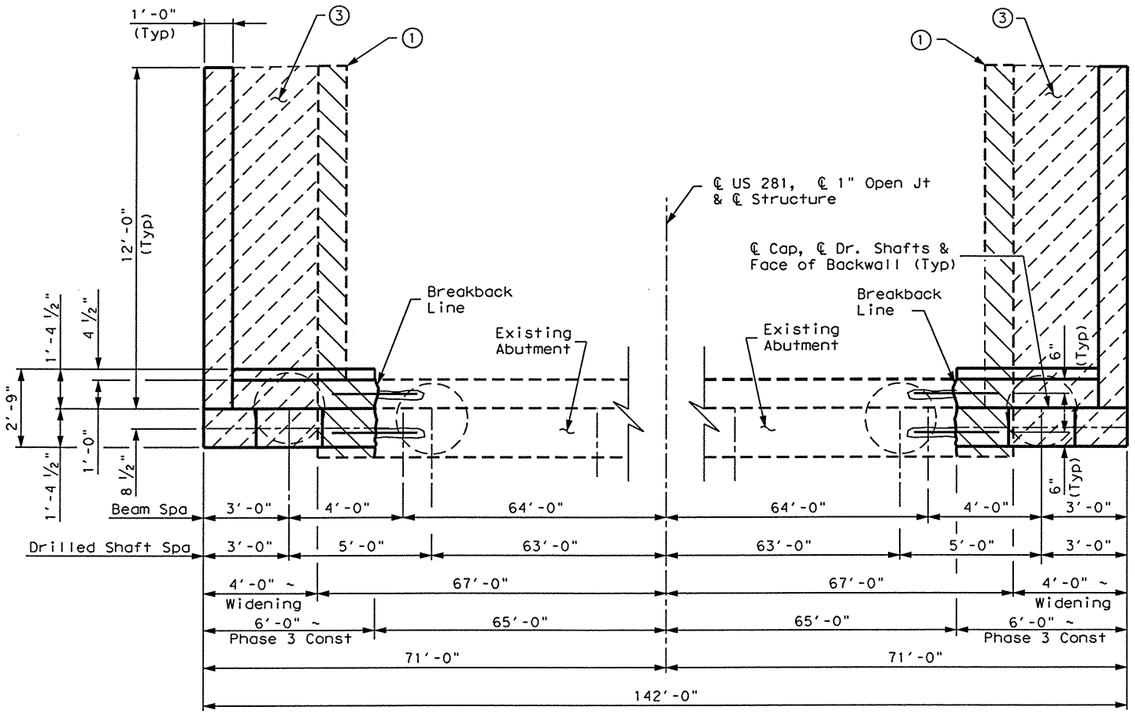

PLAN

Showing Abutment No. 1 (Abutment No. 4 ~ Opposite Hand)

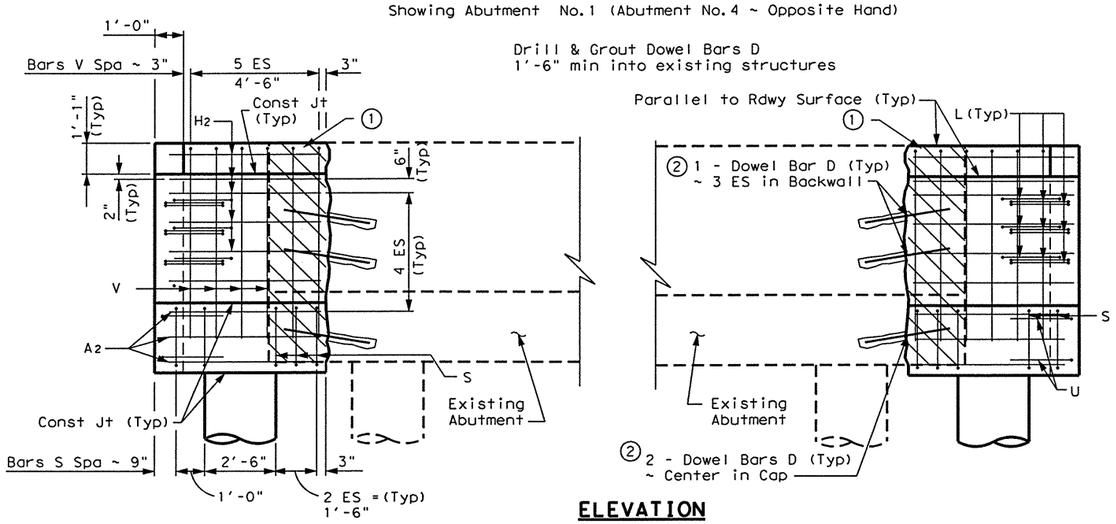

ELEVATION

Showing Abutment No. 1 (Abutment No. 4 ~ Opposite Hand)

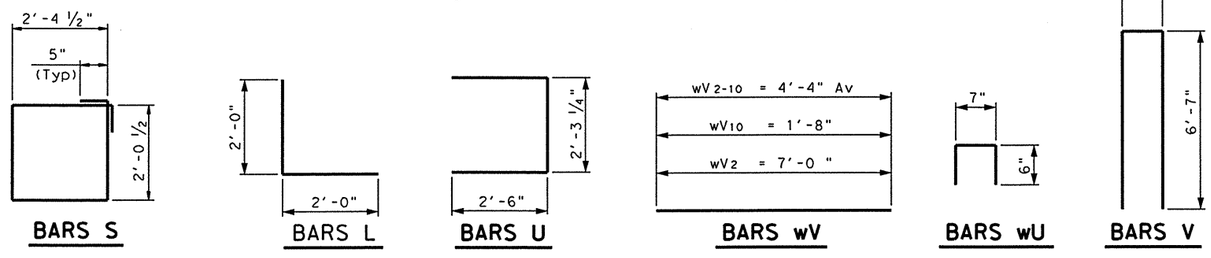

BARS S | BARS L | BARS U | BARS wV | BARS wU | BARS V

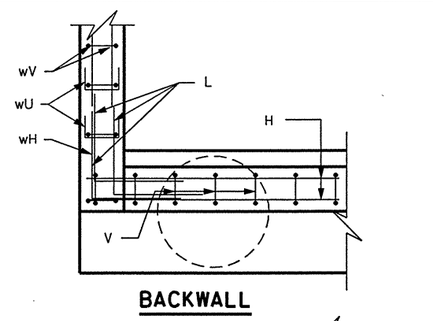

BACKWALL

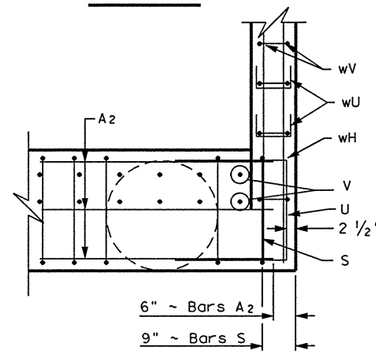

CAP

CORNER DETAILS

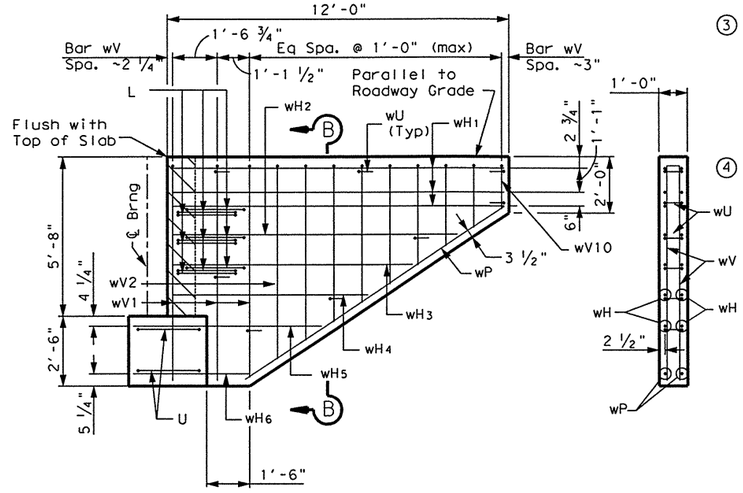

WINGWALL ELEVATION

SECTION B-B

④ TABLE OF CONSTANT QUANTITIES

PHASE 2					PHASE 3				
Bar	No.	Size	Length	Weight	Bar	No.	Size	Length	Weight
A1	6	#11	55'- 8"	1775	A2	12	#11	5'- 4"	340
D	8	# 9	3'- 0"	82	D	8	# 9	3'- 0"	82
H1	12	# 5	55'- 8"	697	H2	24	# 5	5'- 8"	142
S	52	# 4	9'- 8"	336	L	18	# 6	4'- 0"	108
V	57	# 5	13'-10"	822	S	10	# 4	9'- 8"	65
					U	4	# 6	7'- 3"	44
					V	12	# 5	13'-10"	173
					wH1	12	# 6	11'- 8"	210
					wH2	4	# 6	9'-11"	60
					wH3	4	# 6	8'- 4"	50
					wH4	4	# 6	6'- 9"	41
					wH5	4	# 6	6'- 7"	40
					wH6	4	# 6	4'- 1"	25
					wP	4	# 6	11'- 0"	66
					wU	16	# 5	1'- 7"	26
					wV1	12	# 5	7'- 9"	97
					wV2-10	36	# 5	4'- 4" Av	163
Reinforcing Steel			Lb	3712	Reinforcing Steel			Lb	1732
Class "C" Concrete (For Ext Struc)			CY	26.2	Class "C" Concrete (For Ext Struc)			CY	10.4

(1) Breakback hatched Portion of Existing Cap & Wingwall. Clean & extend existing Longitudinal reinforcement 1'-6" into new construction. Cut off remaining reinforcement at face of Concrete & Coat with Epoxy Grout.

(2) Drill & Grout Dowl Bar D ~ 1'-6" min into existing structure in accordance with the Standard Specification Item 420. Dowels shall be sloped at 12:1.

(3) Breakback hatched portion of Existing riprap. Clean existing reinforcement and cut off any reinforcement which conflicts with cap placement. Place drilled shafts and patch riprap as required by the Engineer. Removal and patching of riprap shall be considered subsidiary to bid item Class "C" Concrete (for Ext Struc).

(4) Quantities shown are for one Abut only.

GENERAL NOTES:

Designed according to AASTHO 1996 Standard and current Interim Specifications.
Calculated Foundation Load ~ 100 T/D.S.
See Foundation Detail Standard sheet, FD(MOD) for all Foundation details and notes.
See ARMOR JOINT (SPL) working drawing for additional details.
Class "C" Concrete strength f'c = 3600 psi.
All reinforcing steel shall be Grade 60.

HS20 LOADING (EXISTING)
HS25 LOADING (WIDENING) SHEET 2 OF 2

Parsons Brinckerhoff Quade & Douglas Inc.

Texas Department of Transportation

© 2003 by TxDOT

ABUTMENT NOS. 1 & 4

NOLANA LOOP OVERPASS WIDENING

PHASE 3 CONSTRUCTION

STATE OF TEXAS — ALLEN R. CROZIER — 81450 — REGISTERED PROFESSIONAL ENGINEER

Allen R. Crozier 6/25/03

281Abt07.DGN

DESIGNED: ARC	FED. RD DIV. No.	STATE	FEDERAL AID PROJECT No.		HIGHWAY No.	
CHECKED: ALA	6	TEXAS	NH 2003 ( )		US 281	
DRAWN: OJH	STATE DISTRICT	COUNTY	CONTROL No.	SECTION No.	JOB No.	SHEET No.
CHECKED: ARC	PHARR	HIDALGO	0255	08	091	1035

ESMERALDA G. EGGER
11:44:42 AM
06/25/2003
I:\projects\223226\CADD\Sheets\Structures\Bridge\281Abt07.dgn

ESMERALDA G. EGGER
11:45:23 AM
06/25/2003
I:\projects\22322g\CADD\Sheets\Structures\Bridge\281Bnt06.dgn

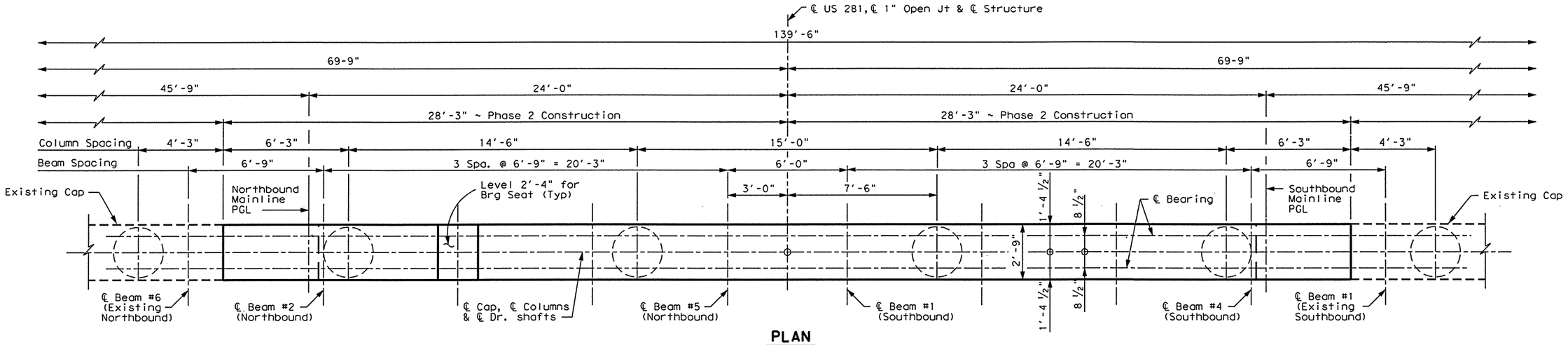

PLAN

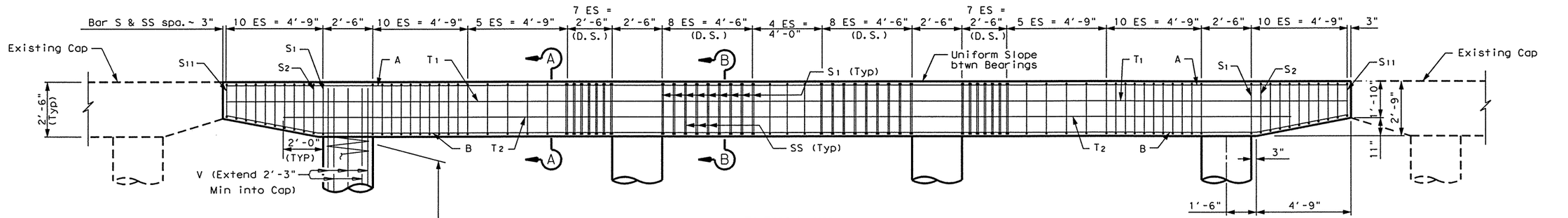

ELEVATION

D. S. = (Double stirrups)

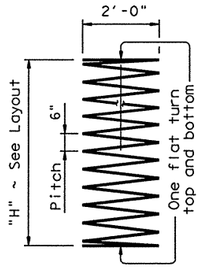

BARS Z

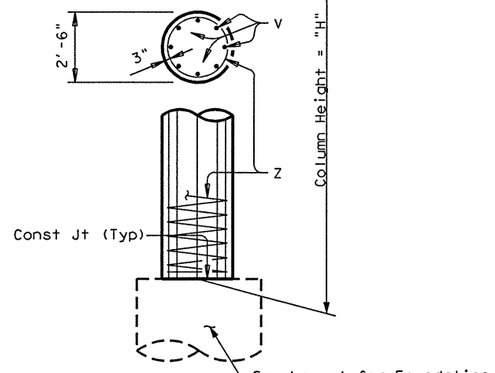

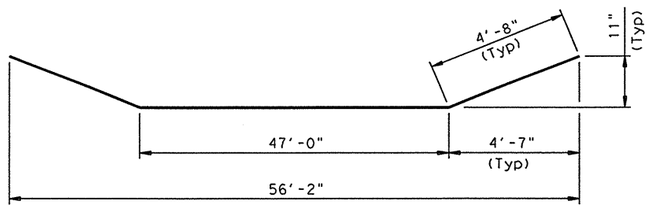

BARS B

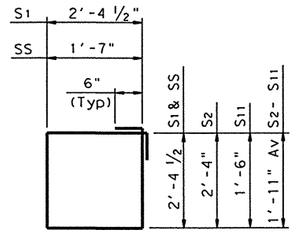

BARS S & SS

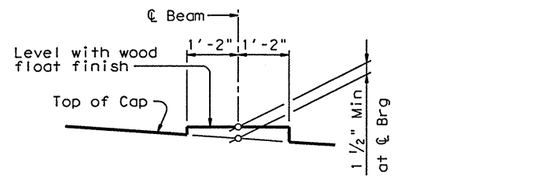

BEARING SEAT DETAIL

(Bearing surface shall be clean and free of all loose material before placing bearing pad.)

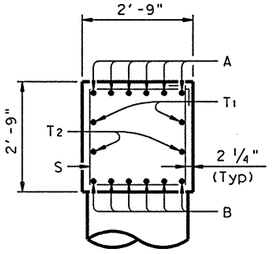

SECTION A-A

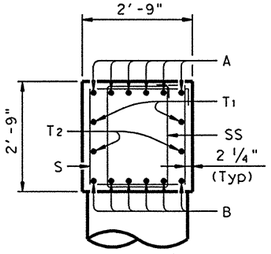

SECTION B-B

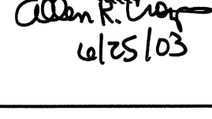

HS20 LOADING (EXISTING)
HS25 LOADING (WIDENING) SHEET 1 OF 2

Parsons Brinckerhoff Quade & Douglas Inc.

Texas Department of Transportation

© 2003 by TxDOT

INTERIOR BENT NOS. 2 & 3

NOLANA LOOP OVERPASS WIDENING

PHASE 2 CONSTRUCTION

281Bnt06.DGN

DESIGNED: ARC	FED. RD DIV. No.	STATE	FEDERAL AID PROJECT No.			HIGHWAY No.	
CHECKED: ALA	6	TEXAS	NH 2003 ( )			US 281	
DRAWN: JMR	STATE DISTRICT	COUNTY	CONTROL No.	SECTION No.	JOB No.	SHEET No.	
CHECKED: ARC	PHARR	HIDALGO	0255	08	091	1036	

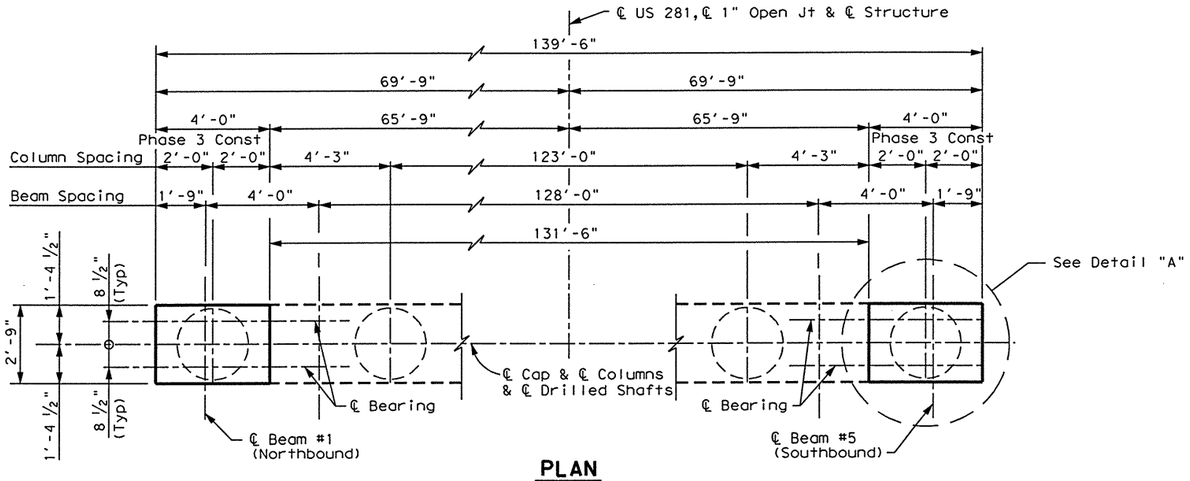

PLAN

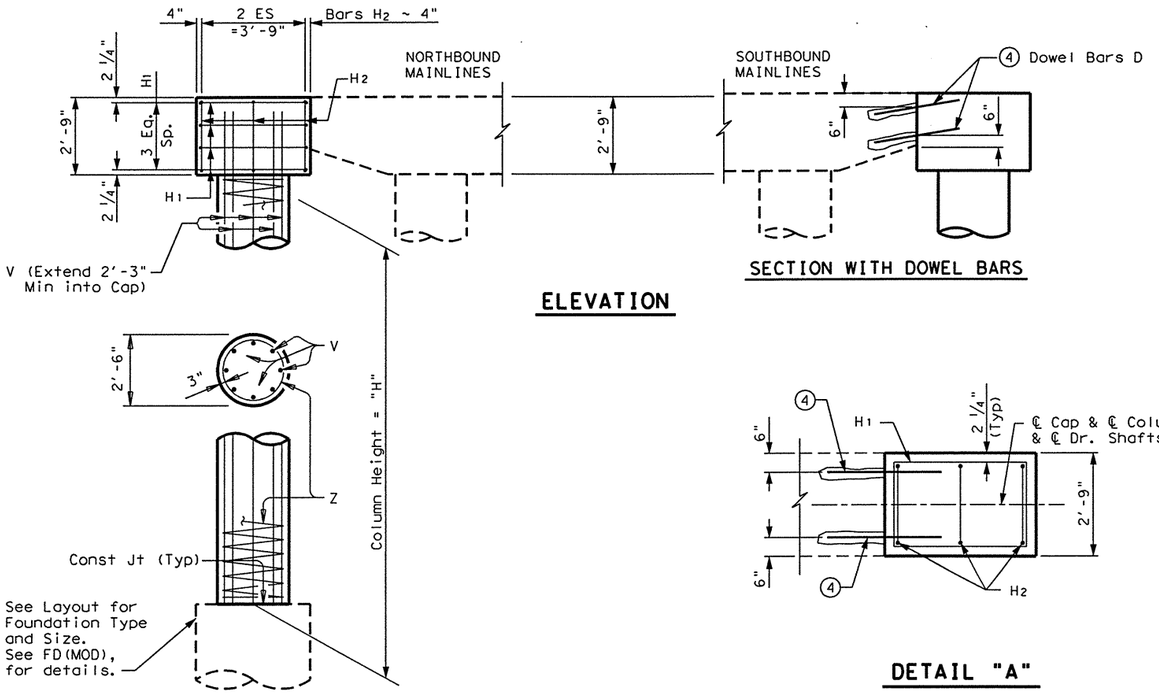

ELEVATION

SECTION WITH DOWEL BARS

DETAIL "A"

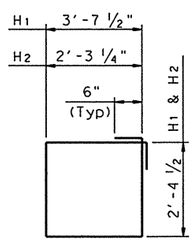

BARS H1 & H2

① TABLE OF CONSTANT QUANTITIES

PHASE 2					PHASE 3				
Bar	No.	Size	Length	Weight	Bar	No.	Size	Length	Weight
A	6	#11	56'- 2"	1791	D	8	# 9	3'- 0"	82
B	6	#11	56'- 4"	1796	H1	8	# 5	13'- 0"	109
S1	69	# 5	10'- 6"	756	H2	6	# 5	10'- 4"	65
S2-11	20	# 5	9'- 7" Av	200					
SS	34	# 5	8'-11"	316					
T1	2	# 5	56'- 2"	117					
T2	2	# 5	51'- 0"	106					
Reinforcing Steel			Lb	5082	Reinforcing Steel			Lb	256
Class "C" Concrete (For Ext Struc)			CY	15.6	Class "C" Concrete (For Ext Struc)			CY	2.3

② TABLE OF VARIABLE QUANTITIES

(Quantities Shown For One Column Only)

"H"	Class "C" Conc (Cols)	Bars Z 1 ~ #3 Spiral		Bars V 8 ~ # 9	
		Length	Weight	Length	Weight
Ft	CY				
16	2.9	213'	80	18'- 3"	496

③ TOTAL ESTIMATED QUANTITIES

PHASE 2		PHASE 3	
Reinf Steel	Class "C" Conc (Ext Struc)	Reinf Steel	Class "C" Conc (Ext Struc)
Lb	CY	Lb	CY
7386	27.2	1408	8.1

(1) Quantities shown are for one Bent only.

(2) Adjust Bars V length by 1 ft and Bars Z length by 12.6061 Ft. for each linear foot of variation in "H" value.

(3) Adjust Reinforcing Steel stage total by 32 Lb. and Class "C" Concrete total by .1818 CY for each linear foot of variation in "H" value for each column.

(4) Drill & Grout Dowel Bars D 1'-6" min into existing structure in accordance with TxDOT Standard Specification Item 420. Dowels shall be sloped at 12:1.

GENERAL NOTES:

Designed according to AASTHO 1996 Standard and current Interim Specifications.
Calculated Foundation Load ~ 205 T/D.S.
See Foundation Detail Standard sheet, FD(MOD), for all Foundation details and notes.
Class "C" Concrete strength f'c = 3600 psi.
All reinforcing steel shall be Grade 60.

HS20 LOADING (EXISTING)
HS25 LOADING (WIDENING) Sheet 2 of 2

STATE OF TEXAS
ALLEN R. CROZIER
81450
REGISTERED PROFESSIONAL ENGINEER

Allen R. Crozier
6/25/03

Parsons Brinckerhoff Quade & Douglas Inc.

Texas Department of Transportation

© 2003 by TxDOT

INTERIOR BENT NOS. 2 & 3

NOLANA LOOP OVERPASS WIDENING

PHASE 3 CONSTRUCTION

281Bnt07.DGN

DESIGNED: ARC	FED. RD DIV. NO.	STATE	FEDERAL AID PROJECT NO.		HIGHWAY NO.	
CHECKED: ALA	6	TEXAS	NH 2003 ( )		US 281	
DRAWN: JMR	STATE DISTRICT	COUNTY	CONTROL NO.	SECTION NO.	JOB NO.	SHEET NO.
CHECKED: ARC	PHARR	HIDALGO	0255	08	091	1037

ESMERALDA G. EGGER
11:47:34 AM
06/25/2003
I:\projects\22322a\CADD\Sheets\Structures\Bridge\281Bnt07.dgn

ESMERALDA G. EGGER
11:48:22 AM
06/25/2003
I:\projects\22322a\CADD\Sheets\Structures\Bridge\281Spn06.dgn

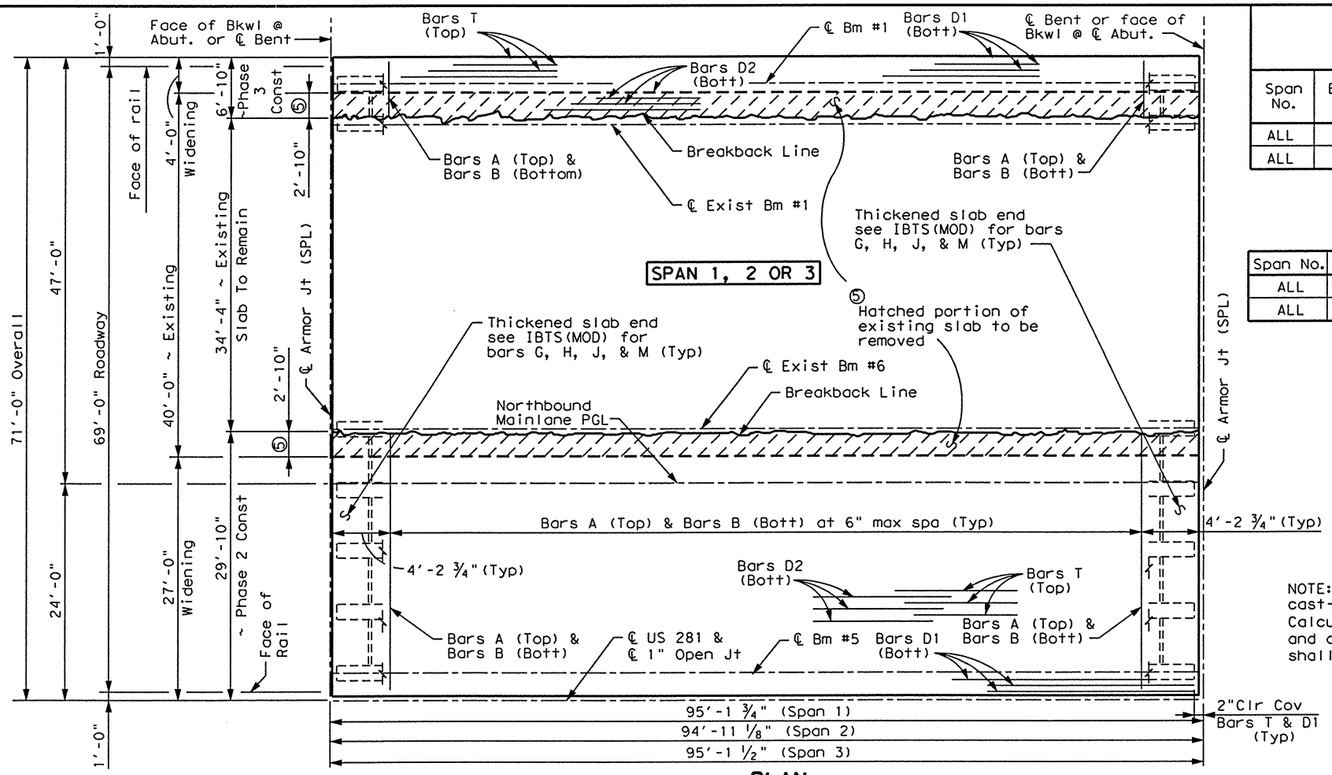

PLAN

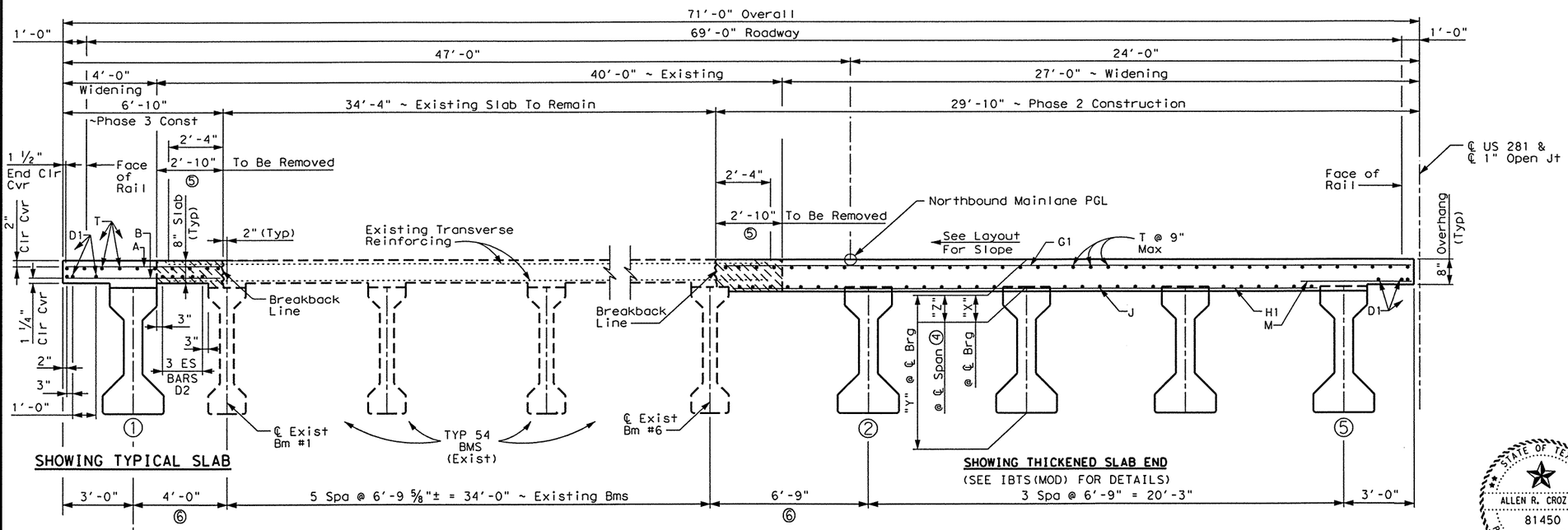

SHOWING TYPICAL SLAB

SHOWING THICKENED SLAB END
(SEE IBTS(MOD) FOR DETAILS)

TYPICAL TRANSVERSE SECTION

At contractor's option, alternating bars B may end at ℄ of outside Bm (Typ)

⑤ Remove cross hatched portion of existing slab to breakback line. clean, straighten and extend existing reinforcing 2'-4" into new construction.

⑥ Prestressed concrete panels shall not be permitted in this bay.

TABLE OF SECTION DEPTHS

Span No.	Beam No.	"X" at ℄ Brg	"Y" at ℄ Brg	"Z" at ℄ Span ④
ALL	1	10"	5'-4"	8 7/8"
ALL	2-5	10"	5'-4"	9 1/8"

④ Theoretical Dimension

Span No.	Beam Center No.	"A"	"B"
ALL	1	0.039′	0.055′
ALL	2-5	0.053′	0.075′

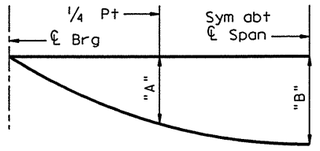

DEAD LOAD DEFLECTION DIAGRAM

NOTE: Deflections shown are due to cast-in-place concrete only. (E_c= 5 X 10^6 psi) Calculated deflections shown are theoretical and actual dimensions may be less. Deflections shall be adjusted based on field observations.

TABLE OF ESTIMATED QUANTITIES

PHASE 2 CONSTRUCTION

Span	REINF CONC SLAB (EXT STR)	PRESTRESSED CONC BEAM (TYPE IV) ②	CLASS "S" CONCRETE (EXT STR)	STRUC STL ARMOR JT (SPL)	REINFORCING STEEL ①
NO.	SF	LF	CY	LB	LB
1	2,835	379.28	74.1	③ 940	18,428
2	2,828	378.40	73.9	630	18,382
3	2,834	379.16	74.1	③ 940	18,421
Total	8,497	1,136.84	222.1	2,510	55,231

PHASE 3 CONSTRUCTION

Span	REINF CONC SLAB (EXT STR)	PRESTRESSED CONC BEAM (TYPE IV) ②	CLASS "S" CONCRETE (EXT STR)	STRUC STL ARMOR JT (SPL)	REINFORCING STEEL ①
NO.	SF	LF	CY	LB	LB
1	650	94.82	16.8	③ 180	4,225
2	649	94.60	16.8	120	4,220
3	650	94.79	16.8	③ 180	4,225
Total	1,949	284.21	50.4	480	12,670

① Reinforcing steel weight is calculated using an approximate factor of 6.5 lbs per sq ft.

② Quantity shown are bottom beam flange lengths with adustmeents made for beam slope.
Beam Length = 94.82′ ~ Span 1~ Each Beam
94.60′ ~ Span 2~ Each Beam
94.79′ ~ Span 3~ Each Beam

③ Includes 2 plates at Abutment and 1 plate at Interior Bent.

BAR TABLE

Bar	Size
A	# 5
B	# 5
D	# 5
G	# 5
H	# 6
J	# 5
M	# 5
T	# 4

GENERAL NOTES:

Designed according to 1996 AASHTO standard and current interim specifications.
See PCP(C)(MOD) standard for details and quantity adjustments if this option is used.
See IBTS(MOD) standard for thickened slab end details.
See ARMOR JOINT (SPL) working drawing for additional details.
All reinforcing shall be Grade 60.
Class "S" Concrete strength f'c= 4000 psi
Bar laps, where required, shall be as follows:
~ #4 = 1′-5"
~ #5 = 1′-9"

HS20 LOADING (EXISTING)
HS25 LOADING (WIDENING)

Parsons Brinckerhoff Quade & Douglas Inc.

Texas Department of Transportation

© 2003 by TxDOT

95′-0" NOMINAL PRESTR CONCRETE BEAM SPAN

NOLANA LOOP OVERPASS WIDENING

NORTHBOUND MAINLANES

STATE OF TEXAS
ALLEN R. CROZIER
81450
REGISTERED PROFESSIONAL ENGINEER

Allen R. Crozier 6/25/03

281Spn06.DGN

DESIGNED: ARC	FED. RD DIV. No.	STATE	FEDERAL AID PROJECT No.	HIGHWAY No.
CHECKED: ALA	6	TEXAS	NH 2003 ( )	US 281

DRAWN: QJH	STATE DISTRICT	COUNTY	CONTROL No.	SECTION No.	JOB No.	SHEET No.
CHECKED: ARC	PHARR	HIDALGO	0255	08	091	1038

ESMERALDA G. EGGER
11:48:56 AM
06/25/2003
I:\projects\22322o\CADD\Sheets\Structures\Bridge\281Spn07.dgn

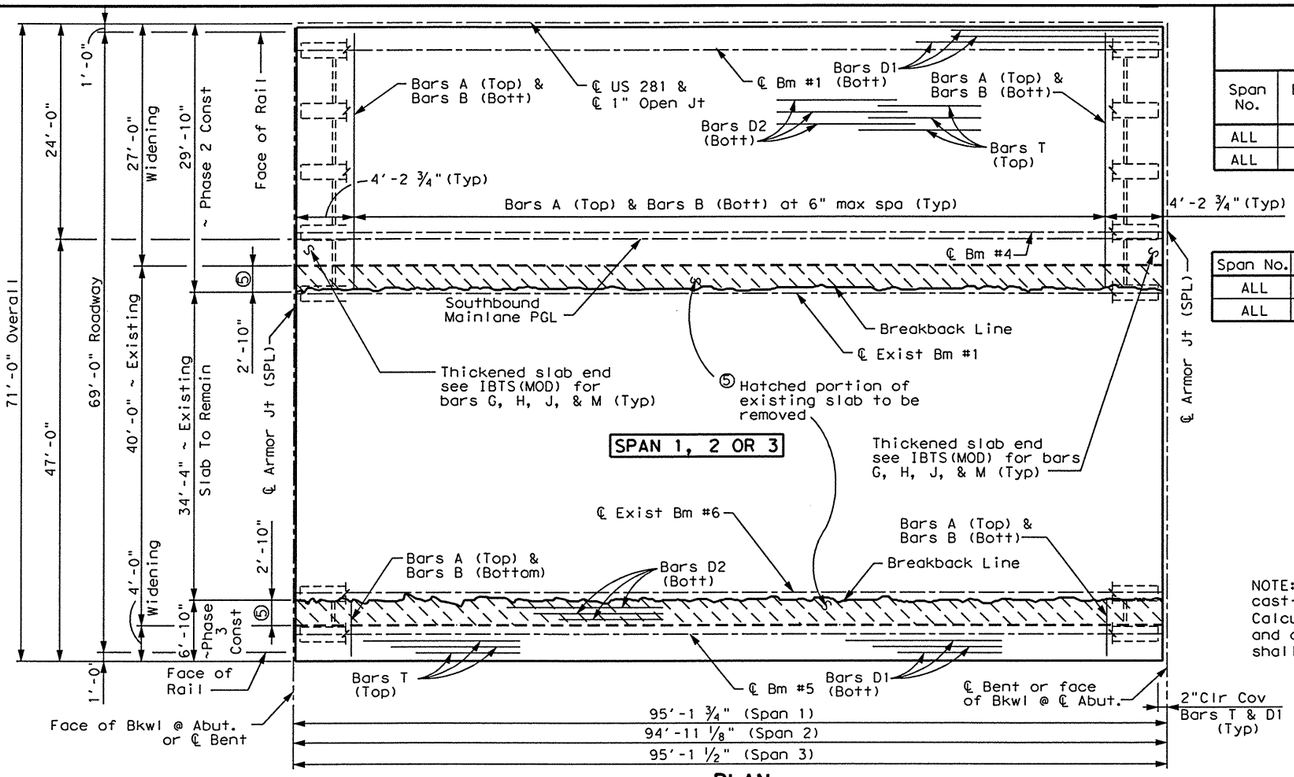

PLAN

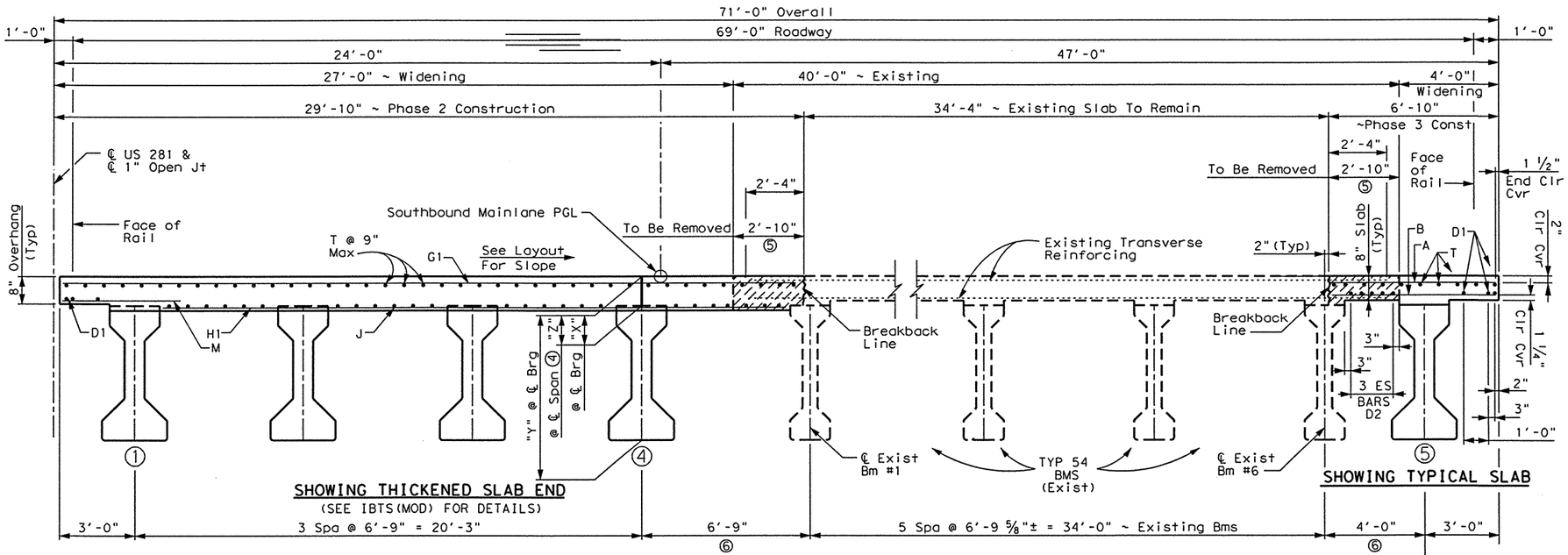

TYPICAL TRANSVERSE SECTION

⑤ Remove cross hatched portion of existing slab to breakback line. clean, straighten and extend existing reinforcing 2'-4" into new construction.

⑥ Prestressed concrete panels shall not be permitted in this bay.

TABLE OF SECTION DEPTHS

Span No.	Beam No.	"X" at ℄ Brg	"Y" at ℄ Brg	"Z" at ℄ Span ④
ALL	1-4	10"	5'-4"	9 1/8"
ALL	5	10"	5'-4"	8 7/8"

④ Theoretical Dimension

Span No.	Beam Center No.	"A"	"B"
ALL	1-4	0.053'	0.075'
ALL	5	0.039'	0.055'

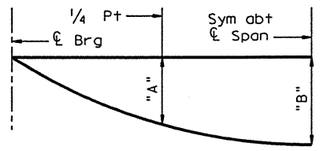

DEAD LOAD DEFLECTION DIAGRAM

NOTE: Deflections shown are due to cast-in-place concrete only. (E_C= 5 X 10^6 psi) Calculated deflections shown are theoretical and actual dimensions may be less. Deflections shall be adjusted based on field observations.

TABLE OF ESTIMATED QUANTITIES

PHASE 2 CONSTRUCTION

Span	REINF CONC SLAB (EXT STR)	PRESTRESSED CONC BEAM (TYPE IV) ②	CLASS "S" CONCRETE (EXT STR)	STRUC STL ARMOR JT (SPL)	REINFORCING STEEL ①
NO.	SF	LF	CY	LB	LB
1	2,835	379.28	74.1	③ 940	18,428
2	2,828	378.40	73.9	630	18,382
3	2,834	379.16	74.1	③ 940	18,421
Total	8,497	1,136.84	222.1	2,510	55,231

PHASE 3 CONSTRUCTION

Span	REINF CONC SLAB (EXT STR)	PRESTRESSED CONC BEAM (TYPE IV) ②	CLASS "S" CONCRETE (EXT STR)	STRUC STL ARMOR JT (SPL)	REINFORCING STEEL ①
NO.	SF	LF	CY	LB	LB
1	650	94.82	16.8	③ 180	4,225
2	649	94.60	16.8	120	4,220
3	650	94.79	16.8	③ 180	4,225
Total	1,949	284.21	50.4	480	12,670

① Reinforcing steel weight is calculated using an approximate factor of 6.5 lbs per sq ft.

② Quantity shown are bottom beam flange lengths with adustmeents made for beam slope.
Beam Length = 94.82' ~ Span 1~ Each Beam
94.60' ~ Span 2~ Each Beam
94.79' ~ Span 3~ Each Beam

③ Includes 2 plates at Abutment and 1 plate at Interior Bent.

BAR TABLE

Bar	Size
A	# 5
B	# 5
D	# 5
G	# 5
H	# 6
J	# 5
M	# 5
T	# 4

GENERAL NOTES:

Designed according to 1996 AASHTO standard and current interim specifications.
See PCP(C)(MOD) standard for details and quantity adjustments if this option is used.
See IBTS(MOD) standard for thickened slab end details.
See ARMOR JOINT (SPL) working drawing for additional details.
All reinforcing shall be Grade 60.
Class "S" Concrete strength f'c= 4000 psi
Bar laps, where required, shall be as follows:
~ #4 = 1'-5"
~ #5 = 1'-9"

HS20 LOADING (EXISTING)
HS25 LOADING (WIDENING)

Parsons Brinckerhoff Quade & Douglas Inc.

Texas Department of Transportation

© 2003 by TxDOT

95'-0" NOMINAL PRESTR CONCRETE BEAM SPAN

NOLANA LOOP OVERPASS WIDENING

SOUTHBOUND MAINLANES

STATE OF TEXAS
ALLEN R. CROZIER
81450
REGISTERED PROFESSIONAL ENGINEER

Allen R. Crozier 6/25/03

281Spn07.DGN

DESIGNED: ARC	FED. RD DIV. No.	STATE	FEDERAL AID PROJECT No.		HIGHWAY No.
CHECKED: ALA	6	TEXAS	NH 2003 ( )		US 281
DRAWN: OJH	STATE DISTRICT	COUNTY	CONTROL No.	SECTION No.	JOB No.	SHEET No.
CHECKED: ARC	PHARR	HIDALGO	0255	08	091	1039

ALLEN CROZIER
03:55:42 PM
06/25/2003

LIMIT OF EXIST RIPRAP CHANNEL
20'-0" CHANNEL
Test Hole No. P-1-E
Sta 808+55, 185' Lt
LIMIT OF EXIST RIPRAP CHANNEL
OH CPL
℄ PHARR/McALLEN DRAIN DITCH
B SWB
PROP MBGF TRANS & TYPE II CURB
NOMINAL FACE OF SSTR(R) RAIL (2)
PROP 100' MBGF & 1-SGT(8)-01
℄ EXIST NORTHBOUND FRONTAGE RD
4° 7' 13" (TYP)
℄ TYPE "A" JOINT
2.0% NOMINAL
42'-0" OVERALL
40'-0" ROADWAY
27'-0"
36'-0" ~ EXISTING TO REMAIN
34'-0" ~ EXISTING
1'-0"
11'-0"
16'-0"
END BRIDGE
℄ ABUT #4
NOMINAL STA 50808+69.23
ELEV = 105.75'
PROP ℄ NORTHBOUND FRONTAGE RD & PGL
℄ TYPE "A" JOINT
S 6° 18' 28" W
EXIST 150' MBGF TO BE REMOVED
50808+00
50809+00
NOMINAL FACE OF SSTR RAIL (2)
BREAKBACK LINE
EXIST RIPRAP TO BE REMOVED (1)
EXIST RIPRAP TO BE REMOVED (1)
PROP MBGF TRANS & TYPE II CURB
PROP 25' MBGF & 1-TAS
PROP 50' MBGF & 1-SGT(8)-01
BEGIN BRIDGE
℄ ABUT #1
NOMINAL STA 50808+09.18
ELEV = 105.70'
℄ BENT #3
NOMINAL STA
50808+51.00
PROP MBGF TRANS & TYPE II CURB
EXIST MBGF TO BE REMOVED
PROP 50' MBGF & 1-SGT(8)-01
1'-0"
6'-0" WIDENING
8'-0" PHASE 1A CONST
EXIST RIPRAP TO REMAIN
℄ BENT #2
NOMINAL STA
50808+27.07
N 81° 30' 16" W
24"

THE CONTRACTOR SHALL VERIFY ALL DIMENSIONS AND ELEVATIONS IN THE FIELD PRIOR TO ORDERING MATERIALS OR BEGINNING CONSTRUCTION.

PLAN

ALL ABUTMENTS/BENTS ARE ON A BEARING OF N 87° 48' 45" W. ALL ABUTMENT/BENT CENTERLINES SHALL BE CONSTRUCTED TO MATCH BEARING OF EXISTING SUBSTRUCTURE CENTERLINES.

36" IL HC2

2' CURB OFFSET
12' LANE
12' LANE
12' LANE
2' CURB OFFSET

BM US 281-6
STA 806+94.49
OFFSET = 183.50' LT
ELEV = 105.29
DESC = 3 1/4" TxDOT ALUM DISK

① REMOVAL OF CONCRETE RIPRAP SHALL BE SUBSIDIARY TO ITEM 100 "PREP ROW"
② SSTR RAIL SHALL BE SLOTTED AS PER SHEET "SINGLE SLOPE TRAFFIC RAILING"

STATE OF TEXAS
ALLEN R. CROZIER
81450
REGISTERED PROFESSIONAL ENGINEER
Allen R. Crozier
6/25/03

BEGIN BRIDGE RAIL FOR PAYMENT
OVERALL LENGTH OF SSTR (RT SIDE) & SSTR(R) (LT SIDE) RAIL = 72'-0"
OVERALL LENGTH OF BRIDGE = 60'-0 1/2"
60'-0 1/2" FLAT SLAB UNIT
(17'- 10 1/2" + 23'- 11" + 18'- 3")
END BRIDGE RAIL FOR PAYMENT
BEGIN BRIDGE
℄ ABUT #1
NOMINAL STA 50808 + 09.18
ELEV = 105.70
END BRIDGE
℄ ABUT #4
NOMINAL STA 50808 + 69.23
ELEV = 105.75
PROP 25' MBGF (RIGHT SIDE) & 1-TAS
PROP MBGF TRANS & TYPE II CURB
STA = 50808+05.00
ELEV = 105.70
TYPE SSTR(R) RAIL OR TYPE SSTR RAIL (2)
STA = 50808+75.00
ELEV = 105.75
PROP MBGF TRANS & TYPE II CURB
PROP 100' MBGF (LEFT SIDE) & 1-SGT(8)-01 OR PROP 50' MBGF (RIGHT SIDE) & 1-SGT(8)-01
PROP NORTHBOUND FRONTAGE RD PROFILE GRADE LINE
EXISTING NATURAL GROUND
Test Hole No. P-1-E
Elev = 106.70'
(+)0.0714 %
1 1/2:1
1 1/2:1
CLAY, silty, dark, soft, moist
CLAY, brn, stiff, moist
CLAY, silty, stiff, moist
CLAY, red, stiff, moist
SILT, clayeyn, brn, stiff, moist
CLAY, silty, cal. nodule, tan, hard, moist
SILT, clayeyn, brn, very stiff, moist
CLAY, brn, very stiff, moist
SILT, clayey, tn, hard, moist
CLAY, red, very hard, moist
12(6) 11(6)
13(6) 12(6)
11(6) 11(6)
47(6) 53(5.25)
28(6) 47(6)
23(6) 21(6)
50(6) 50(3.5)
30(6) 26(6)
30(6) 29(6)
49(6) 51(5.375)
49(6) 51(6)
50(2.25) 50(.875)
1~16" SQ PILE X 29'
1~16" SQ PILE X 34'
1~16" SQ PILE X 29'
EXISTING RIPRAP CHANNEL
B/H = 40.7

HYDRAULIC DATA
Q = 832 CFS (10YR)
V = 2.38 FPS
S = 0.02%
Q = 1550 CFS (100 YR) (Beaulah Storm)
High Water Mark = 107.20' (100 YR)

ELEVATION

135 125 115 105 95 85 75 65 55 45
50807+50 50808+00 50808+50 50809+00

NOTES:

DESIGNED IN ACCORDANCE WITH 1996 AASHTO STANDARD SPECIFICATIONS AND ALL CURRENT INTERIMS.

ELEVATIONS BASED ON THE CURRENT NAVD 88 DATUM. EXISTING STRUCTURE WAS SURVEYED UNDER THE USGS&GS DATUM SYSTEM.

BRIDGE STATIONS BASED ON SURVEY OF EXISTING STRUCTURE.

NEW SLAB SHALL MATCH EXISTING SLAB PROFILE AT CONSTRUCTION JOINTS WITH ADJUSTMENTS FOR A 2% NOMINAL CROSS-SLOPE.

BORE HOLE AND HYDRAULIC DATA TAKEN FROM EXISTING PLANS.
CSJ: 0225-08-063

FUNC CLASS	: URBAN PRINCIPAL ARTERIAL
DESIGN SPEED	: 50 MPH
ADT(2002)	: 6,500 VPD
ADT(2022)	: 10,600 VPD
NBI	: 21-109-0-0255-08-073

HS25 LOADING (WIDENING)
HS20 LOADING (EXISTING)

Texas Department of Transportation
© 2003 by TxDOT

BRIDGE LAYOUT
PHARR/McALLEN DRAIN DITCH BRIDGE WIDENING
NORTHBOUND FRONTAGE ROAD

PLAN 1"= 20' HORIZ
PROFILE 1"= 20' VERT

281BL01.DGN

DESIGNED: ARC	FED. RD DIV. No.	STATE	FEDERAL AID PROJECT No.				HIGHWAY No.
CHECKED: ABM	6	TEXAS	NH 2003 ( )				US 281
DRAWN: OJH	STATE DISTRICT	COUNTY	CONTROL No.	SECTION No.	JOB No.	SHEET No.	
CHECKED: ARC	PHARR	HIDALGO	0255	08	091	1040	

t:\22322e\CADD\Sheets\Structures\Bridge\281BL01.dgn

ALLEN CROZIER
03:48:51 PM
08/05/2003
I:\projects\22322a\CADD\Sheets\Structures\Bridge\281brdgSECT.dgn

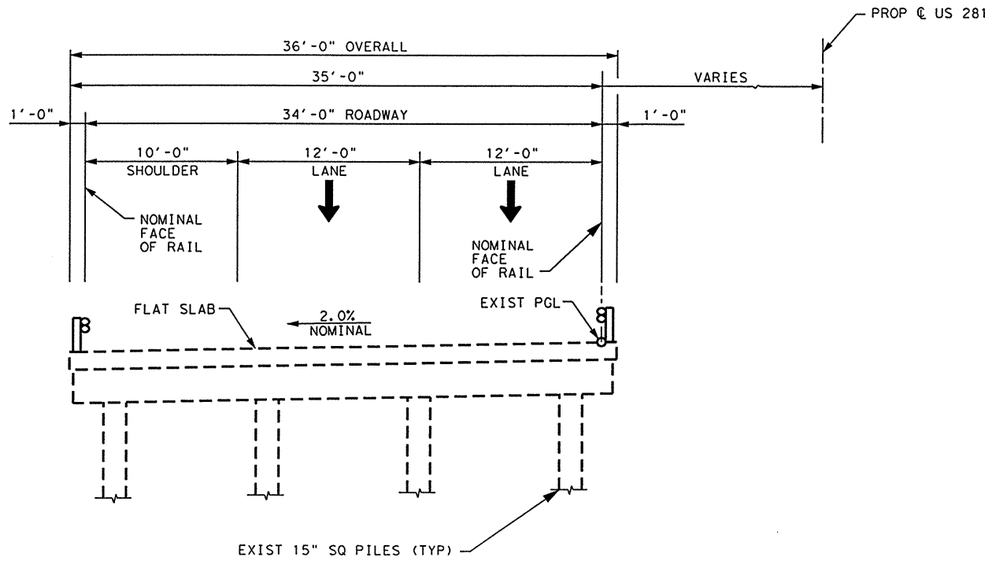

EXISTING STRUCTURE

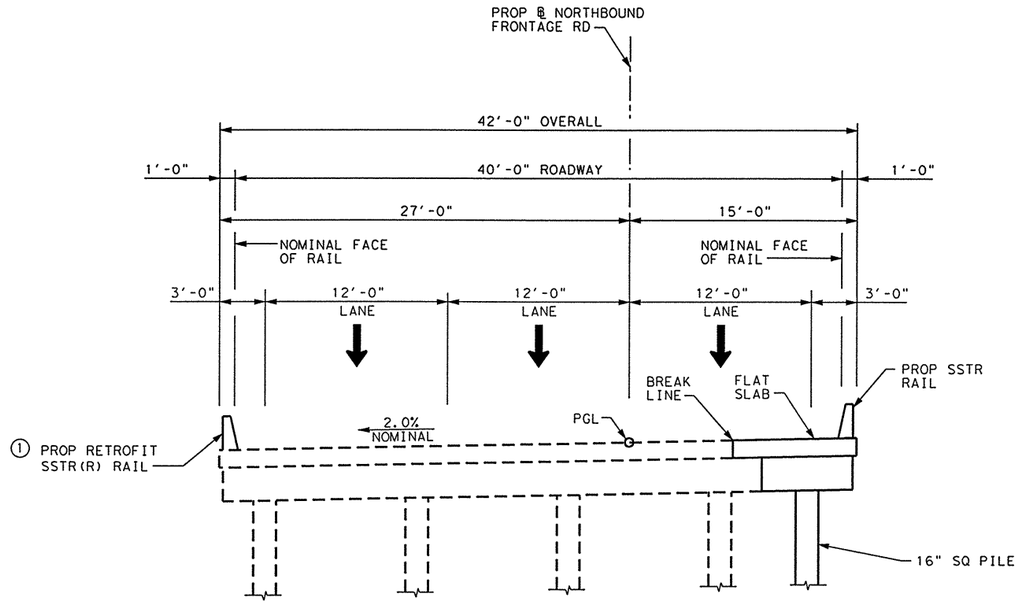

COMPLETE STRUCTURE

① Removal of existing T6 rail shall be considered subsidiary to Bid Item Railing ~ SSTR(R).

NOTE:

REFER TO EXISTING STRUCTURE PLANS
PROJECT NO. F 301(11)
CSJ: 0255-08-063
FOR ADDITIONAL DETAILS

HS 25 LOADING (WIDENING)
HS 20 LOADING (EXISTING)

STATE OF TEXAS
ALLEN R. CROZIER
81450
REGISTERED PROFESSIONAL ENGINEER

Allen R. Crozier
8/5/03

Parsons Brinckerhoff Quade & Douglas Inc.

Texas Department of Transportation

© 2002 by TxDOT

TYPICAL SECTIONS

PHARR/McALLEN DRAIN DITCH BRIDGE WIDENING

NORTHBOUND FRONTAGE ROAD

281BRDGSECT.DGN

DESIGNED: ARC	FED. RD DIV. No.	STATE	FEDERAL AID PROJECT No.			HIGHWAY No.	
CHECKED: ABM	6	TEXAS	NH 2003 ( )			US 281	
DRAWN: OJH	STATE DISTRICT	COUNTY	CONTROL No.	SECTION No.	JOB No.	SHEET No.	
CHECKED: ARC	PHARR	HIDALGO	0255	08	091	1041	

ALLEN CROZIER
03:49:22 PM
08/05/2003
I:\projects\22322G\CADD\Sheets\Structures\Bridge\281brdgSECT.dgn

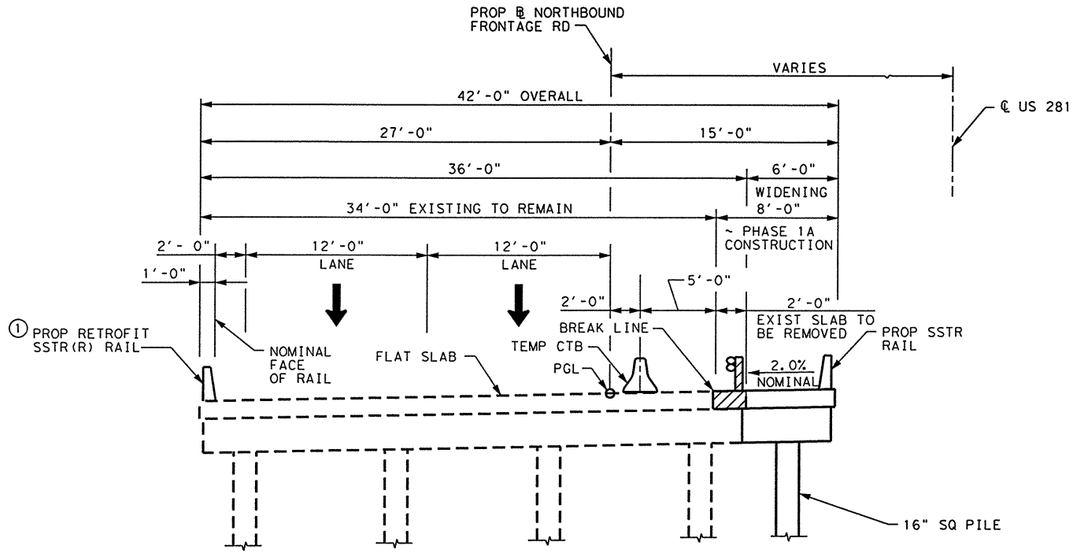

PHASE 1A CONSTRUCTION

① Removal of existing T6 rail shall be considered subsidiary to Bid Item Railing ~ SSTR(R).

NOTE:

REFER TO EXISTING STRUCTURE PLANS
PROJECT NO. F 301(11)
CSJ: 0255-08-063
FOR ADDITIONAL DETAILS

HS 25 LOADING (WIDENING)
HS 20 LOADING (EXISTING)

STATE OF TEXAS
ALLEN R. CROZIER
81450
REGISTERED PROFESSIONAL ENGINEER
8/5/03

Parsons Brinckerhoff Quade & Douglas Inc.

Texas Department of Transportation

© 2002 by TxDOT

CONSTRUCTION SEQUENCE

PHARR/McALLEN DRAIN DITCH BRIDGE WIDENING

NORTHBOUND FRONTAGE ROAD

281BRDGSECT.DGN

DESIGNED: ARC	FED. RD DIV. No.	STATE	FEDERAL AID PROJECT No.			HIGHWAY No.	
CHECKED: ABM	6	TEXAS	NH 2003 ( )			US 281	
DRAWN: OJH	STATE DISTRICT	COUNTY	CONTROL No.	SECTION No.	JOB No.	SHEET No.	
CHECKED: ARC	PHARR	HIDALGO	0255	08	091	1042	

SUMMARY OF ESTIMATED QUANTITIES

ITEM NUMBER	409	430		430	428	450									
ITEM / DESCRIPTION	16" SQ PRESTR CONC PILE	CLASS "C" CONCRETE (FOR EXTENDING STRUCTURES)		CLASS "S" CONC FOR EXT STRUC	CONCRETE SURFACE TREATMENT ①	RAILING									
		ABUTMENT	BENT	SLAB		SSTR	SSTR(R)								
	LF	CY	CY	CY	SY	LF	LF								
2~ABUTMENTS	58	4.0				12.0	12.0								
2~INTERIOR BENTS	68		1.8												
1~60.00' NOM CONT FLAT SLAB UNIT				20.8	267	60.0	60.0								
TOTAL	126	4.0	1.8	20.8	267	72.0	72.0								

① CONCRETE SURFACE TREATMENT TO BE PLACED ON EXISTING AND WIDENED SLAB

TOP OF CONCRETE CAP ELEVATIONS

Abut No. 1	Pt. A 104.70'	Pt. B 104.83'
Bent No. 2	Pt. A 104.75'	Pt. B 104.84'
Bent No. 3	Pt. A 104.77'	Pt. B 104.86'
Abut No. 4	Pt. A 104.75'	Pt. B 104.88'

HS 20 LOADING (EXISTING)
HS 25 LOADING (WIDENING)

STATE OF TEXAS
ALLEN R. CROZIER
81450
REGISTERED PROFESSIONAL ENGINEER

Allen R. Crozier
7/2/03

Parsons Brinckerhoff Quade & Douglas Inc.

Texas Department of Transportation

© 2003 by TxDOT

ESTIMATED QUANTITIES AND TOP OF CONCRETE ELEVATIONS PHARR/McALLEN DRAIN DITCH BRIDGE WIDENING NORTHBOUND FRONTAGE ROAD

281EQ01.DGN

DESIGNED: ARC	FED. RD DIV. No.	STATE	FEDERAL AID PROJECT No.			HIGHWAY No.	
CHECKED: ALA	6	TEXAS	NH 2003 ( )			US 281	
DRAWN: KTD	STATE DISTRICT	COUNTY	CONTROL No.	SECTION No.	JOB No.	SHEET No.	
CHECKED: ARC	PHARR	HIDALGO	0255	08	091	1043	

LEE AUSTIN
04:25:55 PM
07/02/2003
I:\projects\22322g\CADD\Sheets\Structures\Bridge\281EQ01.dgn

ESMERALDA G. EGGER
11:49:58 AM
06/25/2003
I:\projects\22322a\CADD\Sheets\Structures\Bridge\281AbtFtg01.dgn

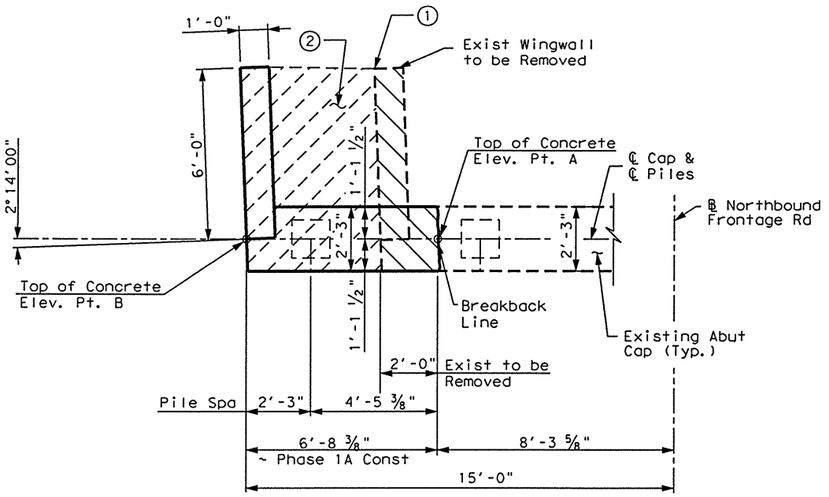

PLAN

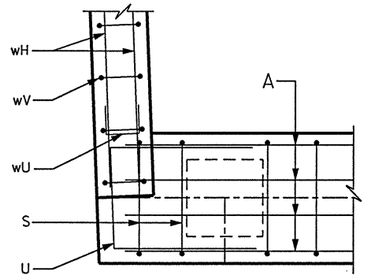

CORNER DETAILS

TABLE OF CONSTANT QUANTITIES

Bar	No.	Size	Length	Weight
A	8	# 9	6'- 1"	165
S	7	# 4	8'- 4"	39
T	2	# 5	6'- 1"	13
U	2	# 6	6'- 9"	20
wH_1	4	# 6	5'- 8"	34
wH_2	4	# 6	6'- 10"	41
wU	4	# 4	1'- 7"	4
wV	14	# 5	3'- 1"	45
Reinforcing Steel			Lb	361
Class "C" Concrete (For Ext Struc)			CY	2.0

TABLE OF CAP ELEVATIONS

PHASE 1A	
A	B
104.70'	104.83'

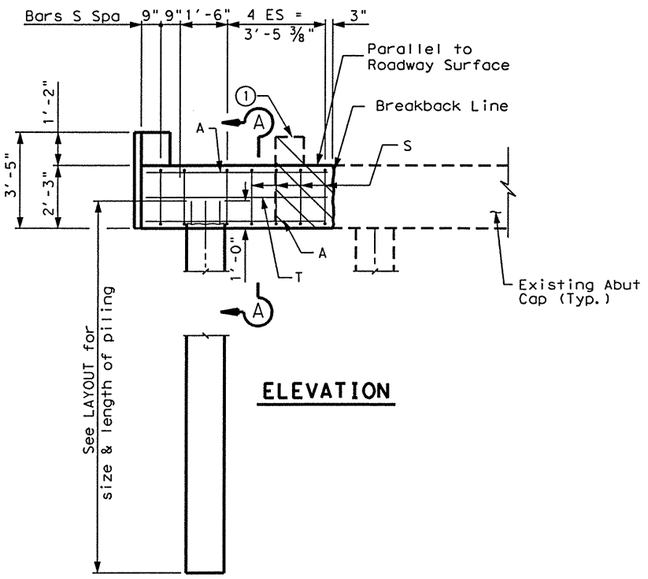

ELEVATION

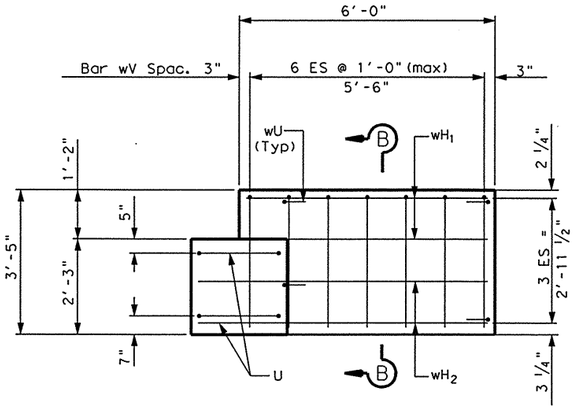

WINGWALL ELEVATION

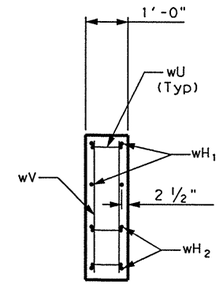

SECTION B-B

1. Breakback hatched Portion of Existing Cap & Wingwall. Clean & extend existing Longitudinal reinforcement 1'-6" into new construction. Cut off remaining reinforcement at face of Concrete & Coat with Epoxy Grout.
2. Breakback hatched portion of Existing riprap. Clean existing reinforcement and cut off any reinforcement which conflicts with cap placement. Drive pile and patch riprap as required by the Enginer. Removal and patching of riprap shall be considered subsidiary to bid item Class "C" Concrete (for Ext Struc).

GENERAL NOTES:

Designed according to AASTHO 1996 Standard and current Interim Specifications.
Calculated Foundation Load ~ 55 T/Pile.
See Foundation Detail Standard sheet, FD(MOD) and CP-S, for all Foundation details and notes.
Class "C" Concrete strength f'c = 3600 psi.
All reinforcing steel shall be Grade 60.

HS20 LOADING (EXISTING)
HS25 LOADING (WIDENING)

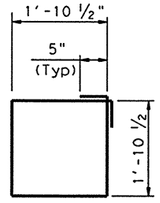

BARS S

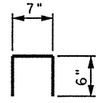

BARS wU

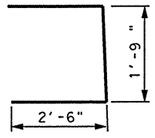

BARS U

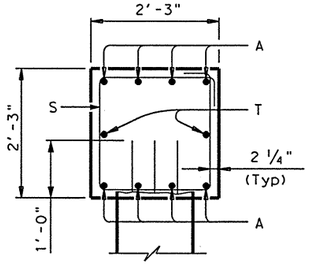

SECTION A-A

STATE OF TEXAS
ALLEN R. CROZIER
81450
REGISTERED PROFESSIONAL ENGINEER
Allen R. Crozier
6/25/03

Parsons Brinckerhoff Quade & Douglas Inc.

Texas Department of Transportation

© 2003 by TxDOT

ABUTMENT NO. 1

PHARR/McALLEN DRAINAGE DITCH BRIDGE WIDENING

NORTHBOUND FRONTAGE ROAD

281AbtFtg01.DGN

DESIGNED: ARC	FED. RD DIV. No.	STATE	FEDERAL AID PROJECT No.		HIGHWAY No.	
CHECKED: ALA	6	TEXAS	NH 2003 ( )		US 281	
DRAWN: JMR	STATE DISTRICT	COUNTY	CONTROL No.	SECTION No.	JOB No.	SHEET No.
CHECKED: ARC	PHARR	HIDALGO	0255	08	091	1044

ESMERALDA G. EGGER
11:50:15 AM
06/25/2003
I:\projects\223220\CADD\Sheets\Structures\Bridge\281AbtFtg04.dgn

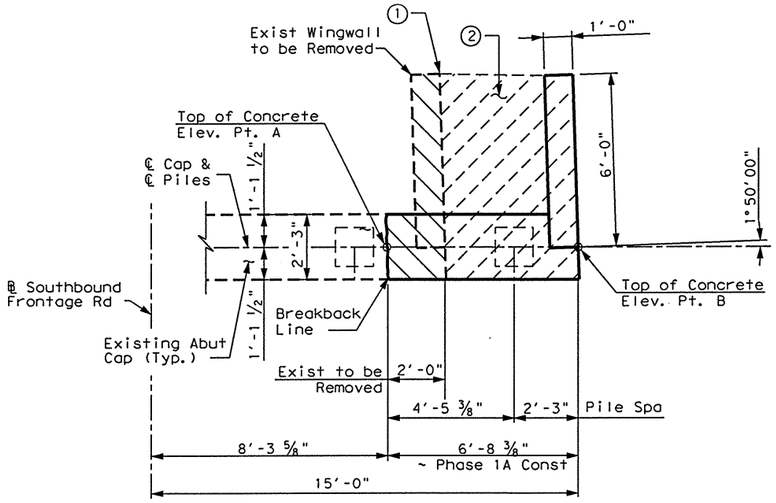

PLAN

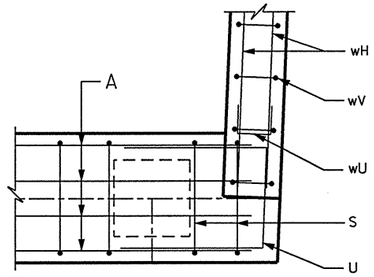

CORNER DETAILS

TABLE OF CONSTANT QUANTITIES

Bar	No.	Size	Length	Weight
A	8	# 9	6'- 1"	165
S	7	# 4	8'- 4"	39
T	2	# 5	6'- 1"	13
U	2	# 6	6'- 9"	20
wH_1	4	# 6	5'- 8"	34
wH_2	4	# 6	6'- 10"	41
wU	4	# 4	1'- 7"	4
wV	14	# 5	3'- 1"	45
Reinforcing Steel			Lb	361
Class "C" Concrete (For Ext Struc)			CY	2.0

TABLE OF CAP ELEVATIONS

PHASE 1A	
A	B
104.75'	104.88'

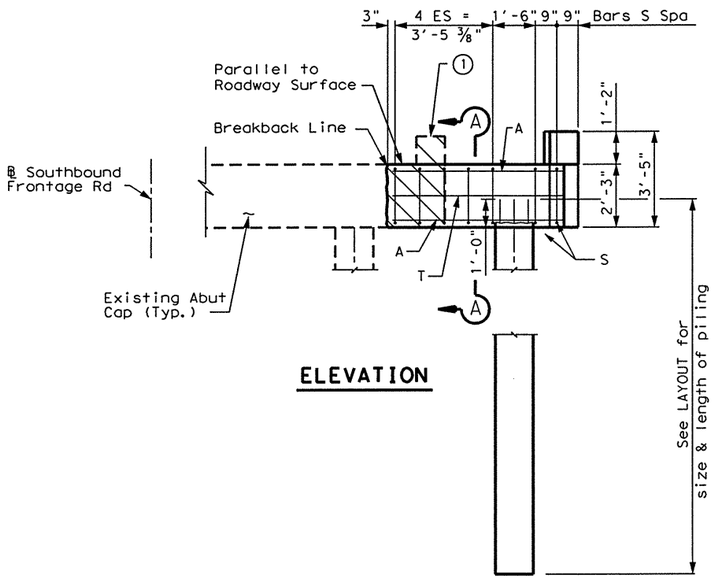

ELEVATION

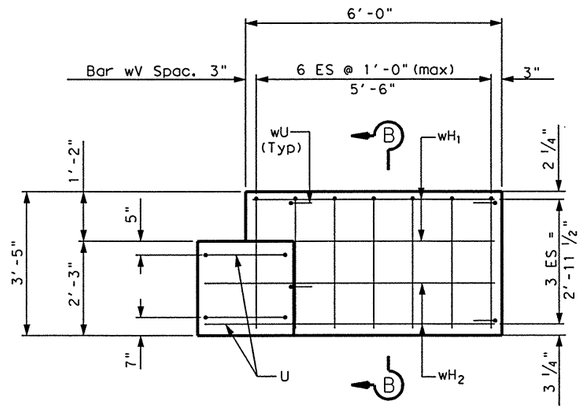

WINGWALL ELEVATION

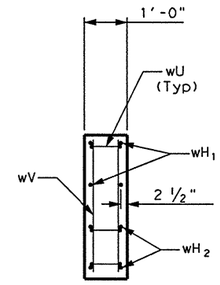

SECTION B-B

1. Breakback hatched Portion of Existing Cap & Wingwall. Clean & extend existing Longitudinal reinforcement 1'-6" into new construction. Cut off remaining reinforcement at face of Concrete & Coat with Epoxy Grout.
2. Breakback hatched portion of Existing riprap. Clean existing reinforcement and cut off any reinforcement which conflicts with cap placement. Drive pile and patch riprap as required by the Engineer. Removal and patching of riprap shall be considered subsidiary to bid item Class "C" Concrete (for Ext Struc).

GENERAL NOTES:

Designed according to AASTHO 1996 Standard and current Interim Specifications.
Calculated Foundation Load ~ 55 T/Pile.
See Foundation Detail Standard sheet, FD(MOD) and CP-S, for all Foundation details and notes.
Class "C" Concrete strength f'c = 3600 psi.
All reinforcing steel shall be Grade 60.

HS20 LOADING (EXISTING)
HS25 LOADING (WIDENING)

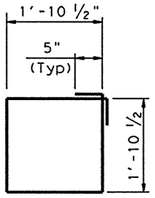

BARS S

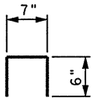

BARS wU

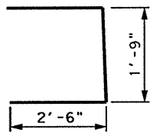

BARS U

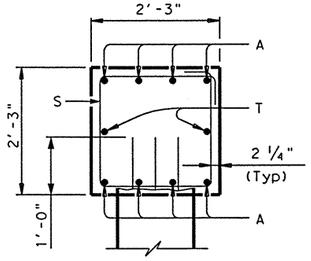

SECTION A-A

STATE OF TEXAS
ALLEN R. CROZIER
81450
REGISTERED PROFESSIONAL ENGINEER
Allen R. Crozier
6/25/03

© 2003 by TxDOT

Parsons Brinckerhoff Quade & Douglas Inc.

Texas Department of Transportation

ABUTMENT NO. 4

PHARR/McALLEN DRAINAGE DITCH BRIDGE WIDENING

NORTHBOUND FRONTAGE ROAD

281AbtFtg04.DGN

DESIGNED: ARC	FED. RD DIV. No.	STATE	FEDERAL AID PROJECT No.		HIGHWAY No.	
CHECKED: ALA	6	TEXAS	NH 2003 ( )		US 281	
DRAWN: JMR	STATE DISTRICT	COUNTY	CONTROL No.	SECTION No.	JOB No.	SHEET No.
CHECKED: ARC	PHARR	HIDALGO	0255	08	091	1045

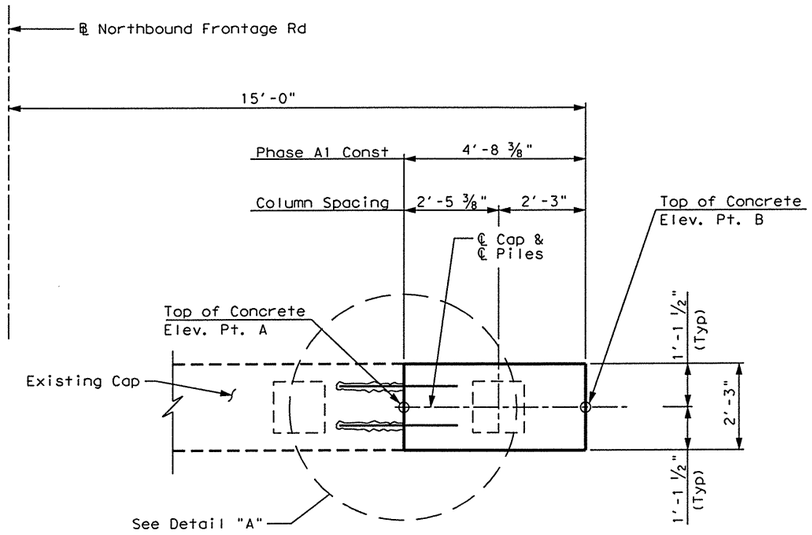

PLAN

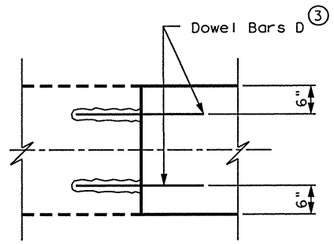

PLAN

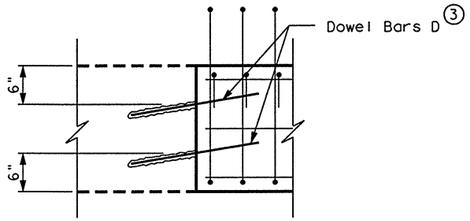

ELEVATION

③ Drill & Grout Dowel Bars D 1'-6" min into existing structure in accordance with the Standard Specification Item 420. Dowels shall be sloped at 12:1.

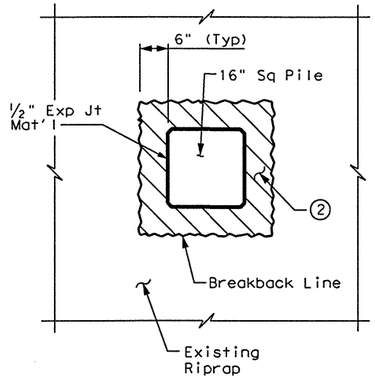

RIPRAP BREAKBACK DETAIL

① TABLE OF CONSTANT QUANTITIES

Bar	No.	Size	Length	Weight
A	8	# 9	4'- 5"	120
C	6	# 4	2'-11"	12
D	4	# 9	3'- 0"	41
T	2	# 5	4'- 5"	9
U	6	# 4	9'- 2"	37
Reinforcing Steel			Lb	219
Class "C" Concrete (For Ext Struc)			CY	0.9

TABLE OF CAP ELEVATIONS

Bent No.	PHASE 1A	
	A	B
2	104.75'	104.84'
3	104.77'	104.86'

① Quantities shown are for one Bent only.

② Breakback hatched portion of Existing riprap. Clean existing reinforcement and cut off any reinforcement which conflicts with pile placement. Drive pile and replace riprap in accordance with Item 432, Riprap. Removal and replacement of riprap shall be considered subsidiary to bid item Class "C" Concrete (for Ext Struc).

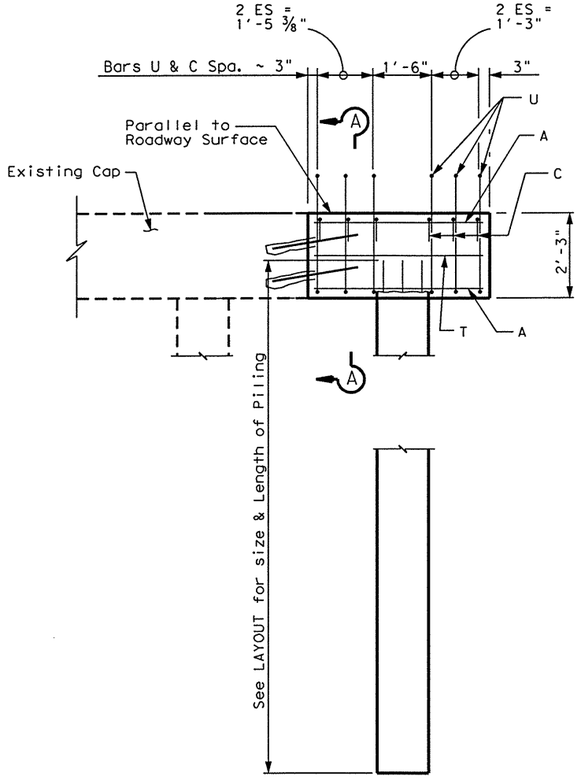

ELEVATION

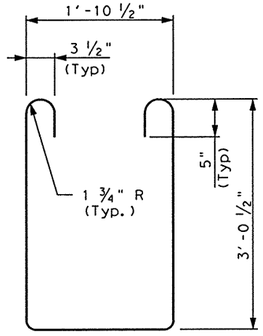

BARS U

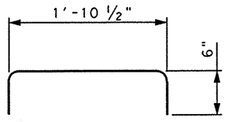

BARS C

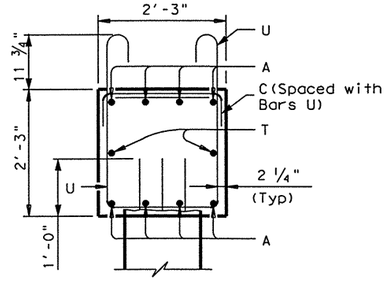

SECTION A-A

GENERAL NOTES:

Designed according to AASTHO 1996 Standard and current Interim Specifications.

Calculated Foundation Load ~ 55 T/Pile.

See Foundation Detail Standard sheet, FD(MOD) and CP-S, for all Foundation details and notes.

Class "C" Concrete strength f'c = 3600 psi.

All reinforcing steel shall be Grade 60.

HS20 LOADING (EXISTING)
HS25 LOADING (WIDENING)

STATE OF TEXAS
ALLEN R. CROZIER
81450
REGISTERED PROFESSIONAL ENGINEER
Allen R. Crozier
6/25/03

Parsons Brinckerhoff Quade & Douglas Inc.

Texas Department of Transportation

© 2003 by TxDOT

INTERIOR BENT NOS. 2 & 3

PHARR/McALLEN DRAINAGE DITCH BRIDGE WIDENING

NORTHBOUND FRONTAGE ROAD

281BntFtg02.DGN

DESIGNED: ARC	FED. RD DIV. No.	STATE	FEDERAL AID PROJECT No.	HIGHWAY No.
CHECKED: ALA	6	TEXAS	NH 2003 ( )	US 281

DRAWN: JMR	STATE DISTRICT	COUNTY	CONTROL No.	SECTION No.	JOB No.	SHEET No.
CHECKED: ARC	PHARR	HIDALGO	0255	08	091	1046

ESMERALDA G. EGGER
11:54:28 AM
06/25/2003
I:\projects\22322a\CADD\Sheets\Structures\Bridge\281BntFtg02.dgn

ESMERALDA G. EGGER
11:55:04 AM
06/25/2003
I:\projects\22322a\CADD\Sheets\Structures\Bridge\281Spn01.dgn

TABLE OF ESTIMATED QUANTITIES

Bar	No.	Size	Length	Weight
A	26	#7	59'-9"	3175
B	4	#8	59'-9"	638
T	61	#5	7'-10"	498
Reinforcing Steel			LB	4311
Class "S" Conc (For Ext Struc)			CY	20.8

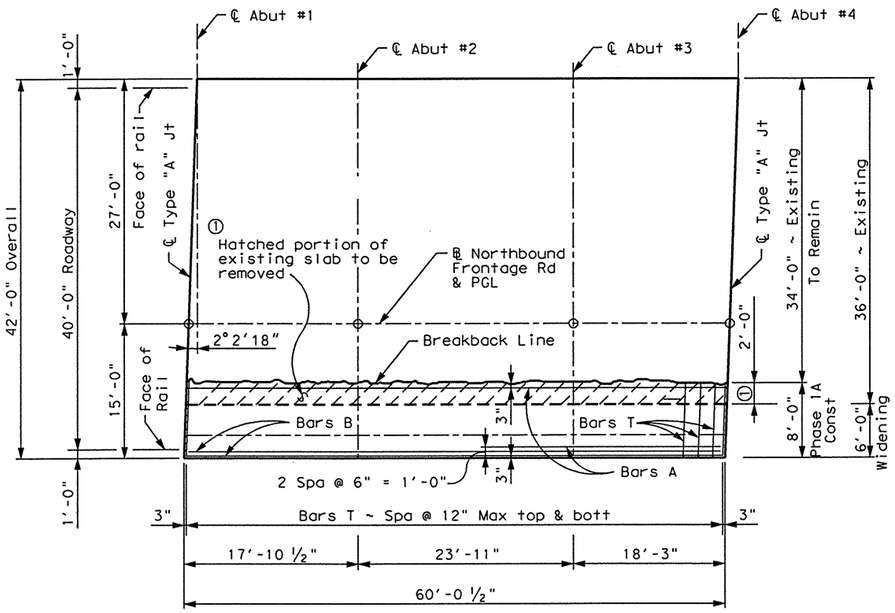

PLAN

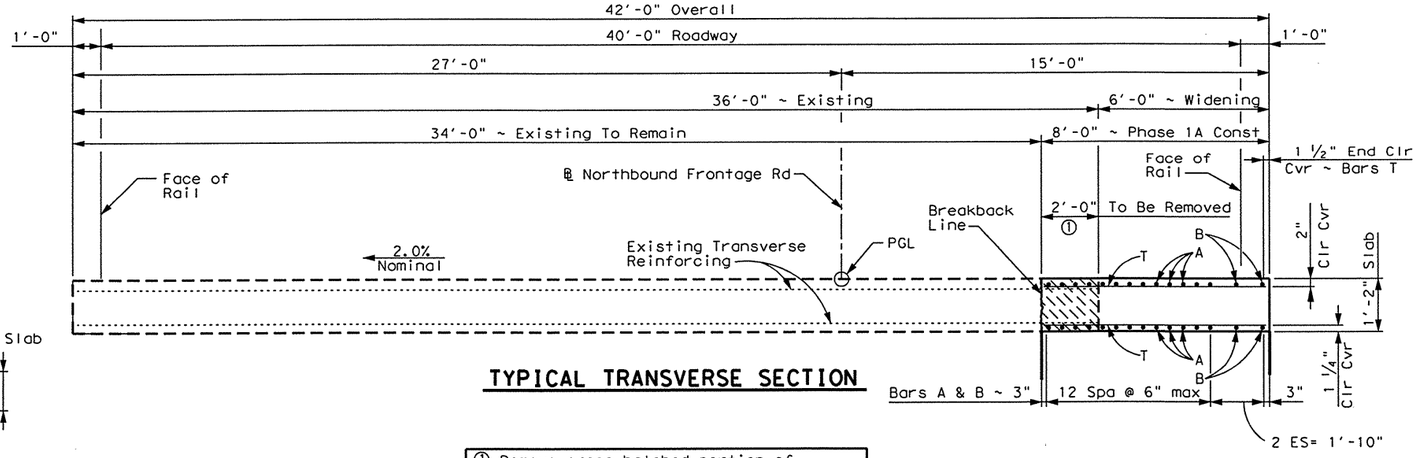

TYPICAL TRANSVERSE SECTION

① Remove cross hatched portion of existing slab to breakback line. clean, straighten and extend existing transverse reinforcing 1'-10" into new construction. Remove any exposed existing longitudinal reinforcing.

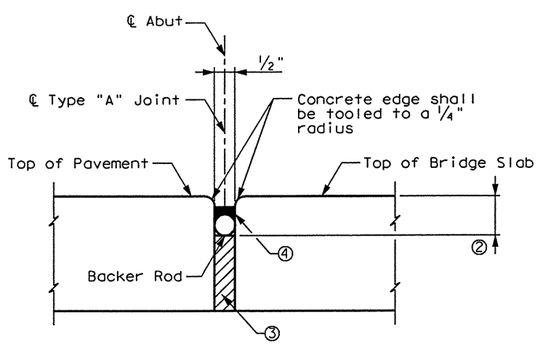

②Per manufacturer's recommendation.

③½" compressible expansion joint material.

④Sealant shall be Class 7 in accordance with ITEMS 420.5 and 433. Sealant shall be installed as per manufacturer's recommendations.

TYPE "A" JOINT DETAIL

GENERAL NOTES:

Designed according to 1996 AASHTO standard and current interim specifications.

All reinforcing shall be Grade 60.

Class "S" Concrete strength f'c= 4000 psi

Bar laps, where required, shall be as follows:

~ #4 = 1'-5"

~ #5 = 1'-9"

HS20 LOADING (EXISTING)
HS25 LOADING (WIDENING)

STATE OF TEXAS
ALLEN R. CROZIER
81450
REGISTERED PROFESSIONAL ENGINEER

Allen R. Crozier
6/25/03

Parsons Brinckerhoff Quade & Douglas Inc.

Texas Department of Transportation

© 2003 by TxDOT

60'-0" NOMINAL CONT CONC SLAB UNIT

PHARR/McALLEN DRAIN DITCH BRIDGE WIDENING

NORTHBOUND FRONTAGE ROAD

281Spn01.DGN

DESIGNED: ARC	FED. RD DIV. No.	STATE	FEDERAL AID PROJECT No.			HIGHWAY No.	
CHECKED: ALA	6	TEXAS	NH 2003 ( )			US 281	
DRAWN: OJH	STATE DISTRICT	COUNTY	CONTROL No.	SECTION No.	JOB No.	SHEET No.	
CHECKED: ARC	PHARR	HIDALGO	0255	08	091	1047	

ALLEN CROZIER
03:15:56 PM
06/25/2003

THE CONTRACTOR SHALL VERIFY ALL DIMENSIONS AND ELEVATIONS IN THE FIELD PRIOR TO ORDERING MATERIALS OR BEGINNING CONSTRUCTION.

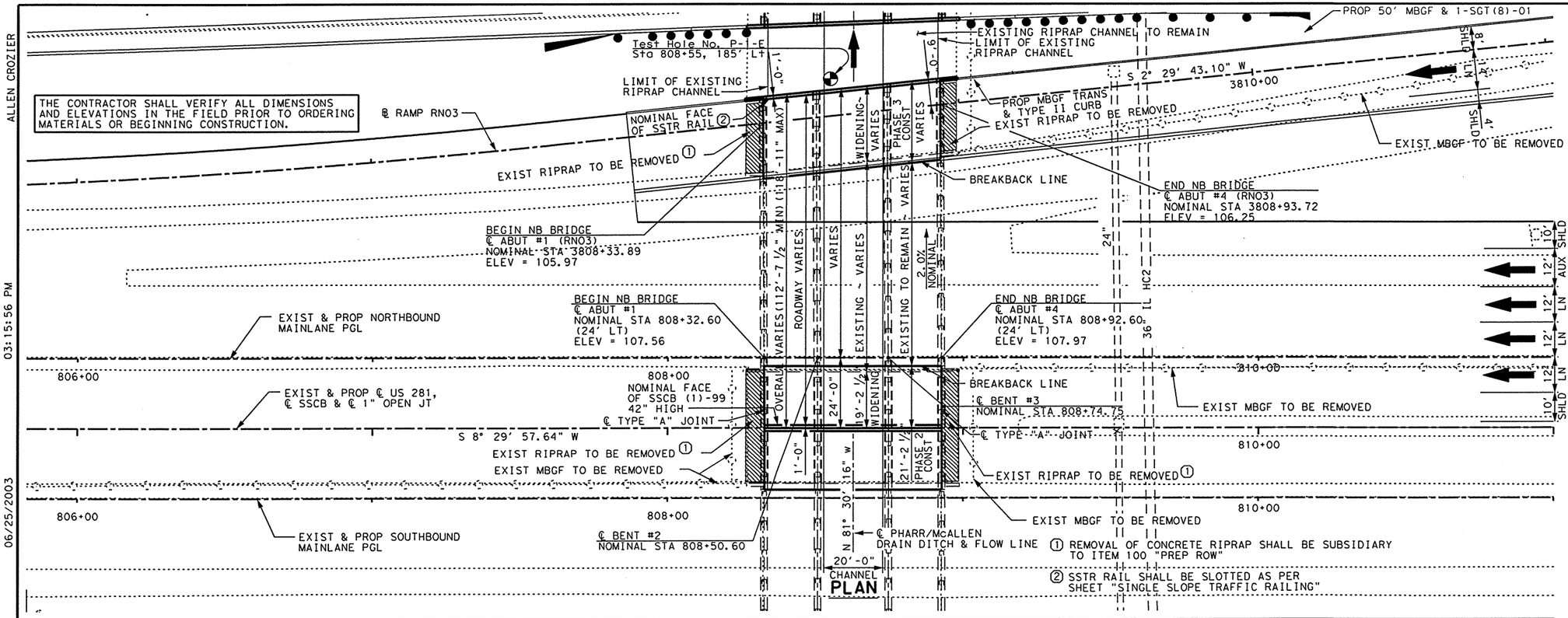

ALL ABUTMENTS/BENTS ARE ON A BEARING OF N 81° 30' 16" W. ALL ABUTMENT/BENT CENTERLINES SHALL BE CONSTRUCTED TO MATCH EXISTING SUBSTRUCTURE CENTERLINES.

▨ EXISTING RIPRAP TO BE REMOVED

⊕ - TEST HOLE

RAMP RNO3 HORIZONTAL CURVE DATA

CURVE RNO3-1		
PI STA	=	3806+40.63
DELTA	=	4° 52' 32.96 (LT)
DEGREE OF CURVE	=	2° 00' 00"
TANGENT	=	121.97'
LENGTH	=	243.79'
RADIUS	=	2,864.79'
X	=	1,089,412.1009
Y	=	16,607,162.6558
CURVE RNO3-2		
PI STA	=	3815+19.50
DELTA	=	6° 00' 00.00 (LT)
DEGREE OF CURVE	=	0° 57' 17.75"
TANGENT	=	314.45'
LENGTH	=	628.32'
RADIUS	=	6,000.00'
X	=	1,089,373.8311
Y	=	16,606,284.4823

BM US 281-6
STA 806+94.49
OFFSET = 183.50' LT
ELEV = 105.29
DESC = 3 1/4" TxDOT ALUM DISK

STATE OF TEXAS
ALLEN R. CROZIER
81450
REGISTERED PROFESSIONAL ENGINEER

Allen R. Crozier
6/25/03

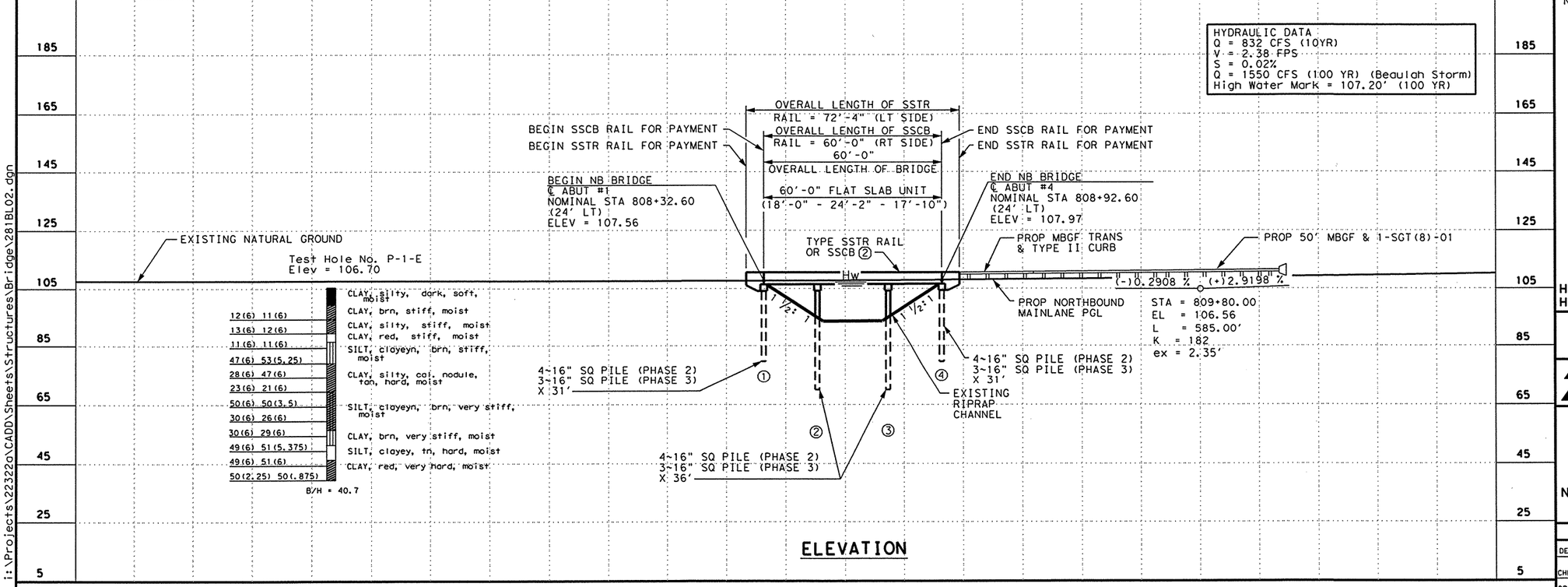

ELEVATION

NOTES:

DESIGNED IN ACCORDANCE WITH 1996 AASHTO STANDARD SPECIFICATIONS AND ALL CURRENT INTERIMS.

ELEVATIONS BASED ON THE CURRENT NAVD 88 DATUM. EXISTING STRUCTURE WAS SURVEYED UNDER THE USGS&GS DATUM SYSTEM.

BRIDGE STATIONS BASED ON SURVEY OF EXISTING STRUCTURE.

NEW SLAB SHALL MATCH EXISTING SLAB PROFILE AT CONSTRUCTION JOINTS WITH ADJUSTMENTS FOR A 2% NOMINAL CROSS-SLOPE.

BORE HOLE AND HYDRAULIC DATA TAKEN FROM EXISTING PLANS.
CSJ: 0225-08-063

FUNC CLASS	: FREEWAY
DESIGN SPEED	: 70 MPH
ADT(2002)	: 56,200 VPD
ADT(2022)	: 91,400 VPD
NBI	: 21-109-0-0255-08-074
EXIST PSN	: 0255-08-074

HS25 LOADING (WIDENING)
HS20 LOADING (EXISTING)

Parsons Brinckerhoff Quade & Douglas Inc.

Texas Department of Transportation

© 2003 by TxDOT

BRIDGE LAYOUT
PHARR/McALLEN DRAIN DITCH BRIDGE WIDENING
NORTHBOUND MAINLANES & ENTRANCE RAMP

PLAN 1"= 40' HORIZ
PROFILE 1"= 40' VERT

281BL02.DGN

DESIGNED: ARC	FED. RD DIV. NO.	STATE	FEDERAL AID PROJECT No.	HIGHWAY No.
CHECKED: ABM	6	TEXAS	NH 2003 ( )	US 281

DRAWN: OJH	STATE DISTRICT	COUNTY	CONTROL No.	SECTION No.	JOB No.	SHEET No.
CHECKED: ARC	PHARR	HIDALGO	0255	08	091	1048

i:\Projects\22322oVCADD\Sheets\Structures\Bridge\281BL02.dgn

ESMERALDA G. EGGER
02:10:48 PM
06/25/2003
I:\projects\22322o\CADD\Sheets\Structures\Bridge\281brdgSECT.dgn

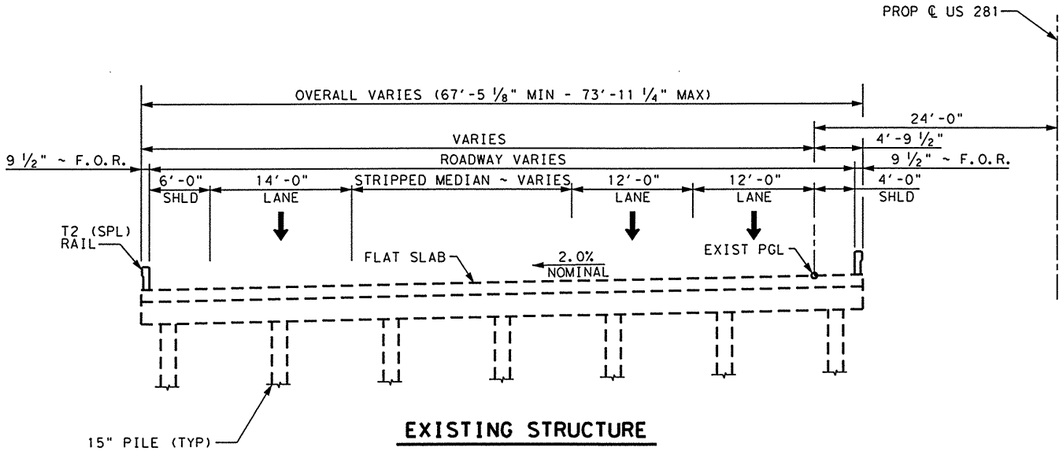

EXISTING STRUCTURE

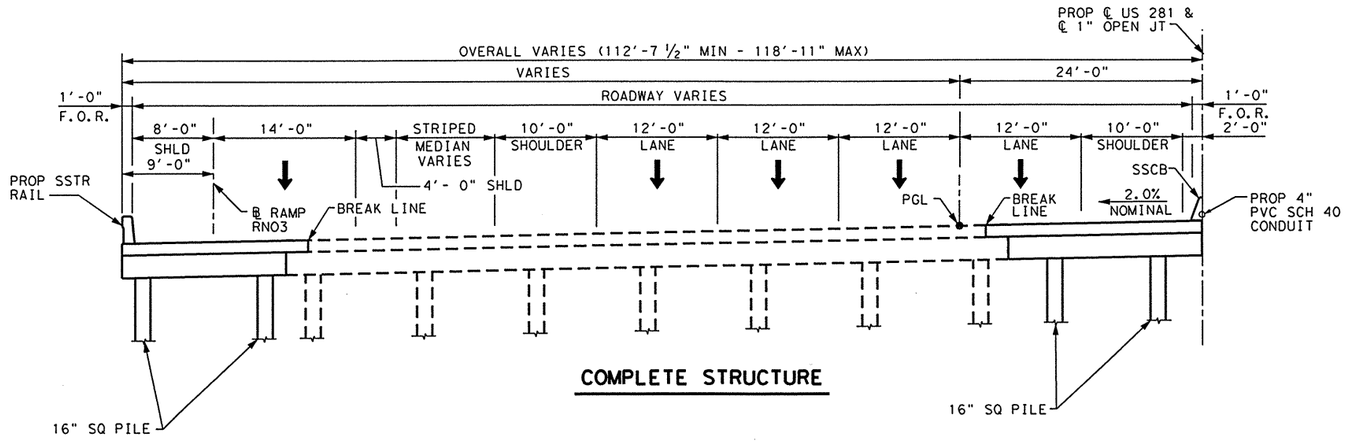

COMPLETE STRUCTURE

NOTE:

REFER TO EXISTING STRUCTURE PLANS
PROJECT NO. F 301(11)
CSJ: 0255-08-063
FOR ADDITIONAL DETAILS

HS 25 LOADING (WIDENING)
HS 20 LOADING (EXISTING)

Parsons Brinckerhoff Quade & Douglas Inc.

Texas Department of Transportation

© 2002 by TxDOT

STATE OF TEXAS
ALLEN R. CROZIER
81450
REGISTERED PROFESSIONAL ENGINEER

Allen R. Crozier
6/25/03

TYPICAL SECTIONS

PHARR/McALLEN DRAIN DITCH BRIDGE WIDENING

NORTHBOUND MAINLANES & ENTRANCE RAMP

281BRDGSECT.DGN

DESIGNED: ARC	FED. RD DIV. No.	STATE	FEDERAL AID PROJECT No.		HIGHWAY No.
CHECKED: ABM	6	TEXAS	NH 2003 ( )		US 281
DRAWN: OJH	STATE DISTRICT	COUNTY	CONTROL No.	SECTION No.	JOB No.	SHEET No.
CHECKED: ARC	PHARR	HIDALGO	0255	08	091	1049

ESMERALDA G. EGGER
02:11:10 PM
06/25/2003
I:\projects\22322o\CADD\Sheets\Structures\Bridge\281brdgSECT.dgn

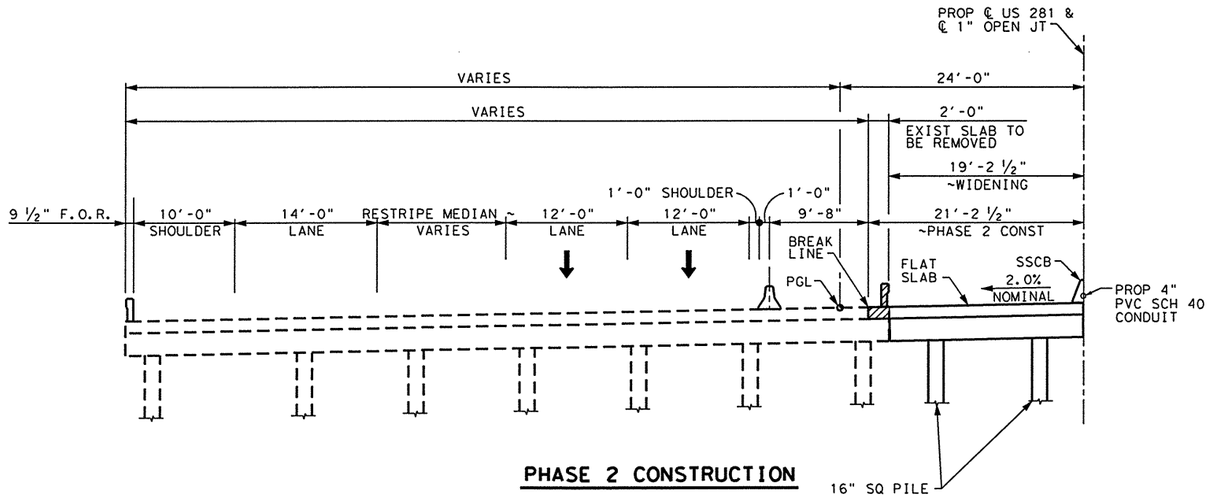

PHASE 2 CONSTRUCTION

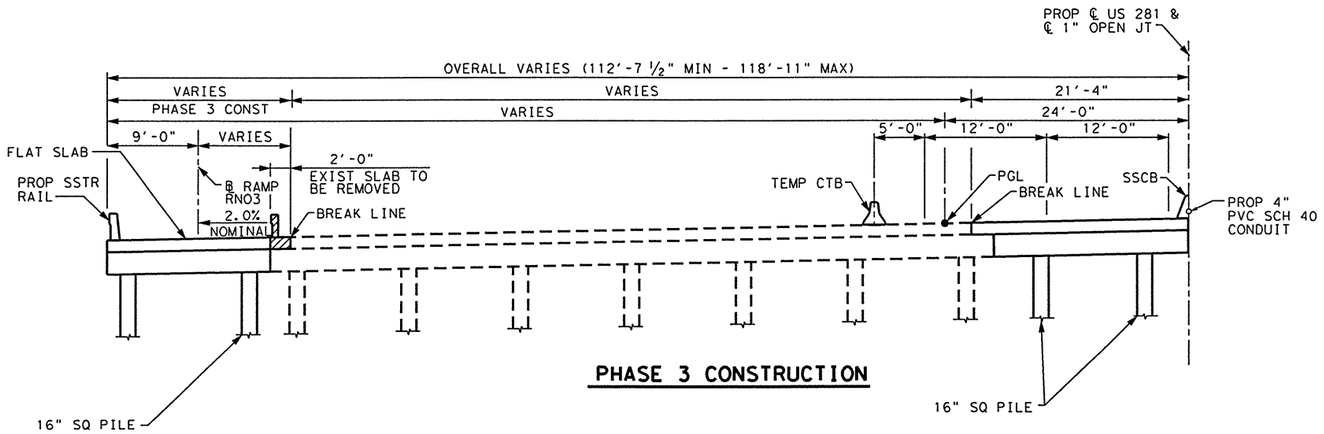

PHASE 3 CONSTRUCTION

NOTE:

REFER TO EXISTING STRUCTURE PLANS
PROJECT NO. F 301(11)
CSJ: 0255-08-063
FOR ADDITIONAL DETAILS

HS 25 LOADING (WIDENING)
HS 20 LOADING (EXISTING)

Parsons Brinckerhoff
Quade & Douglas Inc.

Texas Department of Transportation

© 2002 by TxDOT

STATE OF TEXAS
ALLEN R. CROZIER
81450
REGISTERED
PROFESSIONAL ENGINEER

Allen R. Crozier
6/23/03

CONSTRUCTION SEQUENCE

PHARR/McALLEN DRAIN DITCH BRIDGE WIDENING

NORTHBOUND MAINLANES & ENTRANCE RAMP

281BRDGSECT.DGN

DESIGNED: ARC	FED. RD DIV. No.	STATE	FEDERAL AID PROJECT No.			HIGHWAY No.	
CHECKED: ABM	6	TEXAS	NH 2003 ( )			US 281	
DRAWN: OJH	STATE DISTRICT	COUNTY	CONTROL No.	SECTION No.	JOB No.	SHEET No.	
CHECKED: ARC	PHARR	HIDALGO	0255	08	091	1050	

ALLEN CROZIER
03:16:12 PM
06/25/2003

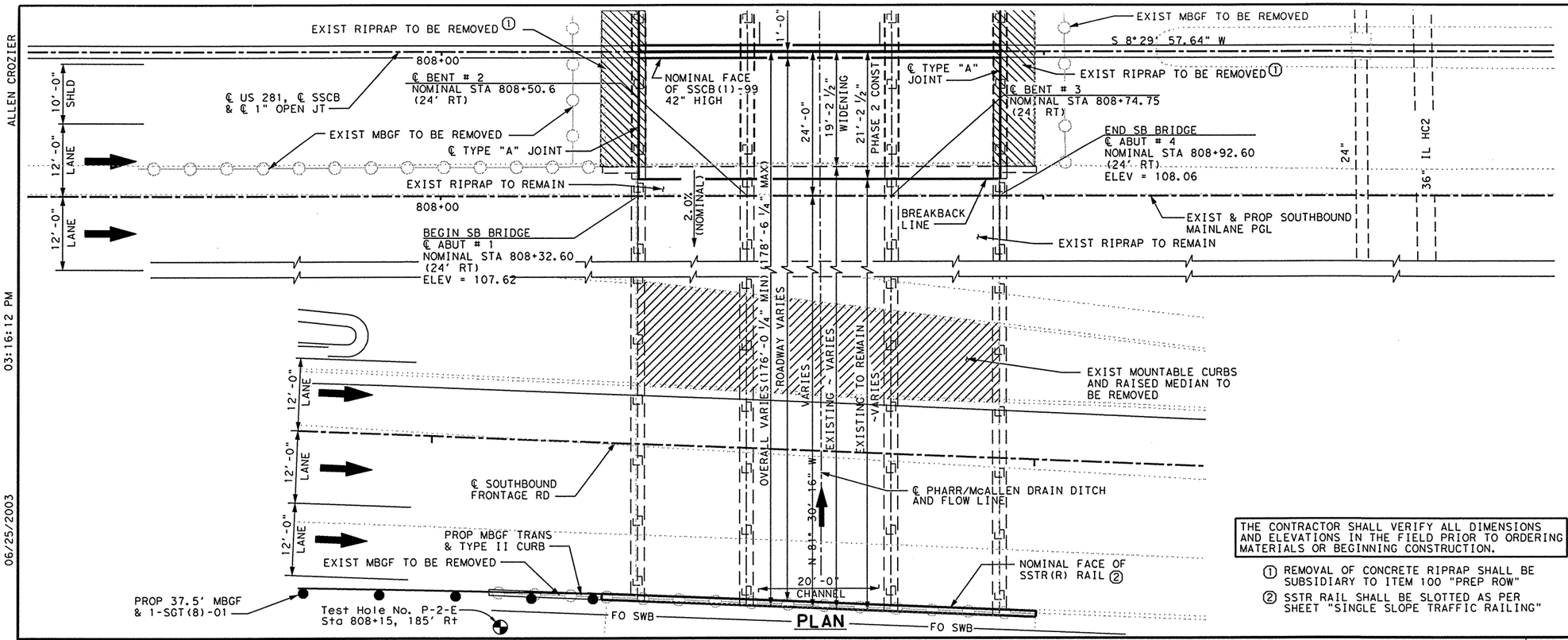

EXIST MOUNTABLE CURBS AND RAISED MEDIAN TO BE REMOVED

EXISTING RIPRAP TO BE REMOVED

- TEST HOLE

ALL ABUTMENTS/BENTS ARE ON A BEARING OF N 81° 30' 16" W. ALL ABUTMENT/BENT CENTERLINES SHALL BE CONSTRUCTED TO MATCH EXISTING SUBSTRUCTURE CENTERLINES.

BM US 281-6
STA 806+94.49
OFFSET = 183.50' LT
ELEV = 105.29
DESC = 3 1/4" TxDOT ALUM DISK

THE CONTRACTOR SHALL VERIFY ALL DIMENSIONS AND ELEVATIONS IN THE FIELD PRIOR TO ORDERING MATERIALS OR BEGINNING CONSTRUCTION.

① REMOVAL OF CONCRETE RIPRAP SHALL BE SUBSIDIARY TO ITEM 100 "PREP ROW"

② SSTR RAIL SHALL BE SLOTTED AS PER SHEET "SINGLE SLOPE TRAFFIC RAILING"

STATE OF TEXAS
ALLEN R. CROZIER
81450
REGISTERED PROFESSIONAL ENGINEER
Allen R. Crozier
6/25/03

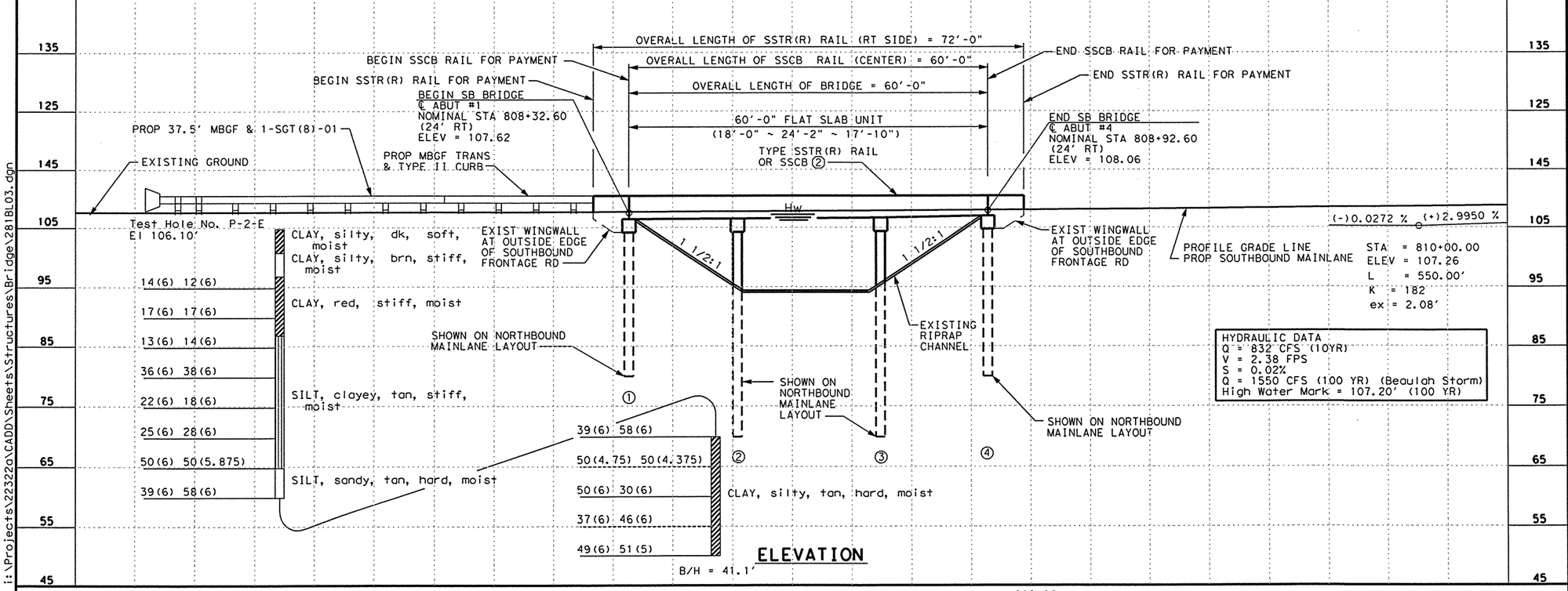

HYDRAULIC DATA
Q = 832 CFS (10YR)
V = 2.38 FPS
S = 0.02%
Q = 1550 CFS (100 YR) (Beaulah Storm)
High Water Mark = 107.20' (100 YR)

ELEVATION

NOTES:

DESIGNED IN ACCORDANCE WITH 1996 AASHTO STANDARD SPECIFICATIONS AND ALL CURRENT INTERIMS.

ELEVATIONS BASED ON THE CURRENT NAVD 88 DATUM. EXISTING STRUCTURE WAS SURVEYED UNDER THE USGS&GS DATUM SYSTEM.

BRIDGE STATIONS BASED ON SURVEY OF EXISTING STRUCTURE.

NEW SLAB SHALL MATCH EXISTING SLAB PROFILE AT CONSTRUCTION JOINTS WITH ADJUSTMENTS FOR A 2% NOMINAL CROSS-SLOPE.

BORE HOLE AND HYDRAULIC DATA TAKEN FROM EXISTING PLANS.
CSJ: 0225-08-063

FUNC CLASS	: FREEWAY
DESIGN SPEED	: 70 MPH
ADT(2002)	: 56,200 VPD
ADT(2022)	: 91,400 VPD
NBI	: 21-109-0-0255-08-075
EXIST PSN	: 0255-08-075

HS25 LOADING (WIDENING)
HS20 LOADING (EXISTING)

Parsons Brinckerhoff Quade & Douglas Inc.

Texas Department of Transportation

© 2003 by TxDOT

BRIDGE LAYOUT
PHARR/McALLEN DRAIN DITCH BRIDGE WIDENING
SOUTHBOUND MAINLANES & FRONTAGE RD

PLAN 1"= 20' HORIZ
PROFILE 1"= 20' VERT

i:\Projects\22322o\CADD\Sheets\Structures\Bridge\281BL03.dgn

281BL03.DGN

DESIGNED: ARC	FED. RD DIV. No.	STATE	FEDERAL AID PROJECT No.			HIGHWAY No.
CHECKED: ABM	6	TEXAS	NH 2003 ( )			US 281
DRAWN: OJH	STATE DISTRICT	COUNTY	CONTROL No.	SECTION No.	JOB No.	SHEET No.
CHECKED: ARC	PHARR	HIDALGO	0255	08	091	1051

ESMERALDA G. EGGER
02:11:34 PM
06/25/2003
I:\projects\223226\CADD\Sheets\Structures\Bridge\281brdgSECT.dgn

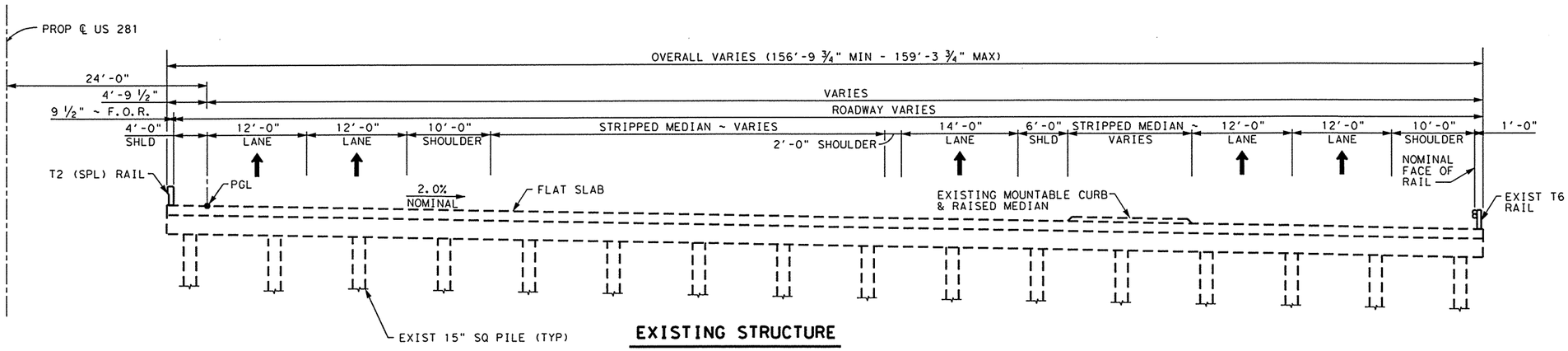

EXISTING STRUCTURE

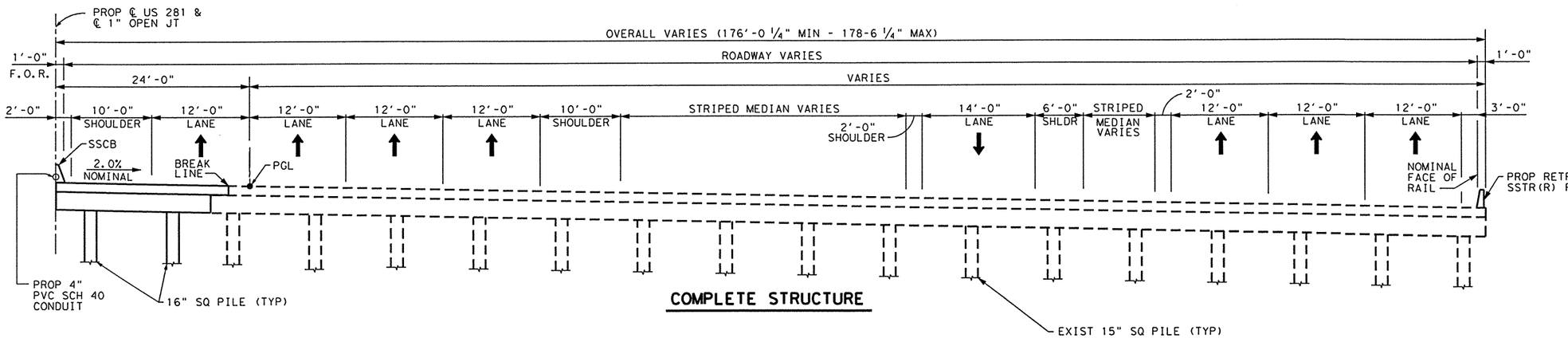

COMPLETE STRUCTURE

NOTE:

REFER TO EXISTING STRUCTURE PLANS
PROJECT NO. F 301(11)
CSJ: 0255-08-063
FOR ADDITIONAL DETAILS

HS 25 LOADING (WIDENING)
HS 20 LOADING (EXISTING)

STATE OF TEXAS
ALLEN R. CROZIER
81450
REGISTERED PROFESSIONAL ENGINEER

Allen R. Crozier
6/25/03

Parsons Brinckerhoff Quade & Douglas Inc.

Texas Department of Transportation

© 2002 by TxDOT

TYPICAL SECTIONS

PHARR/McALLEN DRAIN DITCH BRIDGE WIDENING

SOUTHBOUND MAINLANES & FRONTAGE RD

281BRDGSECT.DGN

DESIGNED: ARC	FED. RD DIV. No.	STATE	FEDERAL AID PROJECT No.	HIGHWAY No.
CHECKED: ABM	6	TEXAS	NH 2003 ( )	US 281
DRAWN: OJH	STATE DISTRICT	COUNTY	CONTROL No.	SECTION No.	JOB No.	SHEET No.
CHECKED: ARC	PHARR	HIDALGO	0255	08	091	1052

ESMERALDA G. EGGER
02:11:47 PM
06/25/2003
I:\projects\22322o\CADD\Sheets\Structures\Bridge\281brdgSECT.dgn

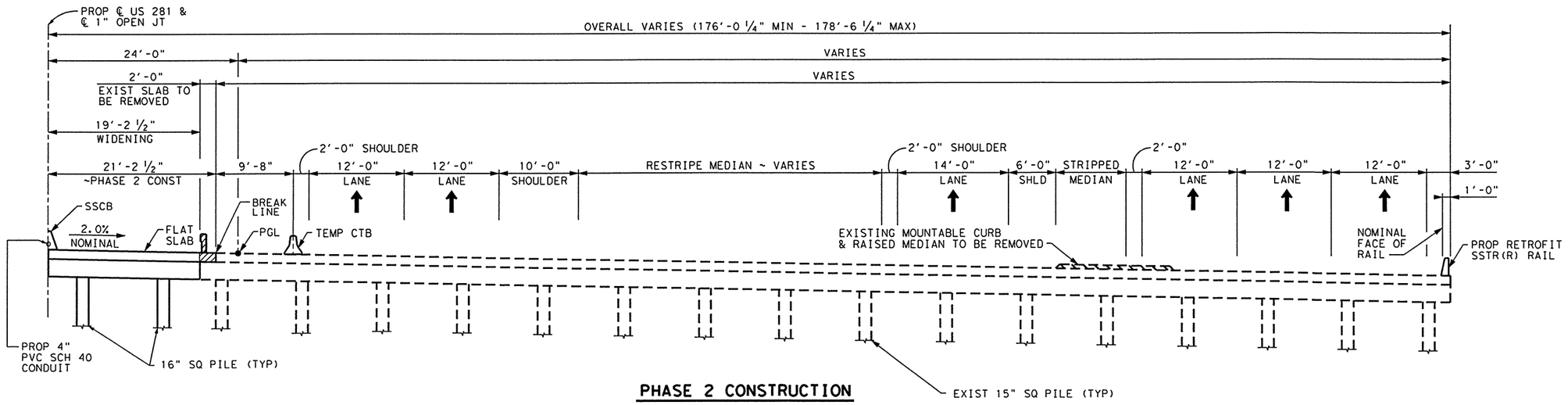

PHASE 2 CONSTRUCTION

NOTE:

REFER TO EXISTING STRUCTURE PLANS
PROJECT NO. F 301(11)
CSJ: 0255-08-063
FOR ADDITIONAL DETAILS

HS 25 LOADING (WIDENING)
HS 20 LOADING (EXISTING)

Parsons Brinckerhoff Quade & Douglas Inc.

Texas Department of Transportation

© 2002 by TxDOT

STATE OF TEXAS
ALLEN R. CROZIER
81450
REGISTERED PROFESSIONAL ENGINEER
Allen R. Crozier
6/25/03

CONSTRUCTION SEQUENCE

PHARR/McALLEN DRAIN DITCH BRIDGE WIDENING

SOUTHBOUND MAINLANES & FRONTAGE RD

281BRDGSECT.DGN

DESIGNED: ARC	FED. RD DIV. No.	STATE	FEDERAL AID PROJECT No.	HIGHWAY No.
CHECKED: ABM	6	TEXAS	NH 2003 ( )	US 281

DRAWN: OJH	STATE DISTRICT	COUNTY	CONTROL No.	SECTION No.	JOB No.	SHEET No.
CHECKED: ARC	PHARR	HIDALGO	0255	08	091	1053

SUMMARY OF ESTIMATED QUANTITIES

	ITEM NUMBER	409	430		430	428	514	450								
	ITEM / DESCRIPTION	16" SQ PRESTR CONC PILE	CLASS "C" CONCRETE (FOR EXTENDING STRUCTURES)		CLASS "S" CONC FOR EXT STRUC	CONCRETE SURFACE TREATMENT	CONCRETE TRAFFIC BARRIER	RAILING								
			ABUTMENT	BENT	SLAB		SSCB (1)	SSTR	SSTR(R)							
		LF	CY	CY	CY	SY	LF	LF	LF							
PHASE 2	2~ABUTMENTS	248	16.0													
	2~INTERIOR BENTS	288		14.4												
	1~60.00' NOM CONT FLAT SLAB UNIT				110.0	268	60.0									
	PHASE 2 TOTAL	536	16.0	14.4	110.0	268	60.0									
PHASE 3	2~ABUTMENTS	186	12.0					12.0	12.0							
	2~INTERIOR BENTS	216		9.7				60.3	60.0							
	1~60.00' NOM CONT FLAT SLAB UNIT				72.3	178										
	PHASE 3 TOTAL	402	12.0	9.7	72.3	178		72.3	72.0							
	TOTAL	938	28.0	24.1	182.3	446	60.0	72.3	72.0							

TOP OF CONCRETE CAP ELEVATIONS

Abut No. 1	Pt. A 104.62'	Pt. B 105.18'	Pt. C 106.45'	Pt. D 106.87'	Pt. E 106.51'
Bent No. 2	Pt. A 104.68'	Pt. B 105.20'	Pt. C 106.59'	Pt. D 106.97'	Pt. E 106.66'
Bent No. 3	Pt. A 104.80'	Pt. B 105.32'	Pt. C 106.76'	Pt. D 107.14'	Pt. E 106.84'
Abut No. 4	Pt. A 104.90'	Pt. B 105.46'	Pt. C 106.86'	Pt. D 107.28'	Pt. E 106.95'

HS 20 LOADING (EXISTING)
HS 25 LOADING (WIDENING)

STATE OF TEXAS
ALLEN R. CROZIER
81450
REGISTERED PROFESSIONAL ENGINEER

8/5/03

Parsons Brinckerhoff Quade & Douglas Inc.

Texas Department of Transportation

© 2003 by TxDOT

ESTIMATED QUANTITIES AND TOP OF CONCRETE ELEVATIONS PHARR/McALLEN DRAIN DITCH BRIDGE WIDENING

NORTHBOUND & SOUTHBOUND MAINLANES

281EQ02.DGN

DESIGNED: ARC	FED. RD DIV. No.	STATE	FEDERAL AID PROJECT No.	HIGHWAY No.
CHECKED: ALA	6	TEXAS	NH 2003 ( )	US 281

DRAWN: KTD	STATE DISTRICT	COUNTY	CONTROL No.	SECTION No.	JOB No.	SHEET No.
CHECKED: ARC	PHARR	HIDALGO	0255	08	091	1054

ALLEN CROZIER
07:30:26 AM
08/06/2003
I:\projects\22322a\CADD\Sheets\Structures\Bridge\281EQ02.dgn

ESMERALDA G. EGGER
11:56:02 AM
06/25/2003
I:\projects\22322gov\CADD\Sheets\Structures\Bridge\281Abt01.dgn

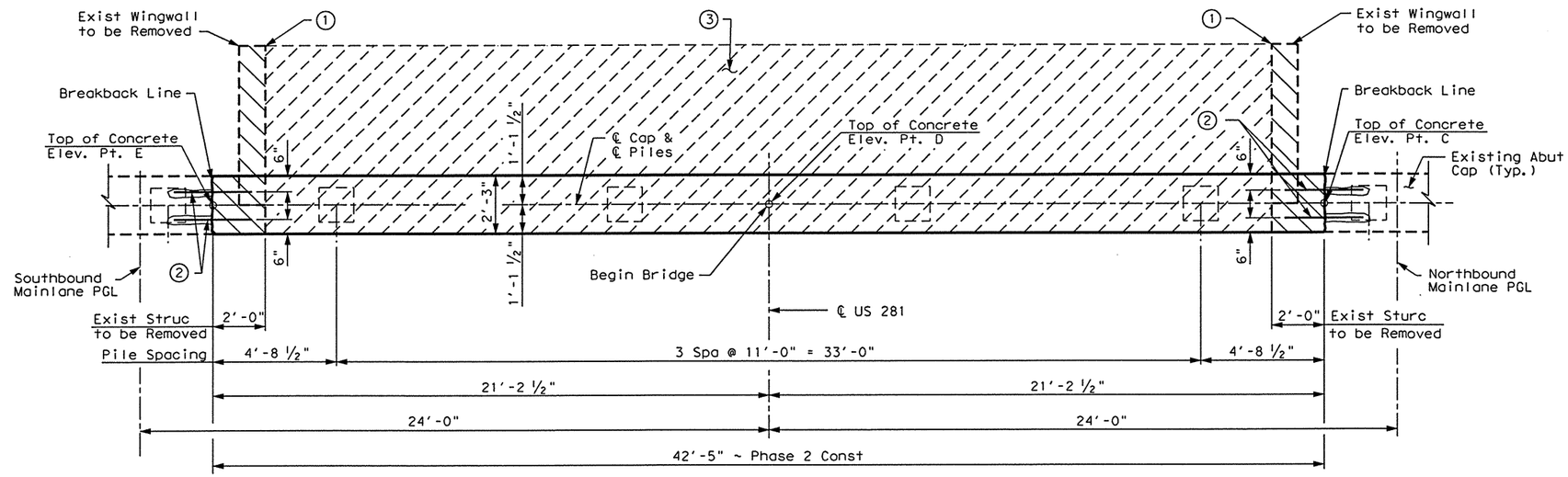

PLAN

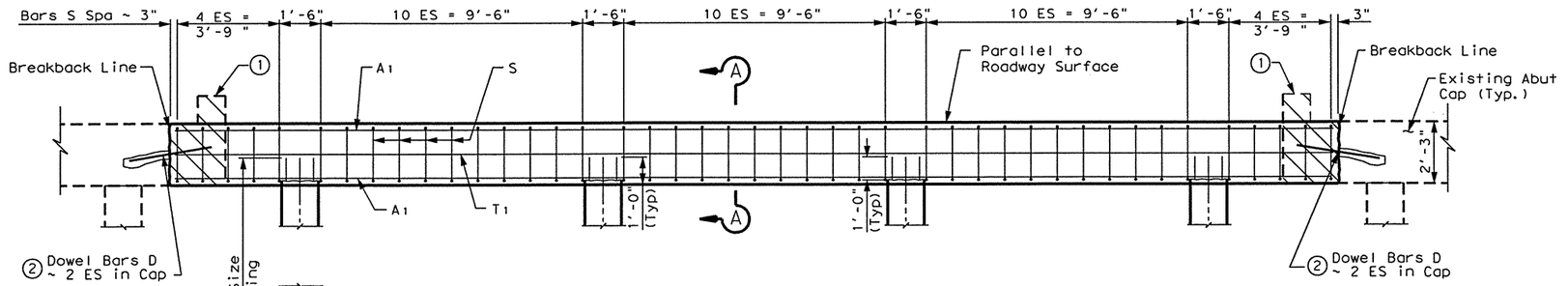

ELEVATION

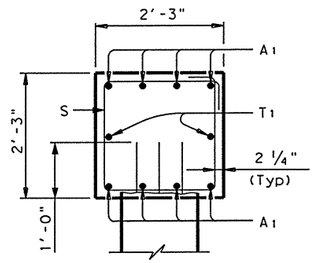

SECTION A-A

(1) Breakback hatched Portion of Existing Cap & Wingwall. Clean & extend existing Longitudinal reinforcement 1'-6" into new construction. Cut off remaining reinforcement at face of Concrete & Coat with Epoxy Grout.

(2) Drill & Grout Dowl Bar D ~ 1'-6" min into existing structure in accordance with the Standard Specification Item 420. Dowels shall be sloped at 12:1.

(3) Breakback hatched portion of Existing riprap. Clean existing reinforcement and cut off any reinforcement which conflicts with cap placement. Drive pile and patch riprap as required by the Engineer. Removal and patching of riprap shall be considered subsidiary to bid item Class "C" Concrete (for Ext Struc).

HS20 LOADING (EXISTING)
HS25 LOADING (WIDENING) SHEET 1 OF 2

Parsons Brinckerhoff Quade & Douglas Inc.

Texas Department of Transportation

© 2003 by TxDOT

STATE OF TEXAS
ALLEN R. CROZIER
81450
REGISTERED PROFESSIONAL ENGINEER
Allen R. Crozier
6/25/03

ABUTMENT NO. 1
PHARR/McALLEN DRAINAGE DITCH BRIDGE WIDENING
NORTHBOUND & SOUTHBOUND MAINLANES PHASE 2 CONSTRUCTION

281ABT01.DGN

DESIGNED: ARC	FED. RD DIV. No.	STATE	FEDERAL AID PROJECT No.			HIGHWAY No.	
CHECKED: ALA	6	TEXAS	NH 2003 ( )			US 281	
DRAWN: OJH	STATE DISTRICT	COUNTY	CONTROL No.	SECTION No.	JOB No.	SHEET No.	
CHECKED: ARC	PHARR	HIDALGO	0255	08	091	1055	

ESMERALDA G. EGGER
11:56:31 AM
06/25/2003
I:\projects\223220\CADD\Sheets\Structures\Bridge\281Abt02.dgn

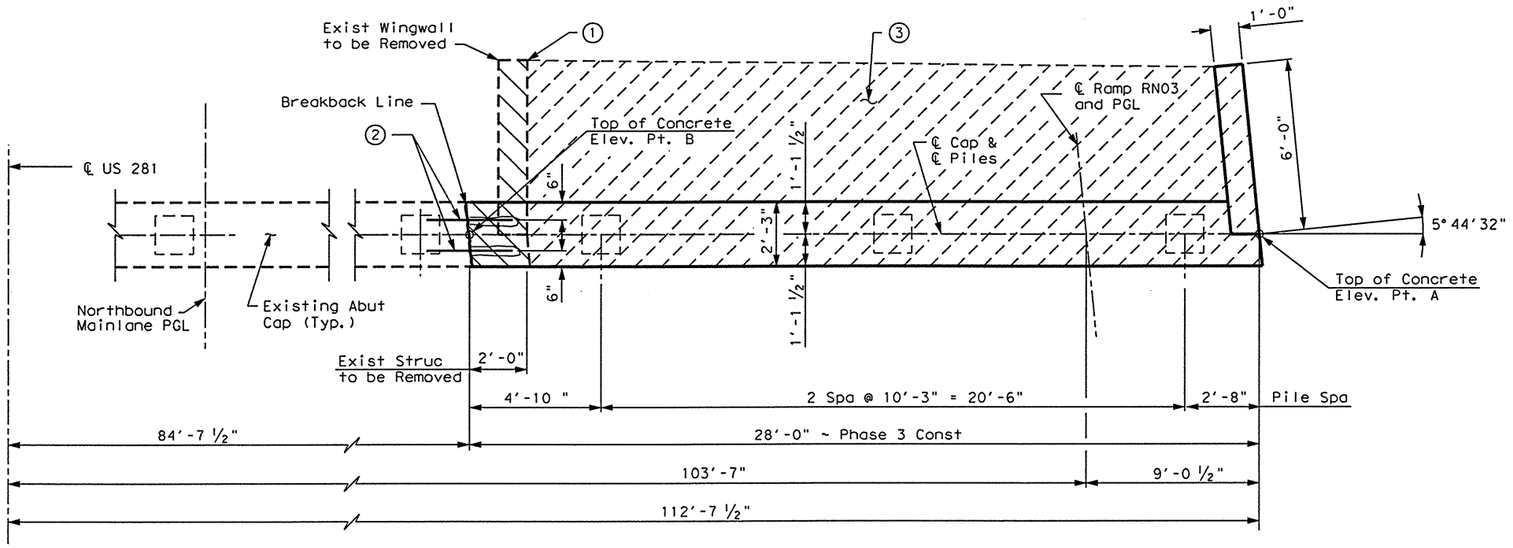

PLAN

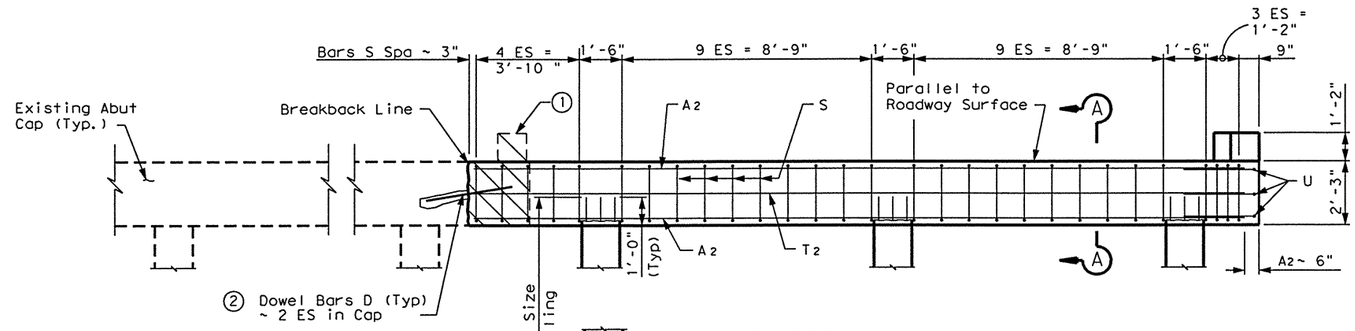

ELEVATION

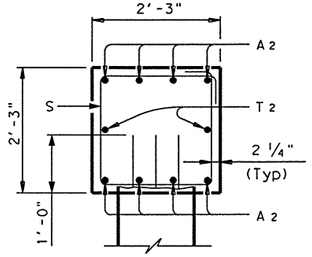

SECTION A-A

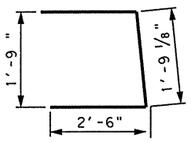

BARS U

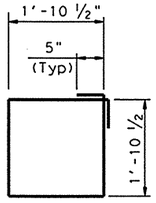

BARS S

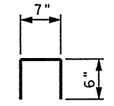

BARS wU

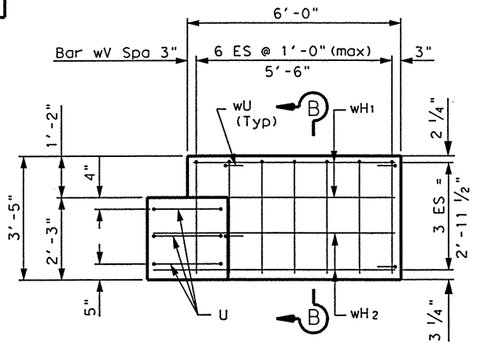

WINGWALL ELEVATION

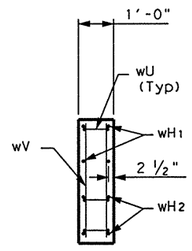

SECTION B-B

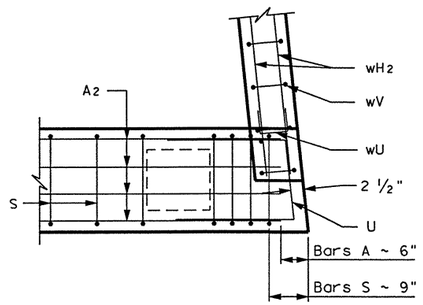

CORNER DETAILS

TABLE OF CONSTANT QUANTITIES

PHASE 2					PHASE 3				
Bar	No.	Size	Length	Weight	Bar	No.	Size	Length	Weight
A1	8	# 9	42'- 1"	1145	A2	8	# 9	27'- 4"	744
D	4	# 9	3'- 0"	41	D	2	# 9	3'- 0"	21
S	43	# 4	8'- 4"	239	S	29	# 4	8'- 4"	161
T1	2	# 5	42'- 1"	88	T2	2	# 5	27'- 4"	57
					U	3	# 6	6'- 9"	30
					wH1	4	# 6	5'- 8"	34
					wH2	4	# 6	6'-10"	41
					wU	4	# 4	1'- 7"	4
					wV	14	# 5	3'- 0"	44
Reinforcing Steel		Lb	1,513		Reinforcing Steel		Lb		1136
Class "C" Concrete (For Ext Struc)		CY	8.0		Class "C" Concrete (For Ext Struc)		CY		6.0

TABLE OF CAP ELEVATION

PHASE 3		PHASE 2		
A	B	C	D	E
104.62'	105.18'	106.45'	106.87'	106.51'

① Breakback hatched Portion of Existing Cap & Wingwall. Clean & extend existing Longitudinal reinforcement 1'-6" into new construction. Cut off remaining reinforcement at face of Concrete & Coat with Epoxy Grout.

② Drill & Grout Dowl Bar D ~ 1'-6" min into existing structure in accordance with the Standard Specification Item 420. Dowels shall be sloped at 12:1.

③ Breakback hatched portion of Existing riprap. Clean existing reinforcement and cut off any reinforcement which conflicts with cap placement. Drive pile and patch riprap as required by the Engineer. Removal and patching of riprap shall be considered subsidiary to bid item Class "C" Concrete (for Ext Struc).

GENERAL NOTES:

Designed according to AASTHO 1996 Standard and current Interim Specifications.
Calculated Foundation Load ~ 55 T/Pile.
See Foundation Detail Standard sheet, FD(MOD) and CP-S, for all Foundation details and notes.
Class "C" Concrete strength f'c = 3600 psi.
All reinforcing steel shall be Grade 60.

HS20 LOADING (EXISTING)
HS25 LOADING (WIDENING) SHEET 2 OF 2

Parsons Brinckerhoff Quade & Douglas Inc.

Texas Department of Transportation

© 2003 by TxDOT

STATE OF TEXAS
ALLEN R. CROZIER
81450
REGISTERED PROFESSIONAL ENGINEER

Allen R. Crozier
6/25/03

ABUTMENT NO. 1
PHARR/McALLEN DRAINAGE DITCH BRIDGE WIDENING
NORTHBOUND & SOUTHBOUND MAINLANES PHASE 3 CONSTRUCTION

281ABT02.DGN

DESIGNED: ARC	FED. RD DIV. No.	STATE	FEDERAL AID PROJECT No.			HIGHWAY No.	
CHECKED: ALA	6	TEXAS	NH 2003 ( )			US 281	
DRAWN: OJH	STATE DISTRICT	COUNTY	CONTROL No.	SECTION No.	JOB No.	SHEET No.	
CHECKED: ARC	PHARR	HIDALGO	0255	08	091	1056	

ESMERALDA G. EGGER
11:56:55 AM
06/25/2003
I:\projects\22322g\CADD\Sheets\Structures\Bridge\281Abt01a.dgn

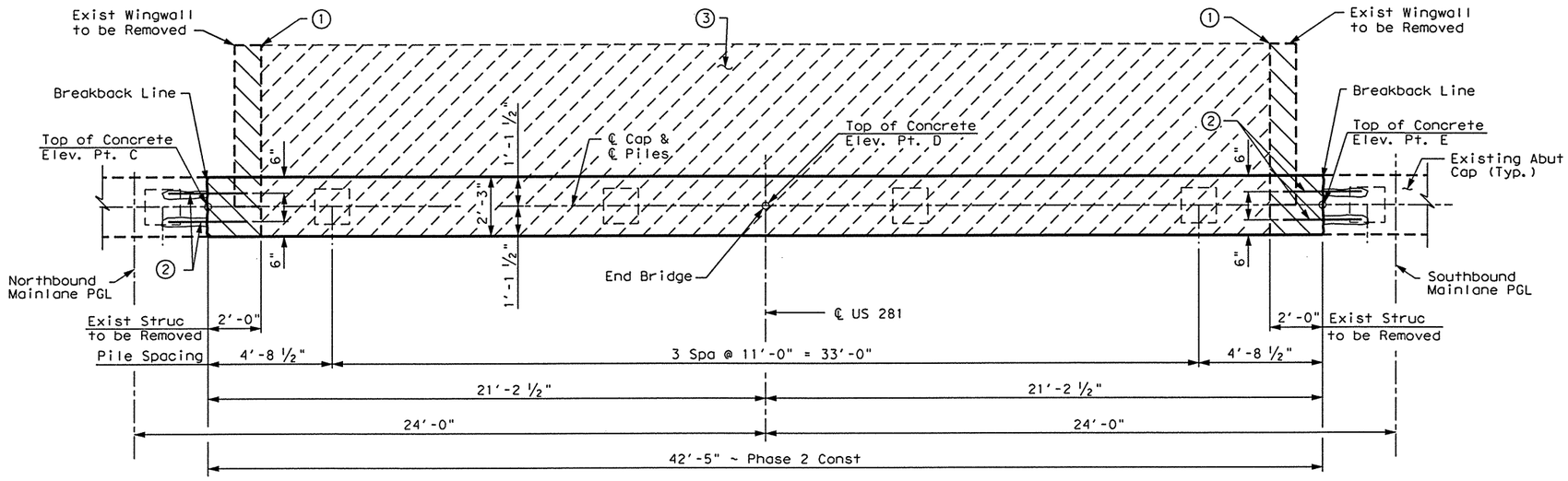

PLAN

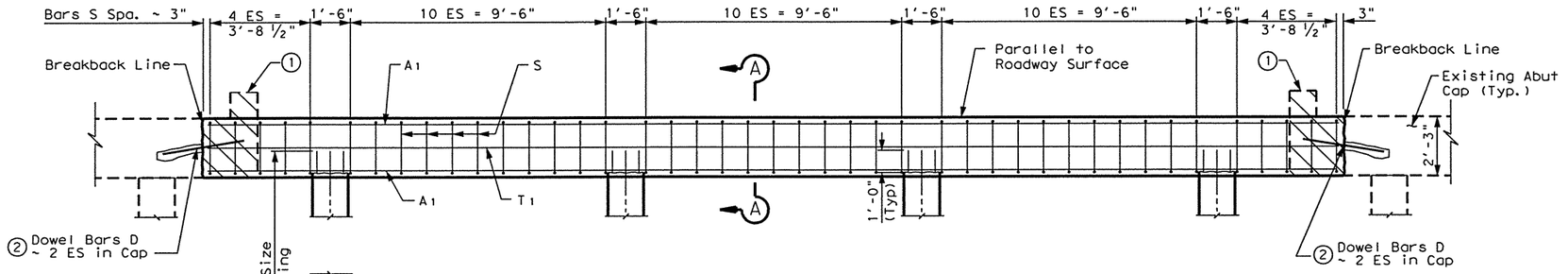

ELEVATION

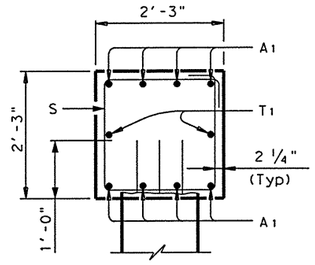

SECTION A-A

① Breakback hatched Portion of Existing Cap & Wingwall. Clean & extend existing Longitudinal reinforcement 1'-6" into new construction. Cut off remaining reinforcement at face of Concrete & Coat with Epoxy Grout.

② Drill & Grout Dowl Bar D ~ 1'-6" min into existing structure in accordance with the Standard Specification Item 420. Dowels shall be sloped at 12:1.

③ Breakback hatched portion of Existing riprap. Clean existing reinforcement and cut off any reinforcement which conflicts with cap placement. Drive pile and patch riprap as required by the Engineer. Removal and patching of riprap shall be considered subsidiary to bid item Class "C" Concrete (for Ext Struc).

HS20 LOADING (EXISTING)
HS25 LOADING (WIDENING) SHEET 1 OF 2

Parsons Brinckerhoff Quade & Douglas Inc.

Texas Department of Transportation

© 2003 by TxDOT

STATE OF TEXAS
ALLEN R. CROZIER
81450
REGISTERED PROFESSIONAL ENGINEER
Allen R. Crozier
6/25/03

ABUTMENT NO. 4
PHARR/McALLEN DRAINAGE DITCH BRIDGE WIDENING
NORTHBOUND & SOUTHBOUND MAINLANES PHASE 2 CONSTRUCTION

281ABT01A.DGN

DESIGNED: ARC	FED. RD DIV. No.	STATE	FEDERAL AID PROJECT No.			HIGHWAY No.
CHECKED: ALA	6	TEXAS	NH 2003 ( )			US 281
DRAWN: OJH	STATE DISTRICT	COUNTY	CONTROL No.	SECTION No.	JOB No.	SHEET No.
CHECKED: ARC	PHARR	HIDALGO	0255	08	091	1057

ESMERALDA G. EGGER
11:57:13 AM
06/25/2003
I:\projects\22322o\CADD\Sheets\Structures\Bridge\281Abt03.dgn

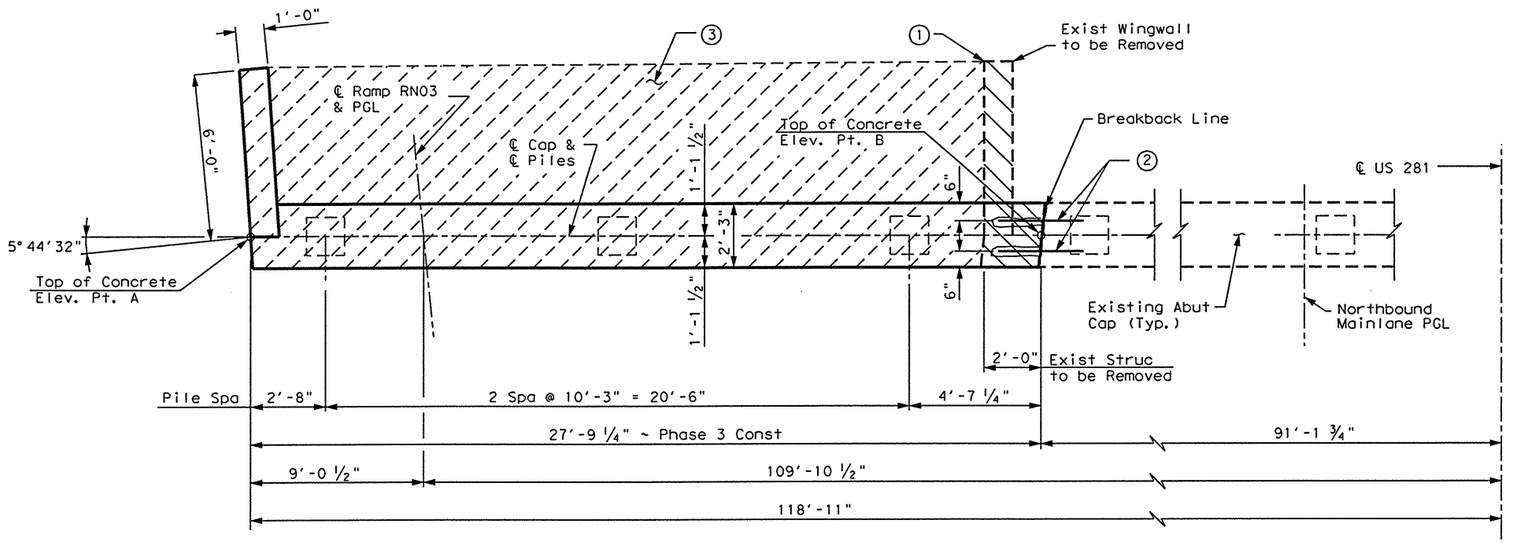

PLAN

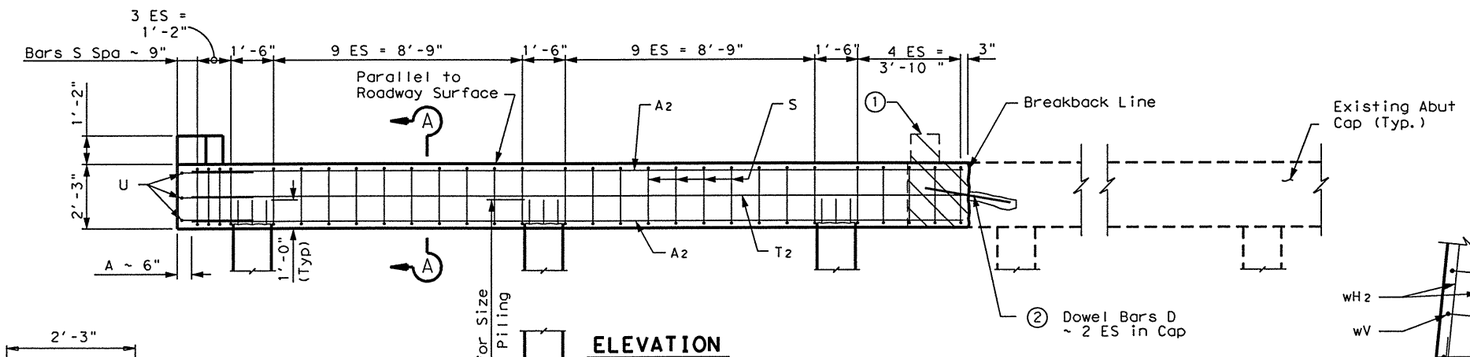

ELEVATION

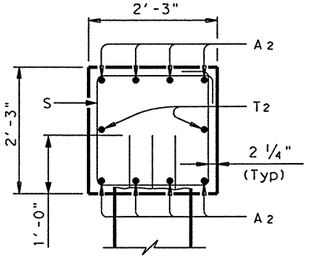

SECTION A-A

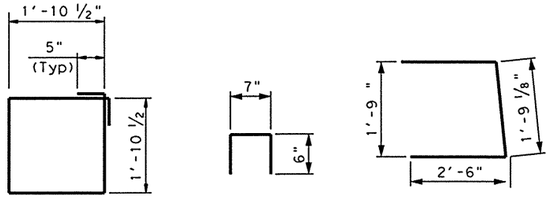

BARS S **BARS wU** **BARS U**

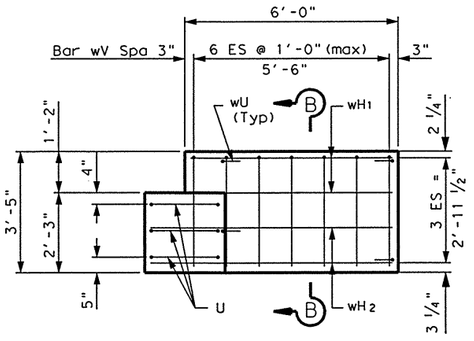

WINGWALL ELEVATION

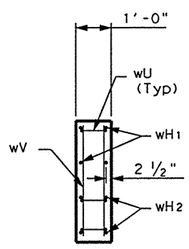

SECTION B-B

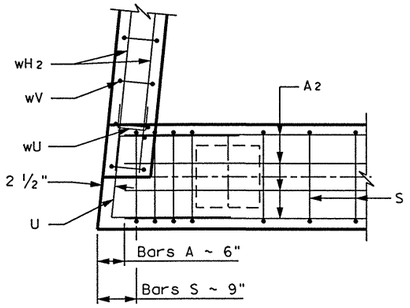

CORNER DETAILS

TABLE OF CONSTANT QUANTITIES

PHASE 2					PHASE 3				
Bar	No.	Size	Length	Weight	Bar	No.	Size	Length	Weight
A1	8	# 9	42'- 1"	1145	A2	8	# 9	27'- 2"	739
D	4	# 9	3'- 0"	41	D	2	# 9	3'- 0"	21
S	43	# 4	8'- 4"	239	S	29	# 4	8'- 4"	161
T1	2	# 5	42'- 1"	88	T2	2	# 5	27'- 2"	57
					U	3	# 6	6'- 9"	30
					wH1	4	# 6	5'- 8"	34
					wH2	2	# 6	6'-10"	21
					wU	4	# 4	1'- 7"	4
					wV	14	# 5	3'- 0"	44
Reinforcing Steel			Lb	1,513	Reinforcing Steel			Lb	1111
Class "C" Concrete (For Ext Struc)			CY	8.0	Class "C" Concrete (For Ext Struc)			CY	6.0

TABLE OF CAP ELEVATION

PHASE 3		PHASE 2		
A	B	C	D	E
104.90'	105.46'	106.86'	107.28'	106.95'

① Breakback hatched Portion of Existing Cap & Wingwall. Clean & extend existing Longitudinal reinforcement 1'-6" into new construction. Cut off remaining reinforcement at face of Concrete & Coat with Epoxy Grout.

② Drill & Grout Dowl Bar D ~ 1'-6" min into existing structure in accordance with the Standard Specification Item 420. Dowels shall be sloped at 12:1.

③ Breakback hatched portion of Existing riprap. Clean existing reinforcement and cut off any reinforcement which conflicts with cap placement. Drive pile and patch riprap as required by the Engineer. Removal and patching of riprap shall be considered subsidiary to bid item Class "C" Concrete (for Ext Struc).

GENERAL NOTES:

Designed according to AASTHO 1996 Standard and current Interim Specifications.
Calculated Foundation Load ~ 55 T/Pile.
See Foundation Detail Standard sheet, FD(MOD) and CP-S, for all Foundation details and notes.
Class "C" Concrete strength f'c = 3600 psi.
All reinforcing steel shall be Grade 60.

HS20 LOADING (EXISTING)
HS25 LOADING (WIDENING) SHEET 2 OF 2

Parsons Brinckerhoff Quade & Douglas Inc.

Texas Department of Transportation

© 2003 by TxDOT

STATE OF TEXAS
ALLEN R. CROZIER
81450
REGISTERED PROFESSIONAL ENGINEER
Allen R. Crozier
6/25/03

ABUTMENT NO. 4
PHARR/McALLEN DRAINAGE DITCH BRIDGE WIDENING
NORTHBOUND & SOUTHBOUND MAINLANES PHASE 3 CONSTRUCTION

281Abt03.DGN

DESIGNED: ARC	FED. RD DIV. No.	STATE	FEDERAL AID PROJECT No.			HIGHWAY No.		
CHECKED: ALA	6	TEXAS	NH 2003 ( )			US 281		
DRAWN: JMR	STATE DISTRICT	COUNTY	CONTROL No.	SECTION No.	JOB No.	SHEET No.		
CHECKED: ARC	PHARR	HIDALGO	0255	08	091	1058		

ESMERALDA G. EGGER
11:57:46 AM
06/25/2003
I:\projects\22322a\CADD\Sheets\Structures\Bridge\281Bnt01a.dgn

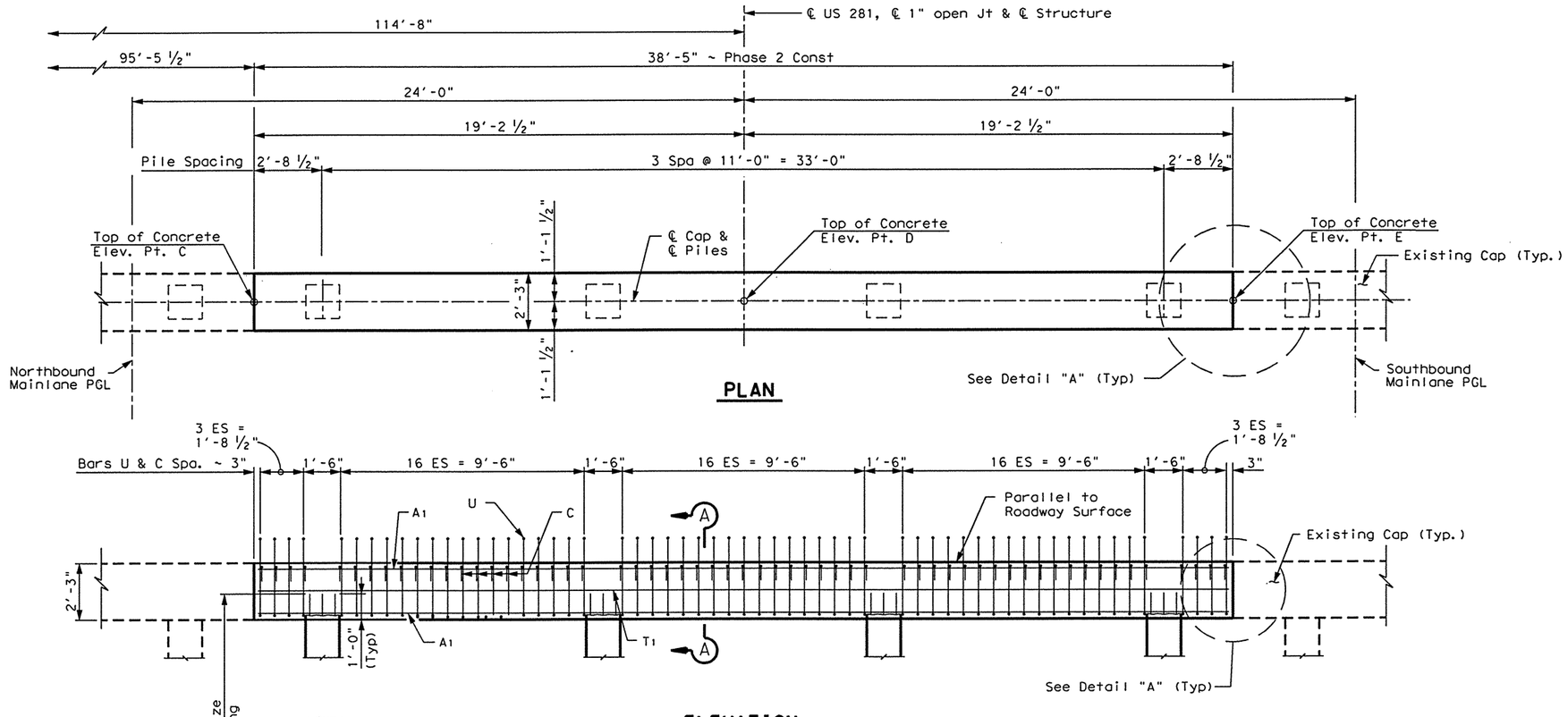

PLAN

ELEVATION

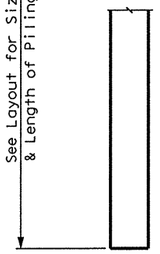

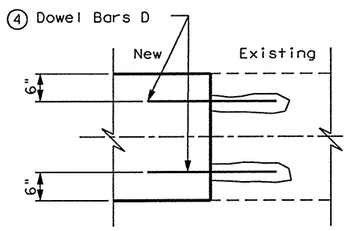

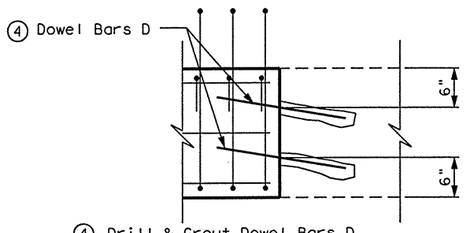

DETAIL A

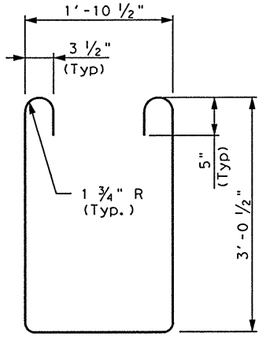

BARS U

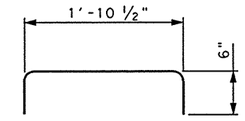

BARS C

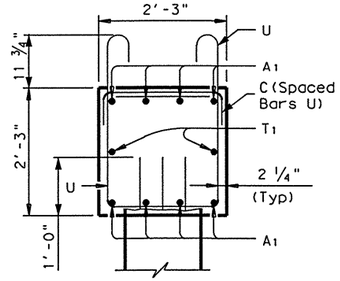

SECTION A-A

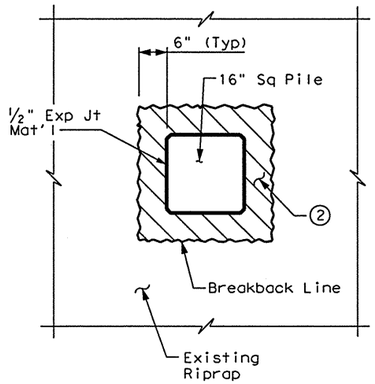

RIPRAP BREAKBACK DETAIL

① Breakback hatched portion of Existing riprap. Clean existing reinforcement and cut off any reinforcement which conflicts with pile placement. Drive pile and replace riprap in accordance with Item 432, Riprap. Removal and replacement of riprap shall be considered subsidiary to bid item Class "C" Concrete (for Ext Struc).

HS20 LOADING (EXISTING)
HS25 LOADING (WIDENING) SHEET 1 OF 2

Parsons Brinckerhoff Quade & Douglas Inc.

Texas Department of Transportation

© 2003 by TxDOT

STATE OF TEXAS
ALLEN R. CROZIER
81450
REGISTERED PROFESSIONAL ENGINEER

Allen R. Crozier
6/25/03

INTERIOR BENT NO. 2

PHARR/McALLEN DRAINAGE DITCH BRIDGE WIDENING

NORTHBOUND & SOUTHBOUND MAINLANES
PHASE 2 CONSTRUCTION

281Bnt01a.DGN

DESIGNED: ARC	FED. RD DIV. NO.	STATE	FEDERAL AID PROJECT No.			HIGHWAY No.	
CHECKED: ALA	6	TEXAS	NH 2003 ( )			US 281	
DRAWN: JMR	STATE DISTRICT	COUNTY	CONTROL No.	SECTION No.	JOB No.	SHEET No.	
CHECKED: ARC	PHARR	HIDALGO	0255	08	091	1059	

ESMERALDA G. EGGER
11:58:07 AM
06/25/2003
I:\projects\22322a\CADD\Sheets\Structures\Bridge\281Bnt02.dgn

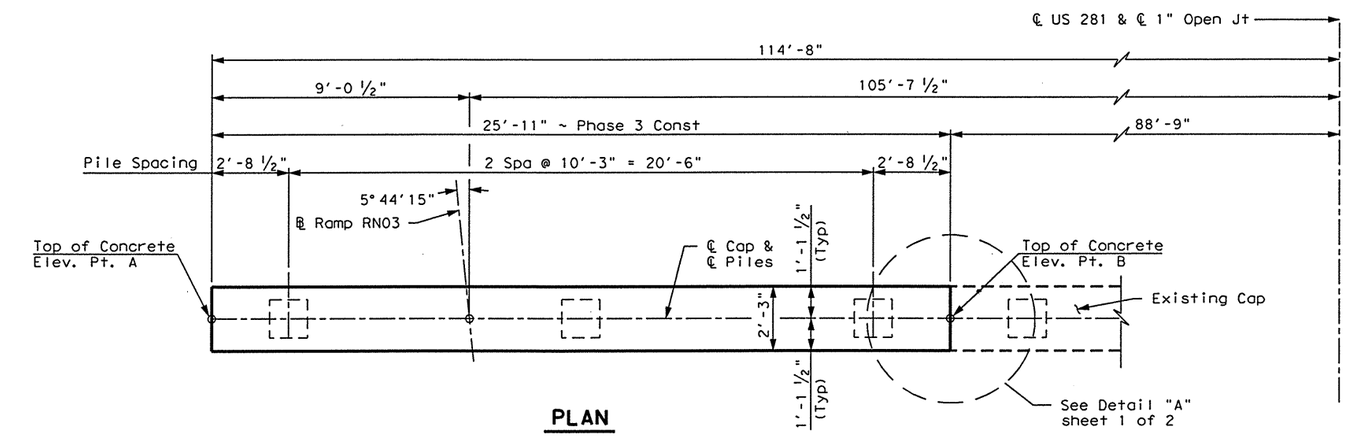

PLAN

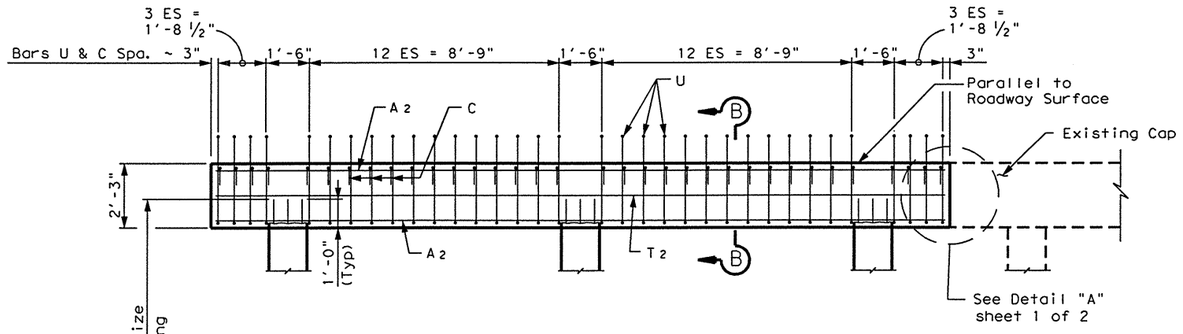

ELEVATION

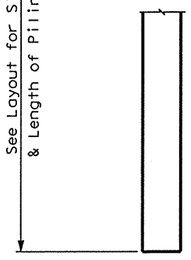

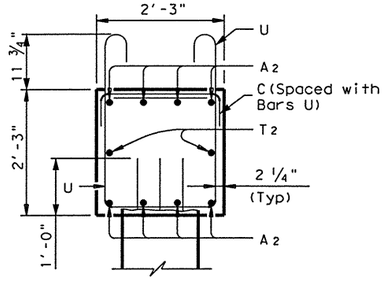

SECTION B-B

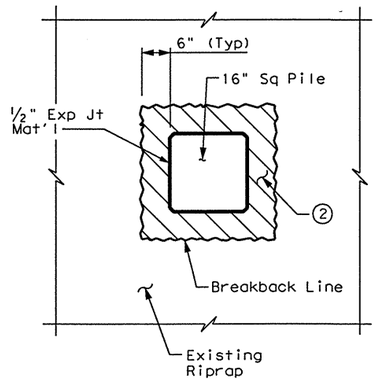

RIPRAP BREAKBACK DETAIL

TABLE OF CONSTANT QUANTITIES

PHASE 2					PHASE 3				
Bar	No.	Size	Length	Weight	Bar	No.	Size	Length	Weight
A1	8	# 9	38'- 1"	1036	A2	8	# 9	25'- 7"	696
C	59	# 4	2'-11"	115	C	34	# 4	2'-11"	66
D	8	# 9	3'- 0"	82	D	4	# 9	3'- 0"	41
T1	2	# 5	38'- 1"	79	T2	2	# 5	25'- 7"	53
U	59	# 4	9'- 2"	361	U	34	# 4	9 '- 2"	208
Reinforcing Steel			Lb	1673	Reinforcing Steel			Lb	1064
Class "C" Concrete (For Ext Struc)			CY	7.2	Class "C" Concrete (For Ext Struc)			CY	4.9

TABLE OF CAP ELEVATION

PHASE 3		PHASE 2		
A	B	C	D	E
104.68'	105.20'	106.59'	106.97'	106.66'

① Breakback hatched portion of Existing riprap. Clean existing reinforcement and cut off any reinforcement which conflicts with pile placement. Drive pile and replace riprap in accordance with Item 432, Riprap. Removal and replacement of riprap shall be considered subsidiary to bid item Class "C" Concrete (for Ext Struc).

GENERAL NOTES:

Designed according to AASTHO 1996 Standard and current Interim Specifications.
Calculated Foundation Load ~ 55 T/Pile.
See Foundation Detail Standard sheet, FD(MOD) and CP-S, for all Foundation details and notes.
Class "C" Concrete strength f'c = 3600 psi.
All reinforcing steel shall be Grade 60.

HS20 LOADING (EXISTING)
HS25 LOADING (WIDENING) SHEET 2 OF 2

Parsons Brinckerhoff Quade & Douglas Inc.

Texas Department of Transportation

© 2003 by TxDOT

STATE OF TEXAS
ALLEN R. CROZIER
81450
REGISTERED PROFESSIONAL ENGINEER

Allen R Crozier
6/25/03

INTERIOR BENT NO. 2

PHARR/McALLEN DRAINAGE DITCH BRIDGE WIDENING

NORTHBOUND & SOUTHBOUND MAINLANES
PHASE 3 CONSTRUCTION

281Bnt02.DGN

DESIGNED: ARC	FED. RD DIV. No.	STATE	FEDERAL AID PROJECT No.		HIGHWAY No.	
CHECKED: ALA	6	TEXAS	NH 2003 ( )		US 281	
DRAWN: JMR	STATE DISTRICT	COUNTY	CONTROL No.	SECTION No.	JOB No.	SHEET No.
CHECKED: ARC	PHARR	HIDALGO	0255	08	091	1060

ESMERALDA G. EGGER
12:03:13 PM
06/25/2003
I:\projects\22322a\CADD\Sheets\Structures\Bridge\281Bnt01.dgn

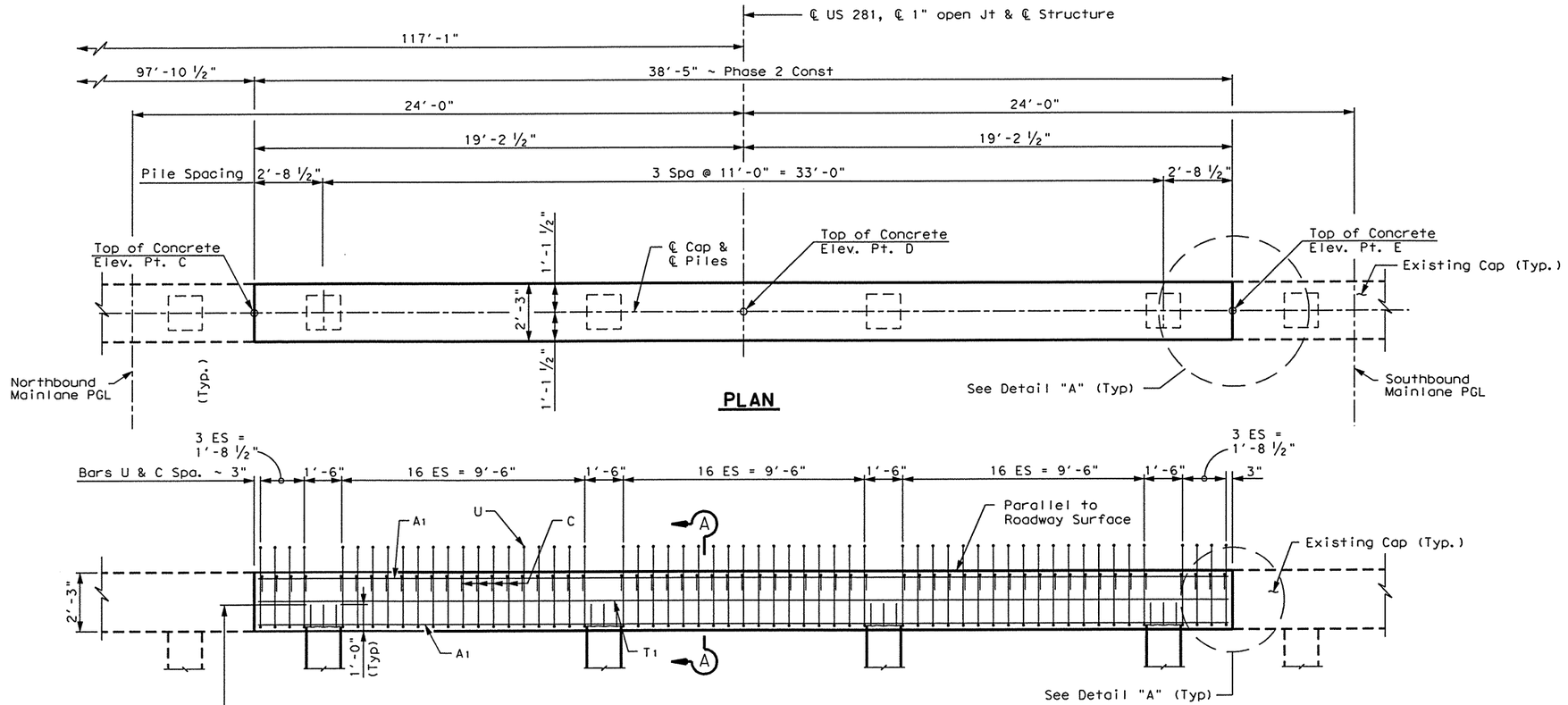

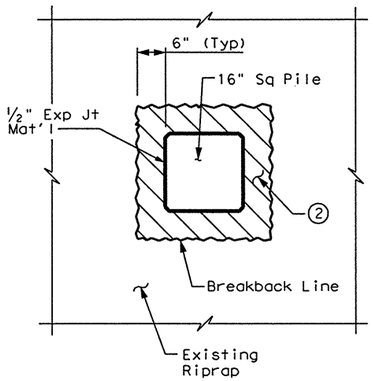

RIPRAP BREAKBACK DETAIL

① Breakback hatched portion of Existing riprap. Clean existing reinforcement and cut off any reinforcement which conflicts with pile placement. Drive pile and replace riprap in accordance with Item 432, Riprap. Removal and replacement of riprap shall be considered subsidiary to bid item Class "C" Concrete (for Ext Struc).

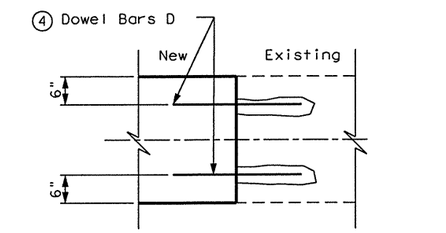

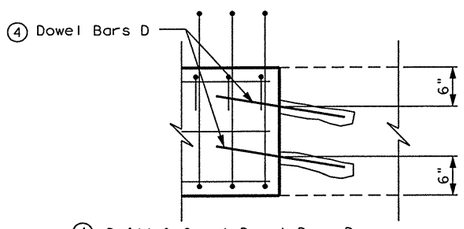

DETAIL A

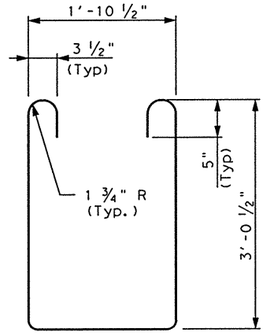

BARS U

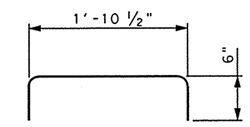

BARS C

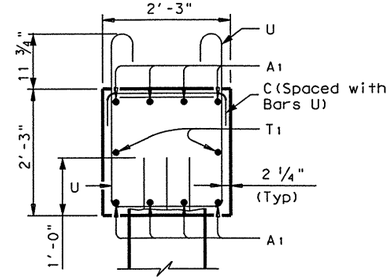

SECTION A-A

HS20 LOADING (EXISTING)
HS25 LOADING (WIDENING) SHEET 1 OF 2

Parsons Brinckerhoff Quade & Douglas Inc.

Texas Department of Transportation

© 2003 by TxDOT

INTERIOR BENT NO. 3

PHARR/McALLEN DRAINAGE DITCH BRIDGE WIDENING

NORTHBOUND & SOUTHBOUND MAINLANES
PHASE 2 CONSTRUCTION

281Bnt01.DGN

DESIGNED: ARC	FED. RD DIV. NO.	STATE	FEDERAL AID PROJECT NO.			HIGHWAY NO.
CHECKED: ALA	6	TEXAS	NH 2003 ( )			US 281
DRAWN: JMR	STATE DISTRICT	COUNTY	CONTROL NO.	SECTION NO.	JOB NO.	SHEET NO.
CHECKED: ARC	PHARR	HIDALGO	0255	08	091	1061

STATE OF TEXAS
ALLEN R. CROZIER
81450
REGISTERED PROFESSIONAL ENGINEER

Allen R. Crozier
6/25/03

ESMERALDA G. EGGER
12:03:51 PM
06/25/2003
I:\projects\22322a\CADD\Sheets\Structures\Bridge\281Bnt03.dgn

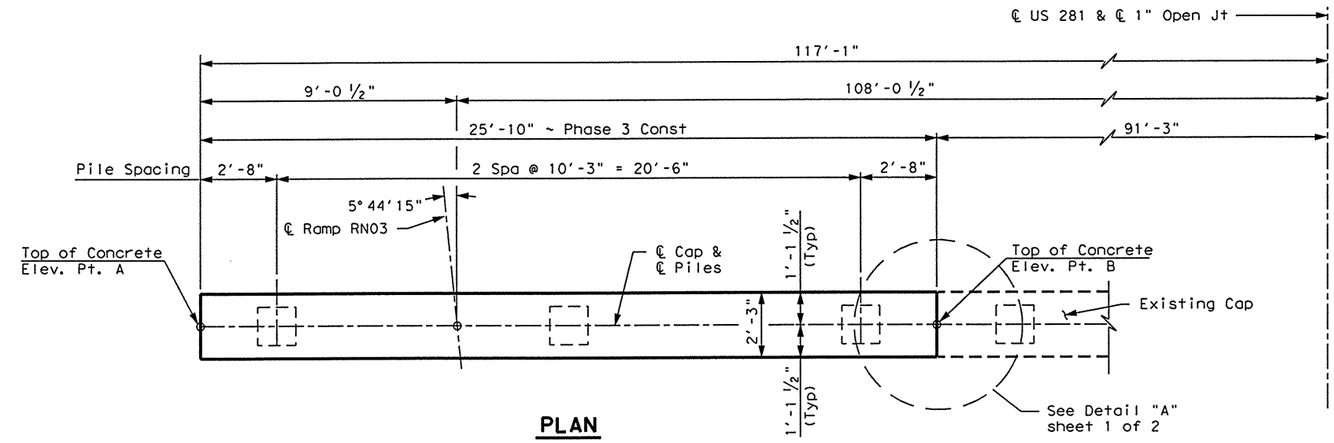

PLAN

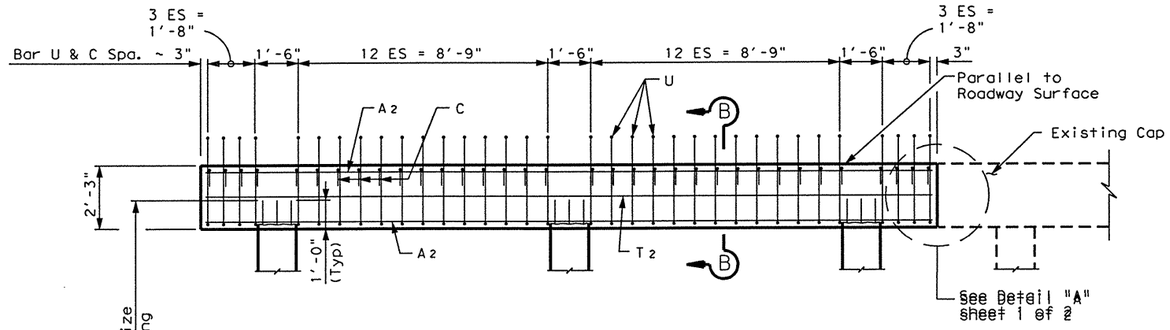

ELEVATION

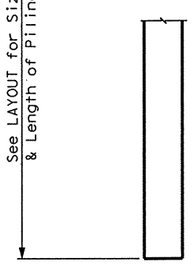

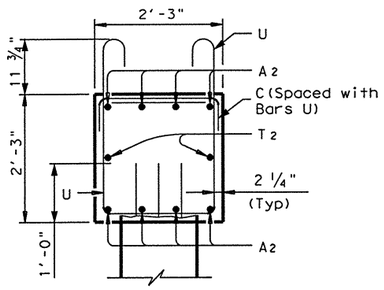

SECTION B-B

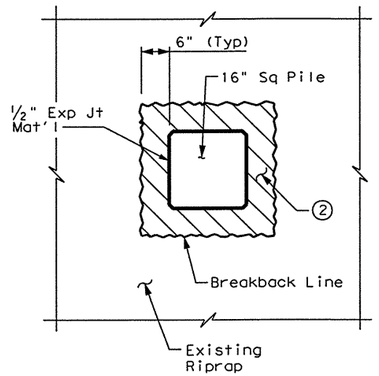

RIPRAP BREAKBACK DETAIL

TABLE OF CONSTANT QUANTITIES

PHASE 2					PHASE 3				
Bar	No.	Size	Length	Weight	Bar	No.	Size	Length	Weight
A1	8	# 9	38'- 1"	1036	A2	8	# 9	25'- 7"	696
C	59	# 4	2'-11"	76	C	34	# 4	2'-11"	66
D	8	# 9	3'- 0"	82	D	4	# 9	3'- 0"	41
T1	2	# 5	38'- 1"	79	T2	2	# 5	25'- 6"	53
U	59	# 4	9'- 2"	361	U	34	# 4	9 '- 2"	208
Reinforcing Steel				Lb 1634	Reinforcing Steel				Lb 1064
Class "C" Concrete (For Ext Struc)				CY 7.2	(For Ext Struc)				CY 4.8

TABLE OF CAP ELEVATION

PHASE 3		PHASE 2		
A	B	C	D	E
104.80'	105.32'	106.76'	107.14'	106.84'

① Breakback hatched portion of Existing riprap. Clean existing reinforcement and cut off any reinforcement which conflicts with pile placement. Drive pile and replace riprap in accordance with Item 432, Riprap. Removal and replacement of riprap shall be considered subsidiary to bid item Class "C" Concrete (for Ext Struc).

GENERAL NOTES:

Designed according to AASTHO 1996 Standard and current Interim Specifications.
Calculated Foundation Load ~ 55 T/Pile.
See Foundation Detail Standard sheet, FD(MOD) and CP-S, for all Foundation details and notes.
Class "C" Concrete strength f'c = 3600 psi.
All reinforcing steel shall be Grade 60.

HS20 LOADING (EXISTING)
HS25 LOADING (WIDENING) SHEET 2 OF 2

Parsons Brinckerhoff Quade & Douglas Inc.

Texas Department of Transportation

© 2003 by TxDOT

STATE OF TEXAS
ALLEN R. CROZIER
81450
REGISTERED PROFESSIONAL ENGINEER

Allen R. Crozier
6/25/03

INTERIOR BENT NO. 3
PHARR/McALLEN DRAINAGE DITCH BRIDGE WIDENING
NORTHBOUND & SOUTHBOUND MAINLANES PHASE 3 CONSTRUCTION

281Bnt03.DGN

DESIGNED: ARC	FED. RD DIV. No.	STATE	FEDERAL AID PROJECT No.	HIGHWAY No.
CHECKED: ALA	6	TEXAS	NH 2003 ( )	US 281

DRAWN: JMR	STATE DISTRICT	COUNTY	CONTROL No.	SECTION No.	JOB No.	SHEET No.
CHECKED: ARC	PHARR	HIDALGO	0255	08	091	1062

ESMERALDA G. EGGER
12:05:17 PM
06/25/2003
I:\projects\22322a\CADD\Sheets\Structures\Bridge\281Spn03.dgn

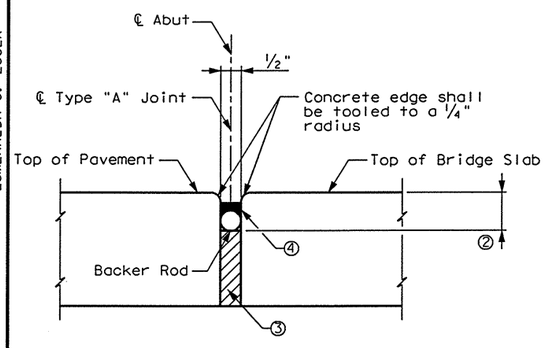

② Per manufacturer's recommendation.

③ 1/2" compressible expansion joint material.

④ Sealant shall be Class 7 in accordance with ITEMS 420.5 and 433. Sealant shall be installed as per manufacturer's recommendations.

TYPE "A" JOINT DETAIL

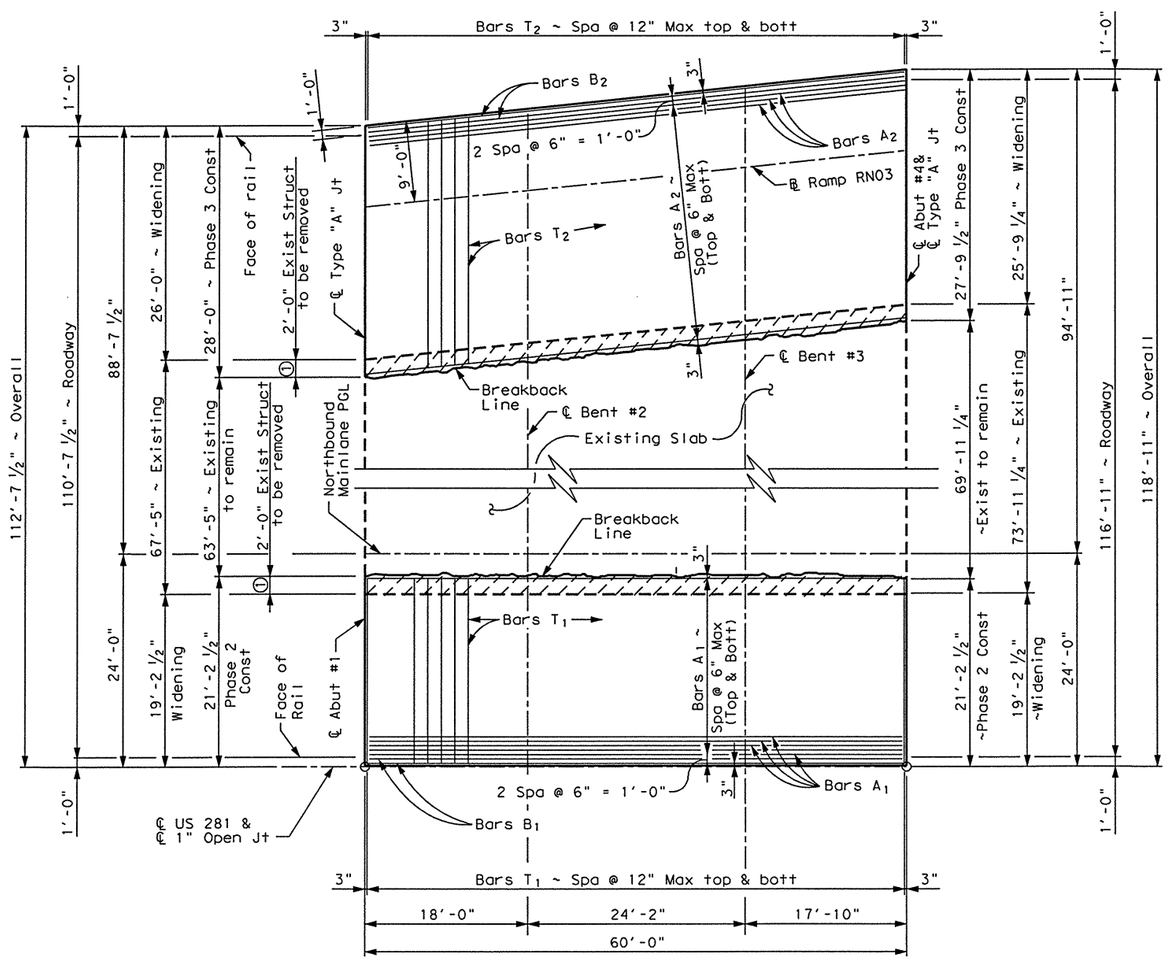

PLAN

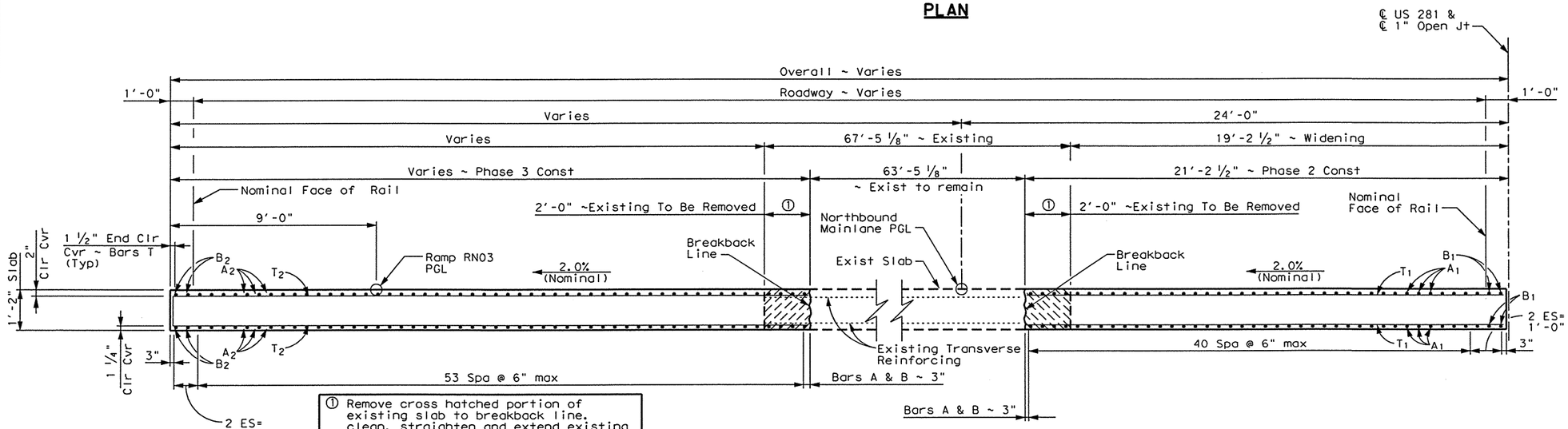

① Remove cross hatched portion of existing slab to breakback line. clean, straighten and extend existing transverse reinforcing 1'-10" into new construction. Remove any exposed existing longitudinal reinforcing.

TYPICAL TRANSVERSE SECTION

PHASE 2 TABLE OF ESTIMATED QUANTITIES

Bar	No.	Size	Length	Weight
A_1	82	#7	59'-8"	10,000
B_1	4	#8	59'-8"	637
T_1	61	#5	21'-0"	1,336
Reinforcing Steel			LB	11,973
Class "S" Conc. (For Ext Struc)			CY	55.0

PHASE 3 TABLE OF ESTIMATED QUANTITIES

Bar	No.	Size	Length	Weight
A_2	108	#7	59'-11"	13,227
B_2	4	#8	59'-11"	640
T_2	61	#5	27'-5"	1,744
Reinforcing Steel			LB	15,611
Class "S" Conc. (For Ext Struc)			CY	72.3

STATE OF TEXAS
ALLEN R. CROZIER
81450
REGISTERED PROFESSIONAL ENGINEER
Allen R. Crozier
6/25/03

GENERAL NOTES:

Designed according to 1996 AASHTO standard and current interim specifications.

All reinforcing shall be Grade 60.

Class "S" Concrete strength f'c= 4000 psi

Bar laps, where required, shall be as follows:

~ #4 = 1'-5"

~ #5 = 1'-9"

HS20 LOADING (EXISTING)
HS25 LOADING (WIDENING)

Parsons Brinckerhoff Quade & Douglas Inc.

Texas Department of Transportation

© 2003 by TxDOT

60'-0" NOMINAL CONT CONC SLAB UNIT

PHARR/McALLEN DRAIN DITCH BRIDGE WIDENING

NORTHBOUND MAINLANES

281Spn03.DGN

DESIGNED: ARC	FED. RD DIV. No.	STATE	FEDERAL AID PROJECT No.	HIGHWAY No.
CHECKED: ALA	6	TEXAS	NH 2003 ( )	US 281

DRAWN: QJH	STATE DISTRICT	COUNTY	CONTROL No.	SECTION No.	JOB No.	SHEET No.
CHECKED: ARC	PHARR	HIDALGO	0255	08	091	1063

ESMERALDA G. EGGER
12:05:56 PM
06/25/2003
I:\projects\22322g\CADD\Sheets\Structures\Bridge\281Spn02.dgn

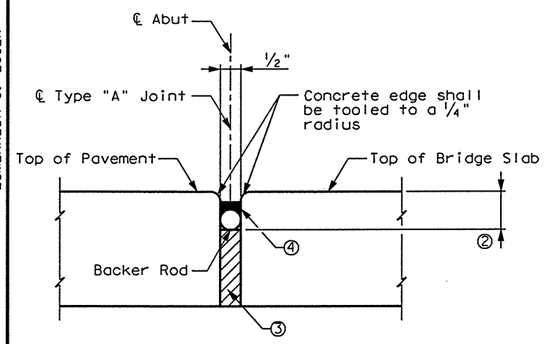

② Per manufacturer's recommendation.

③ ½" compressible expansion joint material.

④ Sealant shall be Class 7 in accordance with ITEMS 420.5 and 433. Sealant shall be installed as per manufacturer's recommendations.

TYPE "A" JOINT DETAIL

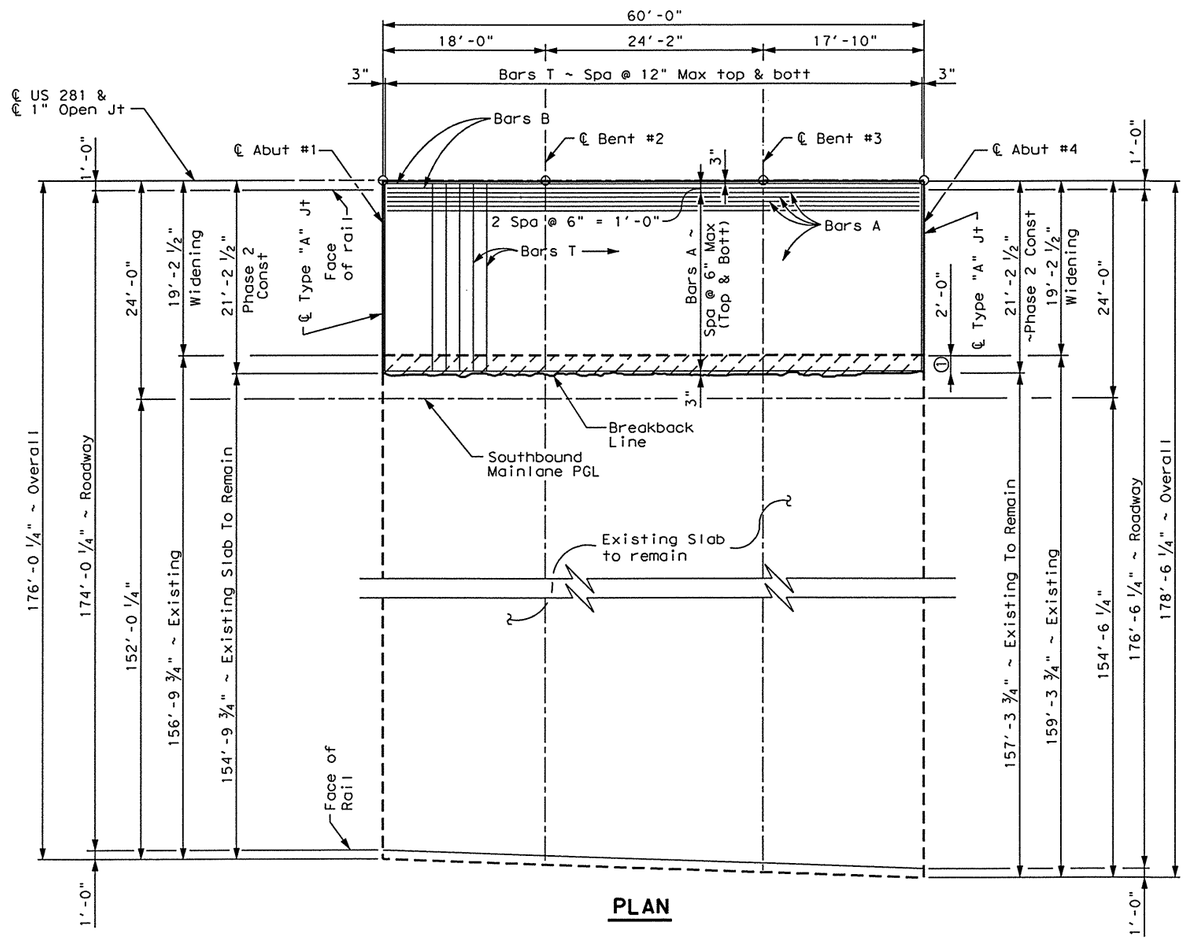

PLAN

① Remove cross hatched portion of existing slab to breakback line. clean, straighten and extend existing transverse reinforcing 1'-10" into new construction. Remove any exposed existing longitudinal reinforcing.

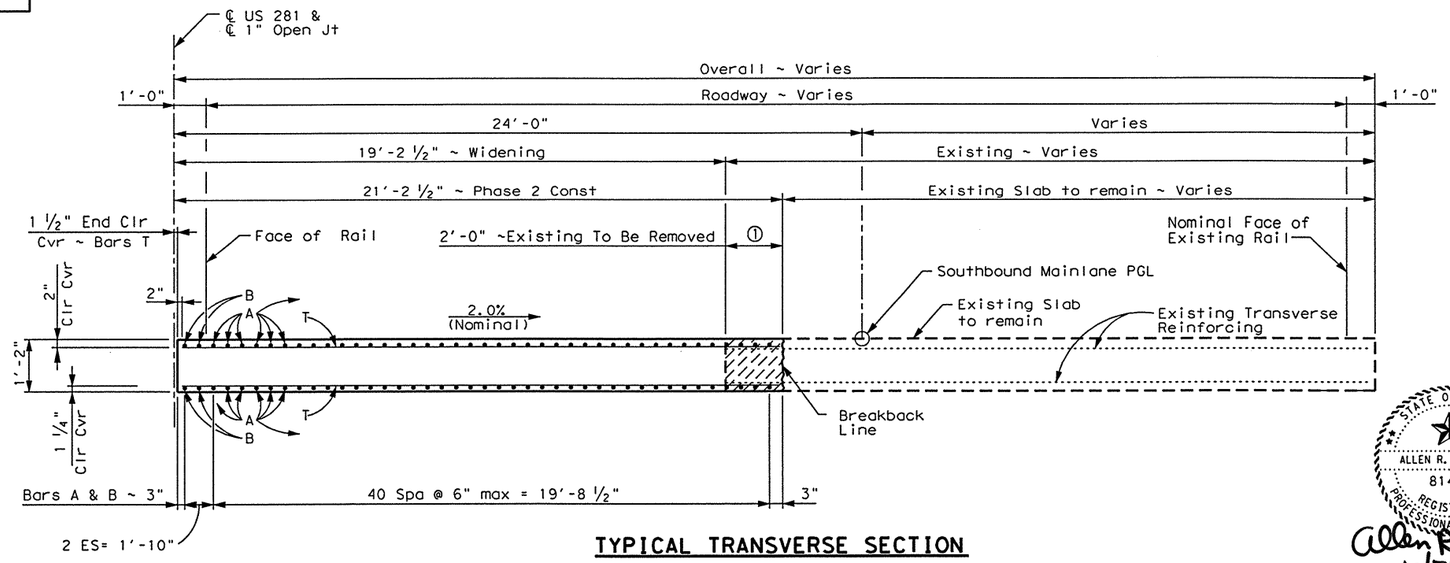

TYPICAL TRANSVERSE SECTION

TABLE OF ESTIMATED QUANTITIES				
Bar	No.	Size	Length	Weight
A	82	#7	59'-8"	10,000
B	4	#8	59'-8"	637
T	61	#5	21'-1"	1,341
Reinforcing Steel			LB	11,978
Class "S" Conc (For Ext Struc)			CY	55.0

GENERAL NOTES:

Designed according to 1996 AASHTO standard and current interim specifications.

All reinforcing shall be Grade 60.

Class "S" Concrete strength f'c= 4000 psi

Bar laps, where required, shall be as follows:

~ #4 = 1'-5"

~ #5 = 1'-9"

HS20 LOADING (EXISTING)
HS25 LOADING (WIDENING)

Parsons Brinckerhoff Quade & Douglas Inc.

Texas Department of Transportation

© 2003 by TxDOT

60'-0" NOMINAL CONT CONC SLAB UNIT

PHARR/McALLEN DRAIN DITCH BRIDGE WIDENING

SOUTHBOUND MAINLANES

STATE OF TEXAS
ALLEN R. CROZIER
81450
REGISTERED PROFESSIONAL ENGINEER
Allen R. Crozier
6/25/03

281Spn02.DGN

DESIGNED: ARC	FED. RD DIV. No.	STATE	FEDERAL AID PROJECT No.			HIGHWAY No.
CHECKED: ALA	6	TEXAS	NH 2003 ( )			US 281
DRAWN: OJH	STATE DISTRICT	COUNTY	CONTROL No.	SECTION No.	JOB No.	SHEET No.
CHECKED: ARC	PHARR	HIDALGO	0255	08	091	1064

ALLEN CROZIER
03:16:30 PM
06/25/2003

LIMITS OF PROP RIPRAP (TYP)
① EXIST RIPRAP TO BE REMOVED & REPLACED
Test Hole No. S-1-E Sta 819+77, 96' Lt
40' ~BPA-1 W/ SIGN 7.7' FROM ℄ BENT #2
FO TWC
N 81° 30' 16" W 15.55 ℄ SIOUX RD
12'-0" WIDENING 14'-10" PHASE 3 CONST.
25' ~BPA-1 W/ SIGN 12.7' FROM ℄ BENT #3
① EXIST RIPRAP TO BE REMOVED & REPLACED
LIMITS OF PROP RIPRAP (TYP)
PROP MBGF TRANS & TYPE II CURB
PROP 150' MBGF & 1-SGT(8)-01

BEGIN NB BRIDGE
FACE OF BKWL @ ℄ ABUT #1
NOMINAL STA 819+85.39
(24' LT)
ELEV = 128.96

3:1
NOMINAL FACE OF TY SSTR RAIL
1'-0"
2.0% NOMINAL
11'-0" OVERALL
69'-0" ROADWAY
47'-0"
40'-0" EXISTING 34'-4" EXISTING TO REMAIN
℄ BENT #3
NOMINAL STA 821+75.64
(24' RT)
11'-2" CLR ℄ BM #1
℄ EXIST BM #1
BREAKBACK LINE
EXIST RIPRAP TO REMAIN
PROP 50' MBGF & 1-TAS
PROP MBGF TRANS & TYPE II CURB
℄ BENT #2
NOMINAL STA 820+80.46
(24' RT)
6'-6" CLR
6'-2" CLR
11'-0" CLR
℄ ARMOR JT W/ SILICONE SEALANT SEE SHEET AJ (SPL) (TYP)
END NB BRIDGE
FACE OF BKWL @ ℄ ABUT #4
NOMINAL STA 822+70.61
(24' LT)
ELEV = 128.95
Test Hole No. S-3-E Sta 822+60, 24' Lt
10' SHLD 12' AUX LN 12' LN 12' LN 12' LN 10' SHLD
820+00
BREAKBACK LINE
EXIST RIPRAP TO REMAIN
EXIST RIPRAP TO BE REMOVED ①
EXIST MBGF TO BE REMOVED
EXISTING AND PROPOSED NORTHBOUND MAINLANE PGL
S 8° 29' 57.64" W
℄ BM #5
℄ EXIST BM #6
19'-0" WIDENING 21'-10" PHASE 2 CONST.
24'-0"
1'-0"
B SWB
2:1
820+00
NOMINAL FACE OF SSCB (1)-99 42" HIGH
EXIST & PROP ℄ US 281, ℄ SSCB (TY 1) & ℄ 1" OPEN JT
820+00
FO TWC
STA 821+28.21 (US 281)
STA 17+93.30 (SIOUX RD)
B SWB

THE CONTRACTOR SHALL VERIFY ALL DIMENSIONS AND ELEVATIONS IN THE FIELD PRIOR TO ORDERING MATERIALS OR BEGINNING CONSTRUCTION.

25'-0" TURN AROUND | 20'-0" | 40'-0" | 40'-0" | 20'-0" | 25'-0" TURN AROUND

PLAN

① REMOVAL OF CONCRETE RIPRAP SHALL BE SUBSIDIARY TO ITEM 100 "PREP ROW"

ALL ABUTMENTS/BENTS ARE ON A BEARING OF N 81° 30' 16" W. ALL ABUTMENT/BENT CENTERLINES SHALL BE CONSTRUCTED TO MATCH EXISTING SUBSTRUCTURE CENTERLINES.

EXISTING RIPRAP TO BE REMOVED AND REPLACED

EXISTING RIPRAP TO BE REMOVED

- TEST HOLE

- POINT OF MIN VERT CLEAR
STA 820+68.21 (68' LT)
STA 821+28.21 (68' LT)
STA 821+88.21 (68' LT)

- CENTER OF 10' SSCB (TY. 4) RAIL AT ℄ US 281.
STA 820+20.00
STA 822+40.00

BM US 281-5
STA 817+01.19
OFFSET = 211.65' LT
ELEV = 107.46
DESC = 3 ¼" TxDOT ALUM DISK

STATE OF TEXAS
ALLEN R. CROZIER
81450
REGISTERED PROFESSIONAL ENGINEER
6/25/03

BEGIN SSTR RAIL FOR PAYMENT
OVERALL LENGTH OF SSTR RAIL (LT SIDE) = 309'- 2 5/8"
OVERALL LENGTH OF SSCB RAIL (CENTER) = 285'- 2 5/8"
12'-0"
OVERALL LENGTH OF BRIDGE = 285'- 2 5/8"
12'-0"
END SSTR RAIL FOR PAYMENT
BEGIN SSCB RAIL FOR PAYMENT
95'-0 7/8" PRESTR CONC BM SPAN (TYPE IV BMS)
95'-2 1/8" PRESTR CONC BM SPAN (TYPE IV BMS)
94'-11 5/8" PRESTR CONC BM SPAN (TYPE IV BMS)
END SSCB RAIL FOR PAYMENT

BEGIN NB BRIDGE
FACE OF BKWL @ ℄ ABUT #1
NOMINAL STA 819+85.39
(24' LT)
ELEV = 128.96

STA = 820+50.00
ELEV = 137.80
L = 1,310.00'
K = 251
ex = -8.56'
(+)2.9198 % (-)2.3056%

PROP MBGF TRANS & TYPE II CURB
PROP 50' MBGF & 1-TAS
TYPE SSTR RAIL OR SSCB
END NB BRIDGE
FACE OF BKWL @ ℄ ABUT #4
NOMINAL STA 822+70.61
(24' LT)
ELEV = 128.95
PROP MBGF TRANS & TYPE II CURB
PROP 150' MBGF & 1-SGT(8)-01

EXIST NATURAL GROUND
2:1 RR9
Test Hole No. S-1-E Elev = 107.47
CALC MIN VERT CLR = 16.58'
1.0%
2.5%
2.5%
CALC MIN VERT CLR = 16.61'
1.0%
2:1 RR9
Test Hole No. S-3-E Elev = 106.89
MAINLANE PGL PROP NORTHBOUND

"H" = 15.0'
CALC MIN VERT CLR =16.57'
PROPOSED FINISHED GRADE
"H" = 15.0'

14(6) 15(6) CLAY, silty, lt. tan, moist, soft
19(6) 23(6) CLAY, silty, reddish tan, moist, stiff
CLAY, silty w/ white streaks of calcium, lt. tan, dry, very stiff
25(6) 23(6) CLAY, silty, lt. tan w/rust streaks, dry, very stiff
47(6) 53(5.625) CLAY, silty, reddish tan, moist, very stiff
CLAY, silty, lt. gray, moist, very stiff
CLAY, silty, lt. tan w/rust streaks, moist
B/H = 57.47'

9(6) 10(6) TOP SOIL, gray
14(6) 15(6) CLAY, silty, lt. tan, moist, stiff
11(6) 14(6) CLAY, silty, reddish tan, moist, stiff
15(6) 17(6) CLAY, silty, lt. tan, moist, stiff
13(6) 19(6) CLAY, silty, lt. brown, moist, stiff
15(6) 21(6)
23(6) 26(6) CLAY, silty, reddish tan, moist, hard, very stiff
37(6) 47(6)
48(6) 52(4.625)
B/H = 56.9'

① 4~30" DIA D.S. (PHASE 2) 2~30" DIA. D.S. (PHASE 3) X 54'
② 3~42" DIA. D.S. (PHASE 2) 1~ 42" DIA D.S. (PHASE 3) X 46'
③
④ 4~30" DIA. D.S. (PHASE 2) 2~30" DIA D.S. (PHASE 3) X 59'

ELEVATION

185 165 145 125 105 85 65 45 25 5
820+00 821+00 822+00 823+00

NOTES:

DESIGNED IN ACCORDANCE WITH 1996 AASHTO STANDARD SPECIFICATIONS AND ALL CURRENT INTERIMS.

ELEVATIONS BASED ON THE CURRENT NAVD 88 DATUM. EXISTING STRUCTURE WAS SURVEYED UNDER THE USGS&GS DATUM SYSTEM.

BRIDGE STATIONS BASED ON SURVEY OF EXISTING STRUCTURE.

NEW SLAB SHALL MATCH EXISTING SLAB PROFILE AT CONSTRUCTION JOINTS WITH ADJUSTMENTS FOR A 2% NOMINAL CROSS-SLOPE.

BORE HOLE DATA TAKEN FROM EXISTING PLANS. CSJ: 0255-08-063

FUNC CLASS	: FREEWAY
DESIGN SPEED	: 70 MPH
ADT(2002)	: 56,200 VPD
ADT(2022)	: 91,400 VPD
NBI	: 21-109-0-0255-08-076
EXIST PSN	: 0255-08-076

HS25 LOADING (WIDENING)
HS20 LOADING (EXISTING)

Parsons Brinckerhoff Quade & Douglas Inc.

Texas Department of Transportation

© 2003 by TxDOT

BRIDGE LAYOUT
SIOUX RD OVERPASS
WIDENING
NORTHBOUND MAINLANES

PLAN 1"= 40' HORIZ
PROFILE 1"= 40' VERT

281BL04.DGN

DESIGNED: ARC	FED. RD DIV. No.	STATE	FEDERAL AID PROJECT No.	HIGHWAY No.
CHECKED: ABM	6	TEXAS	NH 2003 ( )	US 281

DRAWN: OJH	STATE DISTRICT	COUNTY	CONTROL No.	SECTION No.	JOB No.	SHEET No.
CHECKED: ARC	PHARR	HIDALGO	0255	08	091	1065

i:\Projects\22322oCADD\Sheets\Structures\Bridge\281BL04.dgn

ALLEN CROZIER
03:16:47 PM
06/25/2003

STA 821+28.21 (US 281)
STA 17+93.30 (SIOUX RD)

℄ BENT #3
NOMINAL STA 821+75.64
(24' RT)

Test Hole No. S-3-E
Sta 822+60, 24' Lt

① EXIST RIPRAP TO BE REMOVED (TYP)

EXIST MBGF TO BE REMOVED

EXIST & PROP ℄ US 281,
℄ SSCB. (TY. J.) & ℄ J." OPEN JT.

EXIST & PROP SOUTHBOUND MAINLANE PGL

820+00

S 8° 29' 57.64" W (2.36" E)

S 81° 30' 16" W

NOMINAL FACE OF SSCB (1)-99
42" HIGH

2:1

℄ BM #1

BREAKBACK LINE

EXIST RIPRAP TO BE REMOVED (TYP) ①

℄ ARMOR JT W/ SILICONE SEALANT SEE SHEET AJ (SPL) (TYP)

℄ EXIST BM #1

END SB BRIDGE
FACE OF BKWL @ ℄ ABUT #4
NOMINAL STA 822+70.61
(24' RT)
ELEV = 128.92

℄ EXIST BM #6

PROP MBGF TRANS & TYPE II CURB

NOMINAL FACE OF TY SSTR RAIL

PROP 225' MBGF & 1-SGT(8)-01

℄ BM #5

PROP MBGF TRANS & TYPE II CURB

BEGIN SB BRIDGE
FACE OF BKWL @ ℄ ABUT #1
NOMINAL STA 819+85.39
(24' RT)
ELEV = 129.04

℄ BENT #2
NOMINAL STA 820+80.46
(24' RT)

25' BPA-1 W/ SIGN
12.4' FROM ℄ BENT #2

40' BPA-1 W/ SIGN
7.6' FROM ℄ BENT #3

PROP 150' MBGF & 1-TAS

LIMITS OF PROP RIPRAP (TYP)

① EXISTING RIPRAP TO BE REMOVED & REPLACED (TYP)

NOMINAL FACE OF TY SSTR RAIL

LIMITS OF PROP RIPRAP (TYP)

① EXISTING RIPRAP TO BE REMOVED & REPLACED (TYP)

THE CONTRACTOR SHALL VERIFY ALL DIMENSIONS AND ELEVATIONS IN THE FIELD PRIOR TO ORDERING MATERIALS OR BEGINNING CONSTRUCTION.

① REMOVAL OF CONCRETE RIPRAP SHALL BE SUBSIDIARY TO ITEM 100 "PREP ROW"

11'-0" CLR | 6'-5" CLR | 6'-2" CLR | 11'-4" CLR

71'-0" OVERALL | 47'-0" | 69'-0" ROADWAY | 40'-0" EXISTING | 34'-4" EXISTING TO REMAIN | 19'-0" WIDENING | 21'-10" PHASE 2 CONST. | 14'-10" PHASE 3 CONST. | 12'-0" WIDENING

FO TWC | 2.0% NOMINAL | 1'-0" | 1'-0" | N 81° 30' 16" W ℄ SIOUX RD.

25'-0" TURN AROUND | 20'-0" | 40'-0" | 40'-0" | 20'-0" | 25'-0" TURN AROUND

PLAN

ALL ABUTMENTS/BENTS ARE ON A BEARING OF N 81° 30' 16" W. ALL ABUTMENT/BENT CENTERLINES SHALL BE CONSTRUCTED TO MATCH EXISTING SUBSTRUCTURE CENTERLINES.

EXISTING RIPRAP TO BE REMOVED AND REPLACED

EXISTING RIPRAP TO BE REMOVED

- TEST HOLE

- POINT OF MIN VERT CLEAR
STA 820+68.21 (68' RT)
STA 821+28.21 (68' RT)
STA 821+88.21 (68' RT)

- CENTER OF 10' SSCB (TY. 4) RAIL AT ℄ US 281.
STA 820+20.00
STA 822+40.00

BM US 281-5
STA 817+01.19
OFFSET = 211.65' LT
ELEV = 107.46
DESC = 3 ¼" TxDOT ALUM DISK

STATE OF TEXAS
ALLEN R. CROZIER
81450
REGISTERED PROFESSIONAL ENGINEER

Allen R. Crozier 6/25/03

NOTES:

DESIGNED IN ACCORDANCE WITH 1996 AASHTO STANDARD SPECIFICATIONS AND ALL CURRENT INTERIMS.

ELEVATIONS BASED ON THE CURRENT NAVD 88 DATUM. EXISTING STRUCTURE WAS SURVEYED UNDER THE USGS&GS DATUM SYSTEM.

BRIDGE STATIONS BASED ON SURVEY OF EXISTING STRUCTURE.

NEW SLAB SHALL MATCH EXISTING SLAB PROFILE AT CONSTRUCTION JOINTS WITH ADJUSTMENTS FOR A 2% NOMINAL CROSS-SLOPE.

BORE HOLE DATA TAKEN FROM EXISTING PLANS. CSJ: 0255-08-063

FUNC CLASS	: FREEWAY
DESIGN SPEED	: 70 MPH
ADT(2002)	: 56,200 VPD
ADT(2022)	: 91,400 VPD
NBI	: 21-109-0-0255-08-077
EXIST PSN	: 0255-08-077

HS25 LOADING (WIDENING)
HS20 LOADING (EXISTING)

OVERALL LENGTH OF SSTR RAIL (RT SIDE) = 309'- 2 5/8"
OVERALL LENGTH OF SSCB RAIL (CENTER) = 285'-2 5/8"
OVERALL LENGTH OF BRIDGE = 285'-2 5/8"

BEGIN SSTR RAIL FOR PAYMENT
BEGIN SSCB RAIL FOR PAYMENT
END SSTR RAIL FOR PAYMENT
END SSCB RAIL FOR PAYMENT

95'-0 7/8" PRESTR CONC BM SPAN (TYPE IV BMS)
95'-2 1/8" PRESTR CONC BM SPAN (TYPE IV BMS)
94'-11 5/8" PRESTR CONC BM SPAN (TYPE IV BMS)

12'-0"

STA = 821+10.00
ELEV = 140.50
L = 1,500.00'
K = 253
ex = -11.12'

(+)2.9950 % (-)2.9354 %

BEGIN SB BRIDGE
FACE OF BKWL @ ℄ ABUT #1
NOMINAL STA 819+85.39
(24' RT)
ELEV = 129.04
PROP 225' MBGF & 1-SGT(8)-01

PROP MBGF TRANS & TYPE II CURB
TYPE SSTR RAIL OR SSCB

END SB BRIDGE
FACE OF BKWL @ ℄ ABUT #4
NOMINAL STA 822+70.61
(24' RT)
ELEV = 128.92

PROP MBGF TRANS & TYPE II CURB
PROP SOUTHBOUND MAINLANE PGL
PROP 150' MBGF & 1-TAS

EXIST NATURAL GROUND

2:1 RRS

CALC MIN VERT CLR = 16.63'
1.0%
2.5%
2.5%
CALC MIN VERT CLR =16.59'
PROPOSED FINISHED GRADE
"H" = 15.0'
"H" = 15.0'
CALC MIN VERT CLR = 16.51'
1.0%
2:1 RRS

Test Hole No. S-1-E
Elev = 107.47

14(6) 15(6) CLAY, silty, lt. tan, moist, soft
19(6) 23(6) CLAY, silty, reddish tan, moist, stiff
CLAY, silty w/ white streaks of caliche, lt. tan, dry, very stiff
25(6) 23(6) CLAY, silty, lt. tan w/rust streaks, dry, very stiff
47(6) 53(5.625) CLAY, silty, reddish tan, moist, very stiff
CLAY, silty, lt. gray, moist, very stiff
CLAY, silty, lt. tan w/rust streaks, moist

B/H = 57.47'

SEE NB FOR PHASE 2
2~30" DIA. D.S. X 54'
(PHASE 3)

SEE NB FOR PHASE 2
1~42" DIA. D.S. X 46'
(PHASE 3)

SEE NB FOR PHASE 2
2~30" DIA. D.S. X 59'
(PHASE 3)

Test Hole No. S-3-E
Elev = 106.90
TOP SOIL, gray

9(6) 10(6) CLAY, silty, lt. tan, moist, soft
14(6) 15(6) CLAY, silty, reddish tan, moist, stiff
11(6) 14(6) CLAY, silty, lt. tan, moist, stiff
15(6) 17(6)
13(6) 19(6) CLAY, silty, lt. brown, moist, stiff
15(6) 21(6)
23(6) 26(6)
37(6) 47(6) CLAY, silty, reddish tan, moist, hard, very stiff
48(6) 52(4.625)

B/H = 56.9'

① ② ③ ④

ELEVATION

820+00 | 821+00 | 822+00 | 823+00

185 | 165 | 145 | 125 | 105 | 85 | 65 | 45 | 25 | 5

Parsons Brinckerhoff Quade & Douglas Inc.

Texas Department of Transportation

© 2003 by TxDOT

BRIDGE LAYOUT
SIOUX RD OVERPASS
WIDENING
SOUTHBOUND MAINLANES

PLAN 1"= 40' HORIZ
PROFILE 1"= 40' VERT

281BL05.DGN

DESIGNED: ARC	FED. RD DIV. No.	STATE	FEDERAL AID PROJECT No.		HIGHWAY No.
CHECKED: ABM	6	TEXAS	NH 2003 ( )		US 281
DRAWN: OJH	STATE DISTRICT	COUNTY	CONTROL No.	SECTION No.	JOB No.	SHEET No.
CHECKED: ARC	PHARR	HIDALGO	0255	08	091	1066

i:\Projects\22322oVCADD\Sheets\Structures\Bridge\281BL05.dgn

ESMERALDA G. EGGER
02:12:16 PM
06/25/2003
I:\projects\22322o\CADD\Sheets\Structures\Bridge\281brdgSECT.dgn

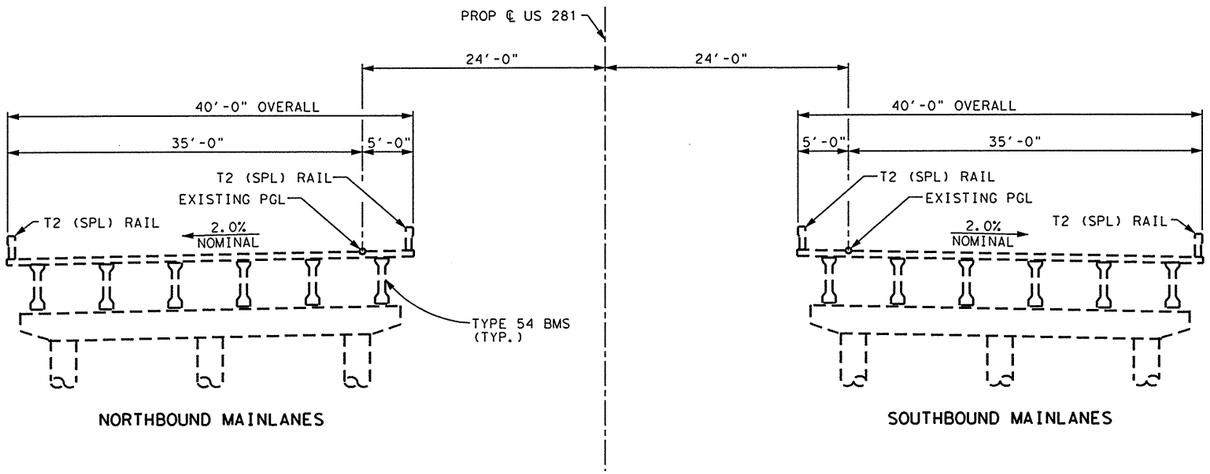

EXISTING STRUCTURE

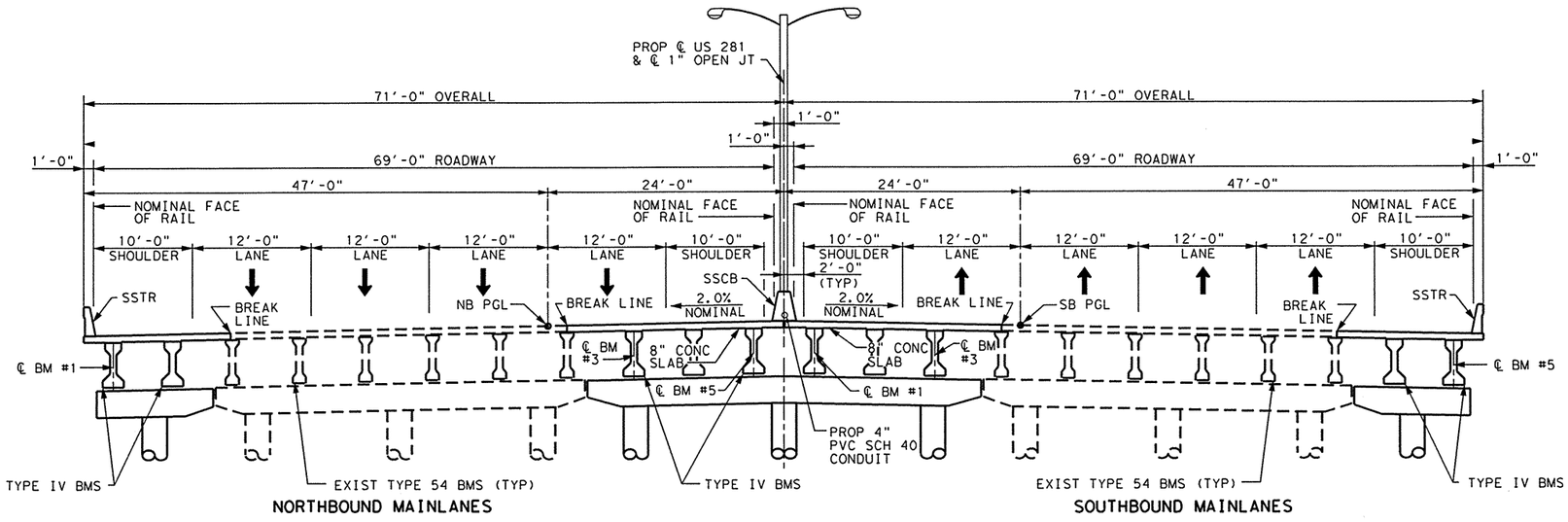

COMPLETE STRUCTURE

NOTE:

REFER TO EXISTING STRUCTURE PLANS
PROJECT NO. F 301(11)
CSJ: 0255-08-063
FOR ADDITIONAL DETAILS

HS 25 LOADING (WIDENING)
HS 20 LOADING (EXISTING)

STATE OF TEXAS
ALLEN R. CROZIER
81450
REGISTERED PROFESSIONAL ENGINEER
Allen R. Crozier
6/25/03

Parsons Brinckerhoff Quade & Douglas Inc.

Texas Department of Transportation

© 2002 by TxDOT

TYPICAL SECTIONS

SIOUX RD OVERPASS WIDENING

NORTHBOUND & SOUTHBOUND MAINLANES

281BRDGSECT.DGN

DESIGNED: ARC	FED. RD DIV. NO.	STATE	FEDERAL AID PROJECT No.			HIGHWAY No.	
CHECKED: ABM	6	TEXAS	NH 2003 ( )			US 281	
DRAWN: OJH	STATE DISTRICT	COUNTY	CONTROL No.	SECTION No.	JOB No.	SHEET No.	
CHECKED: ARC	PHARR	HIDALGO	0255	08	091	1067	

ESMERALDA G. EGGER
02:12:32 PM
06/25/2003
I:\projects\22322a\CADD\Sheets\Structures\Bridge\281brdgSECT.dgn

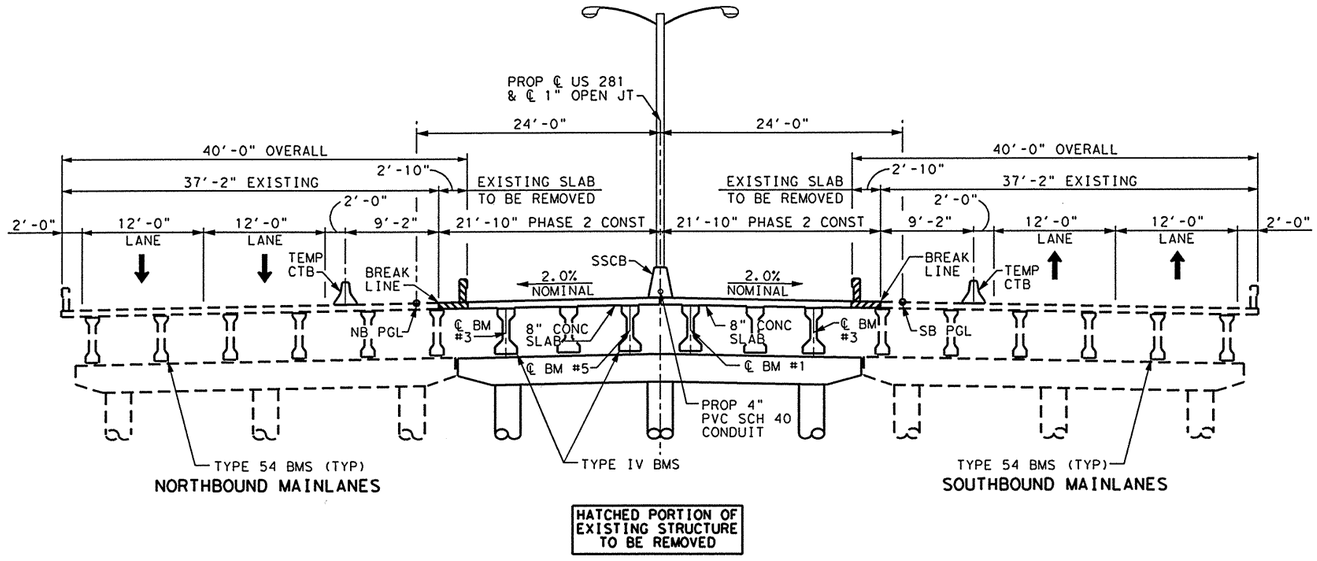

HATCHED PORTION OF EXISTING STRUCTURE TO BE REMOVED

PHASE 2 CONSTRUCTION

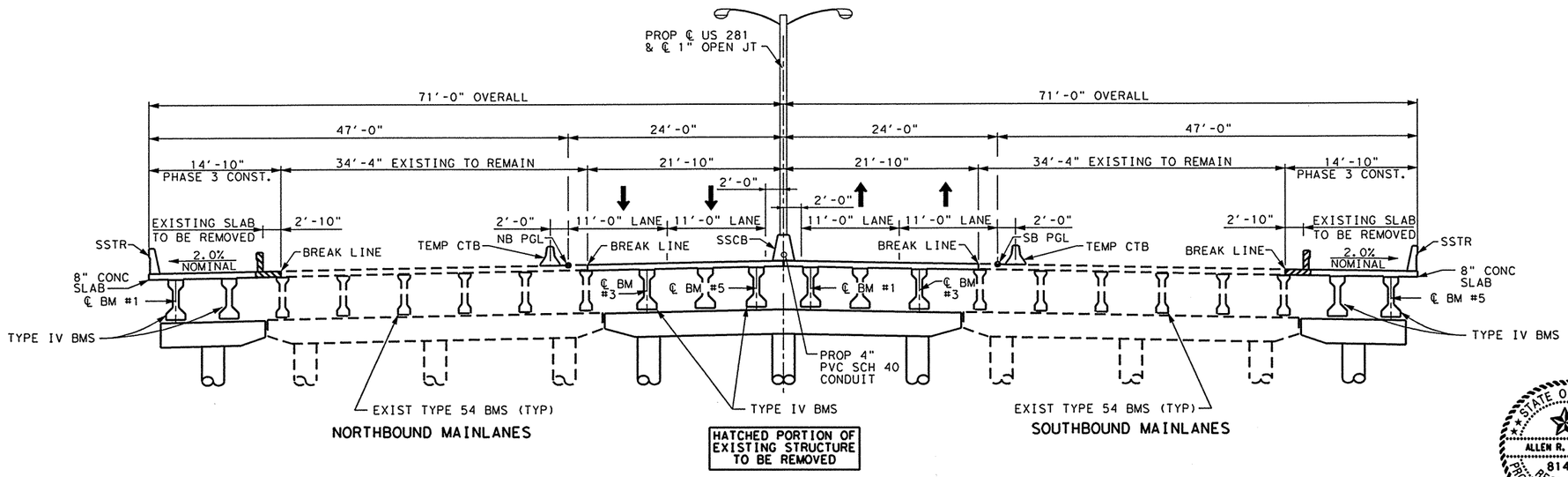

HATCHED PORTION OF EXISTING STRUCTURE TO BE REMOVED

PHASE 3 CONSTRUCTION

NOTE:

REFER TO EXISTING STRUCTURE PLANS
PROJECT NO. F 301(11)
CSJ: 0255-08-063
FOR ADDITIONAL DETAILS

HS 25 LOADING (WIDENING)
HS 20 LOADING (EXISTING)

STATE OF TEXAS
ALLEN R. CROZIER
81450
REGISTERED PROFESSIONAL ENGINEER

Allen R. Crozier
6/25/03

Parsons Brinckerhoff Quade & Douglas Inc.

Texas Department of Transportation

© 2002 by TxDOT

CONSTRUCTION SEQUENCE

SIOUX RD OVERPASS WIDENING

NORTHBOUND & SOUTHBOUND MAINLANES

281BRDGSECT.DGN

DESIGNED: ARC	FED. RD DIV. No.	STATE	FEDERAL AID PROJECT No.			HIGHWAY No.	
CHECKED: ABM	6	TEXAS	NH 2003 ( )			US 281	
DRAWN: OJH	STATE DISTRICT	COUNTY	CONTROL No.	SECTION No.	JOB No.	SHEET No.	
CHECKED: ARC	PHARR	HIDALGO	0255	08	091	1068	

ALLEN CROZIER
02:34:48 PM
08/06/2003
I:\projects\22322a\CADD\Sheets\Structures\Bridge\281EQ05.dgn

SUMMARY OF ESTIMATED QUANTITIES

	ITEM NUMBER	416		430		422	425	428	432	444	442	450	514			
	ITEM / DESCRIPTION	DRILLED SHAFTS		CLASS "C" CONCRETE (FOR EXT STRUCTURE)		REINF CONCRETE SLAB	PRESTR CONCRETE BEAM	CONCRETE SURFACE TREATMENT	RIPRAP CONCRETE	BRIDGE PROTECTIVE ASSEMBLY	STRUCTURAL STEEL ARMOR JT (SPL)	RAILING	CONCRETE TRAFFIC BARRIER			
		30" ø	42" ø	ABUTMENT	BENT	(EXT STRUC)	TYPE "IV"		CLASS "B"			SSTR	SSCB (1)	SSCB (4)		
		LF	LF	CY	CY	SF	LF	SY	CY	EA	LBS	LF	LF	LF		
PHASE 2	2~ABUTMENTS	452		37.2												
	2~INTERIOR BENTS		276		39.2											
	3~95.00' NOM PRESTR CONC BM SPAN					12,432	1,705.38	1304			3,580		265.2	20.0		
	PHASE 2 TOTAL	452	276	37.2	39.2	12,432	1,705.38	1304			3,580		265.2	20.0		
PHASE 3	2~ABUTMENTS	452		33.2								48.0				
	2~INTERIOR BENTS		184		24.2											
	3~95.00' NOM PRESTR CONC BM SPAN					8,462	1,136.92	867		4	2,460	570.4				
	PHASE 3 TOTAL	452	184	33.2	24.2	8,462	1,136.92	867		4	2,460	618.4				
	TOTAL	904	460	70.4	63.4	20,894	2,842.30	2,171	320.0	4	6,040	618.4	265.2	20.0		

BEARING SEAT ELEVATIONS

NORTHBOUND MAINLANES

	BEAM 1	BEAM 2	BEAM 3	BEAM 4	BEAM 5
BENT 1 (FWD)	122.565	122.685	123.612	123.739	123.865
BENT 2 (BK)	122.917	123.037	123.963	124.090	124.217
(FWD)	122.919	123.039	123.966	124.093	124.219
BENT 3 (BK)	122.915	123.035	123.962	124.089	124.215
(FWD)	122.913	123.033	123.959	124.086	124.213
BENT 4 (BK)	122.554	122.674	123.600	123.727	123.854

SOUTHBOUND MAINLANES

	BEAM 1	BEAM 2	BEAM 3	BEAM 4	BEAM 5
BENT 1 (FWD)	123.940	123.813	123.687	122.760	122.640
BENT 2 (BK)	124.253	124.127	124.000	123.073	122.953
(FWD)	124.255	124.129	124.002	123.075	122.955
BENT 3 (BK)	124.217	124.090	123.963	123.037	122.917
(FWD)	124.213	124.087	123.960	123.033	122.913
BENT 4 (BK)	123.823	123.696	123.570	122.643	122.523

HS 20 LOADING (EXISTING)
HS 25 LOADING (WIDENING)

STATE OF TEXAS
ALLEN R. CROZIER
81450
REGISTERED PROFESSIONAL ENGINEER
Allen R. Crozier
8/5/03

Parsons Brinckerhoff Quade & Douglas Inc.

Texas Department of Transportation

© 2003 by TxDOT

ESTIMATED QUANTITIES AND BEARING SEAT ELEVATIONS SIOUX RD OVERPASS WIDENING

281EQ05.DGN

DESIGNED: ARC	FED. RD DIV. No.	STATE	FEDERAL AID PROJECT No.			HIGHWAY No.	
CHECKED: ALA	6	TEXAS	NH 2003 ( )			US 281	
DRAWN: KTD	STATE DISTRICT	COUNTY	CONTROL No.	SECTION No.	JOB No.	SHEET No.	
CHECKED: ARC	PHARR	HIDALGO	0255	08	091	1069	

ESMERALDA G. EGGER
12:07:49 PM
06/25/2003
I:\projects\22322cv\CADD\Sheets\Structures\Bridge\281Abt04.dgn

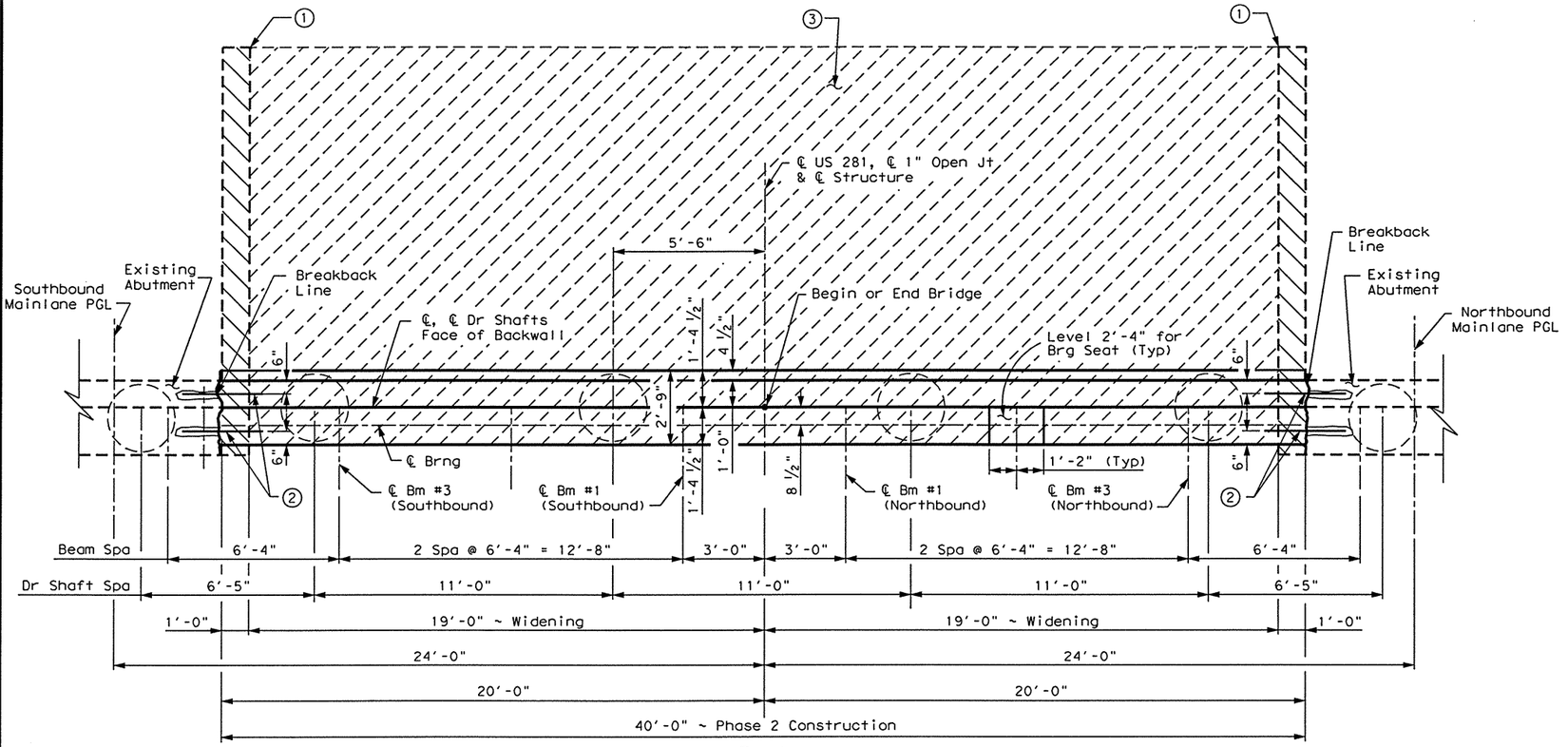

PLAN

Showing Abutment No. 1 (Abutment No. 4 ~ Opposite Hand)

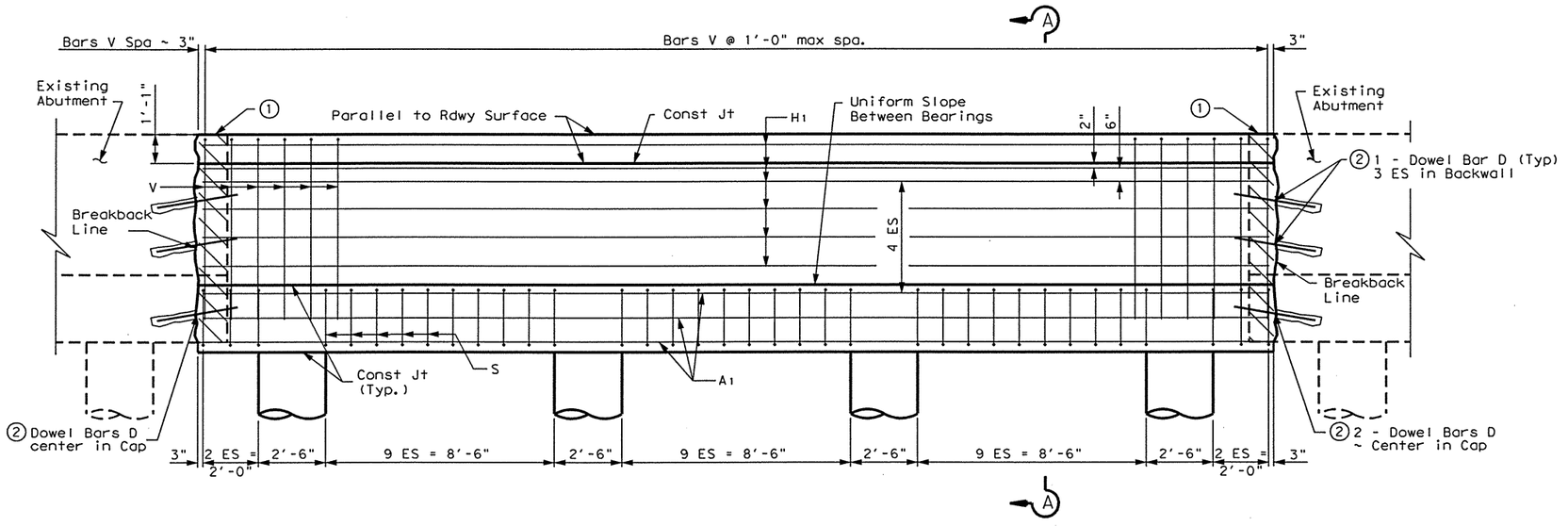

ELEVATION

Showing Abutment No. 1 (Abutment No. 4 ~ Opposite Hand)

① Remove cross-hatched area of Existing Wingwall and Cap. Cut Existing Wing reinforcement flush with breakback line and coat with epoxy grout.

② Drill & Grout Dowel Bars D ~ 1'-6" min into existing structure in accordance with the Standard Specification Item 420. Dowels shall be sloped at 12:1.

③ Breakback hatched portion of Existing riprap. Clean existing reinforcement and cut off any reinforcement which conflicts with cap placement. Place drilled shaft and patch riprap as required by the Engineer. Removal and patching of riprap shall be considered subsidiary to bid item Class "C" Concrete (for Ext Struc).

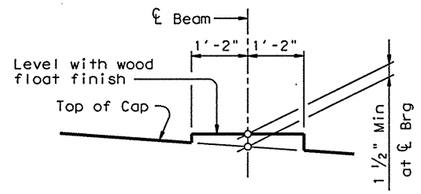

BEARING SEAT DETAIL

(Bearing surface shall be clean and free of all loose material before placing bearing pad.)

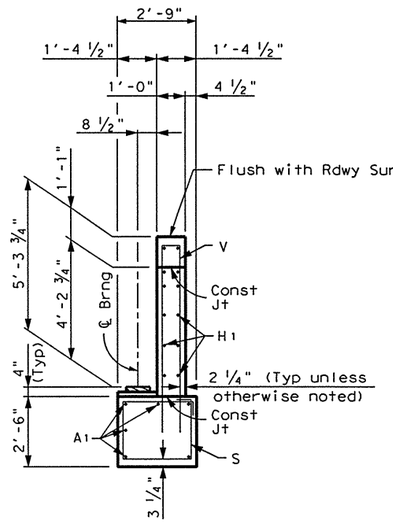

SECTION A-A

HS20 LOADING (EXISTING)
HS25 LOADING (WIDENING) SHEET 1 OF 2

PB Parsons Brinckerhoff Quade & Douglas Inc.

Texas Department of Transportation

© 2003 by TxDOT

ABUTMENT NOS. 1 & 4

SIOUX ROAD OVERPASS WIDENING

PHASE 2 CONSTRUCTION

STATE OF TEXAS
ALLEN R. CROZIER
81450
REGISTERED PROFESSIONAL ENGINEER

Allen R. Crozier
6/25/03

281Abt04.DGN

DESIGNED: ARC	FED. RD DIV. No.	STATE	FEDERAL AID PROJECT No.		HIGHWAY No.	
CHECKED: ALA	6	TEXAS	NH 2003 ( )		US 281	
DRAWN: OJH	STATE DISTRICT	COUNTY	CONTROL No.	SECTION No.	JOB No.	SHEET No.
CHECKED: ARC	PHARR	HIDALGO	0255	08	091	1071

ESMERALDA G. EGGER
12:08:11 PM
06/25/2003
I:\projects\22322a\CADD\Sheets\Structures\Bridge\281Abt05.dgn

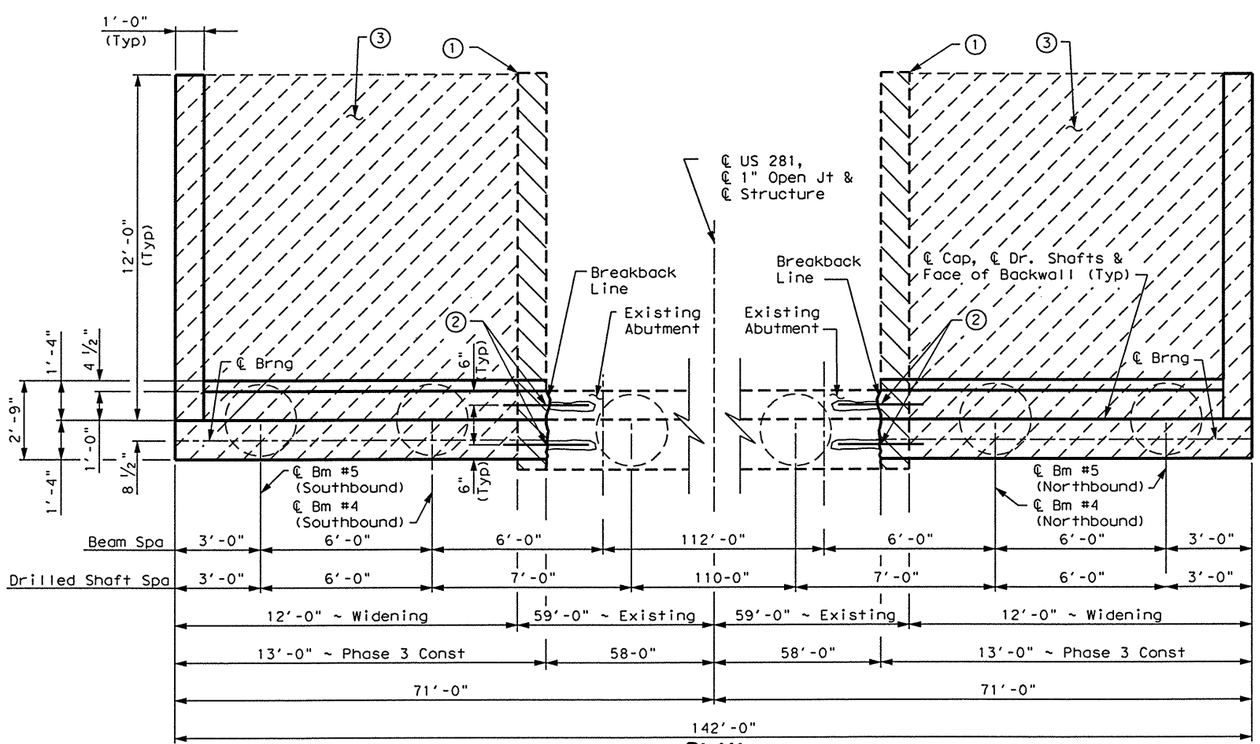

PLAN

Showing Abutment No. 1 (Abutment No. 4 ~ Opposite Hand)

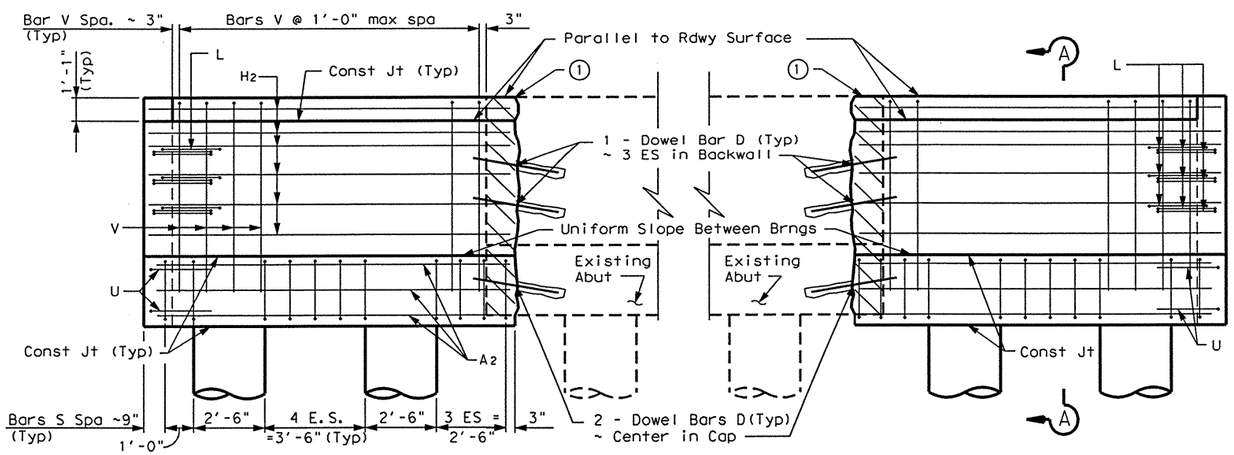

ELEVATION

Showing Abutment No. 1 (Abutment No. 4 ~ Opposite Hand)

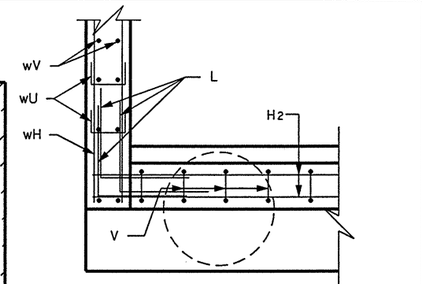

BACKWALL

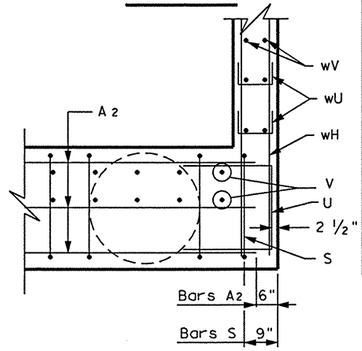

CAP

CORNER DETAILS

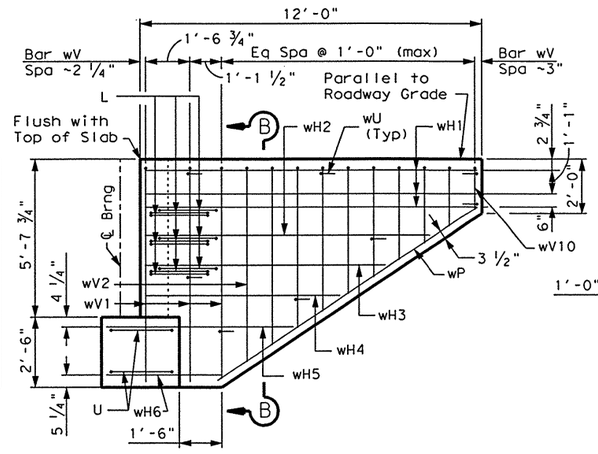

WINGWALL ELEVATION

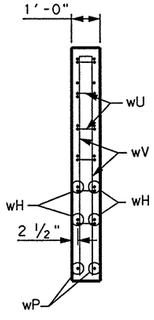

SECTION B-B

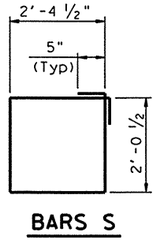

BARS S

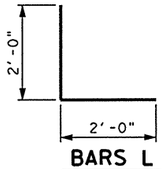

BARS L

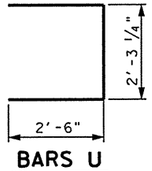

BARS U

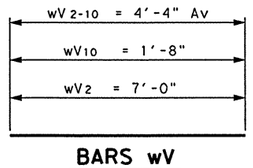

BARS wV

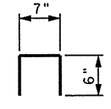

BARS wU

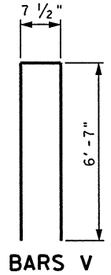

BARS V

④ TABLE OF CONSTANT QUANTITIES

PHASE 2					PHASE 3				
Bar	No.	Size	Length	Weight	Bar	No.	Size	Length	Weight
A1	6	#11	39'- 8"	1265	A2	12	#11	12'- 4"	786
D	8	# 9	3'- 0"	82	D	8	# 9	3'- 0"	82
H1	12	# 5	39'- 8"	497	H2	24	# 5	12'- 8"	317
S	36	# 4	9'- 8"	233	L	18	# 6	4'- 0"	108
V	41	# 5	13'-10"	592	S	22	# 4	9'- 8"	142
					U	4	# 6	7'- 3"	44
					V	26	# 5	13'-10"	375
					wH1	12	# 6	11'- 8"	210
					wH2	4	# 6	9'-11"	60
					wH3	4	# 6	8'- 4"	50
					wH4	4	# 6	6'- 9"	41
					wH5	4	# 6	6'- 7"	40
					wH6	4	# 6	4'- 1"	25
					wP	4	# 6	11'- 0"	66
					wU	16	# 5	1'- 7"	26
					wV1	12	# 5	7'- 9"	97
					wV2-10	36	# 5	4'- 4" Av	163
Reinforcing Steel			Lb	2669	Reinforcing Steel			Lb	2632
Class "C" Concrete (For Ext Struc)			CY	18.6	Class "C" Concrete (For Ext Struc)			CY	16.6

(1) Breakback hatched Portion of Existing Cap & Wingwall. Clean & extend existing Longitudinal reinforcement 1'-6" into new construction. Cut off remaining reinforcement at face of Concrete & Coat with Epoxy Grout.

(2) Drill & Grout Dowl Bar D ~ 1'-6" min into existing structure in accordance with the Standard Specification Item 420. Dowels shall be sloped at 12:1.

(3) Breakback hatched portion of Existing riprap. Clean existing reinforcement and cut off any reinforcement which conflicts with cap placement. Place drilled shafts and patch riprap as required by the Engineer. Removal and patching of riprap shall be considered subsidiary to bid item Class "C" Concrete (for Ext Struc).

(4) Quantities shown are for one Abut only.

GENERAL NOTES:

Designed according to AASTHO 1996 Standard and current Interim Specifications.
Calculated Foundation Load ~ 90 T/D.S.
See Foundation Detail Standard sheet, FD(MOD) for all Foundation details and notes.
See ARMOR JOINT (SPL) working drawing for additional details.
Class "C" Concrete strength f'c = 3600 psi.
All reinforcing steel shall be Grade 60.

HS20 LOADING (EXISTING)
HS25 LOADING (WIDENING) SHEET 2 OF 2

STATE OF TEXAS
ALLEN R. CROZIER
81450
REGISTERED PROFESSIONAL ENGINEER
6/25/03

Parsons Brinckerhoff Quade & Douglas Inc.

Texas Department of Transportation

© 2003 by TxDOT

ABUTMENT NOS. 1 & 4

SIOUX ROAD OVERPASS WIDENING

PHASE 3 CONSTRUCTION

281Abt05.DGN

DESIGNED: ARC	FED. RD DIV. No.	STATE	FEDERAL AID PROJECT No.		HIGHWAY No.
CHECKED: ALA	6	TEXAS	NH 2003 ( )		US 281
DRAWN: OJH	STATE DISTRICT	COUNTY	CONTROL No.	SECTION No.	JOB No. / SHEET No.
CHECKED: ARC	PHARR	HIDALGO	0255	08	091 / 1072

ESMERALDA G. EGGER
12:08:35 PM
06/25/2003
I:\projects\223220\CADD\Sheets\Structures\Bridge\281Bnt04.dgn

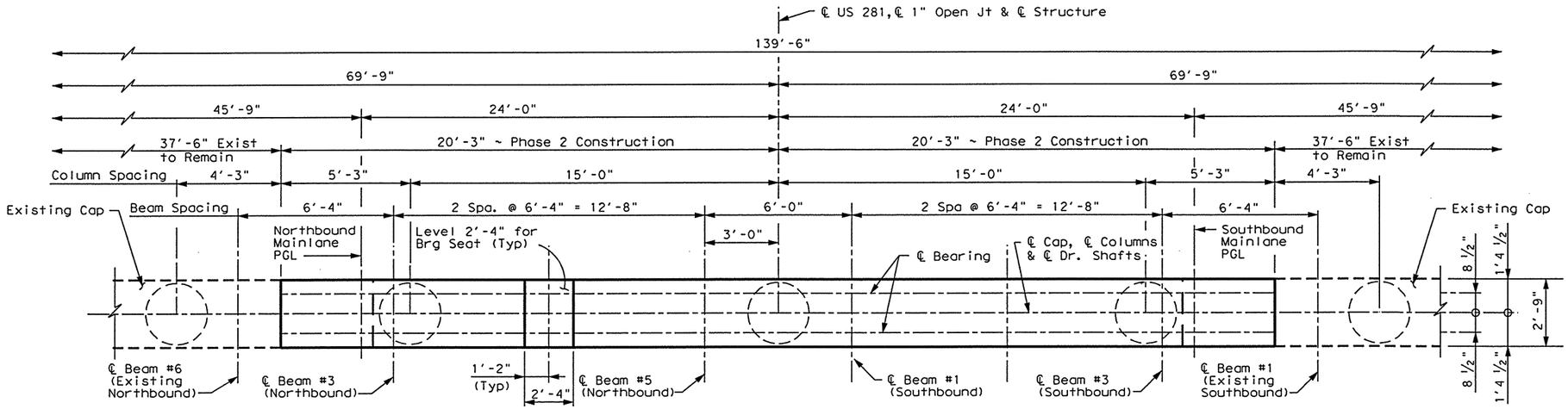

PLAN

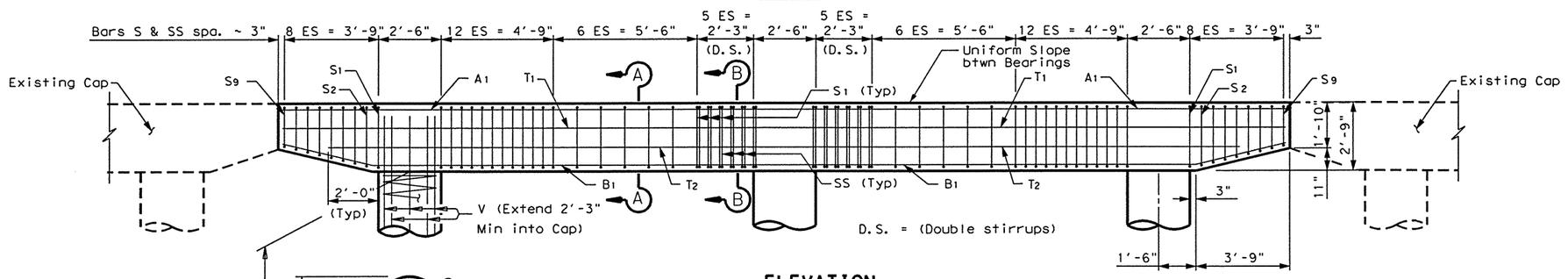

ELEVATION

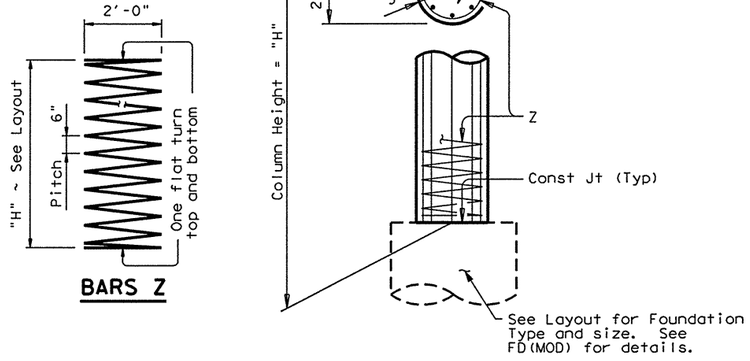

BARS Z

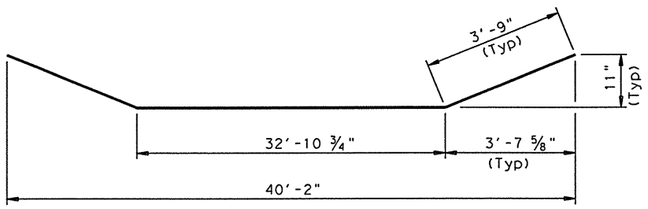

BARS B

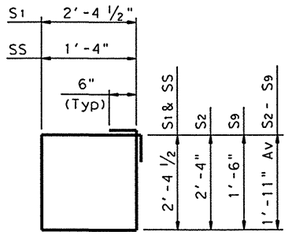

BARS S & SS

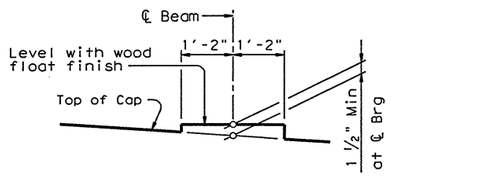

BEARING SEAT DETAIL

(Bearing surface shall be clean and free of all loose material before placing bearing pad.)

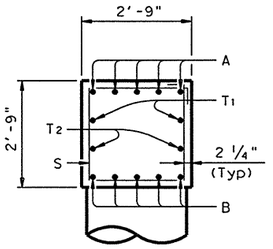

SECTION A-A

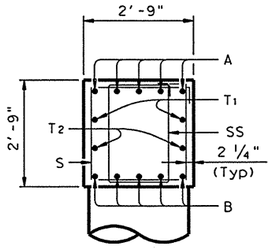

SECTION B-B

HS20 LOADING (EXISTING)
HS25 LOADING (WIDENING) SHEET 1 OF 2

Parsons Brinckerhoff Quade & Douglas Inc.

Texas Department of Transportation

© 2003 by TxDOT

INTERIOR BENT NOS. 2 & 3

SIOUX RD OVERPASS WIDENING

PHASE 2 CONSTRUCTION

STATE OF TEXAS
ALLEN R. CROZIER
81450
REGISTERED PROFESSIONAL ENGINEER

Allen R. Crozier
6/25/03

281Bnt04.DGN

DESIGNED: ARC	FED. RD DIV. No.	STATE	FEDERAL AID PROJECT No.			HIGHWAY No.	
CHECKED: ALA	6	TEXAS	NH 2003 ( )			US 281	
DRAWN: JMR	STATE DISTRICT	COUNTY	CONTROL No.	SECTION No.	JOB No.	SHEET No.	
CHECKED: ARC	PHARR	HIDALGO	0255	08	091	1073	

ESMERALDA G. EGGER
12:09:00 PM
06/25/2003
I:\projects\22322a\CADD\Sheets\Structures\Bridge\281Bnt05.dgn

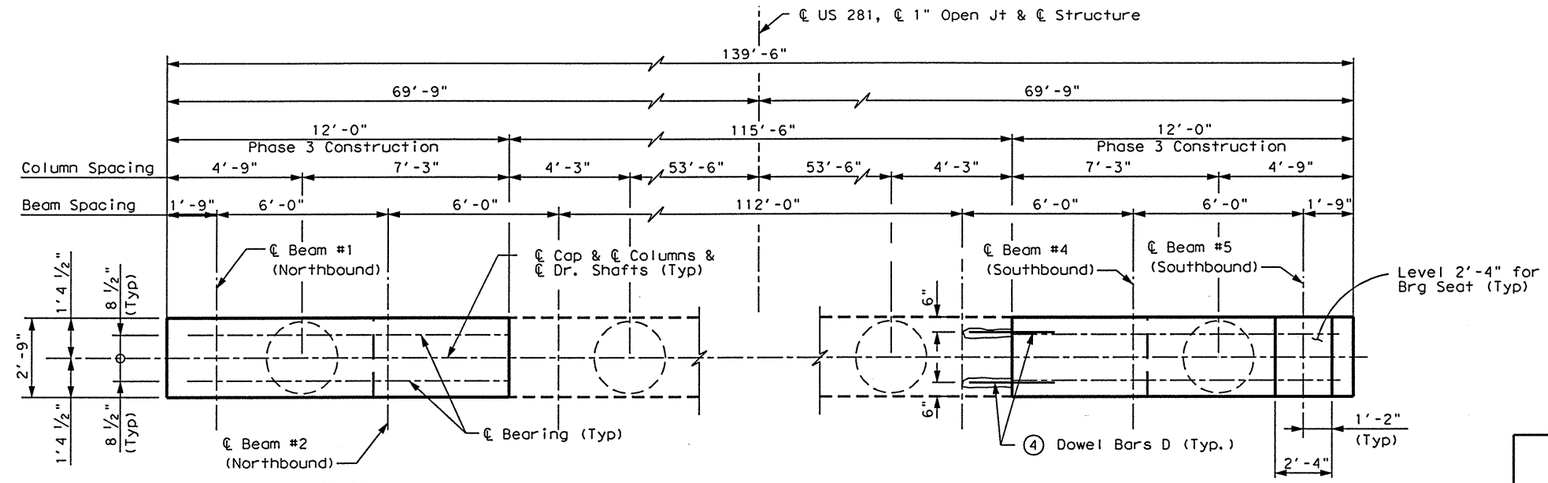

PLAN

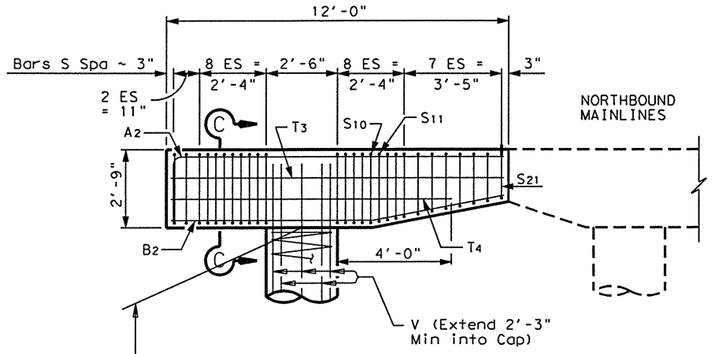

ELEVATION
(Symmetrical about ℄ Structure)

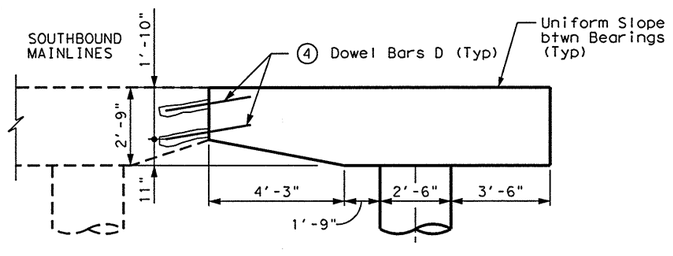

SECTION WITH DOWEL BARS

④ Drill & Grout Dowel Bars D 1'-6" min into existing structure in accordance with the Standard Specification Item 420. Dowels shall be sloped at 12:1.

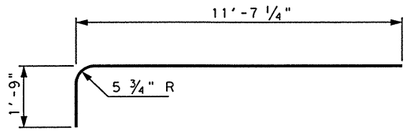

BARS A2

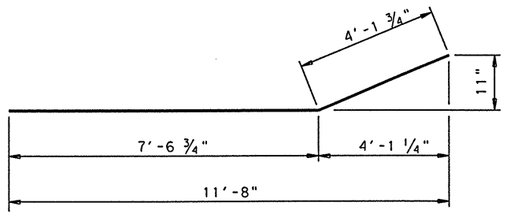

BARS B2

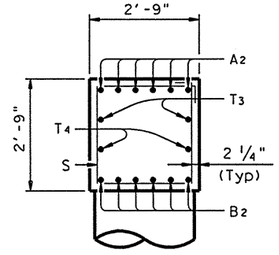

SECTION C-C

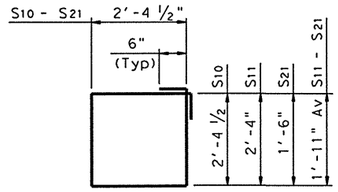

BARS S10 - S21

① TABLE OF CONSTANT QUANTITIES

PHASE 2					PHASE 3				
Bar	No.	Size	Length	Weight	Bar	No.	Size	Length	Weight
A_1	5	#11	40'- 2"	1067	A_2	12	#10	13'- 4"	525
B_1	5	#11	40'- 5"	1074	B_2	12	#10	11'- 9"	607
S_1	50	# 5	10'- 6"	548	D	8	# 9	3'- 0"	82
S_{2-11}	16	# 5	9'- 7" Av	160	S_{10}	32	# 5	10'- 6"	350
SS	12	# 5	8'- 5"	105	S_{11-21}	22	# 5	9'- 7" Av	220
T_1	2	# 5	40'- 2"	84	T_3	4	# 5	11'- 8"	49
T_2	2	# 5	36'- 6"	76	T_4	4	# 5	9'-10"	41
Reinforcing Steel		Lb	3114		Reinforcing Steel		Lb	1962	
Class "C" Concrete (For Ext Struc)		CY	11.2		Class "C" Concrete (For Ext Struc)		CY	6.5	

② TABLE OF VARIABLE QUANTITIES

(Quantities Shown For One Column Only)

"H"	Class "C" Conc (Cols)	Bars Z 1 ~ #3 Spiral		Bars V 8 ~ # 9	
Ft	CY	Length	Weight	Length	Weight
15	2.8	202'	76	17'- 3"	469

③ TOTAL ESTIMATED QUANTITIES

PHASE 2		PHASE 3	
Reinf Steel	Class "C" Conc (Ext Struc)	Reinf Steel	Class "C" Conc (Ext Struc)
Lb	CY	Lb	CY
4749	19.6	3052	12.1

① Quantities shown are for one Bent only.

② Adjust Bars V length by 1 ft and Bars Z length by 12.6061 Ft. for each linear foot of variation in "H" value.

③ Adjust Reinforcind Steel stage total by 32 Lb. and Class "C" Concrete total by .1818 CY for each linear foot of variation in "H" value for each column.

GENERAL NOTES:

Designed according to AASTHO 1996 Standard and current Interim Specifications.
Calculated Foundation Load ~ 220 T/D.S.
See Foundation Detail Standard sheet, FD(MOD), for all Foundation details and notes.
Class "C" Concrete strength f'c = 3600 psi.
All reinforcing steel shall be Grade 60.

HS20 LOADING (EXISTING)
HS25 LOADING (WIDENING) SHEET 2 OF 2

Parsons Brinckerhoff Quade & Douglas Inc.

Texas Department of Transportation

© 2003 by TxDOT

INTERIOR BENT NOS. 2 & 3

SIOUX RD OVERPASS WIDENING

PHASE 3 CONSTRUCTION

STATE OF TEXAS — ALLEN R. CROZIER — 81450 — REGISTERED PROFESSIONAL ENGINEER

Allen R. Crozier 6/25/03

281Bnt05.DGN

DESIGNED: ARC	FED. RD DIV. No.	STATE	FEDERAL AID PROJECT No.		HIGHWAY No.
CHECKED: ALA	6	TEXAS	NH 2003 ( )		US 281
DRAWN: JMR	STATE DISTRICT	COUNTY	CONTROL No.	SECTION No.	JOB No.	SHEET No.
CHECKED: ARC	PHARR	HIDALGO	0255	08	091	1074

ESMERALDA G. EGGER
12:09:38 PM
06/25/2003
I:\projects\223220\CADD\Sheets\Structures\Bridge\281Spn04.dgn

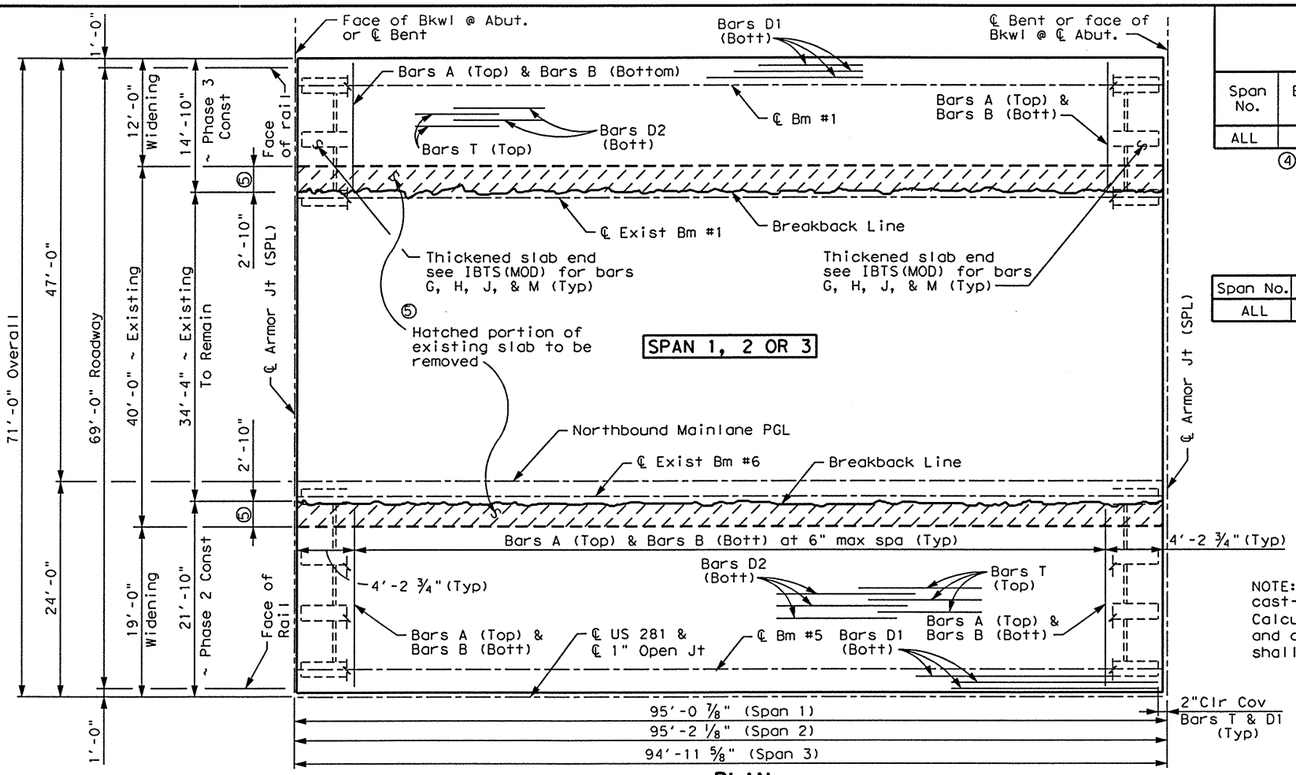

PLAN

TABLE OF SECTION DEPTHS				
Span No.	Beam No.	"X" at ℄ Brg	"Y" at ℄ Brg	"Z" at ℄ Span ④
ALL	1-5	9 3/4"	5'-3 3/4"	9"

④ Theoretical Dimension

Span No.	Beam Center No.	"A"	"B"
ALL	1-5	0.049'	0.068'

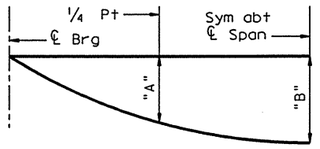

DEAD LOAD DEFLECTION DIAGRAM

NOTE: Deflections shown are due to cast-in-place concrete only. (E_C= 5 X 10^6 psi) Calculated deflections shown are theoretical and actual dimensions may be less. Deflections shall be adjusted based on field observations.

TABLE OF ESTIMATED QUANTITIES

PHASE 2 CONSTRUCTION

Span	REINF CONC SLAB (EXT STR)	PRESTRESSED CONC BEAM (TYPE IV) ②	CLASS "S" CONCRETE (EXT STR)	STRUC STL ARMOR JOINT (SPL)	REINFORCING STEEL ①
NO.	SF	LF	CY	LB	LB
1	2,072	284.22	54.0	③ 670	13,468
2	2,074	284.55	54.0	450	13,481
3	2,070	283.92	54.0	③ 670	13,455
Total	6,216	852.69	162.0	1,790	40,404

PHASE 3 CONSTRUCTION

Span	REINF CONC SLAB (EXT STR)	PRESTRESSED CONC BEAM (TYPE IV) ②	CLASS "S" CONCRETE (EXT STR)	STRUC STL ARMOR JOINT (SPL)	REINFORCING STEEL ①
NO.	SF	LF	CY	LB	LB
1	1,410	189.48	36.8	③ 460	9,165
2	1,412	189.70	36.8	310	9,178
3	1,409	189.28	36.7	③ 460	9,159
Total	4,231	568.46	110.3	1,230	27,502

① Reinforcing steel weight is calculated using an approximate factor of 6.5 lbs per sq ft.

② Quantity shown are bottom beam flange lengths with adustmeents made for beam slope.
Beam Length = 94.74' ~ Span 1~ Each Beam
94.85' ~ Span 2~ Each Beam
94.64' ~ Span 3~ Each Beam

③ Includes 2 plates at Abutment and 1 plate at Interior Bent.

BAR TABLE	
Bar	Size
A	# 5
B	# 5
D	# 5
G	# 5
H	# 6
J	# 5
M	# 5
T	# 4

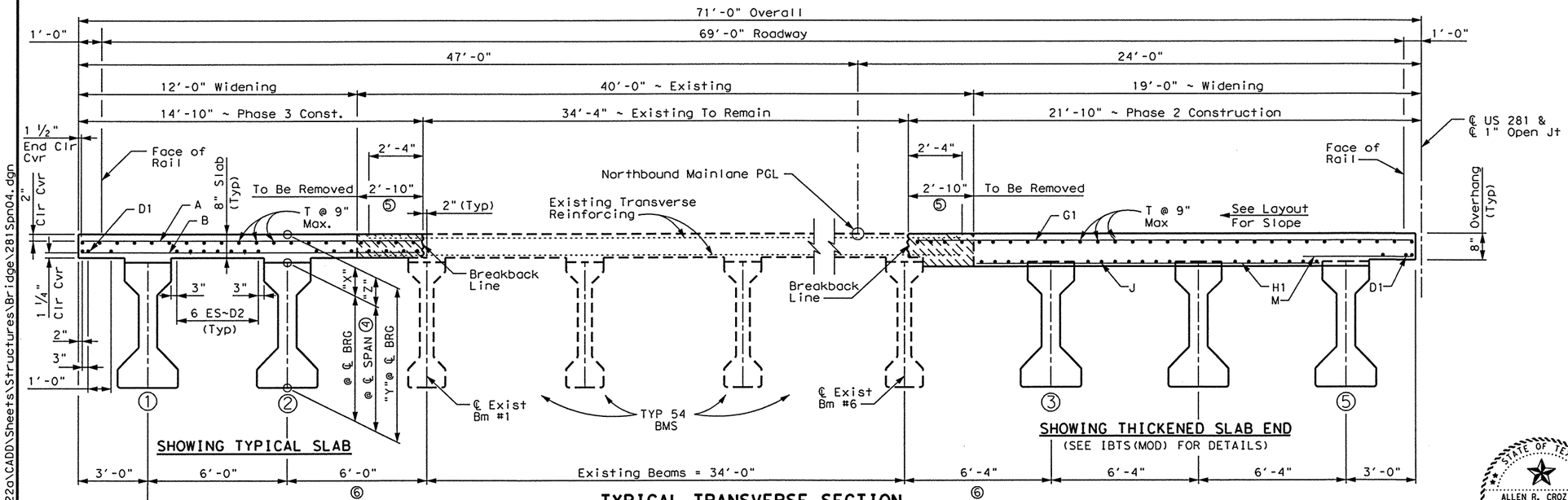

SHOWING TYPICAL SLAB

SHOWING THICKENED SLAB END
(SEE IBTS(MOD) FOR DETAILS)

TYPICAL TRANSVERSE SECTION

At contractor's option, alternating bars B may end at ℄ of outside Bm (Typ)

⑤ Remove cross hatched portion of existing slab to breakback line. clean, straighten and extend existing reinforcing 2'-4" into new construction.

⑥ Prestressed concrete panels shall not be permitted in this bay.

GENERAL NOTES:

Designed according to 1996 AASHTO standard and current interim specifications.
See PCP(C)(MOD) standard for details and quantity adjustments if this option is used.
See IBTS(MOD) standard for thickened slab end details.
See ARMOR JOINT (SPL) working drawings for additional details.
All reinforcing shall be Grade 60.
Class "S" Concrete strength f'c= 4000 psi
Bar laps, where required, shall be as follows:
~ #4 = 1'-5"
~ #5 = 1'-9"

HS20 LOADING (EXISTING)
HS25 LOADING (WIDENING)

STATE OF TEXAS
ALLEN R. CROZIER
81450
REGISTERED PROFESSIONAL ENGINEER
6/25/03

Parsons Brinckerhoff Quade & Douglas Inc.

Texas Department of Transportation

© 2003 by TxDOT

95'-0" NOMINAL PRESTR CONCRETE BEAM SPAN

SIOUX RD OVERPASS WIDENING

NORTHBOUND MAINLANES

281Spn04.DGN

DESIGNED: ARC	FED. RD DIV. No.	STATE	FEDERAL AID PROJECT No.	HIGHWAY No.
CHECKED: ALA	6	TEXAS	NH 2003 ( )	US 281

DRAWN: OJH	STATE DISTRICT	COUNTY	CONTROL No.	SECTION No.	JOB No.	SHEET No.
CHECKED: ARC	PHARR	HIDALGO	0255	08	091	1075

ESMERALDA G. EGGER
12:10:12 PM
06/25/2003
I:\projects\22322a\CADD\Sheets\Structures\Bridge\281Spn05.dgn

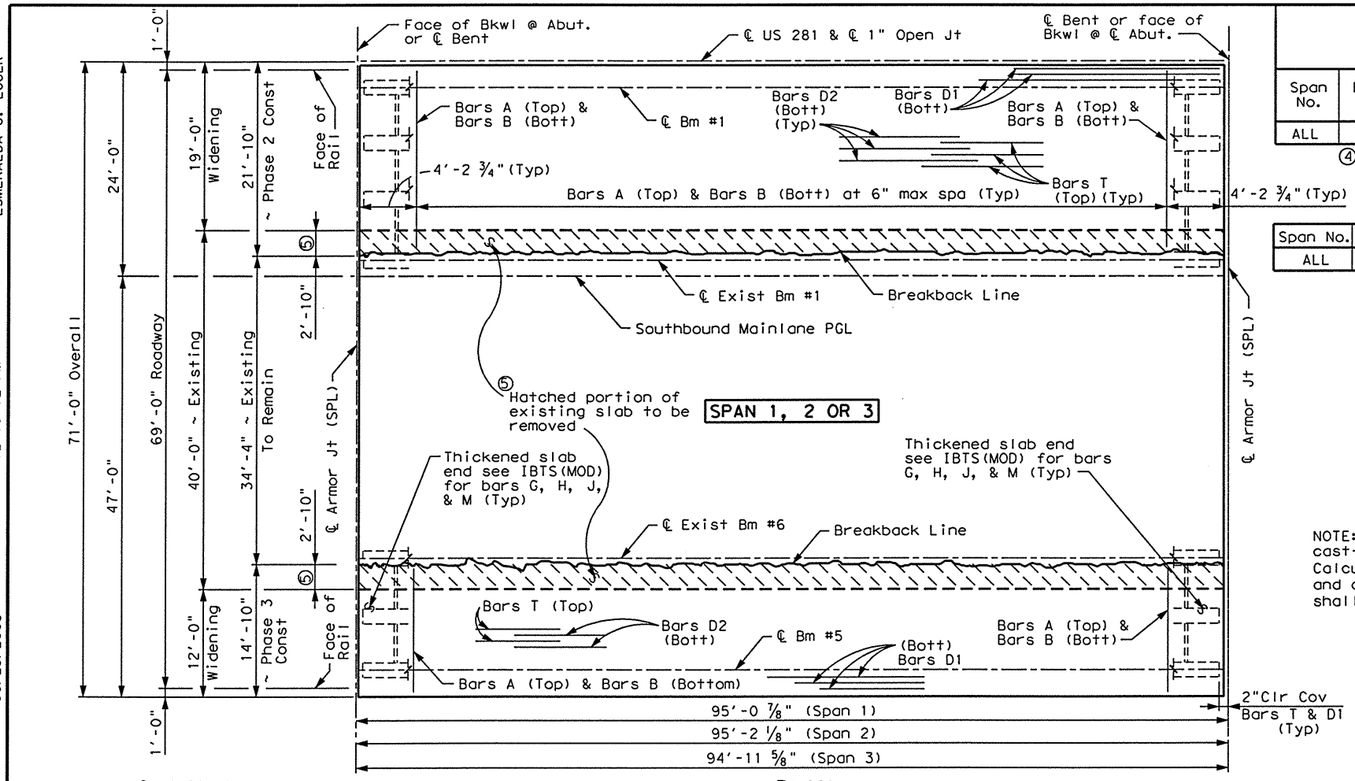

PLAN

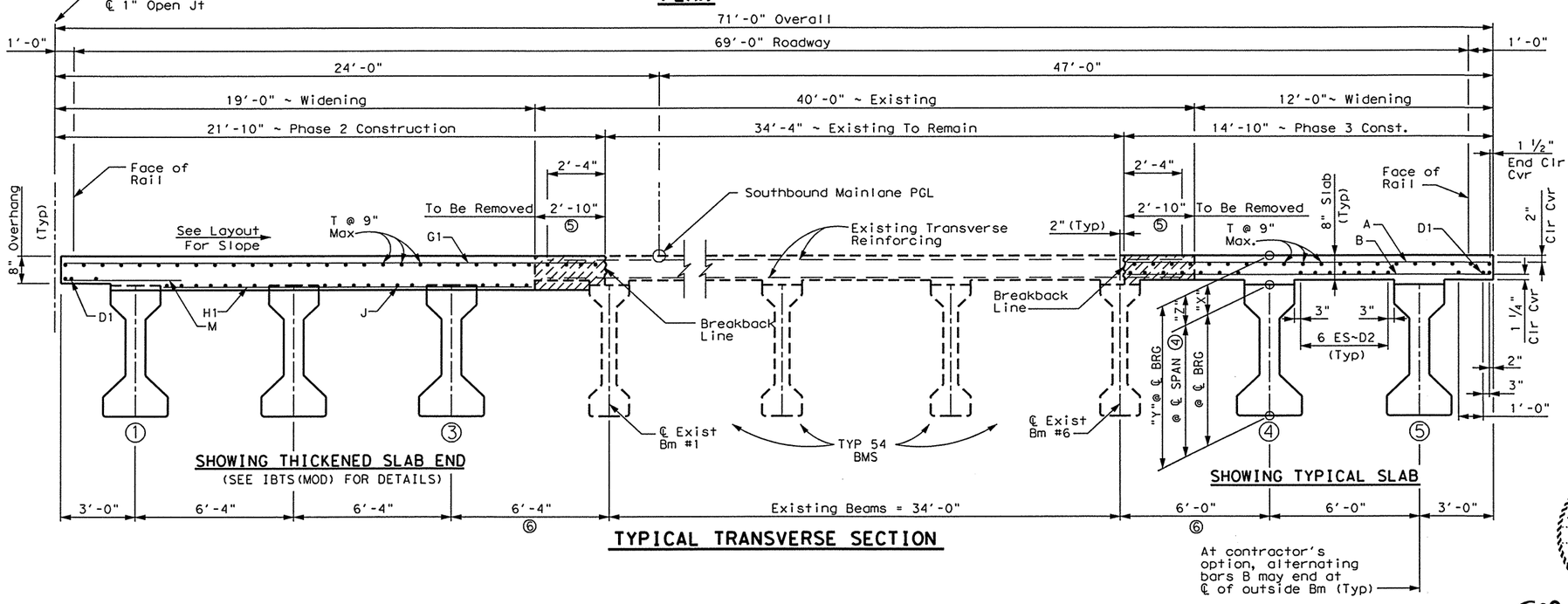

TYPICAL TRANSVERSE SECTION

⑤ Remove cross hatched portion of existing slab to breakback line. clean, straighten and extend existing reinforcing 2'-4" into new construction.

⑥ Prestressed concrete panels shall not be permitted in this bay.

TABLE OF SECTION DEPTHS

Span No.	Beam No.	"X" at ℄ Brg	"Y" at ℄ Brg	"Z" at ℄ Span ④
ALL	1-5	9 3/4"	5'-3 3/4"	9"

④ Theoretical Dimension

Span No.	Beam Center No.	"A"	"B"
ALL	1-5	0.049'	0.068'

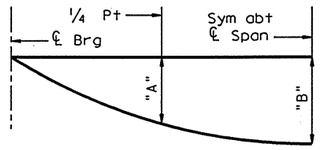

DEAD LOAD DEFLECTION DIAGRAM

NOTE: Deflections shown are due to cast-in-place concrete only. (E_c= 5 X 10^6 psi) Calculated deflections shown are theoretical and actual dimensions may be less. Deflections shall be adjusted based on field observations.

TABLE OF ESTIMATED QUANTITIES

PHASE 2 CONSTRUCTION

Span	REINF CONC SLAB (EXT STR)	PRESTRESSED CONC BEAM (TYPE IV) ②	CLASS "S" CONCRETE (EXT STR)	STRUC STL ARMOR JOINT (SPL)	REINFORCING STEEL ①
NO.	SF	LF	CY	LB	LB
1	2,072	284.22	54.0	③ 670	13,468
2	2,074	284.55	54.0	450	13,481
3	2,070	283.92	54.0	③ 670	13,455
Total	6,216	852.69	162.0	1,790	40,404

PHASE 3 CONSTRUCTION

Span	REINF CONC SLAB (EXT STR)	PRESTRESSED CONC BEAM (TYPE IV) ②	CLASS "S" CONCRETE (EXT STR)	STRUC STL ARMOR JOINT (SPL)	REINFORCING STEEL ①
NO.	SF	LF	CY	LB	LB
1	1,410	189.48	36.8	③ 460	9,165
2	1,412	189.70	36.8	310	9,178
3	1,409	189.28	36.7	③ 460	9,159
Total	4,231	568.46	110.3	1,230	27,502

① Reinforcing steel weight is calculated using an approximate factor of 6.5 lbs per sq ft.

② Quantity shown are bottom beam flange lengths with adustmeents made for beam slope.
Beam Length = 94.74' ~ Span 1~ Each Beam
94.85' ~ Span 2~ Each Beam
94.64' ~ Span 3~ Each Beam

③ Includes 2 plates at Abutment and 1 plate at Interior Bent.

BAR TABLE

Bar	Size
A	# 5
B	# 5
D	# 5
G	# 5
H	# 6
J	# 5
M	# 5
T	# 4

GENERAL NOTES:

Designed according to 1996 AASHTO standard and current interim specifications.
See PCP(C)(MOD) standard for details and quantity adjustments if this option is used.
See IBTS(MOD) standard for thickened slab end details.
See ARMOR JOINT (SPL) working drawing for additional details.
All reinforcing shall be Grade 60.
Class "S" Concrete strength f'c= 4000 psi
Bar laps, where required, shall be as follows:
~ #4 = 1'-5"
~ #5 = 1'-9"

HS20 LOADING (EXISTING)
HS25 LOADING (WIDENING)

Parsons Brinckerhoff Quade & Douglas Inc.

Texas Department of Transportation

© 2003 by TxDOT

95'-0" NOMINAL PRESTR CONCRETE BEAM SPAN

SIOUX RD OVERPASS WIDENING

SOUTHBOUND MAINLANES

STATE OF TEXAS
ALLEN R. CROZIER
81450
REGISTERED PROFESSIONAL ENGINEER

6/25/03

281Spn05.DGN

	FED. RD DIV. No.	STATE	FEDERAL AID PROJECT No.		HIGHWAY No.	
DESIGNED: ARC	6	TEXAS	NH 2003 ( )		US 281	
CHECKED: ALA						
DRAWN: OJH	STATE DISTRICT	COUNTY	CONTROL No.	SECTION No.	JOB No.	SHEET No.
CHECKED: ARC	PHARR	HIDALGO	0255	08	091	1076

DISCLAIMER:
The use of this standard is governed by the "Texas Engineering Practice Act". No warranty of any kind is made by TxDOT for any purpose whatsoever. TxDOT assumes no responsibility for the conversion of this standard to other formats or for incorrect results or damages resulting from its use.

LEVELS DISPLAYED 1 2 | ACC: (LV=1,2 for English)

Showing Top Flg Reinf
Showing Bott Flg Reinf

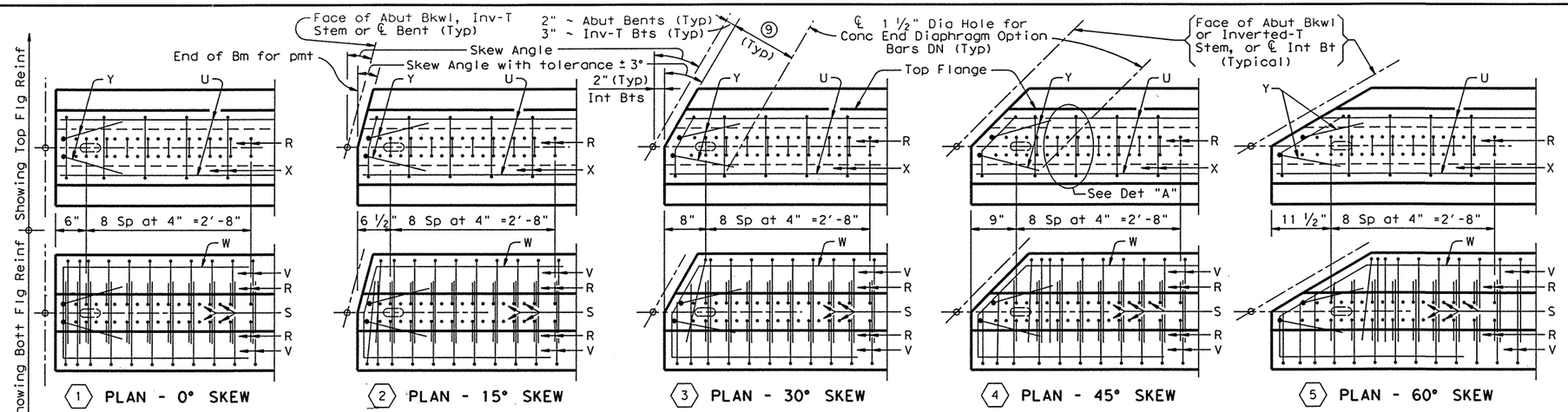

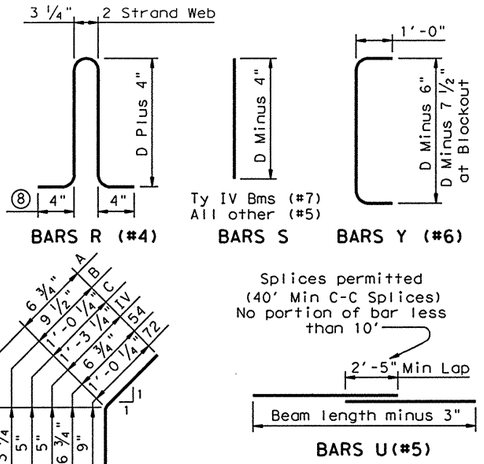

DETAILS OF SKEWED BEAM ENDS ④

④ Reinforcing patterns shown above are to be used as guides in determining the reinforcement for the actual beam type (Type C shown) and the skew angle used. In general, the distance between consecutive Bars R and/or S shall be 2". This spacing may be varied in order to avoid Dowel Holes or Conc End Diaphragm Option holes (See Detail "A"). However, a minimum cross sectional area equivalent to that of Bars R & S in square beam end shall be provided.

Note: It is permissible for bars or strands to come in contact with materials used in forming anchor and diaphragm holes.

Note: See span details for location of interior diaphragms, if any. For skewed spans, location of diaphragms may vary from beam to beam.

① Note: Anchorage holes may be tapered (4 ¾" x 1 ⅝") at base. If holes are formed with sheet metal, forms may be left in place.

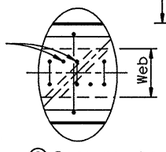

⑧ Bars may be cut or bent at skewed end as required

⑦ Increase for first bar at skewed end

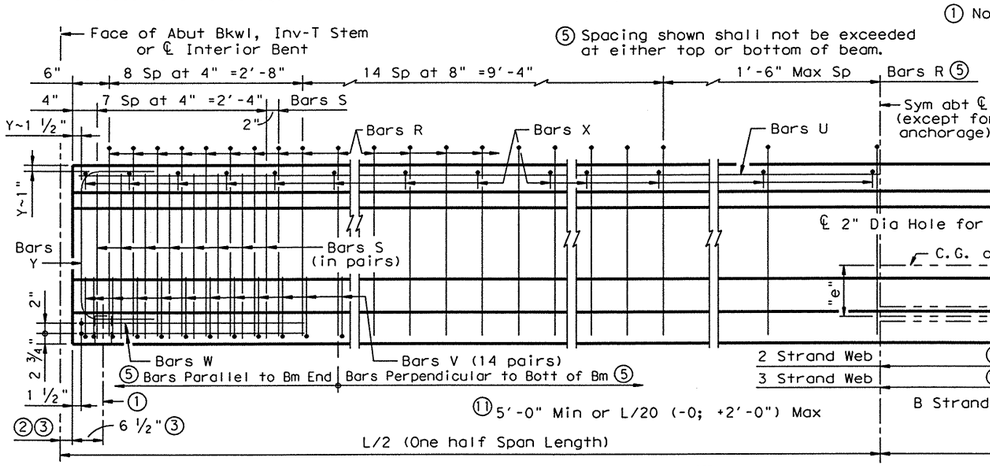

⑥ ELEVATION OF BEAM

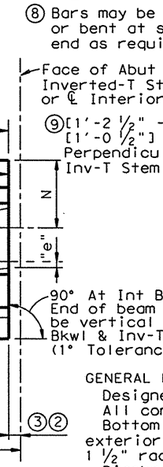

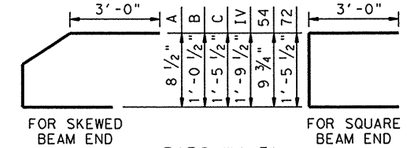

GENERAL NOTES:
Designed in accordance with current AASHTO Specifications.
All concrete shall be Class H.
Bottom corners of all beam flanges and outside corners of exterior beam ends shall be chamfered ¾" or rounded to a 1 ½" radius.
Diaphragm holes in ends of beam only for use with concrete end diaphragm option.
The use of diaphragm holes for lifting purposes will not be permitted.
All reinforcing bars for beams shall be Grade 60.
An equal area of welded wire fabric may be substituted for Bars R, V, S or X if approved by the Engineer.

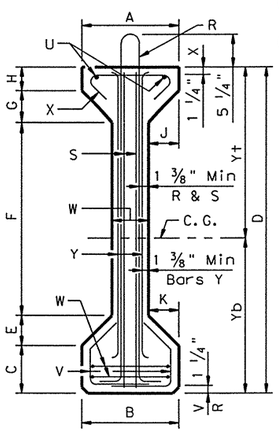

⑦ TYPES 54 & 72 BEAMS

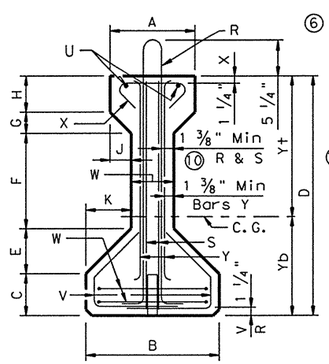

⑧ TYPES A, B, C & IV BEAMS

⑥ 4'-0" / Cosine of Skew Angle

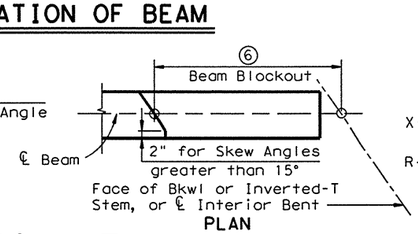

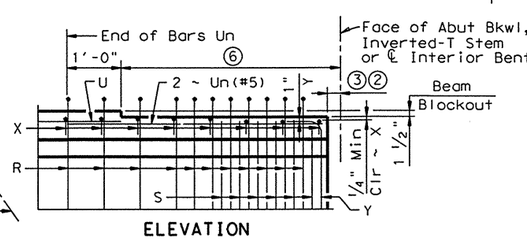

⑨ BLOCKOUT DETAIL FOR THICKENED SLAB END

Note: Beam blockout required only when beam haunch at ℄ Brg is less than 2".

BEAM DIMENSIONS AND SECTION PROPERTIES

BEAM TYPE	A In.	B In.	C In.	D In.	E In.	F In.	G In.	H In.	J In.	K In.	M In.	N In.	W In.	Yt In.	Yb In.	AREA In.²	I In.⁴	Wt/LF Lb.
A	12	16	5	28	5	11	3	4	3	5	13	15	6	15.39	12.61	275.4	22,658	287
B	12	18	6	34	5 ¾	14	2 ¾	5 ½	2 ¾	5 ¾	17	15	6 ½	19.07	14.93	360.3	43,177	375
C	14	22	7	40	7 ½	16	3 ½	6	3 ½	7 ½	21	15	7	22.91	17.09	494.9	82,602	516
IV	20	26	8	54	9	23	6	8	6	9	33	18	8	29.25	24.75	788.4	260,403	821
54	16	16	8	54	5	32	5	4	5	5	35	15	6	28.47	25.53	493.4	164,023	514
72	22	22	11	72	7 ½	40 ½	7 ½	5 ½	7 ½	7 ½	47	15	7	38.27	33.73	863.4	532,060	899

Note: Tolerance for Dimensions M & N = (+ ½" ; -1") (Same toerance to be applied to all holes for a given Diaphragm Bar DN).

HS25 LOADING

STATE OF TEXAS
ALLEN R. CROZIER
81450
REGISTERED PROFESSIONAL ENGINEER
Allen R. Crozier
6/25/03

Texas Department of Transportation
Design Division (Bridge)

PRESTRESSED CONCRETE I-BEAM DETAILS

IBA (MOD)

FILE: ibastdet.dgn	DN: THD	CK: MLR	DW: DRG	CK: LDS	STD: B207
©TxDOT September 1998	DIST	FED REG	FEDERAL AID PROJECT •		SHEET
REVISIONS 9/6/01-ARC - Verified details for HS25 Loading	PHARR	6	NH 2003 ( )		1077
	COUNTY		CONTROL	SECT	JOB	HIGHWAY
	HIDALGO		0255	08	091	US281

DISCLAIMER:
The use of this standard is governed by the "Texas Engineering Practice Act". No warranty of any kind is made by TxDOT for any purpose whatsoever. TxDOT assumes no responsibility for compilation to this standard or for incorrect results or damages resulting from its use.

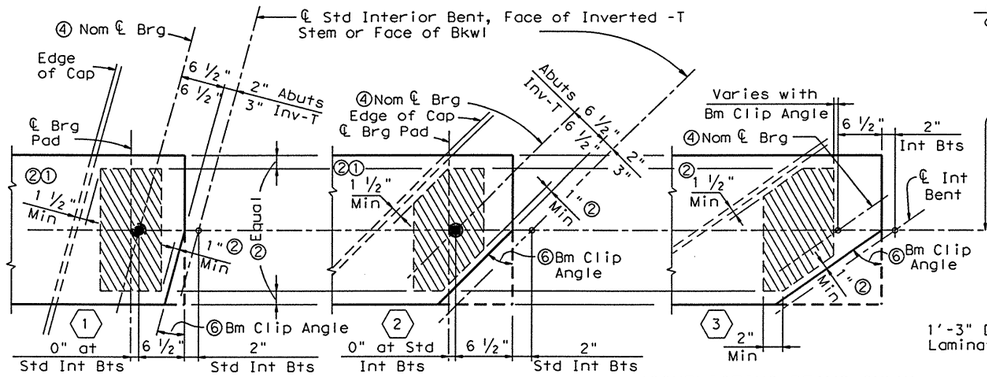

(CONFLICTING BEAMS ONLY)

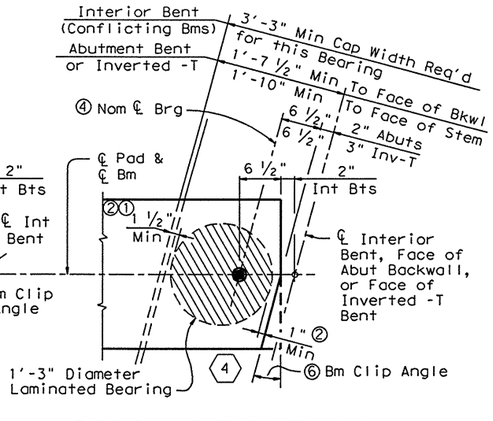

(TYPE IV & TYPE 72 BEAMS ONLY)

ELASTOMERIC BEARING PLACEMENT DIAGRAMS

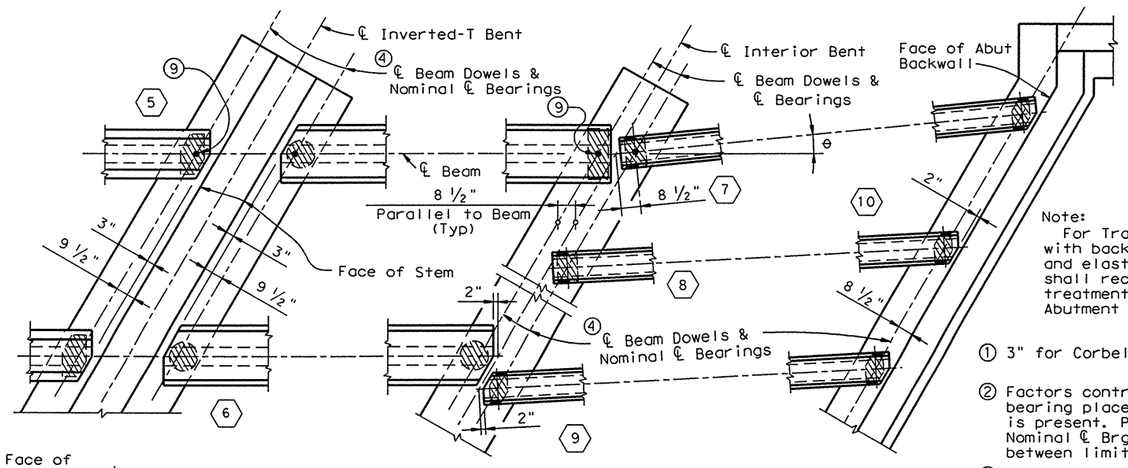

Note:
For Transition Bents with backwall, beams and elastomeric bearings shall receive the same treatment as shown for Abutment Bents

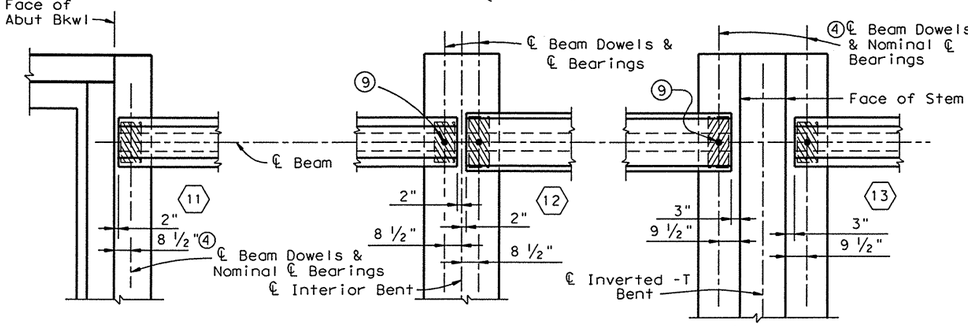

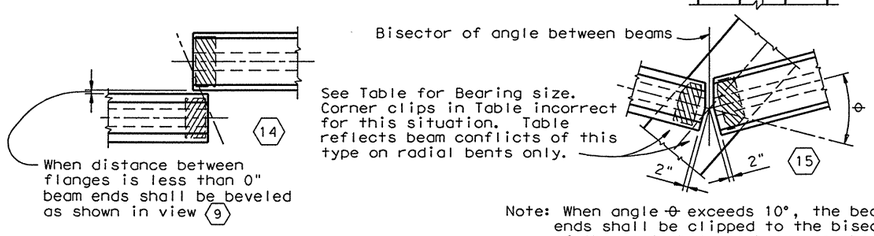

Note: When angle θ exceeds 10°, the beam ends shall be clipped to the bisector of the angle between beams as shown in view 15.

BEAM END DETAILS

① 3" for Corbels of Inverted -T.

② Factors controlling laminated bearing placement if no dowel is present. Place ℄ Pad as near Nominal ℄ Brg as possible between limits shown.

③ Provide 2" Dia Hole (always on beam end side of centerline pad) only at locations required. See substructure details for location.

④ For purposes of computing Bearing Seat Elevations, nominal centerline of bearing shall be defined as shown. The actual center of bearing pad may vary from this line, according to the "C" value shown in Table. If table shows no "C" value, See ②

⑤ Interpolate "C" values for angles not shown between 30° & 40°, 40° & 50°, 50° & 60°.

⑥ Complement of Beam Angle except at some conflicting beams. See ⑮

⑦ Locate "BRG TYPE" identification here

⑧ Locate Permanent Mark here

⑨ Provide Beam Dowels for outside beams only when shown (D) on Layout (Beams adjacent to a longitudinal joint at the median are considered as outside beams).

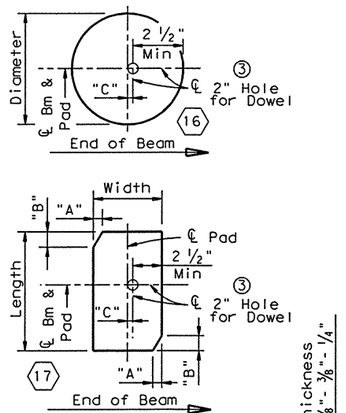

PLANS

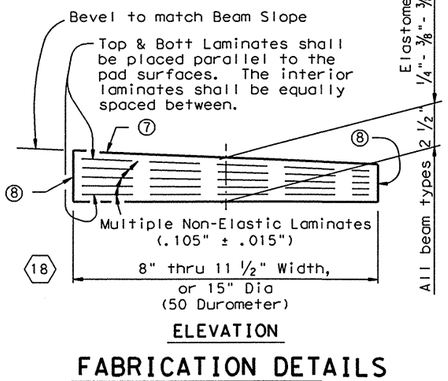

ELEVATION

FABRICATION DETAILS

GENERAL NOTES:
Beams shall be seated on elastomeric bearings of the dimensions shown.
Constant thickness bearings may be used for moderate beam slopes if the variation is within the allowable dimensional tolerances given in the specifications.
Shop drawings will be required for all pads not shown or modified in the table.
Cost of furnishing and installing elastomeric bearings shall be included in unit price bid for "Prestressed Concrete Beams".

Note: The use of Polyisoprene (natural rubber), for the manufacture of bearing pads, shall not be permitted.

ELASTOMERIC BEARING FABRICATION DATA TABLE

Loc.	Beam Type	Brg Type	Bm End Clip Angle Range	Pad Size Wdth x Lgth	"A"	"B"	"C" ③
AT ABUTMENTS, INVERTED - T & TRANSITION BENTS WITH BACKWALLS	A	A-1	0° thru 15°	8" x 14"	—	—	½"
	A	A-2	15°+ thru 45°	8" x 14"	2 ¾"	2 ¾"	½"
	A	A-3	45°+ thru 60°	8" x 14"	4 ¾"	2 ¾"	½"
	B	B-1	0° thru 10°	8" x 16"	—	—	½"
	B	B-2	10°+ thru 45°	8" x 16"	3 ¾"	3 ¾"	½"
	B	B-3	45°+ thru 60°	9" x 16"	7"	4 ¼"	½"
	C	C-1	0° thru 5°	9" x 19"	—	—	½"
	C	C-2	5°+ thru 15°	9" x 19"	1 ½"	4 ½"	½"
	C	C-3	15°+ thru 45°	10" x 19"	6 ¼"	6 ¼"	½"
	C	C-4	45°+ thru 60°	11 ½" x 19"	10 ½"	7"	¾"
	54	54-1	0° thru 10°	9" x 14"	—	—	½"
	54	54-2	10°+ thru 20°	9" x 14"	1"	2 ½"	½"
	54	54-3	20°+ thru 45°	9" x 14"	3 ¼"	3 ¼"	½"
	54	54-4	45°+ thru 60°	9" x 14"	5 ¼"	3 ¼"	½"
	IV	IV-1	0° thru 15°	9" x 22"	—	—	2"
	IV	IV-2	15°+ thru 29°	9" x 22"	2 ½"	4 ½"	2"
	IV & 72	IV-3	⑤ 30°	15" Dia	—	—	2 ⅜"
	IV & 72	IV-4	⑤ 40°	15" Dia	—	—	2 ⅝"
	IV & 72	IV-5	⑤ 50°	15" Dia	—	—	3 ⅛"
	IV & 72	IV-6	⑤ 60°	15" Dia	—	—	4"
	72	72-1	0° thru 15°	9" x 20"	—	—	2"
	72	72-2	15°+ thru 29°	9" x 20"	2"	3 ½"	2"
AT INTERIOR BENTS ~ Square Bm Ends	A	A-4	ALL	8" x 14"	—	—	0
	B	B-4	ALL	8" x 16"	—	—	0
	C	C-5	0° thru 10°	9" x 19"	—	—	0
	C	C-6	10°+ thru 58°	9" x 19"	1 ½"	2 ¼"	0
	C	C-7	58°+ thru 60°	9" x 19"	—	—	0
	54	54-5	ALL	9" x 14"	—	—	0
	IV	IV-7	ALL	9" x 22"	—	—	0
	72	72-3	ALL	9" x 20"	—	—	0
AT INTERIOR BENTS ~ Clipped Bm Ends ~ See ⑨ & ⑬	A	A-5	0° thru 15°	8" x 14"	—	—	¾"
	A	A-6	15°+ thru 45°	8" x 14"	2 ¼"	2 ¼"	—
	A	A-7	45°+ thru 60°	8" x 14"	3 ½"	2 ¼"	—
	B	B-5	0° thru 15°	8" x 16"	—	—	¾"
	B	B-6	15°+ thru 45°	8" x 16"	3 ¼"	3 ¼"	—
	B	B-7	45°+ thru 60°	8" x 16"	5"	3 ¼"	—
	C	C-8	0° thru 5°	9" x 19"	—	—	¾"
	C	C-9	5°+ thru 20°	9" x 19"	1 ¾"	4 ¾"	1"
	C	C-10	20°+ thru 45°	10" x 19"	6"	6"	—
	C	C-11	45°+ thru 60°	11 ½" x 19"	9 ¼"	6 ½"	—
	54	54-6	0° thru 13°	9" x 14"	—	—	¾"
	54	54-7	13°+ thru 45°	9" x 14"	2 ¾"	2 ¾"	—
	54	54-8	45°+ thru 60°	9" x 14"	3 ¾"	2 ¾"	—
	IV	IV-8	0° thru 15°	9" x 22"	—	—	2"
	IV	IV-9	15°+ thru 29°	9" x 22"	2 ¼"	4"	—
	IV & 72	IV-10	30° thru 60°	15" Dia	—	—	—
	72	72-4	0° thru 15°	9" x 20"	—	—	1 ¾"
	72	72-5	15°+ thru 29°	9" x 20"	1 ½"	2 ¾"	—

Table based on 3'-3" cap width for Type 72 and IV Beams; 2'-9" cap width for all other type beams.
Table based on 1'-10" Inverted - T corbel width for Type 72 and IV Beams; 1'-8" corbel width for all other type beams.

HS25 LOADING

Texas Department of Transportation
Design Division (Bridge)

ELASTOMERIC BEARING AND BEAM END DETAILS
(FOR PRESTR CONC I-BEAMS)

IBB (MOD)

STATE OF TEXAS · ALLEN R. CROZIER · 81450 · REGISTERED PROFESSIONAL ENGINEER
Allen R. Crozier 6/25/03

FILE: ibbstdel.dgn	DN: TxDOT	CK: JMH	DW: TxDOT	CK: LDS	STD: B208
©TxDOT September 1998	DIST	FED REG	FEDERAL AID PROJECT •		SHEET
REVISIONS 9/6/01~ARC - Verified details for HS25 Loading	PHARR	6	NH 2003 ( )		1078
	COUNTY		CONTROL	SECT	JOB	HIGHWAY
	HIDALGO		0255	08	091	US281

LEVELS DISPLAYED: 1 2 · ACC: (LV=1,2 for English)

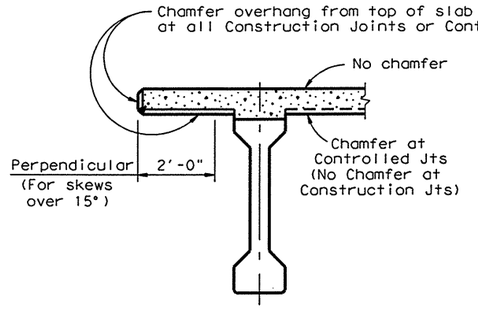

CHAMFER LIMITS DETAIL

Note: See Span details for type of joint and joint locations.

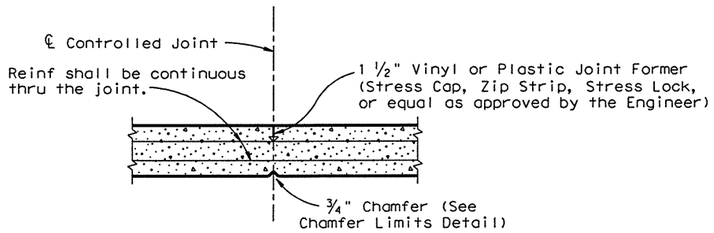

CONTROLLED JOINT DETAIL

(Controlled Joints shall not be used for simple spans)

Note: For continuous placement, the minimum rate of concrete placing and finishing shall not be less than 30 linear feet of bridge deck per hour.

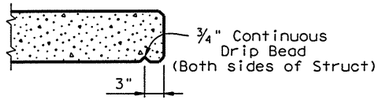

DRIP BEAD DETAIL

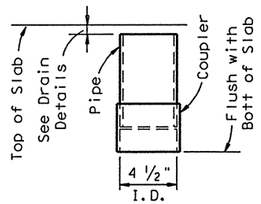

C.I.P. DRAIN DETAIL

Note: Roughen outside of PVC with coarse rasp or equal to ensure bond with cast-in-place concrete.

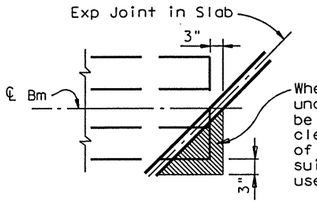

Where corners of Beam Flanges project under slab of adjacent span, care shall be taken to provide a minimum of ½" clearance between top of beam and bottom of adjacent slab. Polystyrene or other suitable compresssible material may be used as a filler.

TREATMENT AT BEAM END FOR SKEWED SPANS

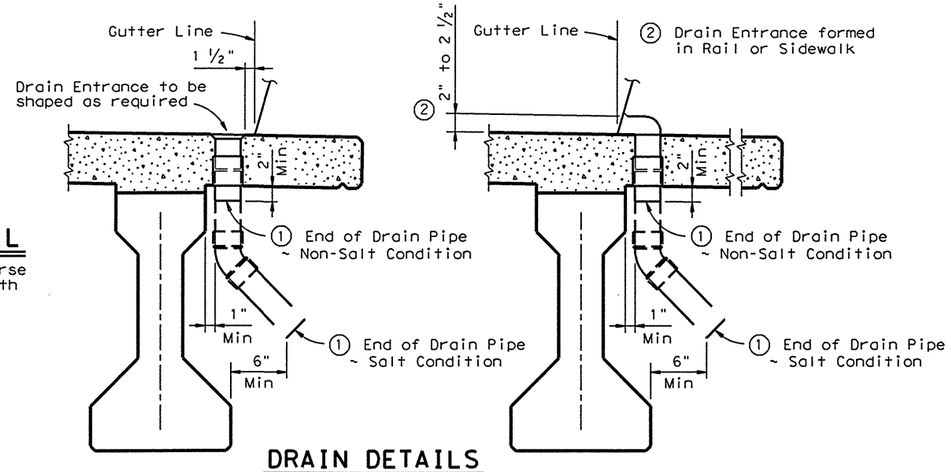

DRAIN DETAILS

① The longer drain length shown shall be used on structures where the use of deicing salts is anticipated.

Note: All drain pipe and fittings to be 4" diameter (Sch 40) PVC. See Item 481 "PVC Pipe for Bridge Drains" for pipe, connections and solent welding. Bend reinforcing steel to clear PVC 1". Drain length and location shall be as directed by the Engineer. No drains shall be permitted over roadways or railways, or within 10'-0" of Bent Caps. Degrease outside of exposed PVC, apply acrylic water base primer, then coat with same surface finishing material as used for outside girder face. Variations of the above designs, as required for the type of rail used and it's location on the structure, shall be installed with the approval and direction of the Engineer. No water shall be discharged onto girders.

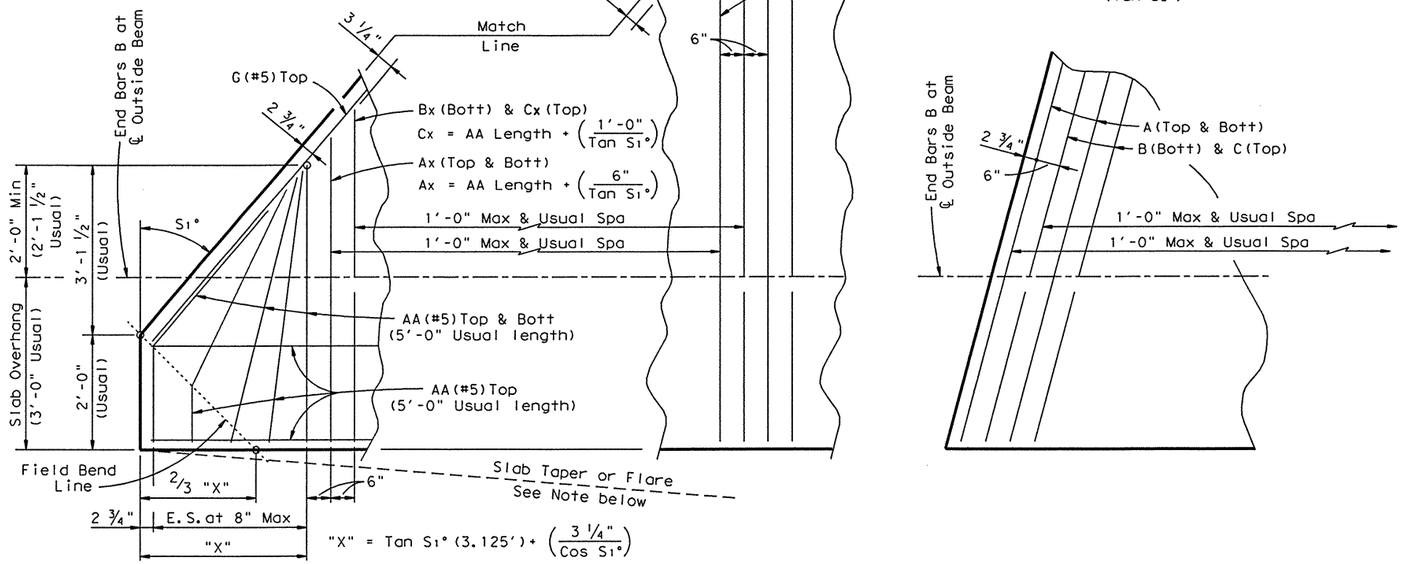

PARTIAL PLAN OF SLAB END WITH BREAKBACK

(For use with Concrete End Diafram Option ~ See IBDO Standard)

Note: Bar length formulas shown for constant width slabs. Adjustment shall be made for slab taper or flare.

PARTIAL PLAN OF SLAB END WITHOUT BREAKBACK

(For use with Concrete End Diafram Option ~ See IBDO Standard)

GENERAL NOTES:

Designed in accordance with current AASHTO Specifications.

All cast-in-place concrete shall be Class S unless otherwise shown on span details.

All reinforcing steel shall be Grade 60.

See Span Detail sheet for epoxy coating requirements and lap lengths, if required.

HS25 LOADING SHEET 1 OF 2

Texas Department of Transportation
Design Division (Bridge)

MISCELLANEOUS SLAB DETAILS FOR PRESTRESSED I-BEAMS

IBMS (MOD)

STATE OF TEXAS — ALLEN R. CROZIER — 81450 — REGISTERED PROFESSIONAL ENGINEER

Allen R. Crozier 6/25/03

FILE: ibmsstde.dgn	DN: THD	CK: THD	DW: DRG	CK: LDS	STD: B210
©TxDOT September 1998	DIST	FED REG	FEDERAL AID PROJECT •		SHEET
REVISIONS 9/6/01-ARC - Verified details for HS25 Loading	PHARR	6	NH2003( )		1079
	COUNTY		CONTROL	SECT	JOB	HIGHWAY
	HIDALGO		0255	08	091	US281

DISCLAIMER:
The use of this standard is governed by the "Texas Engineering Practice Act". No warranty of any kind is made by TxDOT for any purpose whatsoever. TxDOT assumes no responsibility for the conversion of this standard to other formats or for incorrect results or damages resulting from its use.

LEVELS DISPLAYED 1 2 ACC: (LV=1,2 for English)

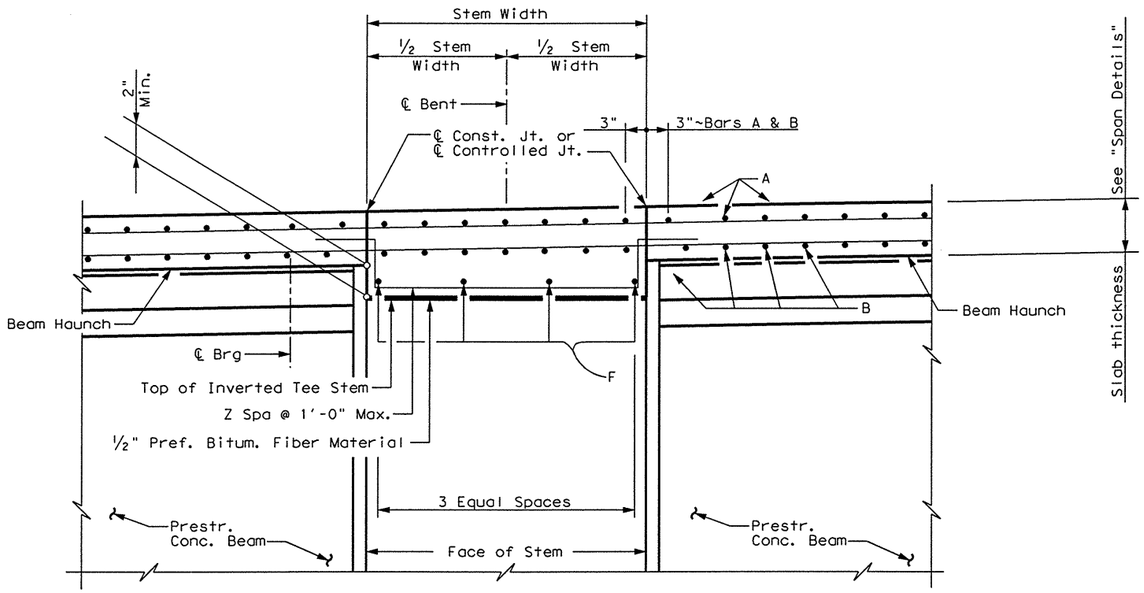

SECTION OVER INVERTED TEE BENT

(Shown between beams)

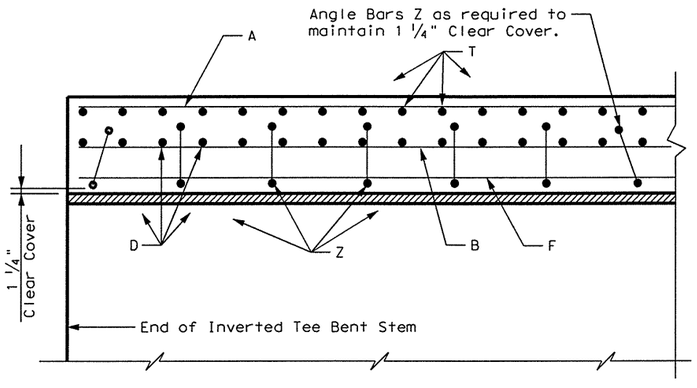

TRANSVERSE SECTION OF SLAB & INVERTED TEE CAP

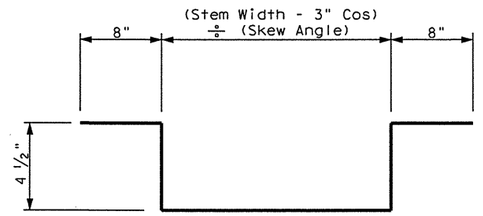

BARS Z

GENERAL NOTES:

Designed for HS25 Loading in accordance with AASHTO 1996 Standard Specifications and current interim.

All reinforcing bars shall be Grade 60 steel.

All laps, if required, shall conform to the item "Reinforcing Steel."

Contractor shall notify prestressed beam fabricators as to which diagram option he intends to use. Option selected shall be incorporated in shop drawings.

Payment for any diagram option used shall be included in the price bid for Reinforced Concrete Slab.

CONSTRUCTION NOTES:

All slab forming and required beam bracing shall be placed prior to installation of overhang formwork.

HS25 LOADING SHEET 2 OF 2

Parsons Brinckerhoff Quade & Douglas Inc.

Texas Department of Transportation

© 2003 by TxDOT

STATE OF TEXAS
ALLEN R. CROZIER
81450
REGISTERED PROFESSIONAL ENGINEER

Allen R. Crozier
6/25/03

MISCELLANEOUS SLAB DETAILS FOR PRESTRESSED I-BEAMS IBMS(MOD)

281det01.DGN

DESIGNED: ARC	FED. RD DIV. No.	STATE	FEDERAL AID PROJECT No.			HIGHWAY No.
CHECKED: ALA	6	TEXAS	NH 2003 ( )			US 281
DRAWN: RLJ	STATE DISTRICT	COUNTY	CONTROL No.	SECTION No.	JOB No.	SHEET No.
CHECKED: ARC	PHARR	HIDALGO	0255	08	091	1080

ALLEN CROZIER
01:33:31 PM
06/24/2003
I:\projects\22322a\CADD\Sheets\Structures\Bridge\281det01.dgn

DISCLAIMER:
The use of this standard is governed by the "Texas Engineering Practice Act". No warranty of any kind is made by TxDOT for any purpose whatever. TxDOT assumes no responsibility for the conversion of this standard to other formats or for incorrect results or damages resulting from its use.

LEVELS DISPLAYED: 1 2 ... 50 | ACC: (LV=1,2 for English)

DESIGNED BEAMS (DEPRESSED STRANDS)

STRUCTURE	SPAN NO.	BEAM NO.	BEAM TYPE	NON-STD STRAND PATTERN	PRESTRESSING STRANDS TOTAL NO.	TOTAL SIZE (in)	TOTAL STRGTH f's (ksi)	TOTAL "e" ℄ (in)	TOTAL "e" END (in)	DEPRESSED NO.	DEPRESSED TO (in)	CONCRETE RELEASE STRGTH f'ci (psi)	CONCRETE MINIMUM 28 DAY COMP STRGTH f'c (psi)
TRENTON ROAD OVERPASS													
NORTHBOUND	1&3	ALL	IV		18	½	270K	22.08	18.97	4	18.0	4000	5000
	2	ALL	IV		64	½	270K	18.00	9.69	14	52.0	6558	6947
SOUTHBOUND	1&3	ALL	IV		18	½	270K	22.08	18.97	4	18.0	4000	5000
	2	ALL	IV		64	½	270K	18.00	9.69	14	52.0	6558	6947
OWASSA RD OVERPASS													
NORTHBOUND	1&3	ALL	IV		16	½	270K	22.25	20.25	4	12.0	4000	5000
	2	ALL	IV		62	½	270K	18.24	9.65	14	52.0	6332	6332
SOUTHBOUND	1&3	ALL	IV		16	½	270K	22.25	20.25	4	12.0	4000	5000
	2	ALL	IV		62	½	270K	18.24	9.65	14	52.0	6332	6332
NOLANA LOOP OVERPASS WIDENING													
NORTHBOUND	1-3	ALL	IV		34	½	270K	20.87	12.75	6	52.0	4017	5000
SOUTHBOUND	1-3	ALL	IV		34	½	270K	20.87	12.75	6	52.0	4017	5000
SIOUX ROAD OVERPASS WIDENING													
NORTHBOUND	1-3	ALL	IV		32	½	270K	21.00	13.88	6	44.0	4000	5000
SOUTHBOUND	1-3	ALL	IV		32	½	270K	21.00	13.88	6	44.0	4000	5000
BUS281 NB DIRECT CONN	1	ALL	IV		50	½	270K	19.47	11.07	10	52.0	5449	5449
	2	ALL	IV		48	½	270K	19.67	10.92	10	52.0	5201	5201
	3	ALL	IV		48	½	270K	19.67	10.92	10	52.0	5202	5202
	4	ALL	IV		56	½	270K	18.89	10.32	12	52.0	5888	5888
	5	ALL	IV		56	½	270K	18.89	10.32	12	52.0	5888	5888
	8	ALL	IV		44	½	270K	20.02	12.02	8	52.0	5003	5003
	9	ALL	IV		44	½	270K	20.02	12.02	8	52.0	5003	5003
	10	ALL	IV		44	½	270K	20.02	12.02	8	52.0	5003	5003
	11	ALL	IV		44	½	270K	20.02	12.02	8	52.0	5007	5007
	12	ALL	IV		52	½	270K	19.29	11.21	10	52.0	5692	5692
	13	ALL	IV		14	½	270K	22.47	21.32	4	8.0	4000	5000

OPTIONAL DESIGN

STRUCTURE	SPAN NO.	BEAM NO.	DESIGN LOAD COMP STRESS (TOP ℄) fct (psi)	DESIGN LOAD TENSILE STRESS (BOTT ℄) fcb (psi)	REQUIRED MINIMUM ULTIMATE MOMENT CAPACITY (ft-kips)
TRENTON ROAD OVERPASS					
NORTHBOUND	1&3	ALL	1367	-1784	3498
	2	ALL	4335	-4751	7807
SOUTHBOUND	1&3	ALL	1367	-1784	3498
	2	ALL	4335	-4751	7807
OWASSA RD OVERPASS					
NORTHBOUND	1&3	ALL	1123	-1504	3013
	2	ALL	3870	-4585	8127
SOUTHBOUND	1&3	ALL	1123	-1504	3013
	2	ALL	3870	-4585	8127
NOLANA LOOP OVERPASS WIDENING					
NORTHBOUND	1-3	ALL	2659	-3114	5509
SOUTHBOUND	1-3	ALL	2659	-3114	5509
SIOUX ROAD OVERPASS WIDENING					
NORTHBOUND	1-3	ALL	2597	-2997	5246
SOUTHBOUND	1-3	ALL	2597	-2997	5246
BUS281 NB DIRECT CONN	1	ALL	3474	-4027	7045
	2	ALL	3358	-3905	6856
	3	ALL	3375	-3922	6883
	4	ALL	3702	-4295	7470
	5	ALL	3687	-4279	7445
	8	ALL	3104	-3657	6476
	9	ALL	3104	-3657	6476
	10	ALL	3107	-3659	6480
	11	ALL	3189	-3748	6620
	12	ALL	3520	-4101	7170
	13	ALL	1057	-1373	2696

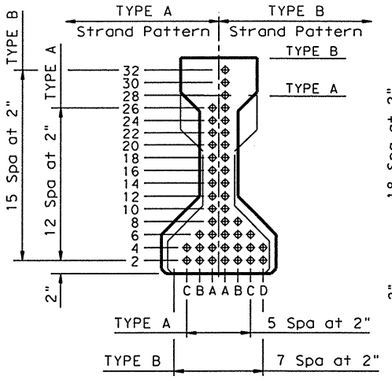

TYPE A & TYPE B BMS

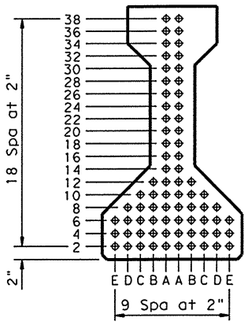

TYPE C BM

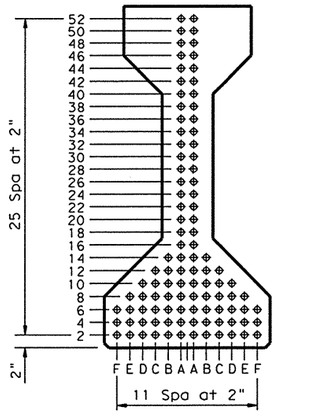

TYPE IV BM
(AASHTO TYPE IV BM)

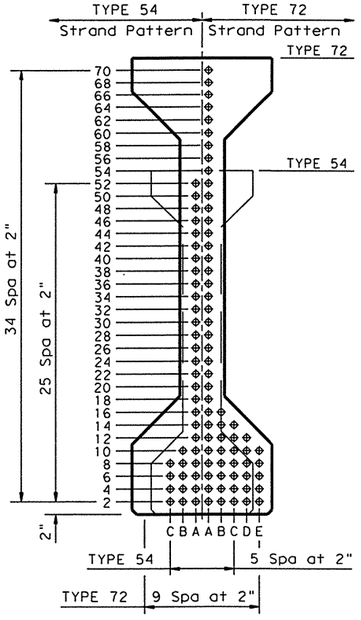

TYPE 54 & TYPE 72 BMS

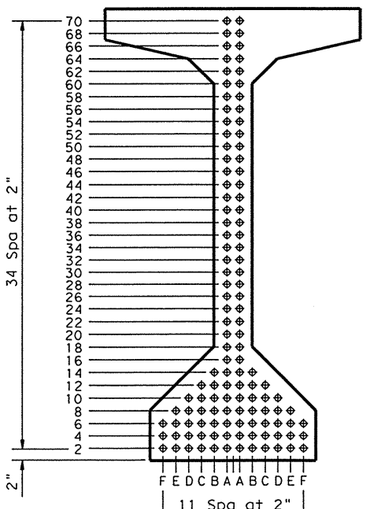

TYPE VIM BM
(AASHTO TYPE VI (MOD) BM)

NON-STANDARD STRAND PATTERNS

PATTERN	STRAND ARRANGEMENT AT ℄ OF BEAM

GENERAL NOTES:

Designed in accordance with current AASHTO Standard Specifications.

All concrete shall be Class H. All reinforcing bars shall be Grade 60.

When shown on this sheet, the Fabricator has the option of furnishing either the designed depressed strand beam or an approved optional design. All optional design submittals and shop drawings shall be signed, sealed and dated by a registered Professional Engineer.

Optional designs for beams 120 feet or longer shall have a calculated residual camber equal to or greater than that of the designed beam.

Prestress losses for the designed beams have been calculated for a relative humidity of 75 percent. Optional designs shall likewise conform.

Certain beams with depressed strands are subject to cracking in the end of the beam. When such cracks occur, all subsequent beams of the same type and strand pattern shall have strands debonded in the following manner:

1. Alternate rows of depressed strands shall be debonded for two feet from each end of the beam.
2. One half of the straight strands, as nearly as possible, shall be debonded for four feet from each end of the beam.
3. The debonding pattern shall be symmetrical about the vertical axis of the beam for both depressed and straight strands.
4. Strands shall be debonded so that the centers of gravity of the depressed strands and the straight strands will remain within one inch of their original location.
5. Strands shall be encased in plastic tubing along entire debonded length, and ends of tubing shall be sealed with waterproof tape. Split plastic tubing may be used provided the seam of the tubing is sufficiently sealed with waterproof tape to prohibit grout infiltration. Wrapping of strands with tape to provide debonding will not be permitted.
6. Revised shop drawings will not be required.

For depressed strand designed beams, strands shall be located as low as possible on the 2" grid system unless a Non-Standard Strand Pattern is indicated. Fill row "2", then row "4", then row "6", etc., beginning each row in the "A" position and working outward until the required number of strands is reached. All strands in the "A" position shall be depressed, maintaining the 2" spacing so that, at the beam ends, the upper two strands are in the position shown in the table.

Strands for the designed beam shall be ½" 270 ksi low relaxation strands pretensioned to 31.0 k each.

Type 54 Beams shall not be used for new structures, but may be used to widen existing bridges built with Type 54 Beams.

HS25 LOADING

STATE OF TEXAS
ALLEN R. CROZIER
81450
REGISTERED PROFESSIONAL ENGINEER
6/25/03

Texas Department of Transportation
Design Division (Bridge)

PRESTRESSED CONCRETE I-BEAMS (NON-STANDARD SPANS)

IBNS (MOD)

FILE: 281IBNS1.DGN	DN: ARC	CK: ABM	DW: OJH	CK: ARC	STD: B211
ORIG DATE: FEBRUARY 2002	DIST	FED REG	FEDERAL AID PROJECT •		SHEET
REVISIONS	PHARR	6	NH 2003 ( )		1081
©TxDOT September 1998 Rev 2/2002 ~ ARC ~ Revised for HS 25	COUNTY		CONTROL	SECT	JOB	HIGHWAY
	HIDALGO		0255	08	091	US281

DISCLAIMER:
The use of this standard is governed by the "Texas Engineering Practice Act". No warranty of any kind is made by TxDOT for any purpose whatsoever. TxDOT assumes no responsibility for the conversion of this standard to other formats or for incorrect results or damages resulting from its use.

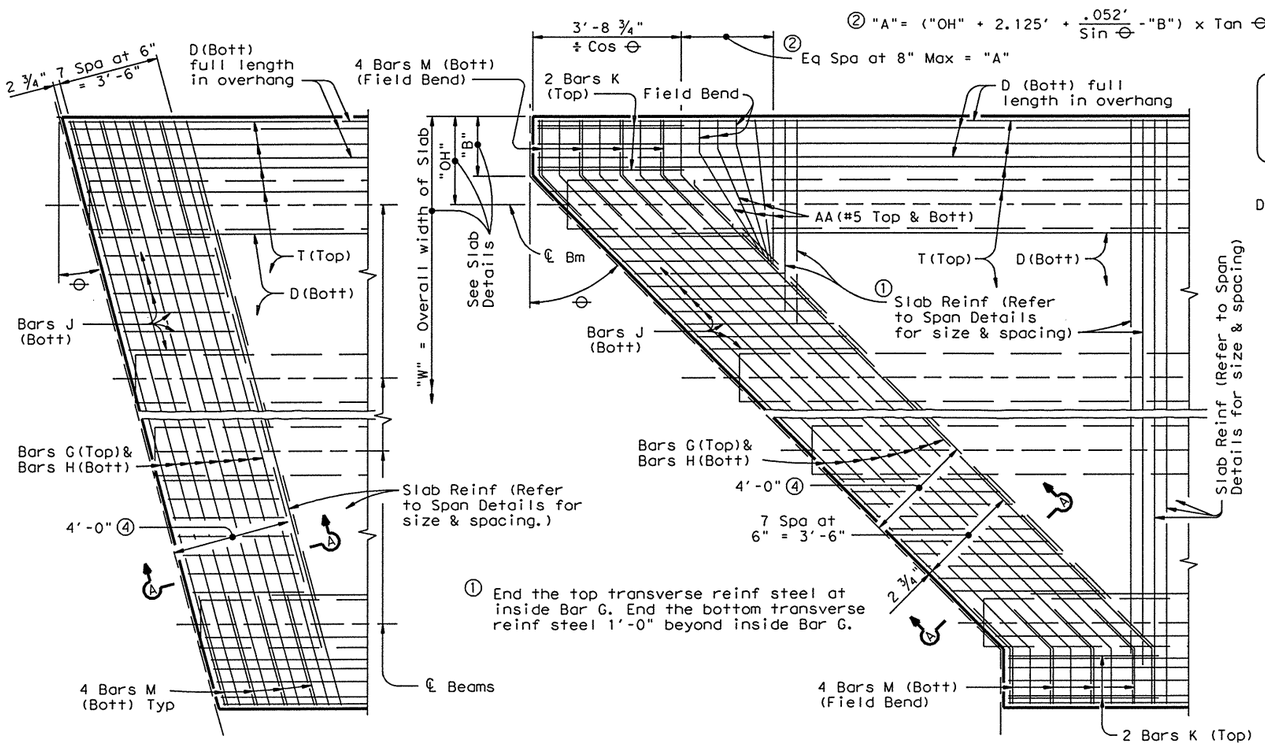

② "A" = ("OH" + 2.125' + $\frac{.052'}{\sin \ominus}$ - "B") x Tan ⊖

PARTIAL PLAN FOR SLABS WITHOUT BREAKBACK

PARTIAL PLAN FOR SLABS WITH BREAKBACK

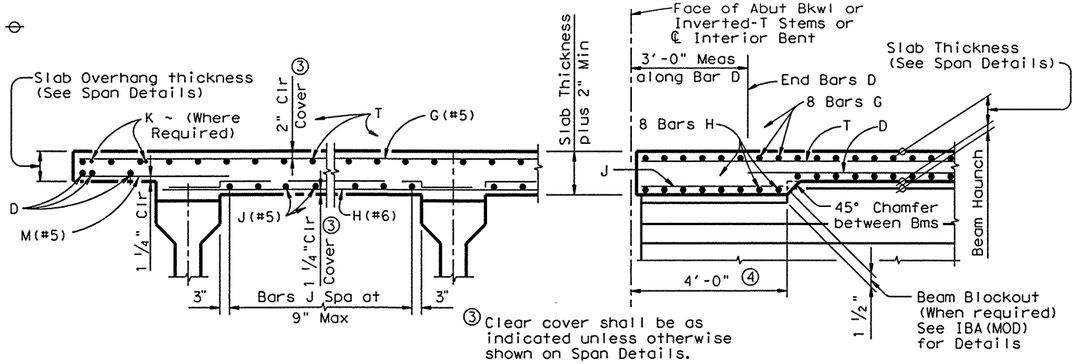

TYPICAL TRANSVERSE SECTION

SECTION A-A

③ Clear cover shall be as indicated unless otherwise shown on Span Details.

④ Thickened Slab End dimensioned perpendicular to Face of Abutment Backwall or Inverted-T Stems or ℄ Interior Bents.

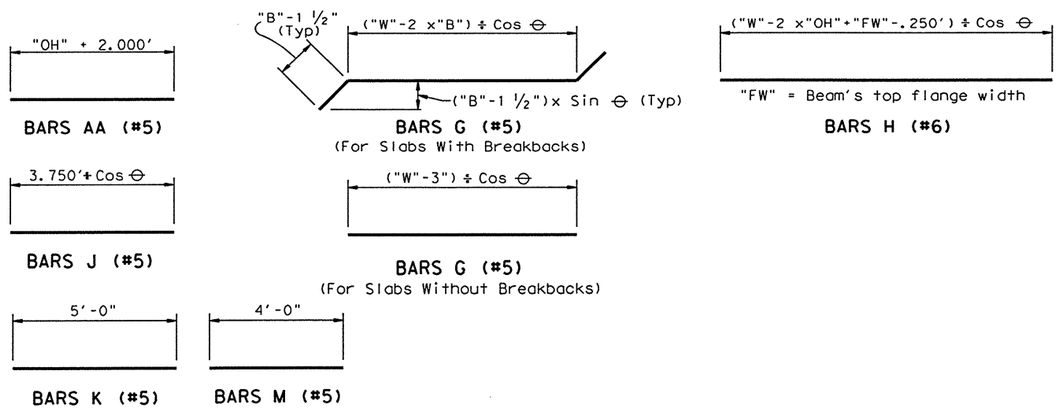

GENERAL NOTES:

Designed according to current AASHTO Standard Specifications for Highway Bridges.

All reinforcing bars shall be Grade 60 steel.

Unless otherwise shown or noted hereon, all Span Details remain unchanged.

If the top and/or bottom layer of reinforcing steel is shown on the Slab Details to be epoxy coated, then the G & K and/or H, J & M bars shall be epoxy coated.

Bar laps, where required, shall be as follows:

Uncoated ~ #4 = 1'-5"
~ #5 = 1'-9"
Epoxy Coated ~ #4 = 2'-1"
~ #5 = 2'-7"

HS25 LOADING

STATE OF TEXAS
ALLEN R. CROZIER
81450
REGISTERED PROFESSIONAL ENGINEER
6/25/03

Texas Department of Transportation
Design Division (Bridge)

THICKENED SLAB END DETAILS FOR PRESTR I-BEAM SPANS AT ABUTMENTS

IBTS(MOD)

FILE: ibtsstde.dgn	DN: THD	CK: DWM	DW: DRG	CK: LDS	STD: B212
© TxDOT September 1998	DIST	FED REG	FEDERAL AID PROJECT •		SHEET
REVISIONS 9/6/01-ARC - Changed H bars from #5's to #6's for HS25 Loading	PHARR	6	NH 2003( )		1082
	COUNTY		CONTROL	SECT	JOB	HIGHWAY
	HIDALGO		0255	08	091	US281

LEVELS DISPLAYED 1 2 ACC: (LV=1,2 for English)

Kate Dougherty
09:45:04 AM
06/17/2003
50I:\projects\223220\CAD\Sheets\Structures\Direct Connects\281PRSTRTSE.DGN

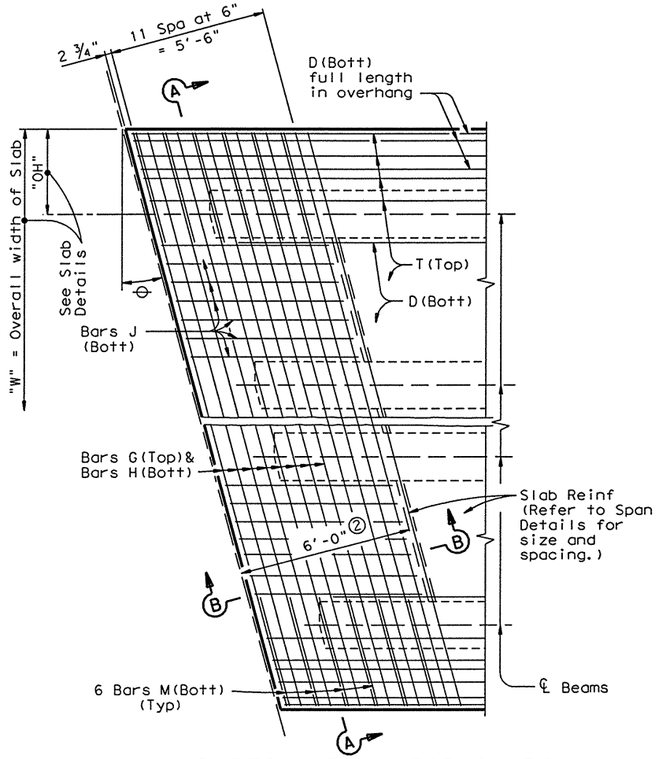

PARTIAL PLAN FOR SLABS AT END OF UNITS

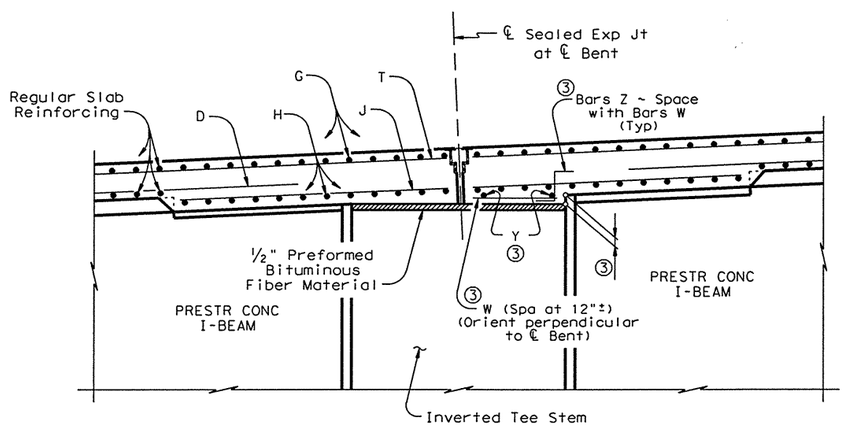

SEC. THRU INVERTED TEE CAP AT END OF UNITS

③ If dimension exceeds 2", Bars W, Y and Z shall be required to reinforce area above top of Inverted Tee Stem.

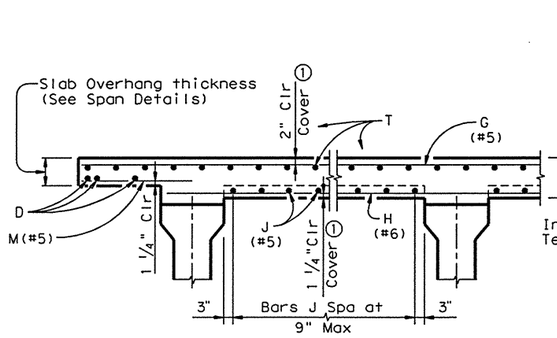

SECTION A-A (AT END OF UNITS)

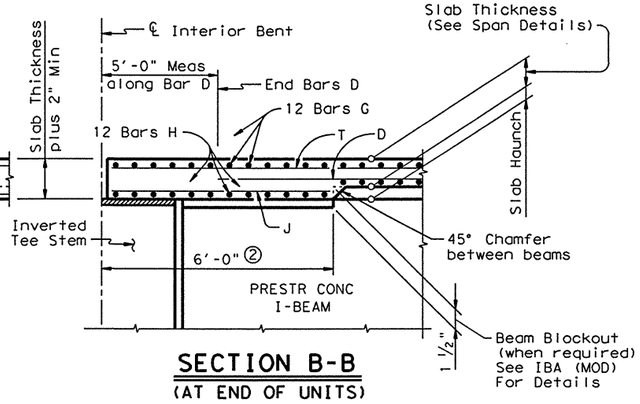

SECTION B-B (AT END OF UNITS)

① Clear cover shall be as indicated unless otherwise shown on Span Details.

② Thickened Slab End dimensioned perpendicular to Face of Abutment Backwall or ℄ Interior Bents.

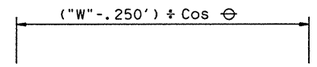

BARS G (#5)

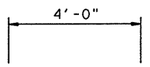

BARS M (#5)

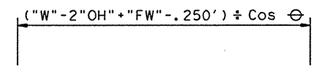

("FW" = Girder's top flange width)

BARS H (#6)

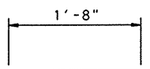

BARS W (#4)

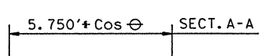

BARS J (#5)

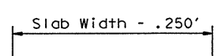

BARS Y (#4)

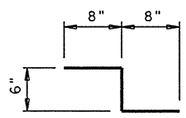

BARS Z (#4)

GENERAL NOTES:

Designed according to current AASHTO Standard Specifications for Highway Bridges.

All reinforcing bars shall be Grade 60 steel.

Unless otherwise shown or noted hereon, all Span Details remain unchanged.

If the top and/or bottom layer of reinforcing steel is shown on the Slab Details to be epoxy coated, then the G and/or H, J & M bars shall be epoxy coated.

Bar laps, where required, shall be as follows:

Epoxy Coated ~ #4 = 2'-1"
~ #5 = 2'-7"

Uncoated ~ #4 = 1'-5"
~ #5 = 1'-9"

HS25 LOADING

STATE OF TEXAS
ALLEN R. CROZIER
81450
REGISTERED PROFESSIONAL ENGINEER

Allen R. Crozier
6/25/03

Parsons Brinckerhoff Quade & Douglas Inc.

Texas Department of Transportation

© 2003 by TxDOT

THICKENED SLAB END DETAILS

FOR PRESTR I-BEAM SPANS

281PRSTRTSE.DGN

DESIGNED: ARC	FED. RD DIV. No.	STATE	FEDERAL AID PROJECT No.		HIGHWAY No.	
CHECKED: ALA	6	TEXAS	NH 2003 ( )		US 281	
DRAWN: DRM	STATE DISTRICT	COUNTY	CONTROL No.	SECTION No.	JOB No.	SHEET No.
CHECKED: ARC	PHARR	HIDALGO	0255	08	091	1083

501:\projects\223220\CAD\Sheets\Structures\Direct Connects\281stltse.dgn
06/17/2003 09:49:53 AM Kate Dougherty

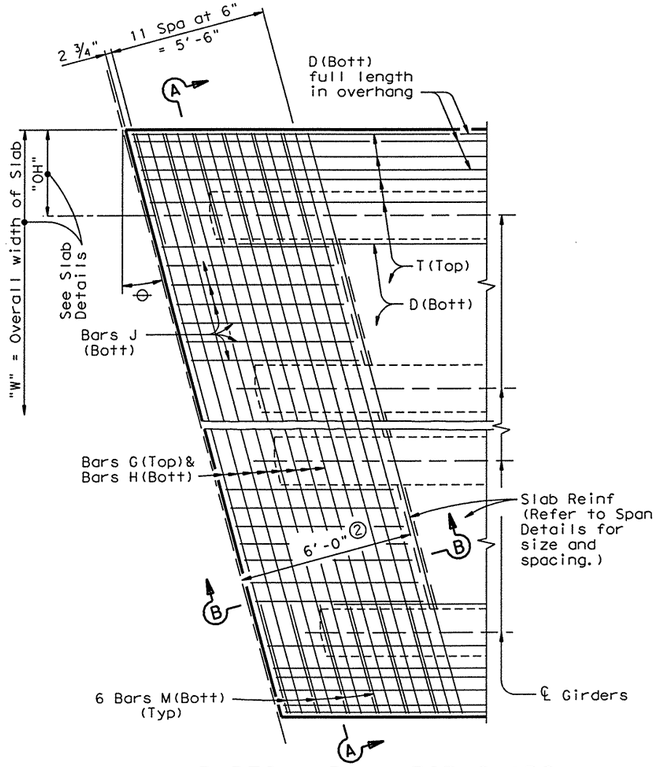

PARTIAL PLAN FOR SLABS AT END OF UNITS

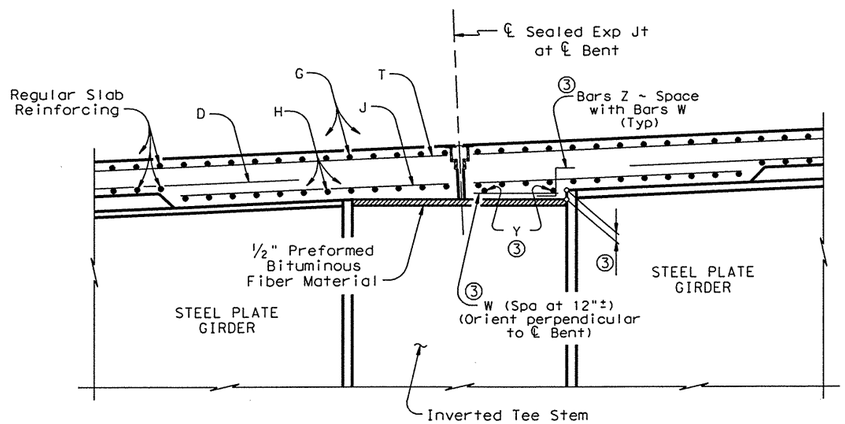

SEC. THRU INVERTED TEE CAP AT END OF UNITS

③ If dimension exceeds 2", Bars W, Y and Z shall be required to reinforce area above top of Inverted Tee Stem.

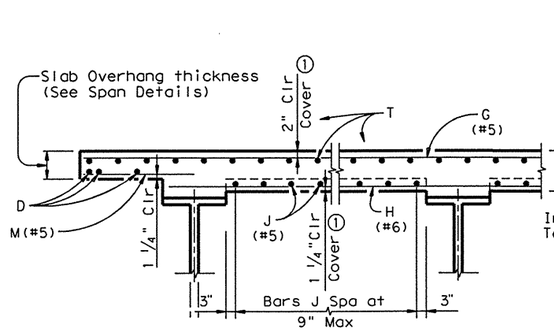

SECTION A-A (AT END OF UNITS)

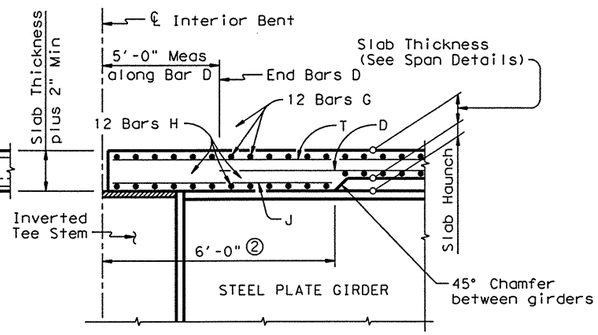

SECTION B-B (AT END OF UNITS)

① Clear cover shall be as indicated unless otherwise shown on Span Details.

② Thickened Slab End dimensioned perpendicular to Face of Abutment Backwall or ℄ Interior Bents.

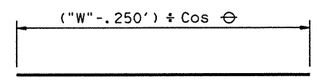

BARS G (#5)

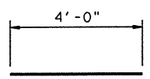

BARS M (#5)

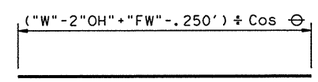

("FW" = Girder's top flange width)

BARS H (#6)

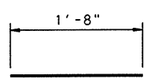

BARS W (#4)

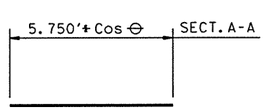

BARS J (#5)

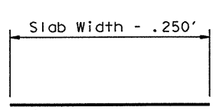

BARS Y (#4)

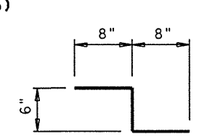

BARS Z (#4)

GENERAL NOTES:

Designed according to current AASHTO Standard Specifications for Highway Bridges.

All reinforcing bars shall be Grade 60 steel.

Unless otherwise shown or noted hereon, all Span Details remain unchanged.

If the top and/or bottom layer of reinforcing steel is shown on the Slab Details to be epoxy coated, then the G and/or H, J & M bars shall be epoxy coated.

Bar laps, where required, shall be as follows:

Epoxy Coated ~ #4 = 2'-1"
~ #5 = 2'-7"

Uncoated ~ #4 = 1'-5"
~ #5 = 1'-9"

HS25 LOADING

Parsons Brinckerhoff Quade & Douglas Inc.

Texas Department of Transportation

© 2003 by TxDOT

THICKENED SLAB END DETAILS FOR STEEL PLATE GIRDER SPANS

281STLTSE.DGN

DESIGNED: ARC	FED. RD DIV. No.	STATE	FEDERAL AID PROJECT No.			HIGHWAY No.	
CHECKED: ALA	6	TEXAS	NH 2003 ( )			US 281	
DRAWN: DRM	STATE DISTRICT	COUNTY	CONTROL No.	SECTION No.	JOB No.	SHEET No.	
CHECKED: ARC	PHARR	HIDALGO	0255	08	091	1084	

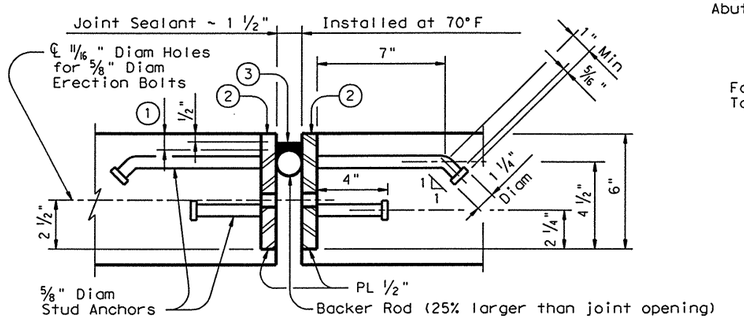

SECTION THRU SEALED ARMOR JOINT

NOTE:
Silicone Seal shall be placed while ambient temperature is between 50°F and 90°F.

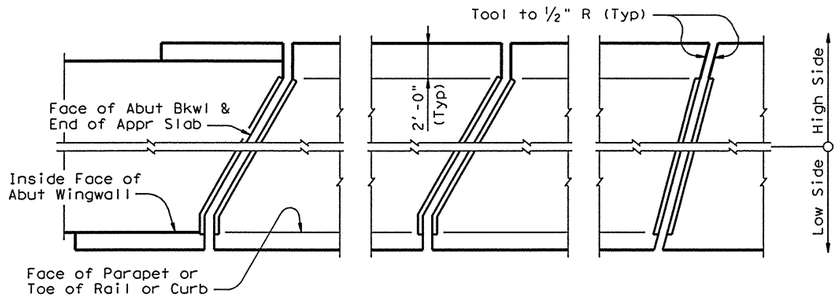

JOINTS AT ABUTMENTS | SKEWS OVER 15° | SKEWS THRU 15°

PLANS OF ARMOR JOINT PLATES

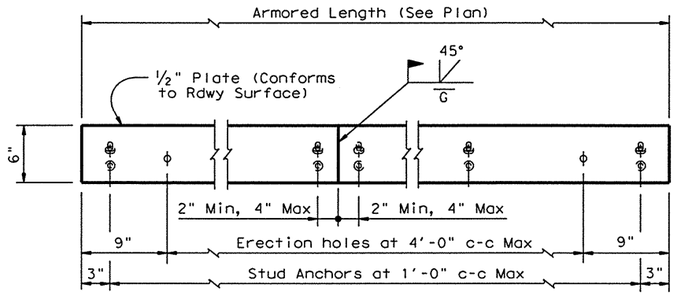

ELEVATION OF BASIC ARMOR PLATE

DETAIL NOTES:

(1) Depth to top of Backer Rod shall be 1". The backer rod shall conform to Item 438, "Cleaning and/or Sealing Joints and Cracks (Portland Cement Concrete)" and shall be subsidiary to the Bid Item "Structural Steel (Armor Joint)".

(2) Armor Joint plates shall be prepared with a Class "A" Blast Cleaning (see description below) before the Joint Sealant is applied. The blast cleaning shall be applied to a depth sufficient to assure that the entire contact area between the seal and plate is cleaned.

Class "A" Blast Cleaning is defined as removal of all visible paint, rust, mill scale, and other forms of contamination. The blasted area shall exhibit a uniform surface appearance.

All concrete surfaces in contact with the Joint Sealant shall receive a light brush blast and be thoroughly cleaned of all dust and debris before application of Silicone Seal.

(3) Joint Sealant shall be a two-part, cold applied silicone material conforming to Item 433, "Joint Sealants and Fillers", Section (g), "Class 7. Self-leveling, Rapid Curing, Low Modulus Silicone", shall be installed in accordance with the Manufacturer's recommendations, and shall be bid under the Item, "Structural Steel (Armor Joint)".

GENERAL NOTES:

Armor Joints and Joint Sealant shall be provided at all locations shown on plans.

Armor Plates shall be shipped in convenient lengths of 24'-0" max and 10'-0" min unless otherwise necessary for stage construction or widenings. One shop splice will be permitted in each shipping length, provided no piece is less than 2'-0" in length and sufficient studs are added to limit the stud to shop splice distance to 2" min and 4" max.

Shop and field welded butt splices shall be made by groove welding. Areas in contact with the joint seal shall be ground smooth. Field splice preparations shall be performed in the shop.

Stud anchors shall be electric arc end-welded to the plates with complete fusion. Erection holes shall be punched to line up in final position of the Armor Joint. Corresponding plate sections shall be match marked and bolted together for shipment.

Steel parts are not to be painted or primed unless designated elsewhere on the plans or in the Class 7 Silicone Sealant manufacturer's recommendations.

Vertical leg of seal shall be formed per the manufacturer's recommendations.

The Contractor shall arrange for securing the Armor Joint in position, placed to the proper grade and alignment, by welding braces to adjacent reinforcing steel. Cost of temporary bracing is to be included in the price bid for "Structural Steel, Armor Joint".

After bracing and welding the armor plates, the erection bolts and spacers shall be removed before placing slab concrete.

Calculated weight (Lb/Ft) of one Armor Joint (2 plates) = 22.90 Lb/Ft

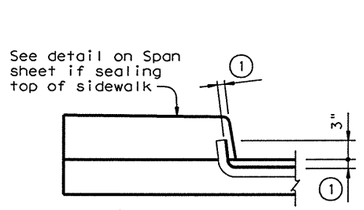

SHOWING CURBS

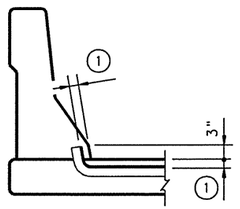

SHOWING BARRIER RAILS

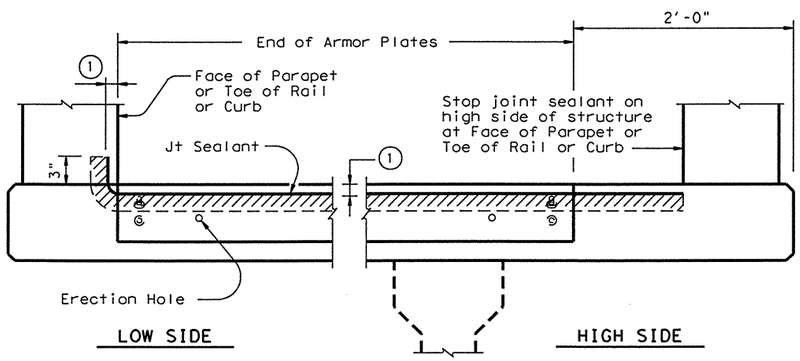

LOCATION OF SILICONE SEAL

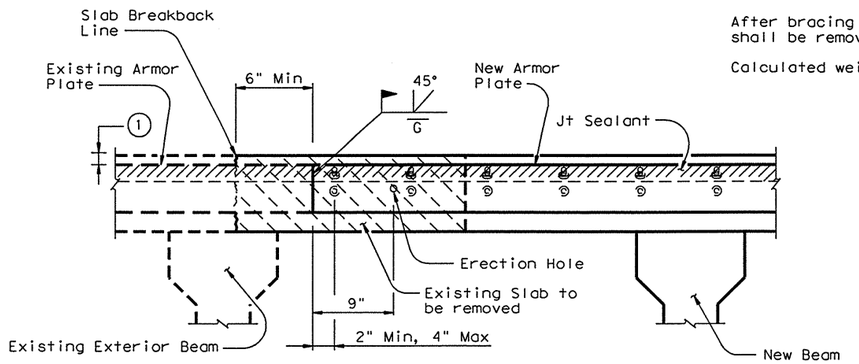

ARMOR JOINT (SPL) WIDENING DETAIL

Existing Armor Joint shall be cleaned and sealed in accordance with Detail Notes (1) - (3) and shall be considered subsidiary to Bid Item "Structural Steel (Armor Joint)".

HS25 LOADING

STATE OF TEXAS
ALLEN R. CROZIER
81450
REGISTERED PROFESSIONAL ENGINEER

Allen R Crozier
6/25/03

Texas Department of Transportation
Bridge Division

ARMOR JOINT (SPL) (WITH JOINT SEALANT)

FILE: 281AJ01.DGN	DN: TxDOT	CK: ARC	DW: JRP	CK: ARC
©TxDOT MARCH 2001	DIST	FED REG	FEDERAL AID PROJECT #	SHEET
REVISIONS	PHARR	6	NH 2003 ( )	1085
REV-10/01-ARC - Added widening detail and verified for HS25 Loading.	COUNTY		CONTROL SECT JOB	HIGHWAY
	HIDALGO		0255 08 091	US281

LEVELS DISPLAYED
1 2 3 4 5 6 7 8 9 10 11 12 13 14 15 16
17 18 19 20 21 22 23 24 25 26 27 28 29 30 31 32
33 34 35 36 37 38 39 40 41 42 43 44 45 46 47 48
49 50 51 52 53 54 55 56 57 58 59 60 61 62 63

PATH:

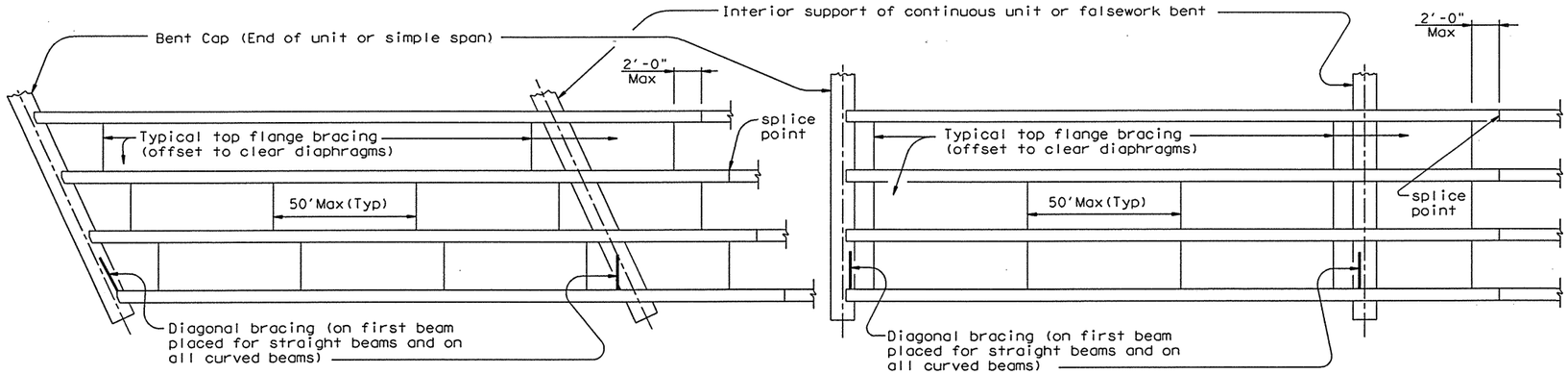

TYPICAL BRACING PLANS

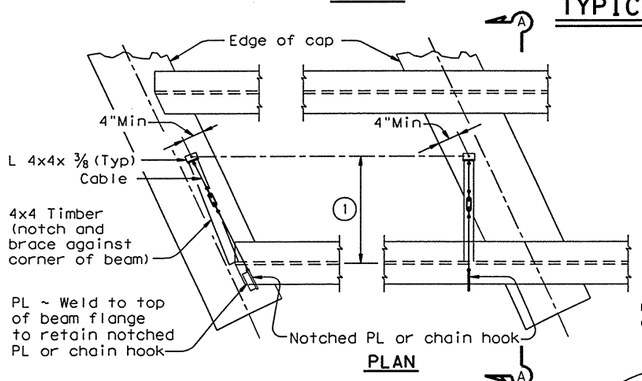

DIAGONAL BRACING DETAILS

To be used at all bents on the first beam erected in the stage for straight beams and on all curved beams when erected in single beam lines.

(1) 5'-0" (Min) for Girders 4' thru 7' deep ~ 3'-6" (Min) for Girders or Beams less than 4' deep

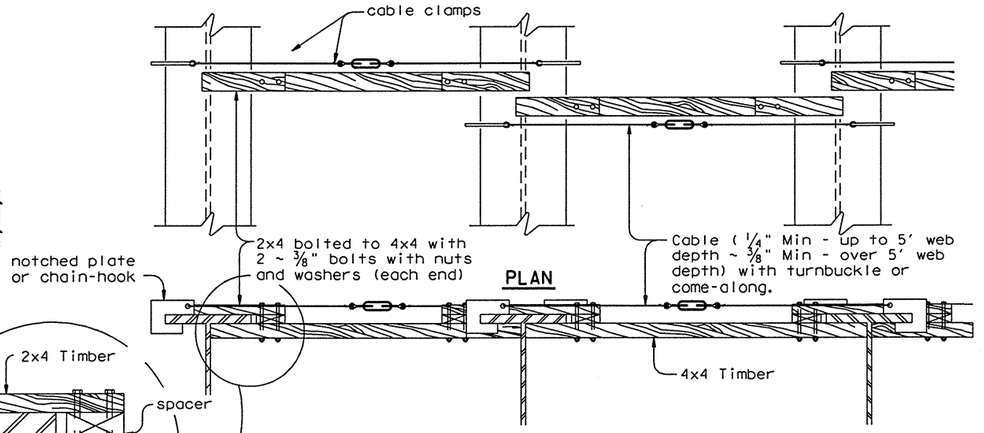

TOP FLANGE BRACING DETAILS

Min breaking strength of cables = 1/4" ~ 5 Kips, 3/8" ~ 10 Kips

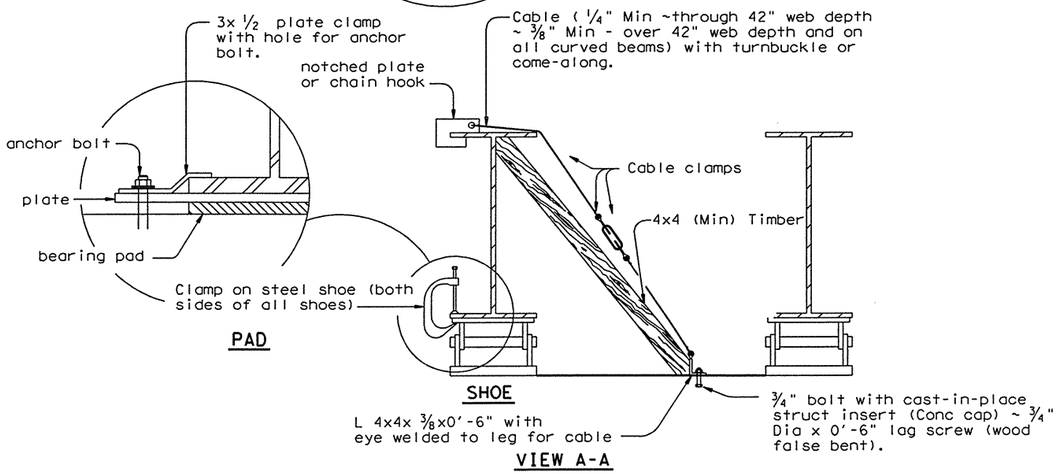

BEAM BRACING DETAILS

See appropriate details elsewhere in plans when Girders are supported at Steel Bent Caps.

STRAIGHT BEAMS AND GIRDERS

The suggested bracing details and erection requirements are considered minimum for all plate girders 7 feet or less in depth (haunch depth governs) and spaced 10 feet or less c.c. of girders. The splice-point support systems shown are considered minimum for I-beams and plate girders for the maximum weights shown.

Diagonal bracing shall be located at caps and falsebents when using single beam line erection. Top flange bracing shall be located near the ends of beam or girder segments and spaced not to exceed 50 feet. Erection bracing shall not be removed until permanent lateral bracing (when required) and all diaphragms in any segment are bolted in place (bolts fully tightened).

Welding of splice point support plates shall be by a certified welder, using E7018 or higher strength Low Hydrogen Electrodes, and inspected and approved by the Engineer prior to erection. Support plates shall not be removed until a minimum of 50 percent of the flange thickness of both flanges is welded, except that over a traveled way or railroad a minimum of 90 percent of the flange thickness of both flanges shall be welded prior to removal.

All turn-buckles, come-alongs and other connections shall be capable of developing the full strength of the minimum size cable required.

Bracing details for plate girders over 7 feet in depth (haunch depth governs), girders spaced more than 10 feet c.c., closely spaced members (as on ramps or railroad structures), members bearing on a single column, and girders framed with floor beams are not shown.

CURVED BEAMS AND GIRDERS

Minimum requirements for straight beams and girders shall apply except as noted.

Web support plates and a minimum of 2 support plates on the top flange will be required to prevent rotation. Clamps will not be permitted as supports, but may be used for alignment purposes.

All girder sections with a radius of curvature (in feet) less than $0.208L^2$ for channel diaphragm systems and $0.104L^2$ for "x" braced diaphragm systems shall be supported at three points during erection and welding of splices. "L" is the distance between supports of the beam or girder section (in feet). Support plate connections at the joints shall be supplemented by the use of a falsebent or a support system near the center of the curved section. For continuous units the falsebents or support system shall not be removed until the beams or girders are extended over three or more permanent bents, all splices welded and all diaphragms bolted or welded in place on that section. In lieu of erection with three point support, other methods, such as multiple girder assembly erection, may be used if shown to be adequate by the Contractor's calculations and approved by the Engineer.

GENERAL NOTES:

Complete erection and falsework plans as required by the Specification Item "Steel Structures" will be required, and shall be approved by the Engineer prior to erection. These suggested details are considered minimum for fulfilling the requirements of Specification Item 441, (Article 441.11, Field Erection) and special provisions thereto for all plate girders up to 7 feet depth regardless of where erected. They are also considered minimum for bracing I-beams erected in the span over a traveled way or railroad, and in those spans generally parallel to a traveled way or railroad and within a distance equal to the difference in elevation between the top of cap upon which the beams are being erected and the traveled way, or 30 feet, whichever is greater.

Bracing and splice point support systems equal to or better than those shown may be used provided details of such systems are submitted to and approved by the Engineer prior to erection.

The Contractor shall submit to the Engineer for approval prior to erection, details of erection, bracing and splice point supports for conditions not covered hereon.

Use of these systems and or details shall not relieve the Contractor of the responsibility of the adequacy of the bracing and safety of the structure.

DISCLAIMER:
The use of this standard is governed by the "Texas Engineering Practice Act". No warranty of any kind is made by TxDOT for any purpose whatsoever. TxDOT assumes no responsibility for the conversion of this standard to other formats or for incorrect results or damages resulting from its use.

LEVELS DISPLAYED 1 2 | ACC: (LV=1,2 for English)

SHEET 1 OF 2

Texas Department of Transportation
Design Division (Bridge)

MINIMUM ERECTION AND BRACING REQUIREMENTS STEEL I-BEAMS AND PLATE GIRDERS

MEBR(S)

FILE: mebsstde.dgn	DN: TxDOT	CK: TxDOT	DW: TGC	CK: JMH	NEG: B111	
©TxDOT September 1998	DIST	FED REG	FEDERAL AID PROJECT #			SHEET
REVISIONS	PHARR	6	NH 2003 ( )			1086
	COUNTY		CONTROL	SECT	JOB	HIGHWAY
	HIDALGO		0255	08	091	US281

DISCLAIMER:
The use of this standard is governed by the "Texas Engineering Practice Act". No warranty of any kind is made by TxDOT for any purpose whatsoever. TxDOT assumes no responsibility for the conversion of this standard to other formats or for incorrect results or damages resulting from its use.

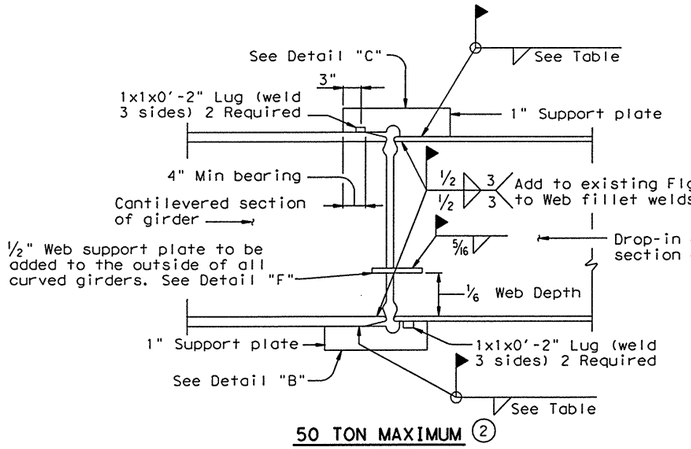

50 TON MAXIMUM (2)

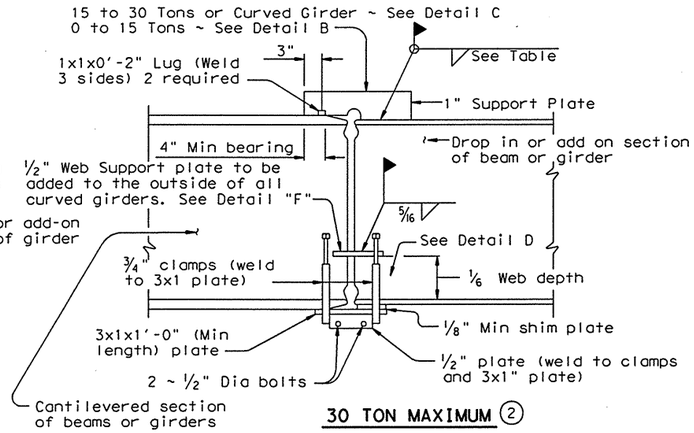

30 TON MAXIMUM (2)

ELEVATIONS OF TYPICAL SPLICE SUPPORTS

NOTE: All top and bottom flange support plates shall be in place before the beam or girder is erected; web plates and lugs shall be attached immediately after erection. Care shall be exercised in removing the support plates and lugs. Flange and web shall be ground smooth after their removal.

(2) Weights indicated are total weight of drop-in section. Special design will be required when weight of drop-in section exceeds 50 Tons or supported reaction of add-on section exceeds 25 Tons.

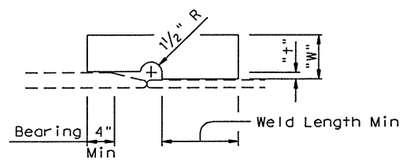

SHOWING PLATE WELDED TO THINNER OR EQUAL FLANGE

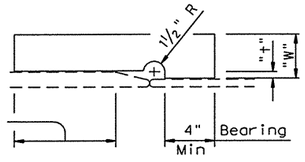

SHOWING PLATE WELDED TO THICKER FLANGE

SUPPORT PLATE DETAILS

"t" inches	1 PL to 15 T or 2 PLs ~ 15 T to 30 T				3 PLs ~ 30 T to 50 T				
	"W"	Required Weld Length			"W"	Required Weld Length			
		5/16" Weld	3/8" Weld	7/16" Weld		5/16" Weld	3/8" Weld	7/16" Weld	1/2" Weld
0 to 1/2	6"	10"	10"	10"	7"	15"	13"	12"	10"
1/2 to 1 1/2	8"	12"	11"	10"	9 1/2"	18"	16"	14"	12"

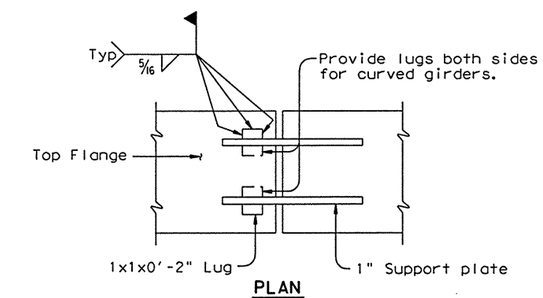

DETAIL C

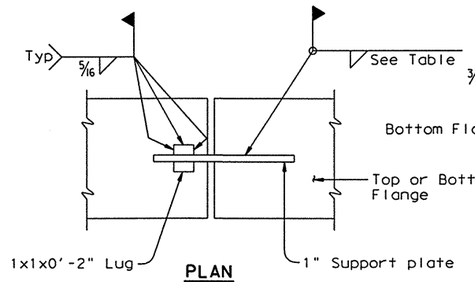

DETAIL B

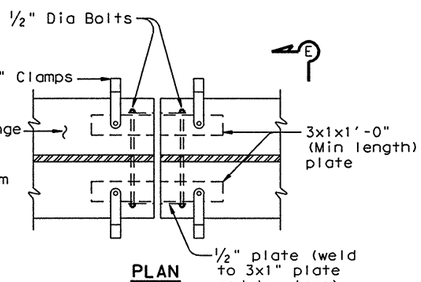

DETAIL D

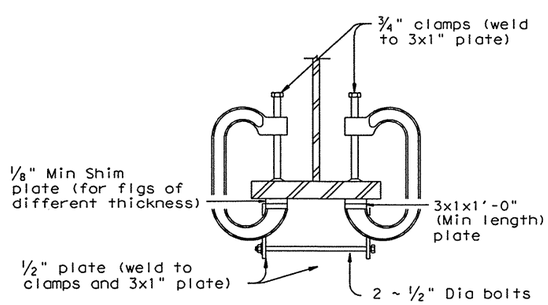

SECTION E-E

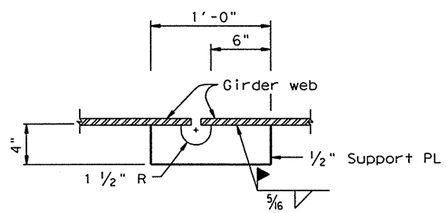

DETAIL F

Web support plates to be used for single line erection of curved girders.

Texas Department of Transportation
Design Division (Bridge)

MINIMUM ERECTION AND BRACING REQUIREMENTS STEEL I-BEAMS AND PLATE GIRDERS

MEBR(S)

FILE: mebsstde.dgn	DN: TxDOT	CK: TxDOT	DW: TGC	CK: JMH	NEG: B111	
© TxDOT September 1998	DIST	FED REG	FEDERAL AID PROJECT •			SHEET
REVISIONS	PHARR	6	NH 2003 ( )			1087
	COUNTY			CONTROL	SECT	JOB	HIGHWAY
	HIDALGO			0255	08	091	US281

LEVELS DISPLAYED 1 2 ACC: (LV=1,2 for English)

DISCLAIMER:
The use of this standard is governed by the "Texas Engineering Practice Act". No warranty of any kind is made by TxDOT for any purpose whatsoever. TxDOT assumes no responsibility for the conversion of this standard to other formats or for incorrect results or damages resulting from its use.

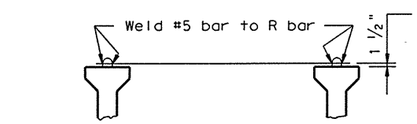

Place #5 bar in plane of bottom slab reinforcement for conventional or PMD Forming. #5 bars to rest on Panels and bent down to beam reinforcement when Prestressed Panels are used.

PERMANENT TOP BRACING (5)

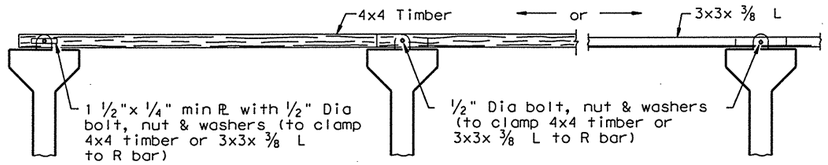

ELELVATION

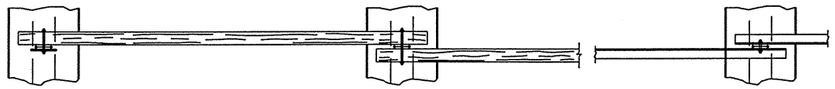

PLAN

TEMPORARY TOP BRACING (4)

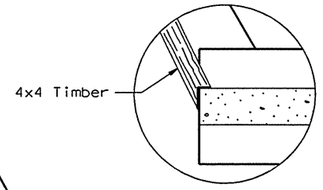

DETAIL "A"

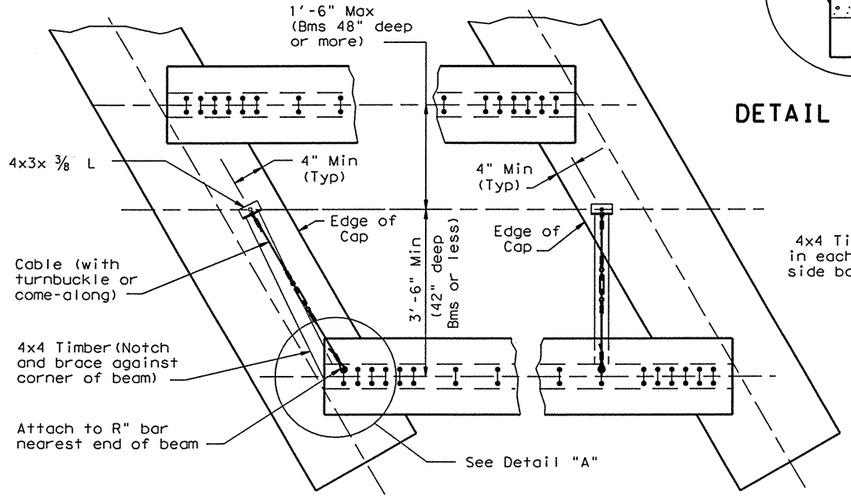

PLAN

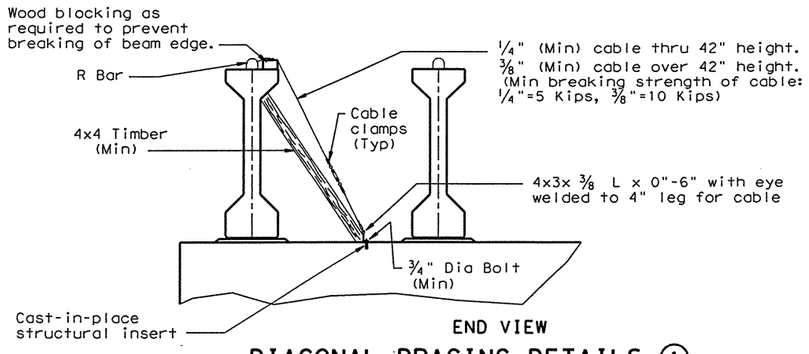

END VIEW

DIAGONAL BRACING DETAILS (1)

(To be used on both ends of the first beam erected in the span.)

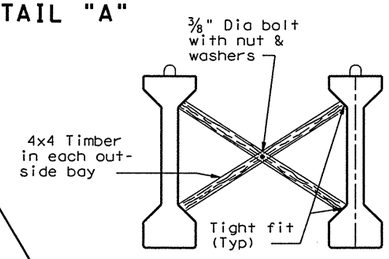

"X" BRACING (3)

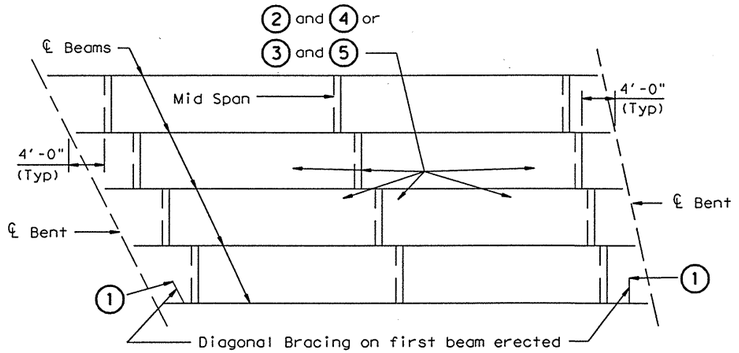

ERECTION BRACING

(NORMAL SPANS AND ALL SKEWS)

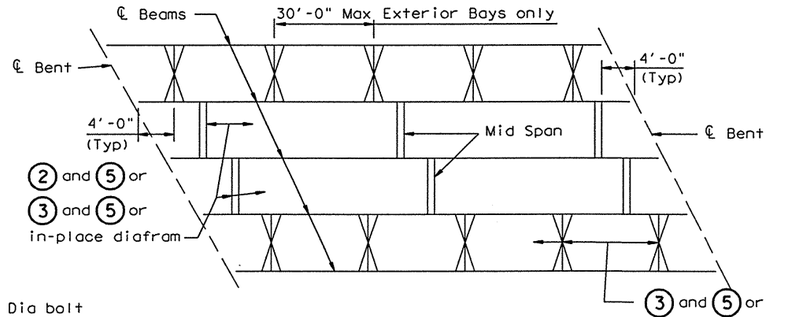

SLAB PLACEMENT BRACING

(NORMAL SPANS AND ALL SKEWS)

Indicates Diagonal Bracing (1)

Indicates Bottom Bracing (2) with Temporary Top Bracing or "X" Bracing (3) with Permanent Top Bracing (5). (4)

Indicates Permanent Top Bracing (5)

Indicates Bottom Bracing (2) or "X" Bracing (3), either one with Permanent Top Bracing (5) or an in-place diafram only.

Indicates "X" Bracing (3) & Permanent Top Bracing (5) or an in-place diafram only.

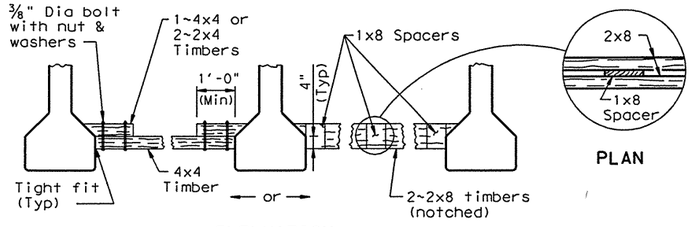

PLAN

ELELVATION

BOTTOM FLANGE BRACING DETAILS (2)

GENERAL NOTES:

ERECTION BRACING:

Erection bracing details are considered minimum for fulfilling the requirements of Specification Item 425 for bracing Types A, B, C, III, IV, and V prestressed concrete beams erected in the span over a traveled way or railroad, and in those spans generally parallel to a traveled way or railroad and within a distance equal to the difference in elevation between the top of cap upon which the beams are being erected and the traveled way, or 30 feet, whichever is greater.

Required erection bracing shall be placed immediately after erection of each beam and remain in place until diafram bars DN are tightened or additional bracing as required for slab placement is in place. This Standard is needed in all cases to meet requirements for Slab Placement Bracing.

SLAB PLACEMENT BRACING:

The details for slab placement bracing are considered minimum for fulfilling the requirements of Specification Item 420 regardless of where erected.

Required slab placement bracing shall remain in place until slab concrete has attained a flexural strength of 500 psi.

GENERAL:

Bracing details for closely spaced beams (as on ramps or railroad structures) are not included herein. The Contractor shall submit his proposed bracing details for such conditions to the Engineer for approval prior to erection.

Systems equal to or better than those shown may be used provided details of such systems are submitted to and approved by the Engineer prior to erection.

Use of these systems and/or details does not relieve the Contractor of the responsibility for the adequacy of the bracing and the safety of the structure.

Removal of bracing for short periods of time to align beams is permissible.

Bottom flange bracing at beam ends may be omitted when all beams are fixed with dowel bars or when erection is on steel caps or floor beams containing bearing seats which restrict lateral movement.

All turn-buckles, come-alongs and other connections shall be capable of developing the full strength of the cable shown hereon.

LEVELS DISPLAYED
ACC: (LV=1,2 for English)
1 2

Texas Department of Transportation
Design Division (Bridge)

MINIMUM ERECTION AND BRACING REQUIREMENTS

PRESTRESSED CONCRETE BEAM TYPES A, B, C, III, IV & V

MEBR(C)-1

FILE: mebcliste.dgn	DN: THD	CK: THD	DW: LW	CK: LDS	REG: B112A
©TxDOT September 1998	DIST	FED REG	FEDERAL AID PROJECT •		SHEET
REVISIONS	PHARR	6	NH 2003( )		1088
	COUNTY		CONTROL	SECT	JOB	HIGHWAY
	HIDALGO		0255	08	091	US281

DISCLAIMER:
The use of this standard is governed by the "Texas Engineering Practice Act". No warranty of any kind is made by TxDOT for any purpose whatsoever. TxDOT assumes no responsibility for the conversion of this standard to other formats or for incorrect results or damages resulting from its use.

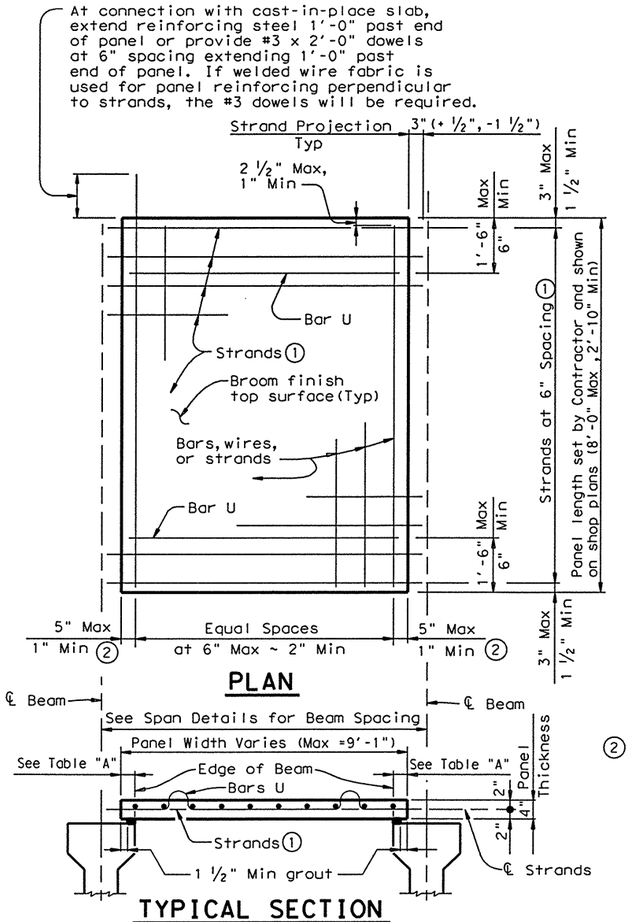

PLAN

TYPICAL SECTION

① Reinforcing steel #4 (Gr 60) at 6" spacing may be substituted for strands in panels 5'-0" in width or less and shall be required in panels 3'-6" in width or less. Non - prestressed concrete panels shall have the same dimensional tolerances as prestressed concrete panels in accordance with the Item "Precast Concrete Structures".

② May be reduced to 0" with welded wire fabric or welded bar mats.

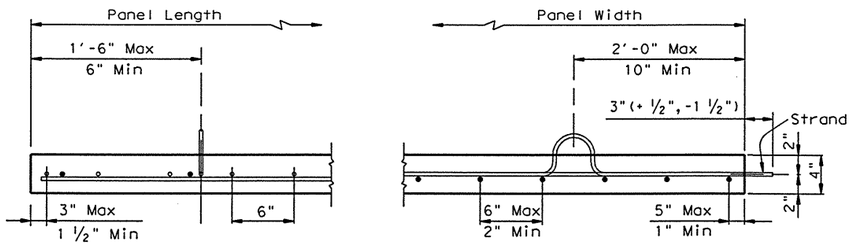

REINFORCING BELOW STRANDS

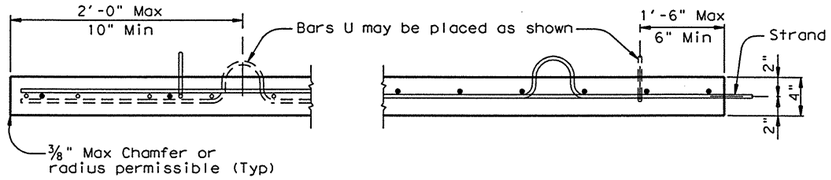

REINFORCING ABOVE STRANDS

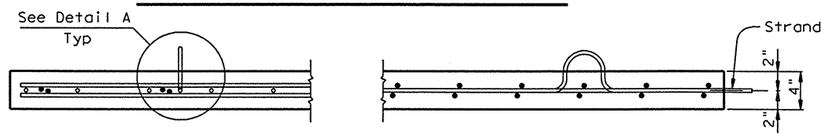

REINFORCING ABOVE & BELOW STRANDS

Reinforcing steel may be deformed reinforcing bars, welded wire fabric or welded deformed bar mats. Minimum area of reinforcing perpendicular to strands shall be 0.22 sq inches per foot. Prestressing strands may also be used, spaced at 6" for ½" strands and 4½" for ⅜" strands. Individual bars or wires shall be no larger than #3. Reinforcing parallel to strands shall be as required to ensure proper handling of the fabric or bar mat. A reasonable amount of form oil will be permitted on welded fabric or bar mats.

GENERAL NOTES:

Designed for HS25 Loading in accordance with AASHTO 1992 Standard and Interim Specifications.

See Span Details for possible restrictions on the use of Prestressed Concrete Panels.

All concrete for panels to be Class H. Release strength f'ci=4000 psi. Minimum 28 day strength f'c=5000 psi.

Prestressing strands to be ⅜" Dia (270k) with an initial tension of 16.1 kips per strand. Larger strands may be used with the same spacing and initial tension.

Suitable holes or anchorage devices for lifting panels may be cast in the panels provided they are shown on the shop plans and approved by the Engineer.

Erected panels shall bear uniformly on bedding strips of fiberboard or extruded polystyrene placed along the outer edge of each beam. A ¼" gap shall be left at 4'-0" intervals to permit escape of trapped air in the cast-in-place concrete. If additional blocking is needed, special grading details for supporting the panels and extra reinforcing between beam and slab will be required. The cost of this additional blocking will be considered subsidiary to deck construction.

Care must be taken to ensure proper cleaning of construction debris and consolidation of concrete mortar under the edges of the panels. It is also important that the bedding strips be placed at the edges of beams so that adequate space is provided for the mortar to flow a minimum of 1 ½" under the panels as the slab concrete is placed. Roadway cross-slope reduces the opening required for proper entry of the mortar. Bedding strips varying in thickness across the beam are therefore required. To allow the proper amount of mortar to flow under the panel, the minimum opening shall be ¼".

All reinforcing steel in the cast-in-place slab shall be Grade 60. See Table on Sheet 2 of 3 for size and spacing of reinforcement. Orientation of reinforcement (normal or skewed) shall match that shown on the Span Details.

If the top and/or bottom layer of reinforcing steel is shown on the Span Details to be epoxy coated, then the OT, OC, OA, & OM and/or OD, OB, & OE bars shall be epoxy coated.

Bar laps, where required, shall be as follows:
Uncoated ~ #4 = 1'-5"
~ #5 = 1'-9"
Epoxy Coated ~ #4 = 2'-1"
~ #5 = 2'-7"

Contractor Note: Details as shown on the PCP Standard sheet are to be used in conjunction with the Span Details and applicable Standard sheets.

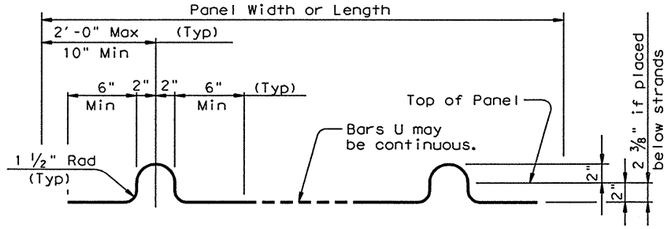

BARS U (#3)
Note: Four loops required per panel.

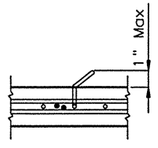

For Panels used with Epoxy Coated slab reinforcing, the loops of Bars U shall be field bent as shown. Bars U may be field bent to clear slab reinforcing.

DETAIL A

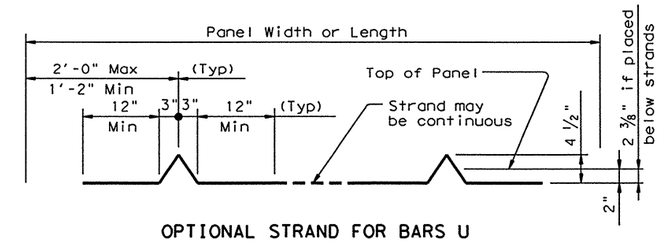

OPTIONAL STRAND FOR BARS U
Note: Four loops required per panel.
⅜" or ½" strands may be used.

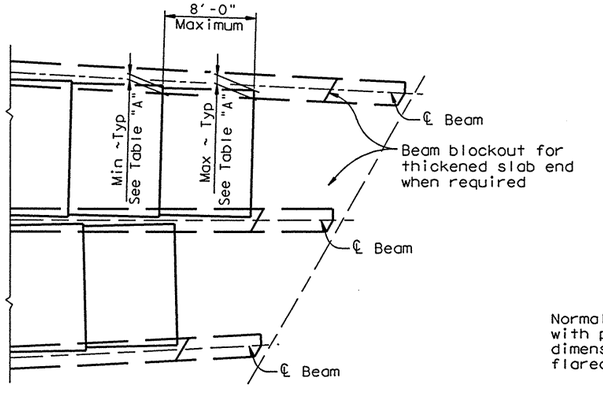

FLARED BEAM SPANS

PART PLAN
(Showing thickened slab end condition)

TABLE "A"			
Beam Type	Normal (In.)	Min (In.)	Max (In.)
A	3	2 ½	3 ½
B	3	2 ½	3 ½
C	3 ½	2 ½	4
54	4	3	5
IV	5 ½	3 ½	7
72	5 ½	3 ½	8

Normal dimensions shall be used on spans with parallel beams. Maximum and Minimum dimensions shall apply only to spans with flared beams.

PRESTRESSED PANEL DETAILS

HS25 LOADING Sheet 1 of 3

Texas Department of Transportation
Design Division (Bridge)

PRESTRESSED CONCRETE PANELS
OPTIONAL DECK DETAILS FOR PRESTRESSED CONC BEAM SPANS

PCP (C) (MOD)

STATE OF TEXAS
ALLEN R. CROZIER
81450
REGISTERED PROFESSIONAL ENGINEER
Allen R. Crozier
6/25/03

FILE: pcpcstde.dgn	DN: TxDOT	CK: DWM	DW: RNP	CK: DWM	STD: B489	
©TxDOT September 1998	DIST	FED REG	FEDERAL AID PROJECT	•	SHEET	
REVISIONS 9/6/01-ARC- Revised General Notes, Typical Section & Loading for HS 25 Loading	PHARR	6	NH 2003 ( )		1089	
	COUNTY		CONTROL	SECT	JOB	HIGHWAY
	HIDALGO		0255	08	091	US281

LEVELS DISPLAYED 1 2 ACC: (LV=1,2 for English)

DISCLAIMER:
The use of this standard is governed by the "Texas Engineering Practice Act". No warranty of any kind is made by TxDOT for any purpose whatsoever. TxDOT assumes no responsibility for the conversion of this standard to other formats or for incorrect results or damages resulting from its use.

LEVELS DISPLAYED: 1 2 | ACC: (LV=1,2 for English)

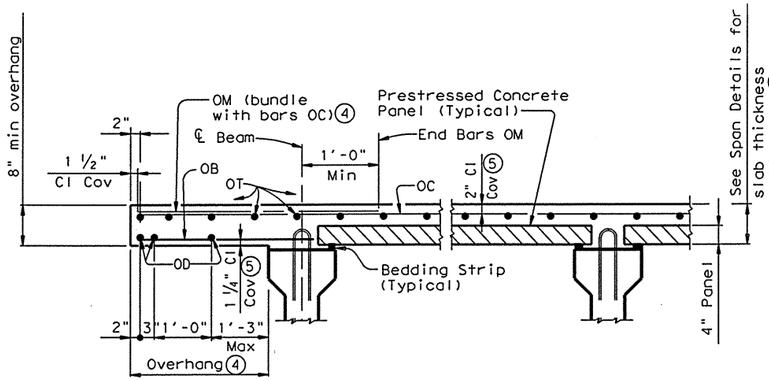

PART TRANSVERSE SECTION~TYPICAL

(3) The actual thickness constructed may exceed the slab thickness shown on Span Details but, at mid-span of beams the extra thickness shall be no more than 2". Bearing Seat Elevations or finished grade may be adjusted.

(4) Bars OM required where slab overhang exceeds the following:
2.75' at end of unit or other slab discontinuity
5.0' at midspan

(5) Clear cover shall be as indicated unless otherwise shown on Span Details. Bars OT may rest on top of prestressed concrete panels if necessary to maintain clear cover.

TABLE OF REINFORCING STEEL		
BAR	SIZE	MAX SPA (in.)
OA	#5	~
OB	#4	18
OC	#5	6
OD	#5	9
OE	#5	6
OM	#4	~
OT	#4	9

Max Spa as listed unless otherwise shown.

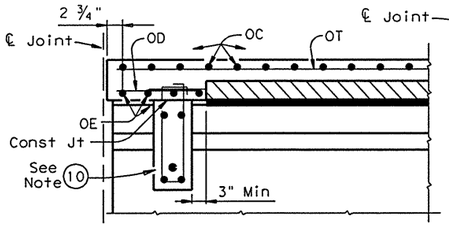

SECTION AT END DIAPHRAGM

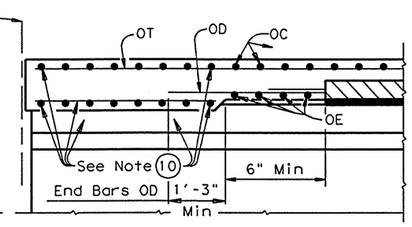

SECTION AT THICKENED SLAB ENDS

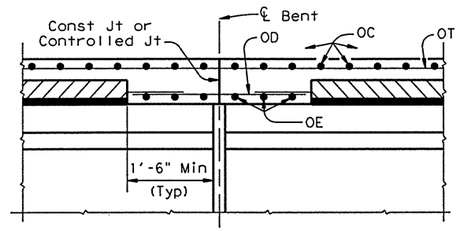

SECTION AT CONVENTIONAL INTERIOR BENT w/o DIAPHRAGM

(10) For size and spacing of reinforcing steel, see appropriate details elsewhere in plans.

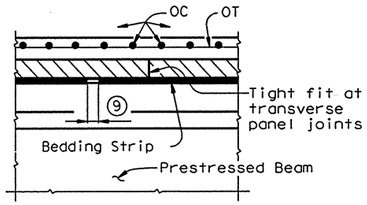

(9) ¼" Open Joint in bedding strip at 4'-0"c/c ±. Place 6" long piece of bedding strip ¼" behind opening if necessary to reduce grout leakage.

SECTION AT TRANSVERSE PANEL JOINTS

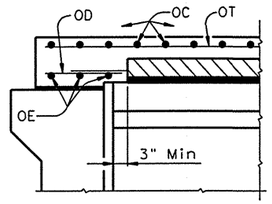

SECTION AT ABUTMENT WITH SLAB OVER BACKWALL

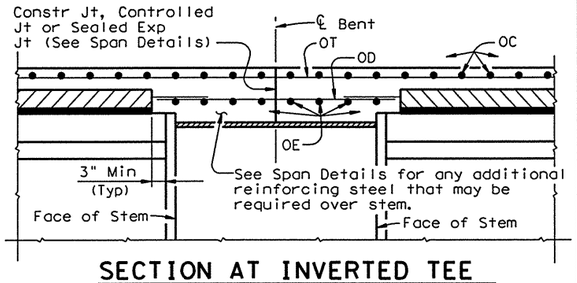

SECTION AT INVERTED TEE INTERIOR BENT

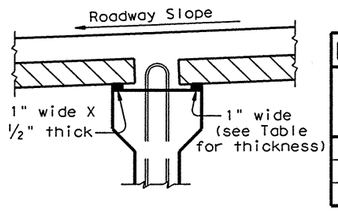

BEDDING STRIP THICKNESS (INCHES)				
	MAXIMUM ROADWAY SLOPE			
BEAM	.08'/ft	.06'/ft	.04'/ft	.02'/ft
A, B, C	1	¾	¾	¾
54	1	1	¾	¾
IV, 72	1 ¼	1	1	¾

NORMAL GRADING DETAIL

Minimum bedding strip dimensions shall be as shown above. To reduce the quantity of cast-in-place concrete, thickness shown may may be increased by ¼" increments to a maximum of 1 ½". Strips may be comprised of one layer or two, except that no layer shall be less than ½" thick. All layers of bedding strips shall be bonded to the beam and to each other with an approved adhesive. The same thickness strip shall be used under any one panel edge and the maximum change in thickness between adjacent panels shall be ¼". Panels may be supported by an alternate method, using a commercial product, if approved by the Engineer of Bridge Design, Design Division.

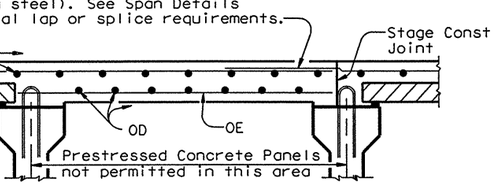

STAGE CONSTRUCTION

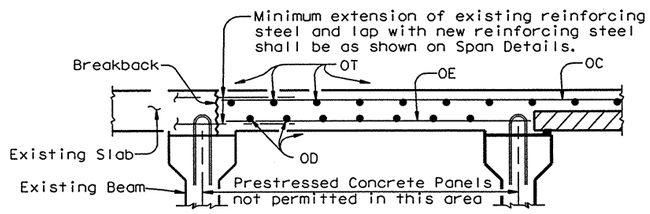

BRIDGE WIDENINGS

PART TRANSVERSE SECTIONS

Examples of potential situations where prestressed concrete panels may not be permitted. Refer to Span Details for limitations on their use.

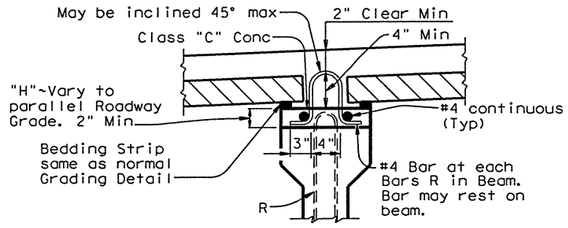

(6) Concrete blocks used for special grading shall be any convenient plan dimension with a minimum of 2" x 4" and a maximum of 4" x 8". Heights may be from 1 ⅛" to 5 ½".

(7) Concrete blocks from 1 ⅛" high to 2" high may be used without the additional R bar extensions or longitudinal No. 4 bars.

(8) For blocks up to 3 ½" high, Use 1" x 6" 16 gage galvanized sheet metal angle and for blocks 3 ½" to 5 ½" high, use 1" x 8" 16 gage galvanized sheet metal angle. Tie sheet metal thru holes in angle at 12" centers with 14 gage minimum galvanized wire. Sheet metal angles are to be overlapped at splices and left in place. Vent holes ⅜" in diameter are to be placed in angles within the upper 1", spaced at 36" centers.

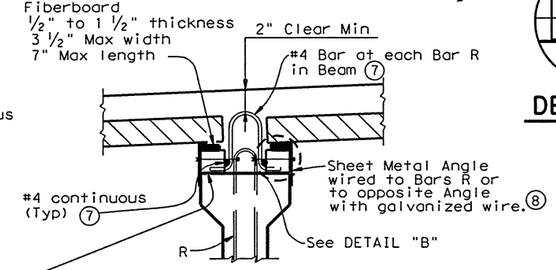

Place concrete blocks (6) at ¼ pts of panel edges (±2" along beam). For panels 4 ft long and less the blocks may be at panel corners and common to two panels. Blocks not to be used with Types A and B beams. Extruded polystyrene shall not be used for panel bedding with concrete blocks.

SPECIAL GRADING DETAILS

For use where the distance between top of beam and finished grade can not be achieved within tolerances on cast-in-place slab thickness and thickness of bedding strips. Panels may be supported by an alternate method, using a commercial product, if approved by the Engineer of Bridge Design, Design Division.

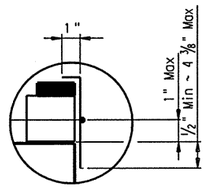

DETAIL "B"

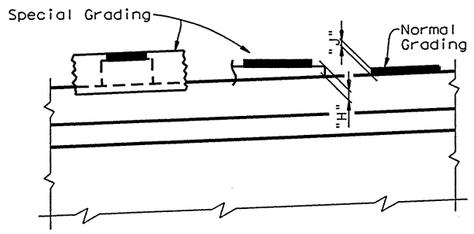

At grading method changes along the beam, the special grading "H" dimension may be reduced to 1 ¾" and the normal grading "J" dimension may be increased to 2". Some cross-slope conditions may require further H and J adjustments as directed by the Engineer.

STATE OF TEXAS
ALLEN R. CROZIER
81450
REGISTERED PROFESSIONAL ENGINEER
Allen R. Crozier
6/25/03

Texas Department of Transportation
Design Division (Bridge)

PRESTRESSED CONCRETE PANELS
OPTIONAL DECK DETAILS FOR PRESTRESSED CONC BEAM SPANS

PCP(C) (MOD)

FILE: pcpcstde.dgn	DN: TxDOT	CK: DWM	DW: RNP	CK: DWM	STD: B489
©TxDOT September 1998	DIST	FED REG	FEDERAL AID PROJECT		SHEET
REVISIONS 9/6/01~ARC~ Revised General Notes, Typical Section & Loading for HS 25 Loading	PHARR	6	NH2003 ( )		1090
	COUNTY		CONTROL	SECT	JOB	HIGHWAY
	HIDALGO		0255	08	091	US281

HS25 LOADING

DISCLAIMER:
The use of this standard is governed by the "Texas Engineering Practice Act". No warranty of any kind is made by TxDOT for any purpose whatsoever. TxDOT assumes no responsibility for the conversion of this standard to other formats or for incorrect results or damages resulting from its use.

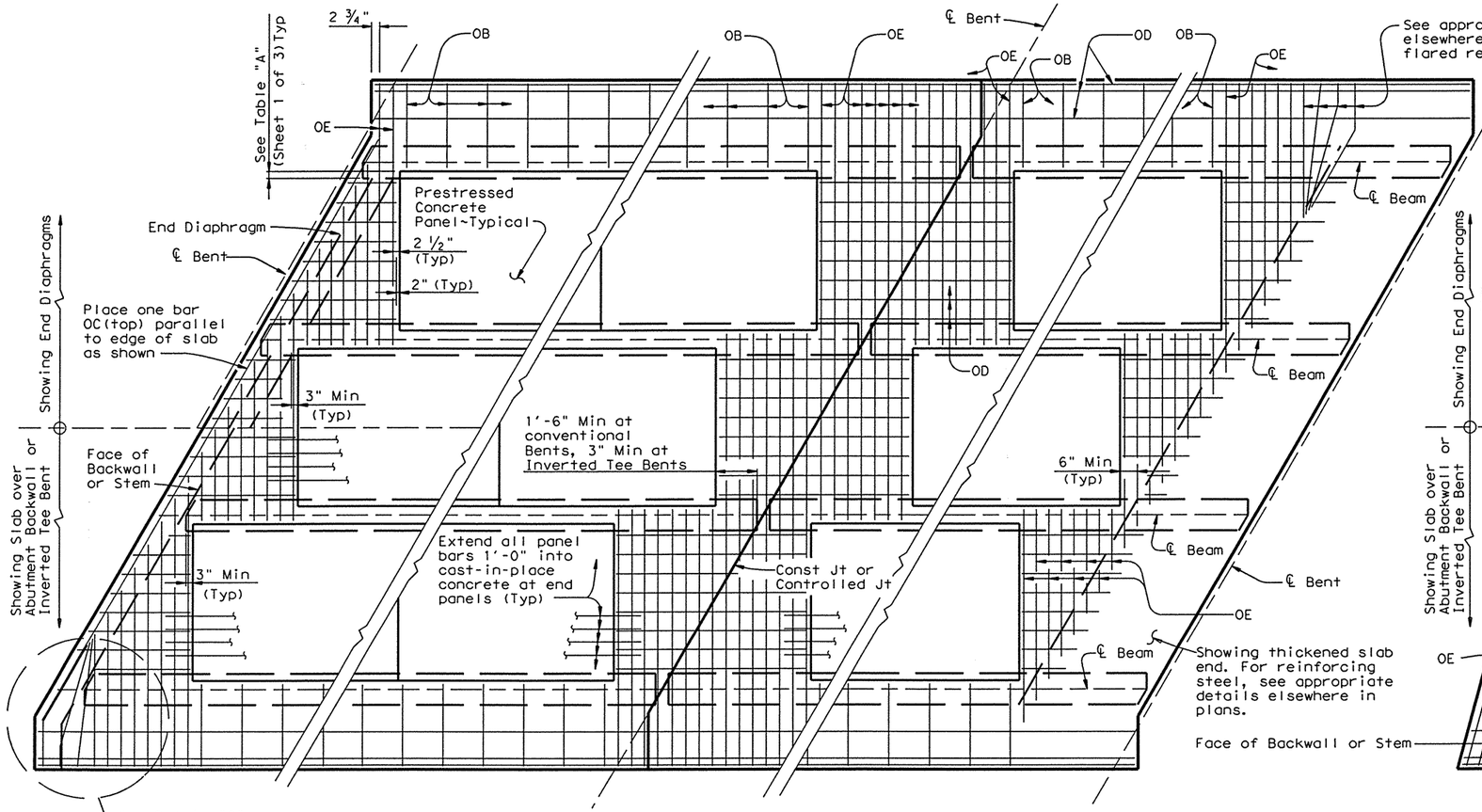

PLAN~SLABS WITH NORMAL REINFORCEMENT

(Showing bottom reinforcing steel. For top reinforcement see Transverse Sections on Sheet 2 of 3 and Detail "A".)

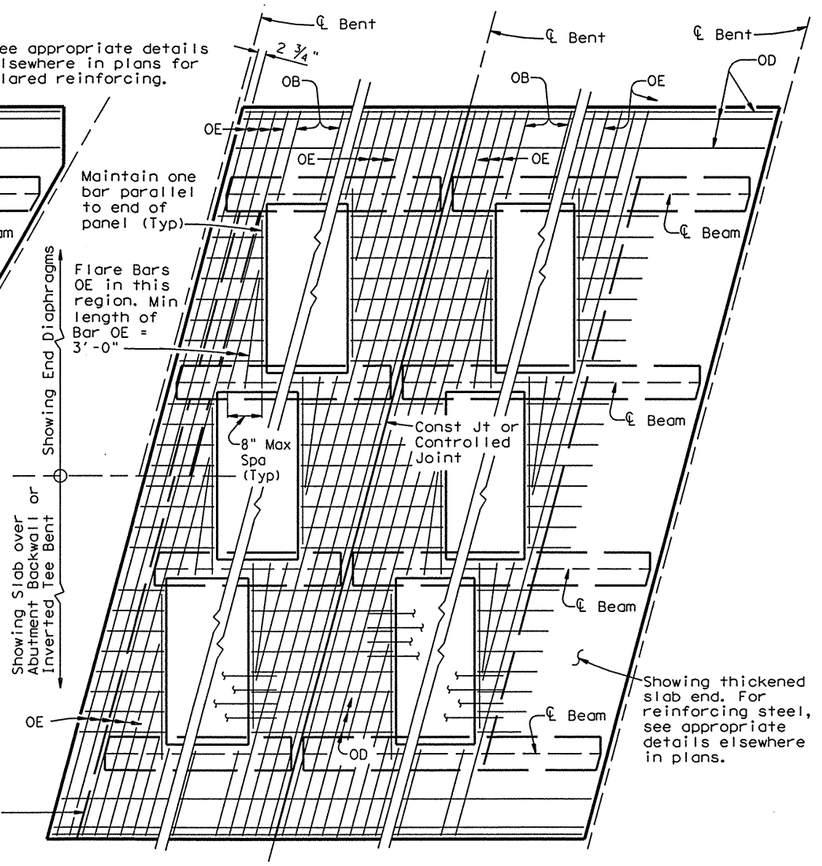

PLAN~SLABS WITH SKEWED REINFORCEMENT

(Showing bottom reinforcing steel. For top reinforcement see Transverse Sections on Sheet 2 of 3.)

APPROXIMATE QUANTITIES FOR ONE SQUARE FOOT OF SLAB

(FOR CONTRACTOR'S INFORMATION ONLY)

Slab Thickness (In.)	Reinf Steel (Lb)	Class S Concrete (CY)
7 ¼	2.98	0.0100
7 ½	2.98	0.0108
7 ¾	2.98	0.0116
8	2.98	0.0123
8 ¼	2.98	0.0131

These approximate quantities are for a typical square foot of cast-in-place slab over the PCP. They do not include an allowance for slab overhangs, thickened ends or diaframs, or the portion between panels over the beams.

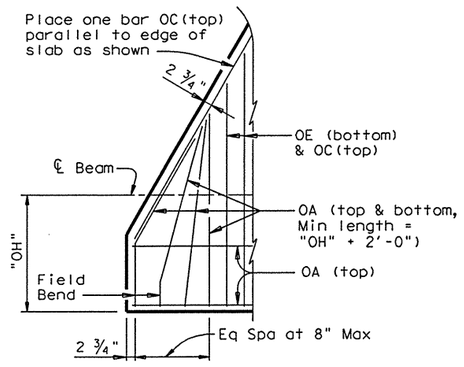

DETAIL "C"

HS25 LOADING Sheet 3 of 3

Texas Department of Transportation
Design Division (Bridge)

PRESTRESSED CONCRETE PANELS
OPTIONAL DECK DETAILS FOR PRESTRESSED CONC BEAM SPANS

PCP(C) (MOD)

STATE OF TEXAS
ALLEN R. CROZIER
81450
REGISTERED PROFESSIONAL ENGINEER
6/25/03

FILE: pcpcstde.dgn	DN: TxDOT	CK: DWM	DW: RNP	CK: DWM	STD: B489
©TxDOT September 1998	DIST	FED REG	FEDERAL AID PROJECT •		SHEET
REVISIONS 9/6/01~ARC~ Revised General Notes, Typical Section & Loading for HS 25 Loading	PHARR	6	NH 2003 ( )		1091
	COUNTY		CONTROL	SECT	JOB	HIGHWAY
	HIDALGO		0255	08	091	US281

LEVELS DISPLAYED 1 2 ACC: (LV=1,2 for English)

DISCLAIMER:
The use of this standard is governed by the "Texas Engineering Practice Act". No warranty of any kind is made by TxDOT for any purpose whatsoever. TxDOT assumes no responsibility for the conversion of this standard to other formats or for incorrect results or damages resulting from its use.

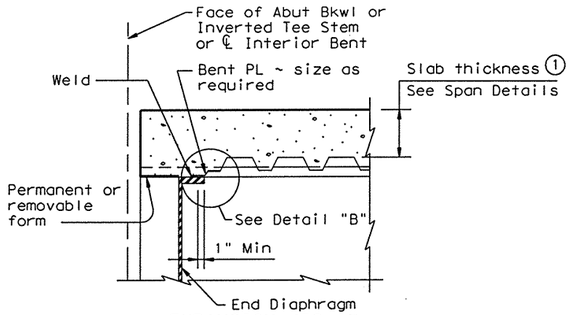

EXPANSION JTS AT ABUTS OR INT BENTS

① Slab thickness minus 5/8" if corrugations match reinforcing bars

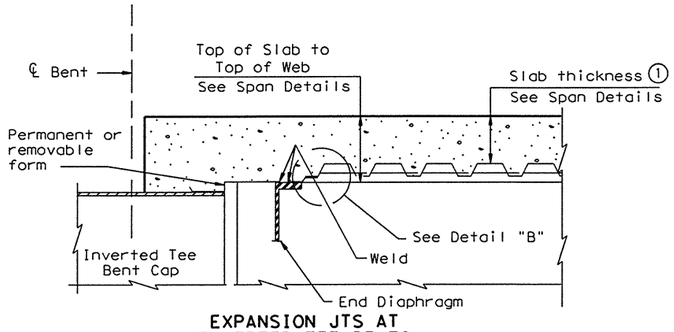

EXPANSION JTS AT INVERTED TEE BENTS

DETAILS AT ENDS OF STEEL GIRDERS OR BEAMS

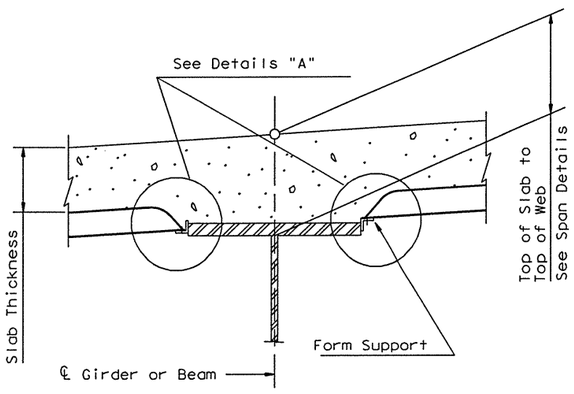

NOTE: Welding of form supports to flange will not be permitted where indicated on Girder or Beam Elevation. Unless otherwise shown, the no weld areas for intermediate Stiffeners shall apply also to form supports.

TYPICAL SECTION THRU STEEL GIRDER OR BEAM

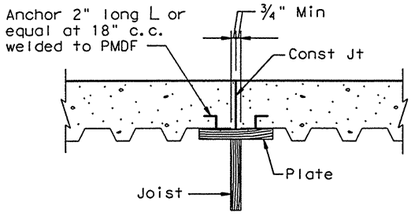

SECTION THRU CONSTRUCTION JOINT

Note: In spans where PMD forms are used, timber forms shall be used at construction joints.

Adequate provision shall be made to support edge of metal form and to provide anchorage of metal form to slab concrete where joined to wood forms.

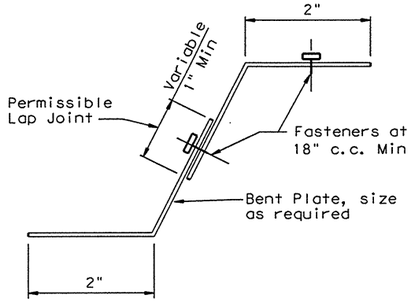

DETAIL "B"

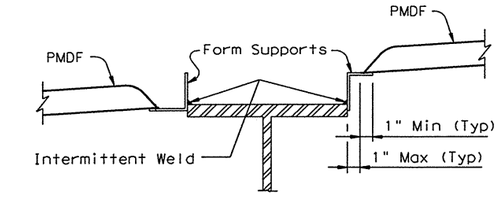

COMPRESSION FLANGES

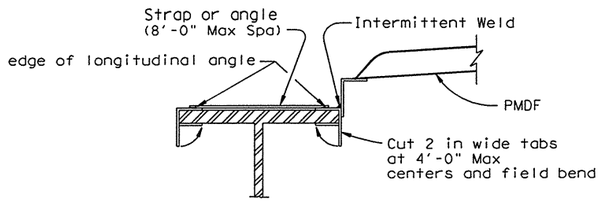

TENSION FLANGES

Other methods of providing wind holdown resistance for PMDF in tension flange zones will be considered. At least one layer of sheet metal must be provided between the flange and the weld joint.

DETAILS "A"

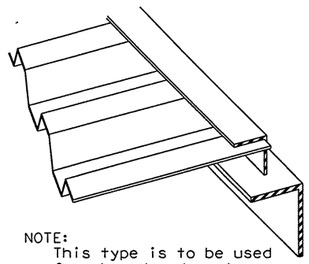

NOTE: This type is to be used for skewed ends only

ANGLE HEADER

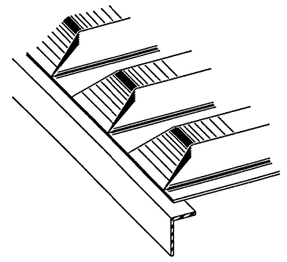

PRECLOSED

TYPES OF END CLOSURES

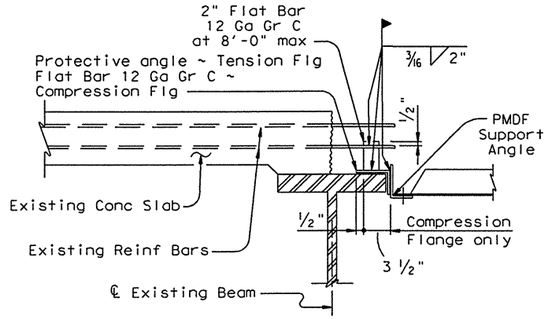

SECTION THRU BREAKBACK FOR WIDENING

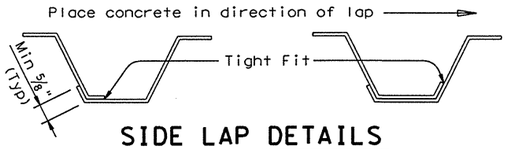

SIDE LAP DETAILS

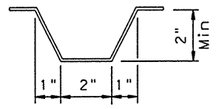

TYPICAL CORRUGATION

APPROXIMATE QUANTITIES FOR ONE SQUARE FOOT OF SLAB (for Contractors information only)

Slab Thickness inches	Reinf Steel Lb/SF	Class S Concrete CY/SF
7.25	6.66	0.0255
7.50	6.66	0.0262
7.75	6.66	0.0270
8.00	6.66	0.0278
8.25	6.66	0.0285

These approximate quantities are for a typical square foot of cast-in-place slab over the average PMDF with corrugations not matching bars. Straight bars are assumed in the slab. The quantities do not include an allowance for slab overhangs, thickened slab ends or possible haunch over beams.

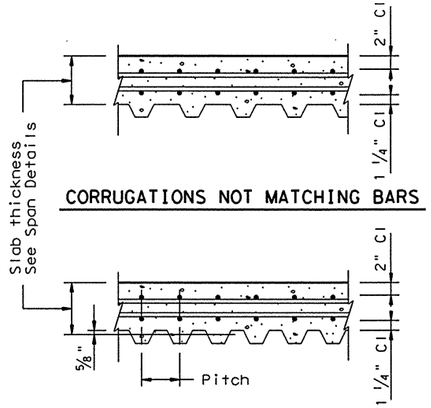

The Contractor has the option of furnishing either system, if practical.

TYPICAL LONGITUDINAL SLAB SECTIONS

GENERAL NOTES:

Permenant Metal Deck Forms (PMDF) shall be designed for the dead load of form, reinforcement and concrete plus 50 pounds per square foot for construction loads. The following allowable stresses shall be used in the design:

ASTM A653, Grade	Yield (psi)	Allowable Stress (psi)
33	33,000	23,900
37	37,000	26,800
40	40,000	29,000
50	50,000	36,000
80	80,000	36,000
Weld Metal		12,400

Maximum deflection under the weight of forms, reinforcement and concrete, or a minimum of 120 pounds per square foot shall not exceed 1/180 of the form span or ½ inch, whichever is less. The design span for forms shall be clear distance between beam flanges measured parallel to the form flutes minus 2 inches. The minimum thickness of the forms shall be 20 gage and that of the support angles shall be 14 gage. All forms shall be securely fastened to supports.

This Standard shall be used as a guide in the preparation of shop detail drawings.

Texas Department of Transportation
Design Division (Bridge)

PERMANENT METAL DECK FORMS (STEEL)

PMDF (S)

FILE: mdfsstde.dgn	DN: THD	CK: THD	DW: LW	CK: LDS	STD: B487		
©TxDOT September 1998	DIST	FED REG	FEDERAL AID PROJECT •			SHEET	
REVISIONS	PHARR	6	NH 2003 ( )			1092	
	COUNTY		CONTROL	SECT	JOB	HIGHWAY	
	HIDALGO		0255	08	091	US281	

LEVELS DISPLAYED 1 2 ACC: (LV=1,2 for English)

DISCLAIMER:
The use of this standard is governed by the "Texas Engineering Practice Act". No warranty of any kind is made by TxDOT for any purpose whatsoever. TxDOT assumes no responsibility for the conversion of this standard to other formats or for incorrect results or damages resulting from its use.

LEVELS DISPLAYED 1 2 | ACC: (LV=1,2 for English)

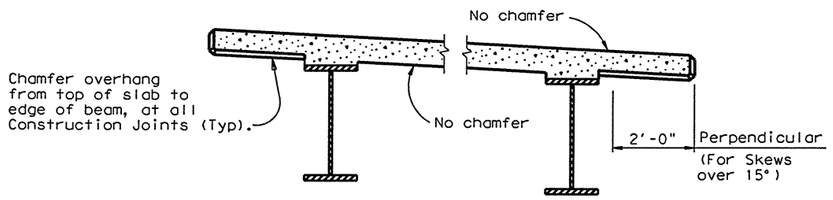

CHAMFER LIMITS DETAILS

Note: See Span Details for Const Jt locations.

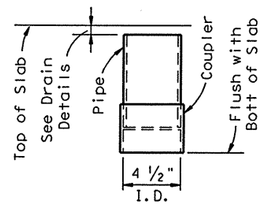

C.I.P. DRAIN DETAIL

Note:
Roughen outside of PVC with coarse rasp or equal to ensure bond with cast-in-place concrete.

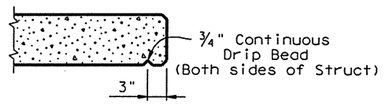

DRIP BEAD DETAIL

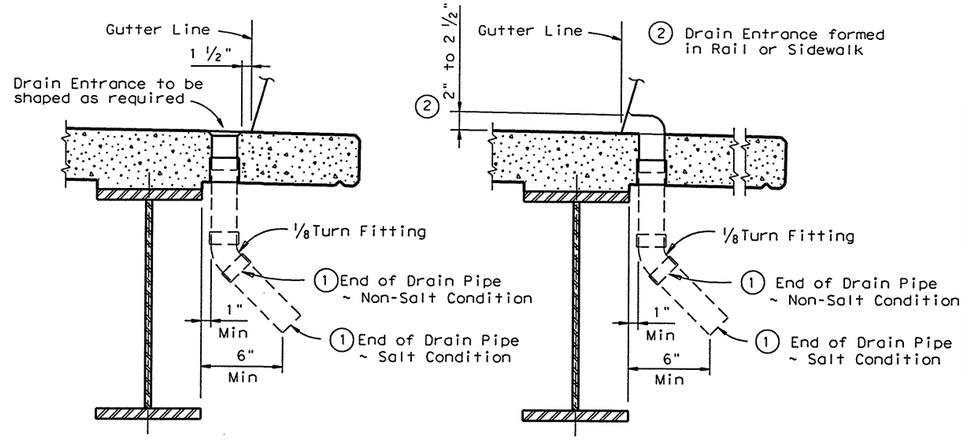

① The longer drain length shown shall be used on structures where the use of deicing salts is anticipated.

DRAIN DETAILS

Note: All drain pipe and fittings to be 4" diameter (Sch 40) PVC. See Item 481 "PVC Pipe for Bridge Drains" for pipe, connections and solvent welding. Bend reinforcing steel to clear PVC 1". Drain length and location shall be as directed by the Engineer. No drains shall be permitted over roadways or railways, or within 10'-0" of Bent Caps. Degrease outside of exposed PVC, apply acrylic water base primer, then coat with same surface finishing material as used for outside girder face. Variations of the above designs, as required for the type of rail used and it's location on the structure, shall be installed with the approval and direction of the Engineer. No water shall be discharged onto girders.

GENERAL NOTES:
Designed in accordance with current AASHTO Specifications.

HS25 LOADING

STATE OF TEXAS
ALLEN R. CROZIER
81450
REGISTERED PROFESSIONAL ENGINEER
Allen R. Crozier
6/25/03

Texas Department of Transportation
Design Division (Bridge)

MISCELLANEOUS SLAB DETAILS FOR PLATE GIRDERS AND STEEL BEAMS

SBMS (MOD)

FILE: sbmstdel.dgn	DN: THD	CK: THD	DW: RNP	CK: LDS	STD: B33
©TxDOT September 1998	DIST	FED REG	FEDERAL AID PROJECT #		SHEET
REVISIONS 4/03- ARC- Verified for HS25 Loading	PHARR	6	NH 2003 ( )		1093
	COUNTY		CONTROL	SECT	JOB	HIGHWAY
	HIDALGO		0255	08	091	US281

DISCLAIMER:
The use of this standard is governed by the "Texas Engineering Practice Act". No warranty of any kind is made by TxDOT for any purpose whatsoever. TxDOT assumes no responsibility for the conversion of this standard to other formats or for incorrect results or damages resulting from its use.

LEVELS DISPLAYED 1 2 | ACC: | (LV=1,2 for English)

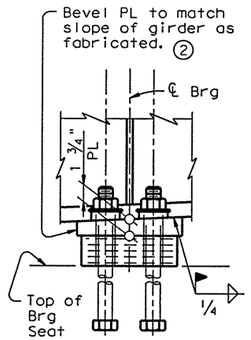

SIDE ELEVATION

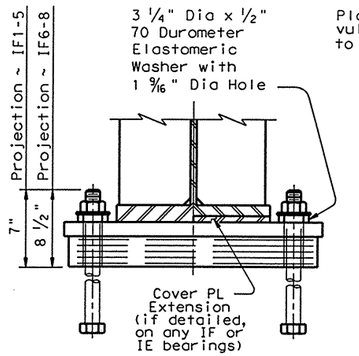

TRANSVERSE SECTION

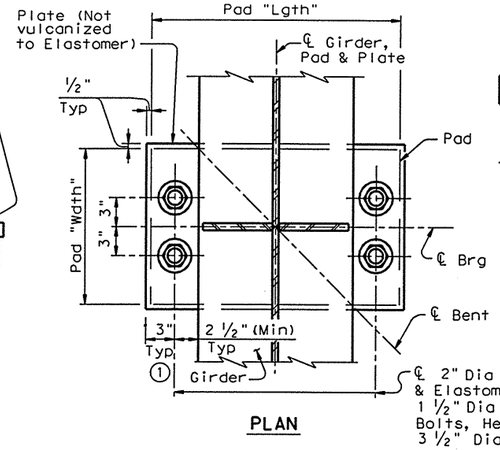

PLAN

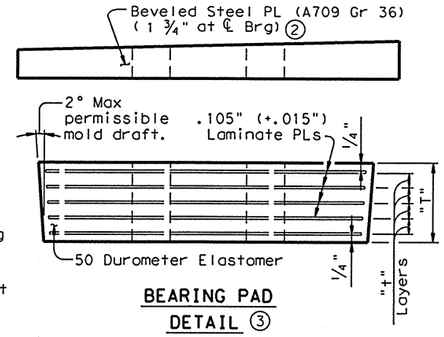

BEARING PAD DETAIL (3)

BRG TYPE	BEARING PAD (Wdth x Lgth)	BEVELED PLATE (Wdth x Lgth)	NO. of "t"	"t"	"T"	MAX FLNG WDTH	MAX EXP LGTH	MAX TOTAL LOAD
	(in)	(in)	(ea)	(in)	(in)	(in)	(ft)	(K)
INTERIOR FIXED BRGS								
IF1	12 x 22	13 x 23	4	.500	3.00	12	-	204
IF2	13 x 26	14 x 27	4	.500	3.00	16	-	299
IF3	15 x 26	16 x 27	4	.500	3.00	16	-	377
IF4	13 x 28	14 x 29	5	.500	3.63	18	-	331
IF5	12 x 30	13 x 31	5	.500	3.63	20	-	316
IF6	17 x 34	18 x 35	5	.625	4.25	24	-	552
IF7	17 x 36	18 x 37	5	.625	4.25	26	-	597
IF8	18 x 40	19 x 41	6	.625	5.00	30	-	707
INTERIOR EXP BRGS								
IE1	18 x 13	19 x 14	5	.500	3.25	12	158	194
IE2	16 x 17	17 x 18	5	.500	3.25	16	179	247
IE3	20 x 17	21 x 18	5	.500	3.25	16	193	340
IE4	17 x 19	18 x 20	5	.500	3.25	18	187	319
IE5	16 x 21	17 x 22	5	.500	3.25	20	180	336
IE6	19 x 25	20 x 26	5	.625	4.00	24	227	451
IE7	21 x 27	22 x 28	6	.625	4.63	26	267	567
IE8	22 x 31	23 x 32	6	.625	4.63	30	279	682
END EXP BRGS								
SE1	8 x 11	14 x 21	-	-	2.00	12	440	95
SE2	8 x 15	14 x 25	-	-	2.00	16	440	130
SE3	8 x 17	14 x 27	-	-	2.00	18	440	147
SE4	8 x 19	14 x 29	-	-	2.00	20	440	164
SE5	8 x 23	14 x 33	-	-	2.00	24	440	199
SE6	8 x 25	14 x 35	-	-	2.00	26	440	216
SE7	8 x 29	14 x 39	-	-	2.00	30	440	251

INTERIOR FIXED BEARINGS

Elastomeric Brg (See Item "Elastomeric Materials")

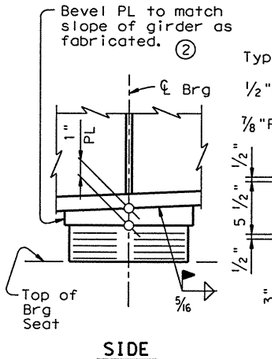

SIDE ELEVATION

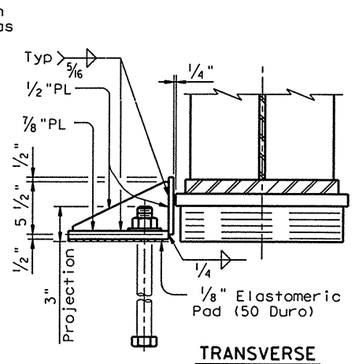

TRANSVERSE SECTION

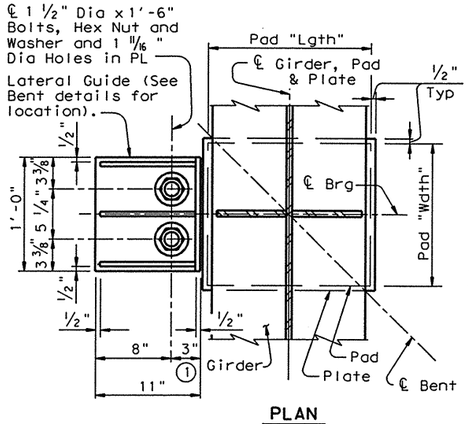

PLAN

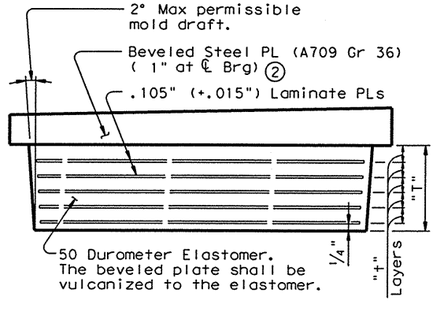

BEARING PAD DETAIL (3)

(3) Note: The use of Polyisoprene (natural rubber), for manufacture of bearing pads, shall not be permitted.

(1) See table "Beveled Plate", "Lgth" value to calculate transverse anchor bolt spacing.

(2) Beveled Steel Plates:

For shop plans, establish one edge of beveled steel plates to nearest 1/16" based on required thickness at center of bearing and the slope of the fabricated beams. Slope for end bearing plates shall be adjusted by .01' per foot slope downward toward the span to allow for dead load deflection.

Thickness tolerance variation from the shop plans shall be plus or minus 1/16", except that the variation from a plane parallel to the theoretical top surface shall not exceed 1/16" total.

Bent Designer Notes:

When noted, SE1A, SE2A, etc, bearings shall be the same as SE1, SE2, etc, except omit anchor bolts and make top plate rectangular 14" x (Bm Flange Wdth + 2"). To be used on Girders or Beams more than 40' from the mid-point between O.S. girders measured along centerline of bent.

When noted 1F1A, 1F2A, etc, bearings shall be provided as shown for IF1, 1F2, etc, except, anchor bolts shall be replaced with dowels thus:

To be used on girders or beams more than 50' from the mid-point between O.S. girders measured along centerline of bent.

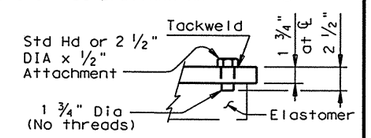

INTERIOR EXPANSION BEARINGS

Elastomeric Brg (See Item "Elastomeric Materials")

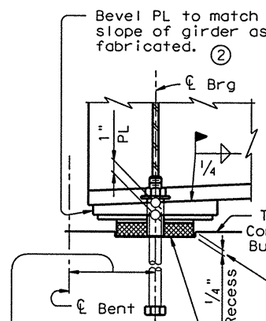

SIDE ELEVATION

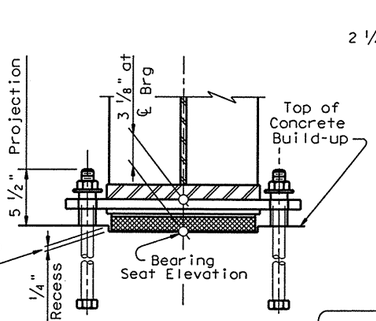

TRANSVERSE SECTION

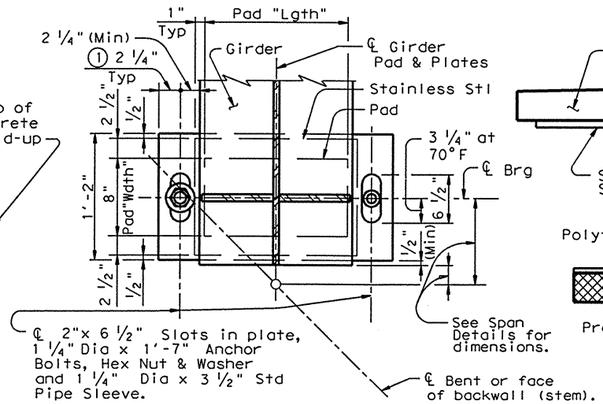

PLAN

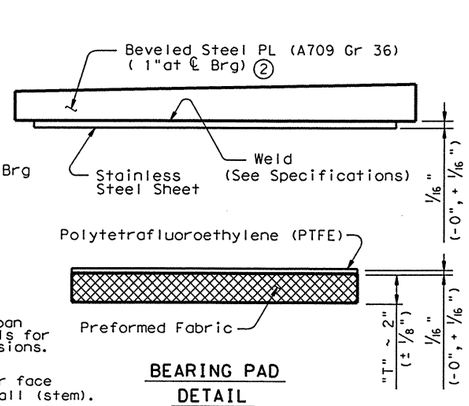

BEARING PAD DETAIL

END EXPANSION BEARINGS

Sliding Brg (See Item "Sliding Elastomeric Bearings")

GENERAL NOTES:

Bearings will be measured by the unit of each "Elastomeric Bearing" or "Sliding Elastomeric Bearing" of the type indicated, complete in place.

Payment for bearings will be made at the unit price bid for each type of "Elastomeric Bearing" or "Sliding Elastomeric Bearing", which price shall be full compensation for furnishing and installing each complete bearing including anchor bolts, top plate, sliding surfaces, elastomeric components, lateral guides, sleeves and washers.

Anchor bolts, nuts, washers and pipe sleeves (if used) shall be galvanized.

HS25 LOADING

Texas Department of Transportation
Design Division (Bridge)

ELASTOMERIC BEARING DETAILS (FOR STEEL GIRDERS & BEAMS)

SEB (MOD)

STATE OF TEXAS
ALLEN R. CROZIER
81450
REGISTERED PROFESSIONAL ENGINEER

Allen R. Crozier 10/25/03

FILE: sebstde1.dgn	DN: RLR/JCC	CK: GAF	DW: TKW	CK: JCC	STD: B34	
©TxDOT September 1998	DIST	FED REG	FEDERAL AID PROJECT #			SHEET
REVISIONS 4/03-ARC- Verified for HS25 Loading	PHARR	6	NH 2003 ( )			1094
	COUNTY		CONTROL	SECT	JOB	HIGHWAY
	HIDALGO		0255	08	091	US281

DISCLAIMER:
The use of this standard is governed by the "Texas Engineering Practice Act". No warranty of any kind is made by TxDOT for any purpose whatsoever. TxDOT assumes no responsibility for the conversion of this standard to other formats or for incorrect results or damages resulting from its use.

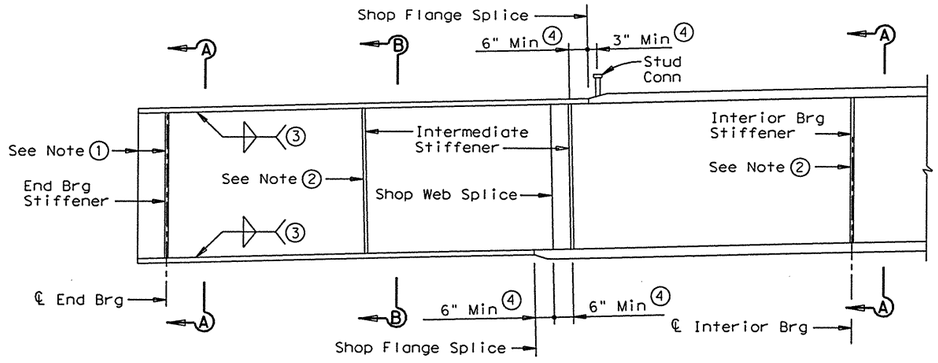

TYPICAL GIRDER ELEVATION

See Item 441 "Steel Structures" for welded field splice details.

(1) Girder ends and End Brg Stiffeners shall be plumb after all dead load deflection has occured.

(2) Intermediate stiffeners and Interior Bearing Stiffeners may be built perpendicular to girder flanges or plumb at the fabricator's option.

(3) Unless otherwise shown on span details, see Table A for weld size.

(4) Shop flange and web splices and stud connectors may be moved (6" max), if required, to obtain clearances shown.

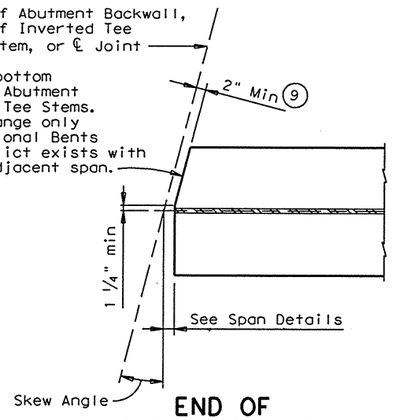

END OF GIRDER DETAIL

SKEW ANGLE = 0° thru 15°

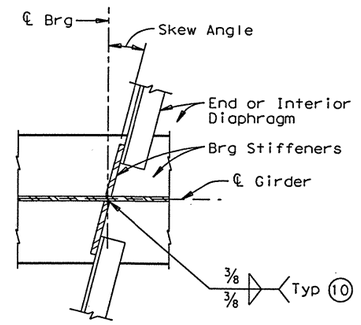

BEARING STIFFENER DETAIL

SKEW ANGLE = 0° thru 15°

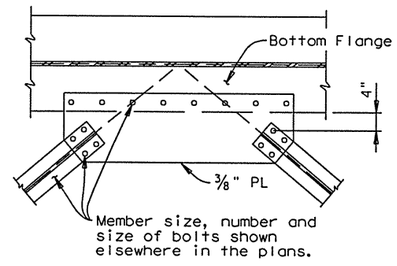

PLAN

LATERAL BRACING DETAIL

(9) May be increased at Face of Abutment or Inverted Tee Stems

(10) Weld size must be increased by amount of gap if gap exceeds 1/16".

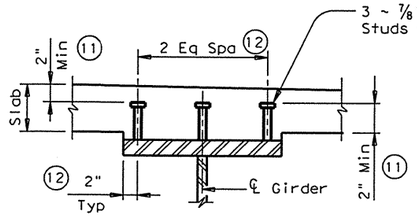

STUD CONNECTOR DETAILS

Studs shall be electric arc end-welded to the flanges with complete fusion. See span details for spacing.

(11) The Fabricator shall determine the stud height based on the requirements shown except that the studs shall not be less than 5" in height.

(12) See PCP(S) sheets for adjustment of stud spacing when Prestressed Concrete Panels are used.

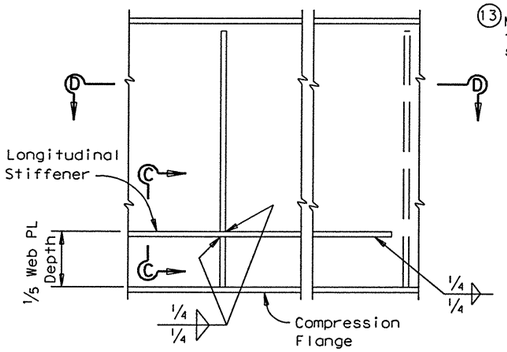

ELEVATION

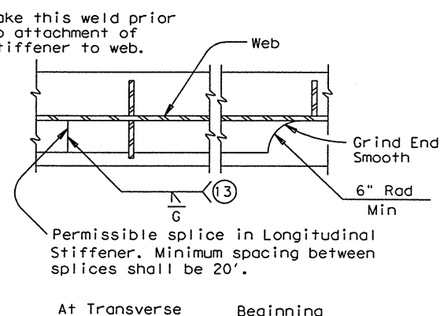

SECTION D-D

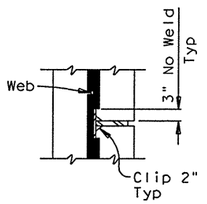

SECTION C-C

TABLE A	
Web Thickness	Weld Size
5/16" to 7/16"	5/16"
Over 7/16" to 9/16"	3/8"
Over 9/16" to 5/8"	7/16"
Over 5/8" to 3/4"	1/2"
Over 3/4" to 13/16"	9/16"
Over 13/16" to 1"	5/8"

If the submerged arc process is used, either the fillet welds shown or full penetration groove welds may be used between flange and web at the fabricators option.

FLANGE TO WEB WELDING

LONGITUDINAL STIFFENER DETAILS

See appropriate details elsewhere in plans for diaphragm to girder connection details when longitudinal stiffeners are used.

(5) ⅜" weld for flanges >1 ½" in thickness, 5/16" weld for flanges 1 ½" or less in thickness.

(6) At the fabricator's option, a complete joint penetration groove weld may be made in lieu of the fillet welds shown.

(7) Mill to bear prior to welding.

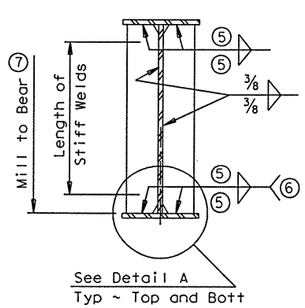

SECTION A-A
(Bearing Stiffeners)

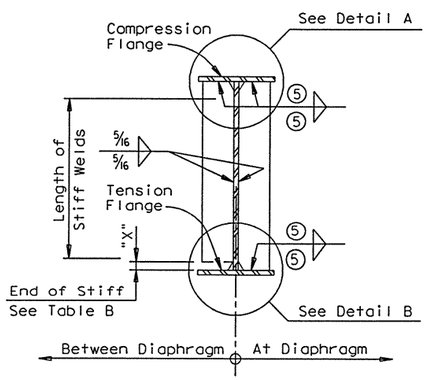

SECTION B-B
(Intermediate Stiffeners)

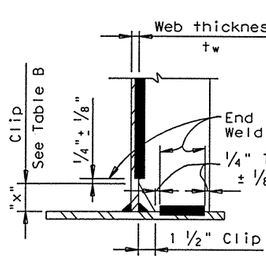

DETAIL A

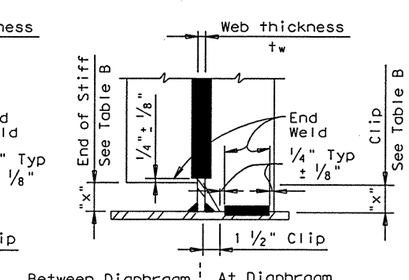

DETAIL B

TABLE B	
Web Thickness tw	"X" (8)
5/16" to 3/8"	1 ½"
Over 3/8" to 5/8"	2 ½"
Over 5/8" to 1"	4"

(8) The fabricator may use an "X" different from what is shown provided that the following is satisfied: $4t_w \le$ "X" $\le 6t_w$

GENERAL NOTES:

Designed according to current AASHTO Standard and current Interim Specifications.

These details are intended for use with straight or curved plate girder units with girders spaced at 10 feet or less and web depths of 84" or less. End diaphragms are designed to accomodate skew angles up to 45 degrees. Details for end diaphragm to girder connections are shown elsewhere in the plans when the skew angle of the supporting bents exceeds 15 degrees.

See span details for size and location of stiffeners, location of diaphragms, diaphragm types, and location of tension flanges.

All lateral bracing bolts and erection bolts shall be high strength bolts conforming to the Specification Item "Structural Bolting". Erection bolts shall remain in the finished structure. Erection bolts need not be tightened beyond snug tight.

Unless noted otherwise on unit details, all steel used for diaphragm members shall conform to ASTM A709 Gr 36, Gr 50, or Gr 50W. If the plate girder steel is specified to be unpainted A709 Gr 50W, the diaphragms, stiffeners, and lateral bracing shall likewise be Gr 50W and the erection bolts shall be Type 3.

HS25 LOADING

Sheet 1 of 2

Texas Department of Transportation
Design Division (Bridge)

PLATE GIRDER DETAILS

SPGD (MOD)

ALLEN R. CROZIER 81450 REGISTERED PROFESSIONAL ENGINEER
6/25/03

FILE: spgdstde.dgn	DN: MRL/JMH	CK: AAC	DW: RNP	CK: JMH	NEG: B35	
©TxDOT September 1998	DIST	FED REG	FEDERAL AID PROJECT •			SHEET
REVISIONS 4/03-ARC- Verified for HS25 Loading	PHARR	6	NH 2003 ( )			1095
	COUNTY		CONTROL	SECT	JOB	HIGHWAY
	HIDALGO		0255	08	091	US281

LEVELS DISPLAYED 1 2 ACC: (LV=1,2 for English)

DISCLAIMER:
The use of this standard is governed by the "Texas Engineering Practice Act". No warranty of any kind is made by TxDOT for any purpose whatsoever. TxDOT assumes no responsibility for the conversion of this standard to other formats or for incorrect results or damages resulting from its use.

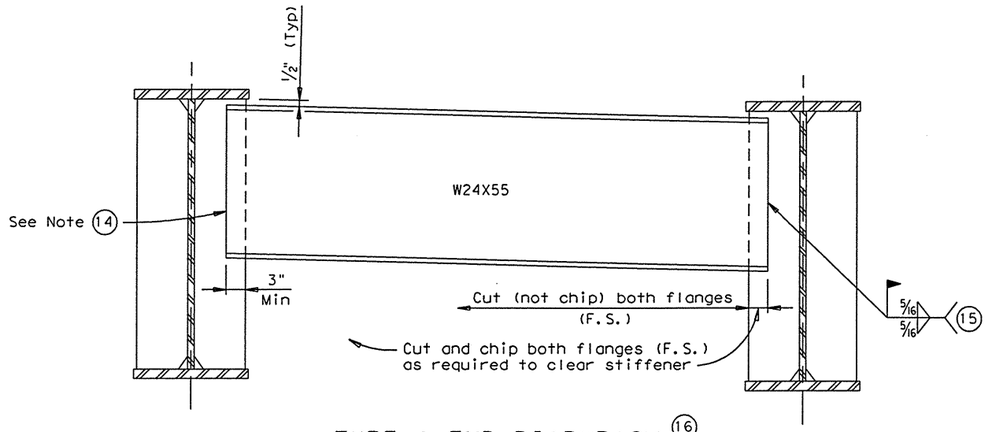

TYPE A END DIAPHRAGM (16)

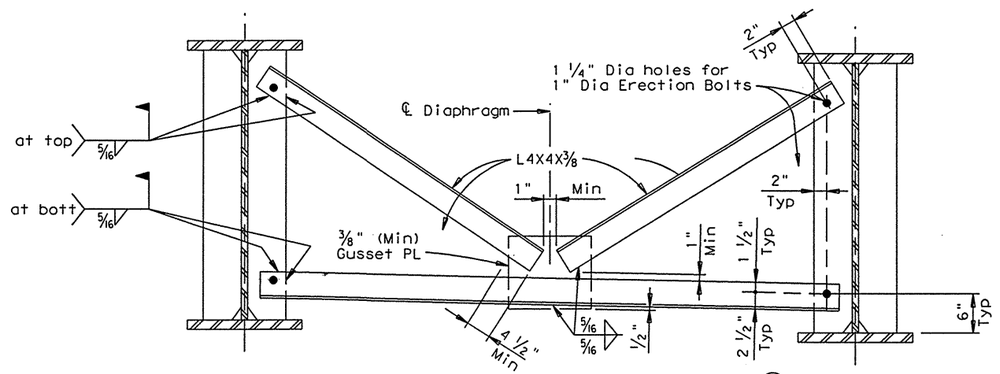

TYPE D INTERIOR DIAPHRAGM (17)

For Straight Girders
All Web PL Depths up to 84"

Web PL Depth
less than 48"

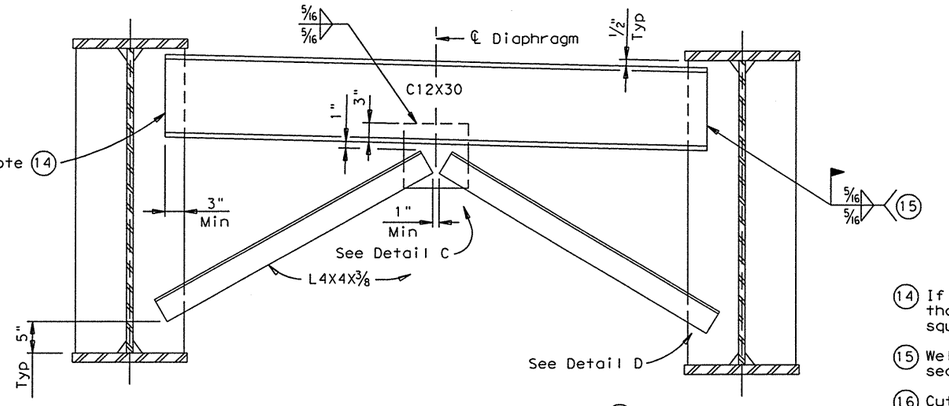

TYPE B END DIAPHRAGM (16)

Web PL Depth
48" to 84"

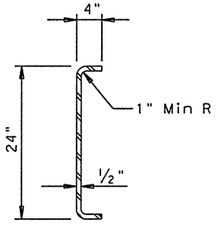

OPTIONAL BENT PLATE DIAPHRAGM

(To replace W24X55)

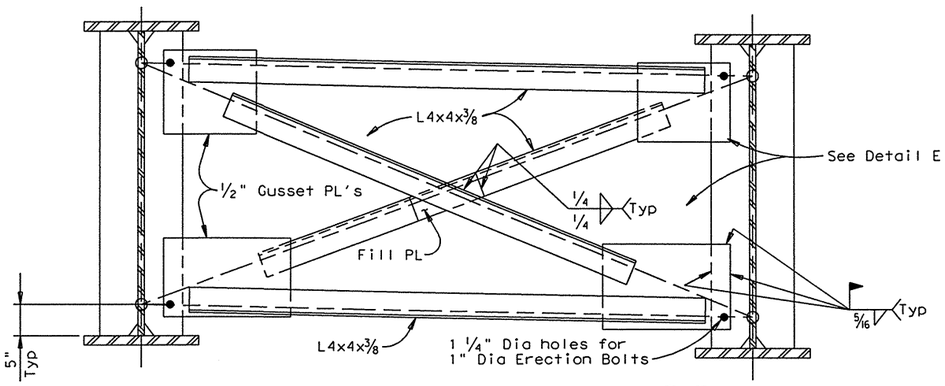

TYPE E INTERIOR DIAPHRAGM (17) (18)

For Curved Girders
All Web PL Depths up to 84"

(14) If slope of W24X55 or C12X30 is less than or equal to 4%, ends may be cut square, otherwise cut ends vertical.

(15) Weld on F.S. of Stiffener is for sealing purposes only.

(16) Cut flanges of W and C members parallel to girders. End diaphragms are parallel to skew of the joint, unless shown otherwise on span details.

(17) Interior diaphragms are perpendicular or radial to girders unless shown otherwise on span details. Interior Diaphragms at Interior bearings are parallel to the skew unless shown otherwise on span details.

(18) The designer shall ensure that the forces in the Type E diaphragm members and connections, obtained by rational analysis, do not exceed allowables.

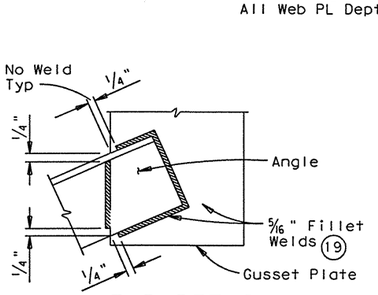

WELD DETAIL

(For Type E Diaphragm)

(19) Total length of fillet weld shall be 1'-3" min

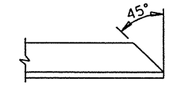

Clip outstanding leg of all angles on diaphragms

CLIP DETAIL

Type E Diaphragm only

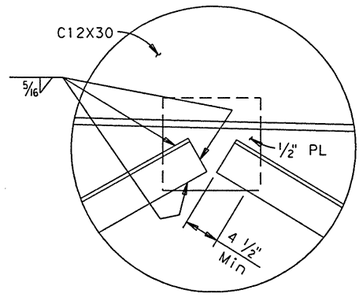

DETAIL C

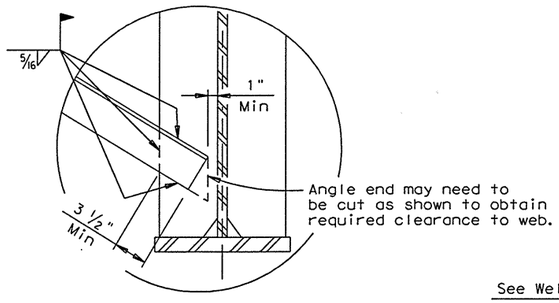

DETAIL D

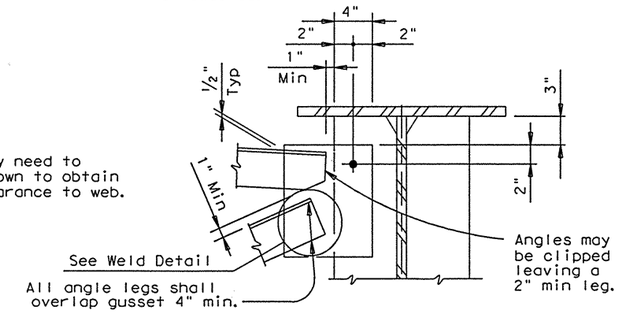

DETAIL E

HS25 LOADING

Sheet 2 of 2

Texas Department of Transportation
Design Division (Bridge)

PLATE GIRDER DETAILS

SPGD (MOD)

STATE OF TEXAS
ALLEN R. CROZIER
81450
REGISTERED PROFESSIONAL ENGINEER

Allen R. Crozier
6/25/03

FILE: spgdstde.dgn	DN: MRL/JMH	CK: AAC	DW: RNP	CK: JMH	NEG: B35	
© TxDOT September 1998	DIST	FED REG	FEDERAL AID PROJECT •			SHEET
REVISIONS	PHARR	6	NH 2003 ( )			1096
4/03-ARC- Verified for HS25 Loading	COUNTY		CONTROL	SECT	JOB	HIGHWAY
	HIDALGO		0255	08	091	US281

LEVELS DISPLAYED 1 2 ACC: (LV=1,2 for English)

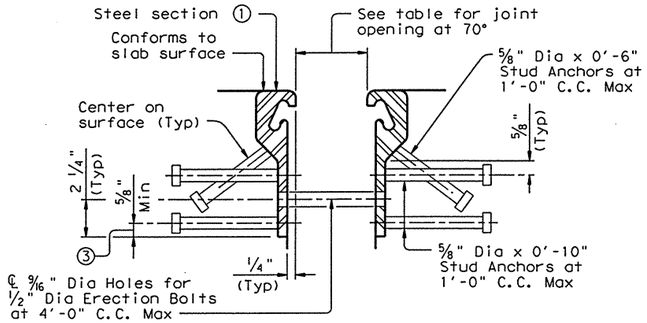

SECTION THRU SEALED EXPANSION JOINT

WATSON BOWMAN & ACME CORP.

D. S. BROWN COMPANY

NEOPRENE SEALS

① Shape of steel section shown is typical. Variations depending on manufacturer are permissible.

② Remove all burrs which will be in contact with seal prior to making splice.

③ The bottom Stud Anchors must be moved up to insure 1 ¼" Cl Cov from bottom of overhang slab and the bottom of Steel Sections may, at the direction of the Engineer, be coped to match the bottom of 8" slab overhangs.

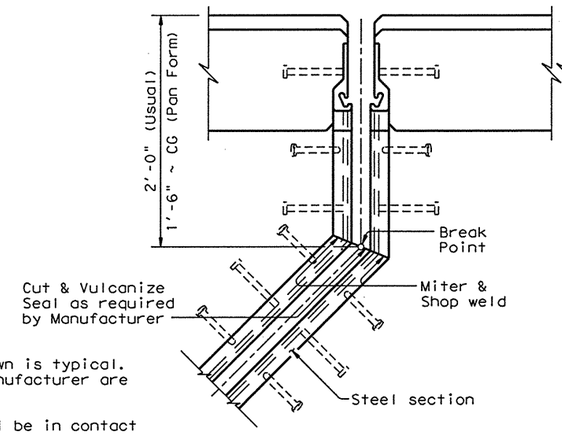

SKEWS WITH SLAB BREAK

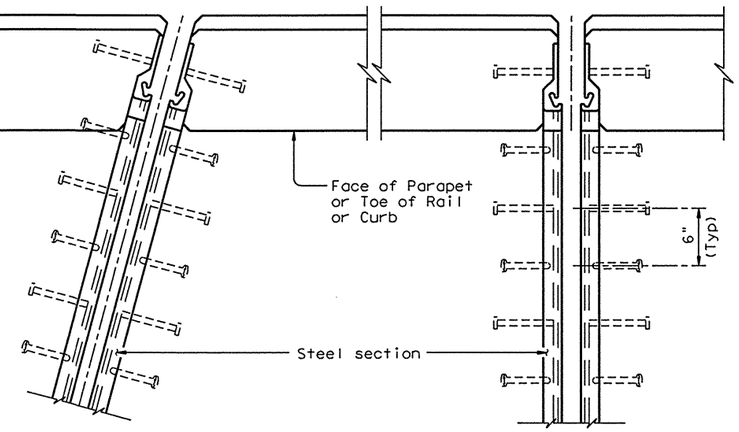

SKEWS WITHOUT SLAB BREAK

NORMAL

PLANS OF END CONDITIONS

NOTES:

Steel sections shall be shipped in convenient lengths of 24'-0" Max and 10'-0" Min unless otherwise necessary for stage construction or widenings. One shop splice will be permitted in each shipping length provided no piece is less than 2'-0" in length and sufficient studs are added to limit the stud to shop or field splice distance to 2" Min and 4" Max .

Shop and field splices shall be made by butt welding with areas in contact with preformed joint sealer to be ground smooth.

Corresponding sections shall be match marked and bolted together for shipment.

All steel parts are not to be painted or primed unless designated elsewhere on the plans.

MANUFACTURER	STEEL SECTION ①	NEOPRENE STRIP SEAL			
		4" JOINT		5" JOINT	
		Seal Type	Joint Opening	Seal Type	Joint Opening
Watson Bowman & Acme Corp.	Type P	SE400	1 ¾"	SE500	2"
D. S. Brown	Type SSPA	L2400	1 ¾"	L2500	2"

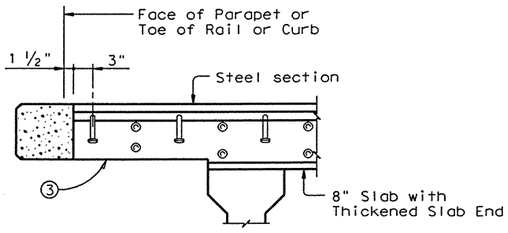

SECTION THRU SLAB

(HIGH SIDE)

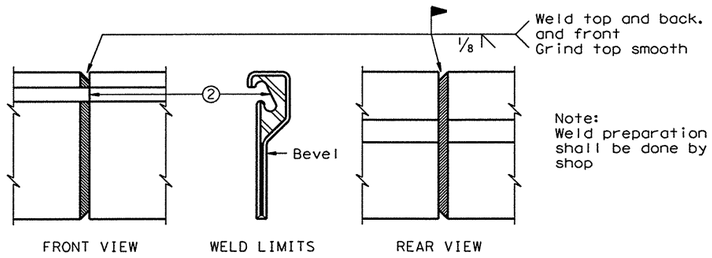

BEVEL AT FIELD SPLICE

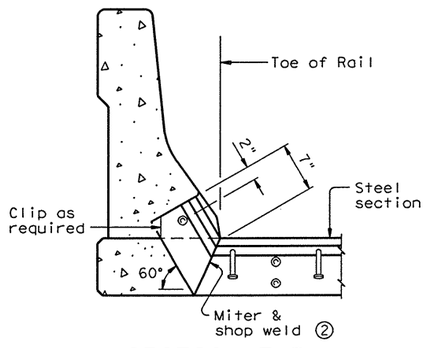

SECTION THRU BARRIER RAIL

(LOW SIDE)

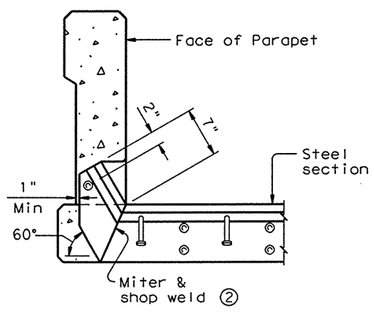

SECTION THRU OTHER PARAPET RAILS

(LOW SIDE)

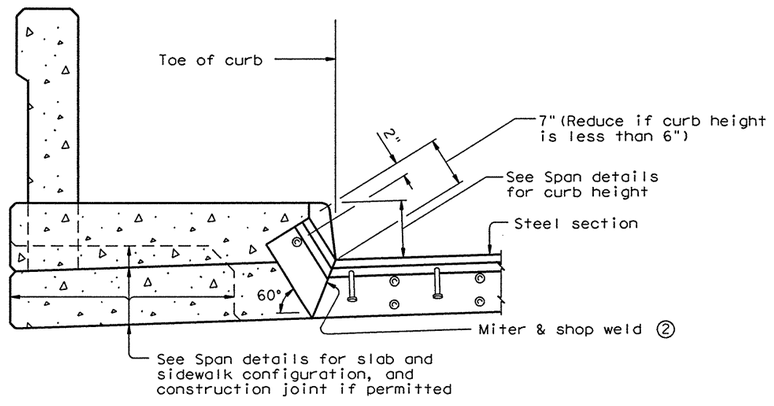

SECTION THRU SIDEWALK

(LOW SIDE)

GENERAL NOTES:

A minimum slab and overhang thickness of 8" and the use of Thickned Slab Ends are required for the use of SEJ-P.

Sealed Exp Jts shall be provided in the size and at locations shown on plans.

Shop fabrication will be required at all intersections of cross slope and at break points.

Corresponding sections of Sealed Exp Jts shall be temporarily shop assembled, checked for fit, and match marked for shipment.

Erection holes shall be punched so as to line up when Sealed Exp Jts are in their final position.

Stud anchors shall be electric arc end-welded with complete fusion.

The neoprene seal shall be continuous and included in the price bid for Sealed Exp Jt .

The Contractor shall arrange for securing the Sealed Exp Jt in position, and placing to the proper grade and alignment by welding braces to adjacent reinf steel, to prestressed beam stirrups, or to anchors cast in concrete diaframs. Cost of temporary bracing is to be included in the price bid for Sealed Exp Jt .

After bracing and welding the steel section, the erection bolts and spacers shall be removed and erection holes sealed before placing slab concrete.

DISCLAIMER:
The use of this standard is governed by the "Texas Engineering Practice Act". No warranty of any purpose whatsoever. TxDOT assumes no responsibility for modifications made by others to this standard, or for other formats or for incorrect results or damages resulting from its use.

LEVELS DISPLAYED 1 2 ACC: (LV=1,2 for English)

Texas Department of Transportation
Design Division (Bridge)

SEALED EXPANSION JOINT DETAILS

WITHOUT OVERLAY

SEJ-P

FILE: sejpstde.dgn	DN: THD	CK: THD	DW: JTR	CK: LDS	NEG:	B273
©TxDOT September 1998	DIST	FED REG	FEDERAL AID PROJECT •			SHEET
REVISIONS	PHARR	6	NH 2003 ( )			1097
	COUNTY		CONTROL	SECT	JOB	HIGHWAY
	HIDALGO		0255	08	091	US281

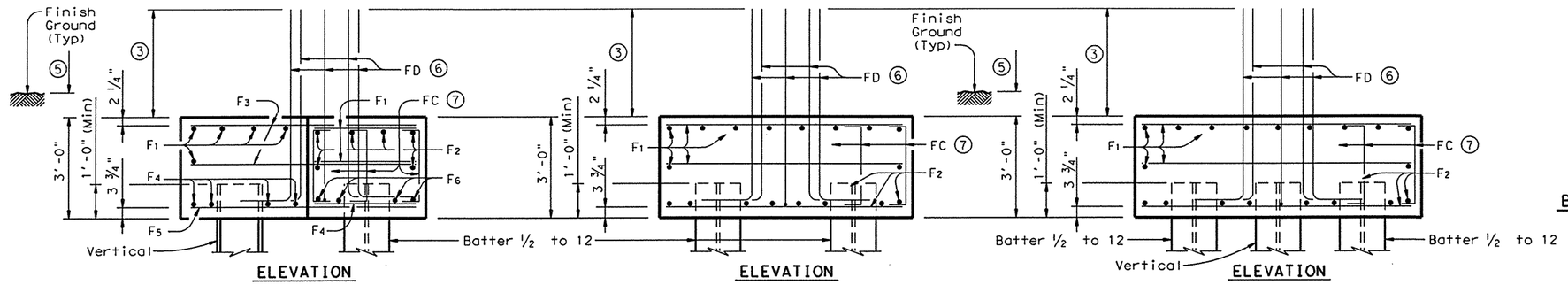

ELEVATION

ELEVATION

ELEVATION

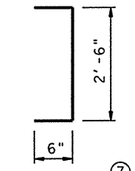

BARS FC ⑦

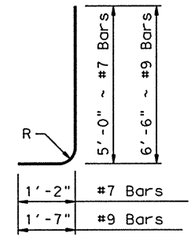

BARS FD ⑥

R = 3 1/4" ~ #7 Bars
and 5 1/4" ~ #9 Bars

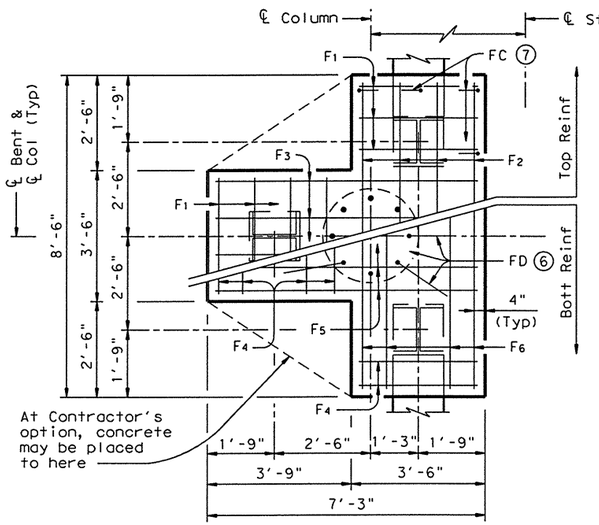

PLAN

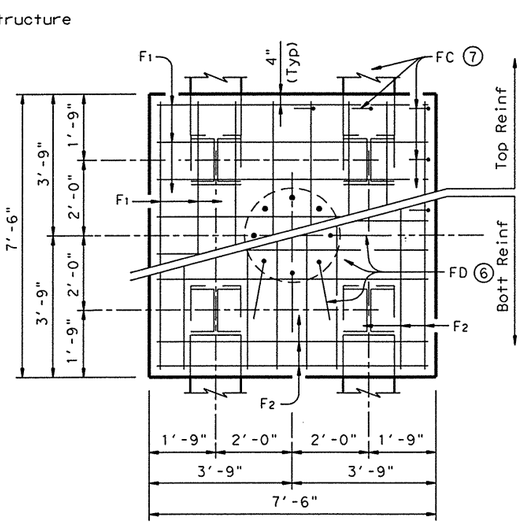

PLAN

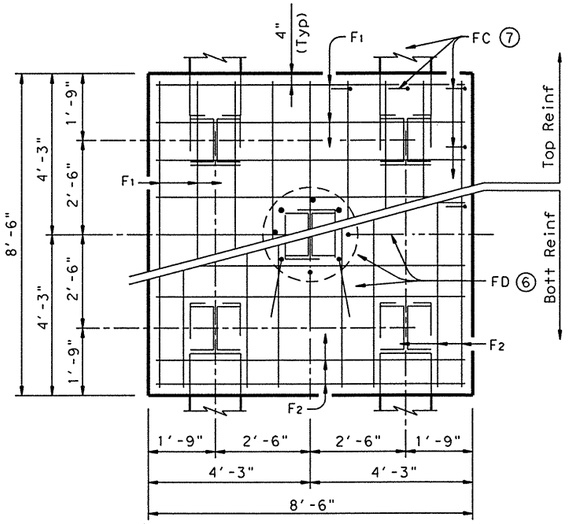

PLAN

THREE PILE FOOTING

FOUR PILE FOOTING

FIVE PILE FOOTING

TABLE OF FOOTING QUANTITIES FOR 30" COLUMNS

Bar	No.	Size	Length	Weight
ONE 3 PILE FOOTING				
F1	13	# 4	3'- 2"	27
F2	6	# 4	8'- 2"	33
F3	6	# 4	6'-11"	28
F4	8	# 9	3'- 2"	86
F5	4	# 9	6'-11"	94
F6	4	# 9	8'- 2"	111
FC	20	# 4	3'- 6"	47
⑧ FD	8	# 9	7'-11"	215
Reinforcing Steel			Lb	641
Class "C" Concrete			CY	4.8
ONE 4 PILE FOOTING				
F1	20	# 4	7'- 2"	96
F2	16	# 8	7'- 2"	306
FC	20	# 4	3'- 6"	47
⑧ FD	8	# 9	7'-11"	215
Reinforcing Steel			Lb	664
Class "C" Concrete			CY	6.3
ONE 5 PILE FOOTING				
F1	22	# 4	8'- 2"	120
F2	16	# 9	8'- 2"	444
FC	22	# 4	3'- 6"	51
⑧ FD	8	# 9	7'-11"	215
Reinforcing Steel			Lb	830
Class "C" Concrete			CY	8.0

⑧ For 24" Cols, use #7 FD bars (6'-1") in place of #9 bars and deduct 116 lbs.
For 36" Cols, add 2 FD bars (54 lbs).

① #3 Spiral at 6" pitch (One flat turn top & bottom)

② Min extension into Abutment
Wingwalls = 1'-0"
Min extension into Abutment
Caps ~ 24" Dia = 1'-5"
30" Dia and 36" Dia = 2'-3"

③ Min lap with Column reinf:
#7 Bars = 2'-4"
#9 Bars = 3'-10"
Note: Number and size of Col reinf must match FD bars

④ Or as shown on plans

⑤ 6" (Min) at Grade Crossing
1'-0" (Min) In Channel

⑥ FD bars shall be tied to the top of the bottom mat of reinforcing

⑦ FC bar spacing = 18"±

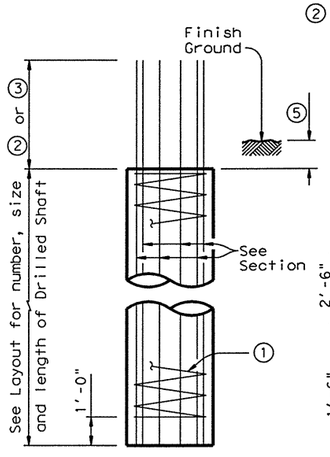

ELEVATION

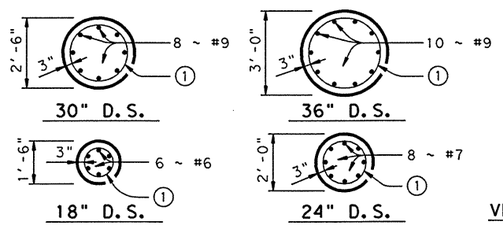

SECTIONS

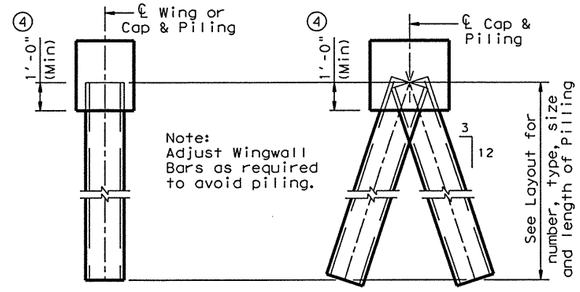

VERTICAL WING OR CAP PILE

BATTERED CAP PILE

PILING DETAILS
(Concrete or Steel H)

ABUTMENT, WINGWALL, AND INTERIOR BENT DRILLED SHAFTS

GENERAL NOTES:

Designed according to current AASHTO Standard Specifications for Highway Bridges.

See Bridge Layout of each Structure for Foundation Type to be used.

Details shown on this standard to be used unless shown otherwise in the plans.

Maximum Pile Load for the footings shown shall be as follows : 72 Tons/Pile with 24" Dia Column
80 Tons/Pile with 30" Dia Column
100 Tons/Pile with 36" Dia Column

Standard Footings shall not be used in salt water conditions.

Drilled Shaft reinforcing may be Grade 40.

Piling under wings to be driven to a minimum resistance of 10 Tons.

HS25 LOADING

STATE OF TEXAS
ALLEN R. CROZIER
81450
REGISTERED PROFESSIONAL ENGINEER
Allen R. Crozier
6/25/03

Texas Department of Transportation
Design Division (Bridge)

COMMON FOUNDATION DETAILS

FD (MOD)

FILE: fdstde01.dgn	DN: JMH	CK: DWM	DW: RNP	CK: JMH	STD: B205
© TxDOT September 1998	DIST	FED REG	FEDERAL AID PROJECT •		SHEET
REVISIONS 9/01-ARC-Verified details for HS25 & revised live load callout to HS25.	PHARR	6	NH 2003 ( )		1098
	COUNTY		CONTROL	SECT	JOB	HIGHWAY
	HIDALGO		0255	08	091	US281

DISCLAIMER:
The use of this standard is governed by the "Texas Engineering Practice Act". No warranty of any kind is made by TxDOT for any purpose whatsoever. TxDOT assumes no responsibility for the conversion of this standard to other formats or for incorrect results or damages resulting from its use.

LEVELS DISPLAYED 1 2 | ACC: | (LV=1,2 for English)

DISCLAIMER:
The use of this standard is governed by the "Texas Engineering Practice Act". No warranty of any kind is made by TxDOT for any purpose whatsoever. TxDOT assumes no responsibility for the conversion of this standard to other formats or for incorrect results or damages resulting from its use.

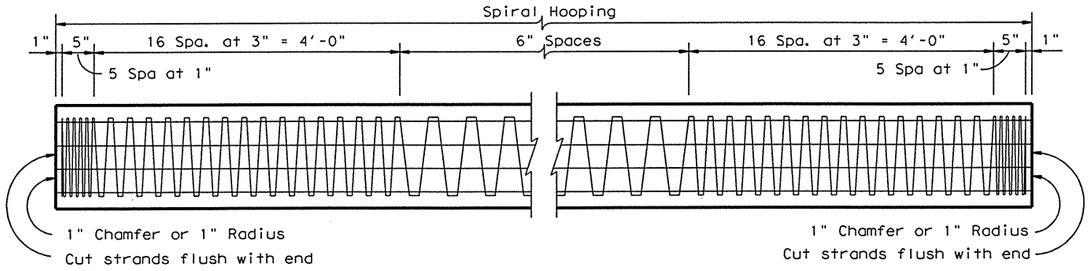

PILING DETAILS

TABLE OF PROPERTIES FOR PRESTRESSED CONCRETE PILING						
Pile Size "D"	Area of Pile Section	I	Weight	Prestressing ④		
				No	Initial Prestress Force	Concrete Final Prestress (15% Loss)
	Sq In	In⁴	Lb/Ft		Kips	p s i
14" ②	194	3110	202	6	173	760
15" ③	223	4116	232	8	231	881
16"	254	5340	265	8	231	774
18"	322	8600	336	10	289	763
20"	398	13150	415	14	405	864
24"	574	27380	598	18	520	770

② When 14" square piling are specified on the plans, Contractor has the option of furnishing either 14", 15" or 16" square piling.

③ When 15" square piling are specified on the plans, Contractor has the option of furnishing either 15" or 16" square piling.

④ Prestressing strands shall be ½" 270 K low relaxation strands tensioned to 28.9 kips each.

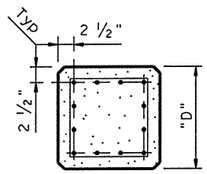

TYPICAL SECTION THRU PILING

NOTE: Strand location shall be symmetrical about the axis of the pile with no more than one strand difference between any two adjacent sides.

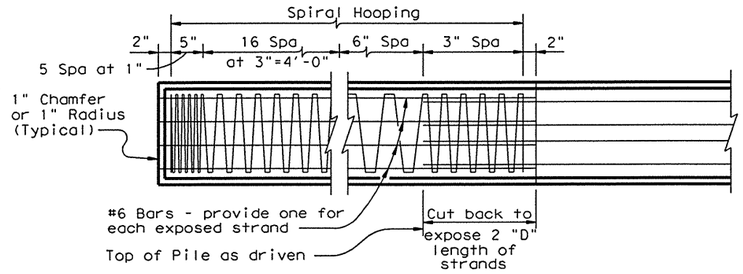

PILE BUILD-UP DETAIL

Class S concrete shall be used for pile build-up.

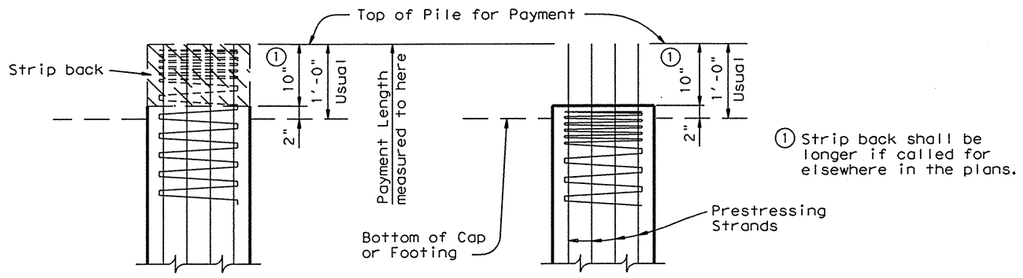

PILE STRIPPED BACK AFTER DRIVING

PILE CAST WITH PRESTRESSING STRANDS PROTRUDING

PILING EMBEDMENT DETAILS

Payment for piling shall be made in accordance with detail shown above.

Where piling conflicts with substructure reinforcing or when the side cover from edge of pile to edge of substructure is less than 4" after driving, piling shall be stripped back 10" with the Prestressing Strands extending into the substructure. Piling may be cast to full payment length and stripped back after driving to expose 10" of Prestressing Strands, or they may be cast 10" short of payment length with Prestressing Strands protruding from top of piling.

GENERAL NOTES

Concrete for Prestressed Piling shall be Class H . Release strength = 4000 psi. Minimum 28 day compressive strength (f'c) = 5000 psi.

Unless otherwise noted in the plans or authorized by the Engineer, piling shall be cast with concrete using Type II cement and without voids.

All dimensions relating to prestressing steel are to centers of bars or strands.

Size, number, and length of piling shall be as shown on Layout Sheets.

Spiral Hooping shall have a minimum diameter of .207".

LEVELS DISPLAYED 1|2 ACC: (LV=1,2 for English)

Texas Department of Transportation
Design Division (Bridge)

PRESTRESSED CONCRETE PI LI NG
(SEVERE EXPOSURE)

CP-S

FILE: cpsstdel.dgn	DN: THD	CK: THD	DW: LW	CK: LDS	STD: B242
©TxDOT September 1998	DIST	FED REG	FEDERAL AID PROJECT •		SHEET
REVISIONS	6	6	NH 2003( )		1099
	COUNTY		CONTROL	SECT	JOB	HIGHWAY
	HIDALGO		0255	08	091	US281

DISCLAIMER:
The use of this standard is governed by the "Texas Engineering Practice Act". No warranty of any kind is made by TxDOT for any purpose whatsoever. TxDOT assumes no responsibility for the conversion of this standard to other formats or for incorrect results or damages resulting from its use.

LEVELS DISPLAYED: 1 2 | ACC: (LV's 1,2 for English)

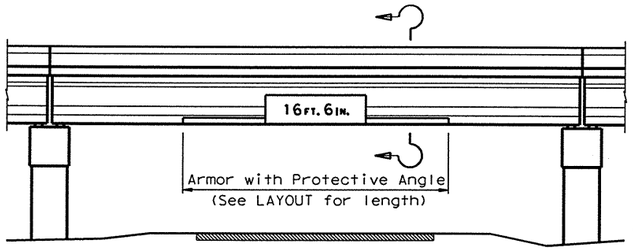

TYPICAL BRIDGE ELEVATION

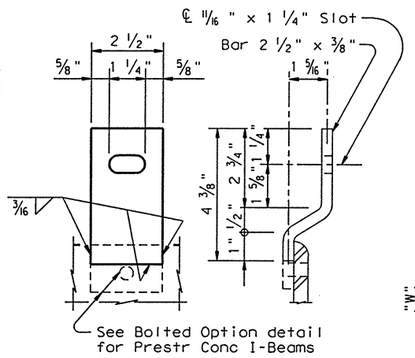

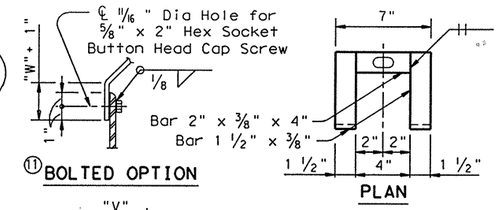

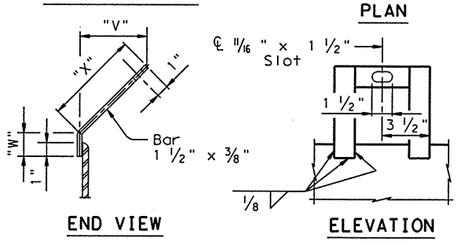

40' CG (PAN FORM) SPANS

PRESTRESSED CONCRETE BEAMS

BEAM	"V"	11 "W"	"X"	"Y"	"Z"
TYPE A	4 7/16"	1 5/16"	6 5/16"	2 9/16"	3 5/8"
TYPE B	5 1/2"	2 5/16"	7 13/16"	2 1/4"	3 3/16"
TYPE C	7 5/16"	1 5/16"	10 5/16"	2 1/4"	3 3/16"
TYPE 54	4 3/4"	2 5/16"	6 3/4"	2 1/4"	3 3/16"
TYPE 72	7 5/16"	5 5/16"	10 5/16"	2 1/4"	3 3/16"
TYPE IV	4 13/16"	2 5/16"	6 13/16"	6 1/4"	8 13/16"

BOX BEAM	"V"	11 "W"	"X"	"Y"	"Z"
20	4 1/16"	1 5/16"	5 3/4"	1 15/16"	2 3/4"
28	4 7/16"	1 5/16"	6 5/16"	2 9/16"	3 5/8"
34	4 7/16"	5 5/16"	6 5/16"	2 9/16"	3 5/8"
40	4 7/16"	11 5/16"	6 5/16"	2 9/16"	3 5/8"

11 Add 1" to "W" dimension when "BOLTED OPTION" is used. Notch Redwood Plank to accomodate bolt and nut.

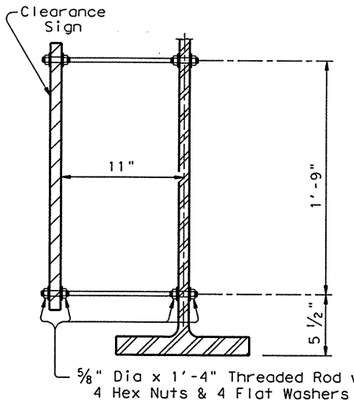

CLEARANCE SIGN MOUNTING BOLTS

STEEL GIRDER & I-BEAM UNITS

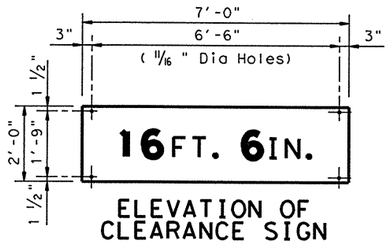

ELEVATION OF CLEARANCE SIGN

PROTECTIVE ANGLE SUPPORT BRACKETS

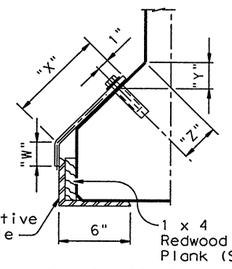

TYPE A & B BEAMS & 20" & 28" BOX BEAMS
(SHOWN WITHOUT SIGN)

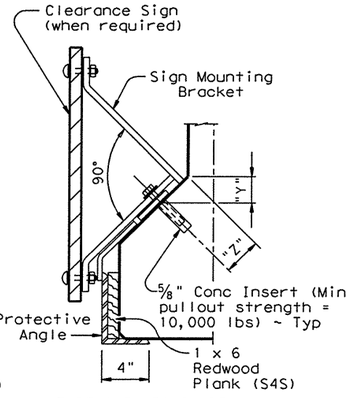

TYPE C, 54, 72, IV BEAMS & 34" & 40" BOX BEAMS
(SHOWN WITH SIGN)

PRESTRESSED CONCRETE BEAMS

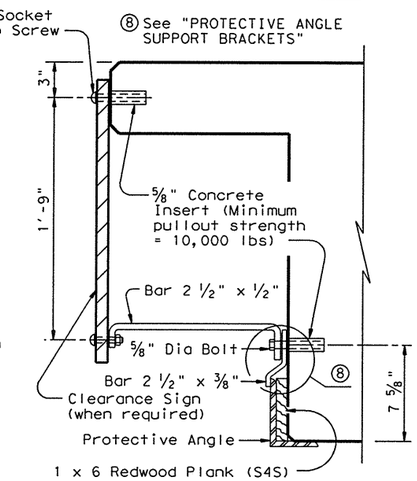

40' CG (PAN FORM) SPANS
(SHOWN WITH SIGN)

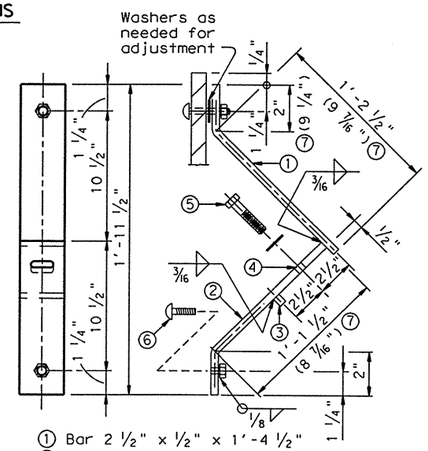

① Bar 2 1/2" x 1/2" x 1'-4 1/2"
② Bar 2 1/2" x 1/2" x 1'-3 1/2"
③ 1/2" x 1/2" x 2 1/2"
④ 11/16" x 1 1/4" Slot
⑤ 5/8" Dia x 3" Bolt with Flat Washer
⑥ 5/8" x 2" Hex Socket Button Head Cap Screw
⑦ For 508 & 711 mm Boxes & Type A Beams only.

PRESTRESSED CONCRETE BEAMS

CLEARANCE SIGN MOUNTING BRACKET

(2 REQUIRED PER SIGN)

SECTIONS THRU BRIDGE ELEVATION

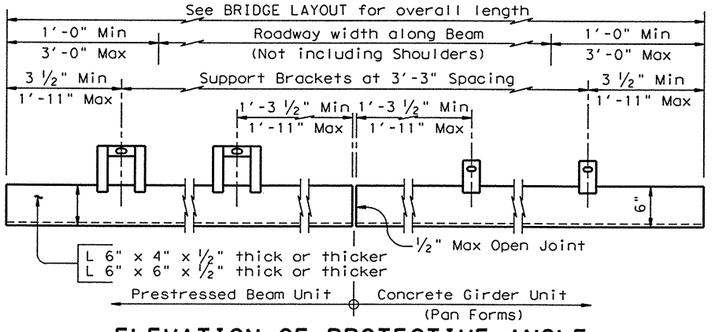

ELEVATION OF PROTECTIVE ANGLE

See Prestressed Concrete Beam Sections.
"V", "W" & "X" Dimensions may need adjusting for thicker Protective Angles.

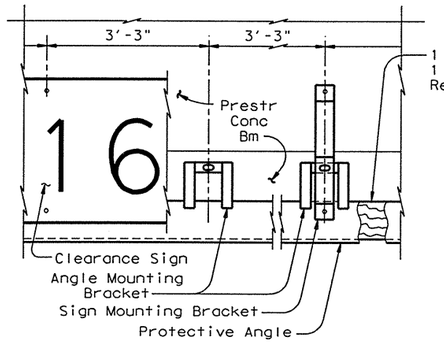

TYPICAL INSTALLATION OF CLEARANCE SIGN AND PROTECTIVE ANGLE

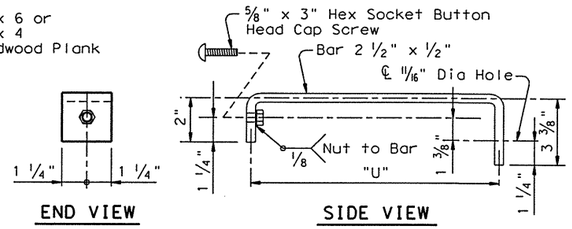

OVERHANG	9 1/4"	1'-3 1/4"	1'-9 1/4"	7 3/4"
"U"	8 3/8"	1'-2 3/8"	1'-8 3/8"	6 7/8"

NOTE: If Overhang is 1 3/4" or less, omit Bracket, space with washers as necessary, re-position upper anchors and/or holes in sign.

40' CG (PAN FORM) SPANS

CLEARANCE SIGN MOUNTING BRACKET

(2 REQUIRED PER SIGN)

GENERAL NOTES:

Designed according to current AASHTO Standard Specifications.

Protective Angles and Support Brackets shall be Structural Steel conforming to ASTM designation A36, A572 or A588 and may be shipped in convenient lengths (11'-0" Min).

Redwood Planks shall be beveled to clear inside radius of Protective Angle and shall be full length of angle. Joints in plank shall not coincide with joints in angle.

Either clearance signs, protective angles or both together may be installed using these details. For clearance signs these details are appropriate for skew angles up to 30°. For protective angles these details are appropriate for any skew.

Plans may require the complete assembly, consisting of protective angle and mounting brackets, sign and sign mounting brackets, or may require only portions of this assembly, all as noted on the structure Layout sheet

For clearance sign details in excess of 30°, include BPA-2.

Texas Department of Transportation
Design Division (Bridge)

BRIDGE PROTECTIVE ASSEMBLY
WITH SIGN MOUNT BRACKET FOR SKEWS THRU 30°
BPA-1

FILE: bpalstde.dgn	DN: THD	CK: THD	DW: DRG	CK: LDS	STD: B113A	
©TxDOT September 1998	DIST	FED REG	FEDERAL AID PROJECT •			SHEET
REVISIONS	PHARR	6	NH2003( )			1100
	COUNTY		CONTROL	SECT	JOB	HIGHWAY
	HIDALGO		0255	08	091	US281

DISCLAIMER:
The use of this standard is governed by the "Texas Engineering Practice Act". No warranty of any kind is made by TxDOT for any purpose whatsoever. TxDOT assumes no responsibility for the conversion of this standard to other formats or for incorrect results or damages resulting from its use.

LEVELS DISPLAYED | ACC: | (LV=1,2 for English)
1 | 2

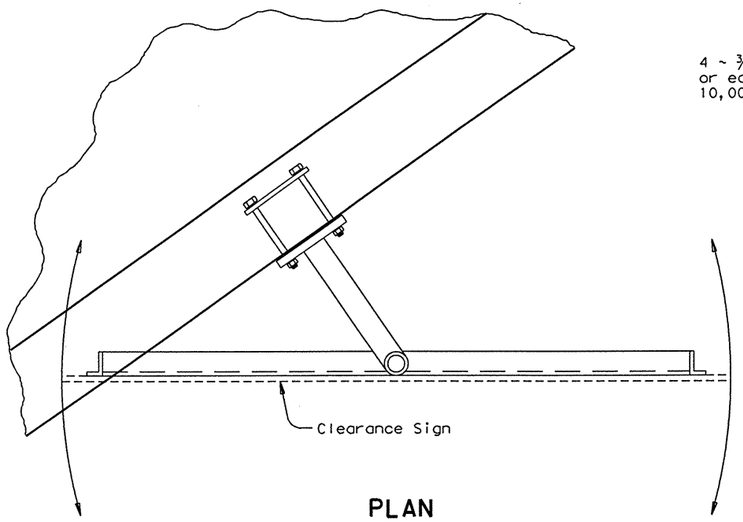

PLAN

NOTE: Rotate sign until perpendicular to Roadway below.

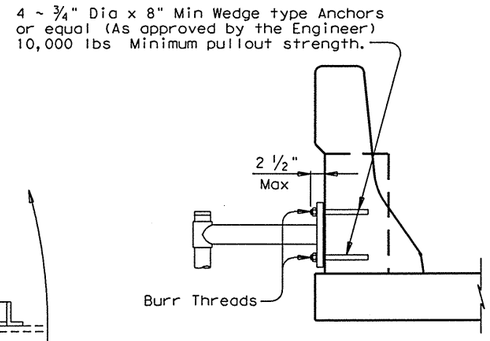

ALTERNATE ANCHORAGE DETAIL

(ANCHORAGE PLACED AFTER RAIL POURED AND CURED)

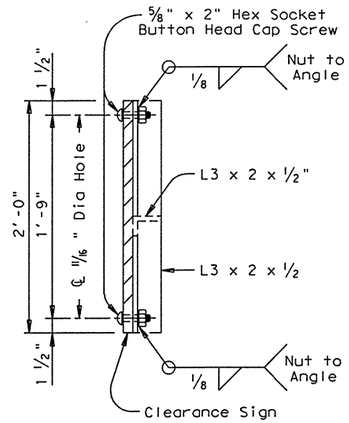

SECTION A-A

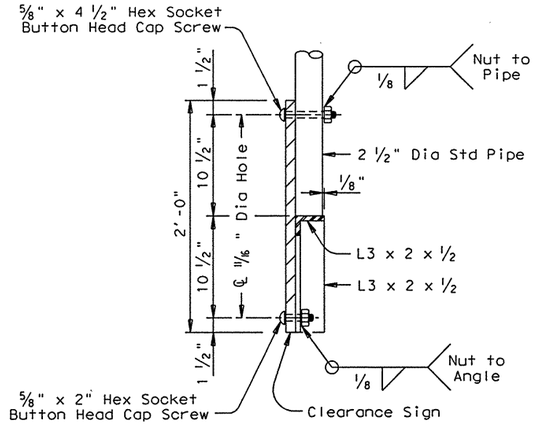

SECTION B-B

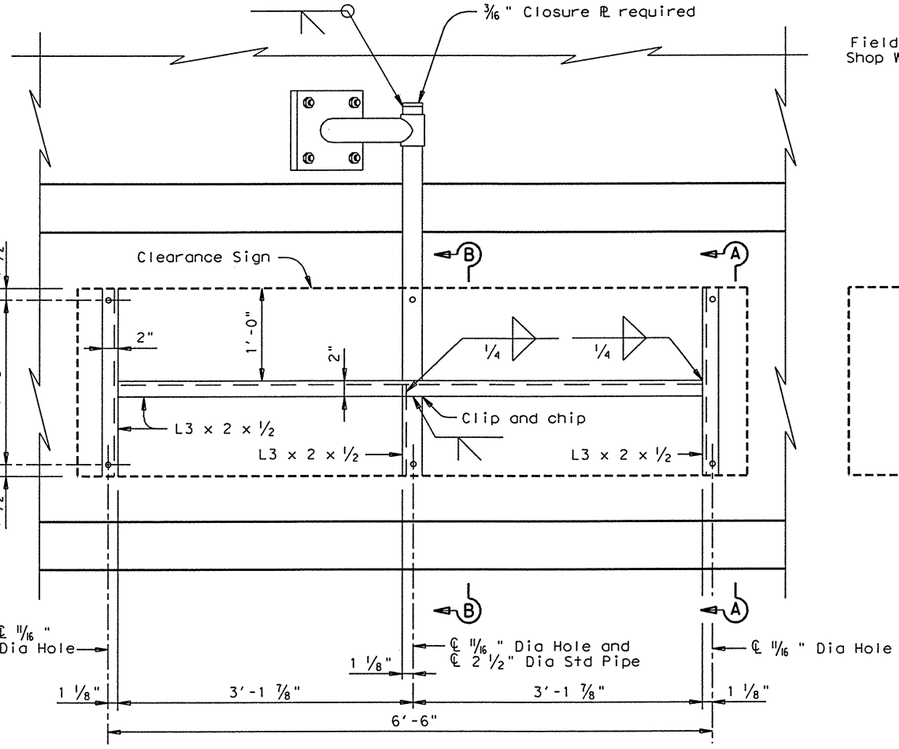

ELEVATION

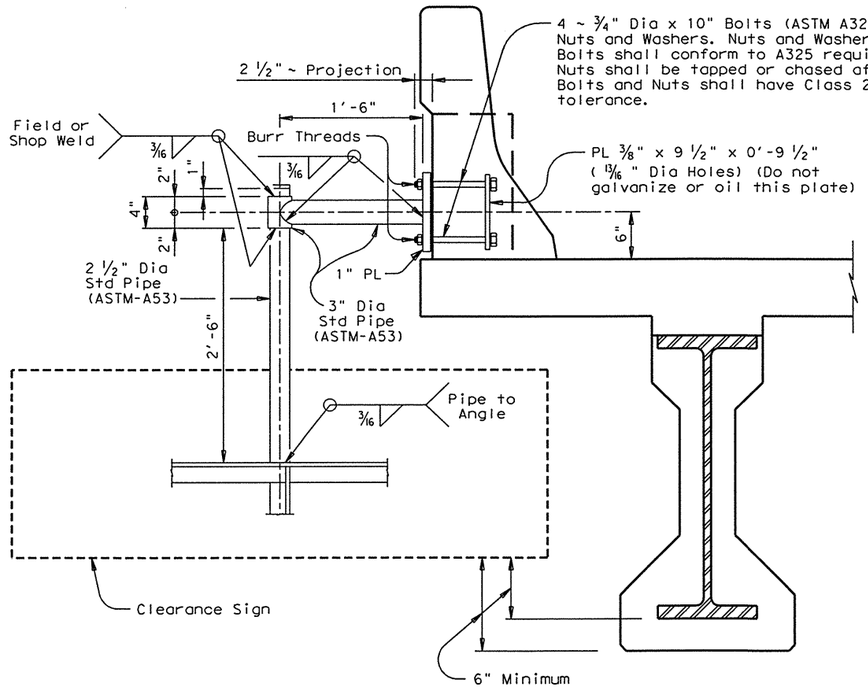

SECTION

(ANCHORAGE PLACED BEFORE RAIL POURED)

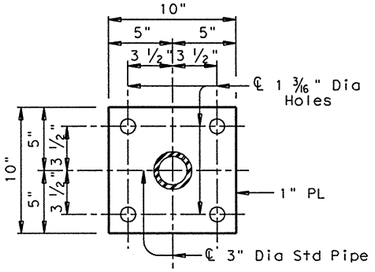

PLATE DETAIL

NOTES:
See BPA-1 for GENERAL NOTES.
All steel components shall be galvanized after fabrication unless otherwise shown.
Structural steel shall conform to ASTM A36.
Details shown are applicable for beam depth of 3'-0" and greater.
The galvanized areas damaged by field welding shall be thoroughly cleaned and repaired in accordance with the item "Galvanizing".

Texas Department of Transportation
Design Division (Bridge)

BRIDGE PROTECTIVE ASSEMBLY

WITH SIGN MOUNT BRACKET FOR SKEWS OVER 30°

BPA-2

FILE: bpa2stde.dgn	DN: THD	CK: THD	DW: MFG	CK: LDS	STD: B113B		
©TxDOT September 1998	DIST	FED REG	FEDERAL AID PROJECT •			SHEET	
REVISIONS	PHARR	6	NH 2003( )			1101	
	COUNTY			CONTROL	SECT	JOB	HIGHWAY
	HIDALGO			0255	08	091	US281

DISCLAIMER:
The use of this standard is governed by the "Texas Engineering Practice Act". No warranty of any kind is made by TxDOT for any purpose whatsoever. TxDOT assumes no responsibility for the conversion of this standard to other formats or for incorrect results or damages resulting from its use.

LEVELS DISPLAYED 1 2 | ACC: (LV=1,2 for English)

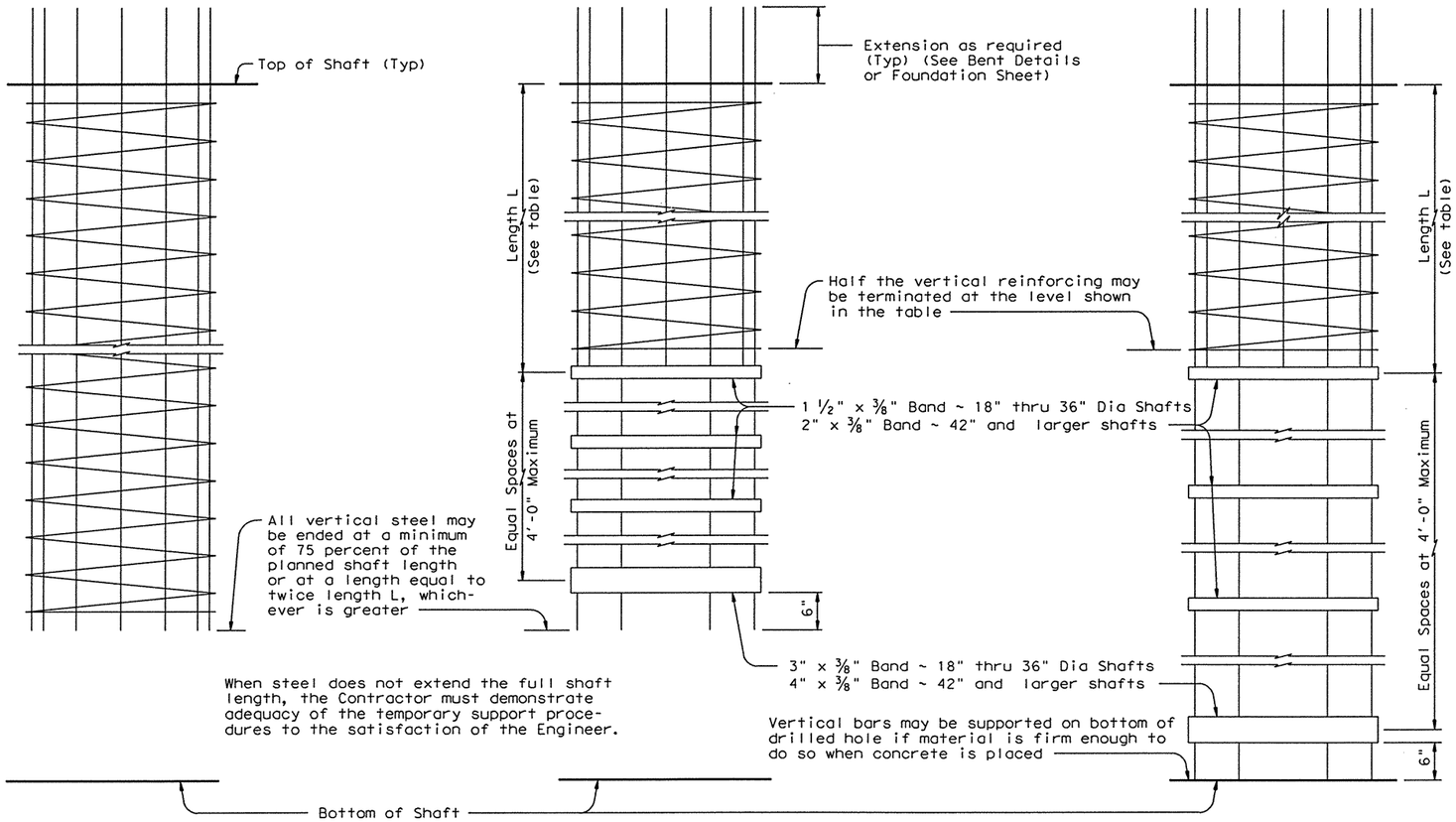

ELEVATIONS

LENGTH L		
Drilled Shaft Diameter (Inches)	Length L (Feet)	Note
18 & 24	24	The length L is measured from top of shaft, natural ground, or finished ground, whichever results in the longer length of full reinforcement.
30 & 36	30	
42 & larger	10 Shaft Diameters	

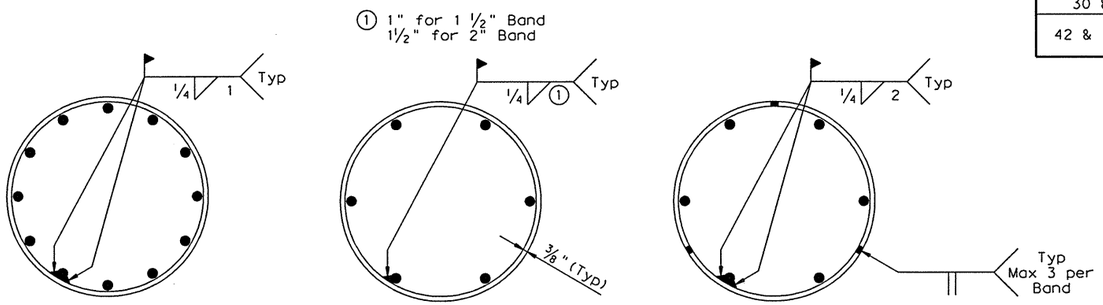

BAND DETAILS

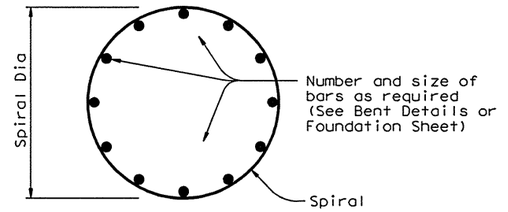

Spiral to be at the pitch and diameter as shown elsewhere in the plans.

SPIRAL DETAIL

GENERAL NOTES:

At the Contractor's option, any or all drilled shafts may be constructed using these details in lieu of the drilled shaft details shown elsewhere in the plans.

These details shall not be applied to single column bents supported by a single shaft, or to overhead sign bridge towers supported by a single shaft, or to high mast illumination pole foundations. Unless otherwise noted, all drilled shafts on stream crossings and any others specifically noted in the plans shall have full reinforcement and be excluded from applications of these details.

All welded bands and reinforcing steel, including that projecting the required amount from the top of the shaft, shall not be paid for directly, but shall be subsidiary to the bid item, "Drilled Shaft Foundations"

Tack welding of spiral to main steel will not be allowed in the upper 15' of drilled shaft.

Texas Department of Transportation
Design Division (Bridge)

OPTIONAL DRILLED SHAFT REINFORCING

ODSR

FILE: odsstdet.dgn	DN: THD	CK: CHO	DW: KC	CK: LDS	STD: B109
©TxDOT September 1998	DIST	FED REG	FEDERAL AID PROJECT •		SHEET
REVISIONS	PHARR	6	NH 2603 ( )		1102
	COUNTY		CONTROL	SECT	JOB	HIGHWAY
	HIDALGO		0255	08	091	US281

DISCLAIMER:
The use of this standard is governed by the "Texas Engineering Practice Act". No warranty of any kind is made by TxDOT for any purpose whatsoever. TxDOT assumes no responsibility for the conversion of this standard to other formats or for incorrect results or damages resulting from its use.

LEVELS DISPLAYED 1 2 | ACC: | (LV=1,2 for English)

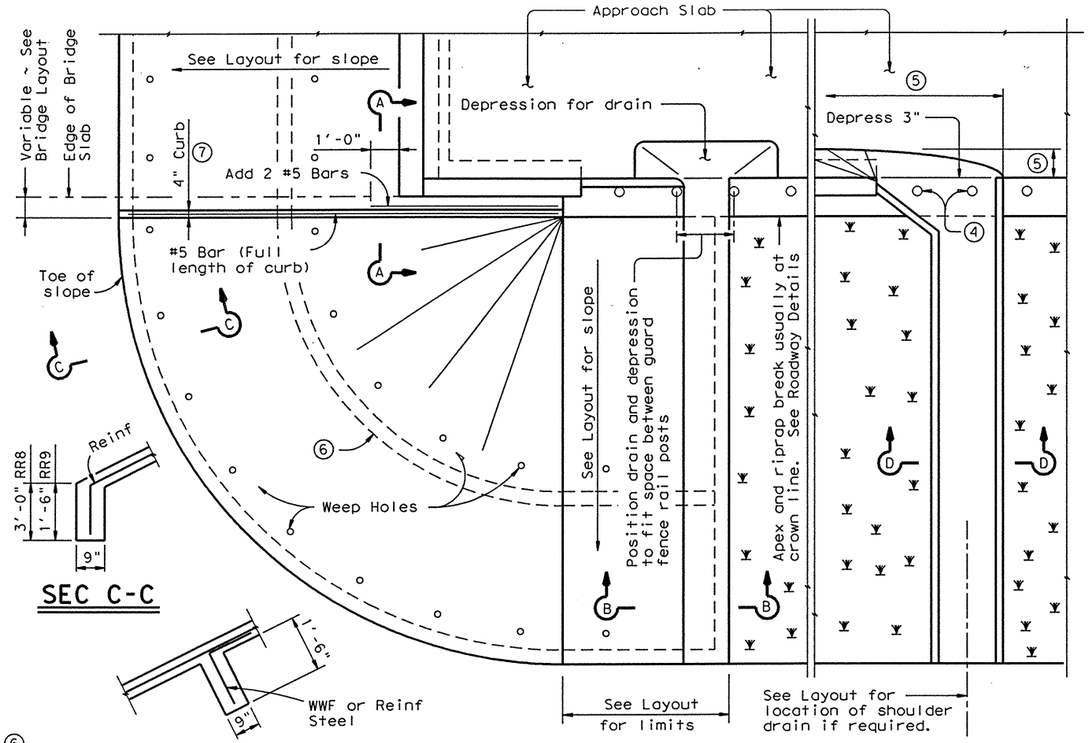

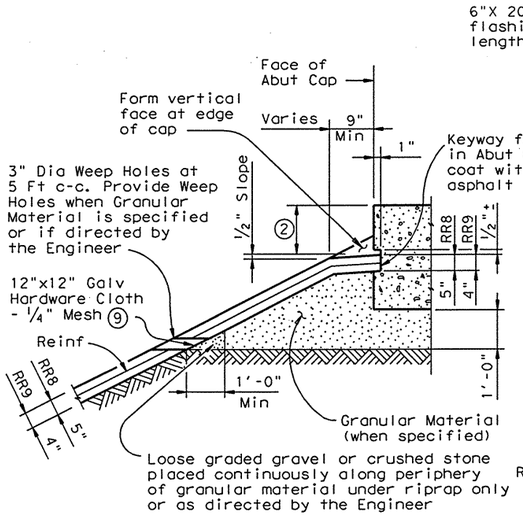

SECTION THRU RIPRAP AT CAP

Note: The sealing option of the joint between the face of cap and riprap shall be as designated by the Engineer or as shown elsewhere on plans.

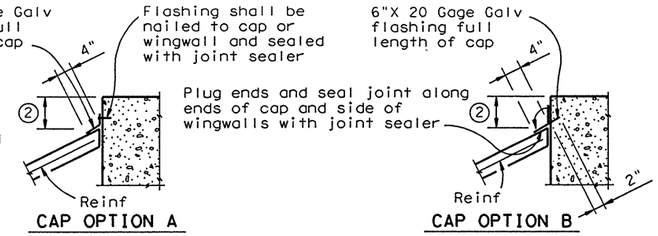

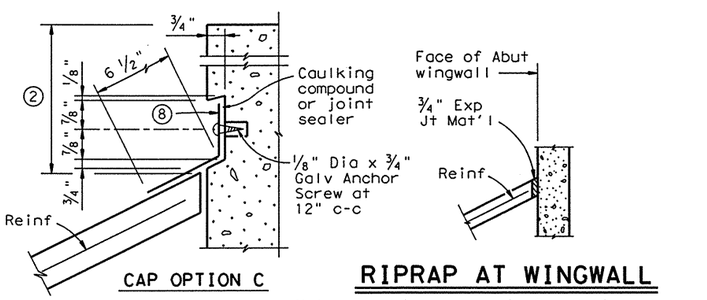

Note: Flashing (shown in Cap Option A) may be used at wingwall in addition to Exp Jt Mat'l if shown on plans or directed by the Engineer.

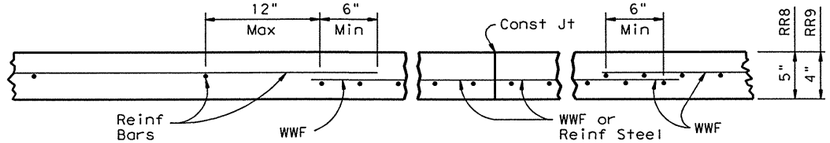

Note: Reinforcing bars shall be #3 at 18" spac c-c. Welded wire fabric shall be 6X6-W2.9XW2.9. Combinations of WWF and reinforcing bars may be used if both are permitted. Lap splices shall be a minimum of 6 inches, measured from the transverse wire of WWF, and the ends of reinforcing bars.

DETAILS OF WWF, REINF AND CONST JOINT

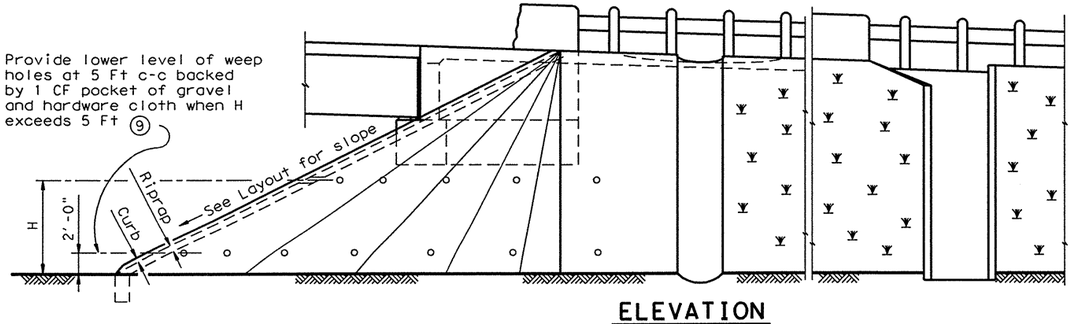

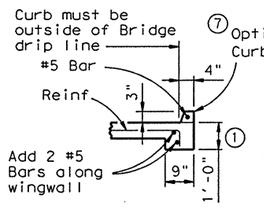

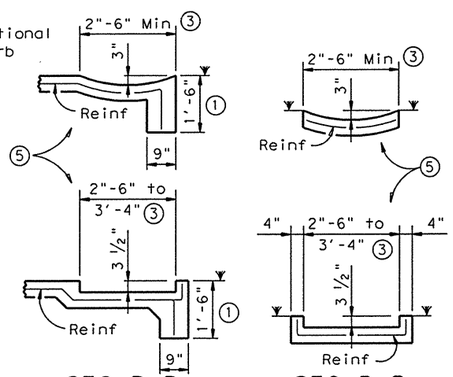

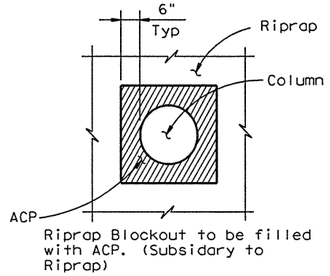

1. Wall extension may be reduced or modified if approved by the Engineer. Wall extension shall be increased to 1'-6" whenever the optional Intermediate Toewall is called for in the plans.
2. Top of cap to top of riprap dimension varies as directed by the Engineer. Should be 9" Min for stringer type bridges and 1'-6" for slab type bridges.
3. Wider or other drain configurations shall be used if shown elsewhere in plans or if directed by the Engineer.
4. A 12 in. Dia void should be provided in the riprap at the guard fence location. Backfill with 4 in. of ACP if directed by the Engineer.
5. Limits and configuration of drains and depressions shall be as shown elsewhere in plans or as directed by the Engineer.
6. The optional Intermediate toe wall shall be constructed when designated elsewhere in the plans or included in the specifications.
7. When riprap is shown extended around header on layout, extend slab and toewall as shown and eliminate 4" curb.
8. 8" x 18 Gage Galv Sheet Metal
9. If erodable soils occur in the embankment

FOR CONTRACTOR'S INFORMATION ONLY:
5" of RR8 = 0.015 CY/SF
4" of RR9 = 0.012 CY/SF
#3 Reinf at 18" c-c = 0.501 Lbs/SF
6X6-W2.9XW2.9 = 0.394 Lbs/SF

GENERAL NOTES

Concrete shall be Class B unless noted elsewhere in plans.

Reinforcing other than that shown may be used by substituting reinforcement of equal or greater unit cross-sectional area. The Maximum reinforcement spacing shall be 18 inches.

Construction joints or grooved joints extending the full slant slope height shall be at intervals of approximately 20 feet unless otherwise directed by the Engineer.

Porus Concrete Filter Blanket and Gravel Backfill shall be placed if shown elsewhere in the plans or if directed by the Engineer.

Hardware cloth, loose graded stone behind weep holes, flashing, or other sealing material shall not be paid for directly but shall be subsidiary to the bid item, Riprap.

Unless specified elsewhere in the plans to be only reinforcing bars, the riprap reinforcing may be composed of reinforcing bars, welded wire fabric, or any suitable combination of both types.

See Layout for limits of riprap.

RR8 is to be used on stream crossings.

RR9 is to be used on other embankments.

Texas Department of Transportation
Design Division (Bridge)

CONCRETE RIPRAP
FOR EMBANKMENT SLOPES UNDER BRIDGE ENDS (TYPES RR8 & RR9)

CRR

FILE: crrstdel.dgn	DN: JJP	CK: THD	DW: DRG	CK: LDS	NEG:	B202
©TxDOT September 1998	DIST	FED REG	FEDERAL AID PROJECT •			SHEET
REVISIONS	PHARR	6	NH 2003( )			1103
	COUNTY			CONTROL	SECT	JOB	HIGHWAY
	HIDALGO			0255	08	091	US281

DISCLAIMER:
The use of this standard is governed by the "Texas Engineering Practice Act". No warranty of any kind is made by TxDOT for any purpose whatsoever. TxDOT assumes no responsibility for the conversion of this standard to other formats or for incorrect results or damages resulting from its use.

LEVELS DISPLAYED

ACC:

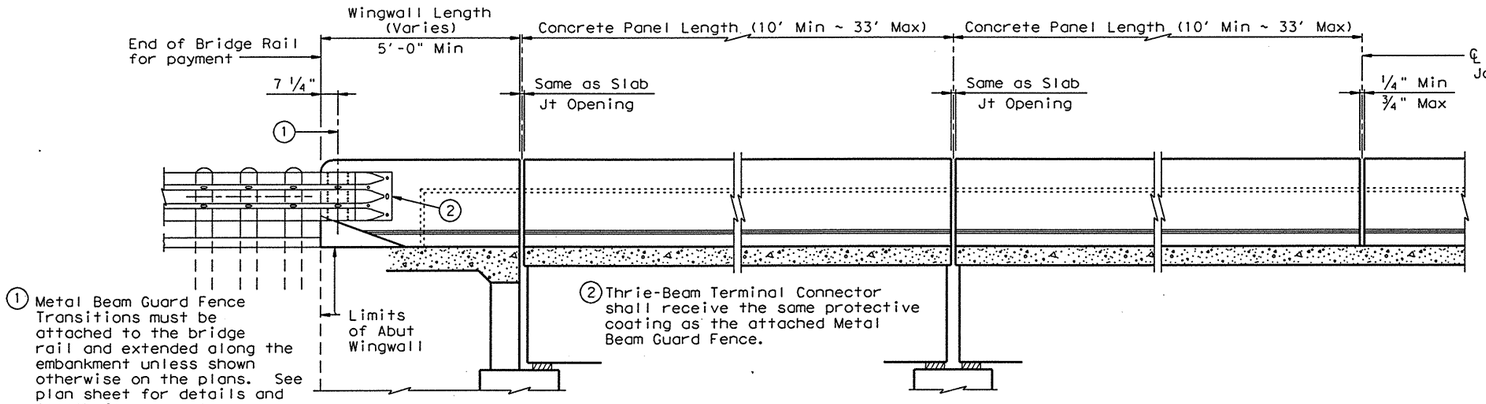

1 Metal Beam Guard Fence Transitions must be attached to the bridge rail and extended along the embankment unless shown otherwise on the plans. See plan sheet for details and length for payment.

2 Thrie-Beam Terminal Connector shall receive the same protective coating as the attached Metal Beam Guard Fence.

3 Increase 2" for structures with Overlay.

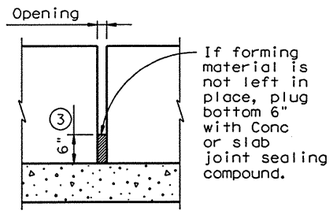

INTERMEDIATE WALL JOINT DETAIL

Note: Provide intermediate wall joints over all slab construction joints, over interior supports on continuous units, and at equal intervals in between as necessary to maintain a 33' maximum length of unbroken wall. Material used in forming joint may be left in place if it is compressible and light in color such as the following materials: polystyrene, molded cork granules, sponge rubber sheet, etc.

AT ABUTMENT BENTS

AT SLAB EXP JOINTS

AT INTERMEDIATE WALL JOINTS

ROADWAY ELEVATION OF RAIL

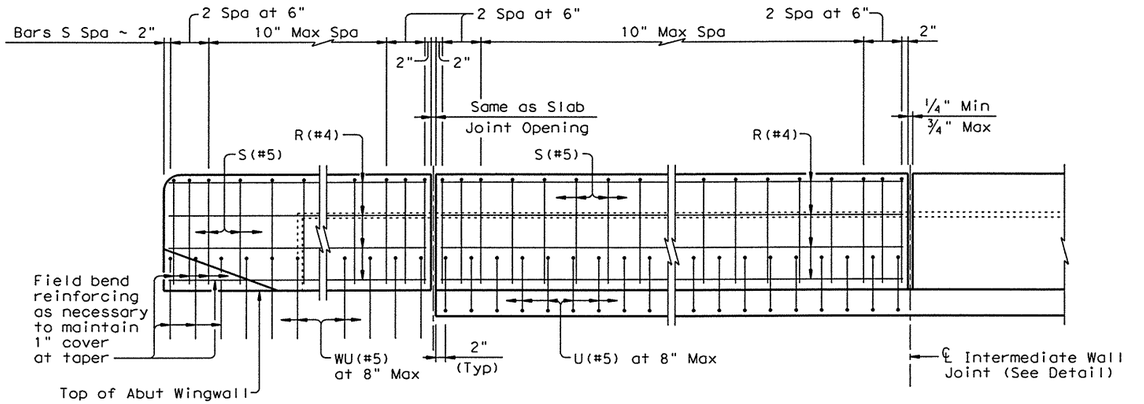

ELEVATION SHOWING TYPICAL REINFORCING PLACEMENT

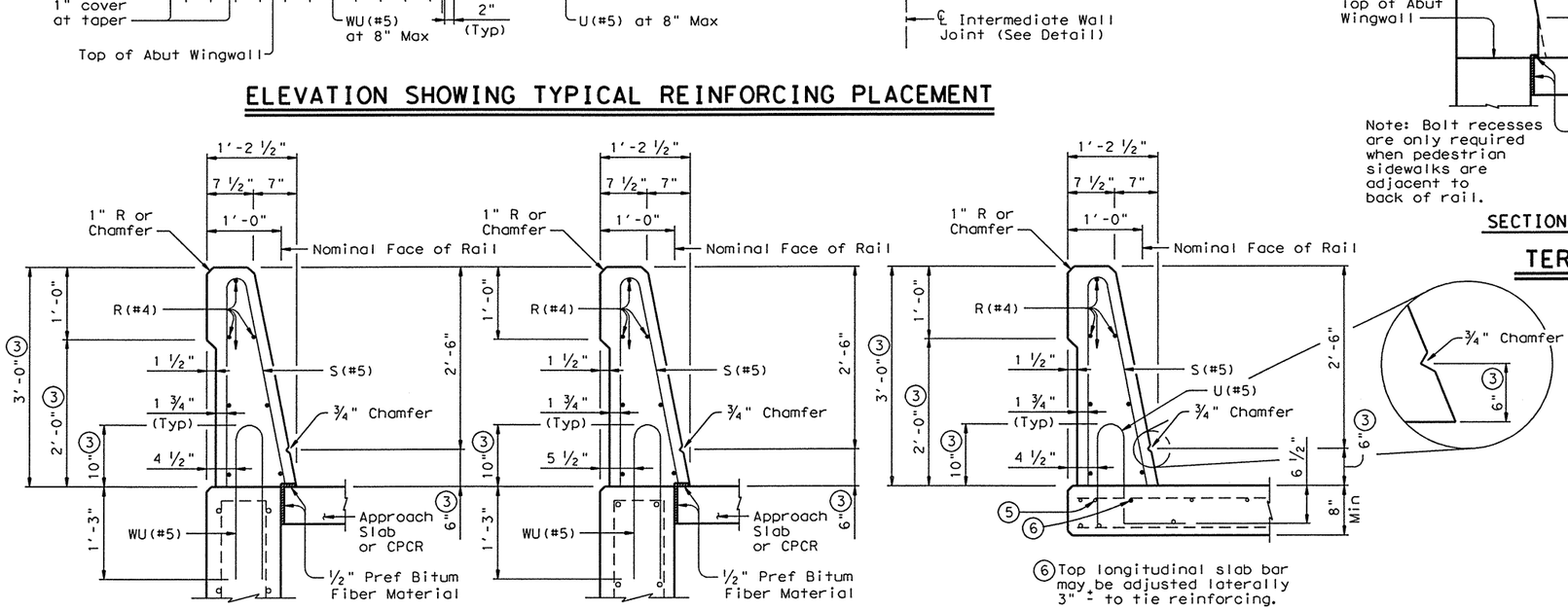

SECTIONS THRU RAIL

5 As an aid in supporting reinforcement, additional longitudinal bars may be used in the slab with the approval of the Engineer. Such bars shall be furnished at the Contractors expense.

6 Top longitudinal slab bar may be adjusted laterally 3" ± to tie reinforcing.

℄ 5 ~ 7/8" Dia A325 Hex Head Bolts with two 1 3/4" O.D. washers. Place washer under each head and nut. The 5 Terminal Connection Bolts shall be tightened in a well distributed pattern so to prevent damage or distortion of the Thrie-Beam Connection and the MBGF Transition. Bolts shall be cut off after installation so as to extend no more than 3/4" beyond nut. End of cut-off bolt shall be painted with Zinc-rich paint.

℄ 5 ~ 1" Dia holes and 2 1/2" Dia x 2" deep recesses. Holes and recesses must be formed or cored. Percussion drilling is not permitted. Adjust placement of reinforcing steel as necessary to avoid bolt holes and recesses.

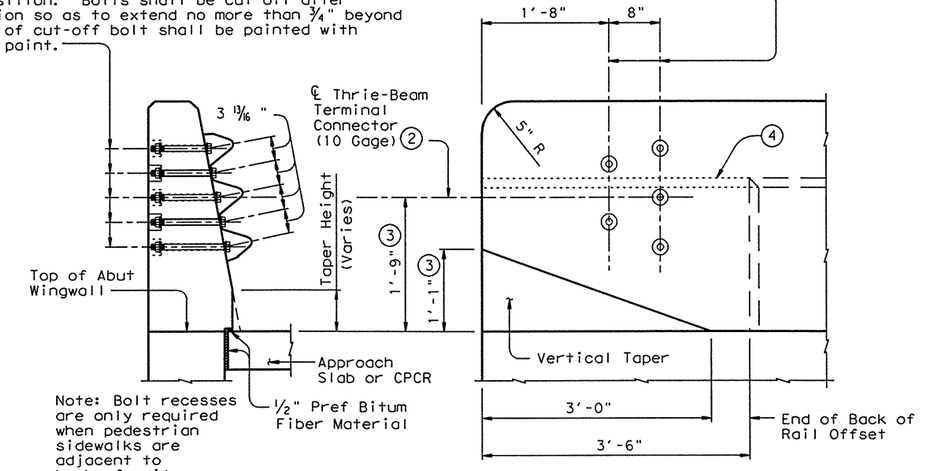

4 Back of rail offset may, with Engineer's approval be continued to the end of the railing.

TERMINAL CONNECTION DETAILS

Sheet 1 of 2

Texas Department of Transportation
Bridge Division

SINGLE SLOPE TRAFFIC RAILING

TYPE SSTR

FILE: rlstde37.dgn	DN: GHO	CK: TxDOT	DW: JTR	CK: DWM		
©TxDOT April 2002	DISTRICT	FEDERAL AID PROJECT			SHEET	
REVISIONS	PHARR	NH 2003 ( )			1104	
	COUNTY		CONTROL	SECT	JOB	HIGHWAY
	HIDALGO		0255	08	091	US281

DISCLAIMER:
The use of this standard is governed by the "Texas Engineering Practice Act". No warranty of any kind is made by TxDOT for any purpose whatsoever. TxDOT assumes no responsibility for the conversion of this standard to other formats or for incorrect results or damages resulting from its use.

LEVELS DISPLAYED | ACC:

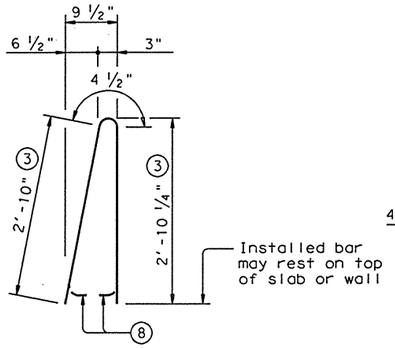

BARS S (#5)

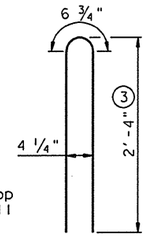

BARS WU (#5)

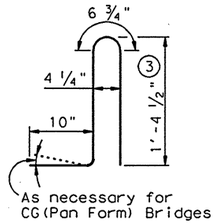

BARS U (#5)

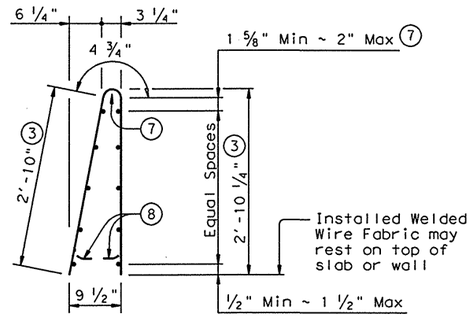

OPTIONAL WELDED WIRE FABRIC

DESCRIPTION	LONGITUDINAL WIRES	VERTICAL WIRES
Minimum (Cumulative Total) Wire Area	0.933 Sq In.	0.248 Sq In. per Ft
	No. of Wires	Spacing
Minimum	6	4"
Maximum	11	12"
Maximum Wire Size Differential	The smaller wire shall have an area of 40% or more of the larger wire.	

(3) Increase 2" for structures with Overlay.

(7) No longitudinal wires may be within upper bend.

(8) Bend or cut as required to clear drain slots.

GENERAL NOTES:

This rail has been evaluated and accepted to be of equal strength to other safety-shaped railings with like geometry, which have been crash tested to meet NCHRP Report 350 TL-4 criteria and can be used for design speeds of 50 mph and greater.

All parts of the railing including concrete parapet wall, reinforcing, MBGF connections, bolts, nuts and washers are included in the price bid per linear foot of rail.

All steel components except reinforcing shall be galvanized unless otherwise shown in plans.

All concrete for railing wall shall be Class "C".

All reinforcing steel shall be grade 60.

Shop drawings will not be required for this rail.

This railing may be constructed with slip-forms when shown on the plans or approved by the Engineer, with equipment approved by the Engineer. Sensor control for both line and grade must be provided. When slip-forming is used, the concrete may be cured with membrane curing compound.

Additional reinforcing may be tack welded to the upper two thirds of the reinforcing cage to provide bracing when slip-forming is used. Additional anchorage devices may be added when welding is necessary in the lower one third of the cage. Do not weld to U or S bars in the lower one third of the cage.

The back of railing shall be vertical unless otherwise shown in the plans or approved by the Engineer.

Deformed welded wire fabric may be used as an option to conventional reinforcement and shall be made in accordance with ASTM A497 (Deformed Wire). Combinations of Reinforcing Steel and Welded Wire Fabric or configurations of Welded Wire Fabric other than shown will be permitted when the conditions in the table are satisfied and the dimension from end of section to first welded vertical wire does not exceed 3".

Epoxy coat bars U and WU if slab bars are epoxy coated.

Average weight of railing with no overlay is 376 plf.

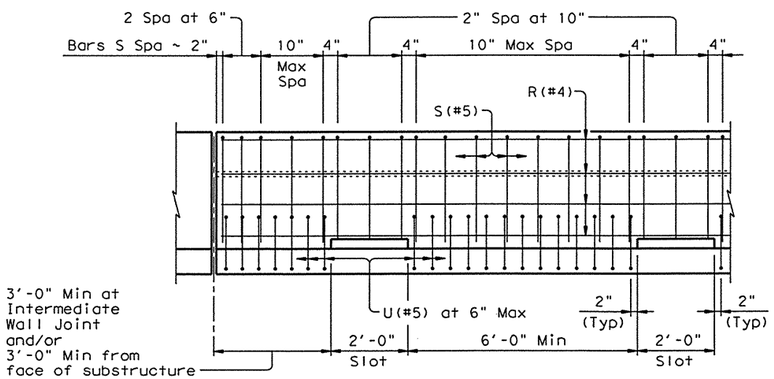

OPTIONAL SIDE SLOT DRAIN DETAIL

Note: Side Slot Drains may be used where shown elsewhere on the plans or as directed by the Engineer. Drains should not be placed over railroad tracks, lower roadways, or sidewalks. When this rail is used as a separator between a roadway surface and a sidewalk surface, side drain slots will not be permitted.

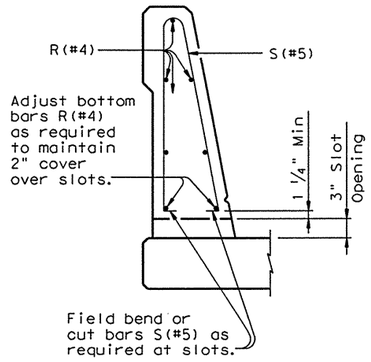

SECTION THRU OPTIONAL SIDE SLOT DRAIN

Texas Department of Transportation
Bridge Division

SINGLE SLOPE TRAFFIC RAILING

TYPE SSTR

FILE: rlstde37.dgn	DN: GHO	CK: TxDOT	DW: JTR	CK: DWW
©TxDOT April 2002	DISTRICT	FEDERAL AID PROJECT		SHEET
REVISIONS	PHARR	NH 2003 ( )		1105
	COUNTY	CONTROL	SECT	JOB	HIGHWAY
	HIDALGO	0255	08	091	US281

DISCLAIMER:
The use of this standard is governed by the "Texas Engineering Practice Act". No warranty of any kind is made by TxDOT for any purpose whatsoever. TxDOT assumes no responsibility for the conversion of this standard to other formats or for incorrect results or damages resulting from its use.

03:54:37 PM 8/5/2003 ALLEN CROZIER

LEVELS DISPLAYED 1 2 ACC:

I:\projects\2232a02\PLD\Sheets\Structures\br_lage\28) SSTR(R)_dgn [LV=1,2 for English; 1,3 for Metric]

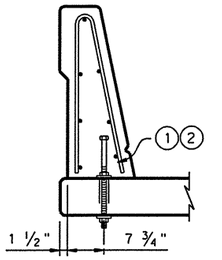

EXISTING T6 RAIL ONLY
(ON SLAB)

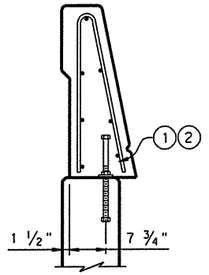

EXISTING T6 RAIL ONLY
(ON ABUTMENT WINGWALL)

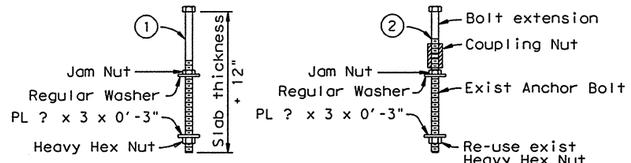

⅞" ANCHOR BOLT (1)(2)
(A321, A325 or A193 B7)

(1) Remove old anchor bolts and replace with ⅞ inch bolts in the two existing interior holes. An additional bolt shall be placed at the midpoint between old posts by drilling a 1 inch diameter hole for the additional bolts. The holes through the bridge deck must be drilled with rotary (coring or masonry drill) type equipment. Percussion (star drill) drilling shall not be used. Spalls in the bottom of the slab exceeding 0.5 inch from the edge of the holes shall be patched.
The bolts shall be secured using a jam nut and washer. Existing bottom plates may be used at old post locations in place of the 3 x 3 x ⅜ inch plates.

The bolts, nuts, and bottom plate washer shall be galvanized. Bolts and nuts shall have Class 2A and 2B fit tolerances. The nuts shall be tapped after galvanizing.

(2) At existing posts, two interior bolts may optionally be left in place with an additional length of bolt joined by a rod coupling nut. Rod coupling nut shall be Grade 5 or better with a proof load capacity at least equivalent to A325 Nuts. Do not galvanize. Class 2B thread fit tolerance. The two exterior bolts may be used for the bolt extensions. In either case, the length of bolt and head protruding from slab shall be approximately 11 ½ inches to insure adequate development length and cover over the bolt head. Bolts may be slightly field bent to maintain cover.

(3) Removal of existing T6 rail shall be considered subsidiary to Bid Item Railing ~ SSTR(R).

GENERAL NOTES:
Designed in accordance with current AASHTO Standard Specifications.
See Traffic Rail Type SSTR standard for details not shown herein.
Additional reinforcing may be tack welded to the upper two thirds of the reinforcing cage to provide bracing when slip forming is used. Additional dowels or anchorages may be added when welding is necessary in the lower one third of the cage. Do not weld to the anchor bolts or required dowels.

STATE OF TEXAS
ALLEN R. CROZIER
81450
REGISTERED PROFESSIONAL ENGINEER
8/5/03

Parsons Brinckerhoff Quade & Douglas Inc.

Texas Department of Transportation

© 2003 by TxDOT

SSTR RETROFIT DETAILS

SSTR(R)

281SSTR(R).DGN

DESIGNED: ARC	FED. RD DIV. No.	STATE	FEDERAL AID PROJECT No.			HIGHWAY No.	
CHECKED: ALA	6	TEXAS	NH 2003 ( )			US 281	
DRAWN: RLJ	STATE DISTRICT	COUNTY	CONTROL No.	SECTION No.	JOB No.	SHEET No.	
CHECKED: ARC	PHARR	HIDALGO	0255	08	091	1106	

BENT LOCATIONS FOR STAR (TYPE 'A') DESIGN

BUS 281 BENT NO. 12 NORTH BOUND DC

OWASSA: BENT NO. 2 NORTH BOUND OUTSIDE COLUMN
OWASSA: BENT NO. 3 SOUTH BOUND OUTSIDE COLUMN

TRENTON: BENT NO. 2 NORTH BOUND OUTSIDE COLUMN
TRENTON: BENT NO. 3 SOUTH BOUND OUTSIDE COLUMN

ALL OTHER BENTS SHALL RECIVE TYPE 'B' DESIGN

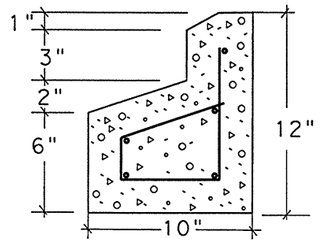

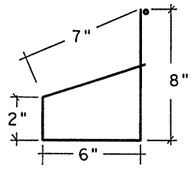

STEEL STIRRUP

COLUMN AND BASE

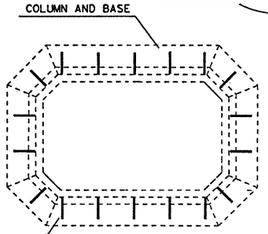

STEEL STIRRUP PLACEMENT
12" O.C.

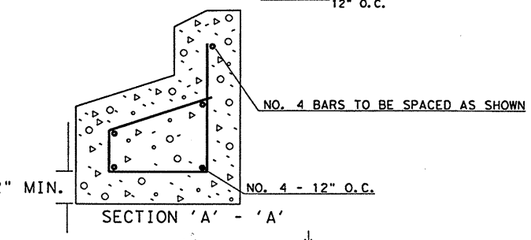

SECTION 'A' - 'A'

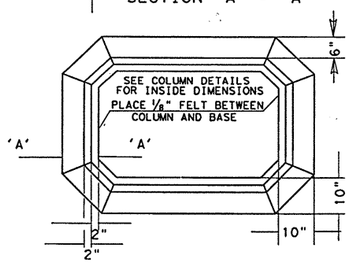

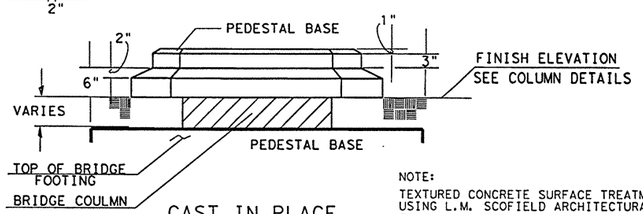

CAST IN PLACE
ARCHITECTURAL
DETAIL

PEDESTAL BASE
NO SCALE

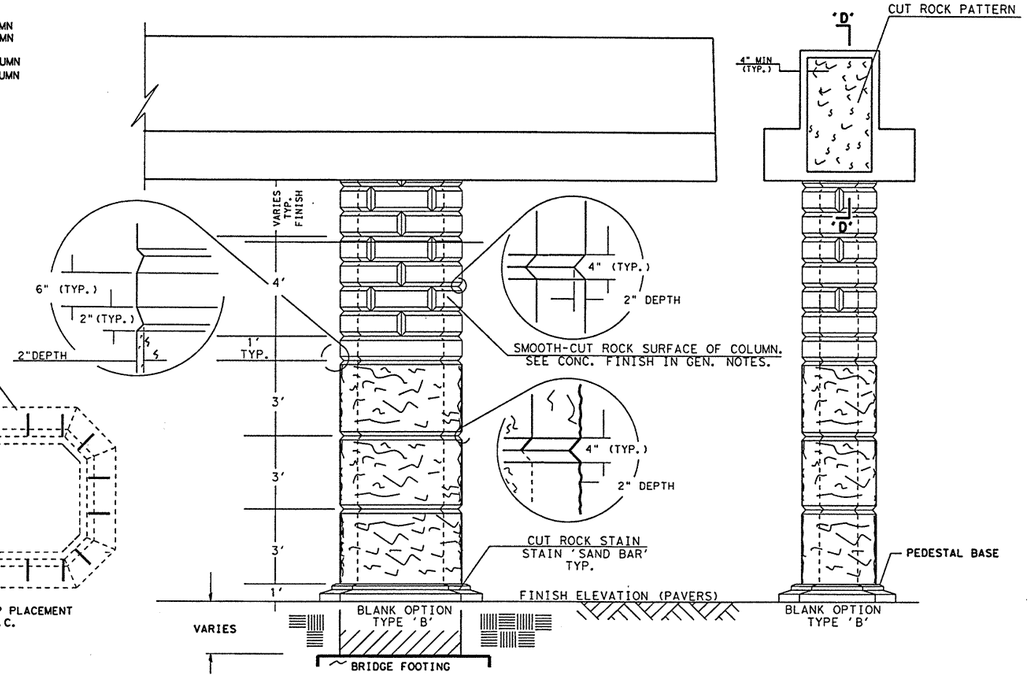

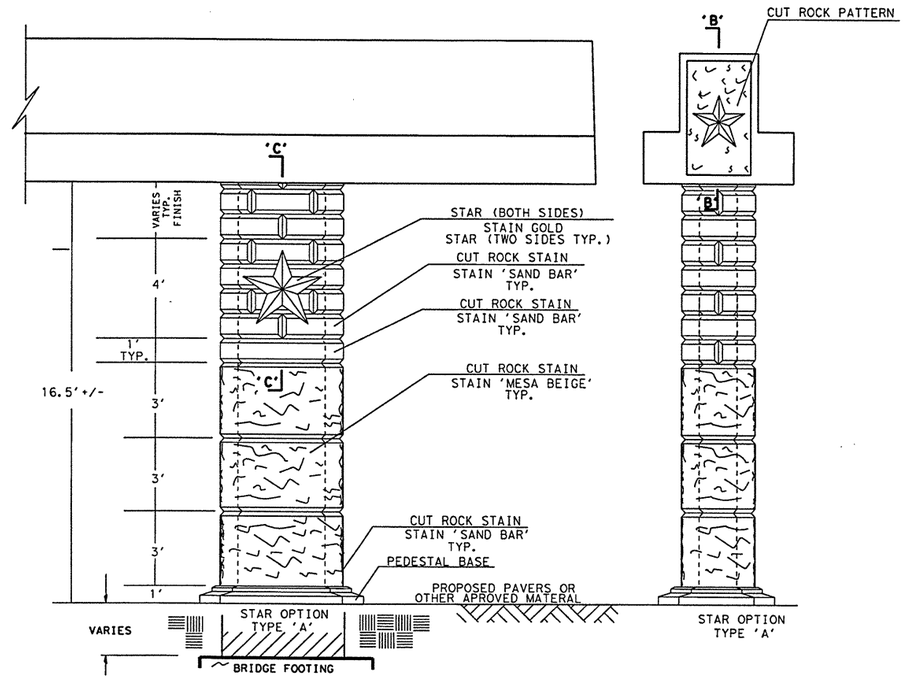

TOP OF FOOTING

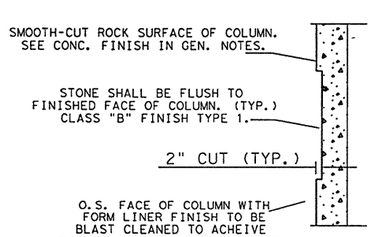

SECTION "D-D"
STONE AT CAP

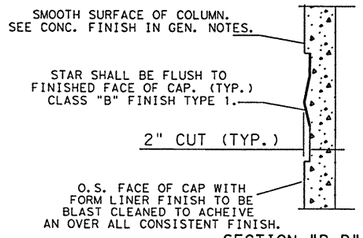

SECTION "B-B"
STAR AT CAP

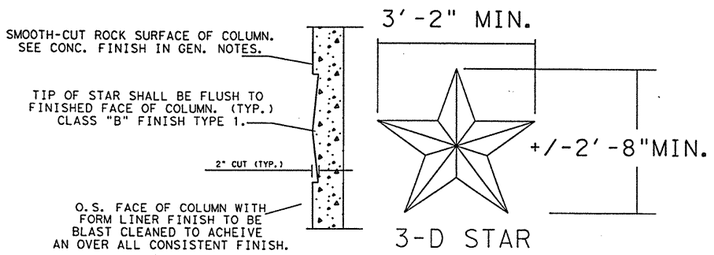

SECTION "C-C"
COLUMN TREATMENT

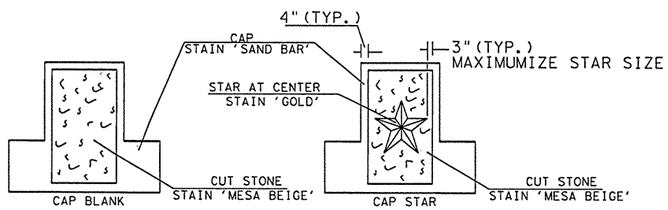

CAP TREATMENT OPTIONS

NOTE:

TEXTURED CONCRETE SURFACE TREATMENT SHALL BE FORMED USING L.M. SCOFIELD ARCHITECTURAL FORM LINERS OR APPROVED EQUAL.
L.M. SCOFIELD COMPANY 820 E. 29 ST.
HOUSTON TX. ZIP - 77009. ALL FORM LINERS SHALL BE APPROVED BY THE ENGINEER PRIOR TO USE.

A SAMPLE PANEL SHALL BE SUBMITTED OF ALL FINISHES FOR APPROVAL TO THE ENGINEER PRIOR TO USE.

SAMPLE PANELS SHALL BE SIZED AS APPROVED BY THE ENGINEER.

SAMPLES SHALL NOT BE PAID FOR DIRECTLY, BUT SHALL BE SUBSIDIARY TO THE VARIOUS BID ITEMS.

STAR SHALL BE A SMOOTH FINISH (TYP.) SEE GEN. NOTES.

FINAL COLOR SELECTIONS SHALL BE APPROVED BY TXDOT PRIOR TO FINISHING.

PAYMENT FOR FORM LINER TREATMENT AND COLOR STAIN SHALL BE SUBSIDIARY TO THE ITEM CLASS C CONCRETE (BENT).

STATE OF TEXAS
STEPHEN P. WALKER
01774
REGISTERED
LANDSCAPE ARCHITECT

09.01.03

THE TEXAS BOARD OF ARCHITECTURAL EXAMINERS, 8213 SHOAL CREEK BLVD., SUITE 107, AUSTIN, TEXAS 78758, TELEPHONE (512) 458-4126, HAS JURISDICTION OVER THE INDIVIDUALS LICENSED UNDER THE LANDSCAPE ARCHITECTS REGISTRATION LAW ARTICLE 249C, VERNON'S TEXAS CIVIL STATUTES.

© 2003 by Texas Department of Transportation. All rights reserved.

US 281
TYPICAL FORM LINER DETAILS FOR 3'x5' COLUMNS

Texas Department of Transportation

©TxDOT 2003

FED. RD. DIV. NO.	FEDERAL AID PROJECT NO.					SHEET NO.
6						1107
STATE	DIST.	COUNTY	CONT.	SECT.	JOB	HIGHWAY NO.
TEXAS	21	HIDALGO	255	08	091	US 281

BENT LOCATIONS FOR STAR (TYPE 'A') DESIGN

BUS 281 BENT NO. 12 NORTH BOUND DC

ALL OTHER BENTS SHALL RECIVE TYPE 'B' DESIGN

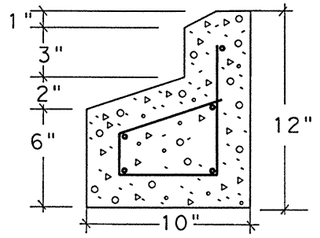

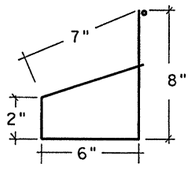

STEEL STIRRUP

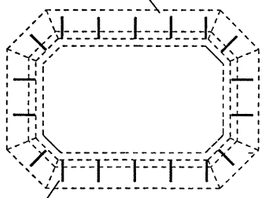

STEEL STIRRUP PLACEMENT
12" O.C.

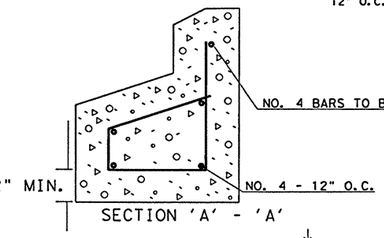

SECTION 'A' - 'A'

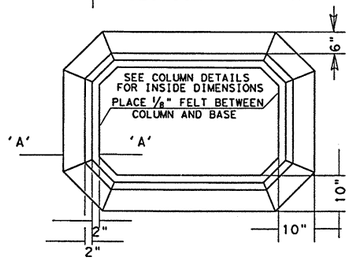

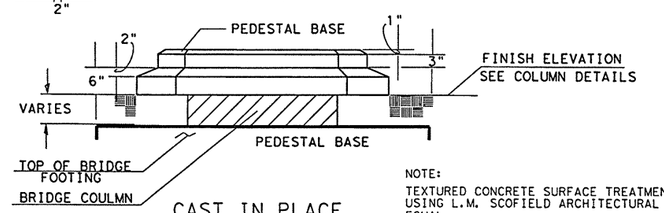

CAST IN PLACE
ARCHITECTURAL
DETAIL
PEDESTAL BASE

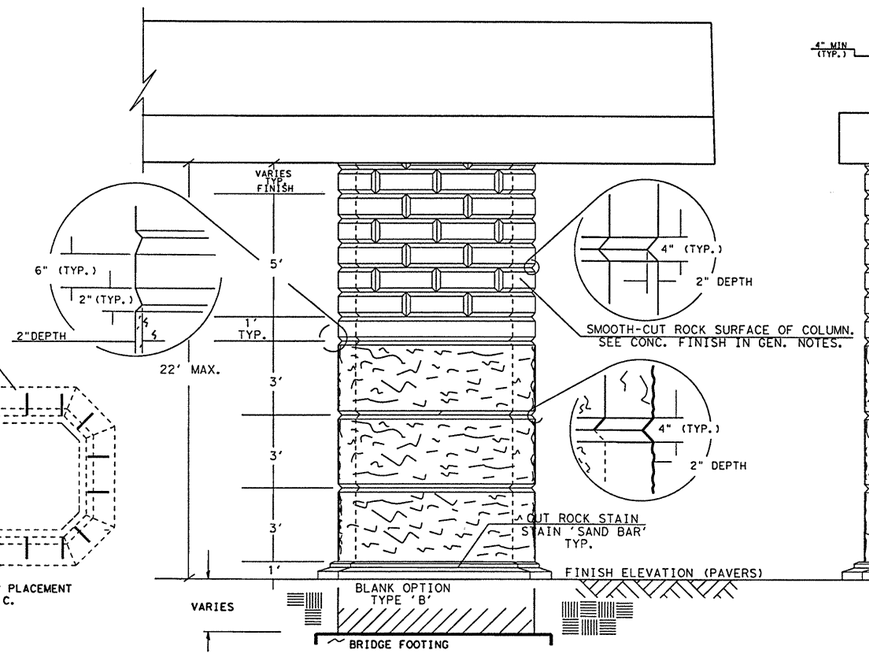

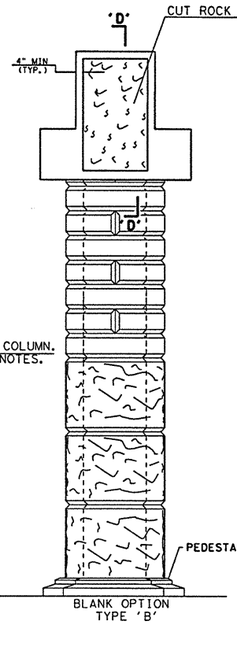

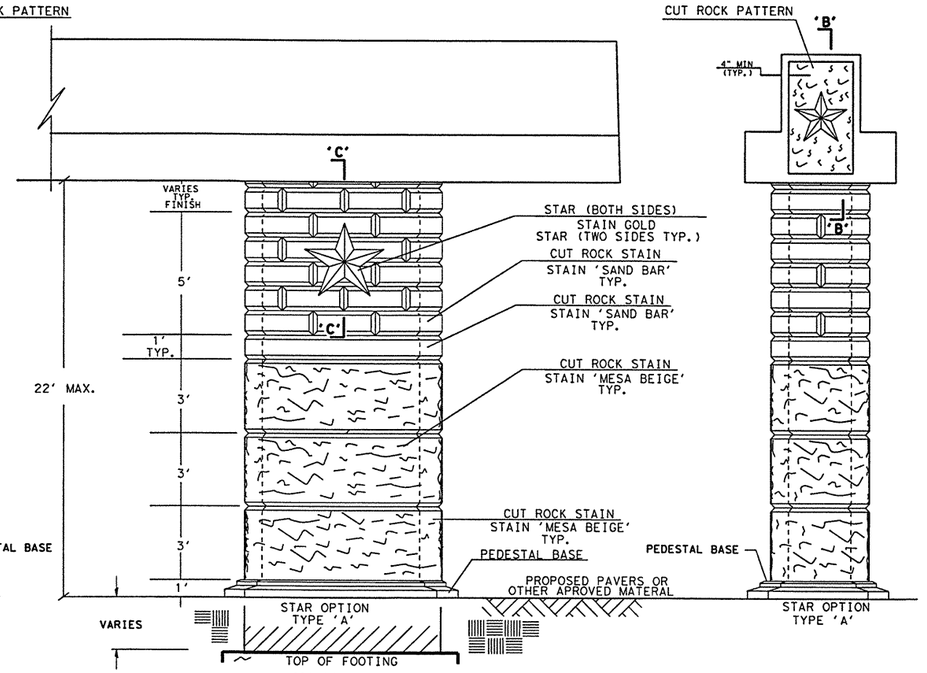

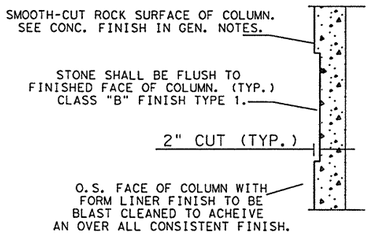

SECTION "D-D"

STONE AT CAP

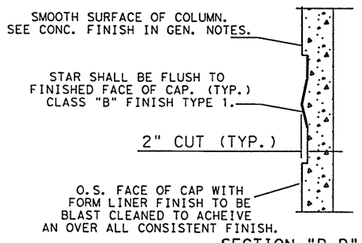

SECTION "B-B"

STAR AT CAP

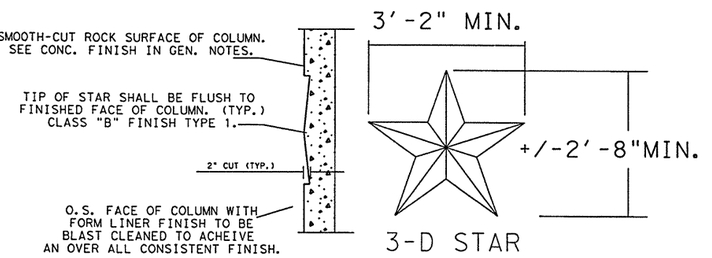

SECTION "C-C"

COLUMN TREATMENT

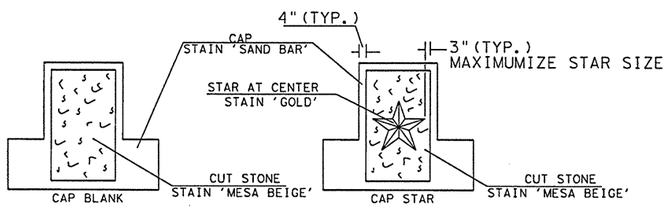

CAP TREATMENT OPTIONS

NOTE:

TEXTURED CONCRETE SURFACE TREATMENT SHALL BE FORMED USING L.M. SCOFIELD ARCHITECTURAL FORM LINERS OR APPROVED EQUAL.
L.M. SCOFIELD COMPANY 820 E. 29 ST.
HOUSTON TX. ZIP - 77009. ALL FORM LINERS SHALL BE APPROVED BY THE ENGINEER PRIOR TO USE.

A SAMPLE PANEL SHALL BE SUBMITTED OF ALL FINISHES FOR APPROVAL TO THE ENGINEER PRIOR TO USE.

SAMPLE PANELS SHALL BE SIZED AS APPROVED BY THE ENGINEER.

SAMPLES SHALL NOT BE PAID FOR DIRECTLY, BUT SHALL BE SUBSIDIARY TO THE VARIOUS BID ITEMS.

STAR SHALL BE A SMOOTH FINISH (TYP.) SEE GEN. NOTES.

FINAL COLOR SELECTIONS SHALL BE APPROVED BY TXDOT PRIOR TO FINISHING.

PAYMENT FOR FORM LINER TREATMENT AND COLOR STAIN SHALL BE SUBSIDIARY TO THE ITEM CLASS C CONCRETE (BENT).

STATE OF TEXAS
STEPHEN P. WALKER
01774
REGISTERED
LANDSCAPE ARCHITECT

Stephen P. Walker 09.07.03

THE TEXAS BOARD OF ARCHITECTURAL EXAMINERS, 8213 SHOAL CREEK BLVD., SUITE 107, AUSTIN, TEXAS 78758, TELEPHONE (512) 458-4126, HAS JURISDICTION OVER THE INDIVIDUALS LICENSED UNDER THE LANDSCAPE ARCHITECTS REGISTRATION LAW ARTICLE 249C, VERNON'S TEXAS CIVIL STATUTES.

© 2003 by Texas Department of Transportation. All rights reserved.

US 281
TYPICAL FORM LINER DETAILS FOR 4'x 8' COLUMNS UP TO 22'

Texas Department of Transportation

©TxDOT 2003

FED. RD. DIV. NO.	FEDERAL AID PROJECT NO.					SHEET NO.
6						1108
STATE	DIST.	COUNTY	CONT.	SECT.	JOB	HIGHWAY NO.
TEXAS	21	HIDALGO	255	08	091	US 281

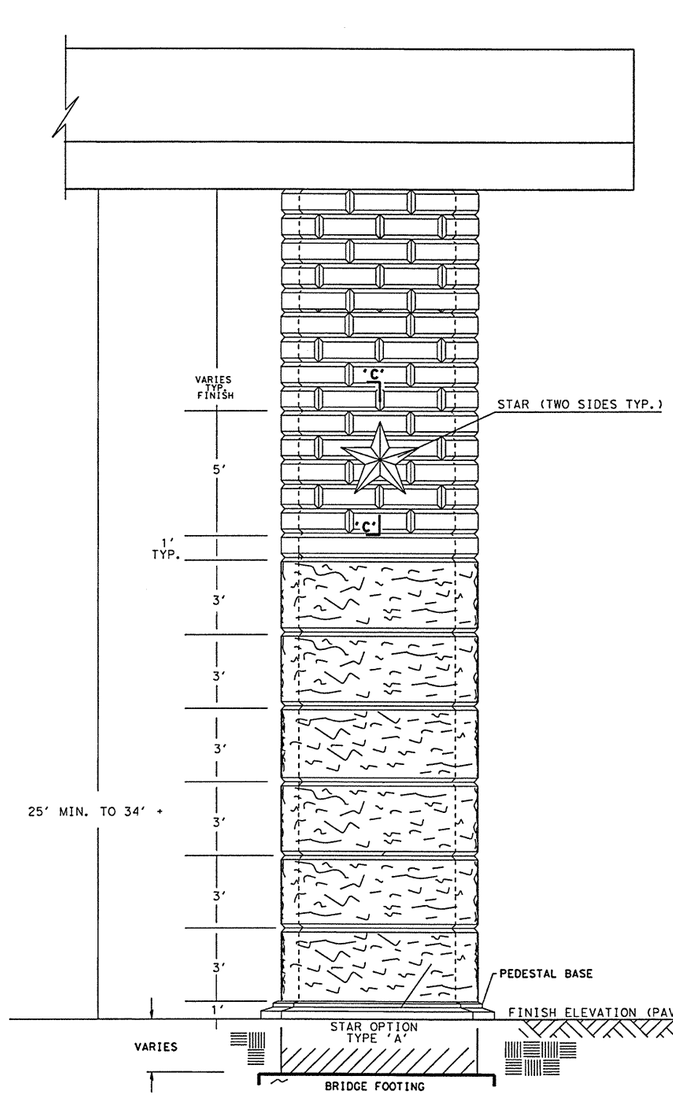

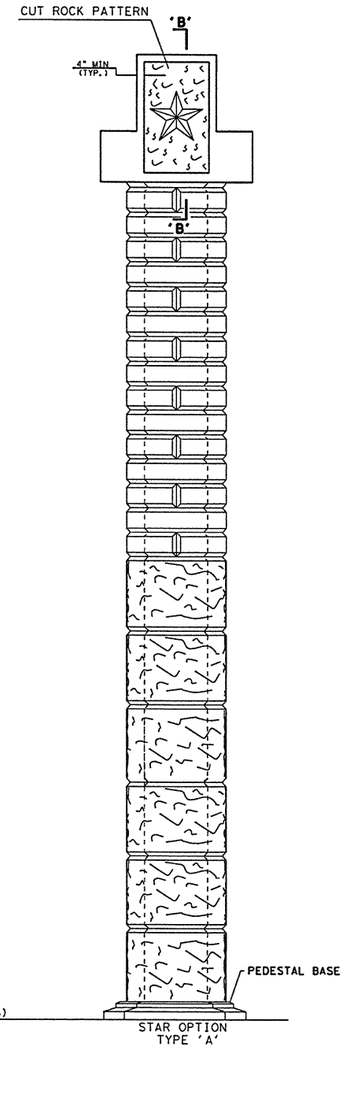

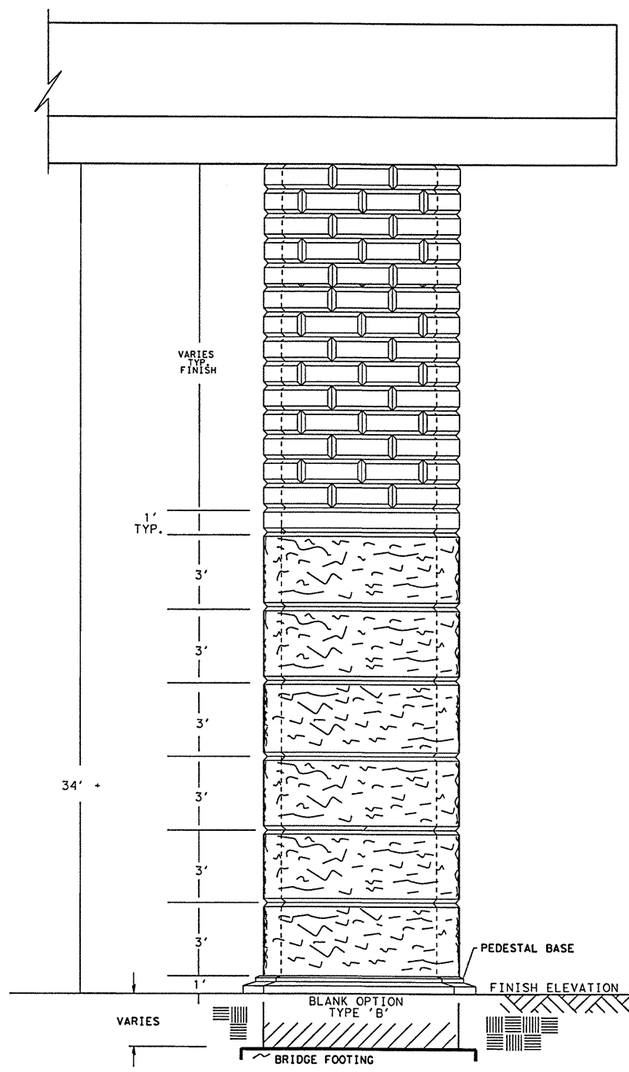

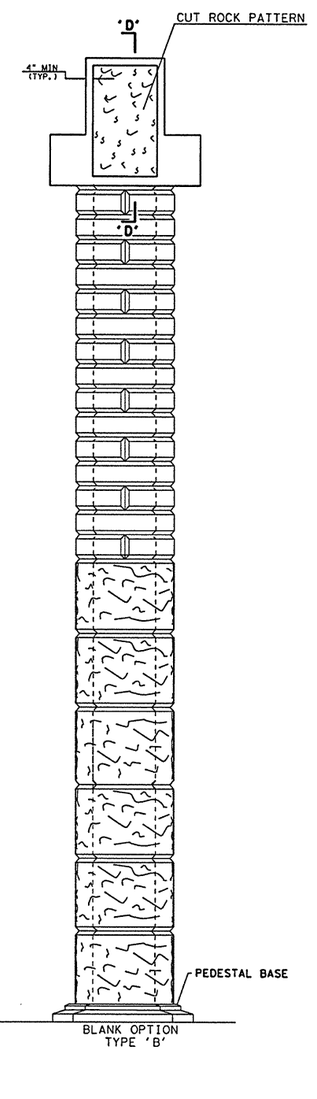

NOTE:

TEXTURED CONCRETE SURFACE TREATMENT SHALL BE FORMED USING L.M. SCOFIELD ARCHITECTURAL FORM LINERS OR APPROVED EQUAL.
L.M. SCOFIELD COMPANY 820 E. 29 ST.
HOUSTON TX. ZIP - 77009. ALL FORM LINERS SHALL BE APPROVED BY THE ENGINEER PRIOR TO USE.

A SAMPLE PANEL SHALL BE SUBMITTED OF ALL FINISHES FOR APPROVAL TO THE ENGINEER PRIOR TO USE.

SAMPLE PANELS SHALL BE SIZED AS APPROVED BY THE ENGINEER.

SAMPLES SHALL NOT BE PAID FOR DIRECTLY, BUT SHALL BE SUBSIDIARY TO THE VARIOUS BID ITEMS.

STAR SHALL BE A SMOOTH FINISH (TYP.) SEE GEN. NOTES.

BENT LOCATIONS FOR STAR (TYPE 'A') DESIGN

BUS 281: BENT NO. 4 NORTH BOUND DC

ALL OTHER BENTS SHALL RECIVE TYPE 'B' DESIGN

FINAL COLOR SELECTIONS SHALL BE APPROVED BY TXDOT PRIOR TO FINISHING.

PAYMENT FOR FORM LINER TREATMENT AND COLOR STAIN SHALL BE SUBSIDIARY TO THE ITEM CLASS C CONCRETE (BENT).

STATE OF TEXAS
STEPHEN P. WALKER
01774
REGISTERED
LANDSCAPE ARCHITECT

Stephen P. Walker 07.01.03

THE TEXAS BOARD OF ARCHITECTURAL EXAMINERS, 8213 SHOAL CREEK BLVD., SUITE 107, AUSTIN, TEXAS 78758, TELEPHONE (512) 458-4126, HAS JURISDICTION OVER THE INDIVIDUALS LICENSED UNDER THE LANDSCAPE ARCHITECTS REGISTRATION LAW ARTICLE 249C, VERNON'S TEXAS CIVIL STATUTES.

US 281
TYPICAL FORM LINER DETAILS FOR 4'x8' COLUMNS OVER 22'

© 2003 by Texas Department of Transportation. All rights reserved.

Texas Department of Transportation

©TxDOT 2003

FED. RD. DIV. NO.	FEDERAL AID PROJECT NO.					SHEET NO.
6						1109
STATE	DIST.	COUNTY	CONT.	SECT.	JOB	HIGHWAY NO.
TEXAS	21	HIDALGO		08	091	US 281

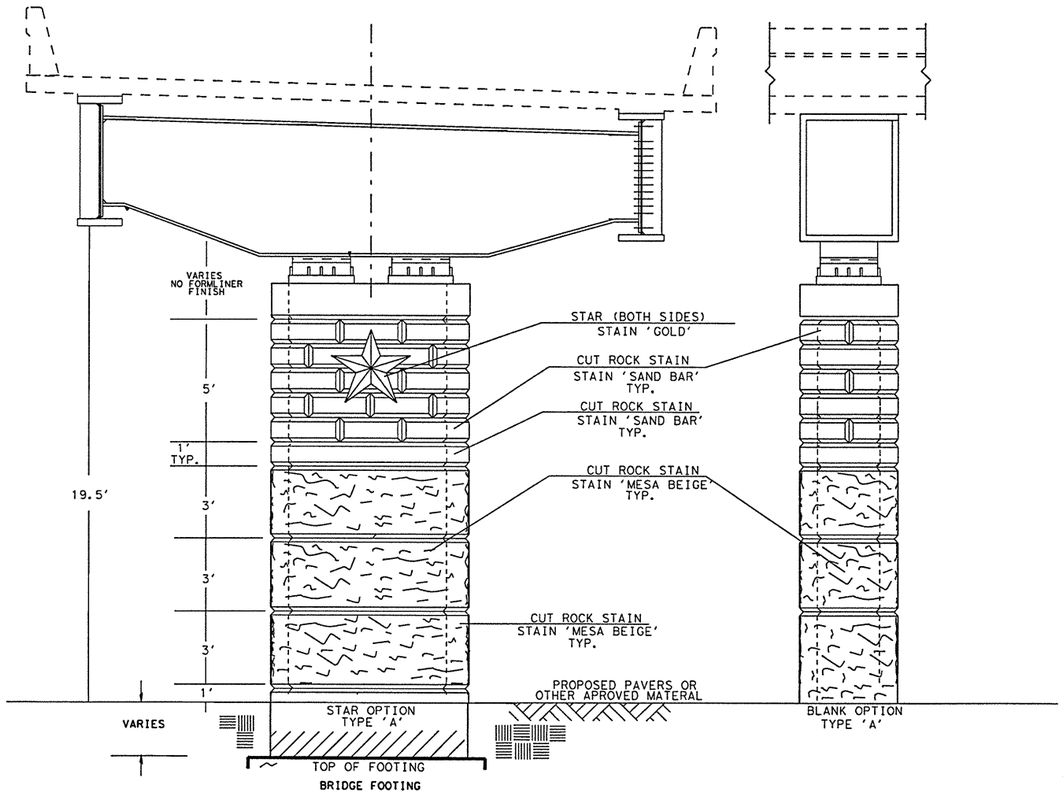

NOTE:

TEXTURED CONCRETE SURFACE TREATMENT SHALL BE FORMED USING L.M. SCOFIELD ARCHITECTURAL FORM LINERS OR APPROVED EQUAL.
L.M. SCOFIELD COMPANY 820 E. 29 ST.
HOUSTON TX. ZIP - 77009. ALL FORM LINERS SHALL BE APPROVED BY THE ENGINEER PRIOR TO USE.

A SAMPLE PANEL SHALL BE SUBMITTED OF ALL FINISHES FOR APPROVAL TO THE ENGINEER PRIOR TO USE.

SAMPLE PANELS SHALL BE SIZED AS APPROVED BY THE ENGINEER.

SAMPLES SHALL NOT BE PAID FOR DIRECTLY, BUT SHALL BE SUBSIDIARY TO THE VARIOUS BID ITEMS.

STAR SHALL BE A SMOOTH FINISH (TYP.) SEE GEN. NOTES.

FINAL COLOR SELECTIONS SHALL BE APPROVED BY TXDOT PRIOR TO FINISHING.

PAYMENT FOR FORM LINER TREATMENT AND COLOR STAIN SHALL BE SUBSIDIARY TO THE ITEM CLASS C CONCRETE (BENT).

STATE OF TEXAS
STEPHEN P. WALKER
01774
REGISTERED
LANDSCAPE ARCHITECT

07.01.03

THE TEXAS BOARD OF ARCHITECTURAL EXAMINERS, 8213 SHOAL CREEK BLVD., SUITE 107, AUSTIN, TEXAS 78758, TELEPHONE (512) 458-4126, HAS JURISDICTION OVER THE INDIVIDUALS LICENSED UNDER THE LANDSCAPE ARCHITECTS REGISTRATION LAW ARTICLE 249C, VERNON'S TEXAS CIVIL STATUTES.

BUS 281
INTERIOR BENT 7 COLUMN
TYPICAL FORM LINER DETAIL

© 2003 by Texas Department of Transportation. All rights reserved.

Texas Department of Transportation

BUS 281 NB DIRECT CONNECTER

©TxDOT 2003

FED. RD. DIV. NO.	FEDERAL AID PROJECT NO.					SHEET NO.
6						1110
STATE	DIST.	COUNTY	CONT.	SECT.	JOB	HIGHWAY NO.
TEXAS	21	HIDALGO	255	08	091	US 281